AUTOMATIC TRANSMISSION

SECTION AT

CONTENTS

TROUBLE DIAGNOSIS - INDEX 4
Alphabetical & P No. Index for DTC 4
PRECAUTIONS 6
Precautions for Supplemental Restraint System (SRS) "AIR BAG" and "SEAT BELT PRE-TENSIONER" 6
Precautions for On Board Diagnostic (OBD) System of A/T and Engine 6
Precautions 6
Service Notice or Precautions 8
Wiring Diagrams and Trouble Diagnosis 9
PREPARATION 10
Special Service Tools 10
OVERALL SYSTEM 12
A/T Electrical Parts Location 12
Circuit Diagram 13
Cross-sectional View 14
Hydraulic Control Circuit 15
Shift Mechanism 16
Control System 25
Control Mechanism 26
Control Valve 31
ON BOARD DIAGNOSTIC SYSTEM DESCRIPTION 33
Introduction 33
OBD-II Function for A/T System 33
One or Two Trip Detection Logic of OBD-II 33
OBD-II Diagnostic Trouble Code (DTC) 33
Malfunction Indicator Lamp (MIL) 37
CONSULT-II 37
Diagnostic Procedure Without CONSULT-II 48
TROUBLE DIAGNOSIS - INTRODUCTION 55
Introduction 55
Work Flow 59
TROUBLE DIAGNOSIS - BASIC INSPECTION 61
A/T Fluid Check 61
Stall Test 61
Line Pressure Test 64
Road Test 65
TROUBLE DIAGNOSIS - GENERAL DESCRIPTION 83
Symptom Chart 83
TCM Terminals and Reference Value 95
CAN COMMUNICATION 98
System Description 98
TROUBLE DIAGNOSIS FOR POWER SUPPLY 99
Wiring Diagram - AT - MAIN 99
Diagnostic Procedure 100
DTC P0705 PARK/NEUTRAL POSITION SWITCH 102
Description 102
Wiring Diagram - AT - PNP/SW 104
Diagnostic Procedure 105
Component Inspection 106
DTC P0710 A/T FLUID TEMPERATURE SENSOR CIRCUIT 108
Description 108
Wiring Diagram - AT - FTS 110
Diagnostic Procedure 111
Component Inspection 113
DTC P0720 VEHICLE SPEED SENSOR.A/T (REVOLUTION SENSOR) 114
Description 114
Wiring Diagram - AT - VSSA/T 116
Diagnostic Procedure 117
Component Inspection 118
DTC P0725 ENGINE SPEED SIGNAL 119
Description 119
Wiring Diagram - AT - ENGSS 120
Diagnostic Procedure 121
DTC P0731 IMPROPER SHIFTING TO 1ST GEAR POSITION 123
Description 123
Wiring Diagram - AT - 1ST 126
Diagnostic Procedure 127
Component Inspection 128
DTC P0732 IMPROPER SHIFTING TO 2ND GEAR POSITION 129
Description 129

CONTENTS (Cont'd)

Wiring Diagram - AT - 2ND....132
Diagnostic Procedure....133
Component Inspection....134
DTC P0733 IMPROPER SHIFTING TO 3RD GEAR POSITION....135
Description....135
Wiring Diagram - AT - 3RD....138
Diagnostic Procedure....139
Component Inspection....140
DTC P0734 IMPROPER SHIFTING TO 4TH GEAR POSITION....141
Description....141
Wiring Diagram - AT - 4TH....145
Diagnostic Procedure....146
Component Inspection....150
DTC P0740 TORQUE CONVERTER CLUTCH SOLENOID VALVE....151
Description....151
Wiring Diagram - AT - TCV....153
Diagnostic Procedure....154
Component Inspection....155
DTC P0744 IMPROPER LOCK-UP OPERATION....156
Description....156
Wiring Diagram - AT - TCCSIG....159
Diagnostic Procedure....160
Component Inspection....164
DTC P0745 LINE PRESSURE SOLENOID VALVE....165
Description....165
Wiring Diagram - AT - LPSV....167
Diagnostic Procedure....168
Component Inspection....170
DTC P0750 SHIFT SOLENOID VALVE A....171
Description....171
Wiring Diagram - AT - SSV/A....172
Diagnostic Procedure....173
Component Inspection....174
DTC P0755 SHIFT SOLENOID VALVE B....175
Description....175
Wiring Diagram - AT - SSV/B....176
Diagnostic Procedure....177
Component Inspection....178
DTC P1705 ACCELERATOR PEDAL POSITION SENSOR (THROTTLE POSITION SENSOR)....179
Description....179
On Board Diagnosis Logic....180
Possible Cause....180
Diagnostic Trouble Code (DTC) Confirmation Procedure....181
Wiring Diagram - AT - TPS....182
Diagnostic Procedure....183
DTC P1760 OVERRUN CLUTCH SOLENOID VALVE....185
Description....185
Wiring Diagram - AT - OVRCSV....187
Diagnostic Procedure....188
Component Inspection....189
DTC BATT/FLUID TEMP SEN (A/T FLUID TEMP SENSOR CIRCUIT AND TCM POWER SOURCE)....190
Description....190
Wiring Diagram - AT - BA/FTS....192
Diagnostic Procedure....193
Component Inspection....196
DTC VEHICLE SPEED SENSOR.MTR....197
Description....197
Wiring Diagram - AT - VSSMTR....199
Diagnostic Procedure....200
DTC U1000 CAN COMMUNICATION LINE....202
Description....202
On Board Diagnosis Logic....202
Possible Cause....202
Diagnostic Trouble Code (DTC) Confirmation Procedure....203
Wiring Diagram - AT - CAN....204
Diagnostic Procedure....205
DTC TURBINE REVOLUTION SENSOR....206
Description....206
Wiring Diagram - AT - TRSA/T....208
Diagnostic Procedure....209
Component Inspection....210
DTC CONTROL UNIT (RAM), CONTROL UNIT (ROM)....211
Description....211
Diagnostic Procedure....212
DTC CONTROL UNIT (EEP ROM)....213
Description....213
Diagnostic Procedure....214
TROUBLE DIAGNOSES FOR SYMPTOMS....215
Wiring Diagram - AT - NONDTC....215
O/D OFF Indicator Lamp Does Not Come On....218
Engine Cannot Be Started In ″P″ and ″N″ Position....220
In ″P″ Position, Vehicle Moves Forward Or Backward When Pushed....221
In ″N″ Position, Vehicle Moves....222
Large Shock. ″N″ -> ″R″ Position....224
Vehicle Does Not Creep Backward In ″R″ Position....226
Vehicle Does Not Creep Forward In ″D″, ″2″ Or ″1″ Position....229
Vehicle Cannot Be Started From D_1....232
A/T Does Not Shift: D_1 -> D_2 Or Does Not Kickdown: D_4 -> D_2....235
A/T Does Not Shift: D_2 -> D_3....238
A/T Does Not Shift: D_3 -> D_4....241

CONTENTS (Cont'd)

A/T Does Not Perform Lock-up 244
A/T Does Not Hold Lock-up Condition 246
Lock-up Is Not Released 248
Engine Speed Does Not Return To Idle (Light Braking D_4 -> D_3)....249
Vehicle Does Not Start From D_1 251
A/T Does Not Shift: D_4 -> D_3, When Overdrive Control Switch ″ON″ -> ″OFF″ 252
A/T Does Not Shift: D_3 -> 2_2, When Selector Lever ″D″ -> ″2″ Position....253
A/T Does Not Shift: 2_2 -> 1_1, When Selector Lever ″2″ -> ″1″ Position 254
Vehicle Does Not Decelerate By Engine Brake....255
TCM Self-diagnosis Does Not Activate (PNP, Overdrive Control and Accelerator Pedal Position Sensor Circuit Checks)....255
A/T SHIFT LOCK SYSTEM....262
Description 262
Wiring Diagram - SHIFT -....263
Diagnostic Procedure 264
KEY INTERLOCK CABLE 267
Components....267
Removal....267
Installation....268
ON-VEHICLE SERVICE 269
Control Valve Assembly and Accumulators....269
Revolution Sensor Replacement 270
Turbine Revolution Sensor Replacement....270
Rear Oil Seal Replacement....270
Rear Oil Seal and Companion Flange Oil Seal Replacement....271
Parking Components Inspection....271
Park/Neutral Position Switch Adjustment 272
Manual Control Linkage Adjustment....272
REMOVAL AND INSTALLATION 273
Removal....273
Installation....274
OVERHAUL 278
Components....278
Oil Channel 281
Locations of Needle Bearings, Thrust Washers and Snap Rings 282
DISASSEMBLY....283
REPAIR FOR COMPONENT PARTS 294
Oil Pump 294
Control Valve Assembly....298
Control Valve Upper Body 304
Control Valve Lower Body 309
Reverse Clutch 311
High Clutch 314
Forward and Overrun Clutches 317
Low & Reverse Brake....321
Forward Clutch Drum Assembly....325
Rear Internal Gear and Forward Clutch Hub 327
Band Servo Piston Assembly 330
Parking Pawl Components 334
ASSEMBLY....336
Assembly (1)....336
Adjustment 344
Assembly (2)....346
SERVICE DATA AND SPECIFICATIONS (SDS) 353
General Specifications....353
Shift Schedule....353
Stall Revolution....353
Line Pressure....353
Return Springs....354
Accumulator O-ring....355
Clutches and Brakes 355
Oil Pump and Low One-way Clutch....357
Total End Play....357
Reverse Clutch Drum End Play 358
Removal and Installation 358
Shift Solenoid Valves....358
Solenoid Valves 358
A/T Fluid Temperature Sensor....358
Turbine Revolution Sensor 358
Revolution Sensor 359
Dropping Resistor 359

Alphabetical & P No. Index for DTC

NAAT0179

ALPHABETICAL INDEX FOR DTC

NAAT0179S01

Items (CONSULT-II screen terms)	DTC	Reference page
	CONSULT-II GST*1	
A/T 1ST GR FNCTN	P0731	AT-123
A/T 2ND GR FNCTN	P0732	AT-129
A/T 3RD GR FNCTN	P0733	AT-135
A/T 4TH GR FNCTN	P0734	AT-141
A/T TCC S/V FNCTN	P0744	AT-156
ATF TEMP SEN/CIRC	P0710	AT-108
ENGINE SPEED SIG	P0725	AT-119
L/PRESS SOL/CIRC	P0745	AT-165
O/R CLTCH SOL/CIRC	P1760	AT-185
PNP SW/CIRC	P0705	AT-102
SFT SOL A/CIRC*2	P0750	AT-171
SFT SOL B/CIRC*2	P0755	AT-175
TCC SOLENOID/CIRC	P0740	AT-151
TP SEN/CIRC A/T*2	P1705	AT-179
VEH SPD SEN/CIR AT*3	P0720	AT-114

*1: These numbers are prescribed by SAE J2012.

*2: When the fail-safe operation occurs, the MIL illuminates.

*3: The MIL illuminates when both the “Revolution sensor signal” and the “Vehicle speed sensor signal” meet the fail-safe condition at the same time.

P NO. INDEX FOR DTC

=NAAT0179S02

DTC CONSULT-II GST*1	Items (CONSULT-II screen terms)	Reference page
P0705	PNP SW/CIRC	AT-102
P0710	ATF TEMP SEN/CIRC	AT-108
P0720	VEH SPD SEN/CIR AT*3	AT-114
P0725	ENGINE SPEED SIG	AT-119
P0731	A/T 1ST GR FNCTN	AT-123
P0732	A/T 2ND GR FNCTN	AT-129
P0733	A/T 3RD GR FNCTN	AT-135
P0734	A/T 4TH GR FNCTN	AT-141
P0740	TCC SOLENOID/CIRC	AT-151
P0744	A/T TCC S/V FNCTN	AT-156
P0745	L/PRESS SOL/CIRC	AT-165
P0750	SFT SOL A/CIRC*2	AT-171
P0755	SFT SOL B/CIRC*2	AT-175
P1705	TP SEN/CIRC A/T*2	AT-179
P1760	O/R CLTCH SOL/CIRC	AT-185

*1: These numbers are prescribed by SAE J2012.

*2: When the fail-safe operation occurs, the MIL illuminates.

*3: The MIL illuminates when both the "Revolution sensor signal" and the "Vehicle speed sensor signal" meet the fail-safe condition at the same time.

Precautions for Supplemental Restraint System (SRS) "AIR BAG" and "SEAT BELT PRE-TENSIONER"

NAAT0001

The Supplemental Restraint System such as "AIR BAG" and "SEAT BELT PRE-TENSIONER" used along with a seat belt, helps to reduce the risk or severity of injury to the driver and front passenger for certain types of collision. The SRS composition which is available to NISSAN MODEL R50 is as follows:

- For a frontal collision
  The Supplemental Restraint System consists of driver air bag module (located in the center of the steering wheel), front passenger air bag module (located on the instrument panel on passenger side), seat belt pre-tensioners, a diagnosis sensor unit, warning lamp, wiring harness and spiral cable.
- For a side collision
  The Supplemental Restraint System consists of side air bag module (located in the outer side of front seat), side curtain air bag module (locating in the headliner side of front and rear seat), satellite sensor, diagnosis sensor unit (one of components of air bags for a frontal collision), wiring harness, warning lamp (one of components of air bags for a frontal collision).

WARNING:

- **To avoid rendering the SRS inoperative, which could increase the risk of personal injury or death in the event of a collision which would result in air bag inflation, all maintenance must be performed by an authorized NISSAN dealer.**
- **Improper maintenance, including incorrect removal and installation of the SRS, can lead to personal injury caused by unintentional activation of the system.**
- **Do not use electrical test equipment on any circuit related to the SRS unless instructed to in this Service Manual. SRS wiring harnesses can be identified by yellow and/or orange harness connector (and by yellow harness protector or yellow insulation tape before the harness connectors).**

Precautions for On Board Diagnostic (OBD) System of A/T and Engine

NAAT0002

The ECM has an on board diagnostic system. It will light up the malfunction indicator lamp (MIL) to warn the driver of a malfunction causing emission deterioration.

CAUTION:

- **Be sure to turn the ignition switch "OFF" and disconnect the negative battery terminal before any repair or inspection work. The open/short circuit of related switches, sensors, solenoid valves, etc. will cause the MIL to light up.**
- **Be sure to connect and lock the connectors securely after work. A loose (unlocked) connector will cause the MIL to light up due to an open circuit. (Be sure the connector is free from water, grease, dirt, bent terminals, etc.)**
- **Be sure to route and secure the harnesses properly after work. Interference of the harness with a bracket, etc. may cause the MIL to light up due to a short circuit.**
- **Be sure to connect rubber tubes properly after work. A misconnected or disconnected rubber tube may cause the MIL to light up due to a malfunction of the EGR system or fuel injection system, etc.**
- **Be sure to erase the unnecessary malfunction information (repairs completed) from the TCM and ECM before returning the vehicle to the customer.**

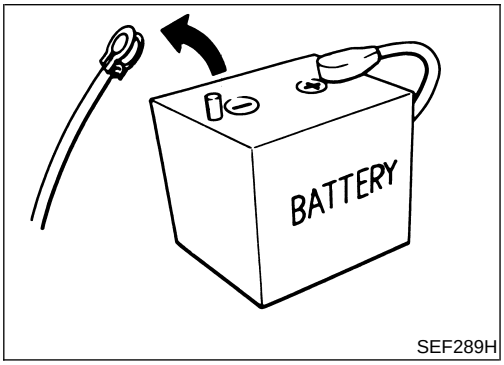

SEF289H

Precautions

NAAT0003

- **Before connecting or disconnecting the TCM harness connector, turn ignition switch "OFF" and disconnect negative battery terminal. Failure to do so may damage the TCM. Because battery voltage is applied to TCM even if ignition switch is turned "OFF".**

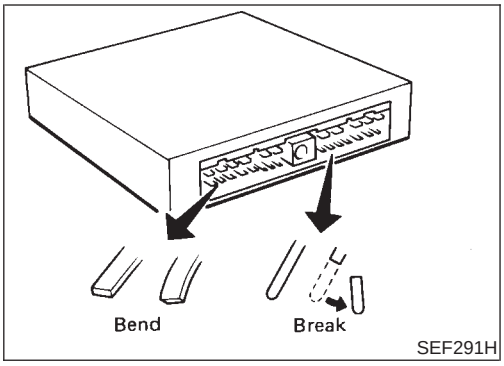

SEF291H

- **When connecting or disconnecting pin connectors into or from TCM, take care not to damage pin terminals (bend or break).**
  Make sure that there are not any bends or breaks on TCM pin terminal, when connecting pin connectors.

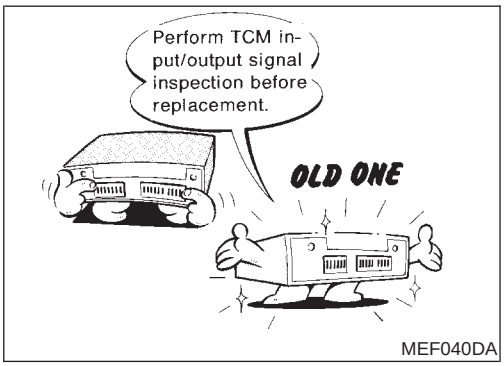

MEF040DA

- **Before replacing TCM, perform TCM input/output signal inspection and make sure whether TCM functions properly or not. (Refer to AT-95.)**

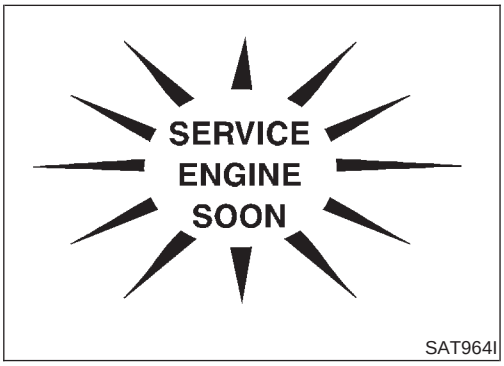

SAT964I

- **After performing each TROUBLE DIAGNOSIS, perform "DTC (Diagnostic Trouble Code) CONFIRMATION PROCEDURE".**
  The DTC should not be displayed in the "DTC CONFIRMATION PROCEDURE" if the repair is completed.

- Before proceeding with disassembly, thoroughly clean the outside of the transmission. It is important to prevent the internal parts from becoming contaminated by dirt or other foreign matter.
- Disassembly should be done in a clean work area.
- Use lint-free cloth or towels for wiping parts clean. Common shop rags can leave fibers that could interfere with the operation of the transmission.
- Place disassembled parts in order for easier and proper assembly.
- All parts should be carefully cleaned with a general purpose, non-flammable solvent before inspection or reassembly.
- Gaskets, seals and O-rings should be replaced any time the transmission is disassembled.
- It is very important to perform functional tests whenever they are indicated.
- The valve body contains precision parts and requires extreme care when parts are removed and serviced. Place disassembled valve body parts in order for easier and proper assembly. Care will also prevent springs and small parts from becoming scattered or lost.
- Properly installed valves, sleeves, plugs, etc. will slide along bores in valve body under their own weight.

- Before assembly, apply a coat of recommended ATF to all parts. Apply petroleum jelly to protect O-rings and seals, or hold bearings and washers in place during assembly. Do not use grease.
- Extreme care should be taken to avoid damage to O-rings, seals and gaskets when assembling.
- Replace ATF cooler if excessive foreign material is found in oil pan or clogging strainer. Refer to "ATF COOLER SERVICE", AT-9.
- After overhaul, refill the transmission with new ATF.
- When the A/T drain plug is removed, only some of the fluid is drained. Old A/T fluid will remain in torque converter and ATF cooling system.
  Always follow the procedures when changing A/T fluid. Refer to MA-22, "Changing A/T Fluid".

Service Notice or Precautions

NAAT0004

FAIL-SAFE

NAAT0004S01

The TCM has an electronic Fail-Safe (limp home mode). This allows the vehicle to be driven even if a major electrical input/output device circuit is damaged.
Under Fail-Safe, the vehicle always runs in third gear, even with a shift lever position of "1", "2" or "D". The customer may complain of sluggish or poor acceleration.
When the ignition key is turned "ON" following Fail-Safe operation, O/D OFF indicator lamp blinks for about 8 seconds. (For "TCM SELF-DIAGNOSTIC PROCEDURE (No Tools)", refer to AT-48.)
The blinking of the O/D OFF indicator lamp for about 8 seconds will appear only once and be cleared. The customer may resume normal driving conditions.
Always follow the "WORK FLOW" (Refer to AT-59).
The SELF-DIAGNOSIS results will be as follows:
The first SELF-DIAGNOSIS will indicate damage to the vehicle speed sensor or the revolution sensor.
During the next SELF-DIAGNOSIS, performed after checking the sensor, no damages will be indicated.

TORQUE CONVERTER SERVICE

NAAT0004S04

The torque converter should be replaced under any of the following conditions:

- External leaks in the hub weld area.
- Converter hub is scored or damaged.
- Converter pilot is broken, damaged or fits poorly into crankshaft.
- Steel particles are found after flushing the cooler and cooler lines.
- Pump is damaged or steel particles are found in the converter.
- Vehicle has TCC shudder and/or no TCC apply. Replace only after all hydraulic and electrical diagnoses have been made. (Converter clutch material may be glazed.)
- Converter is contaminated with engine coolant containing antifreeze.
- Internal failure of stator roller clutch.
- Heavy clutch debris due to overheating (blue converter).
- Steel particles or clutch lining material found in fluid filter or on magnet when no internal parts in unit are worn or damaged — indicates that lining material came from converter.

The torque converter should not be replaced if:

- The fluid has an odor, is discolored, and there is no evidence of metal or clutch facing particles.
- The threads in one or more of the converter bolt holes are damaged.

- Transmission failure did not display evidence of damaged or worn internal parts, steel particles or clutch plate lining material in unit and inside the fluid filter.
- Vehicle has been exposed to high mileage (only). The exception may be where the torque converter clutch dampener plate lining has seen excess wear by vehicles operated in heavy and/or constant traffic, such as taxi, delivery or police use.

ATF COOLER SERVICE

NAAT0004S02

Replace ATF cooler if excessive foreign material is found in oil pan or clogging strainer.
Replace radiator lower tank (which includes ATF cooler) with a new one and flush cooler line using cleaning solvent and compressed air. Refer to LC-22, "REMOVAL AND INSTALLATION".

OBD-II SELF-DIAGNOSIS

NAAT0004S03

- A/T self-diagnosis is performed by the TCM in combination with the ECM. The results can be read through the blinking pattern of the O/D OFF indicator or the malfunction indicator lamp (MIL). Refer to the table on AT-38 for the indicator used to display each self-diagnostic result.
- The self-diagnostic results indicated by the MIL are automatically stored in both the ECM and TCM memories.
  Always perform the procedure "HOW TO ERASE DTC" on AT-35 to complete the repair and avoid unnecessary blinking of the MIL.
- The following self-diagnostic items can be detected using ECM self-diagnostic results mode* only when the O/D OFF indicator lamp does not indicate any malfunctions.

− PNP switch
− A/T 1st, 2nd, 3rd, or 4th gear function
− A/T TCC S/V function (lock-up)

*: For details of OBD-II, refer to EC-77, "Introduction".

- **Certain systems and components, especially those related to OBD, may use the new style slide-locking type harness connector. For description and how to disconnect, refer to EL-7, "Description".**

Wiring Diagrams and Trouble Diagnosis

NAAT0005

When you read wiring diagrams, refer to the following:

- GI-11, "HOW TO READ WIRING DIAGRAMS".
- EL-11, "POWER SUPPLY ROUTING" for power distribution circuit.

When you perform trouble diagnosis, refer to the following:

- GI-35, "HOW TO FOLLOW TEST GROUPS IN TROUBLE DIAGNOSES".
- GI-24, "HOW TO PERFORM EFFICIENT DIAGNOSIS FOR AN ELECTRICAL INCIDENT".

Special Service Tools

NAAT0006

The actual shapes of Kent-Moore tools may differ from those of special service tools illustrated here.

Tool number (Kent-Moore No.) Tool name	Description	
ST2505S001 (J34301-C) Oil pressure gauge set 1 ST25051001 (—) Oil pressure gauge 2 ST25052000 (—) Hose 3 ST25053000 (—) Joint pipe 4 ST25054000 (—) Adapter 5 ST25055000 (—) Adapter	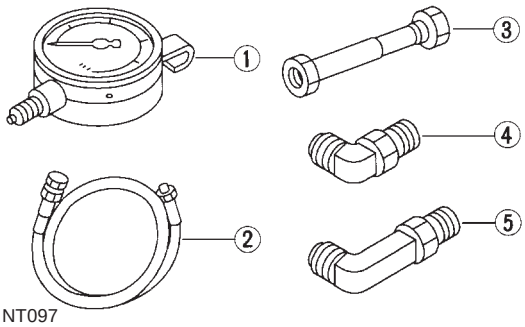 NT097	Measuring line pressure
ST07870000 (J37068) Transmission case stand	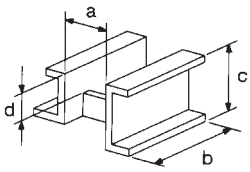 NT421	Disassembling and assembling A/T **a: 182 mm (7.17 in)** **b: 282 mm (11.10 in)** **c: 230 mm (9.06 in)** **d: 100 mm (3.94 in)**
KV31102100 (J37065) Torque converter one-way clutch check tool	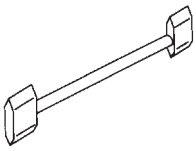 NT098	Checking one-way clutch in torque converter
ST25850000 (J25721-A) Sliding hammer	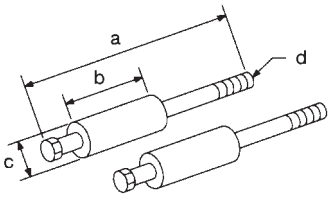 NT422	Removing oil pump assembly **a: 179 mm (7.05 in)** **b: 70 mm (2.76 in)** **c: 40 mm (1.57 in) dia.** **d: M12 x 1.75P**
KV31102400 (J34285 and J34285-87) Clutch spring compressor	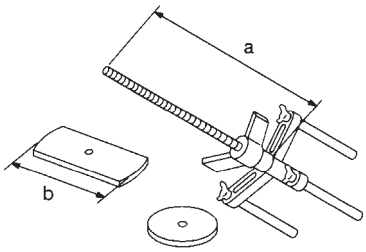 NT423	Removing and installing clutch return springs **a: 320 mm (12.60 in)** **b: 174 mm (6.85 in)**

Tool number (Kent-Moore No.) Tool name	Description	
ST33200000 (J26082) Drift	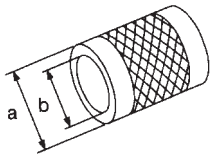 NT091	Installing oil pump housing oil seal Installing rear oil seal **a: 60 mm (2.36 in) dia.** **b: 44.5 mm (1.752 in) dia.**
(J34291) Shim setting gauge set	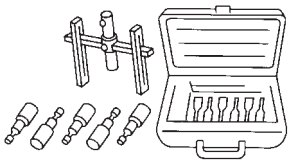 NT101	Selecting oil pump cover bearing race and oil pump thrust washer

A/T Electrical Parts Location

NAAT0007

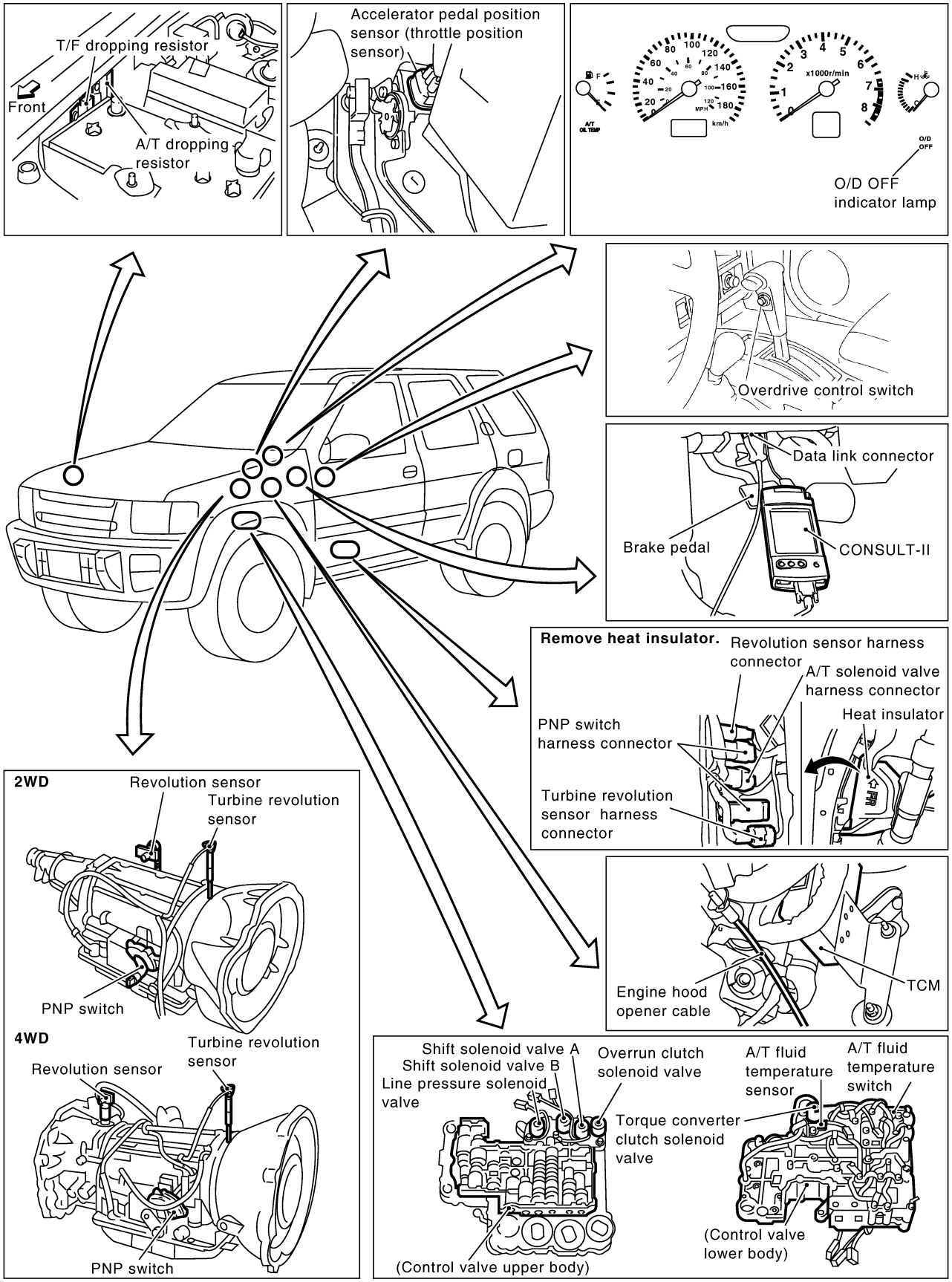

SAT681K

Circuit Diagram

NAAT0008

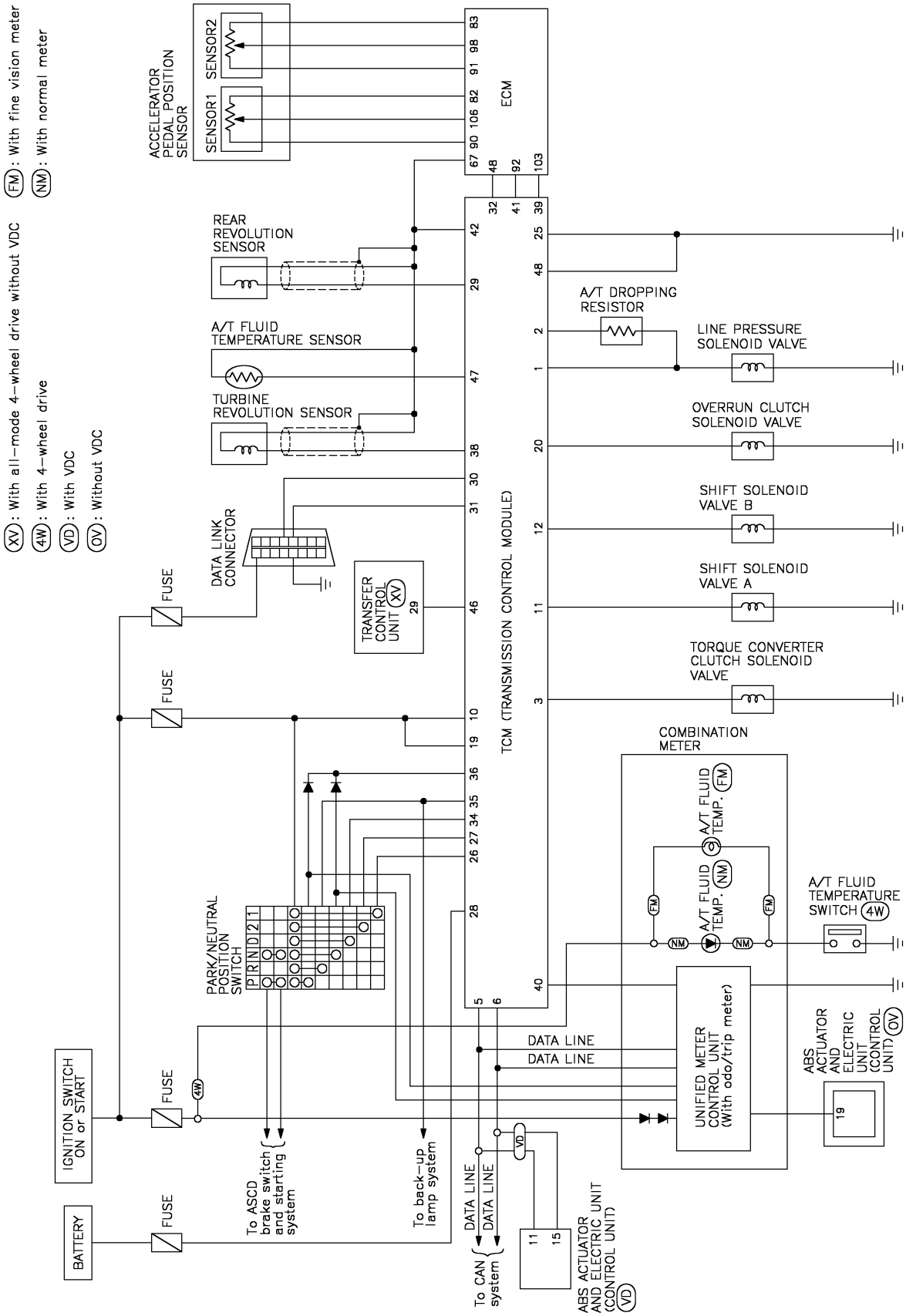

MAT499B

Cross-sectional View

NAAT0010

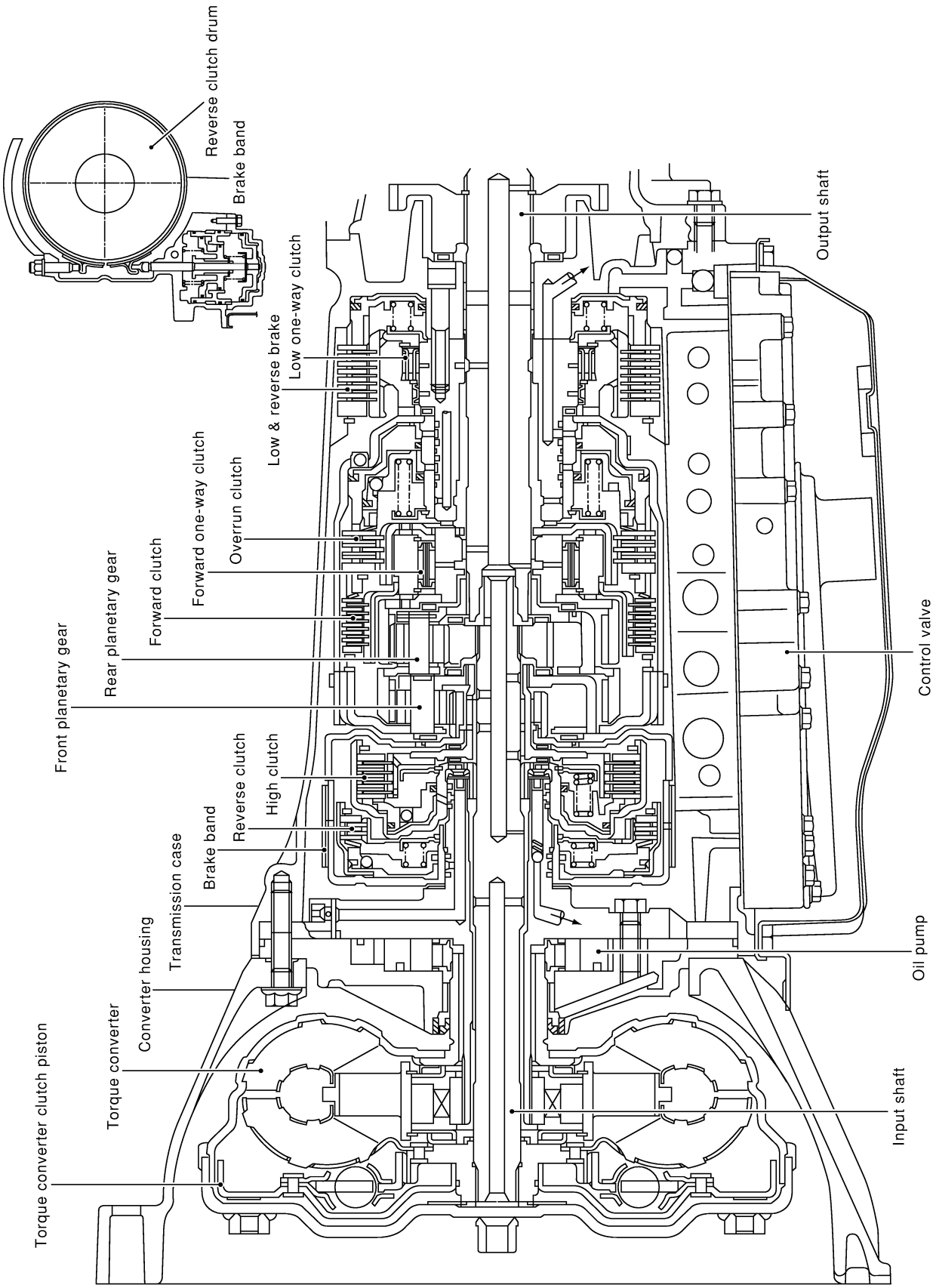

SAT150K

Hydraulic Control Circuit

NAAT0011

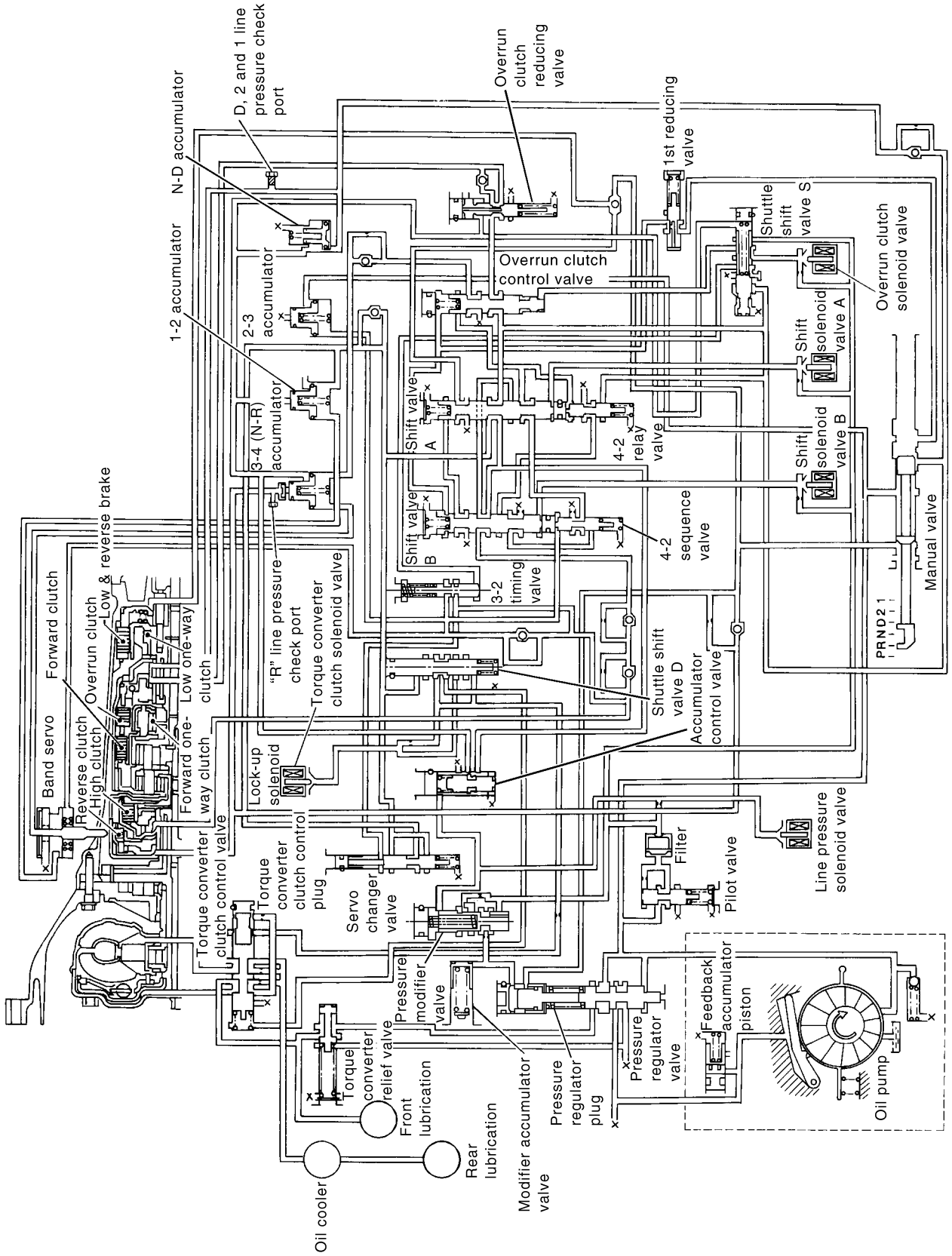

SAT706K

Shift Mechanism

NAAT0012

The automatic transmission uses compact, dual planetary gear systems to improve power-transmission efficiency, simplify construction and reduce weight.
It also employs an optimum shift control and superwide gear ratios. They improve starting performance and acceleration during medium and high-speed operation.
Two one-way clutches are also employed: one is used for the forward clutch and the other for the low clutch. These one-way clutches, combined with four accumulators, reduce shifting shock to a minimum.

CONSTRUCTION

NAAT0012S01

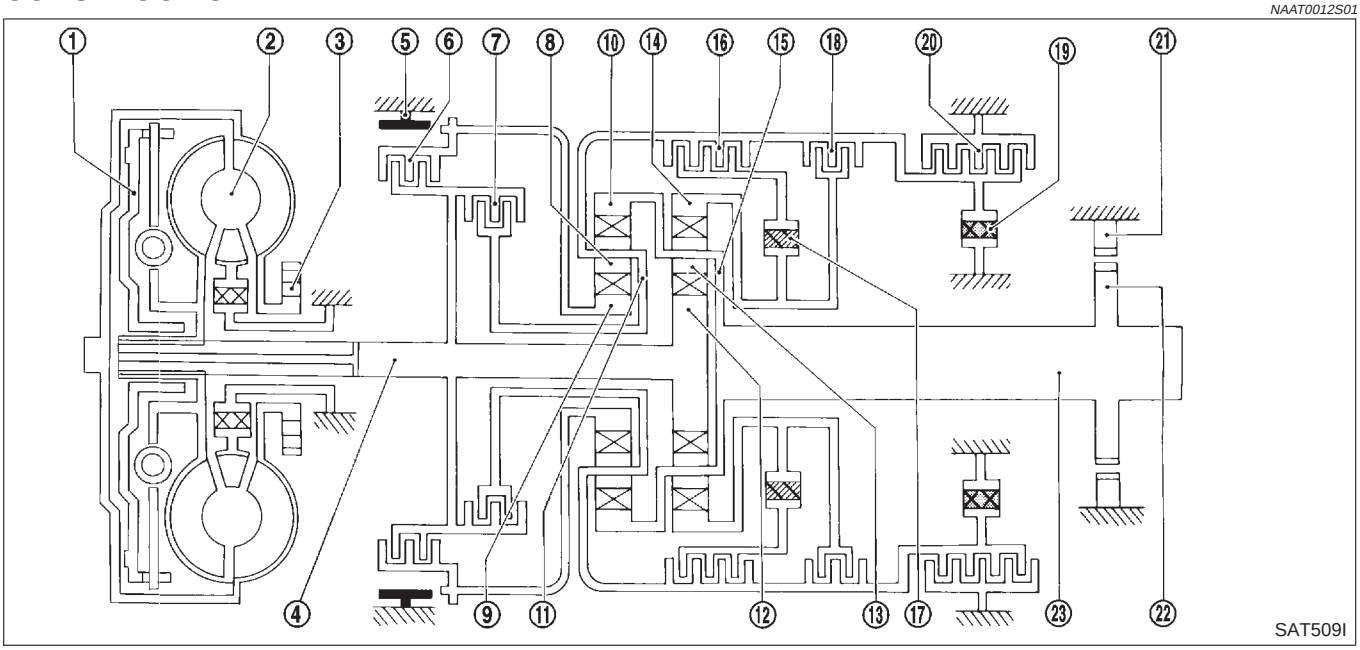

1. Torque converter clutch piston
2. Torque converter
3. Oil pump
4. Input shaft
5. Brake band
6. Reverse clutch
7. High clutch
8. Front pinion gear
9. Front sun gear
10. Front internal gear
11. Front planetary carrier
12. Rear sun gear
13. Rear pinion gear
14. Rear internal gear
15. Rear planetary carrier
16. Forward clutch
17. Forward one-way clutch
18. Overrun clutch
19. Low one-way clutch
20. Low & reverse brake
21. Parking pawl
22. Parking gear
23. Output shaft

FUNCTION OF CLUTCH AND BRAKE

NAAT0012S02

Clutch and brake components	Abbr.	Function
Reverse clutch **6**	R/C	To transmit input power to front sun gear **9**.
High clutch **7**	H/C	To transmit input power to front planetary carrier **11**.
Forward clutch **16**	F/C	To connect front planetary carrier **11** with forward one-way clutch **17**.
Overrun clutch **18**	O/C	To connect front planetary carrier **11** with rear internal gear **14**.
Brake band **5**	B/B	To lock front sun gear **9**.
Forward one-way clutch **17**	F/O.C	When forward clutch **16** is engaged, to stop rear internal gear **14** from rotating in opposite direction against engine revolution.
Low one-way clutch **19**	L/O.C	To stop front planetary carrier **11** from rotating in opposite direction against engine revolution.
Low & reverse brake **20**	L & R/B	To lock front planetary carrier **11**.

CLUTCH AND BAND CHART

NAAT0012S03

Shift position		Reverse clutch	High clutch	For-ward clutch	Over-run clutch	Band servo			For-ward one -way clutch	Low one-way clutch	Low & reverse brake	Lock-up	Remarks
						2nd apply	3rd release	4th apply					
P													PARK POSITION
R		○									○		REVERSE POSITION
N													NEUTRAL POSITION
D*4	1st			○	*1D				B	B			Automatic shift 1 ⇔ 2 ⇔ 3 ⇔ 4
	2nd			○	*1A	○			B				
	3rd		○	○	*1A	*2C	C		B			*1○	
	4th		○	C		*3C	C	○				○	
2	1st			○	D				B	B			Automatic shift 1 ⇔ 2
	2nd			○	*1A	○			B				
1	1st			○	○				B		○		Locks (held stationary) in 1st speed 1 ⇐ 2
	2nd			○	○	○			B				

*1: Operates when overdrive control switch is being set in "OFF" position.

*2: Oil pressure is applied to both 2nd "apply" side and 3rd "release" side of band servo piston. However, brake band does not contract because oil pressure area on the "release" side is greater than that on the "apply" side.

*3: Oil pressure is applied to 4th "apply" side in condition *2 above, and brake band contracts.

*4: A/T will not shift to 4th when overdrive control switch is set in "OFF" position.

○ : Operates.

A: Operates when throttle opening is less than 3/16, activating engine brake.

B: Operates during "progressive" acceleration.

C: Operates but does not affect power transmission.

D: Operates when throttle opening is less than 3/16, but does not affect engine brake.

POWER TRANSMISSION

=NAAT0012S04

"N" and "P" Positions

NAAT0012S0401

- "N" position
  No control members operate. Power from the input shaft is not transmitted to the output shaft since the clutch does not operate.
- "P" position
  Similar to the "N" position, no control members operate. The parking pawl interconnected with the select lever engages with the parking gear to mechanically hold the output shaft so that the power train is locked.

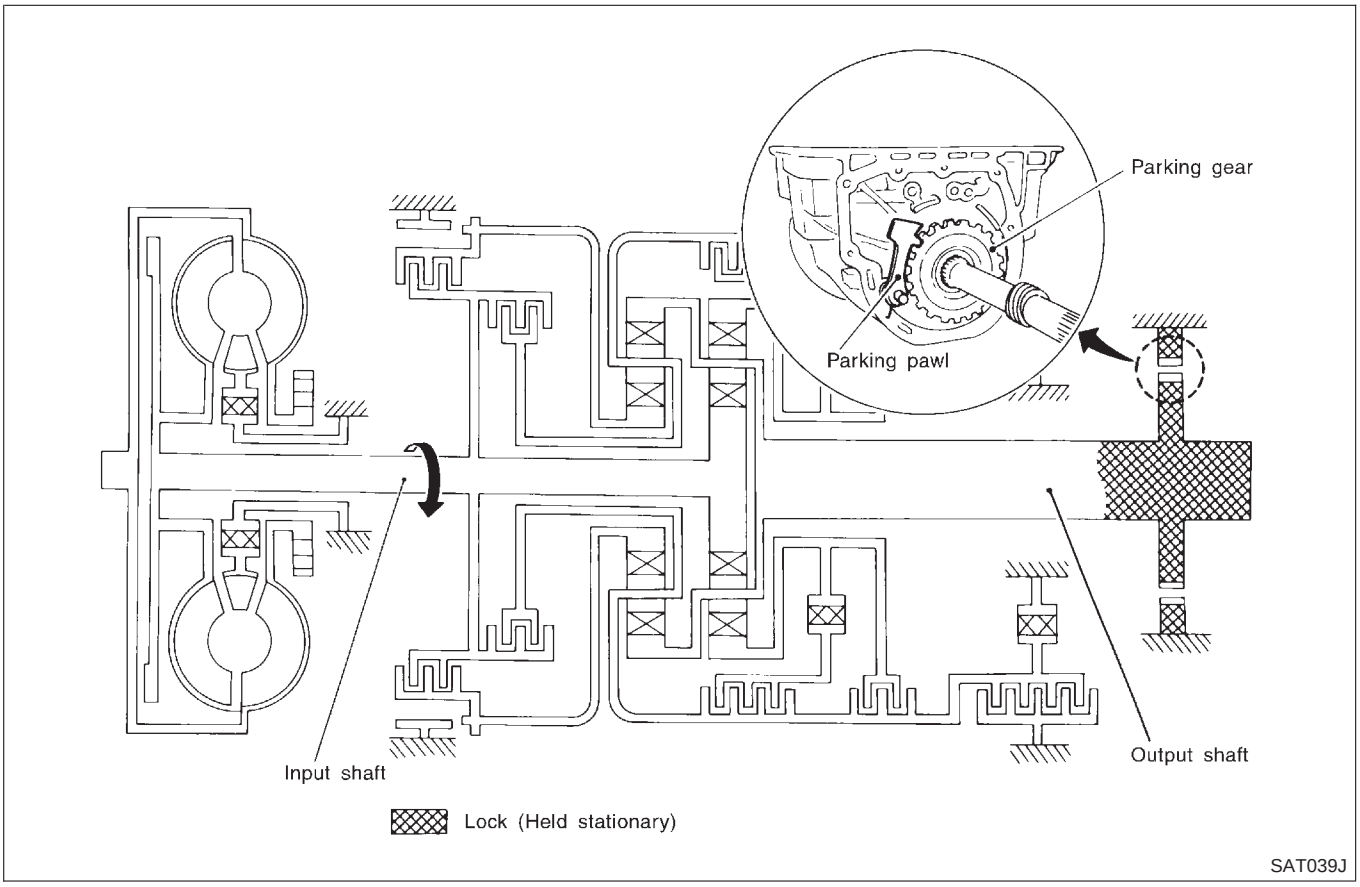

"1_1" Position

=NAAT0012S0406

Forward clutch **Forward one-way clutch** **Overrun clutch** **Low and reverse brake**	As overrun clutch engages, rear internal gear is locked by the operation of low and reverse brake. This is different from that of D_1 and 2_1.
Engine brake	Overrun clutch always engages, therefore engine brake can be obtained when decelerating.

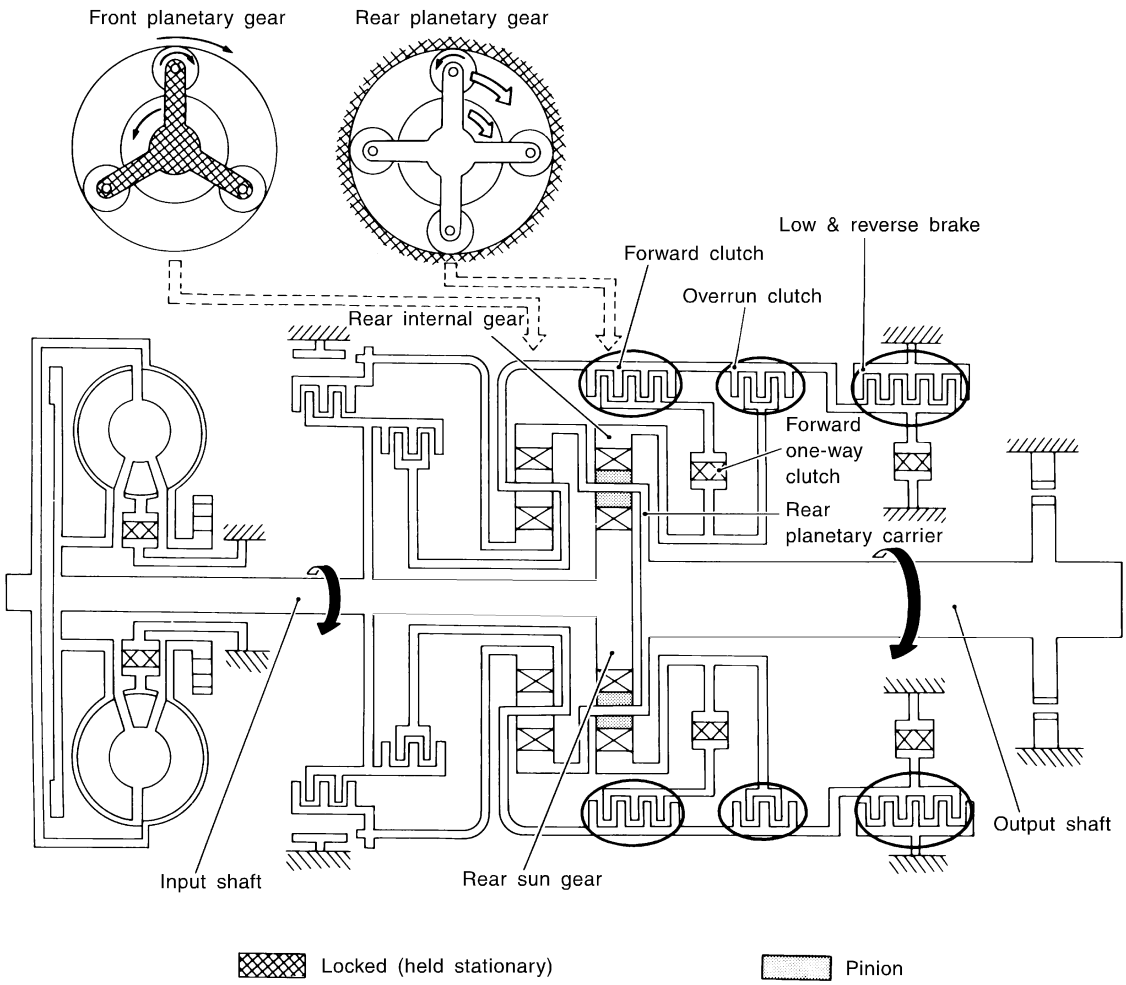

Power flow

Input shaft
⇩
Rear sun gear
⇩
Rear planetary carrier ⇨ Output shaft

SAT100JC

"D_1" and "2_1" Positions

=NAAT0012S0402

Forward one-way clutch **Forward clutch** **Low one-way clutch**	Rear internal gear is locked to rotate counterclockwise because of the functioning of these three clutches. (Start-up at D_1)
Overrun clutch engagement conditions (Engine brake)	D_1: Overdrive control switch in "OFF" Throttle opening less than 3/16 2_1: Throttle opening less than 3/16 At D_1 and 2_1 positions, engine brake is not activated due to free turning of low one-way clutch.

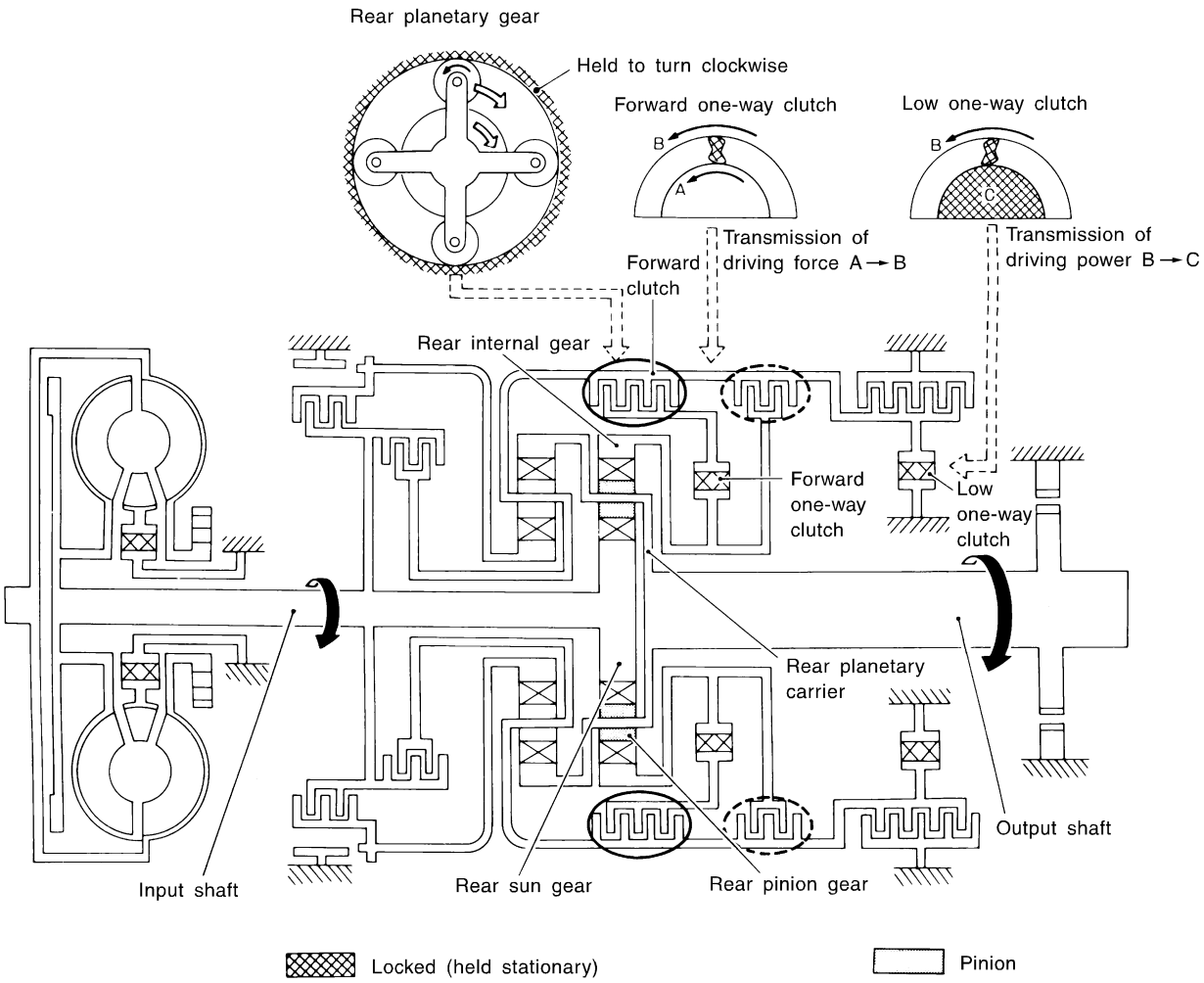

Power flow

Input shaft
⇩
Rear sun gear
⇩
Rear pinion gear
⇩
Rear planetary carrier → Output shaft

SAT096JC

"D_2", "2_2" and "1_2" Positions

=NAAT0012S0403

Forward clutch **Forward one-way clutch** **Brake band**	Rear sun gear drives rear planetary carrier and combined front internal gear. Front internal gear now rotates around front sun gear accompanying front planetary carrier. As front planetary carrier transfers the power to rear internal gear through forward clutch and forward one-way clutch, this rotation of rear internal gear increases the speed of rear planetary carrier compared with that of the 1st speed.
Overrun clutch engagement conditions	D_2: Overdrive control switch in "OFF" Throttle opening less than 3/16 2_2: Throttle opening less than 3/16 1_2: Always engaged

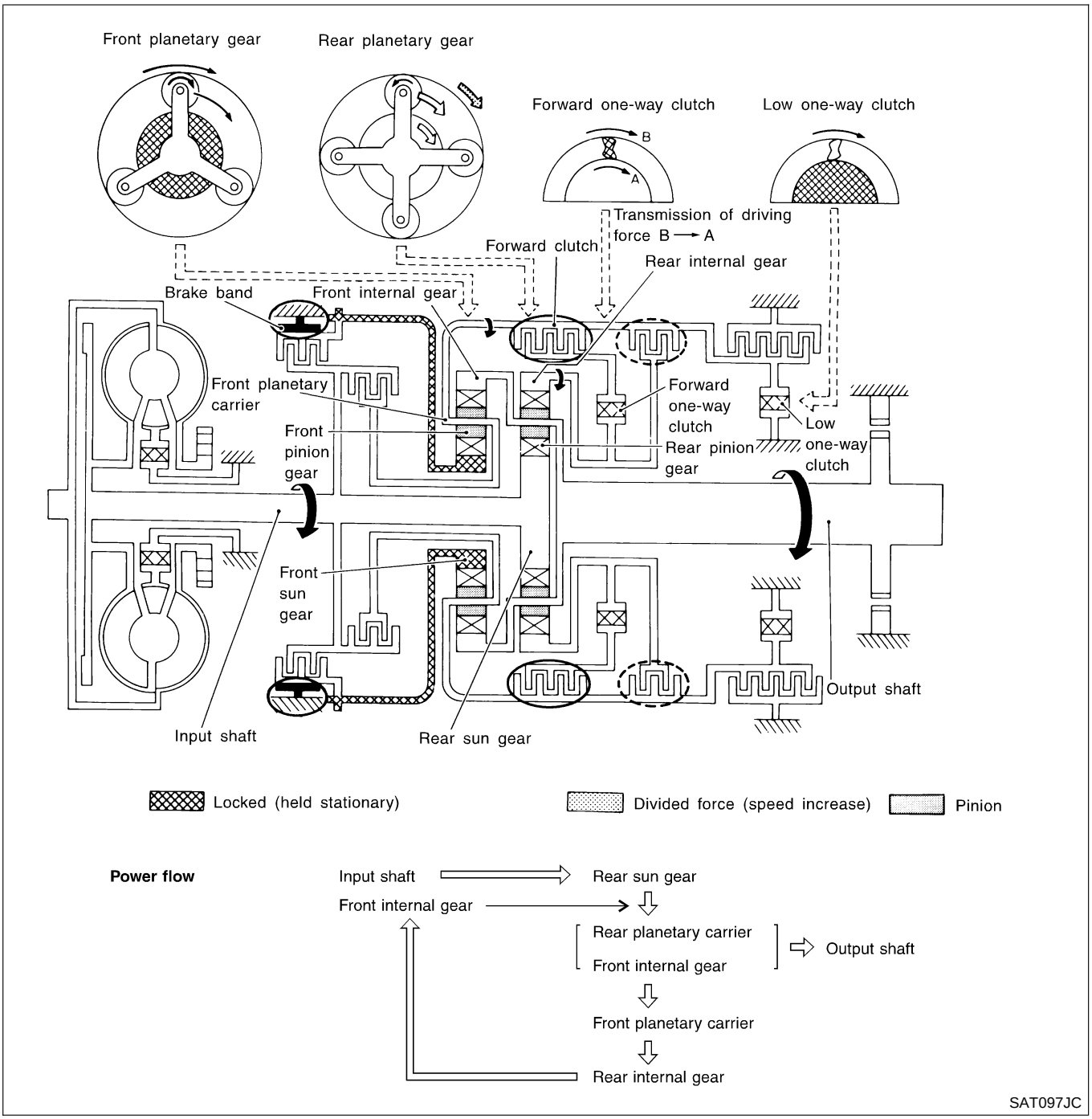

"D_3" Position

=NAAT0012S0404

High clutch **Forward clutch** **Forward one-way clutch**	Input power is transmitted to front planetary carrier through high clutch. And front planetary carrier is connected to rear internal gear by operation of forward clutch and forward one-way clutch. This rear internal gear rotation and another input (the rear sun gear) accompany rear planetary carrier to turn at the same speed.
Overrun clutch engagement conditions	D_3: Overdrive control switch in "OFF" Throttle opening less than 3/16

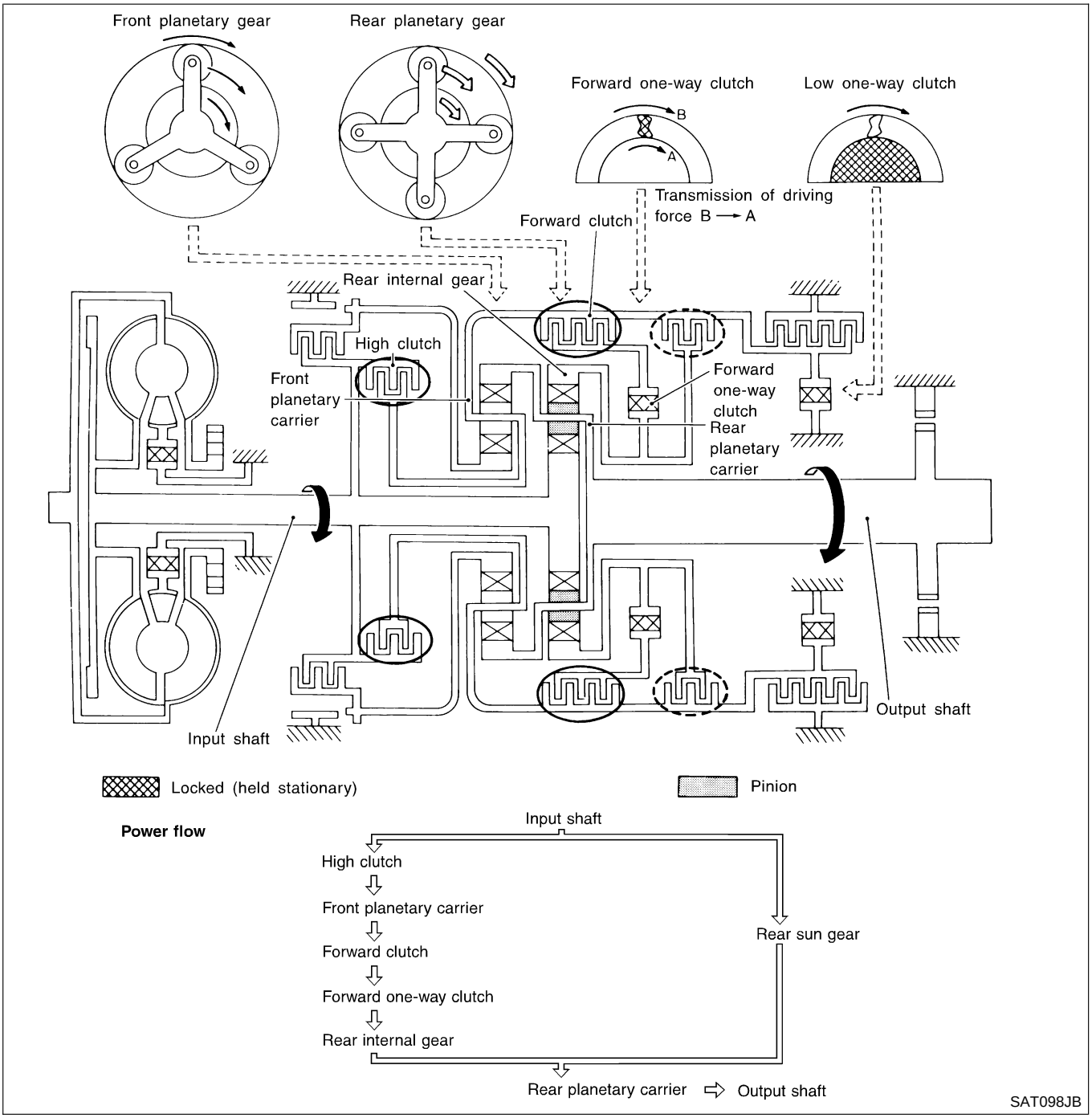

"D_4" (OD) Position

=NAAT0012S0405

High clutch **Brake band** **Forward clutch** (Does not affect power transmission)	Input power is transmitted to front carrier through high clutch. This front planetary carrier turns around the sun gear which is fixed by brake band and makes front internal gear (output) turn faster.
Engine brake	At D_4 position, there is no one-way clutch in the power transmission line and engine brake can be obtained when decelerating.

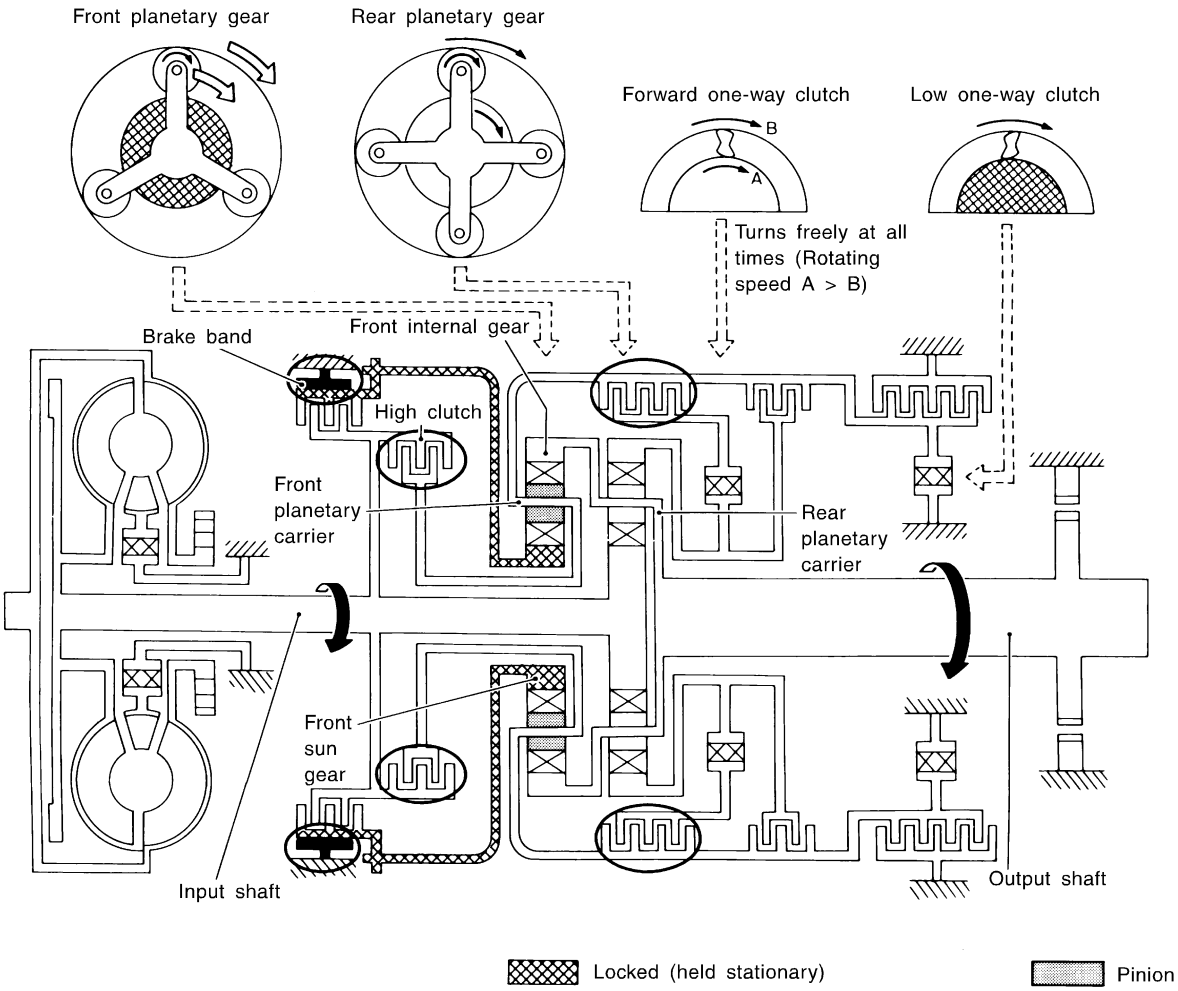

Power flow

Input shaft
⇩
High clutch
⇩
Front planetary carrier
⇩
Front pinion gear
⇨
Front internal gear
⇩
Rear planetary carrier
⇩
Output shaft

SAT099JB

"R" Position

=NAAT0012S0407

Reverse clutch **Low and reverse brake**	Front planetary carrier is stationary because of the operation of low and reverse brake. Input power is transmitted to front sun gear through reverse clutch, which drives front internal gear in the opposite direction.
Engine brake	As there is no one-way clutch in the power transmission line, engine brake can be obtained when decelerating.

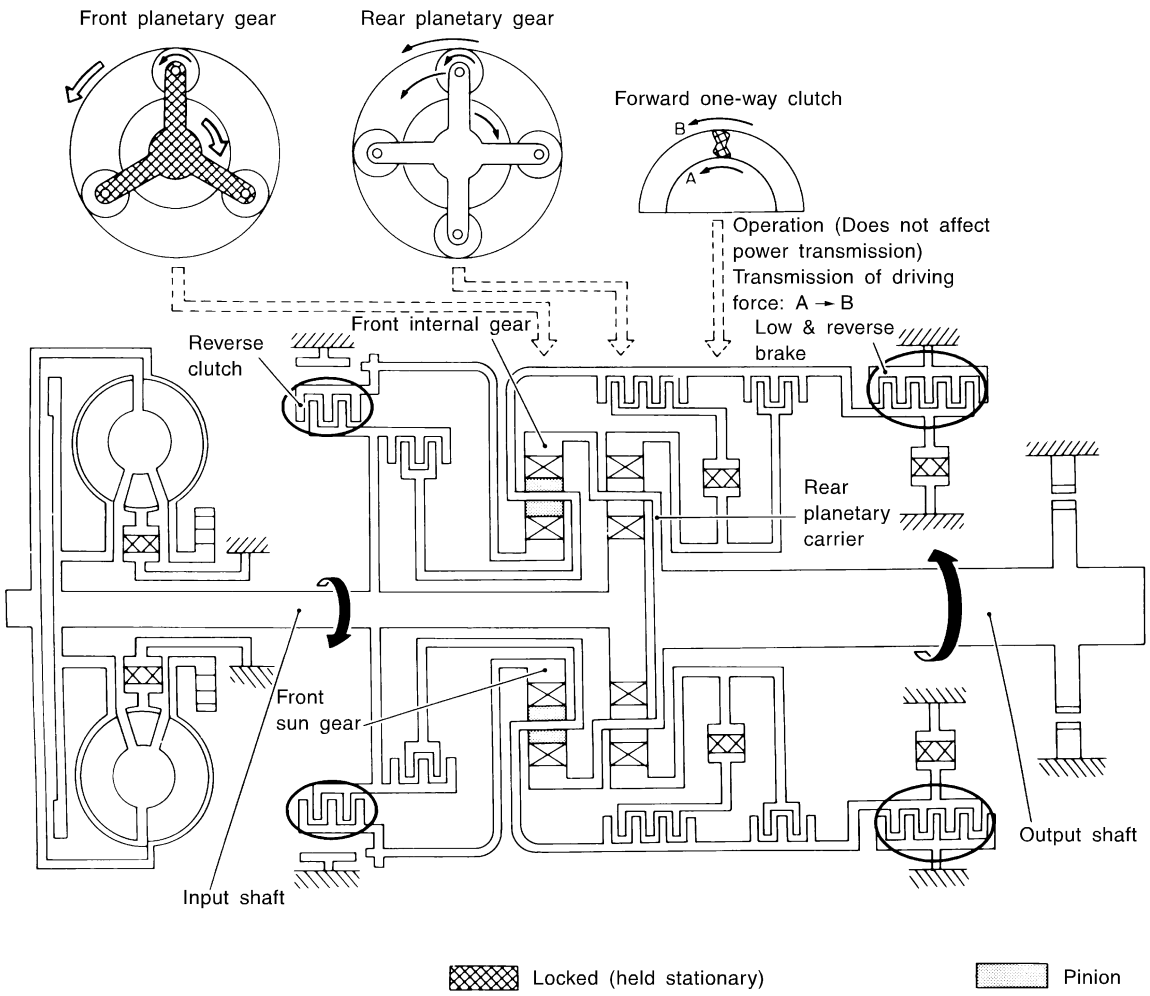

Power flow

Input shaft
⇩
Reverse clutch
⇩
Front pinion gear ⇦ Front sun gear
⇩
Front internal gear ⇨ Output shaft

SAT101JB

Control System

=NAAT0013

OUTLINE

NAAT0013S01

The automatic transmission senses vehicle operating conditions through various sensors or signals. It always controls the optimum shift position and reduces shifting and lock-up shocks.

SENSORS (or SIGNALS)		TCM		ACTUATORS
PNP switch Accelerator pedal position sensor (throttle position sensor) Closed throttle position signal Wide open throttle position signal Engine speed signal A/T fluid temperature sensor Revolution sensor Vehicle speed sensor Overdrive control switch signal Stop lamp switch signal Turbine revolution sensor	▶	Shift control Line pressure control Lock-up control Overrun clutch control Timing control Fail-safe control Self-diagnosis CONSULT-II communication line Duet-EU control	▶	Shift solenoid valve A Shift solenoid valve B Overrun clutch solenoid valve Torque converter clutch solenoid valve Line pressure solenoid valve O/D OFF indicator lamp T/F control unit

CONTROL SYSTEM

NAAT0013S02

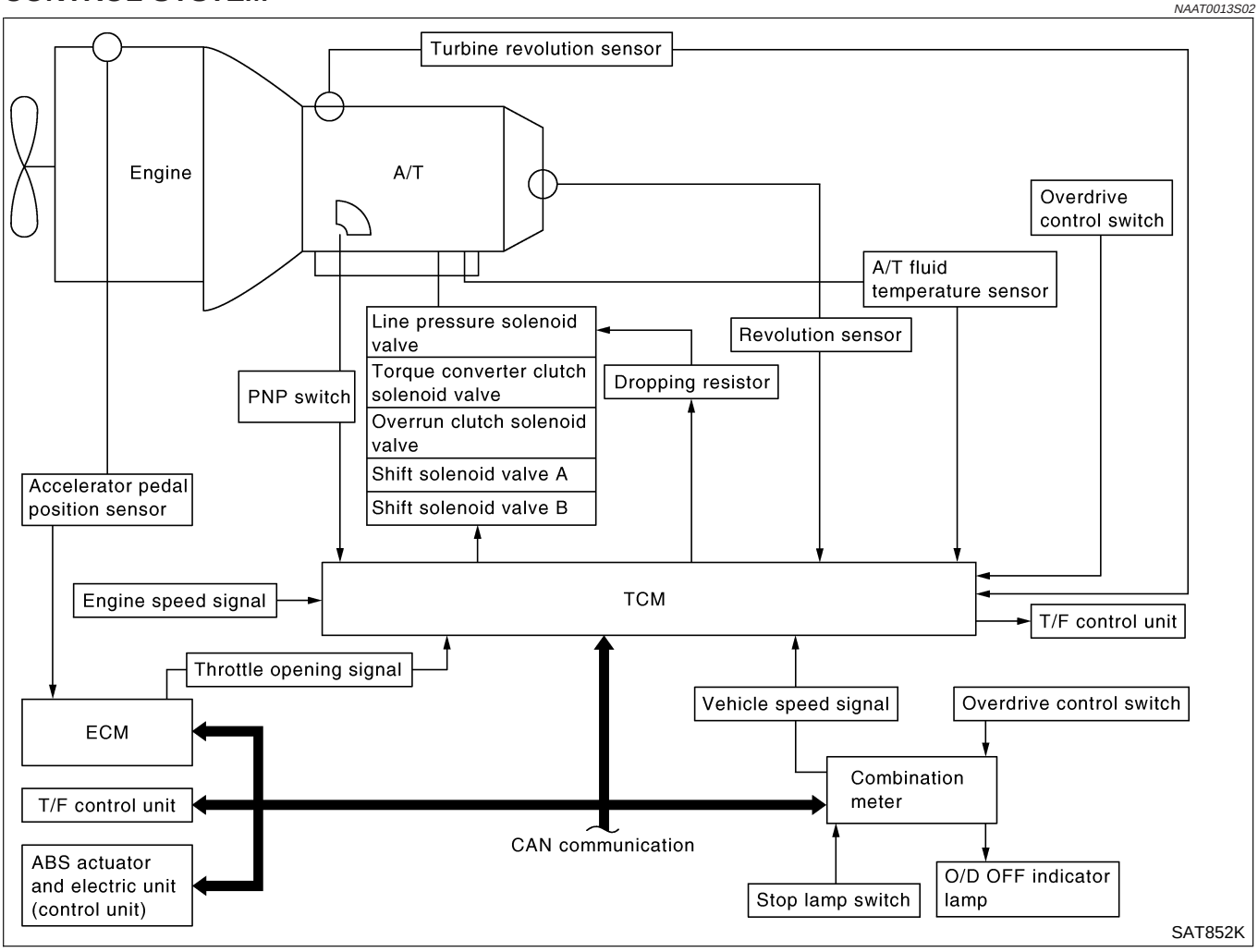

TCM FUNCTION

=NAAT0013S03

The function of the TCM is to:

- Receive input signals sent from various switches and sensors.
- Determine required line pressure, shifting point, lock-up operation, and engine brake operation.
- Send required output signals to the respective solenoids.

INPUT/OUTPUT SIGNAL OF TCM

NAAT0013S04

	Sensors and solenoid valves	Function
Input	PNP switch	Detects select lever position and sends a signal to TCM.
	Accelerator pedal position sensor (throttle position sensor)	Detects accelerator pedal position sensor as throttle position signal and sends a signal from ECM to TCM.
	Closed throttle position signal	Detects throttle valve's fully-closed position and sends a signal from ECM to TCM.
	Wide open throttle position signal	Detects a throttle valve position of greater than 1/2 of full throttle and sends a signal from ECM to TCM.
	Engine speed signal	From ECM.
	A/T fluid temperature sensor	Detects transmission fluid temperature and sends a signal to TCM.
	Revolution sensor	Detects output shaft rpm and sends a signal to TCM.
	Vehicle speed signal	Used as an auxiliary vehicle speed signal. Sends a signal when revolution sensor (installed on transmission) malfunctions.
	Overdrive control switch	Sends a signal, which prohibits a shift to "D_4" (overdrive) position, from unified meter control unit to the TCM.
	Turbine revolution sensor	Sends an input shaft revolution signal.
	Stop lamp switch	Sends the lock-up release signal from unified meter control unit to the TCM at time of D_4 (lock-up).
Output	Shift solenoid valve A/B	Selects shifting point suited to driving conditions in relation to a signal sent from TCM.
	Line pressure solenoid valve	Regulates (or decreases) line pressure suited to driving conditions in relation to a signal sent from TCM.
	Torque converter clutch solenoid valve	Regulates (or decreases) lock-up pressure suited to driving conditions in relation to a signal sent from TCM.
	Overrun clutch solenoid valve	Controls an "engine brake" effect suited to driving conditions in relation to a signal sent from TCM.
	O/D OFF indicator lamp	Shows TCM faults, when A/T control components malfunction.

Control Mechanism

NAAT0180

LINE PRESSURE CONTROL

NAAT0180S01

TCM has the various line pressure control characteristics to meet the driving conditions.
An ON-OFF duty signal is sent to the line pressure solenoid valve based on TCM characteristics.
Hydraulic pressure on the clutch and brake is electronically controlled through the line pressure solenoid valve to accommodate engine torque. This results in smooth shift operation.

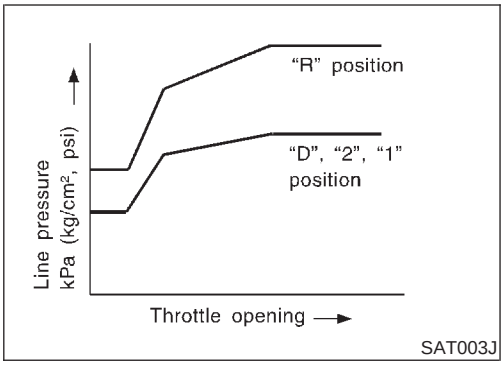

Normal Control

NAAT0180S0101

The line pressure to throttle opening characteristics is set for suitable clutch operation.

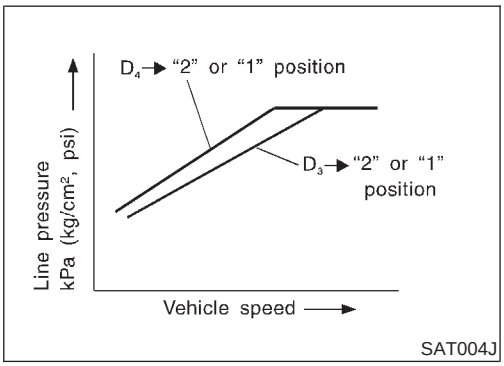

Back-up Control (Engine brake)

NAAT0180S0102

If the selector lever is shifted to "2" position while driving in D_4 (OD) or D_3, great driving force is applied to the clutch inside the transmission. Clutch operating pressure (line pressure) must be increased to deal with this driving force.

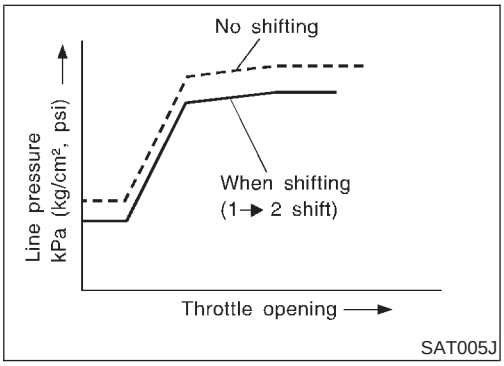

During Shift Change

NAAT0180S0103

The line pressure is temporarily reduced corresponding to a change in engine torque when shifting gears (that is, when the shift solenoid valve is switched for clutch operation) to reduce shifting shock.

At Low Fluid Temperature

NAAT0180S0104

- Fluid viscosity and frictional characteristics of the clutch facing change with fluid temperature. Clutch engaging or band-contacting pressure is compensated for, according to fluid temperature, to stabilize shifting quality.

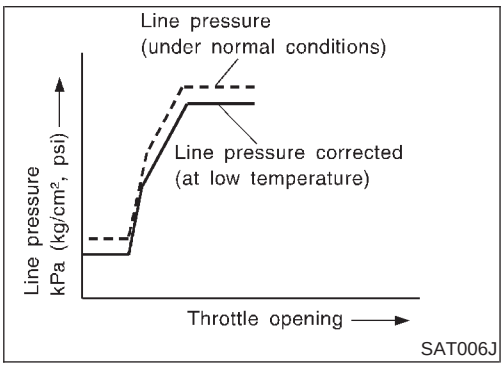

- The line pressure is reduced below 60°C (140°F) to prevent shifting shock due to low viscosity of automatic transmission fluid when temperature is low.

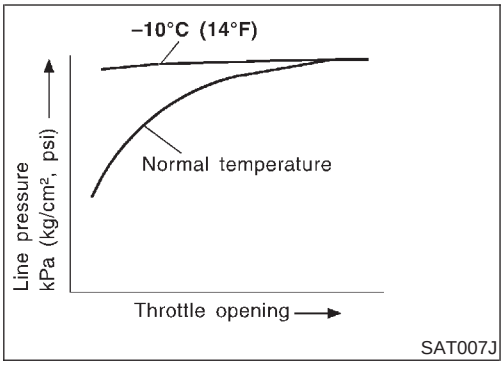

- Line pressure is increased to a maximum irrespective of the throttle opening when fluid temperature drops to −10°C (14°F). This pressure rise is adopted to prevent a delay in clutch and brake operation due to extreme drop of fluid viscosity at low temperature.

SHIFT CONTROL

NAAT0180S02

The shift is regulated entirely by electronic control to accommodate vehicle speed and varying engine operations. This is accomplished by electrical signals transmitted by the revolution sensor and accelerator pedal position sensor (throttle position sensor). This results in improved acceleration performance and fuel economy.

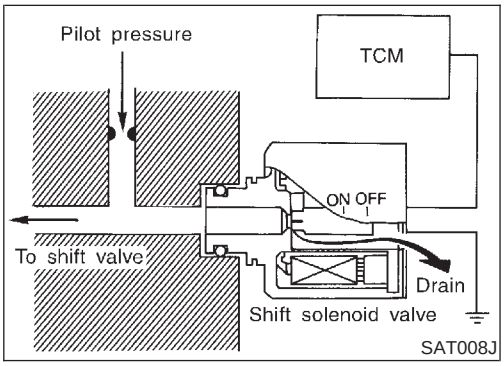

Control of Shift Solenoid Valves A and B

NAAT0180S0201

The TCM activates shift solenoid valves A and B according to signals from the accelerator pedal position sensor (throttle position sensor) and revolution sensor to select the optimum gear position on the basis of the shift schedule memorized in the TCM.
The shift solenoid valve performs simple ON-OFF operation. When set to "ON", the drain circuit closes and pilot pressure is applied to the shift valve.
[Relation between shift solenoid valves A and B and gear positions]

Shift solenoid valve	Gear position				
	D_1, 2_1, 1_1	D_2, 2_2, 1_2	D_3	D_4 (OD)	N-P
A	ON (Closed)	OFF (Open)	OFF (Open)	ON (Closed)	ON (Closed)
B	ON (Closed)	ON (Closed)	OFF (Open)	OFF (Open)	ON (Closed)

Control of Shift Valves A and B

NAAT0180S0202

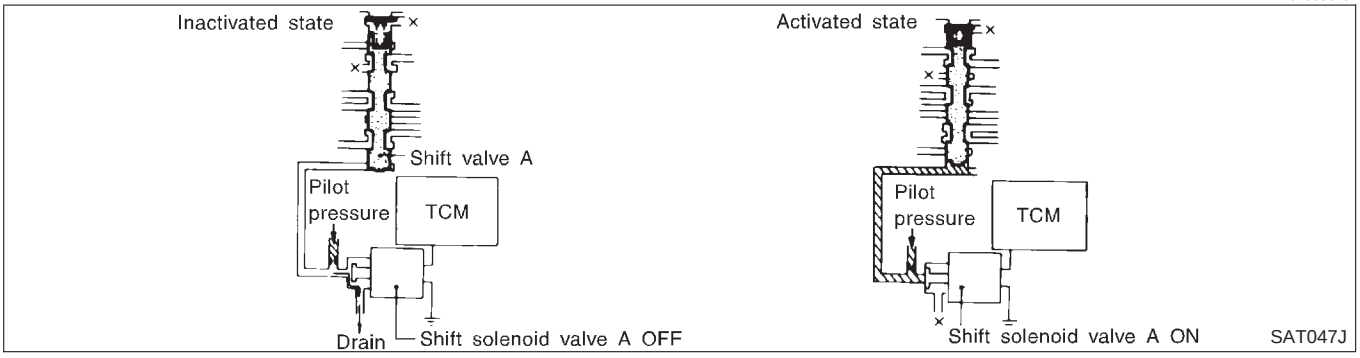

Pilot pressure generated by the operation of shift solenoid valves A and B is applied to the end face of shift valves A and B.
The drawing above shows the operation of shift valve B. When the shift solenoid valve is "ON", pilot pressure applied to the end face of the shift valve overcomes spring force, moving the valve upward.

LOCK-UP CONTROL

NAAT0180S03

The torque converter clutch piston in the torque converter is locked to eliminate torque converter slip to increase power transmission efficiency. The solenoid valve is controlled by an ON-OFF duty signal sent from the TCM. The signal is converted to oil pressure signal which controls the torque converter clutch piston.

Conditions for Lock-up Operation

NAAT0180S0301

When vehicle is driven in 4th gear position, vehicle speed and throttle opening are detected. If the detected values fall within the lock-up zone memorized in the TCM, lock-up is performed.

Overdrive control switch	ON	OFF
Selector lever	"D" position	
Gear position	D_4	D_3
Vehicle speed sensor	More than set value	
Accelerator pedal position sensor (Throttle position sensor)	Less than set opening	
Closed throttle position switch	OFF	
A/T fluid temperature sensor	More than 40°C (104°F)	

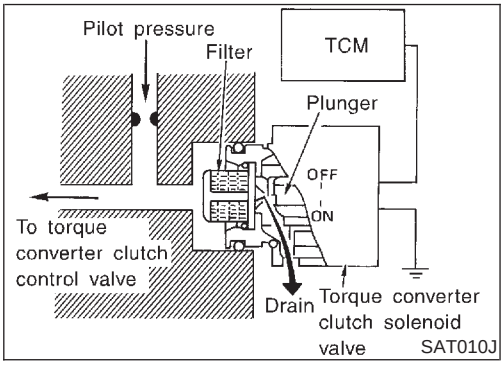

Torque Converter Clutch Solenoid Valve Control

NAAT0180S0302

The torque converter clutch solenoid valve is controlled by the TCM. The plunger closes the drain circuit during the "OFF" period, and opens the circuit during the "ON" period. If the percentage of OFF-time increases in one cycle, the pilot pressure drain time is reduced and pilot pressure remains high.
The torque converter clutch piston is designed to slip to adjust the ratio of ON-OFF, thereby reducing lock-up shock.

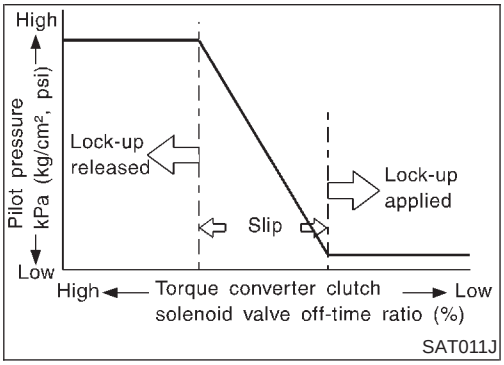

OFF-time INCREASING
↓
Amount of drain DECREASING
↓
Pilot pressure HIGH
↓
Lock-up RELEASING

Torque Converter Clutch Control Valve Operation

NAAT0180S0303

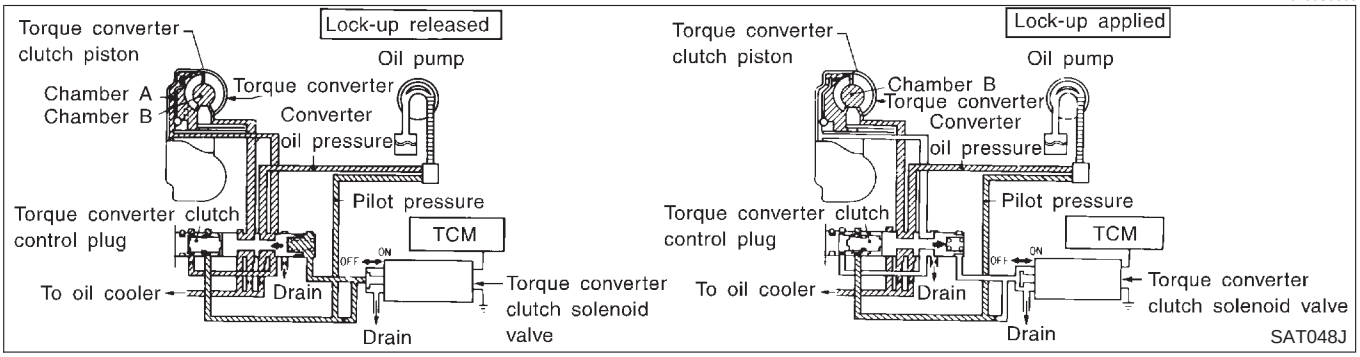

Lock-up Released

The OFF-duration of the torque converter clutch solenoid valve is long, and pilot pressure is high. The pilot pressure pushes the end face of the torque converter clutch control valve in combination with spring force to move the valve to the left. As a result, converter pressure is applied to chamber A (torque converter clutch piston release side). Accordingly, the torque converter clutch piston remains unlocked.

Lock-up Applied

When the OFF-duration of the torque converter clutch solenoid valve is short, pilot pressure drains and becomes low. Accordingly, the control valve moves to the right by the pilot pressure of the other circuit and converter pressure. As a result, converter pressure is applied to chamber B, keeping the torque converter clutch piston applied.

Also smooth lock-up is provided by transient application and release of the lock-up.

OVERRUN CLUTCH CONTROL (ENGINE BRAKE CONTROL)

NAAT0180S04

Forward one-way clutch is used to reduce shifting shocks in down-shifting operations. This clutch transmits engine torque to the wheels. However, drive force from the wheels is not transmitted to the engine because the one-way clutch rotates idle. This means the engine brake is not effective.

The overrun clutch operates when the engine brake is needed.

Overrun Clutch Operating Conditions

NAAT0180S0401

	Gear position	Throttle opening
"D" position	D_1, D_2, D_3 gear position	Less than 3/16
"2" position	2_1, 2_2 gear position	At any position
"1" position	1_1, 1_2 gear position	

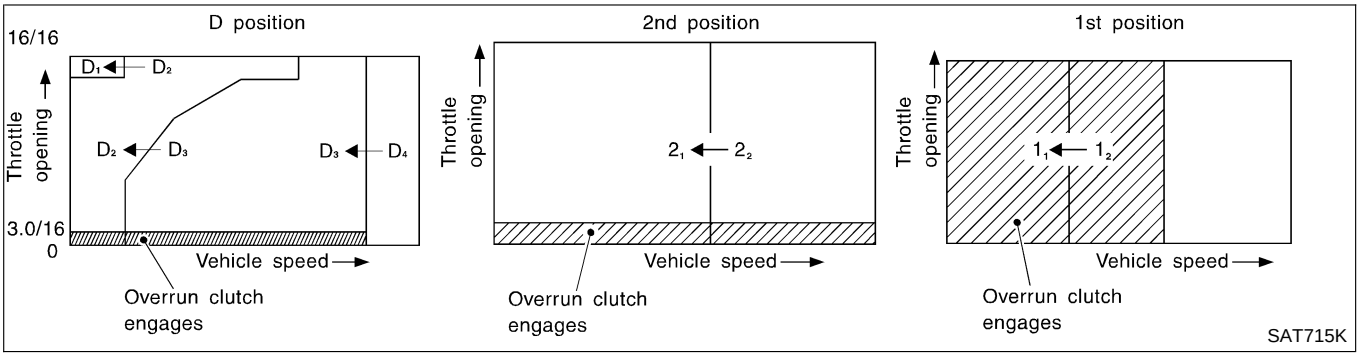

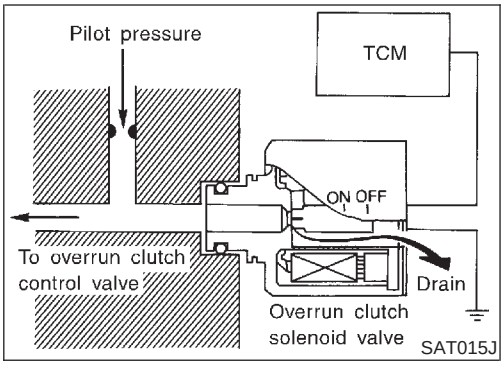

Overrun Clutch Solenoid Valve Control

NAAT0180S0402

The overrun clutch solenoid valve is operated by an ON-OFF signal transmitted by the TCM to provide overrun clutch control (engine brake control).

When this solenoid valve is "ON", the pilot pressure drain port closes. When it is "OFF", the drain port opens.

During the solenoid valve "ON" pilot pressure is applied to the end face of the overrun clutch control valve.

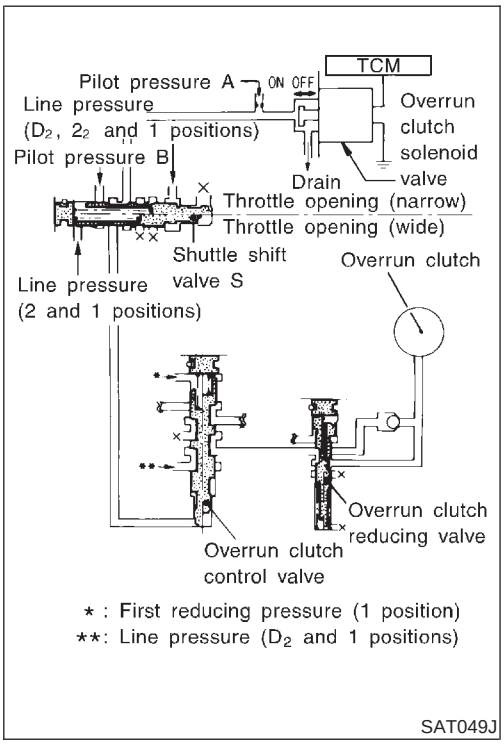

Overrun Clutch Control Valve Operation

NAAT0180S0403

When the solenoid valve is "ON", pilot pressure A is applied to the overrun clutch control valve. This pushes up the overrun clutch control valve. The line pressure is then shut off so that the clutch does not engage.

When the solenoid valve is "OFF", pilot pressure A is not generated. At this point, the overrun clutch control valve moves downward by spring force. As a result, overrun clutch operation pressure is provided by the overrun clutch reducing valve. This causes the overrun clutch to engage.

In the "1" position, the overrun clutch control valve remains pushed down so that the overrun clutch is engaged at all times.

Control Valve

NAAT0181

FUNCTION OF CONTROL VALVE

NAAT0181S01

Valve name	Function
• Pressure regulator valve • Pressure regulator plug • Pressure regulator sleeve plug	Regulate oil discharged from the oil pump to provide optimum line pressure for all driving conditions.
Pressure modifier valve	Used as a signal supplementary valve to the pressure regulator valve. Regulates pressure-modifier pressure (signal pressure) which controls optimum line pressure for all driving conditions.
Modifier accumulator piston	Smooths hydraulic pressure regulated by the pressure modifier valve to prevent pulsations.
Pilot valve	Regulates line pressure to maintain a constant pilot pressure level which controls lock-up mechanism, overrun clutch, 3-2 timing required for shifting.
Accumulator control valve Accumulator control sleeve	Regulate accumulator back-pressure to pressure suited to driving conditions.
Manual valve	Directs line pressure to oil circuits corresponding to select positions. Hydraulic pressure drains when the shift lever is in Neutral.

Control Valve (Cont'd)

Valve name	Function
Shift valve A	Simultaneously switches three oil circuits using output pressure of shift solenoid valve A to meet driving conditions (vehicle speed, throttle opening, etc.). Provides automatic downshifting and up-shifting (1st → 2nd → 3rd → 4th gears/4th → 3rd → 2nd → 1st gears) in combination with shift valve B.
Shift valve B	Simultaneously switches three oil circuits using output pressure of shift solenoid valve B in relation to driving conditions (vehicle speed, throttle opening, etc.). Provides automatic downshifting and up-shifting (1st → 2nd → 3rd → 4th gears/4th → 3rd → 2nd → 1st gears) in combination with shift valve A.
Shuttle shift valve S	Switches hydraulic circuits to provide 3-2 timing control and overrun clutch control in relation to the throttle opening. Inactivates the overrun clutch to prevent interlocking in 4th gear when the throttle is wide open.
Overrun clutch control valve	Switches hydraulic circuits to prevent engagement of the overrun clutch simultaneously with application of the brake band in 4th gear. (Interlocking occurs if the overrun clutch engages during D_4 gear operation.)
4-2 relay valve	Memorizes that the transmission is in 4th gear. Prevents the transmission from downshifting from 4th gear to 3rd and then to 2nd in combination with 4-2 sequence valve and shift valves A and B when downshifting from 4th to 2nd gear.
4-2 sequence valve	Prevents band servo pressure from draining before high clutch operating pressure and band servo releasing pressure drain (from the same circuit) during downshifting from 4th to 2nd gear.
Servo charger valve	An accumulator and a one-way orifice are used in the 2nd gear band servo oil circuit to dampen shifting shock when shifting from 1st to 2nd gear. To maintain adequate flow rate when downshifting from 4th or 3rd gear to 2nd gear, the servo charger valve directs 2nd gear band servo hydraulic pressure to the circuit without going through the one-way orifice when downshifting from 3rd or a higher gear.
3-2 timing valve	Prevents a late operation of the brake band when shifting selector lever from "D" to "1" or "2" position while driving in D_3.
"1" reducing valve	Reduces low & reverse brake pressure to dampen engine-brake shock when downshifting from the "1" position 2nd gear to 1st gear.
Overrun clutch reducing valve	Reduces oil pressure directed to the overrun clutch and prevents engine-brake shock. In "1" and "2" positions, line pressure acts on the overrun clutch reducing valve to increase the pressure-regulating point, with resultant engine brake capability.
Torque converter relief valve	Prevents an excessive rise in torque converter pressure.
Torque converter clutch control valve, torque converter clutch control plug and torque converter clutch control sleeve	Activate or inactivate the lock-up function. Also provide smooth lock-up through transient application and release of the lock-up system.
Shuttle shift valve D	Switches hydraulic circuits so that output pressure of the torque converter clutch solenoid valve acts on the lock-up valve in the "D" position of 2nd, 3rd and 4th gears. (In the "D" position 1st gear, lock-up is inhibited.) ● Lock-up control is not affected in "D" position 2nd, 3rd or 4th gears, unless output pressure of the torque converter clutch solenoid valve is generated by a signal from the control unit.

Introduction

NAAT0014

The A/T system has two self-diagnostic systems.
The first is the emission-related on board diagnostic system (OBD-II) performed by the TCM in combination with the ECM. The malfunction is indicated by the MIL (malfunction indicator lamp) and is stored as a DTC in the ECM memory but not the TCM memory.
The second is the TCM original self-diagnosis indicated by the O/D OFF indicator lamp. The malfunction is stored in the TCM memory. The detected items are overlapped with OBD-II self-diagnostic items. For detail, refer to AT-38.

OBD-II Function for A/T System

NAAT0182

The ECM provides emission-related on board diagnostic (OBD-II) functions for the A/T system. One function is to receive a signal from the TCM used with OBD-related parts of the A/T system. The signal is sent to the ECM when a malfunction occurs in the corresponding OBD-related part. The other function is to indicate a diagnostic result by means of the MIL (malfunction indicator lamp) on the instrument panel. Sensors, switches and solenoid valves are used as sensing elements.
The MIL automatically illuminates in One or Two Trip Detection Logic when a malfunction is sensed in relation to A/T system parts.

One or Two Trip Detection Logic of OBD-II

NAAT0015

ONE TRIP DETECTION LOGIC

NAAT0015S01

If a malfunction is sensed during the first test drive, the MIL will illuminate and the malfunction will be stored in the ECM memory as a DTC. The TCM is not provided with such a memory function.

TWO TRIP DETECTION LOGIC

NAAT0015S02

When a malfunction is sensed during the first test drive, it is stored in the ECM memory as a 1st trip DTC (diagnostic trouble code) or 1st trip freeze frame data. At this point, the MIL will not illuminate. — First Trip
If the same malfunction as that experienced during the first test drive is sensed during the second test drive, the MIL will illuminate. — Second Trip
A/T-related parts for which the MIL illuminates during the first or second test drive are listed below.

Items	MIL	
	One trip detection	Two trip detection
Shift solenoid valve A — DTC: P0750	X	
Shift solenoid valve B — DTC: P0755	X	
Accelerator pedal position sensor (throttle position sensor) or switch — DTC: P1705	X	
Except above		X

The “trip” in the “One or Two Trip Detection Logic” means a driving mode in which self-diagnosis is performed during vehicle operation.

OBD-II Diagnostic Trouble Code (DTC)

NAAT0016

HOW TO READ DTC AND 1ST TRIP DTC

NAAT0016S01

DTC and 1st trip DTC can be read by the following methods.
(with CONSULT-II or GST) CONSULT-II or GST (Generic Scan Tool) Examples: P0705, P0710, P0720, P0725, etc.
These DTCs are prescribed by SAE J2012.
(CONSULT-II also displays the malfunctioning component or system.)

- **1st trip DTC No. is the same as DTC No.**
- **Output of the diagnostic trouble code indicates that the indicated circuit has a malfunction. However, in case of the Mode II and GST they do not indicate whether the malfunction is still occurring or occurred in the past and returned to normal.**
  CONSULT-II can identify them as shown below. Therefore, using CONSULT-II (if available) is recommended.

A sample of CONSULT-II display for DTC and 1st trip DTC is shown on the next page. DTC or 1st trip DTC of a malfunction is displayed in SELF-DIAGNOSTIC RESULTS mode for “ENGINE” with CONSULT-II. Time data indicates how many times the vehicle was driven after the last detection of a DTC.

SELECT SYSTEM
A/T
ENGINE

SAT014K

If the DTC is being detected currently, the time data will be "0".

SELF-DIAG RESULTS	
DTC RESULTS	TIME
PNP SW/CIRC [P0705]	0

SAT015K

If a 1st trip DTC is stored in the ECM, the time data will be "1t".

SELF-DIAG RESULTS	
DTC RESULTS	TIME
PNP SW/CIRC [P0705]	1 t

SAT016K

Freeze Frame Data and 1st Trip Freeze Frame Data

NAAT0016S0101

The ECM has a memory function, which stores the driving condition such as fuel system status, calculated load value, engine coolant temperature, short term fuel trim, long term fuel trim, engine speed and vehicle speed at the moment the ECM detects a malfunction.

Data which are stored in the ECM memory, along with the 1st trip DTC, are called 1st trip freeze frame data, and the data, stored together with the DTC data, are called freeze frame data and displayed on CONSULT-II or GST. The 1st trip freeze frame data can only be displayed on the CONSULT-II screen, not on the GST. For detail, refer to EC-103, "CONSULT-II".

Only one set of freeze frame data (either 1st trip freeze frame data of freeze frame data) can be stored in the ECM. 1st trip freeze frame data is stored in the ECM memory along with the 1st trip DTC. There is no priority for 1st trip freeze frame data and it is updated each time a different 1st trip DTC is detected. However, once freeze frame data (2nd trip detection/MIL on) is stored in the ECM memory, 1st trip freeze frame data is no longer stored. Remember, only one set of freeze frame data can be stored in the ECM. The ECM has the following priorities to update the data.

Priority	Items	
1	Freeze frame data	Misfire — DTC: P0300 - P0306 Fuel Injection System Function — DTC: P0171, P0172, P0174, P0175
2		Except the above items (Includes A/T related items)
3	1st trip freeze frame data	

Both 1st trip freeze frame data and freeze frame data (along with the DTCs) are cleared when the ECM memory is erased.

HOW TO ERASE DTC

NAAT0016S02

The diagnostic trouble code can be erased by CONSULT-II, GST or ECM DIAGNOSTIC TEST MODE as described following.

- **If the battery terminal is disconnected, the diagnostic trouble code will be lost within 24 hours.**
- **When you erase the DTC, using CONSULT-II or GST is easier and quicker than switching the mode selector on the ECM.**

The following emission-related diagnostic information is cleared from the ECM memory when erasing DTC related to OBD-II. For details, refer to EC-78, "Emission-related Diagnostic Information".

- **Diagnostic trouble codes (DTC)**
- **1st trip diagnostic trouble codes (1st trip DTC)**
- **Freeze frame data**
- **1st trip freeze frame data**
- **System readiness test (SRT) codes**
- **Test values**

HOW TO ERASE DTC (WITH CONSULT-II)

NAAT0016S03

- **If a DTC is displayed for both ECM and TCM, it needs to be erased for both ECM and TCM.**

1. If the ignition switch stays "ON" after repair work, be sure to turn ignition switch "OFF" once. Wait at least 5 seconds and then turn it "ON" (engine stopped) again.
2. Turn CONSULT-II "ON" and touch "A/T".
3. Touch "SELF-DIAG RESULTS".
4. Touch "ERASE". (The DTC in the TCM will be erased.) Then touch "BACK" twice.
5. Touch "ENGINE".
6. Touch "SELF-DIAG RESULTS".
7. Touch "ERASE". (The DTC in the ECM will be erased.)

How to erase DTC (With CONSULT-II)

1. If the ignition switch stays "ON" after repair work, be sure to turn ignition switch "OFF" once. Wait at least 5 seconds and then turn it "ON" (engine stopped) again.

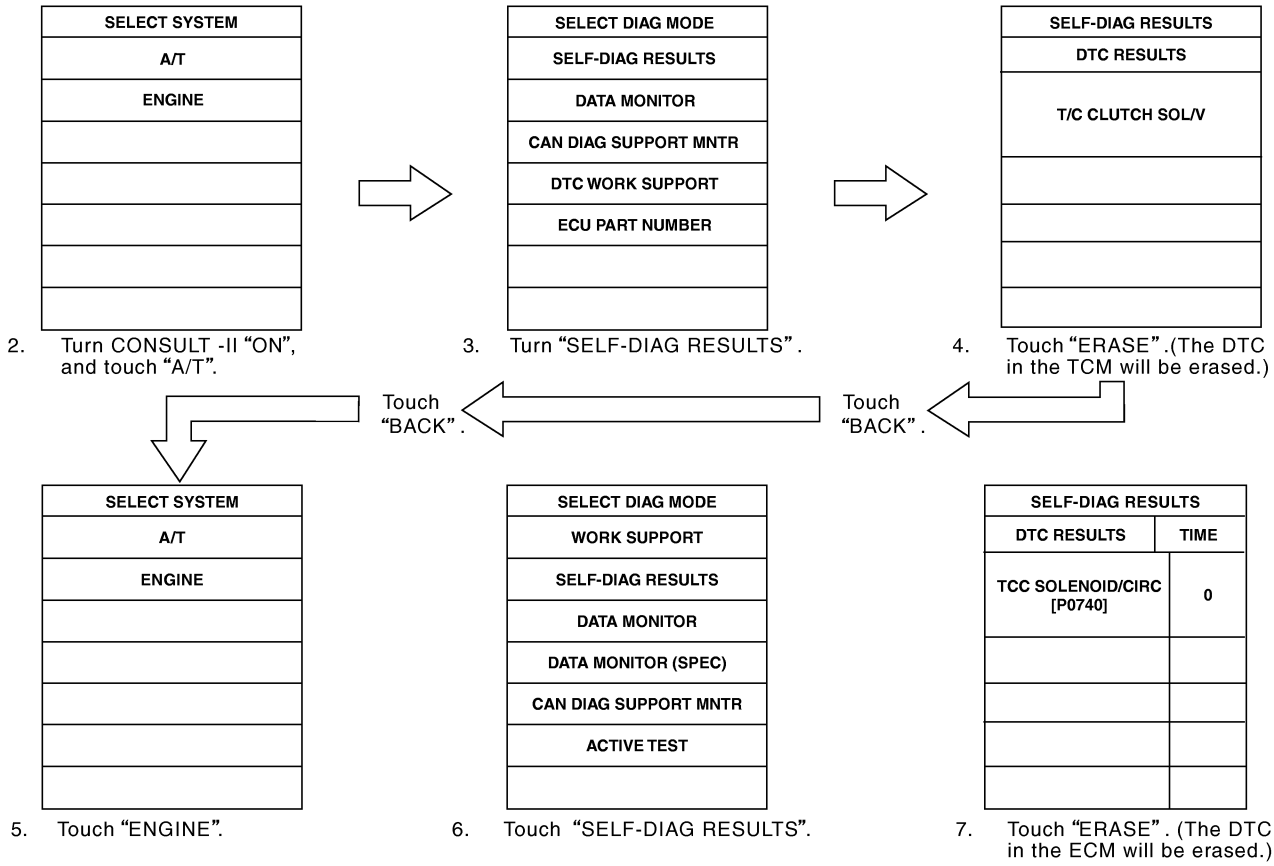

SAT857K

HOW TO ERASE DTC (WITH GST)

NAAT0016S04

1. If the ignition switch stays "ON" after repair work, be sure to turn ignition switch "OFF" once. Wait at least 5 seconds and then turn it "ON" (engine stopped) again.
2. Perform "TCM SELF-DIAGNOSTIC PROCEDURE". Refer to AT-48.
3. Select Mode 4 with Generic Scan Tool (GST). For details, refer to EC-117, "DESCRIPTION".

HOW TO ERASE DTC (NO TOOLS)

NAAT0016S05

1. If the ignition switch stays "ON" after repair work, be sure to turn ignition switch "OFF" once. Wait at least 5 seconds and then turn it "ON" (engine stopped) again.
2. Perform "TCM SELF-DIAGNOSTIC PROCEDURE (No Tools)". Refer to AT-48. (The engine warm-up step can be skipped when performing the diagnosis only to erase the DTC.)

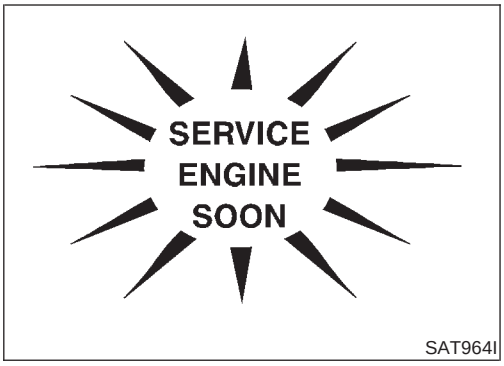

Malfunction Indicator Lamp (MIL)

=NAAT0183

The MIL is located on the instrument panel.

1. The MIL will light up when the ignition switch is turned ON without the engine running. This is a bulb check.
- If the MIL does not light up, refer to EL-130, “Schematic”. (Or refer to EC-757, “Wiring Diagram”.)
2. When the engine is started, the MIL should go off.
   If the MIL remains on, the on board diagnostic system has detected an engine system malfunction. For detail, refer to EC-77, “Introduction”.

CONSULT-II

NAAT0184

After performing “SELF-DIAGNOSTIC PROCEDURE (WITH CONSULT-II)” (AT-38), place check marks for results on the “DIAGNOSTIC WORKSHEET”, AT-57. Reference pages are provided following the items.

NOTICE:

1) The CONSULT-II electrically displays shift timing and lock-up timing (that is, operation timing of each solenoid).
   Check for time difference between actual shift timing and the CONSULT-II display. If the difference is noticeable, mechanical parts (except solenoids, sensors, etc.) may be malfunctioning. Check mechanical parts using applicable diagnostic procedures.
2) Shift schedule (which implies gear position) displayed on CONSULT-II and that indicated in Service Manual may differ slightly. This occurs because of the following reasons:
- Actual shift schedule has more or less tolerance or allowance,
- Shift schedule indicated in Service Manual refers to the point where shifts start, and
- Gear position displayed on CONSULT-II indicates the point where shifts are completed.
3) Shift solenoid valve “A” or “B” is displayed on CONSULT-II at the start of shifting. Gear position is displayed upon completion of shifting (which is computed by TCM).
4) Additional CONSULT-II information can be found in the Operation Manual supplied with the CONSULT-II unit.

FUNCTION

NAAT0184S07

Diagnostic test mode	Function	Reference
Self-diagnostic results	Self-diagnostic results can be read and erased quickly.	Refer to AT-38
Data monitor	Input/Output data in the ECM can be read.	Refer to AT-40
CAN diagnostic support monitor	The results of transmit/receive diagnosis of CAN communication can be read.	—
Function test	Conducted by CONSULT-II instead of a technician to determine whether each system is “OK” or “NG”.	—
DTC work support	Select the operating condition to confirm Diagnosis Trouble Codes.	Refer to AT-44
ECM part number	ECM part number can be read.	—

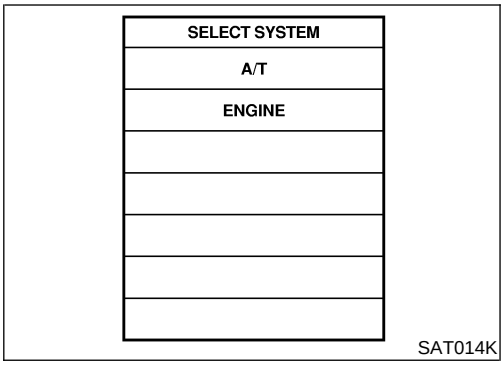

SELF-DIAGNOSTIC PROCEDURE (WITH CONSULT-II)

NAAT0184S01

1. Turn on CONSULT-II and touch "ENGINE" for OBD-II detected items or touch "A/T" for TCM self-diagnosis.
   If A/T is not displayed, check TCM power supply and ground circuit. Refer to AT-95. If result is NG, refer to EL-11, "Schematic".

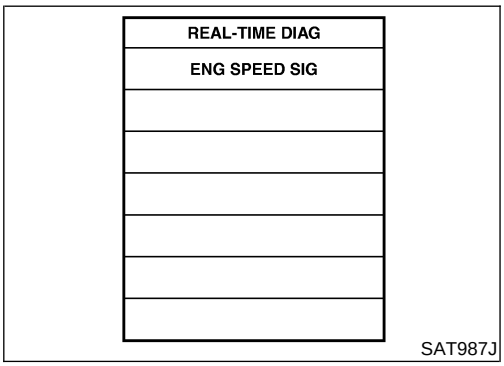

2. Touch "SELF-DIAG RESULTS".
   Display shows malfunction experienced since the last erasing operation.
   CONSULT-II performs REAL-TIME SELF-DIAGNOSIS.
   Also, any malfunction detected while in this mode will be displayed at real time.

SELF-DIAGNOSTIC RESULT TEST MODE

NAAT0184S02

Detected items (Screen terms for CONSULT-II, "SELF-DIAG RESULTS" test mode)		Malfunction is detected when ...	TCM self-diagnosis	OBD-II (DTC)
"A/T"	"ENGINE"		O/D OFF Available by O/D OFF indicator lamp	SERVICE ENGINE SOON Available by malfunction indicator lamp*2, "ENGINE" on CONSULT-II or GST
PNP switch circuit		• TCM does not receive the correct voltage signal (based on the gear position) from the switch.	—	P0705
—	PNP SW/CIRC			
Revolution sensor		• TCM does not receive the proper voltage signal from the sensor.	X	P0720
VHCL SPEED SEN·A/T	VEH SPD SEN/CIR AT			
Vehicle speed sensor (Meter)		• TCM does not receive the proper voltage signal from the sensor.	X	—
VHCL SPEED SEN·MTR	—			
A/T 1st gear function		• A/T cannot be shifted to the 1st gear position even if electrical circuit is good.	—	P0731*1
—	A/T 1ST GR FNCTN			
A/T 2nd gear function		• A/T cannot be shifted to the 2nd gear position even if electrical circuit is good.	—	P0732*1
—	A/T 2ND GR FNCTN			
A/T 3rd gear function		• A/T cannot be shifted to the 3rd gear position even if electrical circuit is good.	—	P0733*1
—	A/T 3RD GR FNCTN			
A/T 4th gear function		• A/T cannot be shifted to the 4th gear position even if electrical circuit is good.	—	P0734*1
—	A/T 4TH GR FNCTN			

CONSULT-II (Cont'd)

Detected items (Screen terms for CONSULT-II, "SELF-DIAG RESULTS" test mode)		Malfunction is detected when ...	TCM self-diagnosis	OBD-II (DTC)
"A/T"	"ENGINE"		O/D OFF Available by O/D OFF indicator lamp	SERVICE ENGINE SOON Available by malfunction indicator lamp*2, "ENGINE" on CONSULT-II or GST
A/T TCC S/V function (lock-up)		• A/T cannot perform lock-up even if electrical circuit is good.	—	P0744*1
—	A/T TCC S/V FNCTN			
Shift solenoid valve A		• TCM detects an improper voltage drop when it tries to operate the solenoid valve.	X	P0750
SHIFT SOLENOID/V A	SFT SOL A/CIRC			
Shift solenoid valve B		• TCM detects an improper voltage drop when it tries to operate the solenoid valve.	X	P0755
SHIFT SOLENOID/V B	SFT SOL B/CIRC			
Overrun clutch solenoid valve		• TCM detects an improper voltage drop when it tries to operate the solenoid valve.	X	P1760
OVERRUN CLUTCH S/V	O/R CLUCH SOL/ CIRC			
T/C clutch solenoid valve		• TCM detects an improper voltage drop when it tries to operate the solenoid valve.	X	P0740
T/C CLUTCH SOL/V	TCC SOLENOID/ CIRC			
Line pressure solenoid valve		• TCM detects an improper voltage drop when it tries to operate the solenoid valve.	X	P0745
LINE PRESSURE S/V	L/PRESS SOL/CIRC			
Accelerator pedal position sensor (throttle position sensor)		• TCM receives an excessively low or high voltage from the sensor.	X	P1705
THROTTLE POSI SEN	TP SEN/CIRC A/T			
Engine speed signal		• TCM does not receive the proper voltage signal from the ECM.	X	P0725
ENGINE SPEED SIG				
A/T fluid temperature sensor		• TCM receives an excessively low or high voltage from the sensor.	X	P0710
BATT/FLUID TEMP SEN	ATF TEMP SEN/ CIRC			
CAN communication		• The CAN communication line is open or shorted.	X	EC-54
CAN COMM LINE	—			
Turbine revolution sensor		• TCM does not receive the proper voltage signal from the sensor.	X	—
TURBINE REV	—			
TCM (RAM)		• TCM memory (RAM) is malfunctioning.	—	—
CONTROL UNIT (RAM)	—			
TCM (ROM)		• TCM memory (ROM) is malfunctioning.	—	—
CONTROL UNIT (ROM)	—			

Detected items (Screen terms for CONSULT-II, "SELF-DIAG RESULTS" test mode)		Malfunction is detected when ...	TCM self-diagnosis	OBD-II (DTC)
"A/T"	"ENGINE"		O/D OFF Available by O/D OFF indicator lamp	SERVICE ENGINE SOON Available by malfunction indicator lamp*2, "ENGINE" on CONSULT-II or GST
TCM (EEP ROM)		● TCM memory (EEP ROM) is malfunctioning.	—	—
CONTROL UNIT (EEP ROM)	—			
Initial start		● This is not a malfunction message (Whenever shutting off a power supply to the TCM, this message appears on the screen.)	X	—
INITIAL START	—			
No failure (NO DTC IS DETECTED FURTHER TESTING MAY BE REQUIRED)		● No failure has been detected.	X	X

X: Applicable
—: Not applicable
*1: These malfunctions cannot be displayed by MIL SERVICE ENGINE SOON if another malfunction is assigned to MIL.
*2: Refer to EC-94, "DESCRIPTION".

DATA MONITOR MODE (A/T)

NAAT0184S03

Item	Display	Selection monitor item			Description	Remarks
		TCM INPUT SIGNALS	MAIN SIGNALS	SELECTION FROM MENU		
Vehicle speed sensor 1 (A/T) (Revolution sensor)	VHCL/S SE·A/T [km/h] or [mph]	X	—	▼	● Vehicle speed computed from signal of revolution sensor is displayed.	When racing engine in "N" or "P" position with vehicle stationary, CONSULT-II data may not indicate 0 km/h (0 mph).
Vehicle speed sensor 2 (Meter)	VHCL/S SE·MTR [km/h] or [mph]	X	—	▼	● Vehicle speed computed from signal of vehicle speed sensor is displayed.	Vehicle speed display may not be accurate under approx. 10 km/h (6 mph). It may not indicate 0 km/h (0 mph) when vehicle is stationary.
Accelerator pedal position sensor (throttle position sensor)	THRTL POS SEN [V]	X	—	▼	● Accelerator pedal position sensor (throttle position sensor) signal voltage is displayed.	
A/T fluid temperature sensor	FLUID TEMP SE [V]	X	—	▼	● A/T fluid temperature sensor signal voltage is displayed. ● Signal voltage lowers as fluid temperature rises.	
Battery voltage	BATTERY VOLT [V]	X	—	▼	● Source voltage of TCM is displayed.	

Item	Display	Selection monitor item			Description	Remarks
		TCM INPUT SIGNALS	MAIN SIGNALS	SELECTION FROM MENU		
Engine speed	ENGINE SPEED [rpm]	X	X	▼	● Engine speed, computed from engine speed signal, is displayed.	Engine speed display may not be accurate under approx. 800 rpm. It may not indicate 0 rpm even when engine is not running.
Turbine revolution sensor	TURBINE REV [rpm]	X	—	▼	● Turbine revolution computed from signal of turbine revolution sensor is displayed.	Error may occur under approx. 800 rpm and will not indicate 0 rpm even if engine is not running.
Overdrive control switch	OVERDRIVE SW [ON/OFF]	X	—	▼	● ON/OFF state computed from signal of overdrive control SW is displayed.	
PN position switch	PN POSI SW [ON/OFF]	X	—	▼	● ON/OFF state computed from signal of PN position SW is displayed.	
R position switch	R POSITION SW [ON/OFF]	X	—	▼	● ON/OFF state computed from signal of R position SW is displayed.	
D position switch	D POSITION SW [ON/OFF]	X	—	▼	● ON/OFF state computed from signal of D position SW is displayed.	
2 position switch	2 POSITION SW [ON/OFF]	X	—	▼	● ON/OFF status, computed from signal of 2 position SW, is displayed.	
1 position switch	1 POSITION SW [ON/OFF]	X	—	▼	● ON/OFF status, computed from signal of 1 position SW, is displayed.	
ASCD cruise signal	ASCD-CRUISE [ON/OFF]	X	—	▼	● Status of ASCD cruise signal is displayed. ON ... Cruising state OFF ... Normal running state	● Not mounted but displayed.
ASCD OD cut signal	ASCD-OD CUT [ON/OFF]	X	—	▼	● Status of ASCD OD release signal is displayed. ON ... OD released OFF ... OD not released	● Not mounted but displayed.
Kickdown switch	KICKDOWN SW [ON/OFF]	X	—	▼	● ON/OFF status, computed from signal of kickdown SW, is displayed.	● This is displayed even when no kickdown switch is equipped.

Item	Display	Selection monitor item			Description	Remarks
		TCM INPUT SIGNALS	MAIN SIGNALS	SELECTION FROM MENU		
A/T mode switch	POWER SHIFT SW [ON/OFF]	X	—	▼		● Not mounted but displayed.
Closed throttle position signal	CLOSED THL/SW [ON/OFF]	X	—	▼	● ON/OFF status, computed from signal of closed throttle position SW, is displayed.	● Signal input with CAN communication
Wide open throttle position signal	W/O THRL/ P-SW [ON/OFF]	X	—	▼	● ON/OFF status, computed from signal of wide open throttle position SW, is displayed.	● Signal input with CAN communication
Shift solenoid valve A	*SHIFT S/V A [ON/OFF]	—	—	▼	Displays status of check signal (re-input signal) for TCM control signal output. Remains unchanged when solenoid valves are open or shorted.	
Shift solenoid valve B	*SHIFT S/V B [ON/OFF]	—	—	▼		
Overrun clutch solenoid valve	*OVRRUN/C S/V [ON/OFF]	—	—	▼		
A/T mode switch	HOLD SW [ON/OFF]	X	—	▼		● Not mounted but displayed.
Stop lamp signal	BRAKE SW [ON/OFF]	X	—	▼	● ON/OFF status is displayed. ON ... Brake pedal is depressed. OFF ... Brake pedal is released.	● Signal input with CAN communication
Gear position	GEAR	—	X	▼	● Gear position data used for computation by TCM, is displayed.	
Selector lever position	SLCT LVR POSI	—	X	▼	● Selector lever position data, used for computation by TCM, is displayed.	● A specific value used for control is displayed if fail-safe is activated due to error.
Vehicle speed	VEHICLE SPEED [km/h] or [mph]	—	X	▼	● Vehicle speed data, used for computation by TCM, is displayed.	
Throttle position	THROTTLE POSI [/8]	—	X	▼	● Throttle position data, used for computation by TCM, is displayed.	● A specific value used for control is displayed if fail-safe is activated due to error.
Line pressure duty	LINE PRES DTY [%]	—	X	▼	● Control value of line pressure solenoid valve, computed by TCM from each input signal, is displayed.	

Item	Display	Selection monitor item			Description	Remarks
		TCM INPUT SIGNALS	MAIN SIGNALS	SELECTION FROM MENU		
Torque converter clutch solenoid valve duty	TCC S/V DUTY [%]	—	X	▼	● Control value of torque converter clutch solenoid valve, computed by TCM from each input signal, is displayed.	
Shift solenoid valve A	SHIFT S/V A [ON/OFF]	—	X	▼	● Control value of shift solenoid valve A, computed by TCM from each input signal, is displayed.	Control value of solenoid is displayed even if solenoid circuit is disconnected. The "OFF" signal is displayed if solenoid circuit is shorted.
Shift solenoid valve B	SHIFT S/V B [ON/OFF]	—	X	▼	● Control value of shift solenoid valve B, computed by TCM from each input signal, is displayed.	
Overrun clutch solenoid valve	OVERRUN/C S/V [ON/OFF]	—	X	▼	● Control value of overrun clutch solenoid valve computed by TCM from each input signal is displayed.	
Self-diagnosis display lamp (O/D OFF indicator lamp)	SELF-D DP LMP [ON/OFF]	—	X	▼	● Control status of O/D OFF indicator lamp is displayed.	
Torque converter slip ratio	TC SLIP RATIO [0.000]	—	—	▼	● Ratio of engine revolution to input shaft revolution of torque converter	
Torque converter slip speed	TC SLIP SPEED [rpm]	—	—	▼	Difference in revolution between input shaft revolution and input shaft revolution of torque converter	Display doesn't indicate 0 rpm even if engine is stopped. But this isn't malfunction.
Voltage	Voltage [V]	—	—	▼	Value measured by voltage probe is displayed.	
Frequency	Frequency [Hz]	—	—	▼	Value measured by pulse probe is displayed. If measurement is impossible, "#" sign is displayed. "#" sign is also displayed at the final data value until the measurement result is obtained.	
Duty cycle (high)	DUTY-HI [%]	—	—	▼	Duty cycle value for measurement probe is displayed.	
Duty cycle (low)	DUTY-LOW [%]	—	—	▼		

Item	Display	Selection monitor item			Description	Remarks
		TCM INPUT SIGNALS	MAIN SIGNALS	SELECTION FROM MENU		
Plus width (high)	PLS WIDTH-HI	—	—	▼	Measured pulse width of measurement probe is displayed.	
Plus width (low)	PLS WIDTH-LOW	—	—	▼		

X: Applicable
—: Not applicable
▼: Option

DTC WORK SUPPORT MODE WITH CONSULT-II

NAAT0184S04

CONSULT-II Setting Procedure

NAAT0184S0401

1. Turn ignition switch "OFF".
2. Connect CONSULT-II and CONSULT-II CONVERTER to data link connector, which is located in instrument lower panel on driver side.

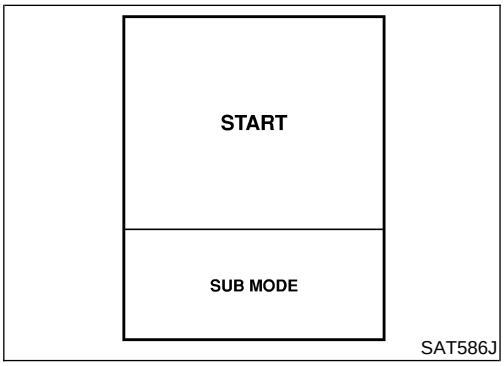

SAT586J

3. Turn ignition switch "ON".
4. Touch "START".

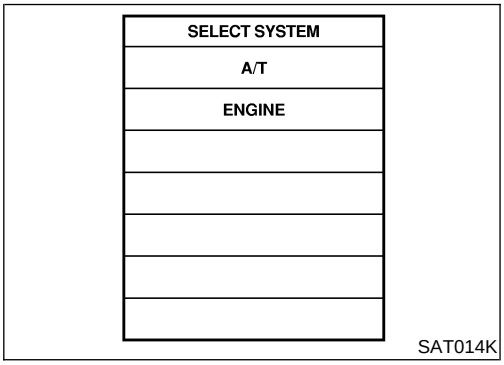

SAT014K

5. Touch "A/T".

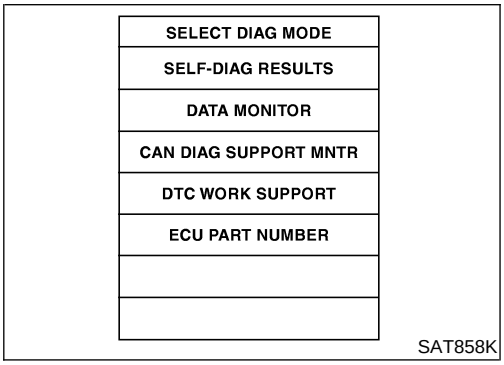

SAT858K

6. Touch "DTC WORK SUPPORT".

SELECT WORK ITEM
1ST GR FNCTN P0731
2ND GR FNCTN P0732
3RD GR FNCTN P0733
4TH GRFNCTN P0734
TCC S/V FNCTN P0744

SAT018K

7. Touch select item menu (1ST, 2ND, etc.).

1ST GR FNCTN P0731
THIS SUPPORT FUNCTION IS FOR DTC P0731. SEE THE SERVICE MANUAL ABOUT THE OPERATING CONDITION FOR THIS DIAGNOSIS.

SAT589J

8. Touch "START".

1ST GR FNCTN P0731	
OUT OF CONDTION	
MONITOR	
GEAR	XXX
VEHICLE SPEED	XXXkm/h
THROTTLE POSI	XXX
TCC S/V DUTY	XXX %

SAT019K

9. Perform driving test according to "DTC CONFIRMATION PROCEDURE" in "TROUBLE DIAGNOSIS FOR DTC".

1ST GR FNCTN P0731	
TESTING	
MONITOR	
GEAR	XXX
VEHICLE SPEED	XXXkm/h
THROTTLE POSI	XXX
TCC S/V DUTY	XXX %

SAT591J

- **When testing conditions are satisfied, CONSULT-II screen changes from "OUT OF CONDITION" to "TESTING".**

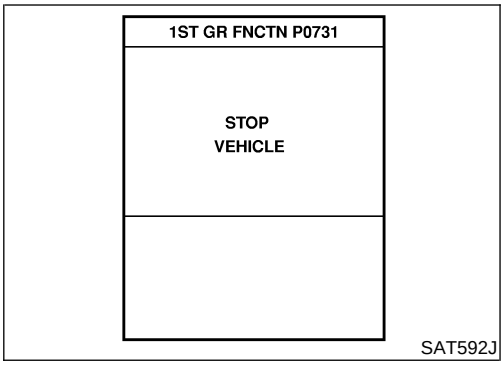

10. Stop vehicle. If "NG" appears on the screen, malfunction may exist. Go to "DIAGNOSTIC PROCEDURE".

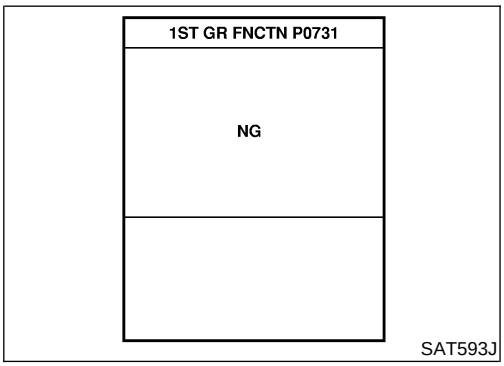

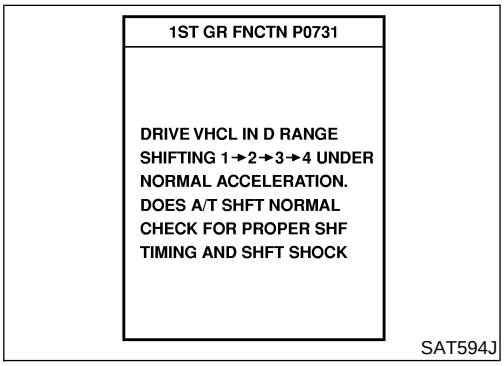

11. Perform test drive to check gear shift feeling in accordance with instructions displayed.

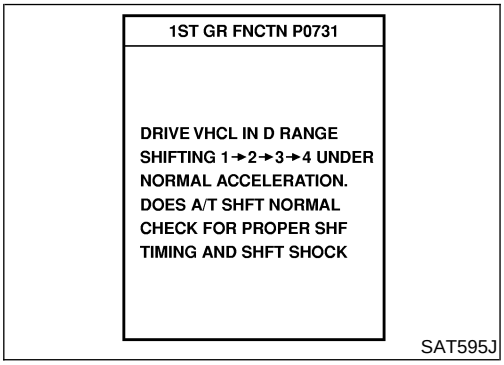

12. Touch "YES" or "NO".

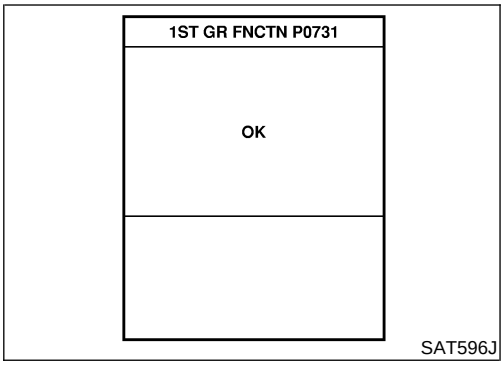

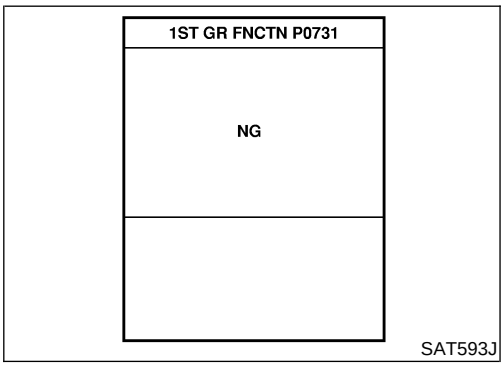

13. CONSULT-II procedure ended.
    If "NG" appears on the screen, a malfunction may exist. Go to "DIAGNOSTIC PROCEDURE".

DTC WORK SUPPORT MODE

NAAT0184S05

DTC work support item	Description	Check item
1ST GR FNCTN P0731	Following items for "A/T 1st gear function (P0731)" can be confirmed. ● Self-diagnosis status (whether the diagnosis is being conducted or not) ● Self-diagnosis result (OK or NG)	● Shift solenoid valve A ● Shift solenoid valve B ● Each clutch ● Hydraulic control circuit
2ND GR FNCTN P0732	Following items for "A/T 2nd gear function (P0732)" can be confirmed. ● Self-diagnosis status (whether the diagnosis is being conducted or not) ● Self-diagnosis result (OK or NG)	● Shift solenoid valve B ● Each clutch ● Hydraulic control circuit
3RD GR FNCTN P0733	Following items for "A/T 3rd gear function (P0733)" can be confirmed. ● Self-diagnosis status (whether the diagnosis is being conducted or not) ● Self-diagnosis result (OK or NG)	● Shift solenoid valve A ● Each clutch ● Hydraulic control circuit
4TH GR FNCTN P0734	Following items for "A/T 4th gear function (P0734)" can be confirmed. ● Self-diagnosis status (whether the diagnosis is being conducted or not) ● Self-diagnosis result (OK or NG)	● Shift solenoid valve A ● Shift solenoid valve B ● Overrun clutch solenoid valve ● Line pressure solenoid valve ● Each clutch ● Hydraulic control circuit
TCC S/V FNCTN P0744	Following items for "A/T TCC S/V function (lock-up) (P0744)" can be confirmed. ● Self-diagnosis status (whether the diagnosis is being conducted or not) ● Self-diagnosis result (OK or NG)	● Torque converter clutch solenoid valve ● Each clutch ● Hydraulic control circuit

Diagnostic Procedure Without CONSULT-II

NAAT0206

OBD-II SELF-DIAGNOSTIC PROCEDURE (WITH GST)

NAAT0206S01

Refer to EC-117, “DESCRIPTION”.

OBD-II SELF-DIAGNOSTIC PROCEDURE (NO TOOLS)

NAAT0206S02

Refer to EC-94, “DESCRIPTION”.

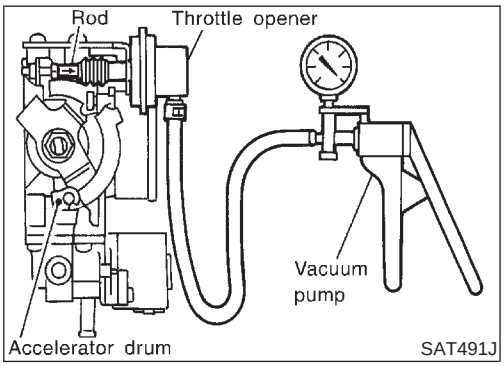

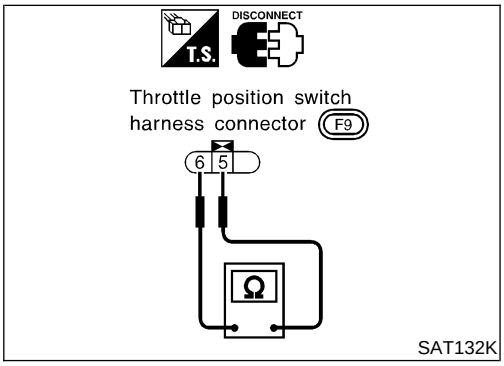

TCM SELF-DIAGNOSTIC PROCEDURE (NO TOOLS)

NAAT0206S03

Preparation

NAAT0206S0301

1. Turn ignition switch to “OFF” position.
2. Connect the handy type vacuum pump to the throttle opener and apply vacuum −25.3 kPa (−190 mmHg, −7.48 inHg).
3. Disconnect the throttle position switch harness connector.
4. Turn ignition switch to “ON” position.
5. Check continuity of the closed throttle position switch.
   Continuity should exist.
   (If continuity does not exist, check throttle opener and closed throttle position switch. Then increase vacuum until closed throttle position switch shows continuity.)
6. Go to “DIAGNOSIS START” on next page.

1	CHECK O/D OFF INDICATOR LAMP

1. Start the engine with selector lever in "P" position. Warm engine to normal operating temperature.
2. Turn ignition switch to "OFF" position.
3. Wait 5 seconds.

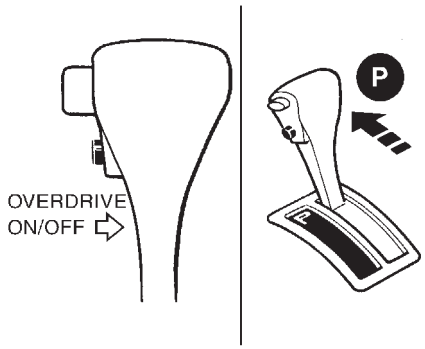

SAT967I

4. Turn ignition switch to "ON" position.
   (Do not start engine.)
5. Does O/D OFF indicator lamp come on for about 2 seconds?

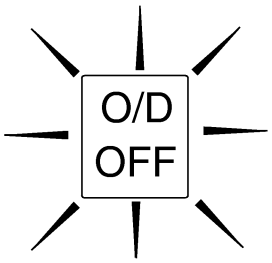

O/D OFF indicator lamp

SAT204K

Yes or No

Yes	▶	GO TO 2.
No	▶	Stop procedure. Perform O/D OFF Indicator Lamp Does Not Come On", AT-218 before proceeding.

2	JUDGEMENT PROCEDURE STEP 1

1. Turn ignition switch to "OFF" position.
2. Push shift lock release button.
3. Move selector lever from "P" to "D" position.
4. Turn ignition switch to "ON" position. (Do not start engine.)
5. Wait 3 seconds.
6. Push the overdrive control switch in "O/D OFF" position (the O/D OFF indicator lamp will be "ON") If O/D OFF indicator lamp does not come on, go to step 5 on AT-255.
7. Turn ignition switch to "OFF" position.

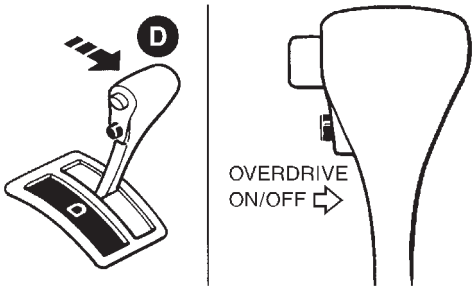

SAT968I

8. Turn ignition switch to "ON" position (Do not start engine.).
9. Push the overdrive control switch in "O/D ON" position (the O/D OFF indicator lamp will be "OFF").
10. Wait 2 seconds.
11. Move selector lever to "2" position.
12. Push the overdrive control switch in "O/D OFF" position (the O/D OFF indicator lamp will be "ON").
13. Push the overdrive control switch in "O/D OFF" position (the O/D OFF indicator lamp will be "OFF").

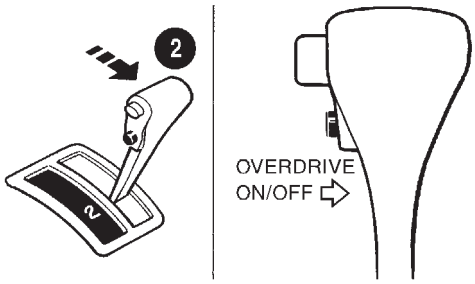

SAT969I

▶	GO TO 3.

3	JUDGEMENT PROCEDURE STEP 2

1. Move selector lever to "1" position.
2. Push the overdrive control switch in "O/D OFF" position (the O/D OFF indicator lamp will be "ON").
3. Push the overdrive control switch in "O/D ON" position (the O/D OFF indicator lamp will be "OFF").
4. Push the overdrive control switch in "O/D OFF" position (the O/D OFF indicator lamp will be "ON").

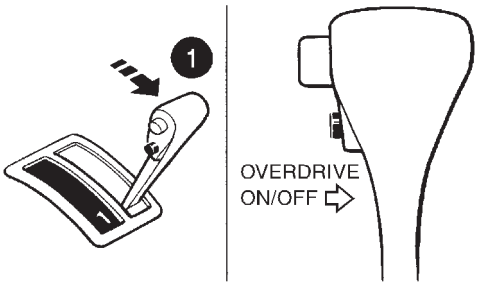

SAT970I

5. Depress accelerator pedal fully and release it.
6. Push the overdrive control switch (the O/D OFF indicator lamp will begin to flash "ON" and "OFF").

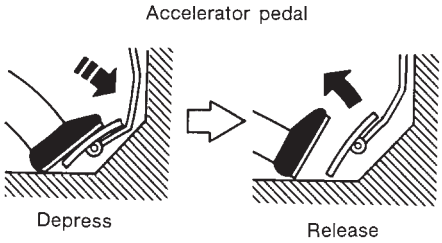

SAT981F

▶	GO TO 4.

4	CHECK SELF-DIAGNOSIS CODE

Check O/D OFF indicator lamp.
Refer to JUDGEMENT OF SELF-DIAGNOSIS CODE, AT-52.

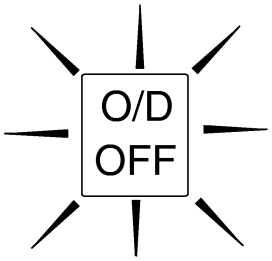

O/D OFF indicator lamp

SAT204K

▶	**DIAGNOSIS END**

JUDGEMENT OF SELF-DIAGNOSIS CODE

NAAT0206S04

O/D OFF indicator lamp:

All judgement flickers are same.

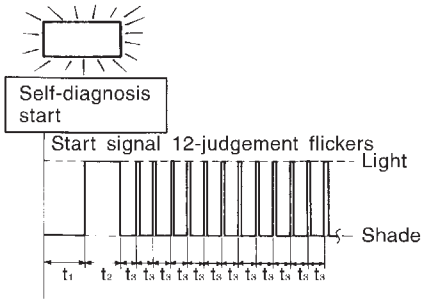

SAT666I

All circuits that can be confirmed by self-diagnosis are OK.

1st judgement flicker is longer than others.

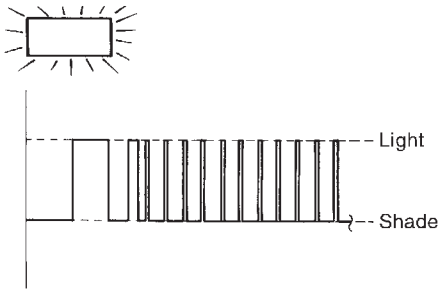

SAT667I

Revolution sensor circuit is short-circuited or disconnected.
⇒ **Go to DTC P0720 VEHICLE SPEED SENSOR·A/T (REVOLUTION SENSOR), AT-114.**

2nd judgement flicker is longer than others.

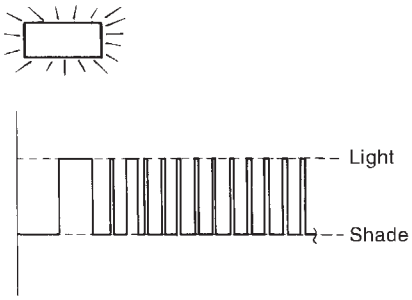

SAT668I

Vehicle speed signal circuit is short-circuited or disconnected.
⇒ **Go to DTC VEHICLE SPEED SIGNAL·MTR, AT-197.**

3rd judgement flicker is longer than others.

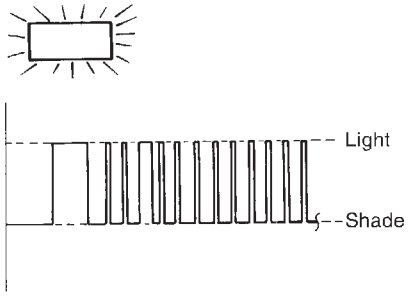

SAT669I

Accelerator pedal position sensor circuit is short-circuited or disconnected.
⇒ **Go to DTC P1705 ACCELERATOR PEDAL POSITION SENSOR, AT-179.**

4th judgement flicker is longer than others.

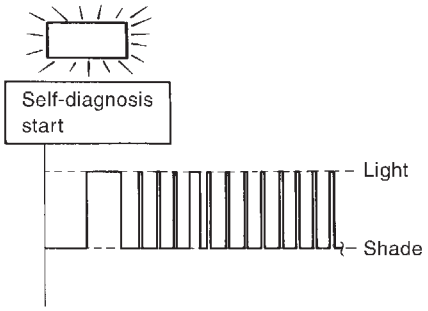

SAT670I

Shift solenoid valve A circuit is short-circuited or disconnected.
⇒ **Go to DTC P0750 SHIFT SOLENOID VALVE A, AT-171.**

5th judgement flicker is longer than others.

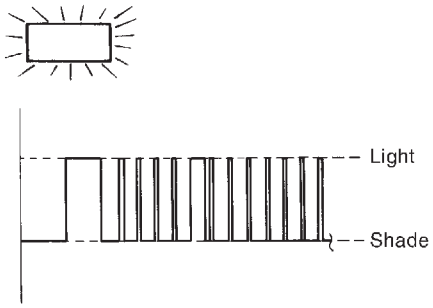

SAT671I

Shift solenoid valve B circuit is short-circuited or disconnected.
⇒ **Go to DTC P0755 SHIFT SOLENOID VALVE B, AT-175.**

O/D OFF indicator lamp:

6th judgement flicker is longer than others.

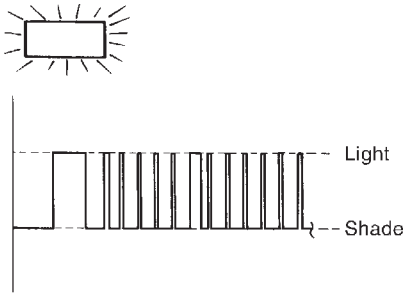

SAT672I

Overrun clutch solenoid valve circuit is short-circuited or disconnected.
⇒ **Go to DTC P1760 OVERRUN CLUTCH SOLENOID VALVE, AT-185.**

7th judgement flicker is longer than others.

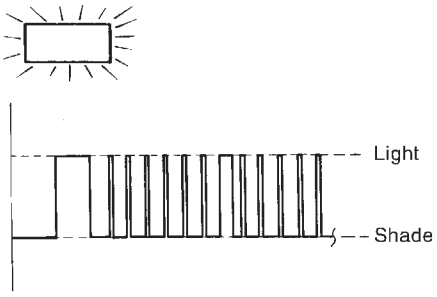

SAT673I

Torque converter clutch solenoid valve circuit is short-circuited or disconnected.
⇒ **Go to DTC P0740 TORQUE CONVERTER CLUTCH SOLENOID VALVE, AT-151.**

8th judgement flicker is longer than others.

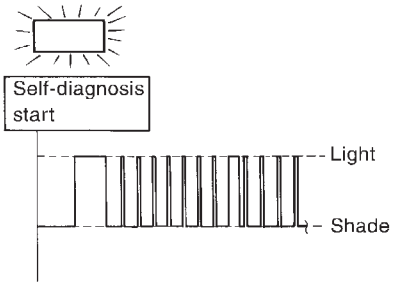

SAT674I

A/T fluid temperature sensor is disconnected or TCM power source circuit is damaged.
⇒ **Go to DTC BATT/FLUID TEMP SEN (A/T FLUID TEMPERATURE SENSOR AND TCM POWER SOURCE), AT-190.**

9th judgement flicker is longer than others.

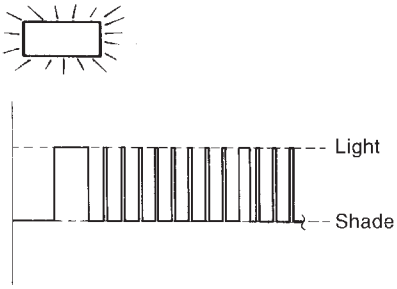

SAT675I

Engine speed signal circuit is short-circuited or disconnected.
⇒ **Go to DTC P0725 ENGINE SPEED SIGNAL, AT-119.**

10th judgement flicker is longer than others.

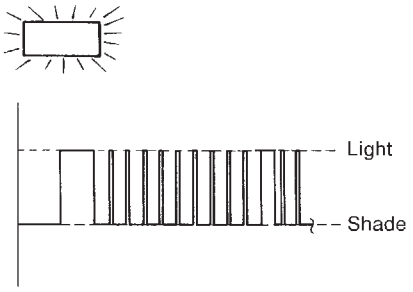

SAT676I

Turbine revolution sensor circuit is short-circuited or disconnected.
⇒ **Go to DTC Turbine Revolution Sensor, AT-206.**

11th judgement flicker is longer than others.

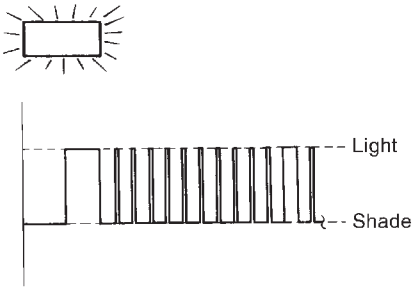

SAT677I

Line pressure solenoid valve circuit is short-circuited or disconnected.
⇒ **Go to DTC P0745 LINE PRESSURE SOLENOID VALVE, AT-165.**

O/D OFF indicator lamp:	
12th judgement flicker is longer than others. 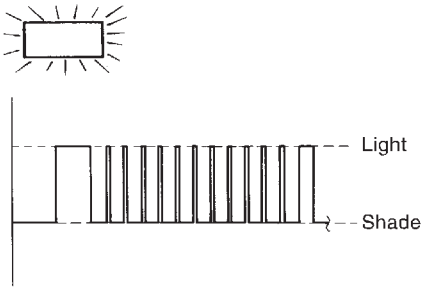 SAT678I CAN communication line is open or shorted. ⇒ **Go to DTC U1000 CAN COMMUNICATION LINE, AT-203.**	Flickers as shown below. 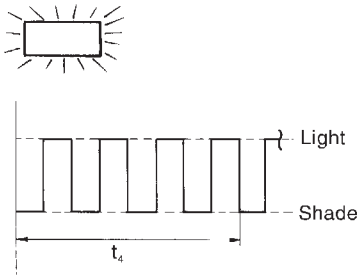 SAT679I Battery power is low. Battery has been disconnected for a long time. Battery is connected conversely. (When reconnecting TCM connectors. — This is not a problem.)
Lamp comes off. 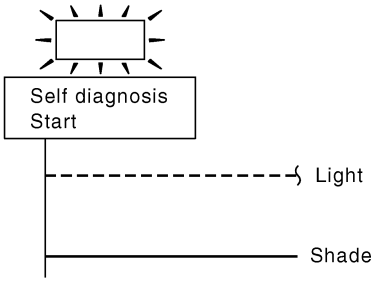 SAT705K Park/neutral position (PNP) switch, overdrive control switch, closed throttle position signal or wide-open throttle position signal circuit is disconnected or TCM is damaged. ⇒ **Go to 21. TCM Self-diagnosis Does Not Activate (PNP, Overdrive Control and Accelerator Pedal Position Sensor Circuit Checks), AT-255.**	

t_1 = 2.5 seconds t_2 = 2.0 seconds t_3 = 1.0 second t_4 = 1.0 second

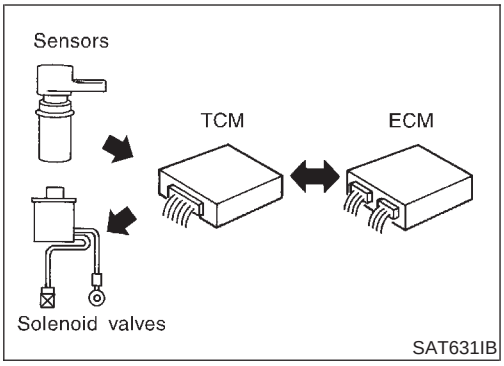

SAT631IB

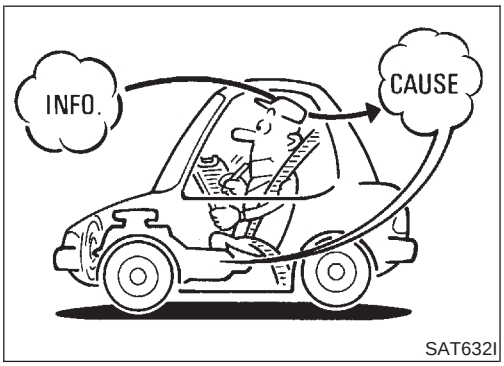

SAT632I

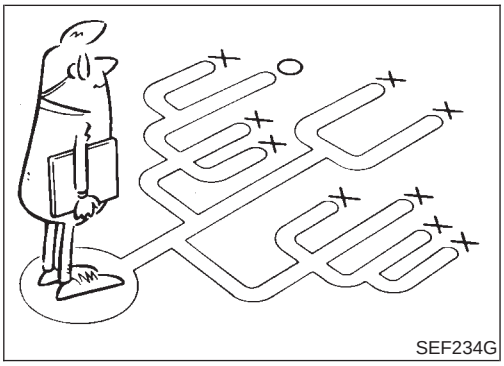
SEF234G

Introduction

NAAT0019

The TCM receives a signal from the vehicle speed sensor, throttle position sensor or PNP switch and provides shift control or lock-up control via A/T solenoid valves.

The TCM also communicates with the ECM by means of a signal sent from sensing elements used with the OBD-related parts of the A/T system for malfunction-diagnostic purposes. The TCM is capable of diagnosing malfunctioning parts while the ECM can store malfunctions in its memory.

Input and output signals must always be correct and stable in the operation of the A/T system. The A/T system must be in good operating condition and be free of valve seizure, solenoid valve malfunction, etc.

It is much more difficult to diagnose an incident that occurs intermittently rather than continuously. Most intermittent incidents are caused by poor electric connections or improper wiring. In this case, careful checking of suspected circuits may help prevent the replacement of good parts.

A visual check only may not find the cause of the incidents. A road test with CONSULT-II (or GST) or a circuit tester connected should be performed. Follow the “Work Flow”. Refer to AT-59.

Before undertaking actual checks, take a few minutes to talk with a customer who approaches with a driveability complaint. The customer can supply good information about such incidents, especially intermittent ones. Find out what symptoms are present and under what conditions they occur. A “Diagnostic Worksheet” like the example (AT-57) should be used.

Start your diagnosis by looking for “conventional” incidents first. This will help troubleshoot driveability incidents on an electronically controlled engine vehicle.

Also check related Service bulletins.

DIAGNOSTIC WORKSHEET

=NAAT0019S01

Information From Customer

NAAT0019S0101

KEY POINTS

WHAT ..... Vehicle & A/T model
WHEN..... Date, Frequencies
WHERE..... Road conditions
HOW..... Operating conditions, Symptoms

Customer name MR/MS	Model & Year	VIN
Trans. model	Engine	Mileage
Incident Date	Manuf. Date	In Service Date
Frequency	☐ Continuous ☐ Intermittent (times a day)	
Symptoms	☐ Vehicle does not move. (☐ Any position ☐ Particular position)	
	☐ No up-shift (☐ 1st → 2nd ☐ 2nd → 3rd ☐ 3rd → O/D)	
	☐ No down-shift (☐ O/D → 3rd ☐ 3rd → 2nd ☐ 2nd → 1st)	
	☐ Lockup malfunction	
	☐ Shift point too high or too low.	
	☐ Shift shock or slip (☐ N → D ☐ Lockup ☐ Any drive position)	
	☐ Noise or vibration	
	☐ No kickdown	
	☐ No pattern select	
	☐ Others ( )	
O/D OFF indicator lamp	Blinks for about 8 seconds.	
	☐ Continuously lit	☐ Not lit
Malfunction indicator lamp (MIL)	☐ Continuously lit	☐ Not lit

Diagnostic Worksheet

=NAAT0019S0102

1.	☐ Read the Fail-safe Remarks and listen to customer complaints.			AT-8
2.	☐ CHECK A/T FLUID			AT-61
		☐ Leakage (Follow specified procedure) ☐ Fluid condition ☐ Fluid level		
3.	Perform STALL TEST and LINE PRESSURE TEST.			AT-61, AT-64
		☐ Stall test — Mark possible damaged components/others.		
			☐ Torque converter one-way clutch ☐ Reverse clutch ☐ Forward clutch ☐ Overrun clutch ☐ Forward one-way clutch	☐ Low & reverse brake ☐ Low one-way clutch ☐ Engine ☐ Line pressure is low ☐ Clutches and brakes except high clutch and brake band are OK
		☐ Pressure test — Suspected parts:		
4.	☐ Perform all ROAD TEST and mark required procedures.			AT-65
	4-1.	Check before engine is started.		AT-66
		☐ O/D OFF Indicator Lamp Does Not Come On, AT-218. ☐ SELF-DIAGNOSTIC PROCEDURE - Mark detected items.		
			☐ DTC P0705 PNP switch, AT-102. ☐ DTC P0710 A/T fluid temperature sensor, AT-108. ☐ DTC P0720 Vehicle speed sensor·A/T (Revolution sensor), AT-114. ☐ DTC P0725 Engine speed signal, AT-119. ☐ DTC P0740 Torque converter clutch solenoid valve, AT-151. ☐ DTC P0745 Line pressure solenoid valve, AT-165. ☐ DTC P0750 Shift solenoid valve A, AT-171. ☐ DTC P0755 Shift solenoid valve B, AT-175. ☐ DTC P1705 Accelerator pedal position sensor, AT-179. ☐ DTC P1760 Overrun clutch solenoid valve, AT-185. ☐ DTC BATT/FLUID TEMP SEN (A/T fluid temperature sensor and TCM power source), AT-190. ☐ DTC Vehicle speed sensor·MTR, AT-197. ☐ DTC Turbine revolution sensor, AT-206. ☐ DTC U1000 CAN communication line, AT-203. ☐ DTC Control unit (RAM), control unit (ROM), AT-211. ☐ DTC Control unit (EEP ROM), AT-213. ☐ PNP, overdrive control and accelerator pedal position sensor, AT-255. ☐ Battery ☐ Others	
	4-2.	Check at idle		AT-68
		☐ Engine Cannot Be Started In "P" And "N" Position, AT-220. ☐ In "P" Position, Vehicle Moves Forward Or Backward When Pushed, AT-221. ☐ In "N" Position, Vehicle Moves, AT-222. ☐ Large Shock. "N" → "R" Position, AT-224. ☐ Vehicle Does Not Creep Backward In "R" Position, AT-226. ☐ Vehicle Does Not Creep Forward In "D", "2" Or "1" Position, AT-229.		

4.	4-3.	Cruise test		AT-69 AT-73
		Part-1		
		☐ Vehicle Cannot Be Started From D_1, AT-232. ☐ A/T Does Not Shift: $D_1 \rightarrow D_2$ Or Does Not Kickdown: $D_4 \rightarrow D_2$, AT-235. ☐ A/T Does Not Shift: $D_2 \rightarrow D_3$, AT-238. ☐ A/T Does Not Shift: $D_3 \rightarrow D_4$, AT-241. ☐ A/T Does Not Perform Lock-up, AT-244. ☐ A/T Does Not Hold Lock-up Condition, AT-246. ☐ Lock-up Is Not Released, AT-248. ☐ Engine Speed Does Not Return To Idle (Light Braking $D_4 \rightarrow D_3$), AT-249.		
		Part-2		AT-77
		☐ Vehicle Does Not Start From D_1, AT-251. ☐ A/T Does Not Shift: $D_1 \rightarrow D_2$ Or Does Not Kickdown: $D_4 \rightarrow D_2$, AT-235. ☐ A/T Does Not Shift: $D_2 \rightarrow D_3$, AT-238. ☐ A/T Does Not Shift: $D_3 \rightarrow D_4$, AT-241.		
		Part-3		AT-79
		☐ A/T Does Not Shift: $D_4 \rightarrow D_3$ When Overdrive Control Switch "ON" → "OFF", AT-252 ☐ Engine Speed Does Not Return To Idle (Engine Brake In D_3), AT-249. ☐ A/T Does Not Shift: $D_3 \rightarrow 2_2$, When Selector Lever "D" → "2" Position, AT-253. ☐ Engine Speed Does Not Return To Idle (Engine Brake In 2_2), AT-249. ☐ A/T Does Not Shift: $2_2 \rightarrow 1_1$, When Selector Lever "2" → "1" Position, AT-254. ☐ Vehicle Does Not Decelerate By Engine Brake, AT-255. ☐ SELF-DIAGNOSTIC PROCEDURE — Mark detected items.		
			☐ DTC P0705 PNP switch, AT-102. ☐ DTC P0710 A/T fluid temperature sensor, AT-108. ☐ DTC P0720 Vehicle speed sensor·A/T (Revolution sensor), AT-114. ☐ DTC P0725 Engine speed signal, AT-119. ☐ DTC P0740 Torque converter clutch solenoid valve, AT-151. ☐ DTC P0745 Line pressure solenoid valve, AT-165. ☐ DTC P0750 Shift solenoid valve A, AT-171. ☐ DTC P0755 Shift solenoid valve B, AT-175. ☐ DTC P1705 Accelerator pedal position sensor, AT-179. ☐ DTC P1760 Overrun clutch solenoid valve, AT-185. ☐ DTC BATT/FLUID TEMP SEN (A/T fluid temperature sensor and TCM power source), AT-190. ☐ DTC Vehicle speed sensor·MTR, AT-197. ☐ DTC Turbine revolution sensor, AT-206. ☐ DTC U1000 CAN communication line, AT-203. ☐ DTC Control unit (RAM), control unit (ROM), AT-211. ☐ DTC Control unit (EEP ROM), AT-213. ☐ PNP, overdrive control and accelerator pedal position sensor, AT-255. ☐ Battery ☐ Others	
5.	☐ For self-diagnosis NG items, inspect each component. Repair or replace the damaged parts.			AT-38
6.	☐ Perform all ROAD TEST and re-mark required procedures.			AT-65
7.	☐ Perform DTC CONFIRMATION PROCEDURE for following MIL indicating items and check out NG items. Refer to EC-78, "Emission-related Diagnostic Information".			EC-78
		☐ DTC (P0731, 1103) A/T 1st gear function, AT-123. ☐ DTC (P0732, 1104) A/T 2nd gear function, AT-129. ☐ DTC (P0733, 1105) A/T 3rd gear function, AT-135. ☐ DTC (P0734, 1106) A/T 4th gear function, AT-141. ☐ DTC (P0744, 1107) A/T TCC S/V function (lock-up), AT-156.		
8.	☐ Perform the Diagnostic Procedures for all remaining items marked NG. Repair or replace the damaged parts. Refer to the Symptom Chart when you perform the procedures. (The chart also shows some other possible symptoms and the component inspection orders.)			AT-95 AT-100
9.	☐ Erase DTC from TCM and ECM memories.			AT-35

Work Flow

NAAT0020

HOW TO PERFORM TROUBLE DIAGNOSES FOR QUICK AND ACCURATE REPAIR

NAAT0020S01

A good understanding of the malfunction conditions can make troubleshooting faster and more accurate.
In general, each customer feels differently about a problem. It is important to fully understand the symptoms or conditions for a customer complaint.
Make good use of the two sheets provided, “INFORMATION FROM CUSTOMER” (AT-56) and “DIAGNOSTIC WORKSHEET” (AT-57), to perform the best troubleshooting possible.

WORK FLOW CHART

NAAT0020S02

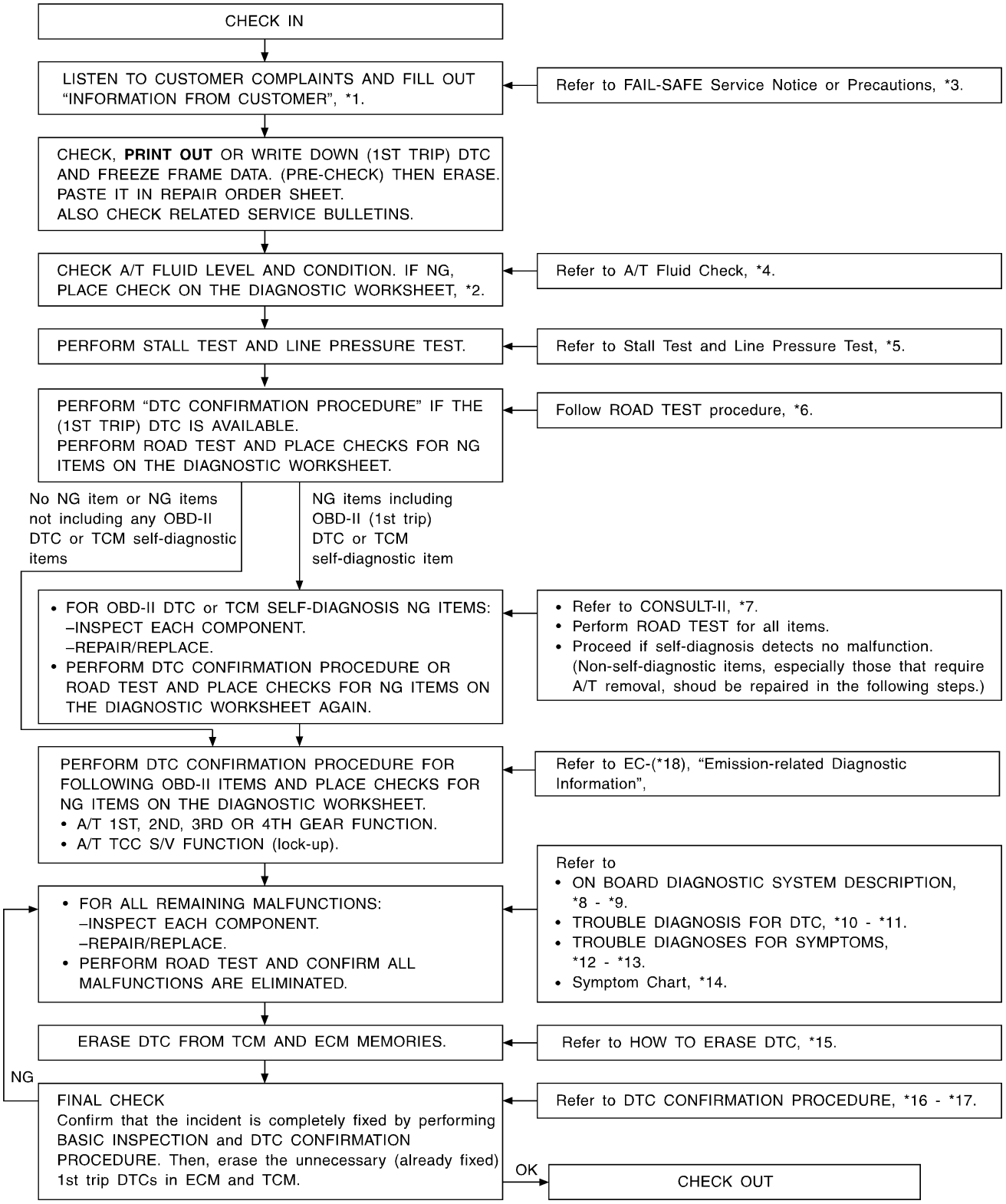

SAT086JF

*1: AT-56	*7: AT-37	*13: AT-255
*2: AT-57	*8: AT-33	*14: AT-83
*3: AT-8	*9: AT-52	*15: AT-35
*4: AT-61	*10: AT-102	*16: AT-103
*5: AT-61, 64	*11: AT-213	*17: AT-213
*6: AT-65	*12: AT-215	*18: EC-78

A/T Fluid Check

NAAT0021

FLUID LEAKAGE CHECK

NAAT0021S01

1. Clean area suspected of leaking. — for example, mating surface of converter housing and transmission case.
2. Start engine, apply foot brake, place selector lever in “D” position and wait a few minutes.
3. Stop engine.
4. Check for fresh leakage.

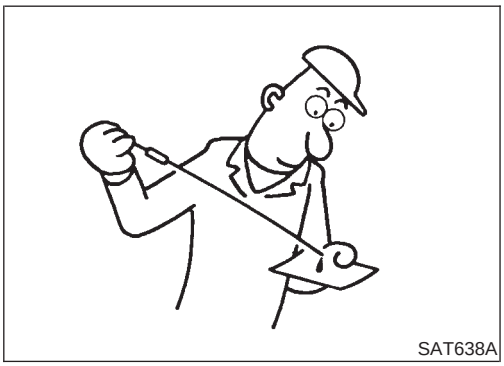
SAT638A

FLUID CONDITION CHECK

NAAT0021S02

Fluid color	Suspected problem
Dark or black with burned odor	Wear of frictional material
Milky pink	Water contamination — Road water entering through filler tube or breather
Varnished fluid, light to dark brown and tacky	Oxidation — Over or under filling, — Overheating

FLUID LEVEL CHECK

NAAT0021S03

Refer to MA-22, “Checking A/T Fluid”.

Stall Test

NAAT0022

STALL TEST PROCEDURE

NAAT0022S01

1. Check A/T fluid and engine oil levels. If necessary, add fluid and oil.
2. Drive vehicle for approx. 10 minutes or until fluid and oil reach operating temperature.

   ATF operating temperature:
   50 - 80°C (122 - 176°F)

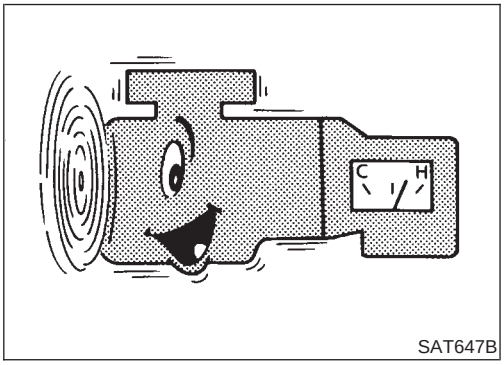

SAT647B

3. Set parking brake and block wheels.
4. Install a tachometer where it can be seen by driver during test.

- **It is good practice to put a mark on point of specified engine rpm on indicator.**

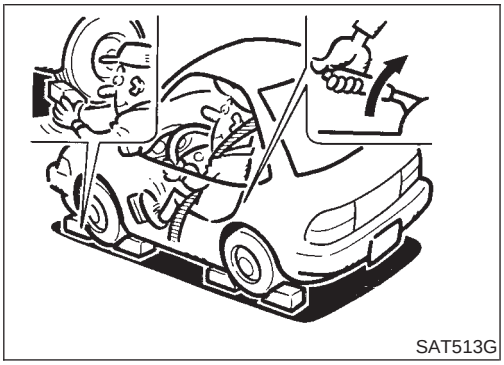
SAT513G

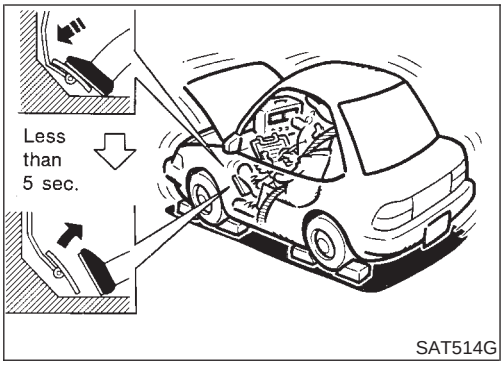

SAT514G

5. Start engine, apply foot brake, and place selector lever in "D" position.
6. Accelerate to wide open throttle gradually while applying foot brake.
7. Quickly note the engine stall revolution and immediately release throttle.

- **During test, never hold throttle wide open for more than 5 seconds.**

Stall revolution:
Refer to SDS, AT-353.

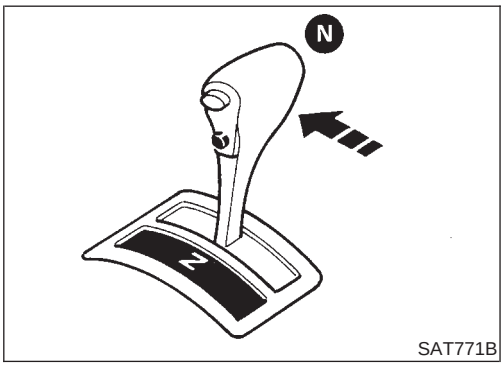

SAT771B

8. Move selector lever to "N" position.
9. Cool off ATF.

- **Run engine at idle for at least one minute.**

10. Repeat steps 5 through 9 with selector lever in "2", "1" and "R" positions.

JUDGEMENT OF STALL TEST

NAAT0022S02

The test result and possible damaged components relating to each result are shown in the illustration. In order to pinpoint the possible damaged components, refer to "Work Flow", AT-59.

NOTE:
Stall revolution is too high in "D" or "2" position:

- Slippage occurs in 1st gear but not in 2nd and 3rd gears. ..... Low one-way clutch slippage
- Slippage occurs at the following gears:
  1st through 3rd gears in "D" position and engine brake functions.
  1st and 2nd gears in "2" position and engine brake functions with accelerator pedal released (fully closed throttle). ..... Forward clutch or forward one-way clutch slippage

Stall revolution is too high in "R" position:

- Engine brake does not function in "1" position. ..... Low & reverse brake slippage
- Engine brake functions in "1" position. ..... Reverse clutch slippage

Stall revolution within specifications:

- Vehicle does not achieve speed of more than 80 km/h (50 MPH). ..... One-way clutch seizure in torque converter housing

CAUTION:
Be careful since automatic fluid temperature increases abnormally.

- Slippage occurs in 3rd and 4th gears in "D" position. ..... High clutch slippage
- Slippage occurs in 2nd and 4th gear in "D" position. ..... Brake band slippage
- Engine brake does not function in 2nd and 3rd gears in "D" position, 2nd gear in 2nd position, and 1st position. ..... Overrun clutch slippage

Stall revolution less than specifications:

- Poor acceleration during starts. ..... One-way clutch slippage in torque converter

Selector lever position	Judgement		
D	L	O	H
2	L	O	H
1	L	O	O
R	L	H	H

O : Stall revolution is normal.
H : Stall revolution is higher than specified.
L : Stall revolution is lower than specified.

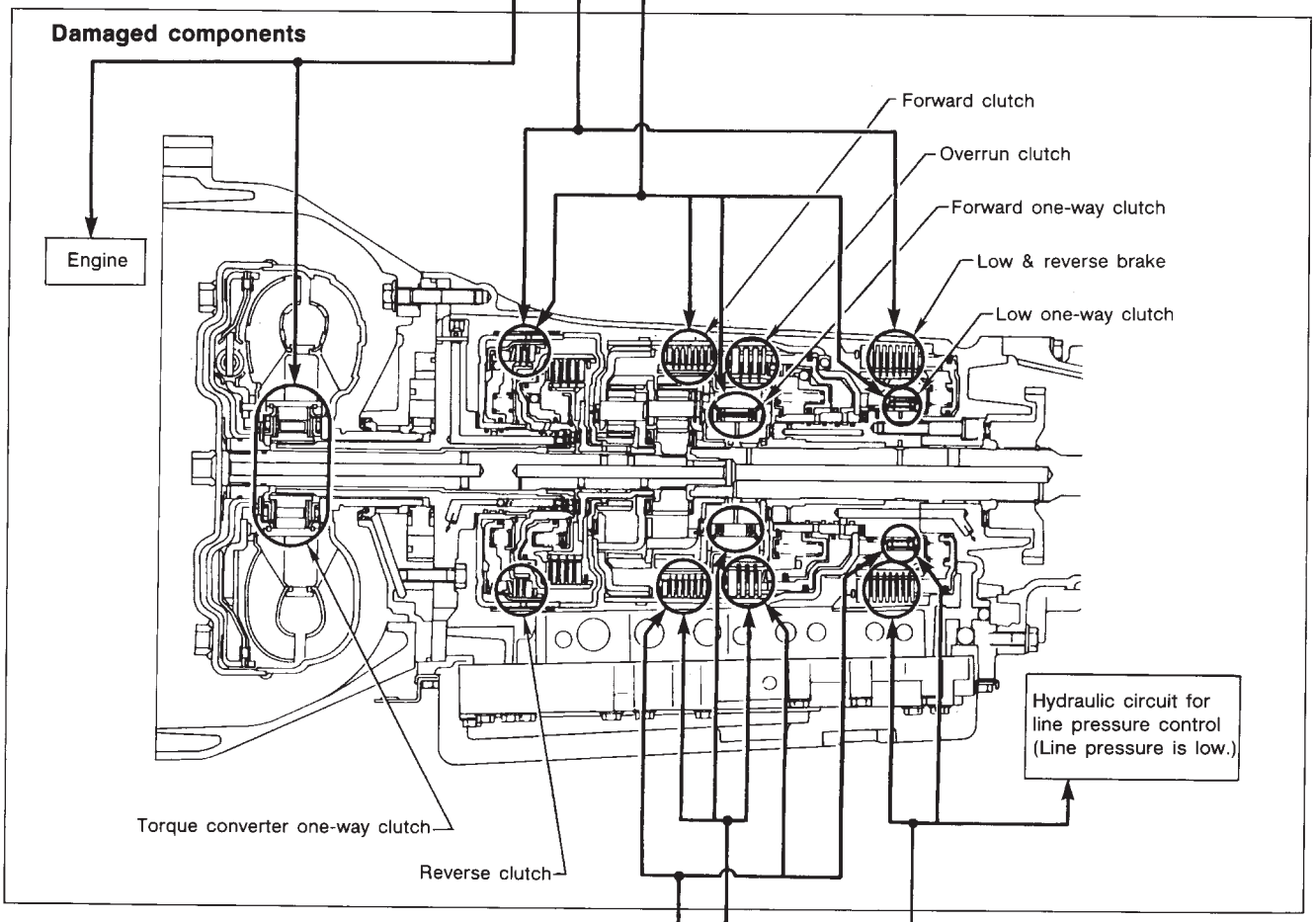

Clutches and brakes except high clutch and brake band are OK. (Condition of high clutch and brake band cannot be confirmed by stall test.)

Selector lever position	Judgement			
D	H	H	H	O
2	H	H	H	O
1	O	H	H	O
R	O	O	H	O

SAT392H

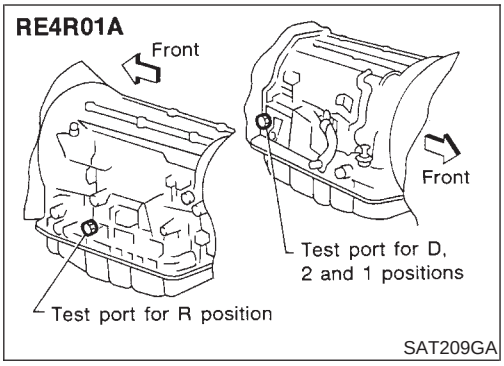

SAT209GA

Line Pressure Test

NAAT0023

- Location of line pressure test ports.
- **Always replace line pressure plugs as they are self-sealing bolts.**

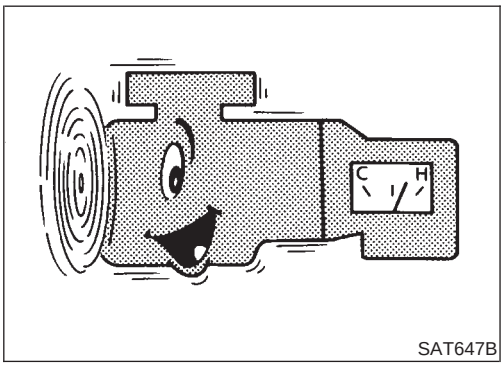

SAT647B

LINE PRESSURE TEST PROCEDURE

NAAT0023S01

1. Check A/T fluid and engine oil levels. If necessary, add fluid and oil.
2. Drive vehicle for approx. 10 minutes or until fluid and oil reach operating temperature.

   ATF operating temperature:
   50 - 80°C (122 - 176°F)

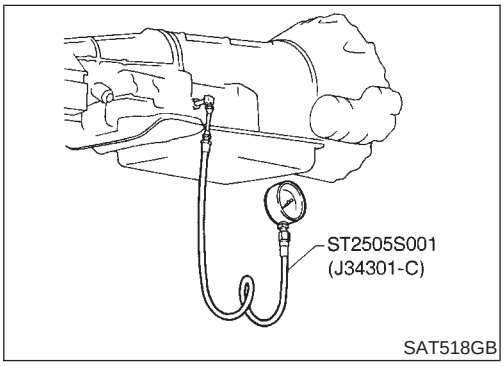

SAT518GB

3. Install pressure gauge to corresponding line pressure port.

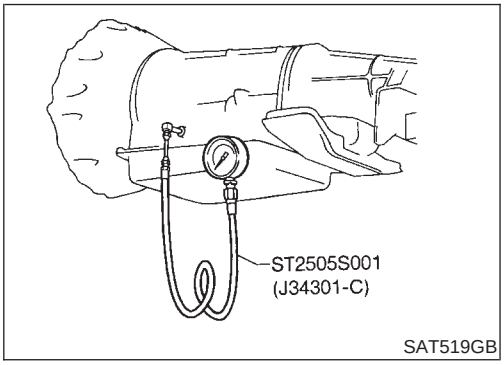

SAT519GB

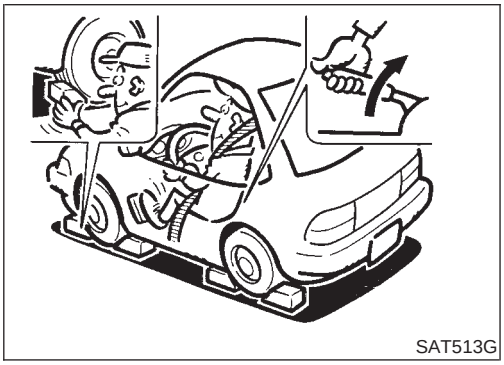
SAT513G

4. Set parking brake and block wheels.

- **Continue to depress brake pedal fully while line pressure test is being performed at stall speed.**

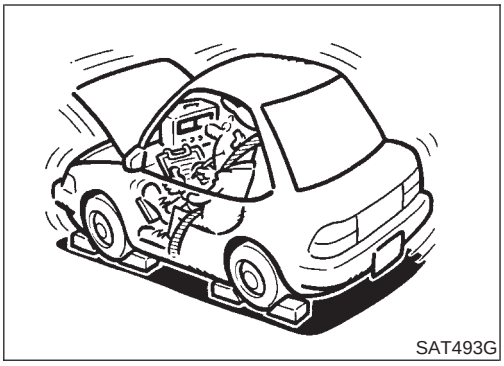
SAT493G

5. Start engine and measure line pressure at idle and stall speed.
- **When measuring line pressure at stall speed, follow the stall test procedure.**

Line pressure:
Refer to SDS, AT-353.

JUDGEMENT OF LINE PRESSURE TEST

NAAT0023S02

Judgement		Suspected parts
At idle	Line pressure is low in all positions.	• Oil pump wear • Control piston damage • Pressure regulator valve or plug sticking • Spring for pressure regulator valve damaged • Fluid pressure leakage between oil strainer and pressure regulator valve • Clogged strainer
	Line pressure is low in particular position.	• Fluid pressure leakage between manual valve and particular clutch • For example, line pressure is: — Low in "R" and "1" positions, but — Normal in "D" and "2" positions. Then, fluid leakage exists at or around low and reverse brake circuit. Refer to "CLUTCH AND BAND CHART", AT-17.
	Line pressure is high.	• Mal-adjustment of throttle position sensor • Fluid temperature sensor damaged • Line pressure solenoid valve sticking • Short circuit of line pressure solenoid valve circuit • Pressure modifier valve sticking • Pressure regulator valve or plug sticking • Open in dropping resistor circuit
At stall speed	Line pressure is low.	• Mal-adjustment of throttle position sensor • Line pressure solenoid valve sticking • Short circuit of line pressure solenoid valve circuit • Pressure regulator valve or plug sticking • Pressure modifier valve sticking • Pilot valve sticking

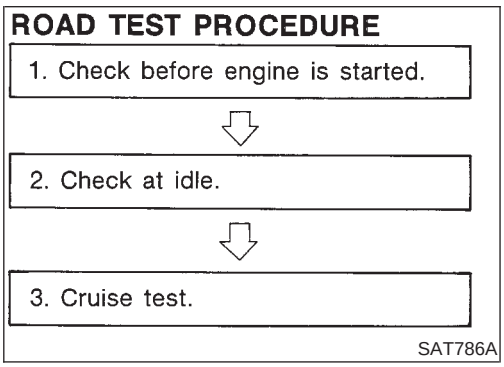

SAT786A

Road Test

NAAT0024

DESCRIPTION

NAAT0024S01

- The purpose of the test is to determine overall performance of A/T and analyze causes of problems.
- The road test consists of the following three parts:

1. Check before engine is started
2. Check at idle
3. Cruise test

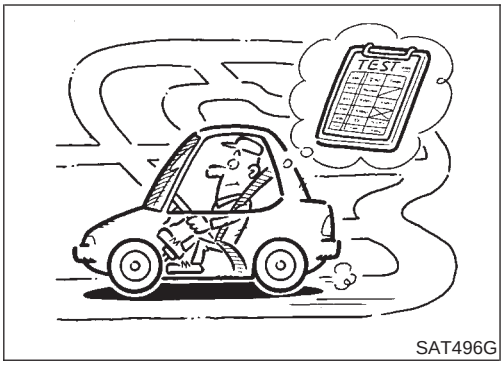

SAT496G

- Before road test, familiarize yourself with all test procedures and items to check.
- Conduct tests on all items until specified symptom is found. Troubleshoot items which check out No Good after road test. Refer to "ON BOARD DIAGNOSTIC SYSTEM DESCRIPTION" and "TROUBLE DIAGNOSES FOR SYMPTOMS", AT-33 - AT-52 and AT-215 - AT-255.

1. CHECK BEFORE ENGINE IS STARTED

NAAT0024S02

1	CHECK O/D OFF INDICATOR LAMP

1. Park vehicle on flat surface.
2. Move selector lever to "P" position.
3. Turn ignition switch to "OFF" position.
   Wait at least 5 seconds.

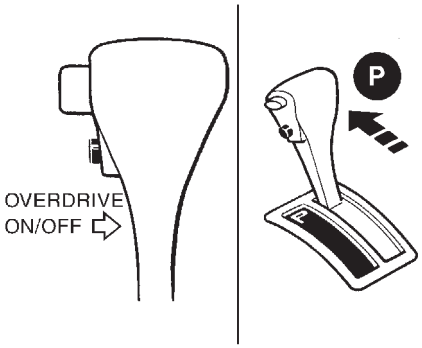

SAT967I

4. Turn ignition switch to "ON" position. (Do not start engine.)
5. Does O/D OFF indicator lamp come on for about 2 seconds?

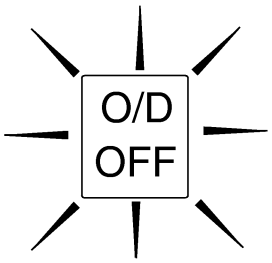

O/D OFF indicator lamp

SAT204K

Yes or No

Yes	▶	GO TO 2.
No	▶	Stop Road Test. Go to "O/D OFF Indicator Lamp Does Not Come On", AT-218.

2	CHECK O/D OFF INDICATOR LAMP
Does O/D OFF indicator lamp flicker for about 8 seconds?	

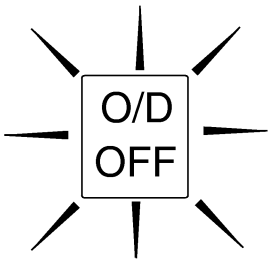

O/D OFF indicator lamp

SAT204K

Yes or No

Yes	▶	Perform self-diagnosis. Refer to TCM SELF-DIAGNOSIS PROCEDURE (No Tools), AT-48.
No	▶	GO TO 3.

3	CHECK NG ITEM
1. Turn ignition switch to "OFF" position. 2. Perform self-diagnosis and note NG items. Refer to TCM SELF-DIAGNOSIS PROCEDURE (No Tools), AT-48.	
▶	Go to "2. CHECK AT IDLE", AT-68.

2. CHECK AT IDLE

=NAAT0024S03

1	CHECK ENGINE START	
1. Park vehicle on flat surface. 2. Turn ignition switch to "OFF" position. 3. Move selector lever to "P" or "N" position. 4. Turn ignition switch to start position. 5. Is engine started?		
Yes or No		
Yes	▶	GO TO 2.
No	▶	Go to "Engine Cannot Be Started In "P" and "N" Position", AT-220.

2	CHECK ENGINE START	
1. Turn ignition switch to "OFF" position. 2. Move selector lever to "D", "1", "2" or "R" position. 3. Turn ignition switch to start position. 4. Is engine started?		
Yes or No		
Yes	▶	Go to "Engine Cannot Be Started In "P" and "N" Position", AT-220.
No	▶	GO TO 3.

3	CHECK VEHICLE MOVE	
1. Turn ignition switch to "OFF" position. 2. Move selector lever to "P" position. 3. Release parking brake. 4. Push vehicle forward or backward. 5. Does vehicle move when it is pushed forward or backward?		
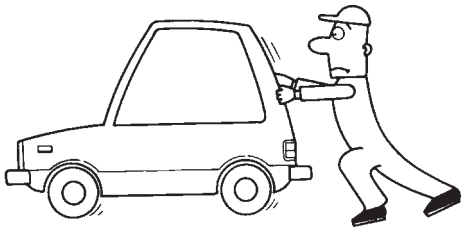 SAT796A		
Yes or No		
Yes	▶	Go to "In "P" Position, Vehicle Moves Forward Or Backward When Pushed", AT-221.
No	▶	GO TO 4.

4	CHECK VEHICLE MOVE	
1. Apply parking brake. 2. Move selector lever to "N" position. 3. Turn ignition switch to "START" position and start engine. 4. Release parking brake. 5. Does vehicle move forward or backward?		
Yes or No		
Yes	▶	Go to "In "N" Position, Vehicle Moves", AT-222.
No	▶	GO TO 5.

5	CHECK SHIFT SHOCK

1. Apply foot brake.
2. Move selector lever to "R" position.
3. Is there large shock when changing from "N" to "R" position?

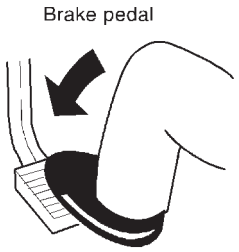

SAT082J

Yes or No

Yes	▶	Go to "Large Shock. "N" → "R" Position", AT-224.
No	▶	GO TO 6.

6	CHECK VEHICLE MOVE

1. Release foot brake for several seconds.
2. Does vehicle creep backward when foot brake is released?

Yes or No

Yes	▶	GO TO 7.
No	▶	Go to "Vehicle Does Not Creep Backward In "R" Position", AT-226.

7	CHECK VEHICLE MOVE

1. Move selector lever to "D", "2" and "1" position and check if vehicle creeps forward.
2. Does vehicle creep forward in all three positions?

Yes or No

Yes	▶	Go to "CRUISE TEST", AT-69.
No	▶	Go to "Vehicle Does Not Creep Forward In "D", "2" Or "1" Position", AT-229.

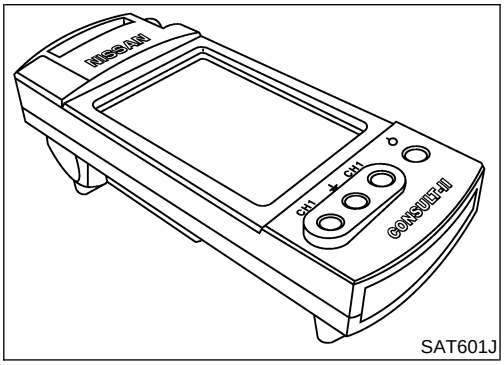

SAT601J

3. CRUISE TEST

NAAT0024S04

- Check all items listed in Parts 1 through 3.

With CONSULT-II

NAAT0024S0401

- Using CONSULT-II, conduct a cruise test and record the result.
- Print the result and ensure that shifts and lock-ups take place as per "Shift Schedule".

CONSULT-II Setting Procedure

NAAT0024S0402

1. Turn ignition switch "OFF".
2. Connect CONSULT-II and CONSULT-II CONVERTER to data link connector, which is located in instrument lower panel on driver side.

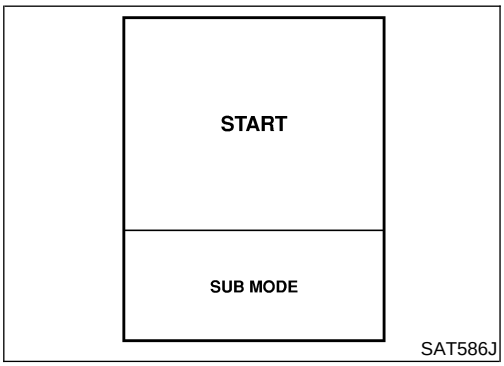

SAT586J

3. Turn ignition switch "ON".
4. Touch "START".

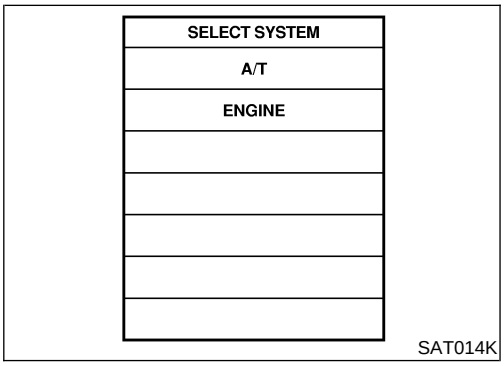

SAT014K

5. Touch "A/T".

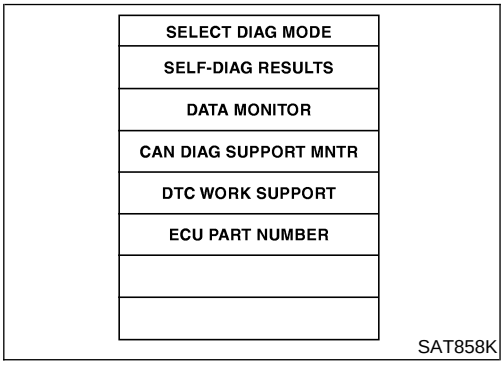

SAT858K

6. Touch "DATA MONITOR".

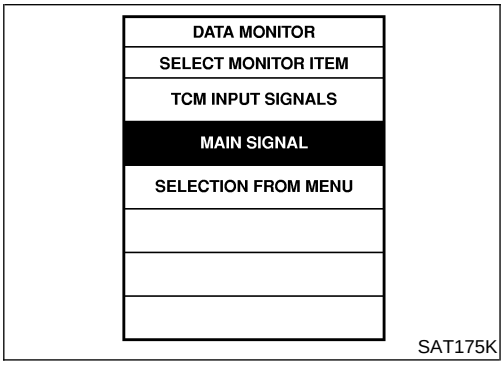

SAT175K

7. Touch "MAIN SIGNALS" or "TCM INPUT SIGNALS".
8. See "Numerical Display", "Barchart Display" or "Line Graph Display".

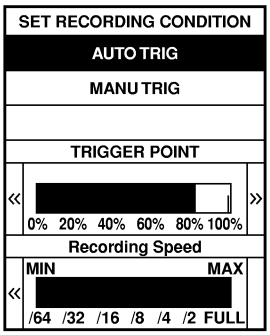

SAT973J

9. Touch "SETTING" to set recording condition ("AUTO TRIG" or "MANU TRIG") and touch "BACK".
10. Touch "Start".

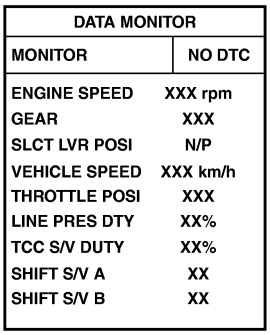

SAT134K

11. When performing cruise test, touch "RECORD".

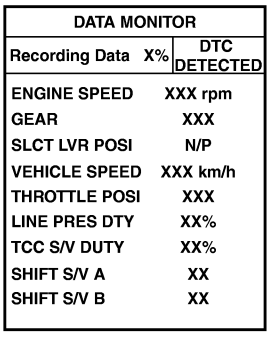

SAT135K

12. After finishing cruise test part 1, touch "STOP".

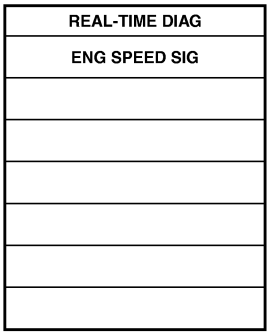

SAT987J

13. Touch "STORE" and touch "BACK".

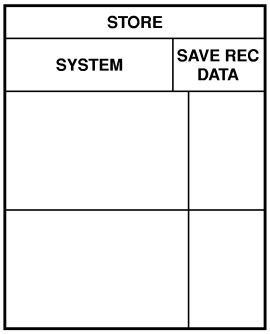

SAT974J

Trigger	VHCL S/SEN A/T	VHCL S/SEN MTR	THRTL POSI SEN
	km/h	km/h	V

SAT975J

14. Touch "DISPLAY".
15. Touch "PRINT".
16. Check the monitor data printed out.
17. Continue cruise test part 2 and 3.

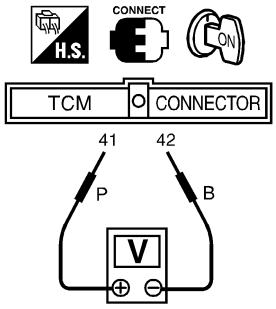

SAT513J

Without CONSULT-II

NAAT0024S0403

- Accelerator pedal position sensor (throttle position sensor) can be checked by voltage across terminals 41 and 42 of TCM.

Cruise Test — Part 1

=NAAT0024S0404

1	CHECK STARTING GEAR (D_1) POSITION

1. Drive vehicle for approx. 10 minutes to warm engine oil and ATF up to operating temperature.
   ATF operating temperature:
   50 - 80°C (122 - 176°F)
2. Park vehicle on flat surface.
3. Set overdrive control switch to "ON" position.
4. Move selector lever to "P" position.

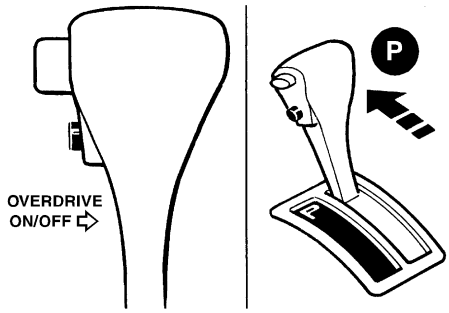

SAT001J

5. Start engine.
6. Move selector lever to "D" position.

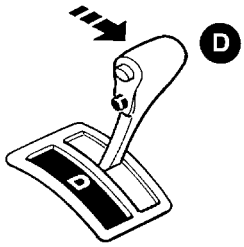

SAT952I

7. Accelerate vehicle by constantly depressing accelerator pedal halfway.

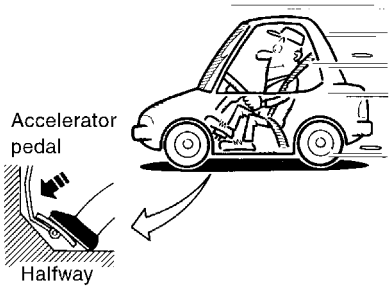

SAT953I

8. Does vehicle start from D_1?
   Read gear position.

Yes or No

Yes	▶	GO TO 2.
No	▶	Go to "Vehicle Cannot Be Started From D_1", AT-232.

2	CHECK SHIFT UP (D_1 TO D_2)

Does A/T shift from D_1 to D_2 at the specified speed?

Read gear position, throttle opening and vehicle speed.

Specified speed when shifting from D_1 to D_2:

Refer to Shift schedule, AT-353.

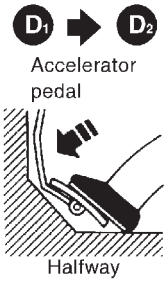

SAT954I

Yes or No

Yes	▶	GO TO 3.
No	▶	Go to "A/T Does Not Shift: $D_1 \rightarrow D_2$ or Does Not Kickdown: $D_4 \rightarrow D_2$", AT-235.

3	CHECK SHIFT UP (D_2 TO D_3)

Does A/T shift from D_2 to D_3 at the specified speed?

Read gear position, throttle opening and vehicle speed.

Specified speed when shifting from D_2 to D_3:

Refer to Shift schedule, AT-353.

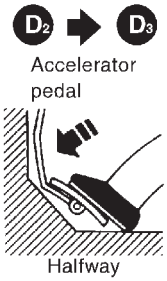

SAT955I

Yes or No

Yes	▶	GO TO 4.
No	▶	Go to "A/T Does Not Shift: $D_2 \rightarrow D_3$", AT-238.

4	CHECK SHIFT UP (D_3 TO D_4)

Does A/T shift from D_3 to D_4 at the specified speed?

Read gear position, throttle opening and vehicle speed.

Specified speed when shifting from D_3 to D_4:

Refer to Shift schedule, AT-353.

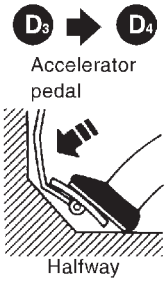

SAT956I

Yes or No

Yes	▶	GO TO 5.
No	▶	Go to "A/T Does Not Shift: $D_3 \rightarrow D_4$", AT-241.

5	CHECK LOCK-UP (D_4 TO D_4 L/U)

Does A/T perform lock-up at the specified speed?

Read vehicle speed, throttle position when lock-up duty becomes 94%.

Specified speed when lock-up occurs:

Refer to Shift schedule, AT-353.

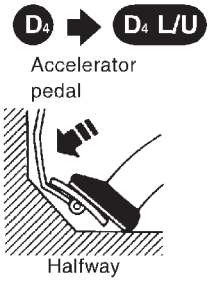

SAT957I

Yes or No

Yes	▶	GO TO 6.
No	▶	Go to "A/T Does Not Perform Lock-up", AT-244.

6	CHECK HOLD LOCK-UP

Does A/T hold lock-up condition for more than 30 seconds?

Yes or No

Yes	▶	GO TO 7.
No	▶	Go to "A/T Does Not Hold Lock-up Condition", AT-246.

7	CHECK LOCK-UP OFF (D_4 L/U TO D_4)

1. Release accelerator pedal.
2. Is lock-up released when accelerator pedal is released?

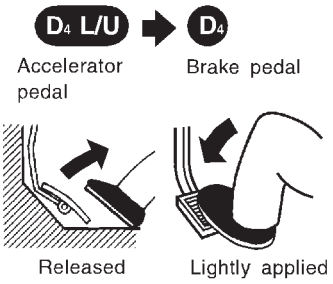

SAT958I

Yes or No

Yes	▶	GO TO 8.
No	▶	Go to "Lock-up Is Not Released", AT-248.

8	CHECK SHIFT DOWN (D_4 TO D_3)

1. Decelerate vehicle by applying foot brake lightly.
2. Does engine speed return to idle smoothly when A/T is shifted from D_4 to D_3?

Read gear position and engine speed.

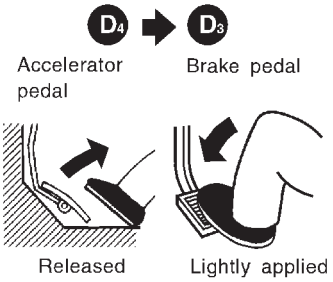

SAT959I

Yes or No

Yes	▶	1. Stop vehicle. 2. Go to "Cruise Test — Part 2", AT-77.
No	▶	Go to "Engine Speed Does Not Return To Idle (Light Braking $D_4 \rightarrow D_3$)", AT-249.

Cruise Test — Part 2

=NAAT0024S0405

1	CHECK STARTING GEAR (D_1) POSITION

1. Confirm overdrive control switch is in "ON" position.
2. Confirm selector lever is in "D" position.
3. Accelerate vehicle by half throttle again.
4. Does vehicle start from D_1?

Read gear position.

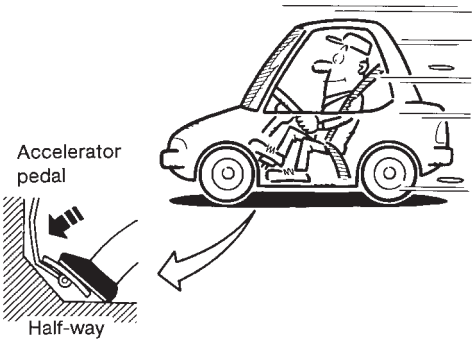

SAT495G

Yes or No

Yes	▶	GO TO 2.
No	▶	Go to "Vehicle Does Not Start From D_1", AT-251.

2	CHECK SHIFT UP AND SHIFT DOWN (D_3 TO D_4 TO D_2)

1. Accelerate vehicle to 80 km/h (50 MPH) as shown in illustration.
2. Release accelerator pedal and then quickly depress it fully.
3. Does A/T shift from D_4 to D_2 as soon as accelerator pedal is depressed fully?

Read gear position and throttle position.

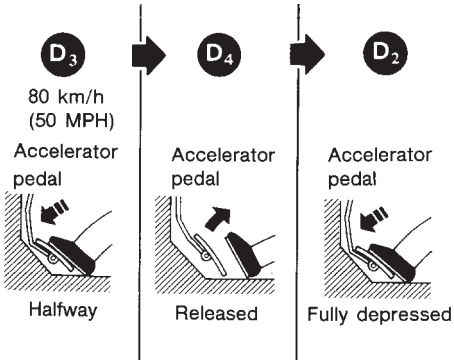

SAT404H

Yes or No

Yes	▶	GO TO 3.
No	▶	Go to "A/T Does Not Shift: $D_3 \rightarrow D_4$, AT-241 Or Does Not Kickdown: $D_4 \rightarrow D_2$", AT-235.

3	CHECK SHIFT UP (D_2 TO D_3)

Does A/T shift from D_2 to D_3 at the specified speed?

Read gear position, throttle position and vehicle speed.

Specified speed when shifting from D_2 to D_3:

Refer to Shift schedule, AT-353.

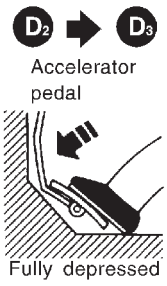

SAT960I

Yes or No

Yes	▶	GO TO 4.
No	▶	Go to "A/T Does Not Shift: $D_2 \rightarrow D_3$", AT-238.

4	CHECK SHIFT UP (D_3 TO D_4) AND ENGINE BRAKE

Release accelerator pedal after shifting from D_2 to D_3.

Does A/T shift from D_3 to D_4 and does vehicle decelerate by engine brake?

Read gear position, throttle position and vehicle speed.

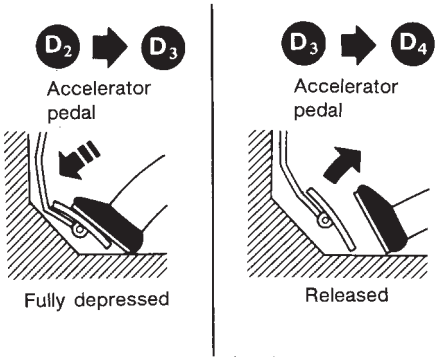

SAT405H

Yes or No

Yes	▶	1. Stop vehicle. 2. Go to "Cruise test — Part 3", AT-79.
No	▶	Go to "A/T Does Not Shift: $D_3 \rightarrow D_4$", AT-241.

Cruise Test — Part 3

=NAAT0024S0406

1	VEHICLE SPEED D_4 POSITION

1. Confirm overdrive control switch is in "ON" position.
2. Confirm selector lever is in "D" position.
3. Accelerate vehicle using half-throttle to D_4.

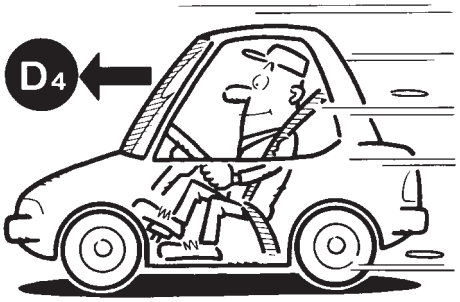

SAT812A

▶	GO TO 2.

2	CHECK SHIFT DOWN (D_4 TO D_3)

1. Release accelerator pedal.
2. Set overdrive control switch to "OFF" position while driving in D_4.
3. Does A/T shift from D_4 to D_3 (O/D OFF)?

Read gear position and vehicle speed.

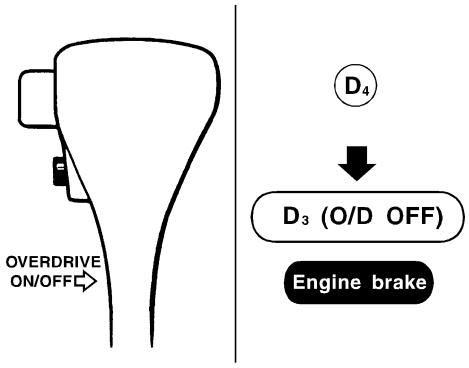

SAT999IA

Yes or No

Yes	▶	GO TO 3.
No	▶	Go to "A/T Does Not Shift: $D_4 \rightarrow D_3$, When Overdrive Control Switch "ON" → "OFF", AT-252.

3	CHECK ENGINE BRAKE

Does vehicle decelerate by engine brake?

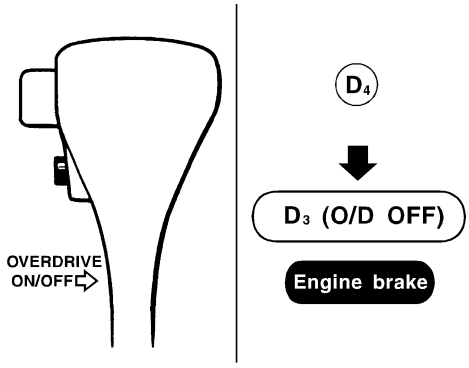

SAT999IA

Yes or No

Yes	▶	GO TO 4.
No	▶	Go to "Engine Speed Does Not Return To Idle (Light Braking $D_4 \rightarrow D_3$)", AT-249.

4	CHECK SHIFT DOWN (D_3 TO 2_2)

1. Move selector lever from "D" to "2" position while driving in D_3 (O/D OFF).
2. Does A/T shift from D_3 (O/D OFF) to 2_2?

Read gear position.

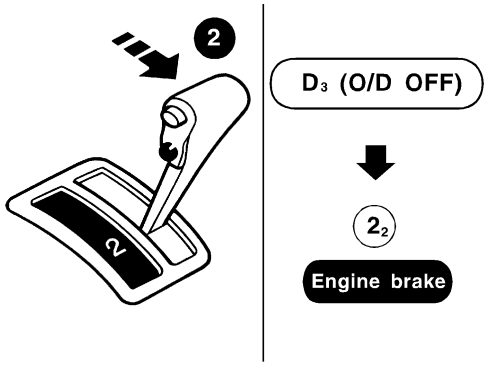

SAT791GB

Yes or No

Yes	▶	GO TO 5.
No	▶	Go to "A/T Does Not Shift: $D_3 \rightarrow 2_2$, When Selector Lever "D" → "2" Position", AT-253.

5	CHECK ENGINE BRAKE

Does vehicle decelerate by engine brake?

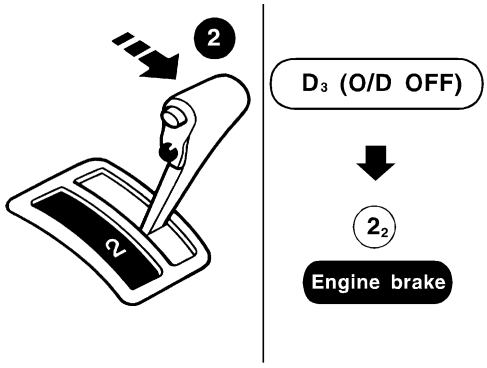

SAT791GB

Yes or No

Yes	▶	GO TO 6.
No	▶	Go to "Engine Speed Does Not Return To Idle (Light Braking $D_4 \rightarrow D_3$)", AT-249.

6	CHECK SHIFT DOWN (2_2 TO 1_1)

1. Move selector lever from "2" to "1" position while driving in 2_2.
2. Does A/T shift from 2_2 to 1_1 position?

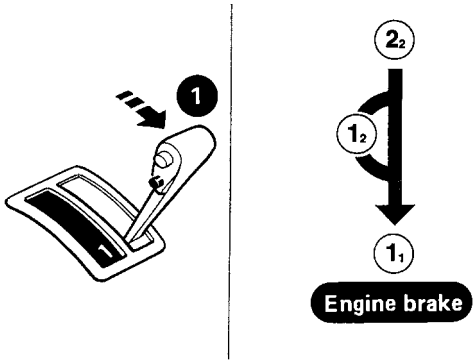

SAT778B

Yes or No

Yes	▶	GO TO 7.
No	▶	Go to "A/T Does Not Shift: $2_2 \rightarrow 1_1$, When Selector lever "2" → "1" Position", AT-254.

7	CHECK ENGINE BRAKE
Does vehicle decelerate by engine brake?	

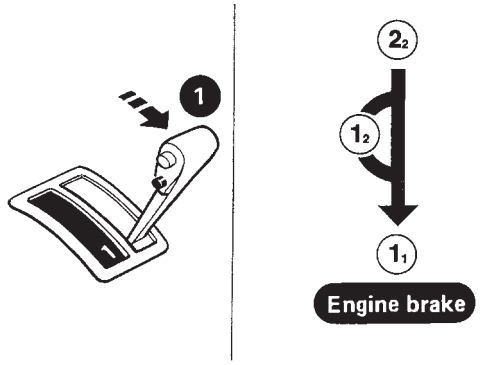

SAT778B

Yes or No

Yes	▶	1. Stop vehicle. 2. Perform self-diagnosis. Refer to TCM SELF-DIAGNOSTIC PROCEDURE (No Tools), AT-48.
No	▶	Go to "Vehicle Does Not Decelerate By Engine Brake", AT-255.

Symptom Chart

NAAT0233

Numbers are arranged in order of inspection.
Perform inspections starting with number one and work up.

Items	Symptom	Condition	Diagnostic Item	Reference Page
No Lock-up Engagement/TCC Inoperative	Torque converter is not locked up.	ON vehicle	1. Accelerator pedal position sensor (throttle position sensor)	AT-179
			2. Vehicle speed sensor·A/T (Revolution sensor) and vehicle speed sensor·MTR	AT-114, 197
			3. Park/neutral position (PNP) switch adjustment	AT-272
			4. Engine speed signal	AT-119
			5. A/T fluid temperature sensor	AT-108
			6. Line pressure test	AT-64
			7. Torque converter clutch solenoid valve	AT-151
			8. Control valve assembly	AT-269
		OFF vehicle	9. Torque converter	AT-283
	Torque converter clutch piston slip.	ON vehicle	1. Fluid level	AT-61
			2. Accelerator pedal position sensor (throttle position sensor)	AT-179
			3. Line pressure test	AT-64
			4. Torque converter clutch solenoid valve	AT-151
			5. Line pressure solenoid valve	AT-165
			6. Control valve assembly	AT-269
		OFF vehicle	7. Torque converter	AT-283
	Lock-up point is extremely high or low. AT-244	ON vehicle	1. Accelerator pedal position sensor (throttle position sensor)	AT-179
			2. Vehicle speed sensor·A/T (Revolution sensor) and vehicle speed sensor·MTR	AT-114, 197
			3. Torque converter clutch solenoid valve	AT-151
			4. Control valve assembly	AT-269
Shift Shock	Sharp shock in shifting from N to D position.	ON vehicle	1. Engine idling rpm	EC-758
			2. Accelerator pedal position sensor (throttle position sensor)	AT-179
			3. Line pressure test	AT-64
			4. A/T fluid temperature sensor	AT-108
			5. Engine speed signal	AT-119
			6. Line pressure solenoid valve	AT-165
			7. Control valve assembly	AT-269
			8. Accumulator N-D	AT-269
		OFF vehicle	9. Turbine revolution sensor	AT-206
			10. Forward clutch	AT-317

Symptom Chart (Cont'd)

Items	Symptom	Condition	Diagnostic Item	Reference Page
Shift Shock	Too sharp a shock in change from D_1 to D_2.	ON vehicle	1. Accelerator pedal position sensor (throttle position sensor)	AT-179
			2. Line pressure test	AT-64
			3. Accumulator servo release	AT-269
			4. Control valve assembly	AT-269
			5. A/T fluid temperature sensor	AT-108
		OFF vehicle	6. Brake band	AT-330
	Too sharp a shock in change from D_2 to D_3.	ON vehicle	1. Accelerator pedal position sensor (throttle position sensor)	AT-179
			2. Line pressure test	AT-64
			3. Control valve assembly	AT-269
		OFF vehicle	4. High clutch	AT-314
			5. Brake band	AT-330
	Too sharp a shock in change from D_3 to D_4.	ON vehicle	1. Accelerator pedal position sensor (throttle position sensor)	AT-179
			2. Line pressure test	AT-64
			3. Control valve assembly	AT-269
		OFF vehicle	4. Brake band	AT-330
			5. Overrun clutch	AT-317
	Gear change shock felt during deceleration by releasing accelerator pedal.	ON vehicle	1. Accelerator pedal position sensor (throttle position sensor)	AT-179
			2. Line pressure test	AT-64
			3. Overrun clutch solenoid valve	AT-185
			4. Control valve assembly	AT-269
	Large shock changing from 1_2 to 1_1 in 1 position.	ON vehicle	1. Control valve assembly	AT-269
		ON vehicle	2. Low & reverse brake	AT-321

Symptom Chart (Cont'd)

Items	Symptom	Condition	Diagnostic Item	Reference Page
Improper Shift Timing	Too high a gear change point from D_1 to D_2, from D_2 to D_3, from D_3 to D_4. AT-235, 238, 241	ON vehicle	1. Accelerator pedal position sensor (throttle position sensor)	AT-179
			2. Vehicle speed sensor·A/T (Revolution sensor) and vehicle speed sensor·MTR	AT-114, 197
			3. Shift solenoid valve A	AT-171
			4. Shift solenoid valve B	AT-175
	Gear change directly from D_1 to D_3 occurs.	ON vehicle	1. Fluid level	AT-61
			2. Accumulator servo release	AT-269
		OFF vehicle	3. Brake band	AT-330
	Too high a change point from D_4 to D_3, from D_3 to D_2, from D_2 to D_1.	ON vehicle	1. Accelerator pedal position sensor (throttle position sensor)	AT-179
			2. Vehicle speed sensor·A/T (Revolution sensor) and vehicle speed sensor·MTR	AT-114, 197
	Kickdown does not operate when depressing pedal in D_4 within kick-down vehicle speed.	ON vehicle	1. Accelerator pedal position sensor (throttle position sensor)	AT-179
			2. Vehicle speed sensor·A/T (Revolution sensor) and vehicle speed sensor·MTR	AT-114, 197
			3. Shift solenoid valve A	AT-171
			4. Shift solenoid valve B	AT-175
Improper Shift Timing	Kickdown operates or engine overruns when depressing pedal in D_4 beyond kick-down vehicle speed limit.	ON vehicle	1. Vehicle speed sensor·A/T (Revolution sensor) and vehicle speed sensor·MTR	AT-114, 197
			2. Accelerator pedal position sensor (throttle position sensor)	AT-179
			3. Shift solenoid valve A	AT-171
			4. Shift solenoid valve B	AT-175
	Gear change from 2_2 to 2_3 in 2 position.	ON vehicle	1. Park/neutral position (PNP) switch adjustment	AT-272
	Gear change from 1_1 to 1_2 in 1 position.	ON vehicle	1. Park/neutral position (PNP) switch adjustment	AT-272
			2. Manual control linkage adjustment	AT-272

Symptom Chart (Cont'd)

Items	Symptom	Condition	Diagnostic Item	Reference Page
No Down Shift	Failure to change gear from D_4 to D_3.	ON vehicle	1. Fluid level	AT-61
			2. Accelerator pedal position sensor (throttle position sensor)	AT-179
			3. Overrun clutch solenoid valve	AT-185
			4. Shift solenoid valve A	AT-171
			5. Line pressure solenoid valve	AT-165
			6. Control valve assembly	AT-269
		OFF vehicle	7. Low & reverse brake	AT-321
			8. Overrun clutch	AT-317
	Failure to change gear from D_3 to D_2 or from D_4 to D_2.	ON vehicle	1. Fluid level	AT-61
			2. Accelerator pedal position sensor (throttle position sensor)	AT-179
			3. Shift solenoid valve A	AT-171
			4. Shift solenoid valve B	AT-175
			5. Control valve assembly	AT-269
		OFF vehicle	6. High clutch	AT-314
			7. Brake band	AT-330
	Failure to change gear from D_2 to D_1 or from D_3 to D_1.	ON vehicle	1. Fluid level	AT-61
			2. Accelerator pedal position sensor (throttle position sensor)	AT-179
			3. Shift solenoid valve A	AT-179
			4. Shift solenoid valve B	AT-175
			5. Control valve assembly	AT-269
		OFF vehicle	6. Low one-way clutch	AT-325
			7. High clutch	AT-314
			8. Brake band	AT-330

Symptom Chart (Cont'd)

Items	Symptom	Condition	Diagnostic Item	Reference Page
No Down Shift	Failure to change from D_3 to 2_2 when changing lever into 2 position. AT-249	ON vehicle	1. Park/neutral position (PNP) switch adjustment	AT-272
			2. Accelerator pedal position sensor (throttle position sensor)	AT-179
			3. Overrun clutch solenoid valve	AT-185
			4. Shift solenoid valve B	AT-175
			5. Shift solenoid valve A	AT-171
			6. Control valve assembly	AT-269
			7. Manual control linkage adjustment	AT-272
		OFF vehicle	8. Brake band	AT-330
			9. Overrun clutch	AT-317
	Does not change from 1_2 to 1_1 in 1 position.	ON vehicle	1. Park/neutral position (PNP) switch adjustment	AT-272
			2. Vehicle speed sensor·A/T (Revolution sensor) and vehicle speed sensor·MTR	AT-114, 197
			3. Shift solenoid valve A	AT-171
			4. Control valve assembly	AT-269
			5. Overrun clutch solenoid valve	AT-185
		OFF vehicle	6. Overrun clutch	AT-317
			7. Low & reverse brake	AT-321
No Up Shift	Failure to change gear from D_1 to D_2.	ON vehicle	1. Park/neutral position (PNP) switch adjustment	AT-272
			2. Manual control linkage adjustment	AT-272
			3. Shift solenoid valve A	AT-171
			4. Control valve assembly	AT-269
			5. Vehicle speed sensor·A/T (Revolution sensor) and vehicle speed sensor·MTR	AT-114, 197
		OFF vehicle	6. Brake band	AT-330
	Failure to change gear from D_2 to D_3.	ON vehicle	1. Park/neutral position (PNP) switch adjustment	AT-272
			2. Manual control linkage adjustment	AT-272
			3. Shift solenoid valve B	AT-175
			4. Control valve assembly	AT-269
			5. Vehicle speed sensor·A/T (Revolution sensor) and vehicle speed sensor·MTR	AT-114, 197
		OFF vehicle	6. High clutch	AT-314
			7. Brake band	AT-330

Symptom Chart (Cont'd)

Items	Symptom	Condition	Diagnostic Item	Reference Page
No Up Shift	Failure to change gear from D_3 to D_4.	ON vehicle	1. Park/neutral position (PNP) switch adjustment	AT-272
			2. Manual control linkage adjustment	AT-272
			3. Shift solenoid valve A	AT-171
			4. Vehicle speed sensor·A/T (Revolution sensor) and vehicle speed sensor·MTR	AT-114, 197
			5. A/T fluid temperature sensor	AT-108
		OFF vehicle	6. Brake band	AT-330
	A/T does not shift to D_4 when driving with overdrive control switch ON.	ON vehicle	1. Accelerator pedal position sensor (throttle position sensor)	AT-179
			2. Park/neutral position (PNP) switch adjustment	AT-272
			3. Vehicle speed sensor·A/T (Revolution sensor) and vehicle speed sensor·MTR	AT-114, 197
			4. Shift solenoid valve A	AT-171
			5. Overrun clutch solenoid valve	AT-185
			6. Control valve assembly	AT-269
			7. A/T fluid temperature sensor	AT-108
			8. Line pressure solenoid valve	AT-165
		OFF vehicle	9. Brake band	AT-330
			10. Overrun clutch	AT-317
Slips/Will Not Engage	Vehicle will not run in R position (but runs in D, 2 and 1 positions). Clutch slips. Very poor acceleration. AT-226	ON vehicle	1. Manual control linkage adjustment	AT-272
			2. Line pressure test	AT-64
			3. Line pressure solenoid valve	AT-165
			4. Control valve assembly	AT-269
		OFF vehicle	5. Reverse clutch	AT-311
			6. High clutch	AT-314
			7. Forward clutch	AT-317
			8. Overrun clutch	AT-317
			9. Low & reverse brake	AT-321
	Vehicle will not run in D and 2 positions (but runs in 1 and R positions).	ON vehicle	1. Manual control linkage adjustment	AT-272
		OFF vehicle	2. Low one-way clutch	AT-325

Symptom Chart (Cont'd)

Items	Symptom	Condition	Diagnostic Item	Reference Page
Slips/Will Not Engage	Vehicle will not run in D, 1, 2 positions (but runs in R position). Clutch slips. Very poor acceleration. AT-229	ON vehicle	1. Fluid level	AT-61
			2. Line pressure test	AT-64
			3. Line pressure solenoid valve	AT-165
			4. Control valve assembly	AT-269
			5. Accumulator N-D	AT-269
		OFF vehicle	6. Reverse clutch	AT-311
			7. High clutch	AT-314
			8. Forward clutch	AT-317
			9. Forward one-way clutch	AT-327
			10. Low one-way clutch	AT-325
	Clutches or brakes slip somewhat in starting.	ON vehicle	1. Fluid level	AT-61
			2. Manual control linkage adjustment	AT-272
			3. Accelerator pedal position sensor (throttle position sensor)	AT-179
			4. Line pressure test	AT-64
			5. Line pressure solenoid valve	AT-165
			6. Control valve assembly	AT-269
			7. Accumulator N-D	AT-269
		OFF vehicle	8. Forward clutch	AT-317
			9. Reverse clutch	AT-311
			10. Low & reverse brake	AT-321
			11. Oil pump	AT-294
			12. Torque converter	AT-283
	No creep at all. AT-226, 229	ON vehicle	1. Fluid level	AT-61
			2. Line pressure test	AT-64
			3. Control valve assembly	AT-269
		OFF vehicle	4. Forward clutch	AT-317
			5. Oil pump	AT-294
			6. Torque converter	AT-283
	Almost no shock or clutches slipping in change from D_1 to D_2.	ON vehicle	1. Fluid level	AT-61
			2. Accelerator pedal position sensor (throttle position sensor)	AT-179
			3. Line pressure test	AT-64
			4. Accumulator servo release	AT-269
			5. Control valve assembly	AT-269
		OFF vehicle	6. Brake band	AT-330

Symptom Chart (Cont'd)

Items	Symptom	Condition	Diagnostic Item	Reference Page
Slips/Will Not Engage	Almost no shock or slipping in change from D_2 to D_3.	ON vehicle	1. Fluid level	AT-61
			2. Accelerator pedal position sensor (throttle position sensor)	AT-179
			3. Line pressure test	AT-64
			4. Control valve assembly	AT-269
		OFF vehicle	5. High clutch	AT-314
			6. Forward clutch	AT-317
	Almost no shock or slipping in change from D_3 to D_4.	ON vehicle	1. Fluid level	AT-61
			2. Accelerator pedal position sensor (throttle position sensor)	AT-179
			3. Line pressure test	AT-64
			4. Control valve assembly	AT-269
		OFF vehicle	5. High clutch	AT-314
			6. Brake band	AT-330
	Races extremely fast or slips in changing from D_4 to D_3 when depressing pedal.	ON vehicle	1. Fluid level	AT-61
			2. Accelerator pedal position sensor (throttle position sensor)	AT-179
			3. Line pressure test	AT-64
			4. Line pressure solenoid valve	AT-165
			5. Control valve assembly	AT-269
		OFF vehicle	6. High clutch	AT-314
			7. Forward clutch	AT-317
	Races extremely fast or slips in changing from D_4 to D_2 when depressing pedal.	ON vehicle	1. Fluid level	AT-61
			2. Accelerator pedal position sensor (throttle position sensor)	AT-179
			3. Line pressure test	AT-64
			4. Line pressure solenoid valve	AT-165
			5. Shift solenoid valve A	AT-171
			6. Control valve assembly	AT-269
		OFF vehicle	7. Brake band	AT-330
			8. Forward clutch	AT-317
	Races extremely fast or slips in changing from D_3 to D_2 when depressing pedal.	ON vehicle	1. Fluid level	AT-61
			2. Accelerator pedal position sensor (throttle position sensor)	AT-179
			3. Line pressure test	AT-64
			4. Line pressure solenoid valve	AT-165
			5. Control valve assembly	AT-269
			6. A/T fluid temperature sensor	AT-108

Symptom Chart (Cont'd)

Items	Symptom	Condition	Diagnostic Item	Reference Page
Slips/Will Not Engage	Races extremely fast or slips in changing from D_3 to D_2 when depressing pedal.	OFF vehicle	7. Brake band	AT-330
			8. Forward clutch	AT-317
			9. High clutch	AT-314
	Races extremely fast or slips in changing from D_4 or D_3 to D_1 when depressing pedal.	ON vehicle	1. Fluid level	AT-61
			2. Accelerator pedal position sensor (throttle position sensor)	AT-179
			3. Line pressure test	AT-64
			4. Line pressure solenoid valve	AT-165
			5. Control valve assembly	AT-269
		OFF vehicle	6. Forward clutch	AT-317
			7. Forward one-way clutch	AT-327
			8. Low one-way clutch	AT-325
	Vehicle will not run in any position.	ON vehicle	1. Fluid level	AT-61
			2. Manual control linkage adjustment	AT-272
			3. Line pressure test	AT-64
			4. Line pressure solenoid valve	AT-165
		OFF vehicle	5. Oil pump	AT-294
			6. High clutch	AT-314
			7. Brake band	AT-330
			8. Low & reverse brake	AT-321
			9. Torque converter	AT-283
			10. Parking pawl components	AT-334
NOT USED	Engine cannot be started in P and N positions. AT-220	ON vehicle	1. Ignition switch and starter	EL-16, and SC-10
			2. Manual control linkage adjustment	AT-272
			3. Park/neutral position (PNP) switch adjustment	AT-272
	Engine starts in positions other than P and N. AT-220	ON vehicle	1. Manual control linkage adjustment	AT-272
			2. Park/neutral position (PNP) switch adjustment	AT-272
	Transmission noise in P and N positions.	ON vehicle	1. Fluid level	AT-61
			2. Line pressure test	AT-64
			3. Accelerator pedal position sensor (throttle position sensor)	AT-179
			4. Vehicle speed sensor·A/T (Revolution sensor) and vehicle speed sensor·MTR	AT-114, 197
			5. Engine speed signal	AT-119
		OFF vehicle	6. Oil pump	AT-294
			7. Torque converter	AT-283

Symptom Chart (Cont'd)

Items	Symptom	Condition	Diagnostic Item	Reference Page
NOT USED	Vehicle moves when changing into P position or parking gear does not disengage when shifted out of P position. AT-221	ON vehicle	1. Manual control linkage adjustment	AT-272
		OFF vehicle	2. Parking pawl components	AT-334
	Vehicle runs in N position. AT-222	ON vehicle	1. Manual control linkage adjustment	AT-272
		OFF vehicle	2. Forward clutch	AT-317
			3. Reverse clutch	AT-311
			4. Overrun clutch	AT-317
	Vehicle braked when shifting into R position.	ON vehicle	1. Fluid level	AT-61
			2. Manual control linkage adjustment	AT-272
			3. Line pressure test	AT-64
			4. Line pressure solenoid valve	AT-165
			5. Control valve assembly	AT-269
		OFF vehicle	6. High clutch	AT-314
			7. Brake band	AT-330
			8. Forward clutch	AT-317
			9. Overrun clutch	AT-317
	Excessive creep.	ON vehicle	1. Engine idling rpm	EC-758
	Engine stops when shifting lever into R, D, 2 and 1.	ON vehicle	1. Engine idling rpm	EC-758
			2. Torque converter clutch solenoid valve	AT-151
			3. Control valve assembly	AT-269
		OFF vehicle	4. Torque converter	AT-283
	Vehicle braked by gear change from D_1 to D_2.	ON vehicle	1. Fluid level	AT-61
		OFF vehicle	2. Reverse clutch	AT-311
			3. Low & reverse brake	AT-321
			4. High clutch	AT-314
			5. Low one-way clutch	AT-325
	Vehicle braked by gear change from D_2 to D_3.	ON vehicle	1. Fluid level	AT-61
		OFF vehicle	2. Brake band	AT-330
	Vehicle braked by gear change from D_3 to D_4.	ON vehicle	1. Fluid level	AT-61
		OFF vehicle	2. Overrun clutch	AT-317
			3. Forward one-way clutch	AT-327
			4. Reverse clutch	AT-311

Symptom Chart (Cont'd)

Items	Symptom	Condition	Diagnostic Item	Reference Page
NOT USED	Maximum speed not attained. Acceleration poor.	ON vehicle	1. Fluid level	AT-61
			2. Park/neutral position (PNP) switch adjustment	AT-272
			3. Shift solenoid valve A	AT-171
			4. Shift solenoid valve B	AT-175
			5. Control valve assembly	AT-269
		OFF vehicle	6. Reverse clutch	AT-311
			7. High clutch	AT-314
			8. Brake band	AT-330
			9. Low & reverse brake	AT-321
			10. Oil pump	AT-294
			11. Torque converter	AT-283
	Transmission noise in D, 2, 1 and R positions.	ON vehicle	1. Fluid level	AT-61
		ON vehicle	2. Torque converter	AT-283
	Engine brake does not operate in "1" position. AT-251	ON vehicle	1. Park/neutral position (PNP) switch adjustment	AT-272
			2. Manual control linkage adjustment	AT-272
			3. Accelerator pedal position sensor (throttle position sensor)	AT-179
			4. Vehicle speed sensor·A/T (Revolution sensor) and vehicle speed sensor·MTR	AT-114, 197
			5. Shift solenoid valve A	AT-171
			6. Control valve assembly	AT-269
			7. Overrun clutch solenoid valve	AT-185
		OFF vehicle	8. Overrun clutch	AT-317
			9. Low & reverse brake	AT-321

Symptom Chart (Cont'd)

Items	Symptom	Condition	Diagnostic Item	Reference Page
NOT USED	Transmission overheats.	ON vehicle	1. Fluid level	AT-61
			2. Engine idling rpm	EC-758
			3. Accelerator pedal position sensor (throttle position sensor)	AT-179
			4. Line pressure test	AT-64
			5. Line pressure solenoid valve	AT-165
			6. Control valve assembly	AT-269
		OFF vehicle	7. Oil pump	AT-294
			8. Reverse clutch	AT-311
			9. High clutch	AT-314
			10. Brake band	AT-330
			11. Forward clutch	AT-317
			12. Overrun clutch	AT-317
			13. Low & reverse brake	AT-321
			14. Torque converter	AT-283
	ATF shoots out during operation. White smoke emitted from exhaust pipe during operation.	ON vehicle	1. Fluid level	AT-61
		OFF vehicle	2. Reverse clutch	AT-311
			3. High clutch	AT-314
			4. Brake band	AT-330
			5. Forward clutch	AT-317
			6. Overrun clutch	AT-317
			7. Low & reverse brake	AT-321
	Offensive smell at fluid charging pipe.	ON vehicle	1. Fluid level	AT-61
		OFF vehicle	2. Torque converter	AT-283
			3. Oil pump	AT-294
			4. Reverse clutch	AT-311
			5. High clutch	AT-314
			6. Brake band	AT-330
			7. Forward clutch	AT-317
			8. Overrun clutch	AT-317
			9. Low & reverse brake	AT-321
	Engine is stopped at R, D, 2 and 1 positions.	ON vehicle	1. Fluid level	AT-61
			2. Torque converter clutch solenoid valve	AT-151
			3. Shift solenoid valve B	AT-175
			4. Shift solenoid valve A	AT-171
			5. Control valve assembly	AT-269

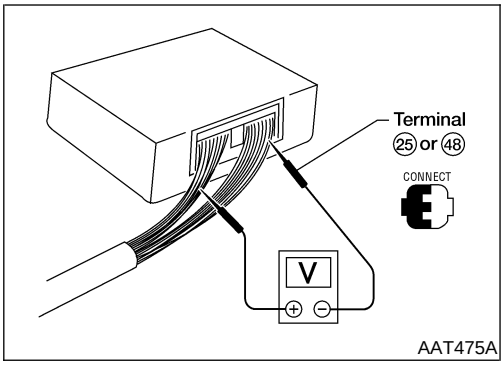

AAT475A

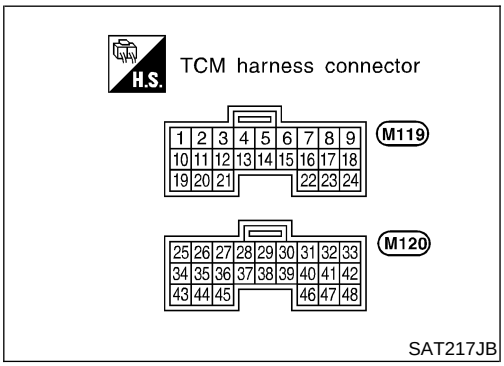

SAT217JB

TCM Terminals and Reference Value

=NAAT0027

PREPARATION

NAAT0027S01

- Measure voltage between each terminal and terminal 25 or 48 by following “TCM INSPECTION TABLE”.

TCM HARNESS CONNECTOR TERMINAL LAYOUT

NAAT0027S02

TCM INSPECTION TABLE

NAAT0027S03

(Data are reference values.)

Terminal No.	Wire color	Item	Condition		Judgement standard (Approx.)
1	GY	Line pressure solenoid valve	ON	When releasing accelerator pedal after warming up engine.	1.5 - 3.0V
				When depressing accelerator pedal fully after warming up engine.	0V
2	BR/Y	Line pressure solenoid valve (with dropping resistor)		When releasing accelerator pedal after warming up engine.	5 - 14V
				When depressing accelerator pedal fully after warming up engine.	0V
3	G/OR	Torque converter clutch solenoid valve		When A/T performs lock-up.	8 - 15V
				When A/T does not perform lock- up.	0V
5	L	CAN (high)	ON or OFF	—	—
6	R	CAN (low)		—	—
10	W/R	Power source		When turning ignition switch to “ON”.	Battery voltage
				When turning ignition switch to “OFF”.	0V

TCM Terminals and Reference Value (Cont'd)

Terminal No.	Wire color	Item	Condition		Judgement standard (Approx.)
11	L/W	Shift solenoid valve A		When shift solenoid valve A operates. (When driving in "D_1" or "D_4".)	Battery voltage
				When shift solenoid valve A does not operate. (When driving in "D_2" or "D_3".)	0V
12	L/R	Shift solenoid valve B		When shift solenoid valve B operates. (When driving in "D_1" or "D_2".)	Battery voltage
				When shift solenoid valve B does not operate. (When driving in "D_3" or "D_4".)	0V
19	W/R	Power source		Same as No. 10	
20	L/B	Overrun clutch solenoid valve		When overrun clutch solenoid valve operates.	Battery voltage
				When overrun clutch solenoid valve does not operate.	0V
25	B	Ground		—	0V
26	L/Y	PNP switch "1" position		When setting selector lever to "1" position.	Battery voltage
				When setting selector lever to other positions.	0V
27	G/W	PNP switch "2" position		When setting selector lever to "2" position.	Battery voltage
				When setting selector lever to other positions.	0V
28	R/Y	Power source (Memory back-up)	or	When turning ignition switch to "OFF".	Battery voltage
				When turning ignition switch to "ON".	Battery voltage
29	W	Revolution sensor (Measure in AC range)		When vehicle cruises at 30 km/h (19 MPH).	1V or more Voltage rises gradually in response to vehicle speed.
				When vehicle parks.	0V
30*	W	Data link connector (RX)	or	—	—
31*	L	Data link connector (TX)		—	—
32	P/B	Sensor power		Ignition switch "ON".	4.5 - 5.5V
				Ignition switch "OFF".	0V

Terminal No.	Wire color	Item	Condition		Judgement standard (Approx.)
34	L	PNP switch "D" position		When setting selector lever to "D" position.	Battery voltage
				When setting selector lever to other positions.	0V
35	Y	PNP switch "R" position		When setting selector lever to "R" position.	Battery voltage
				When setting selector lever to other positions.	0V
36	P	PNP switch "N" or "P" position		When setting selector lever to "N" or "P" position.	Battery voltage
				When setting selector lever to other positions.	0V
38	W	Turbine revolution sensor (Measure in AC range)	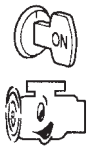	When engine is running at 1,000 rpm	1.2V Voltage rises gradually in response to engine speed.
39	W/B	Engine speed signal	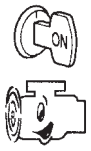	Refer to EC-141, "ECM INSPECTION TABLE".	—
40	W/L	Vehicle speed sensor		When moving vehicle at 2 to 3 km/h (1 to 2 MPH) for 1 m (3 ft) or more.	Voltage varies between less than 1.0V and more than 4.5V.
41	P/L	Accelerator pedal position sensor (throttle position sensor)		When depressing accelerator pedal slowly after warming up engine. (Voltage rises gradually in response to throttle position.)	Fully-closed throttle: 0.5V - 0.7V Fully-open throttle: 4V
42	B	Sensor ground		—	0V
46	W/G	Transfer control unit		Refer to TF section, "Transfer Control Unit Terminals and Reference Value".	—
47	R	A/T fluid temperature sensor		When ATF temperature is 20°C (68°F).	1.5V
				When ATF temperature is 80°C (176°F).	0.5V
48	B	Ground		—	0V

*: These terminals are connected to the Data link connector for CONSULT-II.

System Description

NAAT0234

CAN (Controller Area Network) is a serial communication line for real time application. It is an on-vehicle multiplex communication line with high data communication speed and excellent error detection ability. Many electronic control units are equipped onto a vehicle, and each control unit shares information and links with other control units during operation (not independent). In CAN communication, control units are connected with 2 communication lines (CAN H line, CAN L line) allowing a high rate of information transmission with less wiring. Each control unit transmits/receives data but selectively reads required data only. Refer to EL-409.

Wiring Diagram — AT — MAIN

NAAT0185

AT-MAIN-01

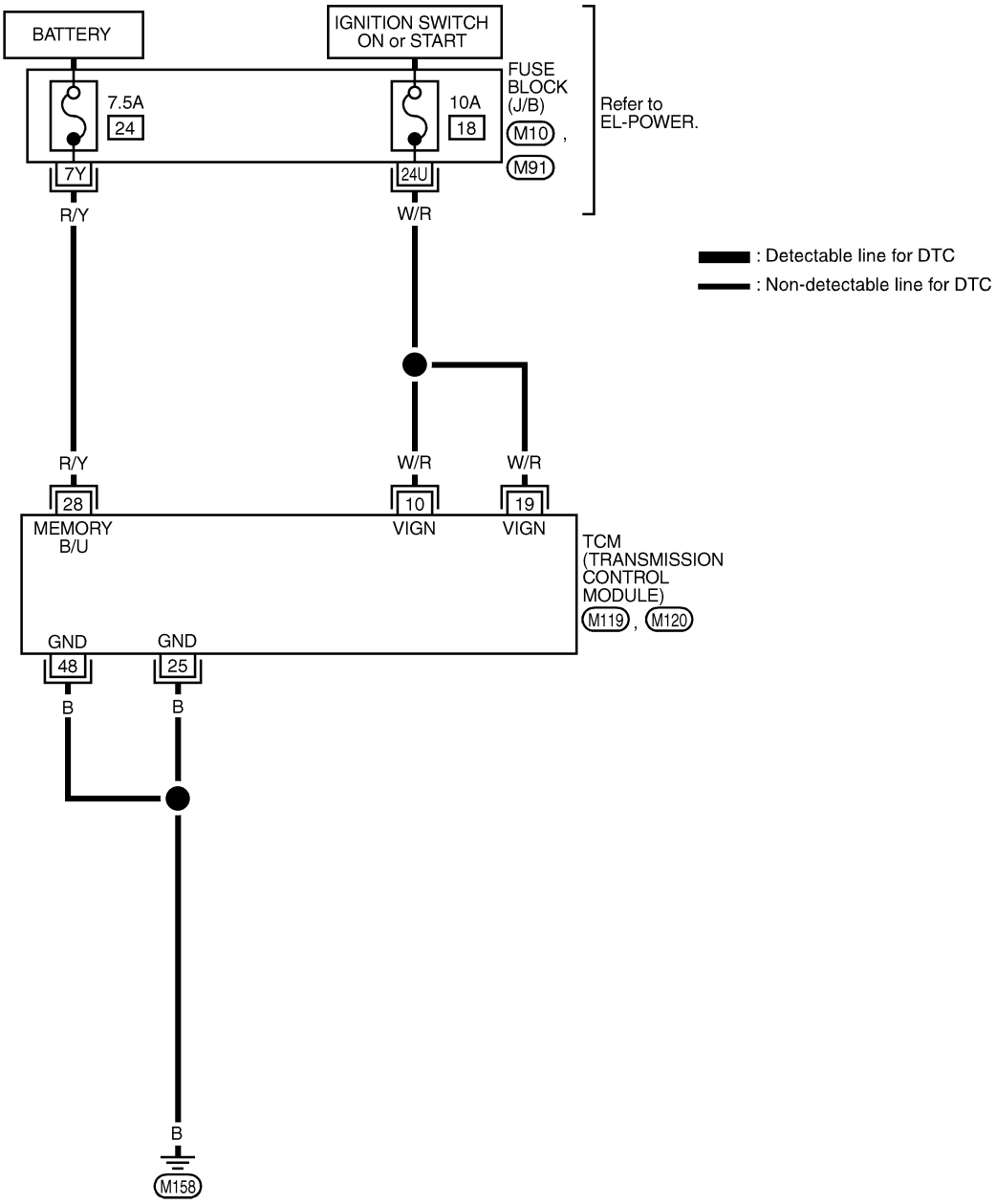

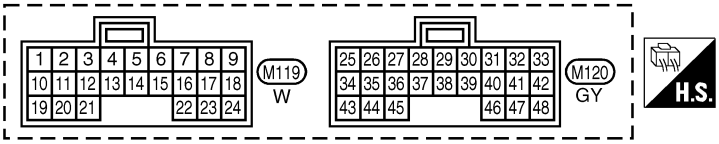

REFER TO THE FOLLOWING.
M10 , M91 -FUSE BLOCK-JUNCTION BOX (J/B)

MAT311B

TCM TERMINALS AND REFERENCE VALUE

NAAT0185S01

Remarks: Specification data are reference values.

Terminal No.	Wire color	Item	Condition		Judgement standard (Approx.)
10	W/R	Power source	ON or OFF	When turning ignition switch to "ON".	Battery voltage
				When turning ignition switch to "OFF".	0V
19	W/R	Power source		Same as No. 10	
25	B	Ground	OFF	—	0V
28	R/Y	Power source (Memory back-up)	ON or OFF	When turning ignition switch to "OFF".	Battery voltage
				When turning ignition switch to "ON".	Battery voltage
48	B	Ground	OFF	—	0V

Diagnostic Procedure

NAAT0223

1 CHECK TCM POWER SOURCE STEP 1

1. Turn ignition switch to ON position.
   (Do not start engine.)
2. Check voltage between TCM harness connector M119, M120 terminals 10, 19, 28 and ground.

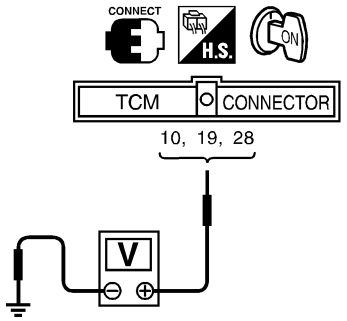

Voltage:
Battery voltage

SAT611J

OK or NG

OK	▶	GO TO 2.
NG	▶	GO TO 3.

2	CHECK TCM POWER SOURCE STEP 2

1. Turn ignition switch to OFF position.
2. Check voltage between TCM harness connector M120 terminal 28 and ground.

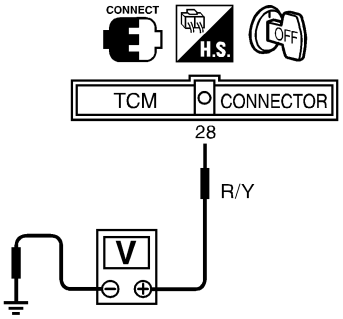

Voltage:
Battery voltage

SAT612JC

OK or NG

OK	▶	GO TO 4.
NG	▶	GO TO 3.

3	DETECT MALFUNCTIONING ITEM

Check the following items:
- Harness for short or open between ignition switch and TCM harness connector M119, M120 terminals 10, 19 and 28 (Main harness)
- Ignition switch and 10A or 7.5A fuse [No. 18 or 24, located in the fuse block (J/B)]
  Refer to EL-11, "Schematic".

OK or NG

OK	▶	GO TO 4.
NG	▶	Repair or replace damaged parts.

4	CHECK TCM GROUND CIRCUIT

1. Turn ignition switch to OFF position.
2. Disconnect TCM harness connector.
3. Check continuity between TCM harness connector M120 terminals 25, 48 and ground. Refer to wiring diagram — AT — MAIN.
   Continuity should exist.
   If OK, check harness for short to ground and short to power.

OK or NG

OK	▶	**INSPECTION END**
NG	▶	Repair open circuit or short to ground or short to power in harness or connectors.

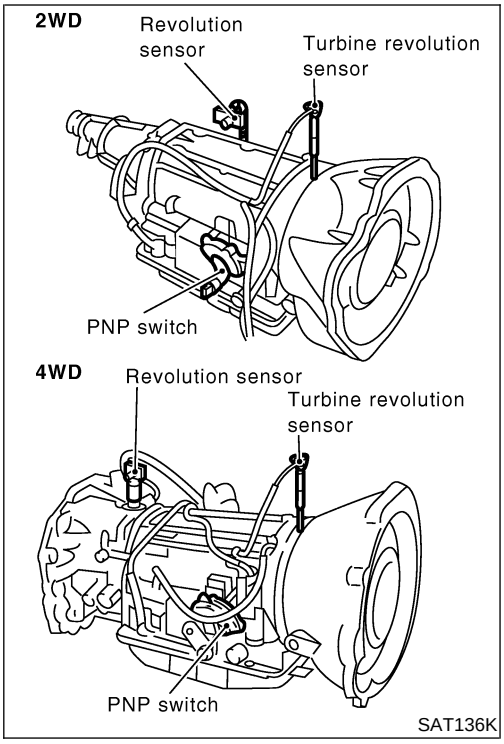

Description

NAAT0028

- The PNP switch assemble includes a transmission range switch.
- The transmission range switch detects the selector position and sends a signal to the TCM.

TCM TERMINALS AND REFERENCE VALUE

NAAT0028S02

Remarks: Specification data are reference values.

Terminal No.	Wire color	Item	Condition		Judgement standard (Approx.)
26	L/Y	PNP switch “1” position		When setting selector lever to “1” position.	Battery voltage
				When setting selector lever to other positions.	0V
27	G/W	PNP switch “2” position		When setting selector lever to “2” position.	Battery voltage
				When setting selector lever to other positions.	0V
34	L	PNP switch “D” position		When setting selector lever to “D” position.	Battery voltage
				When setting selector lever to other positions.	0V
35	Y	PNP switch “R” position		When setting selector lever to “R” position.	Battery voltage
				When setting selector lever to other positions.	0V
36	P	PNP switch “N” or “P” position		When setting selector lever to “N” or “P” position.	Battery voltage
				When setting selector lever to other positions.	0V

ON BOARD DIAGNOSIS LOGIC

NAAT0028S03

Diagnostic trouble code	Malfunction is detected when ...	Check item (Possible cause)
: PNP SW/CIRC	TCM does not receive the correct voltage signal from the switch based on the gear position.	• Harness or connectors (The PNP switch circuit is open or shorted.) • PNP switch
GST : P0705		

SELECT SYSTEM
A/T
ENGINE

SAT014K

SELECT DIAG MODE
WORK SUPPORT
SELF-DIAG RESULTS
DATA MONITOR
ACTIVE TEST
DTC & SRT CONFIRMATION
ECM PART NUMBER

SAT020K

DIAGNOSTIC TROUBLE CODE (DTC) CONFIRMATION PROCEDURE

NAAT0028S01

CAUTION:

Always drive vehicle at a safe speed.

NOTE:

If "DIAGNOSTIC TROUBLE CODE CONFIRMATION PROCEDURE" has been previously conducted, always turn ignition switch "OFF" and wait at least 5 seconds before conducting the next test.

After the repair, perform the following procedure to confirm the malfunction is eliminated.

With CONSULT-II

1) Turn ignition switch "ON".
2) Select "DATA MONITOR" mode for "ENGINE" with CONSULT-II.
3) Start engine and maintain the following conditions for at least 5 consecutive seconds.
   VHCL SPEED SE: 10 km/h (6 MPH) or more
   THRTL POS SEN: More than 1.3V
   Selector lever: D position (OD "ON" or "OFF")

With GST

Follow the procedure "With CONSULT-II".

Wiring Diagram — AT — PNP/SW

NAAT0186

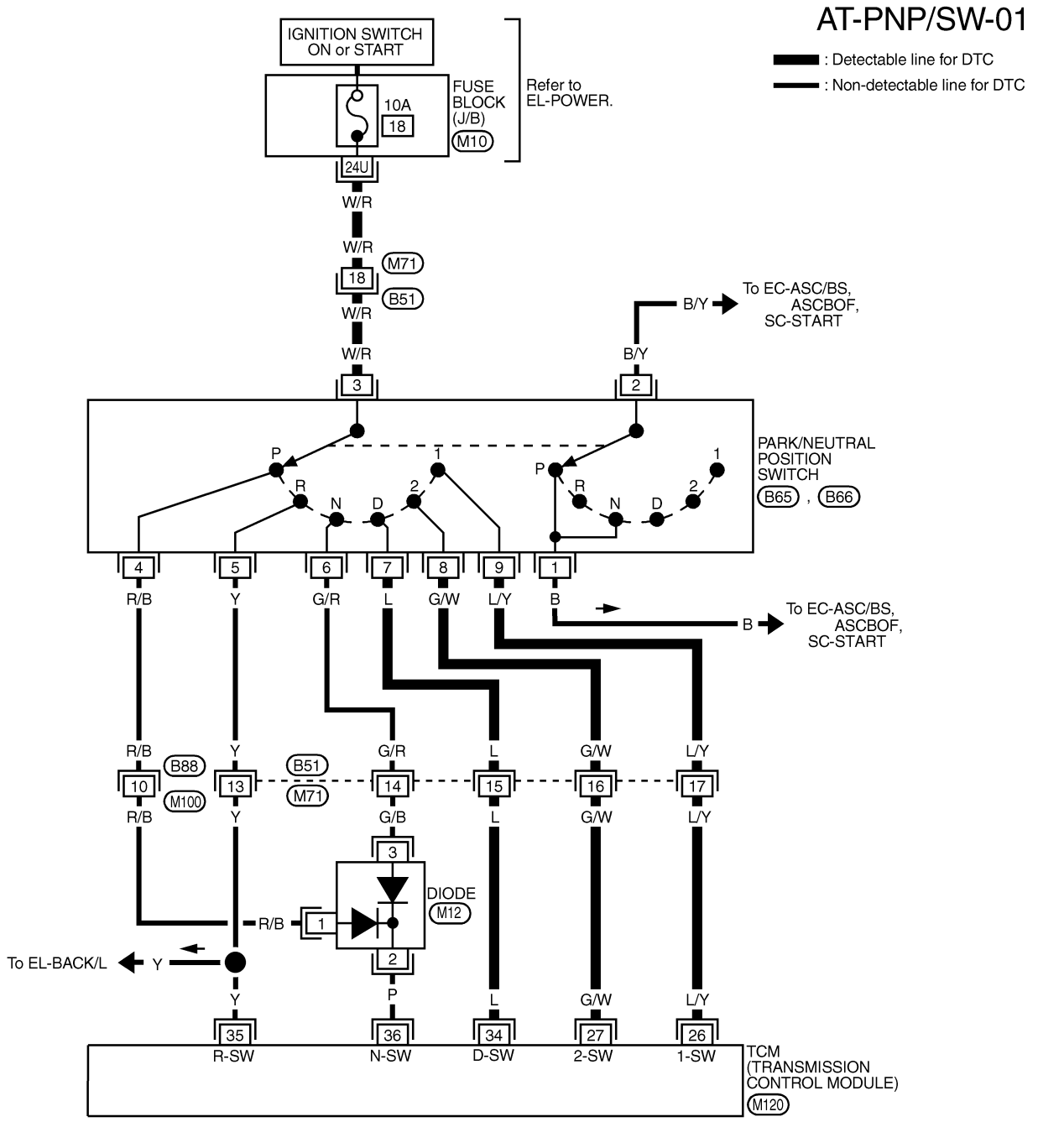

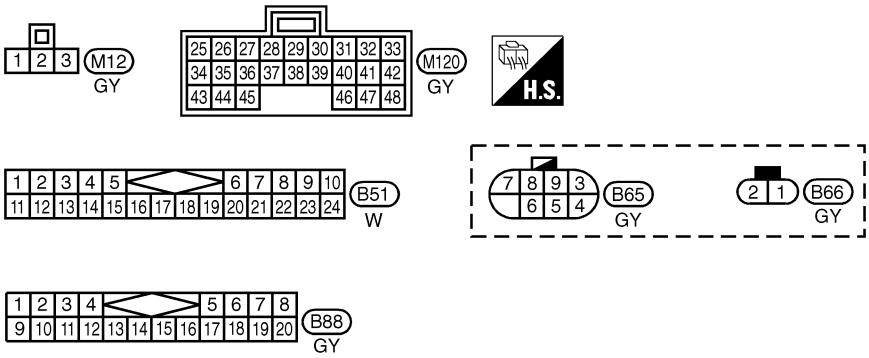

REFER TO THE FOLLOWING.
M10 -FUSE BLOCK-JUNCTION BOX (J/B)

MAT500B

Diagnostic Procedure

NAAT0029

1	CHECK PNP SWITCH CIRCUIT (WITH CONSULT-II)

With CONSULT-II

1. Turn ignition switch to “ON” position.
   (Do not start engine.)
2. Select “TCM INPUT SIGNALS” in “DATA MONITOR” mode for “A/T” with CONSULT-II.
3. Read out “P”, “R”, “N”, “D”, “2” and “1” position switches moving selector lever to each position. Check the signal of the selector lever position is indicated properly.

DATA MONITOR	
MONITORING	
PN POSI SW	OFF
R POSITION SW	OFF
D POSITION SW	OFF
2 POSITION SW	ON
1 POSITION SW	OFF

SAT643J

OK or NG

OK	▶	GO TO 4.
NG	▶	GO TO 3.

2	CHECK PNP SWITCH CIRCUIT (WITHOUT CONSULT-II)

Without CONSULT-II

1. Turn ignition switch to “ON” position.
   (Do not start engine.)
2. Check voltage between TCM harness connector M120 terminals 26, 27, 34, 35, 36 and ground while moving selector lever through each position.

Lever position	Terminals				
	36	35	34	27	26
P, N	**B**	0	0	0	0
R	0	**B**	0	0	0
D	0	0	**B**	0	0
2	0	0	0	**B**	0
1	0	0	0	0	**B**

MTBL0205

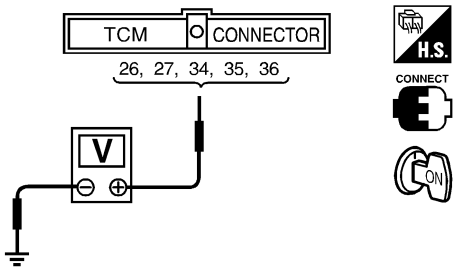

SAT517J

Does battery voltage exist (B) or non-existent (0)?

Yes	▶	GO TO 4.
No	▶	GO TO 3.

3	DETECT MALFUNCTIONING ITEM	
Check the following items: ● PNP switch Refer to "Component Inspection", AT-106. ● Harness for short or open between ignition switch and PNP switch (Main harness) ● Harness for short or open between PNP switch and TCM (Main harness) ● Diode (P, N position) ● Ignition switch and 10A fuse [No. 18, located in the fuse block (J/B)] Refer to EL-11, "Schematic".		
OK or NG		
OK	▶	GO TO 4.
NG	▶	Repair or replace damaged parts.

4	CHECK DTC	
Perform Diagnostic Trouble Code (DTC) confirmation procedure, AT-103.		
OK or NG		
OK	▶	**INSPECTION END**
NG	▶	GO TO 5.

5	CHECK TCM INSPECTION	
1. Perform TCM input/output signal inspection. 2. If NG, recheck TCM pin terminals for damage or loose connection with harness connector.		
OK or NG		
OK	▶	**INSPECTION END**
NG	▶	Repair or replace damaged parts.

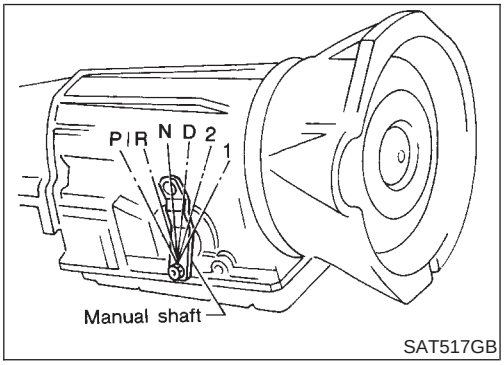

SAT517GB

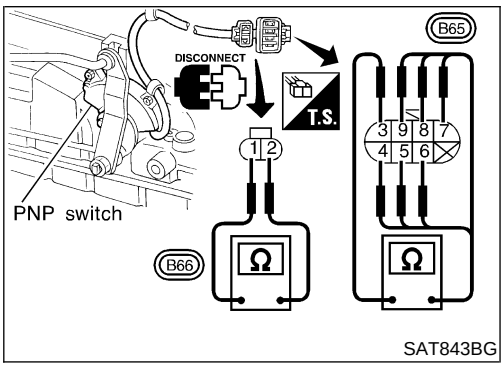

SAT843BG

Component Inspection

NAAT0030

PARK/NEUTRAL POSITION SWITCH

NAAT0030S02

1. Check continuity between terminals 1 and 2 and between terminals 3 and 4, 5, 6, 7, 8, 9 while moving manual shaft through each position.

Lever position	Terminal No.	
P	1 - 2	3 - 4
R	3 - 5	
N	1 - 2	3 - 6
D	3 - 7	
2	3 - 8	
1	3 - 9	

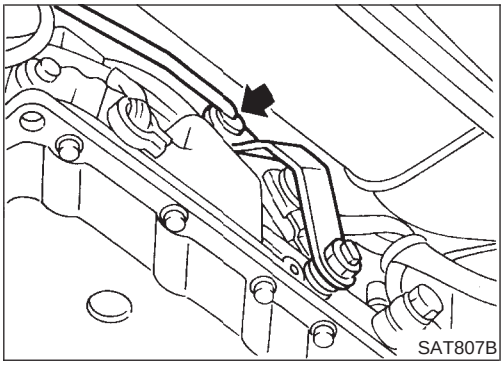

2. If NG, check again with manual control linkage disconnected from manual shaft of A/T assembly. Refer to step 1.
3. If OK on step 2, adjust manual control linkage. Refer to AT-272.

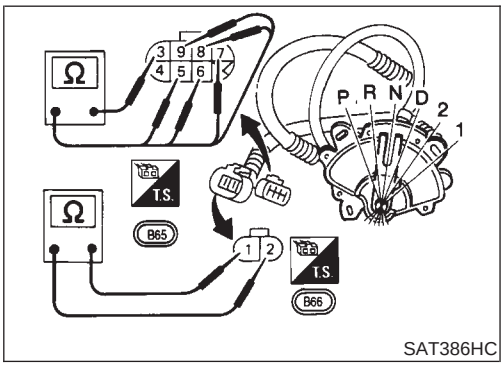

4. If NG on step 2, remove PNP switch from A/T and check continuity of PNP switch terminals. Refer to step 1.
5. If OK on step 4, adjust PNP switch. Refer to AT-272.
6. If NG on step 4, replace PNP switch.

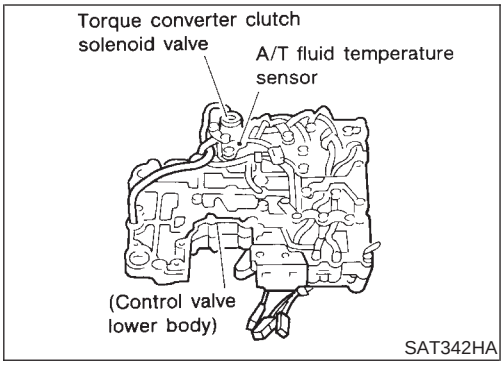

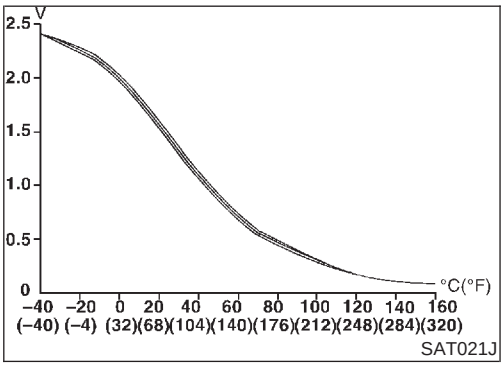

Description

NAAT0031

The A/T fluid temperature sensor detects the A/T fluid temperature and sends a signal to the TCM.

CONSULT-II REFERENCE VALUE IN DATA MONITOR MODE

NAAT0031S04

Remarks: Specification data are reference values.

Monitor item	Condition	Specification	
A/T fluid temperature sensor	Cold [20°C (68°F)] ↓ Hot [80°C (176°F)]	Approximately 1.5V ↓ Approximately 0.5V	Approximately 2.5 kΩ ↓ Approximately 0.3 kΩ

TCM TERMINALS AND REFERENCE VALUE

NAAT0031S02

Remarks: Specification data are reference values.

Terminal No.	Wire color	Item	Condition		Judgement standard (Approx.)
42	B	Throttle position sensor (Ground)		—	0V
47	R	A/T fluid temperature sensor		When ATF temperature is 20°C (68°F).	1.5V
				When ATF temperature is 80°C (176°F).	0.5V

ON BOARD DIAGNOSIS LOGIC

NAAT0031S03

Diagnostic trouble code	Malfunction is detected when ...	Check item (Possible cause)
: ATF TEMP SEN/CIRC	TCM receives an excessively low or high voltage from the sensor.	• Harness or connectors (The sensor circuit is open or shorted.) • A/T fluid temperature sensor
: P0710		

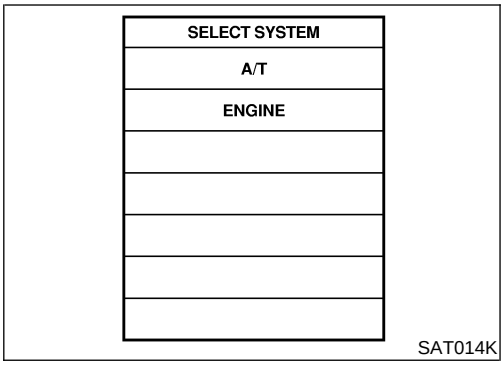

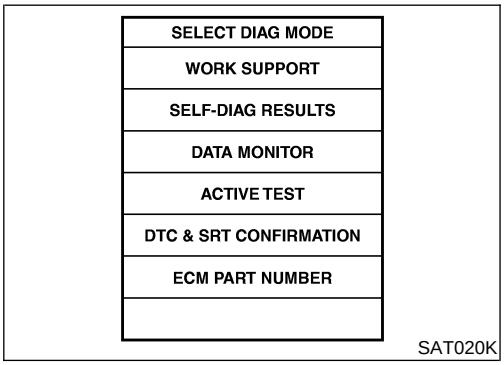

DIAGNOSTIC TROUBLE CODE (DTC) CONFIRMATION PROCEDURE

NAAT0031S01

CAUTION:

Always drive vehicle at a safe speed.

NOTE:

If "DIAGNOSTIC TROUBLE CODE CONFIRMATION PROCEDURE" has been previously conducted, always turn ignition switch "OFF" and wait at least 5 seconds before conducting the next test.

After the repair, perform the following procedure to confirm the malfunction is eliminated.

With CONSULT-II

1) Turn ignition switch "ON" and select "DATA MONITOR" mode for "ENGINE" with CONSULT-II.
2) Start engine and maintain the following conditions for at least 10 minutes (Total). (It is not necessary to maintain continuously.)
   CMPS·RPM (REF): 450 rpm or more
   VHCL SPEED SE: 10 km/h (6 MPH) or more
   THRTL POS SEN: More than 1.2V
   Selector lever: D position (OD "ON")

With GST

Follow the procedure "With CONSULT-II".

Wiring Diagram — AT — FTS

NAAT0187

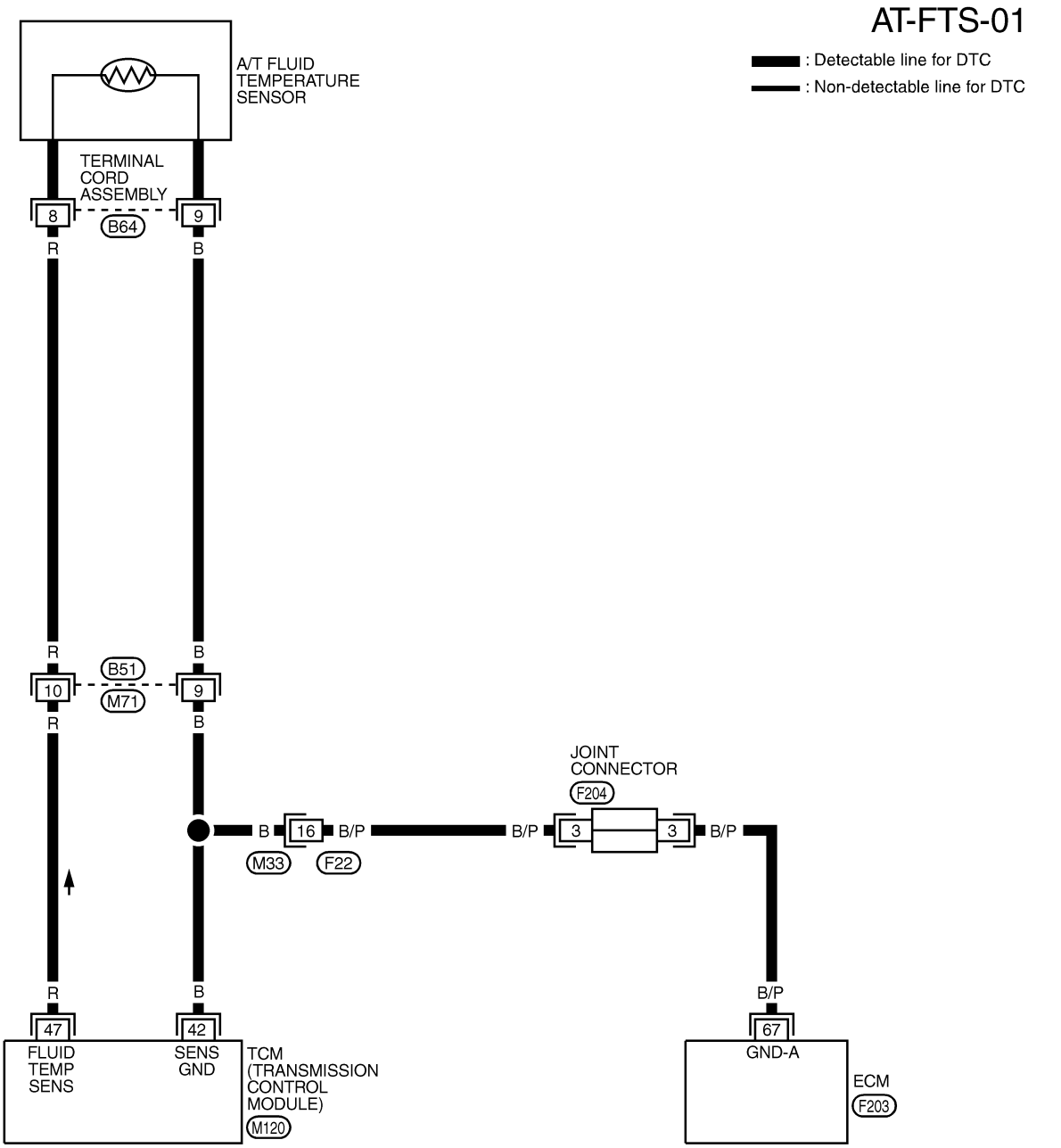

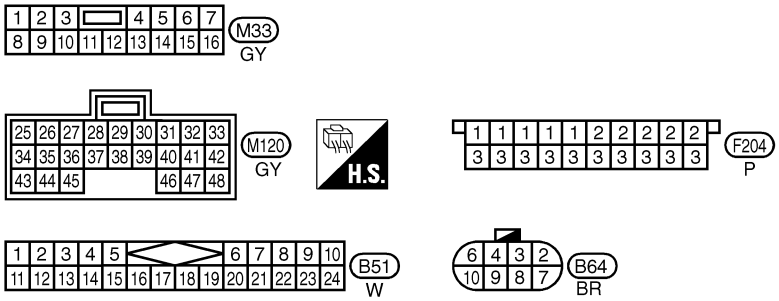

REFER TO THE FOLLOWING.
F203 -ELECTRICAL UNITS

MAT313B

Diagnostic Procedure

NAAT0032

1	INSPECTION START	
Do you have CONSULT-II?		
	Yes or No	
Yes	▶	GO TO 2.
No	▶	GO TO 6.

2	CHECK INPUT SIGNAL OF A/T FLUID TEMPERATURE SENSOR (WITH CONSULT-II)	
With CONSULT-II 1. Start engine. 2. Select “TCM INPUT SIGNALS” in “DATA MONITOR” mode for “A/T” with CONSULT-II. 3. Read out the value of “FLUID TEMP SE”. **Voltage:** **Cold [20°C (68°F)] → Hot [80°C (176°F)]:** **Approximately 1.5V → 0.5V**		
	OK or NG	
OK	▶	GO TO 4.
NG	▶	GO TO 3.

DATA MONITOR	
MONITORING	
VHCL/S SE-A/T	XXX km/h
VHCL/S SE-MTR	XXX km/h
THRTL POS SEN	XXX V
FLUID TEMP SE	XXX V
BATTERY VOLT	XXX V

SAT614J

3	DETECT MALFUNCTIONING ITEM	
Check the following item: ● Harness for short to ground or short to power or open between TCM, ECM and terminal cord assembly (Main harness) ● Ground circuit for ECM. Refer to EC-157, “Wiring Diagram”.		
	OK or NG	
OK	▶	GO TO 4.
NG	▶	Repair or replace damaged parts.

4	CHECK A/T FLUID TEMPERATURE SENSOR WITH TERMINAL CORD ASSEMBLY

1. Turn ignition switch to "OFF" position.
2. Disconnect terminal cord assembly connector on the right side of transfer assmebly.
3. Check resistance between terminals 8 and 9 when A/T is cold [20°C (68°F)].

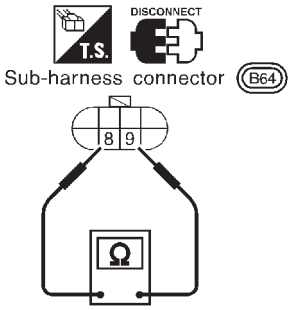

SAT697I

Is resistance approx. 2.5 kΩ?

Yes	▶	GO TO 7.
No	▶	GO TO 5.

5	DETECT MALFUNCTIONING ITEM

1. Remove oil pan.
2. Check the following items:
- A/T fluid temperature sensor
  Refer to "Component Inspection", AT-113.
- Harness of terminal cord assembly for short or open

OK or NG

OK	▶	GO TO 7.
NG	▶	Repair or replace damaged parts.

6	CHECK INPUT SIGNAL OF A/T FLUID TEMPERATURE SENSOR (WITHOUT CONSULT-II)

Without CONSULT-II

1. Start engine.
2. Check voltage between TCM harness connector M120 terminal 47 and ground while warming up A/T.

Voltage:
Cold [20°C (68°F)] → Hot [80°C (176°F)]:
Approximately 1.5V → 0.5V

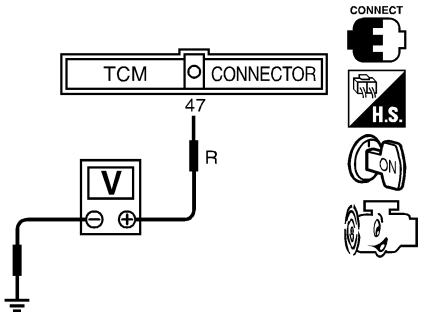

SAT518J

OK or NG

OK	▶	GO TO 4.
NG	▶	GO TO 3.

7	CHECK DTC	
Perform Diagnostic Trouble Code (DTC) confirmation procedure, AT-109.		
OK or NG		
OK	▶	**INSPECTION END**
NG	▶	GO TO 8.

8	CHECK TCM INSPECTION	
1. Perform TCM input/output signal inspection. 2. If NG, recheck TCM pin terminals for damage or loose connection with harness connector.		
OK or NG		
OK	▶	**INSPECTION END**
NG	▶	Repair or replace damaged parts.

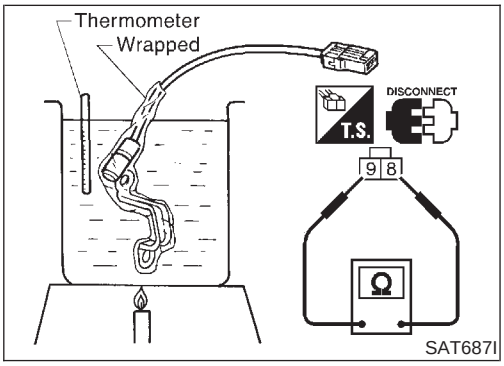

Component Inspection

NAAT0033

A/T FLUID TEMPERATURE SENSOR

NAAT0033S01

- For removal, refer to AT-269.
- Check resistance between terminals 8 and 9 while changing temperature as shown at left.

Temperature °C (°F)	Resistance
20 (68)	Approximately 2.5 kΩ
80 (176)	Approximately 0.3 kΩ

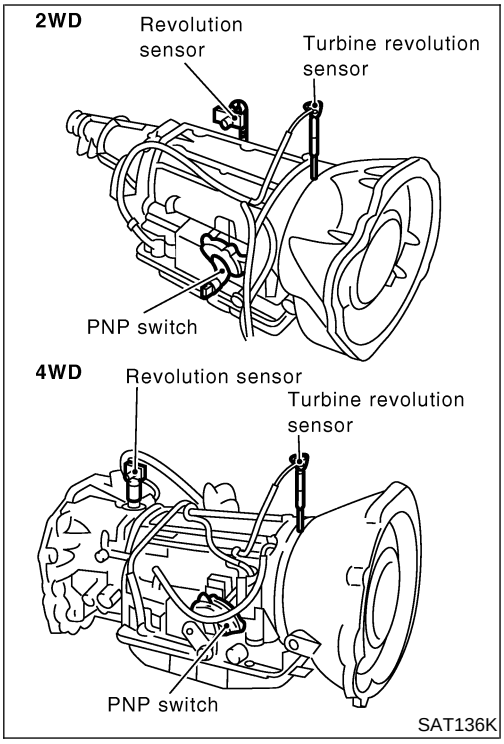

Description

NAAT0034

The revolution sensor detects the revolution of the out put shaft parking pawl lock gear and emits a pulse signal. The pulse signal is sent to the TCM which converts it into vehicle speed.

TCM TERMINALS AND REFERENCE VALUE

NAAT0034S02

Remarks: Specification data are reference values.

Terminal No.	Wire color	Item	Condition		Judgement standard (Approx.)
29	W	Revolution sensor (Measure in AC range)		When vehicle cruises at 30 km/h (19 MPH).	1V or more Voltage rises gradually in response to vehicle speed.
				When vehicle parks.	0V
42	B	Sensor ground	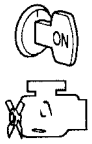	—	0V

ON BOARD DIAGNOSIS LOGIC

NAAT0034S03

Diagnostic trouble code	Malfunction is detected when ...	Check item (Possible cause)
: VEH SPD SEN/CIR AT	TCM does not receive the proper voltage signal from the sensor.	• Harness or connectors (The sensor circuit is open or shorted.) • Revolution sensor
: P0720		

SELECT SYSTEM
A/T
ENGINE

SAT014K

SELECT DIAG MODE
SELF-DIAG RESULTS
DATA MONITOR
CAN DIAG SUPPORT MNTR
DTC WORK SUPPORT
ECU PART NUMBER

SAT858K

SELECT SYSTEM
A/T
ENGINE

SAT014K

SELECT DIAG MODE
WORK SUPPORT
SELF-DIAG RESULTS
DATA MONITOR
ACTIVE TEST
DTC & SRT CONFIRMATION
ECM PART NUMBER

SAT020K

DIAGNOSTIC TROUBLE CODE (DTC) CONFIRMATION PROCEDURE

NAAT0034S01

CAUTION:

- **Always drive vehicle at a safe speed.**
- **Be careful not to rev engine into the red zone on the tachometer.**

NOTE:

If "DIAGNOSTIC TROUBLE CODE CONFIRMATION PROCEDURE" has been previously conducted, always turn ignition switch "OFF" and wait at least 5 seconds before conducting the next test.

After the repair, perform the following procedure to confirm the malfunction is eliminated.

With CONSULT-II

1) Turn ignition switch "ON" and select "DATA MONITOR" mode for "A/T" with CONSULT-II.
2) Drive vehicle and check for an increase of "VHCL/S SE·MTR" value.
   If the check result is NG, go to "DIAGNOSTIC PROCEDURE", AT-200.
   If the check result is OK, go to following step.
3) Select "DATA MONITOR" mode for "ENGINE" with CONSULT-II.
4) Start engine and maintain the following conditions for at least 5 consecutive seconds.
   VHCL SPEED SE: 30 km/h (19 MPH) or more
   THRTL POS SEN: More than 1.2V
   Selector lever: D position (OD "ON")
   Driving pattern: Driving the vehicle uphill (increased engine load) will help maintain the driving conditions required for this test.
   If the check result is NG, go to "DIAGNOSTIC PROCEDURE", AT-117.
   If the check result is OK, go to following step.
5) Maintain the following conditions for at least 5 consecutive seconds.
   CMPS·RPM (REF): 3,500 rpm or more
   THRTL POS SEN: More than 1.2V
   Selector lever: D position (OD "ON")
   Driving pattern: Driving the vehicle uphill (increased engine load) will help maintain the driving conditions required for this test.

With GST

Follow the procedure "With CONSULT-II".

Wiring Diagram — AT — VSSA/T

NAAT0188

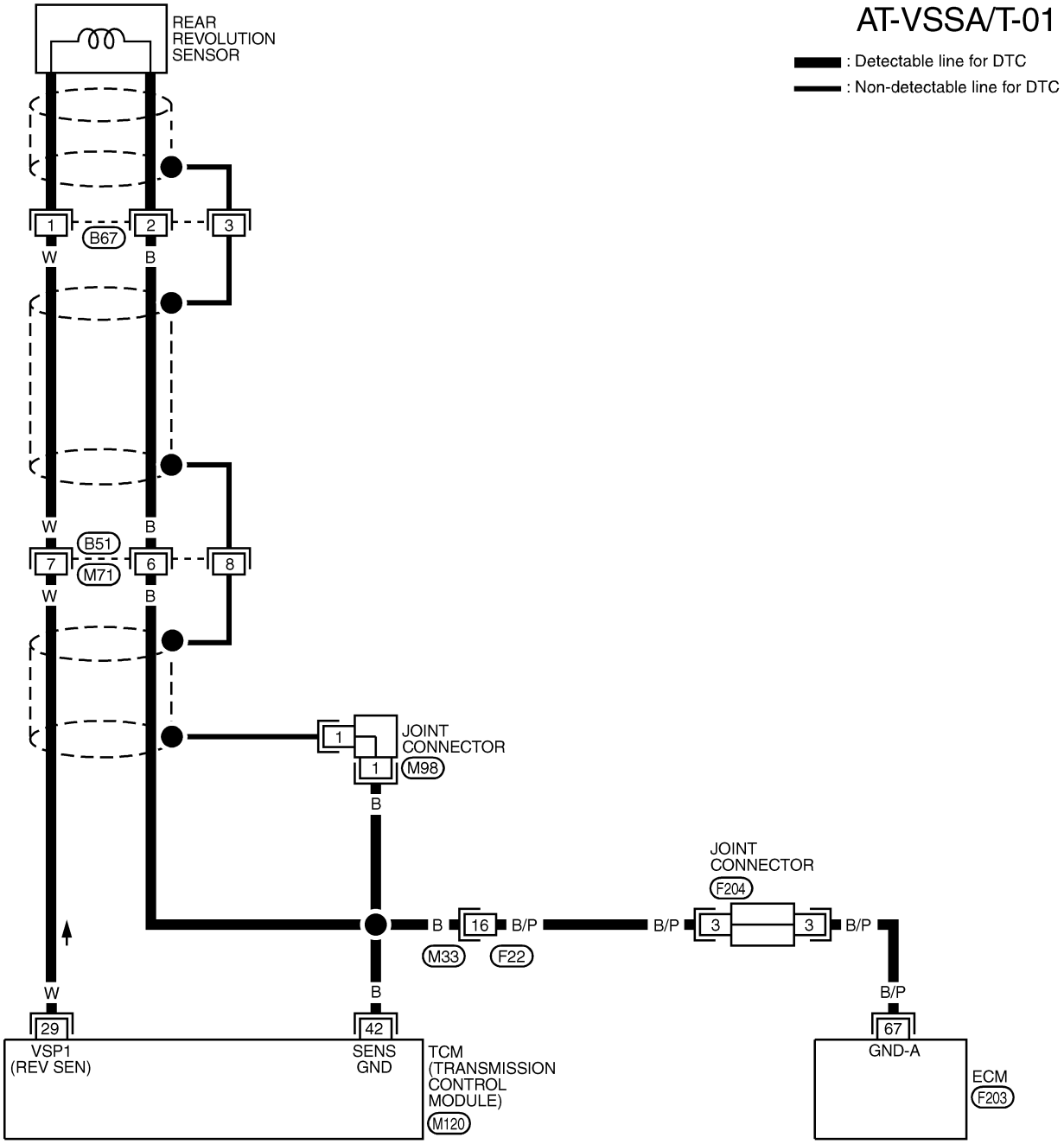

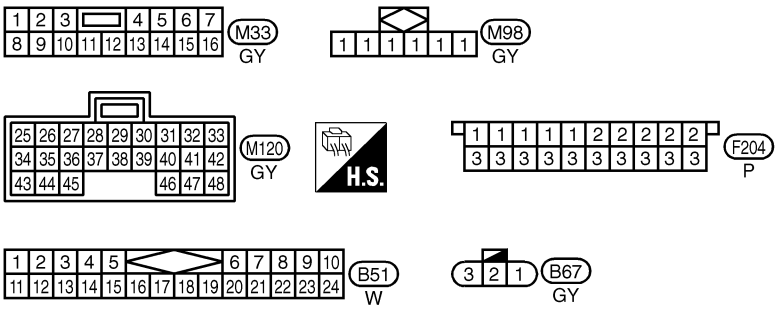

REFER TO THE FOLLOWING.
F203 -ELECTRICAL UNITS

MAT314B

Diagnostic Procedure

NAAT0035

1	INSPECTION START
Do you have CONSULT-II?	
Yes or No	
Yes (With CONSULT-II) ▶	GO TO 2.
No (Without CONSULT-II) ▶	GO TO 5.

2	CHECK INPUT SIGNAL (WITH CONSULT-II)

With CONSULT-II
1. Start engine.
2. Select “TCM INPUT SIGNALS” in “DATA MONITOR” mode for “A/T” with CONSULT-II.
3. Read out the value of “VHCL/S SE·A/T” while driving.
   Check the value changes according to driving speed.

DATA MONITOR	
MONITORING	
VHCL/S SE-A/T	XXX km/h
VHCL/S SE-MTR	XXX km/h
THRTL POS SEN	XXX V
FLUID TEMP SE	XXX V
BATTERY VOLT	XXX V

SAT614J

OK or NG	
OK ▶	GO TO 6.
NG ▶	GO TO 3.

3	CHECK REVOLUTION SENSOR
Refer to “Component Inspection”, AT-118.	
OK or NG	
OK ▶	GO TO 4.
NG ▶	Repair or replace revolution sensor.

4	DETECT MALFUNCTIONING ITEM

Check the following items:
- Harness for short or open between TCM and revolution sensor.
- Harness for short or open between revolution sensor and ECM.
- Ground circuit for ECM
  Refer to EC-157, “WIRING DIAGRAM”.

OK or NG	
OK ▶	GO TO 6.
NG ▶	Repair or replace damaged parts.

5	CHECK INPUT SIGNAL (WITHOUT CONSULT-II)

Without CONSULT-II

1. Start engine.
2. Check voltage between TCM harness connector M120 terminal 29 and ground while driving. (Measure with AC range.)

Voltage:
At 0 km/h (0 MPH):
0V
At 30 km/h (19 MPH):
1V or more
(Voltage rises gradually in response to vehicle speed.)

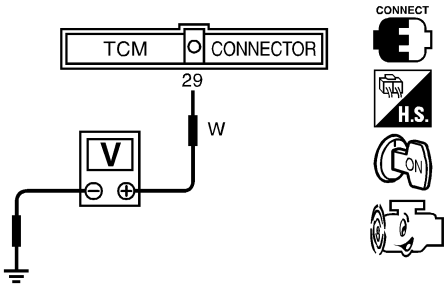

SAT519J

OK or NG

OK	▶	GO TO 6.
NG	▶	GO TO 3.

6	CHECK DTC

Perform Diagnostic Trouble Code (DTC) confirmation procedure, AT-115.

OK or NG

OK	▶	**INSPECTION END**
NG	▶	GO TO 7.

7	CHECK TCM INSPECTION

1. Perform TCM input/output signal inspection.
2. If NG, recheck TCM pin terminals for damage or loose connection with harness connector.

OK or NG

OK	▶	**INSPECTION END**
NG	▶	Repair or replace damaged parts.

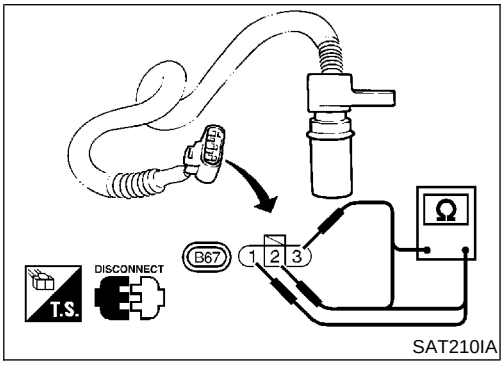

SAT210IA

Component Inspection

NAAT0036

REVOLUTION SENSOR

NAAT0036S01

- For removal, refer to AT-269.
- Check resistance between terminals 1, 2 and 3.

Terminal No.		Resistance
1	2	500 - 650Ω
2	3	No continuity
1	3	No continuity

Description

NAAT0037

The engine speed signal is sent from the ECM to the TCM.

TCM TERMINALS AND REFERENCE VALUE

NAAT0037S02

Remarks: Specification data are reference values.

Terminal No.	Wire color	Item	Condition		Judgement standard (Approx.)
39	W/G	Engine speed signal	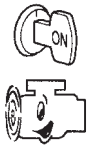	Refer to EC-141, “ECM INSPECTION TABLE”.	—

ON BOARD DIAGNOSIS LOGIC

NAAT0037S03

Diagnostic trouble code	Malfunction is detected when ...	Check item (Possible cause)
: ENGINE SPEED SIG	TCM does not receive the proper voltage signal from ECM.	• Harness or connectors (The sensor circuit is open or shorted.)
: P0725		

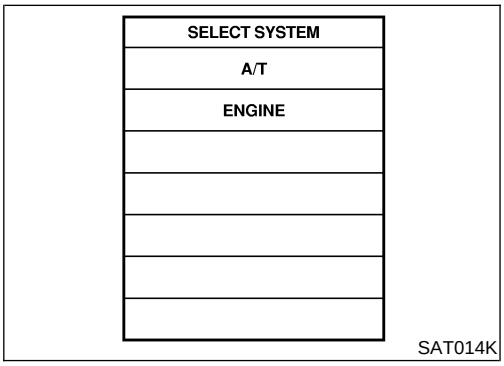

SAT014K

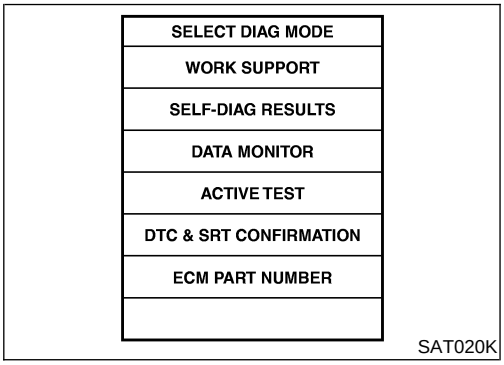

SAT020K

DIAGNOSTIC TROUBLE CODE (DTC) CONFIRMATION PROCEDURE

NAAT0037S01

CAUTION:

Always drive vehicle at a safe speed.

NOTE:

If “DIAGNOSTIC TROUBLE CODE CONFIRMATION PROCEDURE” has been previously conducted, always turn ignition switch “OFF” and wait at least 5 seconds before conducting the next test.

After the repair, perform the following procedure to confirm the malfunction is eliminated.

With CONSULT-II

1) Turn ignition switch “ON” and select “DATA MONITOR” mode for “ENGINE” with CONSULT-II.
2) Start engine and maintain the following conditions for at least 10 consecutive seconds.
   VHCL SPEED SE: 10 km/h (6 MPH) or more
   THRTL POS SEN: More than 1.2V
   Selector lever: D position (OD “ON”)

With GST

Follow the procedure “With CONSULT-II”.

Wiring Diagram — AT — ENGSS

NAAT0189

AT-ENGSS-01

: Detectable line for DTC
: Non-detectable line for DTC

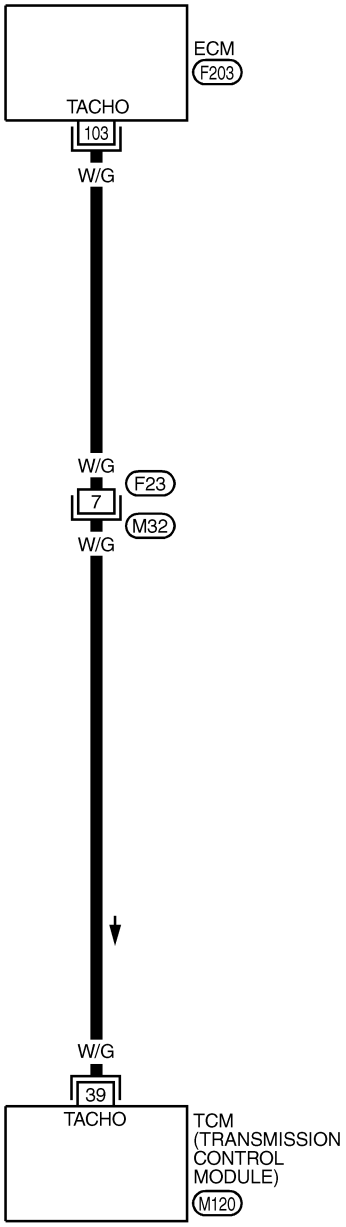

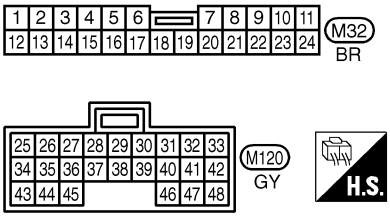

REFER TO THE FOLLOWING.
F203 - ELECTRICAL UNITS

MAT315B

Diagnostic Procedure

NAAT0038

1	CHECK DTC WITH ECM
● Check P code with CONSULT-II. Turn ignition switch “ON” and select “SELF-DIAG RESULTS” mode for “ENGINE” with CONSULT-II. Refer to EC-94, “DESCRIPTION”.	
OK or NG	
OK (With CONSULT-II) ▶	GO TO 2.
OK (Without CONSULT-II) ▶	GO TO 4.
NG ▶	Check ignition signal circuit for engine control. Refer to EC-714, “Component Description”.

2	CHECK INPUT SIGNAL (WITH CONSULT-II)
With CONSULT-II 1. Start engine. 2. Select “TCM INPUT SIGNALS” in “DATA MONITOR” mode for “A/T” with CONSULT-II. 3. Read out the value of “ENGINE SPEED”. Check engine speed changes according to throttle position.	

DATA MONITOR	
MONITORING	
ENGINE SPEED	XXX rpm
TURBINE REV	XXX rpm
OVERDRIVE SW	ON
PN POSI SW	OFF
R POSITION SW	OFF

SAT645J

Refer to EC-141**, “ECM INSPECTION TABLE”.**

Yes ▶	GO TO 5.
No ▶	GO TO 3.

3	DETECT MALFUNCTIONING ITEM
Check the following items: ● Harness for short or open between TCM and ECM ● Resistor ● Ignition coil Refer to EC-714, “Component Description”.	
OK or NG	
OK ▶	GO TO 5.
NG ▶	Repair or replace damaged parts.

4	CHECK INPUT SIGNAL (WITHOUT CONSULT-II)

Without CONSULT-II
1. Start engine.
2. Check voltage between TCM harness connector M120 terminal 39 and ground.

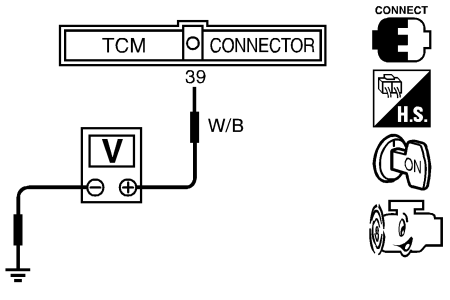

Refer to EC-141**, "ECM INSPECTION TABLE".**

Yes	▶	GO TO 5.
No	▶	GO TO 3.

5	CHECK DTC

Perform Diagnostic Trouble Code (DTC) confirmation procedure, AT-119.

OK or NG

OK	▶	**INSPECTION END**
NG	▶	GO TO 6.

6	CHECK TCM INSPECTION

1. Perform TCM input/output signal inspection.
2. If NG, recheck TCM pin terminals for damage or loose connection with harness connector.

OK or NG

OK	▶	**INSPECTION END**
NG	▶	Repair or replace damaged parts.

Description

NAAT0039

- This is an OBD-II self-diagnostic item and not available in TCM self-diagnosis.
- This malfunction will not be detected while the O/D OFF indicator lamp is indicating another self-diagnosis malfunction.
- This malfunction is detected when the A/T does not shift into first gear position as instructed by the TCM. This is not caused by electrical malfunction (circuits open or shorted) but by mechanical malfunction such as control valve sticking, improper solenoid valve operation, etc.

Gear position	1	2	3	4
Shift solenoid valve A	ON (Closed)	OFF (Open)	OFF (Open)	ON (Closed)
Shift solenoid valve B	ON (Closed)	ON (Closed)	OFF (Open)	OFF (Open)

TCM TERMINALS AND REFERENCE VALUE

NAAT0039S02

Remarks: Specification data are reference values.

Terminal No.	Wire color	Item	Condition		Judgement standard (Approx.)
11	L/W	Shift solenoid valve A		When shift solenoid valve A operates. (When driving in “D_1” or “D_4”.)	Battery voltage
				When shift solenoid valve A does not operate. (When driving in “D_2” or “D_3”.)	0V
12	L/R	Shift solenoid valve B		When shift solenoid valve B operates. (When driving in “D_1” or “D_2”.)	Battery voltage
				When shift solenoid valve B does not operate. (When driving in “D_3” or “D_4”.)	0V

ON BOARD DIAGNOSIS LOGIC

NAAT0039S03

This diagnosis monitors actual gear position by checking the torque converter slip ratio calculated by TCM as follows:
Torque converter slip ratio = A x C/B
A: Output shaft revolution signal from revolution sensor
B: Engine speed signal from ECM
C: Gear ratio determined as gear position which TCM supposes
If the actual gear position is higher than the position (1st) supposed by TCM, the slip ratio will be more than normal. In case the ratio exceeds the specified value, TCM judges this diagnosis malfunction.
This malfunction will be caused when either shift solenoid valve A is stuck open or shift solenoid valve B is stuck open.

Gear position supposed by TCM	1	2	3	4
In case of gear position with no malfunctions	1	2	3	4
In case of gear position with shift solenoid valve A stuck open	2*	2	3	3
In case of gear position with shift solenoid valve B stuck open	4*	3	3	4

*: P0731 is detected.

Diagnostic trouble code	Malfunction is detected when ...	Check item (Possible cause)
: A/T 1ST GR FNCTN	A/T cannot be shifted to the 1st gear position even if electrical circuit is good.	• Shift solenoid valve A • Shift solenoid valve B • Each clutch • Hydraulic control circuit
GST : P0731		

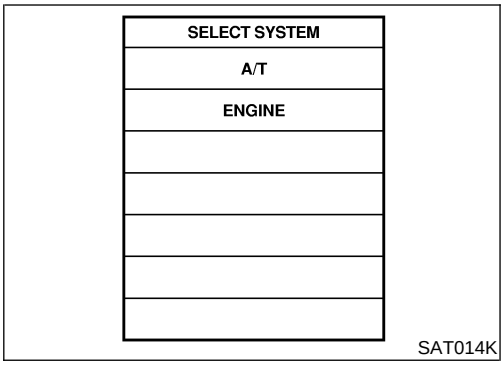

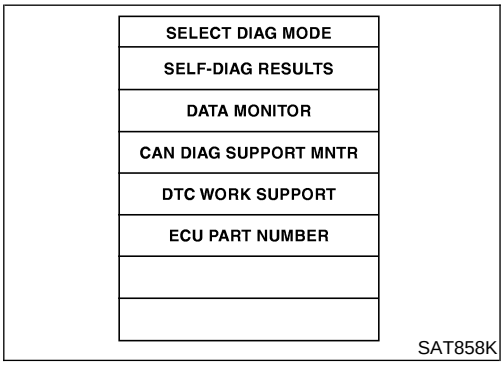

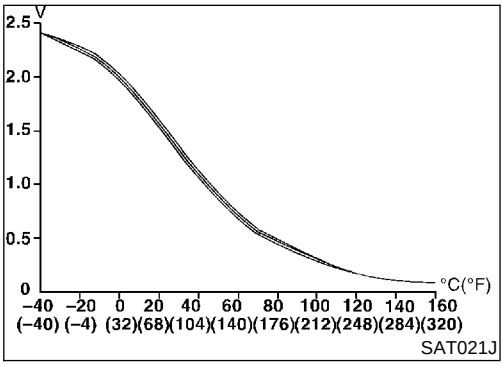

DIAGNOSTIC TROUBLE CODE (DTC) CONFIRMATION PROCEDURE

NAAT0039S01

CAUTION:

- **Always drive vehicle at a safe speed.**
- **Be careful not to rev engine into the red zone on the tachometer.**

NOTE:

If "DIAGNOSTIC TROUBLE CODE CONFIRMATION PROCEDURE" has been previously conducted, always turn ignition switch "OFF" and wait at least 5 seconds before conducting the next test.

TESTING CONDITIONS:

Always drive vehicle on a level road to improve the accuracy of test.

After the repair, perform the following procedure to confirm the malfunction is eliminated.

With CONSULT-II

1) Start engine and select "DATA MONITOR" mode for "A/T" with CONSULT-II.
2) Make sure that output voltage of A/T fluid temperature sensor is within the range below.
   FLUID TEMP SEN: 0.4 - 1.5V
   If out of range, drive the vehicle to decrease the voltage (warm up the fluid) or stop engine to increase the voltage (cool down the fluid).
3) Select "1ST GR FNCTN P0731" of "DTC WORK SUPPORT" mode for "A/T" with CONSULT-II and touch "START".
4) Accelerate vehicle to 10 to 20 km/h (6 to 12 MPH) under the following condition and release the accelerator pedal completely.
   THROTTLE POSI: Less than 1.0/8 (at all times during step 4)
   Selector lever: D position (OD "ON")

- **Check that "GEAR" shows "2" after releasing pedal.**

5) Depress accelerator pedal to WOT (more than 7.0/8 of "THROTTLE POSI") quickly from a speed of 10 to 20 km/h (6 to 12 MPH) until "TESTING" changes to "STOP VEHICLE" or "COMPLETED". (It will take approximately 3 seconds.)
   If the check result NG appears on CONSULT-II screen, go to "DIAGNOSTIC PROCEDURE", AT-127.
   If "STOP VEHICLE" appears on CONSULT-II screen, go to the following step.

- **Check that "GEAR" shows "1" when depressing accelerator pedal to WOT.**
- **If "TESTING" does not appear on CONSULT-II for a long time, select "SELF-DIAG RESULTS" for "ENGINE". In case a 1st trip DTC other than P0731 is shown, refer to applicable "TROUBLE DIAGNOSIS FOR DTC".**

6) Stop vehicle.
7) Follow the instruction displayed. (Check for normal shifting referring to the table below.)

Vehicle condition	Gear on actual transmission shift pattern when screen is changed to 1 → 2 → 3 → 4
No malfunction exists	1 → 2 → 3 → 4

Malfunction for P0731 exists.	2 → 2 → 3 → 3
	4 → 3 → 3 → 4

8) Make sure that "OK" is displayed. (If "NG" is displayed, refer to "DIAGNOSTIC PROCEDURE".)
   Refer to "DIAGNOSTIC PROCEDURE", AT-127.
   Refer to shift schedule, AT-353.

With GST
Follow the procedure "With CONSULT-II".

Wiring Diagram — AT — 1ST

NAAT0190

AT-1STSIG-01

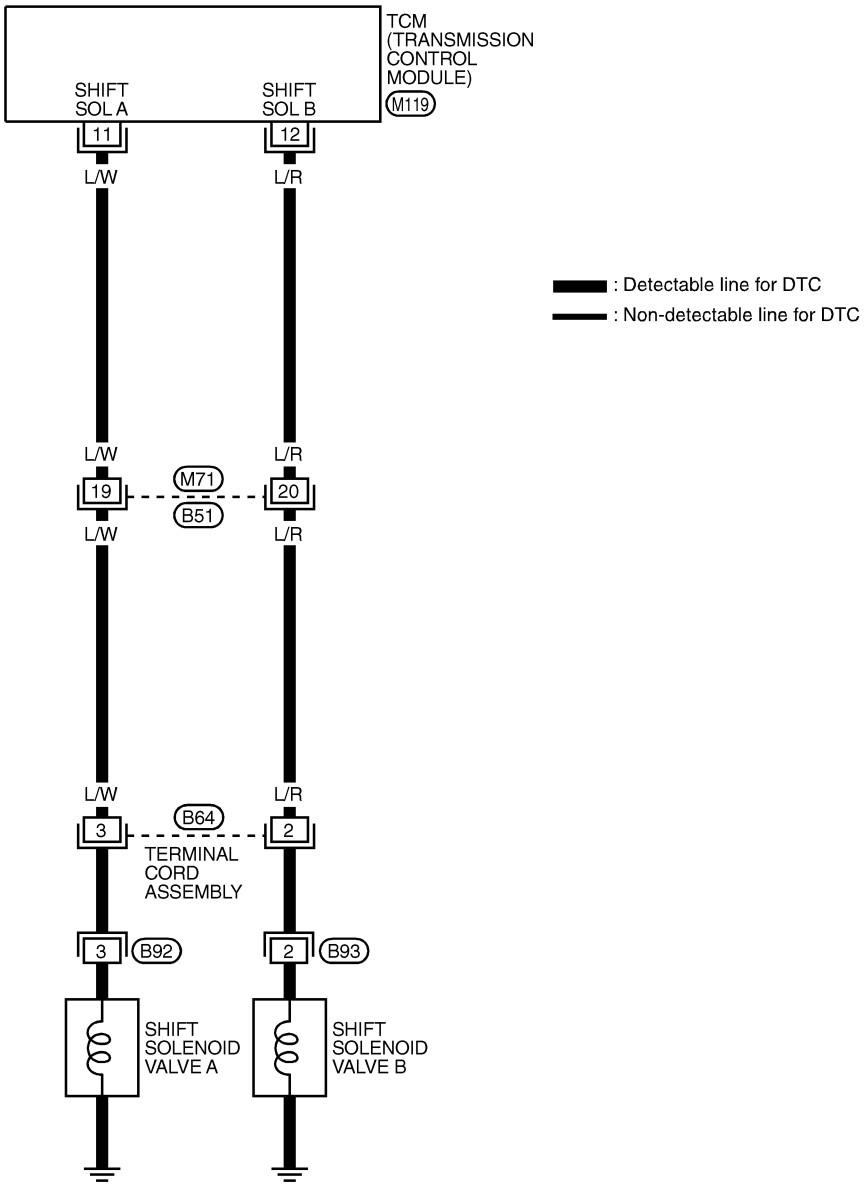

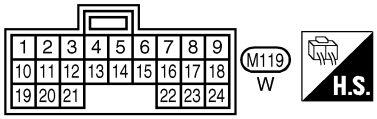

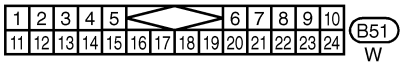

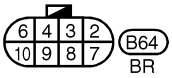

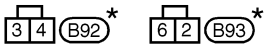

★ : This connector is not shown in "HARNESS LAYOUT" in EL section.

MAT731A

Diagnostic Procedure

NAAT0040

1	CHECK SHIFT SOLENOID VALVE

1. Remove control valve assembly. Refer to AT-269.
2. Check shift solenoid valve operation.
- Shift solenoid valve A
- Shift solenoid valve B

Refer to “Component Inspection”, AT-128.

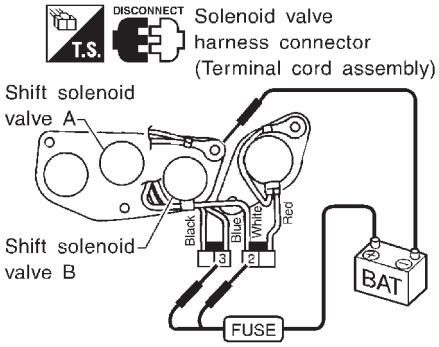

SAT648I

OK or NG

OK	▶	GO TO 2.
NG	▶	Repair or replace shift solenoid valve assembly.

2	CHECK CONTROL VALVE

1. Disassemble control valve assembly.
   Refer to “Control Valve Assembly”, AT-298.
2. Check to ensure that:
- Valve, sleeve and plug slide along valve bore under their own weight.
- Valve, sleeve and plug are free from burrs, dents and scratches.
- Control valve springs are free from damage, deformation and fatigue.
- Hydraulic line is free from obstacles.

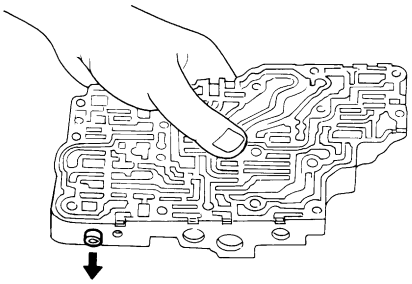

SAT367H

OK or NG

OK	▶	GO TO 3.
NG	▶	Repair control valve assembly.

3	CHECK DTC

Perform Diagnostic Trouble Code (DTC) confirmation procedure, AT-124.

OK or NG

OK	▶	**INSPECTION END**
NG	▶	Check control valve again. Repair or replace control valve assembly.

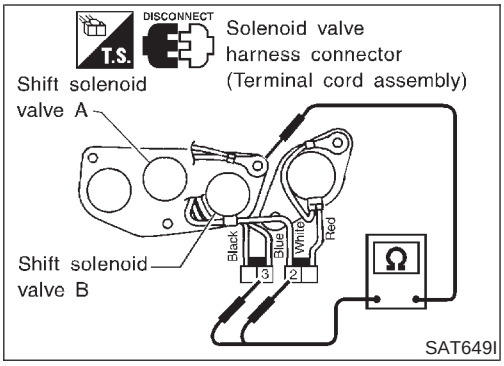

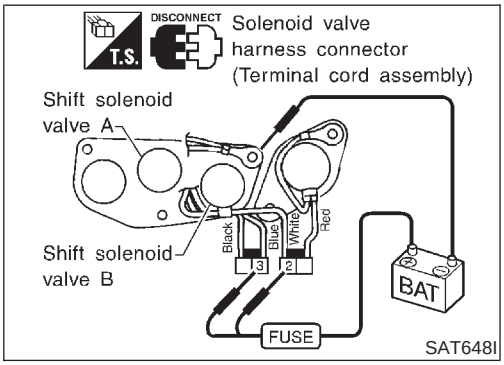

Component Inspection

=NAAT0041

SHIFT SOLENOID VALVE A AND B

NAAT0041S01

- For removal, refer to AT-269.

Resistance Check

NAAT0041S0101

- Check resistance between terminals (3 or 2) and ground.

Solenoid valve	Terminal No.		Resistance (Approx.)
Shift solenoid valve A	3	Ground	20 - 40Ω
Shift solenoid valve B	2		

Operation Check

NAAT0041S0102

- Check solenoid valve by listening for its operating sound while applying battery voltage to the terminals (3 or 2) and ground.

Description

NAAT0042

- This is an OBD-II self-diagnostic item and not available in TCM self-diagnosis.
- This malfunction will not be detected while the O/D OFF indicator lamp is indicating another self-diagnosis malfunction.
- This malfunction is detected when the A/T does not shift into second gear position as instructed by the TCM. This is not caused by electrical malfunction (circuits open or shorted) but by mechanical malfunction such as control valve sticking, improper solenoid valve operation, etc.

Gear position	1	2	3	4
Shift solenoid valve A	ON (Closed)	OFF (Open)	OFF (Open)	ON (Closed)
Shift solenoid valve B	ON (Closed)	ON (Closed)	OFF (Open)	OFF (Open)

TCM TERMINALS AND REFERENCE VALUE

NAAT0042S02

Remarks: Specification data are reference values.

Terminal No.	Wire color	Item	Condition		Judgement standard (Approx.)
12	L/R	Shift solenoid valve B		When shift solenoid valve B operates. (When driving in “D_1” or “D_2”.)	Battery voltage
				When shift solenoid valve B does not operate. (When driving in “D_3” or “D_4”.)	0V

ON BOARD DIAGNOSIS LOGIC

NAAT0042S03

This diagnosis monitors actual gear position by checking the torque converter slip ratio calculated by TCM as follows:
Torque converter slip ratio = A x C/B
A: Output shaft revolution signal from revolution sensor
B: Engine speed signal from ECM
C: Gear ratio determined as gear position which TCM supposes
If the actual gear position is higher than the position (2nd) supposed by TCM, the slip ratio will be more than normal. In case the ratio exceeds the specified value, TCM judges this diagnosis malfunction.
This malfunction will be caused when shift solenoid valve B is stuck open.

Gear position supposed by TCM	1	2	3	4
In case of gear position with no malfunctions	1	2	3	4
In case of gear position with shift solenoid valve B stuck open	4	3*	3	4

*: P0732 is detected.

Diagnostic trouble code	Malfunction is detected when ...	Check item (Possible cause)
: A/T 2ND GR FNCTN	A/T cannot be shifted to the 2nd gear position even if electrical circuit is good.	• Shift solenoid valve B • Each clutch • Hydraulic control circuit
GST : P0732		

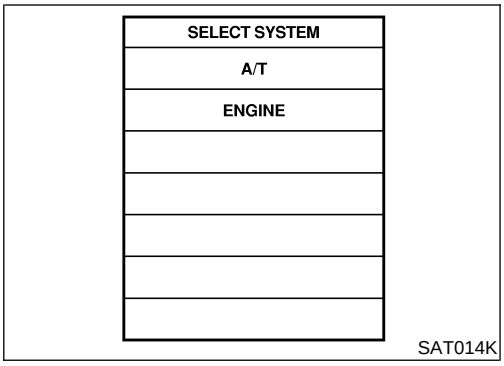

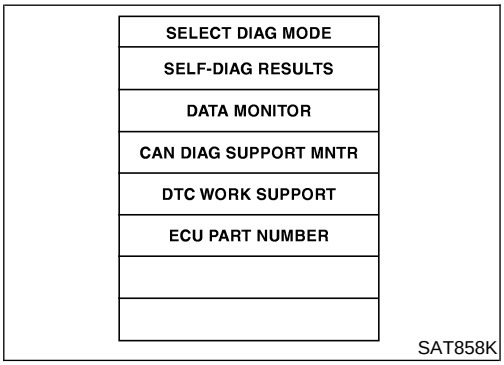

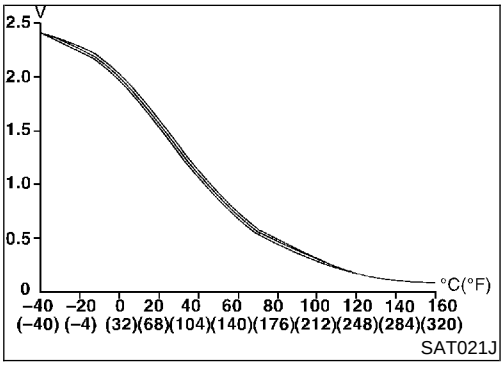

DIAGNOSTIC TROUBLE CODE (DTC) CONFIRMATION PROCEDURE

NAAT0042S01

CAUTION:

- **Always drive vehicle at a safe speed.**
- **Be careful not to rev engine into the red zone on the tachometer.**

NOTE:

If "DIAGNOSTIC TROUBLE CODE CONFIRMATION PROCEDURE" has been previously conducted, always turn ignition switch "OFF" and wait at least 5 seconds before conducting the next test.

TESTING CONDITIONS:

Always drive vehicle on a level road to improve the accuracy of test.

After the repair, perform the following procedure to confirm the malfunction is eliminated.

With CONSULT-II

1) Start engine and select "DATA MONITOR" mode for "A/T" with CONSULT-II.
2) Make sure that output voltage of A/T fluid temperature sensor is within the range below.
   FLUID TEMP SEN: 0.4 - 1.5V
   If out of range, drive the vehicle to decrease the voltage (warm up the fluid) or stop engine to increase the voltage (cool down the fluid).
3) Select "2ND GR FNCTN P0732" of "DTC WORK SUPPORT" mode for "A/T" with CONSULT-II and touch "START".
4) Accelerate vehicle to 25 to 30 km/h (16 to 19 MPH) under the following condition and release the accelerator pedal completely.
   THROTTLE POSI: Less than 1.0/8 (at all times during step 4)
   Selector lever: D position (OD "ON")

- **Check that "GEAR" shows "3" or "4" after releasing pedal.**

5) Depress accelerator pedal to WOT (more than 7.0/8 of "THROTTLE POSI") quickly from a speed of 25 to 30 km/h (16 to 19 MPH) until "TESTING" changes to "STOP VEHICLE" or "COMPLETED". (It will take approximately 3 seconds.)
   If the check result NG appears on CONSULT-II screen, go to "DIAGNOSTIC PROCEDURE", AT-133.
   If "STOP VEHICLE" appears on CONSULT-II screen, go to following step.

- **Check that "GEAR" shows "2" when depressing accelerator pedal to WOT.**
- **If "TESTING" does not appear on CONSULT-II for a long time, select "SELF-DIAG RESULTS" for "ENGINE". In case a 1st trip DTC other than P0732 is shown, refer to applicable "TROUBLE DIAGNOSIS FOR DTC".**

6) Stop vehicle.
7) Follow the instruction displayed. (Check for normal shifting referring to the table below.)

Vehicle condition	Gear on actual transmission shift pattern when screen is changed to 1 → 2 → 3 → 4
No malfunction exists	1 → 2 → 3 → 4
Malfunction for P0732 exists.	4 → 3 → 3 → 4

8) Make sure that "OK" is displayed. (If "NG" is displayed, refer to "DIAGNOSTIC PROCEDURE".) Refer to "DIAGNOSTIC PROCEDURE", AT-133. Refer to shift schedule, AT-353.

With GST

Follow the procedure "With CONSULT-II".

Wiring Diagram — AT — 2ND

NAAT0191

AT-2NDSIG-01

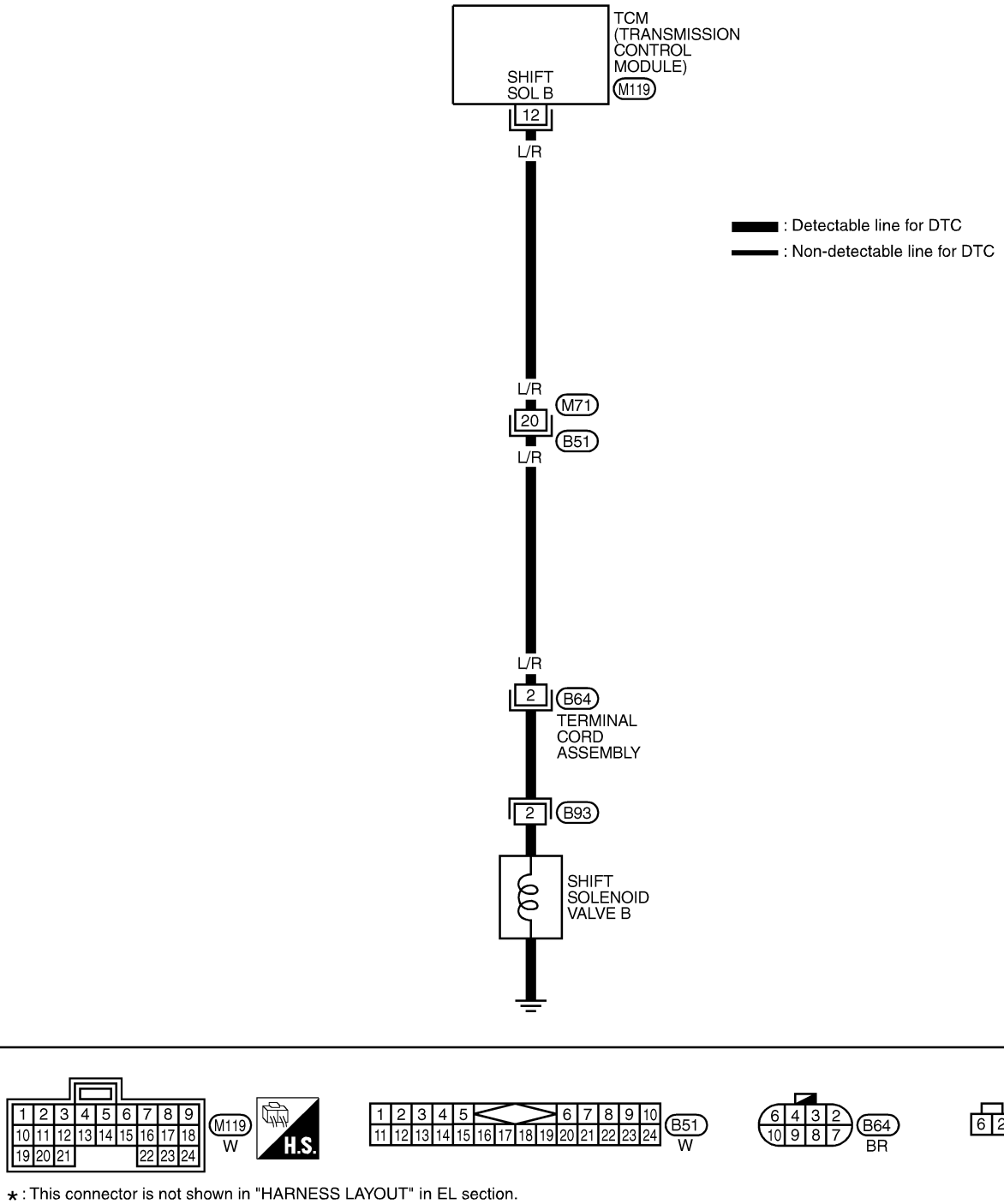

MAT732A

Diagnostic Procedure

NAAT0043

1	CHECK SHIFT SOLENOID VALVE

1. Remove control valve assembly. Refer to AT-269.
2. Check shift solenoid valve operation.
- Shift solenoid valve B

Refer to “Component Inspection”, AT-134.

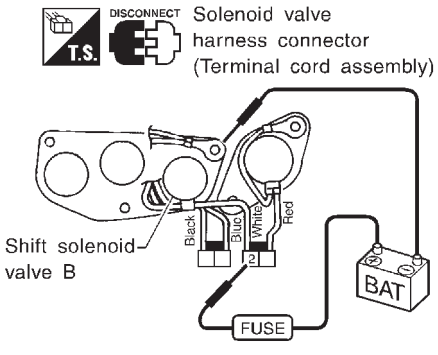

SAT650I

OK or NG

OK	▶	GO TO 2.
NG	▶	Repair or replace shift solenoid valve assembly.

2	CHECK CONTROL VALVE

1. Disassemble control valve assembly.
   Refer to “Control Valve Assembly”, AT-298.
2. Check to ensure that:
- Valve, sleeve and plug slide along valve bore under their own weight.
- Valve, sleeve and plug are free from burrs, dents and scratches.
- Control valve springs are free from damage, deformation and fatigue.
- Hydraulic line is free from obstacles.

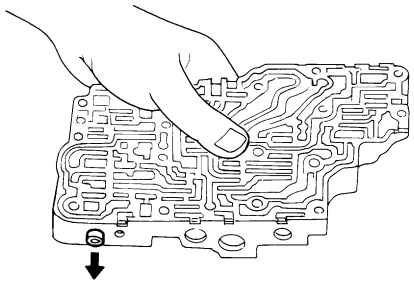

SAT367H

OK or NG

OK	▶	GO TO 3.
NG	▶	Repair control valve assembly.

3	CHECK DTC

Perform Diagnostic Trouble Code (DTC) confirmation procedure, AT-130.

OK or NG

OK	▶	**INSPECTION END**
NG	▶	Check control valve again. Repair or replace control valve assembly.

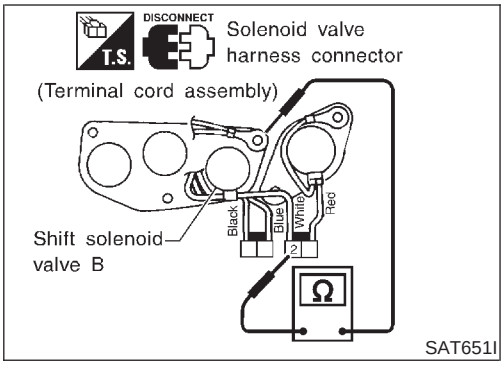

SAT651I

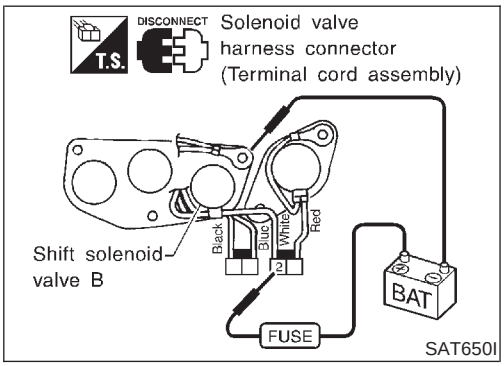

SAT650I

Component Inspection

NAAT0044

SHIFT SOLENOID VALVE B

NAAT0044S01

- For removal, refer to AT-269.

Resistance Check

NAAT0044S0101

- Check resistance between terminal 2 and ground.

Solenoid valve	Terminal No.		Resistance (Approx.)
Shift solenoid valve B	2	Ground	20 - 40Ω

Operation Check

NAAT0044S0102

- Check solenoid valve by listening for its operating sound while applying battery voltage to the terminal 2 and ground.

Description

NAAT0045

- This is an OBD-II self-diagnostic item and not available in TCM self-diagnosis.
- This malfunction will not be detected while the O/D OFF indicator lamp is indicating another self-diagnosis malfunction.
- This malfunction is detected when the A/T does not shift into third gear position as instructed by the TCM. This is not caused by electrical malfunction (circuits open or shorted) but by mechanical malfunction such as control valve sticking, improper solenoid valve operation, malfunctioning servo piston or brake band, etc.

Gear position	1	2	3	4
Shift solenoid valve A	ON (Closed)	OFF (Open)	OFF (Open)	ON (Closed)
Shift solenoid valve B	ON (Closed)	ON (Closed)	OFF (Open)	OFF (Open)

TCM TERMINALS AND REFERENCE VALUE

NAAT0045S02

Remarks: Specification data are reference values.

Terminal No.	Wire color	Item	Condition		Judgement standard (Approx.)
11	L/W	Shift solenoid valve A		When shift solenoid valve A operates. (When driving in “D_1” or “D_4”.)	Battery voltage
				When shift solenoid valve A does not operate. (When driving in “D_2” or “D_3”.)	0V

ON BOARD DIAGNOSIS LOGIC

NAAT0045S03

This diagnosis monitors actual gear position by checking the torque converter slip ratio calculated by TCM as follows:
Torque converter slip ratio = A x C/B
A: Output shaft revolution signal from revolution sensor
B: Engine speed signal from ECM
C: Gear ratio determined as gear position which TCM supposes
If the actual gear position is higher than the position (3rd) supposed by TCM, the slip ratio will be more than normal. In case the ratio exceeds the specified value, TCM judges this diagnosis malfunction.
This malfunction will be caused when shift solenoid valve A is stuck closed.

Gear position supposed by TCM	1	2	3	4
In case of gear position with no malfunctions	1	2	3	4
In case of gear position with shift solenoid valve A stuck closed	1	1	4*	4

*: P0733 is detected.

Diagnostic trouble code	Malfunction is detected when ...	Check item (Possible cause)
: A/T 3RD GR FNCTN	A/T cannot be shifted to the 3rd gear position even if electrical circuit is good.	• Shift solenoid valve A • Each clutch • Hydraulic control circuit
GST : P0733		

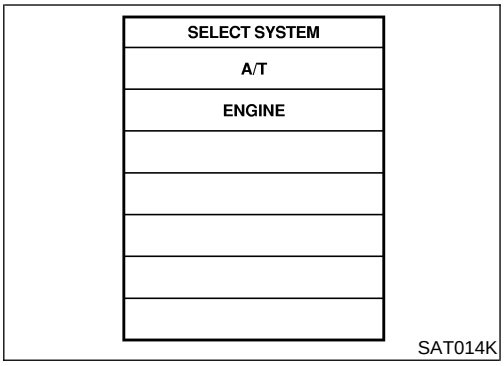

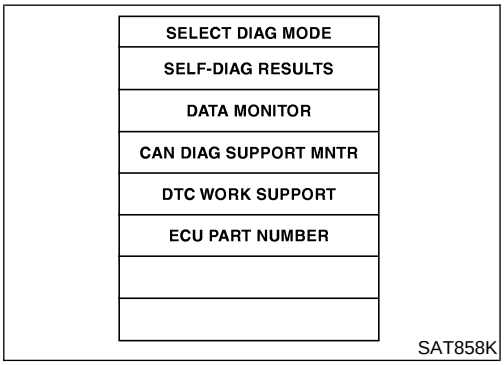

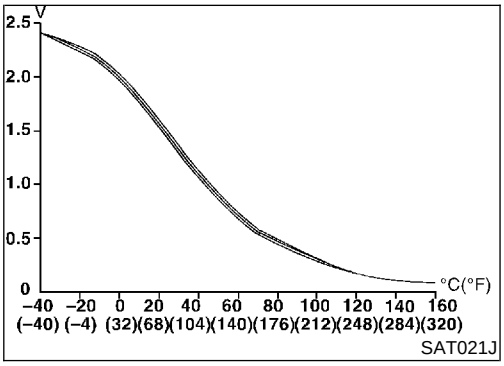

DIAGNOSTIC TROUBLE CODE (DTC) CONFIRMATION PROCEDURE

NAAT0045S01

CAUTION:

- **Always drive vehicle at a safe speed.**
- **Be careful not to rev engine into the red zone on the tachometer.**

NOTE:

If "DIAGNOSTIC TROUBLE CODE CONFIRMATION PROCEDURE" has been previously conducted, always turn ignition switch "OFF" and wait at least 5 seconds before conducting the next test.

TESTING CONDITIONS:

Always drive vehicle on a level road to improve the accuracy of test.

After the repair, perform the following procedure to confirm the malfunction is eliminated.

With CONSULT-II

1) Start engine and select "DATA MONITOR" mode for "A/T" with CONSULT-II.
2) Make sure that output voltage of A/T fluid temperature sensor is within the range below.
   FLUID TEMP SEN: 0.4 - 1.5V
   If out of range, drive the vehicle to decrease the voltage (warm up the fluid) or stop engine to increase the voltage (cool down the fluid).
3) Select "3RD GR FNCTN P0733" of "DTC WORK SUPPORT" mode for "A/T" with CONSULT-II and touch "START".
4) Accelerate vehicle to 35 to 45 km/h (22 to 28 MPH) under the following condition and release the accelerator pedal completely.
   THROTTLE POSI: Less than 1.0/8 (at all times during step 4)
   Selector lever: D position (OD "ON")

- **Check that "GEAR" shows "4" after releasing pedal.**

5) Depress accelerator pedal steadily with 3.5/8 - 4.5/8 of "THROTTLE POSI" from a speed of 35 to 45 km/h (22 to 28 MPH) until "TESTING" changes to "STOP VEHICLE" or "COMPLETED". (It will take approximately 3 seconds.)
   If the check result NG appears on CONSULT-II screen, go to "DIAGNOSTIC PROCEDURE", AT-139.
   If "STOP VEHICLE" appears on CONSULT-II screen, go to following step.

- **Check that "GEAR" shows "3" when depressing accelerator pedal with 3.5/8 - 4.5/8 of "THROTTLE POSI".**
- **If "TESTING" does not appear on CONSULT-II for a long time, select "SELF-DIAG RESULTS" for "ENGINE". In case a 1st trip DTC other than P0733 is shown, refer to applicable "TROUBLE DIAGNOSIS FOR DTC".**

6) Stop vehicle.
7) Follow the instruction displayed. (Check for normal shifting referring to the table below.)

Vehicle condition	Gear on actual transmission shift pattern when screen is changed to 1 → 2 → 3 → 4
No malfunction exists.	1 → 2 → 3 → 4
Malfunction for P0733 exists.	1 → 1 → 4 → 4

8) Make sure that "OK" is displayed. (If "NG" is displayed, refer to "DIAGNOSTIC PROCEDURE".) Refer to "DIAGNOSTIC PROCEDURE", AT-139.
   Refer to shift schedule, AT-353.

With GST

Follow the procedure "With CONSULT-II".

Wiring Diagram — AT — 3RD

NAAT0192

AT-3RDSIG-01

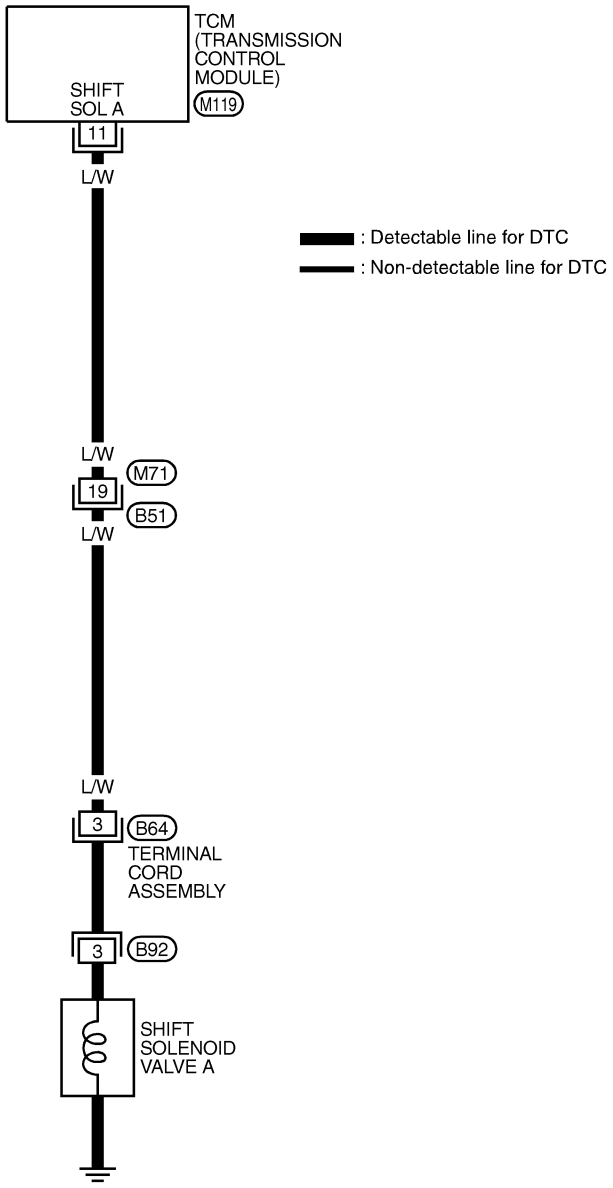

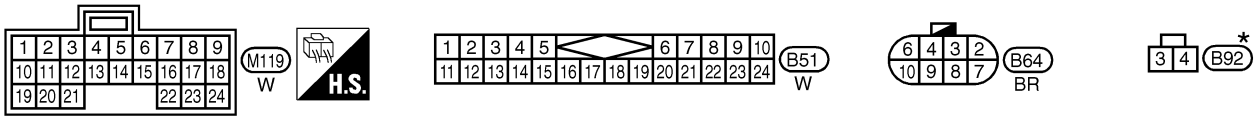

* : This connector is not shown in "HARNESS LAYOUT" in EL section.

MAT733A

Diagnostic Procedure

NAAT0046

1	CHECK SHIFT SOLENOID VALVE

1. Remove control valve assembly. Refer to AT-269.
2. Check shift solenoid valve operation.
- Shift solenoid valve A

Refer to “Component Inspection”, AT-140.

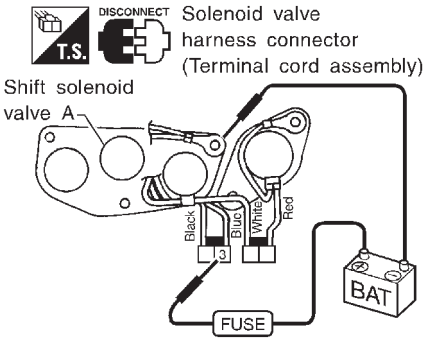

SAT653I

OK or NG

OK	▶	GO TO 2.
NG	▶	Repair or replace shift solenoid valve assembly.

2	CHECK CONTROL VALVE

1. Disassemble control valve assembly.
   Refer to “Control Valve Assembly”, AT-298.
2. Check to ensure that:
- Valve, sleeve and plug slide along valve bore under their own weight.
- Valve, sleeve and plug are free from burrs, dents and scratches.
- Control valve springs are free from damage, deformation and fatigue.
- Hydraulic line is free from obstacles.

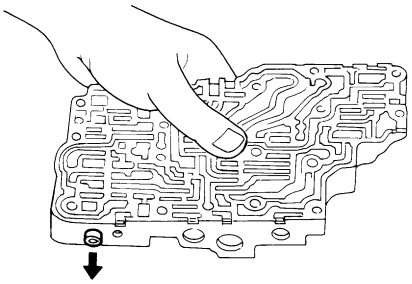

SAT367H

OK or NG

OK	▶	GO TO 3.
NG	▶	Repair control valve assembly.

3	CHECK DTC

Perform Diagnostic Trouble Code (DTC) confirmation procedure, AT-136.

OK or NG

OK	▶	**INSPECTION END**
NG	▶	Check control valve again. Repair or replace control valve assembly.

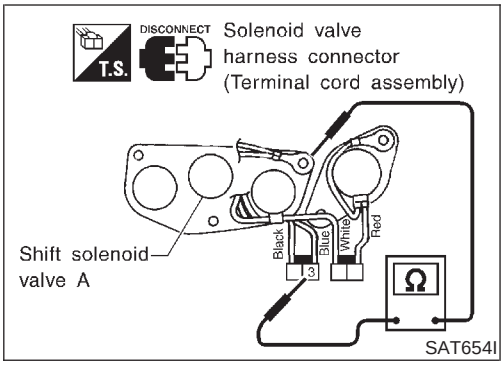

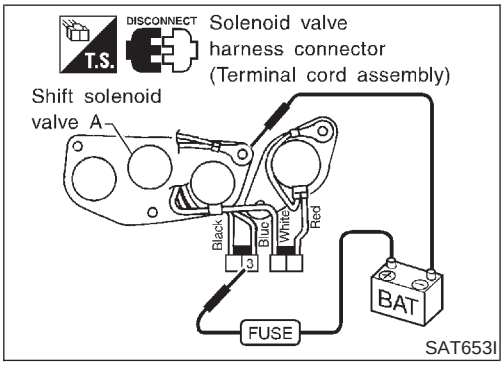

Component Inspection

NAAT0047

SHIFT SOLENOID VALVE A

NAAT0047S01

- For removal, refer to AT-269.

Resistance Check

NAAT0047S0101

- Check resistance between terminal 3 and ground.

Solenoid valve	Terminal No.		Resistance (Approx.)
Shift solenoid valve A	3	Ground	20 - 40Ω

Operation Check

NAAT0047S0102

- Check solenoid valve by listening for its operating sound while applying battery voltage to the terminal 3 and ground.

Description

NAAT0048

- This is an OBD-II self-diagnostic item and not available in TCM self-diagnosis.
- This malfunction will not be detected while the O/D OFF indicator lamp is indicating another self-diagnosis malfunction.
- This malfunction is detected when the A/T does not shift into fourth gear position or the torque converter clutch does not lock up as instructed by the TCM. This is not caused by electrical malfunction (circuits open or shorted) but by mechanical malfunction such as control valve sticking, improper solenoid valve operation, malfunctioning oil pump or torque converter clutch, etc.

CONSULT-II REFERENCE VALUE IN DATA MONITOR MODE

NAAT0048S04

Remarks: Specification data are reference values.

Monitor item	Condition	Specification
Line pressure solenoid valve duty	Small throttle opening (Low line pressure) ↓ Large throttle opening (High line pressure)	Approximately 24% ↓ Approximately 95%

Gear position	1	2	3	4
Shift solenoid valve A	ON (Closed)	OFF (Open)	OFF (Open)	ON (Closed)
Shift solenoid valve B	ON (Closed)	ON (Closed)	OFF (Open)	OFF (Open)

TCM TERMINALS AND REFERENCE VALUE

NAAT0048S02

Remarks: Specification data are reference values.

Terminal No.	Wire color	Item	Condition		Judgement standard (Approx.)
1	GY	Line pressure solenoid valve		When releasing accelerator pedal after warming up engine.	1.5 - 3.0V
				When depressing accelerator pedal fully after warming up engine.	0V
2	BR/Y	Line pressure solenoid valve (with dropping resistor)		When releasing accelerator pedal after warming up engine.	5 - 14V
				When depressing accelerator pedal fully after warming up engine.	0V
11	L/W	Shift solenoid valve A		When shift solenoid valve A operates. (When driving in “D_1” or “D_4”.)	Battery voltage
				When shift solenoid valve A does not operate. (When driving in “D_2” or “D_3”.)	0V
12	L/R	Shift solenoid valve B		When shift solenoid valve B operates. (When driving in “D_1” or “D_2”.)	Battery voltage
				When shift solenoid valve B does not operate. (When driving in “D_3” or “D_4”.)	0V

ON BOARD DIAGNOSIS LOGIC

=NAAT0048S03

This diagnosis monitors actual gear position by checking the torque converter slip ratio calculated by TCM as follows:
Torque converter slip ratio = A x C/B
A: Output shaft revolution signal from revolution sensor
B: Engine speed signal from ECM
C: Gear ratio determined as gear position which TCM supposes
If the actual gear position is much lower than the position (4th) supposed by TCM, the slip ratio will be much less than normal. In case the ratio does not reach the specified value, TCM judges this diagnosis malfunction.
This malfunction will be caused when shift solenoid valve B, line pressure solenoid valve are stuck closed and shift solenoid valve A is stuck open.

Gear position supposed by TCM	1	2	3	4
In case of gear position with no malfunctions	1	2	3	4
In case of gear position with shift solenoid valve B stuck closed	1	2	2	1*

*: P0734 is detected.

Diagnostic trouble code	Malfunction is detected when ...	Check item (Possible cause)
: A/T 4TH GR FNCTN	A/T cannot be shifted to the 4th gear position even if electrical circuit is good.	• Shift solenoid valve A • Shift solenoid valve B • Line pressure solenoid valve • Each clutch • Hydraulic control circuit
: P0734		

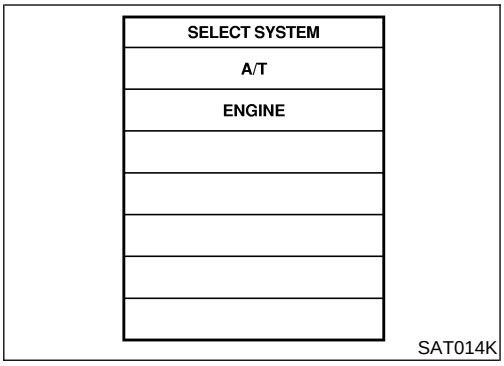

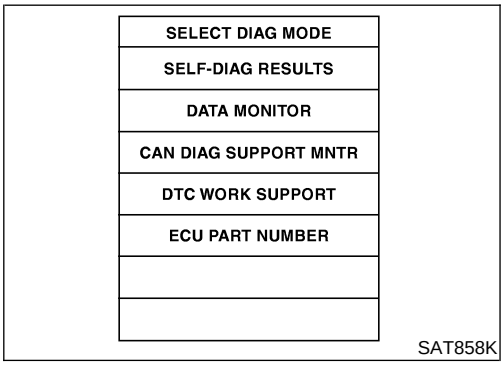

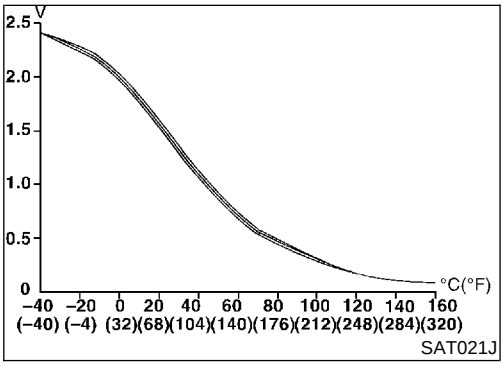

DIAGNOSTIC TROUBLE CODE (DTC) CONFIRMATION PROCEDURE

NAAT0048S01

CAUTION:

- **Always drive vehicle at a safe speed.**
- **Be careful not to rev engine into the red zone on the tachometer.**

NOTE:

If "DIAGNOSTIC TROUBLE CODE CONFIRMATION PROCEDURE" has been previously conducted, always turn ignition switch "OFF" and wait at least 5 seconds before conducting the next test.

TESTING CONDITIONS:

Always drive vehicle on a level road to improve the accuracy of test.

After the repair, perform the following procedure to confirm the malfunction is eliminated.

With CONSULT-II

1) Start engine and select "DATA MONITOR" mode for "A/T" with CONSULT-II.
2) Make sure that output voltage of A/T fluid temperature sensor is within the range below.
   FLUID TEMP SEN: 0.4 - 1.5V
   If out of range, drive the vehicle to decrease the voltage (warm up the fluid) or stop engine to increase the voltage (cool down the fluid).
3) Select "4TH GR FNCTN P0734" of "DTC WORK SUPPORT" mode for "A/T" with CONSULT-II and touch "START".
4) Accelerate vehicle to 55 to 65 km/h (34 to 40 MPH) under the following condition and release the accelerator pedal completely.
   THROTTLE POSI: Less than 5.5/8 (at all times during step 4)
   Selector lever: D position (OD "ON")
   - **Check that "GEAR" shows "3" after releasing pedal.**
5) Depress accelerator pedal steadily with 1.0/8 - 2.0/8 of "THROTTLE POSI" from a speed of 55 to 65 km/h (34 to 40 MPH) until "TESTING" has turned to "STOP VEHICLE" or "COMPLETED". (It will take approximately 3 seconds.)
   If the check result NG appears on CONSULT-II screen, go to "DIAGNOSTIC PROCEDURE", AT-146.
   If "STOP VEHICLE" appears on CONSULT-II screen, go to following step.
   - **Check that "GEAR" shows "4" when depressing accelerator pedal with 1.0/8 - 2.0/8 of "THROTTLE POSI".**
   - **If "TESTING" does not appear on CONSULT-II for a long time, select "SELF-DIAG RESULTS" for "ENGINE". In case a 1st trip DTC other than P0734 is shown, refer to applicable "TROUBLE DIAGNOSIS FOR DTC".**
6) Stop vehicle.
7) Follow the instruction displayed. (Check for normal shifting referring to the table below.)

Vehicle condition	Gear on actual transmission shift pattern when screen is changed to 1 → 2 → 3 → 4
No malfunction exists	1 → 2 → 3 → 4
Malfunction for P0734 exists.	1 → 2 → 2 → 1

8) Make sure that "OK" is displayed. (If "NG" is displayed, refer to "DIAGNOSTIC PROCEDURE".) Refer to "DIAGNOSTIC PROCEDURE", AT-146.
   Refer to shift schedule, AT-353.

With GST

Follow the procedure "With CONSULT-II".

Wiring Diagram — AT — 4TH

NAAT0193

AT-4THSIG-01

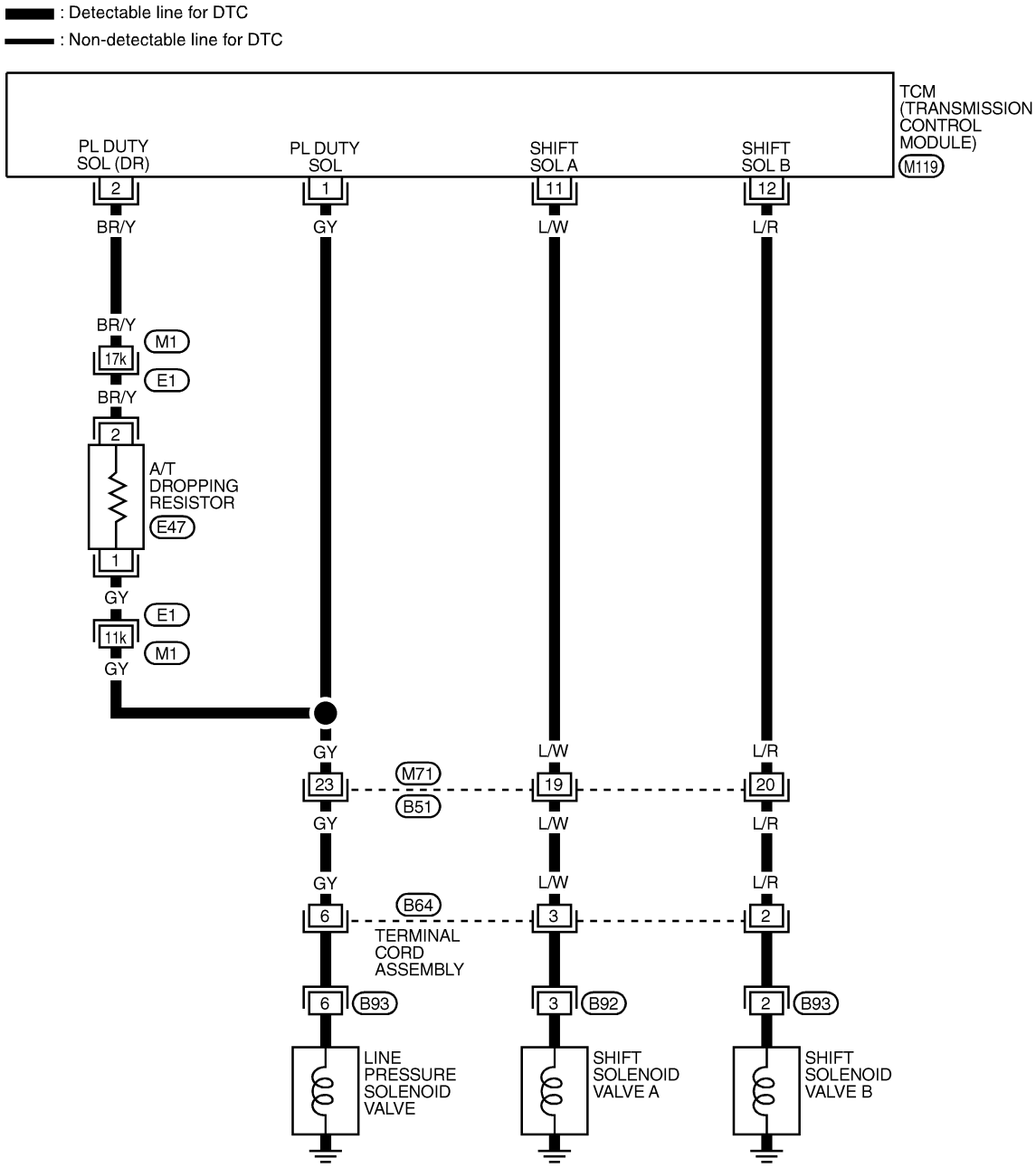

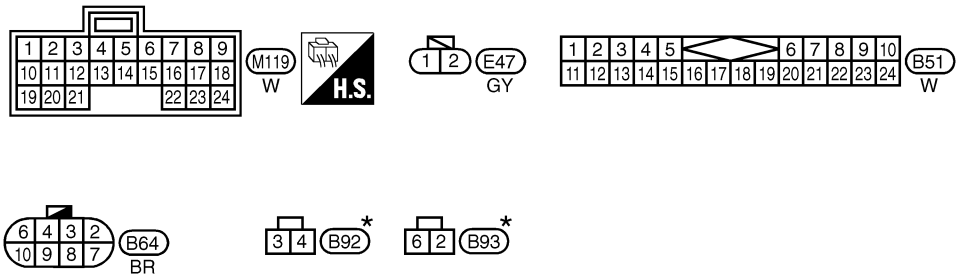

REFER TO THE FOLLOWING.
E1 -SUPER MULTIPLE JUNCTION (SMJ)

* : This connector is not shown in "HARNESS LAYOUT" in EL section.

MAT912A

Diagnostic Procedure

NAAT0049

1	CHECK SHIFT UP (D_3 TO D_4)

During “Cruise test — Part 1”, AT-73.
Does A/T shift from D_3 to D_4 at the specified speed?

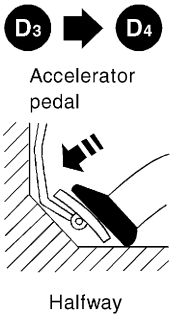

SAT988H

Yes or No

Yes	▶	GO TO 9.
No	▶	GO TO 2.

2	CHECK LINE PRESSURE

Perform line pressure test. Refer to AT-64.

OK or NG

OK	▶	GO TO 3.
NG	▶	GO TO 6.

3	CHECK SOLENOID VALVES

1. Remove control valve assembly. Refer to AT-269.
2. Refer to "Component Inspection", AT-150.

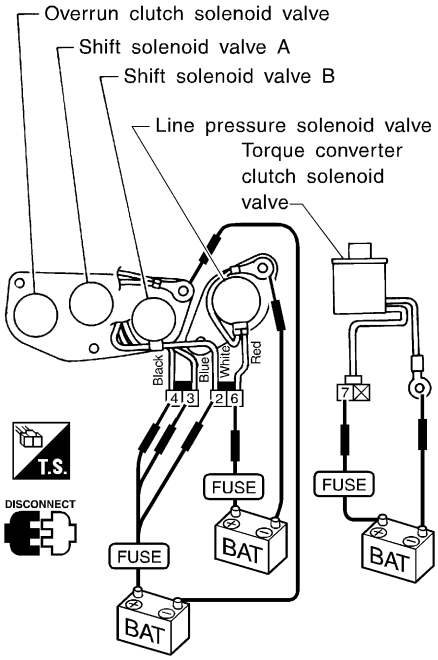

SAT158J

OK or NG

OK	▶	GO TO 4.
NG	▶	Replace solenoid valve assembly.

4	CHECK CONTROL VALVE

1. Disassemble control valve assembly. Refer to AT-298.
2. Check to ensure that:
- Valve, sleeve and plug slide along valve bore under their own weight.
- Valve, sleeve and plug are free from burrs, dents and scratches.
- Control valve springs are free from damage, deformation and fatigue.
- Hydraulic line is free from obstacles.

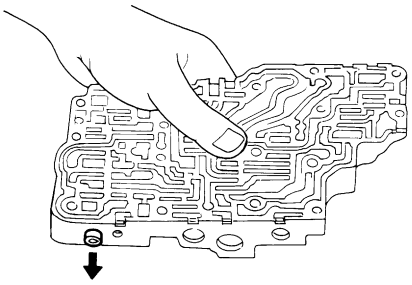

SAT367H

OK or NG

OK	▶	GO TO 5.
NG	▶	Repair control valve.

5	CHECK SHIFT UP (D_3 TO D_4)	
Does A/T shift from D_3 to D_4 at the specified speed?		
	Yes or No	
Yes	▶	GO TO 9.
No	▶	Check control valve again. Repair or replace control valve assembly.

6	CHECK LINE PRESSURE SOLENOID VALVE	
1. Remove control valve assembly. Refer to AT-269. 2. Refer to "Component Inspection", AT-150.		
	OK or NG	
OK	▶	GO TO 7.
NG	▶	Replace solenoid valve assembly.

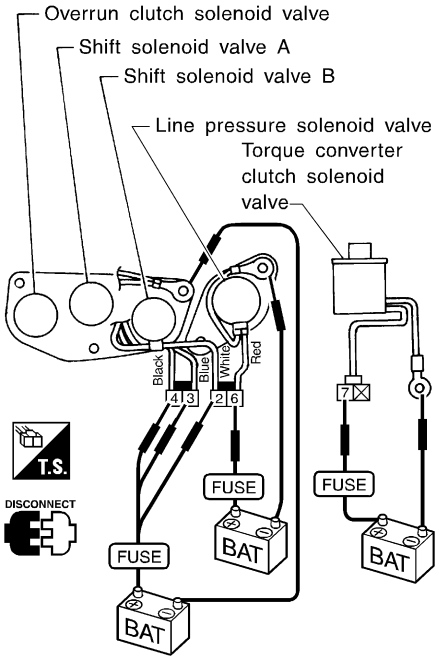

SAT158J

7	CHECK CONTROL VALVE

1. Disassemble control valve assembly. Refer to AT-298.
2. Check line pressure circuit valves for sticking.
- Pressure regulator valve
- Pilot valve
- Pressure modifier valve

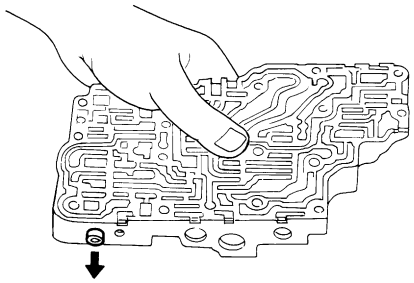

SAT367H

OK or NG

OK	▶	GO TO 8.
NG	▶	Repair control valve.

8	CHECK SHIFT UP (D_3 TO D_4)

Does A/T shift from D_3 to D_4 at the specified speed?

OK or NG

OK	▶	GO TO 9.
NG	▶	Check control valve again. Repair or replace control valve assembly.

9	CHECK DTC

Perform Diagnostic Trouble Code (DTC) confirmation procedure, AT-143.

OK or NG

OK	▶	**INSPECTION END**
NG	▶	Perform "Cruise test — Part 1" again and return to the start point of this flow chart.

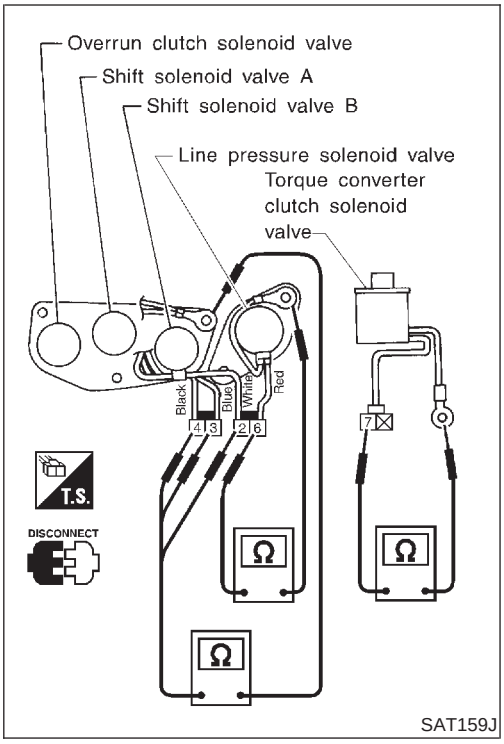

SAT159J

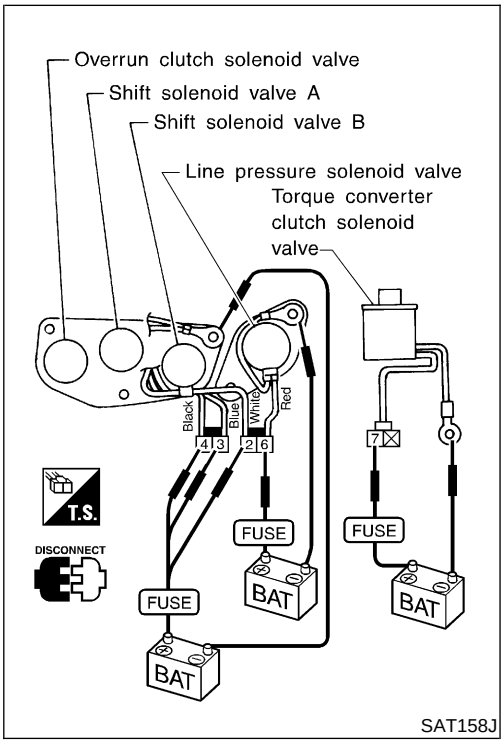

SAT158J

Component Inspection

NAAT0050

SOLENOID VALVES

NAAT0050S01

- For removal, refer to AT-269.

Resistance Check

NAAT0050S0101

- Check resistance between terminals (3, 2 or 6) and ground.

Solenoid valve	Terminal No.		Resistance (Approx.)
Shift solenoid valve A	3	Ground	20 - 40Ω
Shift solenoid valve B	2		
Line pressure solenoid valve	6		2.5 - 5Ω

Operation Check

NAAT0050S0102

- Check solenoid valve by listening for its operating sound while applying battery voltage to the terminals (3, 2 or 6) and ground.

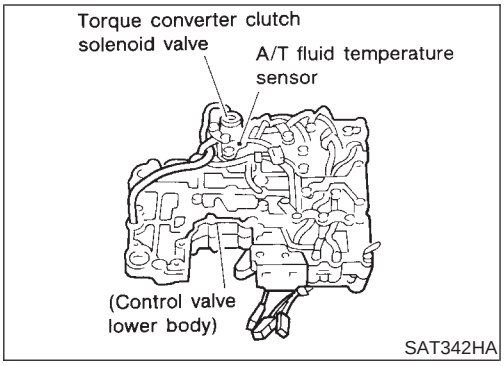

Description

NAAT0051

The torque converter clutch solenoid valve is activated, with the gear in "D_4", by the TCM in response to signals sent from the vehicle speed and throttle position sensors. Lock-up piston operation will then be controlled.
Lock-up operation, however, is prohibited when A/T fluid temperature is too low.
When the accelerator pedal is depressed (less than 2/8) in lock-up condition, the engine speed should not change abruptly. If there is a big jump in engine speed, there is no lock-up.

CONSULT-II REFERENCE VALUE IN DATA MONITOR MODE

NAAT0051S02

Remarks: Specification data are reference values.

Monitor item	Condition	Specification
Torque converter clutch solenoid valve duty	Lock-up "OFF" ↓ Lock-up "ON"	Approximately 4% ↓ Approximately 94%

TCM TERMINALS AND REFERENCE VALUE

NAAT0051S03

Remarks: Specification data are reference values.

Terminal No.	Wire color	Item	Condition		Judgement standard (Approx.)
3	G/OR	Torque converter clutch solenoid valve		When A/T performs lock-up.	8 - 15V
				When A/T does not perform lock-up.	0V

ON BOARD DIAGNOSIS LOGIC

NAAT0051S04

Diagnostic trouble code	Malfunction is detected when ...	Check item (Possible cause)
: TCC SOLENOID/CIRC	TCM detects an improper voltage drop when it tires to operate the solenoid valve.	• Harness or connectors (The solenoid circuit is open or shorted.) • Torque converter clutch solenoid valve
: P0740		

SELECT SYSTEM
A/T
ENGINE

SAT014K

SELECT DIAG MODE
WORK SUPPORT
SELF-DIAG RESULTS
DATA MONITOR
ACTIVE TEST
DTC & SRT CONFIRMATION
ECM PART NUMBER

SAT020K

DIAGNOSTIC TROUBLE CODE (DTC) CONFIRMATION PROCEDURE

NAAT0051S01

NOTE:
If "DIAGNOSTIC TROUBLE CODE CONFIRMATION PROCEDURE" has been previously conducted, always turn ignition switch "OFF" and wait at least 5 seconds before conducting the next test.

After the repair, perform the following procedure to confirm the malfunction is eliminated.

With CONSULT-II

1) Turn ignition switch "ON".
2) Select "DATA MONITOR" mode for "ENGINE" with CONSULT-II and wait at least 1 second.
3) Start engine and maintain the following conditions for at least 5 consecutive seconds.
   VHCL SPEED SE: 80 km/h (50 MPH) or more
   THROTTLE POSI: 0.5/8 - 1.0/8
   Selector lever: D position
   Driving location: Driving the vehicle uphill (increased engine load) will help maintain the driving conditions required for this test.

With GST

Follow the procedure "With CONSULT-II".

Wiring Diagram — AT — TCV

NAAT0194

AT-TCV-01

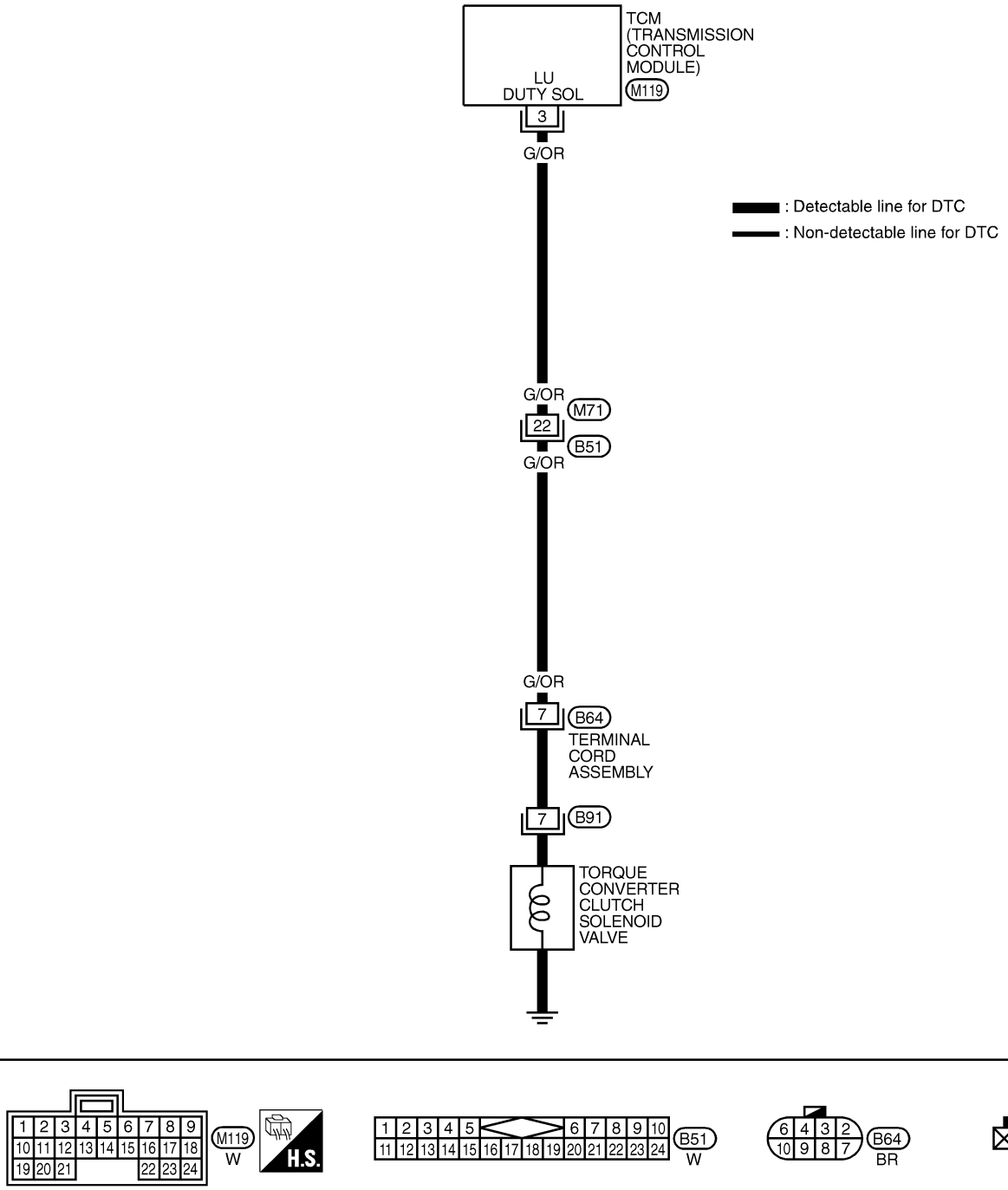

★ : This connector is not shown in "HARNESS LAYOUT" in EL section.

MAT735A

Diagnostic Procedure

NAAT0052

1	CHECK VALVE RESISTANCE

1. Turn ignition switch to “OFF” position.
2. Disconnect terminal cord assembly connector on the right side of transfer assembly.
3. Check resistance between terminal 7 and ground.

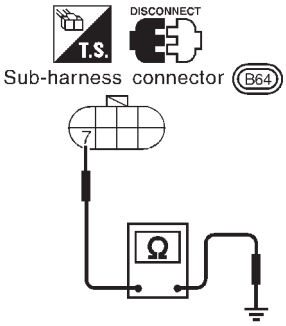

SAT156J

Is resistance approx. 10 - 20Ω?

Yes	▶	GO TO 3.
No	▶	GO TO 2.

2	CHECK VALVE OPERATION

1. Remove oil pan. Refer to AT-269.
2. Check the following items:

- Torque converter clutch solenoid valve
  Refer to “Component Inspection”, AT-155.
- Harness of terminal cord assembly for short or open

OK or NG

OK	▶	GO TO 3.
NG	▶	Repair open circuit or short to ground or short to power in harness or connectors.

3	CHECK RESISTANCE

1. Turn ignition switch to “OFF” position.
2. Disconnect TCM harness connector.
3. Check resistance between terminal 7 and TCM harness connector terminal 3. Refer to wiring diagram — AT — TCV.
   Continuity should exist.
   If OK, check harness for short to ground and short to power.
4. Reinstall any part removed.

OK or NG

OK	▶	GO TO 4.
NG	▶	Repair open circuit or short to ground or short to power in harness or connectors.

4	CHECK DTC

Perform Diagnostic Trouble Code (DTC) confirmation procedure, AT-152.

OK or NG

OK	▶	**INSPECTION END**
NG	▶	GO TO 5.

5	CHECK TCM INSPECTION	
1. Perform TCM input/output signal inspection. 2. If NG, recheck TCM pin terminals for damage or loose connection with harness connector.		
OK or NG		
OK	▶	**INSPECTION END**
NG	▶	Repair or replace damaged parts.

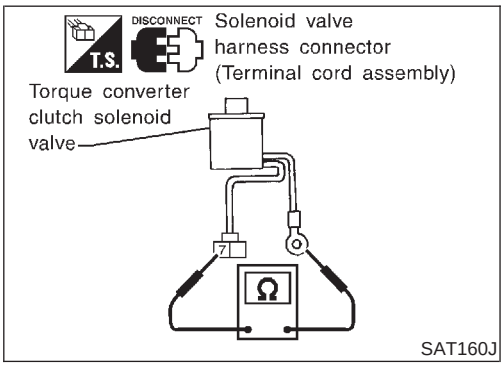

SAT160J

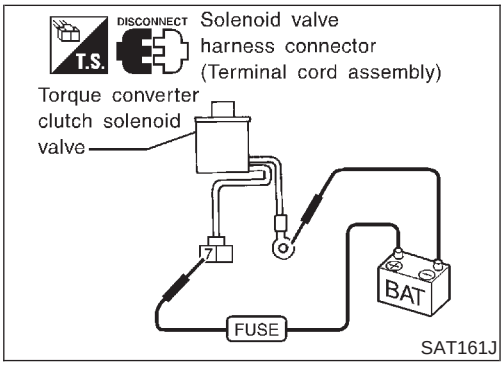

SAT161J

Component Inspection

TORQUE CONVERTER CLUTCH SOLENOID VALVE

NAAT0053

NAAT0053S01

- For removal, refer to AT-269.

Resistance Check

NAAT0053S0101

- Check resistance between terminal 7 and ground.

Solenoid valve	Terminal No.		Resistance (Approx.)
Torque converter clutch solenoid valve	7	Ground	10 - 20Ω

Operation Check

NAAT0053S0102

- Check solenoid valve by listening for its operating sound while applying battery voltage to the terminal 7 and ground.

Description

NAAT0054

- This is an OBD-II self-diagnostic item and not available in TCM self-diagnosis.
- This malfunction will not be detected while the O/D OFF indicator lamp is indicating another self-diagnosis malfunction.
- This malfunction is detected when the A/T does not shift into fourth gear position or the torque converter clutch does not lock up as instructed by the TCM. This is not caused by electrical malfunction (circuits open or shorted) but by mechanical malfunction such as control valve sticking, improper solenoid valve operation, malfunctioning oil pump or torque converter clutch, etc.

CONSULT-II REFERENCE VALUE IN DATA MONITOR MODE

NAAT0054S02

Remarks: Specification data are reference values.

Monitor item	Condition	Specification
Torque converter clutch solenoid valve duty	Lock-up “OFF” ↓ Lock-up “ON”	Approximately 4% ↓ Approximately 94%
Line pressure solenoid valve duty	Small throttle opening (Low line pressure) ↓ Large throttle opening (High line pressure)	Approximately 24% ↓ Approximately 95%

TCM TERMINALS AND REFERENCE VALUE

NAAT0054S03

Remarks: Specification data are reference values.

Terminal No.	Wire color	Item	Condition		Judgement standard (Approx.)
1	GY	Line pressure solenoid valve		When releasing accelerator pedal after warming up engine.	1.5 - 3.0V
				When depressing accelerator pedal fully after warming up engine.	0V
2	BR/Y	Line pressure solenoid valve (with dropping resistor)		When releasing accelerator pedal after warming up engine.	5 - 14V
				When depressing accelerator pedal fully after warming up engine.	0V
3	G/OR	Torque converter clutch solenoid valve		When A/T performs lock-up.	8 - 15V
				When A/T does not perform lock- up.	0V

ON BOARD DIAGNOSIS LOGIC

NAAT0054S04

This diagnosis monitors actual gear position by checking the torque converter slip ratio calculated by TCM as follows:
Torque converter slip ratio = A x C/B
A: Output shaft revolution signal from revolution sensor
B: Engine speed signal from ECM
C: Gear ratio determined as gear position which TCM supposes
If the actual gear position is much lower than the position (4th) supposed by TCM, the slip ratio will be much less than normal. In case the ratio does not reach the specified value, TCM judges this

diagnosis malfunction.
This malfunction will be caused when shift solenoid valve B, line pressure solenoid valve and torque converter clutch solenoid valve are stuck closed.

Gear position supposed by TCM	1	2	3	4
In case of gear position with no malfunctions	1	2	3	4
In case of gear position with shift solenoid valve B stuck closed	1	2	2	1*

*: P0744 is detected.

Diagnostic trouble code	Malfunction is detected when ...	Check item (Possible cause)
: A/T TCC S/V FNCTN	A/T cannot perform lock-up even if electrical circuit is good.	• Line pressure solenoid valve • Torque converter clutch solenoid valve • Each clutch • Hydraulic control circuit • Shift solenoid valve B
: P0744		

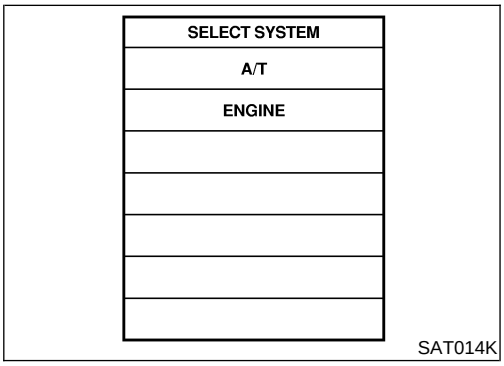

SAT014K

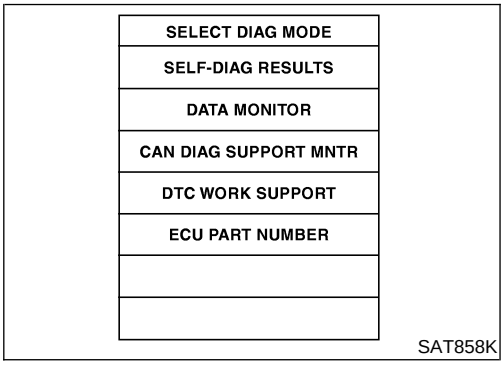

SAT858K

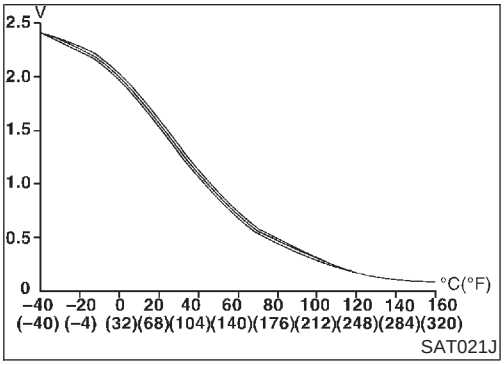

SAT021J

DIAGNOSTIC TROUBLE CODE (DTC) CONFIRMATION PROCEDURE

NAAT0054S01

CAUTION:
Always drive vehicle at a safe speed.

NOTE:
If "DIAGNOSTIC TROUBLE CODE CONFIRMATION PROCEDURE" has been previously conducted, always turn ignition switch "OFF" and wait at least 5 seconds before conducting the next test.

After the repair, perform the following procedure to confirm the malfunction is eliminated.

With CONSULT-II

1) Start engine and select "DATA MONITOR" mode for "A/T" with CONSULT-II.
2) Make sure that output voltage of A/T fluid temperature sensor is within the range below.
   FLUID TEMP SEN: 0.4 - 1.5V
   If out of range, drive the vehicle to decrease the voltage (warm up the fluid) or stop engine to increase the voltage (cool down the fluid).
3) Select "TCC S/V FNCTN P0744" of "DTC WORK SUPPORT" mode for "A/T" with CONSULT-II and touch "START".
4) Accelerate vehicle to more than 67 to 100 km/h (42 to 62 MPH) and maintain the following condition continuously until "TESTING" has turned to "COMPLETED". (It will take approximately 30 seconds after "TESTING" shows.)
   THROTTLE POSI: 1.0/8 - 2.0/8 (at all times during step 4)
   Selector lever: D position (OD "ON")
   TCC S/V DUTY: More than 94%
   VHCL/S SE·A/T: Constant speed of more than 67 to 100 km/h (42 to 62 MPH)

- **Check that "GEAR" shows "4".**
- **For shift schedule, refer to SDS, AT-353.**

- **If "TESTING" does not appear on CONSULT-II for a long time, select "SELF-DIAG RESULTS". In case a 1st trip DTC other than P0744 is shown, refer to applicable "TROUBLE DIAGNOSIS FOR DTC".**

5) Make sure that "OK" is displayed. (If "NG" is displayed, refer to "DIAGNOSTIC PROCEDURE".)
   Refer to "DIAGNOSTIC PROCEDURE", AT-160.
   Refer to shift schedule, AT-353.

With GST

Follow the procedure "With CONSULT-II".

Wiring Diagram — AT — TCCSIG

NAAT0195

AT-TCCSIG-01

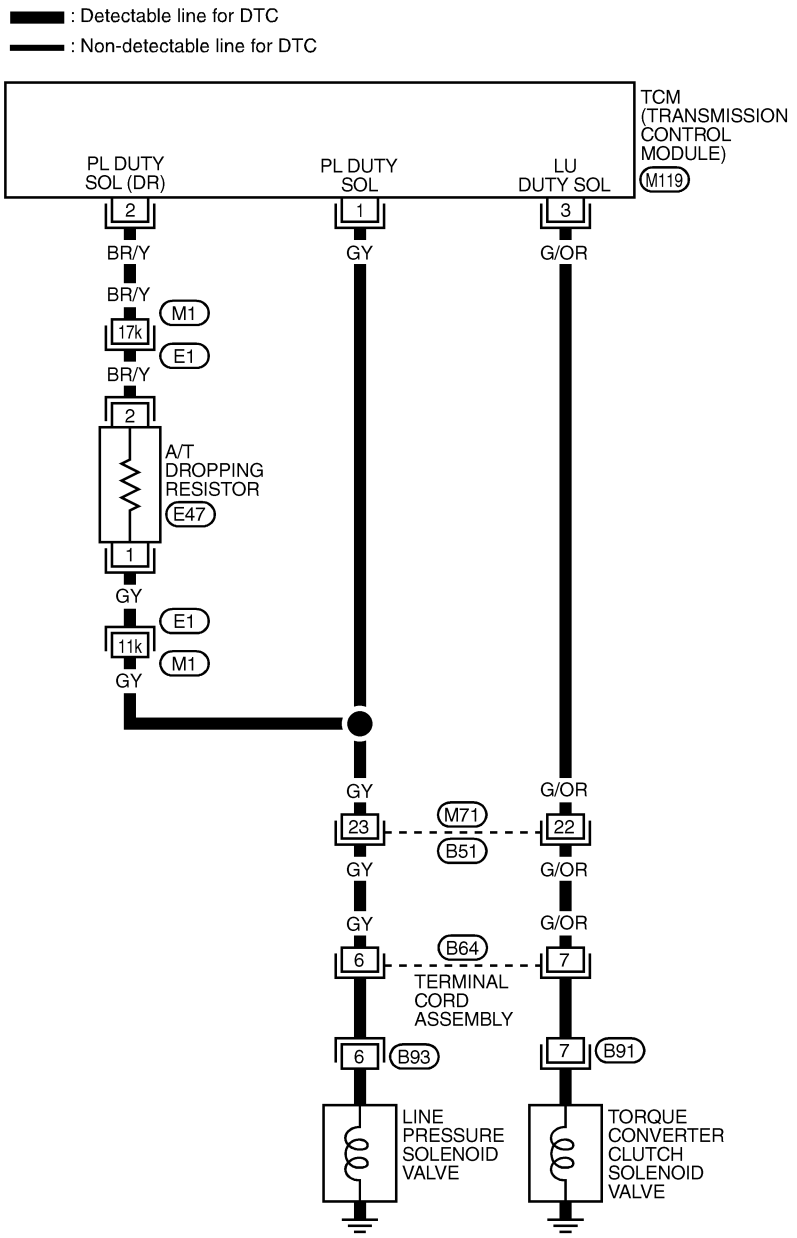

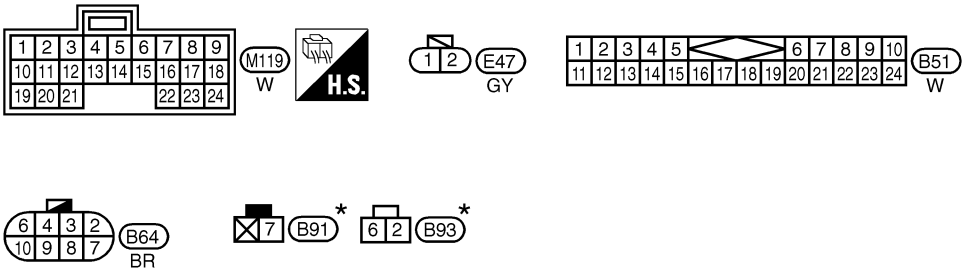

REFER TO THE FOLLOWING.
E1 -SUPER MULTIPLE JUNCTION (SMJ)

★ : This connector is not shown in "HARNESS LAYOUT" in EL section.

MAT913A

Diagnostic Procedure

=NAAT0055

1	CHECK SHIFT UP (D_3 TO D_4)
During “Cruise test — Part 1”, AT-73. Does A/T shift from D_3 to D_4 at the specified speed?	

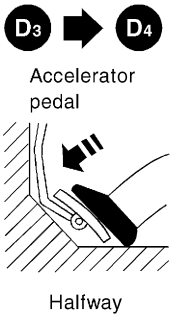

SAT988H

Yes or No

Yes	▶	● GO TO 10. ● And check for proper lock-up.
No	▶	GO TO 2.

2	CHECK LINE PRESSURE
Perform line pressure test. Refer to AT-64.	

OK or NG

OK	▶	GO TO 3.
NG	▶	GO TO 6.

3	CHECK CONTROL VALVE

1. Disassemble control valve assembly. Refer to AT-298.
2. Check to ensure that:
- Valve, sleeve and plug slide along valve bore under their own weight.
- Valve, sleeve and plug are free from burrs, dents and scratches.
- Control valve springs are free from damage, deformation and fatigue.
- Hydraulic line is free from obstacles.

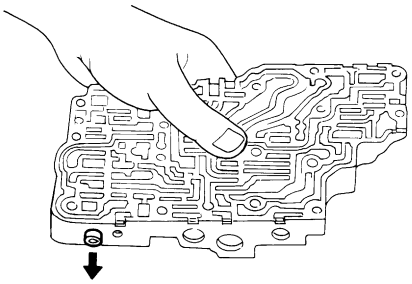

SAT367H

OK or NG

OK	▶	GO TO 4.
NG	▶	Repair control valve.

4	CHECK SHIFT UP (D_3 TO D_4)	
Does A/T shift from D_3 to D_4 at the specified speed?		
Yes or No		
Yes	▶	GO TO 5.
No	▶	Check control valve again. Repair or replace control valve assembly.

5	CHECK DTC	
Perform Diagnostic Trouble Code (DTC) confirmation procedure, AT-157.		
OK or NG		
OK	▶	**INSPECTION END**
NG	▶	• GO TO 10. • And check for proper lock-up.

6	CHECK LINE PRESSURE SOLENOID VALVE	

1. Remove control valve assembly. Refer to AT-269.
2. Check line pressure solenoid valve operation. Refer to AT-164.

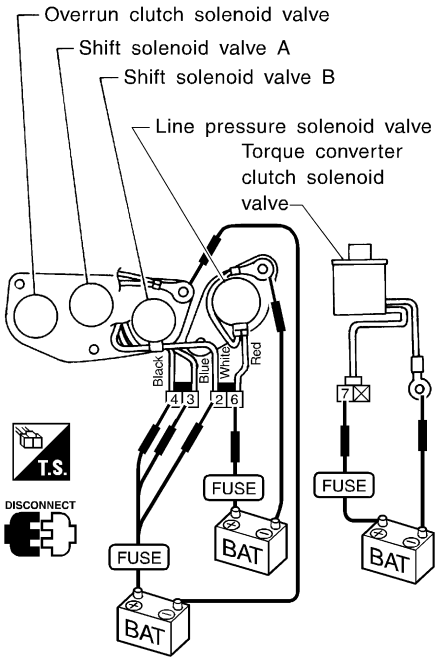

SAT158J

OK or NG		
OK	▶	GO TO 7.
NG	▶	Replace solenoid valve assembly.

7	CHECK CONTROL VALVE

1. Disassemble control valve assembly. Refer to AT-298.
2. Check line pressure circuit valves for sticking.
- Pressure regulator valve
- Pilot valve
- Pressure modifier valve

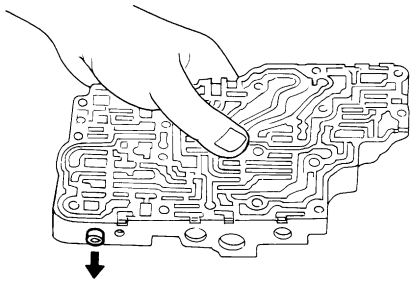

SAT367H

OK or NG

OK	▶	GO TO 8.
NG	▶	Repair control valve.

8	CHECK SHIFT UP (D_3 TO D_4)

Does A/T shift from D_3 to D_4 at the specified speed?

Yes or No

Yes	▶	GO TO 9.
No	▶	Check control valve again. Repair or replace control valve assembly.

9	CHECK DTC

Perform Diagnostic Trouble Code (DTC) confirmation procedure, AT-157.

OK or NG

OK	▶	**INSPECTION END**
NG	▶	• GO TO 10. • And check for proper lock-up.

10	CHECK LOCK-UP CONDITION

During "Cruise test — Part 1", AT-73.
Does A/T perform lock-up at the specified speed?

Yes or No

Yes	▶	Perform "Cruise test − Part 1" again and return to the start point of this flow chart.
No	▶	GO TO 11.

11	CHECK TORQUE CONVERTER CLUTCH SOLENOID VALVE

1. Remove control valve assembly. Refer to AT-269.
2. Check torque converter clutch solenoid valve operation.
   Refer to AT-164.

OK or NG

OK	▶	GO TO 12.
NG	▶	Replace solenoid valve assembly.

12	CHECK CONTROL VALVE	
1. Disassemble control valve assembly. Refer to AT-298. 2. Check control valves for sticking. ● Torque converter clutch control valve ● Torque converter clutch relief valve 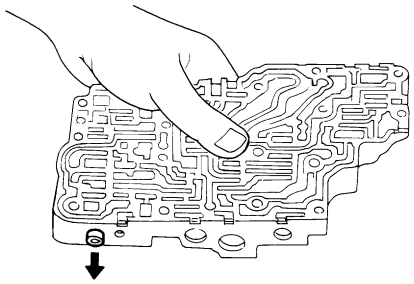 SAT367H		
OK or NG		
OK	▶	GO TO 13.
NG	▶	Repair control valve

13	CHECK LOCK-UP CONDITION	
Does A/T perform lock-up at the specified speed?		
Yes or No		
Yes	▶	GO TO 14.
No	▶	Check control valve again. Repair or replace control valve assembly.

14	CHECK DTC	
Perform Diagnostic Trouble Code (DTC) confirmation procedure, AT-157.		
OK or NG		
OK	▶	**INSPECTION END**
NG	▶	Perform "Cruise test — Part 1" again and return to the start point of this flow chart.

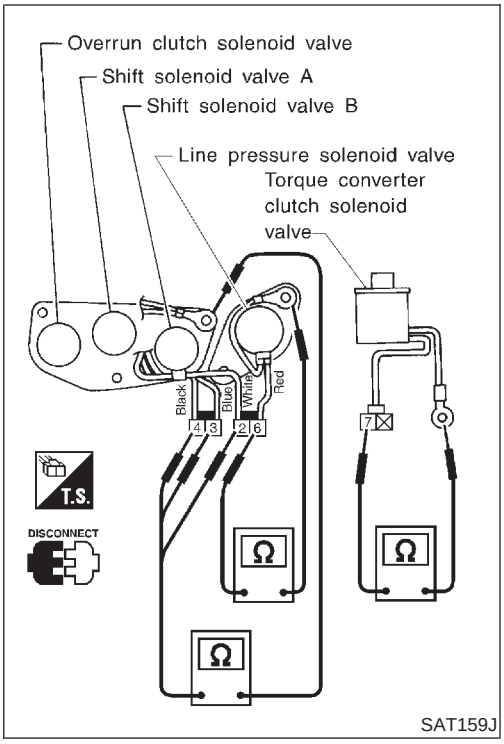

SAT159J

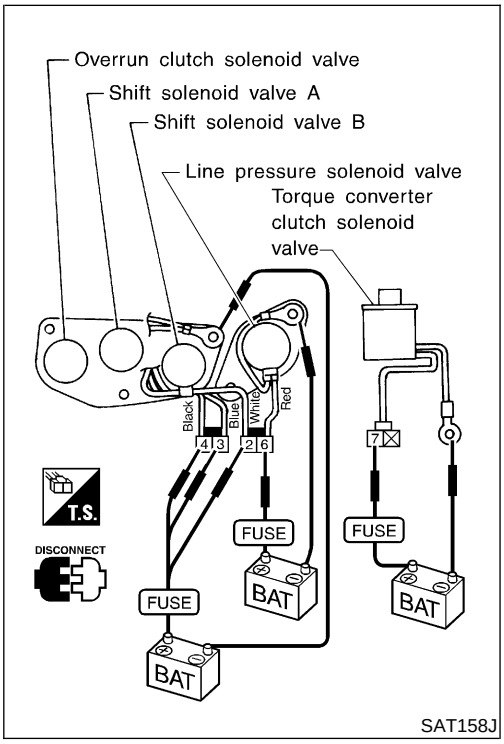

SAT158J

Component Inspection

NAAT0056

SOLENOID VALVES

NAAT0056S01

- For removal, refer to AT-269.

Resistance Check

NAAT0056S0101

- Check resistance between terminals (6 or 7) and ground.

Solenoid valve	Terminal No.		Resistance (Approx.)
Line pressure solenoid valve	6	Ground	2.5 - 5Ω
Torque converter clutch solenoid valve	7		10 - 20Ω

Operation Check

NAAT0056S0102

- Check solenoid valve by listening for its operating sound while applying battery voltage to the terminals (6 or 7) and ground.

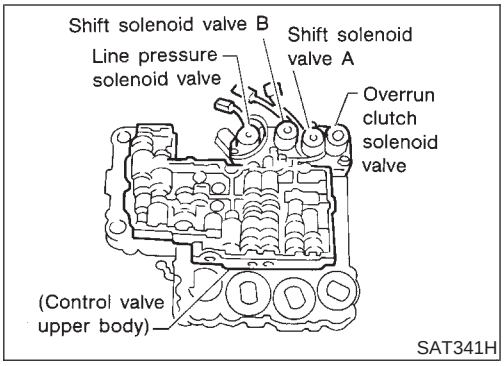

Description

NAAT0057

The line pressure solenoid valve regulates the oil pump discharge pressure to suit the driving condition in response to a signal sent from the TCM.

The line pressure duty cycle value is not consistent when the closed throttle position switch is "ON". To confirm the line pressure duty cycle at low pressure, the accelerator (throttle) should be open until the closed throttle position switch is "OFF".

CONSULT-II REFERENCE VALUE IN DATA MONITOR MODE

NAAT0057S02

Remarks: Specification data are reference values.

Monitor item	Condition	Specification
Line pressure solenoid valve duty	Small throttle opening (Low line pressure) ↓ Large throttle opening (High line pressure)	Approximately 24% ↓ Approximately 95%

NOTE:

The line pressure duty cycle value is not consistent when the closed throttle position switch is "ON". To confirm the line pressure duty cycle at low pressure, the accelerator (throttle) should be open until the closed throttle position switch is "OFF".

TCM TERMINALS AND REFERENCE VALUE

NAAT0057S03

Remarks: Specification data are reference values.

Terminal No.	Wire color	Item	Condition		Judgement standard (Approx.)
1	GY	Line pressure solenoid valve		When releasing accelerator pedal after warming up engine.	1.5 - 3.0V
				When depressing accelerator pedal fully after warming up engine.	0V
2	BR/Y	Line pressure solenoid valve (with dropping resistor)		When releasing accelerator pedal after warming up engine.	5 - 14V
				When depressing accelerator pedal fully after warming up engine.	0V

ON BOARD DIAGNOSIS LOGIC

NAAT0057S04

Diagnostic trouble code	Malfunction is detected when ...	Check item (Possible cause)
: L/PRESS SOL/CIRC	TCM detects an improper voltage drop when it tries to operate the solenoid valve.	• Harness or connectors (The solenoid circuit is open or shorted.) • Line pressure solenoid valve
: P0745		

SELECT SYSTEM
A/T
ENGINE

SAT014K

SELECT DIAG MODE
WORK SUPPORT
SELF-DIAG RESULTS
DATA MONITOR
ACTIVE TEST
DTC & SRT CONFIRMATION
ECM PART NUMBER

SAT020K

DIAGNOSTIC TROUBLE CODE (DTC) CONFIRMATION PROCEDURE

NAAT0057S01

NOTE:

If "DIAGNOSTIC TROUBLE CODE CONFIRMATION PROCEDURE" has been previously conducted, always turn ignition switch "OFF" and wait at least 5 seconds before conducting the next test.

After the repair, perform the following procedure to confirm the malfunction is eliminated.

With CONSULT-II

1) Turn ignition switch "ON" and select "DATA MONITOR" mode for "ENGINE" with CONSULT-II.
2) Depress accelerator pedal completely and wait at least 1 second.

With GST

Follow the procedure "With CONSULT-II".

Wiring Diagram — AT — LPSV

NAAT0196

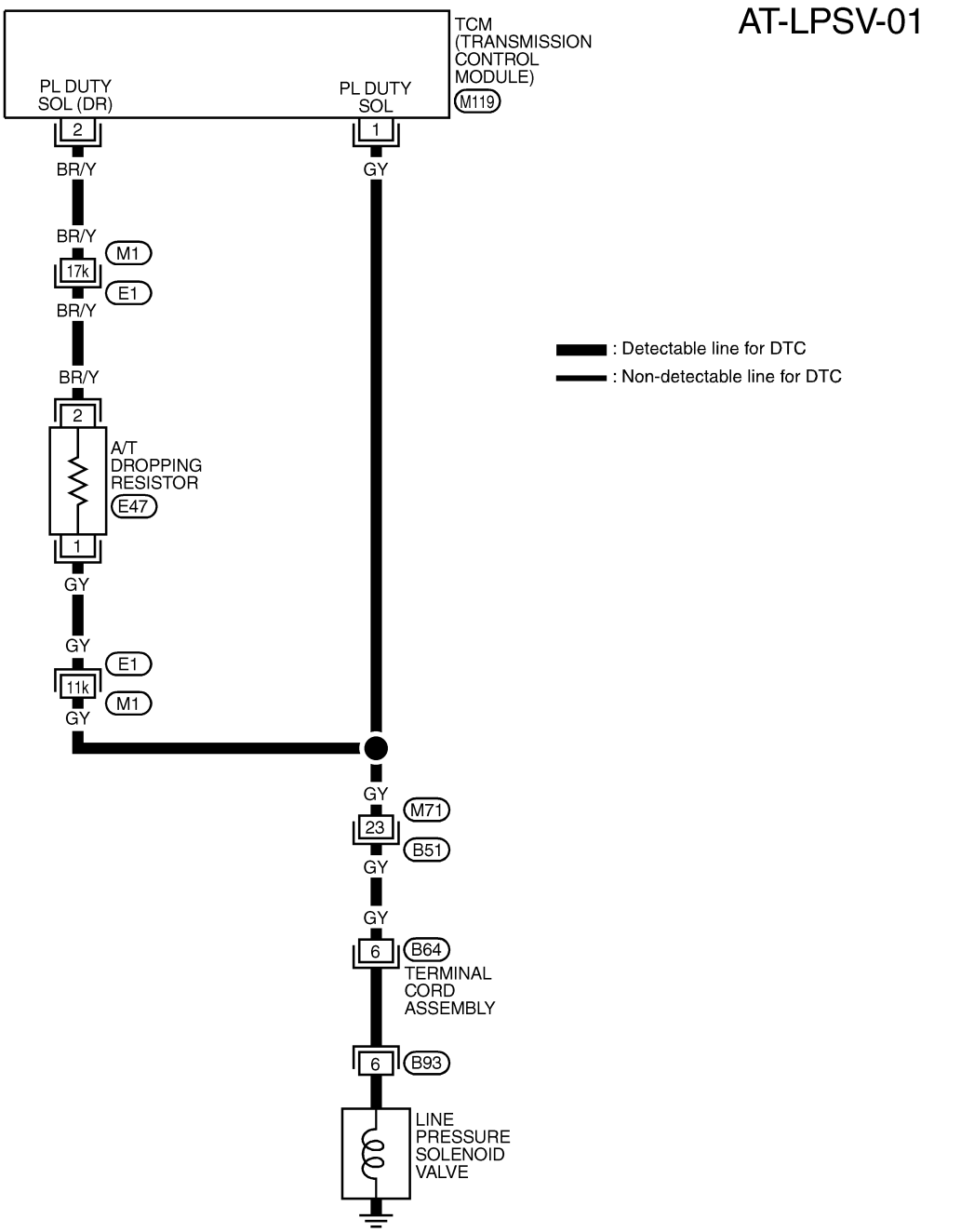

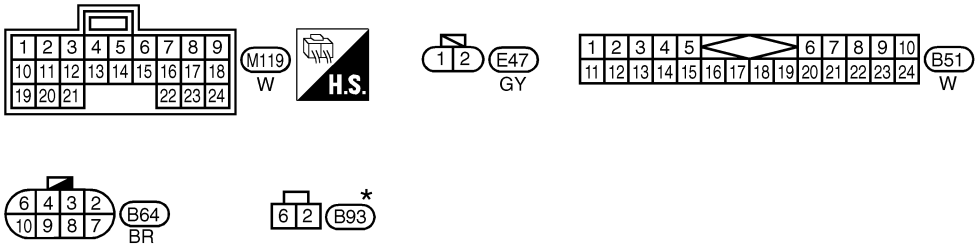

REFER TO THE FOLLOWING.
E1 -SUPER MULTIPLE JUNCTION (SMJ)

* : This connector is not shown in "HARNESS LAYOUT" in EL section.

MAT914A

Diagnostic Procedure

NAAT0058

1	CHECK VALVE RESISTANCE

1. Turn ignition switch to “OFF” position.
2. Disconnect terminal cord assembly connector on the right side of transfer assembly.
3. Check resistance between terminal 6 and ground.

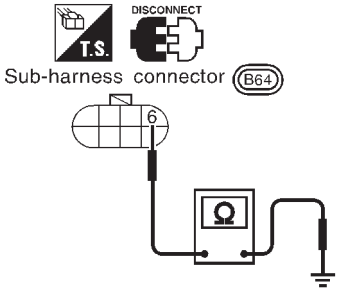

SAT162J

Is resistance approx. 2.5 - 5Ω?

Yes	▶	GO TO 3.
No	▶	GO TO 2.

2	CHECK VALVE OPERATION

1. Remove control valve assembly.
   Refer to AT-269.
2. Check the following items:

- Line pressure solenoid valve
  Refer to “Component Inspection”, AT-170.
- Harness of terminal cord assembly for short or open

OK or NG

OK	▶	GO TO 3.
NG	▶	Repair or replace damaged parts.

3	CHECK POWER SOURCE AND DROPPING RESISTOR CIRCUIT

1. Turn ignition switch to "OFF" position.
2. Disconnect TCM harness connector.
3. Check resistance between sub-harness connector B64 terminal 6 and TCM harness connector M119 terminal 2.

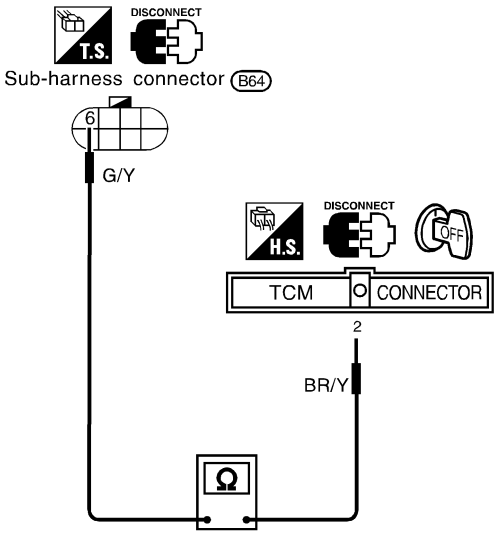

SAT522J

Is resistance approx. 11.2 - 12.8Ω?

Yes	▶	GO TO 5.
No	▶	GO TO 4.

4	DETECT MALFUNCTIONING ITEM

Check the following items:
- Dropping resistor
  Refer to "Component Inspection", AT-170.
- Harness for short or open between TCM harness connector M119 terminal 2 and terminal cord assembly (Main harness)

OK or NG

OK	▶	GO TO 5.
NG	▶	Repair or replace damaged parts.

5	CHECK POWER SOURCE CIRCUIT

1. Turn ignition switch to "OFF" position.
2. Check continuity between terminal 6 and TCM harness connector M119 terminal 1. Refer to wiring diagram — AT — LPSV.
   Continuity should exist.
   If OK, check harness for short to ground or to power.
3. Reinstall any part removed.

Yes	▶	GO TO 6.
No	▶	Repair or replace harness between TCM terminal 1 and terminal cord assembly.

6	CHECK DTC	
Perform Diagnostic Trouble Code (DTC) confirmation procedure, AT-166.		
OK or NG		
OK	▶	**INSPECTION END**
NG	▶	GO TO 7.

7	CHECK TCM INSPECTION	
1. Perform TCM input/output signal inspection. 2. If NG, recheck TCM pin terminals for damage or loose connection with harness connector.		
OK or NG		
OK	▶	**INSPECTION END**
NG	▶	Repair or replace damaged parts.

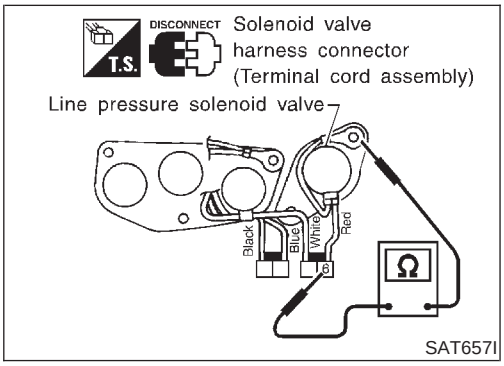

SAT657I

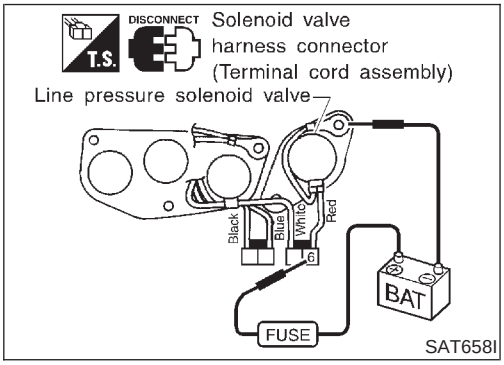

SAT658I

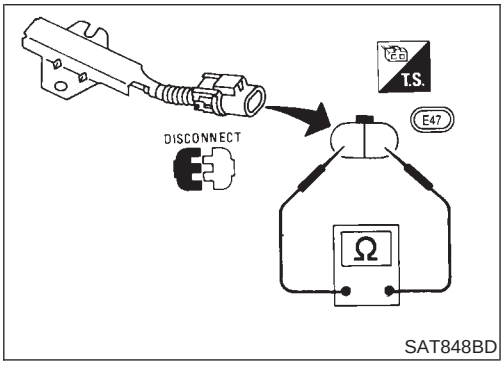

SAT848BD

Component Inspection

NAAT0059

LINE PRESSURE SOLENOID VALVE

NAAT0059S01

- For removal, refer to AT-269.

Resistance Check

NAAT0059S0101

- Check resistance between terminal 6 and ground.

Solenoid valve	Terminal No.		Resistance (Approx.)
Line pressure solenoid valve	6	Ground	2.5 - 5Ω

Operation Check

NAAT0059S0102

- Check solenoid valve by listening for its operating sound while applying battery voltage to the terminal 6 and ground.

DROPPING RESISTOR

NAAT0059S02

- Check resistance between two terminals.
  Resistance: 11.2 - 12.8Ω

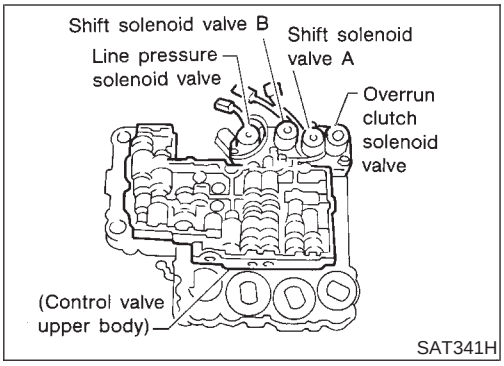

SAT341H

Description

NAAT0060

Shift solenoid valves A and B are turned "ON" or "OFF" by the TCM in response to signals sent from the PNP switch, vehicle speed and throttle position sensors. Gears will then be shifted to the optimum position.

Gear position	1	2	3	4
Shift solenoid valve A	ON (Closed)	OFF (Open)	OFF (Open)	ON (Closed)
Shift solenoid valve B	ON (Closed)	ON (Closed)	OFF (Open)	OFF (Open)

TCM TERMINALS AND REFERENCE VALUE

NAAT0060S02

Remarks: Specification data are reference values.

Terminal No.	Wire color	Item	Condition		Judgement standard (Approx.)
11	L/W	Shift solenoid valve A		When shift solenoid valve A operates. (When driving in "D_1" or "D_4".)	Battery voltage
				When shift solenoid valve A does not operate. (When driving in "D_2" or "D_3".)	0V

ON BOARD DIAGNOSIS LOGIC

NAAT0060S03

Diagnostic trouble code	Malfunction is detected when ...	Check item (Possible cause)
: SFT SOL A/CIRC : P0750	TCM detects an improper voltage drop when it tires to operate the solenoid valve.	• Harness or connectors (The solenoid circuit is open or shorted.) • Shift solenoid valve A

SELECT SYSTEM
A/T
ENGINE

SAT014K

SELECT DIAG MODE
WORK SUPPORT
SELF-DIAG RESULTS
DATA MONITOR
ACTIVE TEST
DTC & SRT CONFIRMATION
ECM PART NUMBER

SAT020K

DIAGNOSTIC TROUBLE CODE (DTC) CONFIRMATION PROCEDURE

NAAT0060S01

CAUTION:

Always drive vehicle at a safe speed.

NOTE:

If "DIAGNOSTIC TROUBLE CODE CONFIRMATION PROCEDURE" has been previously conducted, always turn ignition switch "OFF" and wait at least 5 seconds before conducting the next test.

After the repair, perform the following procedure to confirm the malfunction is eliminated.

With CONSULT-II

1) Turn ignition switch "ON" and select "DATA MONITOR" mode for "ENGINE" with CONSULT-II.
2) Start engine.
3) Drive vehicle in "D" position and allow the transmission to shift "1" → "2" ("GEAR").

With GST

Follow the procedure "With CONSULT-II".

Wiring Diagram — AT — SSV/A

NAAT0197

AT-SSV/A-01

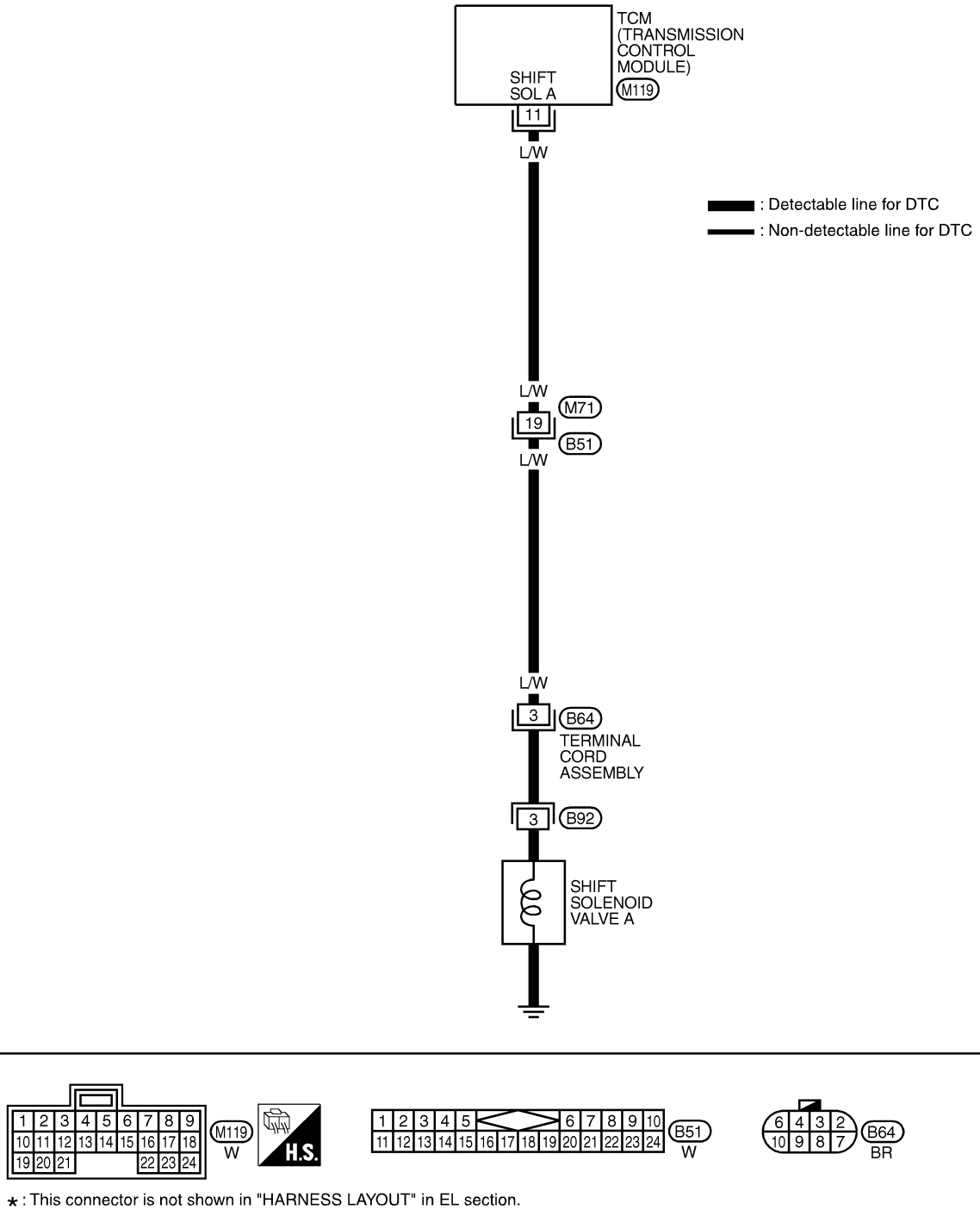

* : This connector is not shown in "HARNESS LAYOUT" in EL section.

MAT738A

Diagnostic Procedure

NAAT0061

1	CHECK VALVE RESISTANCE

1. Turn ignition switch to “OFF” position.
2. Disconnect terminal cord assembly connector on the right side of transfer assembly.
3. Check resistance between terminal 3 and ground.

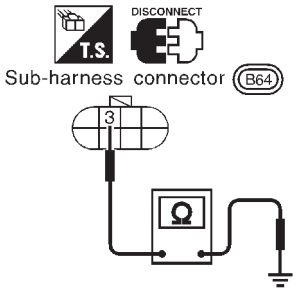

SAT164J

Is resistance approx. 20 - 40Ω?

Yes	▶	GO TO 3.
No	▶	GO TO 2.

2	CHECK VALVE OPERATION

1. Remove control valve assembly.
   Refer to AT-269.
2. Check the following items:
   - Shift solenoid valve A
     Refer to “Component Inspection”, AT-174.
   - Harness of terminal cord assembly for short or open

OK or NG

OK	▶	GO TO 3.
NG	▶	Repair or replace damaged parts.

3	CHECK POWER SOURCE CIRCUIT

1. Turn ignition switch to “OFF” position.
2. Disconnect TCM harness connector.
3. Check resistance between terminal 3 and TCM harness connector terminal 11. Refer to wiring diagram — AT — SSV/A.
   Continuity should exist.
   If OK, check harness for short to ground and short to power.
4. Reinstall any part removed.

OK or NG

OK	▶	GO TO 4.
NG	▶	Repair open circuit or short to ground or short to power in harness or connectors.

4	CHECK DTC

Perform Diagnostic Trouble Code (DTC) confirmation procedure, AT-171.

OK or NG

OK	▶	**INSPECTION END**
NG	▶	GO TO 5.

5	CHECK TCM INSPECTION	
1. Perform TCM input/output signal inspection. 2. If NG, recheck TCM pin terminals for damage or loose connection with harness connector.		
OK or NG		
OK	▶	**INSPECTION END**
NG	▶	Repair or replace damaged parts.

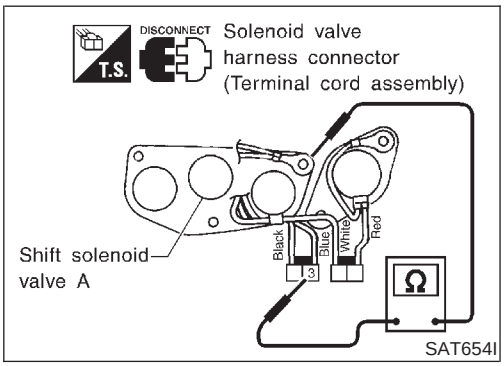

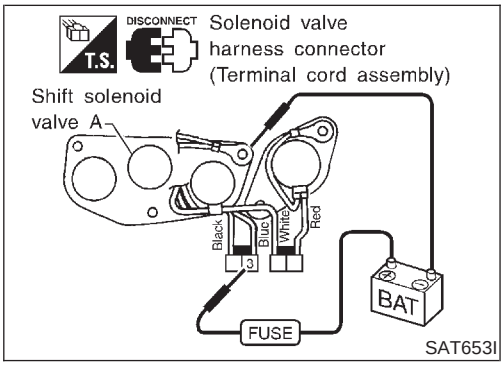

Component Inspection

NAAT0062

SHIFT SOLENOID VALVE A

NAAT0062S01

- For removal, refer to AT-269.

Resistance Check

NAAT0062S0101

- Check resistance between terminal 3 and ground.

Solenoid valve	Terminal No.		Resistance (Approx.)
Shift solenoid valve A	3	Ground	20 - 40Ω

Operation Check

NAAT0062S0102

- Check solenoid valve by listening for its operating sound while applying battery voltage to the terminal 3 and ground.

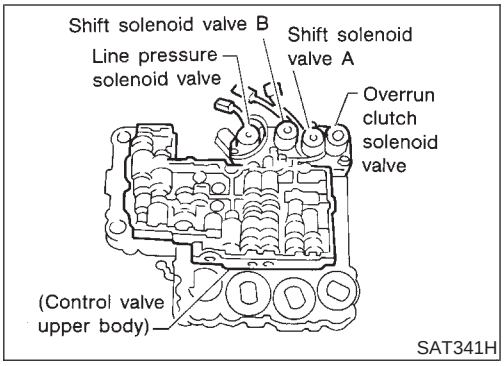

SAT341H

Description

NAAT0063

Shift solenoid valves A and B are turned "ON" or "OFF" by the TCM in response to signals sent from the PNP switch, vehicle speed and throttle position sensors. Gears will then be shifted to the optimum position.

Gear position	1	2	3	4
Shift solenoid valve A	ON (Closed)	OFF (Open)	OFF (Open)	ON (Closed)
Shift solenoid valve B	ON (Closed)	ON (Closed)	OFF (Open)	OFF (Open)

TCM TERMINALS AND REFERENCE VALUE

NAAT0063S02

Remarks: Specification data are reference values.

Terminal No.	Wire color	Item	Condition		Judgement standard (Approx.)
12	L/R	Shift solenoid valve B		When shift solenoid valve B operates. (When driving in "D_1" or "D_2".)	Battery voltage
				When shift solenoid valve B does not operate. (When driving in "D_3" or "D_4".)	0V

ON BOARD DIAGNOSIS LOGIC

NAAT0063S03

Diagnostic trouble code	Malfunction is detected when ...	Check item (Possible cause)
: SFT SOL B/CIRC : P0755	TCM detects an improper voltage drop when it tires to operate the solenoid valve.	• Harness or connectors (The solenoid circuit is open or shorted.) • Shift solenoid valve B

SELECT SYSTEM
A/T
ENGINE

SAT014K

SELECT DIAG MODE
WORK SUPPORT
SELF-DIAG RESULTS
DATA MONITOR
ACTIVE TEST
DTC & SRT CONFIRMATION
ECM PART NUMBER

SAT020K

DIAGNOSTIC TROUBLE CODE (DTC) CONFIRMATION PROCEDURE

NAAT0063S01

CAUTION:

Always drive vehicle at a safe speed.

NOTE:

If "DIAGNOSTIC TROUBLE CODE CONFIRMATION PROCEDURE" has been previously conducted, always turn ignition switch "OFF" and wait at least 5 seconds before conducting the next test.

After the repair, perform the following procedure to confirm the malfunction is eliminated.

With CONSULT-II

1) Turn ignition switch "ON" and select "DATA MONITOR" mode for "ENGINE" with CONSULT-II.
2) Drive vehicle in "D" position and allow the transmission to shift 1 → 2 → 3 ("GEAR").

With GST

Follow the procedure "With CONSULT-II".

Wiring Diagram — AT — SSV/B

NAAT0198

AT-SSV/B-01

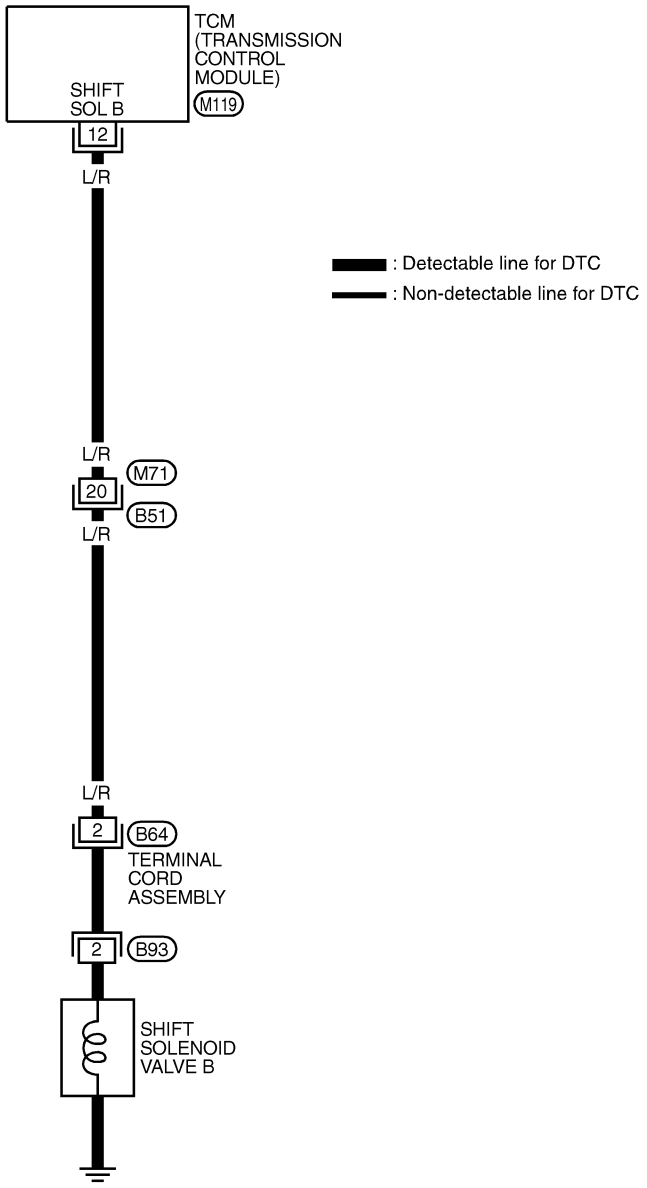

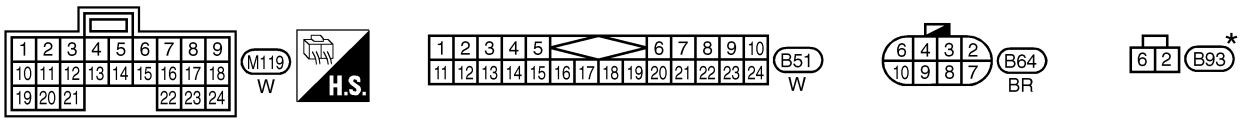

* : This connector is not shown in "HARNESS LAYOUT" in EL section.

MAT739A

Diagnostic Procedure

NAAT0064

1	CHECK VALVE RESISTANCE

1. Turn ignition switch to “OFF” position.
2. Disconnect terminal cord assembly connector on the right side of transfer assembly.
3. Check resistance between terminal 2 and ground.

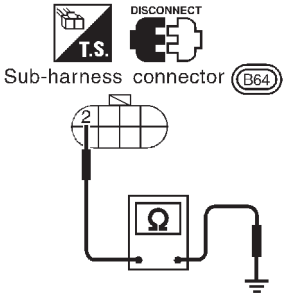

SAT166J

Is resistance approx. 20 - 40Ω?

Yes	▶	GO TO 3.
No	▶	GO TO 2.

2	CHECK VALVE OPERATION

1. Remove control valve assembly.
   Refer to AT-269.
2. Check the following items:

- Shift solenoid valve B
  Refer to “Component Inspection”, AT-178.
- Harness of terminal cord assembly for short or open

OK or NG

OK	▶	GO TO 3.
NG	▶	Repair or replace damaged parts.

3	CHECK POWER SOURCE CIRCUIT

1. Turn ignition switch to “OFF” position.
2. Disconnect TCM harness connector.
3. Check resistance between terminal 2 and TCM harness connector terminal 12. Refer to wiring diagram — AT — SSV/B.
   Continuity should exist.
   If OK, check harness for short to ground and short to power.
4. Reinstall any part removed.

Is resistance approx. 0Ω?

Yes	▶	GO TO 4.
No	▶	Repair open circuit or short to ground or short to power in harness or connectors.

4	CHECK DTC

Perform Diagnostic Trouble Code (DTC) confirmation procedure, AT-175.

OK or NG

OK	▶	**INSPECTION END**
NG	▶	GO TO 5.

5	CHECK TCM INSPECTION	
1. Perform TCM input/output signal inspection. 2. If NG, recheck TCM pin terminals for damage or loose connection with harness connector.		
OK or NG		
OK	▶	**INSPECTION END**
NG	▶	Repair or replace damaged parts.

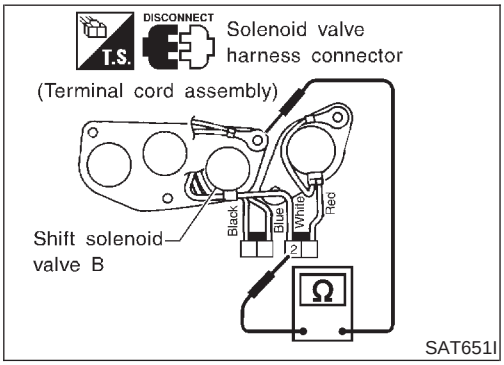

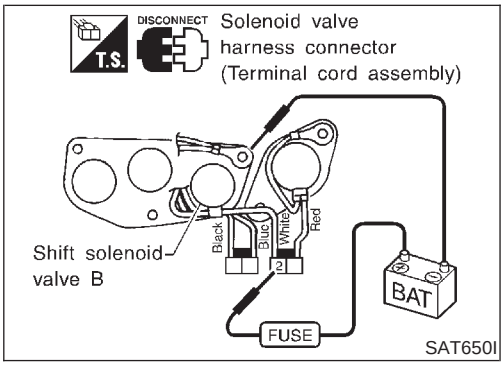

Component Inspection

NAAT0065

SHIFT SOLENOID VALVE B

NAAT0065S01

- For removal, refer to AT-269.

Resistance Check

NAAT0065S0101

- Check resistance between terminal 2 and ground.

Solenoid valve	Terminal No.		Resistance (Approx.)
Shift solenoid valve B	2	Ground	20 - 40Ω

Operation Check

NAAT0065S0102

- Check solenoid valve by listening for its operating sound while applying battery voltage to the terminal 2 and ground.

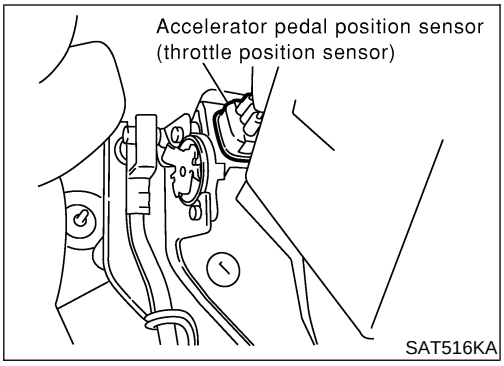

Description

NAAT0236

The accelerator pedal position sensor is part of the system that controls throttle position. Accelerator pedal position signal is sent to the ECM. And the signal is also sent to TCM as throttle valve position signal.

CONSULT-II REFERENCE VALUE IN DATA MONITOR MODE

NAAT0236S01

Remarks: Specification data are reference values.

Monitor item	Condition	Specification
Accelerator pedal position sensor (throttle position sensor)	Fully-closed throttle	Approximately 0.5V
	Fully-open throttle	Approximately 4V

TCM TERMINALS AND REFERENCE VALUE

NAAT0236S02

Remarks: Specification data are reference values.

Terminal No.	Wire color	Item	Condition		Judgement standard (Approx.)
32	R	Sensor power	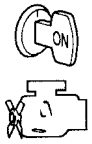	Ignition switch ON.	4.5 - 5.5V
				Ignition switch OFF.	0V
41	P/L	Accelerator pedal position sensor (throttle position sensor)		When depressing accelerator pedal slowly after warming up engine. (Voltage rises gradually in response to throttle position.)	Fully-closed throttle: 0.5V Fully-open throttle: 4V
42	B	Sensor ground	—		0V

On Board Diagnosis Logic

=NAAT0237

Diagnostic trouble code TP SEN/CIRC A/T with CONSULT-II or P1705 without CONSULT-II is detected when TCM receives an excessively low or high voltage from the ECM.

Possible Cause

NAAT0239

Check the following items.

- Harness or connectors
  (The sensor circuit is open or shorted.)
- Accelerator pedal position sensor (throttle position sensor)

SELECT SYSTEM
A/T
ENGINE

SAT014K

SELECT DIAG MODE
SELF-DIAG RESULTS
DATA MONITOR
CAN DIAG SUPPORT MNTR
DTC WORK SUPPORT
ECU PART NUMBER

SAT858K

SELECT SYSTEM
A/T
ENGINE

SAT014K

SELECT DIAG MODE
WORK SUPPORT
SELF-DIAG RESULTS
DATA MONITOR
DATA MONITOR (SPEC)
ACTIVE TEST
DTC & SRT CONFIRMATION

SEF949Y

Diagnostic Trouble Code (DTC) Confirmation Procedure

NAAT0240

CAUTION:

Always drive vehicle at a safe speed.

NOTE:

If "DTC Confirmation Procedure" has been previously conducted, always turn ignition switch OFF and wait at least 10 seconds before conducting the next test.

After the repair, perform the following procedure to confirm the malfunction is eliminated.

WITH CONSULT-II

NAAT0240S01

1) Turn ignition switch ON and select "DATA MONITOR" mode for "A/T" with CONSULT-II.

Accelerator pedal condition	Accelerator pedal position sensor (THRTL POS SEN)
Fully released	Less than 4.7V
Partially depressed	0.1 - 4.6V
Fully depressed	1.9 - 4.6V

If the check result is NG, go to "DIAGNOSTIC PROCEDURE", AT-221.
If the check result is OK, go to following step.

2) Turn ignition switch ON and select "DATA MONITOR" mode for "ENGINE" with CONSULT-II.
3) Start engine and maintain the following conditions for at least 3 consecutive seconds. Then release accelerator pedal completely.
VHCL SPEED SE: 10 km/h (6 MPH) or more
THRTL POS SEN (electric throttle control actuator): Approximately 3V or less
Selector lever: D position
If the check result is NG, go to "DIAGNOSTIC PROCEDURE", AT-221.
If the check result is OK, go to following step.
4) Maintain the following conditions for at least 3 consecutive seconds. Then release accelerator pedal completely.
VHCL SPEED SE: 10 km/h (6 MPH) or more
Accelerator pedal: Wide open throttle
Selector lever: D position

WITH GST

NAAT0240S02

Follow the procedure "With CONSULT-II".

Wiring Diagram — AT — TPS

NAAT0199

AT-TPS-01

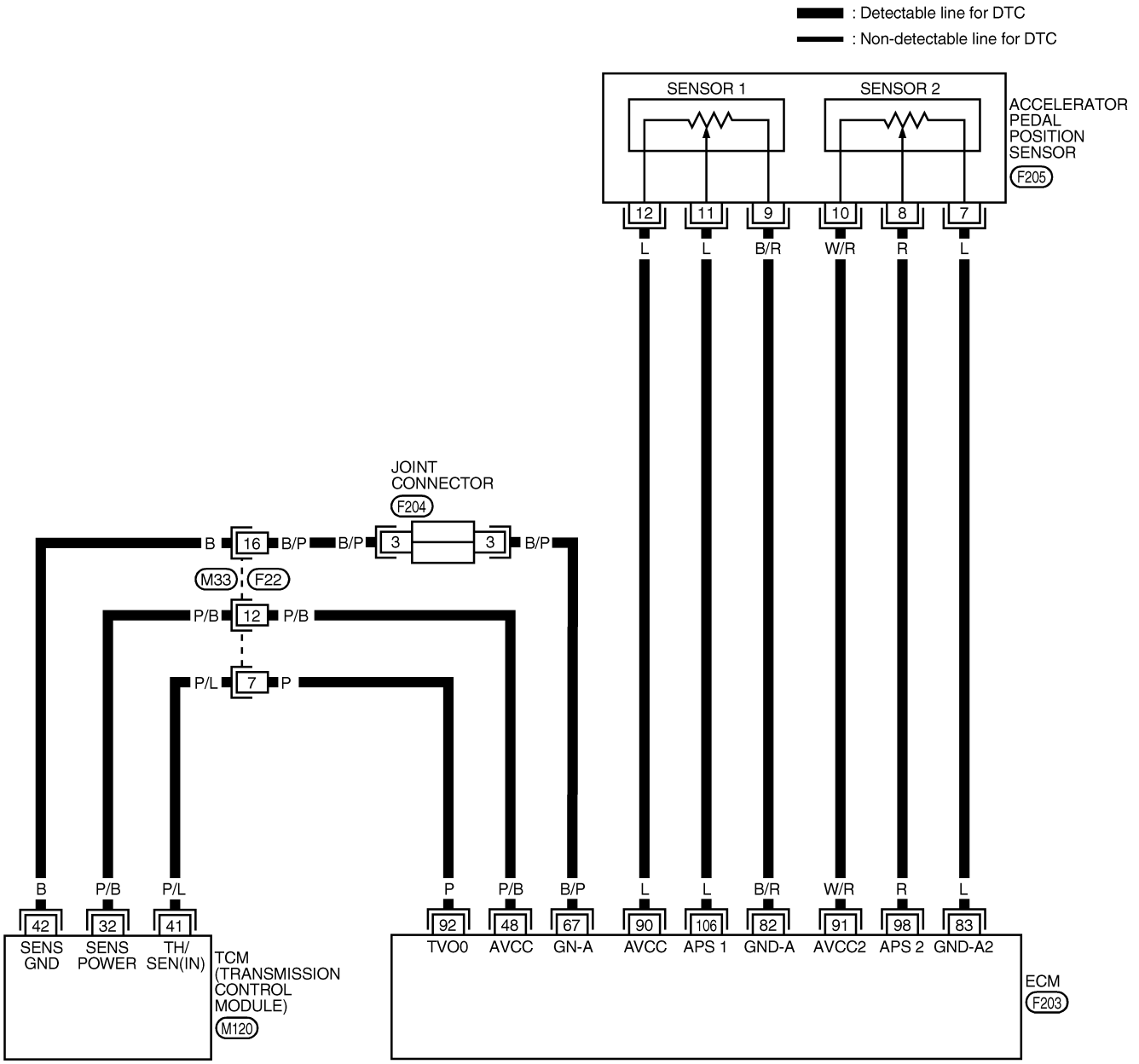

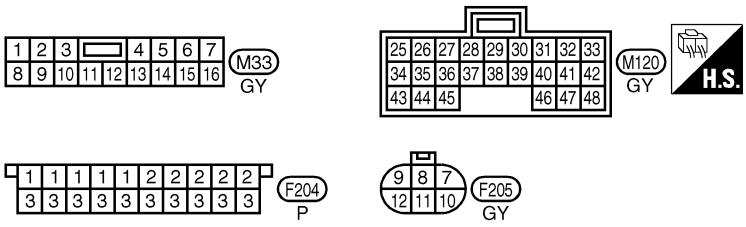

REFER TO THE FOLLOWING.
F203 -ELECTRICAL UNITS

MAT316B

Diagnostic Procedure

NAAT0241

1	CHECK DTC WITH ECM
● Check P code with CONSULT-II “ENGINE”. Turn ignition switch ON and select “SELF DIAGNOSTIC RESULTS” mode for “ENGINE” with CONSULT-II. Refer to EC-168, “Malfunction Indicator Lamp (MIL)”.	
OK or NG	
OK (with CONSULT-II) ▶	GO TO 2.
OK (without CONSULT-II) ▶	GO TO 3.
NG ▶	Check accelerator pedal position sensor (throttle position sensor) circuit for engine control. Refer to EC-569, “DTC P0226 APP SENSOR”.

2	CHECK INPUT SIGNAL (With CONSULT-II)

With CONSULT-II

1. Turn ignition switch to ON position.
   (Do not start engine.)
2. Select “TCM INPUT SIGNALS” in “DATA MONITOR” mode for “A/T” with CONSULT-II.
3. Read out the value of “THRTL POS SEN”.
   Voltage:
   Fully-closed throttle:
   Approximately 0.5V
   Fully-open throttle:
   Approximately 4V

DATA MONITOR	
MONITORING	
VHCL/S SE-A/T	XXX km/h
VHCL/S SE-MTR	XXX km/h
THRTL POS SEN	XXX V
FLUID TEMP SE	XXX V
BATTERY VOLT	XXX V

SAT614J

OK or NG	
OK ▶	GO TO 4.
NG ▶	Check harness for short or open between ECM and TCM regarding accelerator pedal position sensor (throttle position sensor) circuit. (Main harness)

3	CHECK INPUT SIGNAL (Without CONSULT-II)

Without CONSULT-II

1. Turn ignition switch to ON position. (Do not start engine.)
2. Check voltage between TCM harness connector M120 terminals 41 (P/L) and 42 (B) while accelerator pedal is depressed slowly.

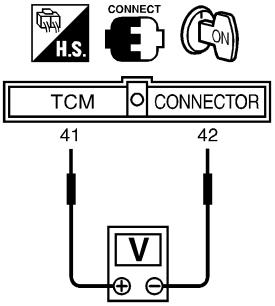

SAT349JB

Voltage:
Fully-closed throttle valve:
Approximately 0.5V
Fully-open throttle valve:
Approximately 4V
(Voltage rises gradually in response to throttle position.)

OK or NG

OK	▶	GO TO 4.
NG	▶	Check harness for short or open between ECM and TCM regarding accelerator pedal position sensor (throttle position sensor) circuit. (Main harness)

4	CHECK DTC

Perform Diagnostic Trouble Code (DTC) confirmation procedure, AT-202.

OK or NG

OK	▶	**INSPECTION END**
NG	▶	GO TO 5.

5	CHECK TCM INSPECTION

1. Perform TCM input/output signal inspection.
2. If NG, recheck TCM pin terminals for damage or loose connection with harness connector.

OK or NG

OK	▶	**INSPECTION END**
NG	▶	Repair or replace damaged parts.

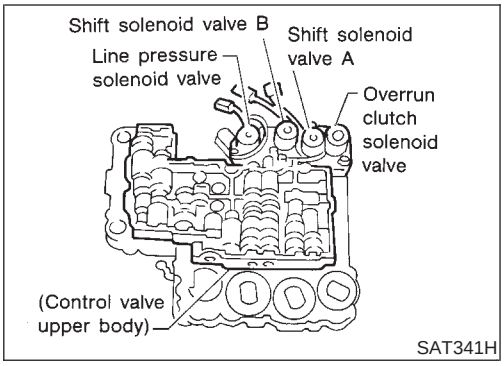

SAT341H

Description

NAAT0068

The overrun clutch solenoid valve is activated by the TCM in response to signals sent from the park/neutral position (PNP) switch, overdrive control switch, vehicle speed and throttle position sensors. The overrun clutch operation will then be controlled.

TCM TERMINALS AND REFERENCE VALUE

NAAT0068S02

Remarks: Specification data are reference values.

Terminal No.	Wire color	Item	Condition		Judgement standard (Approx.)
20	L/B	Overrun clutch solenoid valve		When overrun clutch solenoid valve operates.	Battery voltage
				When overrun clutch solenoid valve does not operate.	0V

ON BOARD DIAGNOSIS LOGIC

NAAT0068S03

Diagnostic trouble code	Malfunction is detected when ...	Check item (Possible cause)
: O/R CLTCH SOL/CIRC	TCM detects an improper voltage drop when it tries to operate the solenoid valve.	• Harness or connectors (The solenoid circuit is open or shorted.) • Overrun clutch solenoid valve
: P1760		

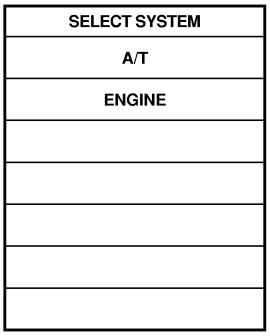

SAT014K

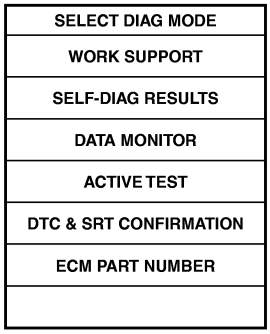

SAT020K

DIAGNOSTIC TROUBLE CODE (DTC) CONFIRMATION PROCEDURE

NAAT0068S01

CAUTION:

Always drive vehicle at a safe speed.

NOTE:

If "DIAGNOSTIC TROUBLE CODE CONFIRMATION PROCEDURE" has been previously conducted, always turn ignition switch "OFF" and wait at least 5 seconds before conducting the next test.

TESTING CONDITION:

Always drive vehicle on a level road to improve accuracy of test.

After the repair, perform the following procedure to confirm the malfunction is eliminated.

With CONSULT-II

1) Turn ignition switch "ON" and select "DATA MONITOR" mode for "ENGINE" with CONSULT-II.
2) Start engine.
3) Accelerate vehicle to a speed of more than 10 km/h (6MPH) in "D" position (OD "ON").
4) Release accelerator pedal completely in "D" position (OD "OFF").

With GST

Follow the procedure "With CONSULT-II".

Wiring Diagram — AT — OVRCSV

NAAT0200

AT-OVRCSV-01

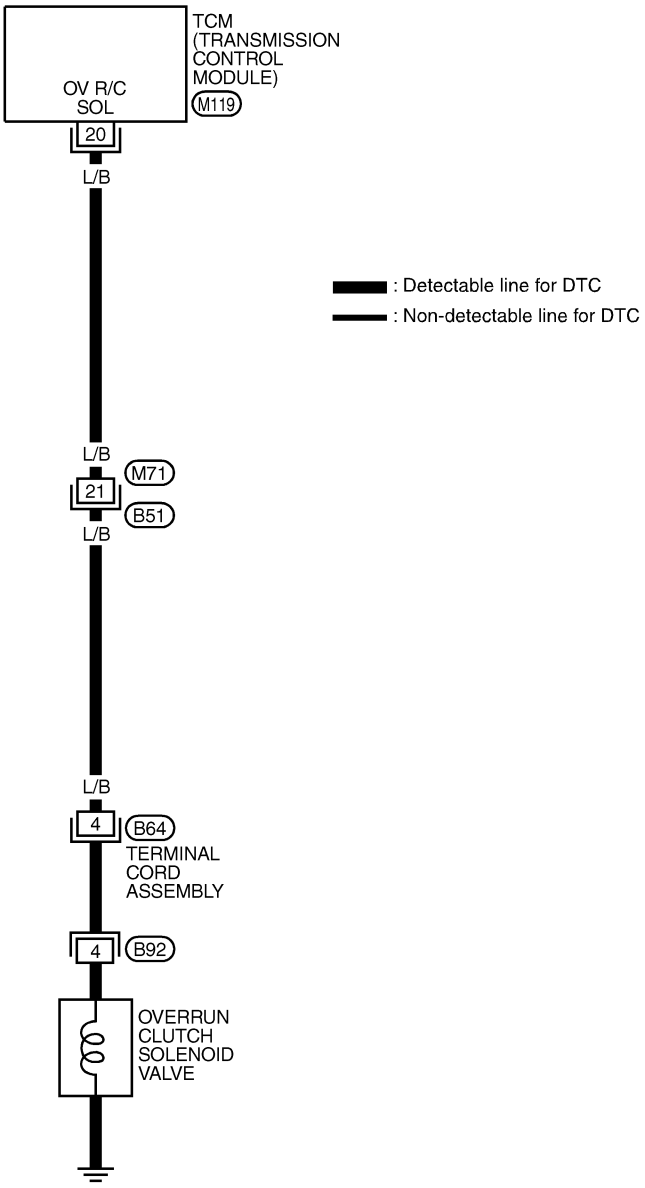

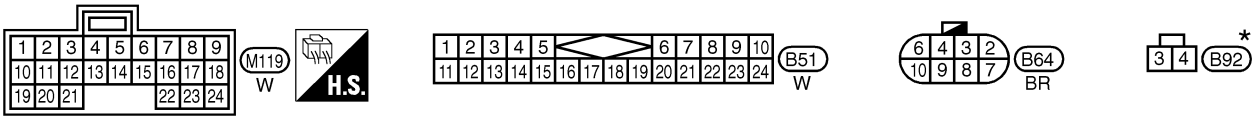

* : This connector is not shown in "HARNESS LAYOUT" in EL section.

MAT741A

Diagnostic Procedure

NAAT0069

1	CHECK VALVE RESISTANCE

1. Turn ignition switch to “OFF” position.
2. Disconnect terminal cord assembly connector on the right side of transfer assembly.
3. Check resistance between terminal 4 and ground.

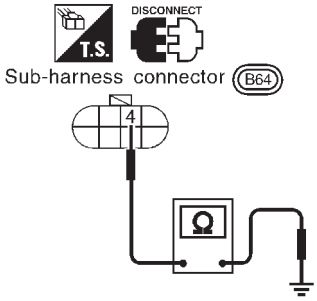

SAT170J

Is resistance approx. 20 - 40Ω?

Yes	▶	GO TO 3.
No	▶	GO TO 2.

2	CHECK VALVE OPERATION

1. Remove control valve assembly.
   Refer to AT-269.
2. Check the following items:

- Overrun clutch solenoid valve
  Refer to “Component Inspection”, AT-189.
- Harness of terminal cord assembly for short or open

OK or NG

OK	▶	GO TO 3.
NG	▶	Repair or replace damaged parts.

3	CHECK POWER SOURCE CIRCUIT

1. Turn ignition switch to “OFF” position.
2. Disconnect TCM harness connector.
3. Check resistance between terminal 4 and TCM harness connector terminal 20. Refer to wiring diagram — AT — OVRCSV.
   Continuity should exist.
   If OK, check harness for short to ground and short to power.
4. Reinstall any part removed.

OK or NG

OK	▶	GO TO 4.
NG	▶	Repair open circuit or short to ground or short to power in harness or connectors.

4	CHECK DTC

Perform Diagnostic Trouble Code (DTC) confirmation procedure, AT-185.

OK or NG

OK	▶	**INSPECTION END**
NG	▶	GO TO 5.

5	CHECK TCM INSPECTION	
1. Perform TCM input/output signal inspection. 2. If NG, recheck TCM pin terminals for damage or loose connection with harness connector.		
OK or NG		
OK	▶	**INSPECTION END**
NG	▶	Repair or replace damaged parts.

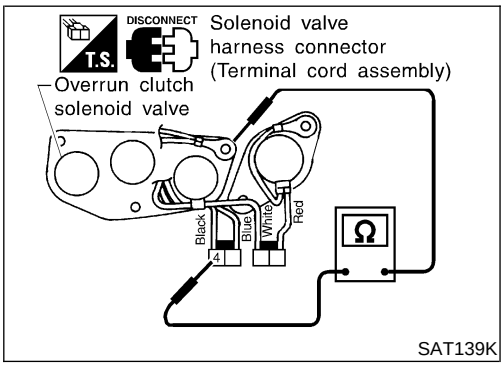

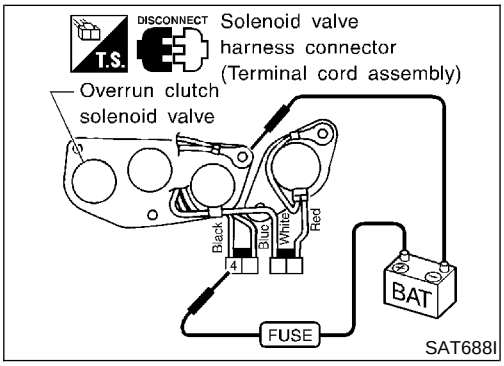

Component Inspection

NAAT0070

OVERRUN CLUTCH SOLENOID VALVE

NAAT0070S01

- For removal, refer to AT-269.

Resistance Check

NAAT0070S0101

- Check resistance between terminal 4 and ground.

Solenoid valve	Terminal No.		Resistance (Approx.)
Overrun clutch solenoid valve	4	Ground	20 - 40Ω

Operation Check

NAAT0070S0102

- Check solenoid valve by listening for its operating sound while applying battery voltage to the terminal 4 and ground.

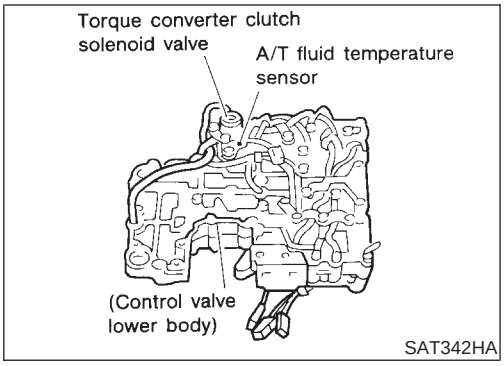

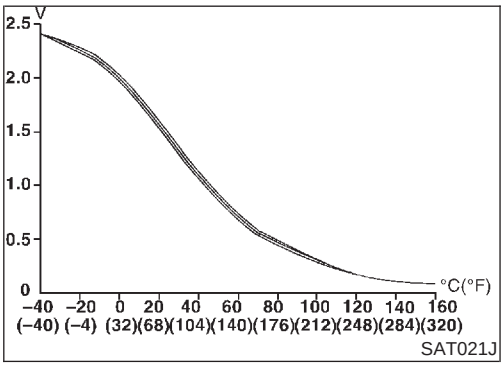

Description

NAAT0172

The A/T fluid temperature sensor detects the A/T fluid temperature and sends a signal to the TCM.

CONSULT-II REFERENCE VALUE IN DATA MONITOR MODE

NAAT0172S02

Remarks: Specification data are reference values.

Monitor item	Condition	Specification	
A/T fluid temperature sensor	Cold [20°C (68°F)] ↓ Hot [80°C (176°F)]	Approximately 1.5V ↓ Approximately 0.5V	Approximately 2.5 kΩ ↓ Approximately 0.3 kΩ

TCM TERMINALS AND REFERENCE VALUE

NAAT0172S03

Remarks: Specification data are reference values.

Terminal No.	Wire color	Item	Condition		Judgement standard (Approx.)
10	W/R	Power source	ON or OFF	When turning ignition switch to “ON”.	Battery voltage
				When turning ignition switch to “OFF”.	0V
19	W/R	Power source		Same as No. 10	
28	R/Y	Power source (Memory back-up)		When turning ignition switch to “OFF”.	Battery voltage
				When turning ignition switch to “ON”.	Battery voltage
42	B	Throttle position sensor (Ground)	ON	—	0V
47	R	A/T fluid temperature sensor		When ATF temperature is 20°C (68°F).	1.5V
				When ATF temperature is 80°C (176°F).	0.5V

ON BOARD DIAGNOSIS LOGIC

NAAT0172S04

Diagnostic trouble code	Malfunction is detected when ...	Check item (Possible cause)
: BATT/FLUID TEMP SEN	TCM receives an excessively low or high voltage from the sensor.	• Harness or connectors (The sensor circuit is open or shorted.) • A/T fluid temperature sensor
: 8th judgement flicker		

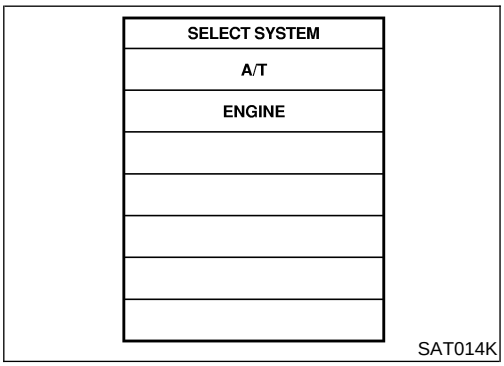

SAT014K

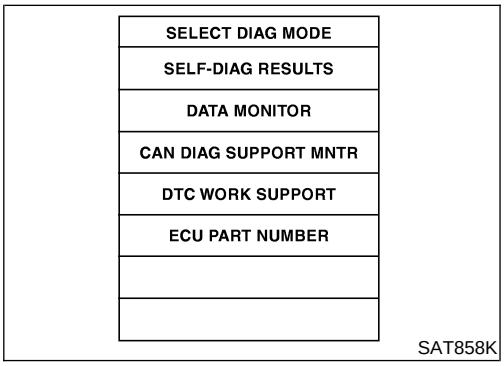

SAT858K

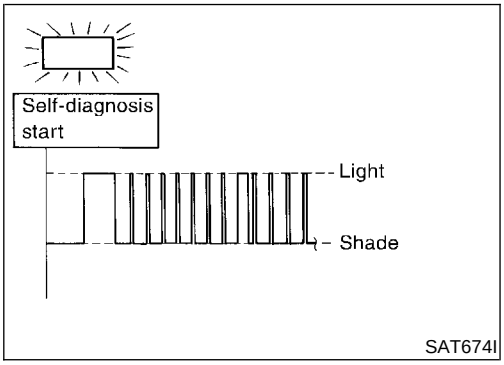

SAT674I

DIAGNOSTIC TROUBLE CODE (DTC) CONFIRMATION PROCEDURE

NAAT0172S01

After the repair, perform the following procedure to confirm the malfunction is eliminated.

With CONSULT-II

1) Start engine.
2) Select "DATA MONITOR" mode for "A/T" with CONSULT-II.
3) Drive vehicle under the following conditions:
   Selector lever in "D" position, vehicle speed higher than 20 km/h (12 MPH).

No Tools

1) Start engine.
2) Drive vehicle under the following conditions:
   Selector lever in "D" position, vehicle speed higher than 20 km/h (12 MPH).
3) Perform self-diagnosis.
   Refer to TCM SELF-DIAGNOSTIC PROCEDURE (No Tools), AT-48.

Wiring Diagram — AT — BA/FTS

NAAT0201

AT-BA/FTS-01

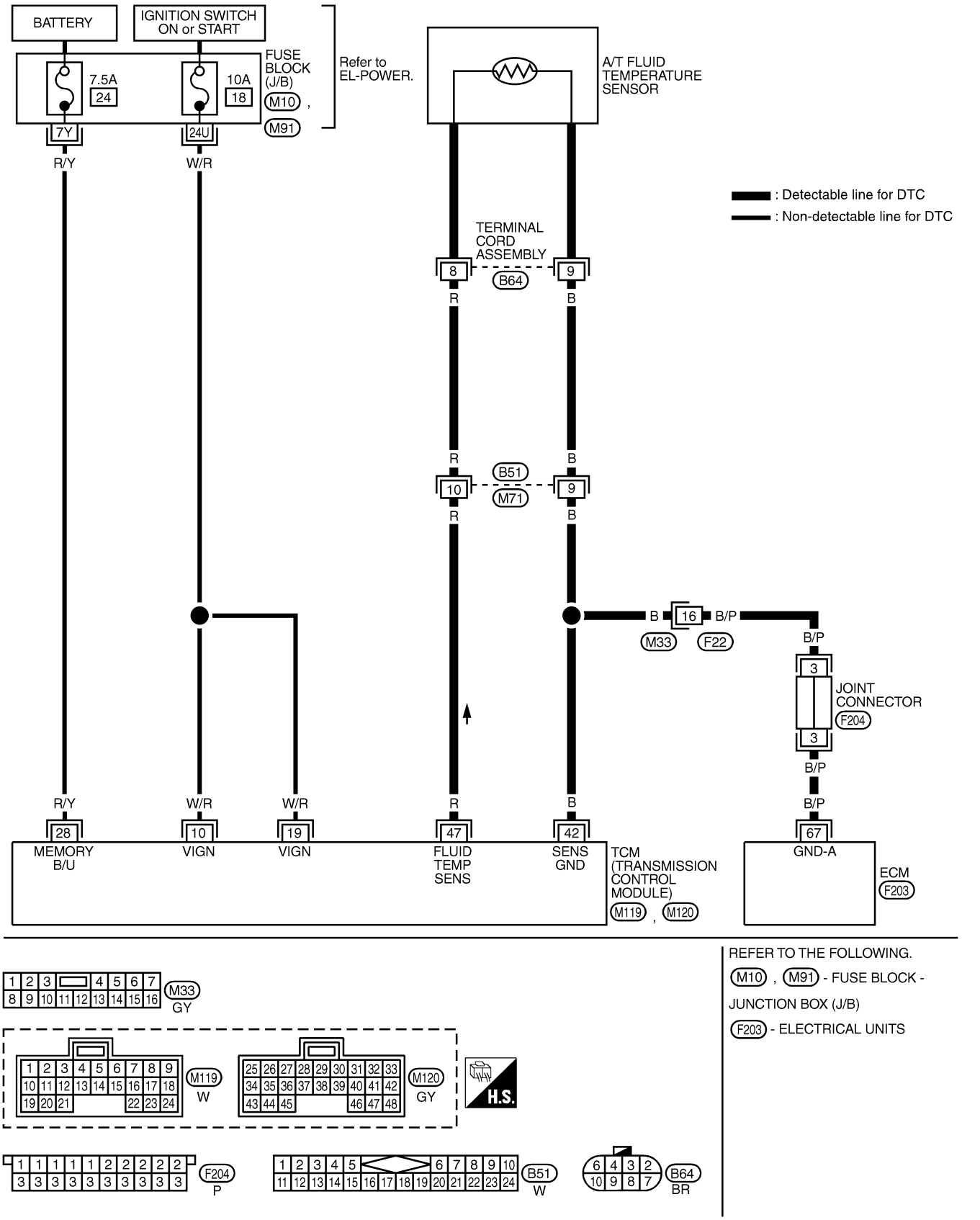

REFER TO THE FOLLOWING.

M10 , M91 - FUSE BLOCK - JUNCTION BOX (J/B)

F203 - ELECTRICAL UNITS

MAT317B

Diagnostic Procedure

NAAT0173

1	INSPECTION START
Do you have CONSULT-II?	
Yes or No	
Yes ▶	GO TO 2.
No ▶	GO TO 6.

2	CHECK INPUT SIGNAL OF A/T FLUID TEMPERATURE SENSOR (WITH CONSULT-II)

With CONSULT-II

1. Start engine.
2. Select “TCM INPUT SIGNALS” in “DATA MONITOR” mode for “A/T” with CONSULT-II.
3. Read out the value of “FLUID TEMP SE”.

Voltage:

Cold [20°C (68°F)] → Hot [80°C (176°F)]:

Approximately 1.5V → 0.5V

DATA MONITOR	
MONITORING	
VHCL/S SE-A/T	XXX km/h
VHCL/S SE-MTR	XXX km/h
THRTL POS SEN	XXX V
FLUID TEMP SE	XXX V
BATTERY VOLT	XXX V

SAT614J

OK or NG

OK ▶	GO TO 4.
NG ▶	GO TO 3.

3	DETECT MALFUNCTIONING ITEM

Check the following items:

- Harness for short to ground or short to power or open between TCM, ECM and terminal cord assembly (Main harness)
- Ground circuit for ECM.
  Refer to EC-157, “Wiring Diagram”.

OK or NG

OK ▶	GO TO 4.
NG ▶	Repair or replace damaged parts.

4	CHECK A/T FLUID TEMPERATURE SENSOR WITH TERMINAL CORD ASSEMBLY	

1. Turn ignition switch to "OFF" position.
2. Disconnect terminal cord assembly connector on the right side of transfer assmebly.
3. Check resistance between terminals 8 and 9 when A/T is cold [20°C (68°F)].

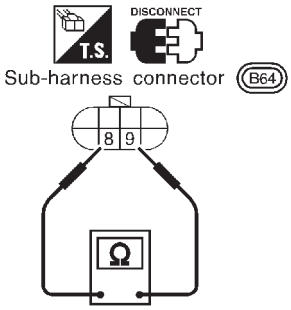

SAT697I

Is resistance approx. 2.5 kΩ?

Yes	▶	GO TO 7.
No	▶	GO TO 5.

5	DETECT MALFUNCTIONING ITEM	

1. Remove oil pan.
2. Check the following items:
- A/T fluid temperature sensor
  Refer to "Component Inspection", AT-113.
- Harness of terminal cord assembly for short or open

OK or NG

OK	▶	GO TO 7.
NG	▶	Repair or replace damaged parts.

6	CHECK INPUT SIGNAL OF A/T FLUID TEMPERATURE SENSOR (WITHOUT CONSULT-II)	

Without CONSULT-II

1. Start engine.
2. Check voltage between TCM harness connector M120 terminal 47 and ground while warming up A/T.

Voltage:

Cold [20°C (68°F)] → Hot [80°C (176°F)]:

Approximately 1.5V → 0.5V

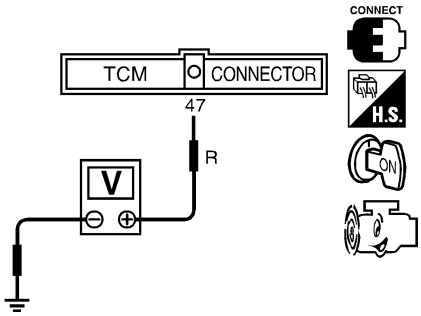

SAT518J

OK or NG

OK	▶	GO TO 11.
NG	▶	GO TO 3.

7	CHECK TCM POWER SOURCE STEP 1

1. Turn ignition switch to ON position.
   (Do not start engine.)
2. Check voltage between TCM harness connector M119, M120 terminals 10, 19, 28 and ground.

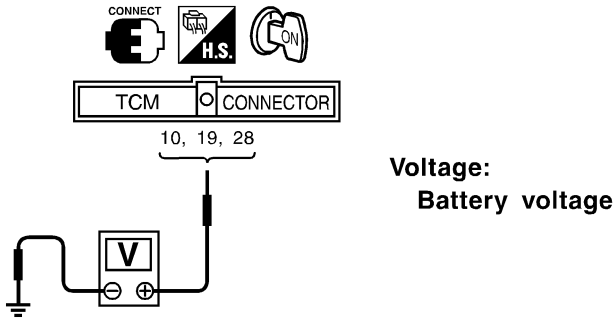

Voltage:
Battery voltage

SAT611J

OK or NG

OK	▶	GO TO 8.
NG	▶	GO TO 9.

8	CHECK TCM POWER SOURCE STEP 2

1. Turn ignition switch to OFF position.
2. Check voltage between TCM harness connector M120 terminal 28 and ground.

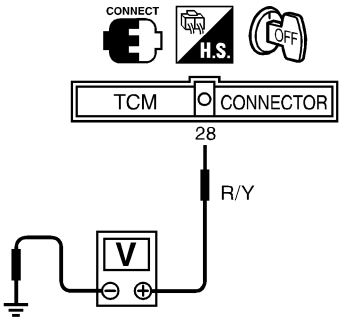

Voltage:
Battery voltage

SAT612JC

OK or NG

OK	▶	GO TO 10.
NG	▶	GO TO 9.

9	DETECT MALFUNCTIONING ITEM

Check the following items:
- Harness for short or open between ignition switch and TCM terminals 10, 19 and 28 (Main harness)
- Ignition switch and 10A or 7.5A fuse [No. 18 or 24, located in the fuse block (J/B)]
  Refer to EL-11, "Schematic".

OK or NG

OK	▶	GO TO 10.
NG	▶	Repair or replace damaged parts.

10	CHECK TCM GROUND CIRCUIT	
1. Turn ignition switch to OFF position. 2. Disconnect TCM harness connector. 3. Check continuity between TCM terminals 25, 48 and ground. Refer to wiring diagram — AT — MAIN. **Continuity should exist.** If OK, check harness for short to ground and short to power.		
OK or NG		
OK	▶	GO TO 11.
NG	▶	Repair open circuit or short to ground or short to power in harness or connectors.

11	CHECK DTC	
Perform Diagnostic Trouble Code (DTC) confirmation procedure, AT-109.		
OK or NG		
OK	▶	**INSPECTION END**
NG	▶	GO TO 12.

12	CHECK TCM INSPECTION	
1. Perform TCM input/output signal inspection. 2. If NG, recheck TCM pin terminals for damage or loose connection with harness connector.		
OK or NG		
OK	▶	**INSPECTION END**
NG	▶	Repair or replace damaged parts.

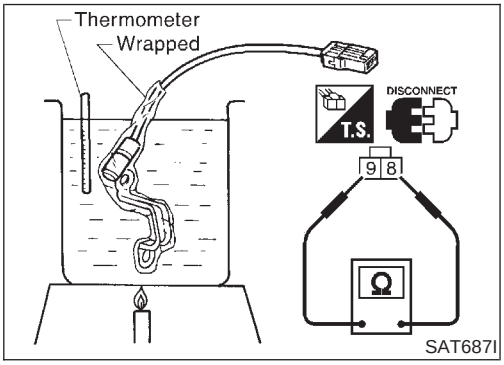

Component Inspection

NAAT0174

A/T FLUID TEMPERATURE SENSOR

NAAT0174S01

- For removal, refer to AT-269.
- Check resistance between terminals 8 and 9 while changing temperature as shown at left.

Temperature °C (°F)	Resistance
20 (68)	Approximately 2.5 kΩ
80 (176)	Approximately 0.3 kΩ

Description

NAAT0071

The vehicle speed sensor·MTR is built into the speedometer assembly. The sensor functions as an auxiliary device to the revolution sensor when it is malfunctioning. The TCM will then use a signal sent from the vehicle speed sensor·MTR.

TCM TERMINALS AND REFERENCE VALUE

NAAT0071S02

Remarks: Specification data are reference values.

Terminal No.	Wire color	Item	Condition		Judgement standard (Approx.)
40	W/L	Vehicle speed sensor		When moving vehicle at 2 to 3 km/h (1 to 2 MPH) for 1 m (3 ft) or more.	Voltage varies between less than 1V and more than 4.5V

ON BOARD DIAGNOSIS LOGIC

NAAT0071S03

Diagnostic trouble code	Malfunction is detected when ...	Check item (Possible cause)
: VHCL SPEED SEN·MTR	TCM does not receive the proper voltage signal from the sensor.	• Harness or connectors (The sensor circuit is open or shorted.) • Vehicle speed sensor
NO TOOLS : 2nd judgement flicker		

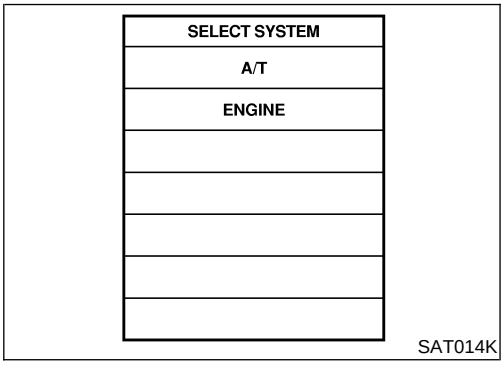

SAT014K

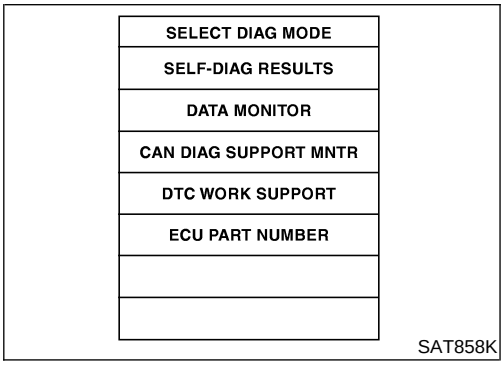

SAT858K

DIAGNOSTIC TROUBLE CODE (DTC) CONFIRMATION PROCEDURE

NAAT0071S01

CAUTION:

- **Always drive vehicle at a safe speed.**
- **If conducting this "DTC CONFIRMATION PROCEDURE" again, always turn ignition switch "OFF" and wait at least 5 seconds before continuing.**

After the repair, perform the following procedure to confirm the malfunction is eliminated.

With CONSULT-II

1) Turn ignition switch "ON" and select "DATA MONITOR" mode for "A/T" with CONSULT-II.
2) Start engine and accelerate vehicle from 0 to 25 km/h (0 to 6 MPH).

Description (Cont'd)

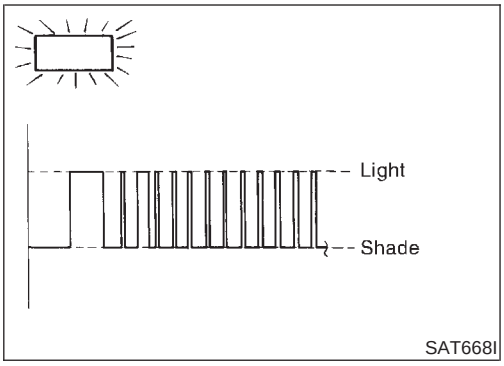

No Tools

1) Start engine.
2) Drive vehicle under the following conditions:
   Selector lever in "D" position and vehicle speed higher than 25 km/h (16 MPH).
3) Perform self-diagnosis.
   Refer to TCM SELF-DIAGNOSTIC PROCEDURE (No Tools), AT-48.

Wiring Diagram — AT — VSSMTR

NAAT0202

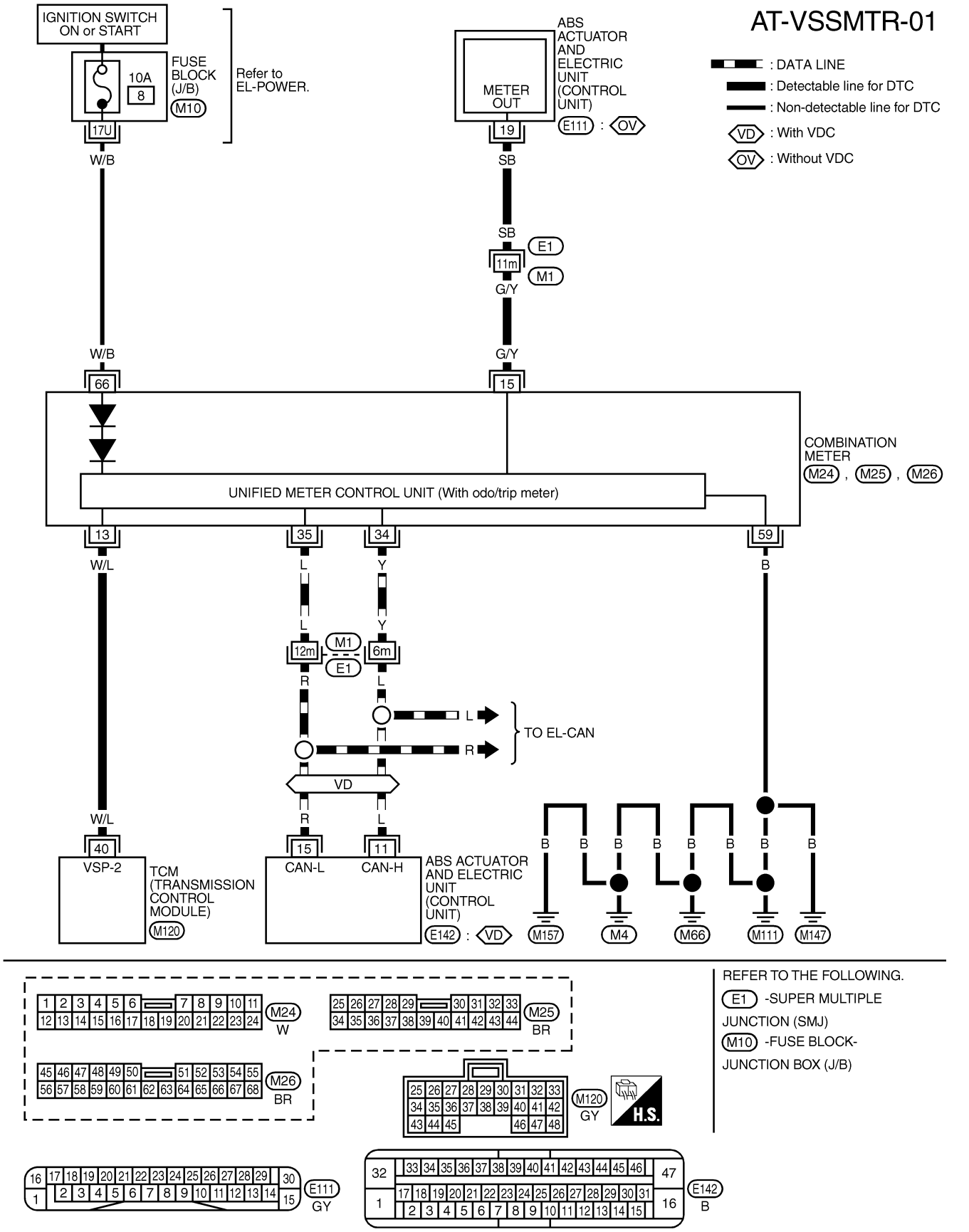

MAT501B

Diagnostic Procedure

NAAT0072

1	CHECK INPUT SIGNAL.

With CONSULT-II

1. Start engine.
2. Select “TCM INPUT SIGNALS” in “DATA MONITOR” mode for “A/T” with CONSULT-II.
3. Read out the value of “VHCL/S SE·MTR” while driving.
   Check the value changes according to driving speed.

DATA MONITOR	
MONITORING	
VHCL/S SE-A/T	XXX km/h
VHCL/S SE-MTR	XXX km/h
THRTL POS SEN	XXX V
FLUID TEMP SE	XXX V
BATTERY VOLT	XXX V

SAT614J

Without CONSULT-II

1. Start engine.
2. Check voltage between TCM harness connector M120 terminal 40 and ground while driving at 2 to 3 km/h (1 to 2 MPH) for 1 m (3 ft) or more.

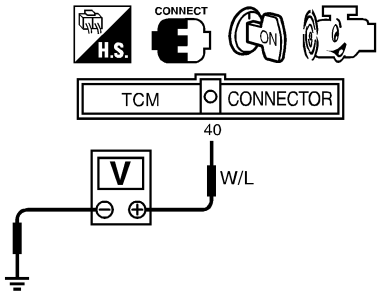

SAT528J

Does battery voltage vary between less than 1V and more than 4.5V?

Yes	▶	GO TO 3.
No	▶	GO TO 2.

2	DETECT MALFUNCTIONING ITEM

Check the following items:

- Vehicle speed sensor and ground circuit for vehicle speed sensor
  Refer to EL-35, “Component Parts and Harness Connector Location”.
- Harness for short or open between TCM and vehicle speed sensor (Main harness)
- Harness for short or open between ABS actuator and electrical unit and combination meter

OK or NG

OK	▶	GO TO 3.
NG	▶	Repair or replace damaged parts.

3	CHECK DTC

Perform Diagnostic Trouble Code (DTC) confirmation procedure, AT-197.

OK or NG

OK	▶	**INSPECTION END**
NG	▶	GO TO 4.

4	CHECK TCM INSPECTION	
1. Perform TCM input/output signal inspection. 2. If NG, recheck TCM pin terminals for damage or loose connection with harness connector.		
OK or NG		
OK	▶	**INSPECTION END**
NG	▶	Repair or replace damaged parts.

Description

NAAT0242

CAN (Controller Area Network) is a serial communication line for real time application. It is an on-vehicle multiplex communication line with high data communication speed and excellent error detection ability. Many electronic control units are equipped onto a vehicle, and each control unit shares information and links with other control units during operation (not independent). In CAN communication, control units are connected with 2 communication lines (CAN H line, CAN L line) allowing a high rate of information transmission with less wiring. Each control units transmits/receives data but selectively reads required data only.

TCM TERMINALS AND REFERENCE VALUE

NAAT0242S01

Remarks: Specification data are reference values.

Terminal No.	Wire color	Item	Condition		Judgement standard (Approx.)
5	L	CAN (high)	—	—	—
6	R	CAN (low)	—	—	—

*: This terminal is connected to the ECM.

On Board Diagnosis Logic

NAAT0243

Diagnostic trouble code CAN COMM CIRCUIT or U1000 with CONSULT-II or 12th judgement flicker without CONSULT-II is detected when TCM cannot communicate to other control unit.

Possible Cause

NAAT0244

Check harness or connector.
(CAN communication line is open or shorted.)

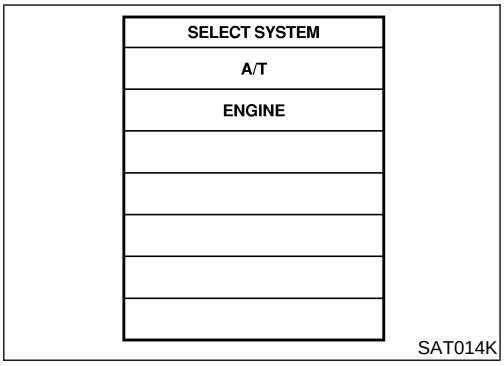

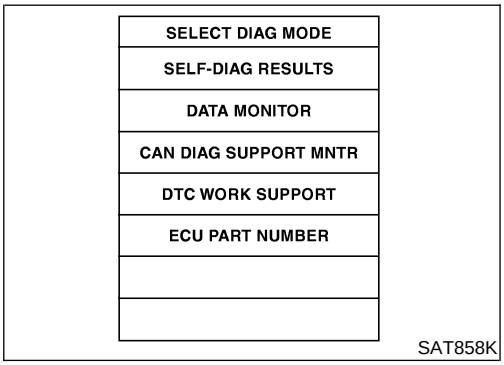

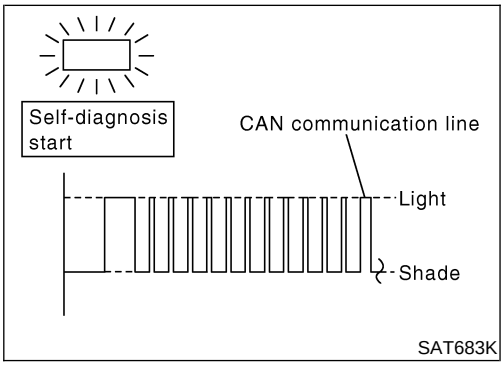

Diagnostic Trouble Code (DTC) Confirmation Procedure

NAAT0245

After the repair, perform the following procedure to confirm the malfunction is eliminated.

WITH CONSULT-II

NAAT0245S01

1) Turn ignition switch “ON”.
2) Select “DATA MONITOR” mode for “A/T” with CONSULT-II.
3) Wait at least 6 seconds or start engine and wait for at least 6 seconds.

WITHOUT CONSULT-II

NAAT0245S02

1) Turn ignition switch “ON”.
2) Wait at least 6 seconds or start engine and wait at least 6 seconds.
3) Perform self-diagnosis.
   Refer to TCM SELF-DIAGNOSTIC PROCEDURE (NO TOOLS), AT-48.

Wiring Diagram — AT — CAN

NAAT0246

AT-CAN-01

: Detectable line for DTC
: Non-detectable line for DTC
: DATA LINE

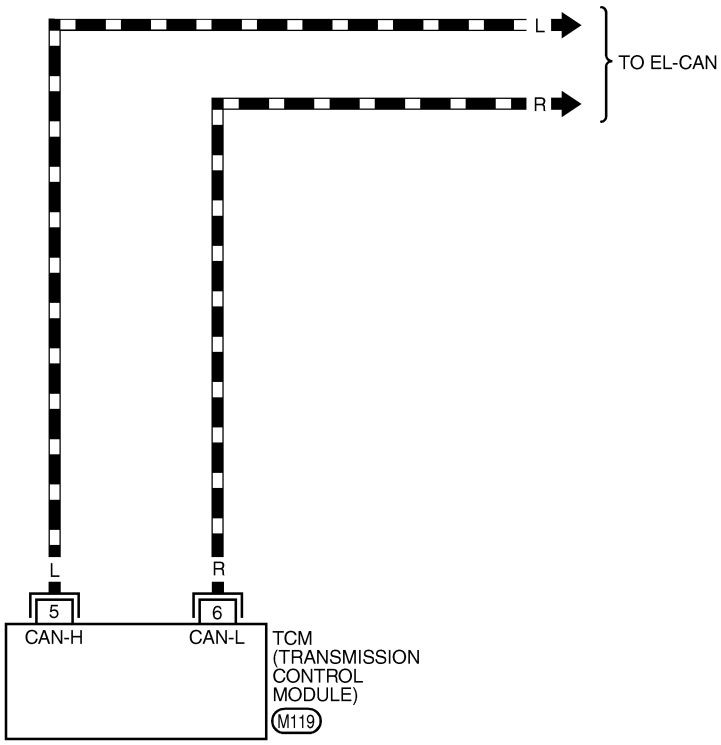

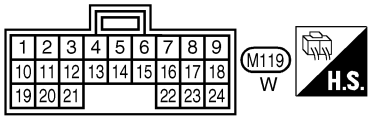

MAT320B

Diagnostic Procedure

NAAT0247

1	CHECK CAN COMMUNICATION CIRCUIT

With CONSULT-II

1. Turn ignition switch to “ON” position. (Do not start engine.)
2. Select “SELF-DIAG RESULTS” mode for “A/T” with CONSULT-II.
3. The “CAN COMM CIRCUIT” is detected.

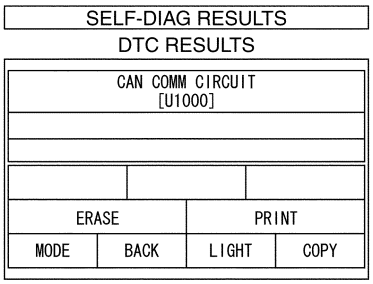

PCIA0061E

Yes or No?

Yes	▶	Print out CONSULT-II screen, go to EL-409, “CAN Communication Unit”.
No	▶	INSPECTION END

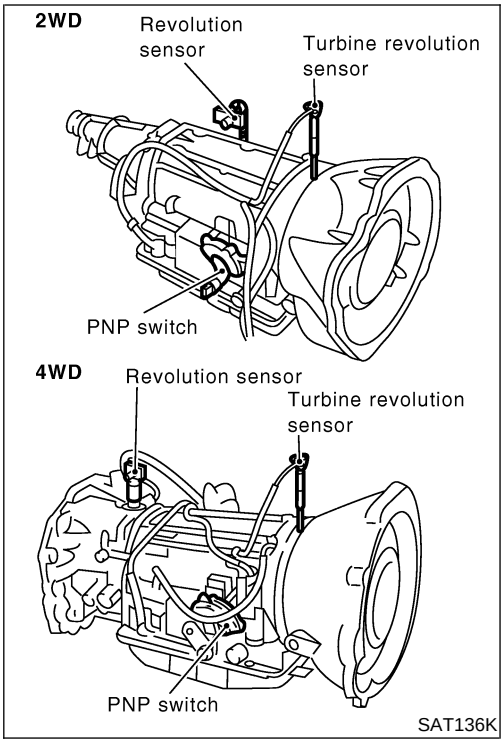

Description

NAAT0224

The turbine revolution sensor detects input shaft rpm (revolutions per minute). It is located on the input side of the automatic transmission. The vehicle speed sensor A/T (Revolution sensor) is located on the output side of the automatic transmission. With the two sensors, input and output shaft rpms are accurately detected. The result is optimal shift timing during deceleration and improved shifting.

TCM TERMINALS AND REFERENCE VALUE

NAAT0224S01

Remarks: Specification data are reference values.

Terminal No.	Wire color	Item	Condition		Judgement standard (Approx.)
38	W	Turbine revolution sensor (Measure in AC range)		When engine is running at 1,000 rpm	1.2V Voltage rises gradually in response to engine speed.
42	B	Sensor ground		—	0V

ON BOARD DIAGNOSIS LOGIC

NAAT0224S02

Diagnostic trouble code	Malfunction is detected when ...	Check item (Possible cause)
: TURBINE REV	TCM does not receive the proper voltage signal from the sensor.	• Harness or connectors (The sensor circuit is open or shorted.) • Turbine revolution sensor
: 10th judgement flicker		

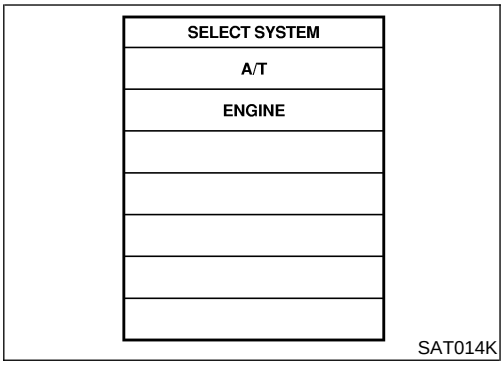

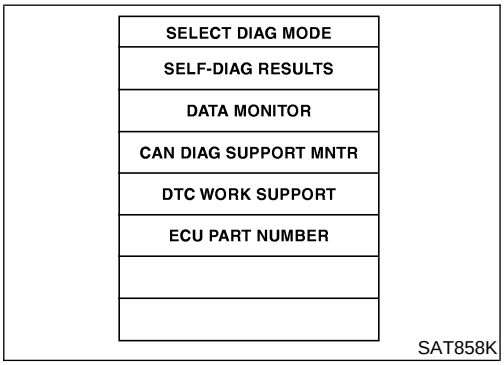

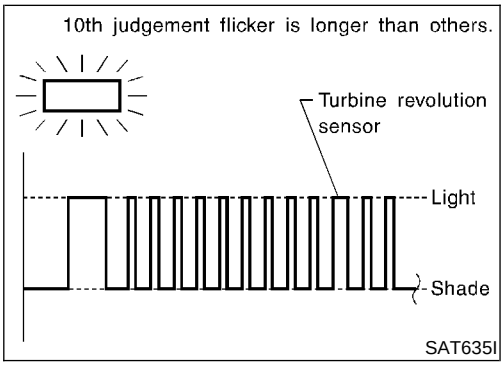

DIAGNOSTIC TROUBLE CODE (DTC) CONFIRMATION PROCEDURE

NAAT0224S03

CAUTION:

- **Always drive vehicle at a safe speed.**
- **If conducting this "DTC CONFIRMATION PROCEDURE" again, always turn ignition switch "OFF" and wait at least 5 seconds before continuing.**

After the repair, perform the following procedure to confirm the malfunction is eliminated.

With CONSULT-II

1) Start engine.
2) Select "DATA MONITOR" mode for "A/T" with CONSULT-II.
3) Drive vehicle under the following conditions:
   Selector lever in "D", vehicle speed higher than 40 km/h (25 MPH), engine speed higher than 1,500 rpm, throttle opening greater than 1.0/8 of the full throttle position and driving for more than 5 seconds.

No Tools

1) Start engine.
2) Drive vehicle under the following conditions:
   Selector lever in "D", vehicle speed higher than 40 km/h (25 MPH), engine speed higher than 1,500 rpm, throttle opening greater than 1/8 of the full throttle position and driving for more than 5 seconds.
3) Perform self-diagnosis.
   Refer to TCM SELF-DIAGNOSTIC PROCEDURE (No Tools), AT-48.

Wiring Diagram — AT — TRSA/T

NAAT0225

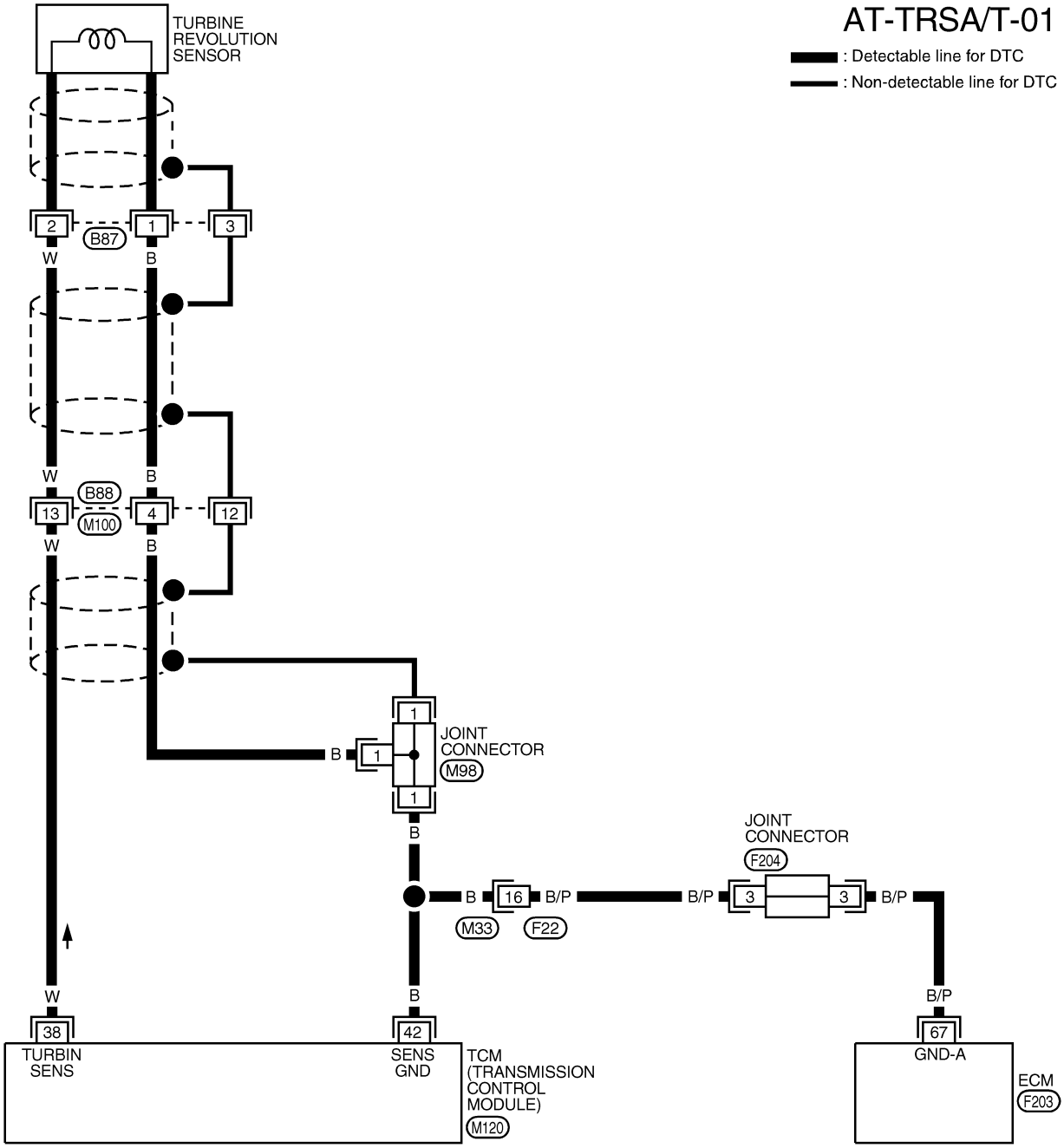

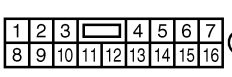

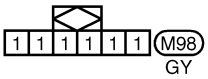

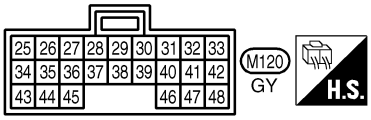

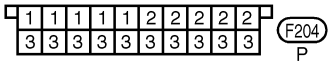

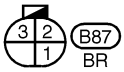

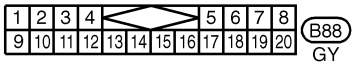

REFER TO THE FOLLOWING.
F203 - ELECTRICAL UNITS

MAT319B

Diagnostic Procedure

NAAT0226

1	CHECK INPUT SIGNAL

With CONSULT-II

1. Start engine.
2. Select “TCM INPUT SIGNALS” in “DATA MONITOR” mode for “A/T” with CONSULT-II.
3. Read out the value of “TURBINE REV”. Check the value changes according to engine speed.

DATA MONITOR	
MONITORING	
ENGINE SPEED	XXX rpm
TURBINE REV	XXX rpm
OVERDRIVE SW	ON
PN POSI SW	OFF
R POSITION SW	OFF

SAT740J

Without CONSULT-II

1. Start engine.
2. Check voltage between TCM harness connector M120 terminal 38 and ground. (Measure in AC range.)

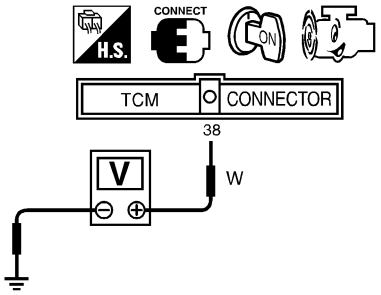

Approximately 1.2V
(Voltage rises gradually in response to engine speed.)

SAT140K

OK or NG

OK	▶	GO TO 3.
NG	▶	GO TO 2.

2	DETECT MALFUNCTIONING ITEM

Check harness for short or open between TCM and turbine revolution sensor.

OK or NG

OK	▶	GO TO 3.
NG	▶	Repair or replace damaged parts.

3	CHECK DTC

Perform Diagnostic Trouble Code (DTC) confirmation procedure, AT-207.

OK or NG

OK	▶	**INSPECTION END**
NG	▶	GO TO 4.

4	CHECK TCM INSPECTION	
1. Perform TCM input/output signal inspection. 2. If NG, recheck TCM pin terminal for damage or loose connection with harness connector. **OK or NG**		
OK	▶	**INSPECTION END**
NG	▶	Repair or replace damaged parts.

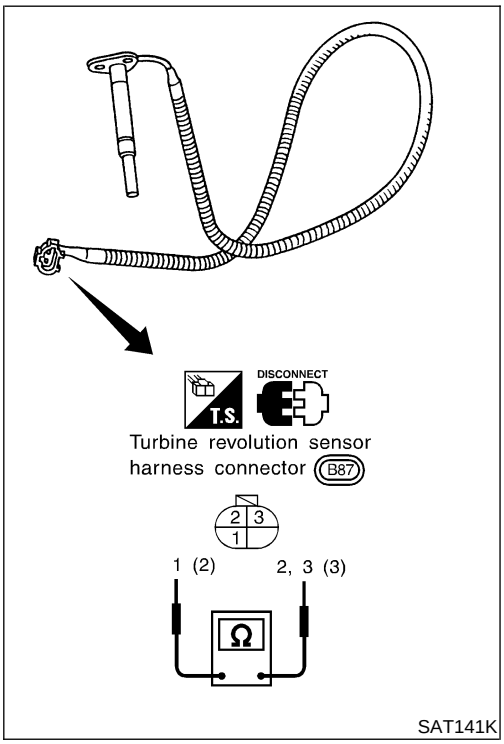

Component Inspection

NAAT0227

TURBINE REVOLUTION SENSOR

NAAT0227S01

- Check resistance between terminals 1, 2 and 3.

Terminal No.		Resistance (Approx.)
1	2	2.4 - 2.8 kΩ
1	3	No continuity
2	3	No continuity

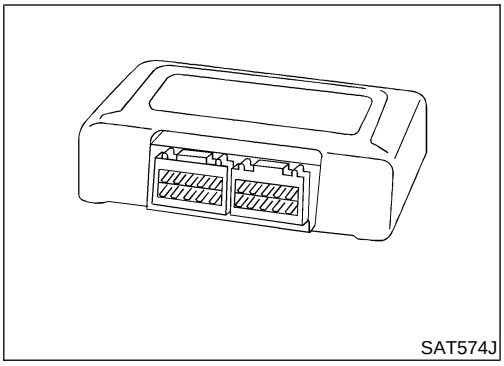
SAT574J

Description

NAAT0207

The TCM consists of a microcomputer and connectors for signal input and output and for power supply. The unit controls the A/T.

ON BOARD DIAGNOSIS LOGIC

NAAT0207S01

Diagnostic trouble code	Malfunction is detected when ...	Check item (Possible cause)
: CONTROL UNIT (RAM) : CONTROL UNIT (ROM)	TCM memory (RAM) or (ROM) is malfunctioning.	TCM

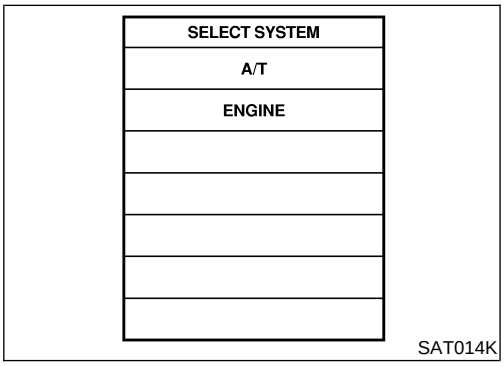

SAT014K

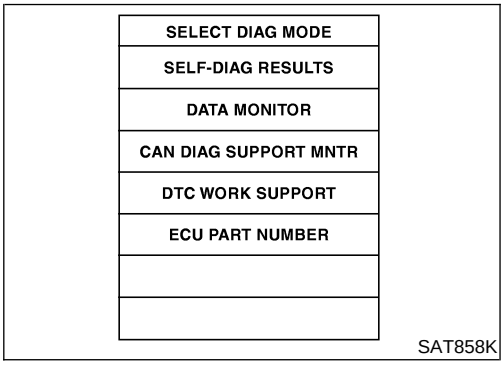

SAT858K

DIAGNOSTIC TROUBLE CODE (DTC) CONFIRMATION PROCEDURE

NAAT0207S02

NOTE:

If "DIAGNOSTIC TROUBLE CODE CONFIRMATION PROCEDURE" has been previously conducted, always turn ignition switch "OFF" and wait at least 5 seconds before conducting the next test.

With CONSULT-II

1) Turn ignition switch "ON" and select "DATA MONITOR" mode for A/T with CONSULT-II.
2) Start engine.
3) Run engine for at least 2 seconds at idle speed.

Diagnostic Procedure

=NAAT0208

1	CHECK DTC	
With CONSULT-II 1. Turn ignition switch “ON” and select “SELF DIAG RESULTS” mode for A/T with CONSULT-II. 2. Touch “ERASE”. PERFORM DIAGNOSTIC TROUBLE CODE (DTC) CONFIRMATION PROCEDURE. See previous page. **Is the “CONTROL UNIT (RAM) or CONTROL UNIT (ROM)” displayed again?**		
Yes	▶	Replace TCM.
No	▶	**INSPECTION END**

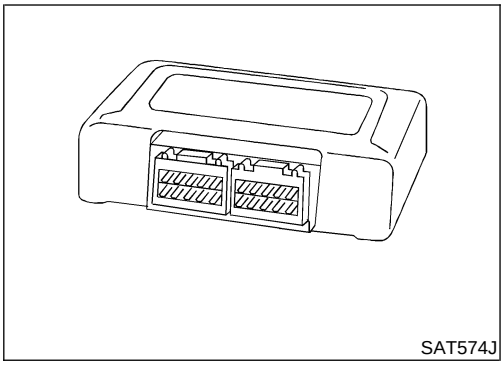

SAT574J

Description

NAAT0215

The TCM consists of a microcomputer and connectors for signal input and output and for power supply. The unit controls the A/T.

ON BOARD DIAGNOSIS LOGIC

NAAT0215S01

Diagnostic trouble code	Malfunction is detected when ...	Check item (Possible cause)
: CONT UNIT (EEP ROM)	TCM memory (EEP ROM) is malfunctioning.	TCM

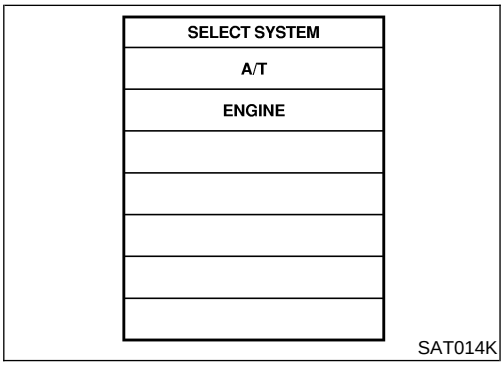

SAT014K

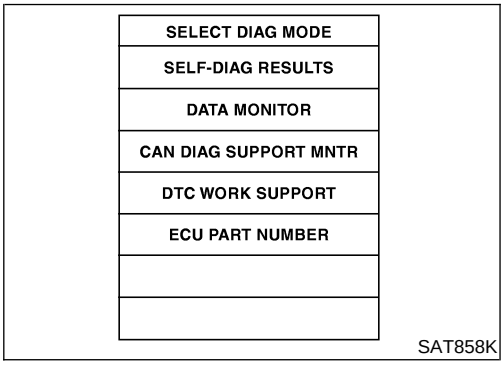

SAT858K

DIAGNOSTIC TROUBLE CODE (DTC) CONFIRMATION PROCEDURE

NAAT0215S02

NOTE:

If "DIAGNOSTIC TROUBLE CODE CONFIRMATION PROCEDURE" has been previously conducted, always turn ignition switch "OFF" and wait at least 5 seconds before conducting the next test.

With CONSULT-II

1) Turn ignition switch "ON" and select "DATA MONITOR" mode for A/T with CONSULT-II.
2) Start engine.
3) Run engine for at least 2 seconds at idle speed.

Diagnostic Procedure

=NAAT0216

1	CHECK DTC	
With CONSULT-II 1. Turn ignition switch “ON” and select “SELF DIAG RESULTS” mode for A/T with CONSULT-II. 2. Move selector lever to “R” position. 3. Depress accelerator pedal (Full throttle position). 4. Touch “ERASE”. 5. Turn ignition switch “OFF” position for 10 seconds. PERFORM DIAGNOSTIC TROUBLE CODE (DTC) CONFIRMATION PROCEDURE. See previous page.		
	Is the “CONTROL UNIT (EEP ROM)” displayed again?	
Yes	▶	Replace TCM.
No	▶	**INSPECTION END**

Wiring Diagram — AT — NONDTC

NAAT0203

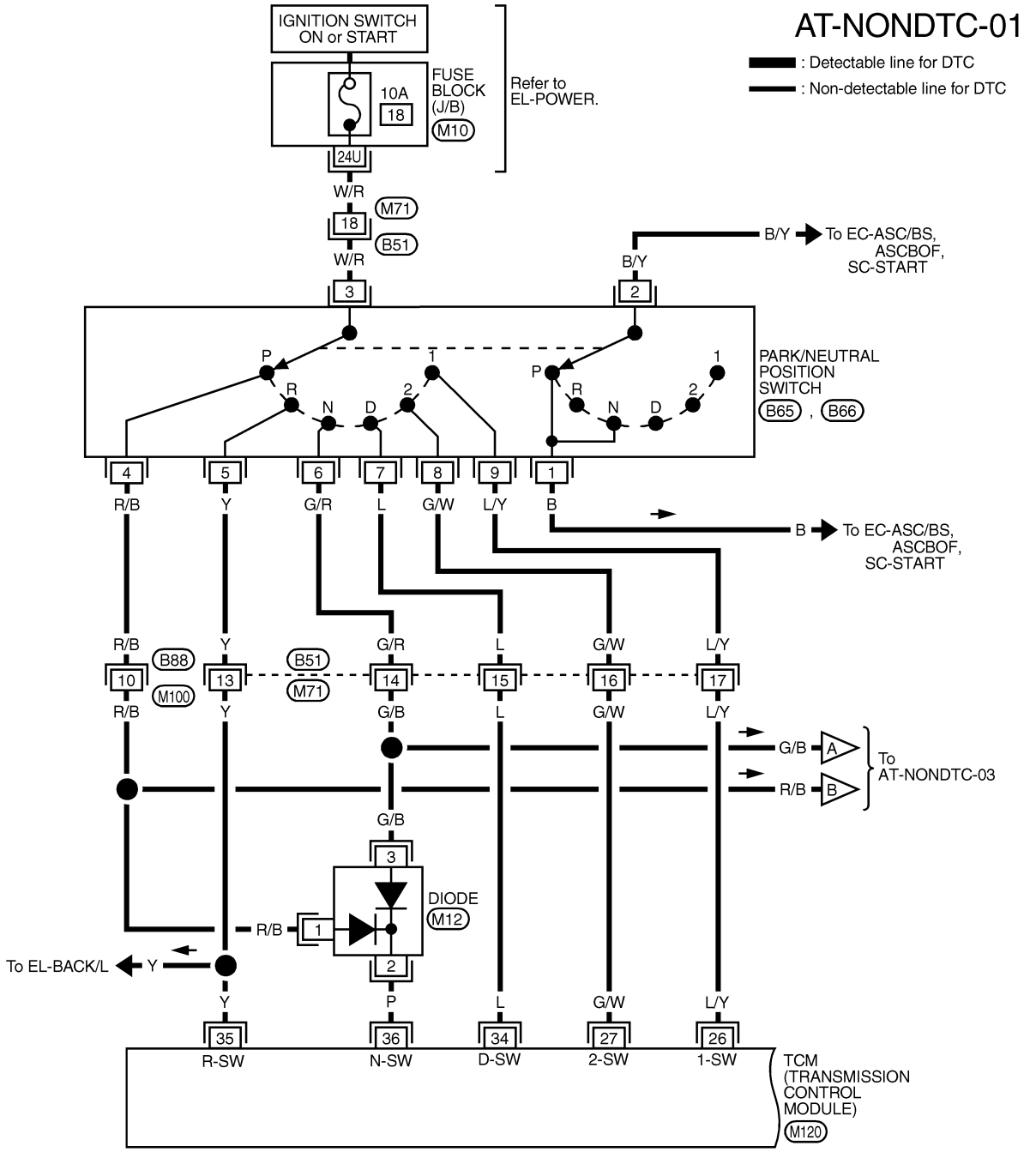

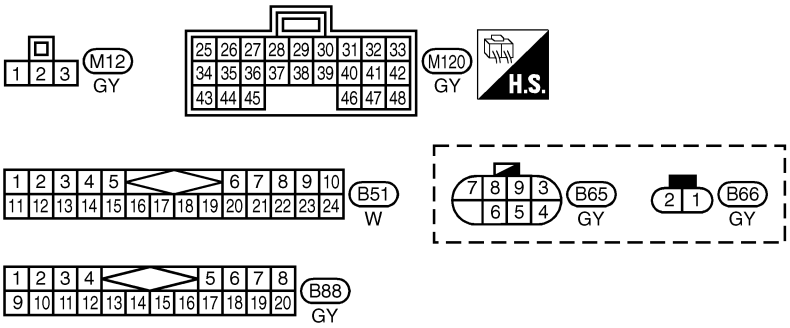

REFER TO THE FOLLOWING.
M10 -FUSE BLOCK-JUNCTION BOX (J/B)

MAT502B

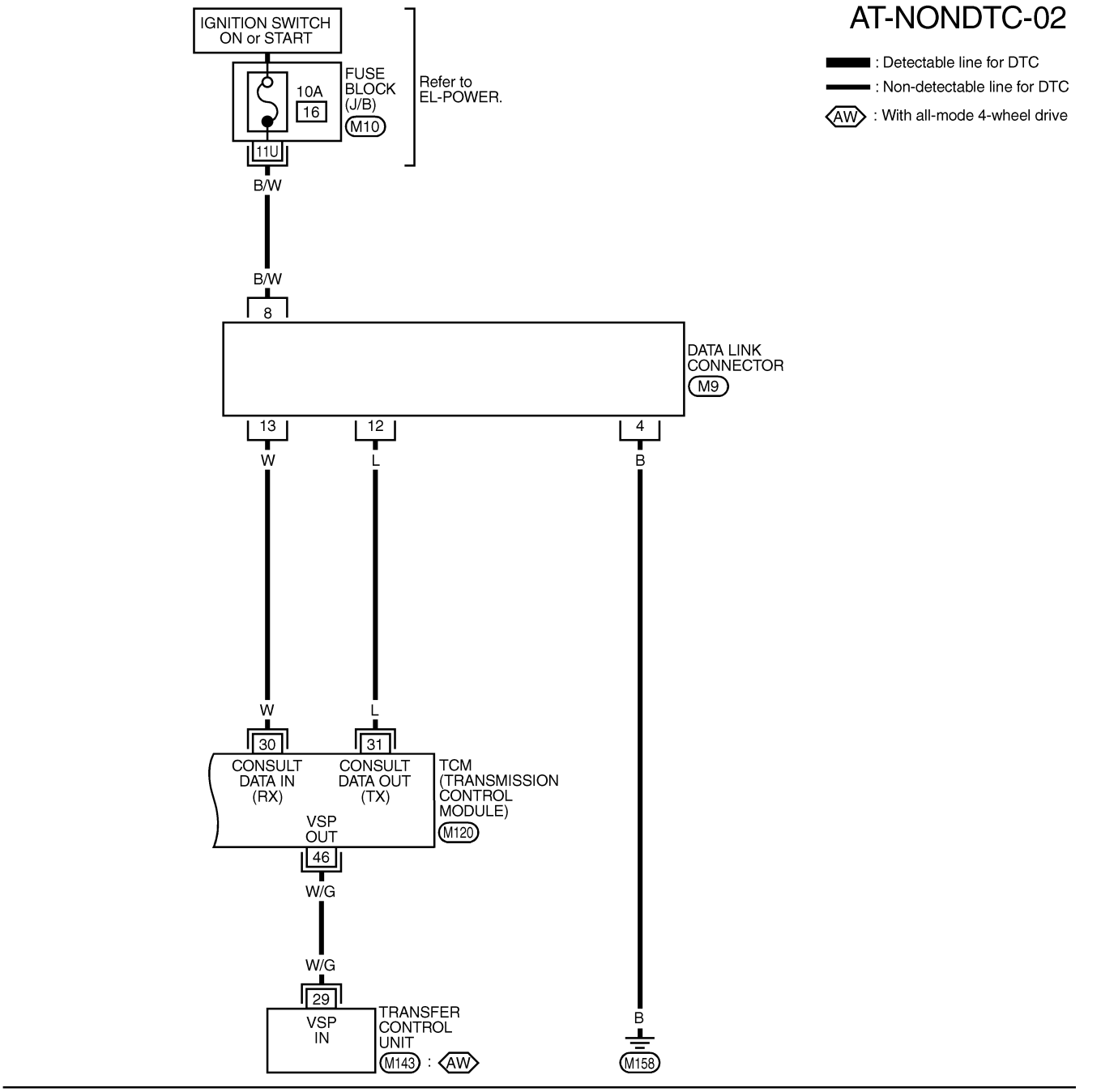
AT-NONDTC-02
: Detectable line for DTC
: Non-detectable line for DTC
AW : With all-mode 4-wheel drive
IGNITION SWITCH ON or START
FUSE BLOCK (J/B)
M10
10A
16
11U
Refer to EL-POWER.
B/W
B/W
8
DATA LINK CONNECTOR
M9
13
12
4
W
L
B
W
L
30
31
CONSULT DATA IN (RX)
CONSULT DATA OUT (TX)
VSP OUT
TCM (TRANSMISSION CONTROL MODULE)
M120
46
W/G
W/G
29
VSP IN
TRANSFER CONTROL UNIT
M143 : AW
B
M158
M9
W
M120
GY
M143
G
H.S.
REFER TO THE FOLLOWING.
M10 -FUSE BLOCK-JUNCTION BOX (J/B)
MAT503B

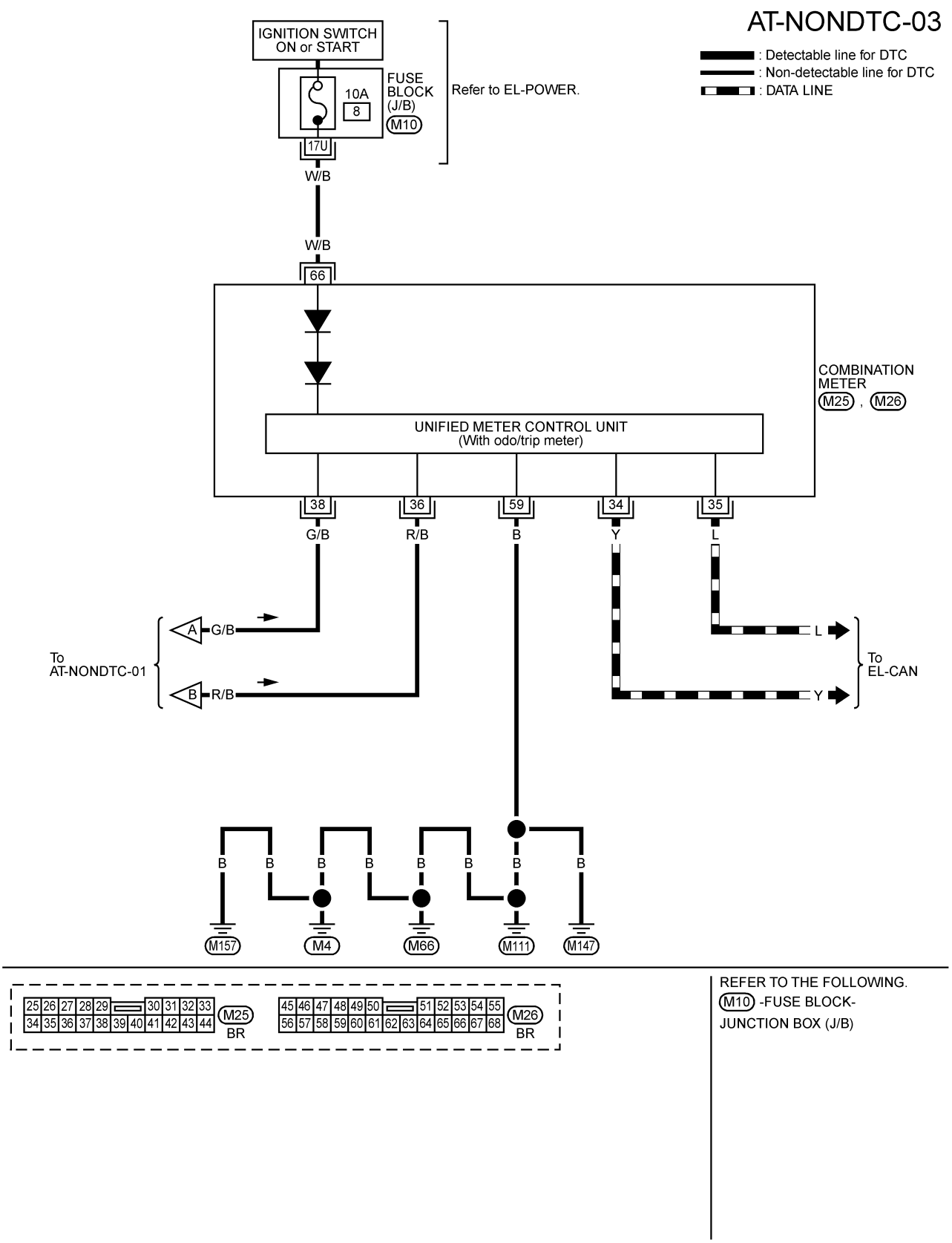
AT-NONDTC-03
: Detectable line for DTC
: Non-detectable line for DTC
: DATA LINE
IGNITION SWITCH ON or START
FUSE BLOCK (J/B)
M10
10A
8
Refer to EL-POWER.
17U
W/B
W/B
66
COMBINATION METER
M25 , M26
UNIFIED METER CONTROL UNIT
(With odo/trip meter)
38
36
59
34
35
G/B
R/B
B
Y
L
A
G/B
B
R/B
To AT-NONDTC-01
L
Y
To EL-CAN
B
M157
M4
M66
M111
M147
25 26 27 28 29 30 31 32 33
34 35 36 37 38 39 40 41 42 43 44
M25
BR
45 46 47 48 49 50 51 52 53 54 55
56 57 58 59 60 61 62 63 64 65 66 67 68
M26
BR
REFER TO THE FOLLOWING.
M10 -FUSE BLOCK-
JUNCTION BOX (J/B)
MAT504B

O/D OFF Indicator Lamp Does Not Come On

NAAT0073

SYMPTOM:

O/D OFF indicator lamp does not not come on for about 2 seconds when turning ignition switch to “ON”.

1	CHECK TCM POWER SOURCE STEP 1

1. Turn ignition switch to ON position.
   (Do not start engine.)
2. Check voltage between TCM harness connector M119, M120 terminals 10, 19, 28 and ground.

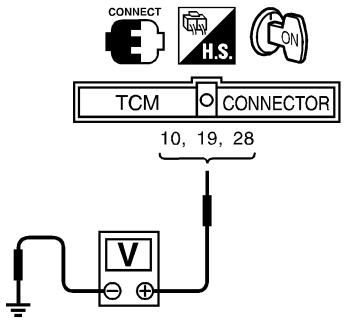

Voltage:
Battery voltage

SAT611J

OK or NG

OK	▶	GO TO 2.
NG	▶	GO TO 3.

2	CHECK TCM POWER SOURCE STEP 2

1. Turn ignition switch to OFF position.
2. Check voltage between TCM harness connector M120 terminal 28 and ground.

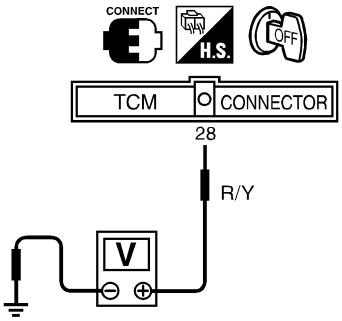

Voltage:
Battery voltage

SAT612JC

OK or NG

OK	▶	GO TO 4.
NG	▶	GO TO 3.

3	DETECT MALFUNCTIONING ITEM

Check the following items:

- Harness for short or open between ignition switch and TCM harness connector M119, M120 terminals 10, 19 and 28 (Main harness)
- Ignition switch and 10A or 7.5A fuse [No. 18 or 24, located in the fuse block (J/B)]
  Refer to EL-11, “Schematic”.

OK or NG

OK	▶	GO TO 4.
NG	▶	Repair or replace damaged parts.

4	CHECK TCM GROUND CIRCUIT	
1. Turn ignition switch to OFF position. 2. Disconnect TCM harness connector. 3. Check continuity between TCM harness connector M120 terminals 25, 48 and ground. Refer to wiring diagram — AT — MAIN. **Continuity should exist.** If OK, check harness for short to ground and short to power.		
OK or NG		
OK	▶	GO TO 5.
NG	▶	Repair open circuit or short to ground or short to power in harness or connectors.

5	CHECK MALFUNCTIONING ITEM	
Check the following items: ● Fuse ● O/D OFF indicator lamp ● Harness for short or open between ignition switch and O/D OFF indicator lamp ● Harness for short or open between O/D OFF indicator lamp and TCM		
OK or NG		
Yes	▶	GO TO 6.
No	▶	Repair or replace damaged parts.

6	CHECK SYMPTOM	
Check again.		
OK or NG		
OK	▶	**INSPECTION END**
NG	▶	GO TO 7.

7	CHECK TCM INSPECTION	
1. Perform TCM input/output signal inspection. 2. If NG, recheck TCM pin terminals for damage or loose connection with harness connector.		
OK or NG		
OK	▶	**INSPECTION END**
NG	▶	Repair or replace damaged parts.

Engine Cannot Be Started In “P” and “N” Position

=NAAT0074

SYMPTOM:

Engine cannot be started with selector lever in “P” or “N” position.

Engine cannot be started with selector lever in “P”Engine can be started with selector lever in “D”, “2”, “1” or “R” position.

1	CHECK PNP SWITCH CIRCUIT
With CONSULT-II Does “TCM INPUT SIGNALS” in Data Monitor show damage to PNP switch circuit?	
Without CONSULT-II Does self-diagnosis show damage to PNP switch circuit?	

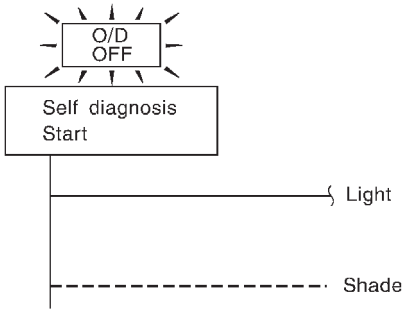

SAT367J

Yes or No

Yes	▶	Check PNP switch circuit. Refer to “DTC P0705”, AT-102.
No	▶	GO TO 2.

2	CHECK PNP SWITCH INSPECTION
Check for short or open of PNP switch 2-pin connector. Refer to “Components Inspection”, AT-106.	

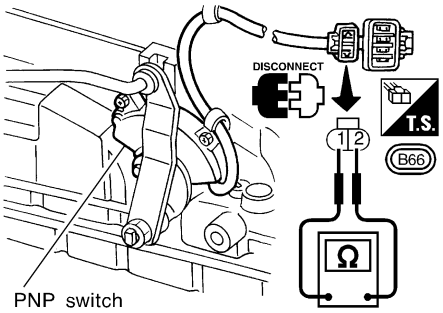

SAT838BB

OK or NG

OK	▶	GO TO 3.
NG	▶	Repair or replace PNP switch.

3	CHECK STARTING SYSTEM
Check starting system. Refer to SC-10, “System Description”.	

OK or NG

OK	▶	**INSPECTION END**
NG	▶	Repair or replace damaged parts.

In “P” Position, Vehicle Moves Forward Or Backward When Pushed

=NAAT0075

SYMPTOM:

Vehicle moves when it is pushed forward or backward with selector lever in “P” position.

1	CHECK PARKING COMPONENTS	
Check parking components. Refer to “Parking Pawl Components”, AT-334. 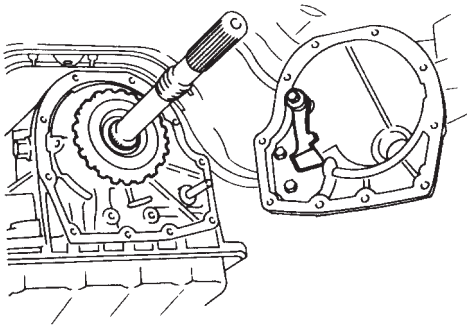 SAT133B		
OK or NG		
OK	▶	**INSPECTION END**
NG	▶	Repair or replace damaged parts.

In “N” Position, Vehicle Moves

=NAAT0076

SYMPTOM:

Vehicle moves forward or backward when selecting “N” position.

1	CHECK PNP SWITCH CIRCUIT
With CONSULT-II Does “TCM INPUT SIGNALS” in Data Monitor show damage to PNP switch circuit?	
Without CONSULT-II Does self-diagnosis show damage to PNP switch circuit?	

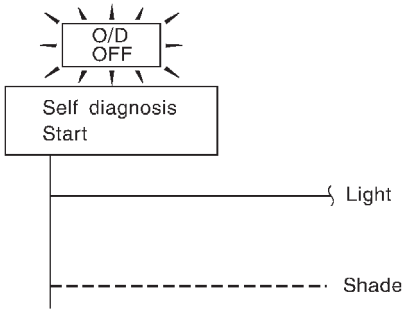

SAT367J

Yes or No

Yes	▶	Check PNP switch circuit. Refer to “DTC P0705”, AT-102.
No	▶	GO TO 2.

2	CHECK CONTROL LINKAGE
Check control linkage. Refer to AT-272.	

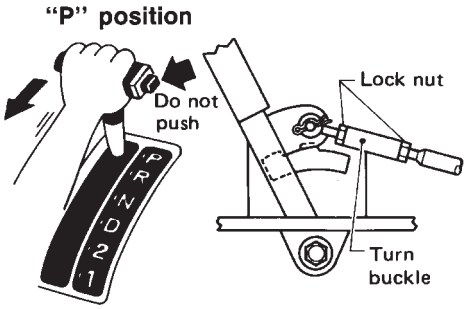

SAT032G

OK or NG

OK	▶	GO TO 3.
NG	▶	Adjust control linkage. Refer to AT-272.

3	CHECK A/T FLUID LEVEL

Check A/T fluid level again.

SAT638A

OK or NG

OK	▶	GO TO 4.
NG	▶	Refill ATF.

4	CHECK A/T FLUID CONDITION

1. Remove oil pan.
2. Check A/T fluid condition.

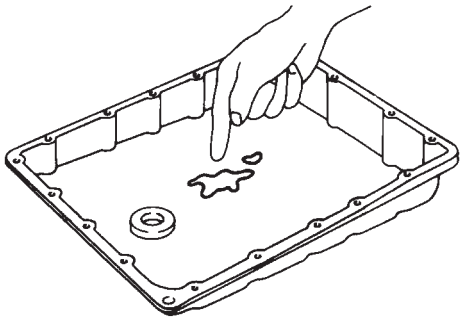

SAT171B

OK or NG

OK	▶	GO TO 5.
NG	▶	1. Disassemble A/T. 2. Check the following items: ● Forward clutch assembly ● Overrun clutch assembly ● Reverse clutch assembly

5	CHECK SYMPTOM

Check again.

OK or NG

OK	▶	**INSPECTION END**
NG	▶	1. Perform TCM input/output signal inspection. 2. If NG, recheck TCM pin terminals for damage or loose connection with harness connector.

Large Shock. “N” → “R” Position

=NAAT0077

SYMPTOM:

There is large shock when changing from “N” to “R” position.

1	CHECK SELF-DIAGNOSTIC RESULTS
Does self-diagnosis show damage to A/T fluid temperature sensor, line pressure solenoid valve or accelerator pedal position sensor circuit?	

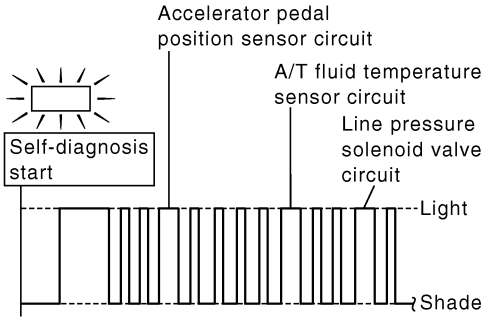

SAT579IC

Yes or No

Yes	▶	Check damaged circuit. Refer to “DTC P0710, DTC P0745 or DTC P1705”, AT-108, 165 or 179.
No	▶	GO TO 2.

2	CHECK ACCELERATOR PEDAL POSITION SENSOR (THROTTLE POSITION SENSOR)
Check accelerator pedal position sensor (throttle position sensor). Refer to EC section.	

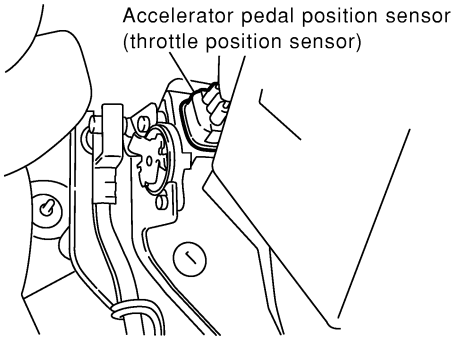

SAT516KA

OK or NG

OK	▶	GO TO 3.
NG	▶	Repair or replace accelerator pedal position sensor (throttle position sensor).

3	CHECK LINE PRESSURE
Check line pressure at idle with selector lever in "D" position. Refer to "LINE PRESSURE TEST", AT-64.	

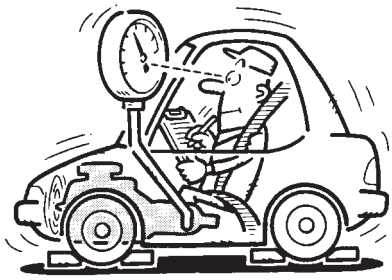

SAT494G

OK or NG

OK	▶	GO TO 4.
NG	▶	1. Remove control valve assembly. Refer to AT-269. 2. Check the following items: ● Valves to control line pressure (Pressure regulator valve, pressure modifier valve, pilot valve and pilot filter) ● Line pressure solenoid valve

4	CHECK SYMPTOM
Check again.	

OK or NG

OK	▶	**INSPECTION END**
NG	▶	1. Perform TCM input/output signal inspection. 2. If NG, recheck TCM pin terminals for damage or loose connection with harness connector.

Vehicle Does Not Creep Backward In “R” Position

=NAAT0078

SYMPTOM:

Vehicle does not creep backward when selecting “R” position.

1	CHECK A/T FLUID LEVEL
Check A/T fluid level again.	

SAT638A

OK or NG

OK	▶	GO TO 2.
NG	▶	Refill ATF.

2	CHECK STALL TEST
Check stall revolution with selector lever in “1” and “R” positions. Refer to AT-353.	

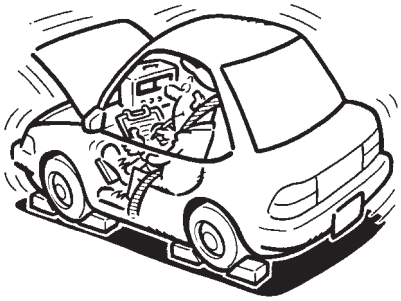

SAT493G

OK or NG

OK	▶	GO TO 3.
OK in “1” position, NG in “R” position	▶	1. Remove control valve assembly. Refer to “ON-VEHICLE SERVICE”, AT-269. 2. Check the following items: ● Valves to control line pressure (Pressure regulator valve, pressure modifier valve, pilot valve and pilot filter) ● Line pressure solenoid valve 3. Disassemble A/T. 4. Check the following items: ● Oil pump assembly ● Torque converter ● Reverse clutch assembly ● High clutch assembly
NG in both “1” and “R” positions	▶	GO TO 6.

3	CHECK LINE PRESSURE

Check line pressure at idle with selector lever in “R” position. Refer to “LINE PRESSURE TEST”, AT-64.

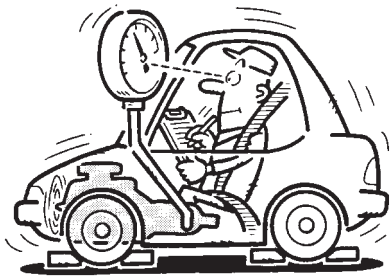

SAT494G

OK or NG

OK	▶	GO TO 4.
NG	▶	1. Remove control valve assembly. Refer to “ON-VEHICLE SERVICE”, AT-269. 2. Check the following items: ● Valves to control line pressure (Pressure regulator valve, pressure modifier valve, pilot valve and pilot filter) ● Line pressure solenoid valve 3. Disassemble A/T. 4. Check the following items: ● Oil pump assembly

4	CHECK A/T FLUID CONDITION

1. Remove oil pan.
2. Check A/T fluid condition.

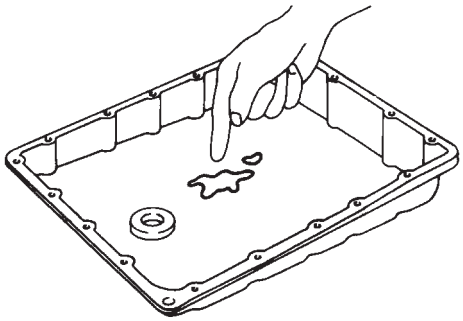

SAT171B

OK or NG

OK	▶	GO TO 5.
NG	▶	GO TO 6.

5	CHECK SYMPTOM

Check again.

OK or NG

OK	▶	**INSPECTION END**
NG	▶	1. Perform TCM input/output signal inspection. 2. If NG, recheck TCM pin terminals for damage or loose connection with harness connector.

6	DETECT MALFUNCTIONING ITEM
1. Remove control valve assembly. Refer to “ON-VEHICLE SERVICE”, AT-269. 2. Check the following items: ● Valves to control line pressure (Pressure regulator valve, pressure modifier valve, pilot valve and pilot filter) ● Line pressure solenoid valve 3. Disassemble A/T. 4. Check the following items: ● Oil pump assembly ● Torque converter ● Reverse clutch assembly ● High clutch assembly ● Low & reverse brake assembly ● Low one-way clutch	
▶	Repair or replace damaged parts.

Vehicle Does Not Creep Forward In “D”, “2” Or “1” Position

=NAAT0079

SYMPTOM:

Vehicle does not creep forward when selecting “D”, “2” or “1” position.

1	CHECK A/T FLUID LEVEL	
Check A/T fluid level again.		

SAT638A

OK or NG

OK	▶	GO TO 2.
NG	▶	Refill ATF.

2	CHECK STALL TEST	
Check stall revolution with selector lever in “D” position. Refer to “STALL TEST”, AT-61.		

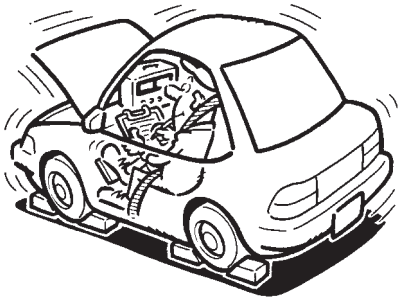

SAT493G

OK or NG

OK	▶	GO TO 3.
NG	▶	GO TO 6.

3	CHECK LINE PRESSURE
Check line pressure at idle with selector lever in “R” position. Refer to “LINE PRESSURE TEST”, AT-64. 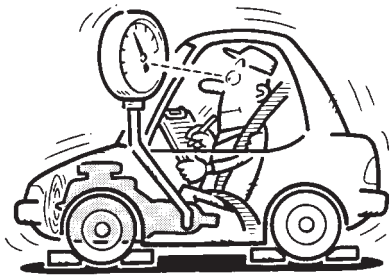 SAT494G	
OK or NG	
OK ▶	GO TO 4.
NG ▶	1. Remove control valve assembly. Refer to AT-269. 2. Check the following items: ● Valves to control line pressure (Pressure regulator valve, pressure modifier valve, pilot valve and pilot filter) ● Line pressure solenoid valve 3. Disassemble A/T. 4. Check the following items: ● Oil pump assembly

4	CHECK A/T FLUID CONDITION
1. Remove oil pan. 2. Check A/T fluid condition. 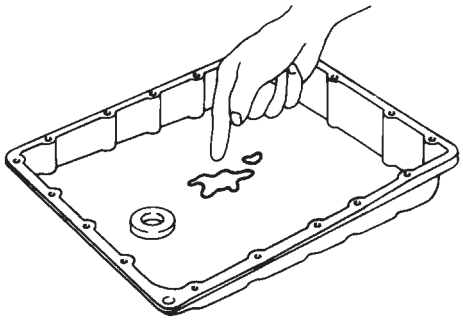 SAT171B	
OK or NG	
OK ▶	GO TO 5.
NG ▶	GO TO 6.

5	CHECK SYMPTOM
Check again.	
OK or NG	
OK ▶	**INSPECTION END**
NG ▶	1. Perform TCM input/output signal inspection. 2. If NG, recheck TCM pin terminals for damage or loose connection with harness connector.

6	DETECT MALFUNCTIONING ITEM
1. Remove control valve assembly. Refer to “ON-VEHICLE SERVICE”, AT-269. 2. Check the following items: ● Valves to control line pressure (Pressure regulator valve, pressure modifier valve, pilot valve and pilot filter) ● Line pressure solenoid valve 3. Disassemble A/T. 4. Check the following items: ● Oil pump assembly ● Forward clutch assembly ● Forward one-way clutch ● Low one-way clutch ● Low & reverse brake assembly ● Torque converter	
▶	Repair or replace damaged parts.

Vehicle Cannot Be Started From D_1

=NAAT0080

SYMPTOM:

Vehicle cannot be started from D_1 on Cruise test — Part 1.

1	CHECK SYMPTOM	
Is “Vehicle Does Not Creep Backward In “R” Position” OK?		
	Yes or No	
Yes	▶	GO TO 2.
No	▶	Go to “Vehicle Does Not Creep Backward In “R” Position”, AT-226.

2	CHECK SELF-DIAGNOSTIC RESULTS	
Does self-diagnosis show damage to vehicle speed sensor·A/T (revolution sensor), shift solenoid valve A, B or vehicle speed sensor·MTR after cruise test?		
	Yes or No	
Yes	▶	Check damaged circuit. Refer to “DTC P0720, DTC P0750, DTC P0755 or VEHICLE SPEED SENSOR. MTR”, AT-114, 171, 175 or 197.
No	▶	GO TO 3.

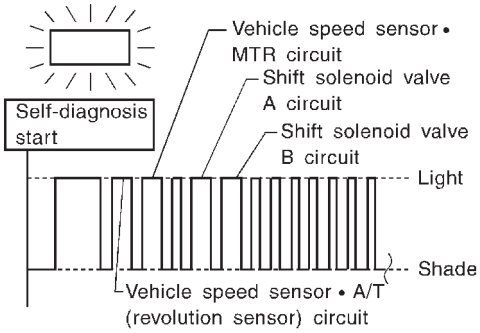

SAT686I

3	CHECK ACCELERATOR PEDAL POSITION SENSOR (THROTTLE POSITION SENSOR)	
Check accelerator pedal position sensor (throttle position sensor). Refer to EC section.		
	OK or NG	
OK	▶	GO TO 4.
NG	▶	Repair or replace accelerator pedal position sensor (throttle position sensor).

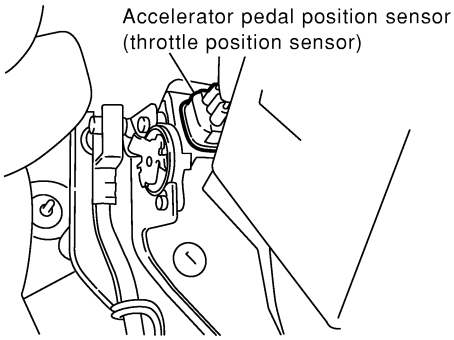

SAT516KA

4	CHECK LINE PRESSURE

Check line pressure at stall point with selector lever in "D" position.
Refer to "LINE PRESSURE TEST", AT-64.

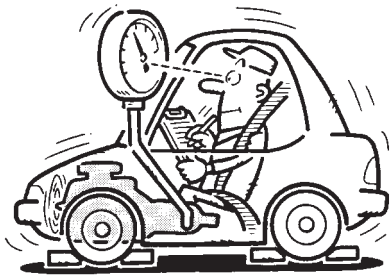

SAT494G

OK or NG

OK	▶	GO TO 5.
NG	▶	GO TO 8.

5	CHECK A/T FLUID CONDITION

1. Remove oil pan.
2. Check A/T fluid condition.

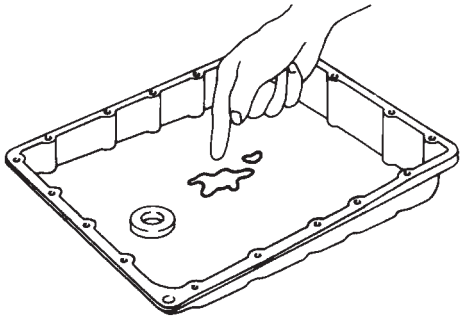

SAT171B

OK or NG

OK	▶	GO TO 6.
NG	▶	GO TO 8.

6	DETECT MALFUNCTIONING ITEM

1. Remove control valve assembly.
   Refer to AT-269.
2. Check the following items:

- Shift valve A
- Shift valve B
- Shift solenoid valve A
- Shift solenoid valve B
- Pilot valve
- Pilot filter

OK or NG

OK	▶	GO TO 7.
NG	▶	Repair or replace damaged parts.

7	CHECK SYMPTOM	
Check again.		
	OK or NG	
OK	▶	**INSPECTION END**
NG	▶	1. Perform TCM input/output signal inspection. 2. If NG, recheck TCM pin terminals for damage or loose connection with harness connector.

8	DETECT MALFUNCTIONING ITEM	
1. Remove control valve assembly. Refer to AT-269. 2. Check the following items: ● Shift valve A ● Shift valve B ● Shift solenoid valve A ● Shift solenoid valve B ● Pilot valve ● Pilot filter 3. Disassemble A/T. 4. Check the following items: ● Forward clutch assembly ● Forward one-way clutch ● Low one-way clutch ● High clutch assembly ● Torque converter ● Oil pump assembly		
	OK or NG	
OK	▶	GO TO 7.
NG	▶	Repair or replace damaged parts.

A/T Does Not Shift: $D_1 \rightarrow D_2$ Or Does Not Kickdown: $D_4 \rightarrow D_2$

=NAAT0081

SYMPTOM:

A/T does not shift from D_1 to D_2 at the specified speed.
A/T does not shift from D_4 to D_2 when depressing accelerator pedal fully at the specified speed.

1	CHECK SYMPTOM	
Are “Vehicle Does Not Creep Forward In “D”, “2” Or “1” Position” and “Vehicle Cannot Be Started From D_1” OK?		
Yes or No		
Yes	▶	GO TO 2.
No	▶	Go to “Vehicle Does Not Creep Forward In “D”, “2” Or “1” Position” and “Vehicle Cannot Be Started From D_1”, AT-229, 232.

2	CHECK PNP SWITCH CIRCUIT	
With CONSULT-II Does “TCM INPUT SIGNALS” in Data Monitor show damage to PNP switch circuit?		
Without CONSULT-II Does self-diagnosis show damage to PNP switch circuit?		

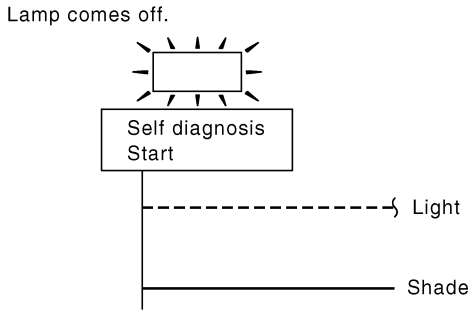

SAT705K

Yes or No		
Yes	▶	Check PNP switch circuit. Refer to “DTC P0705”, AT-102.
No	▶	GO TO 3.

3	CHECK VEHICLE SPEED SENSOR·A/T AND VEHICLE SPEED SENSOR·MTR CIRCUIT	
Check vehicle speed sensor·A/T (revolution sensor) and vehicle speed sensor·MTR circuit. Refer to “DTC P0720 and VEHICLE SPEED SENSOR·MTR”, AT-114, 197.		
OK or NG		
OK	▶	GO TO 4.
NG	▶	Repair or replace vehicle speed sensor·A/T (revolution sensor) and vehicle speed sensor·MTR circuits.

4	CHECK ACCELERATOR PEDAL POSITION SENSOR (THROTTLE POSITION SENSOR)

Check accelerator pedal position sensor (throttle position sensor). Refer to EC section.

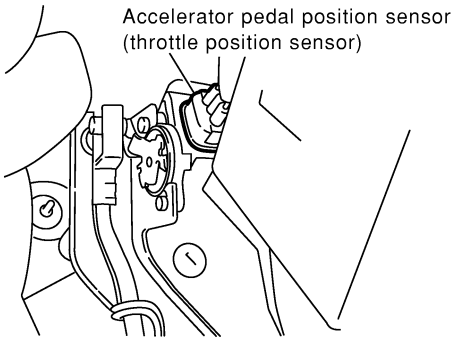

SAT516KA

OK or NG

OK	▶	GO TO 5.
NG	▶	Repair or replace accelerator pedal position sensor (throttle position sensor).

5	CHECK A/T FLUID CONDITION

1. Remove oil pan.
2. Check A/T fluid condition.

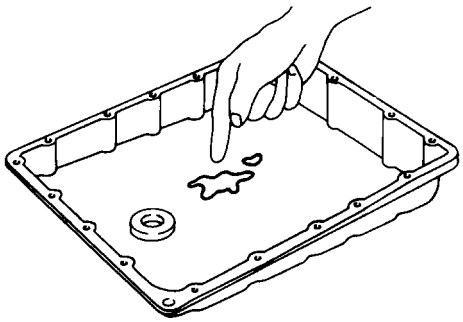

SAT171B

OK or NG

OK	▶	GO TO 6.
NG	▶	GO TO 8.

6	DETECT MALFUNCTIONING ITEM

1. Remove control valve. Refer to AT-269.
2. Check the following items:
- Shift valve A
- Shift solenoid valve A
- Pilot valve
- Pilot filter

OK or NG

OK	▶	GO TO 7.
NG	▶	Repair or replace damaged parts.

7	CHECK SYMPTOM	
Check again.		
	OK or NG	
OK	▶	**INSPECTION END**
NG	▶	1. Perform TCM input/output signal inspection. 2. If NG, recheck TCM pin terminals for damage or loose connection with harness connector.

8	DETECT MALFUNCTIONING ITEM	
1. Remove control valve. Refer to AT-269. 2. Check the following items: ● Shift valve A ● Shift solenoid valve A ● Pilot valve ● Pilot filter 3. Disassemble A/T. 4. Check the following items: ● Servo piston assembly ● Brake band ● Oil pump assembly		
	OK or NG	
OK	▶	GO TO 7.
NG	▶	Repair or replace damaged parts.

A/T Does Not Shift: $D_2 \rightarrow D_3$

=NAAT0082

SYMPTOM:

A/T does not shift from D_2 to D_3 at the specified speed.

1	CHECK SYMPTOM	
Are “Vehicle Does Not Creep Forward In “D”, “2” Or “1” Position” and “Vehicle Cannot Be Started From D_1” OK?		
Yes or No		
Yes	▶	GO TO 2.
No	▶	Go to “Vehicle Does Not Creep Forward In “D”, “2” Or “1” Position” and “Vehicle Cannot Be Started From D_1”, AT-229, 232.

2	CHECK PNP SWITCH CIRCUIT	
With CONSULT-II Does “TCM INPUT SIGNALS” in Data Monitor show damage to PNP switch circuit?		
Without CONSULT-II Does self-diagnosis show damage to PNP switch circuit?		

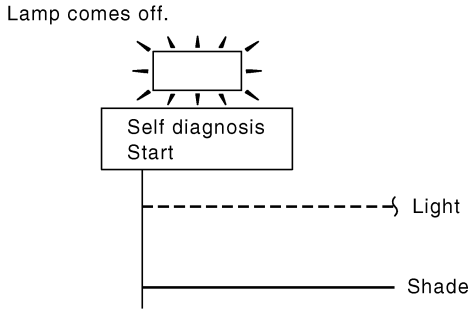

SAT705K

Yes or No		
Yes	▶	Check PNP switch circuit. Refer to “DTC P0705”, AT-102.
No	▶	GO TO 3.

3	CHECK ACCELERATOR PEDAL POSITION SENSOR (THROTTLE POSITION SENSOR)	
Check accelerator pedal position sensor (throttle position sensor). Refer to EC section.		

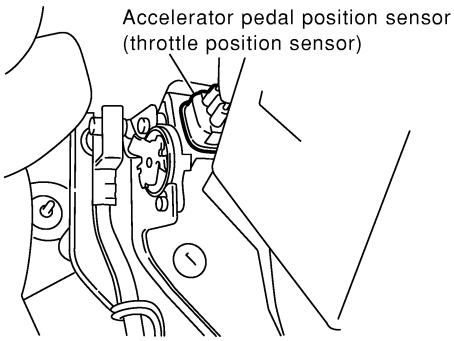

SAT516KA

OK or NG		
OK	▶	GO TO 4.
NG	▶	Repair or replace accelerator pedal position sensor (throttle position sensor).

4	CHECK A/T FLUID CONDITION

1. Remove oil pan.
2. Check A/T fluid condition.

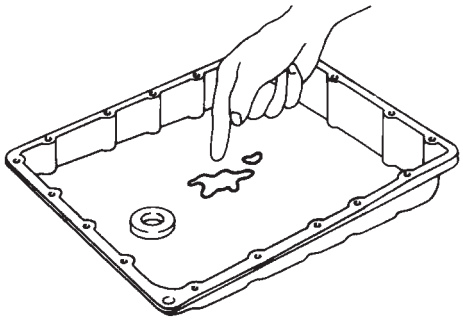

SAT171B

OK or NG

OK	▶	GO TO 5.
NG	▶	GO TO 7.

5	DETECT MALFUNCTIONING ITEM

1. Remove control valve Assembly. Refer to AT-269.
2. Check the following items:
- Shift valve B
- Shift solenoid valve B
- Pilot valve
- Pilot filter

OK or NG

OK	▶	GO TO 6.
NG	▶	Repair or replace damaged parts.

6	CHECK SYMPTOM

Check again.

OK or NG

OK	▶	**INSPECTION END**
NG	▶	1. Perform TCM input/output signal inspection. 2. If NG, recheck TCM pin terminals for damage or loose connection with harness connector.

7	DETECT MALFUNCTIONING ITEM
1. Remove control valve Assembly. Refer to AT-269. 2. Check the following items: ● Shift valve B ● Shift solenoid valve B ● Pilot valve ● Pilot filter 3. Disassemble A/T. 4. Check the following items: ● Servo piston assembly ● High clutch assembly ● Oil pump assembly	
OK or NG	
OK ▶	GO TO 6.
NG ▶	Repair or replace damaged parts.

A/T Does Not Shift: $D_3 \rightarrow D_4$

=NAAT0083

SYMPTOM:

- **A/T does not shift from D_3 to D_4 at the specified speed.**
- **A/T must be warm before D_3 to D_4 shift will occur.**

1	CHECK SYMPTOM	
Are “Vehicle Does Not Creep Forward In “D”, “2” Or “1” Position” and “Vehicle Cannot Be Started From D_1” OK?		
Yes or No		
Yes	▶	GO TO 2.
No	▶	Go to “Vehicle Does Not Creep Forward In “D”, “2” Or “1” Position” and “Vehicle Cannot Be Started From D_1”, AT-229, 232.

2	CHECK SELF-DIAGNOSTIC RESULTS	
With CONSULT-II Does self-diagnosis, after cruise test, show damage to any of the following circuits? ● Inhibitor switch ● Overdrive control switch ● A/T fluid temperature sensor ● Revolution sensor ● Shift solenoid valve A or B ● Vehicle speed sensor 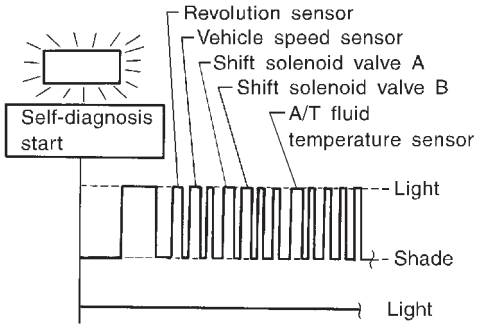 SAT580I		
Yes or No		
Yes	▶	Check damaged circuit. Refer to “DTC P0705, P0710, P0720, P0750, P0755 or VHCL SPEED SEN·MTR”, AT-102, 108, 114, 171, 175 or 197.
No	▶	GO TO 3.

3	CHECK ACCELERATOR PEDAL POSITION SENSOR (THROTTLE POSITION SENSOR)

Check accelerator pedal position sensor (throttle position sensor). Refer to EC section.

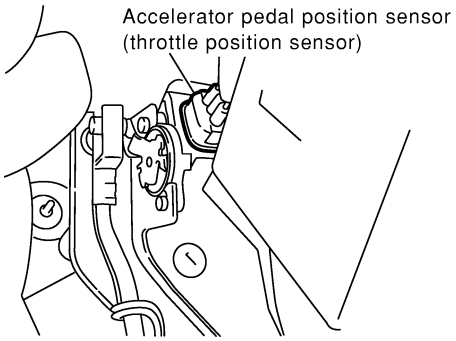

SAT516KA

OK or NG

OK	▶	GO TO 4.
NG	▶	Repair or replace accelerator pedal position sensor (throttle position sensor).

4	CHECK A/T FLUID CONDITION

1. Remove oil pan.
2. Check A/T fluid condition.

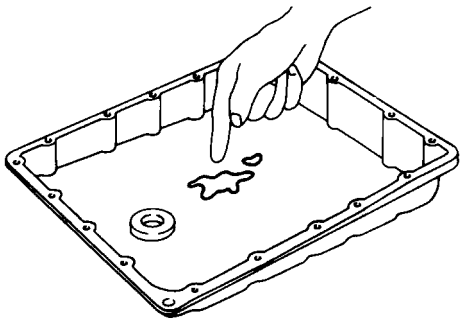

SAT171B

OK or NG

OK	▶	GO TO 5.
NG	▶	GO TO 7.

5	DETECT MALFUNCTIONING ITEM

1. Remove control valve Assembly. Refer to AT-269.
2. Check the following items:
- Shift valve B
- Overrun clutch control valve
- Shift solenoid valve B
- Pilot valve
- Pilot filter

OK or NG

OK	▶	GO TO 6.
NG	▶	Repair or replace damaged parts.

6	CHECK SYMPTOM
Check again.	
OK or NG	
OK ▶	**INSPECTION END**
NG ▶	1. Perform TCM input/output signal inspection. 2. If NG, recheck TCM pin terminals for damage or loose connection with harness connector.

7	DETECT MALFUNCTIONING ITEM
1. Remove control valve Assembly. Refer to AT-269. 2. Check the following items: ● Shift valve B ● Overrun clutch control valve ● Shift solenoid valve B ● Pilot valve ● Pilot filter 3. Disassemble A/T. 4. Check the following items: ● Servo piston assembly ● Brake band ● Torque converter ● Oil pump assembly	
OK or NG	
OK ▶	GO TO 6.
NG ▶	Repair or replace damaged parts.

A/T Does Not Perform Lock-up

=NAAT0084

SYMPTOM:

A/T does not perform lock-up at the specified speed.

1	CHECK SELF-DIAGNOSTIC RESULTS

Does self-diagnosis show damage to torque converter clutch solenoid valve circuit after cruise test?

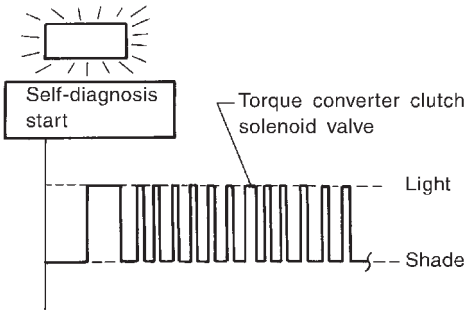

SAT581I

Yes or No

Yes	▶	Check torque converter clutch solenoid valve circuit. Refer to “DTC P0740”, AT-151.
No	▶	GO TO 2.

2	CHECK ACCELERATOR PEDAL POSITION SENSOR (THROTTLE POSITION SENSOR)

Check accelerator pedal position sensor (throttle position sensor). Refer to EC section.

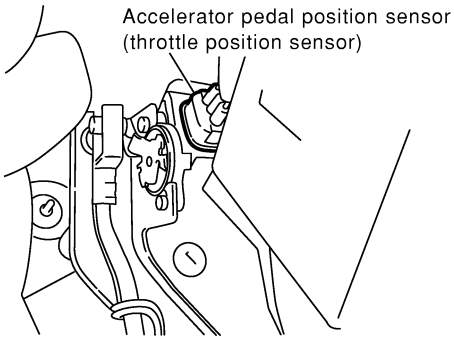

SAT516KA

OK or NG

OK	▶	GO TO 3.
NG	▶	Repair or replace accelerator pedal position sensor (throttle position sensor).

3	DETECT MALFUNCTIONING ITEM

1. Remove control valve. Refer to AT-269.
2. Check following items:
- Torque converter clutch control valve
- Torque converter relief valve
- Torque converter clutch solenoid valve
- Pilot valve
- Pilot filter

OK or NG

OK	▶	GO TO 4.
NG	▶	Repair or replace damaged parts.

4	CHECK SYMPTOM	
Check again.		
	OK or NG	
OK	▶	**INSPECTION END**
NG	▶	1. Perform TCM input/output signal inspection. 2. If NG, recheck TCM pin terminals for damage or loose connection with harness connector.

A/T Does Not Hold Lock-up Condition

=NAAT0085

SYMPTOM:

A/T does not hold lock-up condition for more than 30 seconds.

1	CHECK DIAGNOSTIC RESULTS	
Does self-diagnosis show damage to engine speed signal circuit after cruise test?		

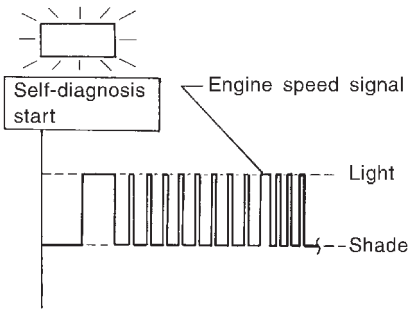

SAT582I

Yes or No

Yes	▶	Check engine speed signal circuit. Refer to “DTC P0725”, AT-119.
No	▶	GO TO 2.

2	CHECK A/T FLUID CONDITION	

1. Remove oil pan.
2. Check A/T fluid condition.

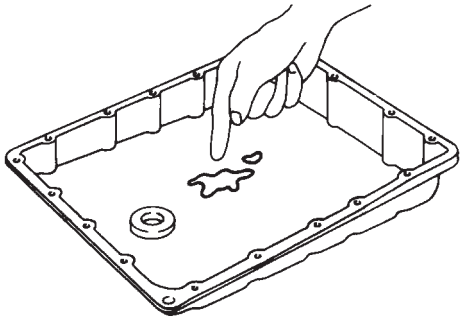

SAT171B

OK or NG

OK	▶	GO TO 3.
NG	▶	GO TO 5.

3	DETECT MALFUNCTIONING ITEM	

1. Remove control valve assembly. Refer to AT-269.
2. Check the following items:

- Torque converter clutch control valve
- Pilot valve
- Pilot filter

OK or NG

OK	▶	GO TO 4.
NG	▶	Repair or replace damaged parts.

4	CHECK SYMPTOM	
Check again.		
OK or NG		
OK	▶	**INSPECTION END**
NG	▶	1. Perform TCM input/output signal inspection. 2. If NG, recheck TCM pin terminals for damage or loose connection with harness connector.

5	DETECT MALFUNCTIONING ITEM	
1. Remove control valve assembly. Refer to AT-269. 2. Check the following items: ● Torque converter clutch control valve ● Pilot valve ● Pilot filter 3. Disassemble A/T. 4. Check torque converter and oil pump assembly.		
OK or NG		
OK	▶	GO TO 4.
NG	▶	Repair or replace damaged parts.

Lock-up Is Not Released

=NAAT0086

SYMPTOM:

Lock-up is not released when accelerator pedal is released.

1	CHECK ACCELERATOR PEDAL POSITION SENSOR CIRCUIT
With CONSULT-II Does “TCM INPUT SIGNALS” in Data Monitor show damage to closed throttle position switch circuit?	
Without CONSULT-II Does self-diagnosis show damage to closed throttle position switch circuit? 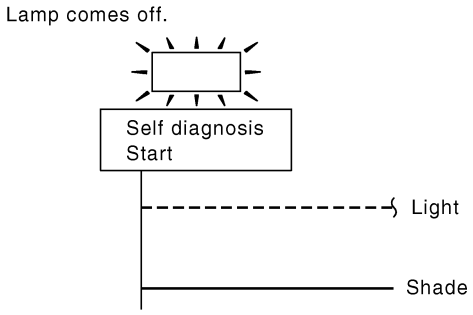 SAT705K	
Yes or No	
Yes ▶	Check accelerator pedal position sensor circuit. Refer to “DTC P1705”, AT-179.
No ▶	GO TO 2.

2	CHECK SYMPTOM
Check again.	
OK or NG	
OK ▶	**INSPECTION END**
NG ▶	1. Perform TCM input/output signal inspection. 2. If NG, recheck TCM pin terminals for damage or loose connection with harness connector.

Engine Speed Does Not Return To Idle (Light Braking $D_4 \rightarrow D_3$)

=NAAT0087

SYMPTOM:

- **Engine speed does not smoothly return to idle when A/T shifts from D_4 to D_3.**
- **Vehicle does not decelerate by engine brake when turning overdrive control switch OFF.**
- **Vehicle does not decelerate by engine brake when shifting A/T from "D" to "2" position.**

1	CHECK SELF-DIAGNOSTIC RESULTS	
Does self-diagnosis show damage to overrun clutch solenoid valve circuit after cruise test?		
Yes or No		
Yes	▶	Check overrun clutch solenoid valve circuit. Refer to "DTC P1760", AT-185.
No	▶	GO TO 2.

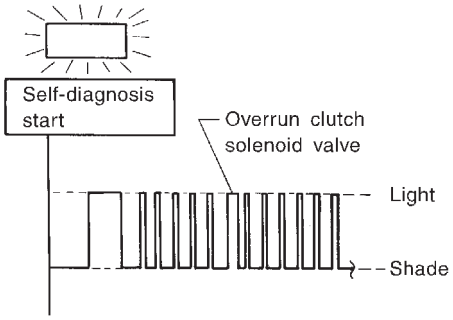

SAT583I

2	CHECK ACCELERATOR PEDAL POSITION SENSOR (THROTTLE POSITION SENSOR)	
Check accelerator pedal position sensor (throttle position sensor). Refer to EC section.		
OK or NG		
OK	▶	GO TO 3.
NG	▶	Repair or replace accelerator pedal position sensor (throttle position sensor).

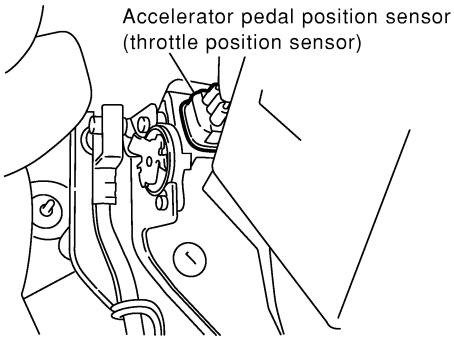

SAT516KA

3	CHECK A/T FLUID CONDITION

1. Remove oil pan.
2. Check A/T fluid condition.

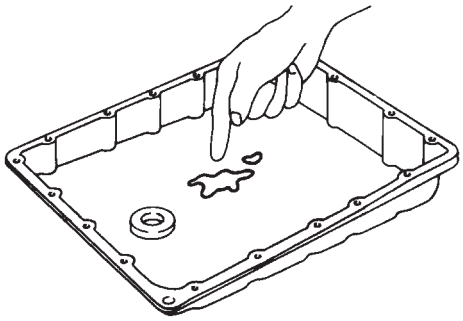

SAT171B

OK or NG

OK	▶	GO TO 4.
NG	▶	GO TO 6.

4	DETECT MALFUNCTIONING ITEM

1. Remove control valve assembly. Refer to AT-269.
2. Check the following items:
- Overrun clutch control valve
- Overrun clutch reducing valve
- Overrun clutch solenoid valve

OK or NG

OK	▶	GO TO 5.
NG	▶	Repair or replace damaged parts.

5	CHECK SYMPTOM

Check again.

OK or NG

OK	▶	**INSPECTION END**
NG	▶	1. Perform TCM input/output signal inspection. 2. If NG, recheck TCM pin terminals for damage or loose connection with harness connector.

6	DETECT MALFUNCTIONING ITEM

1. Remove control valve assembly. Refer to AT-269.
2. Check the following items:
- Overrun clutch control valve
- Overrun clutch reducing valve
- Overrun clutch solenoid valve
3. Disassemble A/T.
4. Check the following items:
- Overrun clutch assembly
- Oil pump assembly

OK or NG

OK	▶	GO TO 5.
NG	▶	Repair or replace damaged parts.

Vehicle Does Not Start From D_1

NAAT0088

SYMPTOM:

Vehicle does not start from D_1 on Cruise test — Part 2.

1	CHECK SELF-DIAGNOSTIC RESULTS	
Does self-diagnosis show damage to vehicle speed sensor·A/T (revolution sensor), shift solenoid valve A, B or vehicle speed sensor·MTR after cruise test?		
	Yes or No	
Yes	▶	Check damaged circuit. Refer to “DTC P0720, P0750, P0755 or VHCL SPEED SEN·MTR”, AT-114, 171, 175 or 197.
No	▶	GO TO 2.

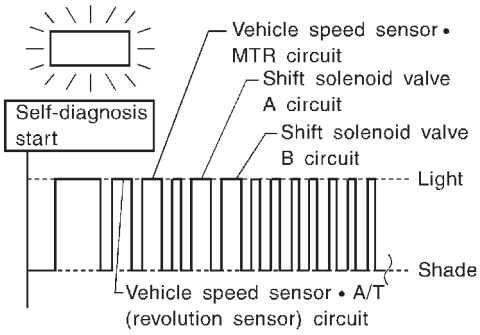

SAT686I

2	CHECK SYMPTOM	
Check again.		
	OK or NG	
OK	▶	Go to “Vehicle Cannot Be Started From D_1”, AT-232.
NG	▶	1. Perform TCM input/output signal inspection. 2. If NG, recheck TCM pin terminals for damage or loose connection with harness connector.

A/T Does Not Shift: $D_4 \rightarrow D_3$, When Overdrive Control Switch "ON" → "OFF"

=NAAT0089

SYMPTOM:

A/T does not shift from D_4 to D_3 when changing overdrive control switch to "OFF" position.

1	CHECK OVERDRIVE CONTROL SWITCH CIRCUIT
With CONSULT-II Does "TCM INPUT SIGNALS" in Data Monitor show damage to overdrive control switch circuit?	
Without CONSULT-II Does self-diagnosis show damage to overdrive control switch circuit?	

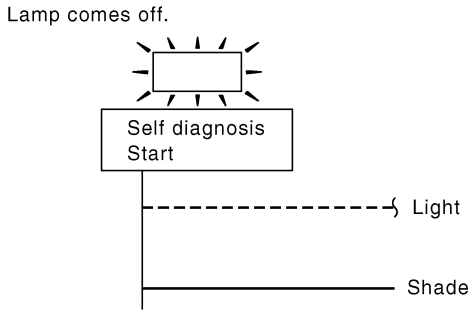

SAT705K

Yes or No

Yes	▶	Check overdrive control switch circuit. Refer to AT-255.
No	▶	Go to "A/T Does Not Shift: $D_2 \rightarrow D_3$", AT-238.

A/T Does Not Shift: $D_3 \rightarrow 2_2$, When Selector Lever "D" → "2" Position

=NAAT0090

SYMPTOM:

A/T does not shift from D_3 to 2_2 when changing selector lever from "D" to "2" position.

1	CHECK PNP SWITCH CIRCUIT
With CONSULT-II Does "TCM INPUT SIGNALS" in Data Monitor show damage to PNP switch circuit?	
Without CONSULT-II Does self-diagnosis show damage to PNP switch circuit? 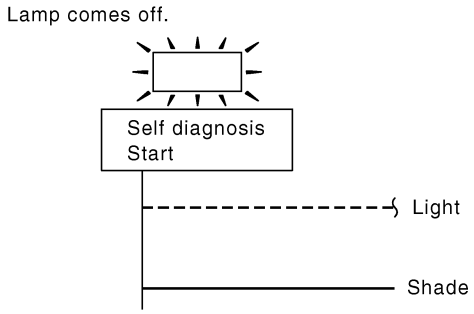 SAT705K	
Yes or No	
Yes ▶	Check PNP switch circuit. Refer to "DTC P0705", AT-102.
No ▶	Go to "A/T Does Not Shift: $D_1 \rightarrow D_2$ Or Does Not Kickdown: $D_4 \rightarrow D_2$", AT-235.

A/T Does Not Shift: $2_2 \rightarrow 1_1$, When Selector Lever "2" → "1" Position

=NAAT0091

SYMPTOM:

A/T does not shift from 2_2 to 1_1 when changing selector lever from "2" to "1" position.

1	CHECK PNP SWITCH CIRCUIT
With CONSULT-II Does "TCM INPUT SIGNALS" in Data Monitor show damage to PNP switch circuit?	
Without CONSULT-II Does self-diagnosis show damage to PNP switch circuit? 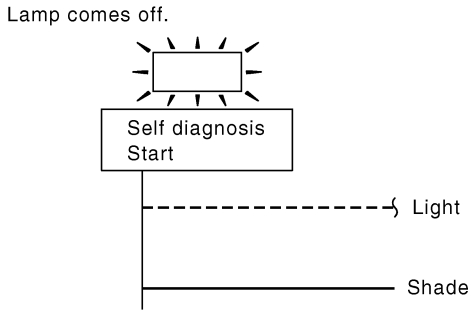 SAT705K	
Yes or No	
Yes ▶	Check PNP switch circuit. Refer to "DTC P0705", AT-102.
No ▶	GO TO 2.

2	CHECK SYMPTOM
Check again. 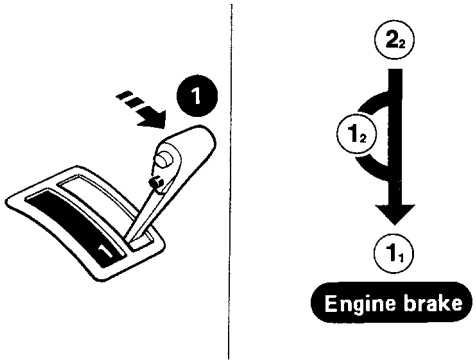 SAT778B	
OK or NG	
OK ▶	**INSPECTION END**
NG ▶	1. Perform TCM input/output signal inspection. 2. If NG, recheck TCM pin terminals for damage or loose connection with harness connector.

Vehicle Does Not Decelerate By Engine Brake

NAAT0092

SYMPTOM:

Vehicle does not decelerate by engine brake when shifting from 2_2 (1_2) to 1_1.

1	CHECK SYMPTOM	
Is “Vehicle Does Not Creep Backward In “R” Position” OK?		
	Yes or No	
Yes	▶	Go to “Engine Speed Does Not Return To Idle (Light Braking $D_4 \rightarrow D_3$)”, AT-249.
No	▶	Go to “Vehicle Does Not Creep Backward In “R” Position”, AT-226.

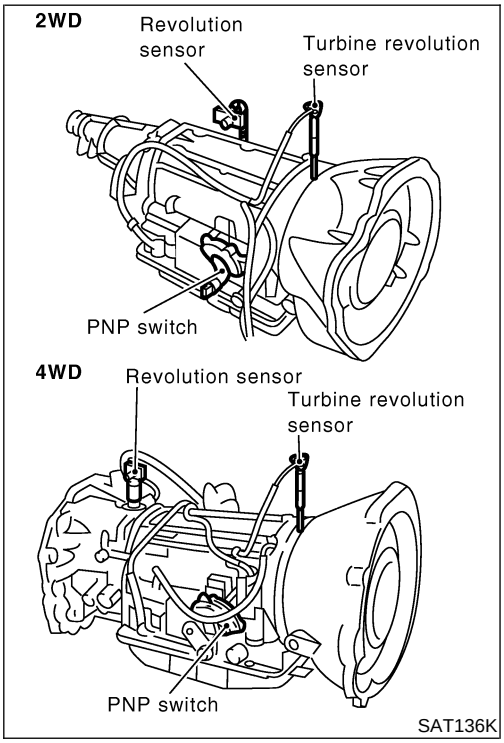

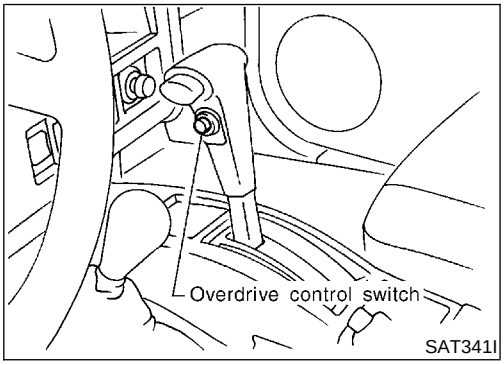

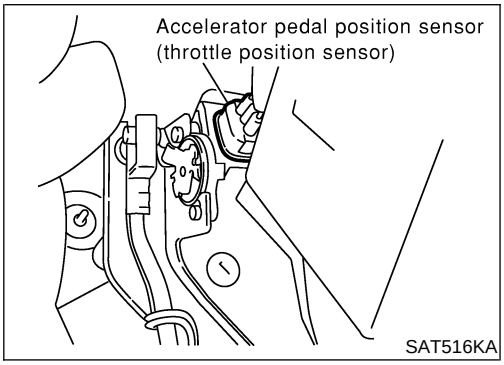

TCM Self-diagnosis Does Not Activate (PNP, Overdrive Control and Accelerator Pedal Position Sensor Circuit Checks)

NAAT0204

SYMPTOM:

O/D OFF indicator lamp does not come on in TCM self-diagnostic procedure even the lamp circuit is good.

DESCRIPTION

NAAT0204S01

- PNP switch
  The PNP switch assemble includes a transmission range switch. The transmission range switch detects the selector position and sends a signal to the TCM.
- Overdrive control switch
  Detects the overdrive control switch position (ON or OFF) and sends a signal to the TCM.
- Closed throttle position signal and wide-open throttle position signal
  ECM judges throttle opening based on a signal from accelerator pedal position sensor, and sends the signal via CAN communication to TCM.

DIAGNOSTIC PROCEDURE

=NAAT0204S03

NOTE:
The diagnostic procedure includes inspections for the overdrive control and throttle position switch circuits.

1	INSPECTION START
Do you have CONSULT-II?	
Yes or No	
Yes (With CONSULT-II) ▶	GO TO 2.
No (Without CONSULT-II) ▶	GO TO 3.

2	CHECK PNP SWITCH CIRCUIT (With CONSULT-II)

With CONSULT-II

1. Turn ignition switch to "ON" position.
   (Do not start engine.)
2. Select "TCM INPUT SIGNALS" in "DATA MONITOR" mode for "A/T" with CONSULT-II.
3. Read out "P", "R", "N", "D", "2" and "1" position switches moving selector lever to each position. Check the signal of the selector lever position is indicated properly.

DATA MONITOR	
MONITORING	
PN POSI SW	OFF
R POSITION SW	OFF
D POSITION SW	OFF
2 POSITION SW	ON
1 POSITION SW	OFF

SAT643J

OK or NG

OK ▶	GO TO 5.
NG ▶	GO TO 4.

3	CHECK PNP SWITCH CIRCUIT (Without CONSULT-II)

Without CONSULT-II

1. Turn ignition switch to "ON" position.
   (Do not start engine.)
2. Check voltage between TCM harness connector M120 terminals 26, 27, 34, 35, 36 and ground while moving selector lever through each position.

Lever position	Terminals				
	36	35	34	27	26
P, N	**B**	0	0	0	0
R	0	**B**	0	0	0
D	0	0	**B**	0	0
2	0	0	0	**B**	0
1	0	0	0	0	**B**

MTBL0205

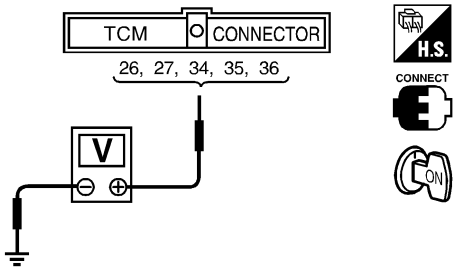

SAT517J

Does battery voltage exist (B) or non-existent (0)?

Yes	▶	GO TO 6.
No	▶	GO TO 4.

4	DETECT MALFUNCTIONING ITEM

Check the following items:

- PNP switch
  Refer to "Component Inspection", AT-260.
- Harness for short or open between ignition switch and PNP switch (Main harness)
- Harness for short or open between PNP switch and TCM (Main harness)

OK or NG

OK (With CONSULT-II)	▶	GO TO 5.
OK (Without CONSULT-II)	▶	GO TO 6.
NG	▶	Repair or replace damaged parts.

5	CHECK OVERDRIVE CONTROL SWITCH CIRCUIT

With CONSULT-II

1. Turn ignition switch to "ON" position.
   (Do not start engine.)
2. Select "TCM INPUT SIGNALS" in "DATA MONITOR" mode for "A/T" with CONSULT-II.
3. Read out "OVERDRIVE SWITCH". Check the signal of the overdrive control switch is indicated properly.
   (Overdrive control switch "ON" displayed on CONSULT-II means overdrive "OFF".)

DATA MONITOR	
MONITORING	
ENGINE SPEED	XXX rpm
TURBINE REV	XXX rpm
OVERDRIVE SW	ON
PN POSI SW	OFF
R POSITION SW	OFF

SAT645J

OK or NG

OK (With CONSULT-II)	▶	GO TO 7.
NG	▶	GO TO 6.

6	DETECT MALFUNCTIONING ITEM

Check the following items:

- Overdrive control switch
  Refer to "Component Inspection", AT-260.
- Harness for short or open between TCM and overdrive control switch (Main harness)
- Harness for short or open of ground circuit for overdrive control switch (Main harness)

OK or NG

OK (With CONSULT-II)	▶	GO TO 7.
OK (Without CONSULT-II)	▶	GO TO 8.
NG	▶	Repair or replace damaged parts.

7	CHECK ACCELERATOR PEDAL POSITION SENSOR CIRCUIT (With CONSULT-II)

With CONSULT-II

1. Turn ignition switch to "ON" position.
   (Do not start engine.)
2. Select "TCM INPUT SIGNALS" in "DATA MONITOR" mode for "A/T" with CONSULT-II.
3. Apply vacuum to the throttle opener, then check the following. Refer to steps 1 and 2 of "Preparation", "TCM SELF-DIAGNOSTIC PROCEDURE (No Tools)", AT-48.
4. Read out "CLOSED THL/SW" and "W/O THRL/P-SW" depressing and releasing accelerator pedal.
   Check the signal of throttle position switch is indicated properly.

Accelerator pedal condition	Data monitor	
	CLOSED THL/SW	W/O THRL/P-SW
Released	ON	OFF
Fully depressed	OFF	ON

MTBL0011

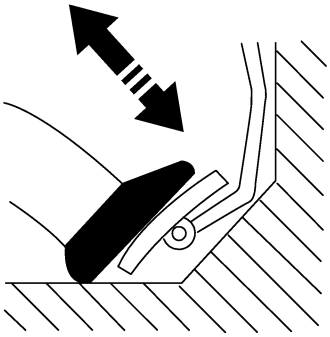

DATA MONITOR	
MONITORING	
POWERSHIFT SW	OFF
CLOSED THL/SW	OFF
W/O THRL/P-SW	OFF
HOLD SW	OFF
BRAKE SW	ON

SAT646J

OK or NG

OK	▶	GO TO 9.
NG	▶	GO TO 8.

8	DETECT MALFUNCTIONING ITEM

Check the following items:

- Accelerator pedal position sensor
- Harness for short or open between ignition switch and accelerator pedal position sensor (Main harness)
- Harness for short or open between accelerator pedal position sensor and ECM (Main harness)

OK or NG

OK	▶	GO TO 9.
NG	▶	Repair or replace damaged parts.

9	CHECK TCM INSPECTION

1. Perform TCM input/output signal inspection.
2. If NG, recheck TCM pin terminals for damage or loose connection with harness connector.

OK or NG

OK	▶	**INSPECTION END**
NG	▶	Repair or replace damaged parts.

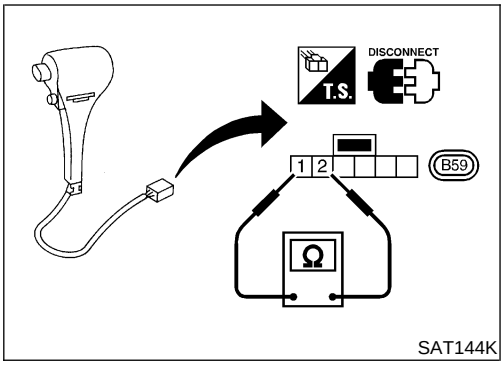

SAT144K

COMPONENT INSPECTION

NAAT0204S04

Overdrive Control Switch

NAAT0204S0401

- Check continuity between two terminals.

Continuity:

Switch position "ON":

No

Switch position "OFF":

Yes

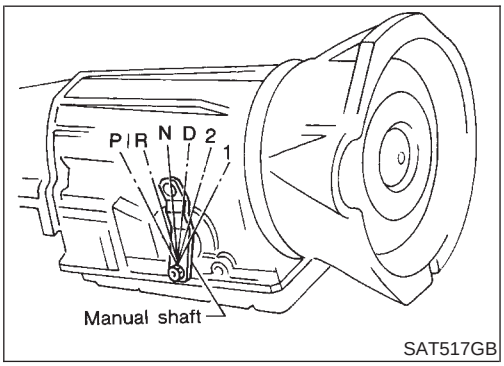

SAT517GB

Park/Neutral Position Switch

NAAT0204S0402

1. Check continuity between terminals 1 and 2 and between terminals 3 and 4, 5, 6, 7, 8, 9 while moving manual shaft through each position.

Lever position	Terminal No.	
P	1 - 2	3 - 4
R	3 - 5	
N	1 - 2	3 - 6
D	3 - 7	
2	3 - 8	
1	3 - 9	

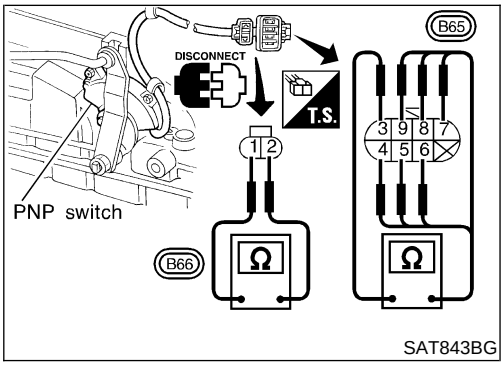

SAT843BG

2. If NG, check again with manual control linkage disconnected from manual shaft of A/T assembly. Refer to step 1.
3. If OK on step 2, adjust manual control linkage. Refer to AT-272.

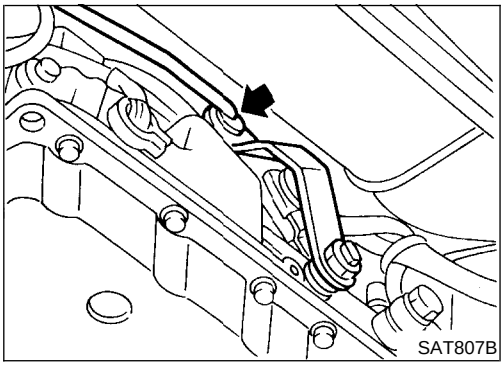
SAT807B

4. If NG on step 2, remove PNP switch from A/T and check continuity of PNP switch terminals. Refer to step 1.
5. If OK on step 4, adjust PNP switch. Refer to AT-272.
6. If NG on step 4, replace PNP switch.

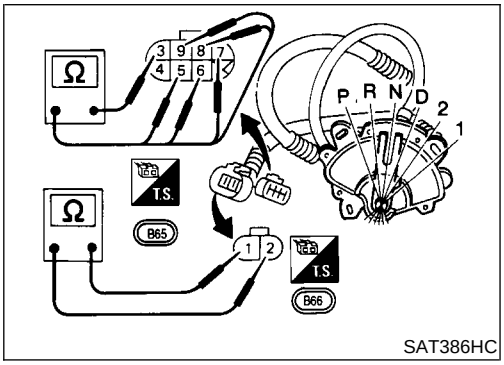

SAT386HC

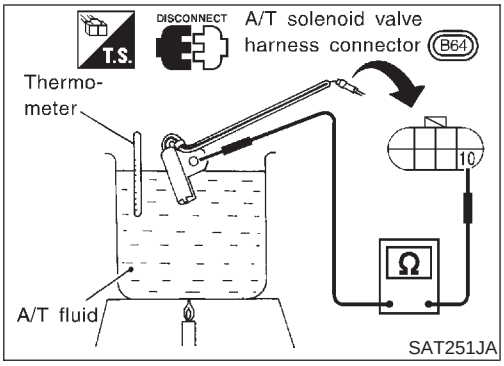

A/T Fluid Temperature Switch

NAAT0204S0404

1. Make sure the A/T fluid warning lamp lights when the key is inserted and turned to "ON".
2. Make sure the A/T fluid warning lamp goes off when turning the ignition switch to "ON".
3. Check resistance between terminal 10 and ground while changing temperature as shown at left.

Temperature °C (°F)	Resistance
140 (284) or more	Yes
140 (284) or less	No

Description

NAAT0093

- The mechanical key interlock mechanism also operates as a shift lock:
  With the key switch turned to “ON”, the selector lever cannot be shifted from “P” (parking) to any other position unless the brake pedal is depressed.
  With the key removed, the selector lever cannot be shifted from “P” to any other position.
  The key cannot be removed unless the selector lever is placed in “P”.
- The shift lock and key interlock mechanisms are controlled by the ON-OFF operation of the shift lock solenoid and by the operation of the rotator and slider located inside the key cylinder, respectively.

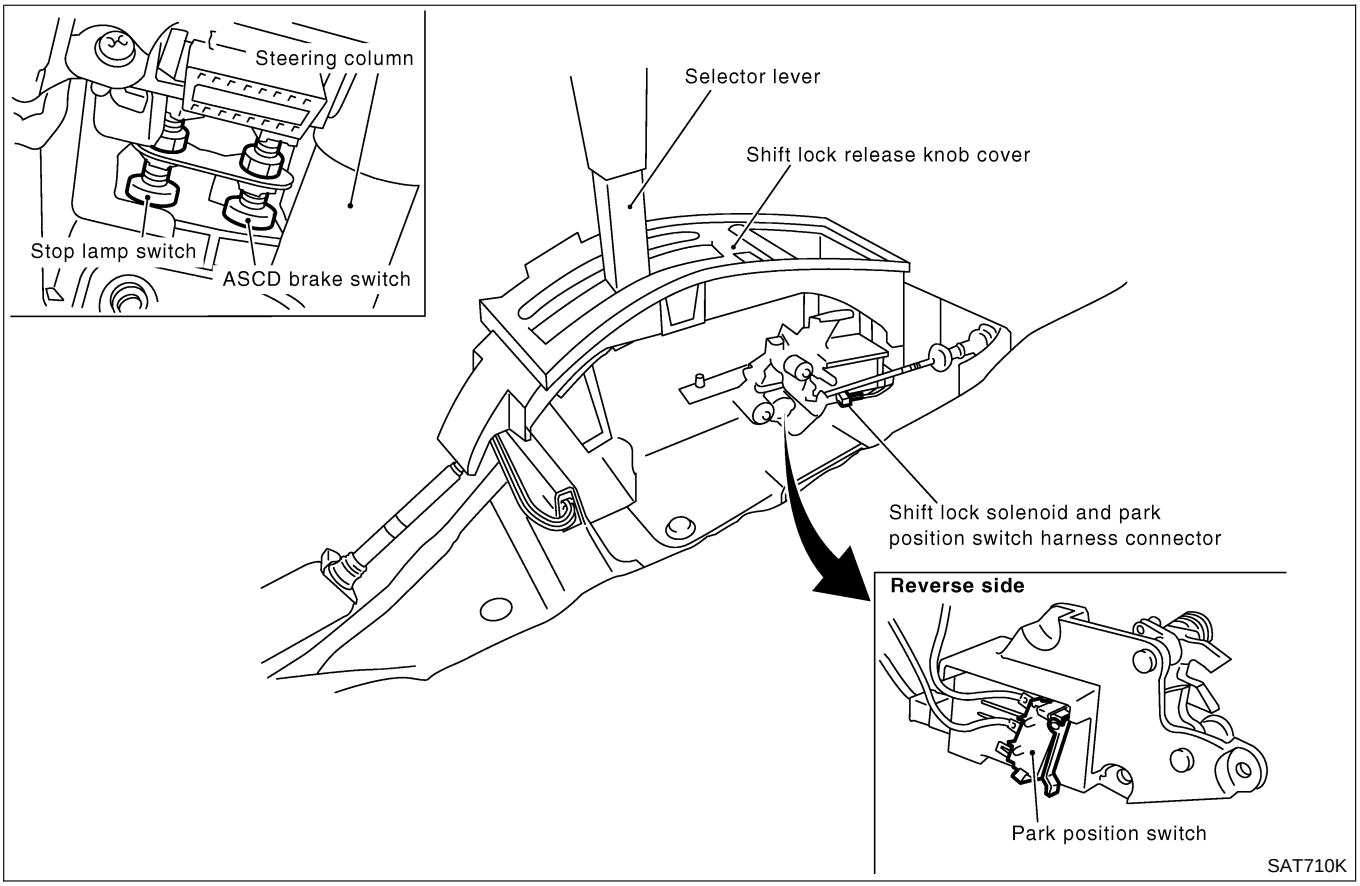

Wiring Diagram — SHIFT —

NAAT0094

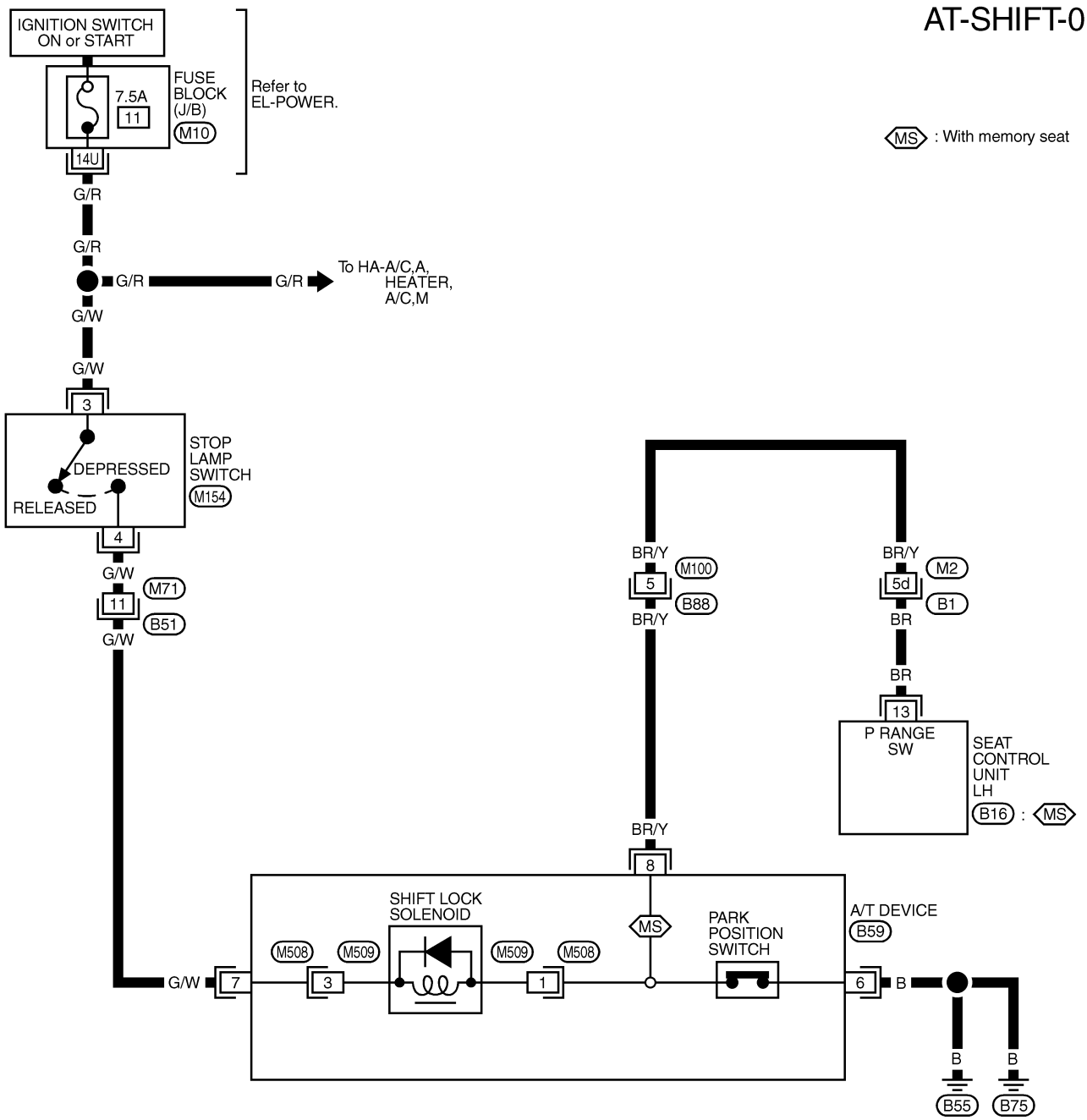

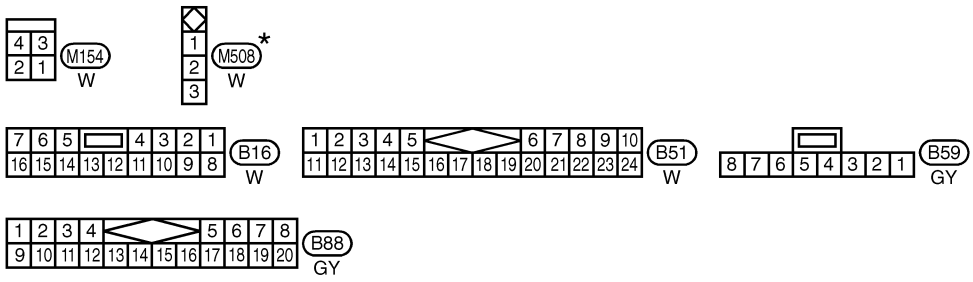

* : This connector is not shown in "HARNESS LAYOUT", EL section.

REFER TO THE FOLLOWING.
B1 -SUPER MULTIPLE JUNCTION (SMJ)
M10 -FUSE BLOCK-JUNCTION BOX (J/B)

MAT323B

Diagnostic Procedure

NAAT0095

SYMPTOM 1:

- **Selector lever cannot be moved from “P” position with key in “ON” position and brake pedal applied.**
- **Selector lever can be moved from “P” position with key in “ON” position and brake pedal released.**
- **Selector lever can be moved from “P” position when key is removed from key cylinder.**

SYMPTOM 2:

Ignition key cannot be removed when selector lever is set to “P” position.

Ignition key can be removed when selector lever is set to any position except “P”.

1	CHECK KEY INTERLOCK CABLE	
Check key interlock cable for damage.		
	OK or NG	
OK	▶	GO TO 2.
NG	▶	Repair key interlock cable. Refer to “Key Interlock Cable”, AT-267.

2	CHECK SELECTOR LEVER POSITION	
Check selector lever position for damage.		
	OK or NG	
OK	▶	GO TO 3.
NG	▶	Check selector lever. Refer to “ON-VEHICLE SERVICE — PNP Switch and Manual Control Linkage Adjustment”, AT-272 and AT-272.

3 CHECK POWER SOURCE

1. Turn ignition switch to ON position. (Do not start engine.)
2. Check voltage between A/T device harness terminal 7 (G/W) and ground.

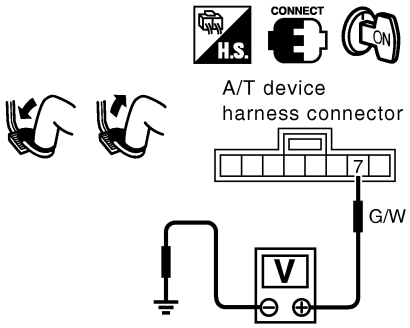

Brake pedal	Voltage
Depressed	Battery voltage
Released	0V

SAT684KB

	OK or NG	
OK	▶	GO TO 5.
NG	▶	GO TO 4.

4	DETECT MALFUNCTIONING ITEM

Check the following items:
1. 7.5A fuse [No. 11, located in the fuse block (J/B)]
2. Ignition switch (Refer to EL-11, "Schematic".)
3. Harness for short or open between battery and stop lamp switch harness connector 3 (G/W)
4. Harness for short or open between stop lamp switch harness connector 4 (G/W) and A/T device harness connector 7 (G/W)
5. Diode
6. Stop lamp switch

a. Check continuity between connector terminals 3 and 4.

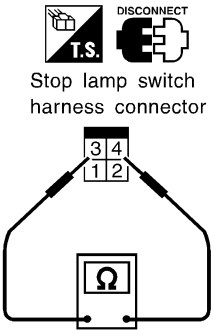

Condition	Continuity
When brake pedal is depressed	Yes
When brake pedal is released	No

SCIA1569E

Check stop lamp switch after adjusting brake pedal — refer to BR-13, "Adjustment".

OK or NG

OK	▶	GO TO 5.
NG	▶	Repair or replace damaged parts.

5	CHECK GROUND CIRCUIT

1. Turn ignition switch to OFF position.
2. Disconnect A/T device harness connector.
3. Check continuity between A/T device harness connector terminal 6 (B) and ground. Refer to wiring diagram — SHIFT —.

   Continuity should exist.

   If OK, check harness for short to ground and short to power.

OK or NG

OK	▶	GO TO 6.
NG	▶	Repair open circuit or short to ground or short to power in harness or connectors.

6	CHECK PARK POSITION SWITCH

- Check continuity between A/T device harness connector B59 terminal 6 and park position switch harness connctor M508 terminal 1.

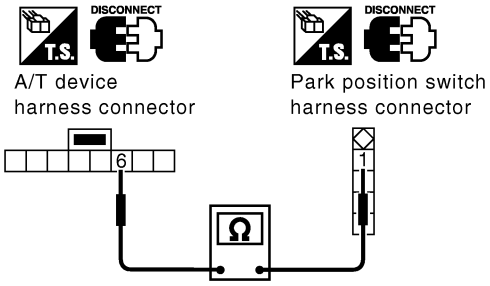

Condition	Continuity
When selector lever is set in "P" position and selector lever button is released	Yes
Except above	No

SAT713K

OK or NG

OK	▶	GO TO 7.
NG	▶	Replace park position switch.

7	CHECK SHIFT LOCK SOLENOID

- Check operation by applying battery voltage shift lock solenoid harness connctor terminals 1 and 3.

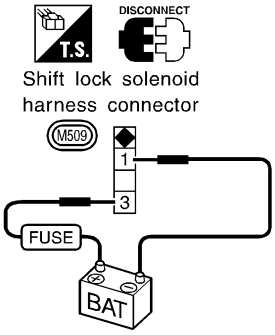

SAT762J

OK or NG

OK	▶	GO TO 8.
NG	▶	Replace shift lock solenoid.

8	CHECK SHIFT LOCK OPERATION

1. Reconnect shift lock harness connector.
2. Turn ignition switch from OFF to ON position. (Do not start engine.)
3. Recheck shift lock operation.

OK or NG

OK	▶	**INSPECTION END**
NG	▶	GO TO 9.

9	CHECK A/T DEVICE INSPECTION

1. Perform A/T device input/output signal inspection test.
2. If NG, recheck harness connector connection.

OK or NG

OK	▶	**INSPECTION END**
NG	▶	Repair or replace damaged parts.

Components

NAAT0097

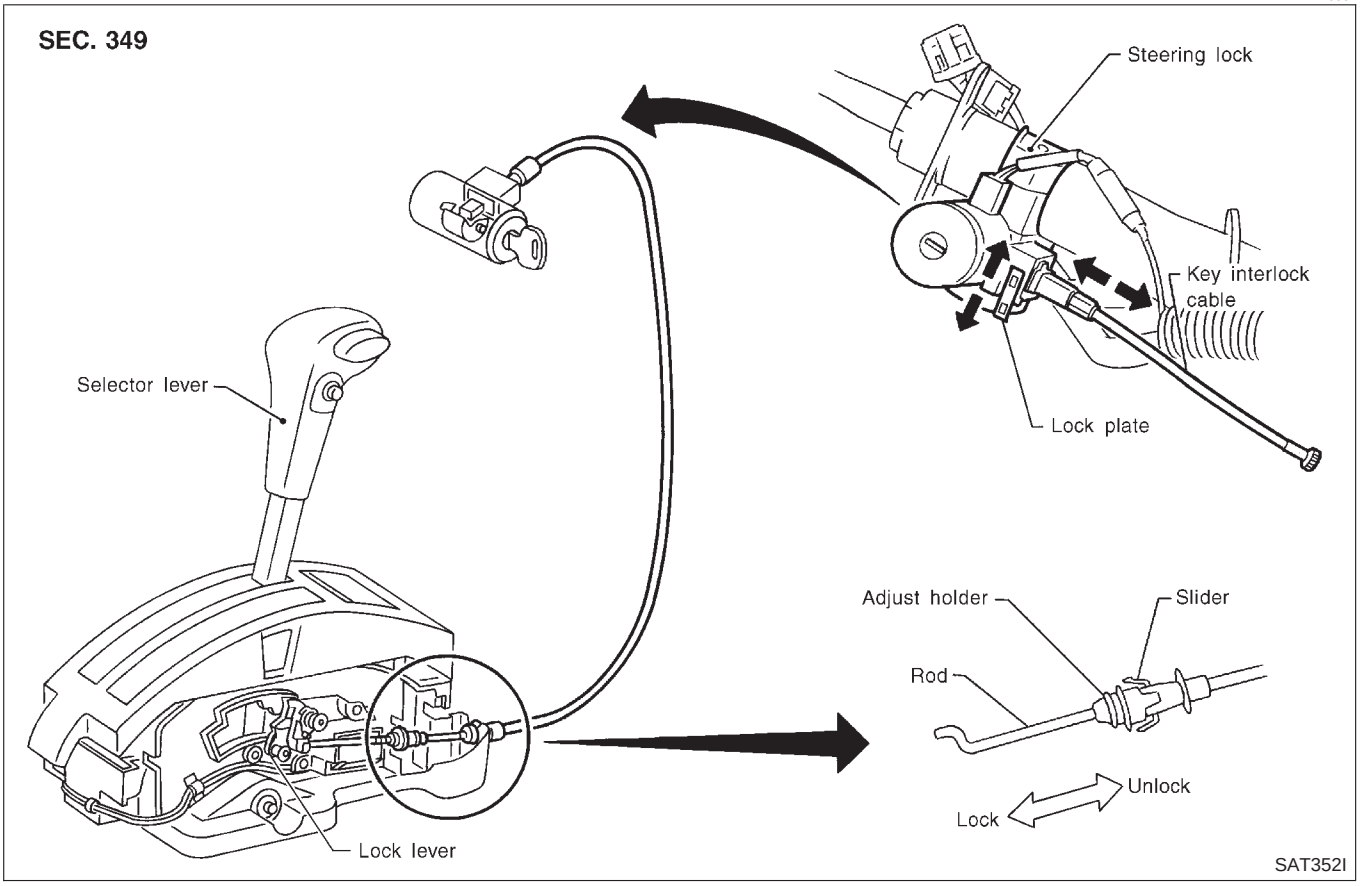

CAUTION:

- **Install key interlock cable in such a way that it will not be damaged by sharp bends, twists or interference with adjacent parts.**
- **After installing key interlock cable to control device, make sure that casing cap and bracket are firmly secured in their positions. If casing cap can be removed with an external load of less than 39.2 N (4.0 kg, 8.8 lb), replace key interlock cable with new one.**

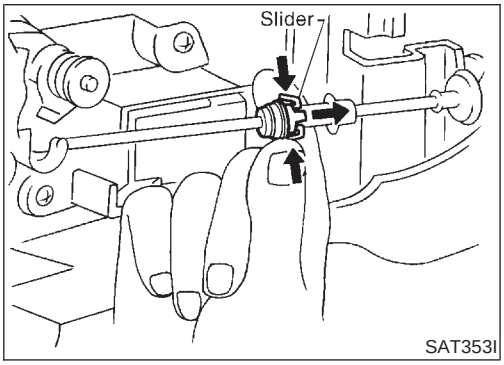

Removal

NAAT0098

Unlock slider from adjuster holder and remove rod from cable.

Installation

NAAT0099

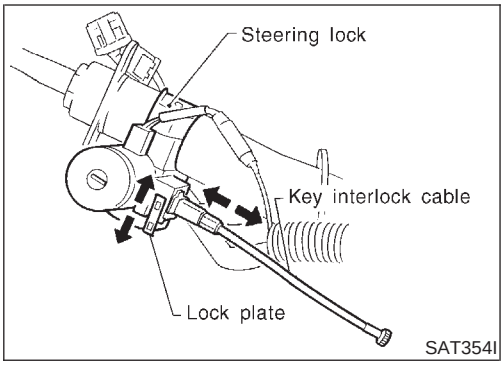

1. Set key interlock cable to steering lock assembly and install lock plate.
2. Clamp cable to steering column and fix to control cable with band.
3. Set selector lever to P position.

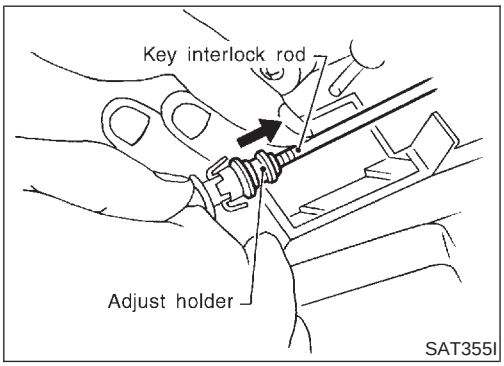

4. Insert interlock rod into adjuster holder.

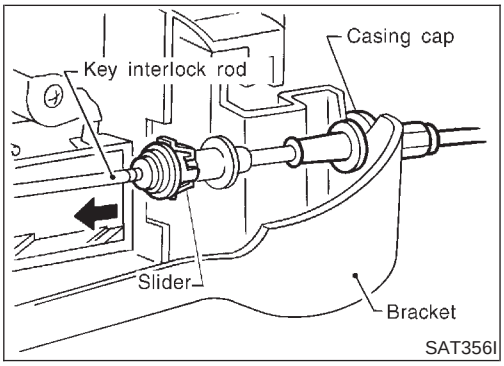

5. Install casing cap to bracket.
6. Move slider in order to fix adjuster holder to interlock rod.

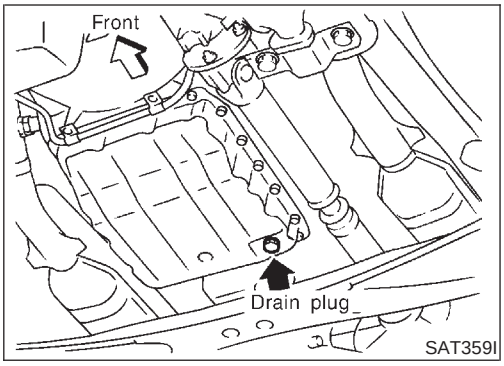

SAT359I

Control Valve Assembly and Accumulators

NAAT0100

REMOVAL

NAAT0100S01

1. Remove exhaust front tube.
2. Remove oil pan and gasket and drain ATF.

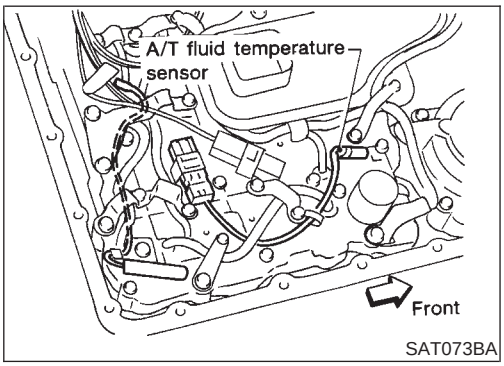

SAT073BA

3. Remove A/T fluid temperature sensor if necessary.
4. Remove oil strainer.

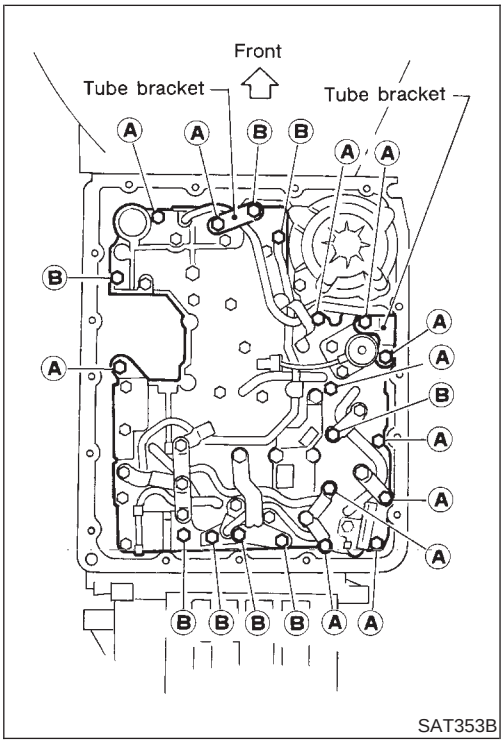

SAT353B

5. Remove control valve assembly by removing fixing bolts and disconnecting harness connector.

Bolt length and location

Bolt symbol	ℓ mm (in) ℓ
A	33 (1.30)
B	45 (1.77)

6. Remove solenoids and valves from valve body if necessary.
7. Remove terminal cord assembly if necessary.

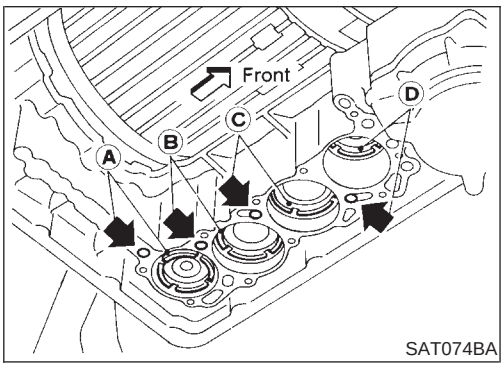

SAT074BA

8. Remove accumulator **A, B, C** and **D** by applying compressed air if necessary.
- **Hold each piston with rag.**
9. Reinstall any part removed.
- **Always use new sealing parts.**

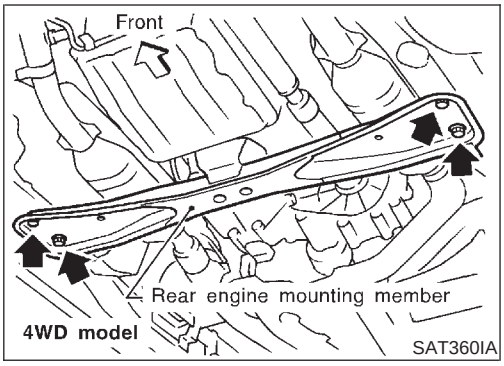

Revolution Sensor Replacement

NAAT0210

— 4WD MODEL —

NAAT0210S01

1. Remove rear engine mounting member from side member while supporting A/T with transfer case with jack. Tighten rear engine mounting member to the specified torque. Refer to EM-64, “Rear Engine Mounting”.
2. Lower A/T with transfer case as much as possible.
3. Remove revolution sensor from A/T.
4. Reinstall any part removed.

- **Always use new sealing parts.**

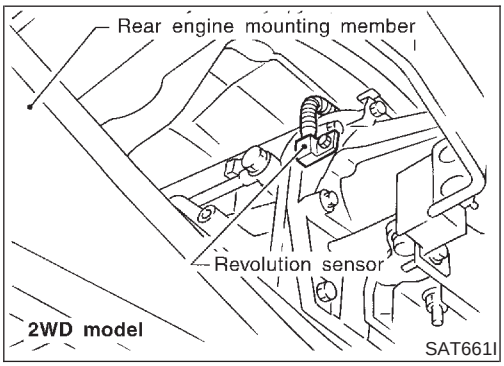

— 2WD MODEL —

NAAT0210S02

- Remove revolution sensor from A/T.
- **Always use new sealing parts.**

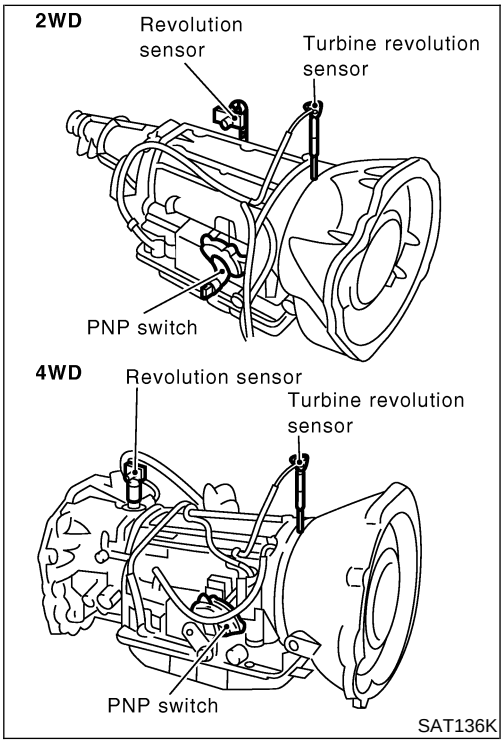

Turbine Revolution Sensor Replacement

NAAT0231

1. Remove A/T assembly, Refer to “Removal”, AT-273.
2. Remove turbine revolution sensor from A/T assembly upper side.
3. Reinstall any part removed.

- **Always use new sealing parts.**

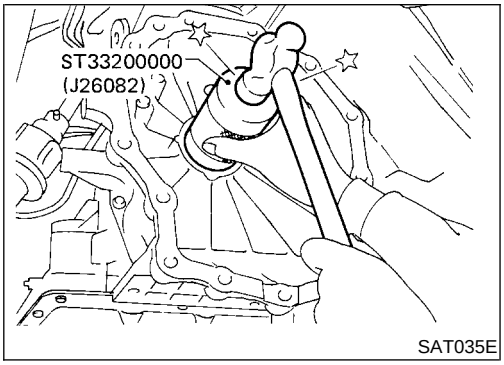

Rear Oil Seal Replacement

NAAT0211

— 4WD MODEL —

NAAT0211S01

1. Remove transfer case from vehicle. Refer to TF-155, “Removal”.
2. Remove rear oil seal.
3. Install rear oil seal.

- **Apply ATF before installing.**

4. Reinstall any part removed.

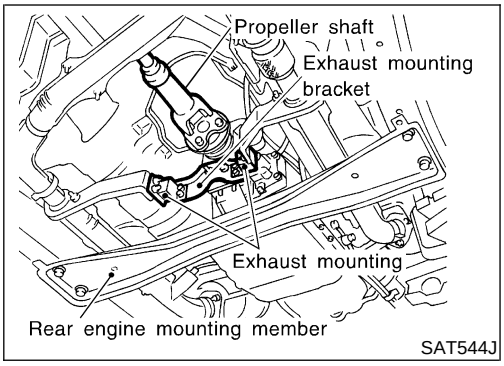

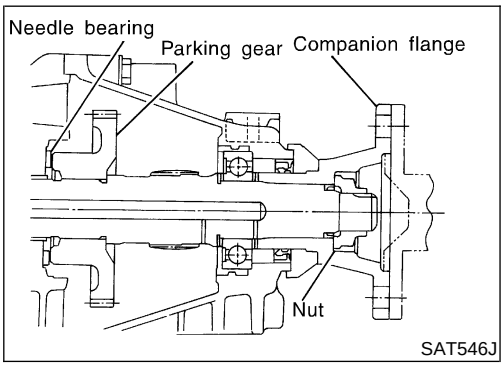

Rear Oil Seal and Companion Flange Oil Seal Replacement

NAAT0212

— 2WD MODEL —

NAAT0212S01

NOTE:
Replace rear extension assembly as a single unit because it cannot be disassembled.

1. Remove propeller shaft. Refer to PD-5, “Components”.
2. Remove exhaust mounting and mounting bracket.
3. Disconnect revolution and speedometer sensor harness connector.
4. Support A/T assembly with a jack.
5. Remove rear engine mounting member. Tighten rear engine mounting member to the specified torque. Refer to EM-64, “Rear Engine Mounting”.
6. Remove rear extension assembly.

a. Remove parking gear and needle bearing.

CAUTION:
Insert your hand between rear extension and transmission case. Detach rear extension assembly while holding parking gear and needle bearing by hand.

7. Reinstall any part removed.

- Always use new sealing parts.

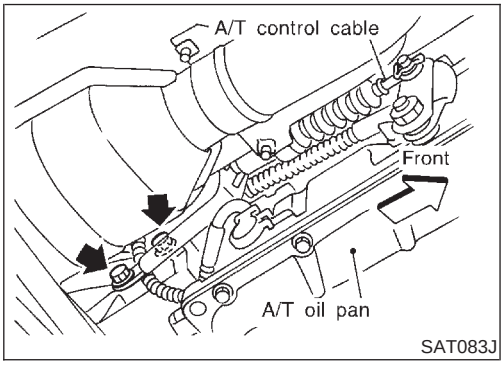

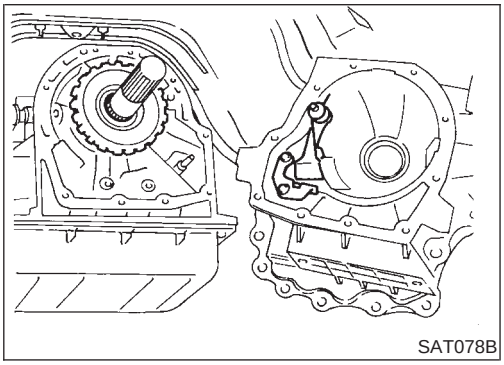

Parking Components Inspection

NAAT0213

— 4WD MODEL —

NAAT0213S01

1. Remove propeller shaft. Refer to PD-5, “Components”.
2. Remove transfer case from vehicle. Refer to TF-155, “Removal”.
3. Remove A/T control cable bracket from transmission case.
4. Support A/T assembly with a jack.
5. Remove adapter case from transmission case.
6. Replace parking components if necessary.
7. Reinstall any part removed.

- **Always use new sealing parts.**

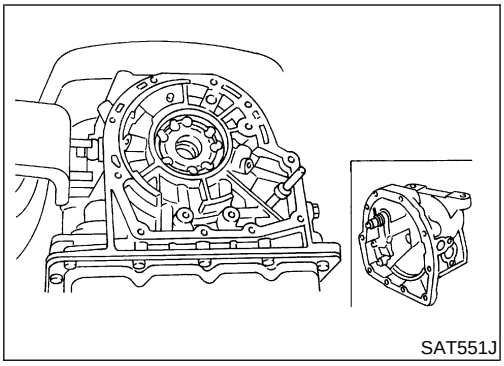
SAT551J

— 2WD MODEL —

NAAT0213S02

1. Remove propeller shaft from vehicle. Refer to PD-5, "Components".
2. Support A/T assembly with a jack.
3. Remove rear engine mounting member. Tighten rear engine mounting member to the specified torque. Refer to EM-64, "Rear Engine Mounting".

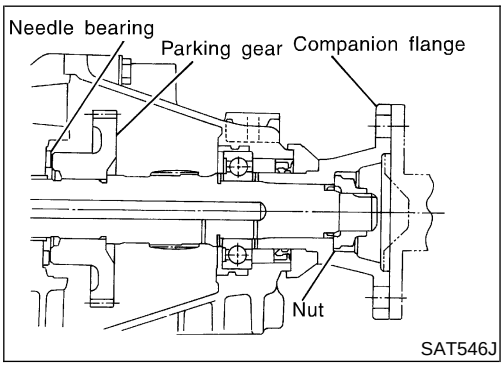

SAT546J

4. Remove rear extension assembly.

a. Remove parking gear and needle bearing.

CAUTION:

Insert your hand between rear extension and transmission case. Detach rear extension assembly while holding parking gear and needle bearing by hand.

5. Replace parking components if necessary.
6. Reinstall any part removed.

- **Always use new sealing parts.**

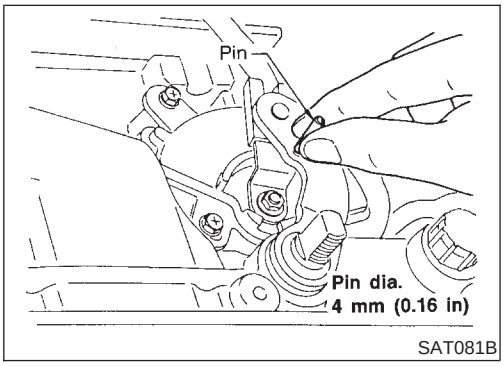

SAT081B

Park/Neutral Position Switch Adjustment

NAAT0104

1. Remove manual control linkage from manual shaft of A/T assembly.
2. Set manual shaft of A/T assembly in "N" position.
3. Loosen PNP switch fixing bolts.
4. Insert pin into adjustment holes in both PNP switch and manual shaft of A/T assembly as near vertical as possible.
5. Reinstall any part removed.
6. Check continuity of PNP switch. Refer to "Components Inspection", AT-106.

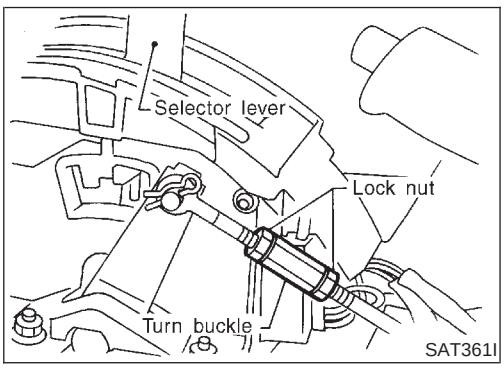

SAT361I

Manual Control Linkage Adjustment

NAAT0105

Move selector lever from "P" position to "1" position. You should be able to feel the detents in each position.

If the detents cannot be felt or the pointer indicating the position is improperly aligned, the linkage needs adjustment.

1. Place selector lever in "P" position.
2. Loosen lock nuts.

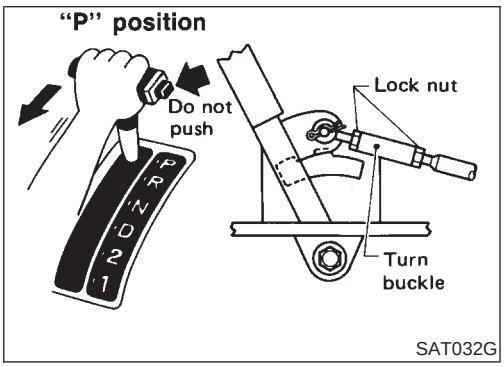

SAT032G

3. Tighten turn buckle until aligns with inner cable, pulling selector lever toward "R" position side without pushing button.
4. Back off turn buckle 1 turn and tighten lock nuts to the specified torque.

   Lock nut:

   : 4.4 - 5.9 N·m (0.45 - 0.60 kg-m, 39.1 - 52.1 in-lb)

5. Move selector lever from "P" position to "1" position. Make sure that selector lever can move smoothly.

Removal

NAAT0214

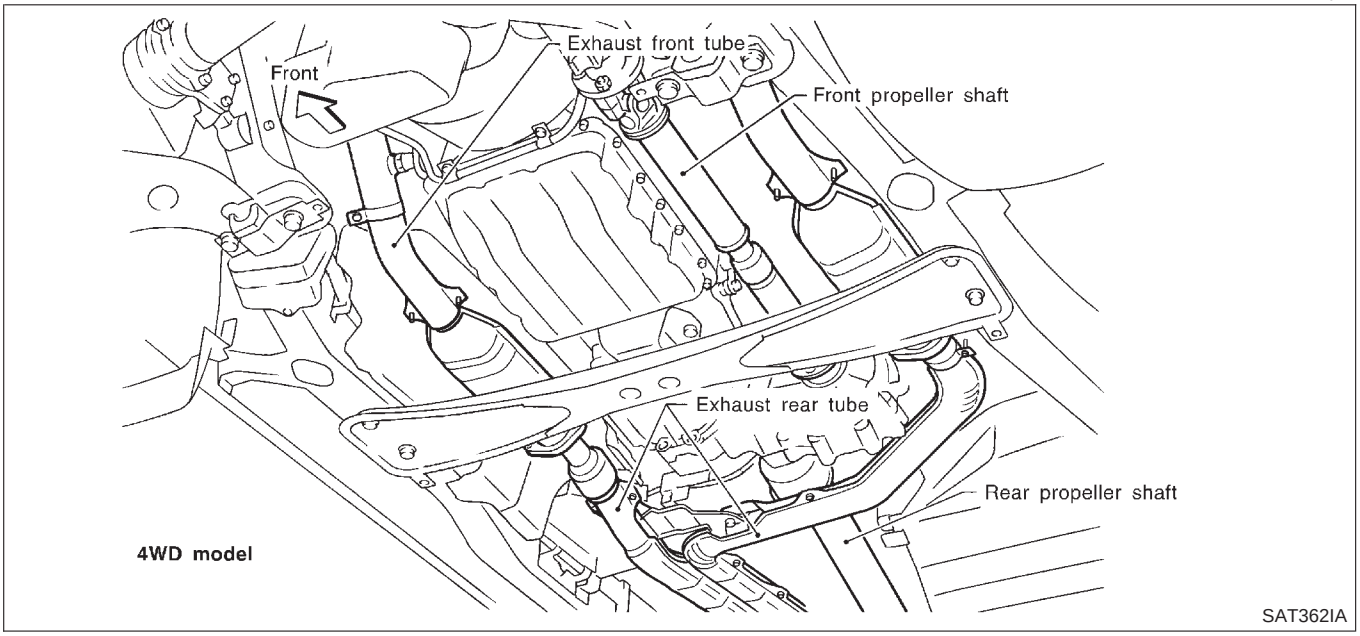

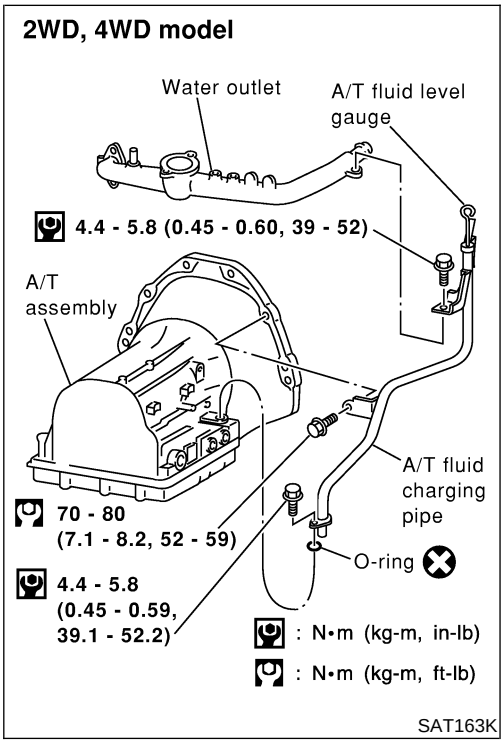

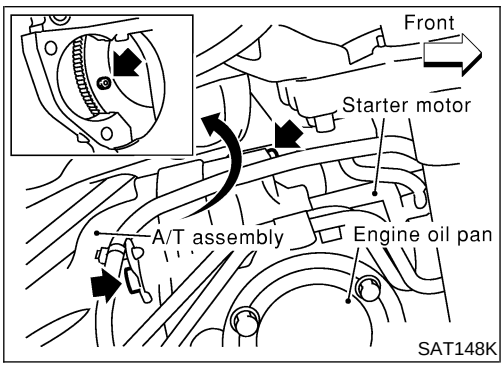

CAUTION:

When removing the A/T assembly from engine, first remove the crankshaft position sensor (OBD) from the A/T assembly lower side.

Be careful not to damage sensor edge.

— 4WD MODEL —

NAAT0214S01

1. Remove battery negative terminal.
2. Remove exhaust front and rear tubes.
3. Remove fluid charging pipe from A/T assembly.
4. Remove oil cooler pipe from A/T assembly.
5. Plug up openings such as the fluid charging pipe hole, etc.
6. Remove propeller shaft. Refer to PD-5, “Components”.
7. Remove transfer control linkage from transfer. Refer to TF-155, “Removal”.

- **Insert plug into rear oil seal after removing rear propeller shaft.**
- **Be careful not to damage spline, sleeve yoke and rear oil seal.**

8. Remove A/T control cable from A/T assembly.
9. Disconnect A/T solenoid, PNP switch, turbine revolution, revolution and speedometer sensor harness connectors.
10. Remove starter motor. Refer to SC-19, “Removal and Installation”.
11. Remove bolts securing torque converter to drive plate.

- **Remove the bolts by turning crankshaft.**

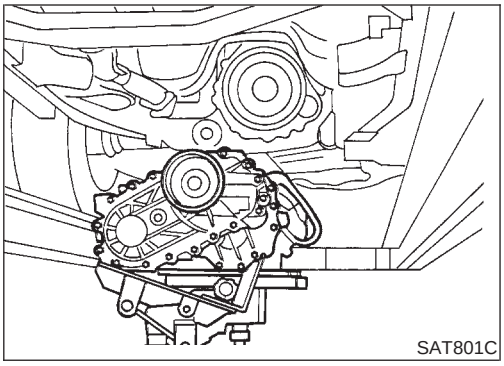

12. Support A/T and transfer assembly with a jack.
13. Remove rear engine mounting member from body and A/T assembly. Tighten rear engine mounting member to the specified torque. Refer to EM-64, "Rear Engine Mounting".
14. Remove bolts securing A/T assembly to engine.
- **Secure torque converter to prevent it from dropping.**
- **Secure A/T assembly to a jack.**
15. Lower A/T assembly with transfer.

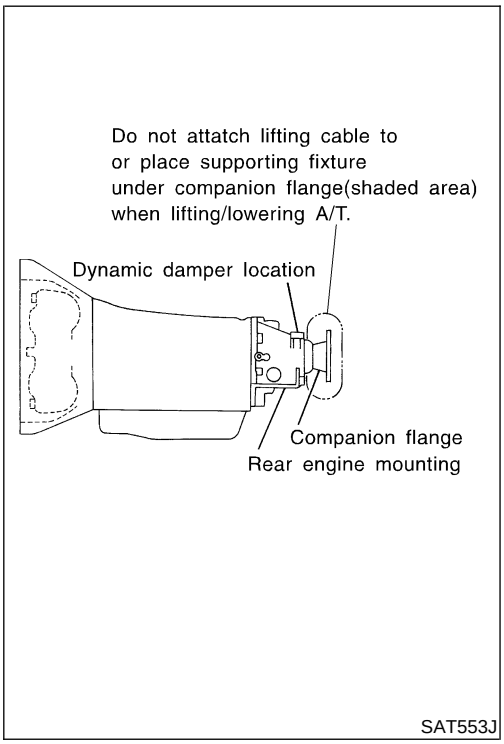

— 2WD MODEL —

NAAT0214S02

CAUTION:

- **Do not attach lifting cable to or place supporting fixture under companion flange at rear of A/T (shown in the figure at left) when lifting/lowering A/T.**
- **Be sure to attach lifting cable to rear engine mounting or dynamic damper location when lifting/lowering A/T.**

1. Remove battery negative terminal.
2. Remove exhaust front and rear tubes.
3. Remove fluid charging pipe from A/T assembly.
4. Remove oil cooler pipe from A/T assembly.
5. Plug up openings such as the fluid charging pipe hole, etc.
6. Remove propeller shaft. Refer to PD-5, "Components".
7. Remove A/T control cable from A/T assembly.
8. Disconnect A/T and speedometer sensor harness connectors.
9. Remove starter motor. Refer to SC-19, "Removal and Installation".
10. Remove gusset and rear plate cover securing engine to A/T assembly.
11. Remove bolts securing torque converter to drive plate.
- **Remove the bolts by turning crankshaft.**
12. Support A/T assembly with a jack.
13. Remove rear engine mounting member from body and A/T assembly. Tighten rear engine mounting member to the specified torque. Refer to EM-64, "Rear Engine Mounting".
14. Remove bolts securing A/T assembly to engine.
15. Pull A/T assembly backwards.
- **Secure torque converter to prevent it from dropping.**
- **Secure A/T assembly to a jack.**
16. Lower A/T assembly.

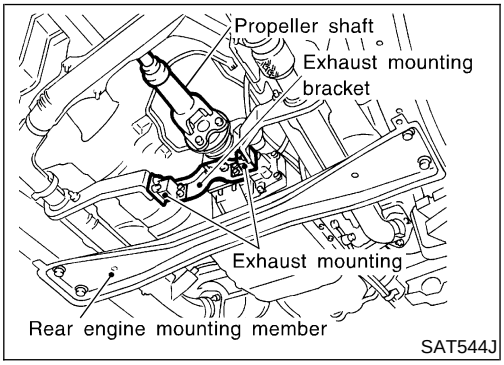

Installation

NAAT0107

- Drive plate runout

  Maximum allowable runout:

  Refer to EM-76, "FLYWHEEL/DRIVE PLATE RUNOUT".

  If this runout is out of specification, replace drive plate with ring gear.

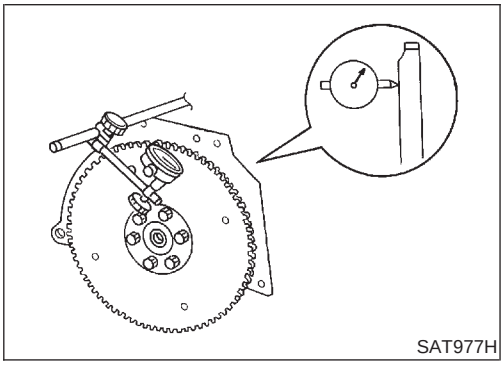

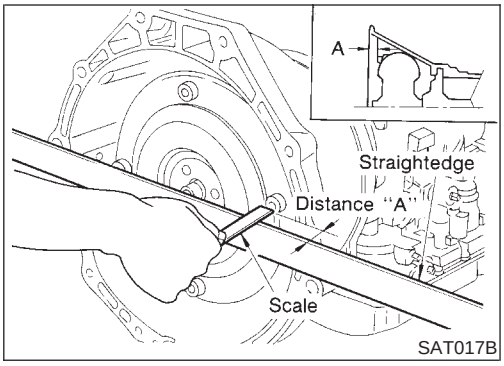

- When connecting torque converter to transmission, measure distance "A" to be certain that they are correctly assembled.

  Distance "A":

  25.0 mm (0.984 in) or more

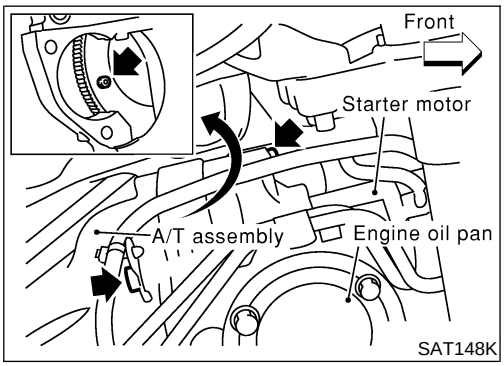

- Install converter to drive plate.
- **After converter is installed to drive plate, rotate crankshaft several turns and check to be sure that transmission rotates freely without binding.**

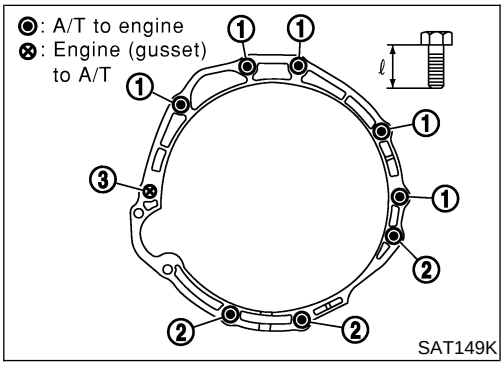

- Tighten bolts securing transmission.

Bolt No.	Tightening torque N·m (kg-m, ft-lb)	Bolt length "ℓ" mm (in)
1	70 - 80 (7.1 - 8.2, 52 - 59)	65 (2.56)
2	29 - 39 (3.0 - 4.0, 22 - 29)	40 (1.57)
3	70 - 80 (7.1 - 8.2, 52 - 59)	55 (2.17)

- Reinstall any part removed.

- Check fluid level in transmission.
- Move selector lever through all positions to be sure that transmission operates correctly.
  With parking brake applied, rotate engine at idling. Move selector lever through "N" to "D", to "2", to "1" and to "R" positions. A slight shock should be felt by hand gripping selector each time transmission is shifted.
- Perform road test. Refer to "ROAD TEST", AT-65.

AIR BREATHER HOSE

NAAT0107S01

F/T 4WD model

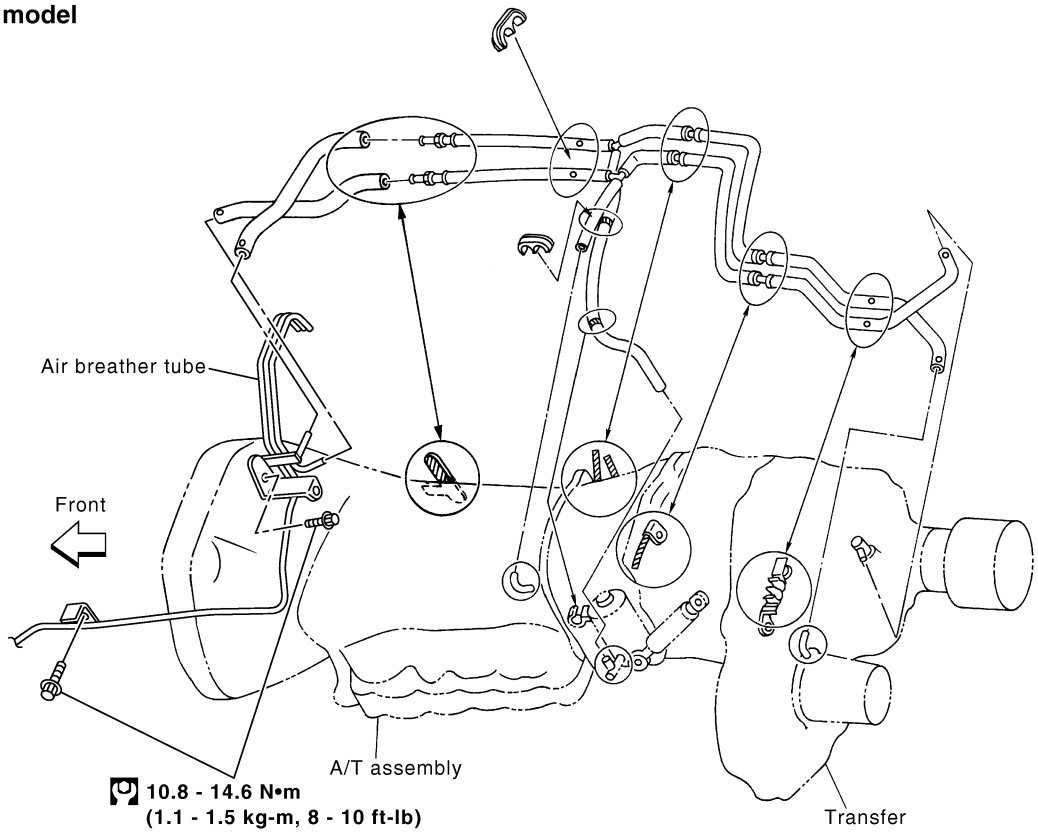

SAT662K

P/T 4WD model

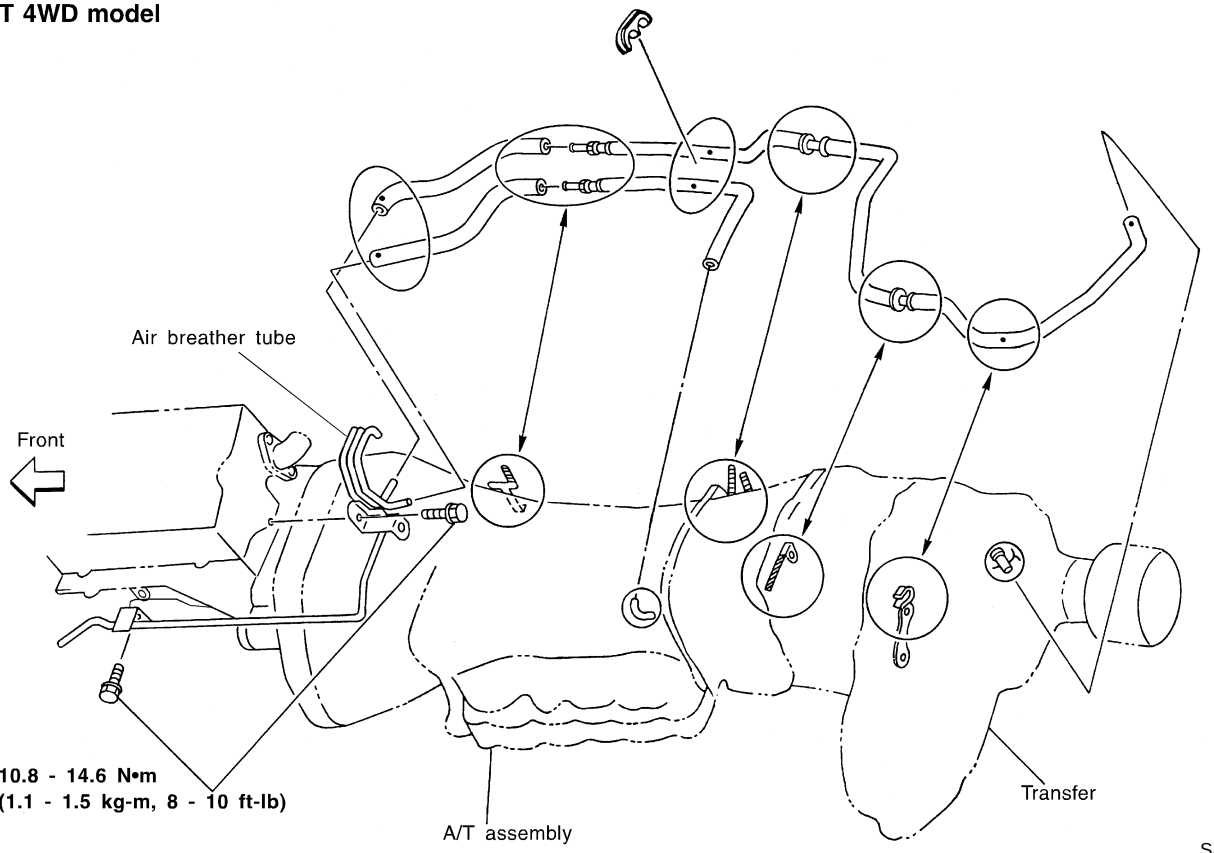

SAT206KA

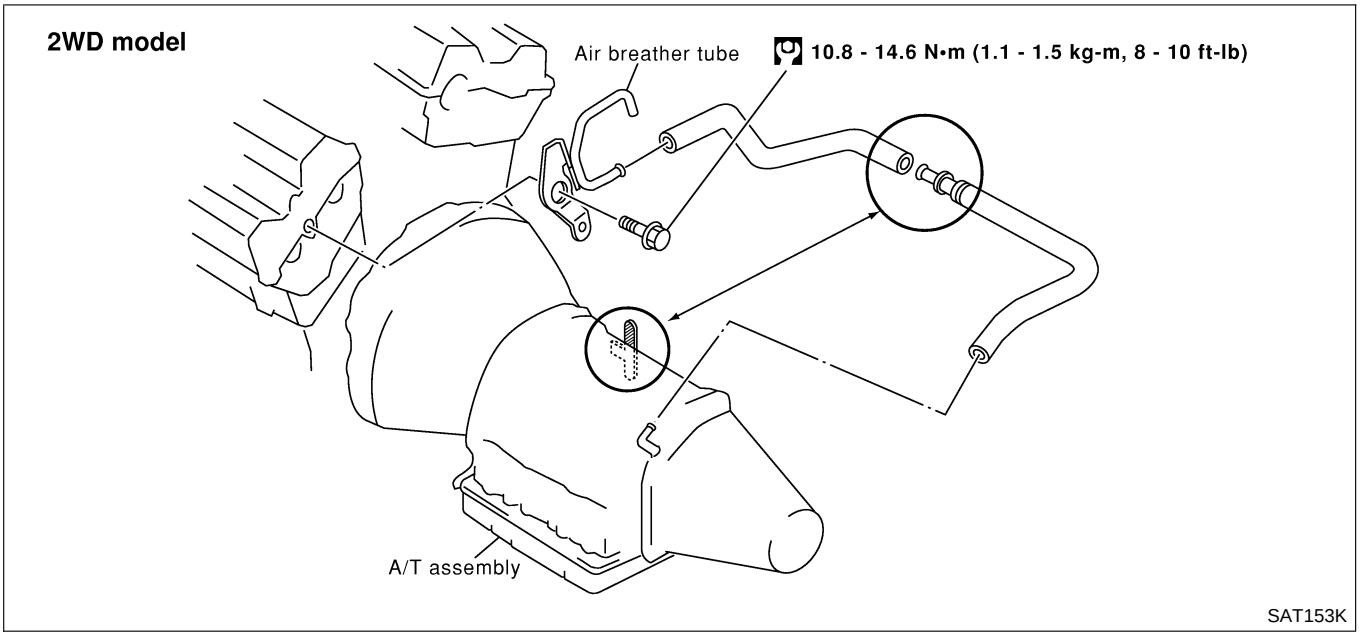
2WD model
Air breather tube
10.8 - 14.6 N•m (1.1 - 1.5 kg-m, 8 - 10 ft-lb)
A/T assembly
SAT153K

Components

NAAT0108

SEC. 311•313•315

: N•m (kg-m, ft-lb)
: Apply Genuine Anaerobic Liquid Gasket or equivalent. Refer to GI section.
ATF : Apply ATF.
: Apply petroleum jelly.
★ : Select with proper thickness.
: Always replace after every disassembly.

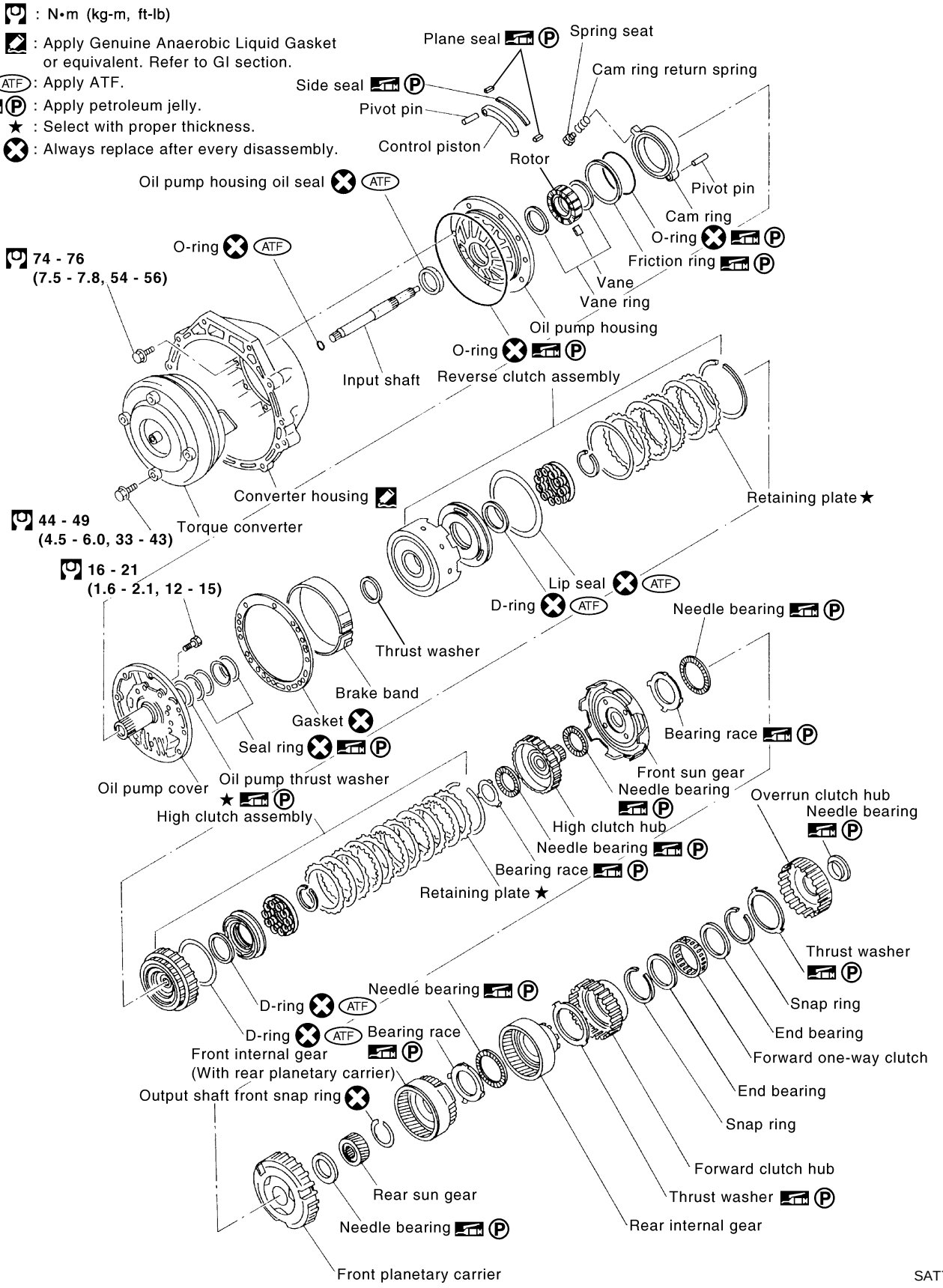

SAT712K

SEC. 311•315•317
4WD model

: N•m (kg-m, in-lb)
: N•m (kg-m, ft-lb)
ATF : Apply ATF.
Ⓟ : Apply petroleum jelly.
★ : Select with proper thickness.
☆ : Adjustment is required.
⊗ : Always replace after every disassembly.

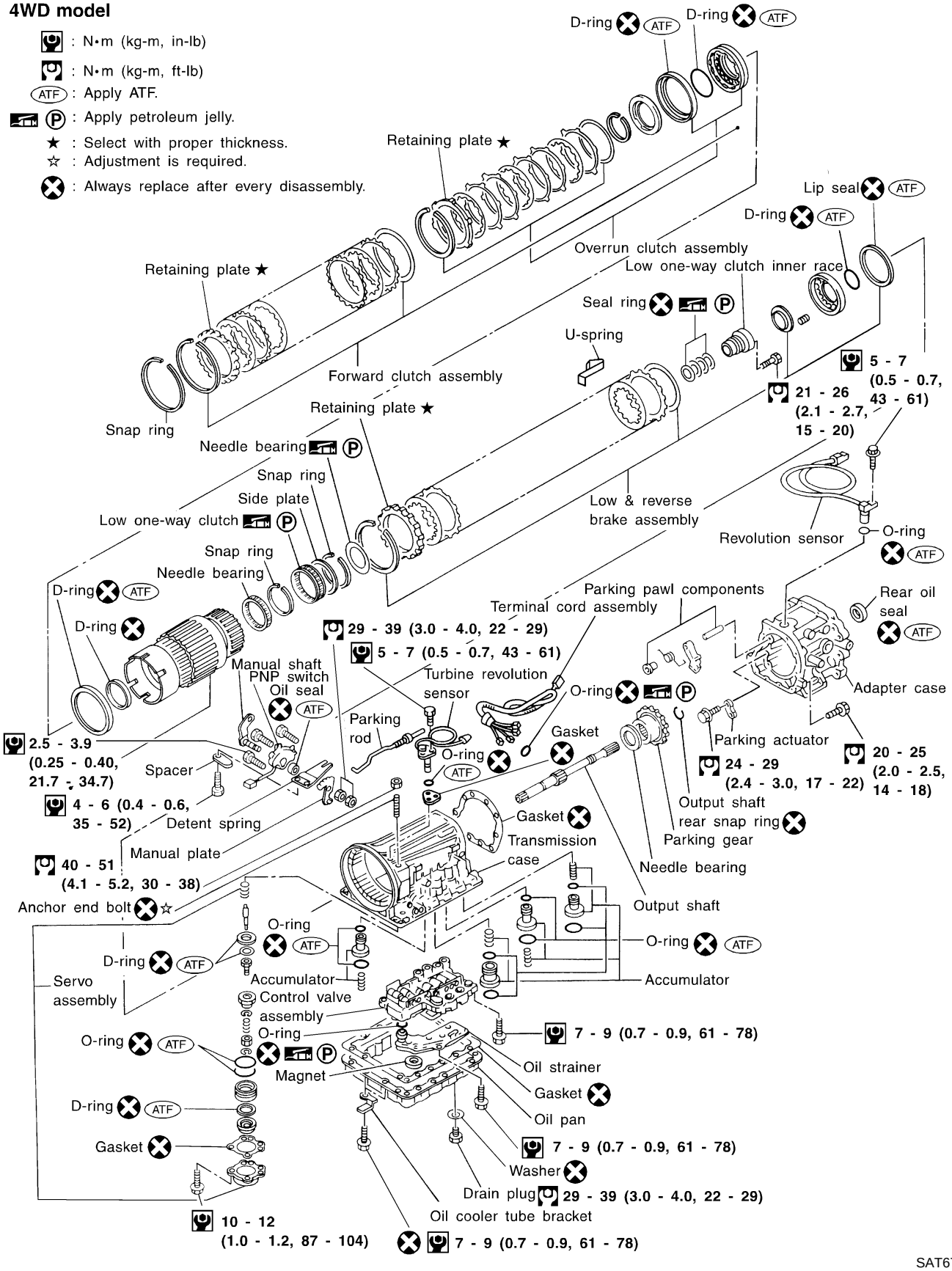

SAT671KA

SEC. 311•315•317
2WD model

: N•m (kg-m, in-lb)
: N•m (kg-m, ft-lb)
ATF : Apply ATF.
Ⓟ : Apply petroleum jelly.
★ : Select with proper thickness.
☆ : Adjustment is required.
⊗ : Always replace after every disassembly.

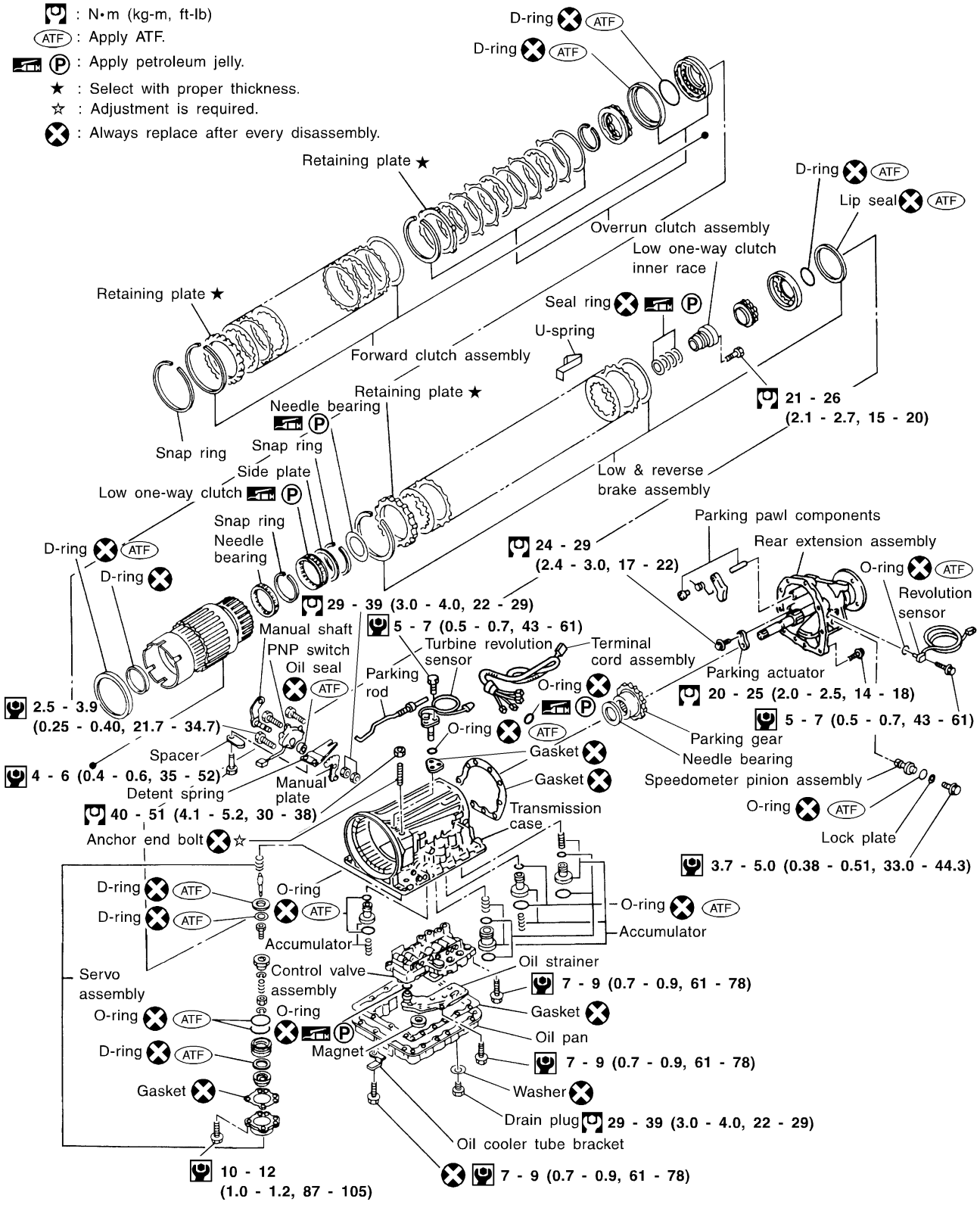

SAT672KA

Oil Channel

NAAT0109

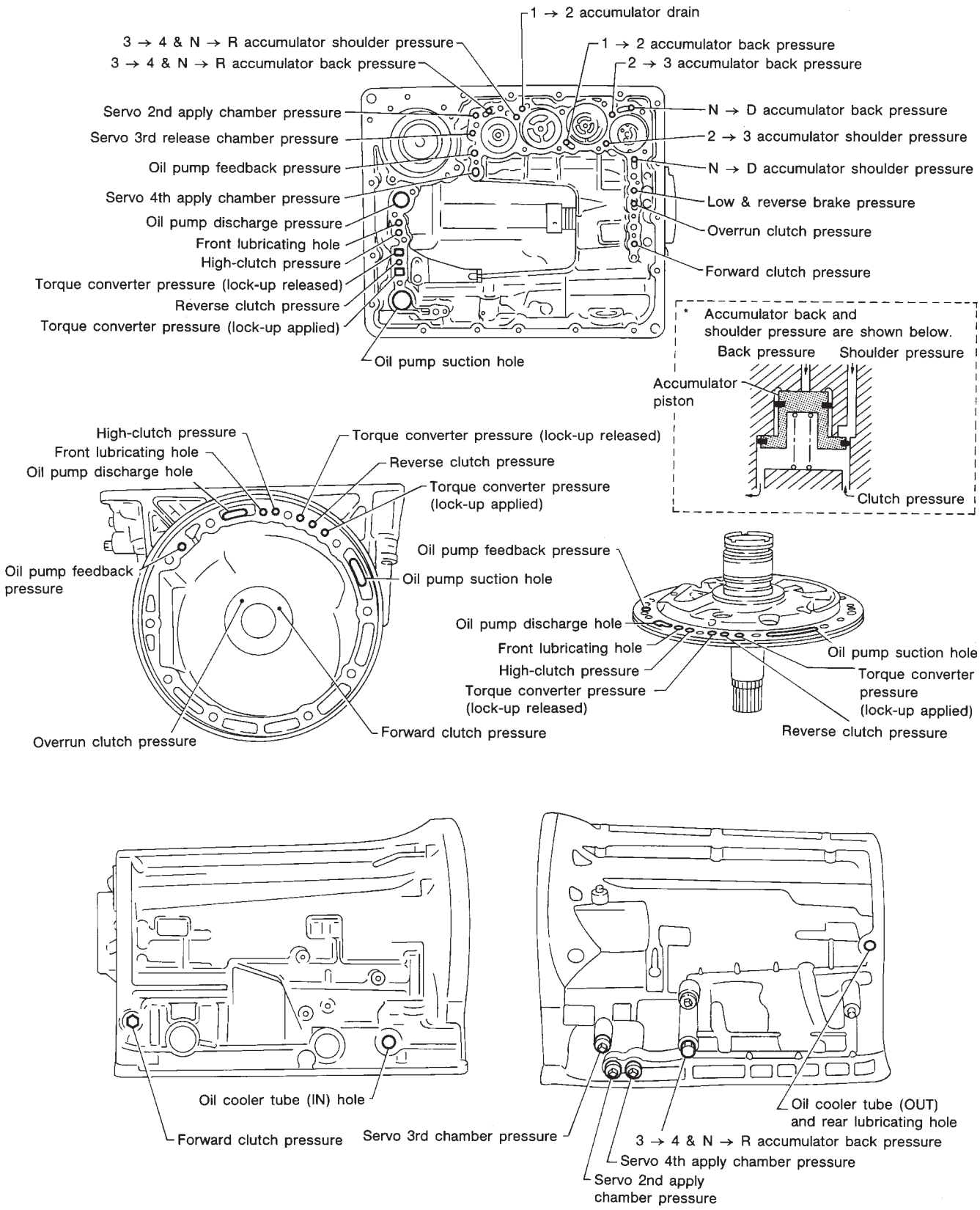

SAT185B

Locations of Needle Bearings, Thrust Washers and Snap Rings

NAAT0110

Outer diameter of snap rings

Item number	Outer diameter mm (in)
②	161.0 (6.34)
③	140.1 (5.52)
④	156.4 (6.16)
⑥	142.0 (5.59)
⑦	159.2 (6.27)

Thrust washers

Item number	Color
①	Black
⑤	White

Outer diameter of needle bearings

Item number	Outer diameter mm (in)
⑧	47 (1.85)
⑨	53 (2.09)
⑪	75 (2.95)
⑫	53 (2.09)
⑬	75 (2.95)
⑭	57 (2.24)
⑮	78.1 (3.075)
⑯	64 (2.52)
⑰	53 (2.09)

Inner diameter of bearing races

Item number	Outer diameter mm (in)
⑪	58.8 (2.315)
⑬	58.8 (2.315)

Installation of one-piece bearings

Item number	Bearing race (black) location
⑩	Front
⑫	Front
⑮	Rear side
⑯	Rear side

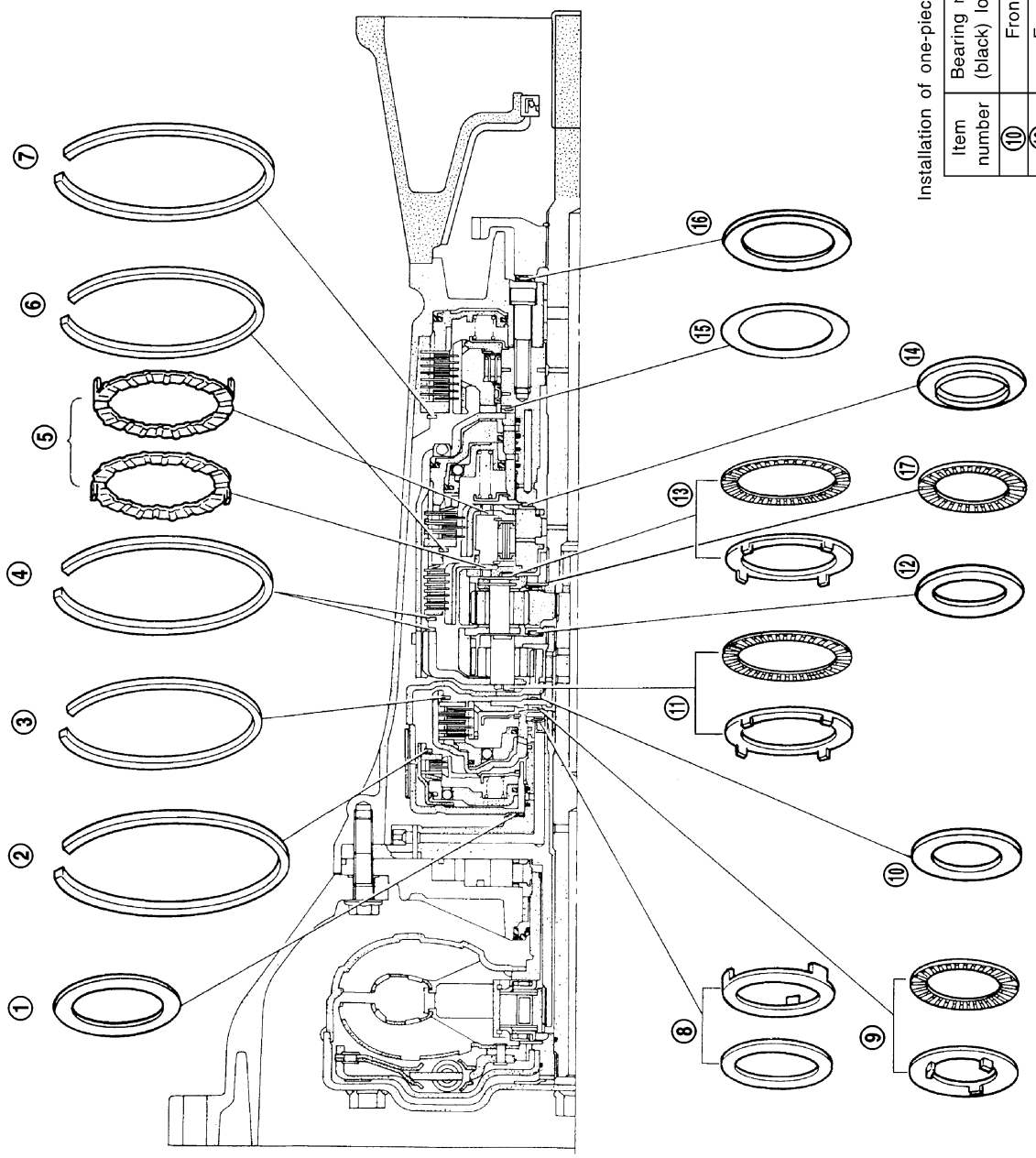

SAT140JB

DISASSEMBLY

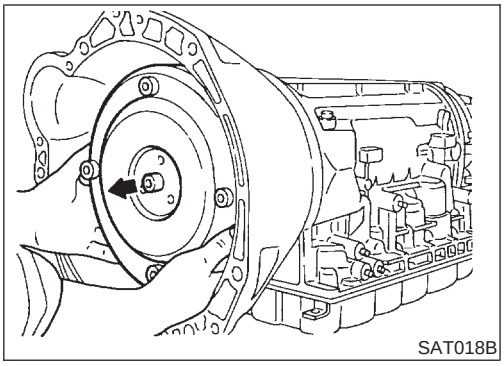
SAT018B

1. Drain ATF through drain plug.
2. Remove turbine revolution sensor.
3. Remove torque converter by holding it firmly and turning while pulling straight out.

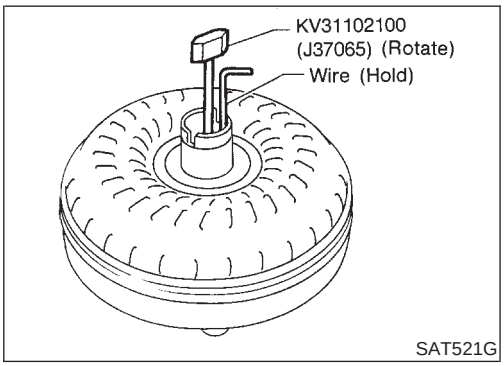

SAT521G

4. Check torque converter one-way clutch.
a. Insert Tool into spline of one-way clutch inner race.
b. Hook bearing support unitized with one-way clutch outer race with suitable wire.
c. Check that one-way clutch inner race rotates only clockwise with Tool while holding bearing support with wire.

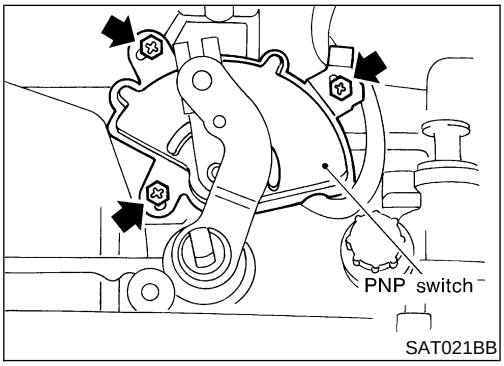

SAT021BB

5. Remove PNP switch from transmission case.

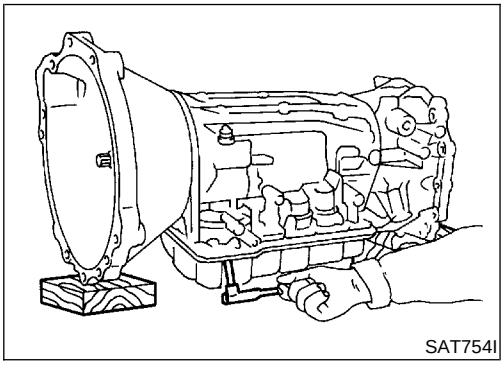
SAT754I

6. Remove oil pan.
- Always place oil pan straight down so that foreign particles inside will not move.

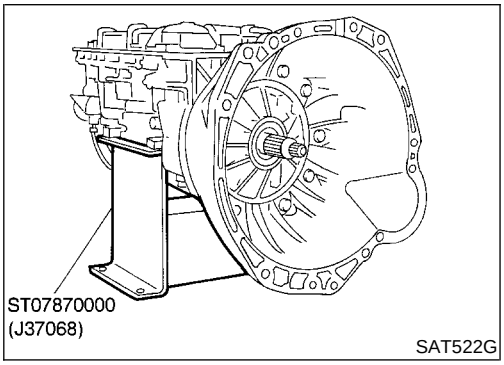

SAT522G

7. Place transmission into Tool with the control valve facing up.

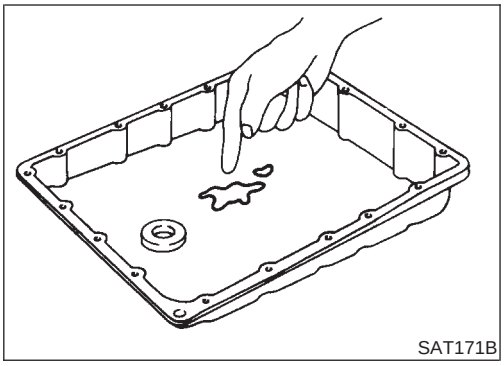
SAT171B

8. Check foreign materials in oil pan to help determine cause of malfunction. If the fluid is very dark, smells burned, or contains foreign particles, the frictional material (clutches, band) may need replacement. A tacky film that will not wipe clean indicates varnish build up. Varnish can cause valves, servo, and clutches to stick and may inhibit pump pressure.

- **If frictional material is detected, replace radiator after repair of A/T. Refer to LC-22, "REMOVAL AND INSTALLATION".**

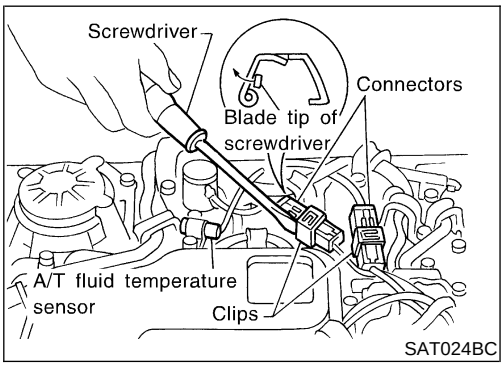

SAT024BC

9. Remove torque converter clutch solenoid valve and A/T fluid temperature sensor connectors.

- **Be careful not to damage connector.**

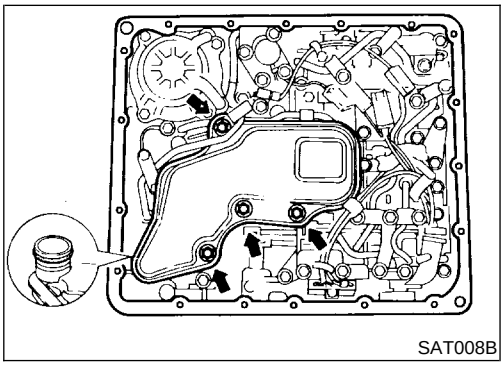
SAT008B

10. Remove oil strainer.

a. Remove oil strainer from control valve assembly. Then remove O-ring from oil strainer.

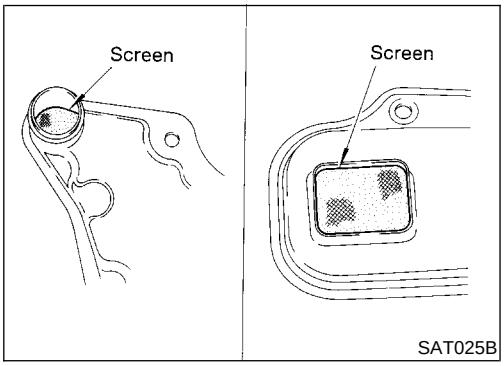

SAT025B

b. Check oil strainer screen for damage.

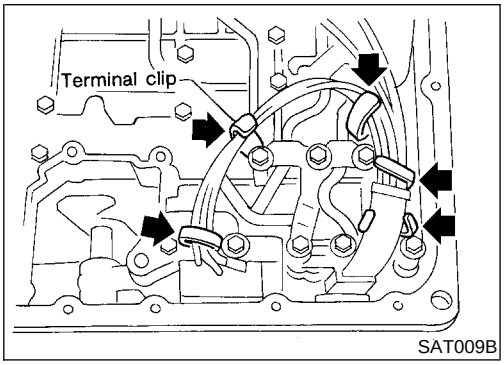

SAT009B

11. Remove control valve assembly.

a. Straighten terminal clips to free terminal cords then remove terminal clips.

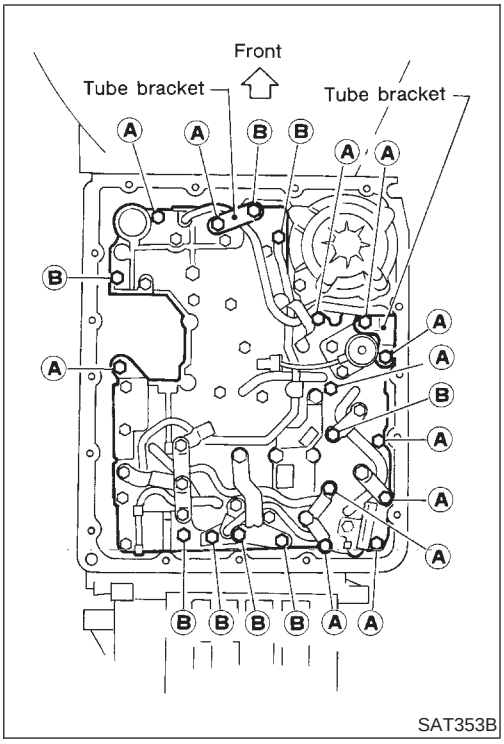

SAT353B

b. Remove bolts A and B, and remove control valve assembly from transmission.

Bolt symbol	Length mm (in)
A	33 (1.30)
B	45 (1.77)

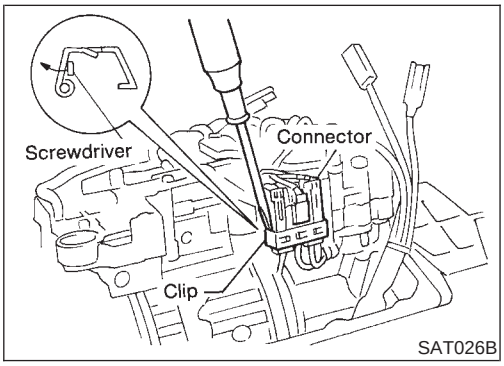

SAT026B

c. Remove solenoid connector.

- **Be careful not to damage connector.**

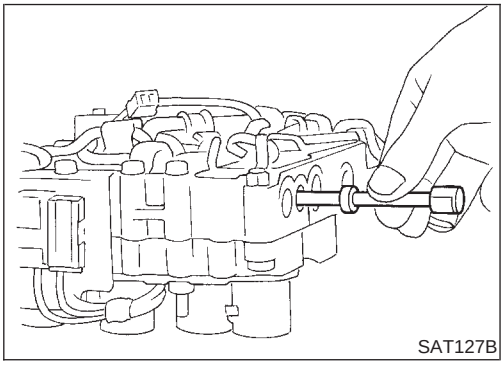
SAT127B

d. Remove manual valve from control valve assembly.

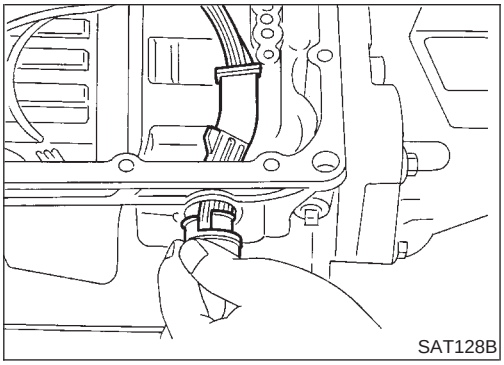
SAT128B

12. Remove terminal cord assembly from transmission case while pushing on stopper.

- **Be careful not to damage cord.**
- **Do not remove terminal cord assembly unless it is damaged.**

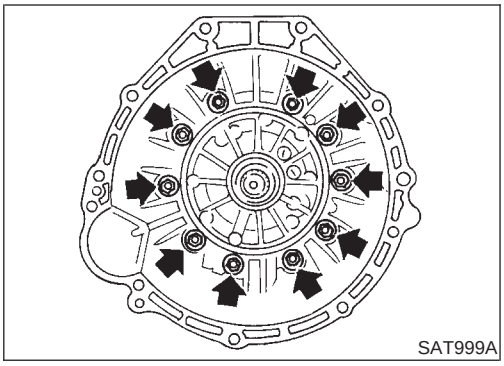

13. Remove converter housing from transmission case.
- **Be careful not to scratch converter housing.**

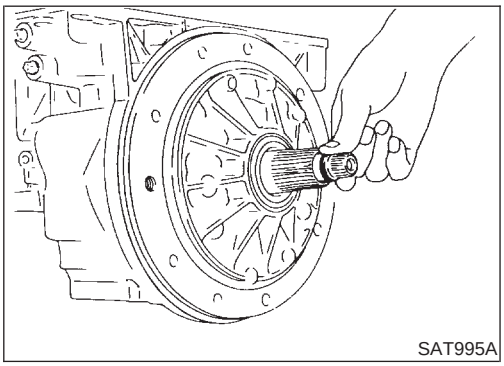

14. Remove O-ring from input shaft.

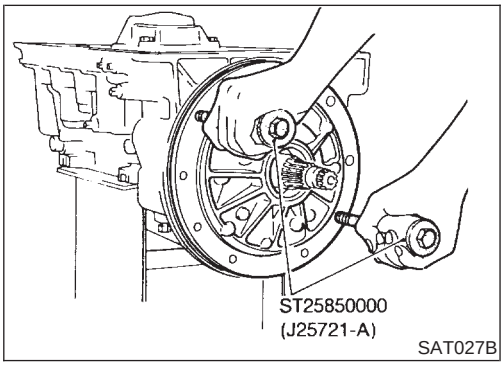

15. Remove oil pump assembly.

a. Attach Tool to oil pump assembly and extract it evenly from transmission case.

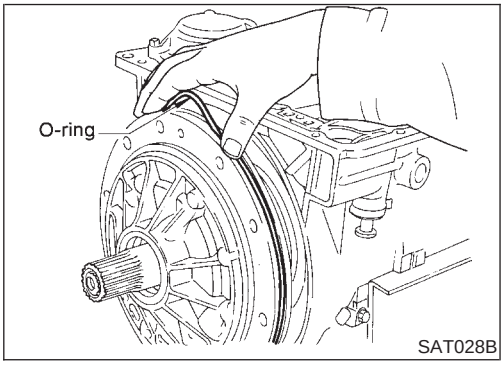

b. Remove O-ring from oil pump assembly.

c. Remove traces of sealant from oil pump housing.

- **Be careful not to scratch pump housing.**

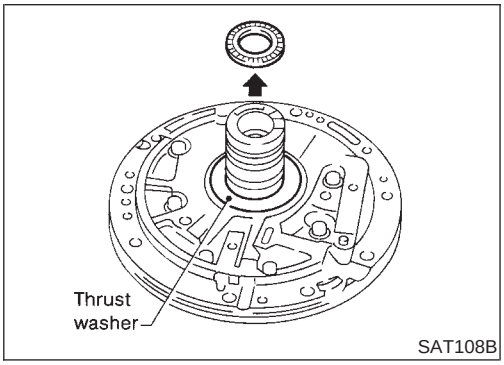

d. Remove needle bearing and thrust washer from oil pump assembly.

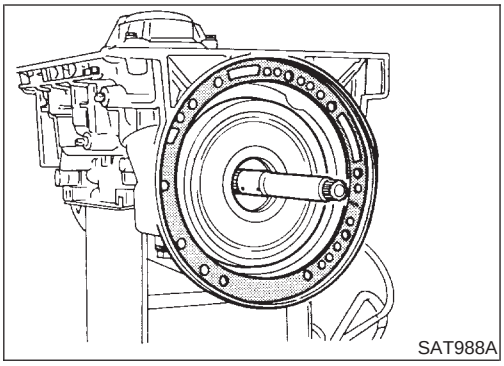
SAT988A

16. Remove input shaft and oil pump gasket.

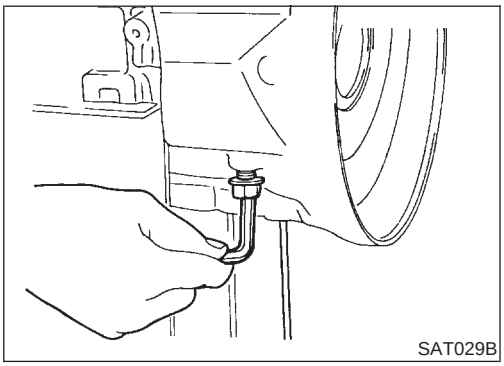
SAT029B

17. Remove brake band and band strut.
a. Loosen lock nut and remove band servo anchor end pin from transmission case.

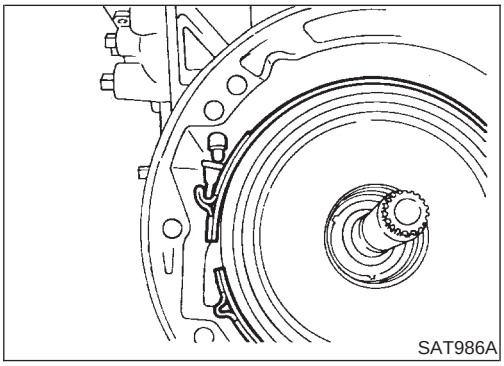
SAT986A

b. Remove brake band and band strut from transmission case.

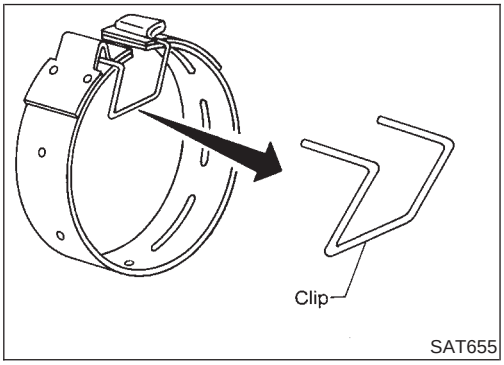

SAT655

c. Hold brake band in a circular shape with clip.

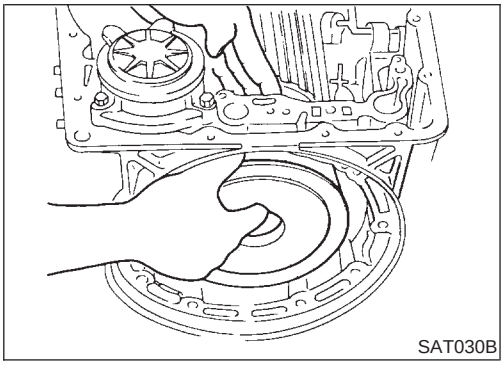
SAT030B

18. Remove front side clutch and gear components.
a. Remove clutch pack (reverse clutch, high clutch and front sun gear) from transmission case.

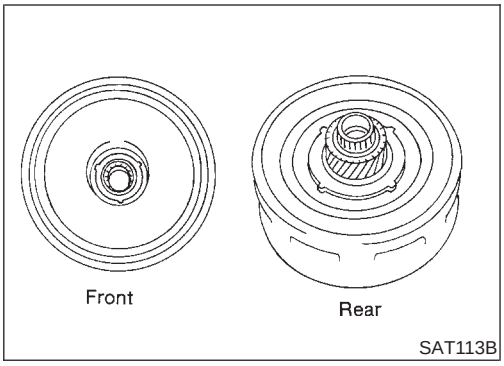

b. Remove front bearing race from clutch pack.
c. Remove rear bearing race from clutch pack.

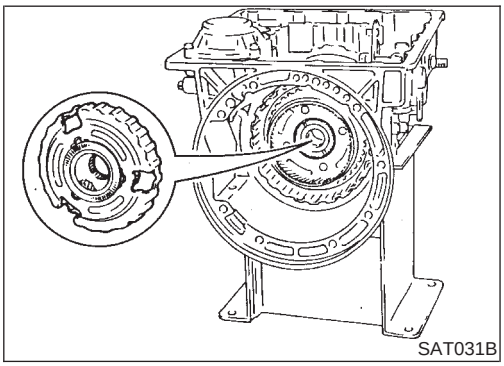

d. Remove front planetary carrier from transmission case.

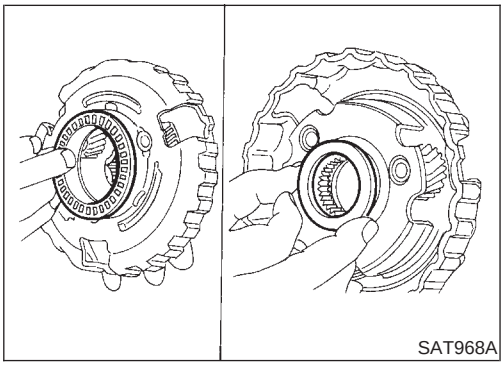

e. Remove front needle bearing from front planetary carrier.
f. Remove rear bearing from front planetary carrier.

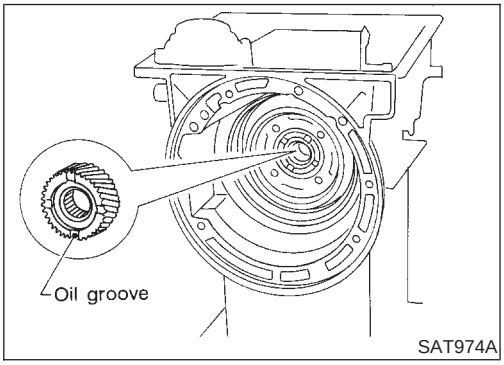

g. Remove rear sun gear from transmission case.

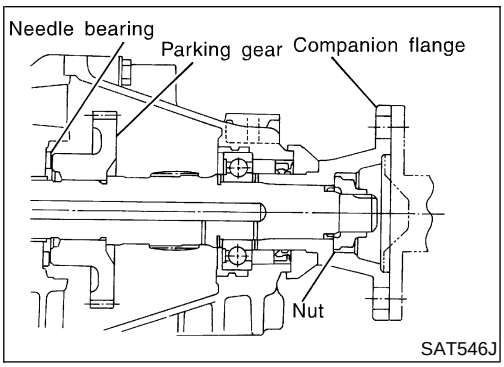

19. Remove rear extension assembly (2WD model only).
a. Remove rear extension assembly.
b. Remove parking gear and needle bearing.

CAUTION:
Insert your hand between rear extension and transmission case. Detach rear extension assembly while holding parking gear and needle bearing by hand.

c. Remove rear extension gasket.

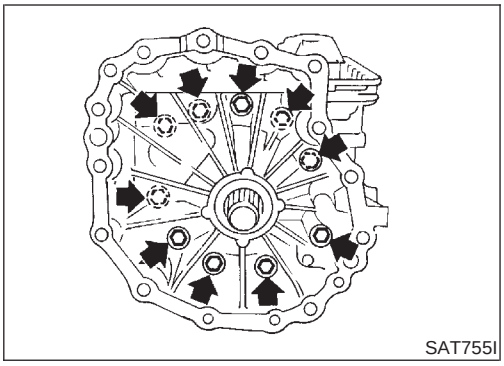
SAT755I

20. Remove adapter case (4WD model only).
a. Remove adapter case from transmission case.
b. Remove adapter case gasket from transmission case.

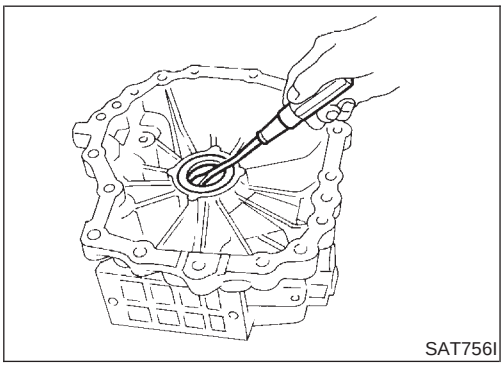
SAT756I

c. Remove oil seal from adapter case.
- **Be careful not to scratch adapter case.**
- **Do not remove oil seal unless it is to be replaced.**

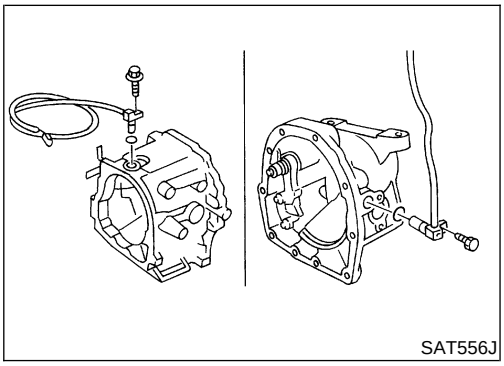
SAT556J

21. Remove revolution sensor from rear extension or adapter case.
a. Remove O-ring from revolution sensor.

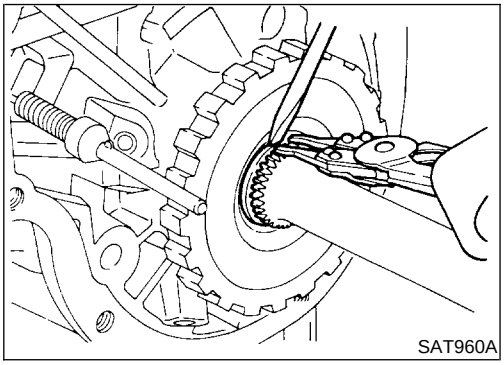
SAT960A

22. Remove output shaft and parking gear (4WD model only).
a. Remove rear snap ring from output shaft.

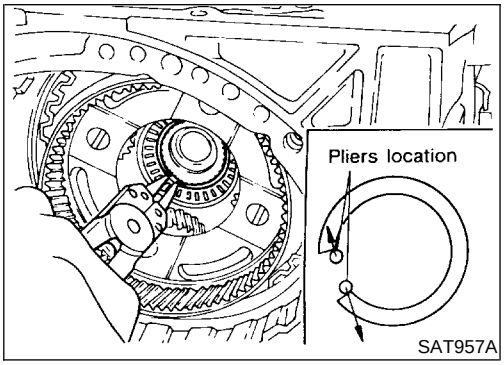

SAT957A

b. Slowly push output shaft all the way forward.
- **Do not use excessive force.**

c. Remove snap ring from output shaft.

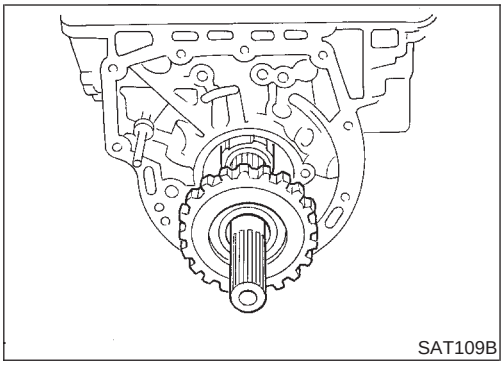
SAT109B

d. Remove output shaft and parking gear as a unit from transmission case.
e. Remove parking gear from output shaft.

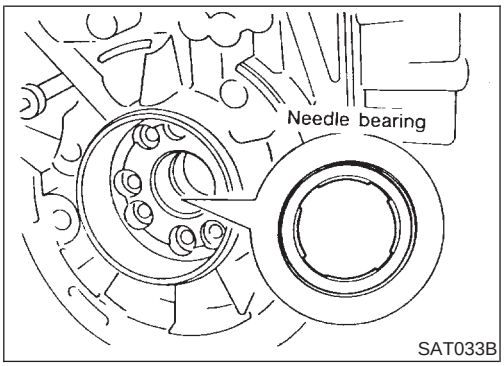

SAT033B

f. Remove needle bearing from transmission case.

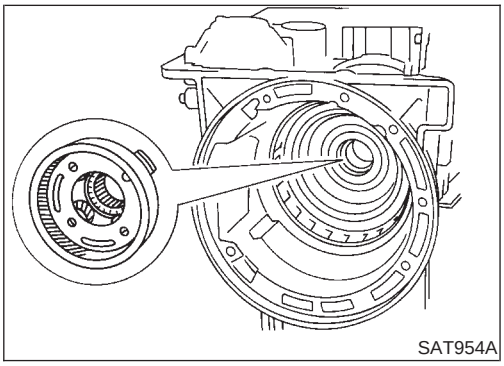
SAT954A

23. Remove rear side clutch and gear components.
a. Remove front internal gear.

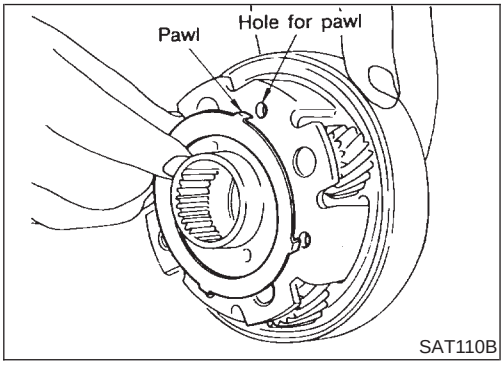

SAT110B

b. Remove bearing race from front internal gear.

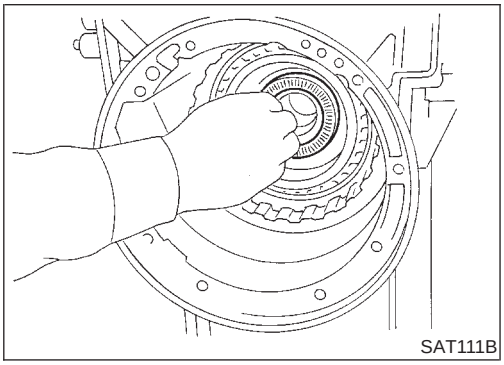
SAT111B

c. Remove needle bearing from rear internal gear.

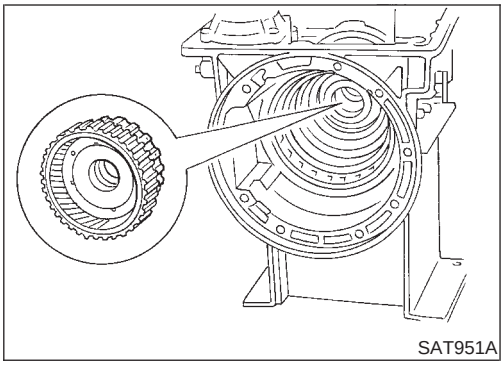
SAT951A

d. Remove rear internal gear, forward clutch hub and overrun clutch hub as a set from transmission case.

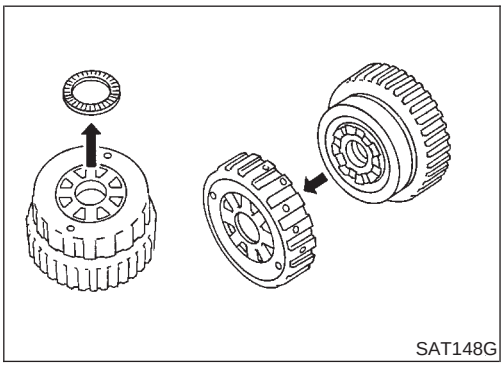
SAT148G

e. Remove needle bearing from overrun clutch hub.
f. Remove overrun clutch hub from rear internal gear and forward clutch hub.

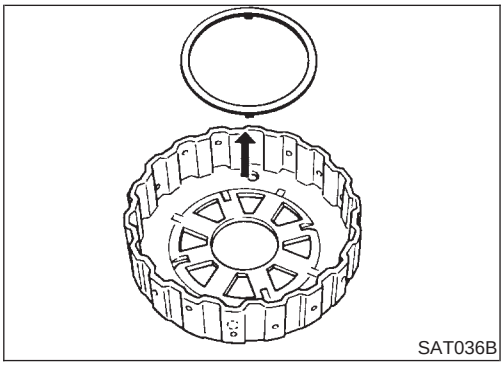
SAT036B

g. Remove thrust washer from overrun clutch hub.

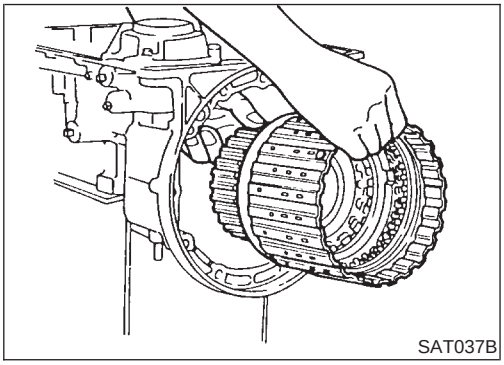
SAT037B

h. Remove forward clutch assembly from transmission case.

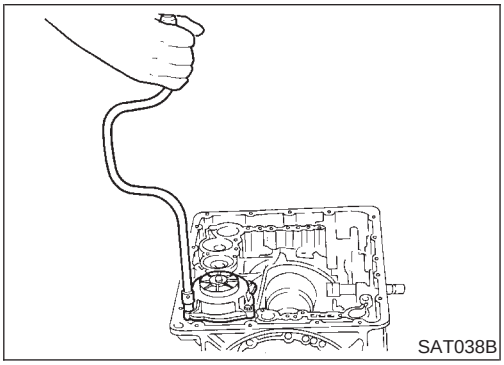
SAT038B

24. Remove band servo and accumulator components.
a. Remove band servo retainer from transmission case.

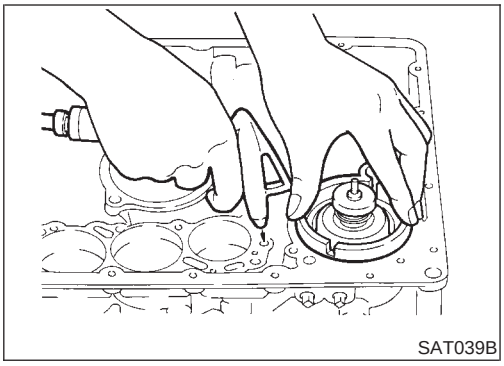

b. Apply compressed air to oil hole until band servo piston comes out of transmission case.

- **Hold piston with a rag and gradually direct air to oil hole.**

c. Remove return springs.

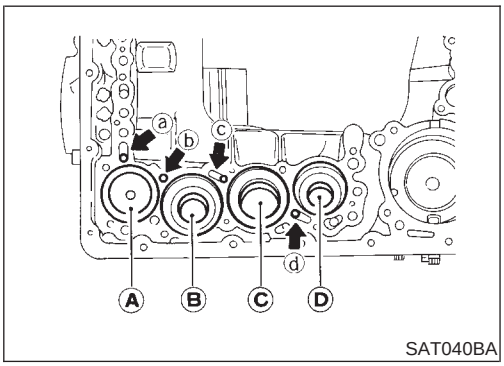

d. Remove springs from accumulator pistons B, C and D.

e. Apply compressed air to each oil hole until piston comes out.

- **Hold piston with a rag and gradually direct air to oil hole.**

Identification of accumulator pistons	A	B	C	D
Identification of oil holes	a	b	c	d

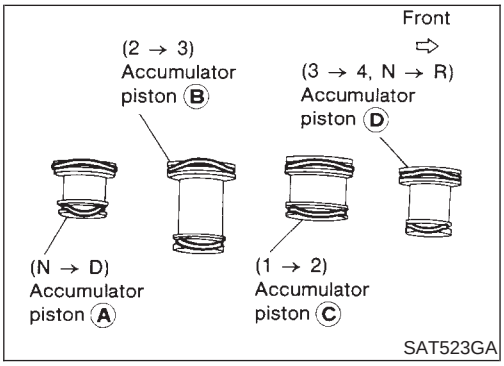

f. Remove O-ring from each piston.

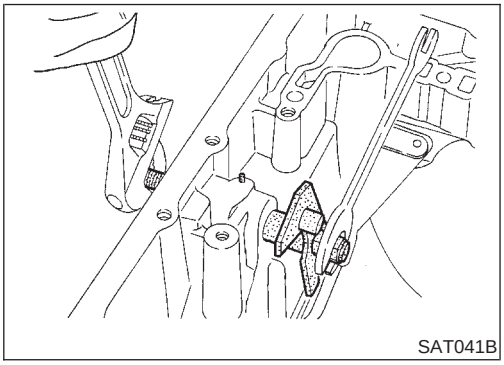

25. Remove manual shaft components, if necessary.

a. Hold width across flats of manual shaft (outside the transmission case) and remove lock nut from shaft.

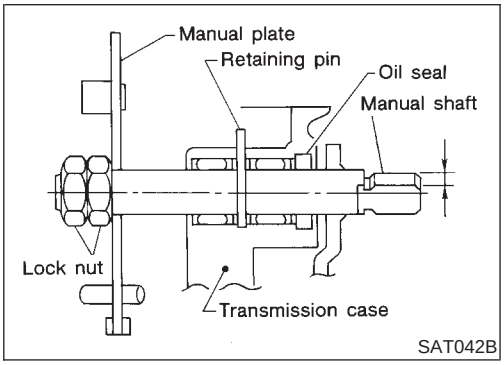

b. Remove retaining pin from transmission case.

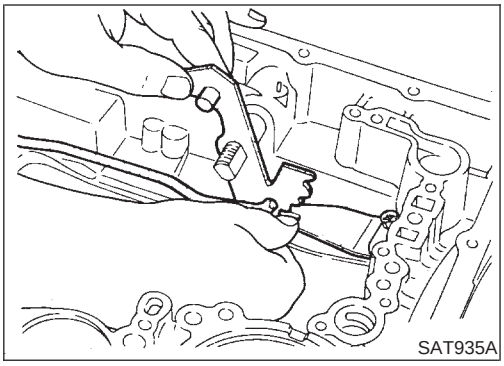
SAT935A

c. While pushing detent spring down, remove manual plate and parking rod from transmission case.

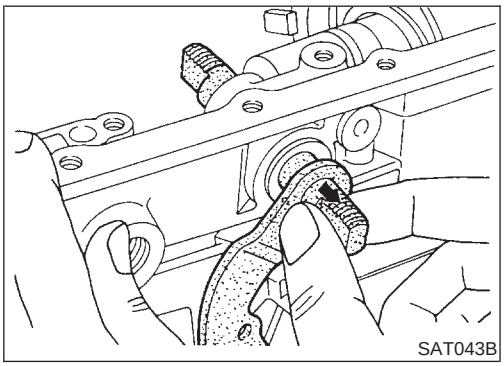
SAT043B

d. Remove manual shaft from transmission case.

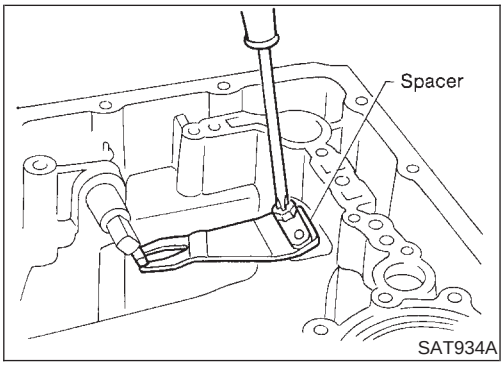

SAT934A

e. Remove spacer and detent spring from transmission case.

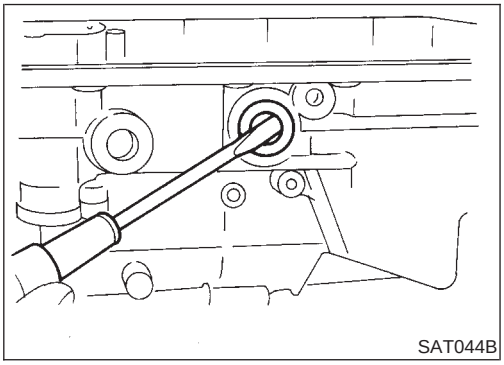
SAT044B

f. Remove oil seal from transmission case.

Oil Pump

COMPONENTS

NAAT0112

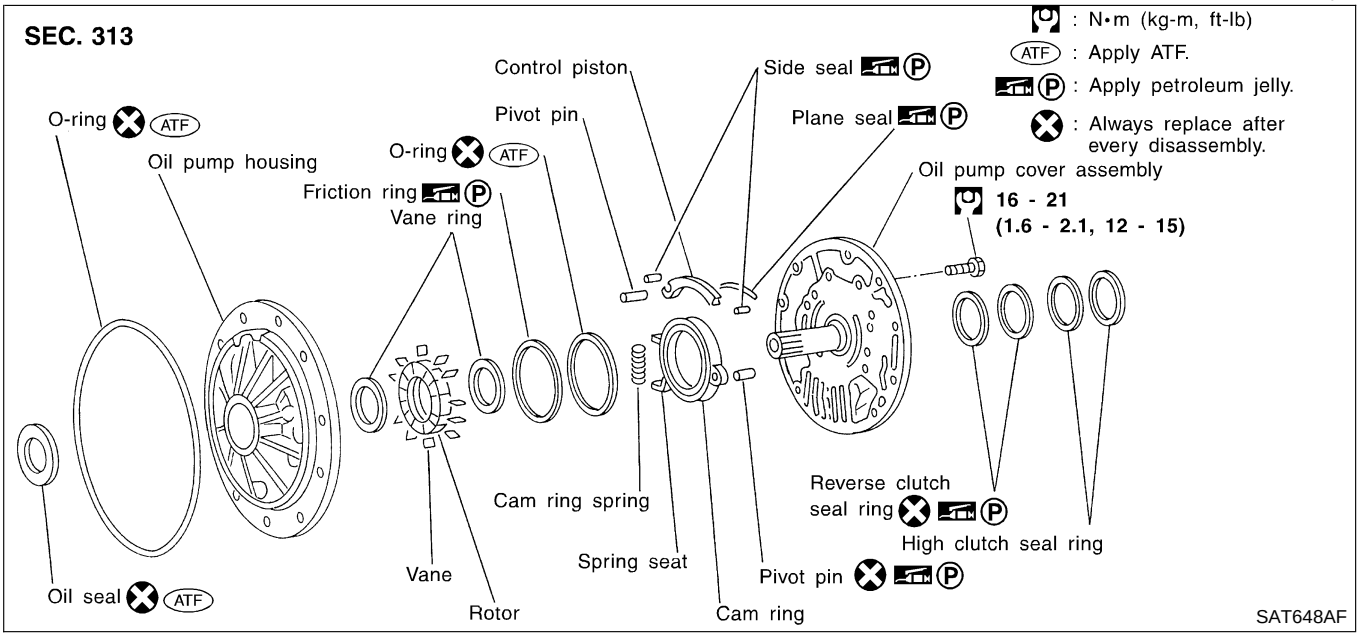

DISASSEMBLY

NAAT0113

1. Loosen bolts in numerical order and remove oil pump cover.

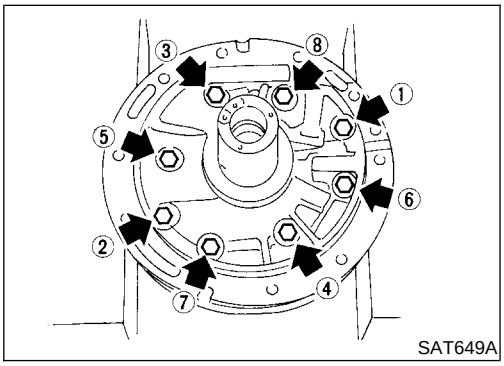

2. Remove rotor, vane rings and vanes.

- **Inscribe a mark on back of rotor for identification of fore-aft direction when reassembling rotor. Then remove rotor.**

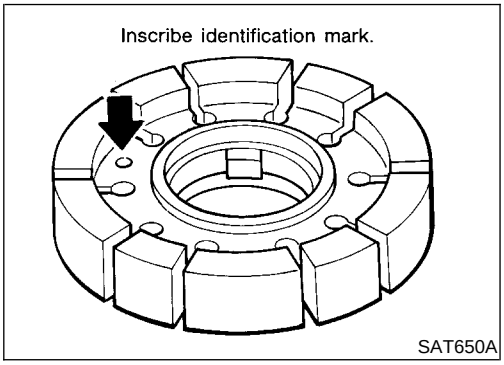

3. While pushing on cam ring remove pivot pin.

- **Be careful not to scratch oil pump housing.**

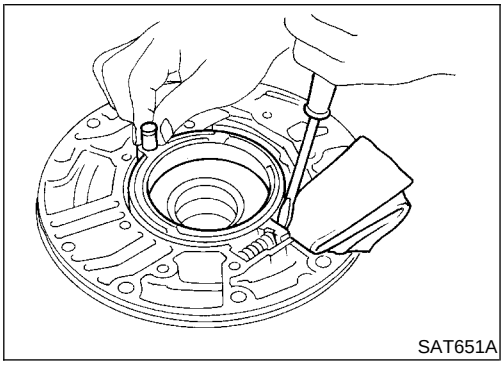

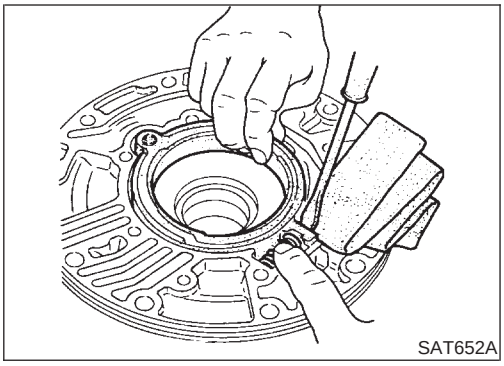
SAT652A

4. While holding cam ring and spring lift out cam ring spring.
- **Be careful not to damage oil pump housing.**
- **Hold cam ring spring to prevent it from jumping.**

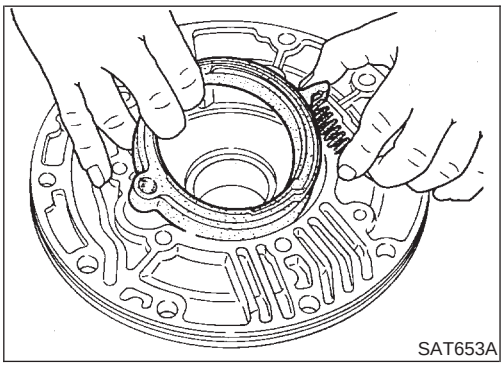
SAT653A

5. Remove cam ring and cam ring spring from oil pump housing.

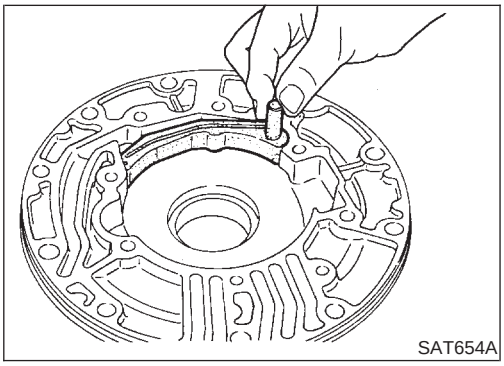
SAT654A

6. Remove pivot pin from control piston and remove control piston assembly.

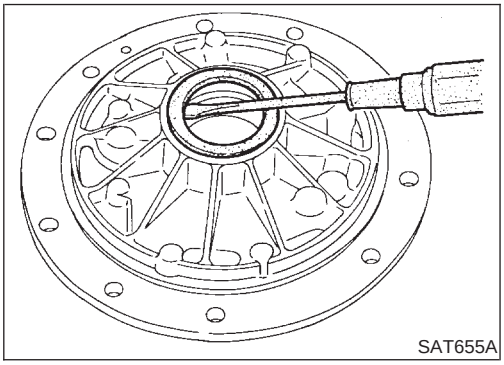
SAT655A

7. Remove oil seal from oil pump housing.
- **Be careful not to scratch oil pump housing.**

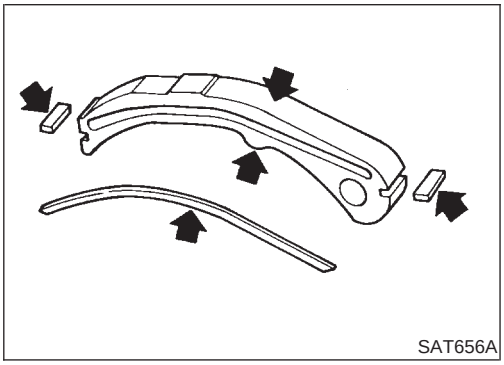
SAT656A

INSPECTION

NAAT0114

Oil Pump Cover, Rotor, Vanes, Control Piston, Side Seals, Cam Ring and Friction Ring

NAAT0114S01

- Check for wear or damage.

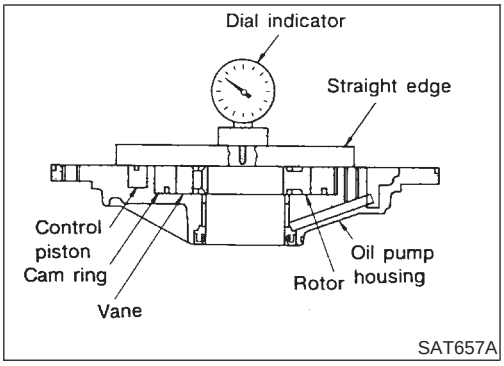

Side Clearances

NAAT0114S02

- Measure side clearances between end of oil pump housing and cam ring, rotor, vanes and control piston. Measure in at least four places along their circumferences. Maximum measured values should be within specified positions.
- **Before measurement, check that friction rings, O-ring, control piston side seals and cam ring spring are removed.**

  Standard clearance (Cam ring, rotor, vanes and control piston):

  Refer to SDS, AT-357.
- If not within standard clearance, replace oil pump assembly except oil pump cover assembly.

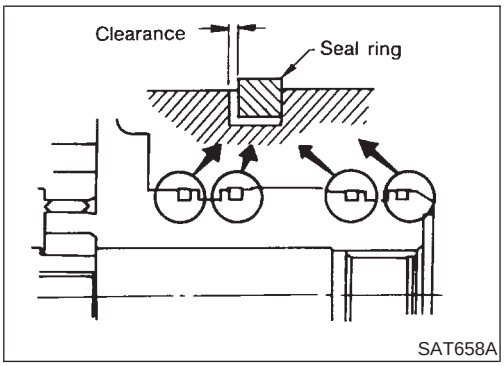

Seal Ring Clearance

NAAT0114S03

- Measure clearance between seal ring and ring groove.

  Standard clearance:

  0.10 - 0.25 mm (0.0039 - 0.0098 in)

  Wear limit:

  0.25 mm (0.0098 in)
- If not within wear limit, replace oil pump cover assembly.

ASSEMBLY

NAAT0115

1. Drive oil seal into oil pump housing.
- **Apply ATF to outer periphery and lip surface.**

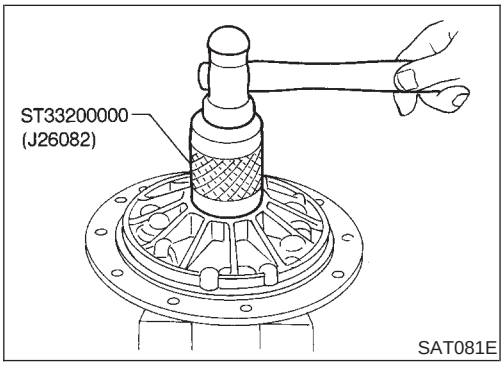

2. Install cam ring in oil pump housing by the following

a. Install side seal on control piston.
- **Pay attention to its direction — Black surface goes toward control piston.**
- **Apply petroleum jelly to side seal.**

b. Install control piston on oil pump.

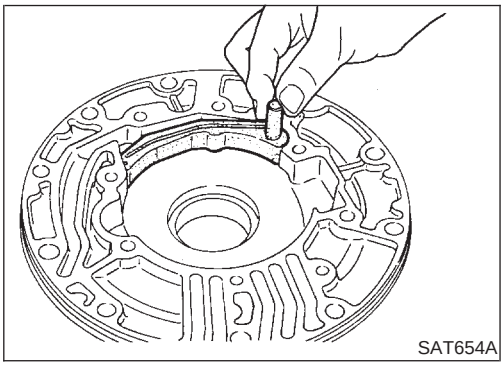

c. Install O-ring and friction ring on cam ring.
- **Apply petroleum jelly to O-ring.**

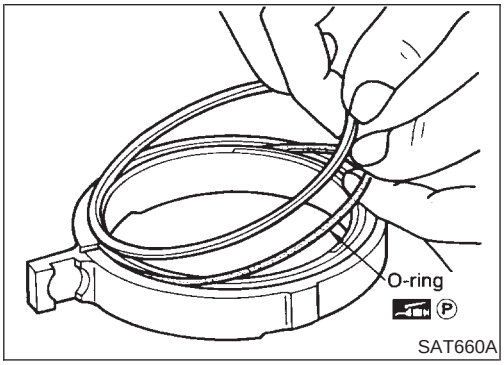

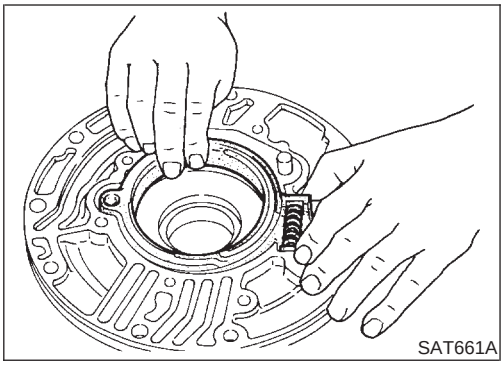
SAT661A

d. Assemble cam ring, cam ring spring and spring seat. Install spring by pushing it against pump housing.

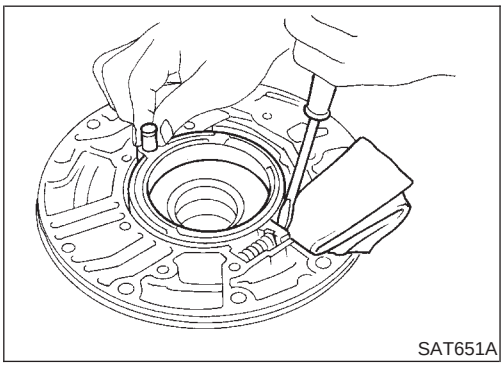
SAT651A

e. While pushing on cam ring install pivot pin.

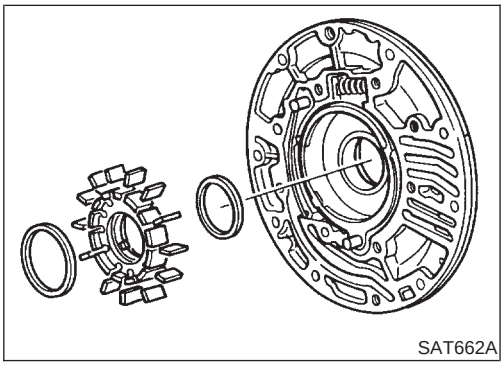
SAT662A

3. Install rotor, vanes and vane rings.

- **Pay attention to direction of rotor.**

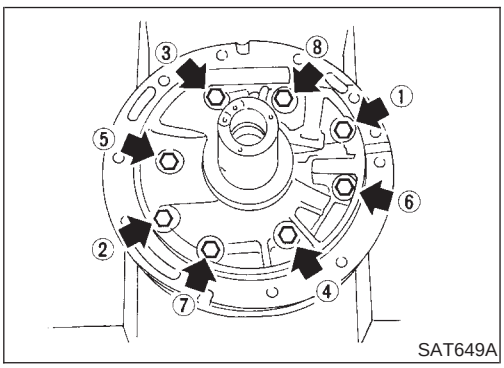

SAT649A

4. Install oil pump housing and oil pump cover.

a. Wrap masking tape around splines of oil pump cover assembly to protect seal. Position oil pump cover assembly in oil pump housing assembly, then remove masking tape.

b. Tighten bolts in a criss-cross pattern.

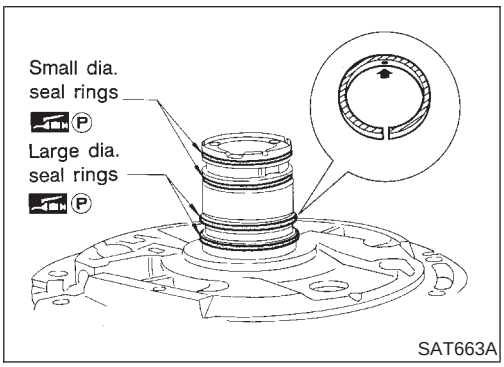

SAT663A

5. Install new seal rings carefully after packing ring grooves with petroleum jelly. Press rings down into jelly to a close fit.

- **Seal rings come in two different diameters. Check fit carefully in each groove.**

  Small dia. seal ring:

  No mark

  Large dia. seal ring:

  Yellow mark in area shown by arrow

- **Do not spread gap of seal ring excessively while installing. It may deform ring.**

Control Valve Assembly

COMPONENTS

NAAT0116

SEC. 317

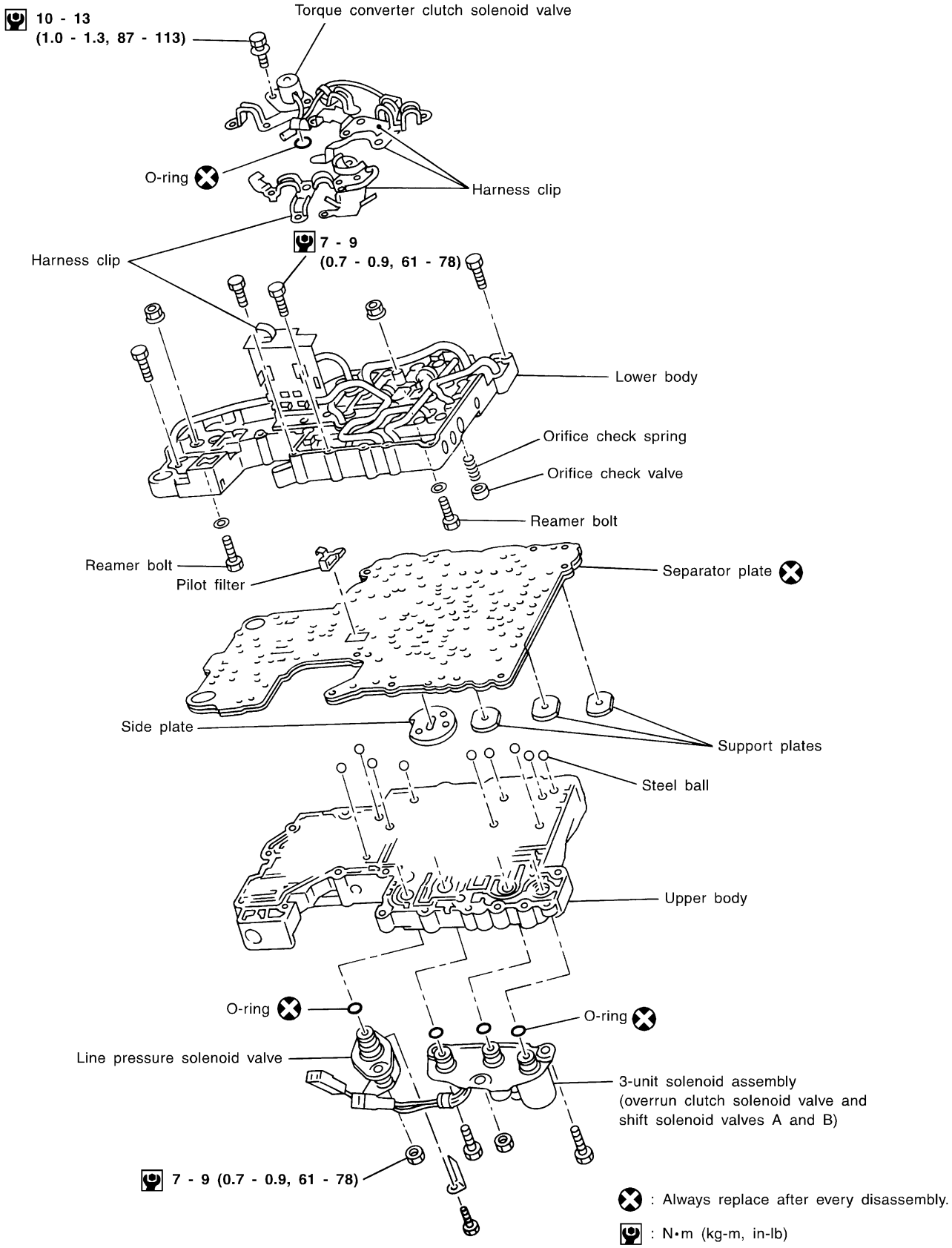

SAT156KA

DISASSEMBLY

NAAT0117

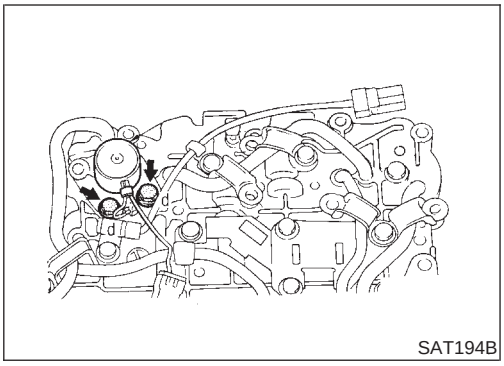
SAT194B

1. Remove solenoids.
a. Remove torque converter clutch solenoid valve and side plate from lower body.
b. Remove O-ring from solenoid.

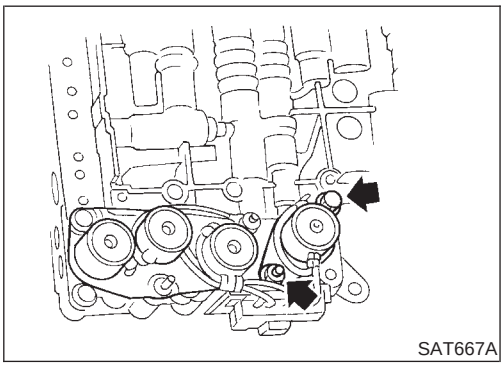
SAT667A

c. Remove line pressure solenoid valve from upper body.
d. Remove O-ring from solenoid.

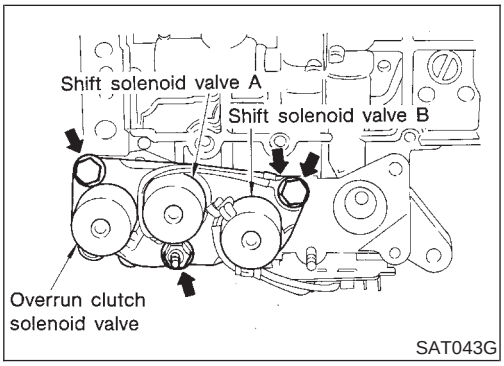

SAT043G

e. Remove 3-unit solenoid assembly from upper body.
f. Remove O-rings from solenoids.

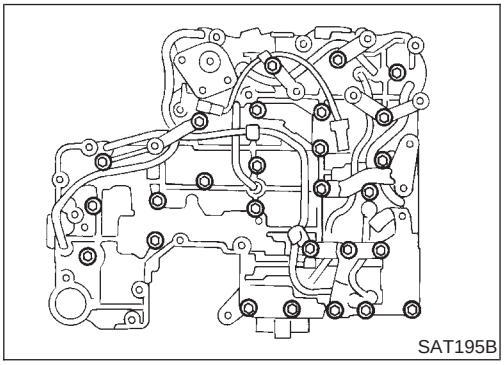
SAT195B

2. Disassemble upper and lower bodies.
a. Place upper body facedown, and remove bolts, reamer bolts and support plates.
b. Remove lower body, separator plate as a unit from upper body.
- **Be careful not to drop pilot filter, orifice check valve, spring and steel balls.**

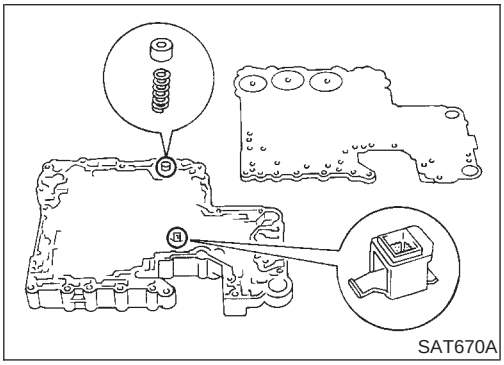
SAT670A

c. Place lower body facedown, and remove separator plate.
d. Remove pilot filter, orifice check valve and orifice check spring.

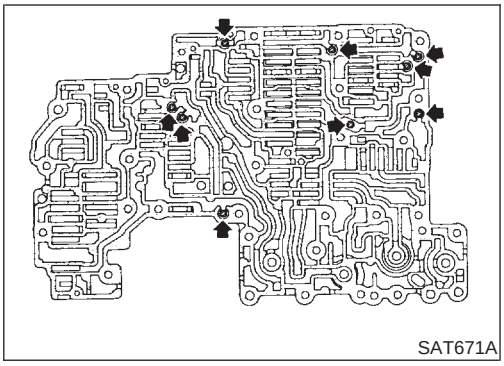
SAT671A

e. Check to see that steel balls are properly positioned in upper body. Then remove them from upper body.

INSPECTION

NAAT0118

Lower and Upper Bodies

NAAT0118S01

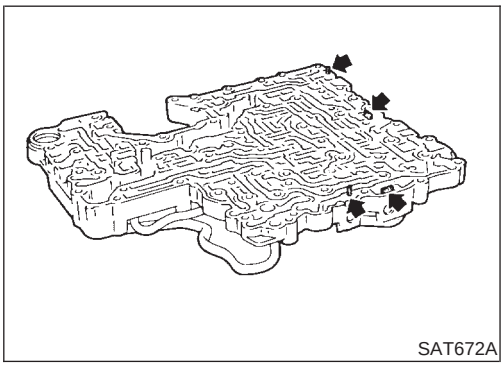
SAT672A

- Check to see that there are pins and retainer plates in lower body.

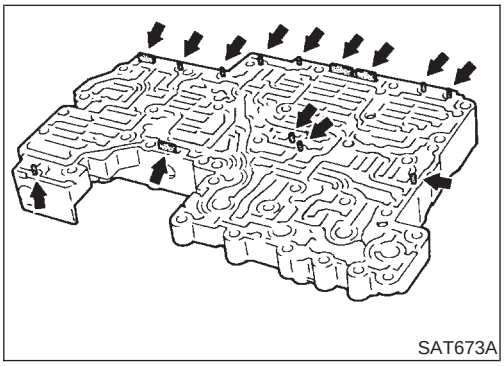
SAT673A

- Check to see that there are pins and retainer plates in upper body.
- **Be careful not to lose these parts.**

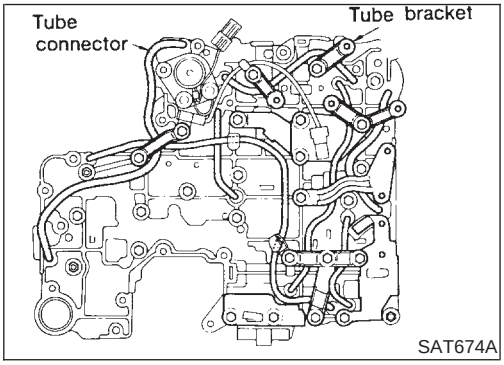

SAT674A

- Check to make sure that oil circuits are clean and free from damage.
- Check tube brackets and tube connectors for damage.

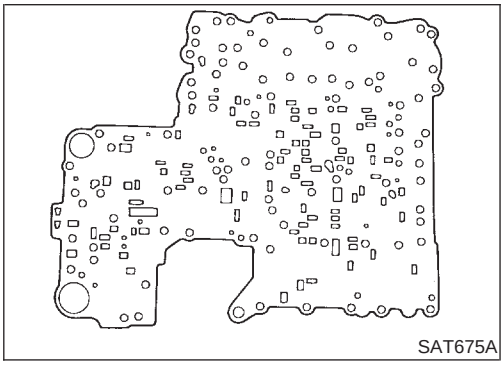
SAT675A

Separator Plate

NAAT0118S02

- Make sure that separator plate is free of damage and not deformed and oil holes are clean.

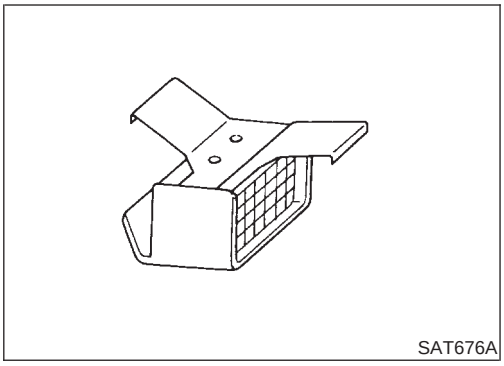
SAT676A

Pilot Filter

NAAT0118S03

- Check to make sure that filter is not clogged or damaged.

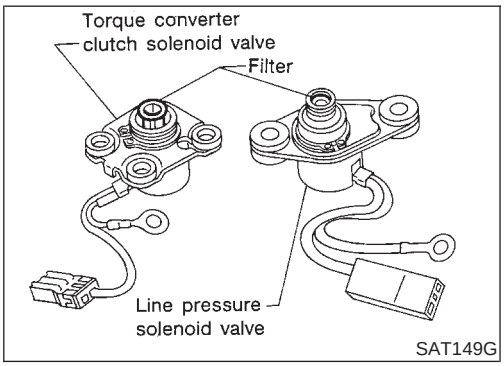

SAT149G

Torque Converter Clutch Solenoid Valve

NAAT0118S04

- Check that filter is not clogged or damaged.
- Measure resistance. Refer to "Component Inspection", AT-155.

Line Pressure Solenoid Valve

NAAT0118S05

- Check that filter is not clogged or damaged.
- Measure resistance. Refer to "Component Inspection", AT-170.

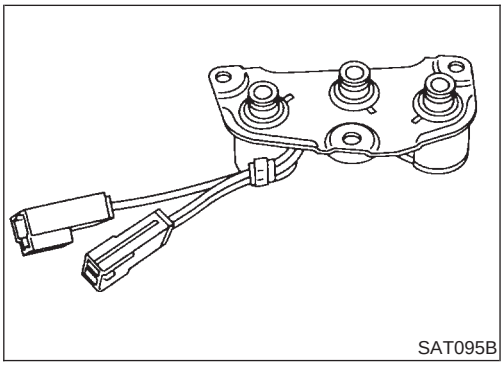
SAT095B

3-Unit Solenoid Assembly (Overrun Clutch Solenoid Valve and Shift Solenoid Valves A and B)

NAAT0118S06

- Measure resistance of each solenoid. Refer to "Component Inspection", AT-174, AT-178 and AT-189.

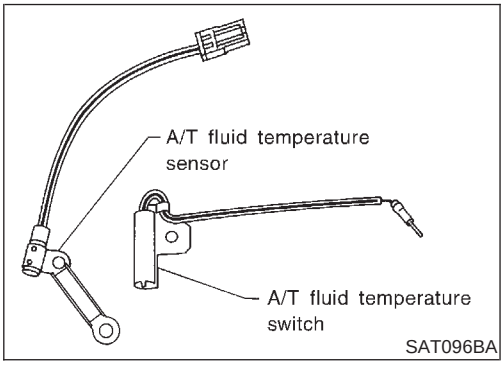

SAT096BA

A/T Fluid Temperature Sensor and Switch

NAAT0118S07

- Measure resistance. Refer to "Component Inspection", AT-113 and AT-261.

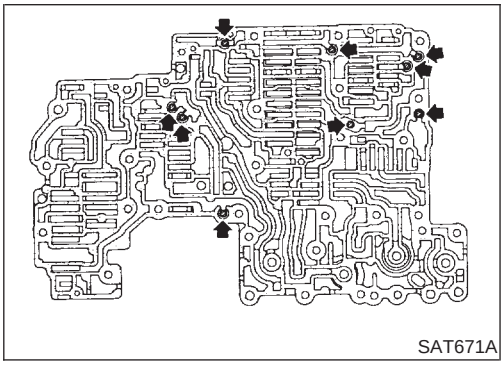
SAT671A

ASSEMBLY

NAAT0119

1. Install upper and lower bodies.

a. Place oil circuit of upper body face up. Install steel balls in their proper positions.

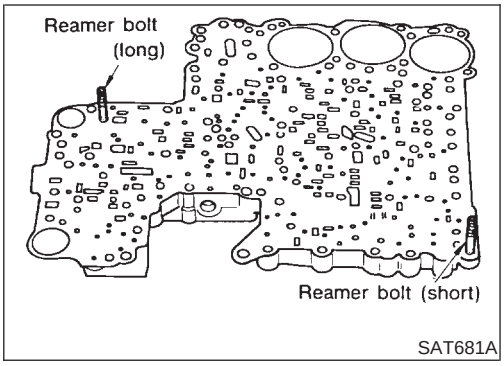

SAT681A

b. Install reamer bolts from bottom of upper body.

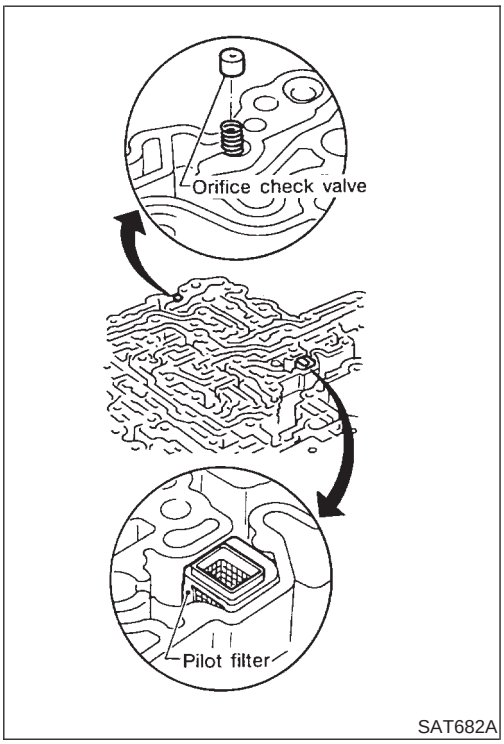

SAT682A

c. Place oil circuit of lower body face up. Install orifice check spring, orifice check valve and pilot filter.

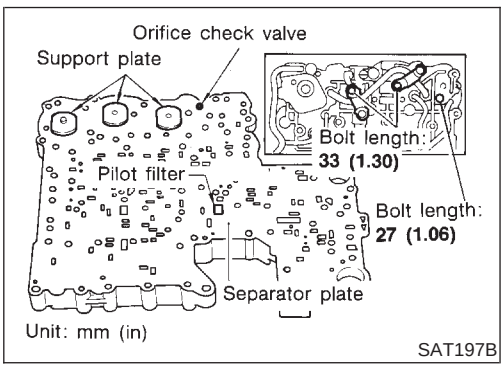

SAT197B

d. Install lower separator plate on lower body.

e. Install and temporarily tighten support plates, A/T fluid temperature sensor and tube brackets.

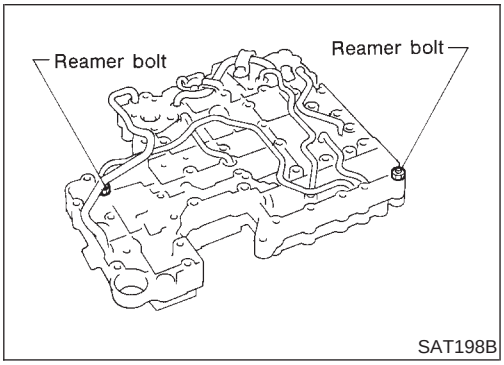

SAT198B

f. Temporarily assemble lower and upper bodies, using reamer bolt as a guide.

- **Be careful not to dislocate or drop steel balls, orifice check spring, orifice check valve and pilot filter.**

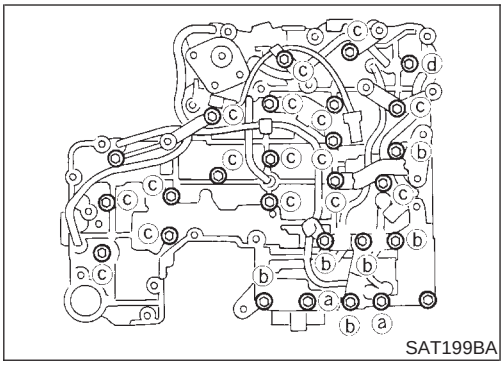

g. Install and temporarily tighten bolts and tube brackets in their proper locations.

Bolt length and location:

Bolt symbol	a	b	c	d
Bolt length mm (in)	70 (2.76)	50 (1.97)	33 (1.30)	27 (1.06)

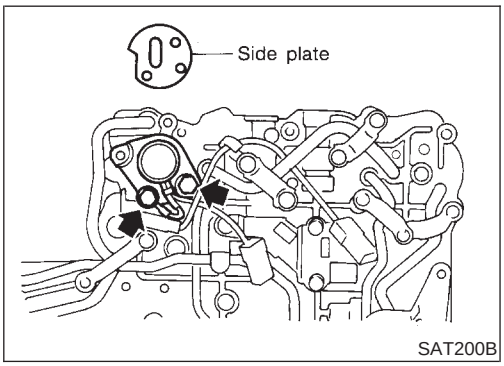

2. Install solenoids.

a. Attach O-ring and install torque converter clutch solenoid valve and side plates onto lower body.

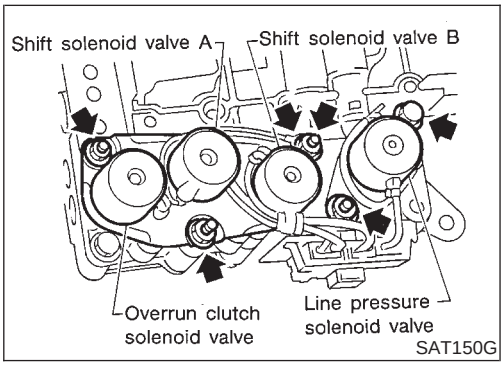

b. Attach O-rings and install 3-unit solenoids assembly onto upper body.

c. Attach O-ring and install line pressure solenoid valve onto upper body.

3. Tighten all bolts.

Control Valve Upper Body

COMPONENTS

NAAT0120

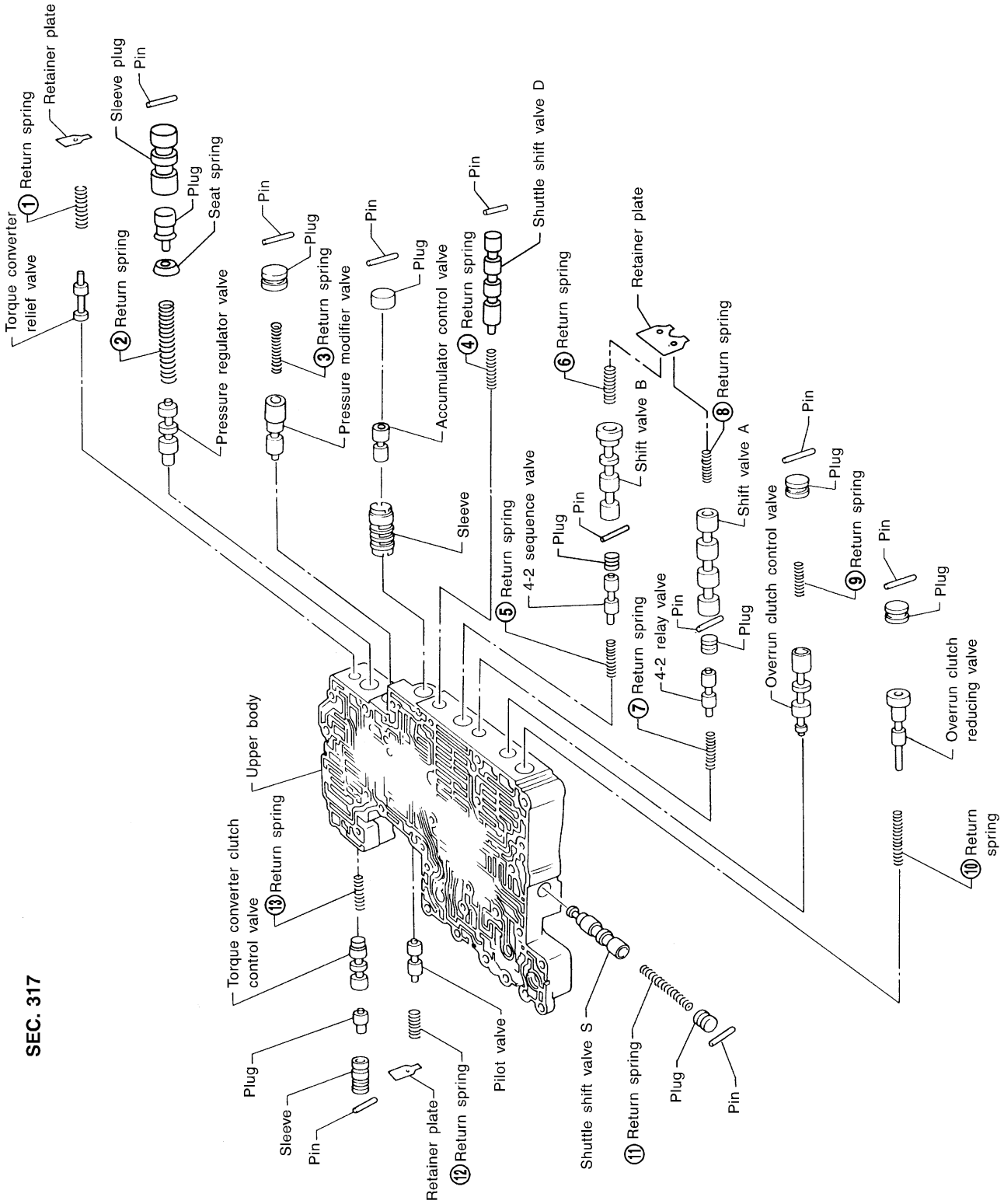

SAT142JA

Apply ATF to all components before their installation.
Numbers preceding valve springs correspond with those shown in SDS on page AT-354.

DISASSEMBLY

NAAT0121

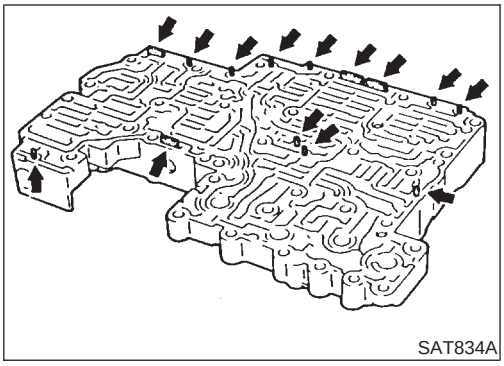
SAT834A

1. Remove valves at parallel pins.
- **Do not use a magnetic hand.**

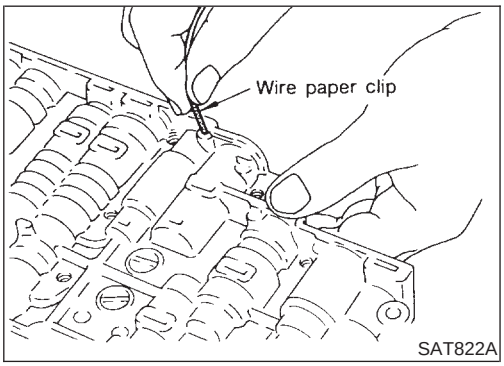

SAT822A

a. Use a wire paper clip to push out parallel pins.

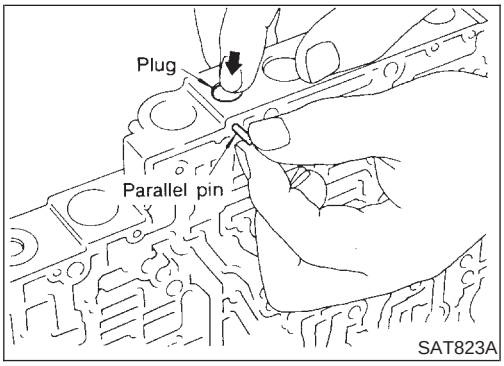

SAT823A

b. Remove parallel pins while pressing their corresponding plugs and sleeves.
- **Remove plug slowly to prevent internal parts from jumping out.**

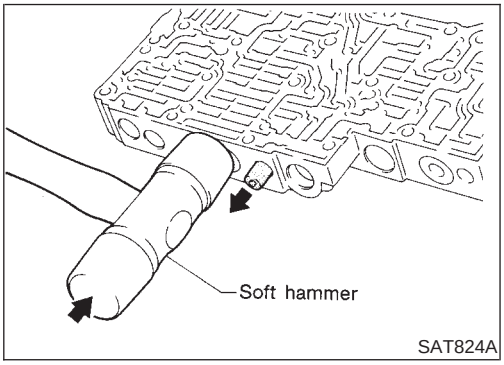

SAT824A

c. Place mating surface of valve facedown, and remove internal parts.
- **If a valve is hard to remove, place valve body facedown and lightly tap it with a soft hammer.**
- **Be careful not to drop or damage valves and sleeves.**

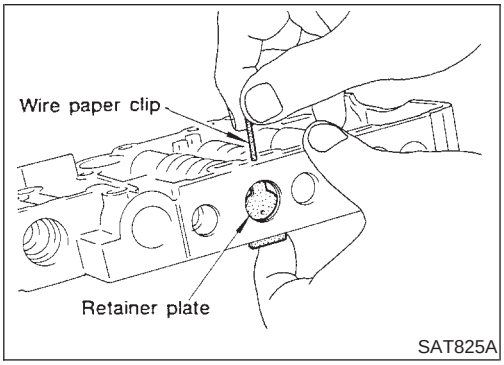

SAT825A

2. Remove valves at retainer plates.

a. Pry out retainer plate with wire paper clip.

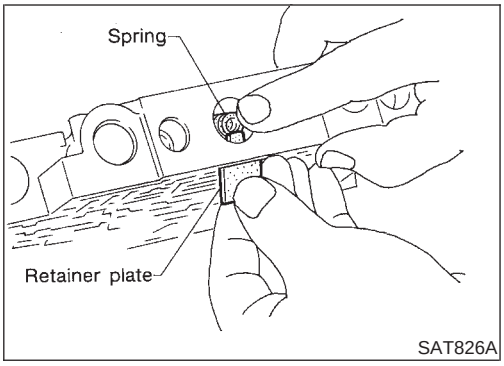

SAT826A

b. Remove retainer plates while holding spring.

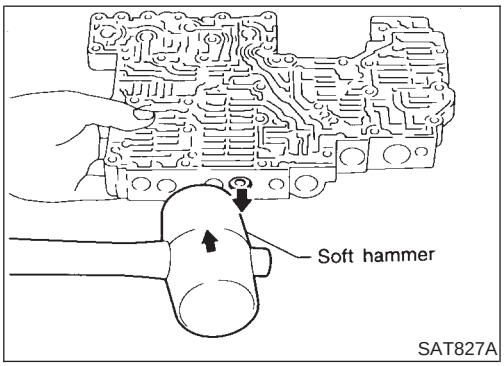

SAT827A

c. Place mating surface of valve facedown, and remove internal parts.

- **If a valve is hard to remove, lightly tap valve body with a soft hammer.**
- **Be careful not to drop or damage valves, sleeves, etc.**

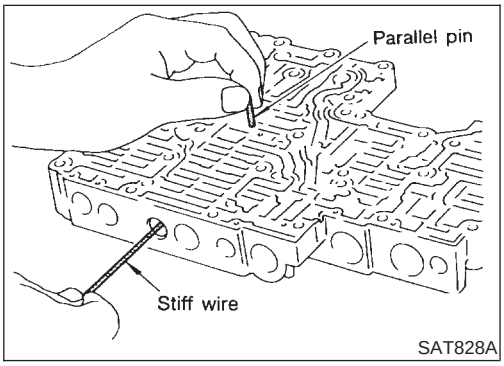

SAT828A

- 4-2 sequence valve and relay valve are located far back in upper body. If they are hard to remove, carefully push them out using stiff wire.
- **Be careful not to scratch sliding surface of valve with wire.**

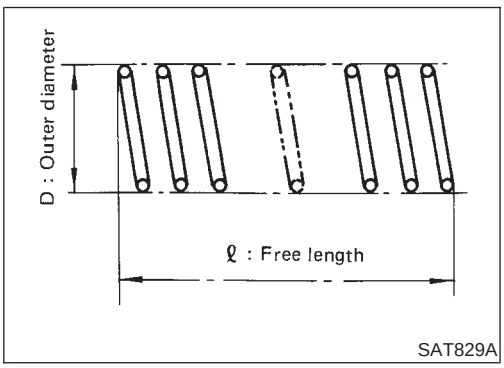

SAT829A

INSPECTION

NAAT0122

Valve Springs

NAAT0122S01

- Measure free length and outer diameter of each valve spring. Also check for damage or deformation.

  Inspection standard:

  Refer to SDS, AT-354.

- Replace valve springs if deformed or fatigued.

Control Valves

NAAT0122S02

- Check sliding surfaces of valves, sleeves and plugs.

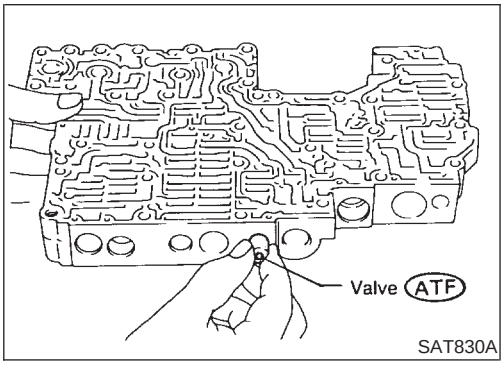

SAT830A

ASSEMBLY

NAAT0123

1. Lubricate the control valve body and all valves with ATF. Install control valves by sliding them carefully into their bores.

- **Be careful not to scratch or damage valve body.**

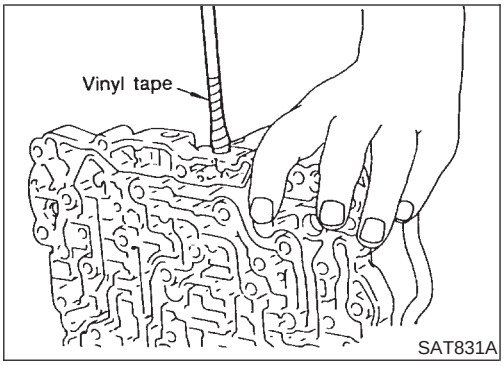

- Wrap a small screwdriver with vinyl tape and use it to insert the valves into proper position.

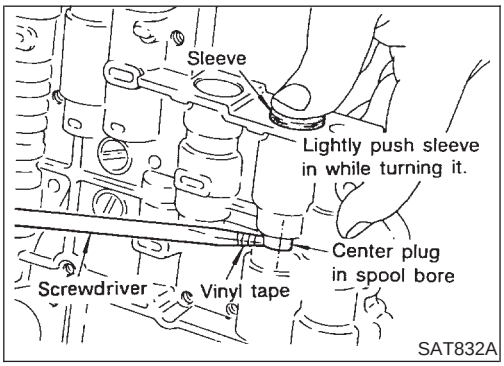

Pressure regulator valve

- If pressure regulator plug is not centered properly, sleeve cannot be inserted into bore in upper body. If this happens, use vinyl tape wrapped screwdriver to center sleeve until it can be inserted.
- Turn sleeve slightly while installing.

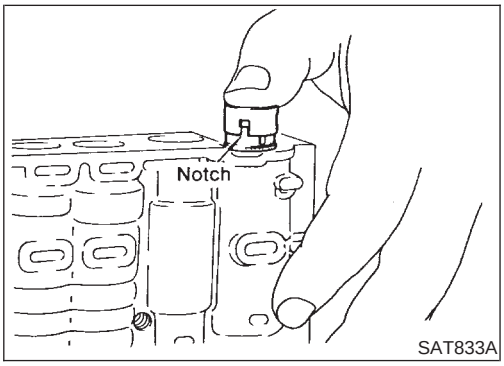

Accumulator control plug

- Align protrusion of accumulator control sleeve with notch in plug.
- Align parallel pin groove in plug with parallel pin, and install accumulator control valve.

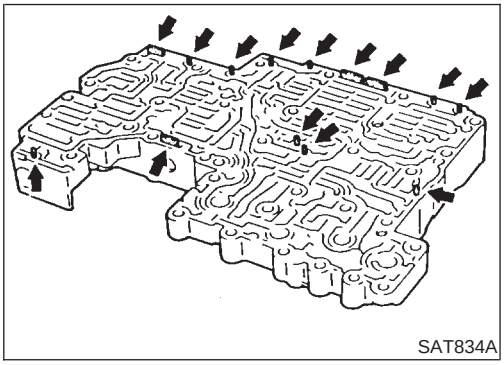

2. Install parallel pins and retainer plates.

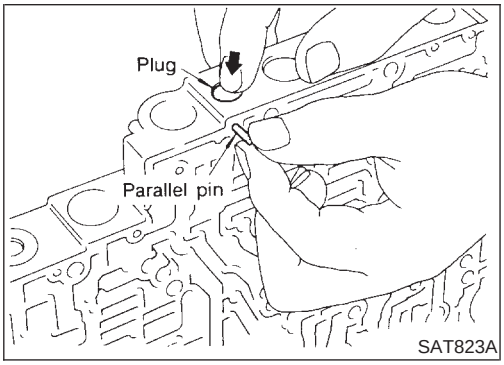

- **While pushing plug, install parallel pin.**

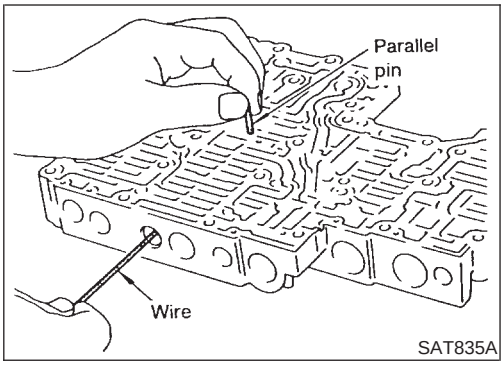

4-2 sequence valve and relay valve

- Push 4-2 sequence valve and relay valve with wire wrapped in vinyl tape to prevent scratching valve body. Install parallel pins.

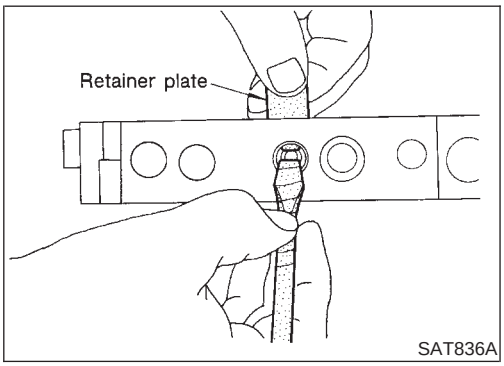

- Insert retainer plate while pushing spring.

Control Valve Lower Body

COMPONENTS

NAAT0124

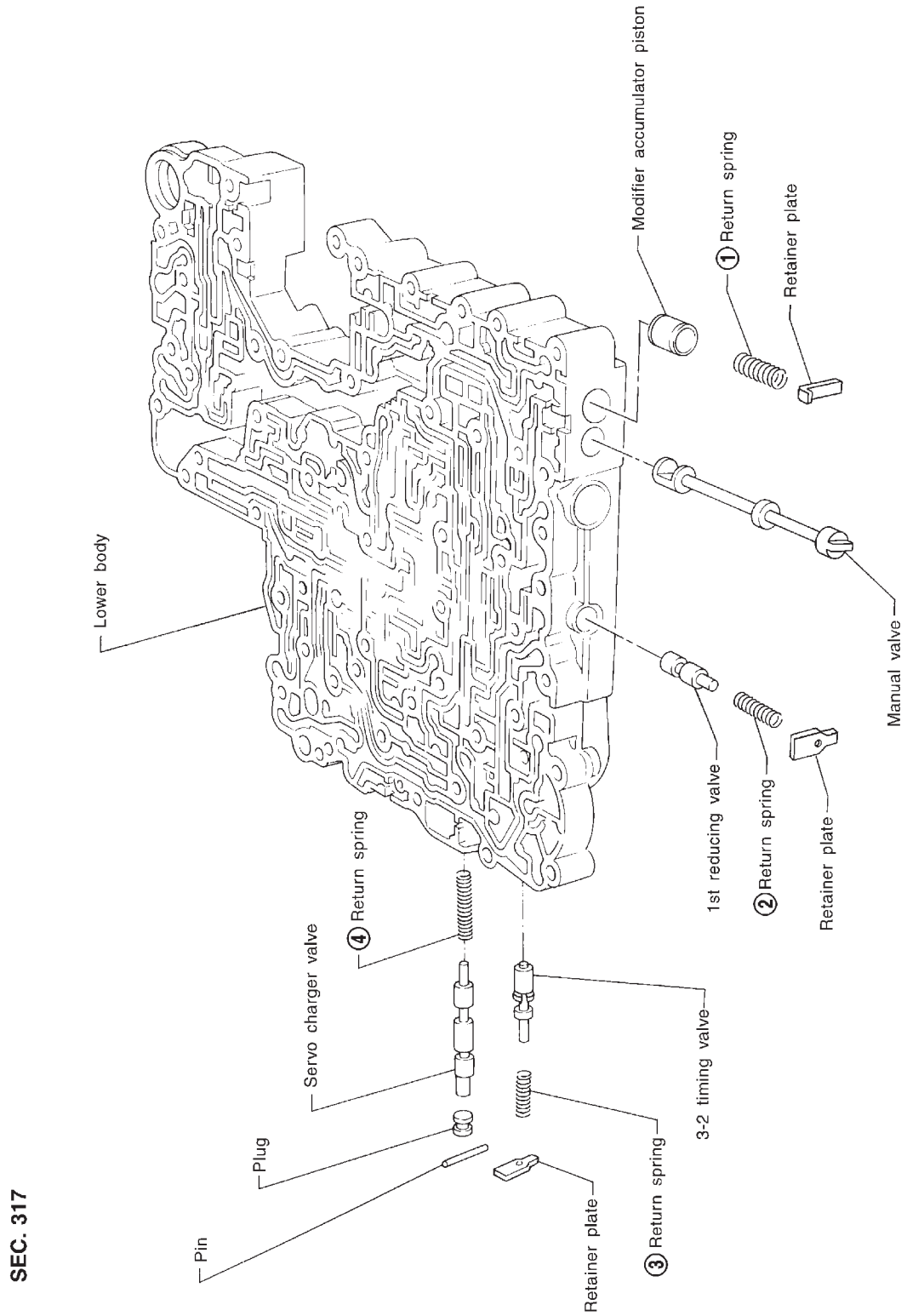

Apply ATF to all components before their installation.
Numbers preceding valve springs correspond with those shown in SDS on page AT-354.

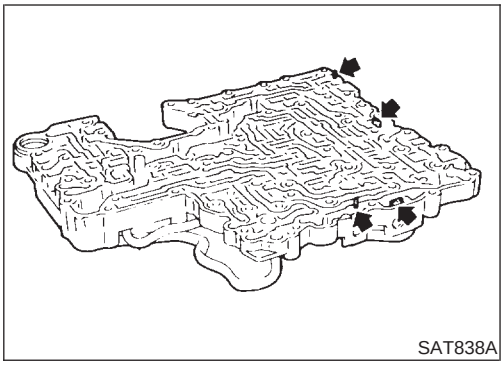
SAT838A

DISASSEMBLY

NAAT0125

1. Remove valves at parallel pins.
2. Remove valves at retainer plates.
   For removal procedures, refer to "DISASSEMBLY" of Control Valve Upper Body.

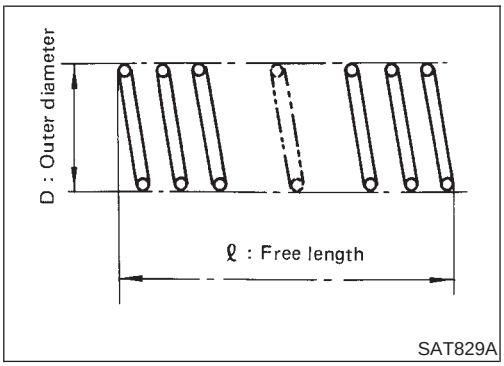

SAT829A

INSPECTION

NAAT0126

Valve Springs

NAAT0126S01

- Check each valve spring for damage or deformation. Also measure free length and outer diameter.

  Inspection standard:

  Refer to SDS, AT-354.

- Replace valve springs if deformed or fatigued.

Control Valves

NAAT0126S02

- Check sliding surfaces of control valves, sleeves and plugs for damage.

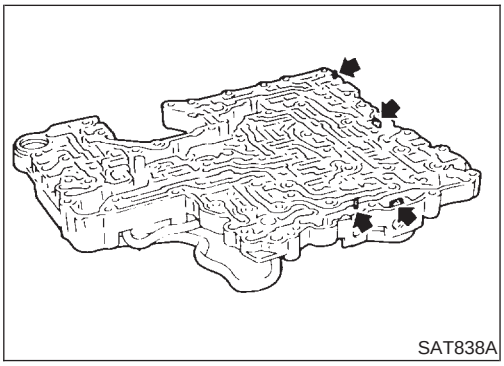
SAT838A

ASSEMBLY

NAAT0127

- Install control valves.
  For installation procedures, refer to "ASSEMBLY" of Control Valve Upper Body, AT-306.

Reverse Clutch

COMPONENTS

NAAT0128

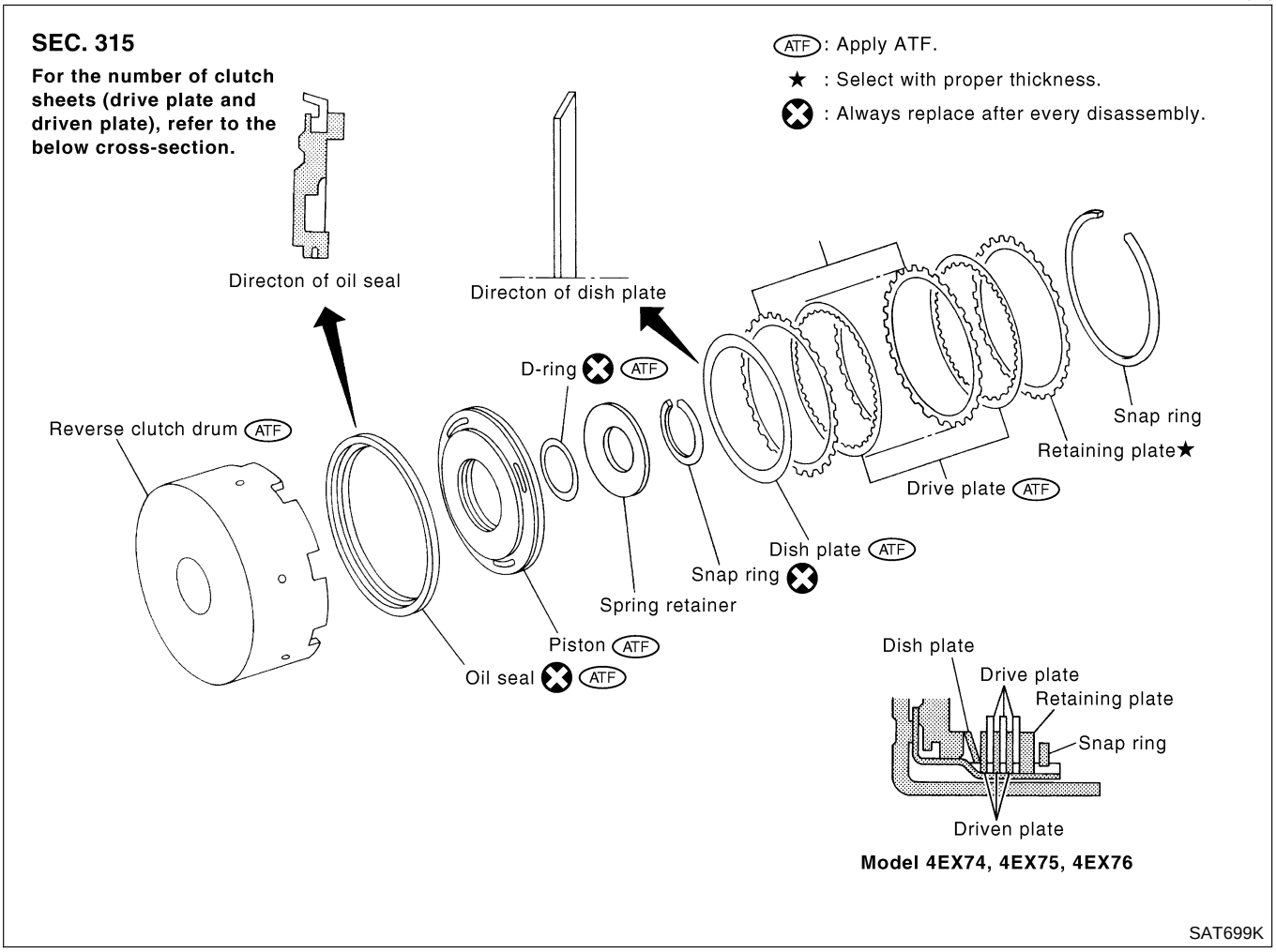

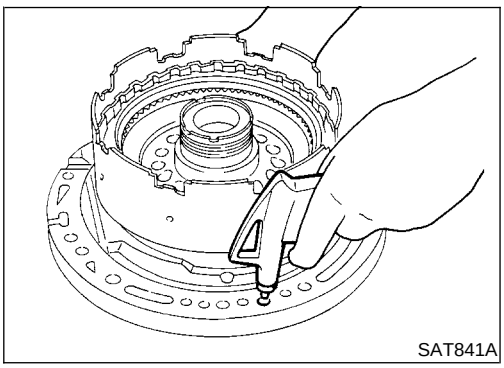

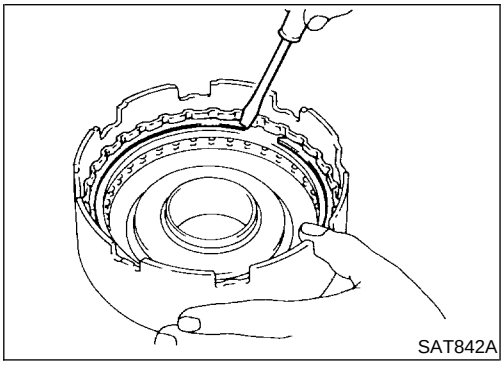

DISASSEMBLY

NAAT0129

1. Check operation of reverse clutch.

a. Install seal ring onto oil pump cover and install reverse clutch. Apply compressed air to oil hole.

b. Check to see that retaining plate moves to snap ring.

c. If retaining plate does not contact snap ring,

- D-ring might be damaged.
- Lip seal might be damaged.
- Fluid might be leaking past piston check ball.

2. Remove drive plates, driven plates, retaining plate, dish plate and snap ring.

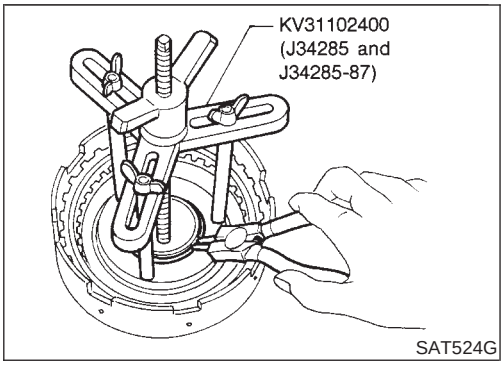

3. Remove snap ring from clutch drum while compressing clutch springs.
- **Do not expand snap ring excessively.**
4. Remove spring retainer.

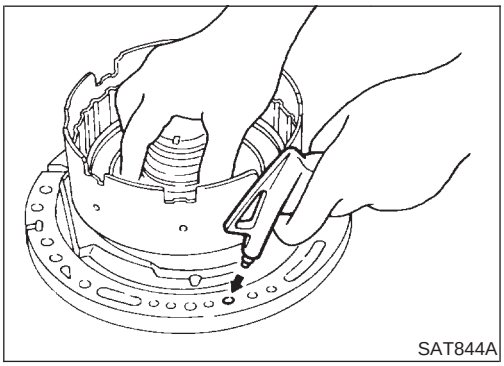

5. Install seal ring onto oil pump cover and install reverse clutch drum. While holding piston, gradually apply compressed air to oil hole until piston is removed.
- **Do not apply compressed air abruptly.**
6. Remove D-ring and oil seal from piston.

INSPECTION

NAAT0130

Reverse Clutch Snap Ring and Spring Retainer

NAAT0130S01

- Check for deformation, fatigue or damage.

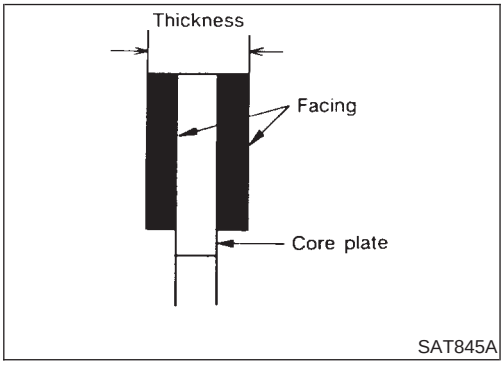

Reverse Clutch Drive Plates

NAAT0130S03

- Check facing for burns, cracks or damage.
- Measure thickness of facing.

  Thickness of drive plate:

  Standard value: 1.90 - 2.05 mm (0.0748 - 0.0807 in)

  Wear limit: 1.80 mm (0.0709 in)
- If not within wear limit, replace.

Reverse Clutch Dish Plate

NAAT0130S04

- Check for deformation or damage.

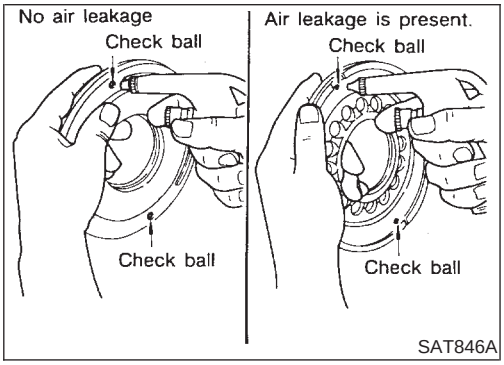

Reverse Clutch Piston

NAAT0130S05

- Shake piston to assure that balls are not seized.
- Apply compressed air to check ball oil hole opposite the return spring. Make sure there is no air leakage.
- Also apply compressed air to oil hole on return spring side to assure that air leaks past ball.

ASSEMBLY

NAAT0131

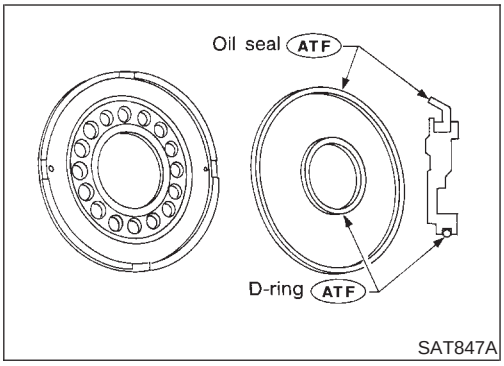

SAT847A

1. Install D-ring and oil seal on piston.
- **Apply ATF to both parts.**

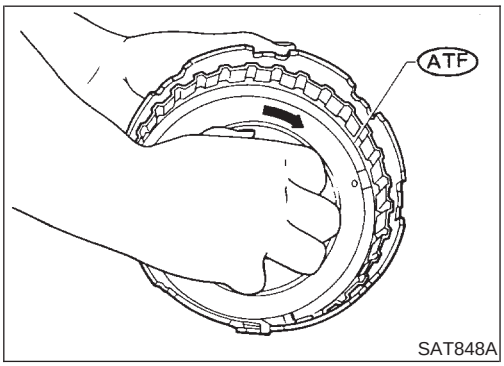

SAT848A

2. Install piston assembly by turning it slowly and evenly.
- **Apply ATF to inner surface of drum.**
3. Install spring retainer.

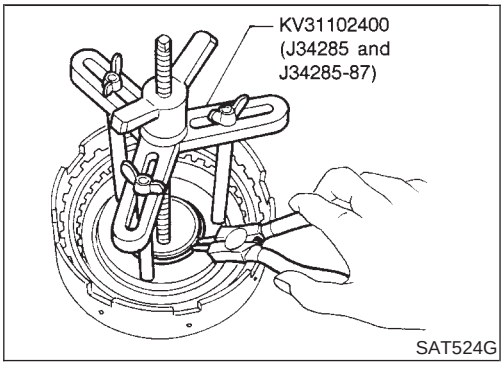

SAT524G

4. Install snap ring while compressing clutch springs.

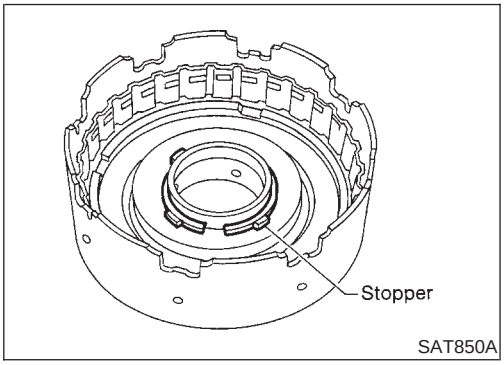

SAT850A

- **Do not align snap ring gap with spring retainer stopper.**

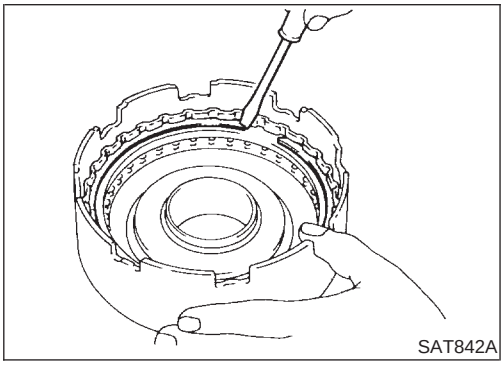
SAT842A

5. Install drive plates, driven plates, retaining plate and dish plate.
6. Install snap ring.

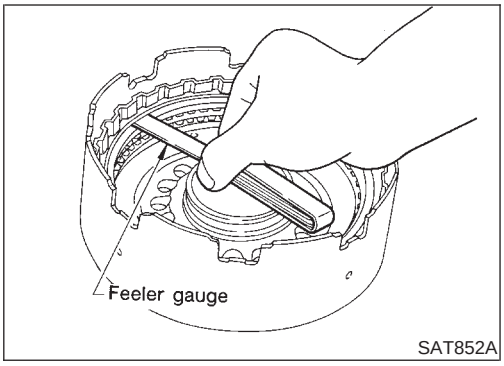

7. Measure clearance between retaining plate and snap ring. If not within allowable limit, select proper retaining plate.

Specified clearance:
Standard
0.5 - 0.8 mm (0.020 - 0.031 in)
Allowable limit
1.2 mm (0.047 in)
Retaining plate:
Refer to SDS, AT-355.

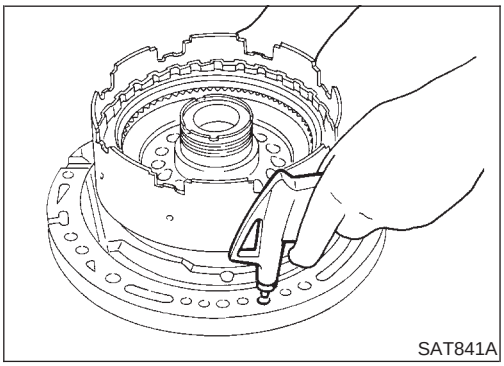

8. Check operation of reverse clutch.
Refer to "DISASSEMBLY" of Reverse Clutch, AT-311.

High Clutch

COMPONENTS

NAAT0132

SEC. 315

For the number of clutch sheets (drive plate and driven plate), refer to the below cross-section.

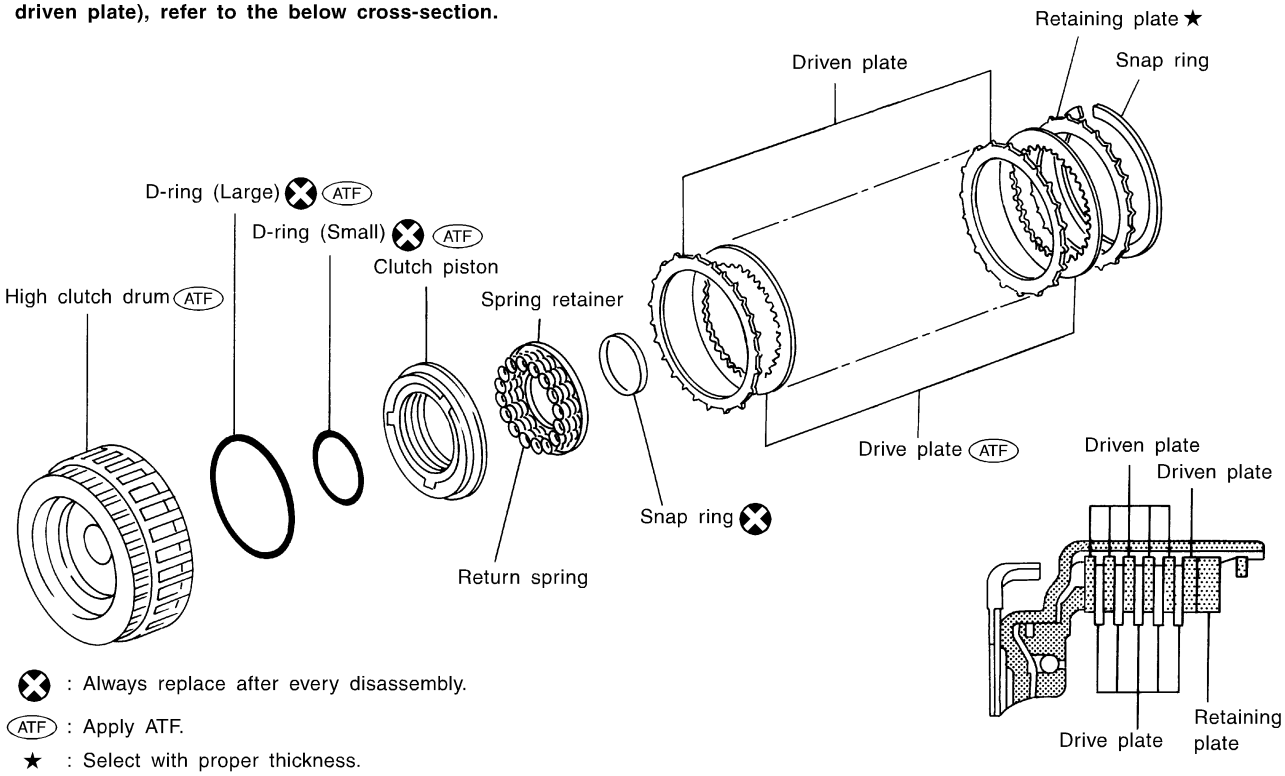

⊗ : Always replace after every disassembly.
ATF : Apply ATF.
★ : Select with proper thickness.

SAT158KA

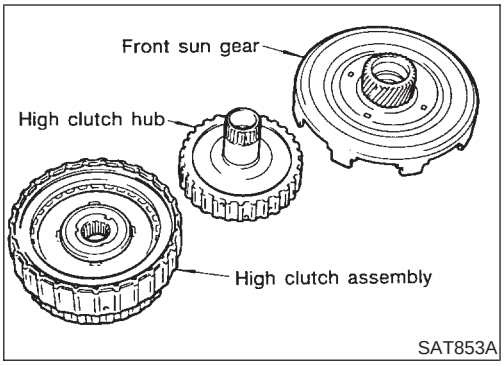

SAT853A

DISASSEMBLY AND ASSEMBLY

NAAT0133

Service procedures for high clutch are essentially the same as those for reverse clutch, with the following exception:

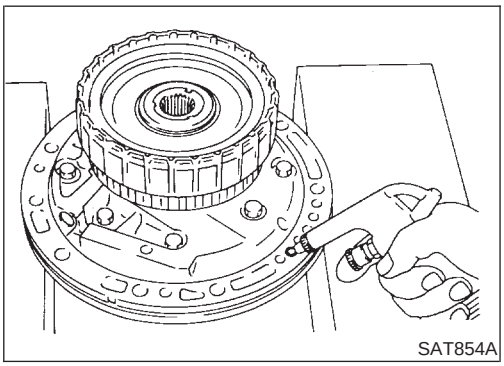
SAT854A

- Check of high clutch operation

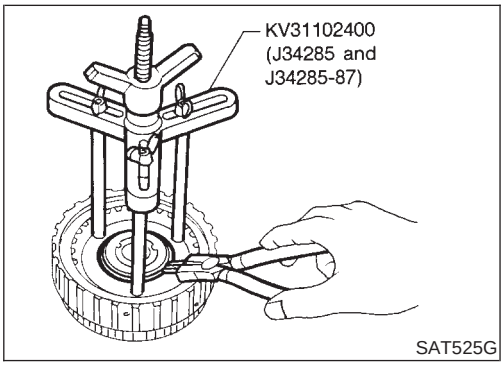

SAT525G

- Removal and installation of return spring

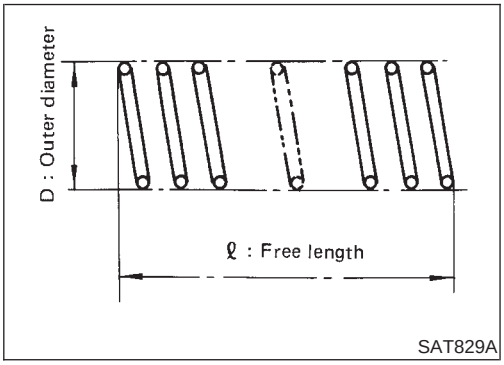

SAT829A

- Inspection of high clutch return springs

  Inspection standard:

  Refer to SDS, AT-354.

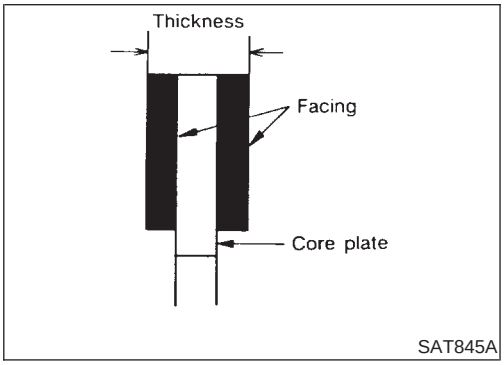

SAT845A

- Inspection of high clutch drive plate

  Thickness of drive plate:

  Standard

  1.52 - 1.67 mm (0.0598 - 0.0657 in)

  Wear limit

  1.40 mm (0.0551 in)

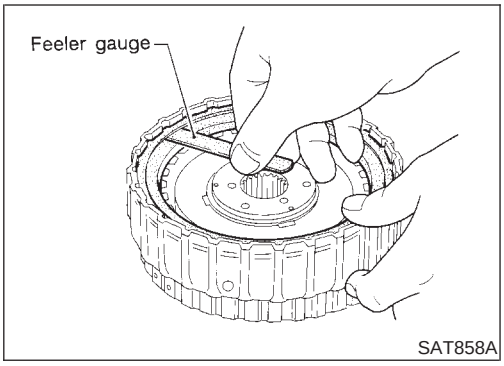

- Measurement of clearance between retaining plate and snap ring

  Specified clearance:

  Standard

  1.8 - 2.2 mm (0.071 - 0.087 in)

  Allowable limit

  3.2 mm (0.126 in)

  Retaining plate:

  Refer to SDS, AT-355.

Forward and Overrun Clutches

COMPONENTS

NAAT0134

SEC. 315

For the number of clutch sheets (drive plate and driven plate), refer to the below cross-section.

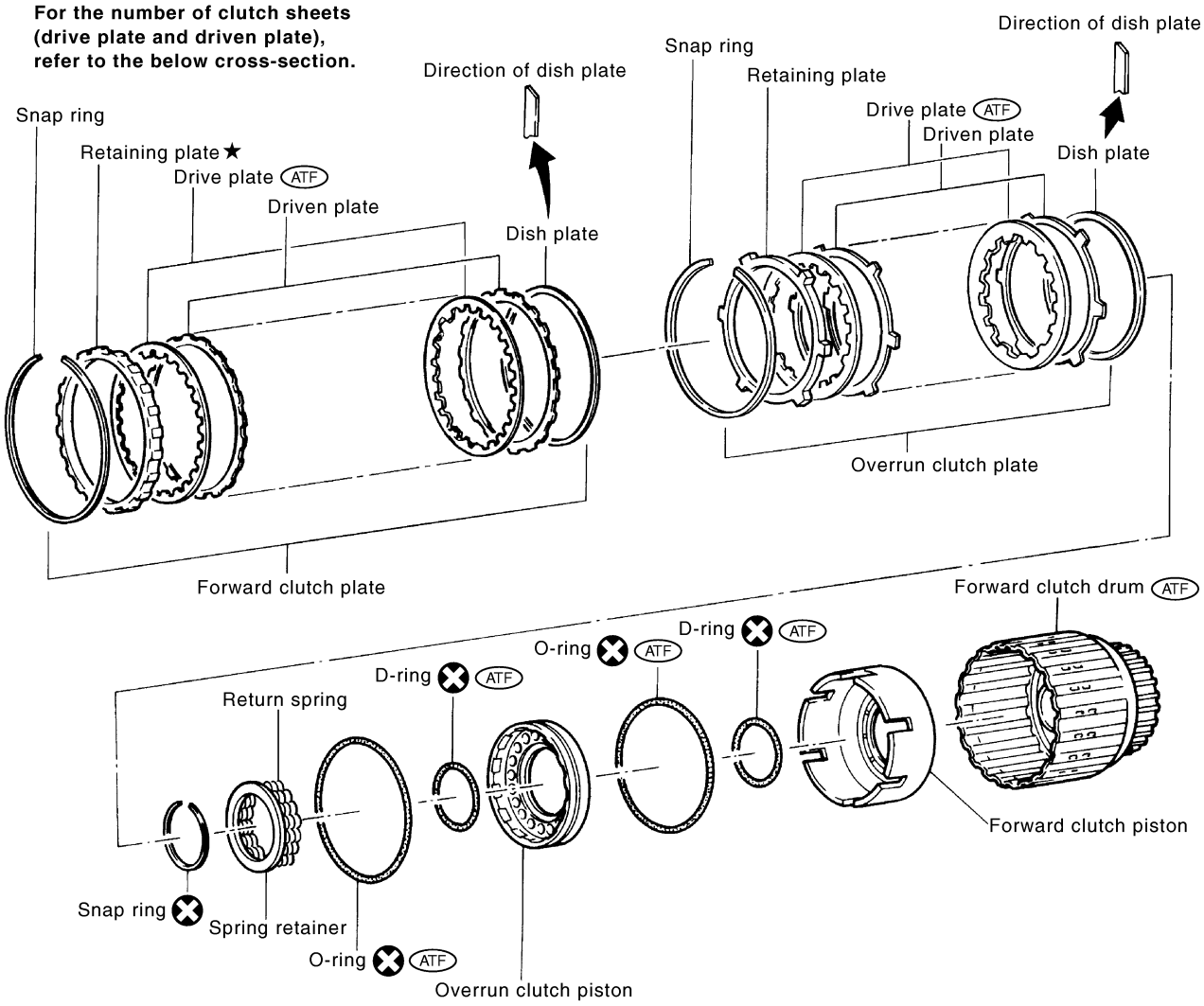

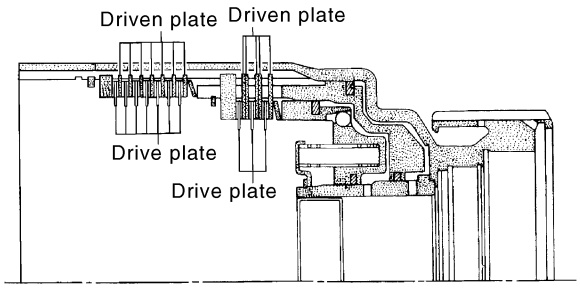

Model 4EX74 (2WD)

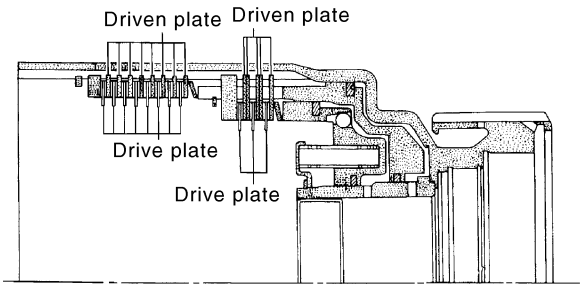

Model 4EX75, 4EX76 (4WD)

(ATF) : Apply ATF.

★ : Select with proper thickness.

⊗ : Always replace after every disassembly.

SAT711K

DISASSEMBLY AND ASSEMBLY

NAAT0135

Forward and overrun clutches are serviced essentially the same way as reverse clutch is serviced. However, note the following exceptions.

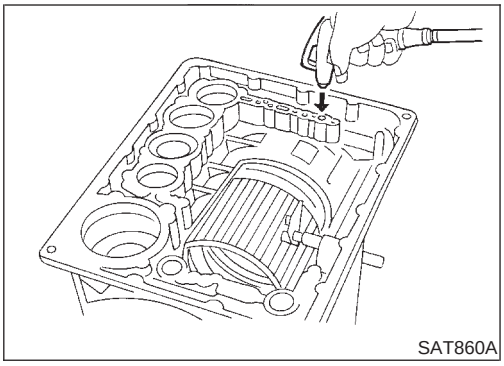
SAT860A

- Check of forward clutch operation

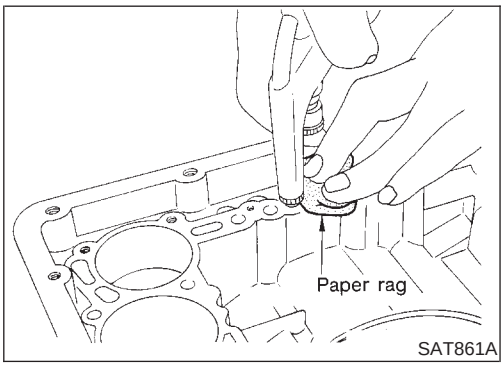

SAT861A

- Check of overrun clutch operation

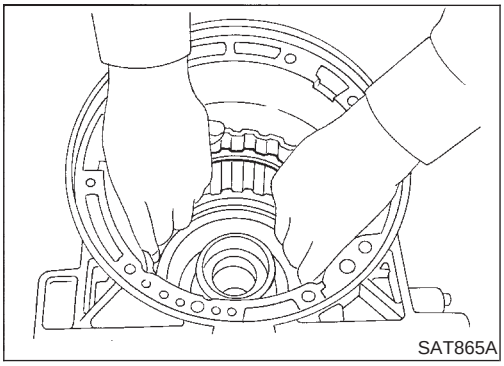
SAT865A

- Removal of forward clutch drum
  Remove forward clutch drum from transmission case by holding snap ring.

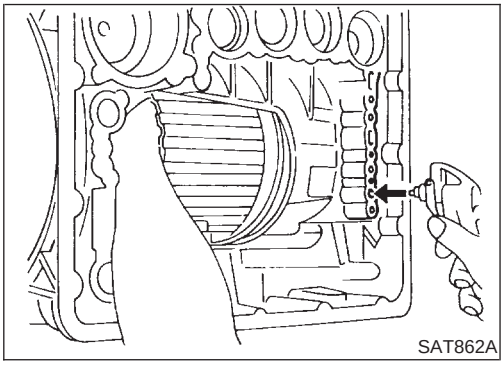
SAT862A

- Removal of forward clutch and overrun clutch pistons

a) While holding overrun clutch piston, gradually apply compressed air to oil hole.

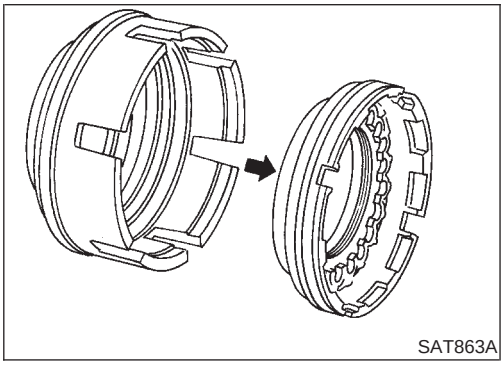
SAT863A

b) Remove overrun clutch from forward clutch.

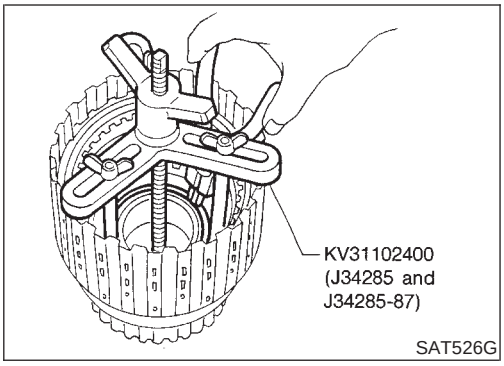

- Removal and installation of return springs

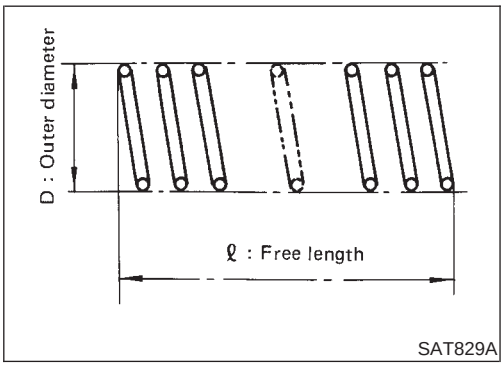

- Inspection of forward clutch and overrun clutch return springs

  Inspection standard:

  Refer to SDS, AT-354.

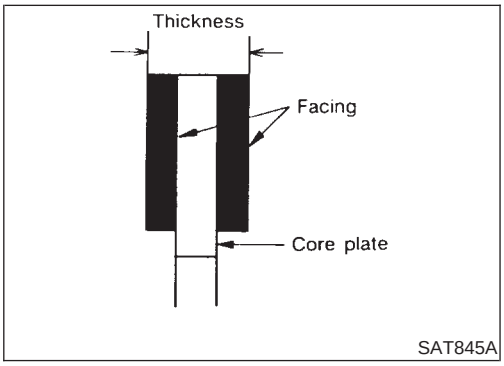

- Inspection of forward clutch drive plates

  Thickness of drive plate:

  Standard

  1.52 - 1.67 mm (0.0598 - 0.0657 in)

  Wear limit

  1.40 mm (0.0551 in)

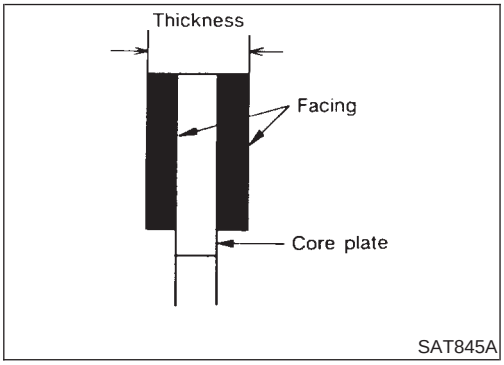

- Inspection of overrun clutch drive plates

  Thickness of drive plate:

  Standard

  1.90 - 2.05 mm (0.0748 - 0.0807 in)

  Wear limit

  1.80 mm (0.0709 in)

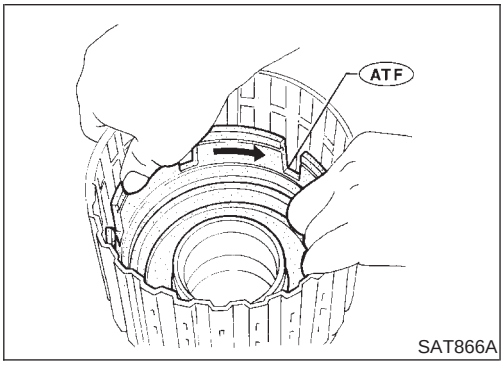

- Installation of forward clutch piston and overrun clutch piston

a) Install forward clutch piston by turning it slowly and evenly.

- **Apply ATF to inner surface of clutch drum.**

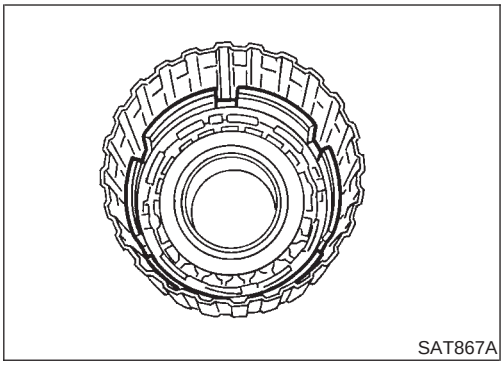
SAT867A

- **Align notch in forward clutch piston with groove in forward clutch drum.**

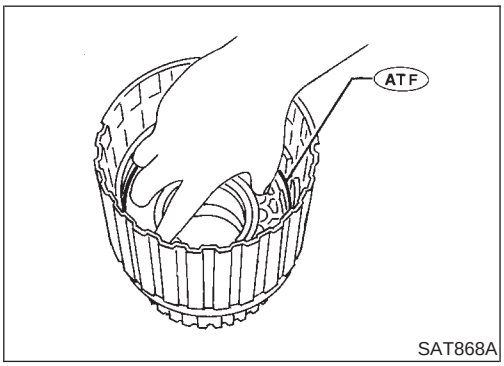

SAT868A

b) Install overrun clutch by turning it slowly and evenly.

- **Apply ATF to inner surface of forward clutch piston.**

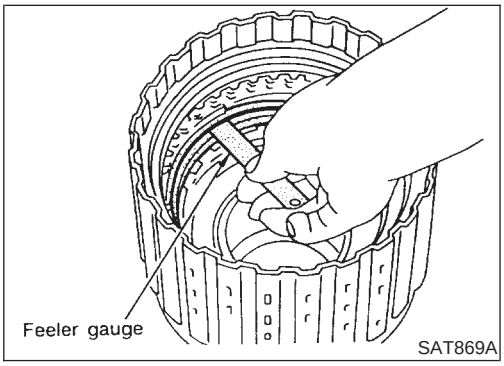

SAT869A

- Measurement of clearance between retaining plate and snap ring of overrun clutch

  Specified clearance:
  Standard
  1.0 - 1.4 mm (0.039 - 0.055 in)
  Allowable limit
  2.0 mm (0.079 in)
  Retaining plate:
  Refer to SDS, AT-356.

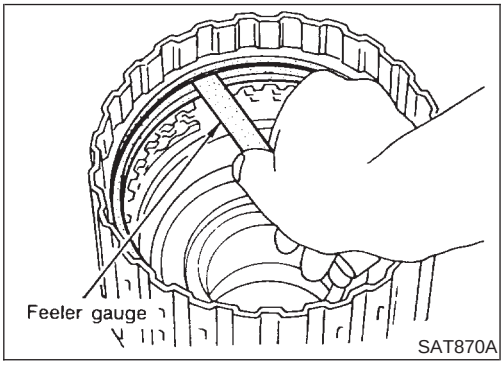

SAT870A

- Measurement of clearance between retaining plate and snap ring of forward clutch

  Specified clearance:
  Standard
  0.35 - 0.75 mm (0.0138 - 0.0295 in)
  Allowable limit
  Model 4EX16, 4EX79 (2WD)
  2.15 mm (0.0846 in)
  Model 4EX17, 4EX23, 4EX80, 4EX81 (4WD)
  2.35 mm (0.0925 in)
  Retaining plate:
  Refer to SDS, AT-356.

Low & Reverse Brake

COMPONENTS

NAAT0136

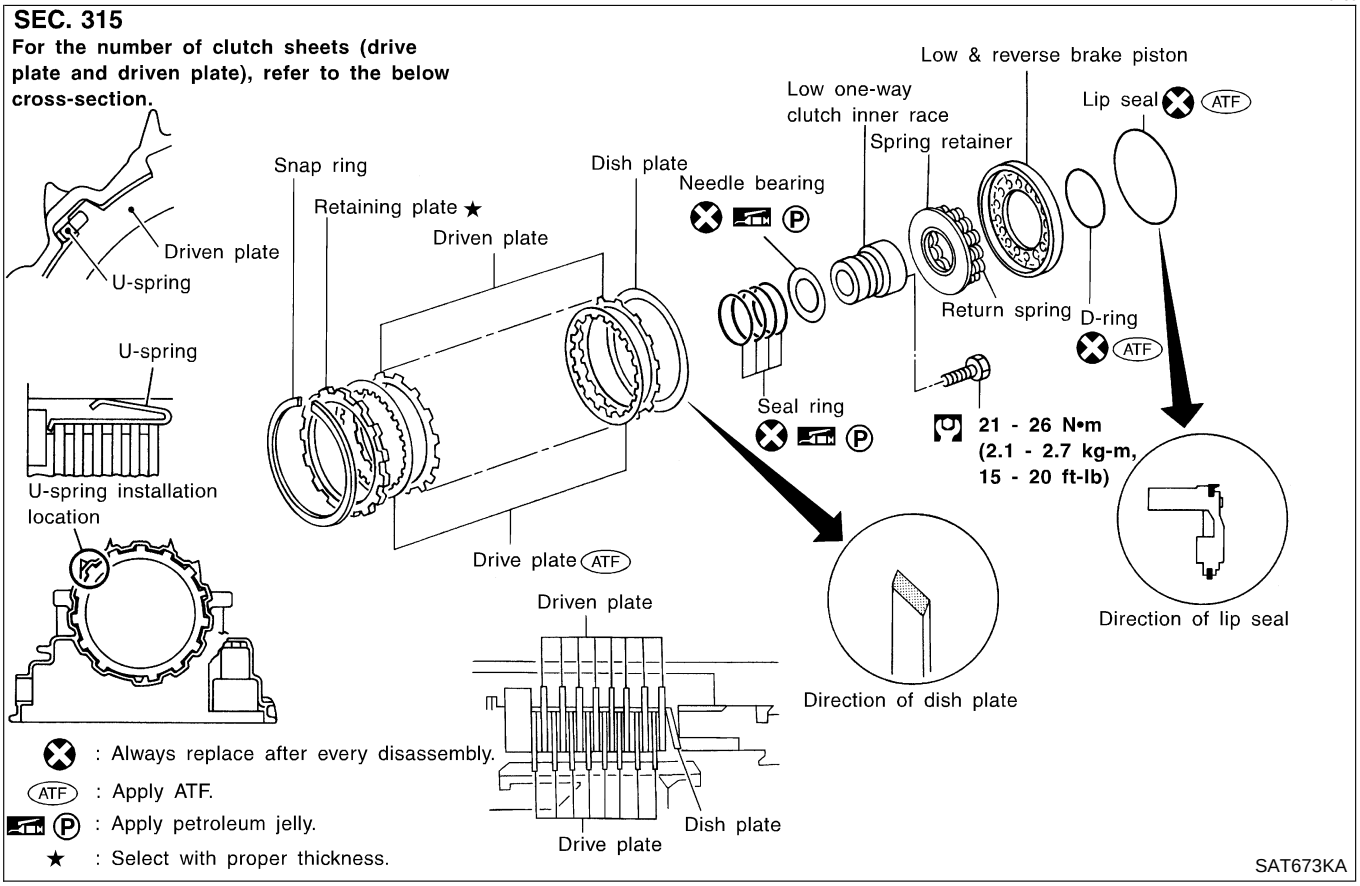

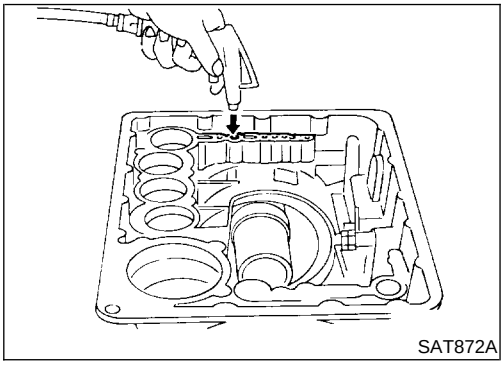

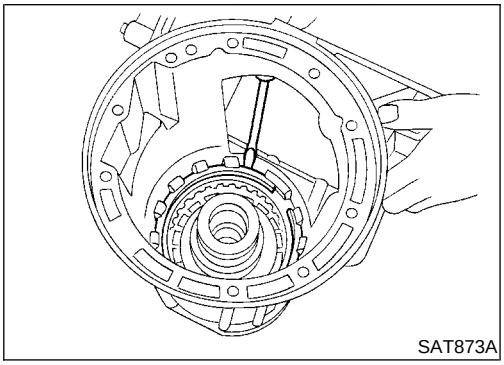

DISASSEMBLY

NAAT0137

1. Check operation of low and reverse brake.

a. Install seal ring onto oil pump cover and install reverse clutch. Apply compressed air to oil hole.

b. Check to see that retaining plate moves to snap ring.

c. If retaining plate does not contact snap ring,

- D-ring might be damaged.
- Oil seal might be damaged.
- Fluid might be leaking past piston check ball.

2. Remove snap ring, and then remove retaining plate, low and reverse brake drive plates, driven plates, dish plate and U-spring.

NOTE:

- U-spring can be set only at the installation position shown in component figure.
- U-spring is removed when the front driven plate is removed.

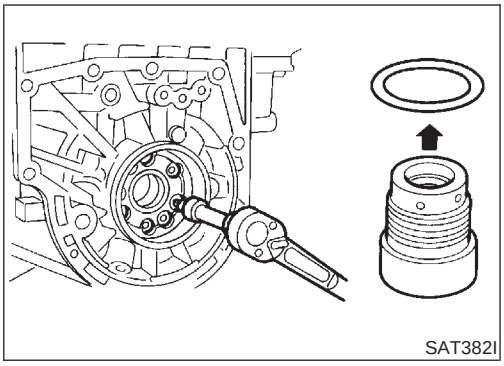

3. Remove low one-way clutch inner race, spring retainer and return spring from transmission case.
4. Remove seal rings from low one-way clutch inner race.
5. Remove needle bearing from low one-way clutch inner race.

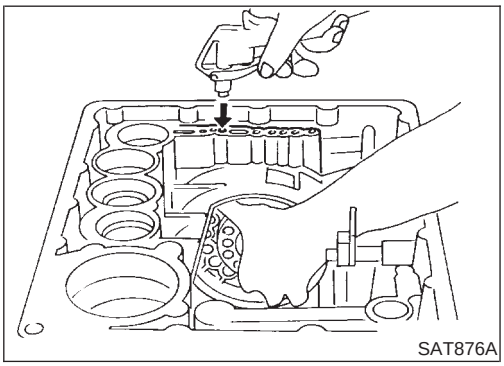

6. Remove low and reverse brake piston using compressed air.
7. Remove oil seal and D-ring from piston.

INSPECTION

NAAT0138

Low and Reverse Brake Snap Ring and Spring Retainer

NAAT0138S01

- Check for deformation, or damage.

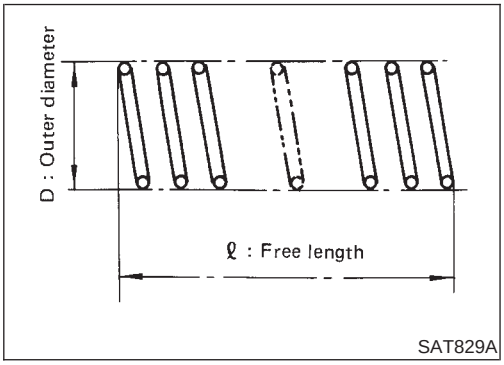

Low and Reverse Brake Return Springs

NAAT0138S02

- Check for deformation or damage. Also measure free length and outside diameter.

Inspection standard:

Refer to SDS, AT-354.

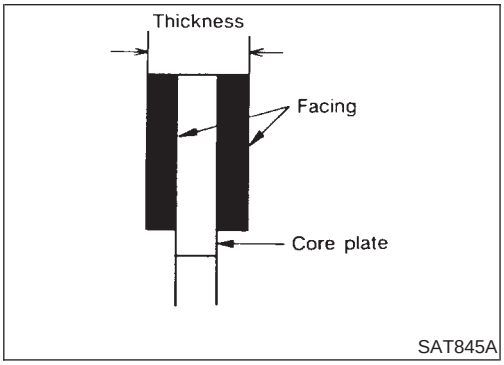

Low and Reverse Brake Drive Plates

NAAT0138S03

- Check facing for burns, cracks or damage.
- Measure thickness of facing.

Thickness of drive plate:

Standard value

Model 4EX16, 4EX79 (2WD)

1.90 - 2.05 mm (0.075 - 0.081 in)

Model 4EX17, 4EX23, 4EX80, 4EX81 (4WD)

1.52 - 1.67 mm (0.0598 - 0.0657 in)

Wear limit

1.40 mm (0.0551 in)

- If not within wear limit, replace.

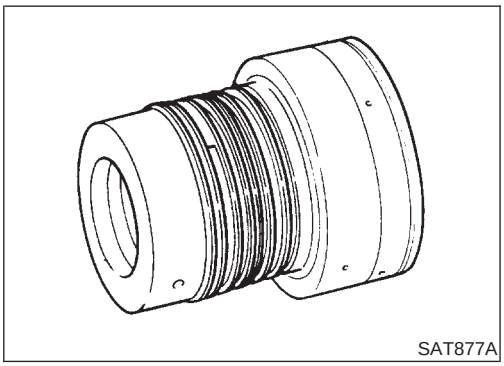
SAT877A

Low One-way Clutch Inner Race

NAAT0138S04

- Check frictional surface of inner race for wear or damage.

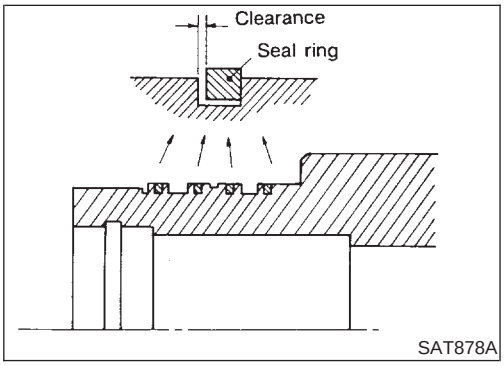

SAT878A

- Install a new seal rings onto low one-way clutch inner race.
- **Be careful not to expand seal ring gap excessively.**
- Measure seal ring-to-groove clearance.

  Inspection standard:

  Standard value: 0.10 - 0.25 mm (0.0039 - 0.0098 in)

  Allowable limit: 0.25 mm (0.0098 in)
- If not within allowable limit, replace low one-way clutch inner race.

ASSEMBLY

NAAT0139

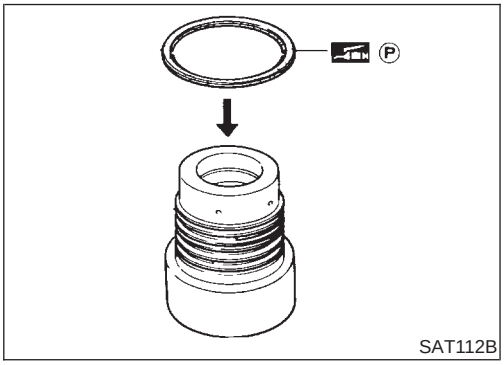

SAT112B

1. Install needle bearing onto one-way clutch inner race.

- **Pay attention to its direction — Black surface goes to rear side.**
- **Apply petroleum jelly to needle bearing.**

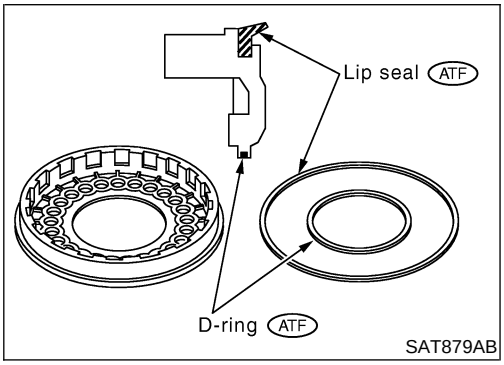

SAT879AB

2. Install lip seal and D-ring onto piston.

- **Apply ATF to oil seal and D-ring.**

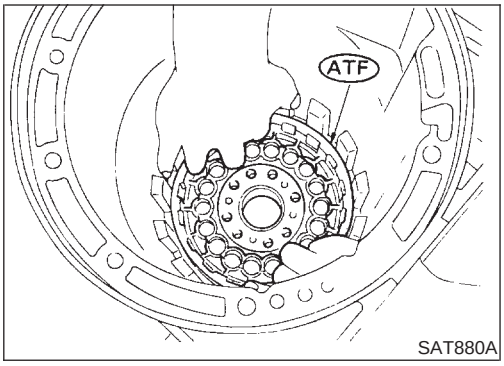

SAT880A

3. Install piston by rotating it slowly and evenly.
- **Apply ATF to inner surface of transmission case.**

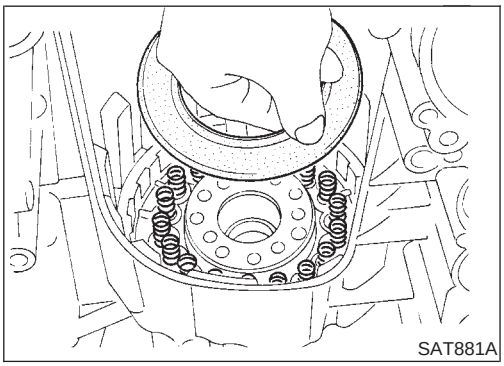
SAT881A

4. Install return springs, spring retainer and low one-way clutch inner race onto transmission case.
5. Install dish plate, low and reverse brake drive plates, driven plates and U-spring, and then retaining plate.
6. Install snap ring on transmission case.

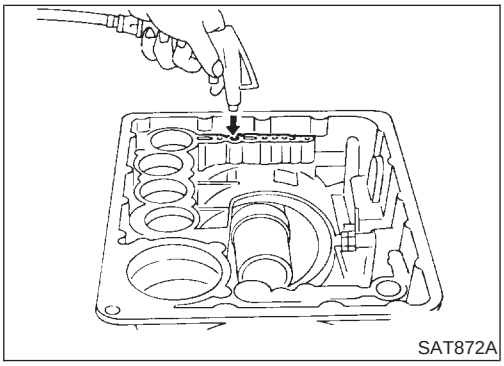
SAT872A

7. Check operation of low and reverse brake clutch piston. Refer to "DISASSEMBLY", AT-321.

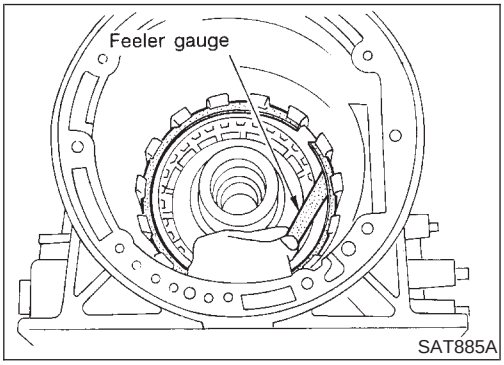

SAT885A

8. Measure clearance between retaining plate and snap ring. If not within allowable limit, select proper retaining plate.

Specified clearance:
Standard
0.8 - 1.1 mm (0.031 - 0.043 in)
Allowable limit
2.7 mm (0.106 in)
Retaining plate:
Refer to SDS, AT-357.

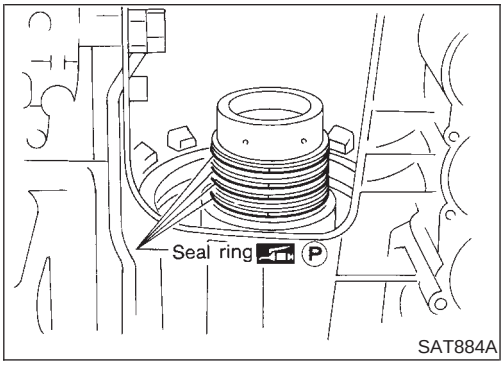

SAT884A

9. Install low one-way clutch inner race seal ring.
- **Apply petroleum jelly to seal ring.**
- **Make sure seal rings are pressed firmly into place and held by petroleum jelly.**

Forward Clutch Drum Assembly

COMPONENTS

NAAT0140

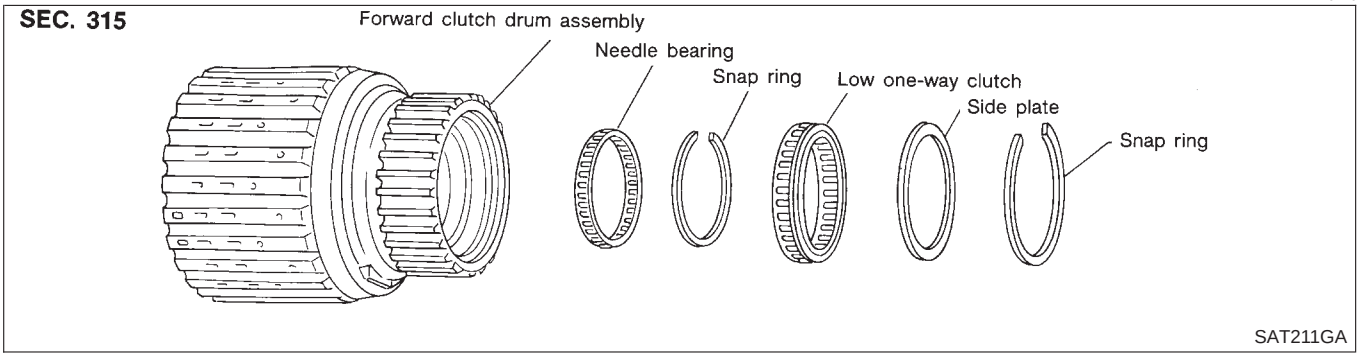

DISASSEMBLY

NAAT0141

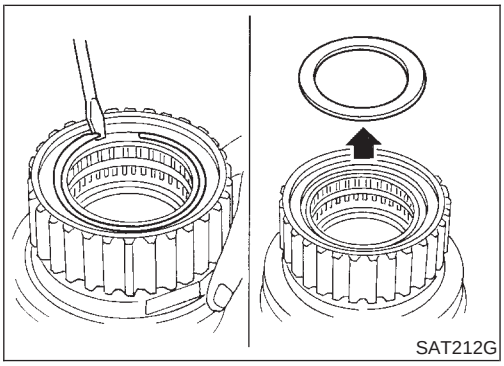

1. Remove snap ring from forward clutch drum.
2. Remove side plate from forward clutch drum.

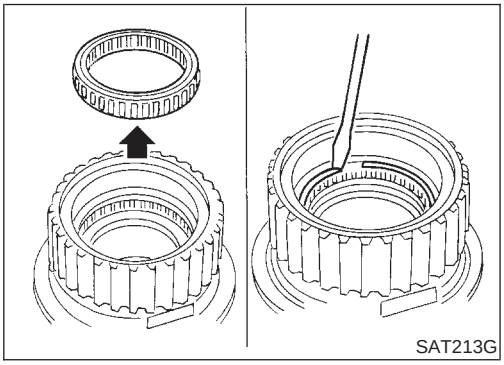

3. Remove low one-way clutch from forward clutch drum.
4. Remove snap ring from forward clutch drum.

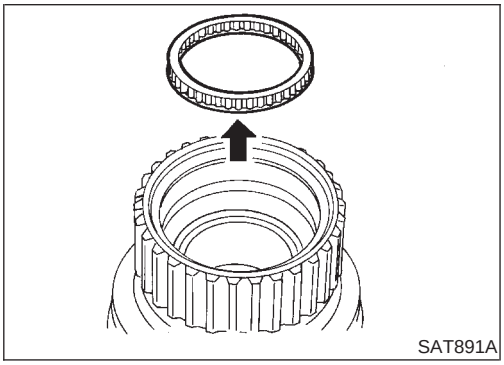

5. Remove needle bearing from forward clutch drum.

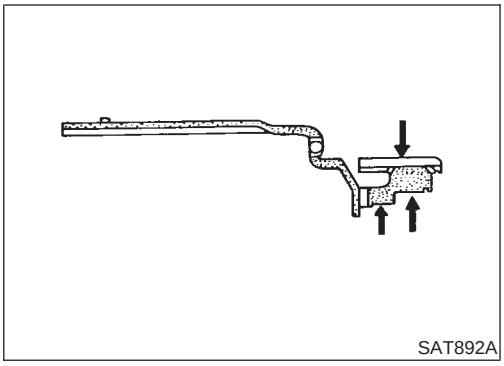
SAT892A

INSPECTION

NAAT0142

Forward Clutch Drum

NAAT0142S01

- Check spline portion for wear or damage.
- Check frictional surfaces of low one-way clutch and needle bearing for wear or damage.

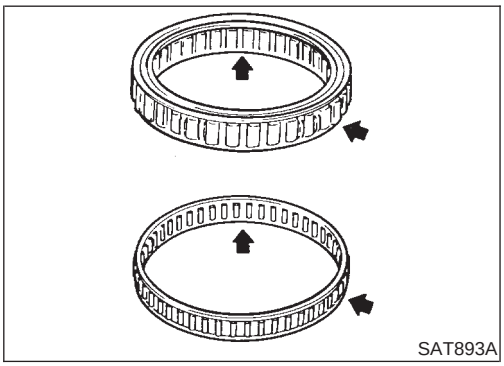
SAT893A

Needle Bearing and Low One-way Clutch

NAAT0142S02

- Check frictional surface for wear or damage.

ASSEMBLY

NAAT0143

1. Install needle bearing in forward clutch drum.
2. Install snap ring onto forward clutch drum.

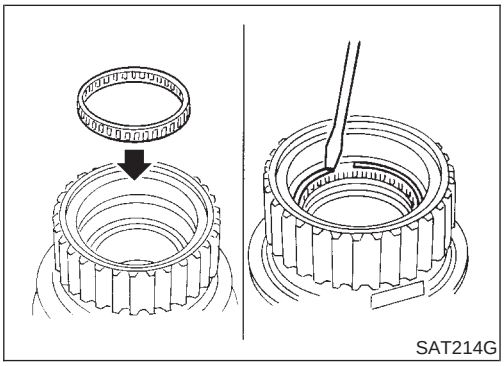
SAT214G

3. Install low one-way clutch onto forward clutch drum by pushing the roller in evenly.

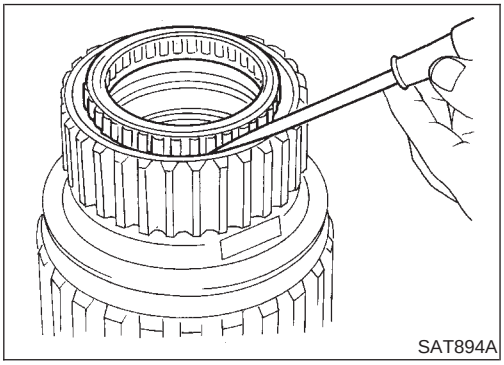
SAT894A

- **Install low one-way clutch with flange facing rearward.**

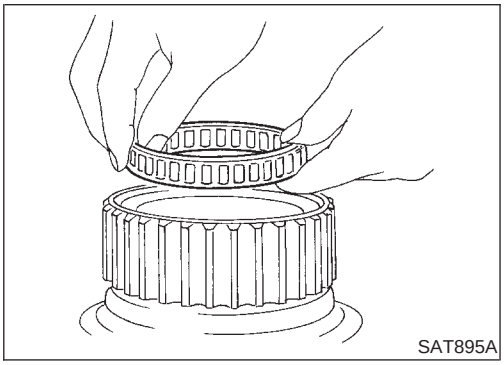
SAT895A

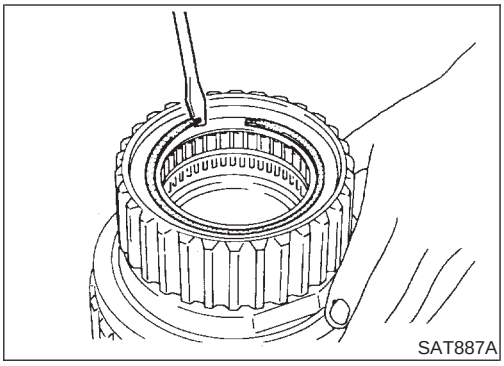

4. Install side plate onto forward clutch drum.
5. Install snap ring onto forward clutch drum.

Rear Internal Gear and Forward Clutch Hub

COMPONENTS

NAAT0144

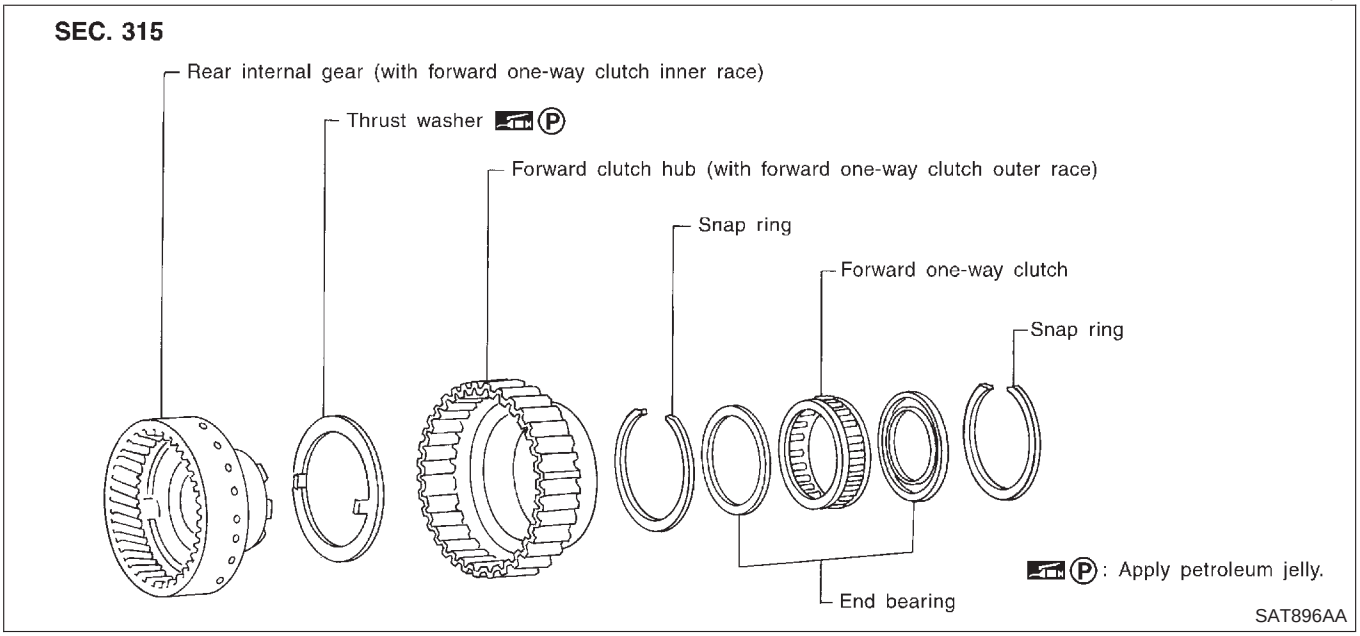

DISASSEMBLY

NAAT0145

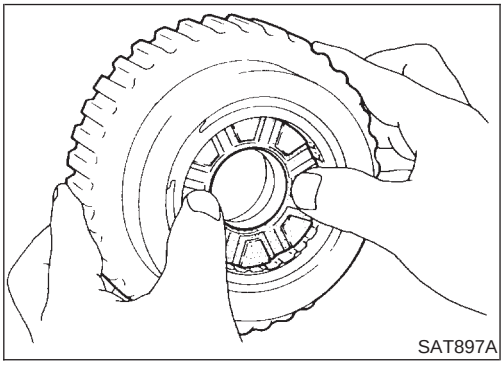

1. Remove rear internal gear by pushing forward clutch hub forward.

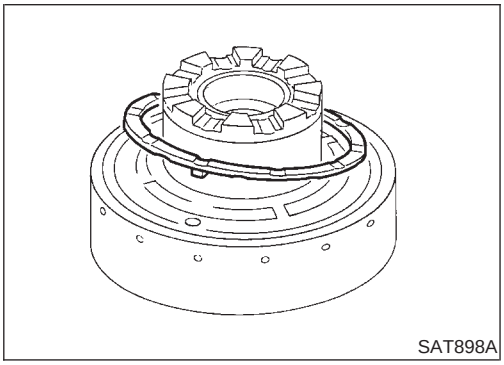

2. Remove thrust washer from rear internal gear.

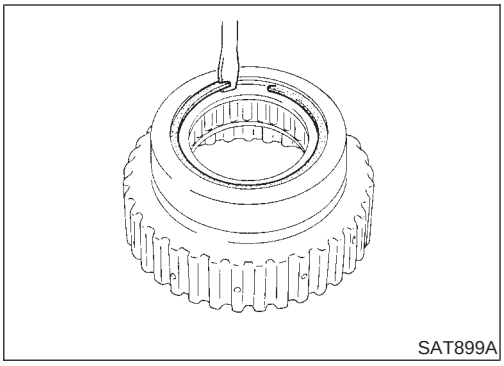
SAT899A

3. Remove snap ring from forward clutch hub.

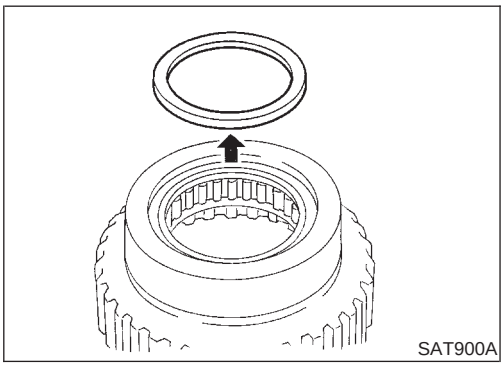
SAT900A

4. Remove end bearing.

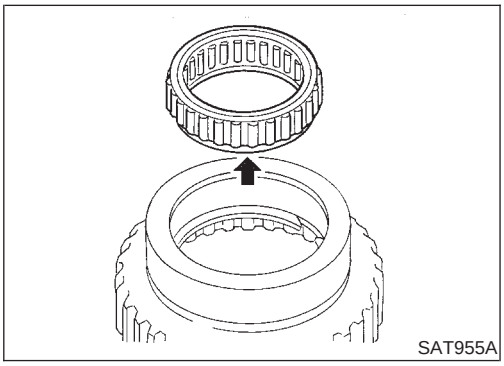
SAT955A

5. Remove forward one-way clutch and end bearing as a unit from forward clutch hub.

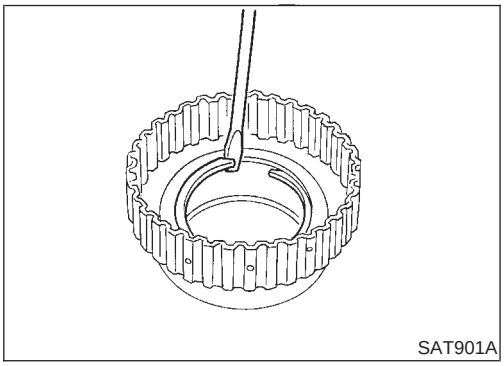
SAT901A

6. Remove snap ring from forward clutch hub.

INSPECTION

NAAT0146

Rear Internal Gear and Forward Clutch Hub

NAAT0146S01

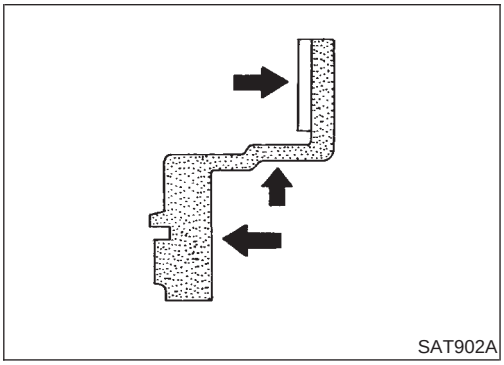
SAT902A

- Check gear for excessive wear, chips or cracks.
- Check frictional surfaces of forward one-way clutch and thrust washer for wear or damage.
- Check spline for wear or damage.

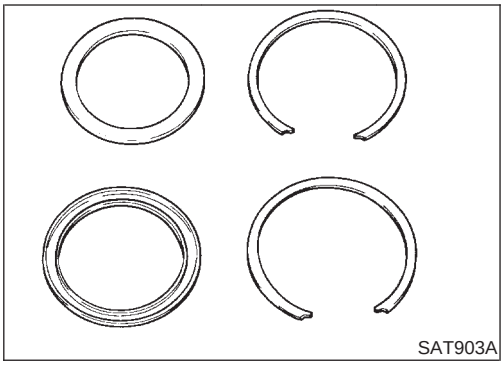
SAT903A

Snap Ring and End Bearing

NAAT0146S02

- Check for deformation or damage.

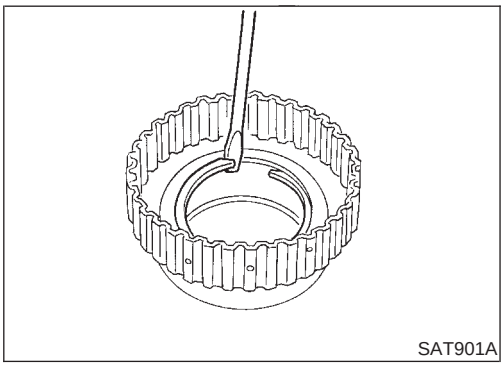
SAT901A

ASSEMBLY

NAAT0147

1. Install snap ring onto forward clutch hub.
2. Install end bearing.

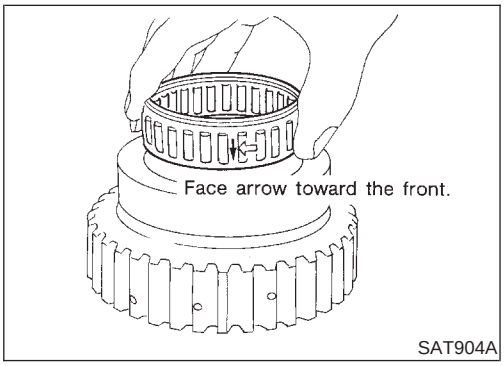

SAT904A

3. Install forward one-way clutch onto clutch hub.
- **Install forward one-way clutch with flange facing rearward.**
4. Install end bearing.
5. Install snap ring onto forward clutch hub.

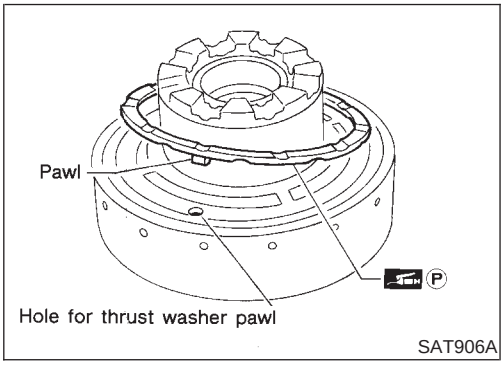

SAT906A

6. Install thrust washer onto rear internal gear.
- **Apply petroleum jelly to thrust washer.**
- **Securely insert pawls of thrust washer into holes in rear internal gear.**

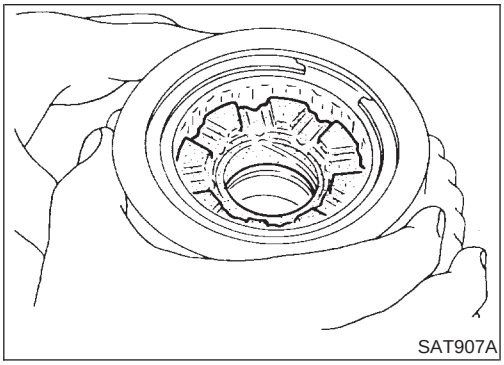
SAT907A

7. Position forward clutch hub in rear internal gear.

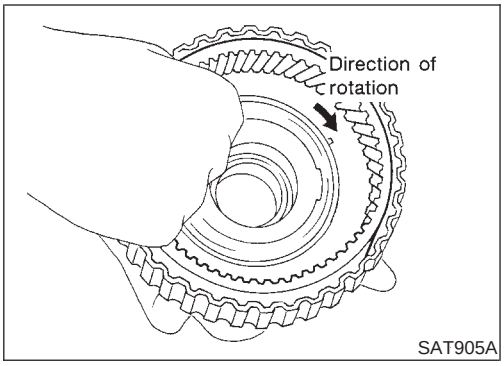

8. After installing, check to assure that forward clutch hub rotates clockwise.

Band Servo Piston Assembly

COMPONENTS

NAAT0148

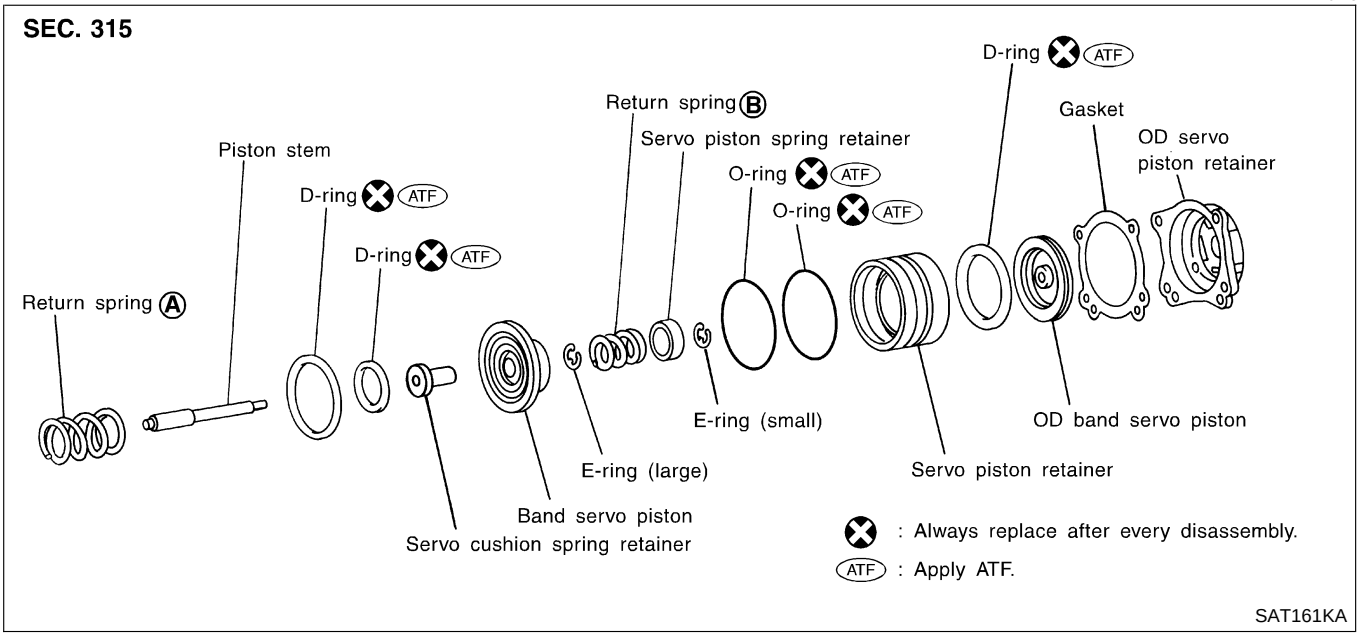

DISASSEMBLY

NAAT0149

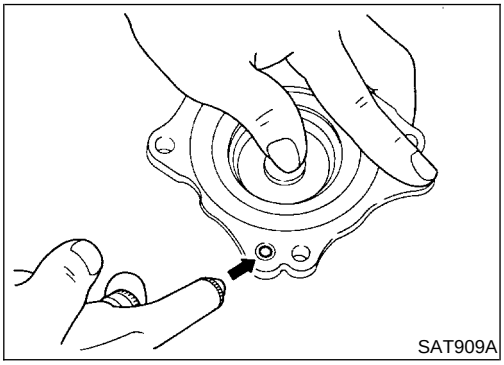

1. Block one oil hole in OD servo piston retainer and the center hole in OD band servo piston.
2. Apply compressed air to the other oil hole in piston retainer to remove OD band servo piston from retainer.
3. Remove D-ring from OD band servo piston.

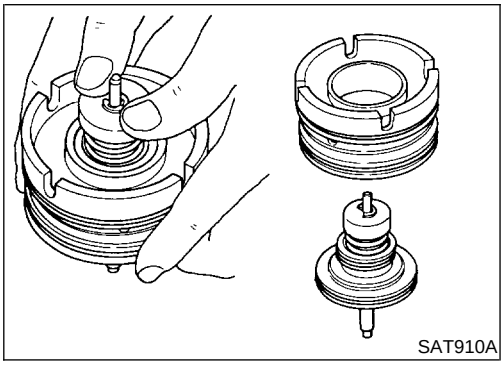

4. Remove band servo piston assembly from servo piston retainer by pushing it forward.

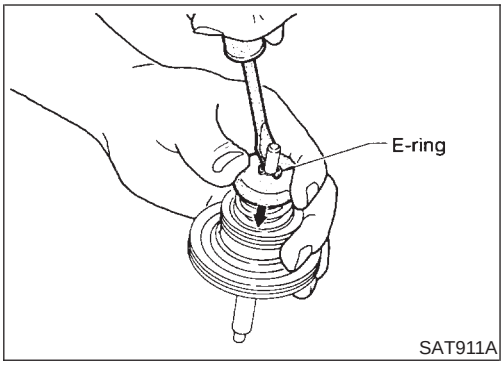

SAT911A

5. Place piston stem end on a wooden block. While pushing servo piston spring retainer down, remove E-ring.

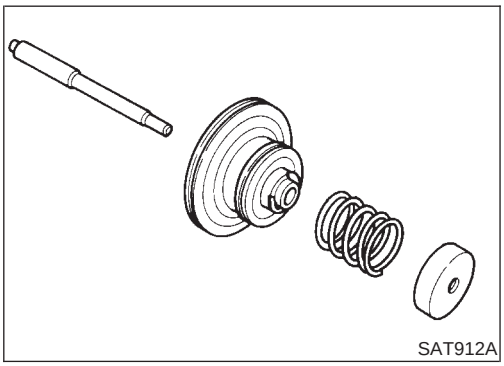
SAT912A

6. Remove servo piston spring retainer, return spring C and piston stem from band servo piston.

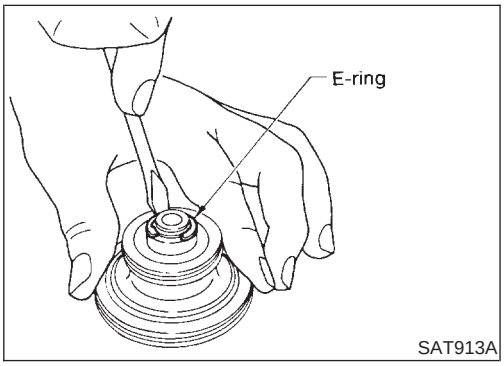

SAT913A

7. Remove E-ring from band servo piston.

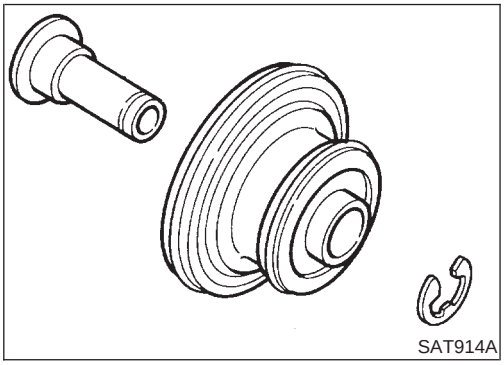
SAT914A

8. Remove servo cushion spring retainer from band servo piston.
9. Remove D-rings from band servo piston.
10. Remove O-rings from servo piston retainer.

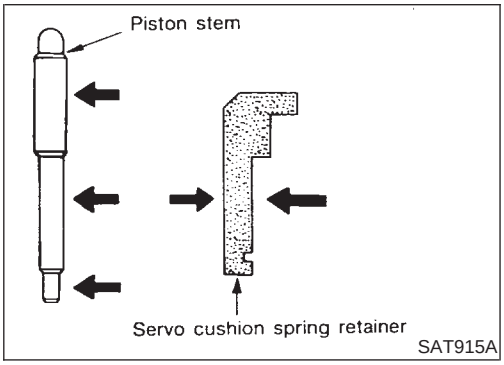

SAT915A

INSPECTION

NAAT0150

Pistons, Retainers and Piston Stem

NAAT0150S01

- Check frictional surfaces for abnormal wear or damage.

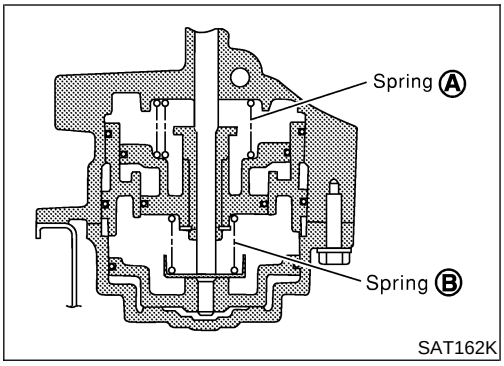

SAT162K

Return Springs

NAAT0150S02

- Check for deformation or damage. Measure free length and outer diameter.

Inspection standard:
Refer to SDS, AT-354.

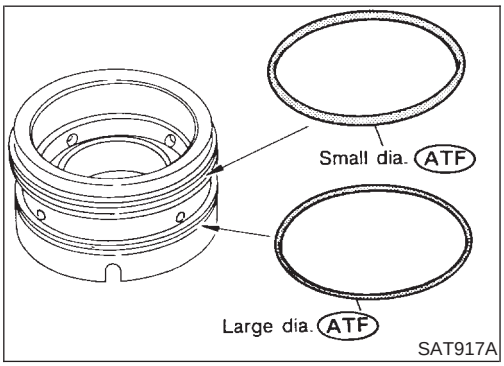

SAT917A

ASSEMBLY

NAAT0151

1. Install O-rings onto servo piston retainer.
- **Apply ATF to O-rings.**
- **Pay attention to position of each O-ring.**

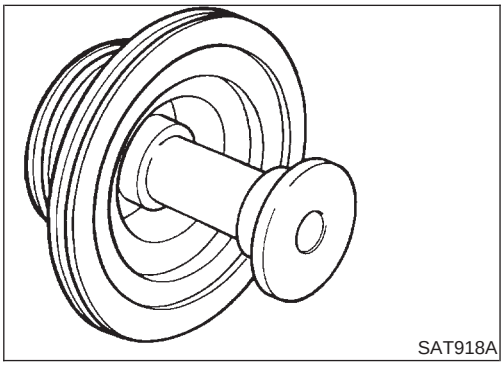
SAT918A

2. Install servo cushion spring retainer onto band servo piston.

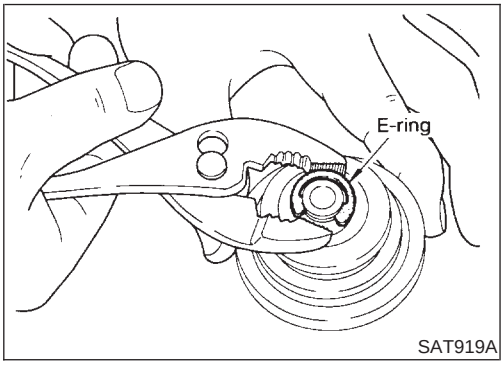

SAT919A

3. Install E-ring onto servo cushion spring retainer.

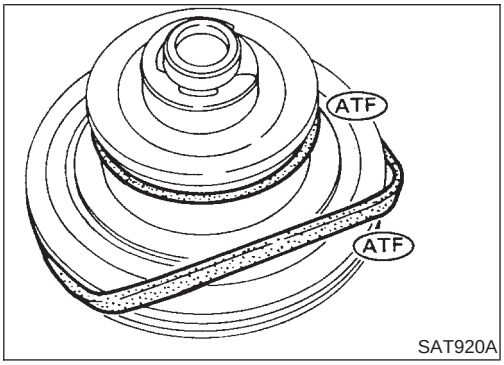

SAT920A

4. Install D-rings onto band servo piston.
- **Apply ATF to D-rings.**

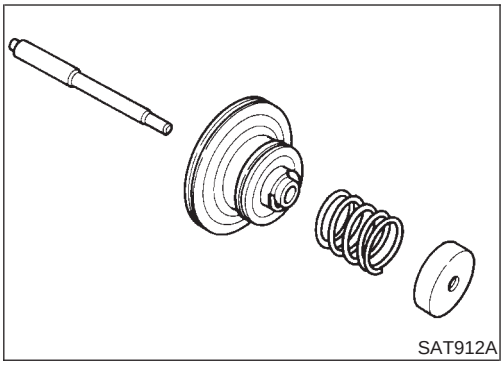
SAT912A

5. Install servo piston spring retainer, return spring C and piston stem onto band servo piston.

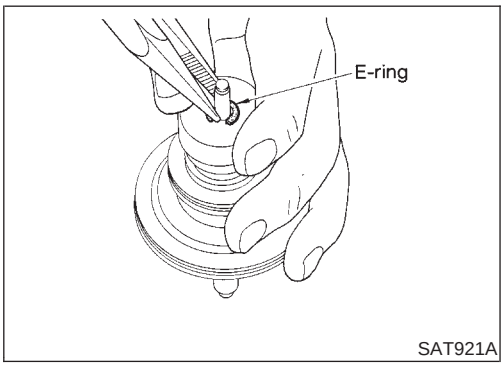

SAT921A

6. Place piston stem end on a wooden block. While pushing servo piston spring retainer down, install E-ring.

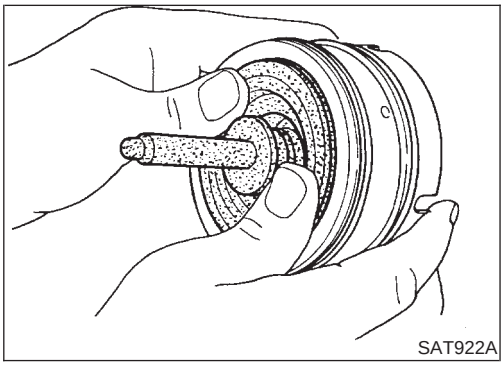
SAT922A

7. Install band servo piston assembly onto servo piston retainer by pushing it inward.

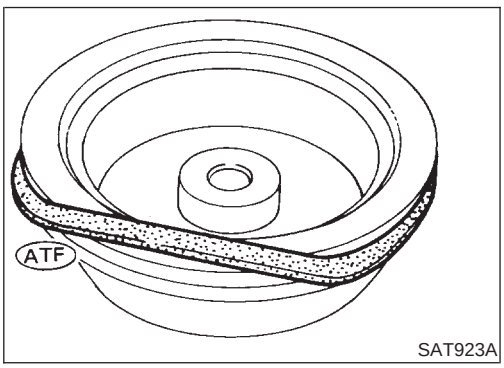

SAT923A

8. Install D-ring on OD band servo piston.
- **Apply ATF to D-ring.**

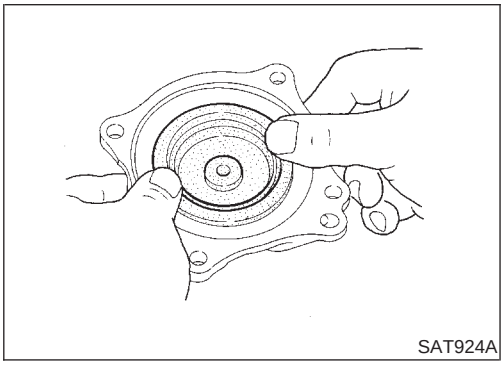
SAT924A

9. Install OD band servo piston onto servo piston retainer by pushing it inward.

Parking Pawl Components

COMPONENTS

NAAT0152

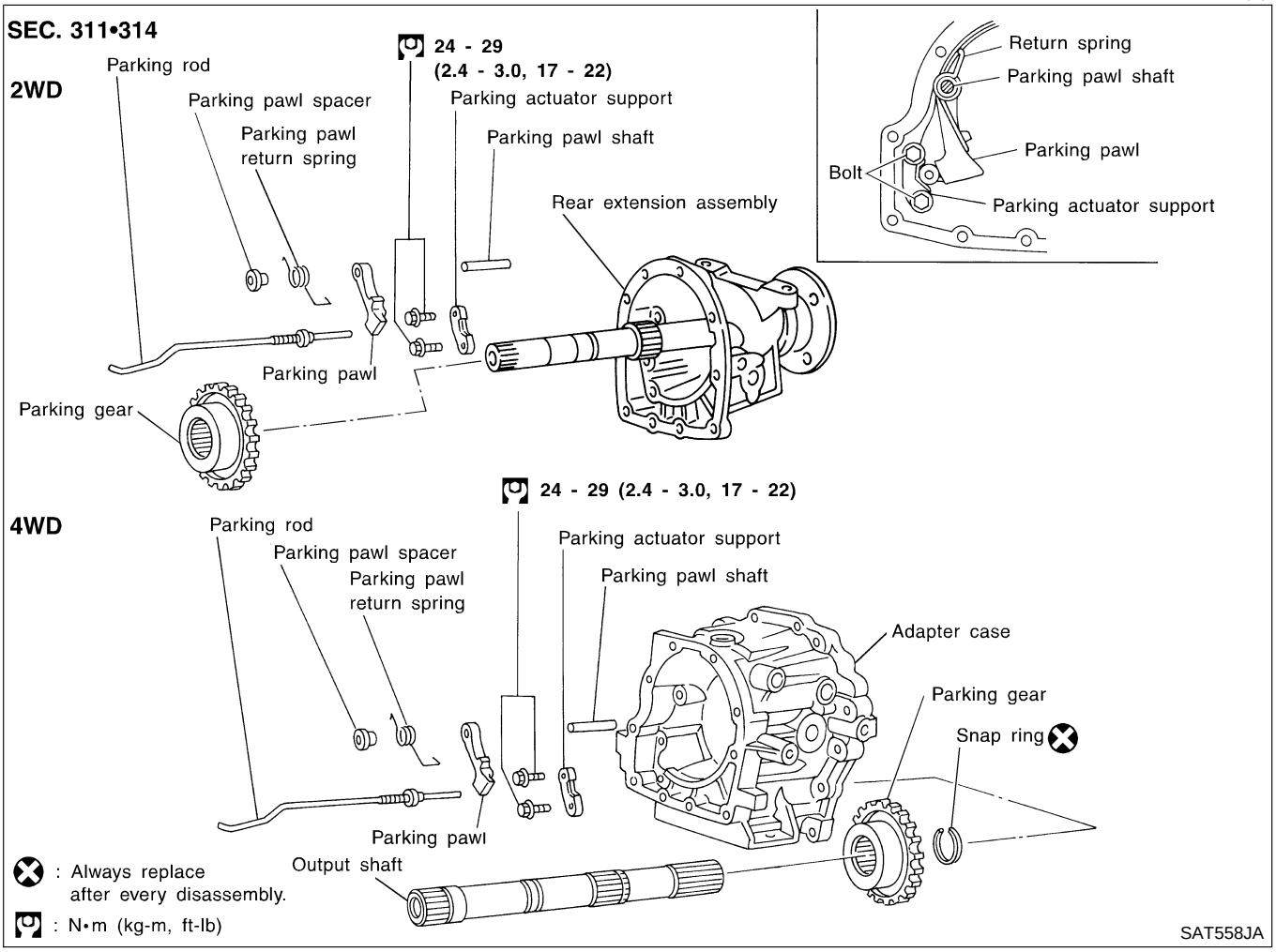

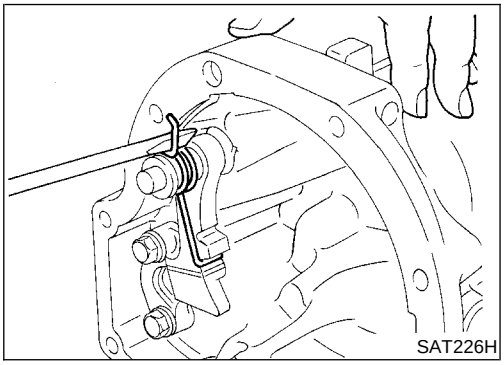

DISASSEMBLY

NAAT0153

1. Slide return spring to the front of adapter case flange.
2. Remove return spring, parking pawl spacer and parking pawl from adapter case.
3. Remove parking pawl shaft from adapter case.

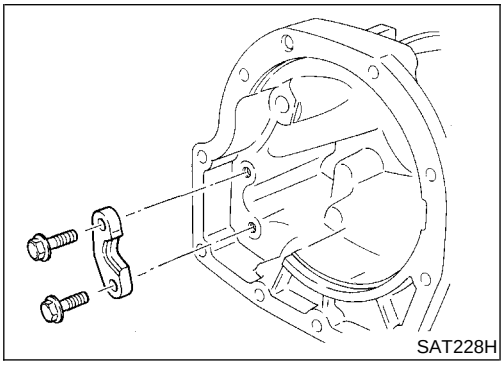

4. Remove parking actuator support from adapter case.

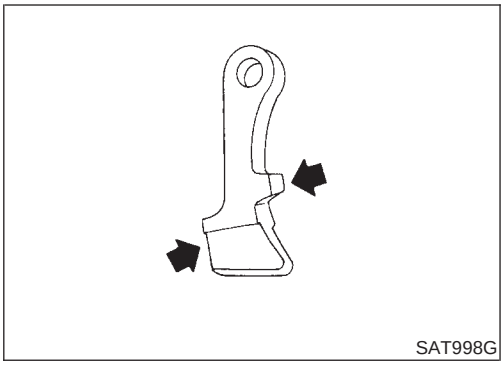
SAT998G

INSPECTION

NAAT0209

Parking Pawl and Parking Actuator Support

NAAT0209S01

- Check contact surface of parking rod for wear.

Rear Extension Assembly (2WD model only)

NAAT0209S02

- Check for free play between companion flange and output shaft.
- Make sure bearings roll freely and are free from noise, cracks, pitting or wear.
- Check contact surface of output shaft for wear.

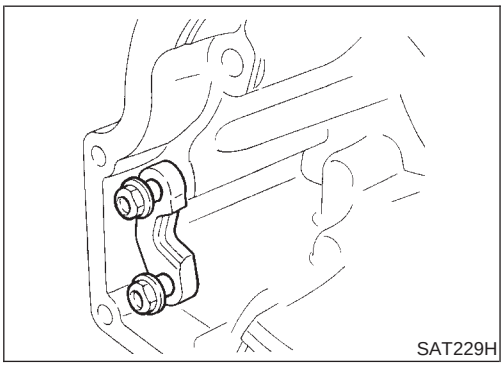
SAT229H

ASSEMBLY

NAAT0154

1. Install parking actuator support onto adapter case.
2. Insert parking pawl shaft into adapter case.
3. Install return spring, pawl spacer and parking pawl onto parking pawl shaft.

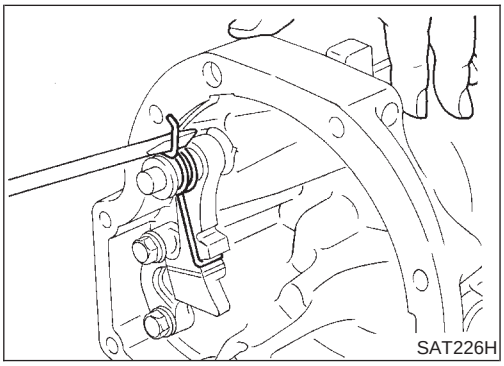
SAT226H

4. Bend return spring upward and install it onto adapter case.

Assembly (1)

NAAT0155

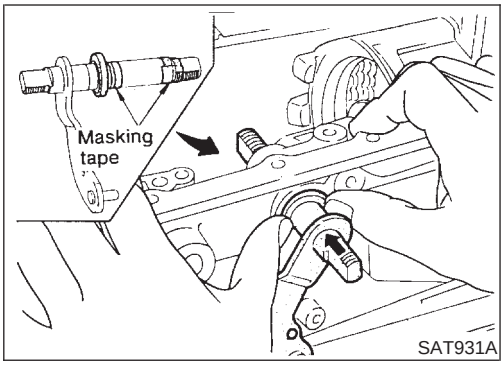

1. Install manual shaft components.

a. Install oil seal onto manual shaft.

- **Apply ATF to oil seal.**
- **Wrap threads of manual shaft with masking tape.**

b. Insert manual shaft and oil seal as a unit into transmission case.

c. Remove masking tape.

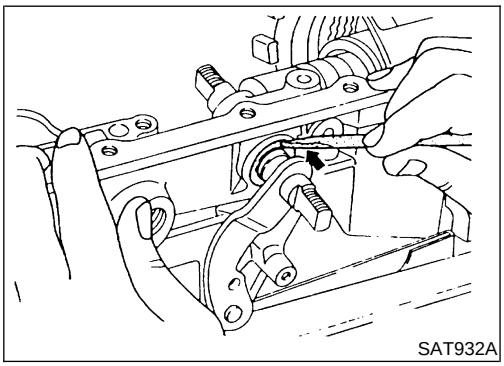

d. Push oil seal evenly and install it onto transmission case.

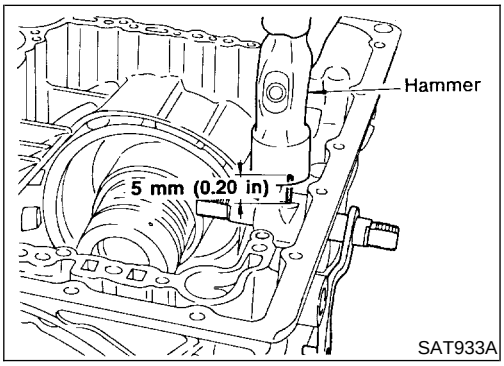

e. Align groove in shaft with retaining pin hole, then retaining pin into position as shown in figure at left.

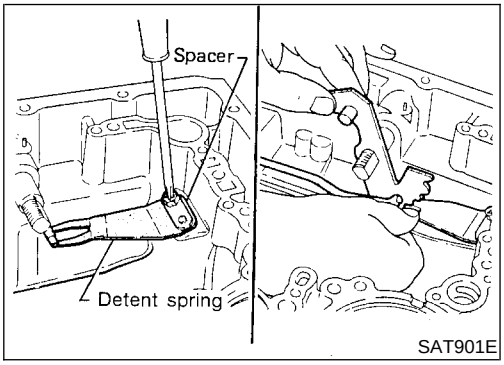

f. Install detent spring and spacer.

g. While pushing detent spring down, install manual plate onto manual shaft.

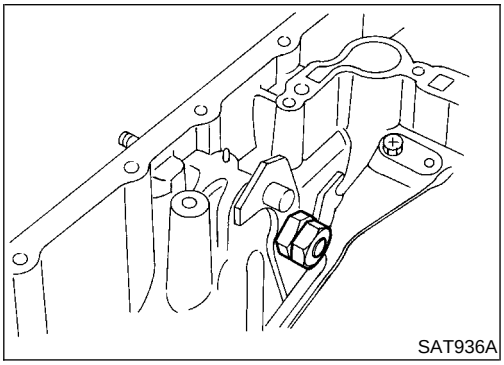

h. Install lock nuts onto manual shaft.

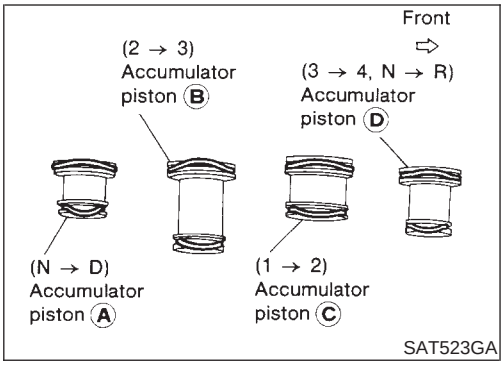

2. Install accumulator piston.

a. Install O-rings onto accumulator piston.

- **Apply ATF to O-rings.**

Accumulator piston O-rings

Unit: mm (in)

Accumulator	A	B	C	D
Small diameter end	29 (1.14)	32 (1.26)	45 (1.77)	29 (1.14)
Large diameter end	45 (1.77)	50 (1.97)	50 (1.97)	45 (1.77)

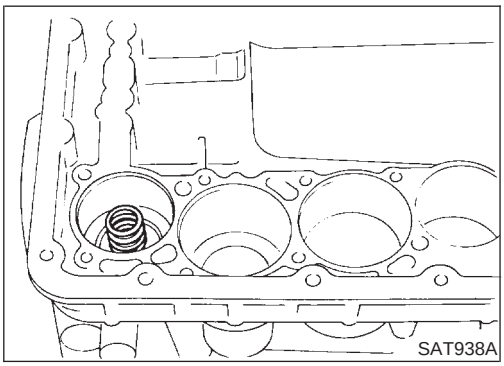

b. Install return spring for accumulator A onto transmission case.

Free length of return spring:
Refer to SDS, AT-354.

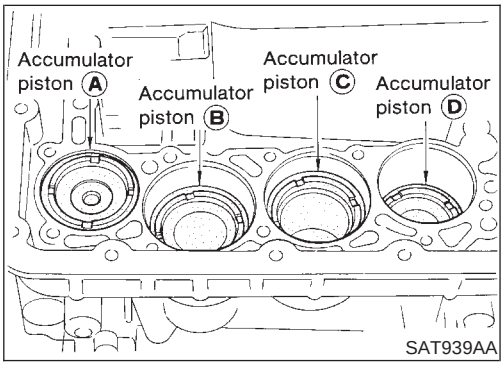

c. Install accumulator pistons A, B, C and D.

- **Apply ATF to transmission case.**

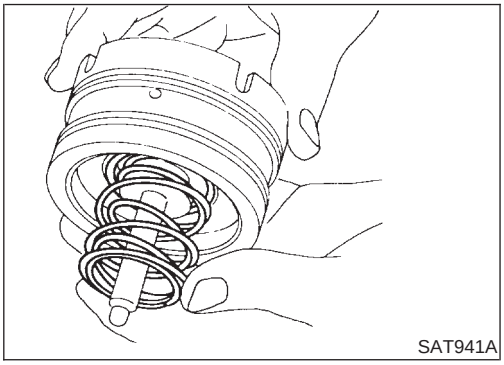

3. Install band servo piston.

a. Install return springs onto servo piston.

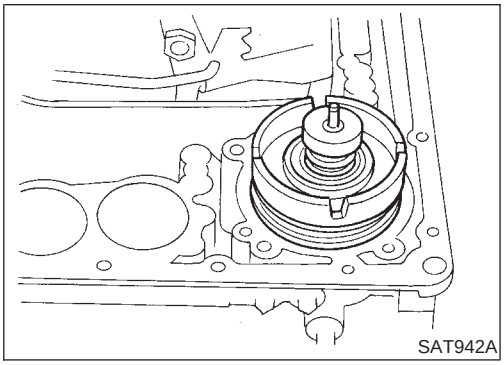

b. Install band servo piston onto transmission case.

- **Apply ATF to O-ring of band servo piston and transmission case.**

c. Install gasket for band servo onto transmission case.

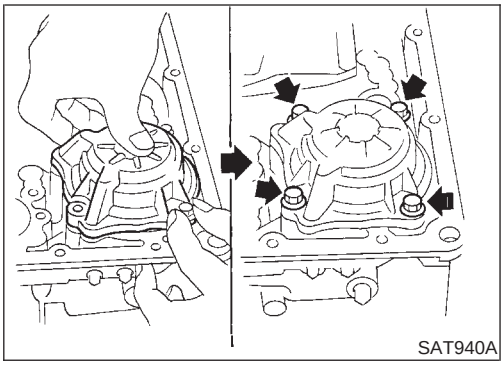

d. Install band servo retainer onto transmission case.

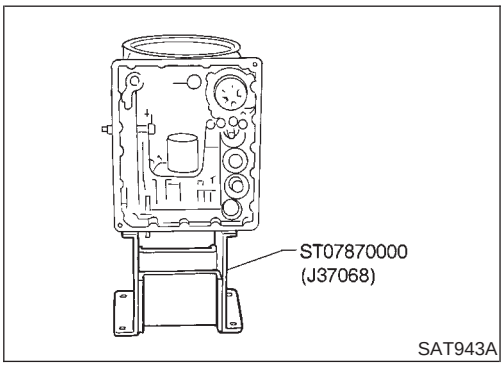

4. Install rear side clutch and gear components.

a. Place transmission case in vertical position.

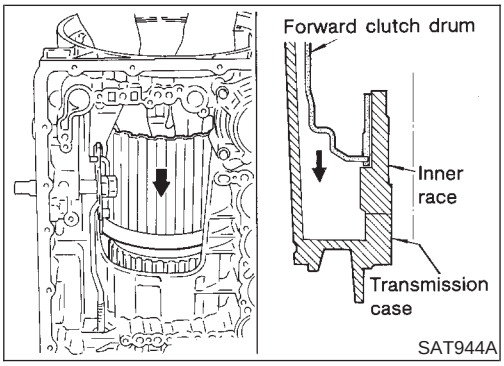

b. Slightly lift forward clutch drum assembly. Then slowly rotate it clockwise until its hub passes fully over clutch inner race inside transmission case.

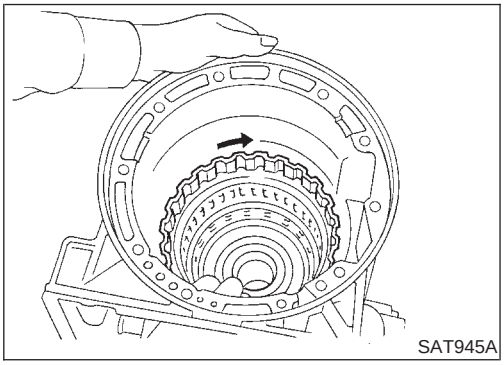

c. Check to be sure that rotation direction of forward clutch assembly is correct.

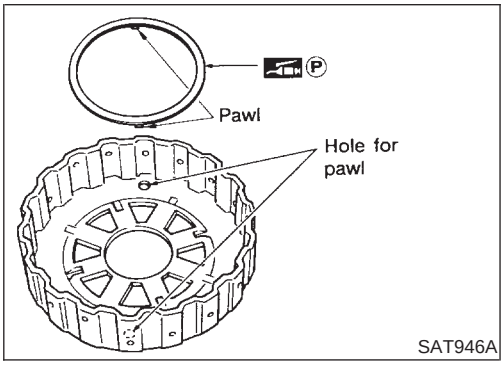

d. Install thrust washer onto front of overrun clutch hub.

- **Apply petroleum jelly to the thrust washer.**
- **Insert pawls of thrust washer securely into holes in overrun clutch hub.**

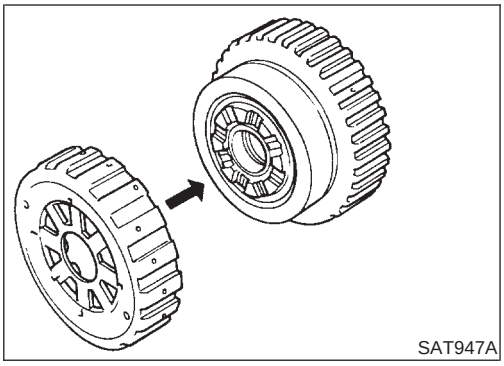

e. Install overrun clutch hub onto rear internal gear assembly.

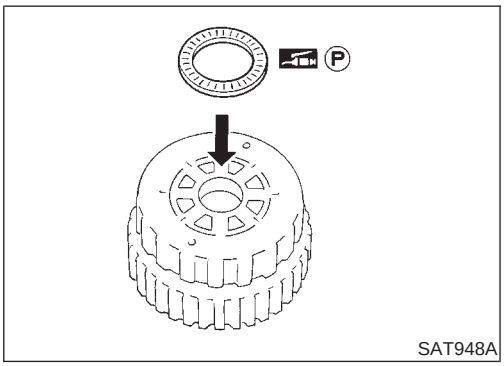

f. Install needle bearing onto rear of overrun clutch hub.

- **Apply petroleum jelly to needle bearing.**

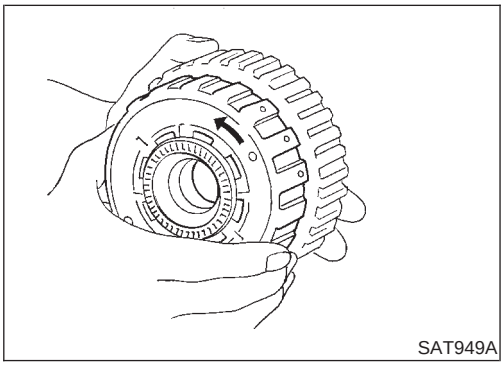

g. Check that overrun clutch hub rotates as shown while holding forward clutch hub.

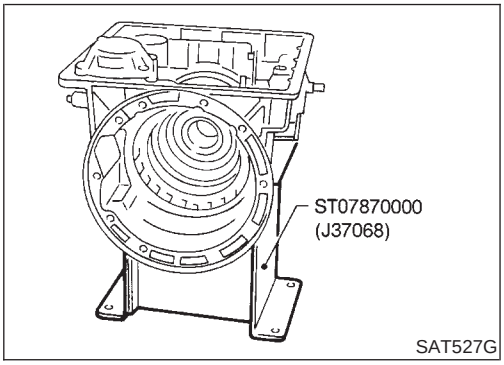

h. Place transmission case into horizontal position.

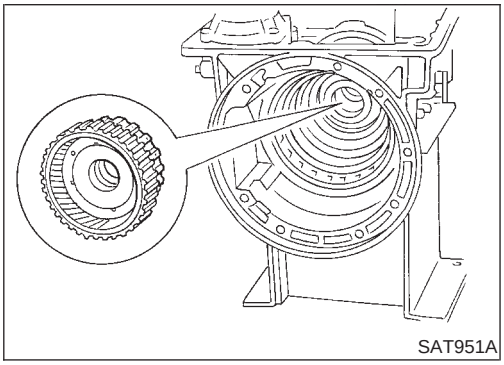

i. Install rear internal gear, forward clutch hub and overrun clutch hub as a unit onto transmission case.

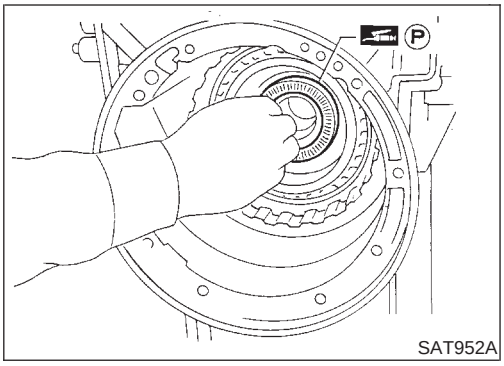

j. Install needle bearing onto rear internal gear.

- **Apply petroleum jelly to needle bearing.**

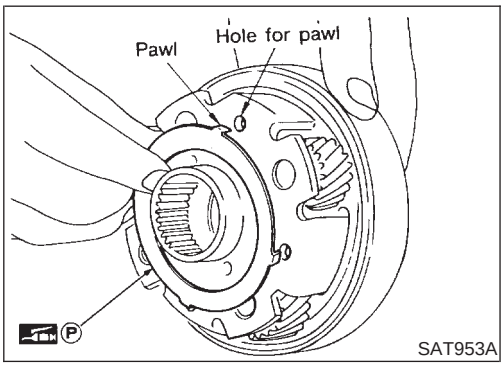

k. Install bearing race onto rear of front internal gear.

- **Apply petroleum jelly to bearing race.**
- **Securely engage pawls of bearing race with holes in front internal gear.**

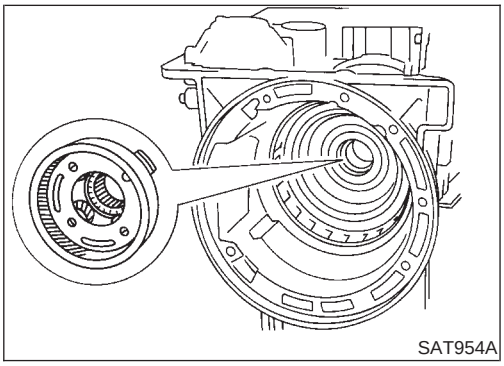

l. Install front internal gear on transmission case.

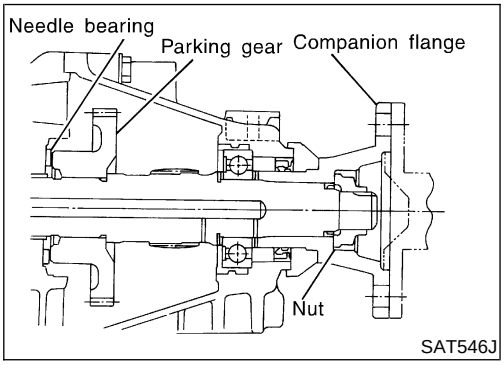

5. Install rear extension assembly on transmission case (2WD model only).

a. Install revolution sensor on rear extension.

b. Install rear extension gasket on transmission case.

c. Install parking rod on transmission case.

d. Install parking gear and needle bearing.

- **Insert rear extension assembly into place while holding parking gear and needle bearing by hand.**

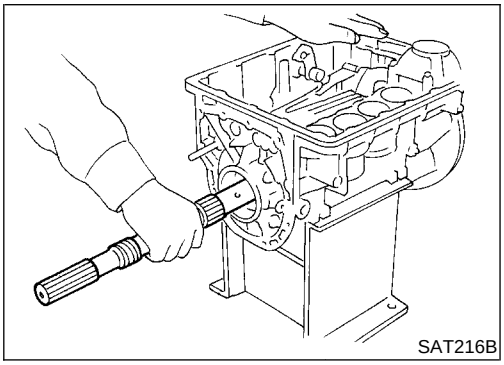

6. Install output shaft and parking gear (4WD model only).

a. Insert output shaft from rear of transmission case while slightly lifting front internal gear.

- **Do not force output shaft against front of transmission case.**

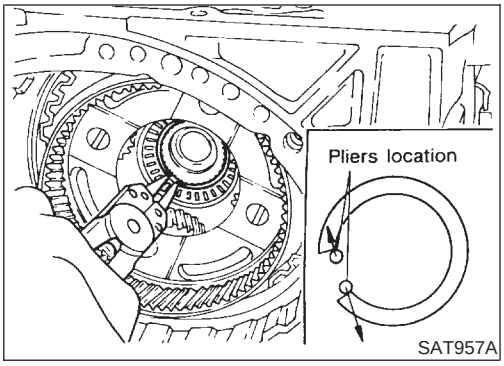

b. Carefully push output shaft against front of transmission case. Install snap ring on front of output shaft.

- **Check to be sure output shaft cannot be removed in rear direction.**

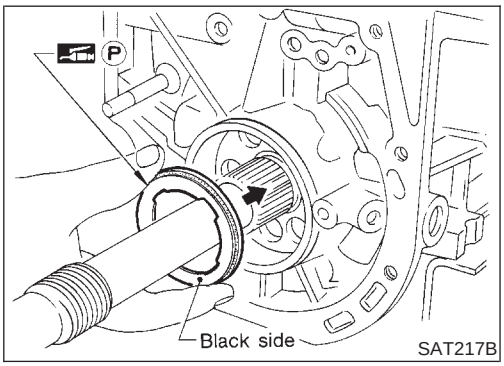

c. Install needle bearing on transmission case.

- **Pay attention to its direction — Black side goes to rear.**
- **Apply petroleum jelly to needle bearing.**

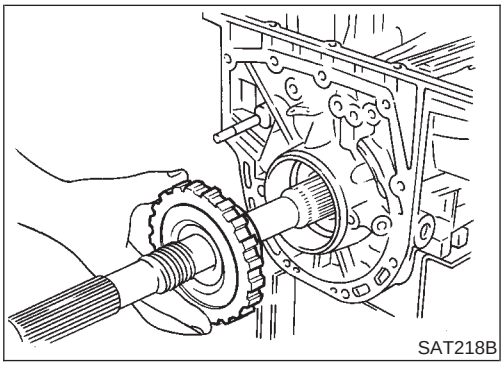

d. Install parking gear on transmission case.

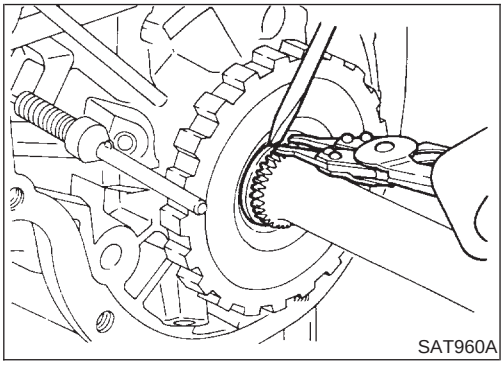

e. Install snap ring on rear of output shaft.

- **Check to be sure output shaft cannot be removed in forward direction.**

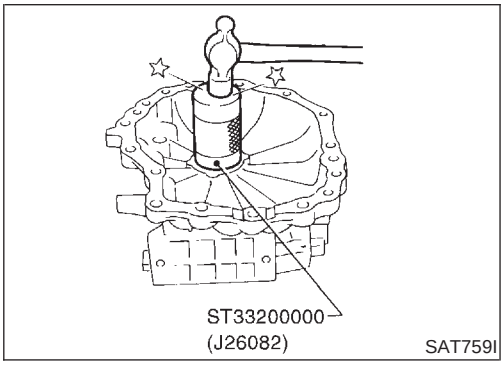

7. Install adapter case (4WD model only).

a. Install oil seal on adapter case.

- **Apply ATF to oil seal.**

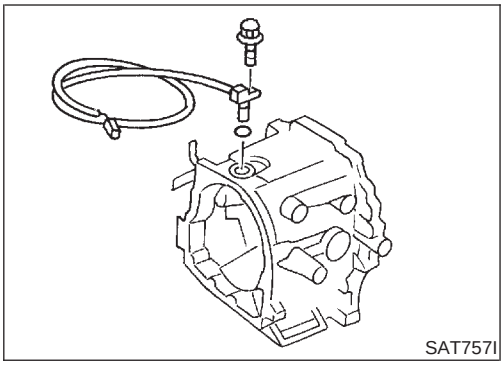

b. Install O-ring on revolution sensor.
- **Apply ATF to O-ring.**

c. Install revolution sensor on adapter case.

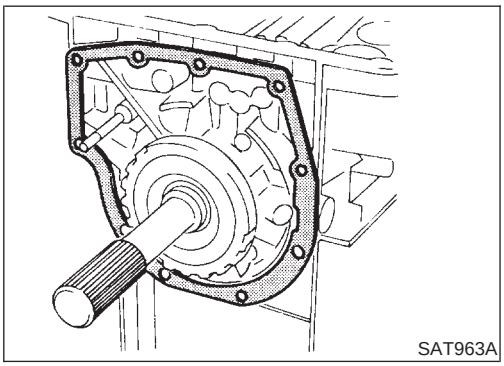

d. Install adapter case gasket on transmission case.

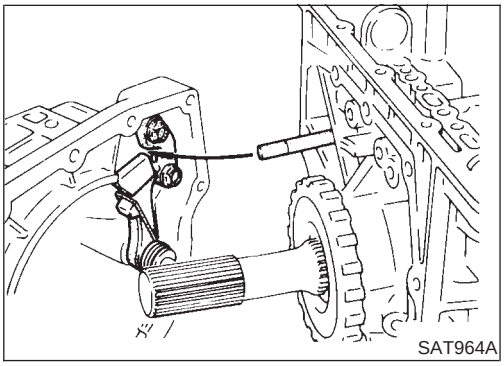

e. Install parking rod on transmission case.

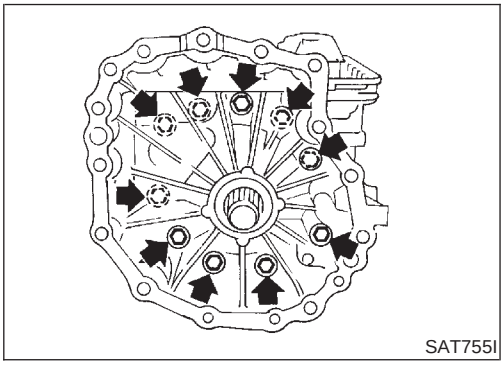

f. Install adapter case on transmission case.

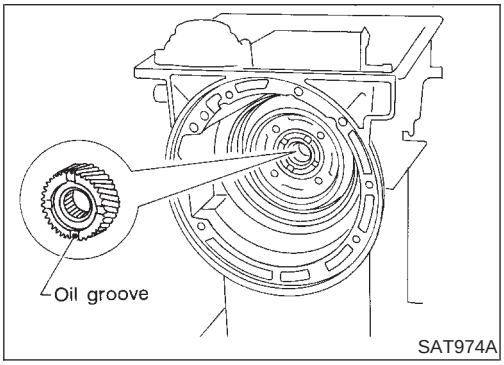

8. Install front side clutch and gear components.

a. Install rear sun gear on transmission case.
- **Pay attention to its direction.**

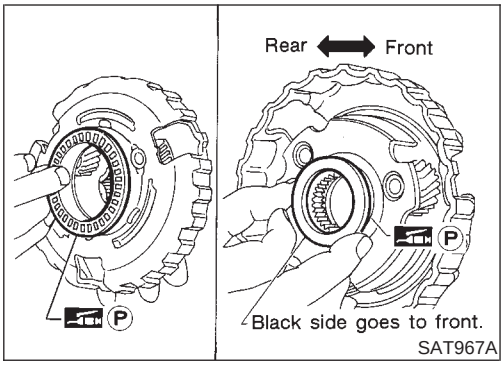

SAT967A

b. Make sure needle bearing is on front of front planetary carrier.
- **Apply petroleum jelly to needle bearing.**

c. Make sure needle bearing is on rear of front planetary carrier.
- **Apply petroleum jelly to bearing.**
- **Pay attention to its direction — Black side goes to front.**

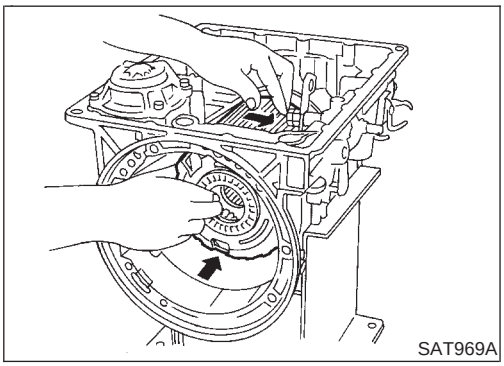
SAT969A

d. While rotating forward clutch drum clockwise, install front planetary carrier on forward clutch drum.

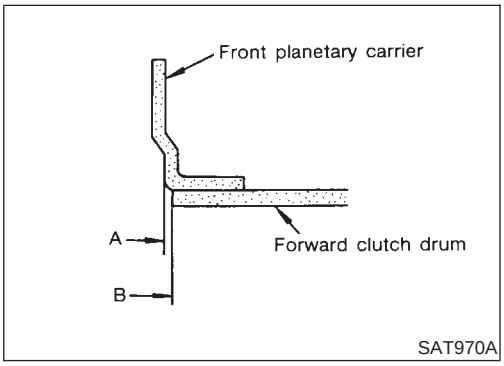

SAT970A

- **Check that portion A of front planetary carrier protrudes approximately 2 mm (0.08 in) beyond portion B of forward clutch assembly.**

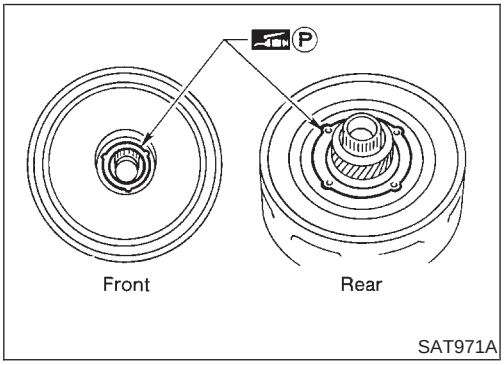

SAT971A

e. Make sure bearing races are on front and rear of clutch pack.
- **Apply petroleum jelly to bearing races.**
- **Securely engage pawls of bearing races with holes in clutch pack.**

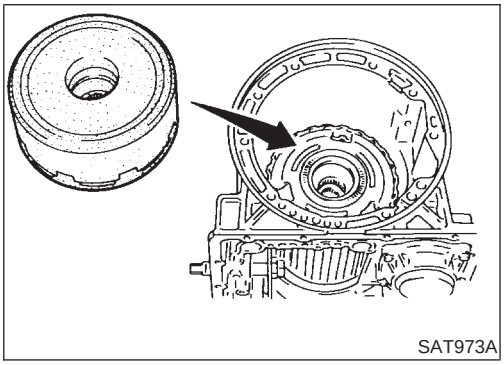
SAT973A

f. Install clutch pack into transmission case.

Adjustment

=NAAT0156

When any parts listed in the following table are replaced, total end play or reverse clutch end play must be adjusted.

Part name	Total end play	Reverse clutch end play
Transmission case	●	●
Low one-way clutch inner race	●	●
Overrun clutch hub	●	●
Rear internal gear	●	●
Rear planetary carrier	●	●
Rear sun gear	●	●
Front planetary carrier	●	●
Front sun gear	●	●
High clutch hub	●	●
High clutch drum	●	●
Oil pump cover	●	●
Reverse clutch drum	—	●

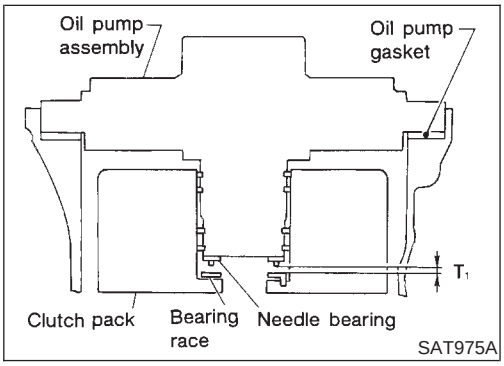

1. Adjust total end play.

   Total end play "T_1":
   0.25 - 0.55 mm (0.0098 - 0.0217 in)

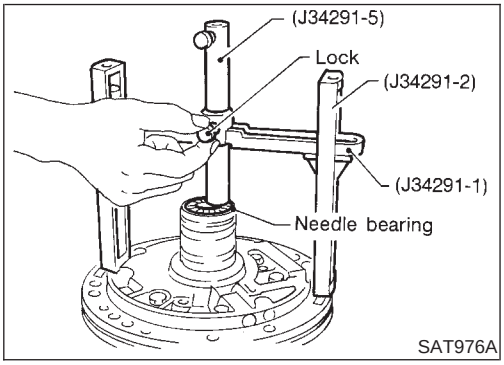

a. With needle bearing installed, place J34291-1 (bridge), J34291-2 (legs) and the J34291-5 (gauging cylinder) onto oil pump. The long ends of legs should be placed firmly on machined surface of oil pump assembly. The gauging cylinder should rest on top of the needle bearing. Lock gauging cylinder in place with set screw.

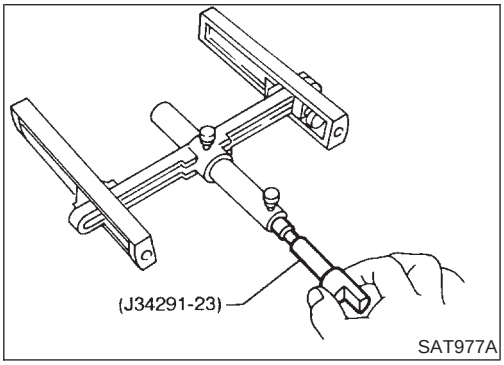

b. Install J34291-23 (gauging plunger) into gauging cylinder.

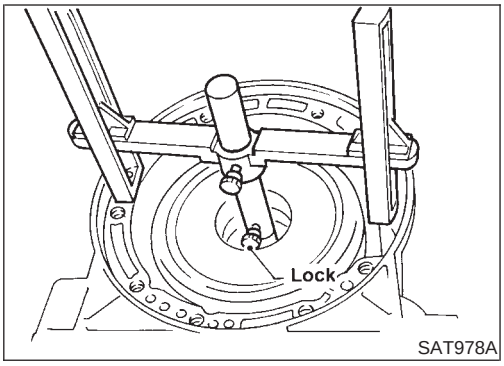

SAT978A

c. Install original bearing race inside reverse clutch drum. Place shim selecting gauge with its legs on machined surface of transmission case (no gasket). Allow gauging plunger to rest on bearing race. Lock gauging plunger in place with set screw.

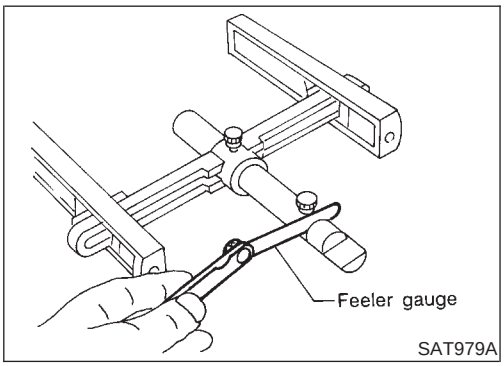

SAT979A

d. Remove Tool and use feeler gauge to measure gap between gauging cylinder and gauging plunger. This measurement should give exact total end play.

Total end play "T_1":

0.25 - 0.55 mm (0.0098 - 0.0217 in)

- If end play is out of specification, decrease or increase thickness of oil pump cover bearing race as necessary.

Available oil pump cover bearing race:

Refer to SDS, AT-357.

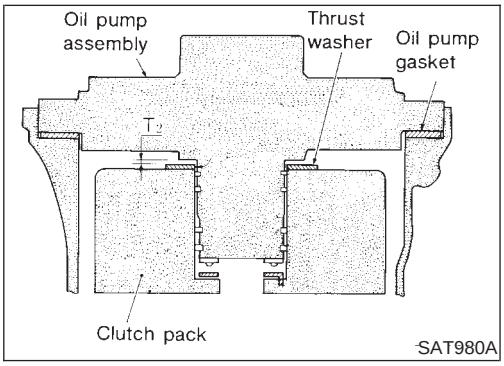

SAT980A

2. Adjust reverse clutch drum end play.

Reverse clutch drum end play "T_2":

0.55 - 0.90 mm (0.0217 - 0.0354 in)

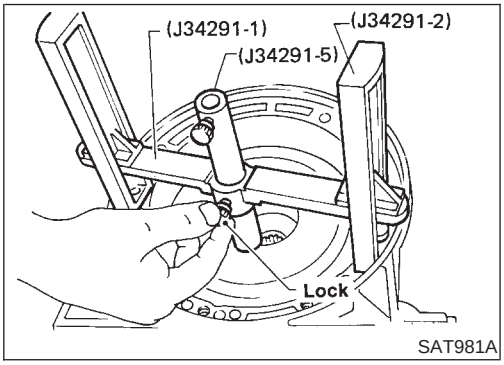

SAT981A

a. Place J34291-1 (bridge), J34291-2 (legs) and J34291-5 (gauging cylinder) on machined surface of transmission case (no gasket). Allow gauging cylinder to rest on front thrust surface of reverse clutch drum. Lock cylinder in place with set screw.

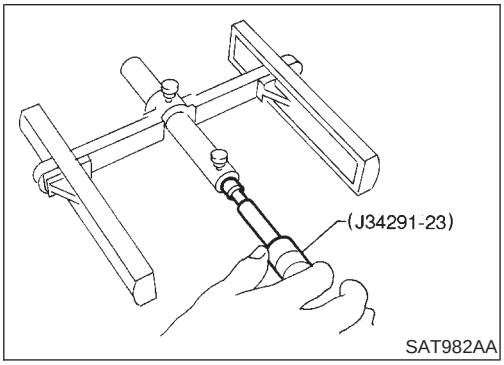

SAT982AA

b. Install J34291-23 (gauging plunger) into gauging cylinder.

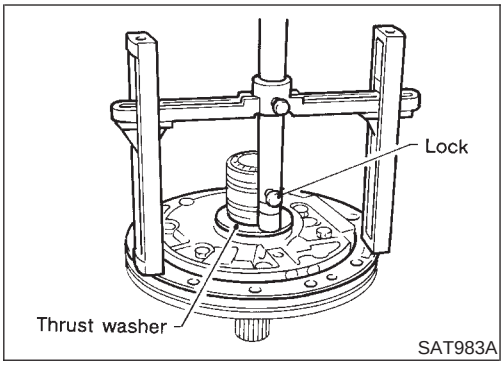

c. Install original thrust washer on oil pump. Place shim setting gauge legs onto machined surface of oil pump assembly. Allow gauging plunger to rest on thrust washer. Lock plunger in place with set screw.

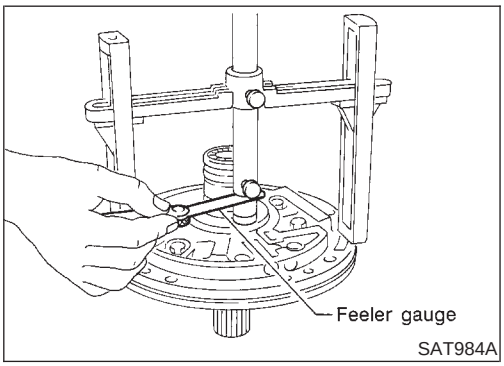

d. Use feeler gauge to measure gap between gauging plunger and gauging cylinder. This measurement should give you exact reverse clutch drum end play.

Reverse clutch drum end play "T_2":
0.55 - 0.90 mm (0.0217 - 0.0354 in)

- If end play is out of specification, decrease or increase thickness of oil pump thrust washer as necessary.

Available oil pump thrust washer:
Refer to SDS, AT-358.

Assembly (2)

NAAT0157

1. Install brake band and band strut.

a. Install band strut on brake band.

- **Apply petroleum jelly to band strut.**

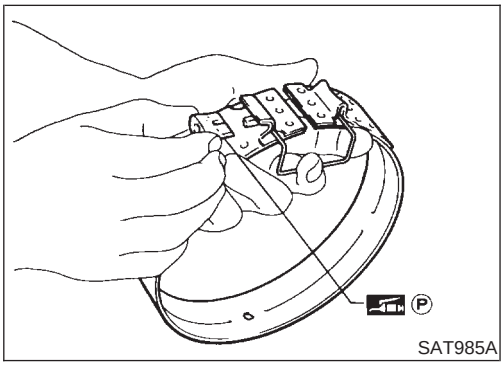

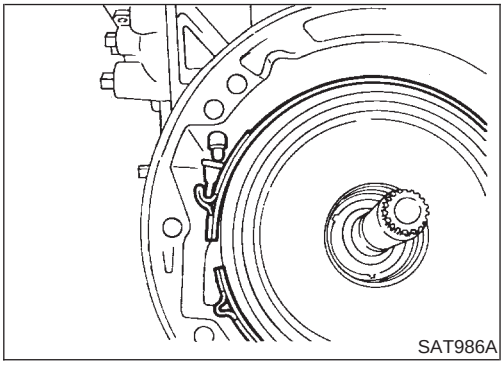

b. Place brake band on periphery of reverse clutch drum, and insert band strut into end of band servo piston stem.

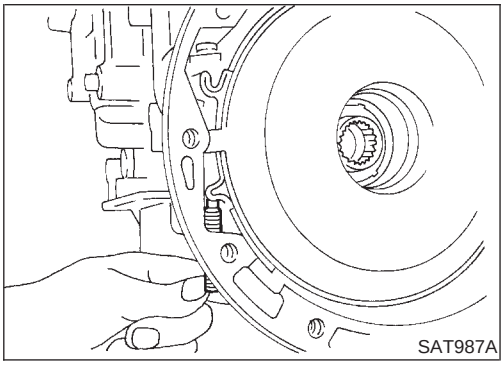

c. Install anchor end bolt on transmission case. Then, tighten anchor end bolt just enough so that reverse clutch drum (clutch pack) will not tilt forward.

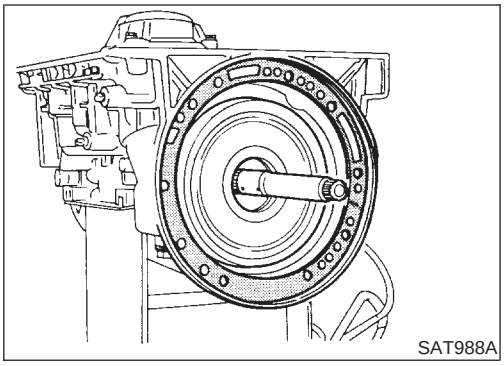

2. Install input shaft on transmission case.
- **Pay attention to its direction — O-ring groove side is front.**

3. Install gasket on transmission case.

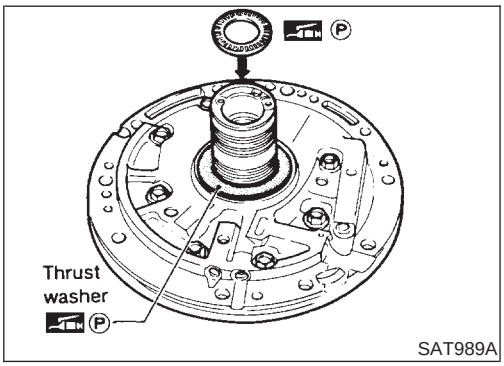

4. Install oil pump assembly.

a. Install needle bearing on oil pump assembly.
- **Apply petroleum jelly to the needle bearing.**

b. Install selected thrust washer on oil pump assembly.
- **Apply petroleum jelly to thrust washer.**

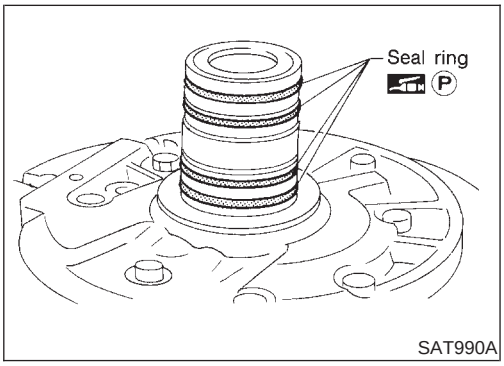

c. Carefully install seal rings into grooves and press them into the petroleum jelly so that they are a tight fit.

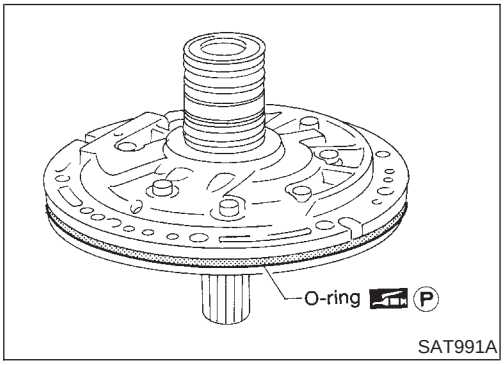

d. Install O-ring on oil pump assembly.
- **Apply petroleum jelly to O-ring.**

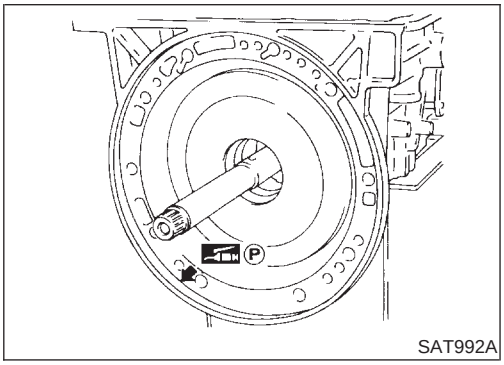

e. Apply petroleum jelly to mating surface of transmission case and oil pump assembly.

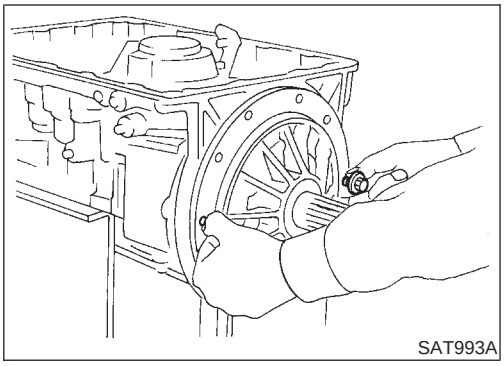
SAT993A

f. Install oil pump assembly.

- **Install two converter housing securing bolts in bolt holes in oil pump assembly as guides.**

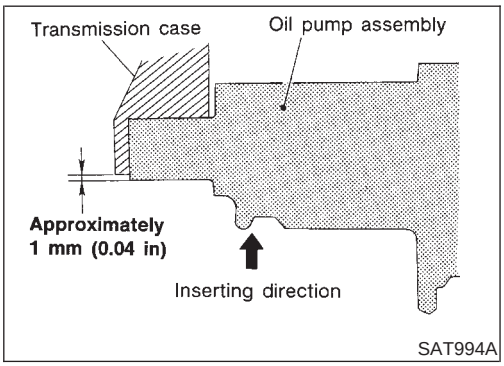

SAT994A

- **Insert oil pump assembly to the specified position in transmission, as shown at left.**

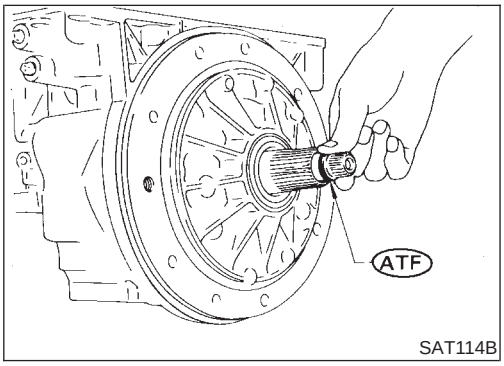

SAT114B

5. Install O-ring on input shaft.

- **Apply ATF to O-rings.**

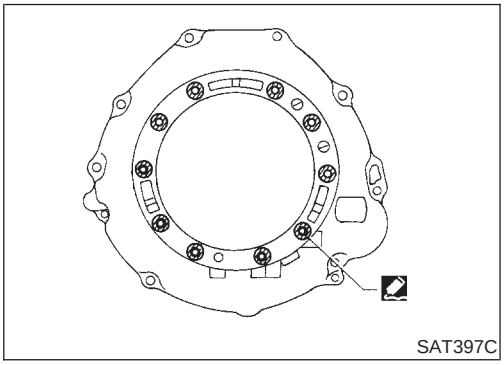
SAT397C

6. Install converter housing.

a. Apply recommended sealant (Genuine Anaerobic Liquid Gasket or equivalent. Refer to GI section.) to outer periphery of bolt holes in converter housing.

- **Do not apply too much sealant.**

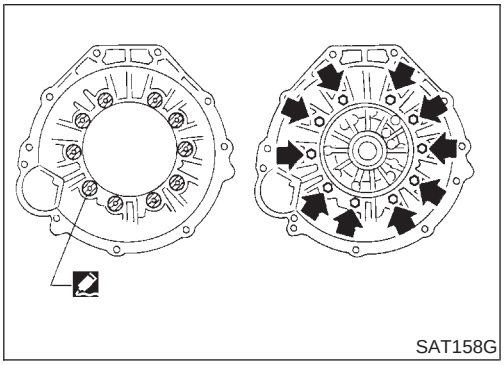
SAT158G

b. Apply recommended sealant (Genuine Anaerobic Liquid Gasket or equivalent. Refer to GI section.) to seating surfaces of bolts that secure front of converter housing.

c. Install converter housing on transmission case.

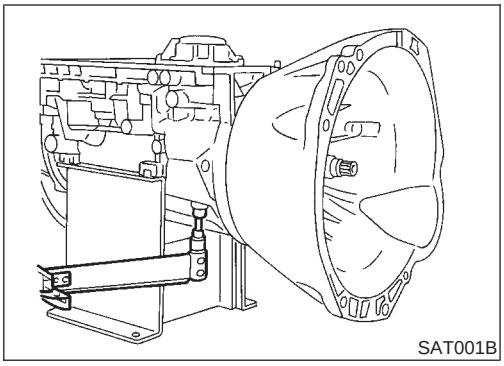

7. Install turbine revolution sensor.
8. Adjust brake band.
a. Tighten anchor end bolt to specified torque.

Anchor end bolt:

: 4 - 6 N·m (0.4 - 0.6 kg-m, 35 - 52 in-lb)

b. Back off anchor end bolt two and a half turns.

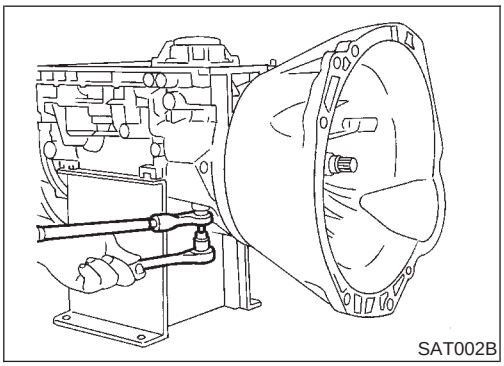

c. While holding anchor end bolt, tighten lock nut.

Ancher end bolt nut:

: 41 - 50 N·m (4.1 - 5.2 kg-m, 30 - 37 ft-lb)

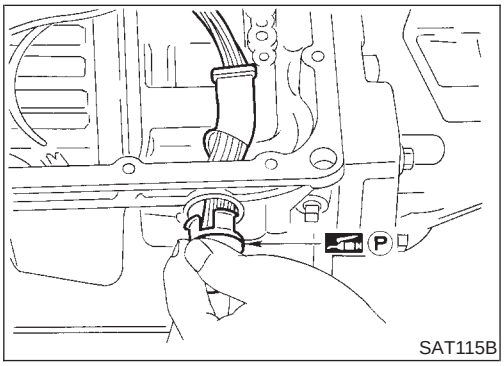

9. Install terminal cord assembly.
a. Install O-ring on terminal cord assembly.
- **Apply petroleum jelly to O-ring.**

b. Compress terminal cord assembly stopper and install terminal cord assembly on transmission case.

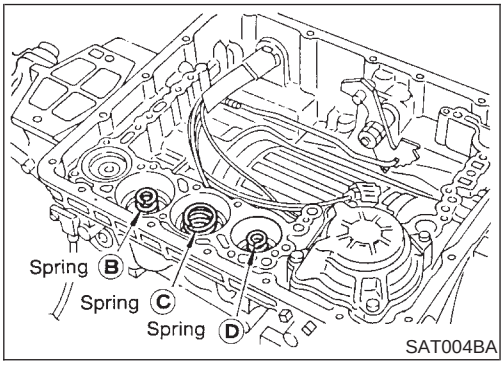

10. Install control valve assembly.
a. Install accumulator piston return springs B, C and D.

Free length of return springs:

Refer to SDS, AT-354.

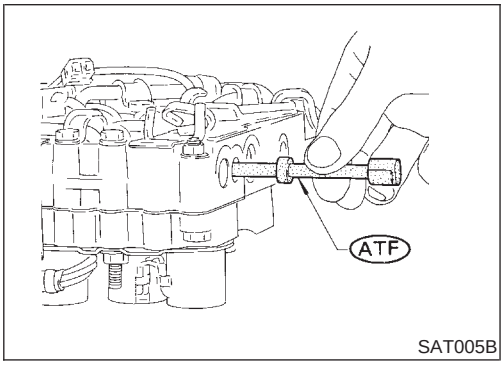

b. Install manual valve on control valve.
- **Apply ATF to manual valve.**

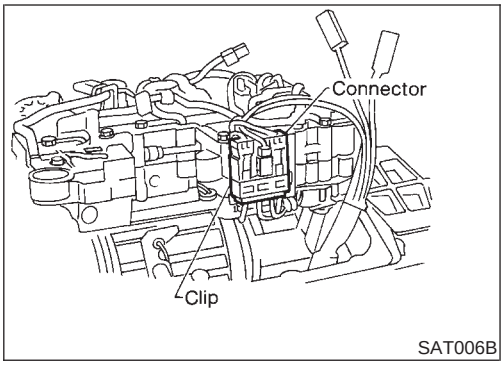

SAT006B

c. Place control valve assembly on transmission case. Connect solenoid connector for upper body.
d. Install connector clip.

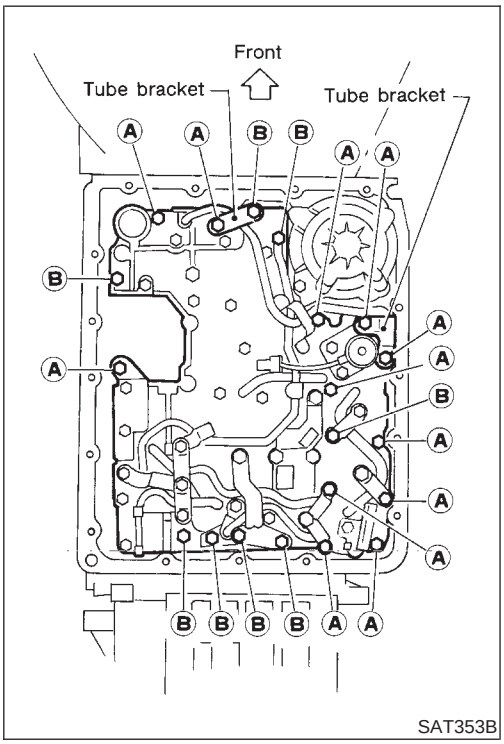

SAT353B

e. Install control valve assembly on transmission case.
f. Install connector tube brackets and tighten bolts A and B.

- **Check that terminal assembly does not catch.**

Bolt symbol	ℓ mm (in) ℓ
A	33 (1.30)
B	45 (1.77)

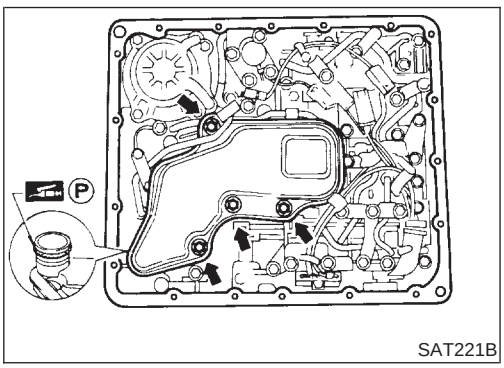

SAT221B

g. Install O-ring on oil strainer.

- **Apply petroleum jelly to O-ring.**

h. Install oil strainer on control valve.

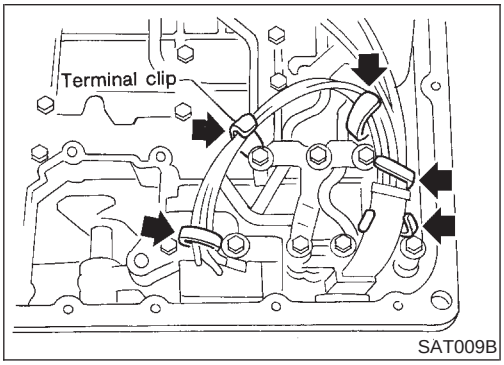

SAT009B

i. Securely fasten terminal harness with clips.

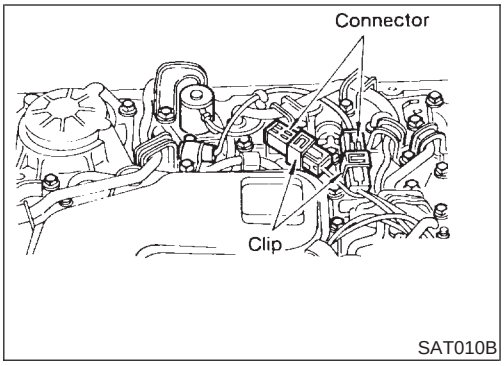

j. Install torque converter clutch solenoid valve and A/T fluid temperature sensor connectors.

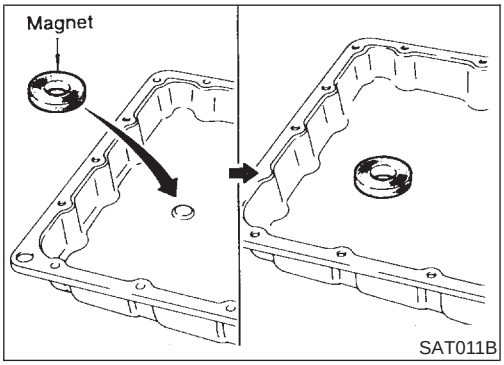

11. Install oil pan.

a. Attach a magnet to oil pan.

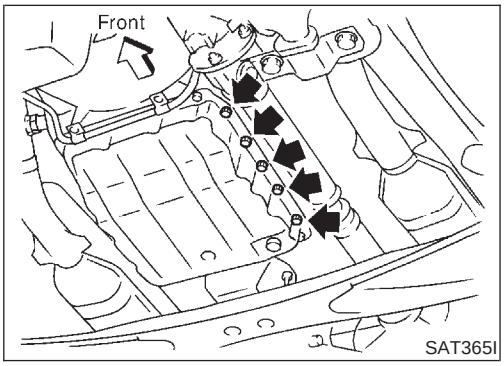

b. Install new oil pan gasket on transmission case.

c. Install oil pan and bracket on transmission case.

- **Always replace oil pan bolts as they are self-sealing bolts.**
- **Before installing bolts, remove traces of sealant and oil from mating surface and thread holes.**
- **Tighten four bolts in a criss-cross pattern to prevent dislocation of gasket.**

d. Tighten drain plug.

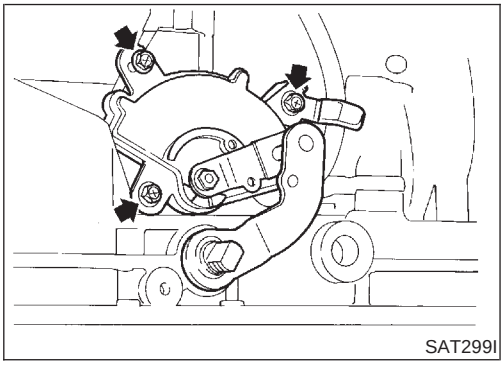

12. Install PNP switch.

a. Check that manual shaft is in "1" position.

b. Temporarily install PNP switch on manual shaft.

c. Move manual shaft to "N".

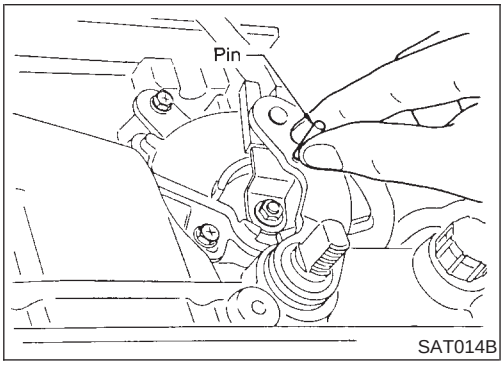

d. Tighten bolts while inserting 4.0 mm (0.157 in) dia. pin vertically into locating holes in PNP switch and manual shaft.

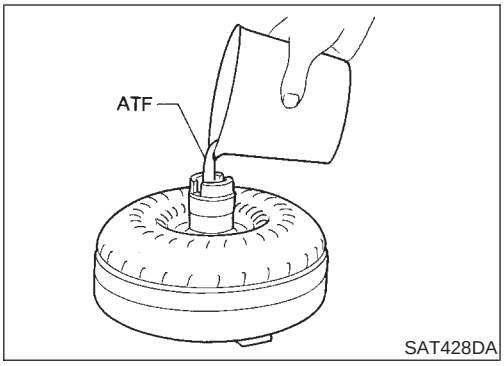

13. Install torque converter.

a. Pour ATF into torque converter.

- **Approximately 2 liters (2-1/8 US qt, 1-3/4 Imp qt) of fluid are required for a new torque converter.**
- **When reusing old torque converter, add the same amount of fluid as was drained.**

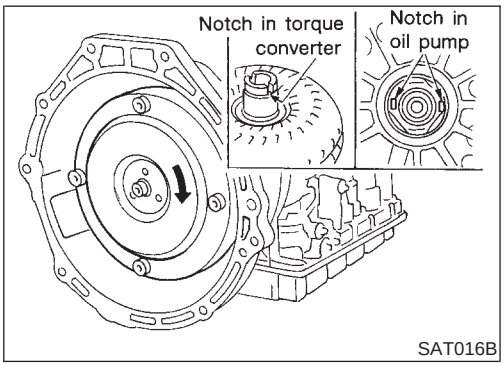

b. Install torque converter while aligning notches and oil pump.

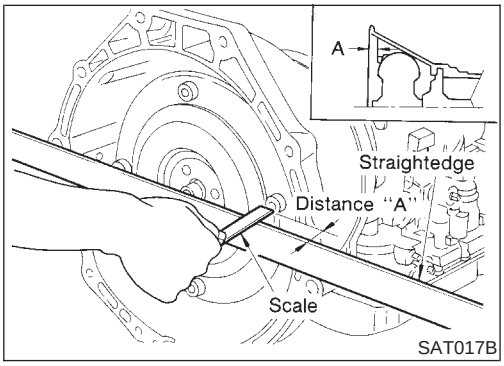

c. Measure distance A to check that torque converter is in proper position.

Distance "A":
25.0 mm (0.984 in) or more

General Specifications

NAAT0160

Applied model		VQ35DE engine	
		2WD	4WD
Automatic transmission model		RE4R01A	
Transmission model code number		4EX74	4EX75, 4EX76
Stall torque ratio		2.0 : 1	
Transmission gear ratio	1st	2.785	
	2nd	1.545	
	Top	1.000	
	OD	0.694	
	Reverse	2.272	
Recommended fluid		Nissan Matic “D” (Continental U.S. and Alaska) or Genuine Nissan Automatic Transmission Fluid (Canada)*1	
Fluid capacity		8.5ℓ (9 US qt, 7-1/2 Imp qt)	

*1: Refer to MA-12, “Fluids and Lubricants”.

Shift Schedule

NAAT0178

VEHICLE SPEED WHEN SHIFTING GEARS THROTTLE POSITION

NAAT0178S01

Throttle position	Vehicle speed km/h (MPH)						
	$D_1 \rightarrow D_2$	$D_2 \rightarrow D_3$	$D_3 \rightarrow D_4$	$D_4 \rightarrow D_3$	$D_3 \rightarrow D_2$	$D_2 \rightarrow D_1$	$1_2 \rightarrow 1_1$
Full throttle	55 - 59 (34 - 37)	105 - 113 (65 - 70)	174 - 184 (108 - 114)	170 - 180 (106 - 112)	102 - 110 (63 - 68)	43 - 47 (27 - 29)	43 - 47 (27 - 29)
Half throttle	37 - 41 (23 - 25)	71 - 79 (44 - 49)	129 - 139 (80 - 86)	81 - 91 (50 - 57)	33 - 41 (21 - 25)	12 - 16 (7 - 10)	43 - 47 (27 - 29)

VEHICLE SPEED WHEN PERFORMING AND RELEASING LOCK-UP

NAAT0178S02

Throttle position	Overdrive control switch [Shift position]	Vehicle speed km/h (MPH)	
		Lock-up “ON”	Lock-up “OFF”
Full throttle	ON [D_4]	174 - 184 (108 - 114)	170 - 180 (106 - 112)
	OFF [D_3]	104 - 114 (65 - 71)	101 - 111 (63 - 69)
Half throttle	ON [D_4]	151 - 161 (94 - 100)	106 - 116 (66 - 72)
	OFF [D_3]	85 - 95 (53 - 59)	82 - 92 (51 - 57)

Stall Revolution

NAAT0163

Stall revolution rpm	2,440 - 2,640

Line Pressure

NAAT0164

Engine speed rpm	Line pressure kPa (kg/cm^2, psi)	
	D, 2 and 1 positions	R position
Idle	422 - 461 (4.3 - 4.7, 61 - 67)	667 - 706 (6.8 - 7.2, 97 - 102)
Stall	1,020 - 1,098 (10.4 - 11.2, 148 - 159)	1,422 - 1,500 (14.5 - 15.3, 206 - 218)

Return Springs

NAAT0165
Unit: mm (in)

Parts				Item		
				Part No.*	Free length	Outer diameter
Control valve	Upper body	1	Torque converter relief valve spring	31742-41X23	38.0 (1.496)	9.0 (0.354)
		2	Pressure regulator valve spring	31742-41X24	44.02 (1.7331)	14.0 (0.551)
		3	Pressure modifier valve spring	31742-41X19	31.95 (1.2579)	6.8 (0.268)
		—	Accumulator control valve spring	—	—	—
		4	Shuttle shift valve D spring	31762-41X01	25.0 (0.984)	7.0 (0.276)
		5	4-2 sequence valve spring	31756-41X00	29.1 (1.146)	6.95 (0.2736)
		6	Shift valve B spring	31762-41X01	25.0 (0.984)	7.0 (0.276)
		7	4-2 relay valve spring	31756-41X00	29.1 (1.146)	6.95 (0.2736)
		8	Shift valve A spring	31762-41X01	25.0 (0.984)	7.0 (0.276)
		9	Overrun clutch control valve spring	31762-41X03	23.6 (0.929)	7.0 (0.276)
		10	Overrun clutch reducing valve spring	31742-41X14	38.9 (1.531)	7.0 (0.276)
		11	Shuttle shift valve S spring	31762-41X04	51.0 (2.008)	5.65 (0.2224)
		12	Pilot valve spring	31742-41X13	25.7 (1.012)	9.0 (0.354)
		13	Torque converter clutch control valve spring	31742-41X22	18.5 (0.728)	13.0 (0.512)
	Lower body	1	Modifier accumulator piston spring	31742-27X70	31.4 (1.236)	9.8 (0.386)
		2	1st reducing valve spring	31756-60X00	29.5 (1.161)	7.0 (0.276)
		3	3-2 timing valve spring	31742-41X06	23.0 (0.906)	6.7 (0.264)
		4	Servo charger valve spring	31742-41X06	23.0 (0.906)	6.7 (0.264)
Reverse clutch			—	31505-41X07	—	—
High clutch			10 pcs	31521-41X03 (Assembly)	24.2 (0.9528)	11.6 (0.457)
Forward clutch (Overrun clutch)			20 pcs	31521-41X04 (Assembly)	35.77 (1.4083)	9.7 (0.382)
Low & reverse brake			18 pcs	31655-41X00 (Assembly)	22.3 (0.878)	11.2 (0.441)
Band servo			Spring A	31605-4AX03	45.6 (1.795)	34.3 (1.350)
			Spring B	31605-41X01	29.7 (1.169)	27.6 (1.087)
Accumulator			Accumulator A	31605-41X02	43.0 (1.693)	18.0 (0.709)
			Accumulator B	31605-41X14	47.6 (1.874)	26.5 (1.043)
			Accumulator C	31605-41X09	45.0 (1.772)	29.3 (1.154)
			Accumulator D	31605-41X06	58.4 (2.299)	17.3 (0.681)

*: Always check with the Parts Department for the latest parts information.

Accumulator O-ring

NAAT0166

Accumulator	Diameter mm (in)			
	A	B	C	D
Small diameter end	29 (1.14)	32 (1.26)	45 (1.77)	29 (1.14)
Large diameter end	45 (1.77)	50 (1.97)	50 (1.97)	45 (1.77)

Clutches and Brakes

NAAT0167

REVERSE CLUTCH

NAAT0167S01

Code number		4EX74	4EX75, 4EX76
Number of drive plates		3	
Number of driven plates		3	
Thickness of drive plate mm (in)	Standard	1.90 - 2.05 (0.0748 - 0.0807)	
	Wear limit	1.80 (0.0709)	
Clearance mm (in)	Standard	0.5 - 0.8 (0.020 - 0.031)	
	Allowable limit	1.2 (0.047)	
Thickness of retaining plate		Thickness mm (in)	Part number*
		4.6 (0.181) 4.8 (0.189) 5.0 (0.197) 5.2 (0.205) 5.4 (0.213)	31537-42X20 31537-42X21 31537-42X22 31537-42X23 31537-42X24

*: Always check with the Parts Department for the latest parts information.

HIGH CLUTCH

NAAT0167S02

Code number		4EX74	4EX75, 4EX76
Number of drive plates		5	
Number of driven plates		6	
Thickness of drive plate mm (in)	Standard	1.52 - 1.67 (0.0598 - 0.0657)	
	Wear limit	1.40 (0.0551)	
Clearance mm (in)	Standard	1.8 - 2.2 (0.071 - 0.087)	
	Allowable limit	3.2 (0.126)	
Thickness of retaining plate		Thickness mm (in)	Part number*
		4.0 (0.157) 4.2 (0.165) 4.4 (0.173) 4.6 (0.181) 4.8 (0.189) 5.0 (0.197)	31537-41X63 31537-41X64 31537-41X65 31537-41X66 31537-41X67 31537-41X68

*: Always check with the Parts Department for the latest parts information.

FORWARD CLUTCH

NAAT0167S03

Code number		4EX74		4EX75, 4EX76	
Number of drive plates		7		8	
Number of driven plates		7		8	
Thickness of drive plate mm (in)	Standard	1.52 - 1.67 (0.0598 - 0.0657)			
	Wear limit	1.40 (0.0551)			
Clearance mm (in)	Standard	0.35 - 0.75 (0.0138 - 0.0295)			
	Allowable limit	2.15 (0.0846)		2.35 (0.0925)	
Thickness of retaining plate		Thickness mm (in)	Part number*	Thickness mm (in)	Part number*
		4.6 (0.181) 4.8 (0.189) 5.0 (0.197) 5.2 (0.205) 5.4 (0.213) 5.6 (0.220)	31537-42X13 31537-42X14 31537-42X15 31537-4AX00 31537-4AX01 31537-4AX02	4.2 (0.165) 4.4 (0.173) 4.6 (0.181) 4.8 (0.189) 5.0 (0.197) 5.2 (0.205) 5.4 (0.213)	31537-42X11 31537-42X12 31537-42X13 31537-42X14 31537-42X15 31537-4AX00 31537-4AX01

*: Always check with the Parts Department for the latest parts information.

OVERRUN CLUTCH

NAAT0167S04

Code number		4EX74	4EX75, 4EX76
Number of drive plates		3	
Number of driven plates		5	
Thickness of drive plate mm (in)	Standard	1.90 - 2.05 (0.0748 - 0.0807)	
	Wear limit	1.80 (0.0709)	
Clearance mm (in)	Standard	1.0 - 1.4 (0.039 - 0.055)	
	Allowable limit	2.0 (0.079)	
Thickness of retaining plate		Thickness mm (in)	Part number*
		4.2 (0.165) 4.4 (0.173) 4.6 (0.181) 4.8 (0.189) 5.0 (0.197)	31537-41X80 31537-41X81 31537-41X82 31537-41X83 31537-41X84

*: Always check with the Parts Department for the latest parts information.

LOW & REVERSE BRAKE

NAAT0167S05

Code number		4EX74	4EX75, 4EX76
Number of drive plates		8	
Number of driven plates		8	
Thickness of drive plate mm (in)	Standard	1.90 - 2.05 (0.0748 - 0.0807)	1.52 - 1.67 (0.0598 - 0.0657)
	Wear limit	1.40 (0.0551)	
Clearance mm (in)	Standard	0.8 - 1.1 (0.031 - 0.043)	
	Allowable limit	2.7 (0.106)	
Thickness of retaining plate		Thickness mm (in)	Part number*
		7.6 (0.299)	31667-41X07
		7.8 (0.307)	31667-41X08
		8.0 (0.315)	31667-41X00
		8.2 (0.323)	31667-41X01
		8.4 (0.331)	31667-41X02
		8.6 (0.339)	31667-41X03
		8.8 (0.346)	31667-41X04
		9.0 (0.354)	31667-41X05
		9.2 (0.362)	31667-41X06
		9.4 (0.370)	31667-41X09
		9.6 (0.378)	31667-41X10

*: Always check with the Parts Department for the latest parts information.

BRAKE BAND

NAAT0167S06

Anchor end bolt nut tightening torque	40 - 51 N·m (4.1 - 5.2 kg-m, 30 - 38 ft-lb)
Anchor end bolt tightening torque	4 - 6 N·m (0.4 - 0.6 kg-m, 35 - 52 in-lb)
Number of returning revolution for anchor end bolt	2.5

Oil Pump and Low One-way Clutch

NAAT0168

Unit: mm (in)

Oil pump clearance	Cam ring — oil pump housing	Standard	0.01 - 0.024 (0.0004 - 0.0009)
	Rotor, vanes and control piston — oil pump housing	Standard	0.03 - 0.044 (0.0012 - 0.0017)
Seal ring clearance		Standard	0.10 - 0.25 (0.0039 - 0.0098)
		Allowable limit	0.25 (0.0098)

Total End Play

NAAT0169

Total end play "T_1"	0.25 - 0.55 mm (0.0098 - 0.0217 in)	
Thickness of oil pump cover bearing race	Thickness mm (in)	Part number*
	0.8 (0.031)	31435-41X01
	1.0 (0.039)	31435-41X02
	1.2 (0.047)	31435-41X03
	1.4 (0.055)	31435-41X04
	1.6 (0.063)	31435-41X05
	1.8 (0.071)	31435-41X06
	2.0 (0.079)	31435-41X07

*: Always check with the Parts Department for the latest parts information.

Reverse Clutch Drum End Play

NAAT0170

Reverse clutch drum end play "T_2"	0.55 - 0.90 mm (0.0217 - 0.0354 in)	
Thickness of oil pump thrust washer	Thickness mm (in)	Part number*
	0.9 (0.035) 1.1 (0.043) 1.3 (0.051) 1.5 (0.059) 1.7 (0.067) 1.9 (0.075)	31528-21X01 31528-21X02 31528-21X03 31528-21X04 31528-21X05 31528-21X06

*: Always check with the Parts Department for the latest parts information.

Removal and Installation

NAAT0171

Manual control linkage	Number of returning revolutions for lock nut	2
	Lock nut tightening torque	4.4 - 5.9 N·m (0.45 - 0.60 kg-m, 39.1 - 52.1 in-lb)
Distance between end of converter housing and torque converter		25.0 mm (0.984 in) or more

Shift Solenoid Valves

NAAT0217

Gear position	1	2	3	4
Shift solenoid valve A	ON (Closed)	OFF (Open)	OFF (Open)	ON (Closed)
Shift solenoid valve B	ON (Closed)	ON (Closed)	OFF (Open)	OFF (Open)

Solenoid Valves

NAAT0218

Solenoid valves	Resistance (Approx.) Ω	Terminal No.
Shift solenoid valve A	20 - 40	3
Shift solenoid valve B	20 - 40	2
Overrun clutch solenoid valve	20 - 40	4
Line pressure solenoid valve	2.5 - 5	6
Torque converter clutch solenoid valve	10 - 20	7

A/T Fluid Temperature Sensor

NAAT0219

Remarks: Specification data are reference values.

Monitor item	Condition	Specification	
A/T fluid temperature sensor	Cold [20°C (68°F)] ↓ Hot [80°C (176°F)]	Approximately 1.5V ↓ Approximately 0.5V	Approximately 2.5 kΩ ↓ Approximately 0.3 kΩ

Turbine Revolution Sensor

NAAT0232

Terminal No.		Resistance
1	2	2.4 - 2.8 kΩ
2	3	No continuity
1	3	No continuity

Revolution Sensor

NAAT0220

Terminal No.		Resistance
1	2	500 - 650Ω
2	3	No continuity
1	3	No continuity

Dropping Resistor

NAAT0221

Resistance	11.2 - 12.8Ω

NOTES

FRONT & REAR AXLE

SECTION AX

CONTENTS

FRONT AXLE 2
Precautions 2
PRECAUTIONS 2
Preparation 2
SPECIAL SERVICE TOOLS 2
COMMERCIAL SERVICE TOOLS 2
Noise, Vibration and Harshness (NVH) Troubleshooting 3
NVH TROUBLESHOOTING CHART 3
On-vehicle Service 3
FRONT AXLE PARTS 3
FRONT WHEEL BEARING 4
DRIVE SHAFT (4WD) 5
Wheel Hub and Rotor Disc 6
COMPONENTS 6
REMOVAL 7
INSTALLATION 9
DISASSEMBLY 9
INSPECTION 9
ASSEMBLY 10
Knuckle Spindle 10
REMOVAL 10
INSPECTION 11
INSTALLATION 11
Drive Shaft (4WD) 12
COMPONENTS 12
REMOVAL 12
DISASSEMBLY 13
INSPECTION 14
ASSEMBLY 14
INSTALLATION 15
Service Data and Specifications (SDS) 16
WHEEL BEARING (FRONT) 16
DRIVE SHAFT (4WD) 16
REAR AXLE 18
Precautions 18
PRECAUTIONS 18
Preparation 18
SPECIAL SERVICE TOOLS 18
COMMERCIAL SERVICE TOOLS 19
Noise, Vibration and Harshness (NVH) Troubleshooting 19
On-vehicle Service 19
REAR AXLE PARTS 19
REAR WHEEL BEARING 19
Components 20
Removal 20
Inspection 22
AXLE SHAFT 22
BEARING CAGE 22
REAR AXLE HOUSING 22
Installation 22
Service Data and Specifications (SDS) 23
WHEEL BEARING (REAR) 23

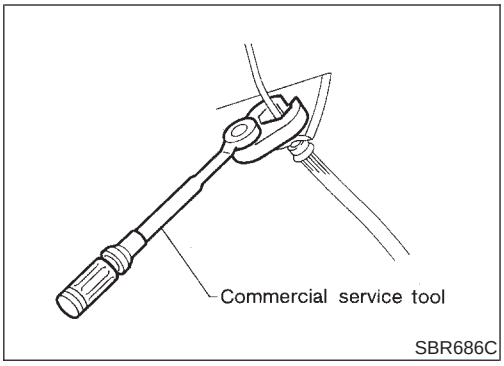

Precautions

PRECAUTIONS

NAAX0001

- **When installing rubber parts, final tightening must be carried out under unladen condition* with tires on ground. *Fuel, radiator coolant and engine oil full. Spare tire, jack, hand tools and mats in designated positions.**
- **Use flare nut wrench when removing and installing brake tubes.**
- **After installing removed suspension parts, check wheel alignment and adjust if necessary.**
- **Always torque brake lines when installing.**

Preparation

SPECIAL SERVICE TOOLS

NAAX0002

The actual shapes of Kent-Moore tools may differ from those of special service tools illustrated here.

Tool number (Kent-Moore No.) Tool name	Description	
ST29020001 (J24319-01) Ball joint remover	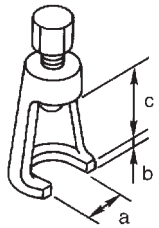 NT694	Removing tie-rod outer end and lower ball joint **a: 34 mm (1.34 in)** **b: 6.5 mm (0.256 in)** **c: 61.5 mm (2.421 in)**
KV401021S0 (—) Bearing race drift	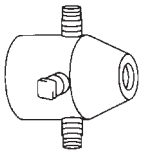 NT153	Installing wheel bearing outer race
KV40105400 (J36001) Wheel bearing lock nut wrench	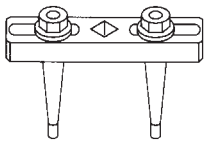 NT154	Removing and installing wheel bearing lock nut

COMMERCIAL SERVICE TOOLS

NAAX0003

Tool name	Description	
1 Flare nut crowfoot 2 Torque wrench	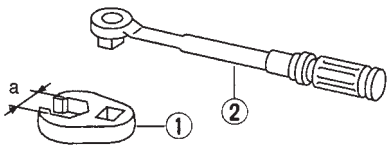 NT360	Removing and installing each brake piping **a: 10 mm (0.39 in)**
Hub cap drift	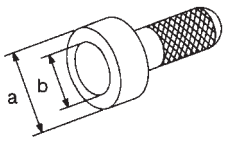 NT115	Installing hub cap (2WD) **a: 85 mm (3.35 in) dia.** **b: 72 mm (2.83 in) dia.** Installing hub cap (4WD) **a: 57 mm (2.24 in) dia.** **b: 46 mm (1.81 in) dia.**

Noise, Vibration and Harshness (NVH) Troubleshooting

NAAX0034

NVH TROUBLESHOOTING CHART

NAAX0034S01

Use the chart below to help you find the cause of the symptom. If necessary, repair or replace these parts.

Possible cause and SUSPECTED PARTS			Excessive joint angle	Joint sliding resistance	Imbalance	Improper installation, looseness	Parts interference	Wheel bearing damage	PROPELLER SHAFT	DIFFERENTIAL	DRIVE SHAFT	AXLE	SUSPENSION	TIRES	ROAD WHEEL	BRAKES	STEERING
Reference page			—	AX-14	—	AX-6, 20	—	AX-4, 19	PD-4	PD-4	Refer to DRIVE SHAFT in this chart.	Refer to AXLE in this chart.	SU-4	SU-4	SU-4	BR-7	ST-6
Symptom	DRIVE SHAFT	Noise, Vibration	×	×					×	×		×	×	×	×	×	×
		Shake	×		×				×			×	×	×	×	×	×
	AXLE	Noise				×	×		×	×	×		×	×	×	×	×
		Shake				×	×		×		×		×	×	×	×	×
		Vibration				×	×		×		×		×	×			×
		Shimmy				×	×						×	×	×	×	×
		Judder				×							×	×	×	×	×
		Poor quality ride or handling				×	×	×					×	×	×		

×: Applicable

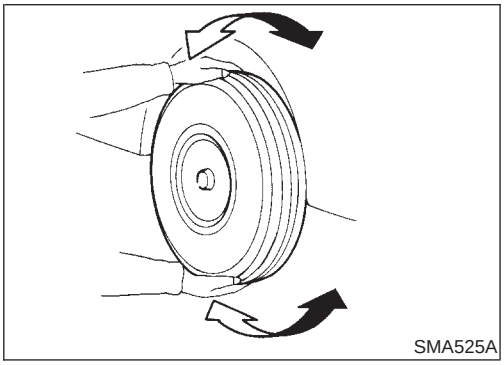

On-vehicle Service

FRONT AXLE PARTS

NAAX0004

Check front axle parts for excessive play, cracks, wear and other damage.

1. Shake each front wheel to check for excessive play.
2. Retighten all nuts and bolts to the specified torque.

Tightening torque:

Refer to “Wheel Hub and Rotor Disc”, AX-6.

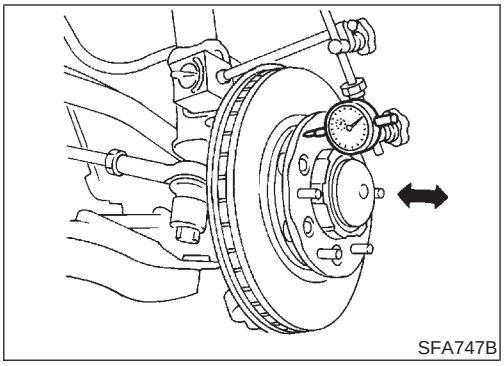

FRONT WHEEL BEARING

NAAX0005

1. Check that wheel bearings operate smoothly.
2. Check axial end play.

   Axial end play: 0 mm (0 in)
3. Adjust wheel bearing preload if there is any axial end play or wheel bearing does not turn smoothly.

Preload Adjustment

NAAX0005S01

Adjust wheel bearing preload after wheel bearing has been replaced or front axle has been reassembled.

Adjust wheel bearing preload as follows:

1. Before adjustment, thoroughly clean all parts to prevent dirt entry.

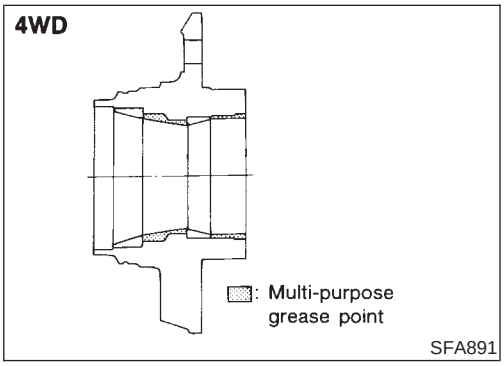

2. Apply multi-purpose grease sparingly to the following parts:
   - Threaded portion of spindle
   - Contact surface between wheel bearing lock washer (chamfered side) and outer wheel bearing
   - Grease seal lip
   - Wheel hub (as shown at left) — 4WD —

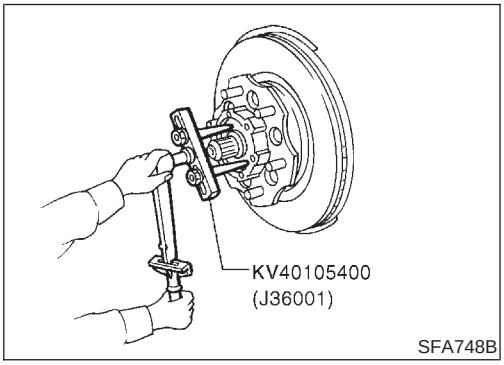

3. Tighten wheel bearing lock nut with Tool.

   : 78 - 98 N·m (8 - 10 kg-m, 58 - 72 ft-lb)
4. Turn wheel hub several times in both directions.
5. Loosen wheel bearing lock nut so that torque becomes 0 N·m (0 kg-m, 0 ft-lb).
6. Retighten wheel bearing lock nut with Tool.

   : 0.5 - 1.5 N·m (0.05 - 0.15 kg-m, 4.3 - 13.0 in-lb)

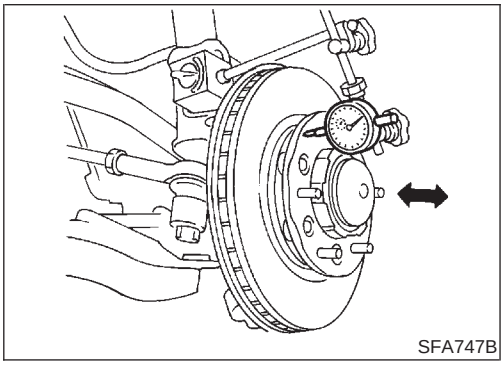

7. Turn wheel hub several times in both directions.
8. Retighten wheel bearing lock nut with Tool.

   : 0.5 - 1.5 N·m (0.05 - 0.15 kg-m, 4.3 - 13.0 in-lb)
9. Measure wheel bearing axial end play.

   Axial end play: 0 mm (0 in)

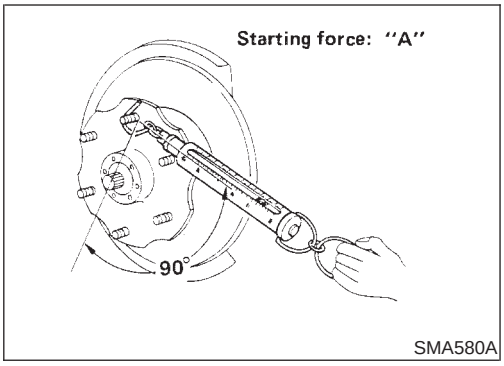

SMA580A

10. Measure starting force "A" at wheel hub bolt.

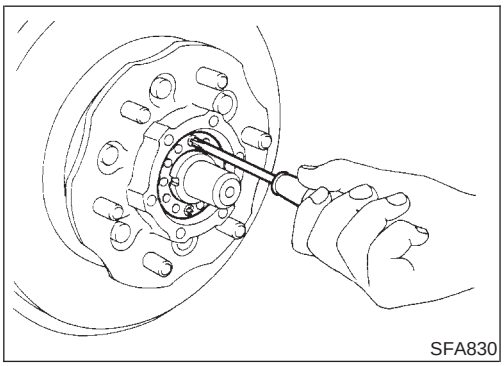
SFA830

11. Install lock washer by tightening the lock nut within 15 to 30 degrees.
12. Turn wheel hub several times in both directions to seat wheel bearing correctly.
13. Measure starting force "B" at wheel hub bolt. Refer to procedure 10.
14. Wheel bearing preload "C" can be calculated as shown below.

    C = B − A

    Wheel bearing preload "C":

    7.06 - 20.99 N (0.72 - 2.14 kg, 1.59 - 4.72 lb)
15. If wheel bearing preload "C" is outside specifications, remove lock washer. Tighten or loosen lock nut within ±15 degrees (Refer to step 11 above). Install lock washer, then repeat steps 12, 13 and 14.
16. Repeat above procedures until correct axial end play and wheel bearing preload are obtained.
17. Install drive flange (4WD models) and wheel hub cap.

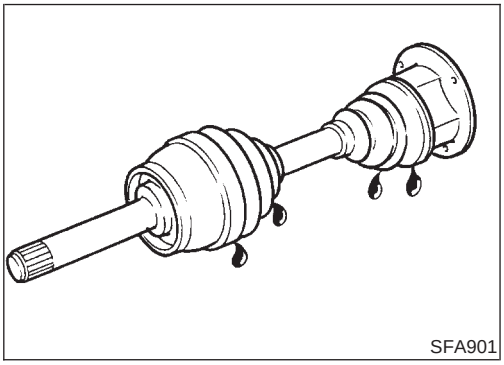
SFA901

DRIVE SHAFT (4WD)

NAAX0006

- Check boot and drive shaft for cracks, wear, damage and grease leakage.

Wheel Hub and Rotor Disc

COMPONENTS

NAAX0007

2WD Model

NAAX0007S01

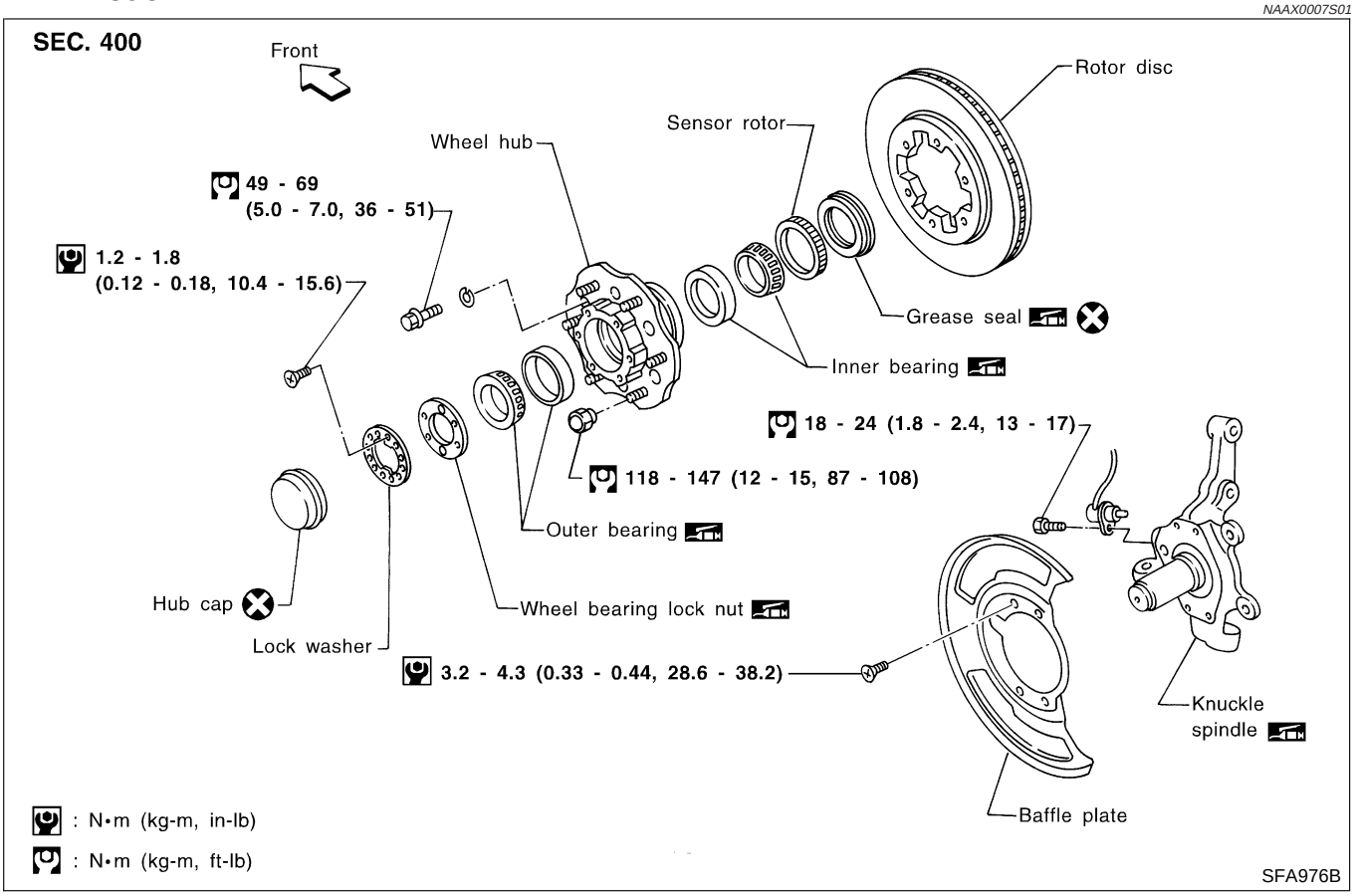

4WD Model

NAAX0007S02

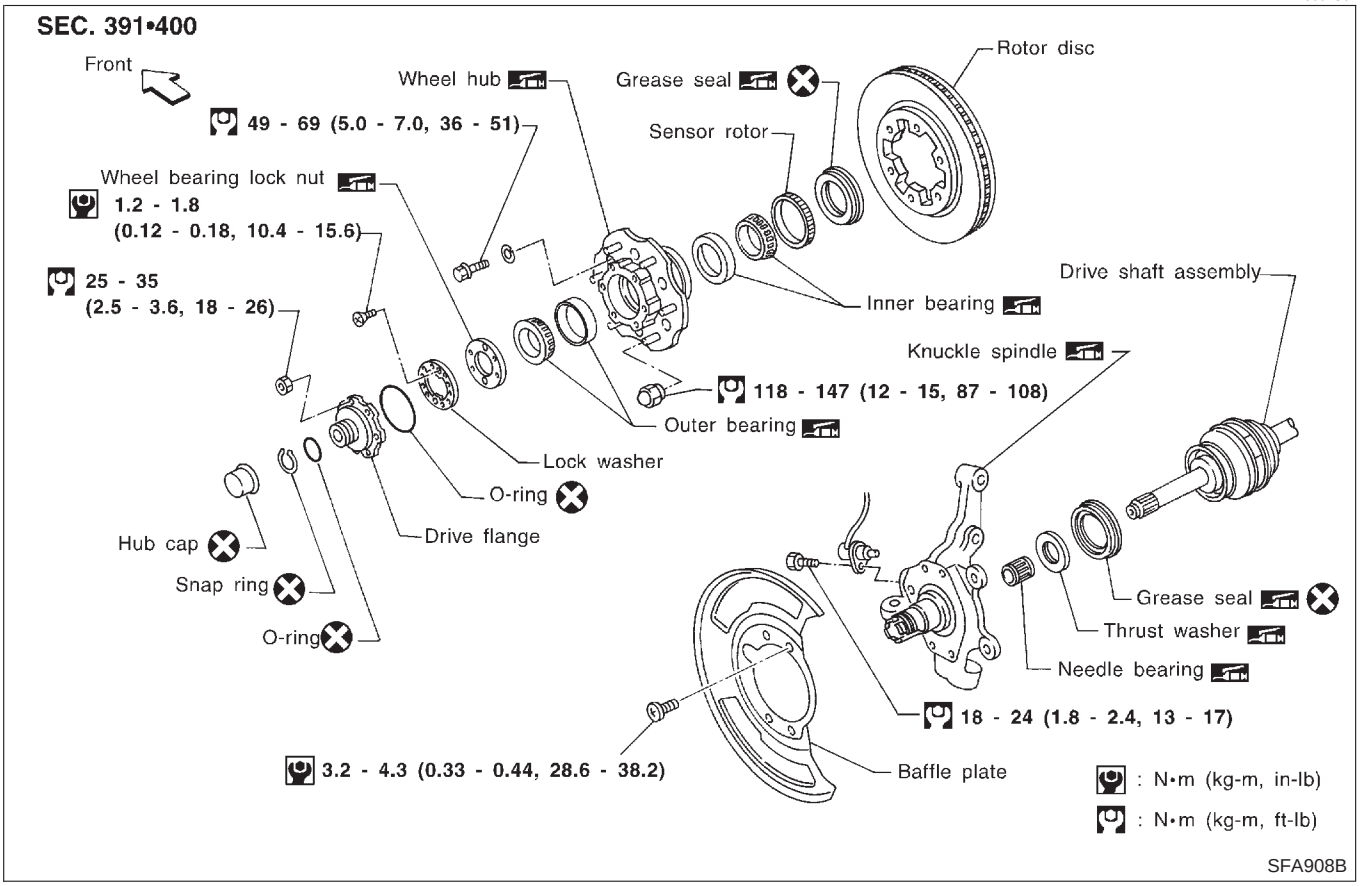

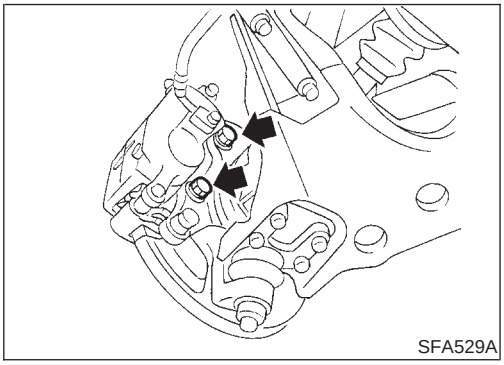

REMOVAL

NAAX0008

CAUTION:

Before removing the front axle assembly, disconnect the ABS wheel sensor from the assembly. Then move it away from the front axle assembly area. Failure to do so may result in damage to the sensor wires and the sensor becoming inoperative.

1. Remove brake caliper assembly.

Brake hose need not be disconnected from brake caliper. In this case, suspend caliper assembly with wire so as not to stretch brake hose.
Be careful not to depress brake pedal, or piston will pop out. Make sure brake hose is not twisted.

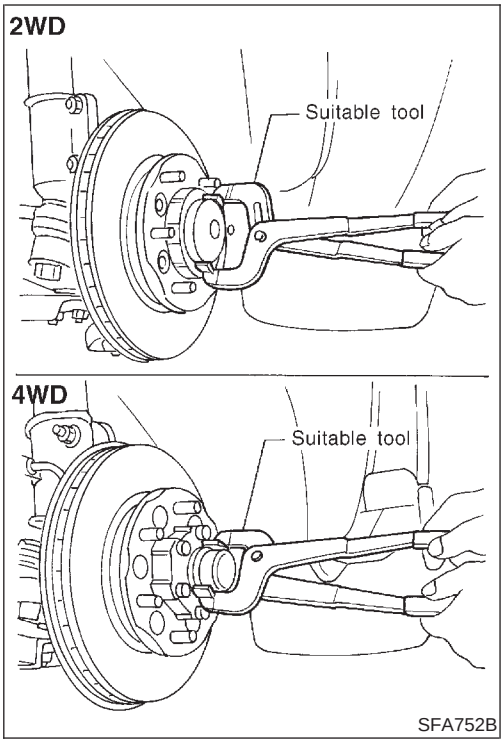

2. Remove hub cap with suitable tool.

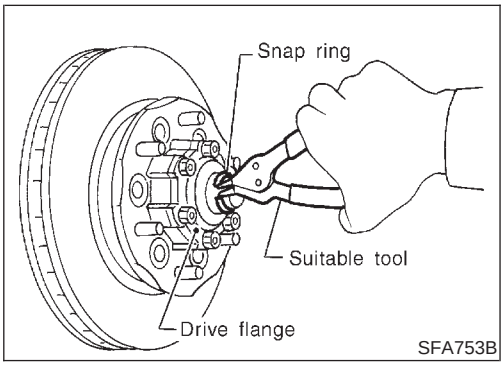

3. Remove snap ring with suitable tool. — 4WD —
4. Remove drive flange. — 4WD —

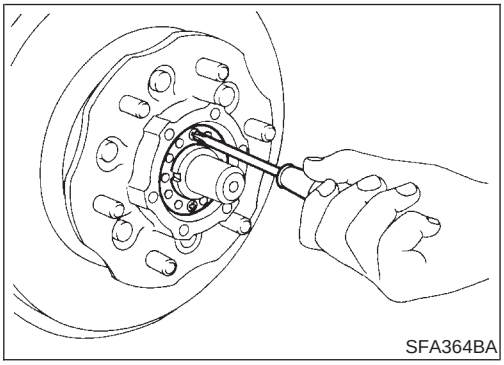

5. Remove lock washer.

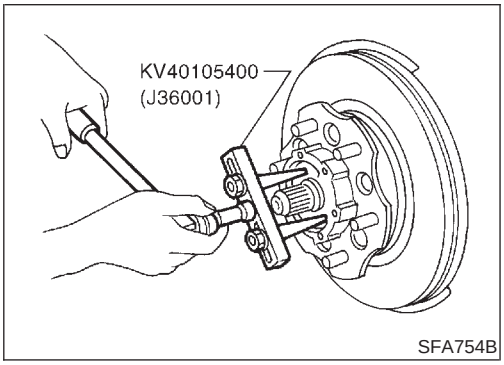

6. Remove wheel bearing lock nut.

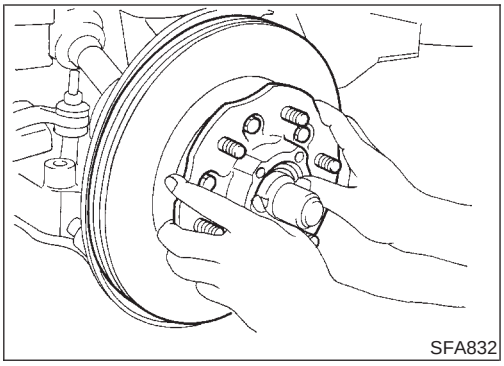
SFA832

7. Remove wheel hub and wheel bearing.
   Be careful not to drop outer bearing.

INSTALLATION

NAAX0009

1. After installing wheel hub and wheel bearing, adjust wheel bearing preload.
   Refer to "Preload Adjustment", "FRONT WHEEL BEARING", "On-vehicle Service", AX-4.

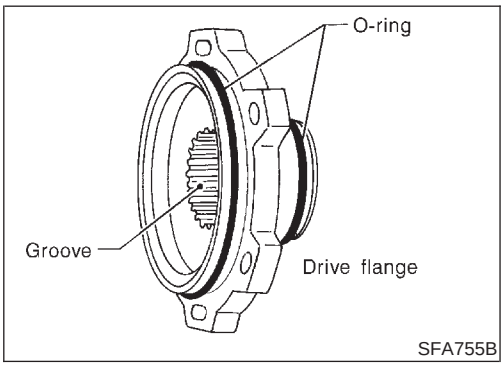

SFA755B

2. Pack drive flange groove with grease, apply grease to O-ring (two places) and mating surface of drive flange, and install flange. — 4WD —
3. Install snap ring. — 4WD —

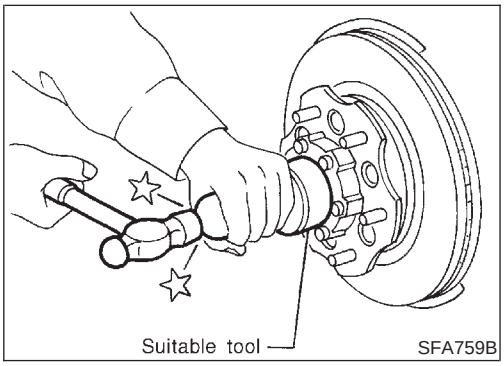

SFA759B

4. Install hub cap using a suitable tool.

Do not reuse hub cap. When installing, replace it with a new one.

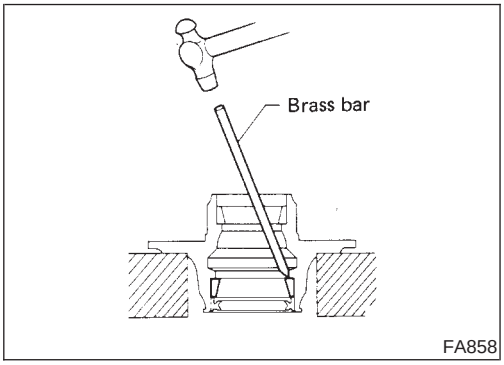

FA858

DISASSEMBLY

NAAX0010

- Remove grease seal and bearing outer races with suitable brass bar.

INSPECTION

NAAX0011

Thoroughly clean wheel bearings and wheel hub.

Wheel Bearing

NAAX0011S01

- Make sure wheel bearing rolls freely and is free from noise, crack, pitting and wear.

Wheel Hub

NAAX0011S02

- Check wheel hub for crack by using a magnetic exploration or dyeing test.

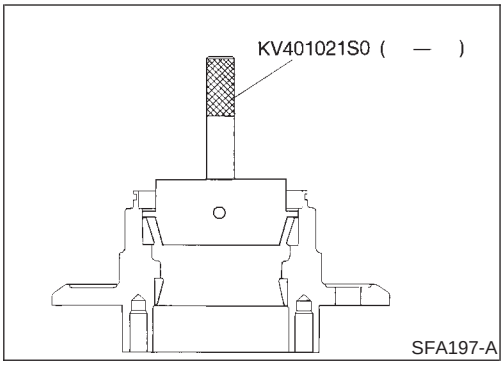

ASSEMBLY

NAAX0012

1. Install bearing outer race with Tool until it seats in hub.

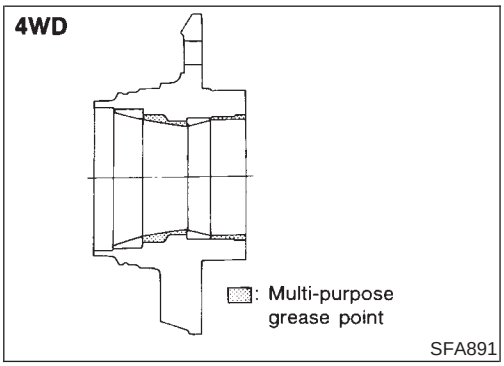

2. Pack multi-purpose grease into wheel hub. — 4WD —

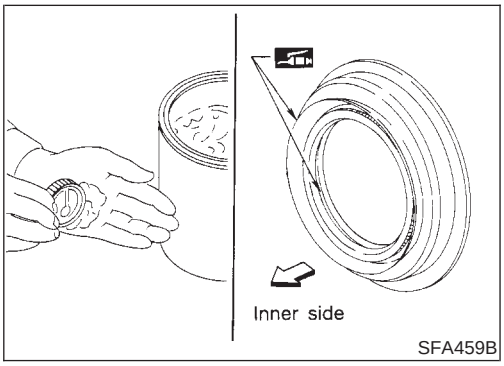

3. Apply multi-purpose grease to each bearing cone.
4. Pack grease seal lip with multi-purpose grease, then install it into wheel hub with suitable drift.

Knuckle Spindle

REMOVAL

NAAX0013

1. Remove drive shaft. — 4WD —
   Refer to "Drive Shaft", AX-12.

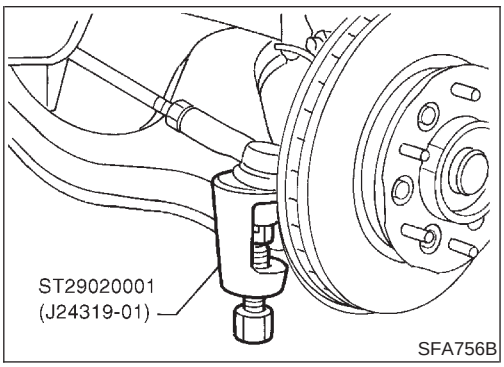

2. Separate tie-rod end and lower ball joint from knuckle with Tool.

Install stud nut conversely on stud bolt so as not to damage stud bolt.

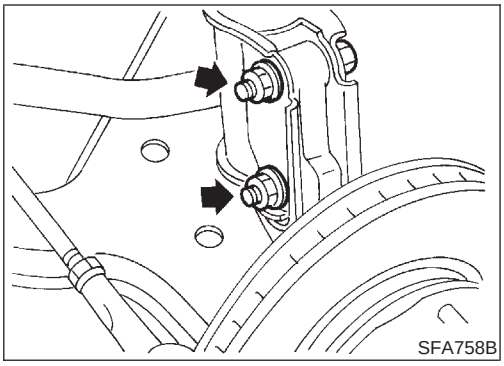

3. Separate knuckle from strut.

INSPECTION

NAAX0014

Knuckle Spindle

NAAX0014S01

- Check knuckle spindle for deformation, cracks and other damage by using a magnetic exploration or dyeing test.

Needle Bearing — 4WD —

NAAX0014S02

- Check needle bearing for wear, scratches, pitting, flaking and burn marks.

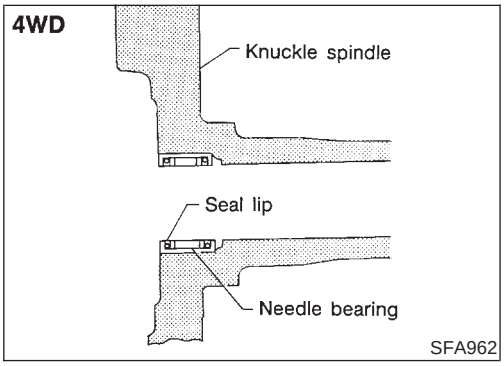

INSTALLATION

NAAX0015

1. Install needle bearing into knuckle spindle. — 4WD —

Make sure that needle bearing is facing in proper direction.
Apply multi-purpose grease.

2. Install knuckle with wheel hub.
3. Install tie-rod end and lower ball joint.

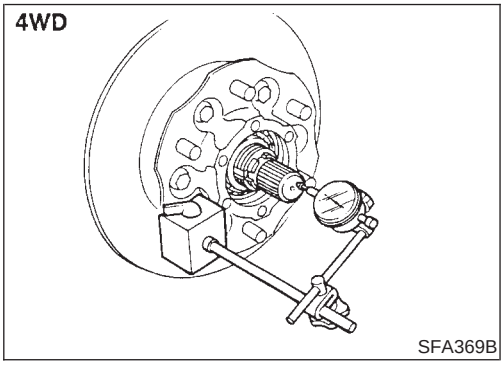

4. After installing knuckle spindle, adjust wheel bearing preload. Refer to "Preload Adjustment", "FRONT WHEEL BEARING", "On-vehicle Service", AX-4.
5. After installing drive shaft, check drive shaft axial end play. — 4WD —
   Do not reuse snap ring once it has been removed.
   Refer to "Drive Shaft", AX-12.

Drive Shaft (4WD)

COMPONENTS

NAAX0016

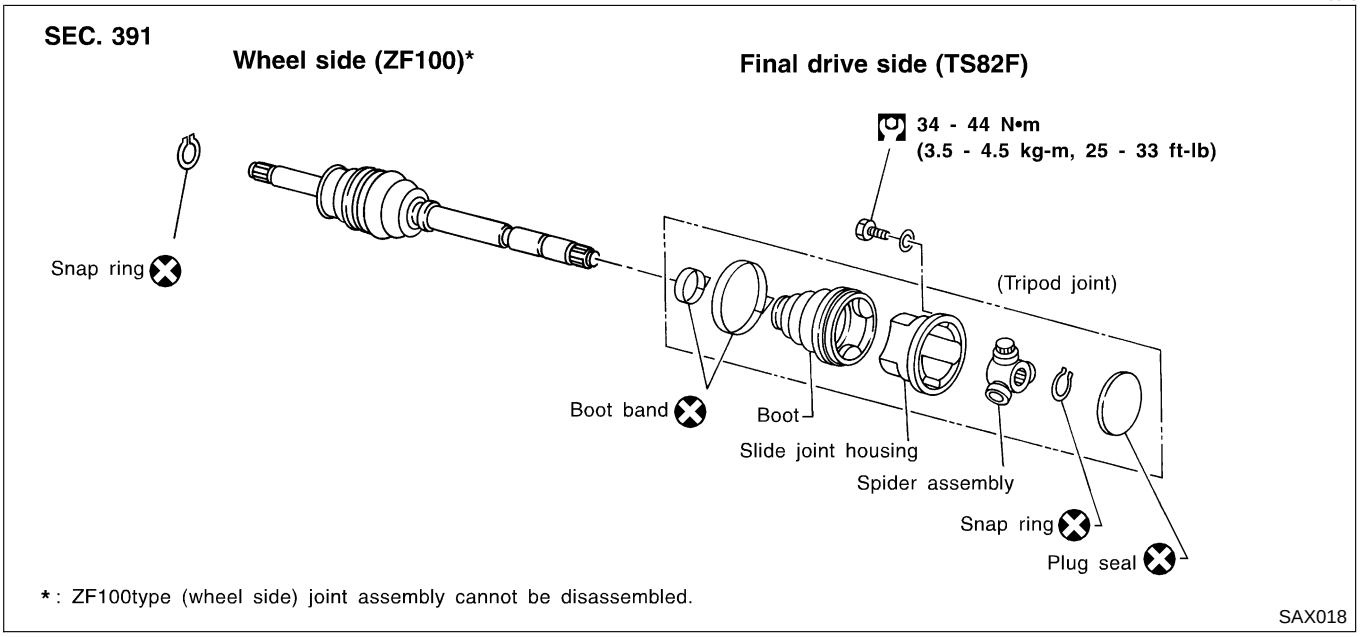

REMOVAL

NAAX0017

1. Remove hub cap and snap ring.
   Refer to “REMOVAL”, “Wheel Hub and Rotor Disc”, AX-7.
2. Remove bolts fixing drive shaft to final drive.

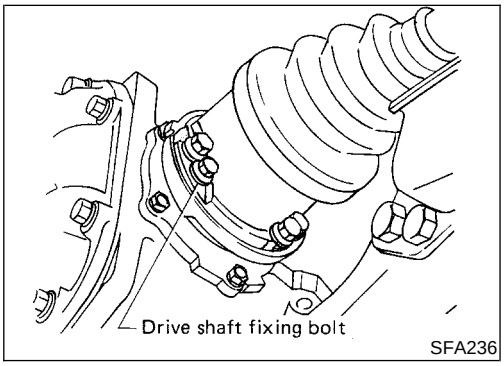

3. Remove transverse link fixing nut and bolts.

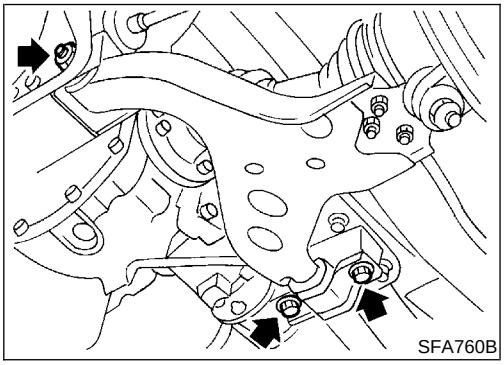

4. Separate drive shaft from knuckle by lightly tapping it with a copper hammer.

Cover boots with shop towel so as not to damage them when removing drive shaft.

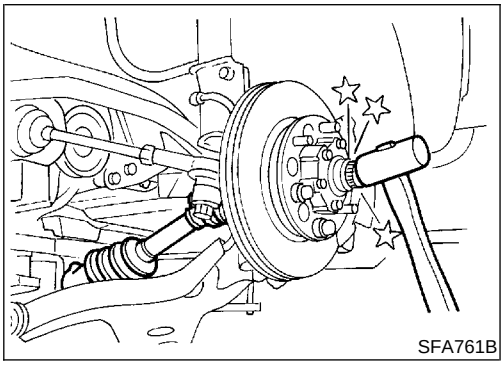

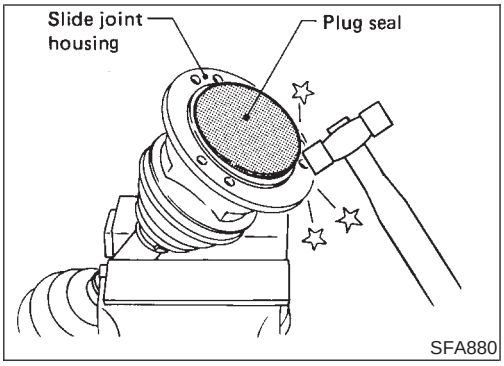

DISASSEMBLY

NAAX0018

Final Drive Side (TS82F)

NAAX0018S01

1. Remove plug seal from slide joint housing by lightly tapping around slide joint housing.
2. Remove boot bands.

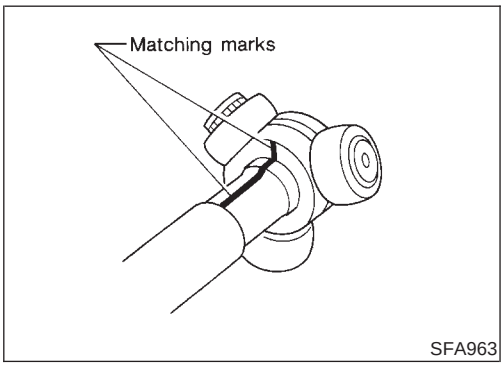

3. Move boot and slide joint housing toward wheel side, and put matching marks.

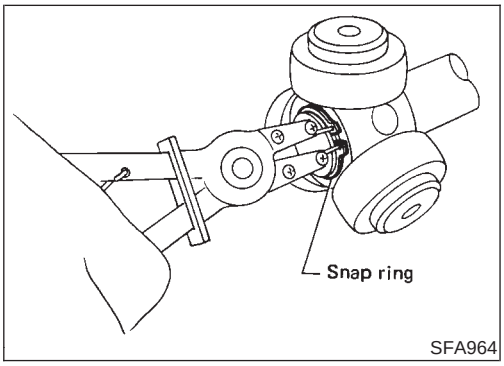

4. Remove snap ring.

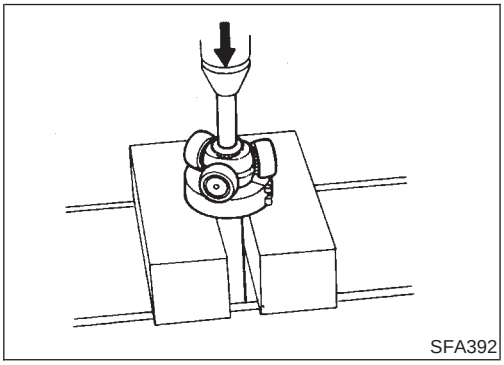

5. Detach spider assembly with press.

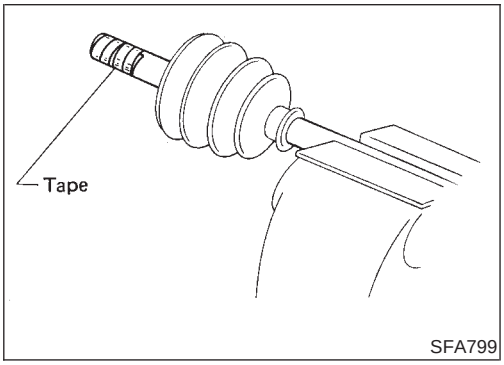

6. Draw out boot.

Cover drive shaft serration with tape so as not to damage the boot.

Wheel Side (ZF100)

NAAX0018S02

CAUTION:

The joint on the wheel side cannot be disassembled.

ZF100 type joint assembly cannot be disassembled because a plastic boot and special boot band are used. Do not use other drive shaft boots. If the boot or joint is damaged, replace the drive shaft assembly.

INSPECTION

NAAX0019

Thoroughly clean all parts in cleaning solvent, and dry with compressed air. Check parts for evidence of deformation and other damage.

Drive Shaft

NAAX0019S01

Replace drive shaft assembly if it is twisted or cracked.

Boot (Final drive side)

NAAX0019S02

Check boot for fatigue, cracks, and wear. Replace boot with new boot bands.

Joint Assembly (Final drive side)

NAAX0019S03

- Replace any parts of double offset joint which show signs of scorching, rust, wear or excessive play.
- Check serration for deformation. Replace if necessary.
- Check slide joint housing for any damage. Replace if necessary.

Joint Assembly (Wheel side)

NAAX0019S04

Replace drive shaft assembly if joint is deformed or damaged.

ASSEMBLY

NAAX0020

- **After drive shaft has been assembled, ensure that it moves smoothly over its entire range without binding.**
- **Use NISSAN GENUINE GREASE or equivalent after every overhaul.**

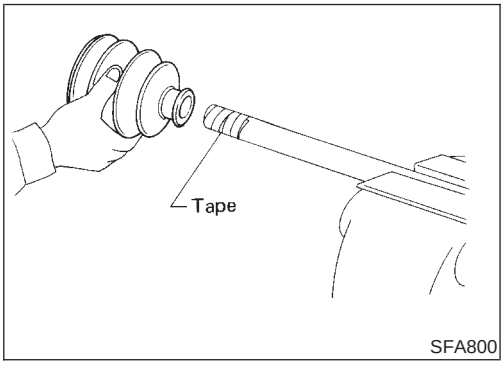

SFA800

Final Drive Side (TS82F)

NAAX0020S01

1. Install new small boot band, boot and side joint housing to drive shaft.

Cover drive shaft serration with tape so as not to damage boot during installation.

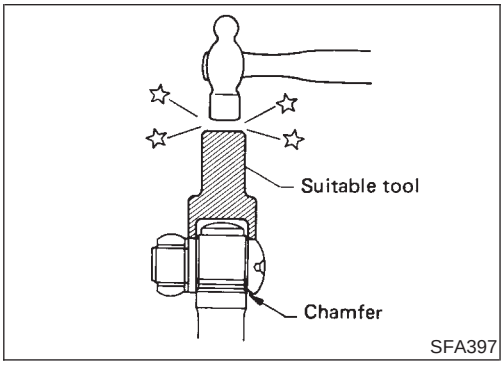

SFA397

2. Install spider assembly securely, ensuring marks are properly aligned.
   - **Press-fit with spider assembly serration chamfer facing shaft.**
3. Install new snap ring.

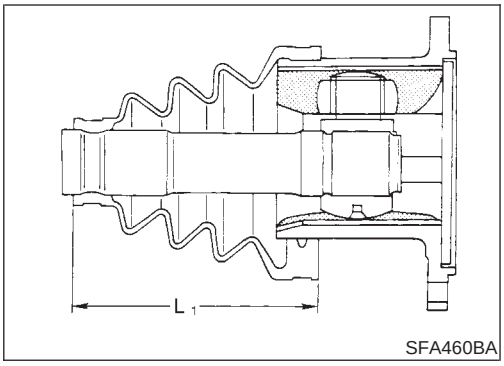

SFA460BA

4. Pack with grease.

   Specified amount of grease:
   95 - 105 g (3.35 - 3.70 oz)

5. Make sure that boot is properly installed on the drive shaft groove. Set boot so that it does not swell and deform when its length is "L_1".

   Length "L_1": 95 - 97 mm (3.74 - 3.82 in)

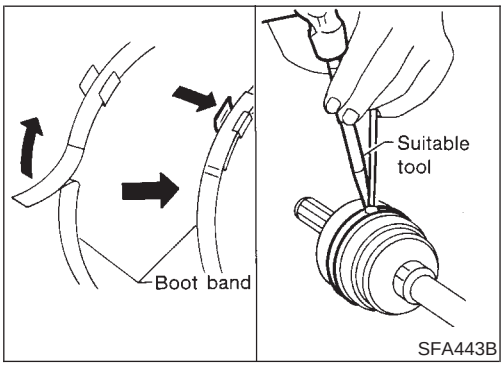

SFA443B

6. Lock new larger boot band securely with a suitable tool, then lock new smaller boot band.
7. Install new plug seal to slide joint housing by lightly tapping it.

Apply sealant to mating surface of plug seal.

Wheel Side (ZF100)

NAAX0020S02

CAUTION:

The joint on the wheel side cannot be disassembled.
ZF100 type joint assembly cannot be disassembled because a plastic boot and special boot band are used. Do not use other drive shaft boots. If the boot or joint is damaged, replace the drive shaft assembly.

INSTALLATION

NAAX0021

1. Apply multi-purpose grease.

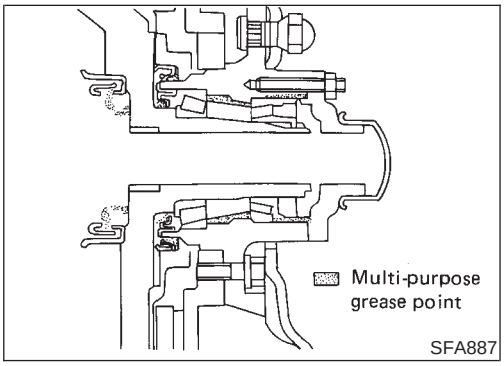

SFA887

2. Install thrust washer onto drive shaft.
   Make sure that thrust washer is facing in proper direction, apply multi-purpose grease.

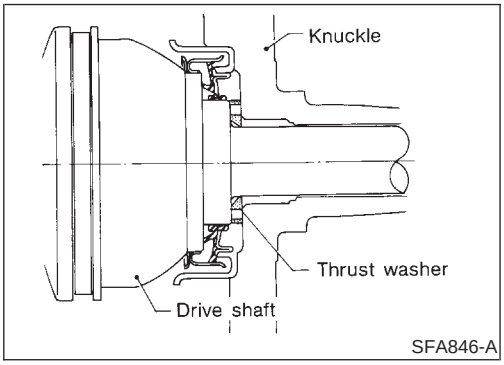

SFA846-A

3. When installing drive shaft, adjust drive shaft axial end play by selecting a suitable snap ring.

a. Temporarily install new snap ring on drive shaft in the same thickness as it was installed before removal.

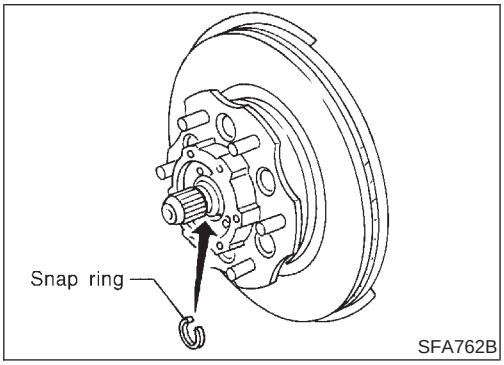

SFA762B

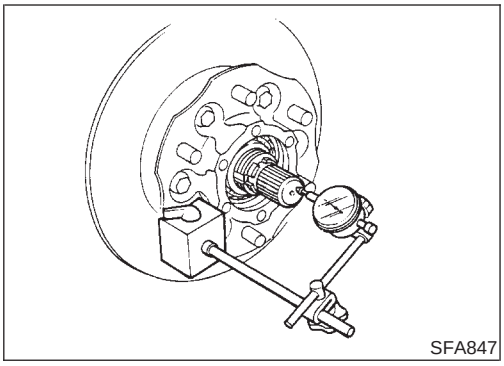

b. Set dial gauge on drive shaft end.

c. Measure axial end play of drive shaft.

Axial end play: 0.45 mm (0.0177 in) or less

d. If axial end play is not within the specified limit, select another snap ring.

1.1 mm (0.043 in) **1.3 mm (0.051 in)** **1.5 mm (0.059 in)** **1.7 mm (0.067 in)**	**1.9 mm (0.075 in)** **2.1 mm (0.083 in)** **2.3 mm (0.091 in)**

Service Data and Specifications (SDS)

WHEEL BEARING (FRONT)

NAAX0022

Wheel bearing lock nut	Tightening torque	78 - 98 N·m (8 - 10 kg-m, 58 - 72 ft-lb)
	Retightening torque after loosening wheel bearing lock nut	0.5 - 1.5 N·m (0.05 - 0.15 kg-m, 4.3 - 13.0 in-lb)
	Axial end play	0 mm (0 in)
	Starting force at wheel hub bolt N (kg, lb)	A
	Turning angle	15° - 30°
	Starting force at wheel hub bolt N (kg, lb)	B
Wheel bearing preload at wheel hub bolt	B − A	7.06 - 20.99 N (0.72 - 2.14 kg, 1.59 - 4.72 lb)

DRIVE SHAFT (4WD)

NAAX0033

Drive shaft joint type	Final drive side		TS82F
	Wheel side		ZF100*
	Fixed joint axial end play limit		1 mm (0.04 in)
Diameter	Wheel side (D_1)		29.0 mm (1.142 in)
Grease	Quality		Nissan genuine grease or equivalent
	Specified amount of grease	Final drive side	95 - 105 g (3.35 - 3.70 oz)
Drive shaft axial end play			0.45 mm (0.0177 in) or less
Boot length	Final drive side (L_1)		95 - 97 mm (3.74 - 3.82 in)

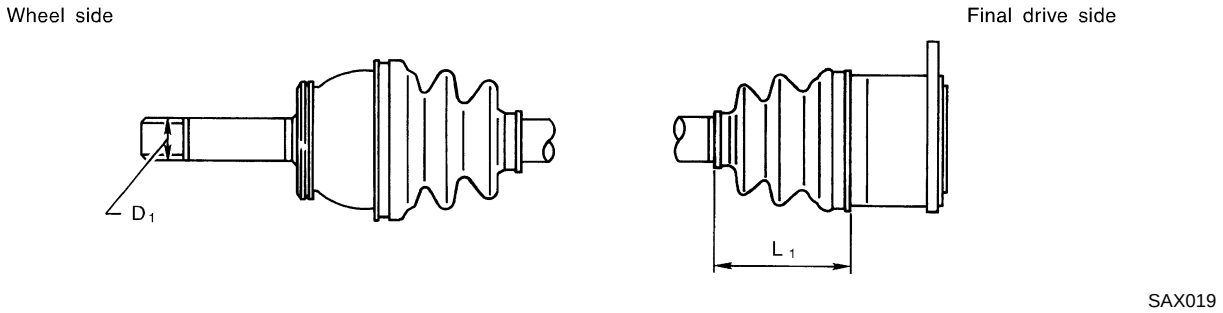

*: ZF100 type joint assembly cannot be disassembled because a plastic boot and special boot band are used. Do not use other drive shaft boots. If the boot or joint is damaged, replace the drive shaft assembly.

Drive Shaft End Snap Ring

=NAAX0033S01

Thickness mm (in)	Part No.	Thickness mm (in)	Part No.
1.1 (0.043)	39253-88G10	1.9 (0.075)	39253-88G14
1.3 (0.051)	39253-88G11	2.1 (0.083)	39253-88G15
1.5 (0.059)	39253-88G12	2.3 (0.091)	39253-88G16
1.7 (0.067)	39253-88G13		

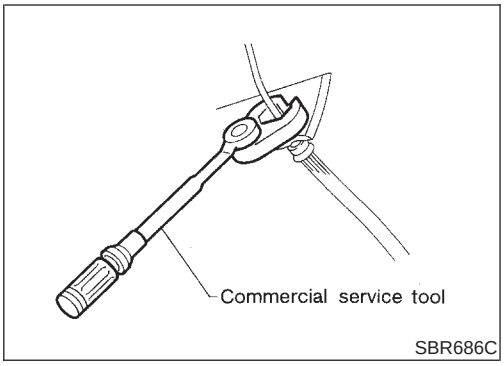

Precautions

PRECAUTIONS

NAAX0023

- **When installing rubber parts, final tightening must be carried out under unladen condition* with tires on ground. *Fuel, radiator coolant and engine oil full. Spare tire, jack, hand tools and mats in designated positions.**
- **Use flare nut wrench when removing and installing brake tubes.**
- **After installing removed suspension parts, check wheel alignment and adjust if necessary.**
- **Always torque brake lines when installing.**

Preparation

SPECIAL SERVICE TOOLS

NAAX0024

The actual shapes of Kent-Moore tools may differ from those of special service tools illustrated here.

Tool number (Kent-Moore No.) Tool name	Description	
KV40101000 (J25604-01) Axle stand	 NT159	Removing rear axle shaft
ST36230000 (J25840-A) Sliding hammer	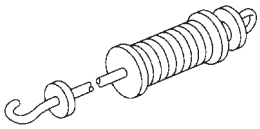 NT126	Removing rear axle shaft
ST38020000 (—) Bearing lock nut wrench	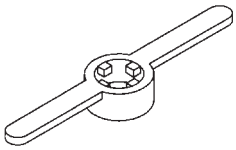 NT160	Removing wheel bearing lock nut
HT72480000 or HT72210000 (J25852-B) Rear axle shaft bearing puller	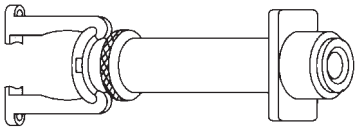 NT161	Removing wheel bearing
ST37840000 (—) Rear axle shaft guide	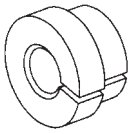 NT162	Installing rear axle shaft

COMMERCIAL SERVICE TOOLS

NAAX0025

Tool name	Description	
1 Flare nut crowfoot 2 Torque wrench	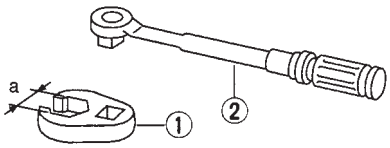 NT360	Removing and installing each brake piping **a: 10 mm (0.39 in)**
Rear axle oil seal drift	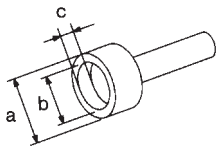 NT163	Installing oil seal **a: 74 mm (2.91 in) dia.** **b: 68 mm (2.68 in) dia.** **c: 10 mm (0.39 in)**

Noise, Vibration and Harshness (NVH) Troubleshooting

NAAX0035

Refer to "Noise, Vibration and Harshness (NVH) Troubleshooting", "FRONT AXLE", AX-3.

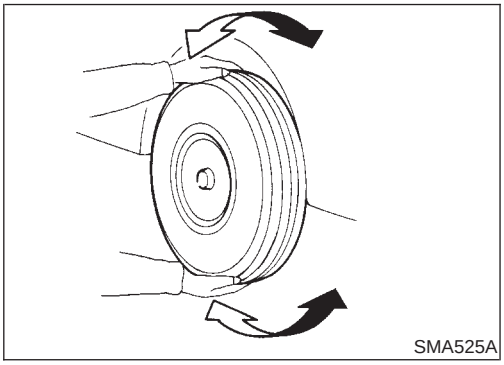

SMA525A

On-vehicle Service

REAR AXLE PARTS

NAAX0026

Check rear axle parts for excessive play, wear and damage.

1. Shake each rear wheel to check for excessive play.
2. Retighten all nuts and bolts to the specified torque.

Tightening torque: Refer to "Components", AX-20.

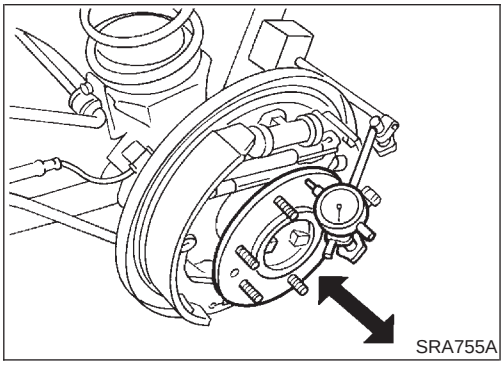

SRA755A

REAR WHEEL BEARING

NAAX0027

1. Check that wheel bearings operate smoothly.
2. Check axial end play.

Axial end play:
0 mm (0 in)

Components

NAAX0028

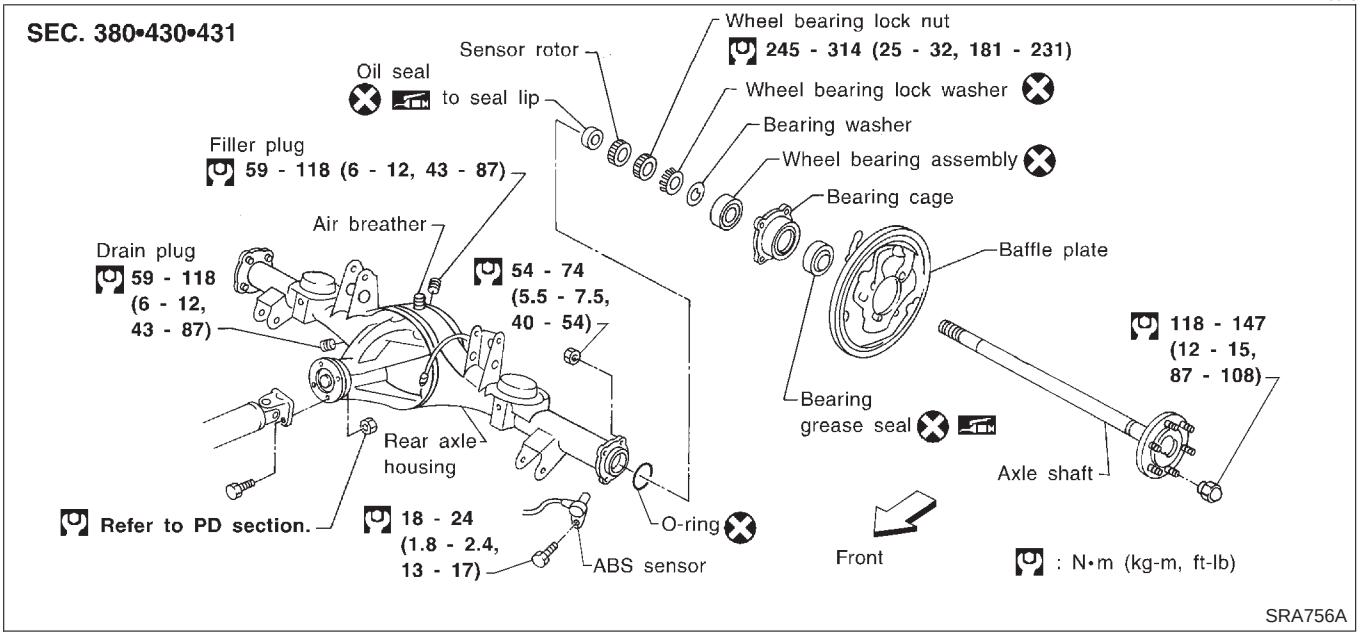

Removal

NAAX0029

CAUTION:

- **Before removing the rear axle, disconnect the ABS wheel sensor from the assembly. Then move it away from the axle. Failure to do so may result in damage to the sensor wires and the sensor becoming inoperative.**
- **Wheel bearing does not require maintenance.**
- If growling noise is emitted from wheel bearing during operation, replace wheel bearing assembly.
- If the wheel bearing assembly is removed, it must be renewed. The old assembly must not be re-used.

1. Disconnect parking brake cable and brake tube.
2. Remove nuts securing wheel bearing cage with baffle plate.

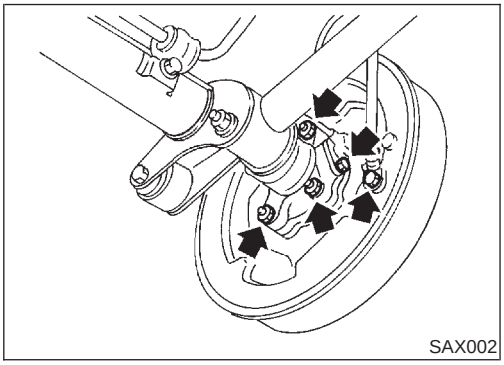

3. Draw out axle shaft with Tool.

When drawing out axle shaft, be careful not to damage oil seal.

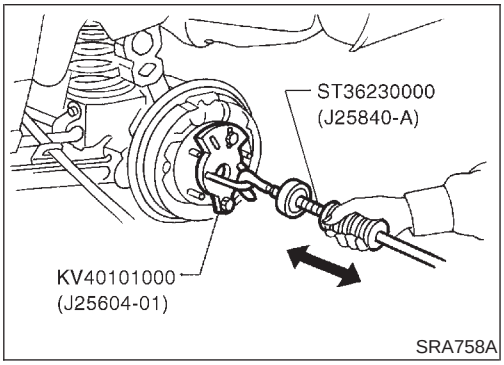

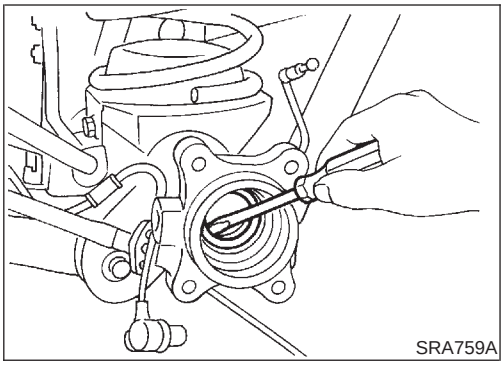
SRA759A

4. Remove oil seal with a screwdriver.

Do not reuse oil seal once it is removed. Always install new one.

5. Remove ABS sensor rotor.

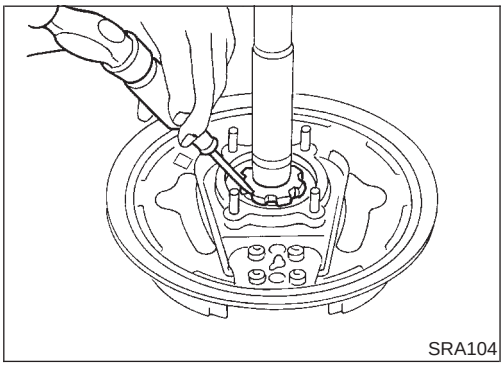
SRA104

6. Unbend lock washer with a screwdriver.

Do not reuse lock washer once removed. Always install new one.

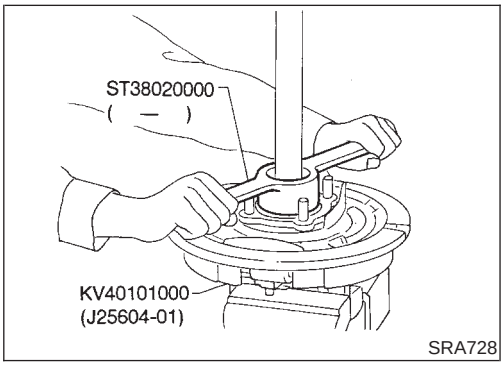

SRA728

7. Remove bearing lock nut with Tool.

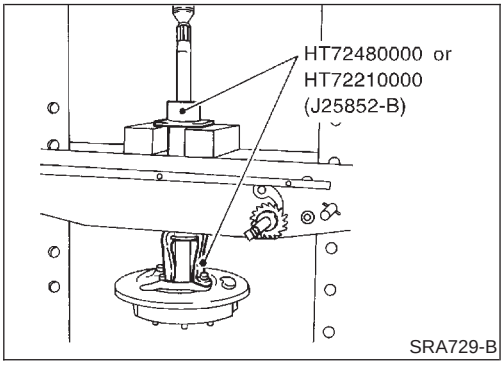

SRA729-B

8. Remove wheel bearing together with bearing cage and baffle plate from axle shaft.

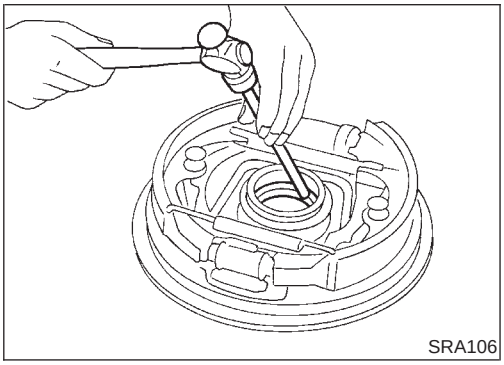
SRA106

9. Remove grease seal with a screwdriver.
10. Remove wheel bearing assembly with a brass drift.

Inspection

NAAX0030

AXLE SHAFT

NAAX0030S01

Check axle shaft for straightness, cracks, damage, wear and distortion. Replace if necessary.

BEARING CAGE

NAAX0030S02

Check bearing cage for deformation and cracks. Replace if necessary.

REAR AXLE HOUSING

NAAX0030S03

Check rear axle housing for yield, deformation and cracks. Replace if necessary.

Installation

NAAX0031

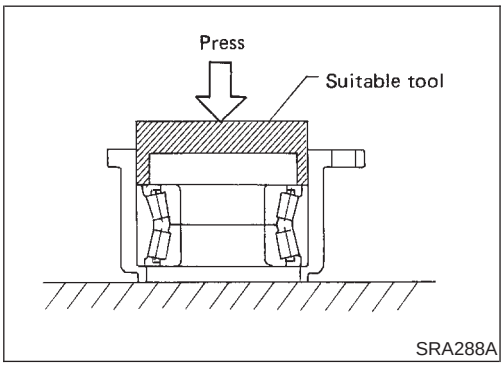

1. Press new wheel bearing until it bottoms end face of bearing cage.

   Maximum load P:

   39 kN (4 ton, 4.4 US ton, 3.9 Imp ton)

Always press outer race of wheel bearing during installation.

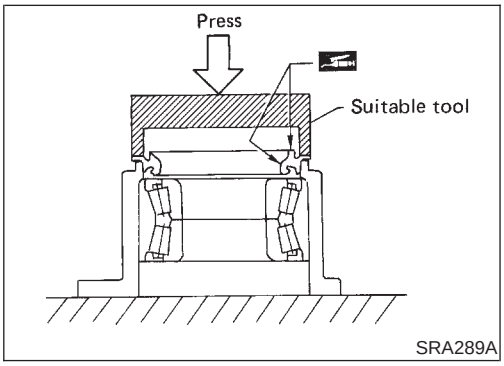

2. Press new grease seal until it bottoms end face of bearing cage.

   Maximum load P:

   8,300 N (847 kg, 1,866 lb)

After installing new grease seal, coat sealing lip with multi-purpose grease.

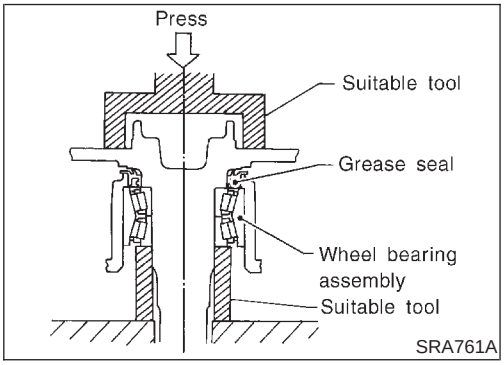

3. Press axle shaft into inner race of wheel bearing.

   Maximum load P:

   47.1 kN (4.8 ton, 5.3 US ton, 4.72 Imp ton)

Be careful not to damage and deform grease seal.

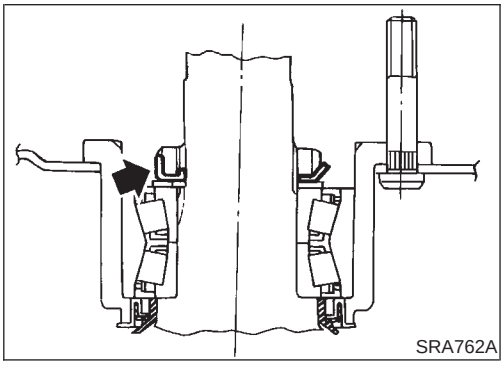

4. Install bearing washer and a new wheel bearing lock washer.
5. Tighten wheel bearing lock nut to specified torque.

   : 245 - 314 N·m (25 - 32 kg-m, 181 - 231 ft-lb)

Fit wheel bearing lock washer lip in wheel bearing lock nut groove correctly by tightening lock nut. Be sure to bend it up.

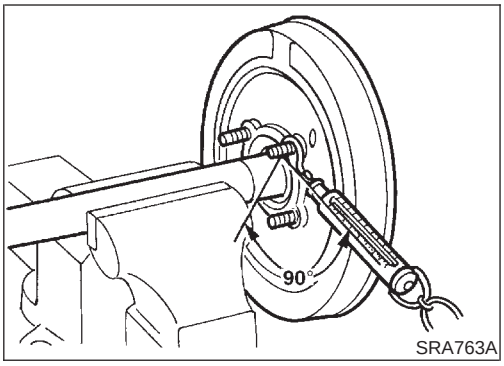

SRA763A

6. Check wheel bearing preload.
a. Turn bearing cage (with respect to axle shaft) two or three times. It must turn smoothly.
b. Attach spring gauge to bearing cage bolt (as shown at left) and pull it at a speed of 10 rpm to measure preload.

Spring gauge indication:
6.7 - 47 N (0.68 - 4.79 kg, 1.51 - 10.57 lb)

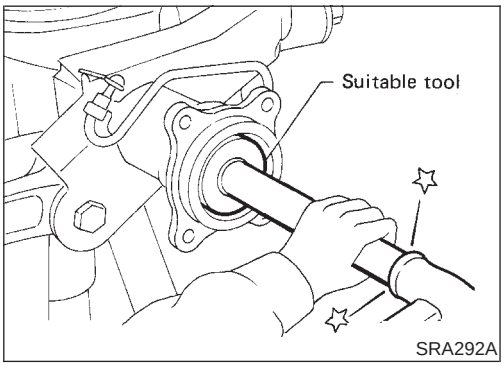

SRA292A

7. Install new oil seal to rear axle housing using a suitable tool.

After installing new oil seal, coat sealing lip with multi-purpose grease.

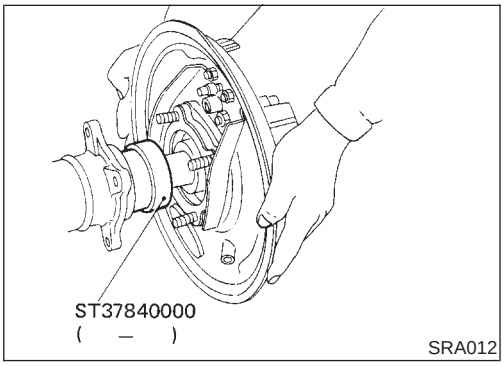

SRA012

8. Press ABS sensor rotor onto axle shaft until it contacts wheel bearing lock nut.
9. Position axle shafts in rear axle housing with Tool as a guide.

Be careful not to damage oil seal.

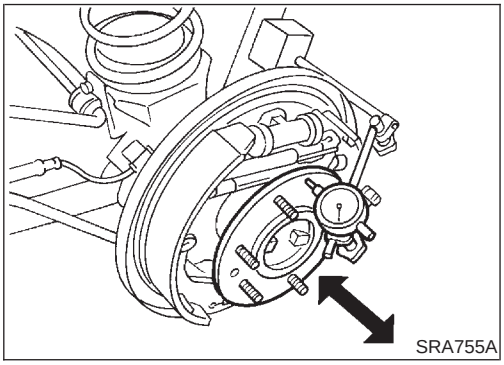
SRA755A

10. Check axial end play.
a. Check that wheel bearings operate smoothly.
b. Check axial end play.

Axial end play:
0 mm (0 in)

Service Data and Specifications (SDS)

WHEEL BEARING (REAR)

NAAX0032

Wheel bearing axial end play	0 mm (0 in)
Wheel bearing lock nut tightening torque	245 - 314 N·m (25 - 32 kg-m, 181 - 231 ft-lb)
Wheel bearing preload measured at bearing cage bolt	6.7 - 47 N (0.68 - 4.79 kg, 1.51 - 10.57 lb)

NOTES

BRAKE SYSTEM

SECTION BR

CONTENTS

PRECAUTIONS 4
Supplemental Restraint System (SRS) "AIR BAG" and "SEAT BELT PRE-TENSIONER"....4
Precautions for SRS "Air Bag" and "SEAT BELT PRE-TENSIONER" Service....4
Precautions for Brake System....4
Wiring Diagrams and Trouble Diagnoses....5
PREPARATION 6
Special Service Tools 6
Commercial Service Tools 6
NOISE, VIBRATION AND HARSHNESS (NVH) TROUBLESHOOTING 7
NVH Troubleshooting Chart....7
ON-VEHICLE SERVICE 8
Checking Brake Fluid Level....8
Checking Brake Line 8
Changing Brake Fluid 8
Bleeding Brake System 9
BRAKE HYDRAULIC LINE 10
Hydraulic Circuit....10
Removal....11
Inspection....11
Installation....11
PROPORTIONING VALVE 12
Inspection....12
Removal and Installation 12
BRAKE PEDAL AND BRACKET 13
Removal and Installation 13
Inspection....13
Adjustment....13
MASTER CYLINDER 15
Removal....15
Disassembly....16
MODELS WITHOUT VDC....16
MODELS WITH VDC....16
Inspection....16
Assembly 17
MODELS WITHOUT VDC....17
MODELS WITH VDC....17
Installation....18
BRAKE BOOSTER 19
On-vehicle Service....19
OPERATING CHECK 19
AIRTIGHT CHECK 19
Removal....19
Inspection....19
OUTPUT ROD LENGTH CHECK 19
Installation....20
VACUUM PIPING 21
Vacuum Hose 21
Removal and Installation 21
Inspection....21
HOSES AND CONNECTORS 21
CHECK VALVE....21
FRONT DISC BRAKE 22
Components....22
Pad Replacement 22
Removal....23
Disassembly....24
Inspection....24
CALIPER....24
ROTOR....24
Assembly 25
Installation....25
Brake Burnishing Procedure....25
REAR DRUM BRAKE 26
Components....26
Removal....26
Inspection....27
WHEEL CYLINDER....27
Wheel Cylinder Overhaul....28
Inspection....28
DRUM....28
LINING....28
Installation....28
PARKING BRAKE CONTROL 30
Components....30
Removal and Installation 30

CONTENTS (Cont'd)

Inspection....30
Adjustment....31

ABS

DESCRIPTION....32
Purpose....32
Operation....32
ABS Hydraulic Circuit....32
System Components....33
System Description....33
SENSOR....33
BUILT-IN ABS ACTUATOR AND ELECTRIC UNIT (CONTROL UNIT)....33
ABS ACTUATOR AND ELECTRIC UNIT (CONTROL UNIT)....33
G SENSOR (4WD MODELS ONLY)....34
Component Parts and Harness Connector Location....35
Schematic....36
Wiring Diagram - ABS -....37
ON BOARD DIAGNOSTIC SYSTEM DESCRIPTION....41
Self-diagnosis....41
FUNCTION....41
SELF-DIAGNOSIS PROCEDURE....41
HOW TO READ SELF-DIAGNOSTIC RESULTS (MALFUNCTION CODES)....42
HOW TO ERASE SELF-DIAGNOSTIC RESULTS (MALFUNCTION CODES)....42
CONSULT-II....43
CONSULT-II APPLICATION TO ABS....43
ECU [ABS ACTUATOR AND ELECTRIC UNIT (CONTROL UNIT)] PART NUMBER MODE....43
CONSULT-II Inspection Procedure....44
SELF-DIAGNOSIS PROCEDURE....44
SELF-DIAGNOSTIC RESULTS MODE....45
DATA MONITOR PROCEDURE....46
ACTIVE TEST PROCEDURE....47
DATA MONITOR MODE....48
ACTIVE TEST MODE....48
TROUBLE DIAGNOSIS - INTRODUCTION....49
How to Perform Trouble Diagnoses for Quick and Accurate Repair....49
INTRODUCTION....49
TROUBLE DIAGNOSIS - BASIC INSPECTION....50
Preliminary Check....50
Ground Circuit Check....53
ABS ACTUATOR AND ELECTRIC UNIT (CONTROL UNIT) GROUND....53
TROUBLE DIAGNOSIS - GENERAL DESCRIPTION....54
Malfunction Code/Symptom Chart....54
TROUBLE DIAGNOSES FOR SELF-DIAGNOSTIC ITEMS....56
Wheel Sensor or Rotor....56
DIAGNOSTIC PROCEDURE....56
ABS Actuator Solenoid Valve or Solenoid Valve Relay....59
DIAGNOSTIC PROCEDURE....59
Motor Relay or Motor....61
DIAGNOSTIC PROCEDURE....61
Low Voltage....63
DIAGNOSTIC PROCEDURE....63
G Sensor and Circuit....65
DIAGNOSTIC PROCEDURE....65
Control Unit....67
DIAGNOSTIC PROCEDURE....67
TROUBLE DIAGNOSES FOR SYMPTOMS....68
1. ABS Works Frequently....68
2. Unexpected Pedal Action....68
3. Long Stopping Distance....70
4. ABS Does Not Work....70
5. Pedal Vibration and Noise....71
6. Warning Lamp Does Not Come On When Ignition Switch Is Turned On....72
7. Warning Lamp Stays On When Ignition Switch Is Turned On....74
8. Vehicle Vibrates Excessively When ABS Is Operating....77
REMOVAL AND INSTALLATION....80
Front Wheel Sensor....80
Rear Wheel Sensor....80
Front Sensor Rotor....81
REMOVAL....81
INSTALLATION....81
Rear Sensor Rotor....81
REMOVAL....81
INSTALLATION....81
G Sensor....81
ABS Actuator and Electric Unit (Control Unit)....82
REMOVAL....82
INSTALLATION....82

VDC/TCS/ABS

PRECAUTIONS....83
Supplemental Restraint System (SRS) "AIR BAG" and "SEAT BELT PRE-TENSIONER"....83
Precautions for SRS "Air Bag" and "SEAT BELT PRE-TENSIONER" Service....83
Precautions for Brake System....83
Precautions for Brake Control....84
PREPARATION....85
Commercial Service Tools....85
ON-VEHICLE SERVICE....86
Adjustment of Steering Angle Sensor Neutral Position....86
Calibration of Decel G Sensor....86

CONTENTS (Cont'd)

GENERAL INFORMATION 88
Fail-Safe.....88
ABS SYSTEM.....88
VDC/TCS SYSTEM 88
Hydraulic Circuit Diagram.....88
ABS Function.....88
TCS Function.....89
VDC Function 89
System Diagram 89
CAN COMMUNICATION 90
System Description.....90
TROUBLE DIAGNOSES.....91
How to Proceed with Diagnosis 91
BASIC CONCEPT.....91
DIAGNOSIS FLOWCHART 92
ASKING COMPLAINTS 93
EXAMPLE OF DIAGNOSIS SHEET.....93
Component Installation Location 94
Schematic 95
Wiring Diagram - VDC - 96
Control Unit Input/Output Signal Standard.....101
STANDARDS BY CONSULT-II 101
CONSULT-II Functions 103
CONSULT-II MAIN FUNCTION.....103
SELF-DIAGNOSIS 105
DATA MONITOR.....108
ACTIVE TEST 111
For Fast and Accurate Diagnosis.....113
PRECAUTIONS FOR DIAGNOSIS 113
Basic Inspection.....115
BASIC INSPECTION 1: BRAKE FLUID LEVEL AND LEAK INSPECTION.....115
BASIC INSPECTION 2: INSPECTION FOR LOOSENESS OF POWER SYSTEM TERMINALS 115
BASIC INSPECTION 3: INSPECTION OF ABS WARNING LAMP, VDC OFF INDICATOR LAMP AND SLIP INDICATOR LAMP 115
Inspection 1 Wheel Sensor System 116
INSPECTION PROCEDURE 116
Inspection 2 Engine System.....118
Inspection 3 VDC/TCS/ABS Control Unit System...118
Inspection 4 VDC Pressure Sensor System 119
Inspection 5 Steering Angle Sensor System.....120
Inspection 6 Yaw Rate/Side/Decel G Sensor System 121
Inspection 7 Solenoid Valve, VDC Switch-over Solenoid Valve and Circuit 123
Inspection 8 ABS Actuator Relay or ABS Motor Relay Power System 125
Inspection 9 Stop Lamp Switch and Circuit 126
Inspection 10 ABS Actuator and Electric Unit (Control Unit) Power Circuit.....127
Inspection 11 When "SHIFT POSITION ERROR" Appears in Self-Diagnosis Results Display 129
Inspection 12 When "ST ANG SEN COM CIR" Appears on Self-Diagnosis Results Display.....130
Inspection 13 Brake Fluid Level of Reservoir Tank 130
Inspection 14 CAN Communications System 131
Inspecting Components.....131
VDC OFF SWITCH 131
Symptom 1 ABS Works Frequently. 132
Symptom 2 Unexpected Pedal Reaction 132
Symptom 3 Long Stopping Distance.....133
Symptom 4 ABS Does Not Work. 134
Symptom 5 Pedal Vibration and Noise 134
Symptom 6 VDC OFF Indicator Lamp Does Not Illuminate.....135
Symptom 7 SLIP Indicator Lamp Does Not Illuminate.....136
Symptom 8 Vehicle Behaves Jerkily During VDC/TCS/ABS Operation.....137
WHEEL SENSORS.....139
Removal and Installation 139
REMOVAL.....139
INSTALLATION.....139
SENSOR ROTOR 141
Removal and Installation 141
REMOVAL.....141
INSTALLATION.....141
VDC/TCS/ABS ACTUATOR.....142
Removal and Installation 142
G SENSOR 143
Removal and Installation 143
REMOVAL.....143
INSTALLATION.....143

SERVICE DATA AND SPECIFICATIONS (SDS) 144
General Specifications.....144
Disc Brake 144
Drum Brake.....144
Brake Pedal 144
Parking Brake Control 145

Supplemental Restraint System (SRS) "AIR BAG" and "SEAT BELT PRE-TENSIONER"

NABR0206

The Supplemental Restraint System such as "AIR BAG" and "SEAT BELT PRE-TENSIONER" used along with a seat belt, helps to reduce the risk or severity of injury to the driver and front passenger for certain types of collision. The SRS composition which is available to NISSAN MODEL R50 is as follows (The composition varies according to optional equipment.):

- For a frontal collision
  The Supplemental Restraint System consists of driver air bag module (located in the center of the steering wheel), front passenger air bag module (located on the instrument panel on passenger side), seat belt pre-tensioners, diagnosis sensor unit, warning lamp, wiring harness and spiral cable.
- For a side collision
  The Supplemental Restraint System consists of front side air bag module (located in the outer side of front seat), side curtain air bag module (locating in the headliner side of front and rear seat), satellite sensor, diagnosis sensor unit (one of components of air bags for a frontal collision), wiring harness, warning lamp (one of components of air bags for a frontal collision).

WARNING:

- **To avoid rendering the SRS inoperative, which could increase the risk of personal injury or death in the event of a collision which would result in air bag inflation, all maintenance should be performed by an authorized NISSAN dealer.**
- **Improper maintenance, including incorrect removal and installation of the SRS, can lead to personal injury caused by unintentional activation of the system.**
- **Do not use electrical test equipment on any circuit related to the SRS unless instructed to in this Service Manual. SRS wiring harnesses can be identified with yellow and/or orange harness connector (and with yellow harness protector or yellow insulation tape before the harness connectors).**

Precautions for SRS "Air Bag" and "SEAT BELT PRE-TENSIONER" Service

NABR0207

- Do not use electrical test equipment to check SRS circuits unless instructed to in this Service Manual.
- Before servicing the SRS, turn ignition switch "OFF", disconnect both battery cables and wait at least 3 minutes.
  For approximately 3 minutes after the cables are removed, it is still possible for the air bag and seat belt pre-tensioner to deploy. Therefore, do not work on any SRS connectors or wires until at least 3 minutes have passed.
- Diagnosis sensor unit must always be installed with their arrow marks "⇐" pointing towards the front of the vehicle for proper operation. Also check diagnosis sensor unit for cracks, deformities or rust before installation and replace as required.
- The spiral cable must be aligned with the neutral position since its rotations are limited. Do not attempt to turn steering wheel or column after removal of steering gear.
- Handle air bag module carefully. Always place driver and passenger air bag modules with the pad side facing upward and place side air bag module standing with stud bolt side setting bottom.
- Conduct self-diagnosis to check entire SRS for proper function after replacing any components.
- After air bag inflates, the front instrument panel assembly should be replaced if damaged.

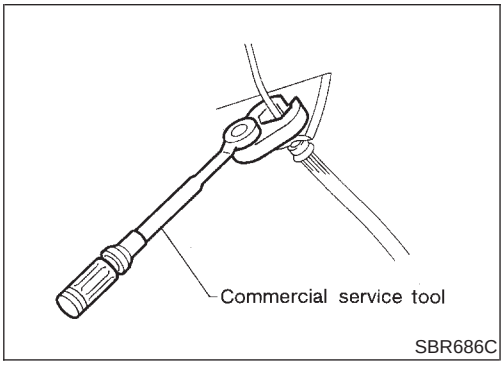

Precautions for Brake System

NABR0002

- **Use brake fluid "DOT 3".**
- **Never reuse drained brake fluid.**
- **Be careful not to splash brake fluid on painted areas; it may cause paint damage. If brake fluid is splashed on painted areas, wash it away with water immediately.**
- **To clean master cylinder parts, disc brake caliper parts or wheel cylinder parts, use clean brake fluid.**
- **Never use mineral oils such as gasoline or kerosene. They will ruin rubber parts of hydraulic system.**

- **Use flare nut wrench when removing and installing brake tubes.**
- **When installing brake piping, be sure to check torque.**

WARNING:

- **Clean brakes with a vacuum dust collector to minimize risk of health hazard from powder caused by friction.**

Wiring Diagrams and Trouble Diagnoses

NABR0003

When you read wiring diagrams, refer to the following:

- GI-11, "HOW TO READ WIRING DIAGRAMS"
- EL-11, "POWER SUPPLY ROUTING" for power distribution circuit

When you perform trouble diagnoses, refer to the following:

- GI-35, "HOW TO FOLLOW TEST GROUPS IN TROUBLE DIAGNOSES"
- GI-24, "HOW TO PERFORM EFFICIENT DIAGNOSIS FOR AN ELECTRICAL INCIDENT"

Special Service Tools

NABR0004

The actual shapes of Kent-Moore tools may differ from those of special service tools illustrated here.

Tool number (Kent-Moore No.) Tool name	Description
KV40106500 (J25852-B) Rear wheel bearing puller	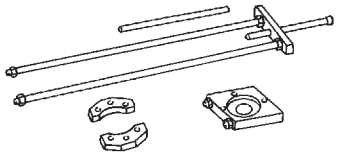 NT724 Removing rear wheel sensor rotor

Commercial Service Tools

NABR0005

Tool name	Description
1 Flare nut crowfoot 2 Torque wrench	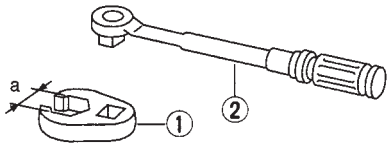 NT360 Removing and installing each brake piping **a: 10 mm (0.39 in)/12 mm (0.47 in)**
Brake fluid pressure gauge	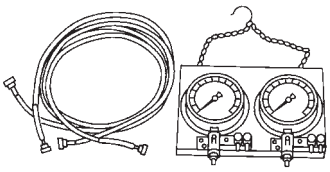 NT151 Measuring brake fluid pressure
Rear wheel sensor rotor drift	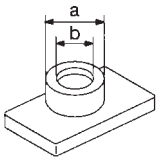 NT509 Installing rear wheel sensor rotor **a: 75 mm (2.95 in) dia.** **b: 63 mm (2.48 in) dia.**

NVH Troubleshooting Chart

NABR0085S01

Use the chart below to help you find the cause of the symptom. If necessary, repair or replace these parts.

Reference page			BR-22, 28	BR-22, 28	BR-26	BR-22	—	—	BR-24, 28	—	—	—	BR-25	BR-28	PD-4	PD-4	AX-3	AX-3	SU-4	SU-4	SU-4	ST-6
Possible cause and SUSPECTED PARTS			Linings or pads - damaged	Linings or pads - uneven wear	Return spring damaged	Shims damaged	Rotor or drum imbalance	Rotor or drum damage	Rotor or drum runout	Rotor or drum deformation	Rotor or drum deflection	Rotor or drum rust	Rotor thickness variation	Drum out of round	PROPELLER SHAFT	DIFFERENTIAL	DRIVE SHAFT	AXLE	SUSPENSION	TIRES	ROAD WHEEL	STEERING
Symptom	BRAKE	Noise	×	×	×	×									×	×	×	×	×	×	×	×
		Shake					×								×		×	×	×	×	×	×
		Shimmy, Judder					×	×	×	×	×	×	×	×				×	×	×	×	×

×: Applicable

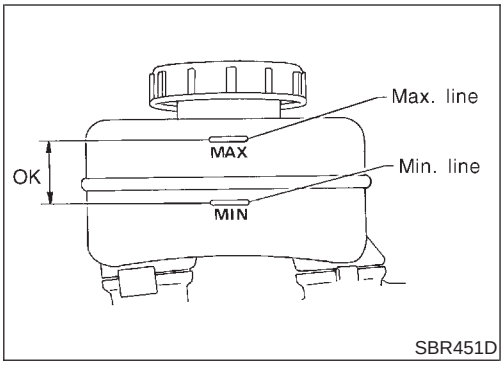

SBR451D

Checking Brake Fluid Level

NABR0006

- Check fluid level in reservoir tank. It should be between Max and Min lines on reservoir tank.
- If fluid level is extremely low, check brake system.
- If the brake warning lamp comes on, check brake fluid level switch and parking brake switch.

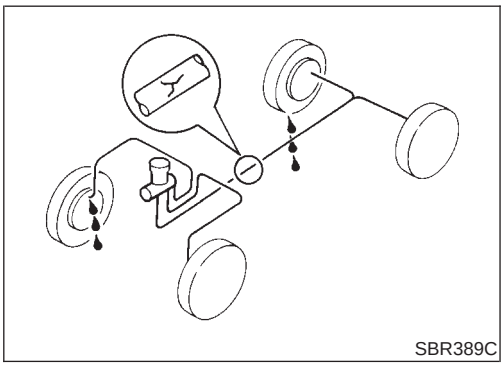
SBR389C

Checking Brake Line

NABR0007

CAUTION:

If leakage occurs around joints, retighten or, if necessary, replace damaged parts.

1. Check brake lines (tubes and hoses) for cracks, deterioration or other damage. Replace any damaged parts.
2. Check for oil leakage by fully depressing brake pedal while engine is running.

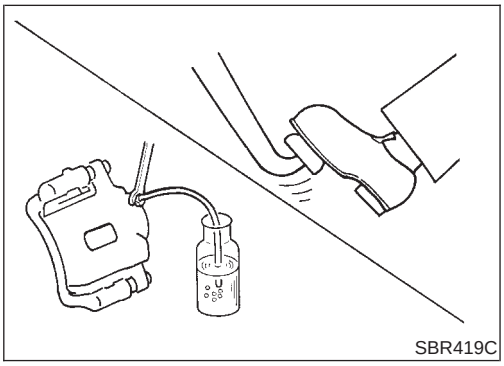
SBR419C

Changing Brake Fluid

NABR0008

CAUTION:

- **Refill with new brake fluid “DOT 3”.**
- **Always keep fluid level higher than minimum line on reservoir tank.**
- **Never reuse drained brake fluid.**
- **Be careful not to splash brake fluid on painted areas; it may cause paint damage. If brake fluid is splashed on painted areas, wash it away with water immediately.**

1. Clean inside of reservoir tank, and refill with new brake fluid.
2. Connect a vinyl tube to each bleed valve.
3. Drain brake fluid from each bleed valve by depressing brake pedal.
4. Refill until brake fluid comes out of each bleed valve.
   Use same procedure as in bleeding hydraulic system to refill brake fluid.
   Refer to “Bleeding Brake System”, BR-9.

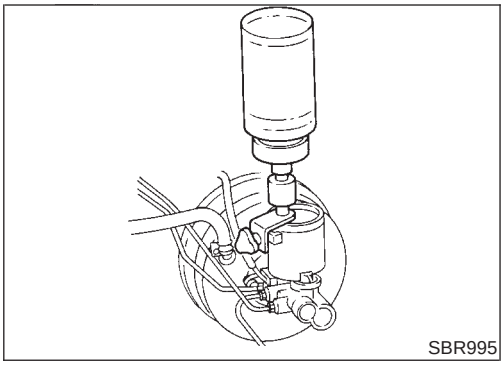
SBR995

Bleeding Brake System

=NABR0009

CAUTION:

- **Carefully monitor brake fluid level at master cylinder during bleeding operation.**
- **If master cylinder is suspected to have air inside, bleed air from master cylinder first. Refer to "Installation", "MASTER CYLINDER", BR-18.**
- **Fill reservoir with new brake fluid "DOT 3". Make sure it is full at all times while bleeding air out of system.**
- **Place a container under master cylinder to avoid spillage of brake fluid.**
- **Turn ignition switch OFF and disconnect ABS actuator and electric unit connectors or battery ground cable.**
- **Bleed air in the following order.**

1. Left rear brake
2. Right rear brake
3. Left front brake
4. Right front brake

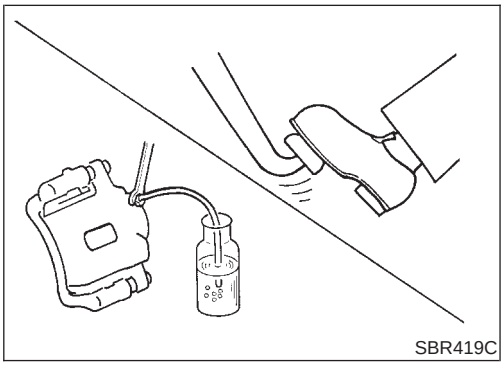
SBR419C

1. Connect a transparent vinyl tube to bleed valve.
2. Fully depress brake pedal several times.
3. With brake pedal depressed, open bleed valve to release air.
4. Close bleed valve.
5. Release brake pedal slowly.
6. Repeat steps 2. through 5. until clear brake fluid comes out of bleed valve.
7. Tighten bleed valve.
   : 7 - 9 N·m (0.7 - 0.9 kg-m, 61 - 78 in-lb)

Hydraulic Circuit

NABR0010

Models without VDC

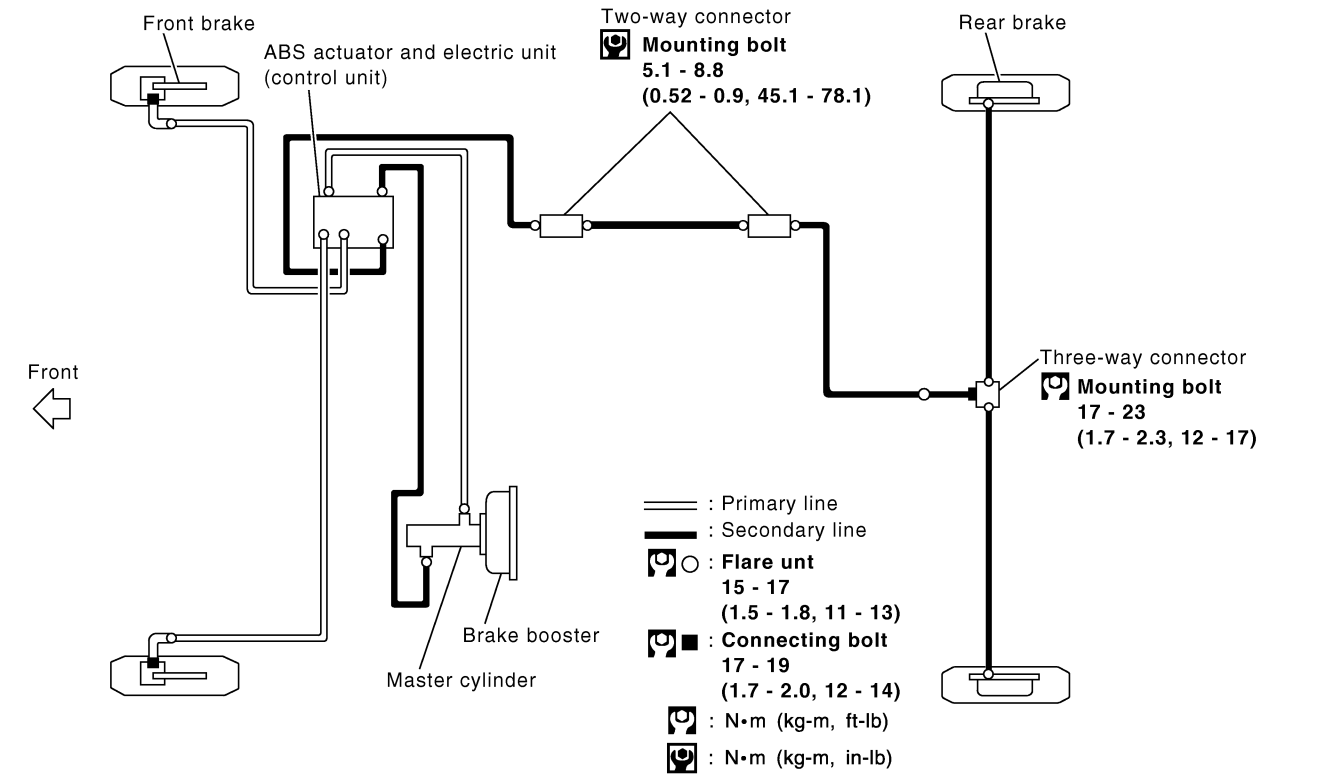

SBR353F

Models with VDC

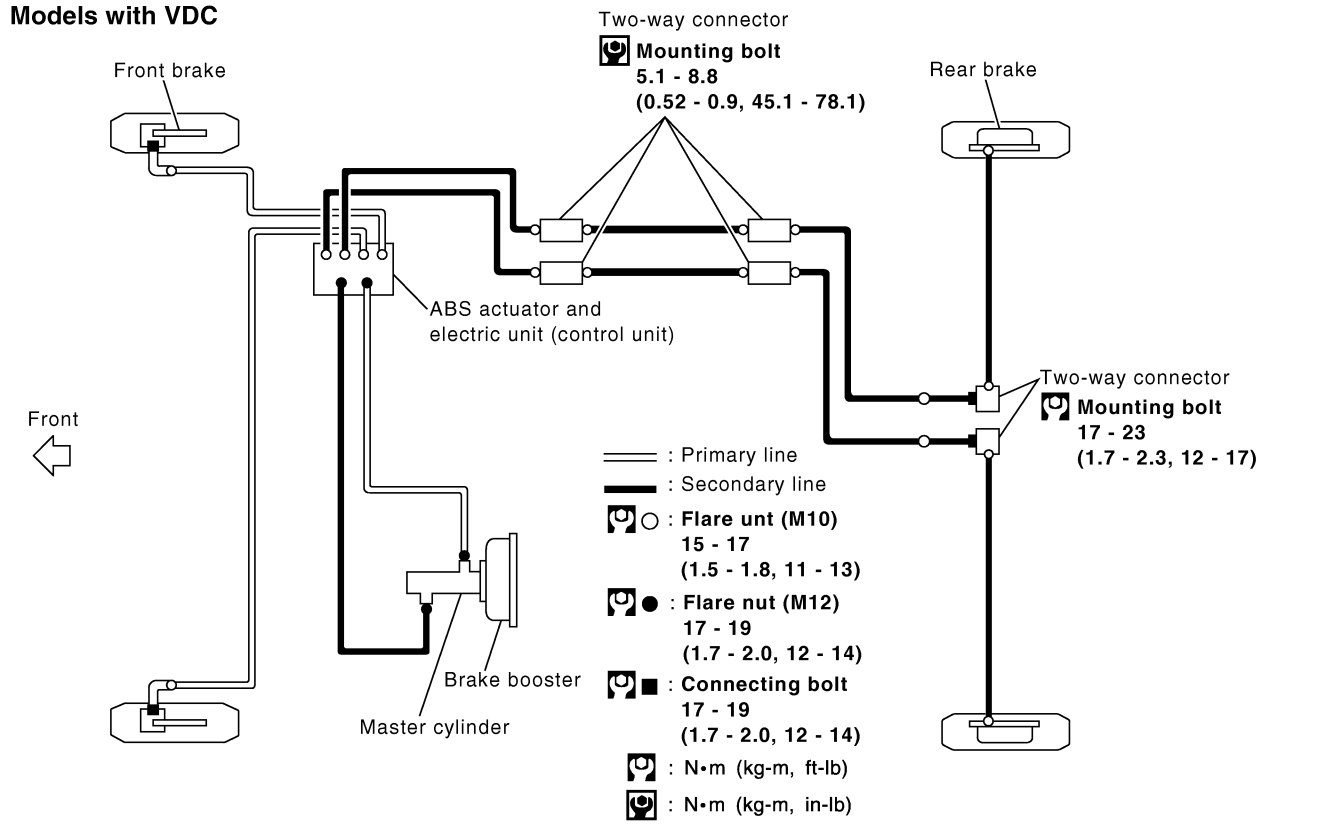

SBR354F

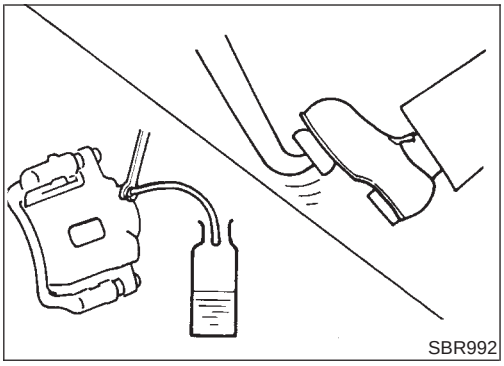

Removal

NABR0011

CAUTION:

- **Be careful not to splash brake fluid on painted areas; it may cause paint damage. If brake fluid is splashed on painted areas, wash it away with water immediately.**
- **All hoses must be free from excessive bending, twisting and pulling.**

1. Connect vinyl tube to bleed valve.
2. Drain brake fluid from each bleed valve by depressing brake pedal.
3. Remove flare nut connecting brake tube and hose, then withdraw lock spring.
4. Cover openings to prevent entrance of dirt whenever disconnecting brake line.

Inspection

NABR0012

Check brake lines (tubes and hoses) for cracks, deterioration or other damage. Replace any damaged parts.

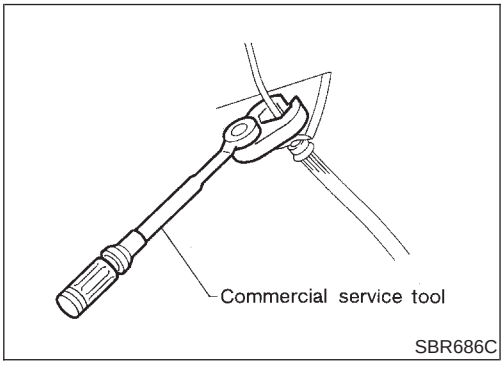

Installation

NABR0013

CAUTION:

- **Refill with new brake fluid “DOT 3”.**
- **Never reuse drained brake fluid.**

1. Tighten all flare nuts and connecting bolts.
   Flare nut: (M10)
   : 15 - 17 N·m (1.5 - 1.8 kg-m, 11 - 13 ft-lb)
   Flare nut: (M12)
   : 17 - 19 N·m (1.7 - 2.0 kg-m, 12 - 14 ft-lb)
   Connecting bolt:
   : 17 - 19 N·m (1.7 - 2.0 kg-m, 12 - 14 ft-lb)
2. Refill until new brake fluid comes out of each bleed valve.
3. Bleed air. Refer to “Bleeding Brake System”, BR-9.

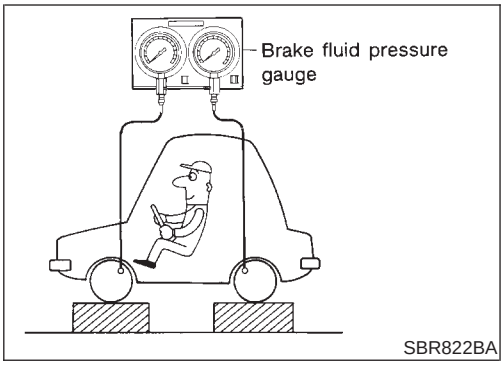

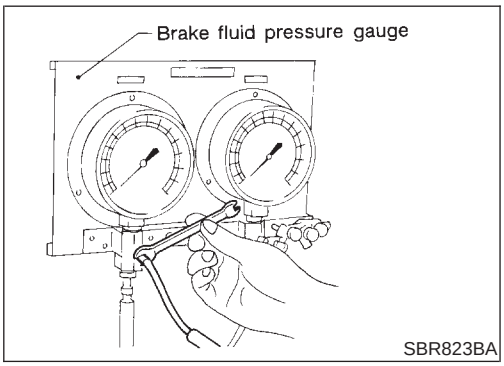

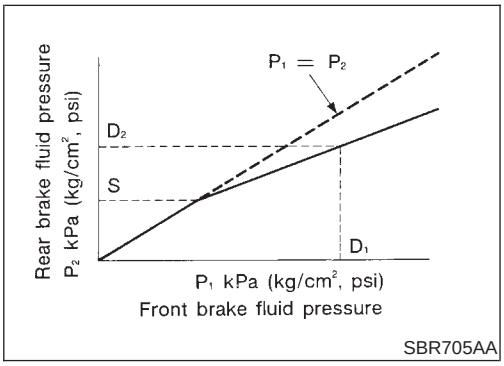

Inspection

NABR0116

CAUTION:

- **Carefully monitor brake fluid level at master cylinder.**
- **Use new brake fluid "DOT 3".**
- **Be careful not to splash brake fluid on painted areas; it may cause paint damage. If brake fluid is splashed on paint areas, wash it away with water immediately.**
- **Depress pedal slowly when raising front brake pressure.**
- **Check rear brake pressure 2 seconds after front brake pressure reaches specified value.**
- **Disconnect harness connectors from ABS actuator and electric unit before checking.**

1. Remove front LH tire.
2. Connect tool to bleed valves on front LH brake caliper and rear LH or RH brake wheel cylinder.
3. Install front LH tire.

Before installing front LH tire, confirm the tool is not touching the front LH wheel.

4. Bleed air from the tool.
5. Check fluid pressure by depressing brake pedal.

kPa (kg/cm^2, psi)

Applied pressure (Front brake) D_1	6,375 (65, 924)
Output pressure (Rear brake) D_2	3,432 - 3,825 (35 - 39, 498 - 555)

If output pressure is out of specifications, replace master cylinder assembly.

6. Bleed air after disconnecting the tool. Refer to "Bleeding Brake System", BR-9.
7. Install front LH tire.

Removal and Installation

NABR0117

Always replace together with master cylinder as an assembly.

- Refer to "MASTER CYLINDER", BR-15.

Removal and Installation

NABR0016

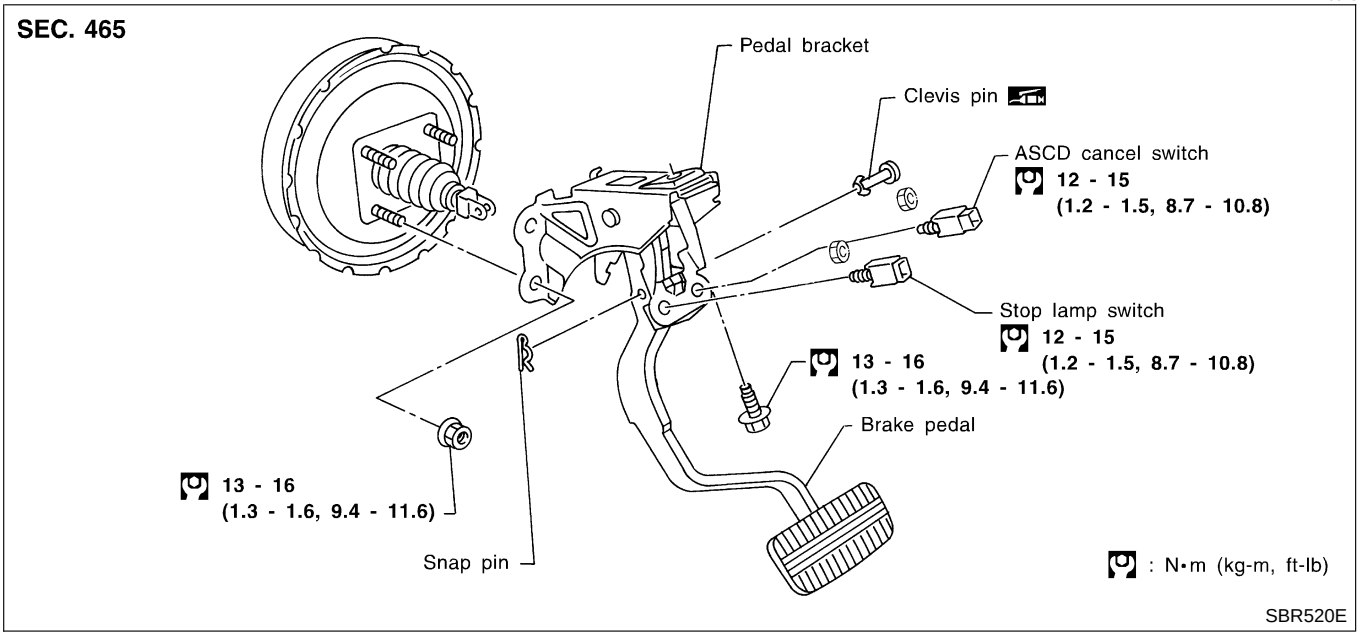

Inspection

NABR0017

Check brake pedal for following items.

- Brake pedal bend
- Clevis pin deformation
- Crack of any welded portion
- Crack or deformation of clevis pin stopper

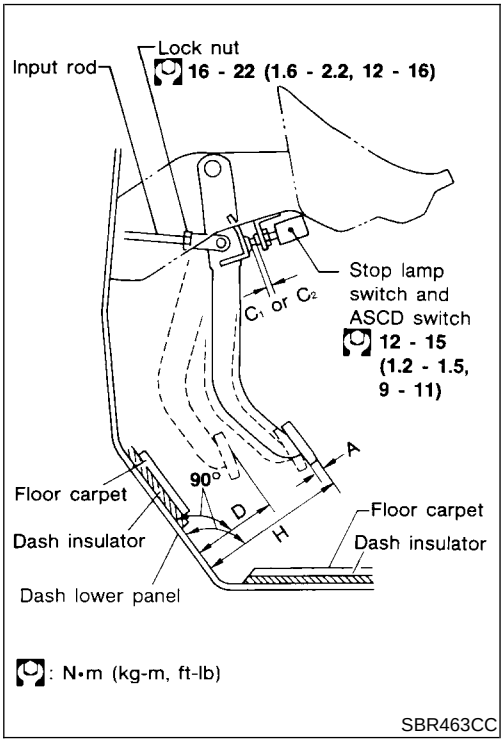

Adjustment

NABR0018

Check brake pedal free height from dash lower panel.

H: Free height

Refer to SDS (BR-144).

D: Depressed height

Refer to SDS (BR-144).

Under force of 490 N (50 kg, 110 lb) with engine running

C_1, C_2: Clearance between pedal stopper and threaded end of stop lamp switch and ASCD switch

0.3 - 1.0 mm (0.012 - 0.039 in)

A: Pedal free play

1 - 3 mm (0.04 - 0.12 in)

If necessary, adjust brake pedal free height.

Adjustment (Cont'd)

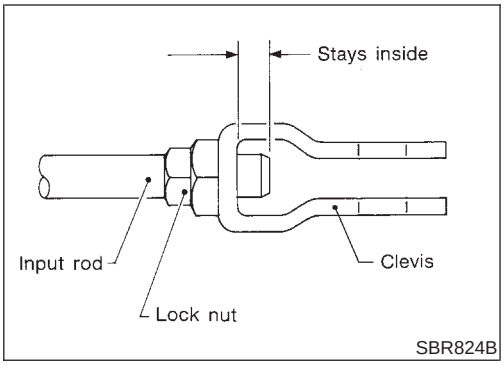

1. Loosen lock nut and adjust pedal free height by turning brake booster input rod. Then tighten lock nut.

Make sure that tip of input rod stays inside.

2. Adjust clearance "C_1" and "C_2 " with stop lamp switch and ASCD switch respectively. Then tighten lock nuts.
3. Check pedal free play.

Make sure that stop lamp is off when pedal is released.

4. Check brake pedal's depressed height while engine is running. If depressed height is below specified value, check brake system for leaks, accumulation of air or any damage to components (master cylinder, wheel cylinder, etc.). Then make necessary repairs.

Removal

NABR0019

CAUTION:

- **Be careful not to splash brake fluid on painted areas; it may cause paint damage. If brake fluid is splashed on painted areas, wash it away with water immediately.**
- **In the case of brake fluid leakage from the master cylinder, disassemble the cylinder. Then check piston cups for deformation or scratches and replace necessary parts.**

1. Connect a vinyl tube to bleed valve.
2. Drain brake fluid from each bleed valve, depressing brake pedal to empty fluid from master cylinder.
3. Remove brake pipe flare nuts.
4. Remove master cylinder mounting nuts.

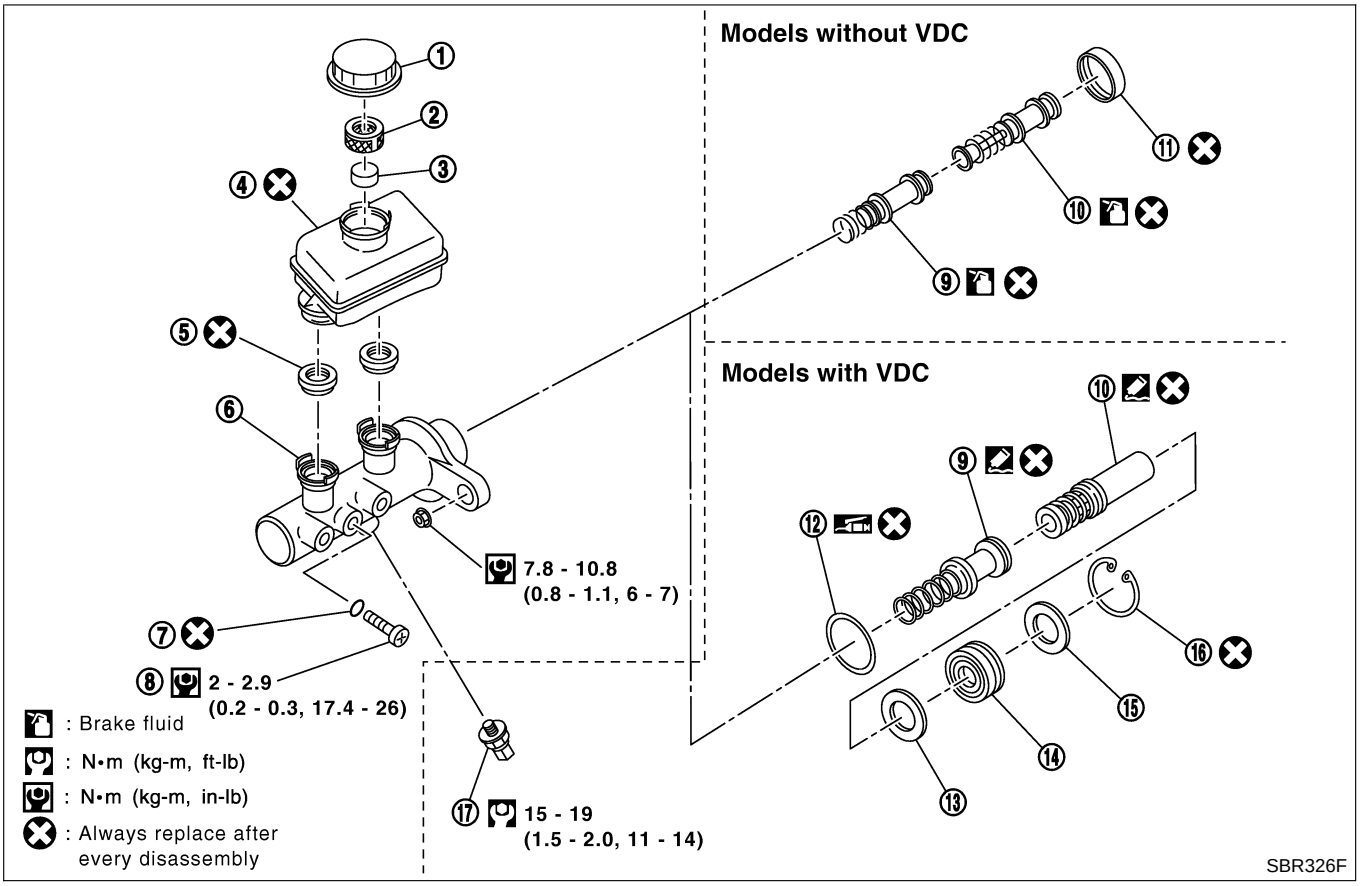

1. Reservoir cap
2. Oil filter
3. Float
4. Reservoir tank
5. Seal
6. Cylinder body
7. O-ring
8. Piston stopper
9. Secondary piston assembly
10. Primary piston assembly
11. Stopper cap
12. O-ring
13. Plate
14. Guide assembly
15. Plate
16. Snap ring
17. Pressure sensor

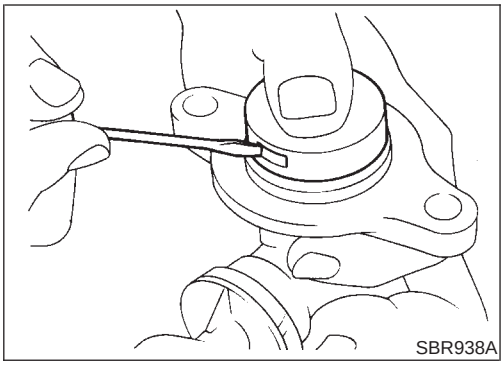
SBR938A

Disassembly

NABR0020

MODELS WITHOUT VDC

NABR0020S01

1. Bend claws of stopper cap outward.

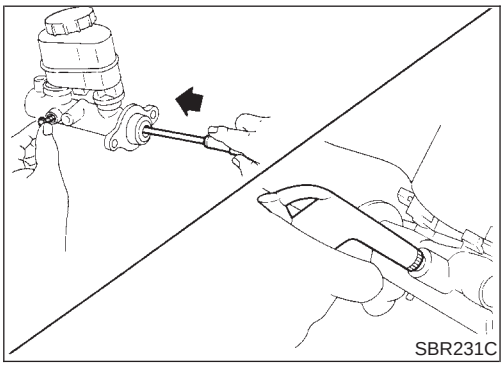
SBR231C

2. Remove piston stopper while piston is pushed into cylinder.
3. Remove piston assemblies.

If it is difficult to remove secondary piston assembly, gradually apply compressed air through fluid outlet.

4. Draw out reservoir tank.

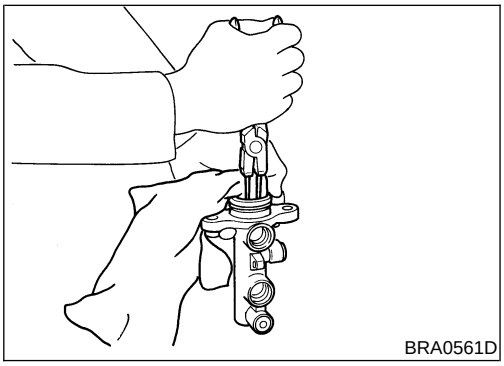
BRA0561D

MODELS WITH VDC

NABR0020S02

1. Remove the snap ring in pushing primary piston.
2. Holding the rod of the primary piston, remove the primary piston assembly, the plate and the guide with pulling straight to prevent the cup from being caught by the inner wall of the cylinder.
3. Remove the plate and the guide from the primary piston.

CAUTION:
Be careful not to damage the rod from the inner wall of the plate.

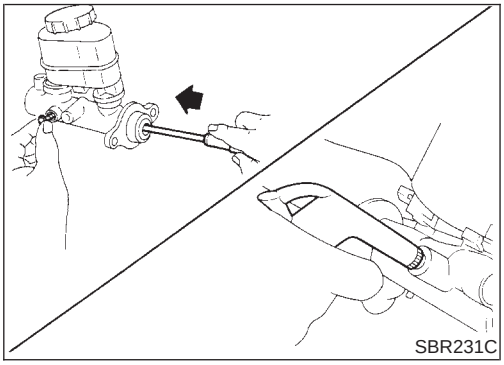
SBR231C

4. Remove piston stopper while secondary piston is pushed into cylinder.
5. Remove secondary piston assemblies.

If it is difficult to remove secondary piston assembly, gradually apply compressed air through fluid outlet.

6. Draw out reservoir tank.

Inspection

NABR0021

Check master cylinder inner wall for pin holes or scratches. Replace if damaged.

Assembly

NABR0022

MODELS WITHOUT VDC

NABR0022S01

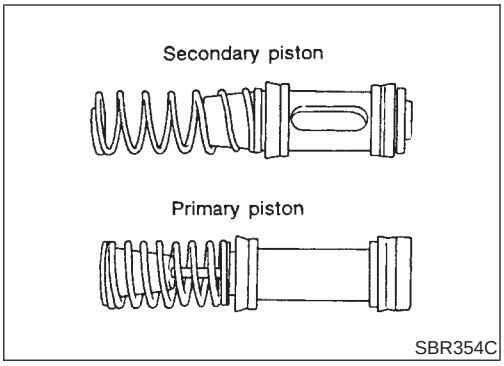

SBR354C

1. Insert secondary piston assembly. Then insert primary piston assembly.

- **Pay attention to direction of piston cups in figure at left. Also, insert pistons squarely to avoid scratches on cylinder bore.**
- **Pay attention to alignment of secondary piston slit with valve stopper mounting hole of cylinder body.**

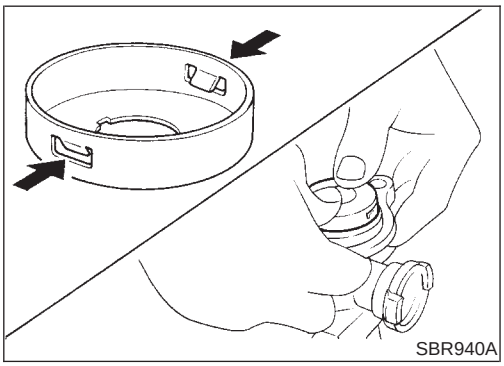
SBR940A

2. Install stopper cap.

Before installing stopper cap, ensure that claws are bent inward.

3. Push reservoir tank seals into cylinder body.
4. Push reservoir tank into cylinder body.

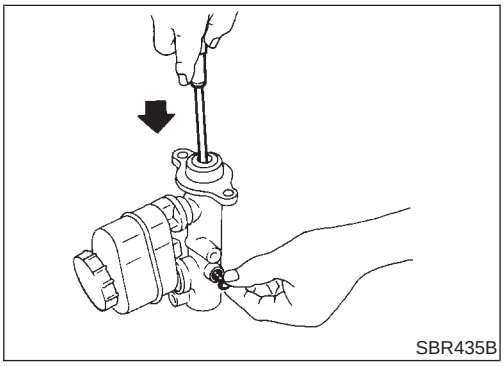
SBR435B

5. Install piston stopper while piston is pushed into cylinder.

MODELS WITH VDC

NABR0022S02

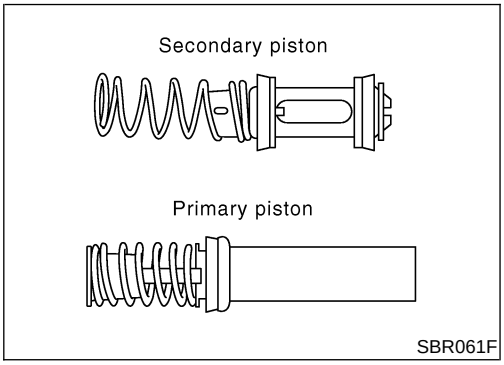

SBR061F

1. Insert secondary piston assembly. Then insert primary piston assembly.

- **Pay attention to direction of piston cups in figure at left. Also, insert pistons squarely to avoid scratches on cylinder bore.**
- **Pay attention to alignment of secondary piston slit with valve stopper mounting hole of cylinder body.**

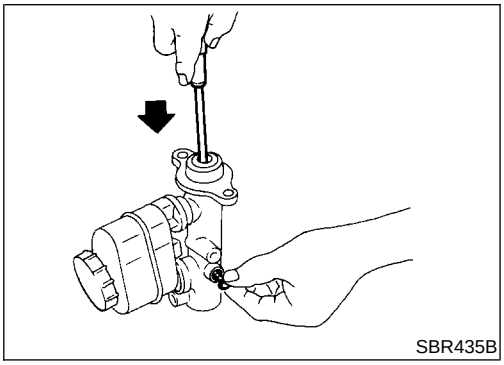
SBR435B

2. Install valve stopper while piston is pushed into cylinder.

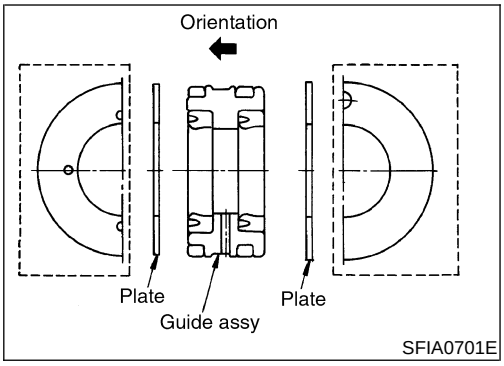

3. Install the plate and the guide into the cylinder body.

CAUTION:

- **Be careful not to damage the rod of the primary piston.**
- **Pay attention to the orientation of the guide.**
- **Do not drop the O-ring.**

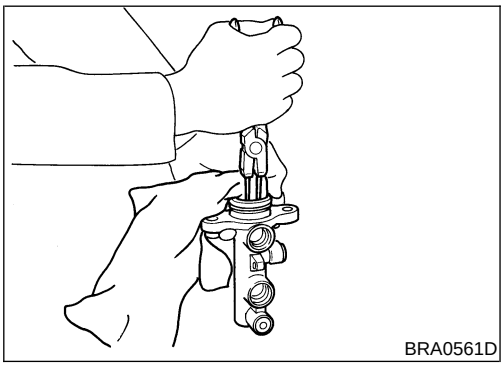

4. Be careful not to damage the rod of the primary piston with covering the close. Then insert snap ring to cylinder with pushing primary piston.

CAUTION:

- **Be careful to check the snap ring in the inner tip of the cylinder body.**
- **Do not reuse the snap ring.**

5. Push reservoir tank seals into cylinder body.
6. Push reservoir tank into cylinder body.

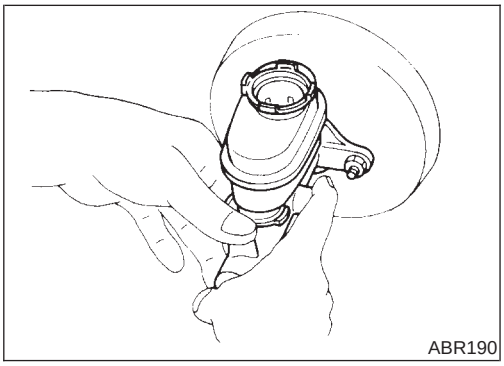

Installation

NABR0023

CAUTION:

- **Refill with new brake fluid "DOT 3".**
- **Never reuse drained brake fluid.**

1. Place master cylinder onto brake booster and secure mounting nuts lightly.
2. Torque mounting nuts.
   : 7.8 - 10.8 N·m (0.8 - 1.1 kg-m, 69 - 95 in-lb)
3. Fill up reservoir tank with new brake fluid.
4. Plug all ports on master cylinder with fingers to prevent air suction while releasing brake pedal.
5. Have driver depress brake pedal slowly several times until no air comes out of master cylinder.
6. Fit brake lines to master cylinder.
7. Tighten flare nuts.
   : 15 - 17 N·m (1.5 - 1.8 kg-m, 11 - 13 ft-lb) (M10)
   : 17 - 19 N·m (1.7 - 2.0 kg-m, 12 - 14 ft-lb) (M12)
8. Bleed air. Refer to "Bleeding Brake System", BR-9.

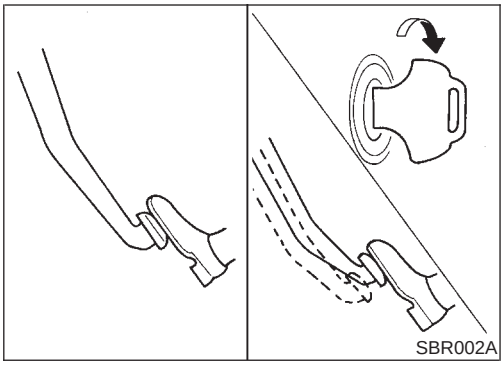

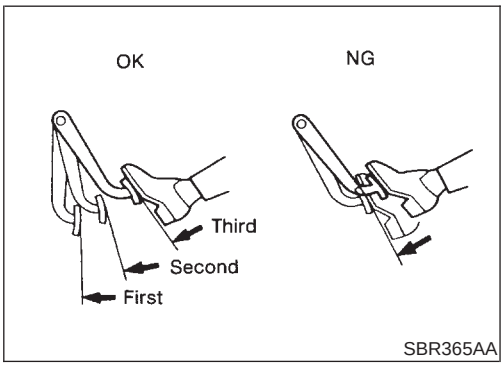

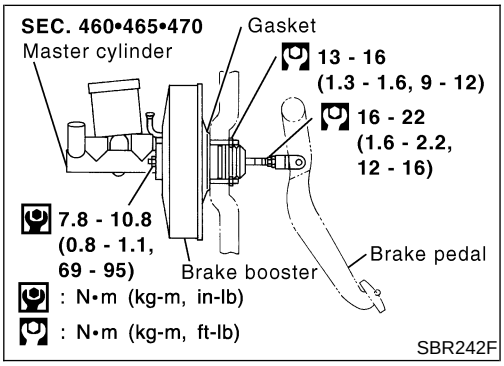

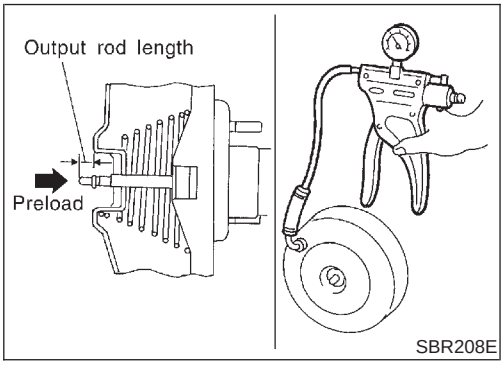

On-vehicle Service

NABR0024

OPERATING CHECK

NABR0024S01

1. Depress brake pedal several times with engine off. After exhausting vacuum, make sure there is no change in pedal stroke.
2. Depress brake pedal, then start engine. If pedal goes down slightly, operation is normal.

AIRTIGHT CHECK

NABR0024S02

1. Start engine, and stop it after one or two minutes. Depress brake pedal several times slowly. Booster is airtight if pedal stroke is less each time.
2. Depress brake pedal while engine is running, and stop engine with pedal depressed. The pedal stroke should not change after holding pedal down for **30 seconds**.

Removal

NABR0025

CAUTION:

- **Be careful not to splash brake fluid on painted areas; it may cause paint damage. If brake fluid is splashed on painted areas, wash it away with water immediately.**
- **Be careful not to deform or bend brake pipes, during removal of booster.**

Inspection

NABR0026

OUTPUT ROD LENGTH CHECK

NABR0026S01

1. Apply vacuum of −66.7 kPa (−500 mmHg, −19.69 inHg) to brake booster with a hand vacuum pump.
2. Add preload of 19.6 N (2.0 kg, 4.4 lb) to output rod.
3. Check output rod length.

   Specified length:

   10.275 - 10.525 mm (0.4045 - 0.4144 in)

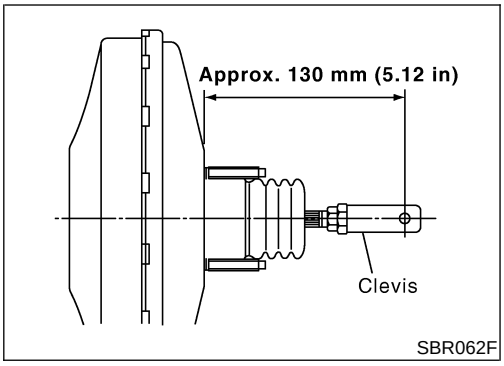

Installation

=NABR0027

CAUTION:

- **Be careful not to deform or bend brake pipes during installation of booster.**
- **Replace clevis pin if damaged.**
- **Refill with new brake fluid “DOT 3”.**
- **Never reuse drained brake fluid.**
- **Take care not to damage brake booster mounting bolt thread when installing. Due to the narrow angle of installation, the threads can be damaged by the dash panel.**

1. Before fitting booster, temporarily adjust clevis to dimension shown.
2. Fit booster, then secure mounting nuts (brake pedal bracket to brake booster) lightly.
3. Connect brake pedal and booster input rod with clevis pin.
4. Secure mounting nuts.

   Specification: 13 - 16 N·m (1.3 - 1.6 kg-m, 9 - 12 ft-lb)
5. Install master cylinder. Refer to “Installation” in “MASTER CYLINDER”, BR-18.
6. Adjust brake pedal height and free play. Refer to “Adjustment” in “BRAKE PEDAL AND BRACKET”, BR-13.
7. Secure lock nut for clevis.

   : 16 - 22 N·m (1.6 - 2.2 kg-m, 12 - 16 ft-lb)
8. Bleed air. Refer to “Bleeding Brake System”, BR-9.

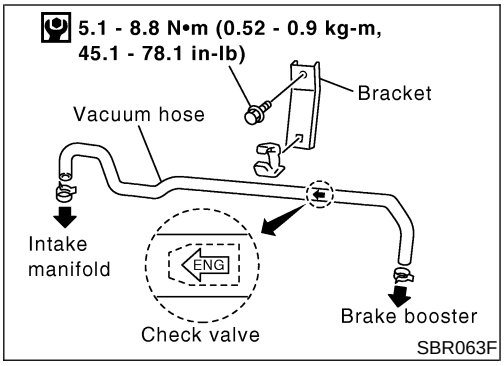

Vacuum Hose

NABR0028

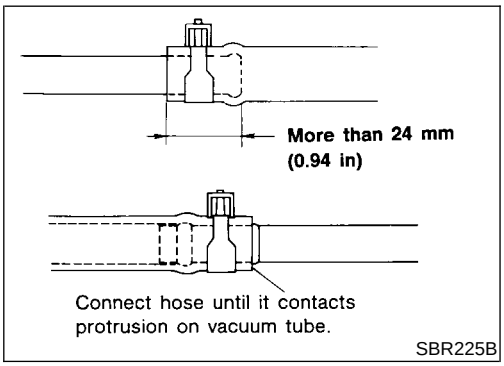

Removal and Installation

NABR0029

CAUTION:

When installing vacuum hoses, pay attention to the following points.

- **Do not apply any oil or lubricants to vacuum hose and check valve.**
- **Insert vacuum tube into vacuum hose as shown.**

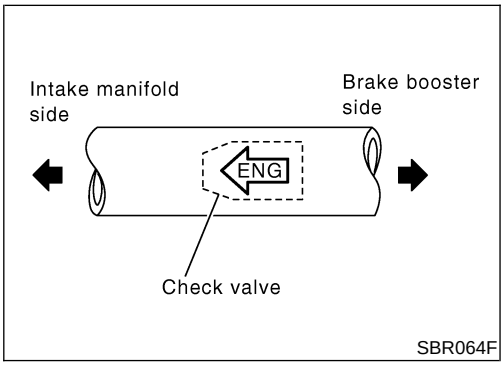

- **Install check valve, paying attention to its direction.**

Inspection

NABR0030

HOSES AND CONNECTORS

NABR0030S01

Check vacuum lines, connections and check valve for airtightness, improper attachment chafing and deterioration.

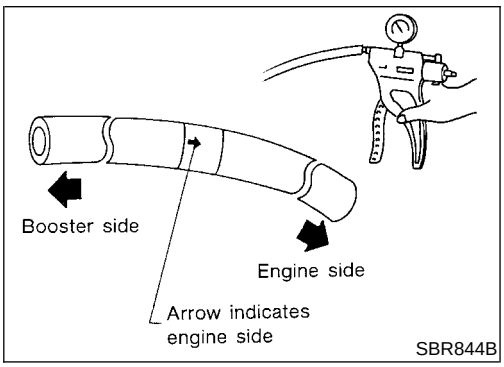

CHECK VALVE

NABR0030S02

Check vacuum with a vacuum pump.

Connect to booster side	Vacuum should exist.
Connect to engine side	Vacuum should not exist.

Components

NABR0031

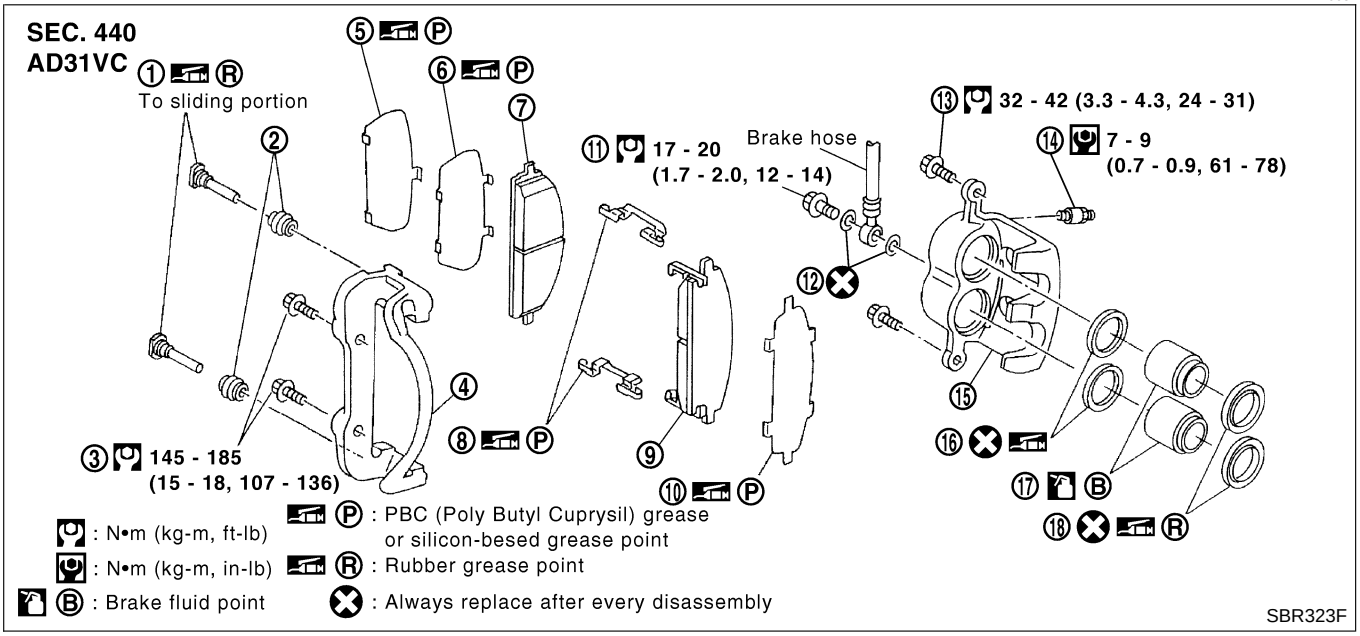

1. Main pin
2. Pin boot
3. Torque member fixing bolt
4. Torque member
5. Shim cover
6. Inner shim
7. Inner pad
8. Pad retainer
9. Outer pad
10. Outer shim
11. Connecting bolt
12. Copper washer
13. Main pin bolt
14. Bleed valve
15. Cylinder body
16. Piston seal
17. Piston
18. Piston boot

Pad Replacement

NABR0032

WARNING:

Clean brakes with a vacuum dust collector to minimize the hazard of airborne particles or other materials.

CAUTION:

- **When cylinder body is open, do not depress brake pedal, or piston will pop out.**
- **Be careful not to damage piston boot or get oil on rotor. Always replace shims when replacing pads.**
- **If shims are rusted or show peeling of the rubber coat, replace them with new shims.**
- **It is not necessary to remove connecting bolt except for disassembly or replacement of caliper assembly. In this case, suspend cylinder body with wire so as not to stretch brake hose.**
- **Carefully monitor brake fluid level because brake fluid will return to reservoir when pushing back piston.**

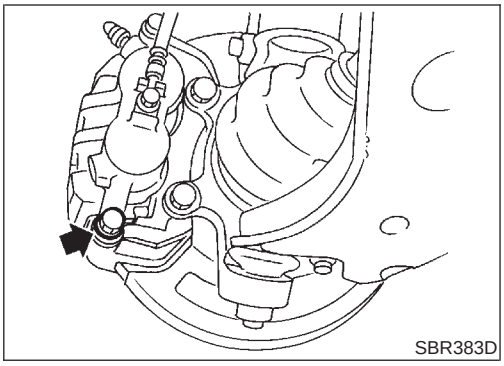

1. Remove master cylinder reservoir cap.
2. Remove lower pin bolt.

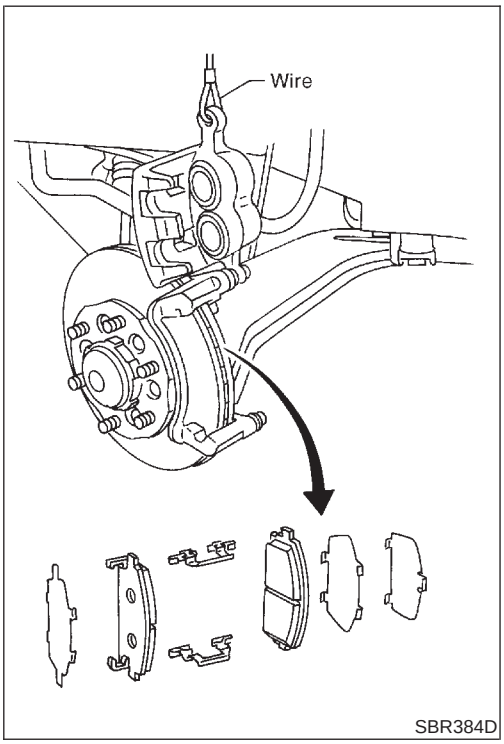

3. Open cylinder body upward. Then remove pad retainers, and inner and outer shims.

   Standard pad thickness:
   11.0 mm (0.433 in)
   Pad wear limit:
   2.0 mm (0.079 in)

Carefully monitor brake fluid level because brake fluid will return to reservoir when pushing back piston.

Removal

NABR0033

WARNING:
Clean brake pads with a vacuum dust collector to minimize the hazard of airborne particles or other materials.

CAUTION:
Suspend caliper assembly with wire so as not to stretch brake hose.

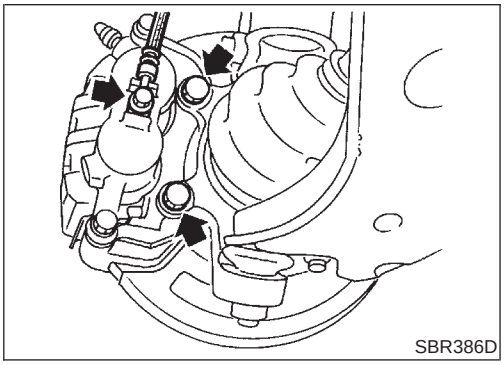

Remove torque member fixing bolts and connecting bolt.
It is not necessary to remove connecting bolt except for disassembly or replacement of caliper assembly. In this case, suspend caliper assembly with wire so as not to stretch brake hose.

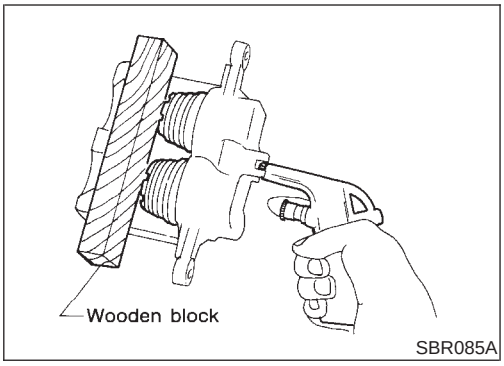

SBR085A

Disassembly

NABR0034

WARNING:
Do not place your fingers in front of piston.

CAUTION:
Do not scratch or score cylinder wall.

1. Push out piston with dust seal with compressed air.
2. Remove piston seal with a suitable tool.

Inspection

NABR0035

CALIPER

NABR0035S01

Cylinder Body

NABR0035S0101

- Check inside surface of cylinder for score, rust, wear, damage or presence of foreign objects. If any of the above conditions are observed, replace cylinder body.
- Minor damage from rust or foreign objects may be eliminated by polishing surface with a fine emery paper. Replace cylinder body if necessary.

CAUTION:
Use brake fluid to clean. Never use mineral oil.

Piston

NABR0035S0102

Check piston for score, rust, wear, damage or presence of foreign objects. Replace if any of the above conditions are observed.

CAUTION:
Piston sliding surface is plated. Do not polish with emery paper even if rust or foreign objects are stuck to sliding surface.

Slide Pin, Pin Bolt and Pin Boot

NABR0035S0103

Check for wear, cracks, rust or other damage. Replace if any of the above conditions are observed.

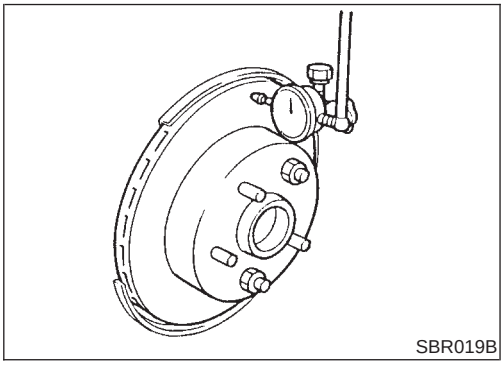
SBR019B

ROTOR

NABR0035S02

Runout

NABR0035S0201

1. Secure rotor to wheel hub with at least two nuts (M12 × 1.25).
2. Check runout using a dial indicator.

Make sure that wheel bearing axial end play is within the specifications before measuring. Refer to AX-4, “Front Wheel Bearing”.

Maximum runout:
0.1 mm (0.004 in)

3. If the runout is out of specification, find minimum runout position as follows:

a. Remove nuts and rotor from wheel hub.
b. Shift the rotor one hole and secure rotor to wheel hub with nuts.
c. Measure runout.
d. Repeat steps a. to c. so that minimum runout position can be found.

4. If the runout is still out of specification, turn rotor with on-car brake lathe (“MAD, DL-8700”, “AMMCO 700 and 705” or equivalent).

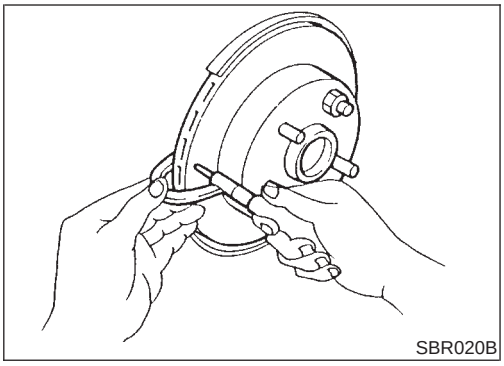
SBR020B

Thickness

NABR0035S0202

Thickness variation (At least 8 positions):
Maximum 0.015 mm (0.0006 in)

If thickness variation exceeds the specification, turn rotor with on-car brake lathe.

Rotor repair limit:
26.0 mm (1.024 in)

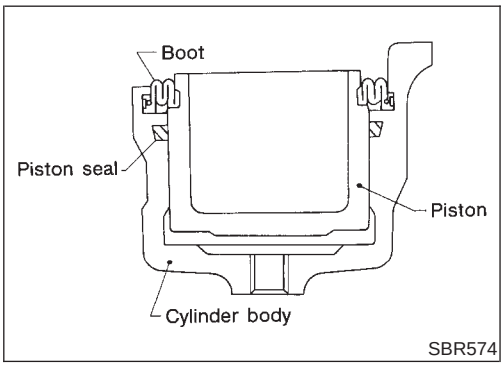

SBR574

Assembly

NABR0036

1. Insert piston seal into groove on cylinder body.
2. With piston boot fitted to piston, insert piston boot into groove on cylinder body and install piston.
3. Properly secure piston boot

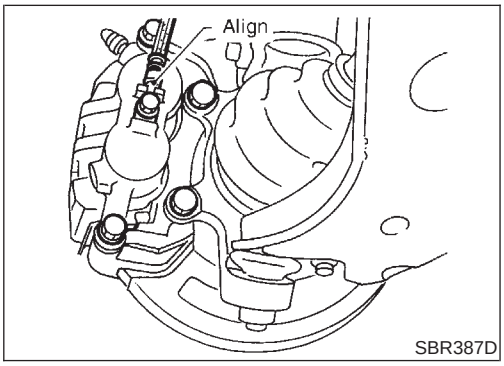

SBR387D

Installation

NABR0037

CAUTION:

- **Refill with new brake fluid "DOT 3".**
- **Never reuse drained brake fluid.**

1. Install caliper assembly.
2. Install brake hose to caliper securely.
3. Install all parts and secure all bolts.
4. Bleed air. Refer to "Bleeding Brake System", BR-9.

Brake Burnishing Procedure

NABR0086

When experiencing soft brake pedal feel at very low mileage, or after replacing the rotor, burnish the brake pad contact surfaces according to the following procedures.

CAUTION:

Only perform this procedure under safe road and traffic conditions. Use extreme caution.

1. Drive the vehicle on a straight smooth road at 50 km/h (31 MPH).
2. Use medium brake pedal/foot effort to bring the vehicle to a complete stop from 50 km/h (31 MPH). Adjust brake pedal/foot pressure such that vehicle stopping time equals 3 to 5 seconds.
3. To cool the brake system, drive the vehicle at 50 km/h (31 MPH) for 1 minute without stopping.
4. Repeat steps 1 to 3 10 times or more to complete the burnishing procedure.

Components

NABR0038

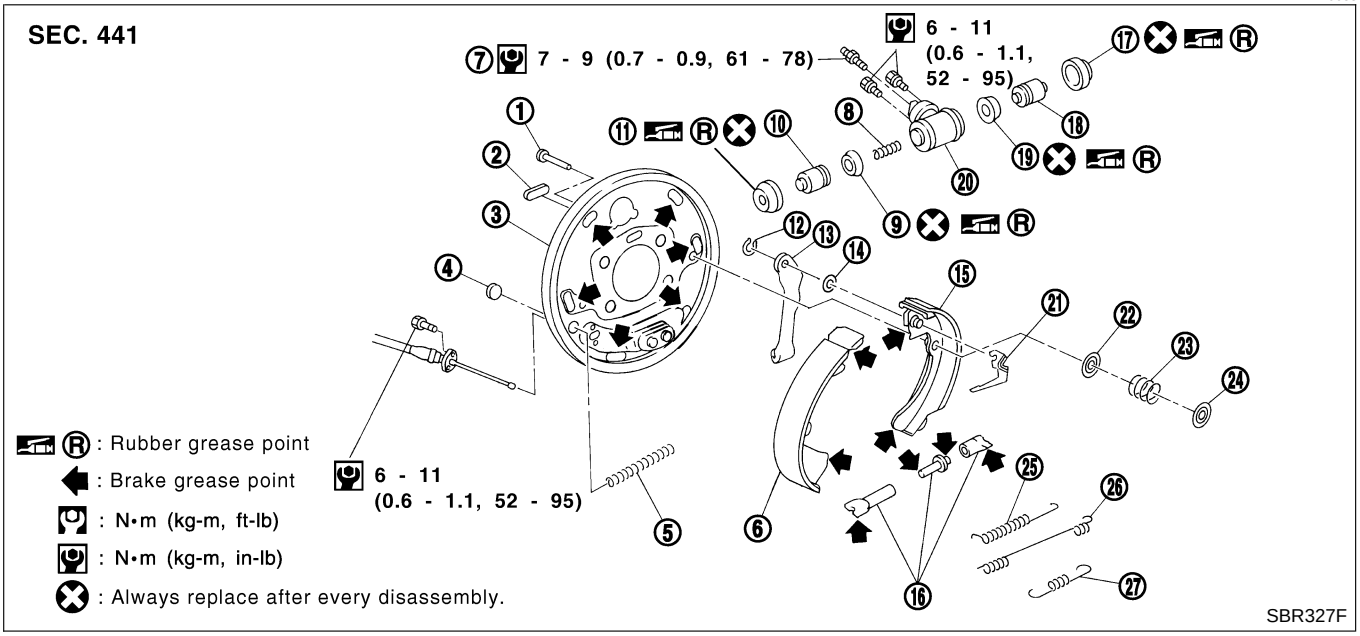

1. Shoe hold pin
2. Plug
3. Back plate
4. Check plug
5. Spring
6. Shoe (leading side)
7. Bleed valve
8. Spring
9. Piston cup
10. Piston
11. Boot
12. Retainer ring
13. Toggle lever
14. Wave washer
15. Shoe (trailing side)
16. Adjuster
17. Boot
18. Piston
19. Piston cup
20. Wheel cylinder
21. Adjuster lever
22. Spring seat
23. Shoe hold spring
24. Retainer
25. Adjuster spring
26. Return spring (upper)
27. Return spring (lower)

Removal

NABR0039

WARNING:

Clean brake lining with a vacuum dust collector to minimize the hazard of airborne asbestos or other materials.

CAUTION:

Make sure parking brake lever is released completely.

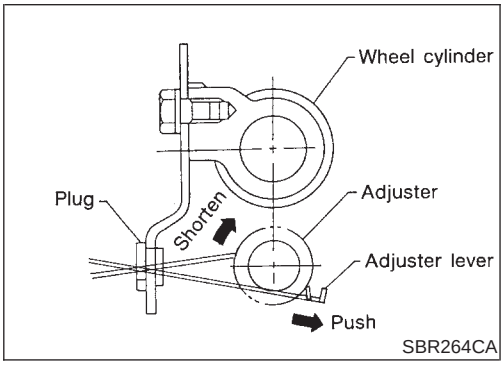

1. Release parking brake lever fully, then remove drum.
   If drum is hard to remove, the following procedures should be carried out.

a. Remove plug. Then shorten adjuster to make clearance between brake shoe and drum as shown.

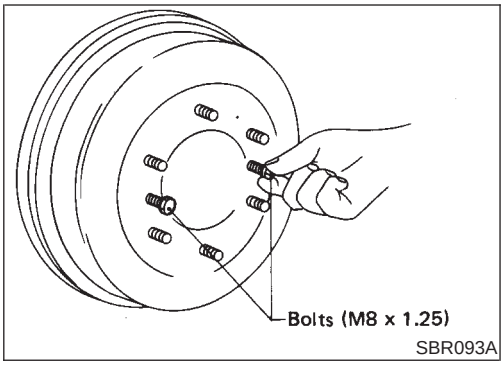

SBR093A

b. Tighten the two bolts gradually.

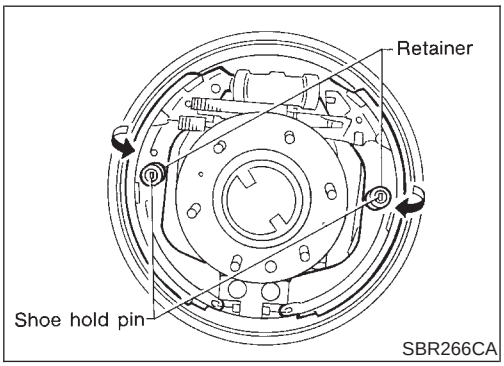

SBR266CA

2. After removing shoe hold pin by rotating push retainer, remove leading shoe then remove trailing shoe. Remove spring by rotating shoes in direction arrow.

Be careful not to damage wheel cylinder piston boots.

3. Remove adjuster.

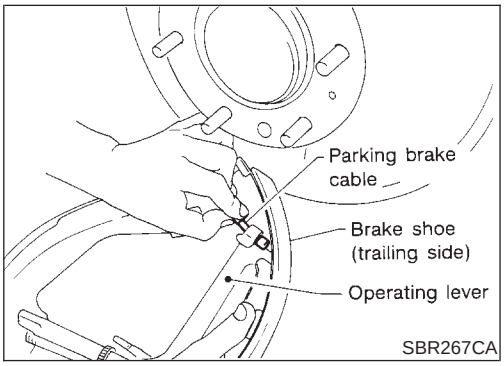

SBR267CA

4. Disconnect parking brake cable from toggle lever.

Be careful not to damage parking brake cable when separating it.

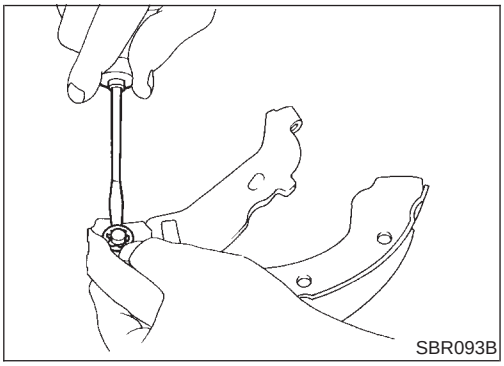
SBR093B

5. Remove retainer ring with a suitable tool. Then separate toggle lever and brake shoe.

Inspection

WHEEL CYLINDER

NABR0040

NABR0040S01

- Check wheel cylinder for leakage.
- Check for wear, damage and loose conditions. Replace if any such condition exists.

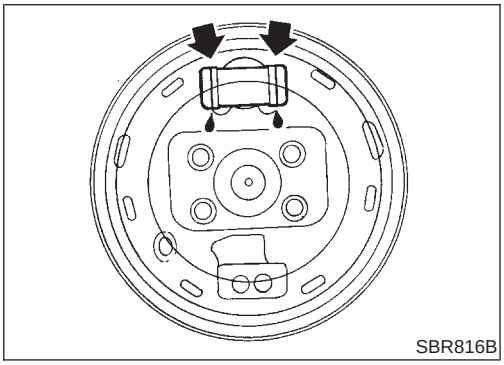
SBR816B

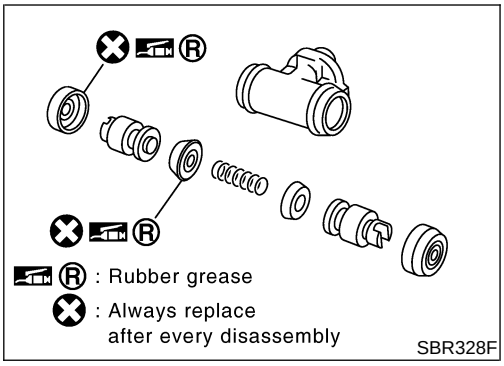

Wheel Cylinder Overhaul

NABR0041

- Check all internal parts for wear, rust and damage. Replace if necessary.
- Pay attention so as not to scratch cylinder when installing pistons.

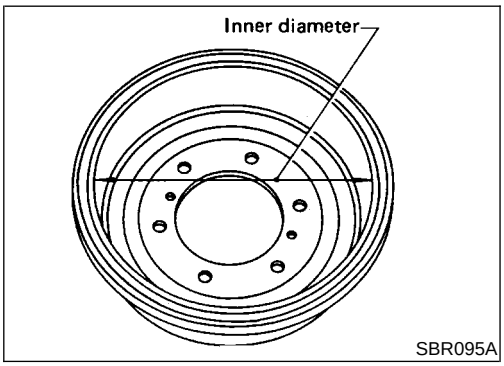

Inspection

NABR0042

DRUM

NABR0042S01

Maximum inner diameter: 296.5 mm (11.67 in)
Out-of-roundness: 0.03 mm (0.0012 in) or less

- Contact surface should be fine finished with No. 120 to 150 emery paper.
- Using a drum lathe, lathe brake drum if it shows scoring, partial wear or stepped wear.
- After brake drum has been completely reconditioned or replaced, check drum and shoes for proper contact pattern.

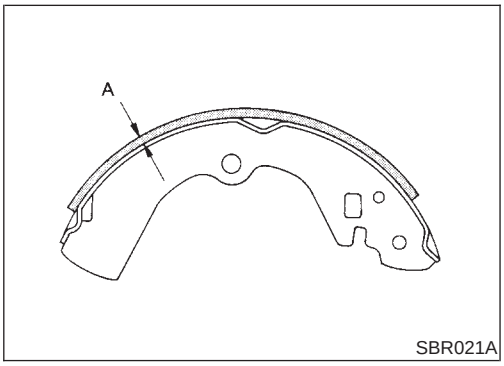

LINING

NABR0042S02

Check lining thickness.

Standard lining thickness:
6.1 mm (0.240 in)
Lining wear limit (A):
1.5 mm (0.059 in)

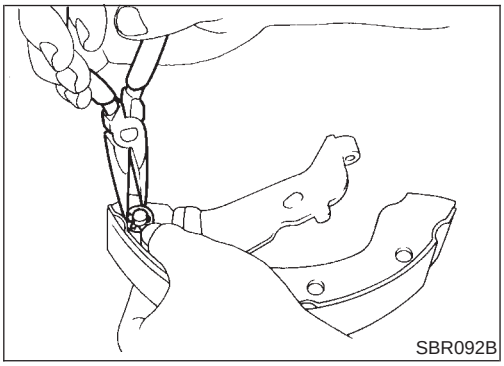

Installation

NABR0043

Always perform shoe clearance adjustment. Refer to BR-31.

1. Fit toggle lever to brake shoe (trailing side) with retainer ring.

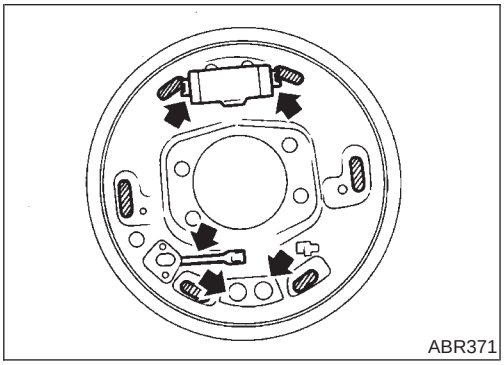

2. Apply brake grease to the contact areas (indicated by arrows and hatching) shown at left.

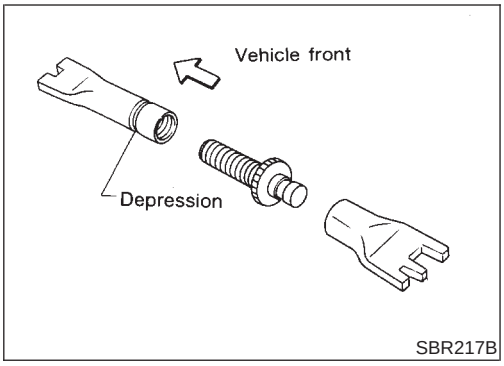

3. Shorten adjuster by rotating it.

- **Pay attention to direction of adjuster.**

Wheel	Screw	Depression
Left	Left-hand thread	Yes
Right	Right-hand thread	No

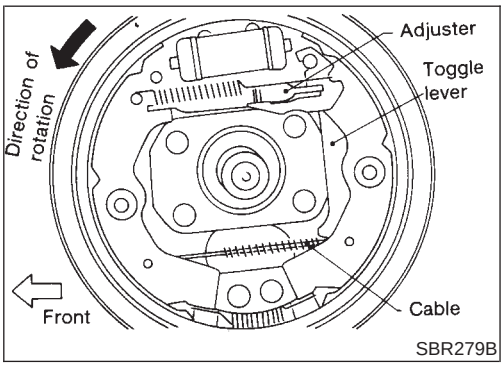

4. Connect parking brake cable to toggle lever.
5. Install all parts.

Be careful not to damage wheel cylinder piston boots.

6. Check all parts are installed properly.

Pay attention to direction of adjuster assembly.

7. Install brake drum.
8. When installing new wheel cylinder or overhauling wheel cylinder, bleed air. Refer to "Bleeding Brake System", BR-9.
9. Adjust parking brake. Refer to "Adjustment", "PARKING BRAKE CONTROL", BR-31.

Components

NABR0044

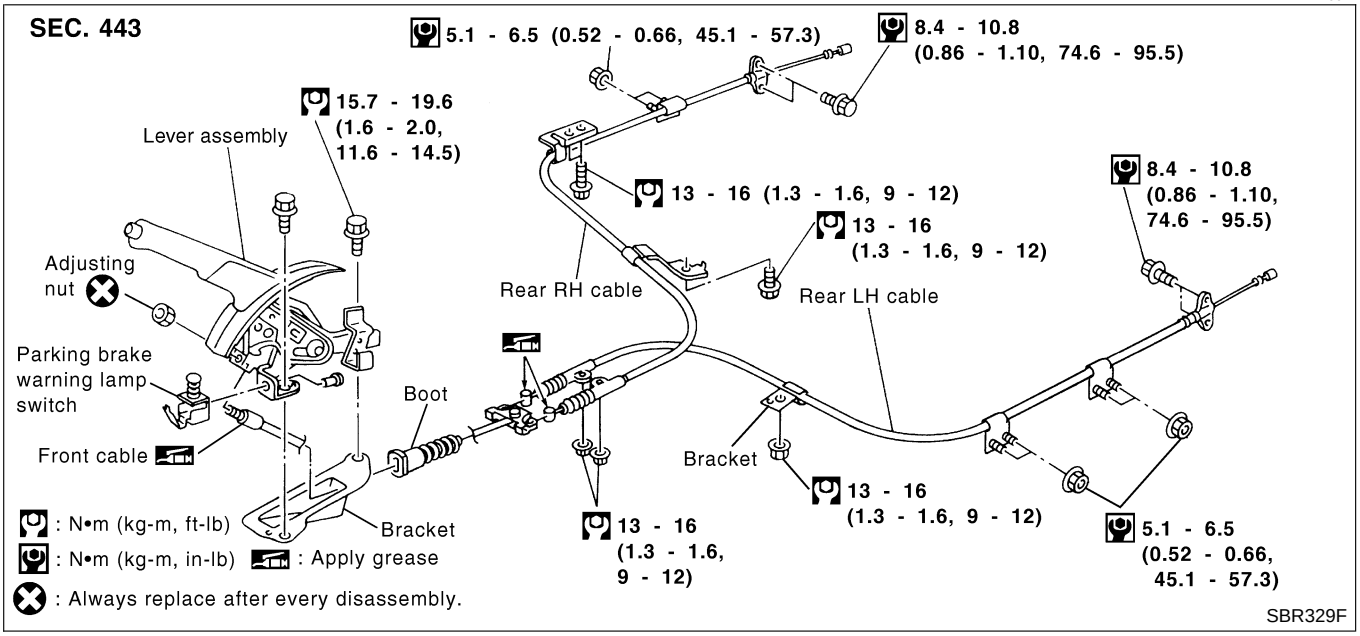

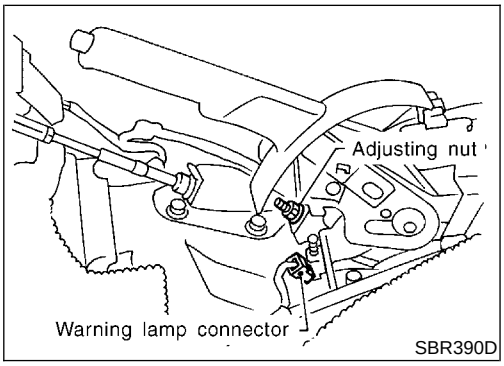

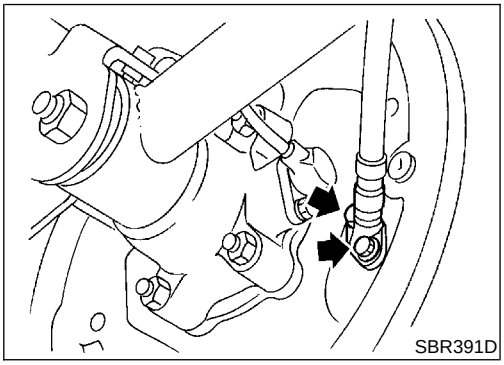

Removal and Installation

NABR0045

1. To remove parking brake cable, first remove center console.
2. Disconnect warning lamp connector.
3. Remove bolts, slacken off and remove adjusting nut.
4. Disconnect cable. Refer to “Removal”, “REAR DRUM BRAKE”, BR-26.

Inspection

NABR0046

1. Check control lever for wear or other damage. Replace if necessary.
2. Check wires for discontinuity or deterioration. Replace if necessary.
3. Check warning lamp and switch. Replace if necessary.
4. Check parts at each connecting portion and, if deformed or damaged, replace.

Adjustment

NABR0047

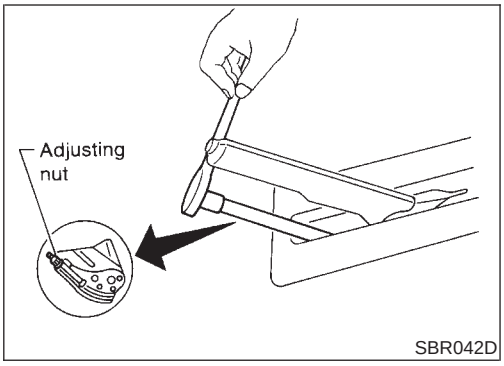

1. Adjust clearance between shoe and drum as follows:

a. Release parking brake lever and loosen adjusting nut.

b. Depress brake pedal fully at least 10 times with engine running.

2. Pull control lever 4 - 5 notches. Then adjust control lever by turning adjusting nut.

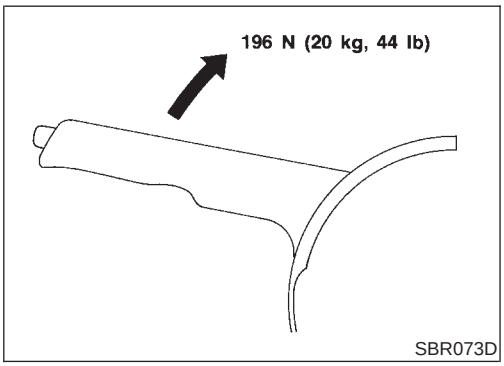

3. Pull control lever with specified amount of force. Check lever stroke and ensure smooth operation.

   Number of notches: 6 - 8

4. Bend warning lamp switchplate to ensure:

- Warning lamp comes on when lever is lifted “A” notches.
- Warning lamp goes out when lever is fully released.

   Number of “A” notches: 1 or less

Purpose

NABR0087

The Anti-Lock Brake System (ABS) consists of electronic and hydraulic components. It allows for control of braking force so locking of the wheels can be avoided.

1) Improves proper tracking performance through steering wheel operation.
2) Eases obstacle avoidance through steering wheel operation.
3) Improves vehicle stability.

Operation

NABR0088

- When the vehicle speed is less than 10 km/h (6 MPH) this system does not work.
- The Anti-Lock Brake System (ABS) has a self-test function. The system turns on the ABS warning lamp for 1 second each time the ignition switch is turned “ON”. After the engine is started, the ABS warning lamp turns off. The system performs a test the first time the vehicle reaches 6 km/h (4 MPH). A mechanical noise may be heard as the ABS performs this self-test. This is a normal part of the self-test feature. If a malfunction is found during this check, the ABS warning lamp will stay on.
- While driving, a mechanical noise may be heard during ABS operation. This is a normal condition.

ABS Hydraulic Circuit

NABR0089

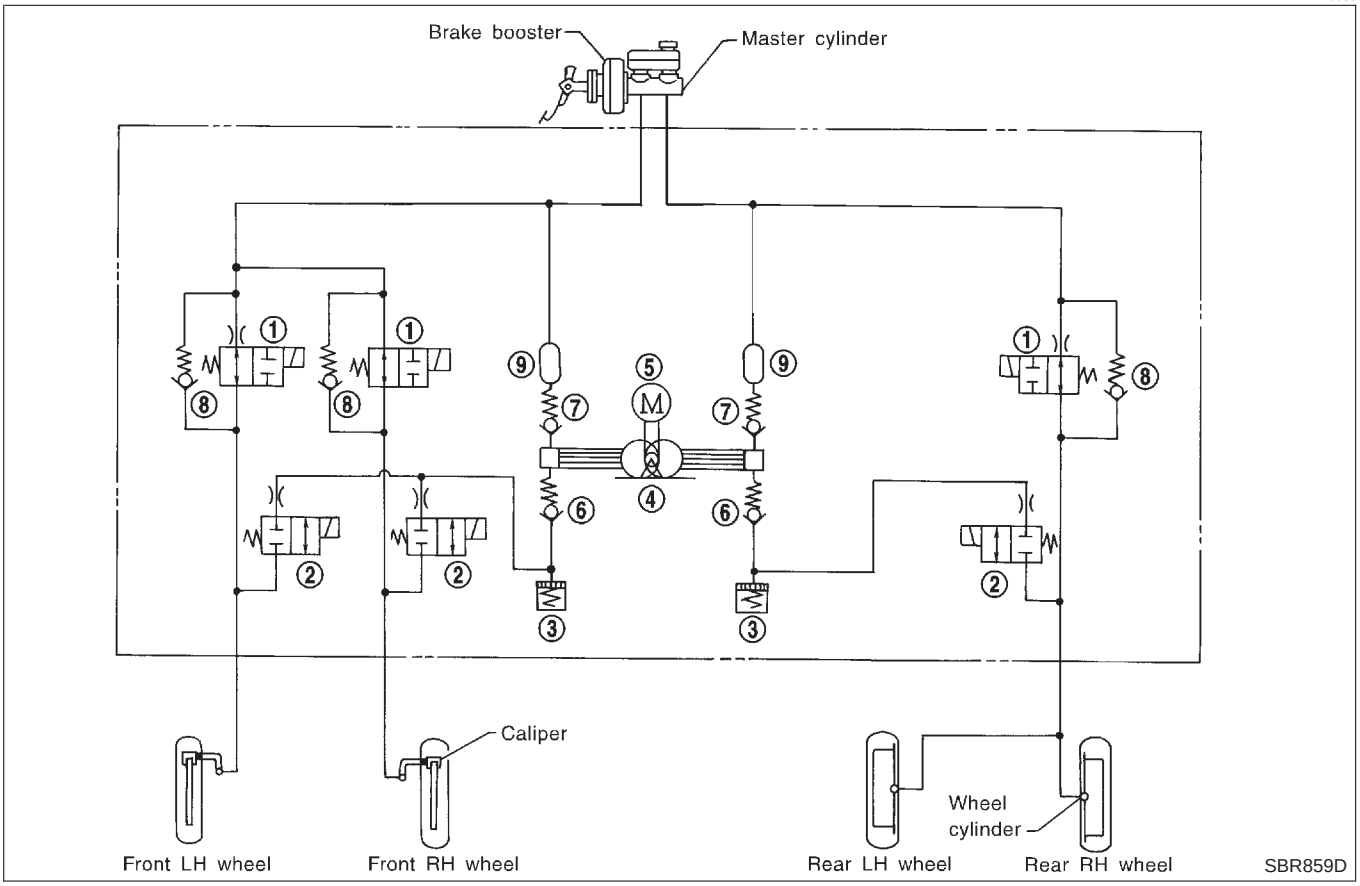

1. Inlet solenoid valve
2. Outlet solenoid valve
3. Reservoir
4. Pump
5. Motor
6. Inlet valve
7. Outlet valve
8. Bypass check valve
9. Damper

System Components

NABR0090

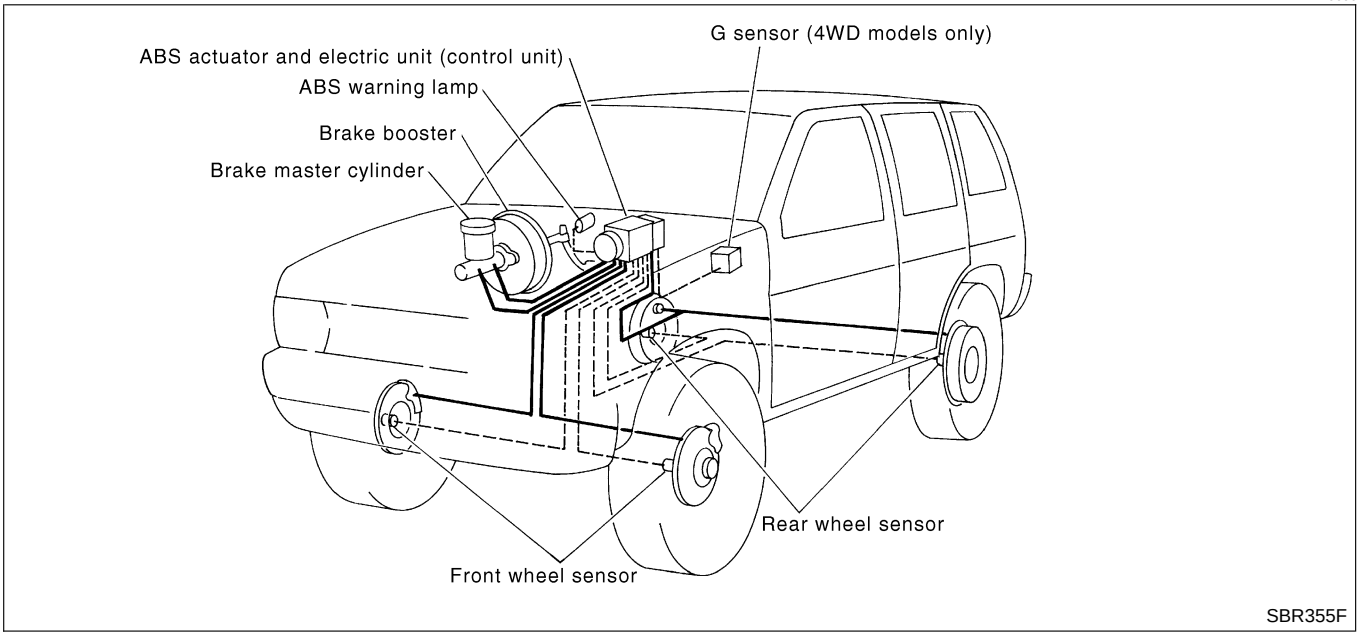

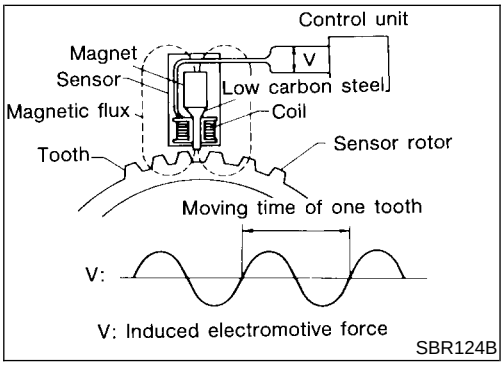

System Description

NABR0091

SENSOR

NABR0091S01

The sensor unit consists of a gear-shaped sensor rotor and a sensor element. The element contains a bar magnet around which a coil is wound. The front sensors are installed on the front spindles and the rear sensors are installed on the rear spindles. As the wheel rotates, the sensor generates a sine-wave pattern. The frequency and voltage increase(s) as the rotating speed increases.

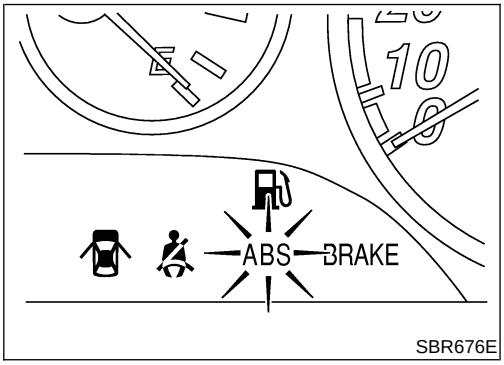

BUILT-IN ABS ACTUATOR AND ELECTRIC UNIT (CONTROL UNIT)

NABR0091S02

The control unit computes the wheel rotating speed by the signal current sent from the sensor. Then it supplies a DC current to the actuator solenoid valve. It also controls ON-OFF operation of the valve relay and motor relay. If any electrical malfunction should be detected in the system, the control unit causes the warning lamp to light up. In this condition, the ABS will be deactivated by the control unit, and the vehicle's brake system reverts to normal operation. [For control unit layout, refer to ABS ACTUATOR AND ELECTRIC UNIT (CONTROL UNIT), BR-33.]

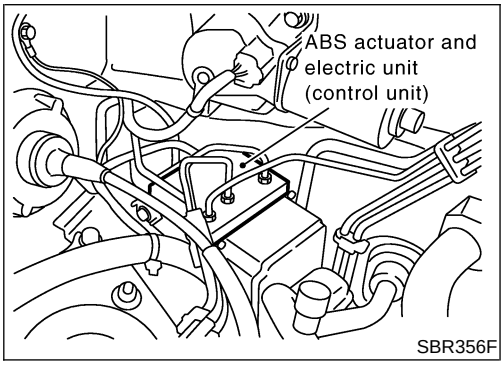

ABS ACTUATOR AND ELECTRIC UNIT (CONTROL UNIT)

NABR0091S03

The ABS actuator and electric unit (control unit) contains:

- An electric motor and pump
- Two relays
- Six solenoid valves, each inlet and outlet for
  — LH front
  — RH front
  — Rear
- ABS control unit

This component controls the hydraulic circuit and increases, holds or decreases hydraulic pressure to all or individual wheels. The ABS actuator and electric unit (control unit) is serviced as an assembly.

ABS Actuator and Electric Unit (Control Unit) Operation

NABR0091S0301

		Inlet solenoid valve	Outlet solenoid valve	
Normal brake operation		OFF (Open)	OFF (Closed)	Master cylinder brake fluid pressure is directly transmitted to caliper via the inlet solenoid valve.
ABS operation	Pressure hold	ON (Closed)	OFF (Closed)	Hydraulic circuit is shut off to hold the caliper brake fluid pressure.
	Pressure decrease	ON (Closed)	ON (Open)	Caliper brake fluid is sent to reservoir via the outlet solenoid valve. Then it is pushed up to the master cylinder by pump.
	Pressure increase	OFF (Open)	OFF (Closed)	Master cylinder brake fluid pressure is transmitted to caliper.

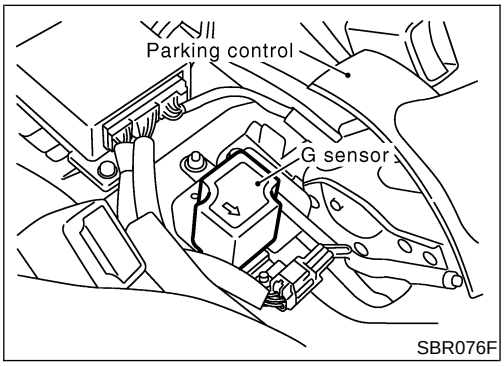

G SENSOR (4WD MODELS ONLY)

NABR0091S05

The G sensor senses deceleration during braking to determine whether the vehicle is being driven on a high μ road (asphalt road, etc.) or a low μ road (snow-covered road, etc.). It then sends a signal to the ABS actuator and electric unit (control unit).

The reed switch turns on when it is affected by a magnetic field. During sudden deceleration (braking on a high μ road), the weight moves and the magnet in the weight moves away from the reed switch. The magnetic field then diminishes and the reed switch turns off.

Component Parts and Harness Connector Location

NABR0147

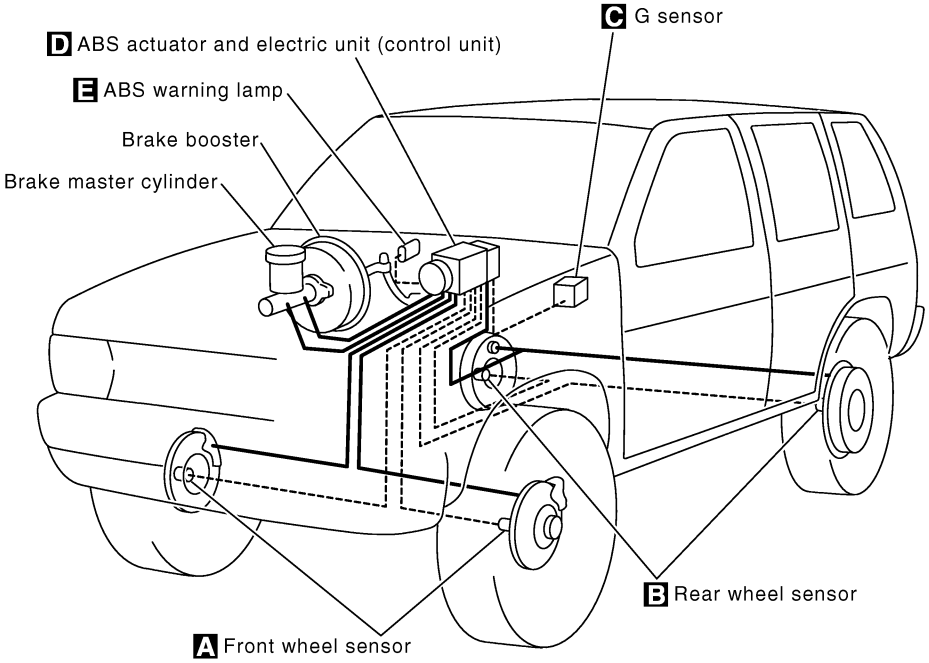

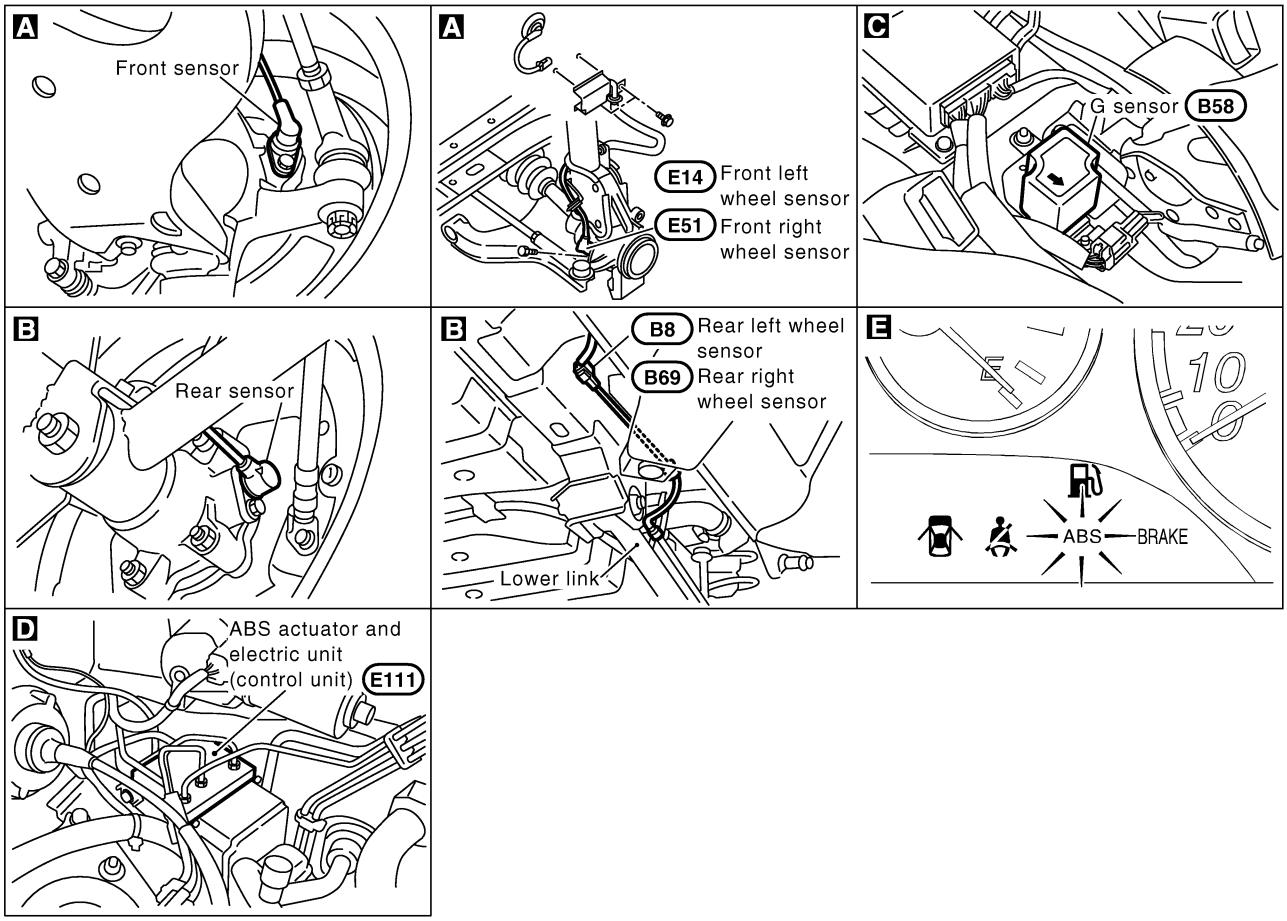

SBR331F

Schematic

NABR0093

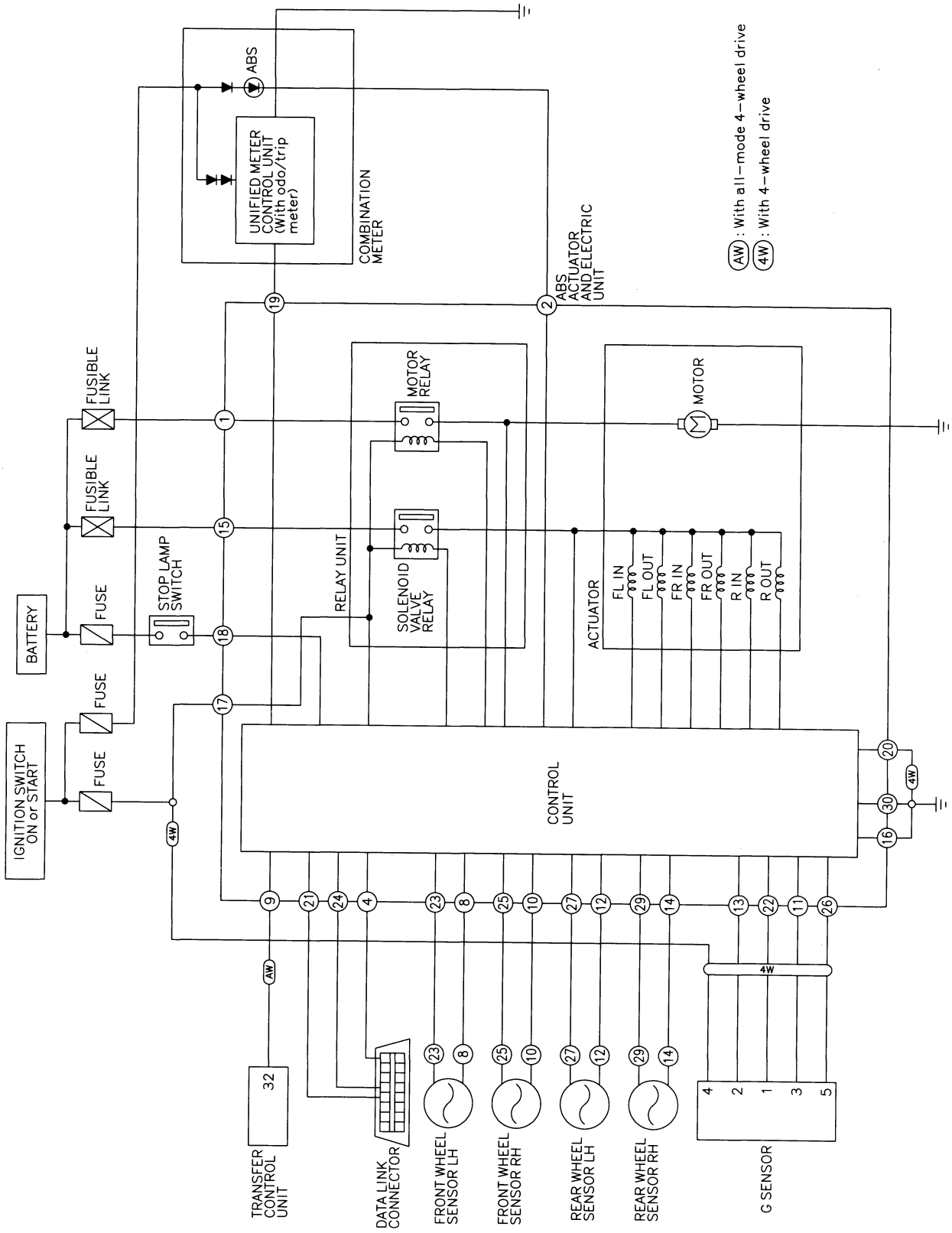

MBR624A

Wiring Diagram — ABS —

NABR0094

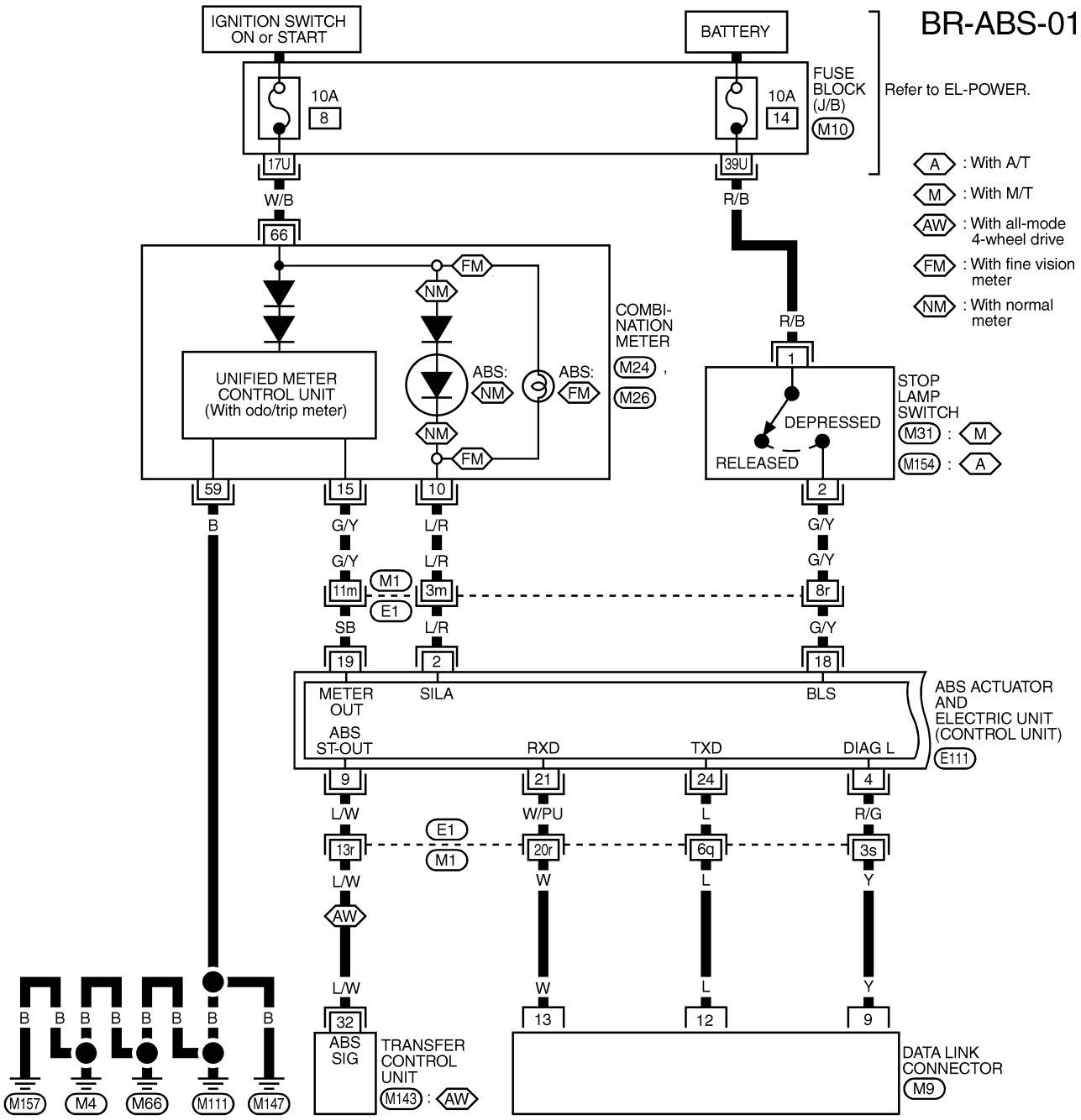

REFER TO THE FOLLOWING.
E1 -SUPER MULTIPLE JUNCTION (SMJ)
M10 -FUSE BLOCK- JUNCTION BOX (J/B)

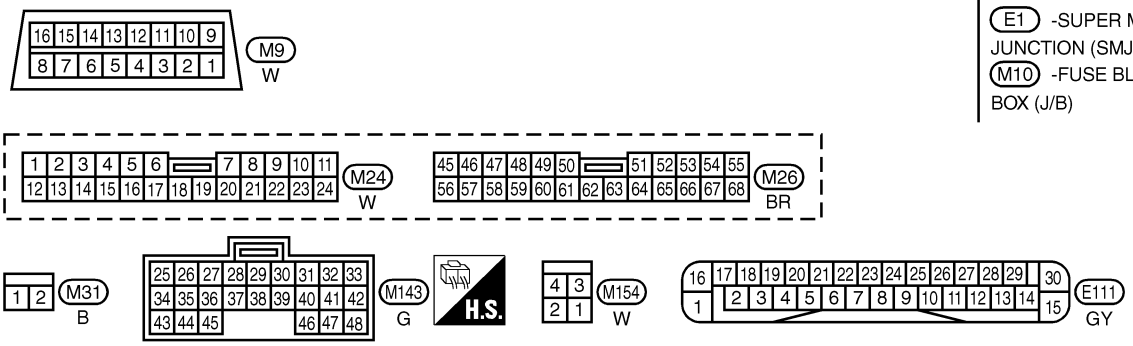

MBR727A

BR-ABS-02

4W : With 4-wheel drive

IGNITION SWITCH ON or START

FUSE BLOCK (J/B) M10

10A 7

1U

OR

4W OR A To BR-ABS-04

OR 7s M1 E1

OR 17

BATTERY

40A d

Y

40A c

L/Y

Refer to EL-POWER.

Y 1

L/Y 15

MOTOR RELAY

SOLENOID VALVE RELAY

RELAY UNIT

ABS ACTUATOR AND ELECTRIC UNIT (CONTROL UNIT) E111

M MOTOR

FL IN FL OUT FR IN FR OUT R IN R OUT ACTUATOR

IGN MOTOR RELAY ACT. ACTR RELAY ACT. MOTOR MON. ACTR RELAY MON. FL IN SOL. FL OUT SOL. FR IN SOL. FR OUT SOL. R IN SOL. R OUT SOL. CONTROL UNIT

GND GND GND

16 20 30

B B B

4W

B B B

E112

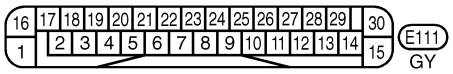

REFER TO THE FOLLOWING.

E1 -SUPER MULTIPLE JUNCTION (SMJ)

M10 -FUSE BLOCK-JUNCTION BOX (J/B)

MBR626A

BR-ABS-03

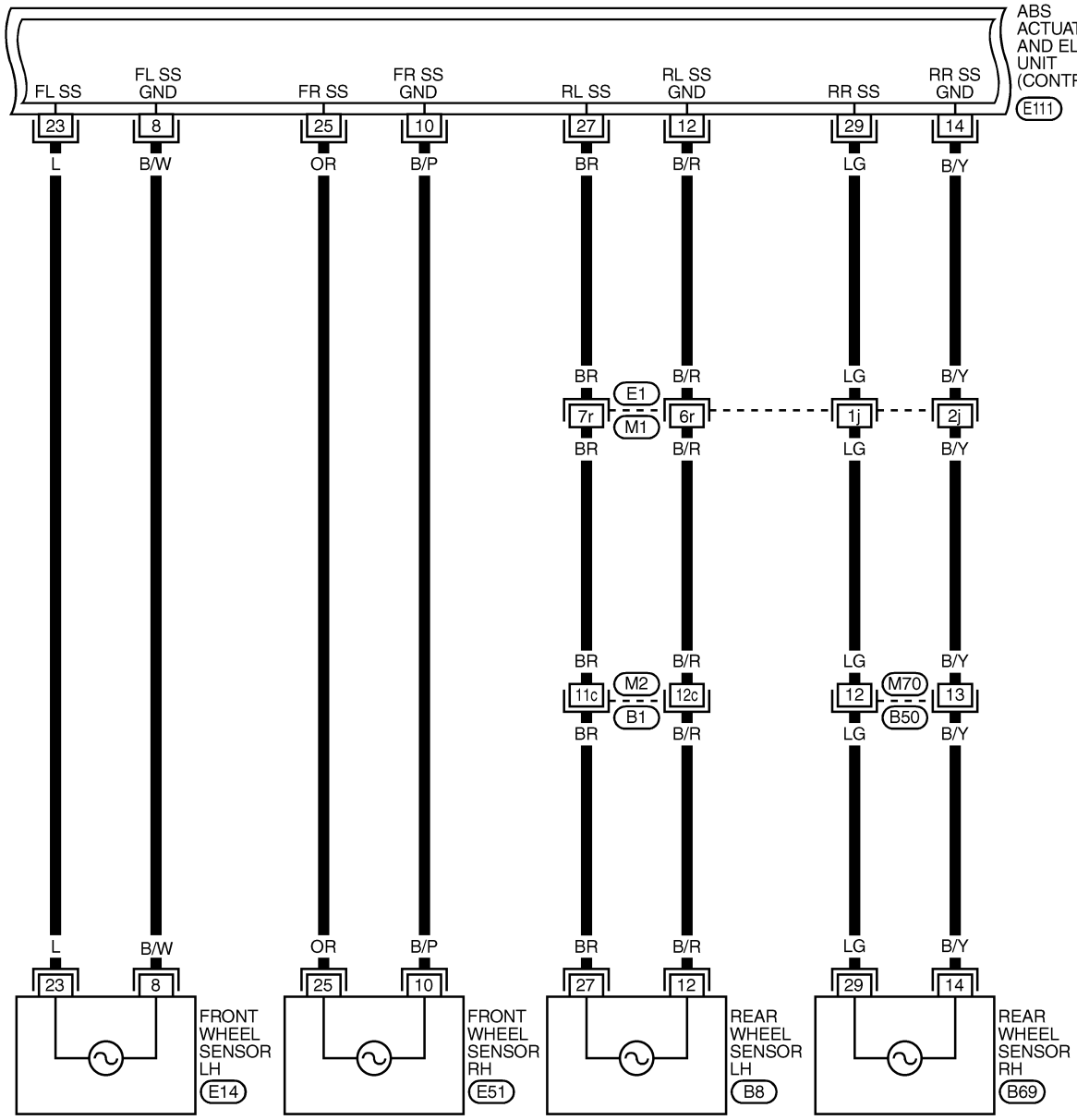

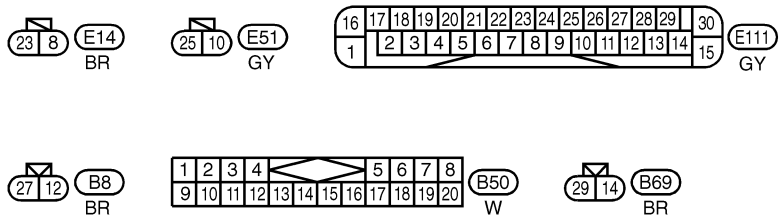

REFER TO THE FOLLOWING.
E1 , B1 -SUPER MULTIPLE JUNCTION(SMJ)

MBR722A

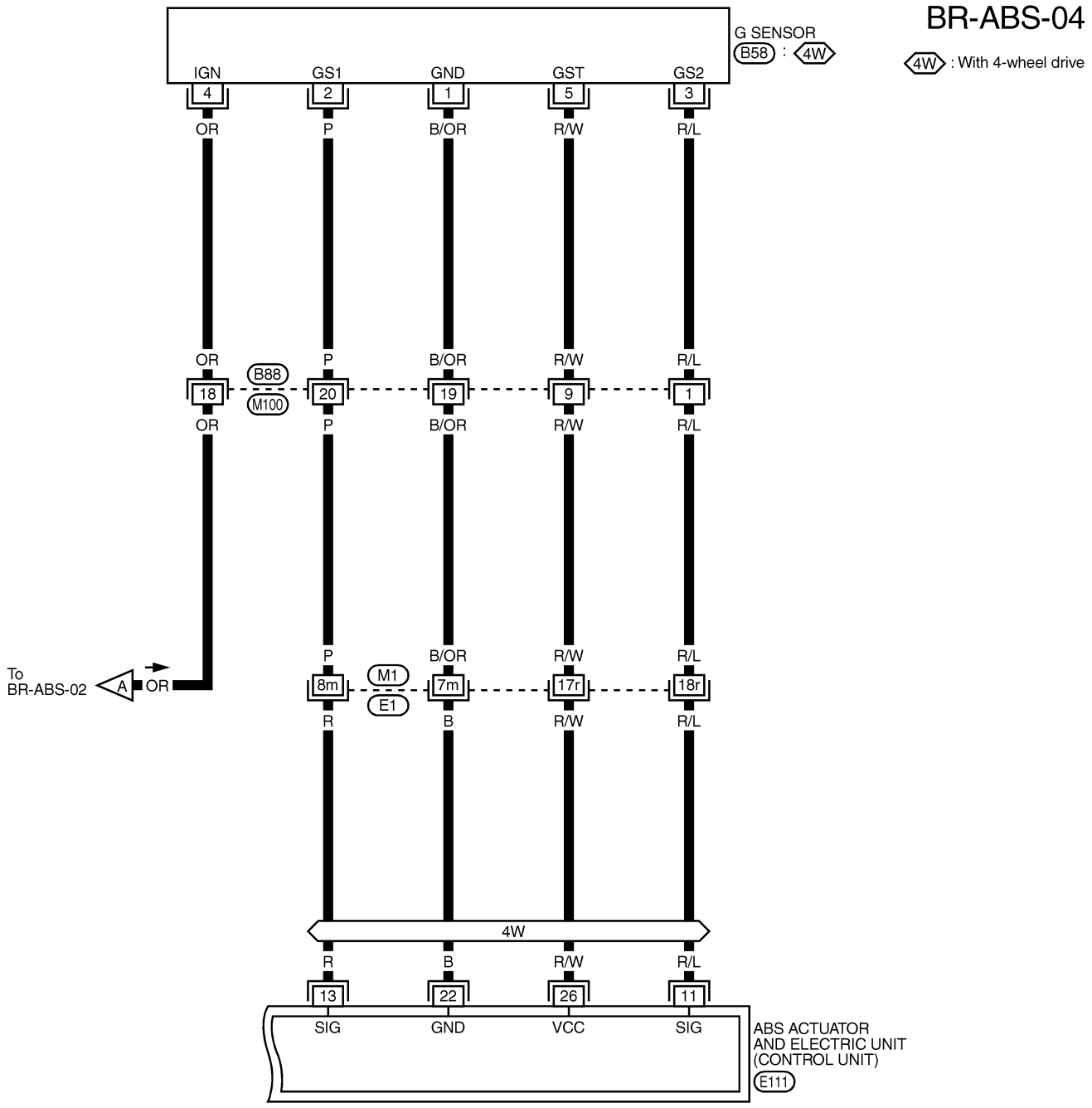

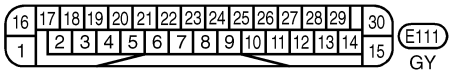

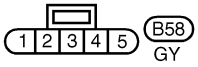

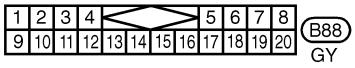

REFER TO THE FOLLOWING.

E1 -SUPER MULTIPLE JUNCTION (SMJ)

MBR584A

Self-diagnosis

NABR0095

FUNCTION

NABR0095S01

- When a problem occurs in the ABS, the warning lamp on the instrument panel comes on. To start the self-diagnostic results mode, ground the self-diagnostic (check) terminal located on data link connector. The location of the malfunction is indicated by the warning lamp flashing.

SELF-DIAGNOSIS PROCEDURE

NABR0095S02

1. Drive vehicle over 30 km/h (19 MPH) or more for at least one minute.
2. Turn ignition switch OFF.

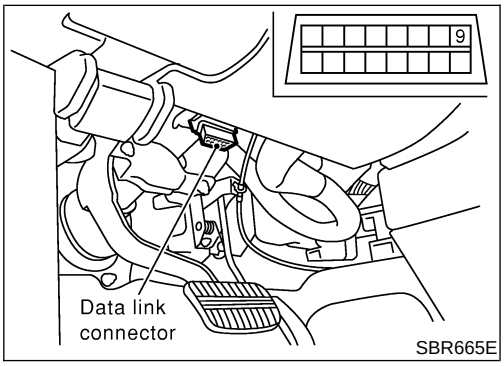

SBR665E

3. Ground terminal 9 of data link connector with a suitable harness.
4. Turn ignition switch ON while grounding terminal 9.
   Do not depress brake pedal.

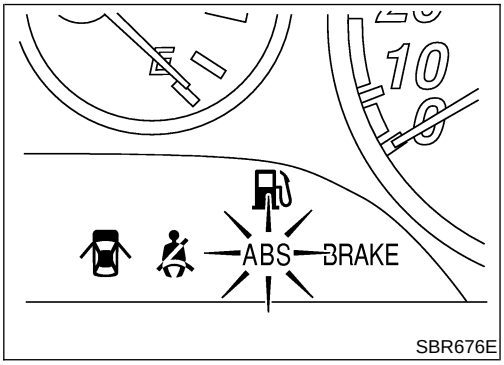

SBR676E

5. After 3.0 seconds, the warning lamp starts flashing to indicate the malfunction code No. (See NOTE.)
6. Verify the location of the malfunction with the malfunction code chart. Refer to BR-54. Then make the necessary repairs following the diagnostic procedures.
7. After the malfunctions are repaired, erase the malfunction codes stored in the control unit. Refer to BR-42.
8. Rerun the self-diagnostic results mode to verify that the malfunction codes have been erased.
9. Disconnect the check terminal from the ground. The self-diagnostic results mode is now complete.
10. Check warning lamp for deactivation after driving vehicle over 30 km/h (19 MPH) or more for at least one minute.
11. After making certain that warning lamp does not come on, test the ABS in a safe area to verify that it functions properly.

NOTE:
The indication terminates after 5 minutes.
However, when the ignition switch is turned from OFF to ON, the indication starts flashing again.

HOW TO READ SELF-DIAGNOSTIC RESULTS (MALFUNCTION CODES)

=NABR0095S03

1. Determine the code No. by counting the number of times the warning lamp flashes on and off.
2. When several malfunctions occur at one time, up to three code numbers can be stored; the latest malfunction will be indicated first.
3. The indication begins with the start code 12. After that a maximum of three code numbers appear in the order of the latest one first. The indication then returns to the start code 12 to repeat (the indication will stay on for five minutes at the most).
4. The malfunction code chart is given on page BR-54.

Example: Code No. 32 REAR SENSOR SHORT-CIRCUIT

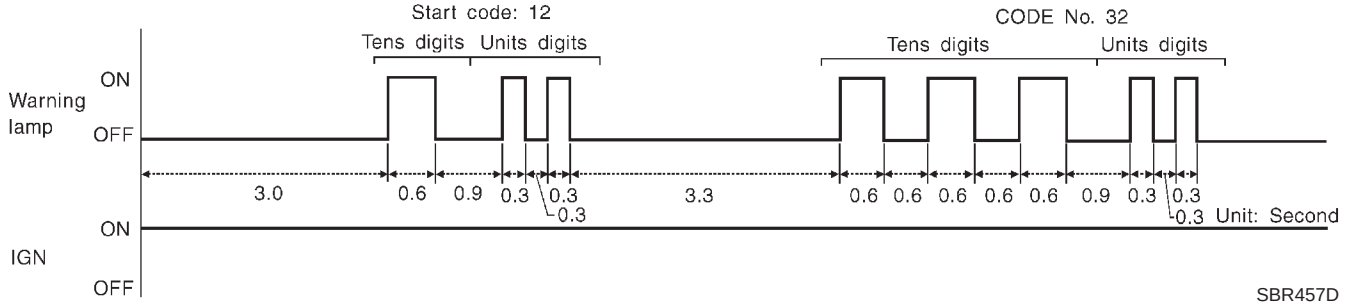

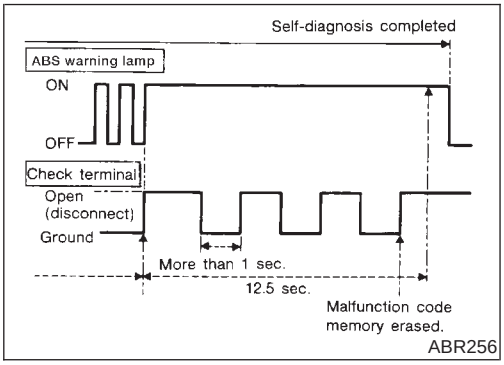

HOW TO ERASE SELF-DIAGNOSTIC RESULTS (MALFUNCTION CODES)

NABR0095S04

1. Disconnect the check terminal from ground (ABS warning lamp will stay lit).
2. Within 12.5 seconds, ground the check terminal three times. Each terminal ground must last more than 1 second. The ABS warning lamp goes out after the erase operation has been completed.
3. Perform self-diagnosis again. Refer to BR-41. Only the start-code should appear, no malfunction codes.

CONSULT-II

=NABR0128

CONSULT-II APPLICATION TO ABS

NABR0128S03

ITEM	SELF-DIAGNOSTIC RESULTS	DATA MONITOR	ACTIVE TEST
Front right wheel sensor	×	×	—
Front left wheel sensor	×	×	—
Rear right wheel sensor	×	×	—
Rear left wheel sensor	×	×	—
DECEL G-sensor 1	×	×	×
DECEL G-sensor 2	×	×	×
ABS sensor	×	—	—
Stop lamp switch	—	×	—
Front right inlet solenoid valve	×	×	×
Front right outlet solenoid valve	×	×	×
Front left inlet solenoid valve	×	×	×
Front left outlet solenoid valve	×	×	×
Rear inlet solenoid valve	×	×	×
Rear outlet solenoid valve	×	×	×
Actuator solenoid valve relay	×	×	—
Actuator motor relay (ABS MOTOR is shown on the Data Monitor screen.)	×	×	×
ABS warning lamp	—	×	—
Battery voltage	×	×	—
Control unit	×	—	—
ABS operating signal	—	×	×

×: Applicable
—: Not applicable

ECU [ABS ACTUATOR AND ELECTRIC UNIT (CONTROL UNIT)] PART NUMBER MODE

NABR0128S04

Ignore the ECU part number displayed in the ECU PART NUMBER MODE. Refer to parts catalog to order the ECU.

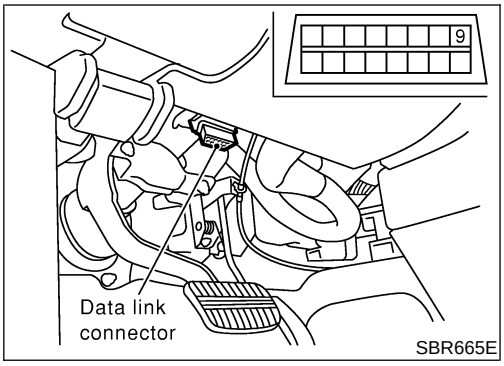

SBR665E

CONSULT-II Inspection Procedure

=NABR0129

SELF-DIAGNOSIS PROCEDURE

NABR0129S01

1. Turn ignition switch OFF.
2. Connect CONSULT-II to data link connector.
3. Start engine.
4. Drive vehicle over 30 km/h (19 MPH) or more for at least one minute.

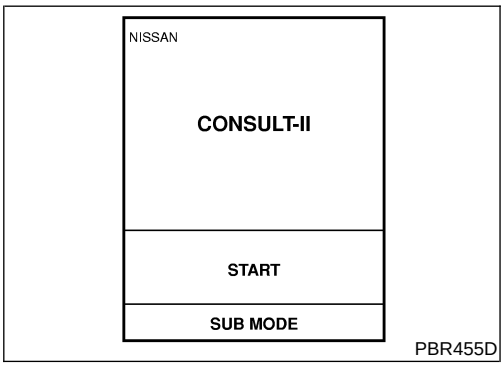

PBR455D

5. Stop vehicle with engine running and touch “START” on CONSULT-II screen.

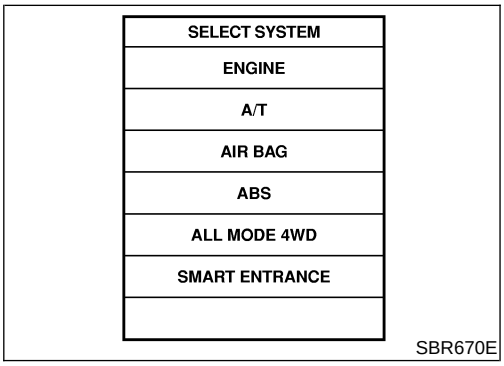

SBR670E

6. Touch “ABS”.

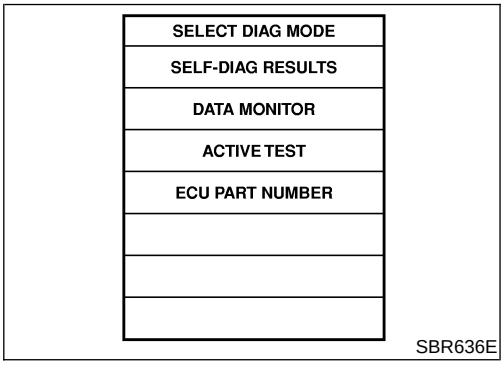

SBR636E

7. Touch “SELF-DIAG RESULTS”.

- The screen shows the detected malfunction and how many times the ignition switch has been turned ON since the malfunction.

8. Make the necessary repairs following the diagnostic procedures.

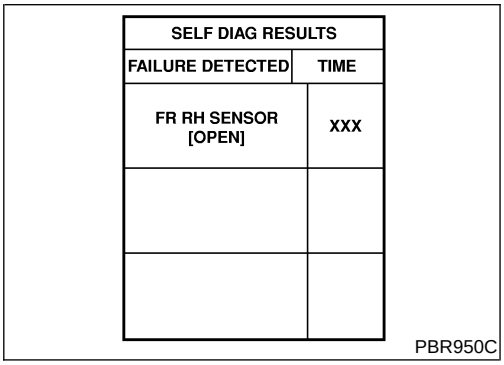

PBR950C

9. After the malfunctions are repaired, erase the self-diagnostic results stored in the control unit by touching “ERASE”.
10. Check warning lamp for deactivation after driving vehicle over 30 km/h (19 MPH) or more for at least one minute.
11. Test the ABS in a safe area to verify that it functions properly.

NOTE:
“SELF-DIAG RESULTS” screen shows the detected malfunction and how many times the ignition switch has been turned since the malfunction.

SELF-DIAGNOSTIC RESULTS MODE

NABR0129S07

Diagnostic item	Diagnostic item is detected when ...	Reference Page
FR RH SENSOR★1 [OPEN]	● Circuit for front right wheel sensor is open. (An abnormally high input voltage is entered.)	BR-56
FR LH SENSOR★1 [OPEN]	● Circuit for front left wheel sensor is open. (An abnormally high input voltage is entered.)	BR-56
RR RH SENSOR★1 [OPEN]	● Circuit for rear right sensor is open. (An abnormally high input voltage is entered.)	BR-56
RR LH SENSOR★1 [OPEN]	● Circuit for rear left sensor is open. (An abnormally high input voltage is entered.)	BR-56
FR RH SENSOR★1 [SHORT]	● Circuit for front right wheel sensor is shorted. (An abnormally low input voltage is entered.)	BR-56
FR LH SENSOR★1 [SHORT]	● Circuit for front left wheel sensor is shorted. (An abnormally low input voltage is entered.)	BR-56
RR RH SENSOR★1 [SHORT]	● Circuit for rear right sensor is shorted. (An abnormally low input voltage is entered.)	BR-56
RR LH SENSOR★1 [SHORT]	● Circuit for rear left sensor is shorted. (An abnormally low input voltage is entered.)	BR-56
ABS SENSOR★1 [ABNORMAL SIGNAL]	● Teeth damage on sensor rotor or improper installation of wheel sensor. (Abnormal wheel sensor signal is entered.)	BR-56
FR RH IN ABS SOL [OPEN, SHORT]	● Circuit for front right inlet solenoid valve is open. (An abnormally low output voltage is entered.)	BR-59
FR LH IN ABS SOL [OPEN, SHORT]	● Circuit for front left inlet solenoid valve is open. (An abnormally low output voltage is entered.)	BR-59
FR RH OUT ABS SOL [OPEN, SHORT]	● Circuit for front right outlet solenoid valve is open. (An abnormally low output voltage is entered.)	BR-59
FR LH OUT ABS SOL [OPEN, SHORT]	● Circuit for front left outlet solenoid valve is open. (An abnormally low output voltage is entered.)	BR-59
RR IN ABS SOL [OPEN, SHORT]	● Circuit for rear inlet solenoid valve is shorted. (An abnormally high output voltage is entered.)	BR-59
RR OUT ABS SOL [OPEN, SHORT]	● Circuit for rear outlet solenoid valve is shorted. (An abnormally high output voltage is entered.)	BR-59
ABS ACTUATOR RELAY [ABNORMAL]	● Actuator solenoid valve relay is ON, even if control unit sends off signal. ● Actuator solenoid valve relay is OFF, even if control unit sends on signal.	BR-59
ABS MOTOR RELAY [ABNORMAL]	● Circuit for ABS motor relay is open or shorted. ● Circuit for actuator motor is open or shorted. ● Actuator motor relay is stuck.	BR-61
BATTERY VOLT [VB-LOW]	● Power source voltage supplied to ABS control unit is abnormally low.	BR-63
CONTROL UNIT	● Function of calculation in ABS control unit has failed.	BR-67
FR & RR G-SEN [ABNORMAL]	● DECEL G sensor output is abnormally higher or lower than specifications.	BR-65
FR & RR G-SEN TEST [ABNORMAL]	● Output voltage is always constant due to G sensor malfunction.	BR-65
G-SEN TEST [ABNORMAL]	● G sensor malfunction is detected during self-diagnosis.	BR-65

★1: If one or more wheels spin on a rough or slippery road for 40 seconds or more, the ABS warning lamp will illuminate. This does not indicate a malfunction. Only in the case of the short-circuit (Code Nos. 26, 22, 32 and 36), after repair the ABS warning lamp also illuminates when the ignition switch is turned ON. In this case, drive the vehicle at speeds greater than 30 km/h (19 MPH) or more for

approximately 1 minute as specified in "SELF-DIAGNOSIS PROCEDURE", BR-41. Check to ensure that the ABS warning lamp goes out while the vehicle is being driven.

DATA MONITOR PROCEDURE

NABR0129S03

1. Turn ignition switch OFF.
2. Connect CONSULT-II to data link connector for CONSULT-II.
3. Turn ignition switch ON.
4. Touch "START" on CONSULT-II screen.

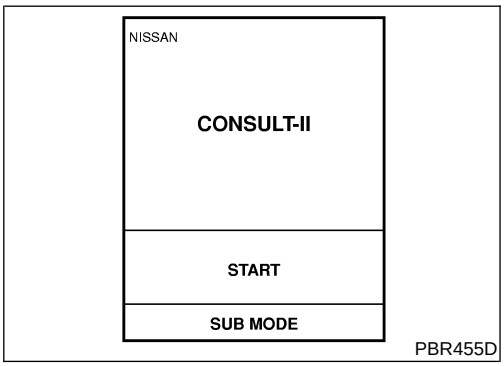

PBR455D

5. Touch "ABS".

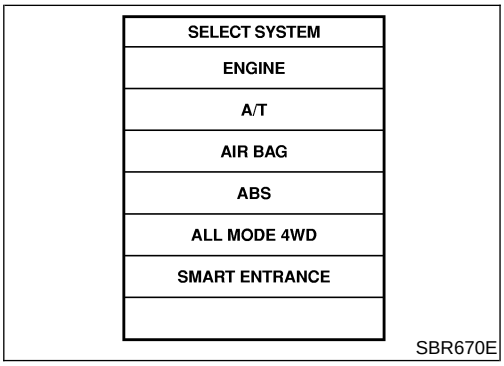

SBR670E

6. Touch "DATA MONITOR".

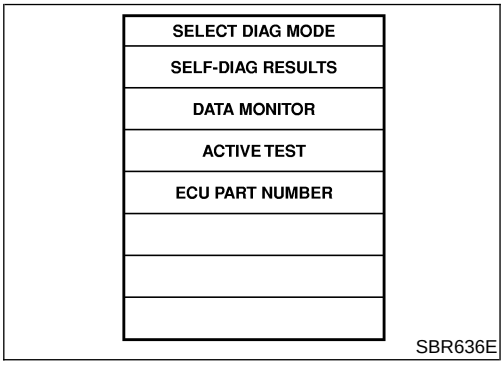

SBR636E

7. Touch "SETTING" on "SELECT MONITOR ITEM" screen.

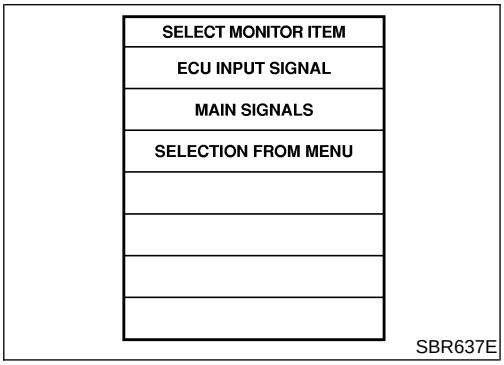

SBR637E

ACTIVE TEST PROCEDURE

=NABR0129S04

- When conducting Active test, vehicle must be stationary.
- When ABS warning lamp stays on, never conduct Active test.

1. Turn ignition switch OFF.
2. Connect CONSULT-II to data link connector.
3. Start engine.
4. Touch "START" on CONSULT-II screen.

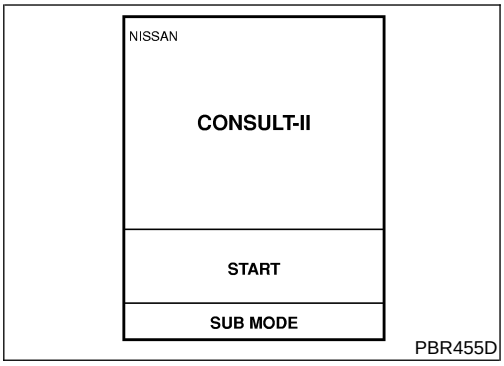

PBR455D

5. Touch "ABS".

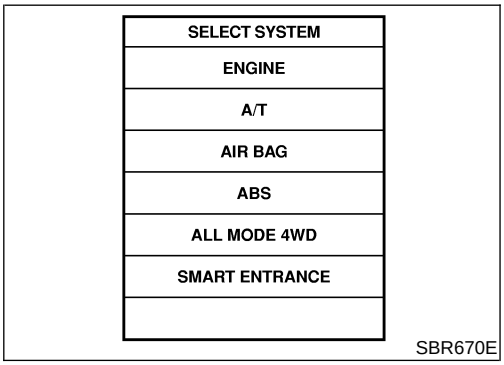

SBR670E

6. Touch "ACTIVE TEST".

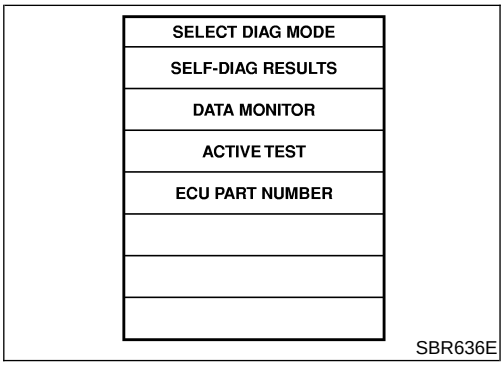

SBR636E

7. Select active test item by touching screen.

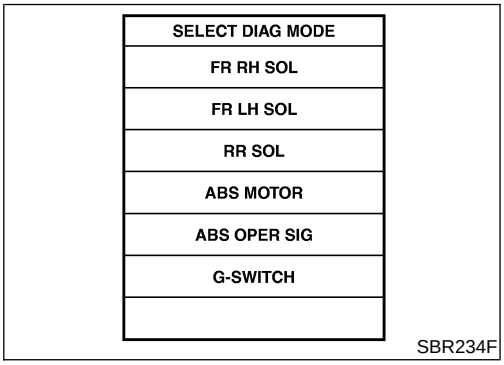

SBR234F

8. Touch "START".
9. Carry out the active test by touching screen key.

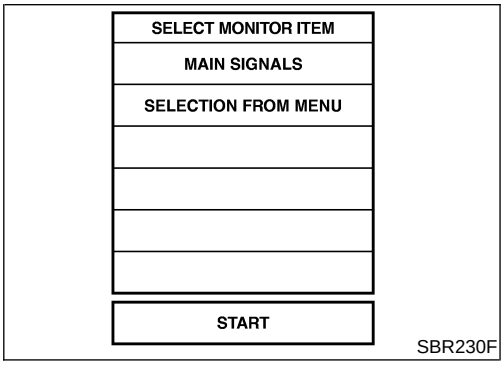

SBR230F

DATA MONITOR MODE

NABR0129S08

MONITOR ITEM	CONDITION	SPECIFICATION
FR RH SENSOR FR LH SENSOR RR RH SENSOR RR LH SENSOR	Drive vehicle. (Each wheel is rotating.)	Wheel speed signal (Almost the same speed as speedometer.)
STOP LAMP SW	Brake is depressed.	Depress the pedal: ON Release the pedal: OFF
FR & RR G SEN	Vehicle is driven. Vehicle is stopped. Brake is applied.	During sudden braking while driving on high μ roads (asphalt roads, etc.): OFF While vehicle is stopped or during constant-speed driving: ON
FR RH IN SOL FR RH OUT SOL FR LH IN SOL FR LH OUT SOL RR IN SOL RR OUT SOL	1. Drive vehicle at speeds over 30 km/h (19 MPH) or more for at least 1 minute. 2. Engine is running.	Operating conditions for each solenoid valve are indicated. ABS is not operating: OFF
MOTOR RELAY		ABS is not operating: OFF ABS is operating: ON
ACTUATOR RELAY	Ignition switch is ON or engine is running.	Ignition switch ON (Engine stops): OFF Engine running: ON
WARNING LAMP		ABS warning lamp is turned on: ON ABS warning lamp is turned off: OFF
BATTERY VOLT		Power supply voltage for control unit
ABS OPER SIG		ABS is not operating: OFF ABS is operating: ON

ACTIVE TEST MODE

NABR0129S09

TEST ITEM	CONDITION	JUDGEMENT		
FR RH SOLENOID FR LH SOLENOID RR SOLENOID	Engine is running.	Brake fluid pressure control operation		
			IN SOL	OUT SOL
		UP (Increase):	OFF	OFF
		KEEP (Hold):	ON	OFF
		DOWN (Decrease):	ON	ON
ABS MOTOR		ABS actuator motor ON: Motor runs (ABS motor relay ON) OFF: Motor stops (ABS motor relay OFF)		
ABS OPER SIG	Ignition switch is ON or engine is running.	ON: Set ABS OPER SIG "ON" (ABS is operating.) OFF: Set ABS OPER SIG "OFF" (ABS is not operating.)		
G SENSOR	Ignition switch is ON.	G SENSOR ON: Set G SENSOR MONITOR "ON" (G sensor circuit is closed.) OFF: Set G SENSOR MONITOR "OFF" (G sensor circuit is open.)		

NOTE:
Active test will automatically stop ten seconds after the test starts. (TEST IS STOPPED monitor shows ON.)

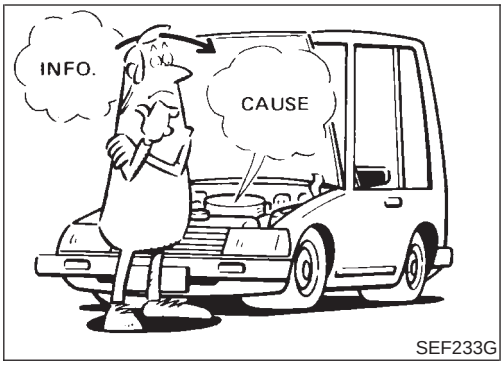

SEF233G

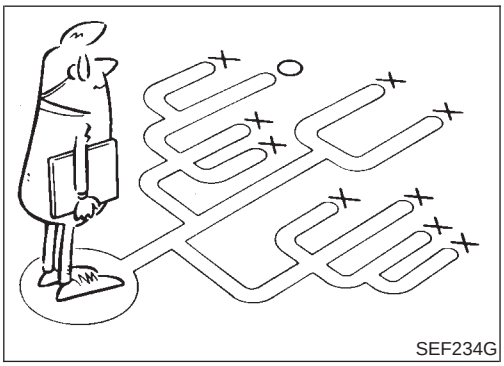
SEF234G

How to Perform Trouble Diagnoses for Quick and Accurate Repair

NABR0098

INTRODUCTION

NABR0098S01

The ABS system has an electronic control unit to control major functions. The control unit accepts input signals from sensors and instantly drives the actuators. It is essential that both kinds of signals are proper and stable. It is also important to check for conventional incidents: such as air leaks in booster lines, lack of brake fluid, or other incidents with the brake system.

It is much more difficult to diagnose an incident that occurs intermittently rather than continuously. Most intermittent incidents are caused by poor electric connections or faulty wiring. In this case, careful checking of suspicious circuits may help prevent the replacement of good parts.

A visual check only may not find the cause of the incidents, so a road test should be performed.

Before undertaking actual checks, take a few minutes to talk with a customer who approaches with an ABS complaint. The customer is a very good source of information on such incidents; especially intermittent ones. By talking to the customer, find out what symptoms are present and under what conditions they occur. Start your diagnosis by looking for “conventional” incidents first. This is one of the best ways to troubleshoot brake incidents on an ABS controlled vehicle.

Also check related Service bulletins for information.

Preliminary Check

NABR0099

1	CHECK BRAKE FLUID	
Check brake fluid for contamination.		
Has brake fluid been contaminated?		
Yes	▶	Replace. GO TO 2.
No	▶	GO TO 2.

2	CHECK BRAKE FLUID LEVEL	
Check brake fluid level in reservoir tank. Low fluid level may indicate brake pad wear or leakage from brake line.		
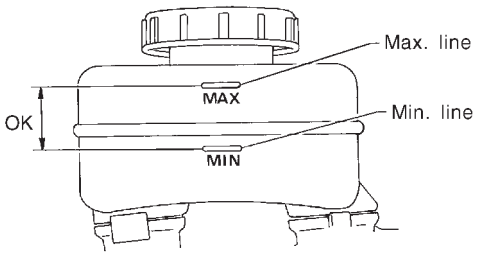 SBR451D		
Is brake fluid filled between MAX and MIN lines on reservoir tank?		
Yes	▶	GO TO 3.
No	▶	Fill up brake fluid. GO TO 3.

3	CHECK BRAKE LINE	
Check brake line for leakage.		
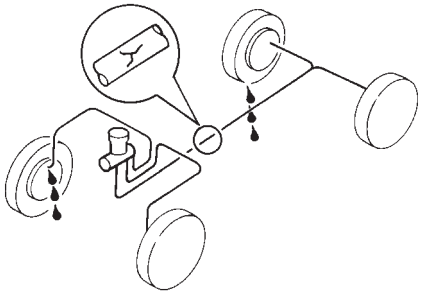 SBR389C		
Is leakage present at or around brake lines, tubes or hoses or are any of these parts cracked or damaged?		
Yes	▶	Repair. GO TO 4.
No	▶	GO TO 4.

4	CHECK BRAKE BOOSTER OPERATION	
Check brake booster for operation and air tightness. Refer to "On-vehicle Service", "BRAKE BOOSTER", BR-19.		
Is brake booster airtight and functioning properly?		
Yes	▶	GO TO 5.
No	▶	Replace. GO TO 5.

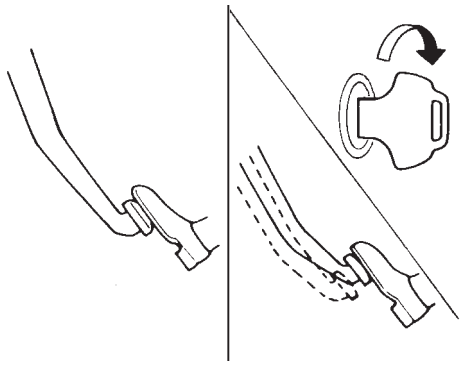

SBR058C

5	CHECK BRAKE PAD AND ROTOR	
Check brake pad and rotor. Refer to (BR-22, BR-24).		
Are brake pads and rotors functioning properly?		
Yes	▶	GO TO 6.
No	▶	Replace.

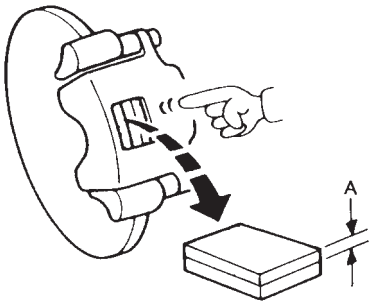

SBR059C

6	RECHECK BRAKE FLUID LEVEL	
Check brake fluid level in reservoir tank again.		

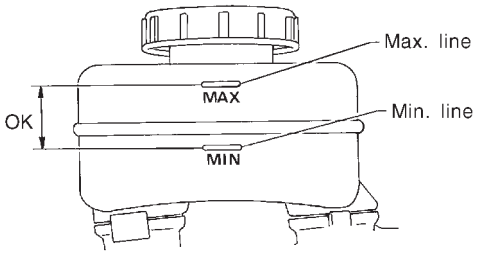

SBR451D

Is brake fluid filled between MAX and MIN lines on reservoir tank?

Yes	▶	GO TO 7.
No	▶	Fill up brake fluid.

7	CHECK WARNING LAMP ACTIVATION	
Check warning lamp activation.		

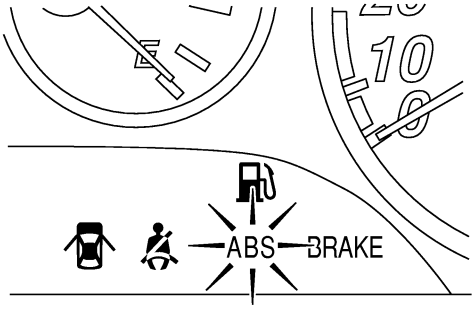

SBR677E

Does warning lamp turn on when ignition switch is turned ON?

Yes	▶	GO TO 8.
No	▶	Check fuse, warning lamp bulb and warning lamp circuit.

8	CHECK WARNING LAMP DEACTIVATION	
Check warning lamp for deactivation after engine is started.		

Does warning lamp turn off when engine is started?

Yes	▶	GO TO 9.
No	▶	Go to Self-diagnosis (BR-41, BR-44).

9	DRIVE VEHICLE	
Drive vehicle at speeds over 30 km/h (19 MPH) or more for at least one minute.		

Does warning lamp remain off after vehicle has been driven at 30 km/h (19 MPH) or more for at least one minute?

Yes	▶	**INSPECTION END**
No	▶	Go to Self-diagnosis (BR-41, BR-44).

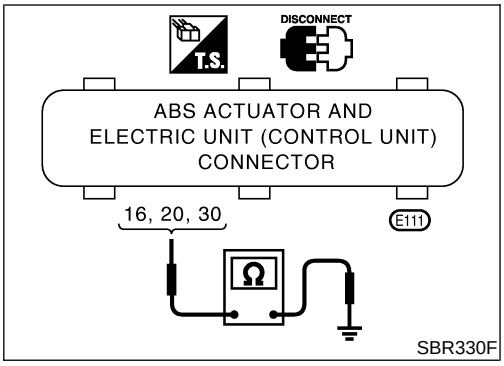

Ground Circuit Check

=NABR0130

ABS ACTUATOR AND ELECTRIC UNIT (CONTROL UNIT) GROUND

NABR0130S01

- Check continuity between ABS actuator and electric unit (control unit) connector terminals and ground.

  Continuity should exist.

Malfunction Code/Symptom Chart

NABR0150

Code No. (No. of warning lamp flashes)	Malfunctioning part	Reference Page
12	Self-diagnosis could not detect any malfunctions.	—
17 ★4	G sensor and circuit	BR-65
18 ★1	Sensor rotor	BR-56
21 ★1	Front right sensor (open-circuit)	BR-56
22 ★1	Front right sensor (short-circuit)	BR-56
25 ★1	Front left sensor (open-circuit)	BR-56
26 ★1	Front left sensor (short-circuit)	BR-56
31 ★1	Rear right sensor (open-circuit)	BR-56
32 ★1	Rear right sensor (short-circuit)	BR-56
35 ★1	Rear left sensor (open-circuit)	BR-56
36 ★1	Rear left sensor (short-circuit)	BR-56
41	Actuator front right outlet solenoid valve	BR-59
42	Actuator front right inlet solenoid valve	BR-59
45	Actuator front left outlet solenoid valve	BR-59
46	Actuator front left inlet solenoid valve	BR-59
55	Actuator rear outlet solenoid valve	BR-59
56	Actuator rear inlet solenoid valve	BR-59
57 ★2	Power supply (Low voltage)	BR-63
61 ★3	Actuator motor or motor relay	BR-61
63	Solenoid valve relay	BR-59
64	FR & RR G sensor	BR-65
65	FR & RR G sensor input signal abnormal	BR-65
66	FR & RR G sensor test abnormal	BR-65
71	Control unit	BR-67
ABS works frequently	—	BR-68
Unexpected pedal action	—	BR-68
Long stopping distance	—	BR-70
ABS does not work	—	BR-70
Pedal vibration and noise	—	BR-71
Warning lamp does not come on when ignition switch is turned ON.	Fuse, warning lamp bulb or warning lamp circuit Control unit	BR-72
Warning lamp stays on when ignition switch is turned ON.	Control unit power supply circuit Warning lamp bulb circuit Control unit or control unit connector Solenoid valve relay stuck Power supply for solenoid valve relay coil	BR-74
Vehicle vibrates excessively when ABS is operating.	ABS actuator and electric unit (control unit) to TCM circuit	BR-77

★1: If one or more wheels spin on a rough or slippery road for 40 seconds or more, the ABS warning lamp will illuminate. This does not indicate a malfunction. Only in the case of the short-circuit (Code Nos. 26, 22, 32 and 36), after repair the ABS warning lamp also illuminates when the ignition switch is turned ON. In this case, drive the vehicle at speeds greater than 30 km/h (19 MPH) or more for

approximately 1 minute as specified in "SELF-DIAGNOSIS PROCEDURE", BR-44. Check to ensure that the ABS warning lamp goes out while the vehicle is being driven.

★2: The trouble code "57", which refers to a low power supply voltage, does not indicate that the ABS actuator and electric unit (control unit) is malfunctioning. Do not replace the ABS actuator and electric unit (control unit) with a new one.

★3: The trouble code "61" can sometimes appear when the ABS motor is not properly grounded. If it appears, be sure to check the condition of the ABS motor ground circuit connection.

Wheel Sensor or Rotor

DIAGNOSTIC PROCEDURE

NABR0132

Malfunction code No. 21, 22, 25, 26, 31, 32, 35, 36 or 18

NOTE:
Wheel position should be distinguished by code No. except code No. 18 (sensor rotor).

1	INSPECTION START
Wheel sensor inspection	

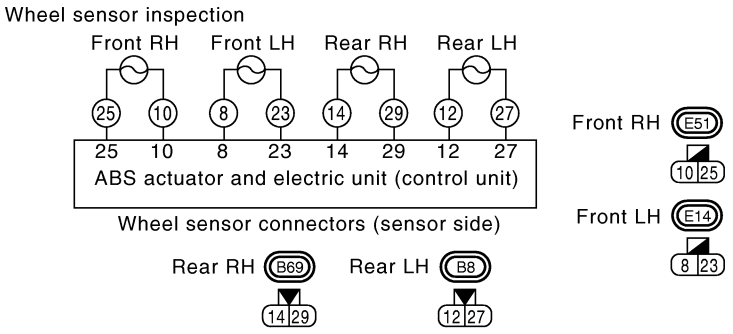

SBR332F

▶	GO TO 2.

2	CHECK CONNECTOR
1. Disconnect connectors from ABS actuator and electric unit (control unit) and wheel sensor of malfunction code No. Check terminals for damage or loose connection. Then reconnect connectors. 2. Carry out self-diagnosis again.	
Does warning lamp activate again?	
Yes ▶	GO TO 3.
No ▶	**INSPECTION END**

3	CHECK WHEEL SENSOR ELECTRICAL

1. Disconnect ABS actuator and electric unit (control unit) connector.
2. Check resistance between ABS actuator and electric unit (control unit) connector E111 terminals.
   Code No. 21 or 22 (Front RH wheel)
   Terminals 10 and 25
   Code No. 25 or 26 (Front LH wheel)
   Terminals 8 and 23
   Code No. 31 or 32 (Rear RH wheel)
   Terminals 14 and 29
   Code No. 35 or 36 (Rear LH wheel)
   Terminals 12 and 27

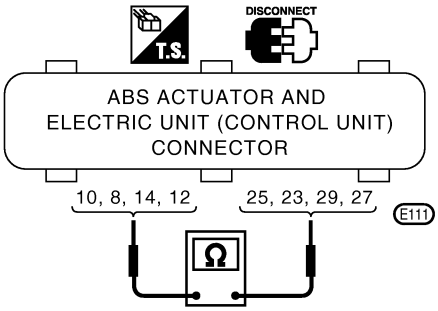

SBR333F

Resistance:
Front 0.9 - 1.1 kΩ
Rear 1.44 - 1.76 kΩ

Is front resistance 0.9 - 1.1 kΩ and rear resistance 1.44 - 1.76 kΩ?

Yes	▶	GO TO 5.
No	▶	GO TO 4.

4	CHECK WHEEL SENSOR

Check each sensor for resistance.

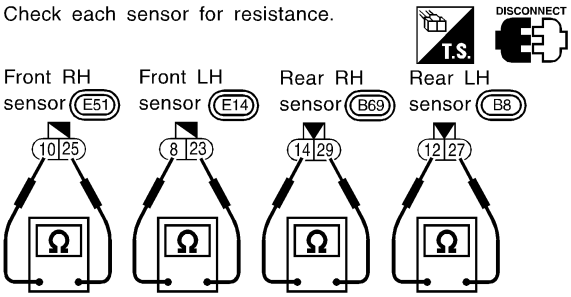

SBR693E

Resistance:
Front 0.9 - 1.1 kΩ
Rear 1.44 - 1.76 kΩ

Is front resistance 0.9 - 1.1 kΩ and rear resistance 1.44 - 1.76 kΩ?

Yes	▶	**Check the following.** If NG, repair harness or connectors. ● Harness connectors E111, E14, E51, B8, B69 ● Harness for open or short between wheel sensor connectors and ABS actuator and electric unit (control unit)
No	▶	Replace wheel sensor.

5	CHECK TIRE	
Check for inflation pressure, wear and size of each tire. (See NOTE.)		
Are tire pressure and size correct and is tire wear within specifications?		
Yes	▶	GO TO 6.
No	▶	Adjust tire pressure or replace tire(s). (See NOTE.)

6	CHECK WHEEL BEARING	
Check wheel bearing axial end play. (See NOTE.)		
Is wheel bearing axial end play within specifications?		
Yes	▶	GO TO 7.
No	▶	Check wheel bearing. Refer to AX-19, AX-4, "Front wheel bearing" and "Rear wheel bearing".

7	CHECK SENSOR ROTOR	
Check sensor rotor for teeth damage. (See NOTE.)		
Is sensor rotor free from damage?		
Yes	▶	Check ABS actuator and electric unit (control unit) pin terminals for damage or the connection of ABS actuator and electric unit (control unit) harness connector. Reconnect ABS actuator and electric unit (control unit) harness connector. Then retest.
No	▶	Replace sensor rotor. (See NOTE.)

ABS Actuator Solenoid Valve or Solenoid Valve Relay

DIAGNOSTIC PROCEDURE

=NABR0133

Malfunction code No. 41, 45, 55, 42, 46, 56, 63

1	INSPECTION START

Solenoid valve relay inspection

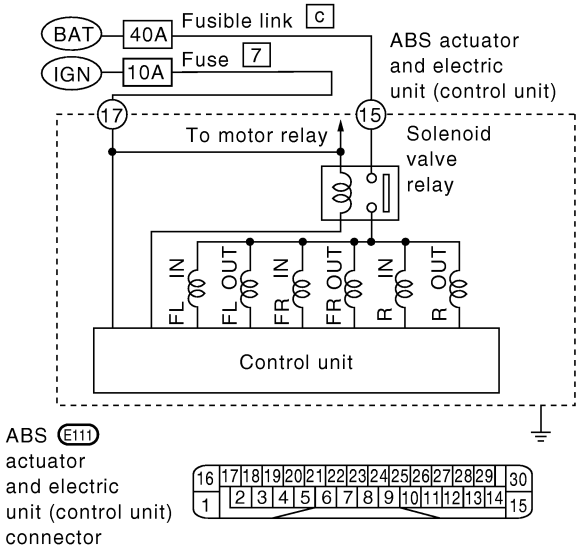

SBR334F

▶	GO TO 2.

2	CHECK FUSIBLE LINK

Check 40A fusible link **c**. For fusible link layout, refer to EL-11, “POWER SUPPLY ROUTING”.

Is fusible link OK?

Yes	▶	GO TO 3.
No	▶	GO TO 6.

3	CHECK CONNECTOR

1. Disconnect connector from ABS actuator and electric unit (control unit). Check terminals for damage or loose connection. Then reconnect connector.
2. Carry out self-diagnosis again.

Does warning lamp activate again?

Yes	▶	GO TO 4.
No	▶	**INSPECTION END**

4	CHECK ABS ACTUATOR AND ELECTRIC UNIT (CONTROL UNIT) GROUND CIRCUIT

Refer to “ABS ACTUATOR AND ELECTRIC UNIT (CONTROL UNIT) GROUND” in “Ground Circuit Check”, BR-53.

Is ground circuit OK?

Yes	▶	GO TO 5.
No	▶	Repair harness or connector.

5	CHECK SOLENOID VALVE POWER SUPPLY CIRCUIT

1. Disconnect ABS actuator and electric unit (control unit) connector.
2. Check voltage between ABS actuator and electric unit (control unit) connector E111 terminal 15 and ground.

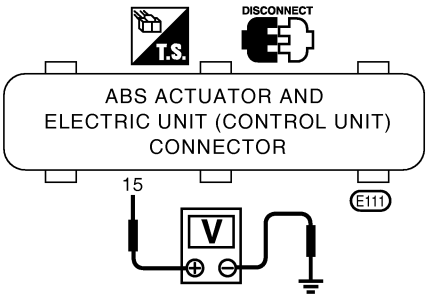

SBR335F

Does battery voltage exist?

Yes	▶	Replace ABS actuator and electric unit (control unit).
No	▶	**Check the following.** If NG, repair harness or connectors. ● Harness connector E111 ● Harness for open or short between ABS actuator and electric unit (control unit) and fusible link

6	REPLACE FUSIBLE LINK

Replace fusible link.

Does the fusible link blow out when ignition switch is turned ON?

Yes	▶	GO TO 7.
No	▶	**INSPECTION END**

7	CHECK SOLENOID VALVE RELAY POWER SUPPLY CIRCUIT FOR SHORT

1. Disconnect battery cable and ABS actuator and electric unit (control unit) connector.
2. Check continuity between ABS actuator and electric unit (control unit) connector E111 terminal 15 and ground.

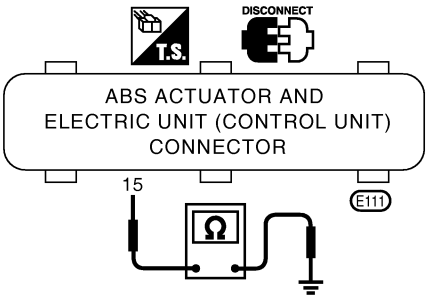

SBR336F

Continuity should not exist.

Does continuity exist?

Yes	▶	**Check the following.** If NG, repair harness or connector. ● Harness connector E111 ● Harness for open or short between ABS actuator and electric unit (control unit) and fusible link
No	▶	Replace ABS actuator and electric unit (control unit).

Motor Relay or Motor

DIAGNOSTIC PROCEDURE

=NABR0134

Malfunction code No. 61

1	INSPECTION START

ABS motor relay inspection

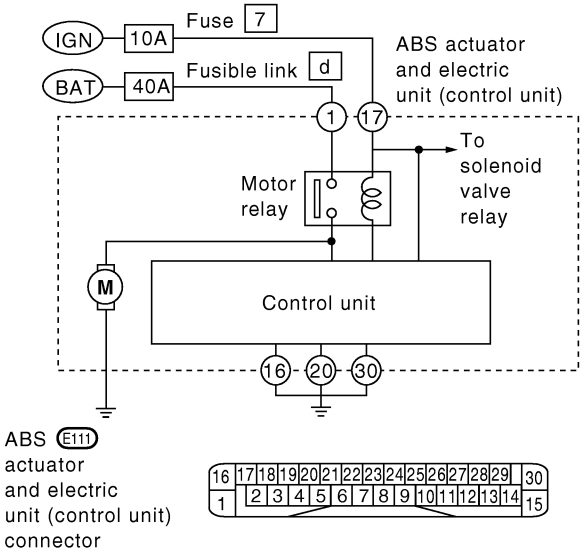

SBR337F

▶	GO TO 2.

2	CHECK FUSIBLE LINK

Check 40A fusible link **d**. For fusible link layout, refer to EL-11, “POWER SUPPLY ROUTING”.

Is fusible link OK?

Yes	▶	GO TO 3.
No	▶	GO TO 6.

3	CHECK CONNECTOR

1. Disconnect ABS actuator and electric unit (control unit) connector. Check terminals for damage or loose connection. Then reconnect connector.
2. Carry out self-diagnosis again.

Does warning lamp activate again?

Yes	▶	GO TO 4.
No	▶	**INSPECTION END**

4	CHECK ABS ACTUATOR AND ELECTRIC UNIT (CONTROL UNIT) GROUND CIRCUIT

Refer to “ABS ACTUATOR AND ELECTRIC UNIT (CONTROL UNIT) GROUND” in “Ground Circuit Check”, BR-53.

Is ground circuit OK?

Yes	▶	GO TO 5.
No	▶	Repair harness or connector.

5	CHECK MOTOR RELAY POWER SUPPLY CIRCUIT

1. Disconnect ABS actuator and electric unit (control unit) connector.
2. Check voltage between ABS actuator and electric unit (control unit) connector E111 terminal 1 and ground.

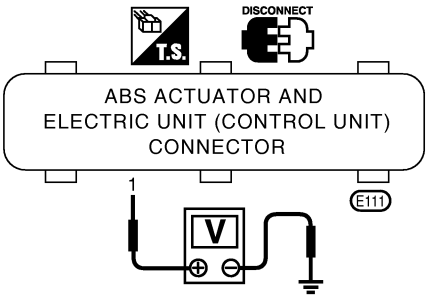

SBR338F

Does battery voltage exist?

Yes	▶	Replace ABS actuator and electric unit (control unit).
No	▶	**Check the following.** If NG, repair harness or connector. ● Harness connector E111 ● Harness for open or short between ABS actuator and electric unit (control unit) and fusible link

6	REPLACE FUSIBLE LINK

Replace fusible link.

Does the fusible link blow out when ignition switch is turned ON?

Yes	▶	GO TO 7.
No	▶	**INSPECTION END**

7	CHECK ABS ACTUATOR MOTOR POWER SUPPLY CIRCUIT FOR SHORT

1. Disconnect battery cable and ABS actuator and electric unit (control unit) connector.
2. Check continuity between ABS actuator and electric unit (control unit) connector E111 terminal 1 and ground.

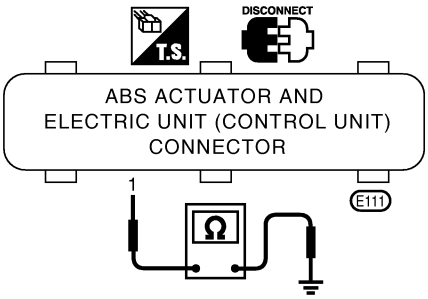

SBR339F

Continuity should not exist.

Does continuity exist?

Yes	▶	**Check the following.** If NG, repair harness or connector. ● Harness connector E111 ● Harness for open or short between ABS actuator and electric unit (control unit) and fusible link
No	▶	Replace ABS actuator and electric unit (control unit).

Low Voltage

DIAGNOSTIC PROCEDURE

NABR0135

Malfunction code No. 57

1	INSPECTION START
ABS actuator and electric unit (control unit) power supply and ground circuit inspection	

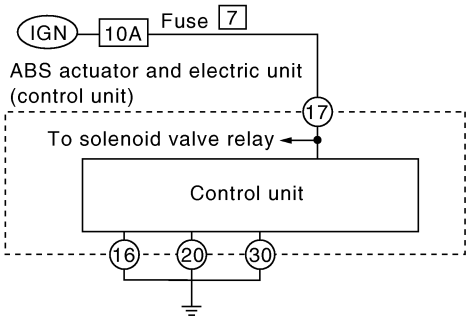

SBR340F

▶	GO TO 2.

2	CHECK FUSE
Check 10A fuse No. 7. For fuse layout, refer to EL-11, “POWER SUPPLY ROUTING”.	
Is fuse OK?	
Yes ▶	GO TO 3.
No ▶	GO TO 6.

3	CHECK CONNECTOR
1. Disconnect ABS actuator and electric unit (control unit) connector. Check terminals for damage or loose connections. Then reconnect connector. 2. Carry out self-diagnosis again.	
Does warning lamp activate again?	
Yes ▶	GO TO 4.
No ▶	**INSPECTION END**

4	CHECK ABS ACTUATOR AND ELECTRIC UNIT (CONTROL UNIT) GROUND CIRCUIT
Refer to “ABS ACTUATOR AND ELECTRIC UNIT (CONTROL UNIT) GROUND” in “Ground Circuit Check”, BR-53.	
Is ground circuit OK?	
Yes ▶	GO TO 5.
No ▶	Repair harness or connector.

5	CHECK ABS ACTUATOR AND ELECTRIC UNIT (CONTROL UNIT) POWER SUPPLY CIRCUIT

1. Disconnect ABS actuator and electric unit (control unit) connector.
2. Check voltage between ABS actuator and electric unit (control unit) connector E111 terminal 17 and ground.

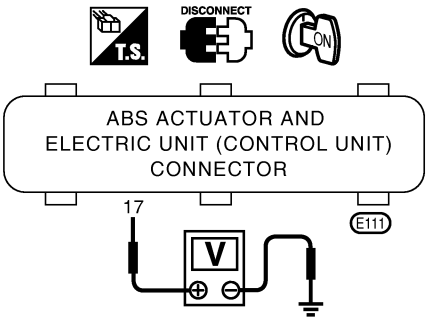

SBR341F

Does battery voltage exist when ignition switch is turned ON?

Yes	▶	Replace ABS actuator and electric unit (control unit).
No	▶	**Check the following.** If NG, repair harness or connector. ● Harness connector E111 ● Harness for open or short between ABS actuator and electric unit (control unit) and fuse

6	REPLACE FUSE

Replace fuse.

Does the fuse blow out when ignition switch is turned ON?

Yes	▶	GO TO 7.
No	▶	**INSPECTION END**

7	CHECK ABS ACTUATOR AND ELECTRIC UNIT (CONTROL UNIT) POWER SUPPLY CIRCUIT FOR SHORT

1. Disconnect battery cable and ABS actuator and electric unit (control unit) connector.
2. Check continuity between ABS actuator and electric unit (control unit) connector E111 terminal 17 and ground.

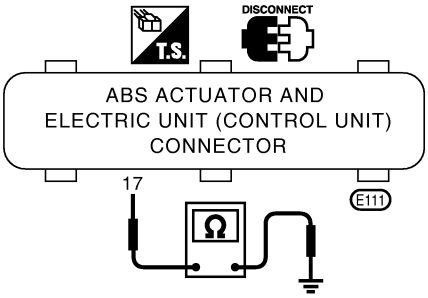

SBR342F

Does continuity exist?

Yes	▶	**Check the following.** If NG, repair harness or connector. ● Harness connector E111 ● Harness for open or short between ABS actuator and electric unit (control unit) and fuse
No	▶	Replace ABS actuator and electric unit (control unit).

G Sensor and Circuit

DIAGNOSTIC PROCEDURE

=NABR0151

Malfunction code No. 17, 64, 65, 66, 68

1	INSPECTION START
G sensor inspection	

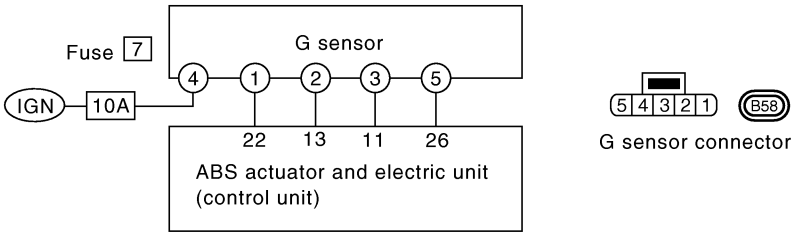

SBR343F

▶	GO TO 2.

2	CHECK CONNECTOR
1. Disconnect ABS actuator and electric unit (control unit) and G sensor connectors. Check terminals for damage or loose connection. Then reconnect connectors. 2. Carry out self-diagnosis again.	
Does warning lamp active again?	
Yes ▶	GO TO 3.
No ▶	**INSPECTION END**

3	CHECK G SENSOR POWER SUPPLY CIRCUIT
1. Disconnect G sensor connector B58. 2. Check voltage between G sensor connector terminals 4 and ground.	

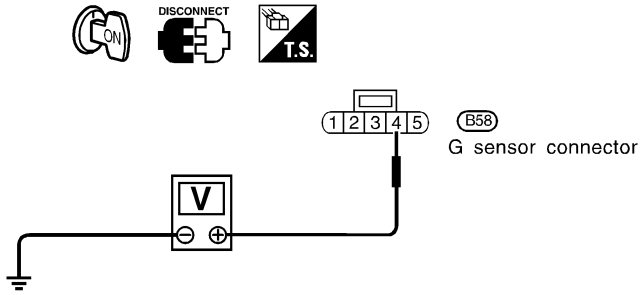

SBR244F

Does battery voltage exist?	
Yes ▶	GO TO 4.
No ▶	**Check the following. If NG, repair harness or connectors.** ● Harness connectors E111, B58 ● Harness for open or short between G sensor and ABS actuator and electric unit (control unit).

4	CHECK G SENSOR ELECTRICAL

1. Connect G sensor body side terminal and sensor side terminal with suitable harness.
2. Check voltage between terminals 1 and 2, 1 and 3 under the following conditions.

G sensor condition

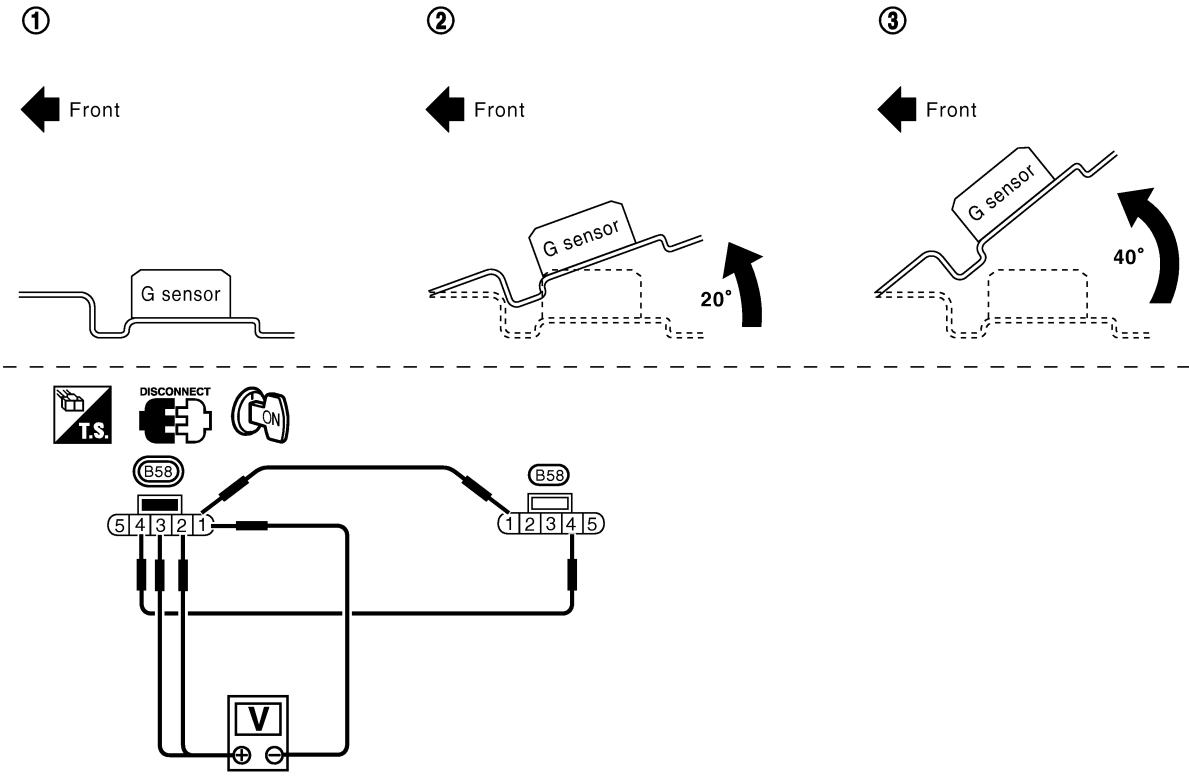

SBR245F

G sensor condition	Voltage between terminals 1 and 2	Voltage between terminals 1 and 3
1	Approx. 5V	Approx. 5V
2	Approx. 10V	Approx. 10V
3	Approx. 5V	Approx. 10V

MTBL0661

Is voltage OK?

Yes ▶	Check ABS actuator and electric unit (control unit) pin terminals for damage or the connection of ABS actuator and electric unit (control unit) harness connector. Then retest.
No ▶	Replace G sensor.

Control Unit

DIAGNOSTIC PROCEDURE

=NABR0137

Malfunction code No. 71

1	INSPECTION START
ABS actuator and electric unit (control unit) power supply and ground circuit inspection	

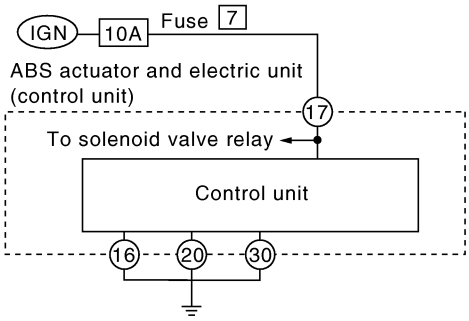

SBR344F

	▶	GO TO 2.

2	CHECK CONNECTOR
1. Disconnect ABS actuator and electric unit (control unit) connector. Check terminals for damage or loose connection. Then reconnect connector. 2. Carry out self-diagnosis again.	
Does warning lamp activate again?	
Yes ▶	GO TO 3.
No ▶	**INSPECTION END**

3	CHECK ABS ACTUATOR AND ELECTRIC UNIT (CONTROL UNIT) POWER SUPPLY CIRCUIT
Check voltage. Refer to “5. CHECK ABS ACTUATOR AND ELECTRIC UNIT (CONTROL UNIT) POWER SUPPLY CIRCUIT” in “DIAGNOSTIC PROCEDURE”, “Low Voltage”, BR-63.	
Does battery voltage exist when ignition switch is turned ON?	
Yes ▶	GO TO 4.
No ▶	Repair.

4	CHECK WARNING LAMP INDICATION
Does warning lamp indicate code No. 71 again?	
Yes or No	
Yes ▶	Replace ABS actuator and electric unit (control unit).
No ▶	Inspect the system according to the code No.

1. ABS Works Frequently

NABR0138

1	CHECK BRAKE FLUID PRESSURE	
Check brake fluid pressure distribution. Refer to BR-12, “Inspection”, “PROPORTIONING VALVE”.		
Is brake fluid pressure distribution normal?		
Yes	▶	GO TO 2.
No	▶	Repair. Then perform Preliminary Check. Refer to BR-50.

2	CHECK WHEEL SENSOR	
1. Check wheel sensor connector for terminal damage or loose connections. 2. Perform wheel sensor mechanical check. Refer to “7. CHECK SENSOR ROTOR” in “DIAGNOSTIC PROCEDURE”, “Wheel Sensor or Rotor”, BR-56.		
Is wheel sensor mechanism OK?		
Yes	▶	GO TO 3.
No	▶	Repair.

3	CHECK FRONT AXLE	
Check front axles for excessive looseness. Refer to AX-4, “Front Wheel Bearing”.		
Is front axle installed properly?		
Yes	▶	Go to “3. CHECK WARNING LAMP INDICATION” in “2. Unexpected Pedal Action”, BR-68.
No	▶	Repair.

2. Unexpected Pedal Action

NABR0139

1	CHECK BRAKE PEDAL STROKE	
Check brake pedal stroke.		
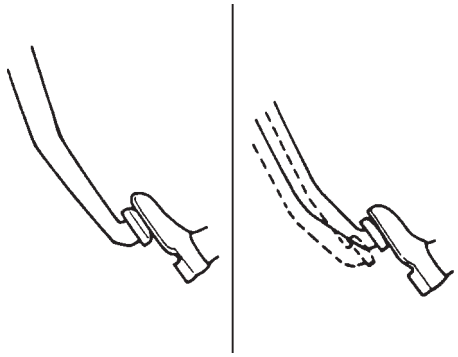 SBR540A		
Is brake pedal stroke excessively large?		
Yes	▶	Perform Preliminary Check. Refer to BR-50.
No	▶	GO TO 2.

2	CHECK MECHANICAL BRAKE SYSTEM PERFORMANCE	
Disconnect ABS actuator and electric unit (control unit) connector and check whether brake is effective. **Does brake system function properly when brake pedal is depressed?**		
Yes	▶	GO TO 3.
No	▶	Perform Preliminary Check. Refer to BR-50.

3	CHECK WARNING LAMP INDICATION	
Ensure warning lamp remains off while driving. 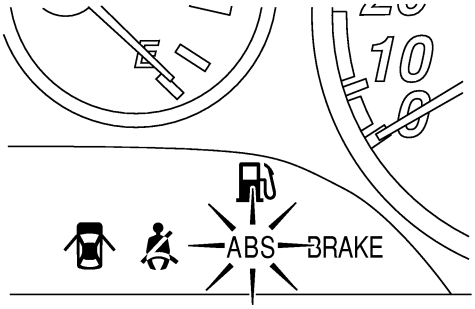 SBR677E **Is warning lamp turned off?**		
Yes	▶	GO TO 4.
No	▶	Carry out self-diagnosis. Refer to BR-41, BR-44.

4	CHECK WHEEL SENSOR	
1. Check wheel sensor connector for terminal damage or loose connection. 2. Perform wheel sensor mechanical check. Refer to "7. CHECK SENSOR ROTOR" in "DIAGNOSTIC PROCEDURE", "Wheel Sensor or Rotor", BR-56. **Is wheel sensor mechanism OK?**		
Yes	▶	Check ABS actuator and electric unit (control unit) pin terminals for damage or the connection of ABS actuator and electric unit harness connector. Reconnect ABS actuator and electric unit (control unit) harness connector. Then retest.
No	▶	Repair.

3. Long Stopping Distance

=NABR0140

1	CHECK MECHANICAL BRAKE SYSTEM PERFORMANCE	
Disconnect ABS actuator and electric unit (control unit) connector and check whether stopping distance is still long. **Does brake system function properly when brake pedal is depressed?**		
Yes	▶	Perform Preliminary Check and air bleeding (if necessary).
No	▶	Go to “3. CHECK WARNING LAMP INDICATION” in “2. Unexpected Pedal Action”, BR-68.

NOTE:
Stopping distance may be longer for vehicles without ABS when road condition is slippery.

4. ABS Does Not Work

NABR0141

1	CHECK WARNING LAMP INDICATION	
Does the ABS warning lamp activate? **Yes or No**		
Yes	▶	Carry out self-diagnosis. Refer to BR-41, BR-44.
No	▶	Go to “3. CHECK WARNING LAMP INDICATION” in “2. Unexpected Pedal Action”, BR-68.

NOTE:
ABS does not work when vehicle speed is under 10 km/h (6 MPH).

5. Pedal Vibration and Noise

NABR0142

1	INSPECTION START
Pedal vibration and noise inspection 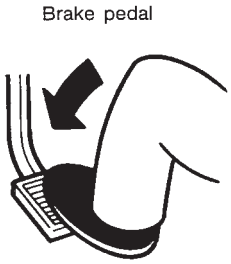 SAT797A	
▶	GO TO 2.

2	CHECK SYMPTOM
1. Apply brake. 2. Start engine. **Does the symptom appear only when engine is started?**	
Yes ▶	Carry out self-diagnosis. Refer to BR-41, BR-44.
No ▶	Go to “3. CHECK WARNING LAMP INDICATION” in “2. Unexpected Pedal Action”, BR-68.

NOTE:
ABS may operate and cause vibration under any of the following conditions.

- Applying brake gradually when shifting or operating clutch.
- Low friction (slippery) road.
- High speed cornering.
- Driving over bumps and pot holes.
- Engine speed is over 5,000 rpm with vehicle stopped.

6. Warning Lamp Does Not Come On When Ignition Switch Is Turned On

NABR0143

1	INSPECTION START
Warning lamp circuit inspection	

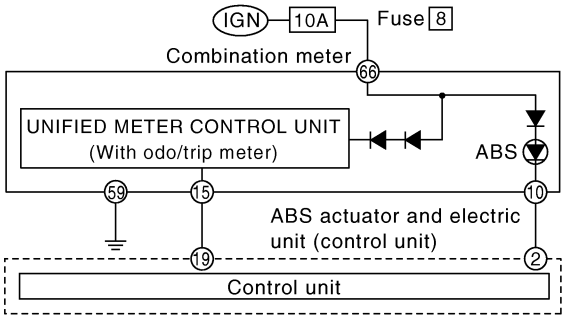

SBR345F

	▶	GO TO 2.

2	CHECK FUSE
Check 10A fuse No. 8. For fuse layout, refer to EL-11, “POWER SUPPLY ROUTING”.	
Is fuse OK?	
Yes ▶	GO TO 3.
No ▶	Replace fuse.

3	CHECK WARNING LAMP ACTIVATE
Disconnect ABS actuator and electric unit (control unit) connector.	

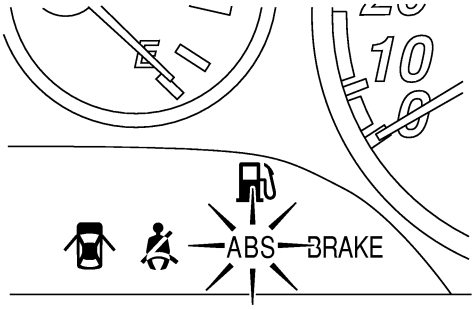

SBR677E

Does the warning lamp activate?	
Yes ▶	Replace ABS actuator and electric unit (control unit).
No ▶	GO TO 4.

4	CHECK HARNESS FOR SHORT

1. Disconnect ABS actuator and electric unit (control unit) connector and combination meter connector M24.
2. Check continuity between ABS actuator and electric unit (control unit) connector E111 terminal 2.

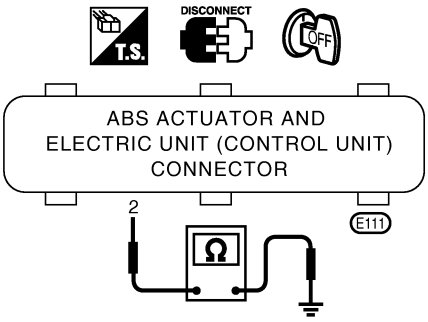

SBR346F

Continuity should not exist.

Does continuity exist?

Yes	▶	Repair harness or connectors.
No	▶	**Check combination meter.** Refer to EL-145, "WARNING LAMPS".

7. Warning Lamp Stays On When Ignition Switch Is Turned On

=NABR0144

1	INSPECTION START
Control unit inspection	

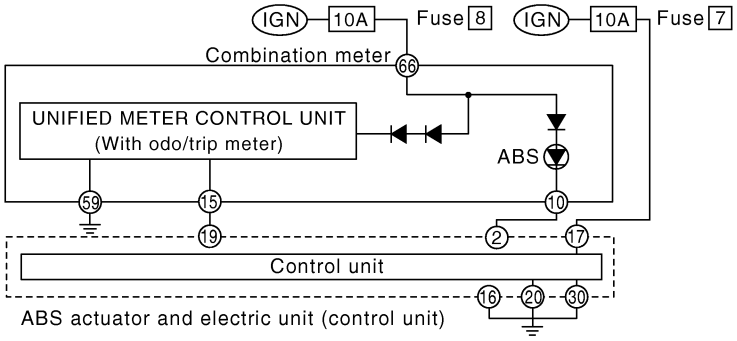

SBR347F

▶	GO TO 2.

2	CHECK FUSE
Check 10A fuse No. 7. For fuse layout, refer to EL-11, “POWER SUPPLY ROUTING”.	
Is fuse OK?	
Yes ▶	GO TO 3.
No ▶	GO TO 8.

3	CHECK HARNESS CONNECTOR
Check ABS actuator and electric unit (control unit) pin terminals for damage or bad connection of ABS actuator and electric unit (control unit) harness connector. Reconnect ABS actuator and electric unit (control unit) harness connector. Then retest.	
Does warning lamp stay on when ignition switch is turned ON?	
Yes ▶	GO TO 4.
No ▶	**INSPECTION END**

4	CHECK ABS ACTUATOR AND ELECTRIC UNIT (CONTROL UNIT) GROUND CIRCUIT
Refer to “ABS ACTUATOR AND ELECTRIC UNIT (CONTROL UNIT) GROUND” in “Ground Circuit Check”, BR-53.	
Is ground circuit OK?	
Yes ▶	GO TO 5.
No ▶	Repair harness or connector.

5	CHECK ABS ACTUATOR AND ELECTRIC UNIT (CONTROL UNIT) POWER SUPPLY CIRCUIT

1. Disconnect ABS actuator and electric unit (control unit) connector.
2. Check voltage between ABS actuator and electric unit (control unit) connector E111 terminal 17 and ground.

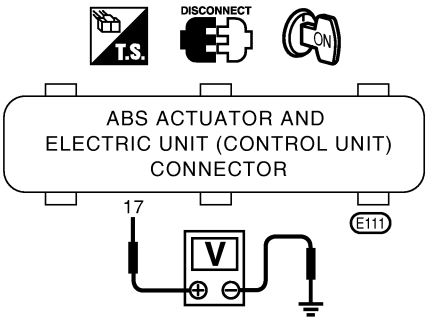

SBR341F

Does battery voltage exist when ignition switch is turned ON?

Yes	▶	GO TO 6.
No	▶	**Check the following.** If NG, repair harness or connector. ● Harness connector E111 ● Harness for open or short between ABS actuator and electric unit (control unit) and fuse

6	CHECK WARNING LAMP

1. Disconnect ABS actuator and electric unit (control unit) connector.
2. Connect suitable wire between ABS actuator and electric unit (control unit) connector E111 terminal 2 and ground.

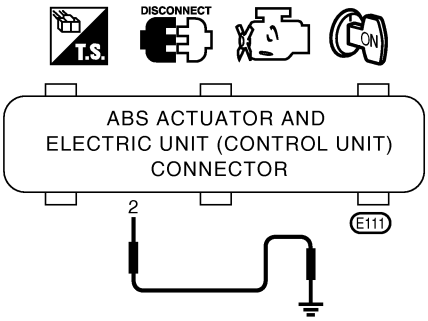

SBR348F

Does the warning lamp deactivate?

Yes	▶	Replace ABS actuator and electric unit (control unit).
No	▶	GO TO 7.

7	CHECK ABS WARNING LAMP CONTROL CIRCUIT FOR OPEN

1. Disconnect combination meter connector M24.
2. Check continuity between combination meter connector M24 terminal 10 and ABS actuator and electric unit (control unit) connector E111 terminal 2.
   NOTE:
   Connect positive lead of multimeter to1combination meter connector M24 terminal 10 and negative lead to ABS actuator and electric unit (control unit) connector E111 terminal 2.

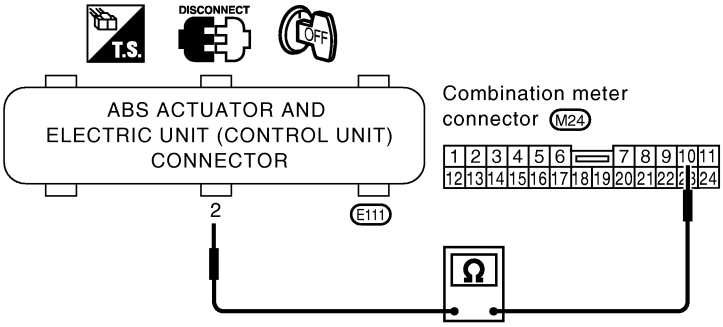

SBR349F

Continuity should exist.

Does continuity exist?

Yes	▶	**Check combination meter.** Refer to EL-145, "WARNING LAMPS".
No	▶	Repair harness or connectors.

8	REPLACE FUSE

Replace fuse.

Does the fuse blow out when ignition switch is turned ON?

Yes	▶	GO TO 9.
No	▶	**INSPECTION END**

9	CHECK ABS ACTUATOR AND ELECTRIC UNIT (CONTROL UNIT) POWER SUPPLY CIRCUIT FOR SHORT

1. Disconnect battery cable and ABS actuator and electric unit (control unit) connector.
2. Check continuity between ABS actuator and electric unit (control unit) connector E111 terminal 17 and ground.

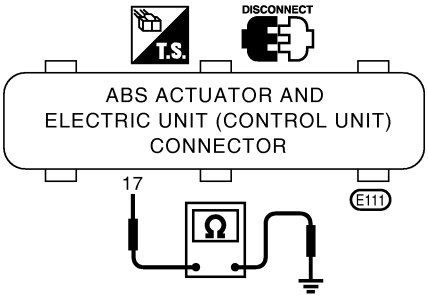

SBR342F

Continuity should not exist.

Does continuity exist?

Yes	▶	**Check the following.** If NG, repair harness or connector. ● Harness connector E111 ● Harness for open or short between ABS actuator and electric unit (control unit) and fuse
No	▶	Replace ABS actuator and electric unit (control unit).

8. Vehicle Vibrates Excessively When ABS Is Operating

=NABR0145

- While ABS is operating, brake pedal vibrates slightly. This is not a problem.
- If vehicle vibration is greater in the AUTO mode than in the 2WD mode, there is the possibility of failure in the communication line between the ABS actuator and electric unit (control unit) and transfer control unit. Check and locate the cause of the problem.

1	INSPECTION START
Inspection for excessive vibration of vehicle	

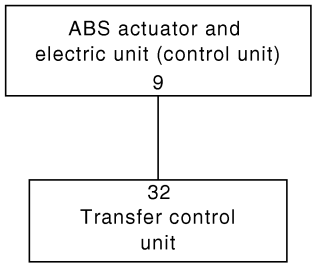

SBR350F

	▶	GO TO 2.

2	CARRY OUT SELF-DIAGNOSIS	
Perform self-diagnosis for the ABS actuator and electric unit (control unit) and transfer control unit.		
Are there any malfunctions?		
Yes	▶	GO TO 3.
No	▶	GO TO 4.

3	INSPECTION OR REPAIR	
Inspect or repair the system according to the self-diagnostic item.		
OK	▶	GO TO 4.

4	CHECK CIRCUIT

1. Disconnect connectors from ABS actuator and electric unit (control unit) and transfer control unit. Check terminals for damage or loose connection.
2. Check continuity between ABS actuator and electric unit (control unit) connector terminal 9 and transfer control unit connector terminal 32.

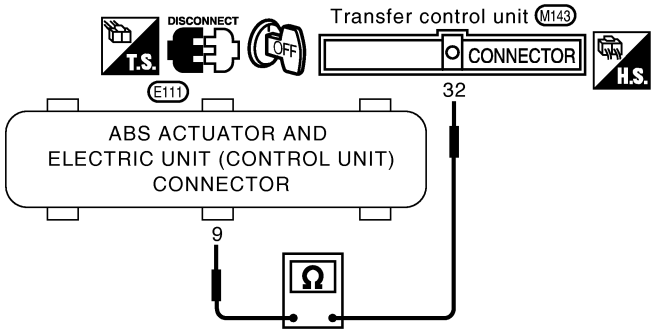

SBR351F

Does continuity exist?

Yes	▶	GO TO 5.
No	▶	**Check the following.** ● Harness connectors E111, M143 ● Harness for open or short between ABS actuator and electric unit (control unit) and transfer control unit If NG, repair harness or connectors.

5	CHECK ABS OPERATING SIGNAL CIRCUIT

1. Reconnect only ABS actuator and electric unit (control unit) connector.
2. Check continuity between transfer control unit connector terminal 32 and ground.
   Continuity should not exist.

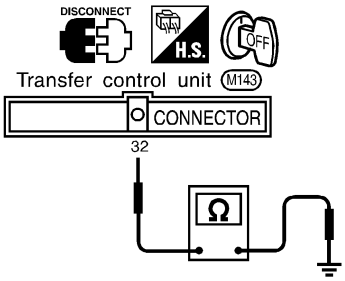

SBR510E

Does continuity exist?

Yes	▶	Replace ABS actuator and electric unit (control unit).
No	▶	GO TO 6.

6	CHECK ABS OPERATING SIGNAL

1. Connect CONSULT-II to Data Link Connector.
2. Turn ignition switch "ON". Set CONSULT-II in the active test mode to output an ABS operating signal. (Refer to "ACTIVE TEST PROCEDURE", "CONSULT-II Inspection Procedure", BR-47.)
3. An ABS operating signal lasts for 10 seconds. During the time the signal is being output, check resistance between transfer control unit connector terminal 32 and ground.
   Resistance: 0.5Ω, max.

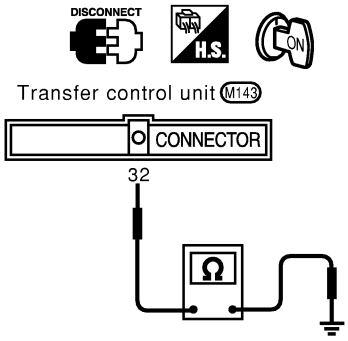

ACTIVE TEST	
ABS OPER SIG	OFF
MONITOR	
ABS OPER SIG	OFF

SBR680E

Is resistance within specifications?

Yes	▶	CHECK transfer control unit. Refer to TF-122, "ABS OPERATION SIGNAL".
No	▶	Replace ABS actuator and electric unit (control unit).

CAUTION:
Be careful not to damage sensor edge and sensor rotor teeth. When removing the front or rear wheel hub assembly, disconnect the ABS wheel sensor from the assembly and move it away.

Front Wheel Sensor

NABR0079S01

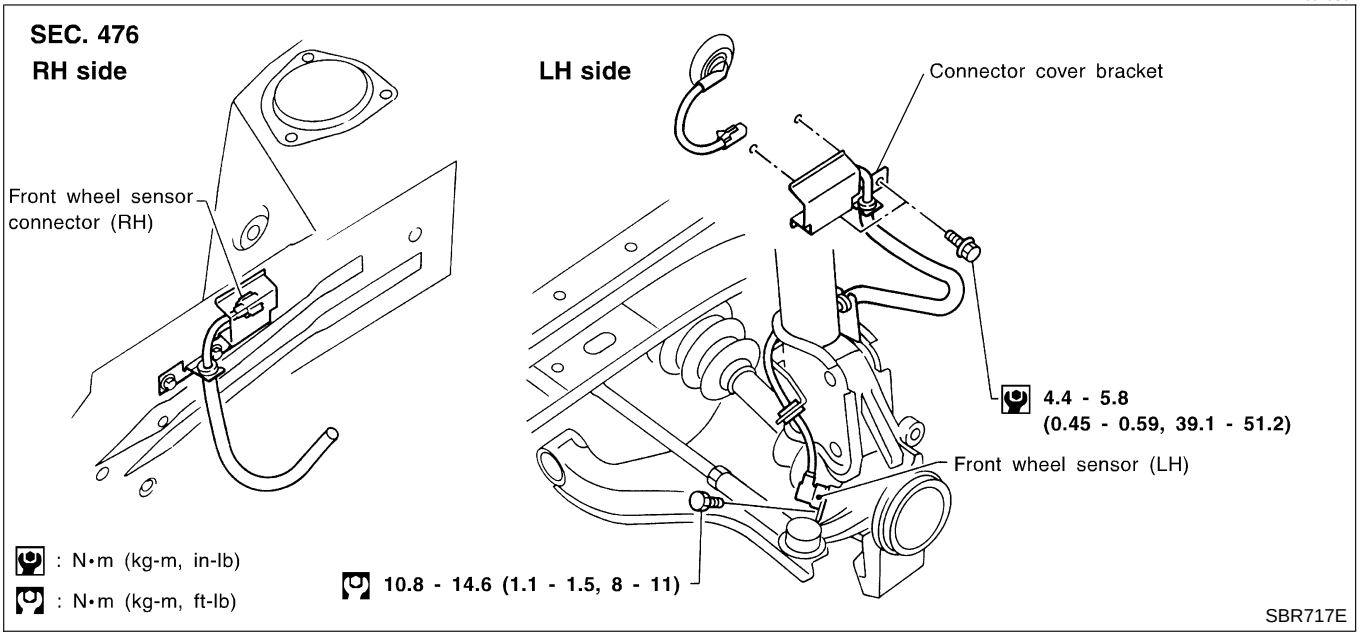

Rear Wheel Sensor

NABR0079S02

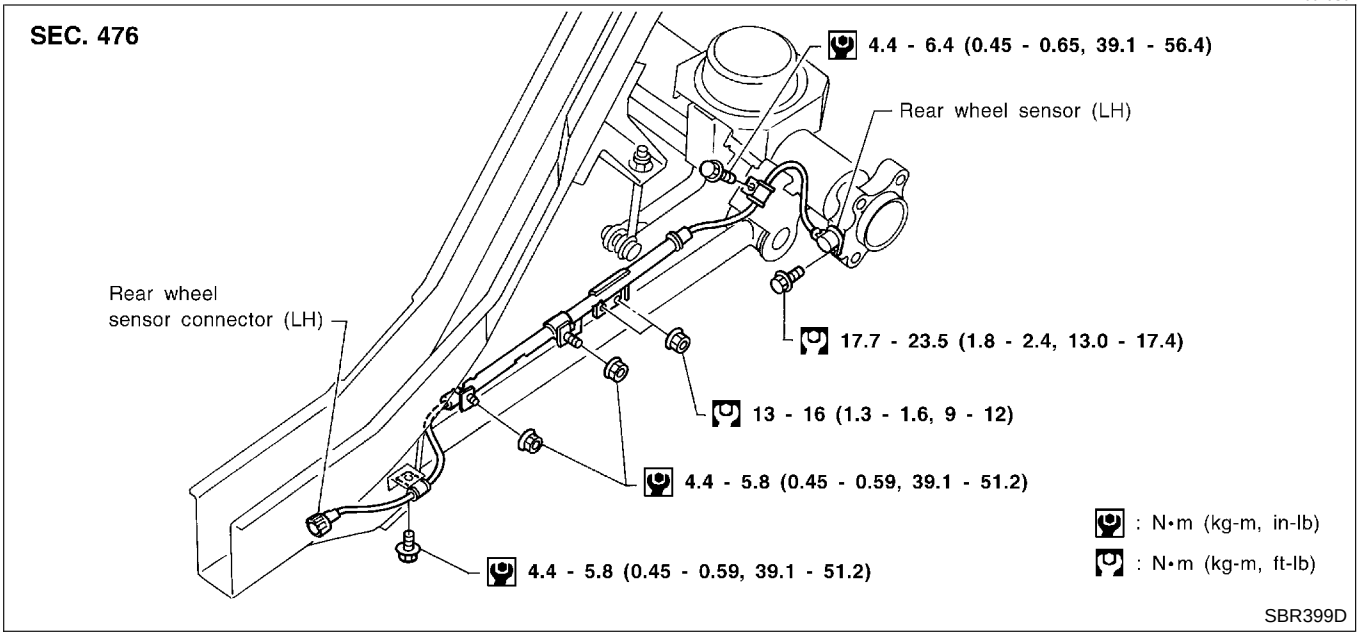

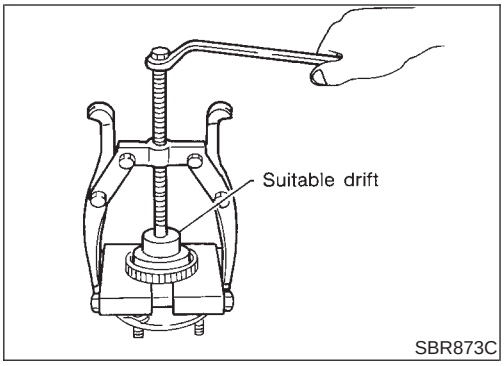

Front Sensor Rotor

NABR0079S03

REMOVAL

NABR0079S0301

1. Remove the front wheel hub. Refer to AX-9, “Disassembly”.
2. Remove the sensor rotor using suitable puller, drift and bearing replacer.

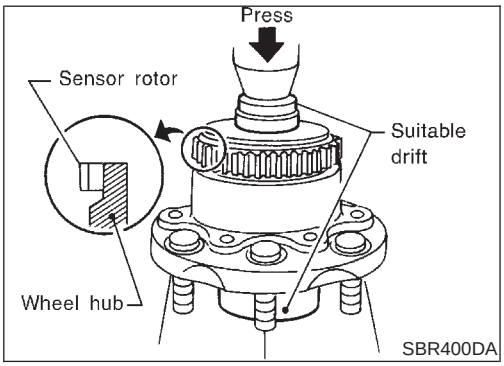

INSTALLATION

NABR0079S0302

Install the sensor rotor using suitable drift and press.

- Always replace sensor rotor with new one.
- Pay attention to the direction of front sensor rotor as shown in figure.

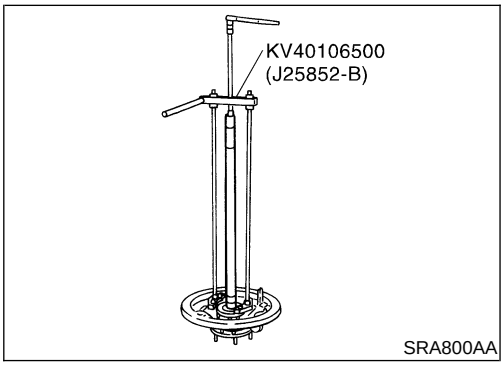

Rear Sensor Rotor

NABR0079S04

REMOVAL

NABR0079S0401

- Remove the sensor rotor using Tool.

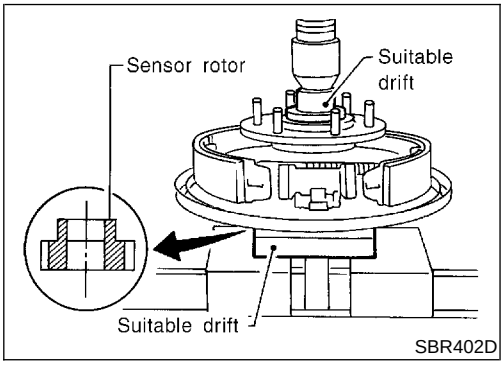

INSTALLATION

NABR0079S0402

Install the sensor rotor using suitable drift and press.

- Always replace sensor rotor with new one.
- Pay attention to the direction of front sensor rotor as shown in figure.

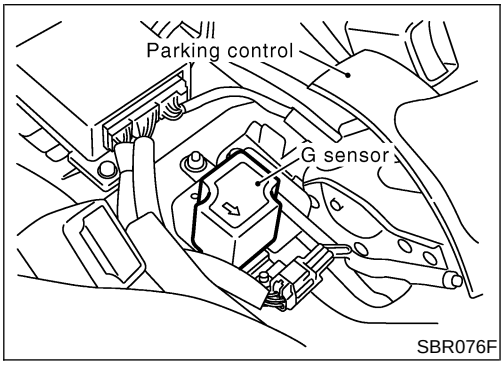

G Sensor

NABR0079S06

Always replace G sensor if bumped or dropped. Otherwise, performance characteristics of G sensor will be changed, which in turn changes ABS control performance characteristics.

ABS Actuator and Electric Unit (Control Unit)

NABR0079S07

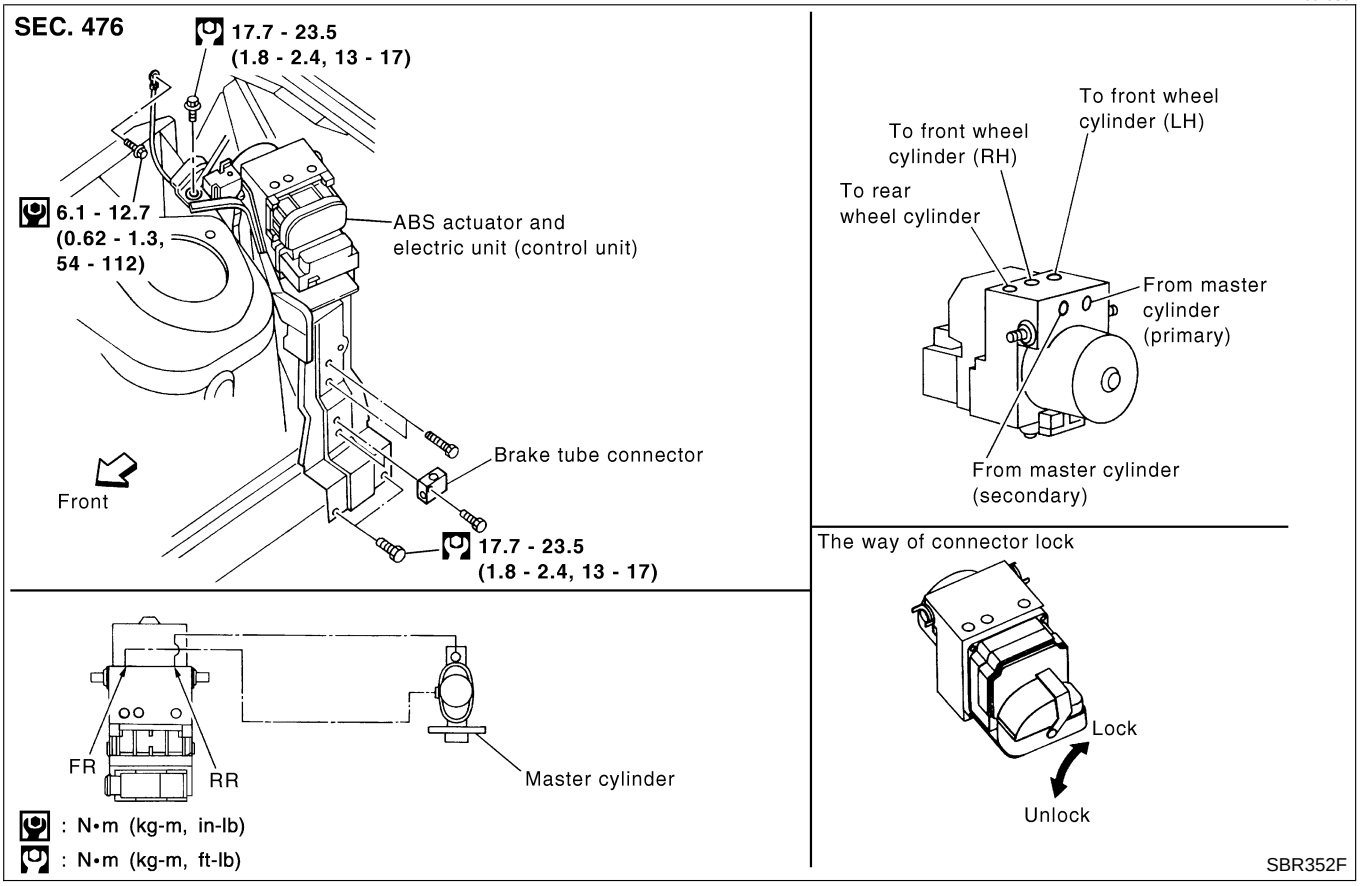

REMOVAL

NABR0079S0701

1. Disconnect battery cable.
2. Drain brake fluid. Refer to “Changing Brake Fluid”, BR-8.
3. Remove mounting bracket fixing bolts and nuts.
4. Disconnect connector, brake pipes and remove fixing nuts and actuator ground cable.

INSTALLATION

NABR0079S0702

CAUTION:

After installation, refill brake fluid. Then bleed air. Refer to “Bleeding Brake System”, BR-9.

1. Tighten actuator ground cable.

Place ground cable at a notch of mounting bracket.

2. Connect brake pipes temporarily.
3. Tighten fixing bolts and nuts.
4. Tighten brake pipes.
5. Connect connector and battery cable.

Supplemental Restraint System (SRS) “AIR BAG” and “SEAT BELT PRE-TENSIONER”

NABR0208

The Supplemental Restraint System such as “AIR BAG” and “SEAT BELT PRE-TENSIONER” used along with a seat belt, helps to reduce the risk or severity of injury to the driver and front passenger for certain types of collision. The SRS composition which is available to NISSAN MODEL R50 is as follows (The composition varies according to optional equipment.):

- For a frontal collision
  The Supplemental Restraint System consists of driver air bag module (located in the center of the steering wheel), front passenger air bag module (located on the instrument panel on passenger side), seat belt pre-tensioners, diagnosis sensor unit, warning lamp, wiring harness and spiral cable.
- For a side collision
  The Supplemental Restraint System consists of front side air bag module (located in the outer side of front seat), (located in the outer side of front seat), side curtain air bag module (locating in the headliner side of front and rear seat), satellite sensor, diagnosis sensor unit (one of components of air bags for a frontal collision), wiring harness, warning lamp (one of components of air bags for a frontal collision).

WARNING:

- **To avoid rendering the SRS inoperative, which could increase the risk of personal injury or death in the event of a collision which would result in air bag inflation, all maintenance should be performed by an authorized NISSAN dealer.**
- **Improper maintenance, including incorrect removal and installation of the SRS, can lead to personal injury caused by unintentional activation of the system.**
- **Do not use electrical test equipment on any circuit related to the SRS unless instructed to in this Service Manual. SRS wiring harnesses can be identified with yellow and/or orange harness connector (and with yellow harness protector or yellow insulation tape before the harness connectors).**

Precautions for SRS “Air Bag” and “SEAT BELT PRE-TENSIONER” Service

NABR0209

- Do not use electrical test equipment to check SRS circuits unless instructed to in this Service Manual.
- Before servicing the SRS, turn ignition switch “OFF”, disconnect both battery cables and wait at least 3 minutes.
  For approximately 3 minutes after the cables are removed, it is still possible for the air bag and seat belt pre-tensioner to deploy. Therefore, do not work on any SRS connectors or wires until at least 3 minutes have passed.
- Diagnosis sensor unit must always be installed with their arrow marks “⇐” pointing towards the front of the vehicle for proper operation. Also check diagnosis sensor unit for cracks, deformities or rust before installation and replace as required.
- The spiral cable must be aligned with the neutral position since its rotations are limited. Do not attempt to turn steering wheel or column after removal of steering gear.
- Handle air bag module carefully. Always place driver and passenger air bag modules with the pad side facing upward and place side air bag module standing with stud bolt side setting bottom.
- Conduct self-diagnosis to check entire SRS for proper function after replacing any components.
- After air bag inflates, the front instrument panel assembly should be replaced if damaged.

Precautions for Brake System

NABR0153

- Recommended fluid is brake fluid “DOT 3”.
- Never reuse drained brake fluid.
- Be careful not to splash brake fluid on painted areas such as body. If brake fluid is splashed, wipe it off and flush area with water immediately.
- Never use mineral oils such as gasoline or kerosene to clean. They will ruin rubber parts and cause improper operation.

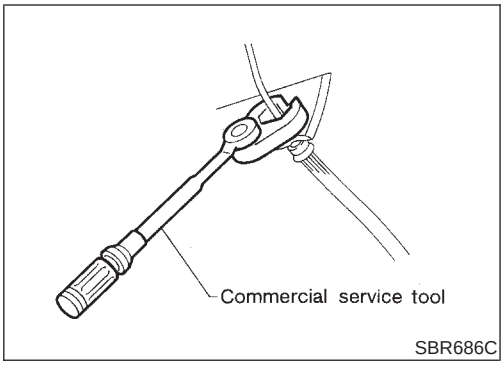

- Using a flare nut torque wrench, securely tighten brake tube flare nuts.
- Brake system is an important safety part. If a brake fluid leak is detected, always disassemble the affected part. If a malfunction is detected, replace part with a new one.
- Before working, turn ignition switch OFF and disconnect electrical connectors of ABS actuator and electric unit (control unit) or battery terminals.
- When installing brake piping, be sure to check torque.

Precautions for Brake Control

NABR0154

- During VDC/TCS/ABS operation, brake pedal lightly vibrates and a mechanical noise may be heard. This is normal.
- Just after starting vehicle after ignition switch ON, brake pedal may vibrate or motor operating noise may be heard from engine compartment. This is a normal status of operation check.
- Stopping distance may be longer than that of vehicles without ABS when vehicle drives on rough, gravel, or snow-covered (fresh, deep snow) roads.
- When an error is indicated by ABS or another warning lamp, collect all necessary information from customer (what symptoms are present under what conditions) and check for simple causes before starting diagnostic servicing. Besides electrical system inspection, check booster operation, brake fluid level, and oil leaks.
- If tire size and type are used in an improper combination, or brake pads are not Genuine NISSAN parts, stopping distance or steering stability may deteriorate.
- If there is a radio, antenna, or antenna lead-in wire (including wiring) near control module, VDC/TCS/ABS function may have a malfunction or error.
- If aftermarket parts (car stereo, CD player, etc.) have been installed, check for incidents such as harness pinches, open circuits, and improper wiring.

Commercial Service Tools

NABR0157

Tool name	Description
1. Flare nut crowfoot 2. Torque wrench	Removing and installing each brake piping **a: 10 mm (0.39 in)/12 mm (0.47 in)** 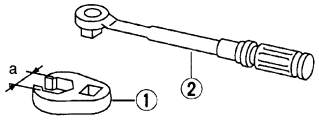 S-NT360

Adjustment of Steering Angle Sensor Neutral Position

NABR0158

- After replacing ABS actuator and electric unit (control unit), steering angle sensor, steering components and suspension components, or after adjusting wheel alignment, make sure to adjust neutral position of steering angle sensor before running vehicle.

CAUTION:
To adjust neutral position of steering angle sensor, make sure to use CONSULT-II. (Adjustment cannot be done without CONSULT-II.)

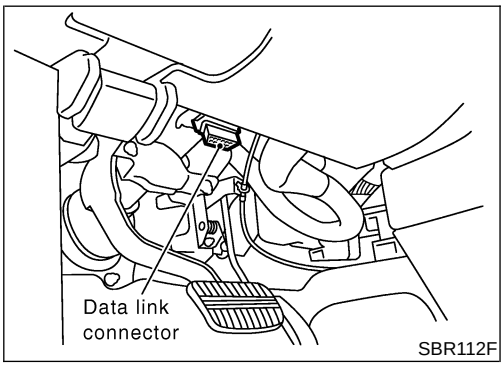

1. Stop vehicle with front wheels in straight-ahead position.
2. Connect CONSULT-II and CONSULT-II CONVERTER to data link connector on vehicle, and turn ignition switch ON (do not start engine).
3. Touch “ABS”, “WORK SUPPORT” and “ST ANGLE SENSOR ADJUSTMENT” on CONSULT-II screen in this order.

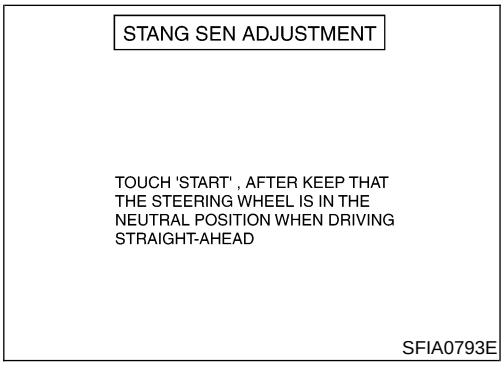

4. Touch “START”.

CAUTION:
Do not touch steering wheel while adjusting steering angle sensor.

5. After approximately 10 seconds, touch “END”. (After approximately 60 seconds, it ends automatically.)
6. Turn ignition switch OFF, then turn it ON again.

CAUTION:
Be sure to carry out above operation.

7. Run vehicle with front wheels in straight-ahead position, then stop.
8. Select “DATA MONITOR”, “CONTROL MODULE INPUT ITEM”, and “STEERING ANGLE SIGNAL” on CONSULT-II screen. Then check that “STEERING ANGLE SIGNAL” is within 0±3.5 deg. If value is more than specification, repeat steps 1 to 5.
9. Erase memory of ABS actuator and electric unit (control unit) and ECM.
10. Turn ignition switch to OFF.

Calibration of Decel G Sensor

NABR0203

- After removing/installing or replacing ABS actuator and electric unit (control unit), suspension components, or after adjusting wheel alignment or replacing yaw rate/side/decel G sensor, make sure to calibrate decel G sensor before running vehicle.

CAUTION:
To calibrate decel G sensor, make sure to use CONSULT-II. (Adjustment cannot be done without CONSULT-II.)

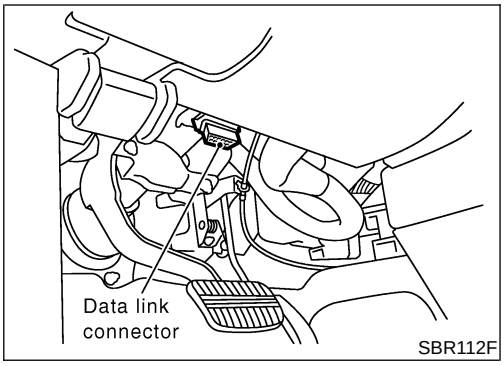

SBR112F

1. Stop vehicle horizontally with front wheels in straight-ahead position.
2. Connect CONSULT-II and CONSULT-II CONVERTER to data link connector on vehicle, and turn ignition switch ON (do not start engine).
3. Touch "ABS", "WORK SUPPORT" and "DECEL G SEN CALIBRATION" on CONSULT-II screen in this order.

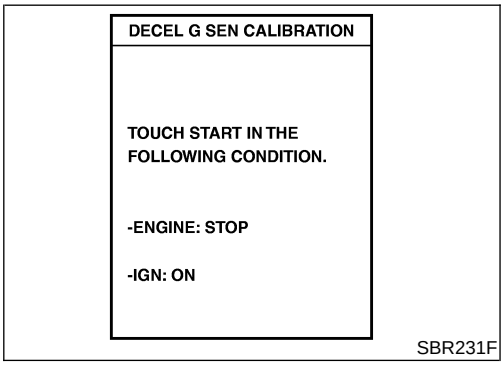

SBR231F

4. Touch "START".

CAUTION:
The vehicle should be set horizontal and stationary.

5. After approximately 10 seconds, touch "END". (After approximately 60 seconds, it ends automatically.)
6. Turn ignition switch OFF, then turn it ON again.

CAUTION:
Be sure to carry out above operation.

7. Run vehicle with front wheels in straight-ahead position, then stop.
8. Select "DATA MONITOR", "CONTROL MODULE INPUT ITEM", and "DECEL G SEN" on CONSULT-II screen. Then check that "DECEL G SEN" is within ±0.08G. If value is more than specification, repeat steps 1 to 5.
9. Erase memory of ABS actuator and electric unit (control unit) and ECM.
10. Turn ignition switch to OFF.

Fail-Safe

NABR0199S01

ABS SYSTEM

NABR0199S0101

If a malfunction occurs in electrical system, ABS warning lamp, VDC OFF indicator lamp, and SLIP indicator lamp in combination meter turn ON. In this condition, the fail-safe function puts VDC/TCS/ABS and EBD into one of the following conditions.

1. Only EBD operates. Same condition as that of models without VDC/TCS/ABS.
2. VDC/TCS/ABS and EBD do not operate. All 4 wheels operate as normal brakes.

NOTE:

In step 1 shown above, self-diagnosis when ignition switch is turned ON and when vehicle starts at initial time is carried out. ABS self-diagnosis noise may be heard as usual.

VDC/TCS SYSTEM

NABR0199S0102

If a malfunction occurs in electrical system, VDC OFF indicator lamp and SLIP indicator lamp in combination meter turn on. In this condition, VDC/TCS will be deactivated and it becomes equal to that of models without VDC/TCS. However, ABS is controlled normally.

If a malfunction occurs in throttle control system, VDC/TCS control will be deactivated and only ABS control will operate normally.

CAUTION:

If fail-safe mode is initiated, carry out self-diagnosis for VDC/TCS/ABS control system.

Hydraulic Circuit Diagram

NABR0199S02

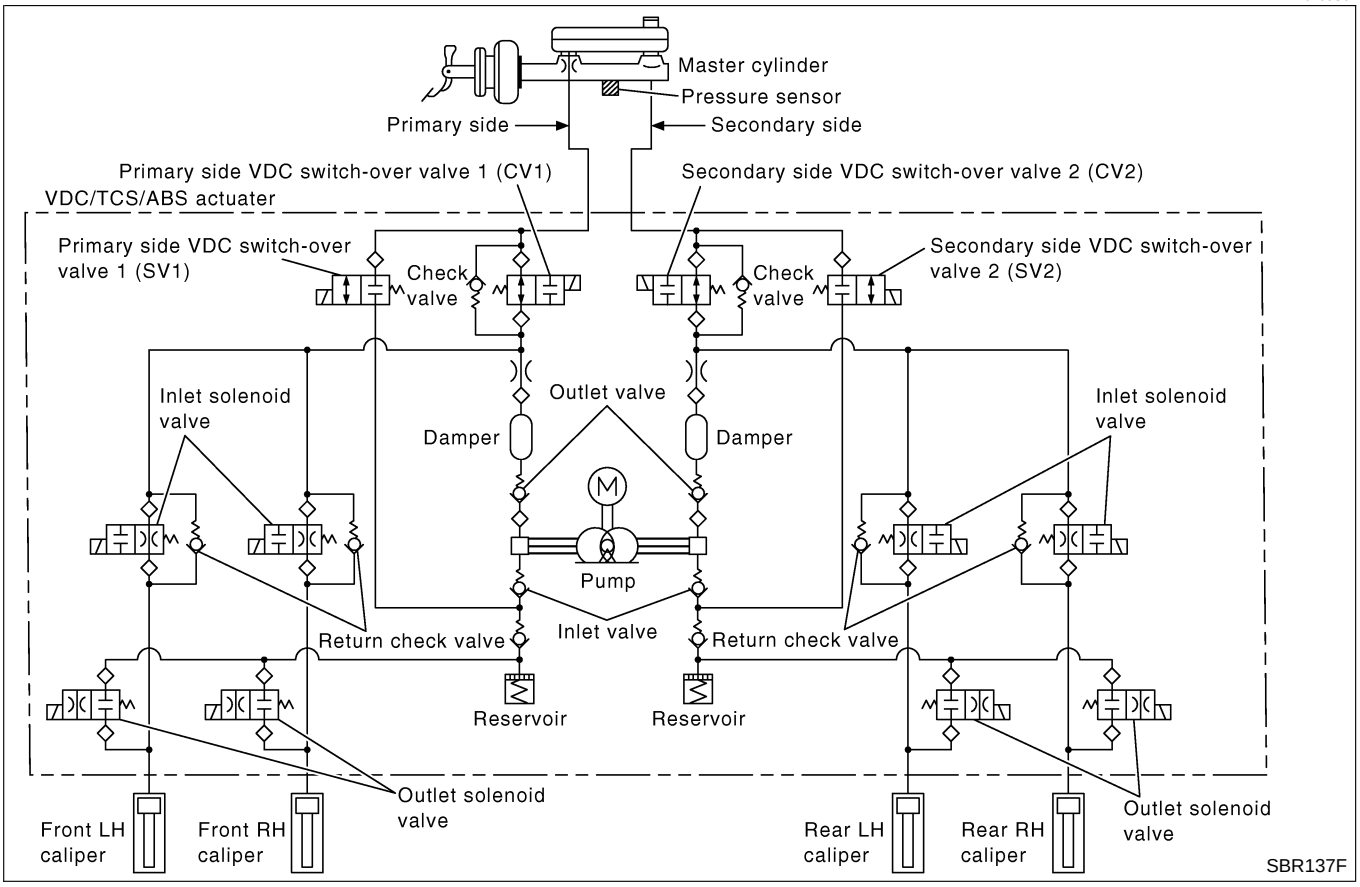

ABS Function

NABR0199S03

1. During ABS operation, brake pedal lightly vibrates and a mechanical noise may be heard. This is normal.
2. When starting engine, or just after starting vehicle, brake pedal may vibrate or motor operating noises may be heard from engine compartment. This is a normal status of operation check.
3. Stopping distance may be longer than that of vehicles without ABS when vehicle drives on rough, gravel, or snow-covered (fresh, deep snow) roads.
4. EBD is integrated in VDC/TCS/ABS system.

TCS Function

NABR0199S04

1. ABS actuator and electric unit (control unit) detects a spin at drive wheels by comparing wheel speed signals from all 4 wheels. At this time, output from control unit controls brake fluid pressure to both LH and RH rear wheels while cutting fuel to engine and closing throttle valve to reduce engine torque. Furthermore, throttle position is continuously controlled to insure appropriate engine torque at all times.
2. Depending on road circumstances, driver may have a sluggish feel. This is normal, because optimum traction has highest priority under TCS operation.
3. When vehicle is passing through a road where surface friction coefficient varies, downshifting or depressing accelerator pedal fully may activate TCS temporarily.
4. During TCS operation, it informs driver of system operation by flashing SLIP indicator lamp.

VDC Function

NABR0199S05

1. In addition to TCS/ABS function, VDC detects driver's steering operation amount and brake pedal travel from steering angle sensor and pressure sensor. Using information from yaw rate/side/decel G-sensor and wheel sensor, VDC judges driving condition (conditions of under steer and over steer) to improve stability by controlling brake application to 4 wheels and engine output.
2. SLIP indicator lamp flashes to inform driver of VDC operation.
3. During VDC operation, body and brake pedal lightly vibrate and mechanical noises may be heard. This is normal.
4. If vehicle is rotated on turn table, or rolled and rocked on ship, ABS warning lamp, VDC OFF indicator lamp, and SLIP indicator lamp may turn ON. In this case, start engine on normal road again. If ABS warning lamp, VDC OFF indicator lamp, and SLIP indicator lamp turn OFF after restart, it is normal.
5. When driving in steep slope such as bank, ABS warning lamp, VDC OFF indicator lamp, and SLIP indicator lamp may turn ON. In this case, start engine on normal road again. If ABS warning lamp, VDC OFF indicator lamp, and SLIP indicator lamp turn OFF after restart, it is normal.

System Diagram

NABR0199S06

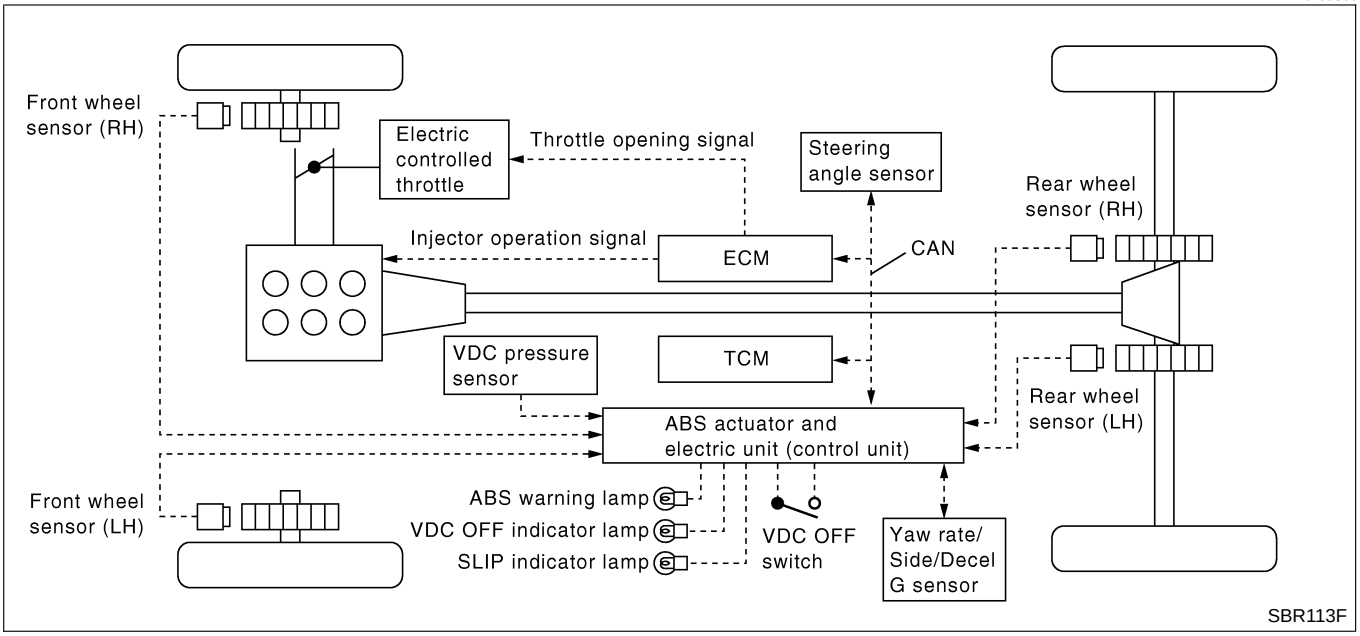

System Description

NABR0204

CAN (Controller Area Network) is a serial communication line for real time application. It is an on-vehicle multiplex communication line with high data communication speed and excellent error detection ability. Many electronic control units are equipped onto a vehicle, and each control unit shares information and links with other control units during operation (not independent). In CAN communication, control units are connected with 2 communication lines (CAN H line, CAN L line) allowing a high rate of information transmission with less wiring. Each control unit transmits/receives data but selectively reads required data only. Refer to EL-409.

How to Proceed with Diagnosis

NABR0165

BASIC CONCEPT

NABR0165S01

- Most important point to perform diagnosis is to understand systems (control and mechanism) in vehicle thoroughly.

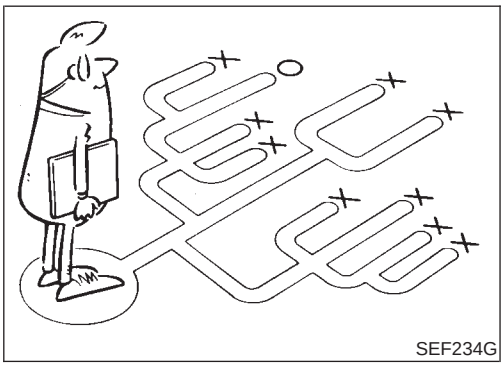
SEF234G

- It is also important to clarify customer complaints before inspection.
  First of all, reproduce symptom, and understand it fully.
  Ask customer about his/her complaints carefully. In some cases, it will be necessary to check symptom by driving vehicle with customer.

NOTE:
Customers are not professionals. Do not assume “maybe customer means...” or “maybe customer mentioned this symptom”.

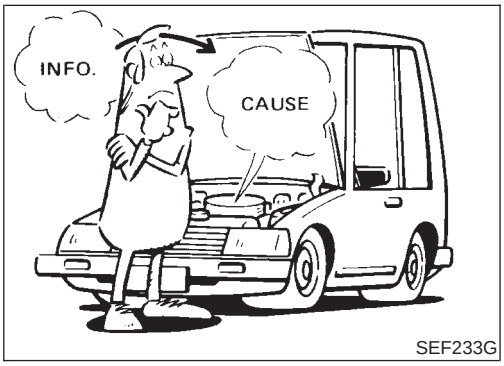

SEF233G

- It is essential to check symptoms right from beginning in order to repair a malfunction completely.
  For an intermittent malfunction, it is important to reproduce symptom based on interview with customer and past examples. Do not perform inspection on ad hoc basis. Most intermittent malfunctions are caused by poor contacts. In this case, it will be effective to shake suspected harness or connector by hand. When repairs are performed without any symptom check, no one can judge if malfunction has actually been eliminated.
- After diagnosis, make sure to carry out “erase memory”. Refer to BR-105.
- For an intermittent malfunction, move harness or harness connector by hand to check poor contact or false open circuit.
- Always read “GI General Information” to confirm general precautions.

DIAGNOSIS FLOWCHART

NABR0165S02

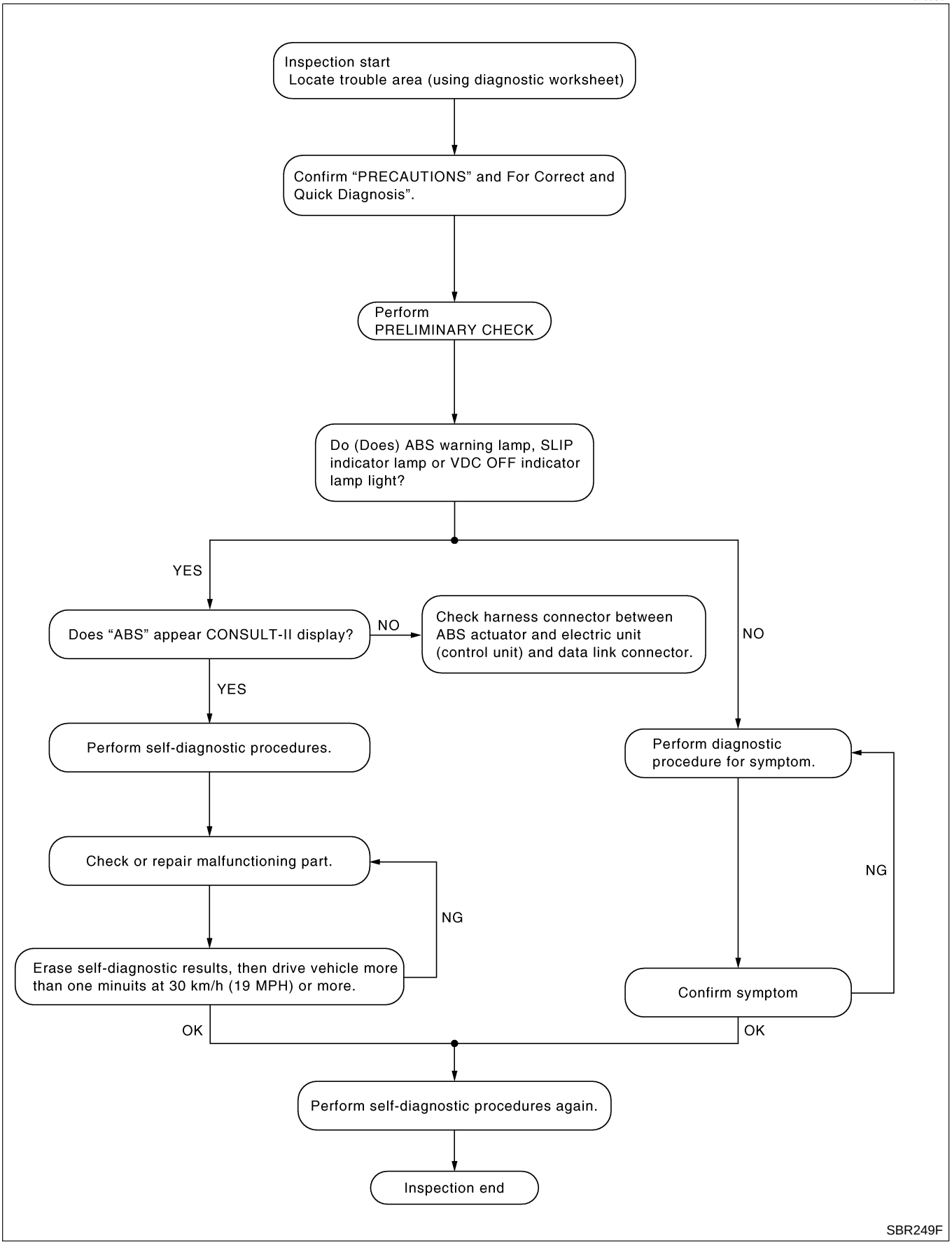

KEY POINTS

WHAT ..... Vehicle model
WHEN ..... Date, Frequencies
WHERE ..... Road conditions
HOW ..... Operating conditions, Weather conditions, Symptoms

SBR339B

ASKING COMPLAINTS

NABR0165S03

- Complaints against malfunction vary depending on each person. It is important to clarify customer complaints.
- Ask customer about what symptoms are present and under what conditions. Use information to reproduce symptom while driving.
- It is also important to use diagnosis sheet so as not to miss information.

EXAMPLE OF DIAGNOSIS SHEET

NABR0165S04

Customer name MR/MS	Model & Year		VIN
Engine #	Trans.		Mileage
Incident Date	Manuf. Date		In Service Date
Symptoms	☐ Noise and vibration (from engine compartment) ☐ Noise and vibration (from axle)	☐ Warning / Indicator activate	☐ Firm pedal operation Large stroke pedal operation
	☐ VDC/TCS dose not work (Rear wheels slip when accelerating)	☐ ABS dose not work. (wheels slip when braking)	☐ Lack of sense of acceleration
Engine conditions	☐ When starting ☐ After starting		
Road conditions	☐ Low friction road (☐Snow ☐Gravel ☐Other) ☐ Bumps / potholes		
Driving conditions	☐ Full-acceleration ☐ High speed cornering ☐ Vehicle speed: Greater than 10 km/h (6 MPH) ☐ Vehicle speed: 10 km/h (6 MPH) or less ☐ Vehicle is stopped		
Applying brake conditions	☐ Suddenly ☐ Gradually		
Other conditions	☐ Operation of electrical equipment ☐ Shift change ☐ Other descriptions		

SFIA0029E

Component Installation Location

NABR0166

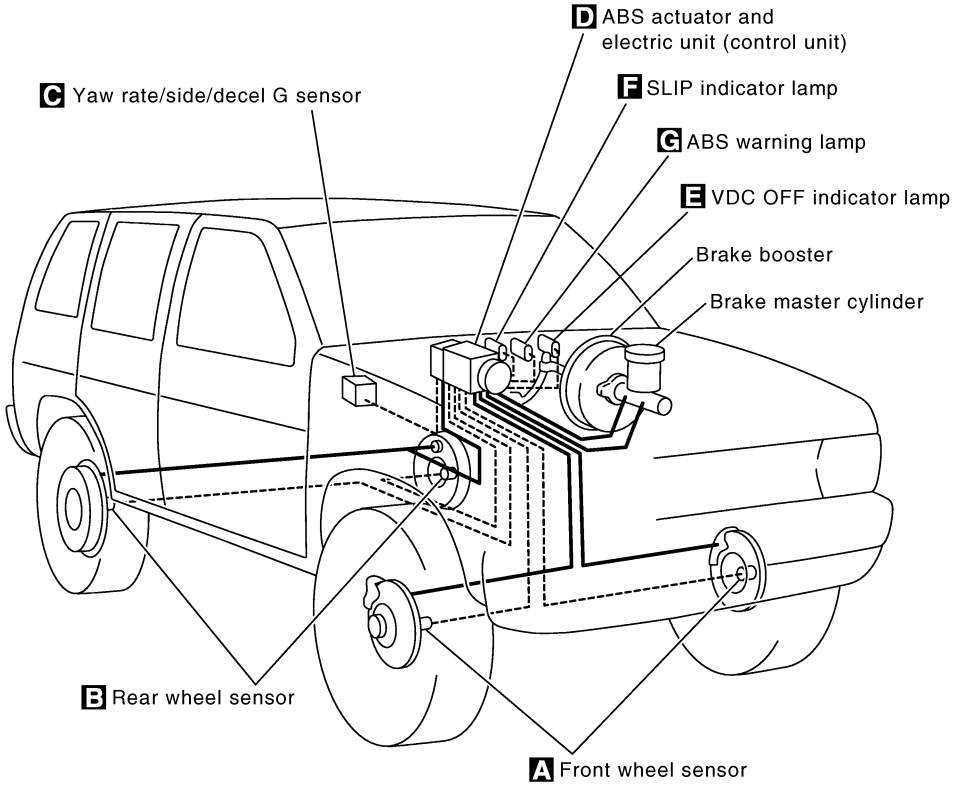

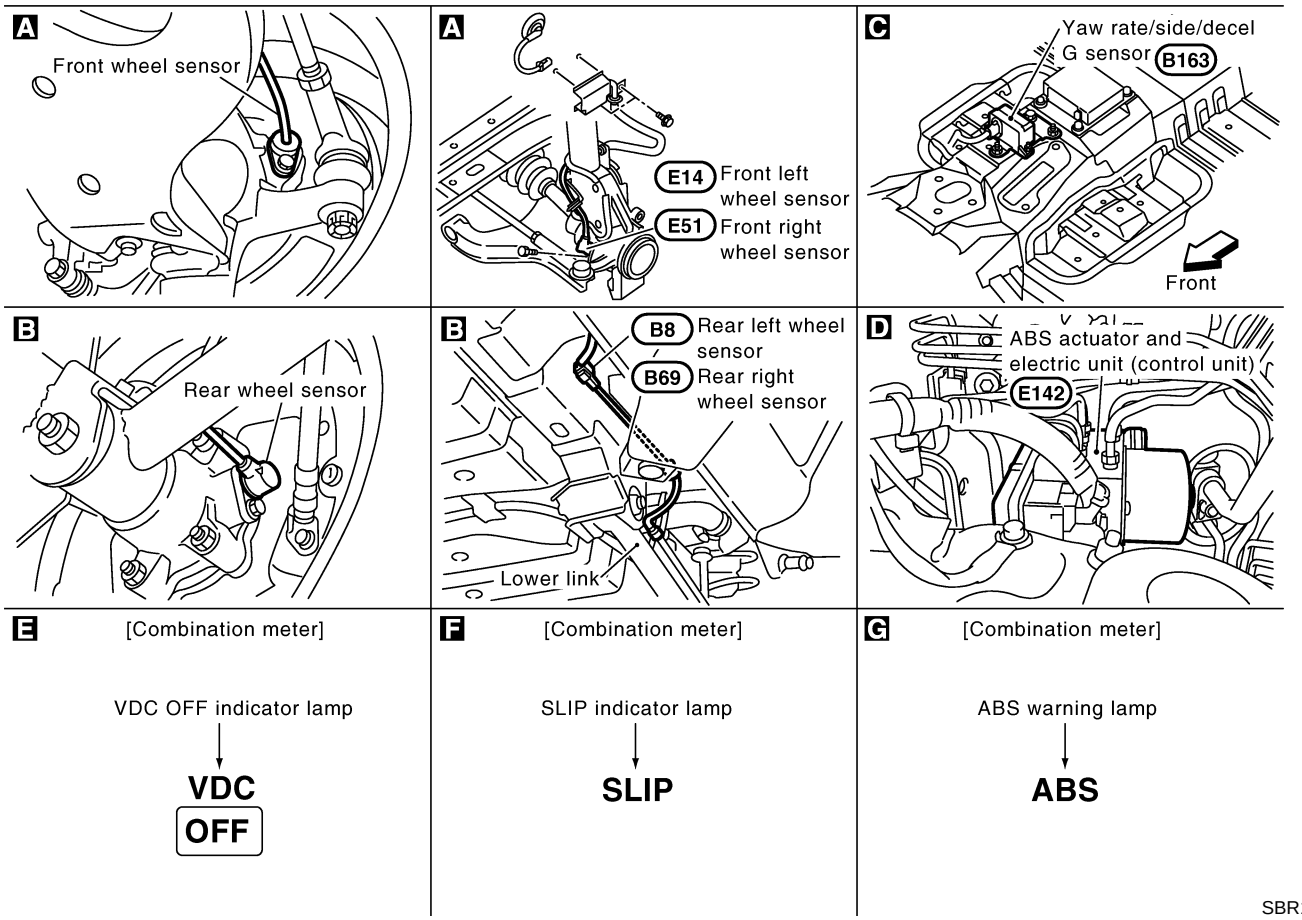

SBR114F

Schematic

NABR0167

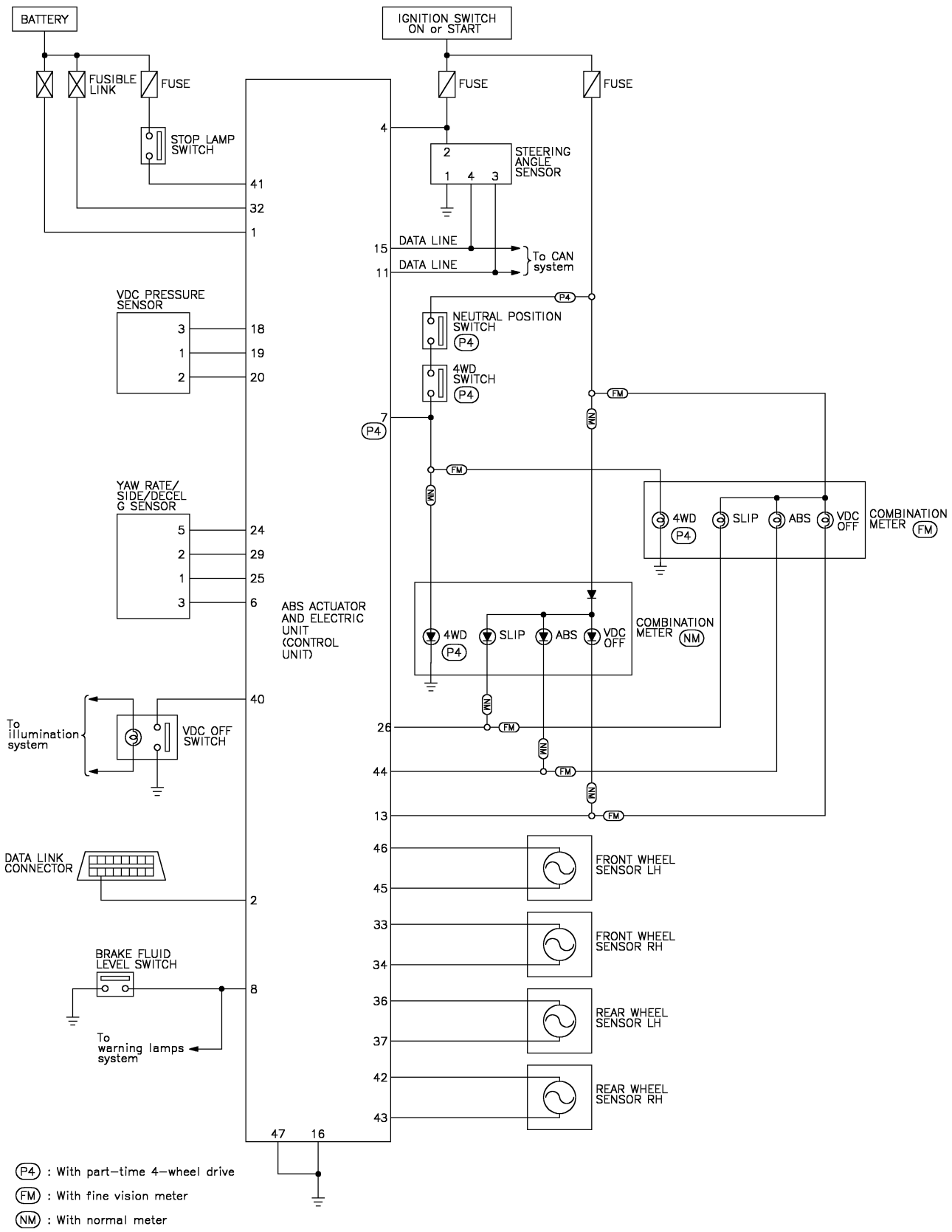

MBR728A

Wiring Diagram — VDC —

NABR0168

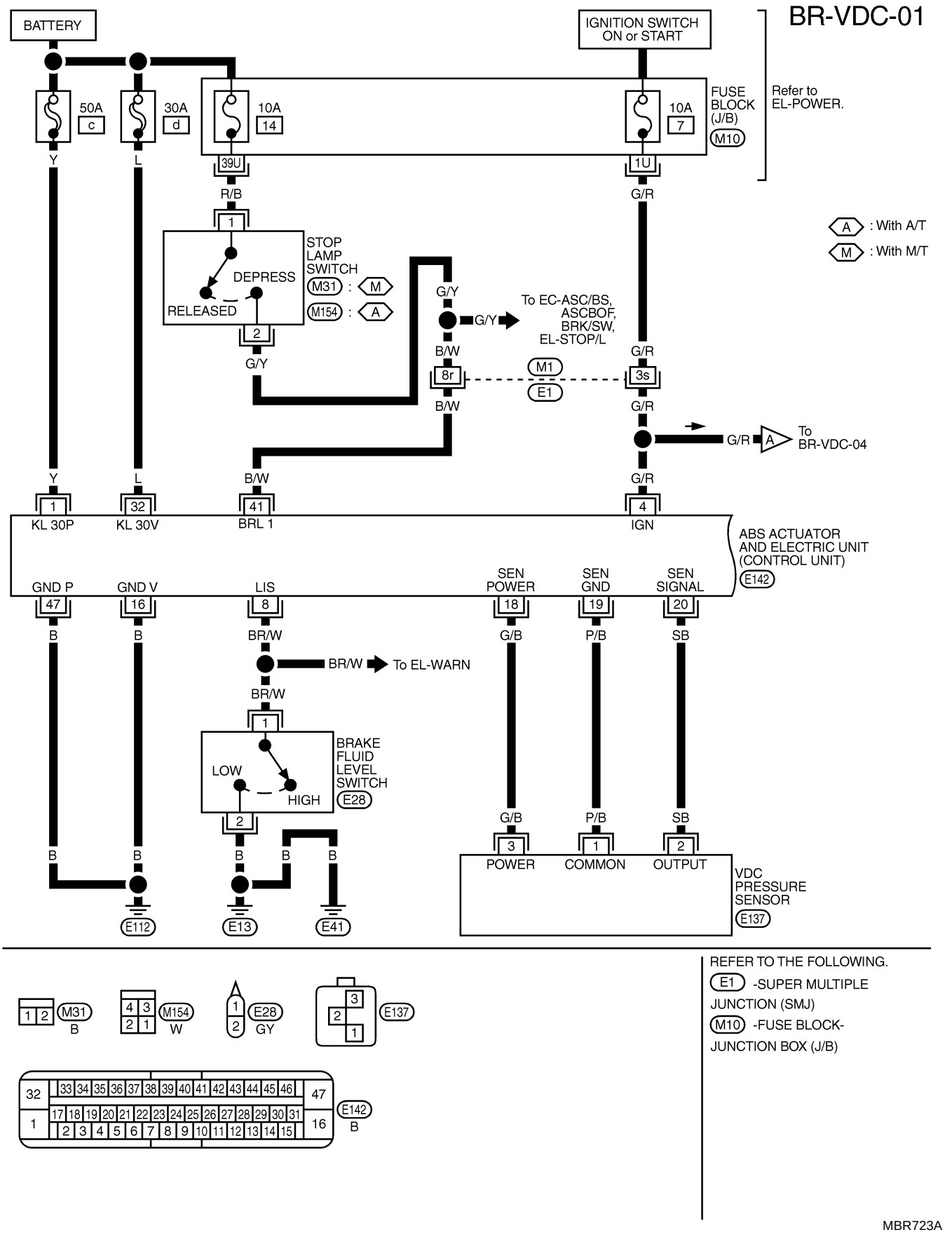

REFER TO THE FOLLOWING.
E1 -SUPER MULTIPLE JUNCTION (SMJ)
M10 -FUSE BLOCK-JUNCTION BOX (J/B)

MBR723A

BR-VDC-02

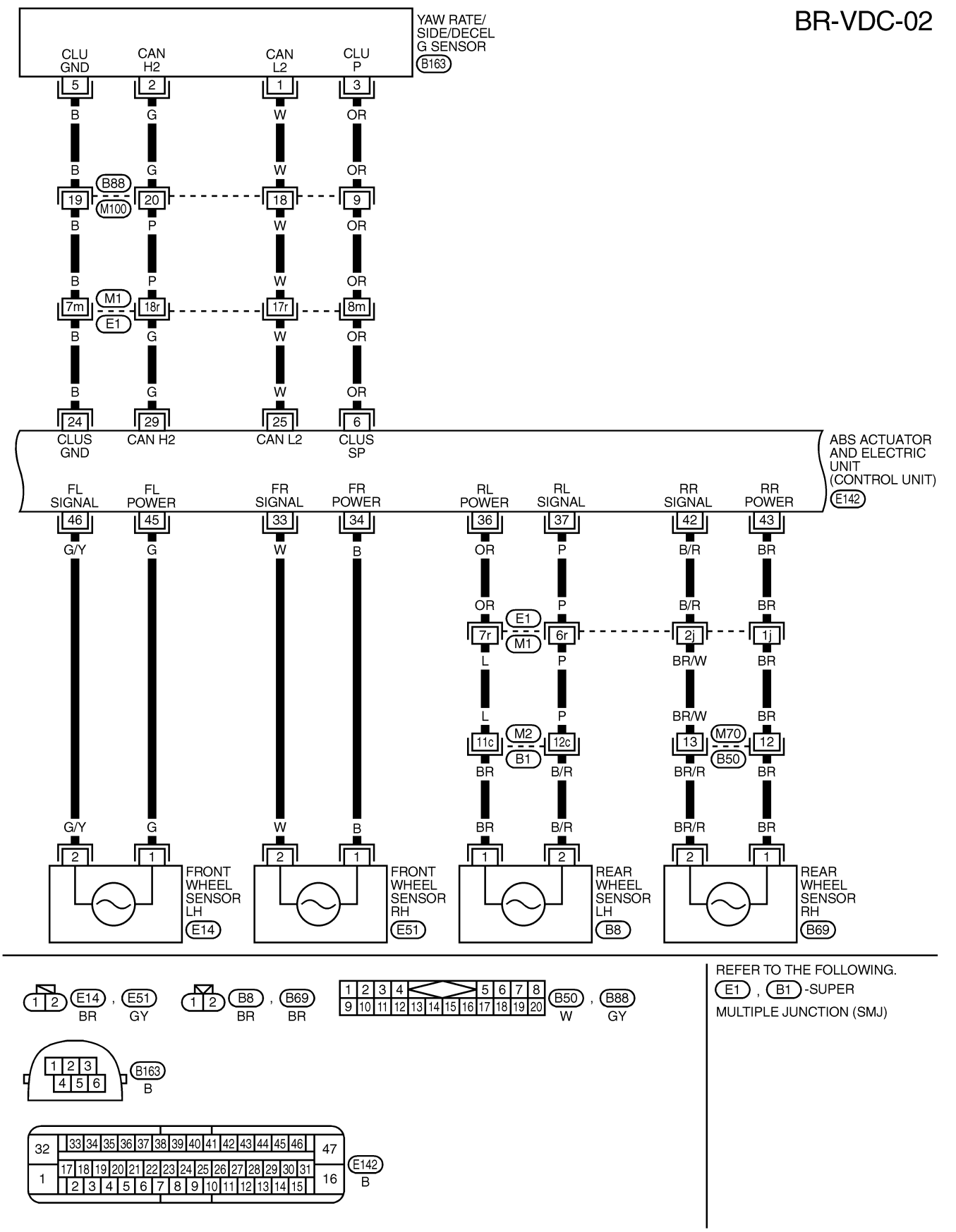

GI
MA
EM
LC
EC
FE
CL
MT
AT
TF
PD
AX
SU
BR
ST
RS
BT
HA
SC
EL
IDX

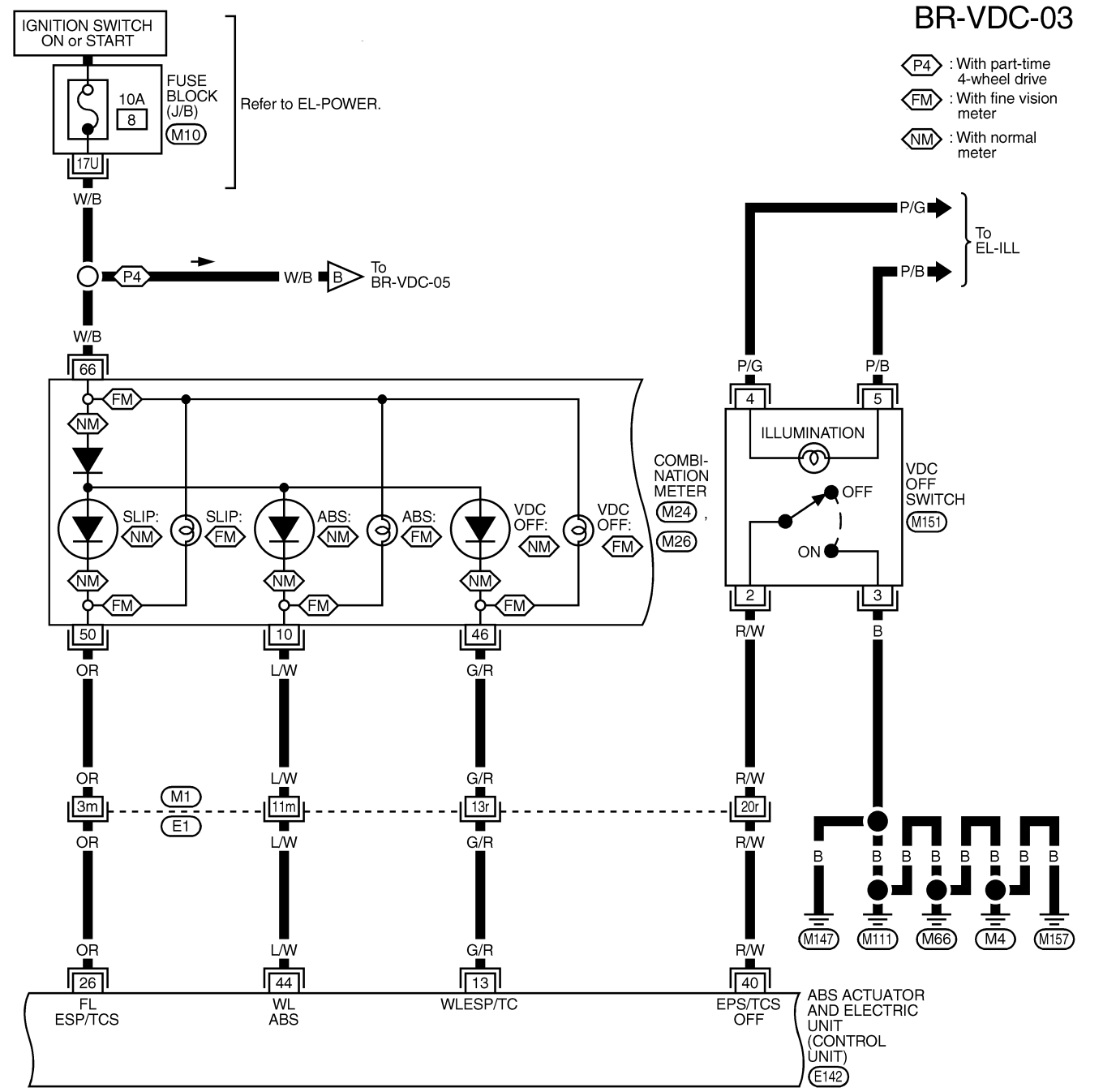
BR-VDC-03
P4 : With part-time 4-wheel drive
FM : With fine vision meter
NM : With normal meter
IGNITION SWITCH ON or START
FUSE BLOCK (J/B)
10A
8
M10
Refer to EL-POWER.
17U
W/B
P4
W/B
B
To BR-VDC-05
W/B
66
FM
NM
SLIP: NM
SLIP: FM
ABS: NM
ABS: FM
VDC OFF: NM
VDC OFF: FM
COMBI-NATION METER
M24
M26
50
10
46
OR
L/W
G/R
OR
L/W
G/R
R/W
3m
M1
E1
11m
13r
20r
OR
L/W
G/R
R/W
OR
L/W
G/R
R/W
26
44
13
40
FL ESP/TCS
WL ABS
WLESP/TC
EPS/TCS OFF
ABS ACTUATOR AND ELECTRIC UNIT (CONTROL UNIT)
E142
P/G
P/B
To EL-ILL
P/G
P/B
4
5
ILLUMINATION
OFF
ON
VDC OFF SWITCH
M151
2
3
R/W
B
B
M147
M111
M66
M4
M157
M24
W
M26
BR
M151
L
E142
B
REFER TO THE FOLLOWING.
E1 -SUPER MULTIPLE JUNCTION (SMJ)
M10 -FUSE BLOCK-JUNCTION BOX (J/B)
MBR725A

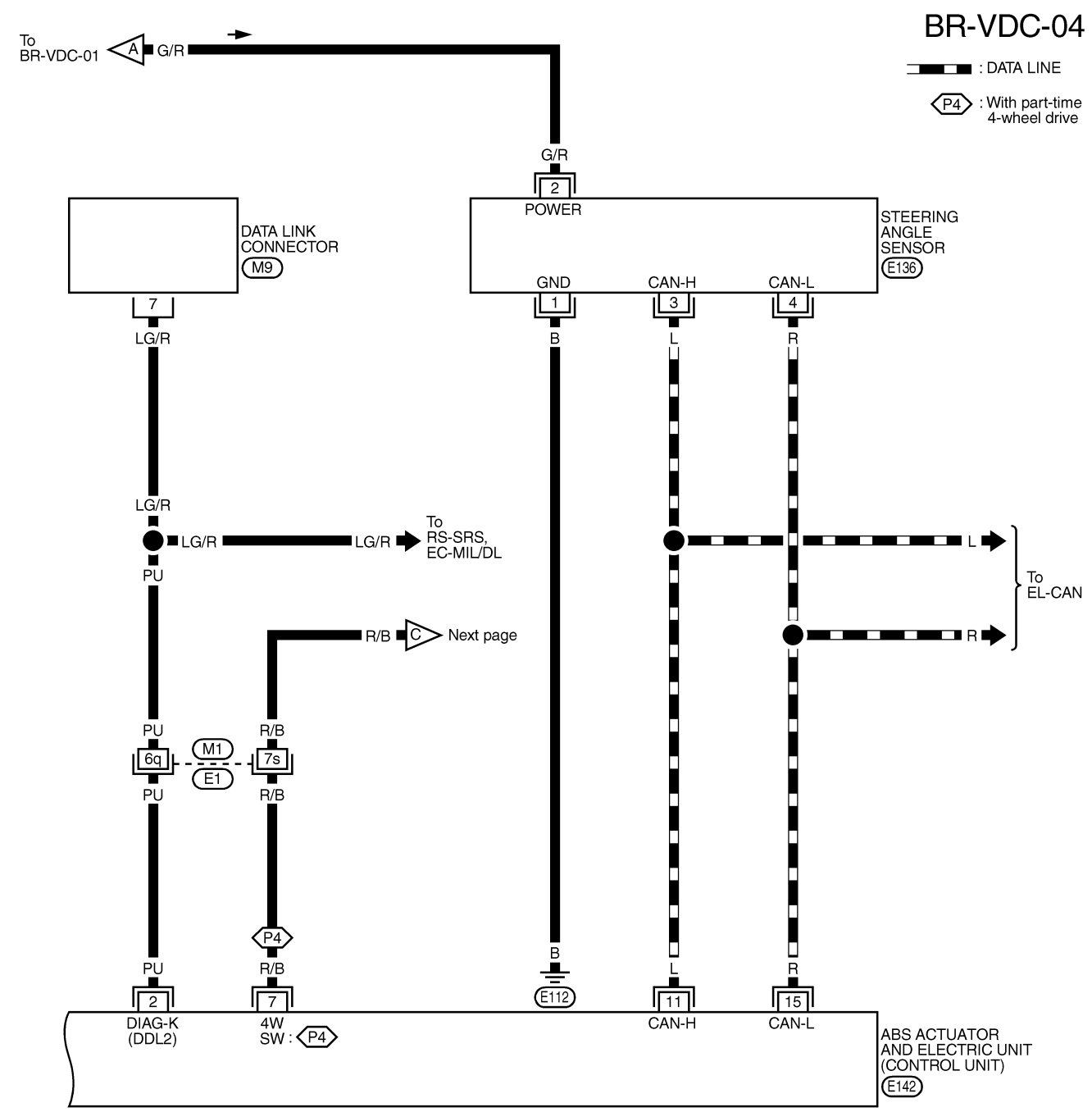

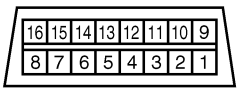

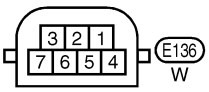

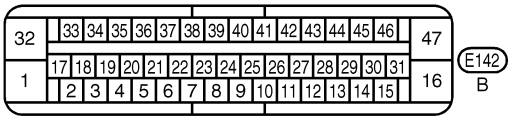

REFER TO THE FOLLOWING.
E1 -SUPER MULTIPLE JUNCTION (SMJ)

MBR726A

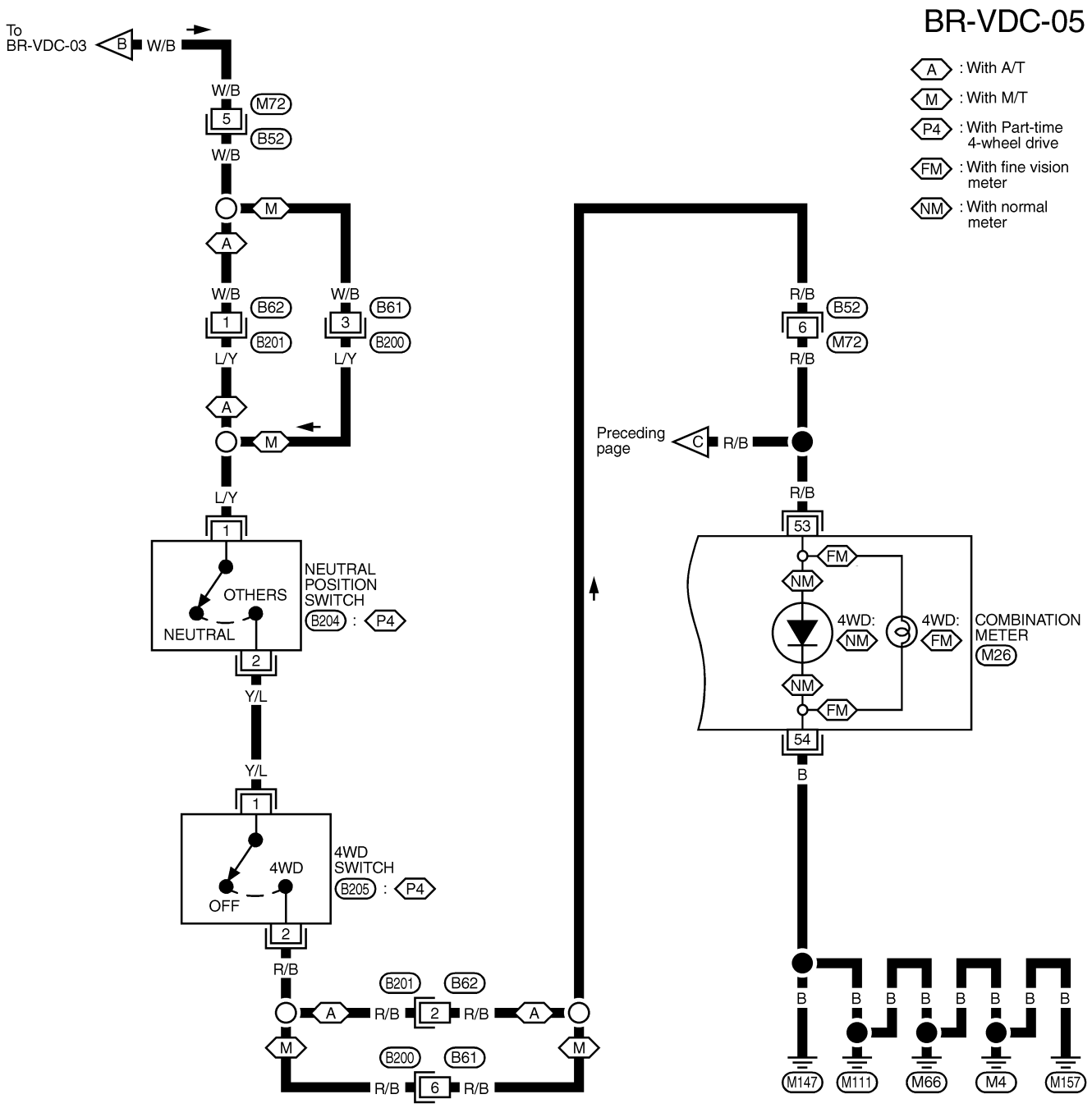
BR-VDC-05
A : With A/T
M : With M/T
P4 : With Part-time 4-wheel drive
FM : With fine vision meter
NM : With normal meter
To BR-VDC-03
B
W/B
M72
5
B52
M
A
B62
1
B201
L/Y
B61
3
B200
NEUTRAL POSITION SWITCH
OTHERS
NEUTRAL
B204 : P4
2
Y/L
4WD SWITCH
4WD
OFF
B205 : P4
R/B
6
Preceding page
C
53
FM
NM
4WD:
COMBINATION METER
M26
54
B
M147
M111
M66
M4
M157

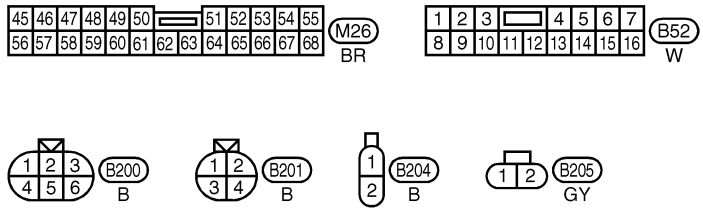
M26
BR
B52
W
B200
B
B201
B
B204
B
B205
GY

MBR729A

Control Unit Input/Output Signal Standard

NABR0169

STANDARDS BY CONSULT-II

NABR0169S01

CAUTION:

Items displayed are data calculated by the control unit and may indicate normal operation even if output circuit (harness) is open or shorted.

Monitor item	Display content	Data monitor		Note: Error inspection checklist
		Condition	Reference value in normal operation	
GEAR	A/T gear position	Vehicle running	1 to 4	—
SLCT LVR POSI	A/T shift position	Select shift position	Shift position: P, R, N or D	Refer to AT section.
FR LH SENSOR FR RH SENSOR RR LH SENSOR RR RH SENSOR	Wheel speed	Vehicle stopped	0 [km/h (MPH)]	Wheel sensor circuit [Inspection 1] Refer to BR-116.
		Vehicle running (Note 1)	Almost in accordance with speedometer display (within ±10%)	
ACCEL POS SIG	Throttle actuator opening/closing is displayed (linked with accelerator pedal)	Accelerator pedal not depressed (ignition switch is ON)	0%	Communication circuit between ABS actuator and electric unit (control unit) and ECM
		Depress accelerator pedal (ignition switch is ON)	0 to 100%	
ENGINE SPEED·	With engine running	With engine stopped	0 rpm	Engine speed signal circuit
		Engine running	Almost in accordance with tachometer display	
STR ANGLE SIG	Steering angle detected by steering angle sensor	Straight-ahead	Approx. 0 deg	Steering angle sensor and circuit [Inspection 5] Refer to BR-120.
		Steering wheel turned	–756 to 756 deg	
YAW RATE SEN	Yaw rate detected by yaw rate sensor	Vehicle stopped	Approx. 0 d/s	Yaw rate sensor and circuit [Inspection 6] Refer to BR-121.
		Vehicle running	–100 to 100 d/s	
SIDE G-SENSOR	Transverse G detected by side G-sensor	Vehicle stopped	Approx. 0 m/s^2	Side G-sensor and circuit [Inspection 6] Refer to BR-121.
		Vehicle running	–16.7 to 16.7 m/s^2	
DECEL G-SEN	Longitudinal acceleration detected by Decel G sensor	Vehicle stopped	Approx. 0 G	Decel G sensor and circuit
		During driving	±1.7 G	
PRESS SENSOR	Brake fluid pressure detected by pressure sensor	With ignition switch turned ON and brake pedal released	Approx. 0 bar	Pressure sensor and circuit [Inspection 4] Refer to BR-119.
		With ignition switch turned ON and brake pedal depressed	0 to 170 bar	
BATTERY VOLT	Battery voltage supplied to ABS actuator and electric unit (control unit)	Ignition switch ON	10 to 16V	ABS actuator and electric unit (control unit) power supply and ground circuits [Inspection 10] Refer to BR-127.

Control Unit Input/Output Signal Standard (Cont'd)

Monitor item	Display content	Data monitor		Note: Error inspection checklist
		Condition	Reference value in normal operation	
STOP LAMP SW	Brake pedal operation	Brake pedal depressed	ON	Stop lamp switch circuit [Inspection 9] Refer to BR-126.
		Brake pedal not depressed	OFF	
OFF SW	OFF switch ON/OFF status	VDC OFF switch ON (When VDC OFF indicator lamp is ON)	ON	VDC OFF switch circuit
		VDC OFF switch OFF (When VDC OFF indicator lamp is OFF)	OFF	
ABS WARN LAMP	ABS warning lamp ON condition (Note 2)	ABS warning lamp ON	ON	ABS warning lamp harness
		ABS warning lamp OFF	OFF	
MOTOR RELAY	Operation status of motor and motor relay	Ignition switch ON or engine running (ABS not operated)	OFF	ABS motor, motor relay, and motor circuit [Inspection 8] Refer to BR-125.
		Ignition switch ON or engine running (ABS operated)	ON	
ACTUATOR RLY	Actuator relay operation status	Vehicle stopped (Ignition switch ON)	OFF	ABS actuator relay and circuit [Inspection 8] Refer to BR-125.
		Vehicle stopped (Engine running)	ON	
OFF LAMP	VDC OFF indicator lamp status (Note 3)	When VDC OFF indicator lamp is ON	ON	VDC OFF indicator lamp circuit
		When VDC OFF indicator lamp is OFF	OFF	
SLIP LAMP	SLIP indicator lamp status (Note 4)	When SLIP indicator lamp is ON	ON	SLIP indicator lamp circuit
		When SLIP indicator lamp is OFF	OFF	
FR IN SOL FR OUT SOL RR IN SOL RR OUT SOL	Solenoid valve operation	Actuator (solenoid) is active ("ACTIVE TEST" with CONSULT-II) or actuator relay is inactive (in fail-safe mode).	ON	Solenoid and circuit [Inspection 7] Refer to BR-123.
		When actuator (solenoid) is not active and actuator relay is active (ignition switch ON).	OFF	
FLUID LEV SW	ON/OFF status of brake fluid level sensor	When brake fluid level sensor ON	ON	Brake fluid level sensor, brake warning lamp, and circuit [Inspection 13] Refer to BR-130.
		When brake fluid level sensor OFF	OFF	
EBD FAIL SIG ABS FAIL SIG TCS FAIL SIG VDC FAIL SIG	System fail signal status	Malfunctions condition (When system failed)	OFF	EBD system ABS system TCS system VDC system

Monitor item	Display content	Data monitor		Note: Error inspection checklist
		Condition	Reference value in normal operation	
CV1 CV2 SV1 SV2	VDC switch-over solenoid valve status	When the actuator (switch-over solenoid valve) is active ("Active test" with CONSULT-II) or the actuator relay is inactive (when fail-safe mode).	ON	Switch-over solenoid valve and circuit
		When the actuator (switch-over solenoid valve) is inactive or the actuator relay is active (ignition switch ON).	OFF	

Note 1: Confirm tire pressure is normal.

Note 2: ON/OFF timing of ABS warning lamp

ON: For approximately 1 seconds after ignition switch is turned ON, or when a malfunction is detected.

OFF: Approximately 1 seconds after ignition switch is turned ON (when system is in normal operation) and VDC/TCS function is not activated.

(Note 3): ON/OFF timing of VDC OFF indicator lamp

ON: For approximately 1 seconds after ignition switch is turned ON, or when a malfunction is detected and VDC OFF switch is ON.

OFF: Approximately 1 seconds after ignition switch is turned ON (when system is in normal operation.) And when VDC OFF switch is OFF.

Note 4: SLIP indicator lamp ON/OFF timing

ON: For approximately 1 seconds after ignition switch is turned ON, or when a malfunction is detected and VDC/TCS function is activated while driving.

OFF: Approximately 1 seconds after ignition switch is turned ON (when system is in normal operation) and VDC/TCS function is not activated.

Flashing: VDC/TCS function is active during driving

CONSULT-II Functions

NABR0170

CONSULT-II MAIN FUNCTION

NABR0170S01

In a diagnosis function (main function), there are "WORK SUPPORT", "SELF-DIAGNOSTIC RESULTS", "DATA MONITOR", "CAN DIAG SUPPORT MNTR", "ACTIVE TEST", "FUNCTION TEST", "ECU PART NUMBER".

Diagnostic test mode	Function	Reference
WORK SUPPORT	This mode enables a technician to adjust some devices faster and more accurately by following the indications on CONSULT-II.	Refer to BR-86.
SELF-DIAGNOSTIC RESULTS	Self-diagnostic results can be read and erased quickly.	Refer to BR-105.
DATA MONITOR	Input/Output data in the ABS actuator and electric unit (control unit) can be read.	Refer to BR-108.
CAN DIAG SUPPORT MNTR	The results of transmit/receive diagnosis of communication can be read.	—
ACTIVE TEST	Diagnostic Test Mode in which CONSULT-II drives some actuators apart from the ABS actuator and electric unit (control unit) and also shifts some parameters in a specified range.	Refer to BR-111.

CONSULT-II Functions (Cont'd)

Diagnostic test mode	Function	Reference
FUNCTION TEST	Conducted by CONSULT-II instead of a technician to determine whether each system is "OK" or "NG".	—
ECU PART NUMBER	ABS actuator and electric unit (control unit) part number can be read.	—

SELF-DIAGNOSIS

=NABR0170S02

Description

NABR0170S0201

If a malfunction is detected in system, ABS warning lamp, VDC OFF indicator lamp, and SLIP indicator lamp on meter turn on. In this case, perform self-diagnosis as follows:

Operation Procedure

NABR0170S0202

1. Perform Refer to BR-115 using information from customer.

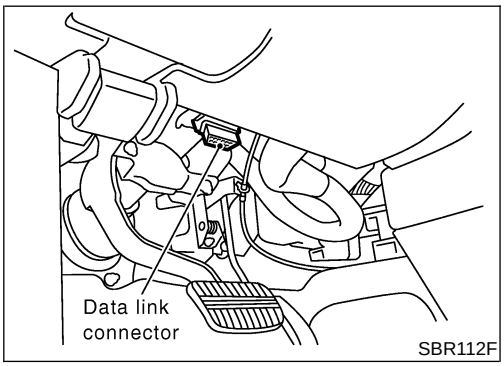

2. After ignition switch is turned OFF, connect CONSULT-II and CONSULT-II CONVERTER to data link connector (data link connector is on lower instrument cover).
3. Start engine and drive at approximately 30 km/h (19 MPH) or more for approximately 1 minute.
4. After stopping vehicle, with engine still idling, touch "START", "ABS", and "SELF-DIAG RESULTS" on CONSULT-II screen in this order.

CAUTION:

Just after starting engine, or turning ignition switch ON, "ABS" may not be displayed on system selection screen even if "START" is touched. In this case, start self-diagnosis again from step 2. If it cannot be shown after several attempts, VDC/TCS/ABS control unit may have malfunctioned. Repair or replace control unit.

5. Self-diagnosis result is displayed. (If necessary, touch "PRINT" to print self-diagnosis result.)

- When "NO FAILURE" is shown, check ABS warning lamp, VDC OFF indicator lamp, SLIP indicator lamp. Refer to BR-113.
- CONSULT-II self-diagnosis results are displayed without regard to occurrence timing. In some cases later ones (timing value is small) appear on next screen.

6. Go to appropriate "Inspection" chart according to "Display Item List", and repair or replace as necessary.
7. Start engine and drive at approximately 30 km/h (19 MPH) or more for approximately 1 minute.

CAUTION:

Check again to make sure that there is no malfunction on other parts.

8. Turn ignition switch OFF to prepare for erasing memory.
9. Start engine and touch "START", "ABS", "SELF-DIAGNOSIS RESULTS", and "ERASE MEMORY" on CONSULT-II screen in this order to erase memory.

CAUTION:

If memory cannot be erased, go to step 6.

10. Drive vehicle at approximately 30 km/h (19 MPH) or more and check that ABS warning lamp, VDC OFF indicator lamp, and SLIP indicator lamp stay off.

Display Item List

NABR0170S0203

Malfunction system	Malfunction detecting condition	Check system
FR LH SENSOR-1	Circuit of front LH wheel sensor is open	Wheel sensor and circuit [Inspection 1] Note 1 Refer to BR-116.
RR RH SENSOR-1	Circuit of rear RH wheel sensor is open	
FR RH SENSOR-1	Circuit of front RH wheel sensor is open	
RR LH SENSOR-1	Circuit of rear LH wheel sensor is open	
FR LH SENSOR-2	Circuit of front LH wheel sensor is shorted, or sensor power voltage is unusual. Control unit cannot identify sensor pulses, because of large gap between wheel sensor and sensor rotor.	
RR RH SENSOR-2	Circuit of rear RH wheel sensor is shorted, or sensor power voltage is unusual. Control unit cannot identify sensor pulses, because of large gap between wheel sensor and sensor rotor.	
FR RH SENSOR-2	Circuit of front RH wheel sensor is shorted, or sensor power voltage is unusual. Control unit cannot identify sensor pulses, because of large gap between wheel sensor and sensor rotor.	
RR LH SENSOR-2	Circuit of rear LH wheel sensor is shorted, or sensor power voltage is unusual. Control unit cannot identify sensor pulses, because of large gap between wheel sensor and sensor rotor.	
STOP LAMP SW	Stop lamp switch circuit is open.	Stop lamp switch and circuit [Inspection 9] Refer to BR-126.
PRESS SEN CIRCUIT	VDC pressure sensor signal line is open or shorted, or VDC pressure sensor is malfunctioning.	VDC pressure sensor and circuit [Inspection 4] Refer to BR-119.
ST ANGLE SEN CIRCUIT	Neutral position of steering angle sensor is dislocated, or steering angle sensor is malfunctioning.	Steering angle sensor and circuit [Inspection 5] Refer to BR-120.
YAW RATE SENSOR	Yaw rate sensor has generated an error, or yaw rate sensor signal line is open or shorted.	Yaw rate/Side G-sensor and circuit [Inspection 6] Refer to BR-121.
FR LH IN ABS SOL	Circuit of front LH IN ABS solenoid is open or shorted, or control line is open or shorted to power supply or ground.	Solenoid and circuit [Inspection 7] Refer to BR-123.
FR LH OUT ABS SOL	Circuit of front LH OUT ABS solenoid is open or shorted, or control line is open or shorted to power supply or ground.	
RR RH IN ABS SOL	Circuit of rear RH IN ABS solenoid is open or shorted, or control line is open or shorted to power supply or ground.	
RR RH OUT ABS SOL	Circuit of rear RH OUT ABS solenoid is open or shorted, or control line is open or shorted to power supply or ground.	
FR RH IN ABS SOL	Circuit of front RH IN ABS solenoid is open or shorted, or control line is open or shorted to power supply or ground.	
FR RH OUT ABS SOL	Circuit of front RH OUT ABS solenoid is open or shorted, or control line is open or shorted to power supply or ground.	
RR LH IN ABS SOL	Circuit of rear LH IN ABS solenoid is open or shorted, or control line is open or shorted to power supply or ground.	
RR LH OUT ABS SOL	Circuit of rear LH OUT ABS solenoid is open or shorted, or control line is open or shorted to power supply or ground.	

Malfunction system	Malfunction detecting condition	Check system
CV1	Front side of VDC switch-over solenoid valve (cut valve) is open circuit or shorted, or the control line is open or shorted to the power supply or the ground.	VDC switch-over valve and circuit [Inspection 7] Refer to BR-123.
CV2	Rear side of VDC switch-over solenoid valve (cut valve) is open circuit or sorted, or the control line is open or shorted to the power supply or the ground.	
SV1	Front side of VDC switch-over solenoid valve (suction valve) is open circuit or shorted, or the control line is open or shorted to the power supply or the ground.	
SV2	Rear side of VDC switch-over solenoid valve (suction valve) is open circuit or shorted, or the control line is open or shorted to the power supply or the ground.	
PUMP MOTOR (note)	During actuator motor operation with ON, when actuator motor turns OFF or when control line for actuator motor relay is open.	Actuator motor, motor relay, and circuit [Inspection 8] Refer to BR-125.
	During actuator motor operation with OFF, when actuator motor turns ON or when control line for relay is shorted to ground.	
LOW POWER VOLTAGE	ABS actuator and electric unit (control unit) power voltage is too low.	ABS actuator and electric unit (control unit) power supply and ground circuits [Inspection 10] Refer to BR-127.
ST ANGLE SEN SIGNAL	Neutral position correction of steering angle sensor is not finished.	Neutral position adjustment of steering angle sensor [Inspection 12] Refer to BR-130.
ST ANG SEN COM CIR	CAN communication line or steering angle sensor has generated an error.	Steering angle sensor and CAN communication line [Inspection 14] Refer to BR-131.
SIDE G-SEN CIRCUIT	Side G-sensor is malfunctioning, or signal line of side G-sensor is open or shorted.	Yaw rate/Side G-sensor and circuit [Inspection 6] Refer to BR-121.
CONTROLLER FAILURE	Internal malfunction of ABS actuator and electric unit (control unit)	ABS actuator and electric unit (control unit) [Inspection 3] Refer to BR-118.
CAN COMM CIRCUIT	• CAN communication line is open or shorted. • ABS actuator and electric unit (control unit) internal malfunction • Battery voltage for EMC is suddenly interrupted for approximately 0.5 seconds or more.	Communication line between ABS actuator and electric unit (control unit) and other control units [Inspection 14] Note 2 Refer to BR-131.
BR FLUID LEVEL LOW	• Brake fluid level drops or communication line between ABS actuator and electric unit (control unit) and brake fluid level sensor is open or shorted.	• Communication line between ABS actuator and electric unit (control unit) and brake fluid sensor, and brake warning lamp • Reservoir tank fluid level [Inspection 13] Refer to BR-130.
VARIANT CODING	• V coding is not functioning.	The ABS actuator and electric unit (control unit) and circuit

Note 1. If wheel sensor 2 for each wheel is indicated, check control unit power supply voltage in addition to wheel sensor circuit check.

Note 2. If multiple malfunctions are detected including CAN communication line [U1000], perform diagnosis for CAN communication line first.

DATA MONITOR

NABR0170S03

- For details of data monitor function, refer to "CONSULT-II Instruction Manual".

Operation Procedure

NABR0170S0301

1. Turn ignition switch OFF.
2. Connect CONSULT-II to data link connector.
3. Turn ignition switch ON.
4. Touch "START" on display.
5. Touch "ABS" on display.

NOTE:
Just after starting engine, or turning ignition switch ON, "ABS" may not be displayed on system selection screen even if "START" is touched. In this case, start self-diagnosis again from step 2.

6. Touch "DATA MONITOR".
7. Return to monitor item selection screen, and touch any of "CONTROL UNIT INPUT ITEM", "MAIN ITEM" or "ITEM MENU SELECTION". Refer to BR-109.
8. Touch "START".
9. Screen of data monitor is displayed.

Display Item List

=NABR0170S0302

Item (Unit)	Monitor item selection			Remarks
	ECU input signals	Main item (Monitor item selector)	Selection from menu	
GEAR	×	×	×	Gear position judged by PNP switch signal is displayed.
FR RH SENSOR (km/h (MPH))	×	×	×	Wheel speed calculated by front RH wheel sensor signal is displayed.
FR LH SENSOR (km/h (MPH))	×	×	×	Wheel speed calculated by front LH wheel sensor signal is displayed.
RR RH SENSOR (km/h (MPH))	×	×	×	Wheel speed calculated by rear RH wheel sensor signal is displayed.
RR LH SENSOR (km/h (MPH))	×	×	×	Wheel speed calculated by rear LH wheel sensor signal is displayed.
BATTERY VOLT (V)	×	×	×	Voltage supplied to ABS actuator and electric unit (control unit) is displayed.
SLCT LVR POSI	×	×	×	Shift position judged by PNP switch signal.
ACCEL POS SIG (%)	×	—	×	Throttle actuator opening/closing status judged by CAN communication signal is displayed.
ENGINE SPEED (rpm)	×	×	×	Engine speed judged by CAN communication signal is displayed.
STR ANGLE SIG (deg)	×	—	×	Steering angle detected by steering angle sensor is displayed.
YAW RATE SEN (d/s)	×	×	×	Yaw rate detected by yaw rate sensor is displayed.
SIDE G-SENSOR (m/s^2)	×	—	×	Transverse acceleration detected by side G-sensor is displayed.
PRESS SENSOR (bar)	×	—	×	Brake fluid pressure detected by pressure sensor is displayed.
STOP LAMP SW (ON/OFF)	×	×	×	Stop lamp switch (ON/OFF) status is displayed.
OFF SW (ON/OFF)	×	×	×	VDC OFF switch (ON/OFF) status is displayed.
ABS WARN LAMP (ON/OFF)	—	×	×	ABS warning lamp (ON/OFF) status is displayed.
SLIP LAMP (ON/OFF)	—	×	×	SLIP indicator lamp (ON/OFF) status is displayed.
FR LH IN SOL (ON/OFF)	—	×	×	Front LH IN ABS solenoid (ON/OFF) status is displayed.
FR LH OUT SOL (ON/OFF)	—	×	×	Front LH OUT ABS solenoid (ON/OFF) status is displayed.
RR RH IN SOL (ON/OFF)	—	×	×	Rear RH IN ABS solenoid (ON/OFF) status is displayed.

CONSULT-II Functions (Cont'd)

Item (Unit)	Monitor item selection			Remarks
	ECU input signals	Main item (Monitor item selector)	Selection from menu	
RR RH OUT SOL (ON/OFF)	—	×	×	Rear RH OUT ABS solenoid (ON/OFF) status is displayed.
FR RH IN SOL (ON/OFF)	—	×	×	Front RH IN ABS solenoid (ON/OFF) status is displayed.
FR RH OUT SOL (ON/OFF)	—	×	×	Front RH OUT ABS solenoid (ON/OFF) status is displayed.
RR LH IN SOL (ON/OFF)	—	×	×	Rear LH IN ABS solenoid (ON/OFF) status is displayed.
RR LH OUT SOL (ON/OFF)	—	×	×	Rear LH OUT ABS solenoid (ON/OFF) status is displayed.
OFF LAMP (ON/OFF)	—	×	×	OFF Lamp (ON/OFF) status is displayed.
MOTOR RELAY (ON/OFF)	—	×	×	ABS motor relay (ON/OFF) status is displayed.
ACTUATOR RLY	—	×	×	ABS actuator relay (ON/OFF) status is displayed.
DECEL G-SEN	×	×	×	
FLUID LEV SW (ON/OFF)	×	—	—	Brake fluid level sensor (ON/OFF) status is displayed.

×: Applicable
—: Not applicable

ACTIVE TEST

=NABR0170S04

Operation Procedure

NABR0170S0401

CAUTION:

- **Do not perform active test while driving the vehicle.**
- **Make sure to completely bleed air from brake system.**
- **Active test cannot be performed when ABS warning lamp is on.**

1. Connect CONSULT-II to data link connector and start the engine.
2. Touch "START" on the display.
3. Touch "ABS" and "ACTIVE TEST".

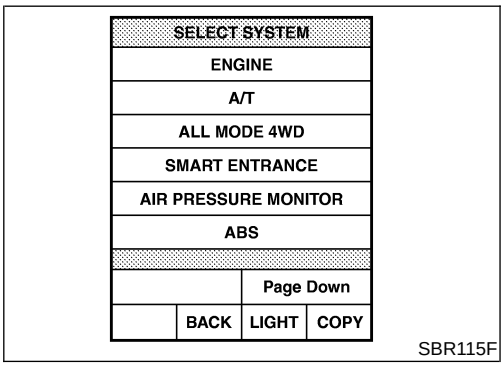

SBR115F

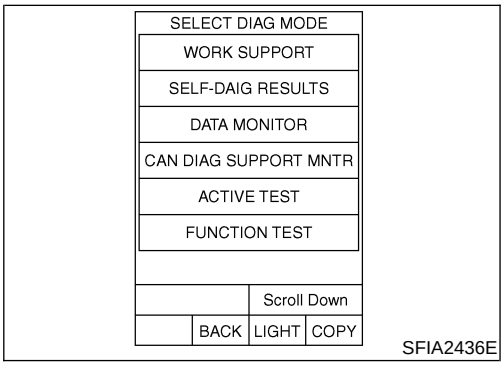

SFIA2436E

4. Test item selection screen is displayed.
5. Touch necessary test item.

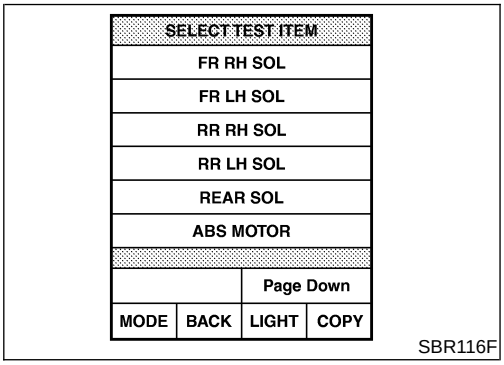

SBR116F

6. Touch "START" with "MAIN SIGNALS" line inverted.

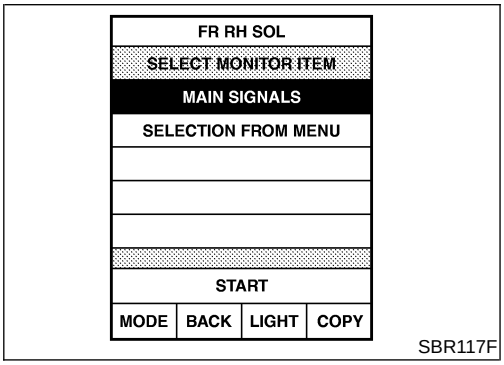

SBR117F

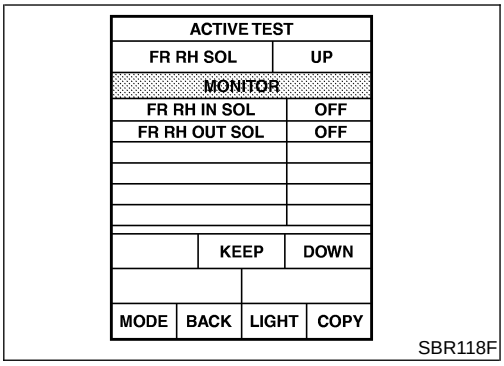

7. Active test screen is displayed.

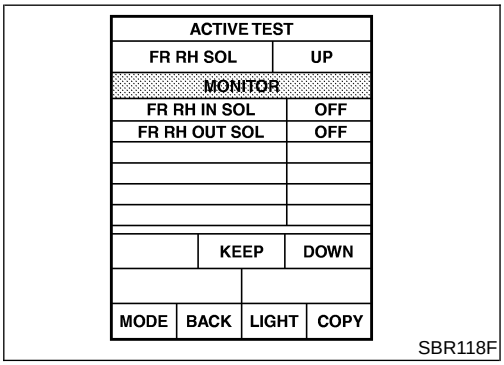

Solenoid Valve

NABR0170S0402

1. To perform active test of ABS functions, select major items for each test item. To perform active test of VDC/TCS functions, select item menu for each test item.
2. For ABS solenoid valve, touch "UP", "KEEP", and "DOWN". For ABS solenoid valve (ACT), touch "UP," "ACT UP," and "ACT KEEP". Use screen monitor to check that solenoid valve operates as shown in Solenoid Valve Operation Chart. Refer to "Solenoid Valve Operation Chart".

Solenoid Valve Operation Chart

NABR0170S0403

Operation		ABS solenoid valve			ABS solenoid valve (ACT)		
		UP	KEEP	DOWN	UP	ACT UP	ACT KEEP
Front RH ABS S/V	FR RH IN SOL	OFF	ON	ON	OFF	OFF	OFF
	FR RH OUT SOL	OFF	OFF	ON*	OFF	OFF	OFF
Front LH ABS S/V	FR LH IN SOL	OFF	ON	ON	OFF	OFF	OFF
	FR LH OUT SOL	OFF	OFF	ON*	OFF	OFF	OFF
Rear RH ABS S/V	RR RH IN SOL	OFF	ON	ON	OFF	OFF	OFF
	RR RH OUT SOL	OFF	OFF	ON*	OFF	OFF	OFF
Rear LH ABS S/V	RR LH IN SOL	OFF	ON	ON	OFF	OFF	OFF
	RR LH OUT SOL	OFF	OFF	ON*	OFF	OFF	OFF

*: ON for 1 to 2 seconds after the touch, and then OFF

NOTE:

- If active test is performed with brake pedal depressed, pedal stroke may change. This is normal.
- "TEST STOP" is displayed approximately 10 seconds after operation starts.
- After "TEST STOP" is displayed, to perform test again, repeat step 6.

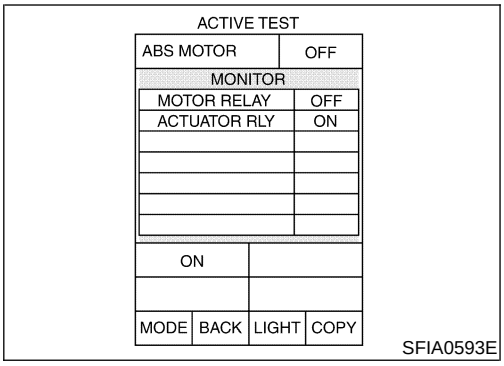

ABS Motor

NABR0170S0404

Touch "ON" and "OFF" on the screen. Check that ABS motor relay operates as shown in table below.

Operation	ON	OFF
ACTUATOR RLY	ON	ON
MOTOR RELAY	ON	OFF

NOTE:

- If active test is performed with brake pedal depressed, pedal stroke may change. This is normal.
- "TEST STOP" is displayed approximately 10 seconds after operation starts.

For Fast and Accurate Diagnosis

NABR0171

PRECAUTIONS FOR DIAGNOSIS

NABR0171S01

- Before performing diagnosis, always read General Information (GI) to confirm general precautions.
- If ABS actuator and electric unit (control unit), steering angle sensor, steering system parts, suspension system parts, or tires have been replaced, or if alignment has been adjusted, be sure to adjust neutral position of steering angle sensor before driving.
- When replacing ABS actuator and electric unit (control unit), be sure labels on control units are the same color.
- After diagnosis is finished, be sure to erase memory. Refer to BR-105.
- When checking continuity and voltage between units, be sure to check for disconnection, looseness, bend, or collapse of connector terminals. If any non-standard condition is found, repair or replace connector terminals.
- For intermittent symptoms, possible cause is malfunction in harness, harness connector, or terminals. Move harness, harness connector, and terminals to check for poor connections.
- If a circuit tester is used for the check, be careful not to forcibly extend any connector terminal.
- To use CONSULT-II to perform self-diagnosis of ABS actuator and electric unit (control unit), active tests, or work support, first stop work, then connect CONSULT-II and select "ABS".
- CONSULT-II self-diagnosis results are displayed without regard to occurrence timing. In some cases later ones (timing value is small) appear on the next screen.
- While self-diagnosis results of CONSULT-II shows an error, if CONSULT-II active test is performed, an engine system error may be indicated. In this case, start engine to resume the normal screen.
- VDC/TCS/ABS system electronically controls brake operation and engine output. The following symptoms may be caused by normal operations:

Symptom	Symptom description	Result
Motor operation noise	This is noise of motor inside ABS actuator and electric unit (control unit). Slight noise may occur during VDC, TCS, and ABS operation.	Normal
	When the vehicle speed goes over 20 km/h (12 MPH), motor and valve operating noise may be heard. It happens only once after turning ignition switch ON. This is a normal status of the system operation check.	

Symptom	Symptom description	Result
System operation check noise	When the engine starts, slight "click" noise may be heard from engine compartment. This is normal and is part of system operation check.	Normal
VDC/TCS operation (SLIP lamp ON)	TCS may activate momentarily if wheel speed changes when driving over location where friction coefficient varies, when downshifting, or when fully depressing accelerator pedal.	Normal Cancel the VDC/TCS function for the inspection on a chassis dynamometer.
	For inspection of speedometer or other instruments, press VDC OFF SW to turn VDC/TCS function off.	
	When accelerator pedal is depressed on a chassis dynamometer (fixed front-wheel type), vehicle speed will not increase. This is not normal. It is result of TCS being activated by stationary front wheels. Warning lamp may also illuminate to indicate "sensor system error". This is also normal, and is the result of the stationary front wheels being detected. To be certain, restart engine, and drive vehicle at 30 km/h (19 MPH) or more. Check that warning lamp does not illuminate.	
ABS operation (Longer stopping distance)	On roads with low friction coefficients, such as snowy roads or gravel roads, vehicles with ABS may require a longer stopping distance. Therefore, when driving on such roads, avoid overconfidence and keep speed sufficiently low.	Normal
Insufficient feeling of acceleration	Depending on road conditions, driver may feel that feeling of acceleration is insufficient. This is because traction control, which controls the engine and brakes to achieve optimal traction, has the highest priority (for safety). As a result, there may be times when acceleration is slightly less than usual for the same accelerator pedal operation.	Normal

ON and OFF Timing for ABS Warning Lamp, VDC OFF Indicator Lamp, and SLIP Indicator Lamp

NABR0171S0101

×: ON —: OFF

Condition	ABS warning lamp	VDC OFF indicator lamp	SLIP indicator lamp	Remarks
Ignition SW OFF	—	—	—	—
For Approx. 1 seconds after ignition SW is turned ON	×	×	×	—
Approx. 1 seconds after ignition switch ON	—	—	—	Turns OFF 2 seconds after engine starts.
VDC OFF SW is turned ON. (VDC function is OFF.)	—	×	—	—
There is a VDC/TCS/ABS error.	×	×	×	—
	×	×	×	There is a ABS actuator and electric unit (control unit) error. (Power or ground malfunction)
When VDC/TCS is not functioning normally.	—	×	×	—

Basic Inspection

NABR0172

BASIC INSPECTION 1: BRAKE FLUID LEVEL AND LEAK INSPECTION

NABR0172S01

1. Check fluid level in the brake reservoir tank. If fluid level is low, refill the brake fluid.
2. Check for leakage in brake piping and around VDC/TCS/ABS actuator. If leakage or seepage is found, check as follows.

- If VDC/TCS/ABS actuator connector is loose, tighten piping to specified torque. Then inspect again and confirm that there is no leakage.
- If connection flare nuts or screws of VDC/TCS/ABS actuator are damaged, replace damaged parts. Then inspect again and confirm that there is no leakage.
- If there is leakage or seepage at any location other than VDC/TCS/ABS actuator connections, wipe away leakage or seepage with clean cloth. Then inspect again and confirm that there is no leakage.
- If there is leakage from VDC/TCS/ABS actuator, wipe away leakage or seepage with clean cloth. Then inspect again. If there is leakage or seepage, replace VDC/TCS/ABS actuator unit.

CAUTION:
ABS actuator body cannot be disassembled.

3. Check brake disc rotor and pads.

BASIC INSPECTION 2: INSPECTION FOR LOOSENESS OF POWER SYSTEM TERMINALS

NABR0172S02

Check battery for looseness on the battery positive/negative terminals and ground connection. If looseness is detected, tighten the piping to the specified torque. Check that the battery voltage does not drop and the alternator is normal.

BASIC INSPECTION 3: INSPECTION OF ABS WARNING LAMP, VDC OFF INDICATOR LAMP AND SLIP INDICATOR LAMP

NABR0172S03

1. Check that ABS warning lamp illuminates for approximately 1 seconds when ignition switch is turned ON. If it does not illuminate, inspect ABS warning lamp and circuit, and inspect combination meter.
2. Check that VDC OFF indicator lamp illuminates for approximately 1 seconds when ignition switch is turned ON. If it does not illuminate, inspect VDC OFF indicator lamp and circuit, and inspect combination meter.
3. Check that SLIP indicator lamp illuminates for approximately 1 seconds when ignition switch is turned ON. If it does not turn on, check SLIP indicator lamp and circuit.
4. With engine running, turn VDC OFF switch ON and OFF. Check that VDC OFF indicator lamp turns ON and OFF. If indicator lamp does not turn ON and OFF according to switch operation, inspect VDC OFF switch and circuit.

Inspection 1 Wheel Sensor System

NABR0173

INSPECTION PROCEDURE

NABR0173S01

First use CONSULT-II self-diagnosis results to determine positions of malfunctioning wheel sensors. Then inspect parts and determine which parts to replace.

1	STARTING INSPECTION

Perform self-diagnosis.

SELF-DIAG RESULTS	
DTCRESULTS	TIME
RR RH SENSOR-1 [C1101]	0

SFIA0625E

OK or NG

OK	▶	Inspection is completed.
NG	▶	GO TO 2.

2	CHECKING CONNECTOR

Disconnect control unit connector E142 and connector E14 (FR-LH), E51 (FR-RH), B8 (RR-LH), B69 (RR-RH) of wheel sensor where malfunction was detected. Check for deformation of terminals and incomplete joining of connectors. Then reconnect connector. Also check that interference with other parts has not cut wheel sensor cables.

Drive vehicle at 30 km/h (19 MPH) or more for at least 1.0 minute. Did ABS warning lamp turn OFF?

YES	▶	Inspection is completed.
NO	▶	GO TO 3.

3	CHECKING WHEEL SENSOR CIRCUIT

1. Disconnect control unit connector E142.
2. Disconnect wheel sensor connector E14 (FR-LH), E51 (FR-RH), B8 (RR-LH), B69 (RR-RH).
3. Check resistance between terminals. (Check resistance when steering wheel is turned right and left, and when sensor harness inside wheel house is moved.)

	Power system		Signal system		GND system
Wheel	Control unit	Wheel sensor	Control unit	Wheel sensor	Control unit
Front RH wheel	34 (B)	1 (B)	33 (W)	2 (W)	16 (B), 47 (B)
Front LH wheel	45 (G)	1 (G)	46 (G/Y)	2 (G/Y)	
Rear RH wheel	43 (BR)	1 (BR)	42 (B/R)	2 (BR/B)	
Rear LH wheel	36 (OR)	1 (BR)	37 (P)	2 (B/R)	

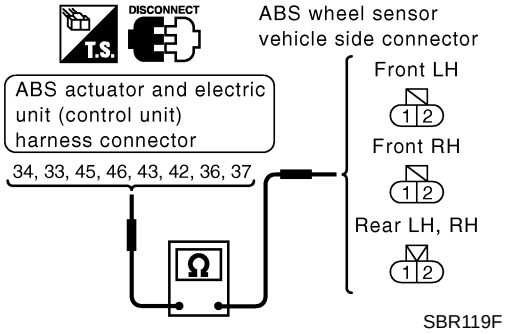

Resistance value
Power system: 0 - 0.5 Ω
Signal system: 0 - 0.5 Ω
GND system: ∞Ω

OK or NG

OK	▶	GO TO 4.
NG	▶	Repair harness and connectors between control unit and wheel sensor.

4	TIRE INSPECTION

Check air pressure, wear, and size.

Are air pressure, wear, and size within standards?

YES	▶	GO TO 5.
NO	▶	Adjust air pressure or replace tire.

5	SENSOR ROTOR INSPECTION

Check for damage to sensor rotor teeth and surface of rubber.

OK or NG

OK	▶	GO TO 6.
NG	▶	Replace sensor rotor.

6	POWER SUPPLY CHECK FOR CONTROL UNIT SENSOR

1. Disconnect wheel sensor connector E14 (FR-LH), E51 (FR-RH), B8 (RR-LH), B69 (RR-RH).
2. Check voltage between wheel sensor harness connector E14 terminal 1 (G), E51 terminal 1 (B), B8 terminal 1 (BR), B69 terminal 1 (BR) and ground.
   Voltage: 8V or more

OK	▶	Replace wheel sensor.
NG	▶	Replace control unit.

Inspection 2 Engine System

NABR0174

Inspection Procedure

1	CHECKING SELF-DIAGNOSIS RESULTS (1)

Check self-diagnosis results.

Self-diagnosis results
CONSULT-II display items
Engine system 2
Engine system 3
Engine system 4
Engine system 5
Engine system 6

MTBL1338

Do self-diagnosis results indicate anything other than the above?

YES	▶	Perform repair or replacement for the item indicated.
NO	▶	GO TO 2.

2	CHECKING SELF-DIAGNOSIS RESULTS (2)

1. Perform ECM self-diagnosis. Repair or replace items indicated, then perform ECM self-diagnosis again.
2. Perform ABS actuator and electric unit (control unit) self-diagnosis again.

OK or NG

OK	▶	Inspection is completed.
NG	▶	Repair or replace the items indicated. Then perform self-diagnosis again.

Inspection 3 VDC/TCS/ABS Control Unit System

NABR0176

Inspection Procedure

1	CHECKING SELF-DIAGNOSIS RESULTS

Check self-diagnosis results.

Self-diagnosis results
CONSULT-II display items
ABS controller

MTBL1339

Does anything other than “ABS CONTROLLER” appear on self-diagnosis display?

YES	▶	Repair or replace the items indicated. Then perform self-diagnosis again.
NO	▶	Replace ABS actuator and electric unit (control unit). Then perform ABS actuator and electric unit (control unit) self-diagnosis again.

Inspection 4 VDC Pressure Sensor System

NABR0177

Inspection Procedure

1	CHECKING SELF-DIAGNOSIS RESULTS (1)

Check self-diagnosis results.

Self-diagnosis results
CONSULT-II display items
Pressure sensor system

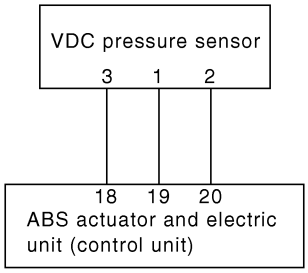

SBR120F

Does "PRESSURE SENSOR" appear on self-diagnosis display?

YES	▶	GO TO 2.
NO	▶	Inspection is completed.

2	CHECKING SELF-DIAGNOSIS RESULTS (2)

1. Disconnect VDC pressure sensor connector E137 and ABS actuator and electric unit (control unit) connectors E142. Then reconnect them securely.
2. Perform ABS actuator and electric unit (control unit) self-diagnosis again.

OK or NG

OK	▶	Poor connection of connectors. Repair or replace suspect connector. Perform self-diagnosis again.
NG	▶	GO TO 3.

3	CHECKING PRESSURE SENSOR CIRCUIT

1. Disconnect VDC pressure sensor connector E137 and ABS actuator and electric unit (control unit) connectors E142.
2. Check continuity between ABS actuator and electric unit (control unit) harness connector E142 and VDC pressure sensor harness connector E137.

ABS actuator and electric unit (control unit) (Harness connector E142)	VDC pressure sensor (Harness connector E137)	Continuity
18 (G/B)	3 (G/B)	Yes
19 (P/B)	1 (P/B)	Yes
20 (SB)	2 (SB)	Yes

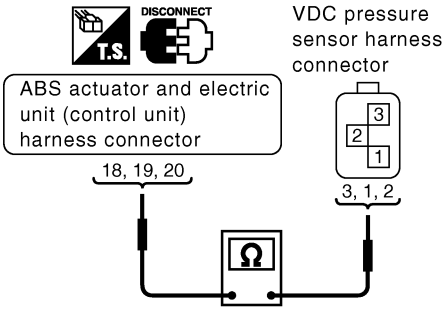

SBR121F

OK or NG

OK	▶	GO TO 4.
NG	▶	Open or short in harness. Repair or replace the suspect harness.

4	CHECKING PRESSURE SENSOR

Check VDC pressure sensor value on "DATA MONITOR".

Condition	Data monitor display
Brake pedal depressed	Positive value
When brake pedal is released.	Approx. 0 bar

MTBL1340

OK or NG

OK	▶	Inspection is completed.
NG	▶	VDC pressure sensor malfunction. Replace VDC pressure sensor.

Inspection 5 Steering Angle Sensor System

NABR0178

Inspection Procedure

1	CHECKING SELF-DIAGNOSIS RESULTS (1)

Check self-diagnosis results.

Self-diagnosis results
CONSULT-II display items
Steering angle sensor system

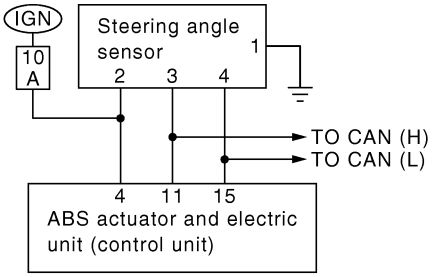

SBR122F

Also perform Inspection 1 for the CAN communication system.

Does "STEERING ANGLE SENSOR" appear on self-diagnosis display?

YES	▶	GO TO 2.
NO	▶	Inspection is completed.

2	CHECKING SELF-DIAGNOSIS RESULTS (2)

1. Disconnect steering angle sensor connector E136 and ABS actuator and electric unit (control unit) connectors E142. Then reconnect them securely.
2. Perform ABS actuator and electric unit (control unit) self-diagnosis again.

OK or NG

OK	▶	Poor connection of connectors. Repair or replace suspect connector. Perform self-diagnosis again.
NG	▶	GO TO 3.

3	CHECKING STEERING ANGLE SENSOR CIRCUIT

1. Disconnect ABS actuator and electric unit (control unit) harness connector E142 and steering angle sensor harness connector E136.
2. Check continuity between ABS actuator and electric unit (control unit) harness connector E142 and steering angle sensor harness connector E136.

ABS actuator and electric unit (control unit) (Harness connector E142)	Steering angle sensor (Harness connector E136)	Continuity
4 (G/R)	2 (G/R)	Yes

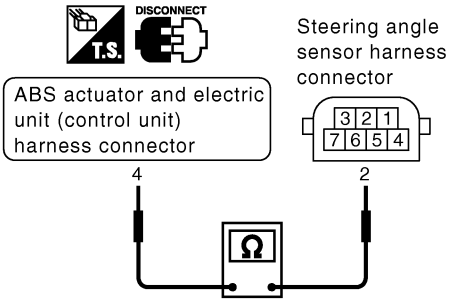

SBR125F

OK or NG

OK	▶	GO TO 4.
NG	▶	Open or short in harness. Repair or replace the suspect harness.

4	DATA MONITOR CHECK

Execute "DATA MONITOR" for "STEERING ANGLE SIGNAL". Check that results are normal.

Steering condition	Data monitor
Driving straight	-5 deg to +5 deg
Turned 90° to right	Approx. +90 deg
Turned 90° to left	Approx. -90 deg

MTBL1341

OK or NG

OK	▶	Perform ABS actuator and electric unit (control unit) self-diagnosis again.
NG	▶	Replace spiral cable (steering angle sensor) and adjust neutral position of steering angle sensor. Refer to BR-86.

Inspection 6 Yaw Rate/Side/Decel G Sensor System

NABR0179

Inspection Procedure

1	CHECKING SELF-DIAGNOSIS RESULTS (1)

Check self-diagnosis results.

Self-diagnosis results
CONSULT-II display items
Yaw rate sensor system Side G-sensor system

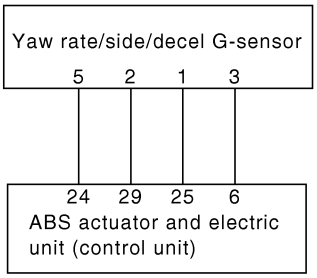

SBR126F

CAUTION:
If vehicle is on turn-table at entrance to parking garage, or on other moving surface, VDC OFF indicator lamp may illuminate and CONSULT-II self-diagnosis may indicate yaw rate sensor system malfunction. However, in this case there is no malfunction in yaw rate sensor system. Take vehicle off of turn-table or other moving surface, and start engine. Results will return to normal.

Do "YAW RATE SENSOR SYSTEM" and "SIDE G-SENSOR SYSTEM" appear on self-diagnosis display?

YES	▶	GO TO 2.
NO	▶	Inspection is completed.

2	CHECKING SELF-DIAGNOSIS RESULTS (2)

1. Disconnect yaw rate/side/decel G-sensor harness connector B163 and ABS actuator and electric unit (control unit) harness connector E142.
2. Check continuity between ABS actuator and electric unit (control unit) harness connector E142 and yaw rate/side/decel G-sensor connector B163.

ABS actuator and electric unit (control unit) (Harness connector E142)	Yaw rate/side/decel G-sensor (Harness connector B163)	Continuity
6 (OR)	3 (OR)	Yes
24 (B)	5 (B)	Yes
25 (W)	1 (W)	Yes
29 (G)	2 (G)	Yes

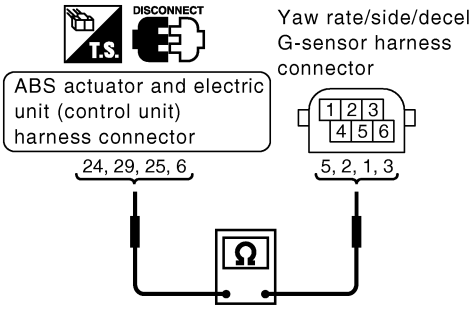

SBR127F

OK or NG

OK	▶	GO TO 3.
NG	▶	Open or short in harness. Repair or replace the suspect harness.

3	CHECKING YAW RATE/SIDE G-SENSOR CIRCUIT

Check "DATA MONITOR" for yaw rate/side/decel G-sensor. Check that results are normal.

Vehicle condition	Yaw rate sensor (Data monitor)	Side G-sensor (Data monitor)	Decel G-sensor (Data monitor)
Stopped	-75 to +75 deg/s	-1 to +1 m/s^2	±0.08 G
Turning right	Negative value	Negative value	Negative value
Turning left	Positive value	Positive value	Positive value

MTBL1342

OK or NG

OK	▶	Perform ABS actuator and electric unit (control unit) self-diagnosis again.
NG	▶	Malfunction of yaw rate/side/decel G-sensor. Replace sensor and perform ABS actuator and electric unit (control unit) self-diagnosis again.

Inspection 7 Solenoid Valve, VDC Switch-over Solenoid Valve and Circuit

NABR0200

Inspection procedure

1	SELF-DIAGNOSIS RESULT CHECK 1

Check the self-diagnosis results.

Self-diagnosis results
CONSULT-II indication item
FR LH IN ABS SOL
FR LH OUT ABS SOL
RR RH IN ABS SOL
RR RH OUT ABS SOL
FR RH IN ABS SOL
FR RH OUT ABS SOL
RR LH IN ABS SOL
RR LH OUT ABS SOL
CV1
CV2
SV1
SV2

SBR149F

Are any self-diagnosis result items above indicated?

	▶	GO TO 2.

2	SELF-DIAGNOSIS RESULT CHECK 2

1. Disconnect the ABS actuator and electric unit (control unit) connector. Securely connect them again.
2. Perform the self-diagnosis again.

OK or NG

OK	▶	GO TO 3.
NG	▶	Repair or replace the poorly connected connector.

3 SOLENOID VALVE LINE CHECK

1. Disconnect the ABS actuator and electric unit (control unit) connector.
2. Check for the power supply voltage between the ABS actuator and electric unit (control unit) connector E142 and the ground.
3. Check the continuity of the ground.

ABS actuator and electric unit (control unit) (Harness connector E142)	Ground	Continuity	Voltage valve
1 (Y), 32 (L)	–	–	Battery voltage (approx. 12V)
16 (B), 47 (B)	–	Yes	–

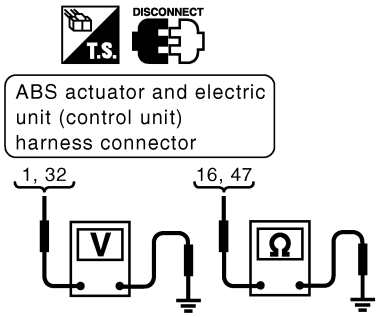

SBR150F

OK or NG

OK	▶	Perform the ABS actuator and electric unit (control unit) self-diagnosis again.
NG	▶	Replace the VDC/TCS/ABS actuator assembly.

Inspection 8 ABS Actuator Relay or ABS Motor Relay Power System

=NABR0201

Inspection procedure

1	SELF-DIAGNOSIS RESULT CHECK 1

Check the self-diagnosis results.

Self-diagnosis results
CONSULT-II indication item
PUMP MOTOR ACTUATOR RLY (NOTE)

MTBL1279

Are "PUMP MOTOR" and "ACTUATOR RLY" (NOTE) indicated in the self-diagnosis results?

▶	GO TO 2. **NOTE:** "ACTUATOR RLY" on the CONSULT-II self-diagnosis results indicates the malfunction of the actuator relay and circuit.

2	SELF-DIAGNOSIS RESULT CHECK 2

1. Disconnect the ABS actuator and electric unit (control unit) connector. Securely connect them again.
2. Perform the self-diagnosis again.

OK or NG

OK	▶	GO TO 3.
NG	▶	Repair or replace the poorly connected connector.

3	SOLENOID VALVE LINE CHECK

1. Disconnect the ABS actuator and electric unit (control unit) connector.
2. Check for the power supply voltage between the ABS actuator and electric unit (control unit) connector E142 and the ground.
3. Check the continuity of the ground.

ABS actuator and electric unit (control unit) (Harness connector E142)	Ground	Continuity	Voltage valve
1 (Y), 32 (L)	–	–	Battery voltage (approx. 12V)
16 (B), 47 (B)	–	Yes	–

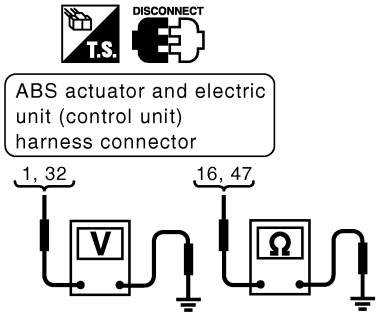

SBR150F

OK or NG

OK	▶	Perform the ABS actuator and electric unit (control unit) self-diagnosis again.
NG	▶	Replace the VDC/TCS/ABS actuator assembly.

Inspection 9 Stop Lamp Switch and Circuit

NABR0181

Inspection Procedure

1	CHECKING SELF-DIAGNOSIS RESULTS

Check self-diagnosis results.

Self-diagnosis results
CONSULT-II display items
Stop lamp switch system

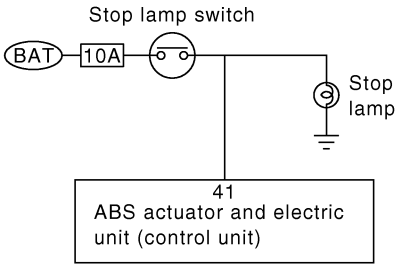

SBR128F

Does "STOP LAMP SW SYSTEM" appear in self-diagnosis results display?

YES	▶	GO TO 2.
NO	▶	Inspection is completed.

2	CHECKING STOP LAMP

1. Disconnect stop lamp switch connector M31 (M/T models) or M154 (A/T models) and ABS actuator and electric unit (control unit) connector E142.
2. Reconnect connectors securely.
3. Start engine.
4. Repeat pumping brake pedal carefully several times, then perform self-diagnosis again.

Do any self-diagnosis items appear?

YES	▶	GO TO 3.
NO	▶	Poor connection. Repair or replace the applicable connector.

3	CHECKING STOP LAMP SWITCH CIRCUIT

1. Disconnect stop lamp switch connector M31 (M/T models) or M154 (A/T models) and ABS actuator and electric unit (control unit) connector E142.
2. Check continuity between stop lamp switch harness connector M31 (M/T models) or M154 (A/T models) and ABS actuator and electric unit (control unit) harness connector E142.

ABS actuator and electric unit (control unit) (Harness connector E142)	Stop lamp switch (Harness connector M31 or M154)	Continuity
41 (B/W)	2 (G/Y)	Yes

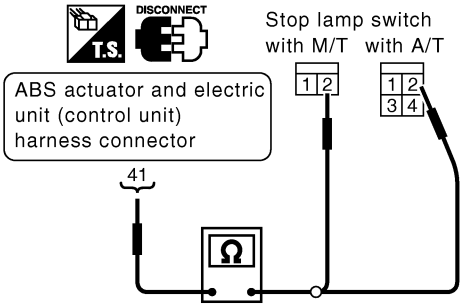

SBR129F

OK or NG

OK	▶	Perform ABS actuator and electric unit (control unit) self-diagnosis again.
NG	▶	Open or short in harness between ABS actuator and electric unit (control unit) and stop lamp switch

Inspection 10 ABS Actuator and Electric Unit (Control Unit) Power Circuit

NABR0182

Inspection Procedure

1	CHECKING SELF-DIAGNOSIS RESULT

Check self-diagnosis results.

Self-diagnosis results
CONSULT-II display items
Low battery voltage

MTBL1343

Does "LOW BATTERY VOLTAGE" appear in self-diagnosis results display?

YES	▶	GO TO 2.
NO	▶	Inspection is completed.

2	STARTING INSPECTION

1. Disconnect ABS actuator and electric unit (control unit) connector E142. Then reconnect it securely.
2. Perform self-diagnosis.

Do any self-diagnosis items appear?

YES	▶	GO TO 3.
NO	▶	Poor connection. Repair or replace the applicable connector.

3	CHECKING ABS ACTUATOR AND ELECTRIC UNIT (CONTROL UNIT) POWER SYSTEM (1)

1. Disconnect ABS actuator and electric unit (control unit) connector E142.
2. Turn ignition switch ON (but do not start engine). Check voltage between ABS actuator and electric unit (control unit) harness connector E142 and ground.

ABS actuator and electric unit (control unit) (Harness connector E142)	Ground	Voltage
1 (Y), 32 (L)	–	Battery voltage (Approx. 12V)

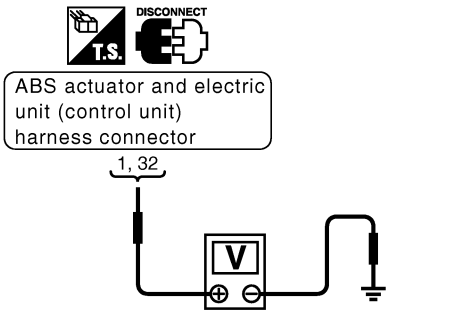

SBR135F

OK or NG

OK	▶	GO TO 4.
NG	▶	GO TO 5.

4 CHECKING ABS ACTUATOR AND ELECTRIC UNIT (CONTROL UNIT) GROUND CIRCUIT

Check ABS actuator and electric unit (control unit) ground circuit.

ABS actuator and electric unit (control unit) (Harness connector E142)	Ground	Continuity
16 (B)	–	Yes
47 (B)		

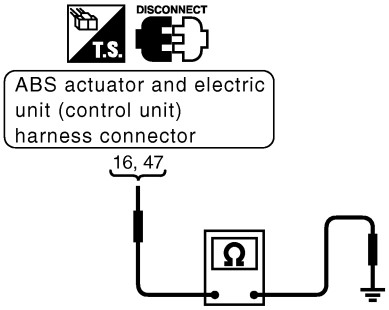

SBR130F

OK or NG

OK	▶	Perform ABS actuator and electric unit (control unit) self-diagnosis again.
NG	▶	● Poor installation of ABS actuator and electric unit (control unit), or harness malfunction

5 CHECKING ABS ACTUATOR AND ELECTRIC UNIT (CONTROL UNIT) POWER SYSTEM (2)

1. Check fuse 50A or 30A.
2. Check continuity between battery positive terminal and ABS actuator and electric unit (control unit) connector E142.

ABS actuator and electric unit (control unit) (Harness connector E142)	Battery positive terminal	Continuity
1 (Y), 32 (L)	–	Yes

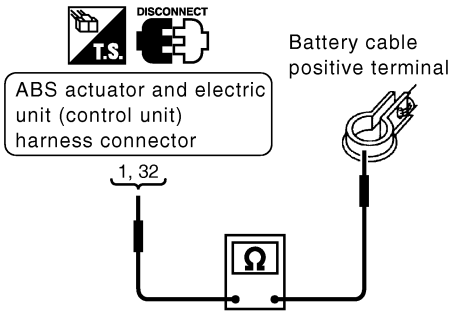

SBR136F

OK or NG

OK	▶	Check for non-standard conditions in battery (terminal looseness, low voltage, etc.) and alternator.
NG	▶	● Replace fuse 50A or 30A. ● Open or short in harness.

Inspection 11 When "SHIFT POSITION ERROR" Appears in Self-Diagnosis Results Display

=NABR0183

Inspection Procedure

1	CHECKING SELF-DIAGNOSIS RESULTS

Check self-diagnosis results.

Self-diagnosis results
CONSULT-II display items
Shift position error

MTBL1344

Does "SHIFT POSITION ERROR" appear in self-diagnosis results display?

YES	▶	GO TO 2.
NO	▶	Inspection is completed.

2	DATA MONITOR CHECK

1. Connect CONSULT-II. Start engine.
2. In "DATA MONITOR" select "ITEM MENU" and then check P position.

Selector lever position	P POSI SIG (data monitor)
P position	ON
Other than P position.	OFF

MTBL1345

OK or NG

OK	▶	Perform ABS actuator and electric unit (control unit) self-diagnosis again.
NG	▶	GO TO 3.

3	CHECKING PARK/NEUTRAL POSITION SWITCH

Perform the park/neutral position switch inspection. Refer to AT-260.

Do any self-diagnosis items appear?

YES	▶	Repair the indicated items and perform ABS actuator and electric unit (control unit) self-diagnosis again.
NO	▶	Perform ABS actuator and electric unit (control unit) self-diagnosis again.

Inspection 12 When "ST ANG SEN COM CIR" Appears on Self-Diagnosis Results Display

=NABR0180

Inspection Procedure

1	CHECKING SELF-DIAGNOSIS RESULTS (1)	
Check self-diagnosis results.		

Self-diagnosis results
CONSULT-II display items
ST ANG SEN COM CIR

MTBL1347

Does anything besides "ST ANG SEN COM CIR" appear on self-diagnosis results display?

YES	▶	Inspect and repair the indicated items. Then perform self-diagnosis again.
NO	▶	Perform adjustment of steering angle sensor neutral position. Then GO TO 2.

2	CHECKING SELF-DIAGNOSIS RESULTS (2)	
Turn ignition switch OFF, and ON to erase self-diagnosis results, and perform ABS actuator and electric unit (control unit) self-diagnosis again.		

Does anything appear on self-diagnosis results display?

YES	▶	Replace steering angle sensor. Then perform adjustment of neutral position and perform self-diagnosis again.
NO	▶	Inspection is completed.

Inspection 13 Brake Fluid Level of Reservoir Tank

NABR0202

Inspection procedure

1	SELF-DIAGNOSIS RESULTS CHECK 1	
Check the self-diagnosis results.		

Self-diagnosis results
CONSULT-II indication item
BR FLUID LEVEL LOW

MTBL1294

Does the brake warning lamp turn on?

Yes	▶	Check the pad for wear. Check the brake fluid for leakage.
No	▶	GO TO 2.

2	SELF-DIAGNOSIS RESULTS CHECK 2

1. Disconnect connectors for the brake fluid level warning switch and the ABS actuator and electric unit (control unit).
2. Securely connect connectors. Perform the ABS actuator and electric unit (control unit) self-diagnosis again.

Is the same self-diagnosis item indicated again?

Yes	▶	Poor connection of connector. Repair or replace the poorly connected connector.
No	▶	GO TO 3.

3	CIRCUIT CHECK BETWEEN BRAKE FLUID LEVEL WARNING SWITCH AND ABS ACTUATOR AND ELECTRIC UNIT (CONTROL UNIT)

1. Disconnect connectors for the brake fluid level warning switch and the ABS actuator and electric unit (control unit).
2. Check for continuity between the brake fluid level warning switch (harness connector E28) and the ABS actuator and electric unit (control unit) (harness connector B142).

ABS actuator and electric unit (control unit) (harness connector)	Brake fluid level warning switch (harness connector)	Continuity
8 (BR/W)	1 (BR/W)	Yes

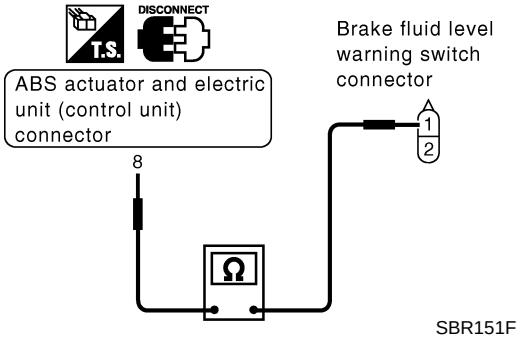

OK or NG

OK	▶	Perform the ABS actuator and electric unit (control unit) self-diagnosis again.
NG	▶	Repair or replace the disconnected harness.

Inspection 14 CAN Communications System

NABR0185

Inspection Procedure

1	CHECK CONNECTOR

1. Turn ignition switch OFF, disconnect the ABS actuator and electric unit (control unit) connector, and check the terminal for deformation, disconnection, looseness, etc. If there is a malfunction, repair or replace the terminal.
2. Reconnect connector to perform self-diagnosis.

Is "CAN COMM CIRCUIT" displayed in the self-diagnosis display items?

YES	▶	Print out the self-diagnostic results. Refer to EL-409.
NO	▶	Connector terminal connection is loose, damaged, open, or shorted.

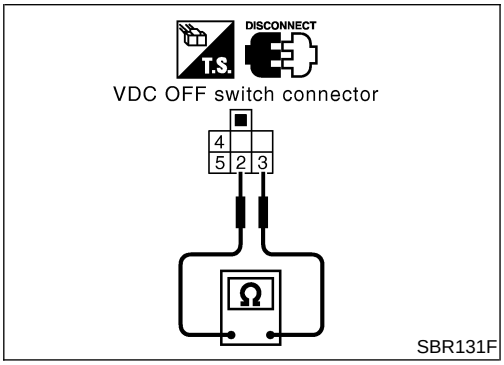

Inspecting Components

NABR0175

VDC OFF SWITCH

NABR0175S01

- Disconnect VDC OFF switch connector M151. Check continuity between terminal No. 2 and terminal No. 3.

  No. 2 to No. 3:

  Pressing the switch will establish continuity, releasing it will break continuity.

Symptom 1 ABS Works Frequently.

NABR0186

Inspection Procedure

1	STARTING INSPECTION	
Inspect wheel sensor system. ● Sensor mounting inspection ● Sensor pick-up inspection for iron chips ● Sensor rotor inspection (e.g. Number of teeth, damaged teeth) ● Sensor connector engagement inspection		
	OK or NG	
OK	▶	GO TO 2.
NG	▶	Repair wheel sensor and rotor system.

2	CHECKING FOR LOOSENESS	
Check for looseness of front axle.		
	OK or NG	
OK	▶	GO TO Refer to BR-132
NG	▶	Axle inspection and repair

Symptom 2 Unexpected Pedal Reaction

NABR0187

Inspection Procedure

1	BRAKE PEDAL STROKE INSPECTION	
Check brake pedal stroke.		
	Is stroke excessively long?	
YES	▶	Check bleeding and brake system.
NO	▶	GO TO 2.

2	CHECKING PEDAL FORCE	
Check that brake is effective with pedal depressed.		
	Is pedal heavy, but effective?	
YES	▶	Normal
NO	▶	GO TO 3.

3	CONNECTOR AND PERFORMANCE INSPECTION	
Disconnect actuator relay unit connector to deactivate ABS function. Check that brake is effective.		
	Is brake effective?	
YES	▶	GO TO 4.
NO	▶	Brake line inspection

4	CHECKING ABS WARNING LAMP INDICATION	
Check that ABS warning lamp illuminates.		
	OK or NG	
OK	▶	Execute self-diagnosis.
NG	▶	GO TO 5.

5	CHECKING WHEEL SENSORS	
Inspect wheel sensor system. ● Sensor mounting inspection ● Check sensor pick-up for adhering iron chips. ● Sensor rotor inspection (e.g. Number of teeth, damaged teeth) ● Sensor connector engagement inspection		
OK or NG		
OK	▶	Normal
NG	▶	Repair wheel sensor and rotor system.

Symptom 3 Long Stopping Distance

NABR0188

Inspection Procedure

1	STARTING INSPECTION	
Check that stopping distance increases only on snowy roads and gravel roads.		
OK or NG		
OK	▶	May be longer than for vehicles without ABS.
NG	▶	GO TO 2.

2	CHECKING PERFORMANCE	
Disconnect actuator relay box to deactivate ABS function.		
Is stopping distance still long?		
YES	▶	● Brake line air bleeding ● Brake line inspection
NO	▶	GO TO 3.

3	CHECKING ABS WARNING LAMP INDICATION	
Check that ABS warning lamp illuminates.		
OK or NG		
OK	▶	Perform self-diagnosis.
NG	▶	GO TO 4.

4	CHECKING WHEEL SENSORS	
Inspect wheel sensor system. ● Sensor mounting inspection ● Check sensor pick-up for adhering iron chips. ● Sensor rotor inspection (e.g. Number of teeth, damaged teeth) ● Sensor connector engagement inspection		
OK or NG		
OK	▶	Normal
NG	▶	Repair wheel sensor and rotor system.

Symptom 4 ABS Does Not Work.

NABR0189

Inspection Procedure

1	CHECKING ABS WARNING LAMP INDICATION	
Check that ABS warning lamp illuminates.		
	OK or NG	
OK	▶	Perform self-diagnosis.
NG	▶	GO TO 2.

2	CHECKING WHEEL SENSORS	
Inspect wheel sensor system. ● Sensor mounting inspection ● Check sensor pick-up for adhering iron chips. ● Sensor rotor inspection (e.g. Number of teeth, damaged teeth) ● Sensor connector engagement inspection		
	OK or NG	
OK	▶	Normal
NG	▶	Repair wheel sensor and rotor system.

Symptom 5 Pedal Vibration and Noise

NABR0190

Inspection Procedure

1	INSPECTION (1)	
Check brake system for pedal vibration or noise at engine start.		
	OK or NG	
OK	▶	Perform self-diagnosis.
NG	▶	GO TO 2.

2	INSPECTION (2)	
Check for vibration during soft braking (just placing foot on pedal). **CAUTION:** **ABS may activate in conditions such as those listed below, when wheel speed changes.** ● **Gear shifting** ● **Turning at high speed** ● **Passing through gusts of wind**		
	OK or NG	
OK	▶	GO TO 3.
NG	▶	Normal

3	INSPECTION (3)	
Does vibration occur during normal braking? **CAUTION:** **In addition to activation for sudden braking, ABS may activate in conditions such as those listed below.** ● **Roads with low surface μ** ● **Turning at high speed** ● **Passing through gusts of wind**		
	OK or NG	
OK	▶	GO TO 4.
NG	▶	Normal

4	INSPECTION (4)	
Check for vibration when engine speed is increased while vehicle is stopped.		
	OK or NG	
OK	▶	GO TO 5.
NG	▶	Normal **CAUTION:** **Vibration may occur when vehicle is stopped.**

5	INSPECTION (5)	
Check for vibration when switches of electrical components are operated.		
	OK or NG	
OK	▶	Check for any wireless devices, antennas, or antenna lead near control unit (including wiring).
NG	▶	GO TO 6.

6	CHECKING ABS WARNING LAMP INDICATION	
Confirm ABS warning lamp turns on.		
	OK or NG	
OK	▶	Execute self-diagnosis.
NG	▶	GO TO 7.

7	CHECKING WHEEL SENSORS	
Inspect wheel sensor system. ● Sensor mounting inspection ● Sensor pick-up inspection for iron chips (e.g. Number of teeth, damaged teeth) ● Sensor connector engagement inspection ● Inspection of wheel sensor circuit		
	OK or NG	
OK	▶	Normal
NG	▶	Repair wheel sensor and rotor system.

Symptom 6 VDC OFF Indicator Lamp Does Not Illuminate.

NABR0191

Inspection Procedure

1	CHECKING VDC OFF INDICATOR LAMP POWER CIRCUIT	
Disconnect ABS actuator and electric unit (control unit) connector. Check that the voltage between ABS actuator and electric unit (control unit) harness terminal and ground is battery voltage (Approx. 12V).		
OK or NG		
OK	▶	Malfunction of ABS actuator and electric unit (control unit). Repair or replace control unit.
NG	▶	Malfunction in combination meter system. Inspect combination meter system.

Symptom 7 SLIP Indicator Lamp Does Not Illuminate.

NABR0192

Inspection Procedure

1	CHECKING FOR BURNED-OUT SLIP INDICATOR LAMP BULB	
Check that there is continuity between meter power terminal and SLIP indicator lamp terminal.		
OK or NG		
OK	▶	GO TO 2.
NG	▶	Open or short in SLIP indicator lamp or combination meter circuit

2	CHECKING SLIP INDICATOR LAMP POWER CIRCUIT	
Disconnect meter connector. Check that the voltage between meter harness terminal and ground is battery voltage (Approx. 12V).		
OK or NG		
OK	▶	GO TO 3.
NG	▶	● Fuse inspection ● Check harness and connectors between fuse block and meter. ● Inspect power system (battery, ignition switch circuit).

3	CHECKING SLIP INDICATOR LAMP HARNESS	
1. Disconnect ABS actuator and electric unit (control unit) and meter harness connectors. 2. Check for open circuit or short circuits in harness between meter and ABS actuator and electric unit (control unit).		
OK or NG		
OK	▶	GO TO 4.
NG	▶	Open or short in harness. Repair or replace the suspect harness.

4	CHECKING SLIP INDICATOR LAMP CONNECTOR	
Check ABS actuator and electric unit (control unit) and meter harness connectors.		
OK or NG		
OK	▶	Reconnect connectors and perform self-diagnosis. There is an intermediate connector in vehicle harness. Be sure to refer to vehicle wiring diagram when performing inspection.
NG	▶	Connector open, shorted or damaged. Repair or replace connector.

Symptom 8 Vehicle Behaves Jerkily During VDC/TCS/ABS Operation.

NABR0193

Inspection Procedure

1	CHECKING ENGINE SPEED SIGNAL	
On CONSULT-II, execute “DATA MONITOR” for ABS actuator and electric unit (control unit). **Is engine speed at idle 400 rpm or higher?**		
YES	▶	Normal
NO	▶	GO TO 2.

2	CHECKING SELF-DIAGNOSIS RESULTS (1)	
Perform ABS actuator and electric unit (control unit) self-diagnosis. **Does anything appear on self-diagnosis results display?**		
YES	▶	Inspect and repair items indicated. Then perform ABS actuator and electric unit (control unit) self-diagnosis again.
NO	▶	GO TO 3.

3	ECM SELF-DIAGNOSIS RESULT ITEM CHECK	
Perform the ECM self-diagnosis. **Is the result of self-diagnosis “CRANKSHAFT POSITION SENSOR”?**		
YES	▶	Repair or replace crankshaft position sensor system.
NO	▶	GO TO 4.

4	CHECKING SELF-DIAGNOSIS RESULTS (2)	
Disconnect ABS actuator and electric unit (control unit) and ECM connectors. Then reconnect them securely. Perform the self-diagnosis again. **OK or NG**		
OK	▶	Connector open, shorted or damaged. Repair or replace connector.
NG	▶	GO TO 5.

5	CHECKING SELF-DIAGNOSIS RESULTS (3)	
Perform the A/T self-diagnosis. **OK or NG**		
OK	▶	GO TO 6.
NG	▶	Repair or replace parts at location indicated.

6	CHECKING SELF-DIAGNOSIS RESULTS (4)	
Perform ABS actuator and electric unit (control unit) self-diagnosis again. **Does anything appear on self-diagnosis results display?**		
YES	▶	Repair or replace parts at location indicated.
NO	▶	GO TO 7.

7	CHECKING CIRCUIT BETWEEN ABS ACTUATOR AND ELECTRIC UNIT (CONTROL UNIT) AND ECM
1. Disconnect ABS actuator and electric unit (control unit) and ECM connectors. 2. Check for open circuit or short circuits in engine speed signal harness between ABS actuator and electric unit (control unit) and ECM. 3. Check ABS actuator and electric unit (control unit) and ECM connectors.	
OK or NG	
OK ▶	Inspection is completed.
NG ▶	Reconnect connectors and perform ABS actuator and electric unit (control unit) self-diagnosis again.

Removal and Installation

NABR0194

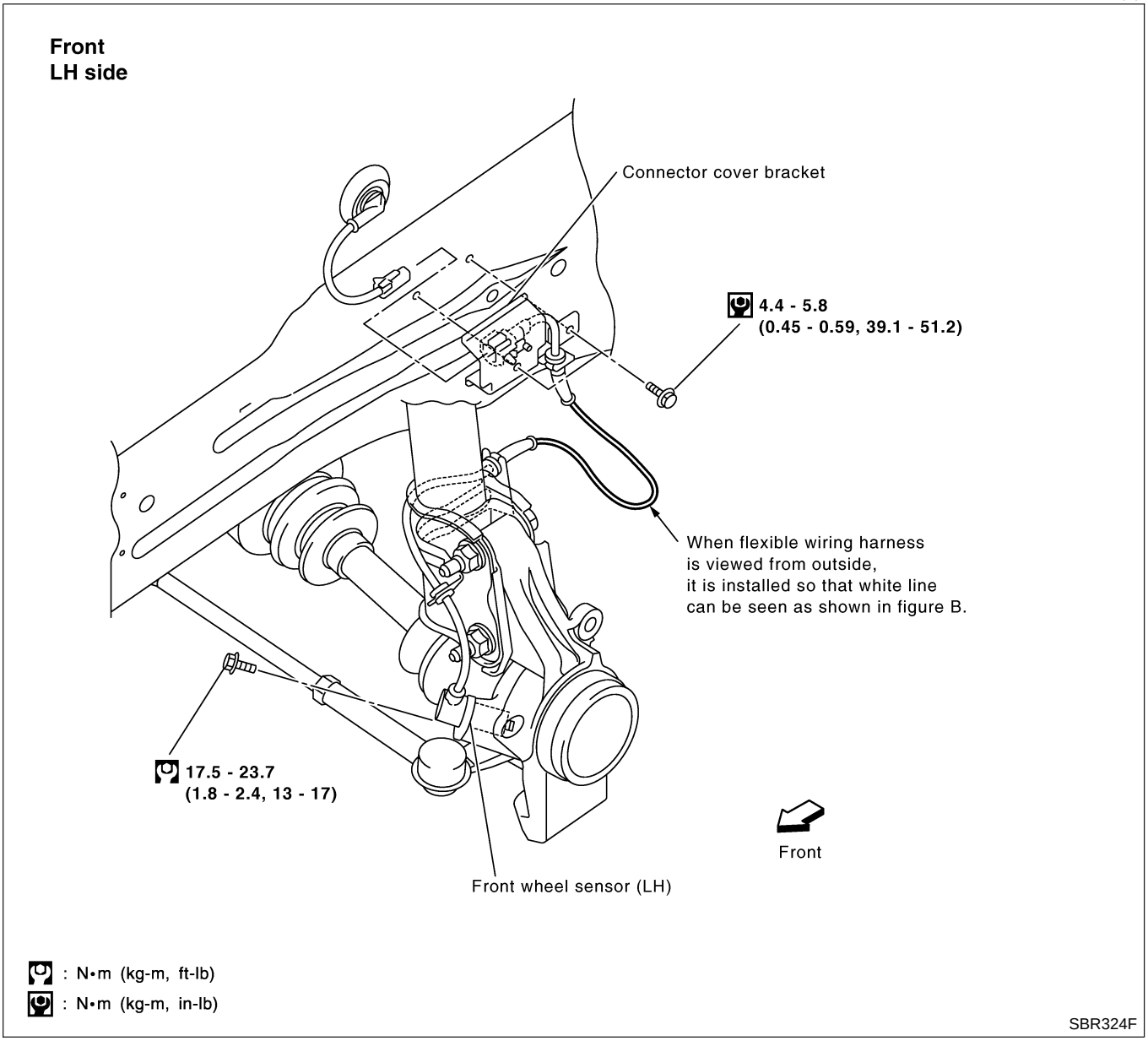

REMOVAL

NABR0194S01

Pay attention to the following when removing sensor.

CAUTION:

- **As much as possible, avoid rotating sensor when removing it. Pull sensors out without pulling on sensor harness.**
- **Take care to avoid damaging sensor edges or rotor teeth. Remove wheel sensor first before removing front or rear wheel hub. This is to avoid damage to sensor wiring and loss of sensor function.**

INSTALLATION

NABR0194S02

Pay attention to the following when installing sensor. Tighten installation bolts and nuts to specified torques.

- When installing, check that there is no foreign material such as iron chips on pick-up and mounting hole of the sensor. Check that no foreign material has been caught in the sensor rotor motor. Remove any foreign material and clean the mount.

- When installing front sensor, be sure to press rubber grommets in until they lock at the three locations shown in diagram (2 at shock absorbers and 1 at body panel). When installed, harness must not be twisted. White line on harness (shaded part) must be visible from left side.

Removal and Installation

NABR0196

REMOVAL

NABR0196S01

Front

NABR0196S0101

1. Remove the front wheel hub. Refer to AX-7.
2. Remove the sensor rotor using suitable puller, drift and bearing replacer.

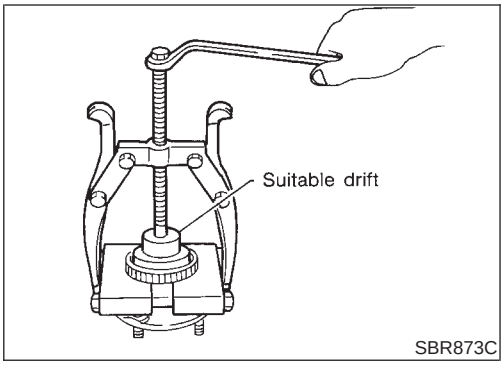

SBR873C

Rear

NABR0196S0102

- Remove the sensor rotor using Tool.

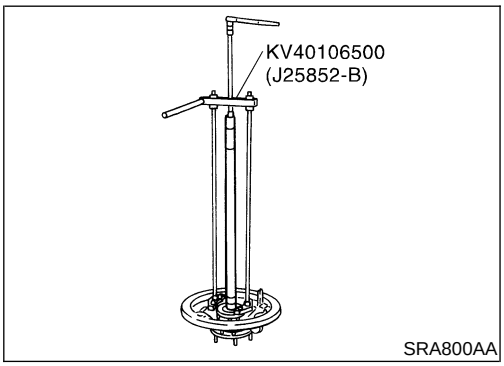

SRA800AA

INSTALLATION

NABR0196S02

Front

NABR0196S0201

Install the sensor rotor using suitable drift and press.

- Always replace sensor rotor with new one.
- Play attention to the direction of front sensor rotor as shown in figure.

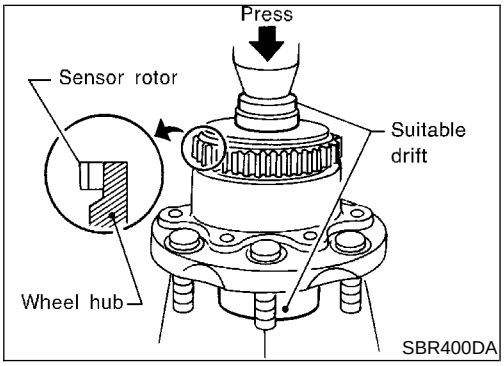

SBR400DA

Rear

NABR0196S0202

Install the sensor rotor using suitable drift and press.

- Always replace sensor rotor with new one.
- Pay attention to the direction of front sensor rotor as shown in figure.

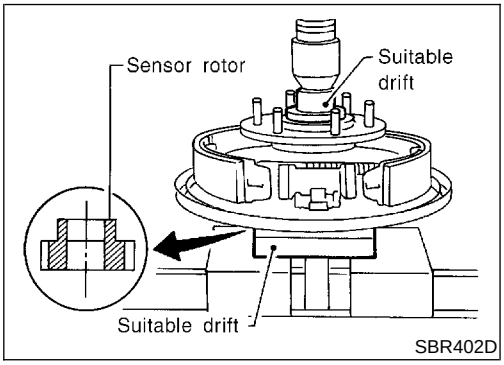

SBR402D

Removal and Installation

NABR0197

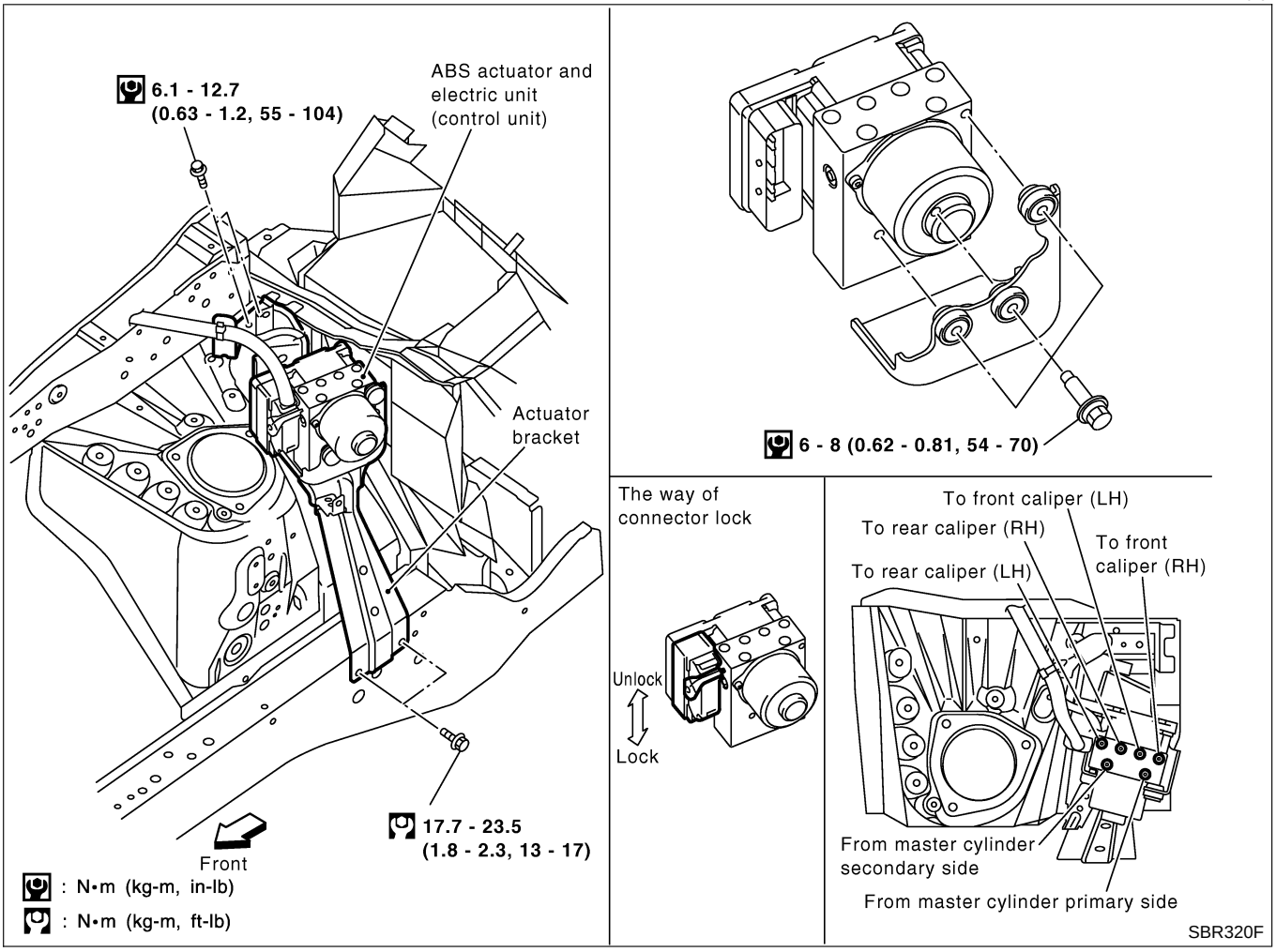

Pay attention to the following when removing actuator.

CAUTION:

- **Before servicing, disconnect battery cables.**
- **To remove brake tube, use a flare nut wrench to prevent flare nuts and brake tube from being damaged. To install, use a brake tube torque wrench (commercial service tool).**
- **Do not remove and install actuator by holding harness.**
- **After work is completed, bleed air from brake piping. Refer to BR-9.**
- **When replacing ABS actuator and electric unit (control unit), calibrate steering angle sensor neutral position and decel G sensor. Refer to BR-86.**

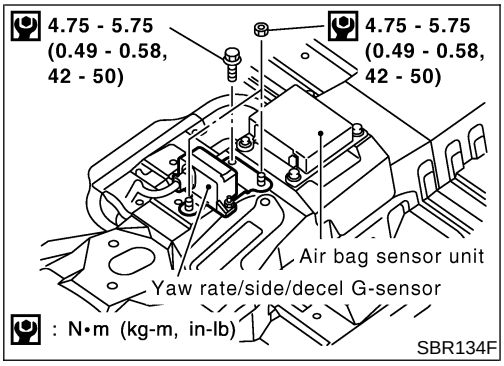

Removal and Installation

NABR0198

REMOVAL

NABR0198S01

1. Install center console. Refer to BT-24.
2. Remove harness connector.
3. Remove installation bolts. Remove yaw rate/side/decel G-sensor.

CAUTION:

Do not drop or strike the yaw rate/side/decel G-sensor, because it has little endurance to impact.

INSTALLATION

NABR0198S02

To install, follow procedure for removal in reverse order.

CAUTION:

Do not drop or strike the yaw rate/side/decel G-sensor, because it has little endurance to impact.

General Specifications

NABR0118
Unit: mm (in)

Applied model		Without VDC models	With VDC models
Front brake	Brake model	AD31VC	
	Cylinder bore diameter × number of pistons	44.45 (1.7500) × 2	
	Pad Length × width × thickness	132.0 × 52.5 × 11 (5.20 × 2.067 × 0.43)	
	Rotor outer diameter × thickness	300 × 28 (11.81 × 1.10)	
Rear brake	Brake model	LT30C	
	Cylinder bore diameter	22.23 (7/8)	
	Lining length × width × thickness	296 × 50 × 6.1 (11.65 × 1.97 × 0.240)	
	Drum inner diameter	295.0 (11.61)	
Master cylinder	Bore diameter	25.40 (1)	
Control valve	Valve model	Proportioning valve within master cylinder	
	Split point kPa (kg/cm^2, psi) × reducing ratio	2,942 (30, 427) × 0.2	
Brake booster	Booster model	M215T	C215T
	Diaphragm diameter	Pri: 230 (9.06) Sec: 205 (8.07)	
Recommended brake fluid		DOT 3	

Disc Brake

NABR0119
Unit: mm (in)

Brake model		AD31VC
Pad wear limit	Minimum thickness	2.0 (0.079)
Rotor repair limit	Minimum thickness	26.0 (1.024)

Drum Brake

NABR0120
Unit: mm (in)

Brake model		LT30C
Lining wear limit	Minimum thickness	1.5 (0.059)
Drum repair limit	Maximum inner diameter	296.5 (11.67)
	Out-of-round limit	0.03 (0.0012)

Brake Pedal

NABR0121
Unit: mm (in)

Transmission		M/T	A/T
Free height “H”*		165 - 175 (6.50 - 6.89)	175 - 185 (6.89 - 7.28)
Depressed height “D”* [under force of 490 N (50 kg, 110 lb) with engine running]		65 (2.56)	70 (2.76)
Clearance “C” between pedal stopper and threaded end of stop lamp switch or ASCD switch		0.3 - 1.0 (0.012 - 0.039)	
Pedal free play	At clevis	1.0 - 3.0 (0.039 - 0.118)	
	At pedal pad	1 - 3 (0.04 - 0.12)	

*: Measured from surface of metal panel to pedal pad

Parking Brake Control

NABR0084

Unit: notch

Control Type	Center lever
Lever stroke [under force of 196 N (20 kg, 44 lb)]	6 - 8
Lever stroke when warning switch comes on	1 or less

NOTES

BODY & TRIM

SECTION BT

CONTENTS

PRECAUTIONS 3
Service Notice....3
Supplemental Restraint System (SRS) "AIR BAG" and "SEAT BELT PRE-TENSIONER"....3
PREPARATION 4
Special Service Tools 4
Commercial Service Tool....4
SQUEAK AND RATTLE TROUBLE DIAGNOSES....5
Work Flow....5
CUSTOMER INTERVIEW....5
DUPLICATE THE NOISE AND TEST DRIVE....6
CHECK RELATED SERVICE BULLETINS 6
LOCATE THE NOISE AND IDENTIFY THE ROOT CAUSE 6
REPAIR THE CAUSE....6
CONFIRM THE REPAIR....7
Generic Squeak and Rattle Troubleshooting 7
INSTRUMENT PANEL....7
CENTER CONSOLE 7
DOORS....7
TRUNK 8
SUNROOF/HEADLINER 8
SEATS....8
UNDERHOOD 8
Diagnostic Worksheet....9
CLIP AND FASTENER....11
Description....11
BODY FRONT END....13
Removal and Installation 13
REMOVAL....14
INSTALLATION....16
BODY REAR END AND OPENER....17
Removal and Installation 17
REMOVAL....17
INSTALLATION....20
FRONT DOOR 21
Overhaul 21
Front Door Limit Switch Reset 22
RESET CONDITIONS 22
RESET PROCEDURES....22
REAR DOOR 23
Overhaul 23
INSTRUMENT PANEL ASSEMBLY 24
Removal and Installation 24
SIDE AND FLOOR TRIM....31
Removal and Installation 31
DOOR TRIM....33
Removal and Installation 33
TYPE A 33
TYPE B 34
ROOF TRIM 36
Removal and Installation 36
BACK DOOR TRIM 37
Removal and Installation 37
EXTERIOR....38
Removal and Installation 38
FRONT SEAT 45
Removal and Installation 45
POWER SEAT....46
MANUAL SEAT....47
HEATED SEAT....48
REAR SEAT....49
Removal and Installation 49
SUNROOF....50
Adjustment....50
Contents of Working 51
Contents of Switch Working 52
JAM PROTECTION....52
Removal and Installation 52
Trouble Diagnoses....56
DIAGNOSTIC TABLE....56
WIND DEFLECTOR 56
ADJUSTMENT....57
DRAIN HOSES 58
WEATHERSTRIP 59
LINK AND WIRE ASSEMBLY....59
WINDSHIELD AND WINDOWS 60
Removal and Installation 60
REMOVAL....60
INSTALLATION....60

CONTENTS (Cont'd)

WINDSHIELD 61
REAR SIDE WINDOW.....62
DOOR MIRROR.....63
Removal and Installation 63
BODY (ALIGNMENT) 64
Alignment 64
ENGINE COMPARTMENT.....65
UNDERBODY 67

Service Notice

NABT0030

- When removing or installing various parts, place a cloth or padding onto the vehicle body to prevent scratches.
- Handle trim, molding, instruments, grille, etc. carefully during removing or installing. Be careful not to soil or damage them.
- Apply sealing compound where necessary when installing parts.
- When applying sealing compound, be careful that the sealing compound does not protrude from parts.
- When replacing any metal parts (for example body outer panel, members, etc.), be sure to take rust prevention measures.

Supplemental Restraint System (SRS) "AIR BAG" and "SEAT BELT PRE-TENSIONER"

NABT0023

The Supplemental Restraint System such as "AIR BAG" and "SEAT BELT PRE-TENSIONER" used along with a seat belt, helps to reduce the risk or severity of injury to the driver and front passenger for certain types of collision. The SRS system composition which is available to NISSAN MODEL R50 is as follows:

- For a frontal collision
  The Supplemental Restraint System consists of driver air bag module (located in the center of the steering wheel), front passenger air bag module (located on the instrument panel on passenger side), seat belt pre-tensioners, a diagnosis sensor unit, warning lamp, wiring harness and spiral cable.
- For a side collision
  The Supplemental Restraint System consists of side air bag module (located in the outer side of front seat), satellite sensor, side curtain air bag module (located in the headlining side of front and rear seat), diagnosis sensor unit (one of components of air bags for a frontal collision), wiring harness, warning lamp (one of components of air bags for a frontal collision).

Information necessary to service the system safely is included in the **RS section** of this Service Manual.

WARNING:

- **To avoid rendering the SRS inoperative, which could increase the risk of personal injury or death in the event of a collision which would result in air bag inflation, all maintenance must be performed by an authorized NISSAN dealer.**
- **Improper maintenance, including incorrect removal and installation of the SRS, can lead to personal injury caused by unintentional activation of the system. For removal of Spiral Cable and Air Bag Module, see the RS section.**
- **Do not use electrical test equipment on any circuit related to the SRS unless instructed to in this Service Manual. SRS wiring harnesses can be identified with yellow and/or orange harness connector (and with yellow harness protector or yellow insulation tape before the harness connectors).**

Special Service Tools

NABT0024

The actual shapes of Kent-Moore tools may differ from those of special service tools illustrated here.

Tool number (Kent-Moore No.) Tool name	Description
— (J39570) Chassis ear	Locating the noise 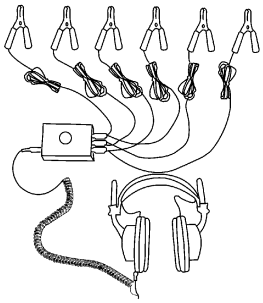 SBT839
— (J43980) Nissan Squeak and Rattle kit	Repairing the cause of noize 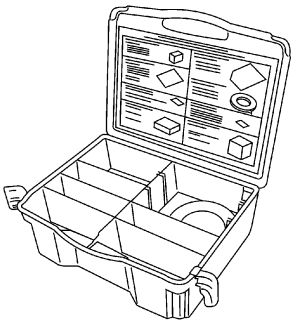 SBT840

Commercial Service Tool

NABT0025

Tool name	Description
Engine ear	Locating the noise 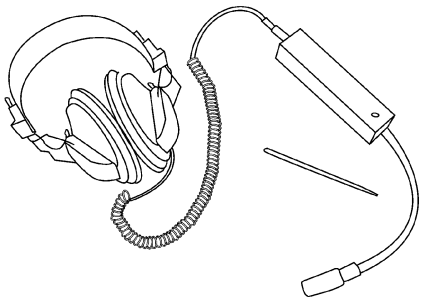 SBT841

Work Flow

NABT0026

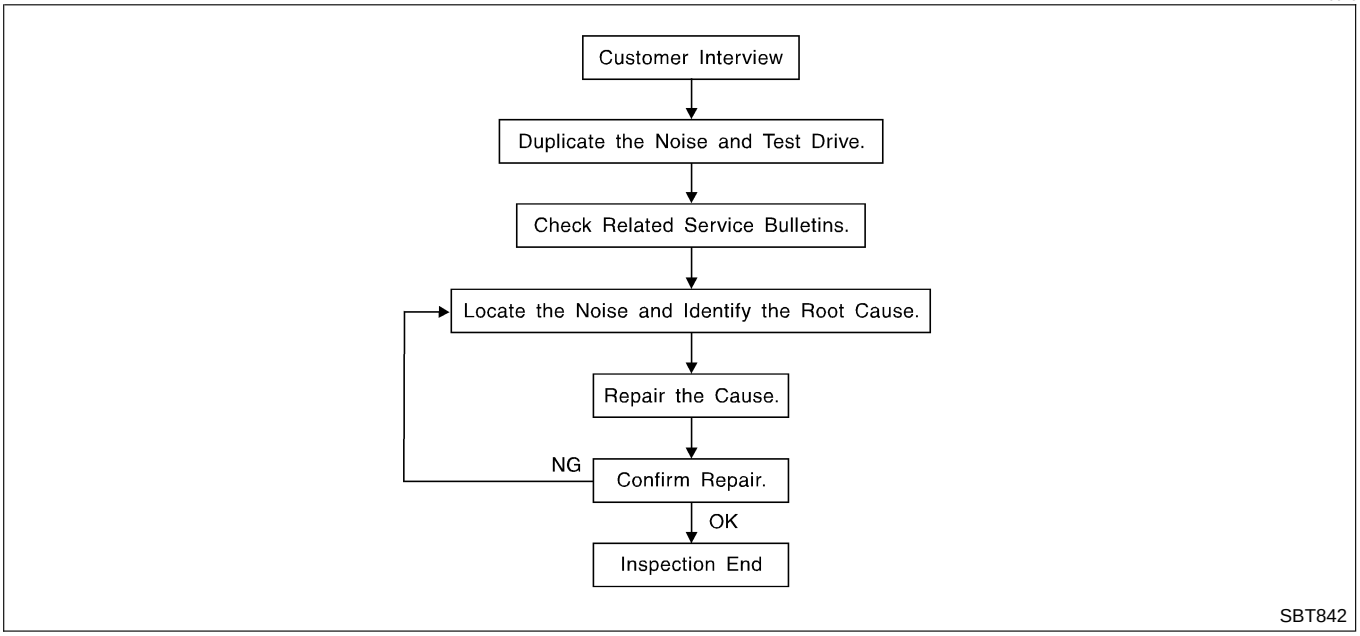

CUSTOMER INTERVIEW

NABT0026S01

Interview the customer, if possible, to determine the conditions that exist when the noise occurs. Use the Diagnostic Worksheet during the interview to document the facts and conditions when the noise occurs and any customer's comments; refer to BT-9. This information is necessary to duplicate the conditions that exist when the noise occurs.

- The customer may not be able to provide a detailed description or the location of the noise. Attempt to obtain all the facts and conditions that exist when the noise occurs (or does not occur).
- If there is more than one noise in the vehicle, be sure to diagnose and repair the noise that the customer is concerned about. This can be accomplished by test driving the vehicle with the customer.
- After identifying the type of noise, isolate the noise in terms of its characteristics. The noise characteristics are provided so the customer, service adviser and technician are all speaking the same language when defining the noise.
- Squeak — (Like tennis shoes on a clean floor)
  Squeak characteristics include the light contact/fast movement/brought on by road conditions/hard surfaces = higher pitch noise/softer surfaces = lower pitch noises/edge to surface = chirping
- Creak — (Like walking on an old wooden floor)
  Creak characteristics include firm contact/slow movement/twisting with a rotational movement/pitch dependent on materials/often brought on by activity.
- Rattle — (Like shaking a baby rattle)
  Rattle characteristics include the fast repeated contact/vibration or similar movement/loose parts/missing clip or fastener/incorrect clearance.
- Knock — (Like a knock on a door)
  Knock characteristics include hollow sounding/sometimes repeating/often brought on by driver action.
- Tick — (Like a clock second hand)
  Tick characteristics include gentle contacting of light materials/loose components/can be caused by driver action or road conditions.
- Thump — (Heavy, muffled knock noise)
  Thump characteristics include softer knock/dead sound often brought on by activity.
- Buzz — (Like a bumble bee)
  Buzz characteristics include high frequency rattle/firm contact.
- Often the degree of acceptable noise level will vary depending upon the person. A noise that you may judge as acceptable may be very irritating to the customer.
- Weather conditions, especially humidity and temperature, may have a great effect on noise level.

DUPLICATE THE NOISE AND TEST DRIVE

NABT0026S02

If possible, drive the vehicle with the customer until the noise is duplicated. Note any additional information on the Diagnostic Worksheet regarding the conditions or location of the noise. This information can be used to duplicate the same conditions when you confirm the repair.

If the noise can be duplicated easily during the test drive, to help identify the source of the noise, try to duplicate the noise with the vehicle stopped by doing one or all of the following:

1) Close a door.
2) Tap or push/pull around the area where the noise appears to be coming from.
3) Rev the engine.
4) Use a floor jack to recreate vehicle "twist".
5) At idle, apply engine load (electrical load, half-clutch on M/T model, drive position on A/T model).
6) Raise the vehicle on a hoist and hit a tire with a rubber hammer.

- Drive the vehicle and attempt to duplicate the conditions the customer states exist when the noise occurs.
- If it is difficult to duplicate the noise, drive the vehicle slowly on an undulating or rough road to stress the vehicle body.

CHECK RELATED SERVICE BULLETINS

NABT0026S03

After verifying the customer concern or symptom, check ASIST for Technical Service Bulletins (TSBs) related to that concern or symptom.

If a TSB relates to the symptom, follow the procedure to repair the noise.

LOCATE THE NOISE AND IDENTIFY THE ROOT CAUSE

NABT0026S04

1. Narrow down the noise to a general area. To help pinpoint the source of the noise, use a listening tool (Chassis Ear: J39570, Engine Ear and mechanics stethoscope).
2. Narrow down the noise to a more specific area and identify the cause of the noise by:

- removing the components in the area that you suspect the noise is coming from.
  Do not use too much force when removing clips and fasteners, otherwise clips and fastener can be broken or lost during the repair, resulting in the creation of new noise.
- tapping or pushing/pulling the component that you suspect is causing the noise.
  Do not tap or push/pull the component with excessive force, otherwise the noise will be eliminated only temporarily.
- feeling for a vibration with your hand by touching the component(s) that you suspect is (are) causing the noise.
- placing a piece of paper between components that you suspect are causing the noise.
- looking for loose components and contact marks.

  Refer to "Generic Squeak and Rattle Troubleshooting", BT-7.

REPAIR THE CAUSE

NABT0026S05

- If the cause is a loose component, tighten the component securely.
- If the cause is insufficient clearance between components:

− separate components by repositioning or loosening and retightening the component, if possible.
− insulate components with a suitable insulator such as urethane pads, foam blocks, felt cloth tape or urethane tape. A Nissan Squeak and Rattle Kit (J43980) is available through your authorized Nissan Parts Department.

CAUTION:

Do not use excessive force as many components are constructed of plastic and may be damaged.
Always check with the Parts Department for the latest parts information.

The following materials are contained in the Nissan Squeak and Rattle Kit (J43980). Each item can be ordered separately as needed.

URETHANE PADS [1.5 mm (0.059 in) thick]
Insulates connectors, harness, etc.
76268-9E005: 100 x 135 mm (3.94 x 5.31 in)/76884-71L01: 60 x 85 mm (2.36 x 3.35 in)/76884-71L02: 15 x 25 mm (0.59 x 0.98 in)
INSULATOR (Foam blocks)
Insulates components from contact. Can be used to fill space behind a panel.
73982-9E000: 45 mm (1.77 in) thick, 50 x 50 mm (1.97 x 1.97 in)/73982-50Y00: 10 mm (0.39 in) thick, 50 x 50 mm (1.97 x 1.97 in)
INSULATOR (Light foam block)

80845-71L00: 30 mm (1.18 in) thick, 30 x 50 mm (1.18 x 1.97 in)
FELT CLOTH TAPE
Used to insulate where movement does not occur. Ideal for instrument panel applications.
68370-4B000: 15 x 25 mm (0.59 x 0.98 in) pad/68239-13E00: 5 mm (0.20 in) wide tape roll
The following materials, not found in the kit, can also be used to repair squeaks and rattles.
UHMW (TEFLON) TAPE
Insulates where slight movement is present. Ideal for instrument panel applications.
SILICONE GREASE
Used in place of UHMW tape that will be visible or not fit.
Note: Will only last a few months.
SILICONE SPRAY
Use when grease cannot be applied.
DUCT TAPE
Use to eliminate movement.

CONFIRM THE REPAIR

NABT0026S06

Confirm that the cause of a noise is repaired by test driving the vehicle. Operate the vehicle under the same conditions as when the noise originally occurred. Refer to the notes on the Diagnostic Worksheet.

Generic Squeak and Rattle Troubleshooting

NABT0027

Refer to Table of Contents for specific component removal and installation information.

INSTRUMENT PANEL

NABT0027S01

Most incidents are caused by contact and movement between:

1. The cluster lid A and instrument panel
2. Acrylic lens and combination meter housing
3. Instrument panel to front pillar garnish
4. Instrument panel to windshield
5. Instrument panel mounting pins
6. Wiring harnesses behind the combination meter
7. A/C defroster duct and duct joint

These incidents can usually be located by tapping or moving the components to duplicate the noise or by pressing on the components while driving to stop the noise. Most of these incidents can be repaired by applying felt cloth tape or silicon spray (in hard to reach areas). Urethane pads can be used to insulate wiring harness.

CAUTION:
Do not use silicone spray to isolate a squeak or rattle. If you saturate the area with silicone, you will not be able to recheck the repair.

CENTER CONSOLE

NABT0027S02

Components to pay attention to include:

1. Shifter assembly cover to finisher
2. A/C control unit and cluster lid C
3. Wiring harnesses behind audio and A/C control unit

The instrument panel repair and isolation procedures also apply to the center console.

DOORS

NABT0027S03

Pay attention to the:

1. Finisher and inner panel making a slapping noise
2. Inside handle escutcheon to door finisher
3. Wiring harnesses tapping
4. Door striker out of alignment causing a popping noise on starts and stops

Tapping or moving the components or pressing on them while driving to duplicate the conditions can isolate many of these incidents. You can usually insulate the areas with felt cloth tape or insulator foam blocks from the Nissan Squeak and Rattle Kit (J43980) to repair the noise.

TRUNK

=NABT0027S04

Trunk noises are often caused by a loose jack or loose items put into the trunk by the owner.
In addition look for:

1. Trunk lid bumpers out of adjustment
2. Trunk lid striker out of adjustment
3. The trunk lid torsion bars knocking together
4. A loose license plate or bracket

Most of these incidents can be repaired by adjusting, securing or insulating the item(s) or component(s) causing the noise.

SUNROOF/HEADLINER

NABT0027S05

Noises in the sunroof/headliner area can often be traced to one of the following:

1. Sunroof lid, rail, linkage or seals making a rattle or light knocking noise
2. Sunvisor shaft shaking in the holder
3. Front or rear windshield touching headliner and squeaking

Again, pressing on the components to stop the noise while duplicating the conditions can isolate most of these incidents. Repairs usually consist of insulating with felt cloth tape.

SEATS

NABT0027S06

When isolating seat noises it's important to note the position the seat is in and the load placed on the seat when the noise is present. These conditions should be duplicated when verifying and isolating the cause of the noise.
Cause of seat noise include:

1. Headrest rods and holders
2. A squeak between the seat pad cushion and frame
3. The rear seat back lock and bracket

These noises can be isolated by moving or pressing on the suspected components while duplicating the conditions under which the noise occurs. Most of these incidents can be repaired by repositioning the component or applying urethane tape to the contact area.

UNDERHOOD

NABT0027S07

Some interior noises may be caused by components under the hood or on the engine wall. The noise is then transmitted into the passenger compartment.
Causes of transmitted underhood noises include:

1. Any component mounted to the engine wall
2. Components that pass through the engine wall
3. Engine wall mounts and connectors
4. Loose radiator mounting pins
5. Hood bumpers out of adjustment
6. Hood striker out of adjustment

These noises can be difficult to isolate since they cannot be reached from the interior of the vehicle. The best method is to secure, move or insulate one component at a time and test drive the vehicle. Also, engine RPM or load can be changed to isolate the noise. Repairs can usually be made by moving, adjusting, securing, or insulating the component causing the noise.

Diagnostic Worksheet

NABT0028

SQUEAK & RATTLE DIAGNOSTIC WORKSHEET

Dear Nissan Customer:
We are concerned about your satisfaction with your Nissan vehicle. Repairing a squeak or rattle sometimes can be very difficult. To help us fix your Nissan right the first time, please take a moment to note the area of the vehicle where the squeak or rattle occurs and under what conditions. You may be asked to take a test drive with a service advisor or technician to ensure we confirm the noise you are hearing.

I. WHERE DOES THE NOISE COME FROM? (circle the area of the vehicle)
The illustrations are for reference only, and may not reflect the actual configuration of your vehicle.

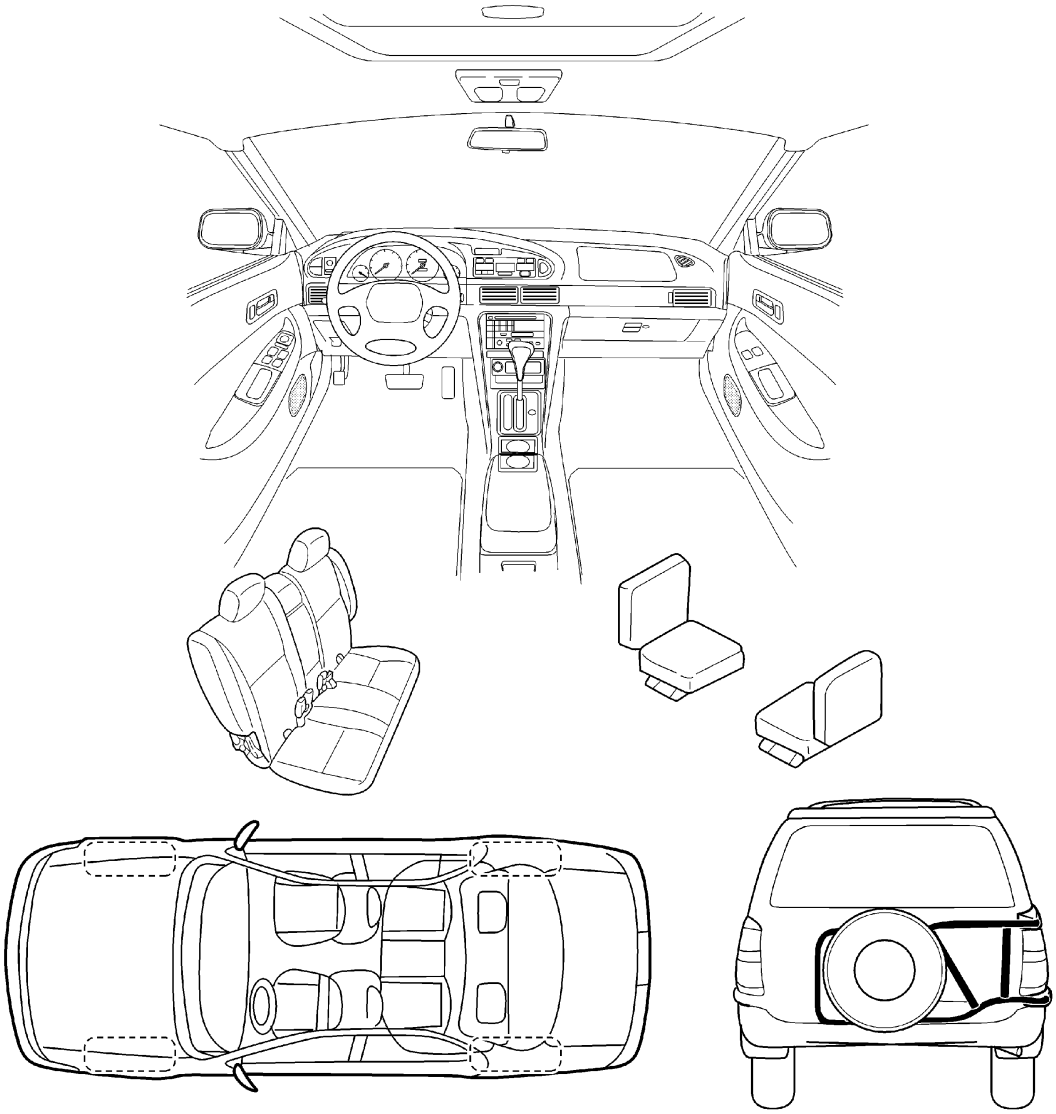

Continue to the back of the worksheet and briefly describe the location of the noise or rattle. In addition, please indicate the conditions which are present when the noise occurs.

SBT843

SQUEAK & RATTLE DIAGNOSTIC WORKSHEET- page 2

Briefly describe the location where the noise occurs:

_____

_____

II. WHEN DOES IT OCCUR? (check the boxes that apply)

- ❑ anytime
- ❑ 1st time in the morning
- ❑ only when it is cold outside
- ❑ only when it is hot outside
- ❑ after sitting out in the sun
- ❑ when it is raining or wet
- ❑ dry or dusty conditions
- ❑ other: _____

III. WHEN DRIVING:

- ❑ through driveways
- ❑ over rough roads
- ❑ over speed bumps
- ❑ only at about ____ mph
- ❑ on acceleration
- ❑ coming to a stop
- ❑ on turns : left, right or either (circle)
- ❑ with passengers or cargo
- ❑ other: _____
- ❑ after driving ____ miles or ____ minutes

IV. WHAT TYPE OF NOISE?

- ❑ squeak (like tennis shoes on a clean floor)
- ❑ creak (like walking on an old wooden floor)
- ❑ rattle (like shaking a baby rattle)
- ❑ knock (like a knock on a door)
- ❑ tick (like a clock second hand)
- ❑ thump (heavy, muffled knock noise)
- ❑ buzz (like a bumble bee)

TO BE COMPLETED BY DEALERSHIP PERSONNEL
Test Drive Notes:

_____

_____

	YES	NO	Initials of person performing
Vehicle test driven with customer	❑	❑	_____
- Noise verified on test drive	❑	❑	
- Noise source located and repaired	❑	❑	_____
- Follow up test drive performed to confirm repair	❑	❑	_____

VIN: _____ Customer Name: _____

W.O. #: _____ Date: _____

This form must be attached to Work Order

SBT844

Description

NABT0003

- Clips and fasteners in BT section correspond to the following numbers and symbols.
- Replace any clips and/or fasteners which are damaged during removal or installation.

Symbol No.	Shapes	Removal & Installation
C101	SBF302H	**Removal:** Remove by bending up with flat-bladed screwdrivers or clip remover. SBF367BA
C103	SBT095	**Removal:** Remove with a clip remover. SBF423H
C203	SBF258G	Push center pin to catching position. (Do not remove center pin by hitting it.) Push Push **Installation:** SBF708E
C205	MBT080A	**Removal:** Flat-bladed screwdriver Clip Finisher SBF638CA
CE103	SBF104B	**Removal:** SBF147B

Description (Cont'd)

Symbol No.	Shapes	Removal & Installation
CE117	SBF174D	**Removal:** Remove with a flat-bladed screwdriver or pliers. SBF175D
CF109	Clip-A Seal Clip-B (Grommet) SBF651B	**Removal:** Finisher Flat-bladed screwdrivers Clip-B (Grommet) Body panel Clip-A SBF652B
CG101	SBF145B	**Removal:** Rotate 45° to remove. **Removal:** **Installation:** SBF085B
CR103	SBF768B	**Removal:** Holder portion of clip must be spread out to remove rod. SBF770B
CS101	SBF078B	**Removal:** 1. Screw out with a Phillips screwdriver. 2. Remove female portion with flat-bladed screwdriver. SBF992G

Removal and Installation

NABT0004

SEC. 260•261•262•620•623•630•650

Hood lock adjustment

- Adjust hood so that hood primary lock meshes at a position 1 to 1.5 mm (0.039 to 0.059 in) lower than fender.
- After hood lock adjustment, adjust bumper rubber.
- When securing hood lock, ensure it does not tilt. Striker must be positioned at the center of hood primary lock.
- After adjustment, ensure that hood primary and secondary lock operate properly.

Hood lock secondary latch hooking length

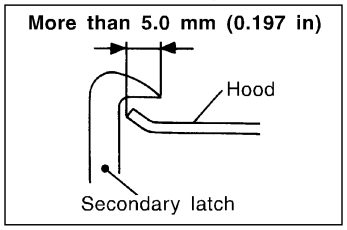

Bumper rubber adjustment

- Adjust so that hood is aligned with fender. At that time deflection is approx. 2 mm (0.08 in).

[Bumper rubber free height is approx. 13 mm (0.51 in).]

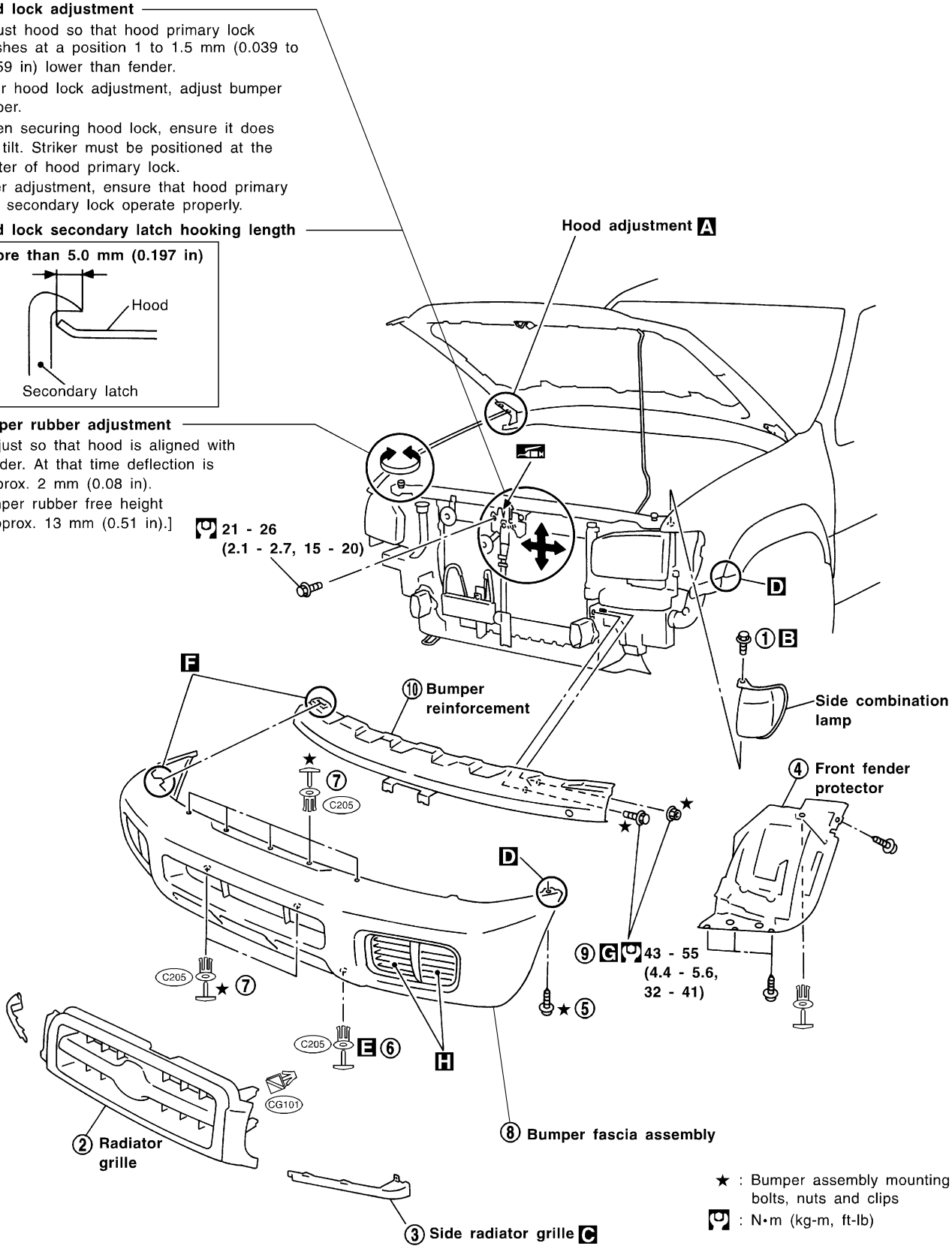

SBT699

REMOVAL

NABT0004S02

- When removing or installing hood, place a cloth or other padding on front fender panel and cowl top. This prevents vehicle body from being scratched.
- Bumper fascia is made of plastic. Do not use excessive force and be sure to keep oil away from it.
- Hood adjustment: Adjust at hinge portion.
- Hood lock adjustment: After adjusting, check hood lock control operation. Apply a coat of grease to hood locks engaging mechanism.
- Hood opener: Do not attempt to bend cable forcibly. Doing so increases effort required to unlock hood.

Front Bumper Assembly

NABT0004S0201

1. Remove bolts securing left and right side combination lamps and remove the lamps. B
2. Remove clips securing center radiator grille and remove the center radiator grille.
3. Remove bolts securing left and right radiator grille and remove the grilles. C
4. Remove clips and screws securing left and right sides of fender protector.
5. Remove screws securing bumper fascia. D
6. Remove clips securing radiator core support lower. E
7. Remove clips securing bumper reinforcement.
8. Extract bumper fasica. F
9. Remove bolts and nuts securing bumper reinforcement. G
10. Extract bumper reinforcement. (When installing bumper reinforcement, remove washer tank.)

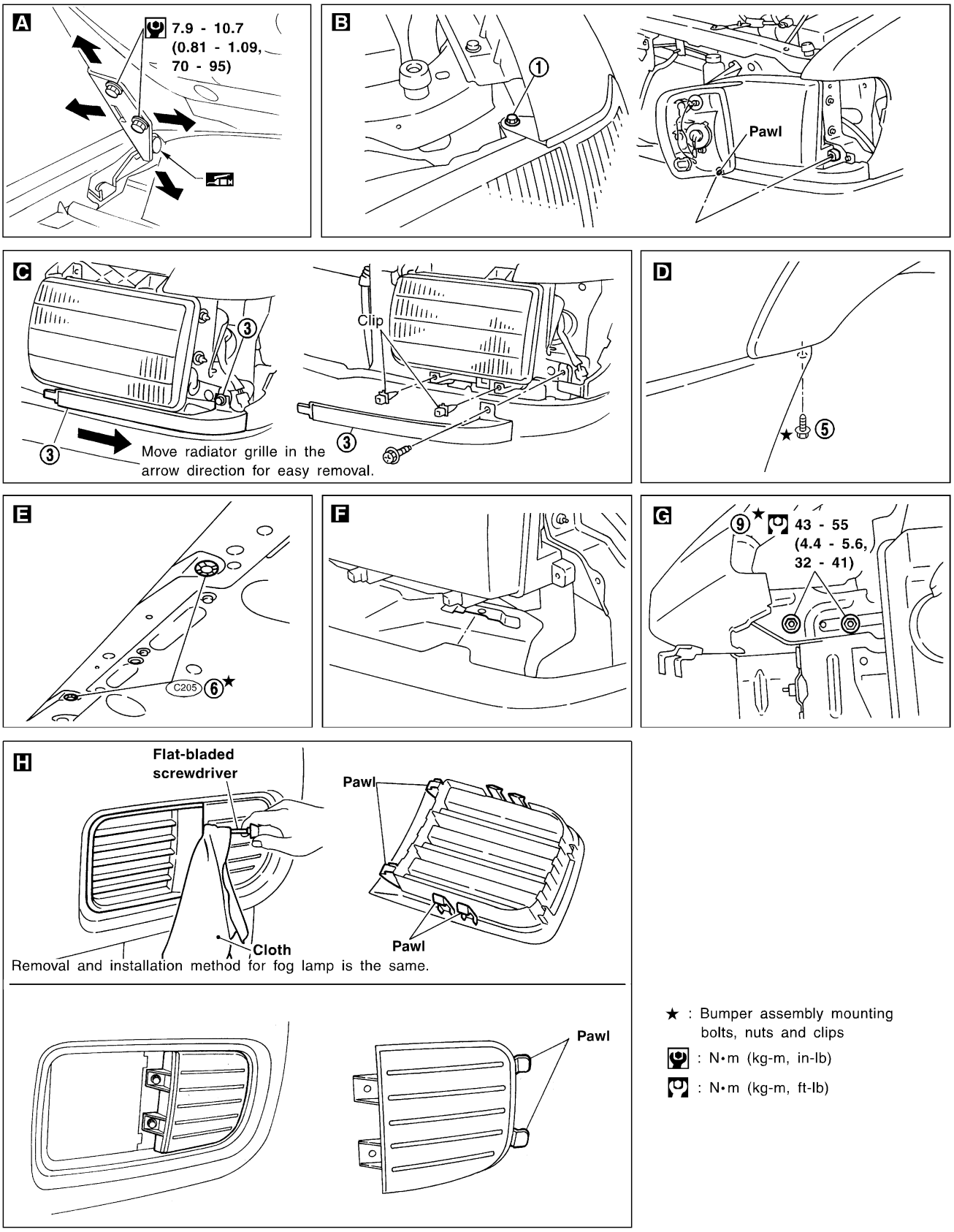

★ : Bumper assembly mounting bolts, nuts and clips

: N•m (kg-m, in-lb)

: N•m (kg-m, ft-lb)

SBT700

INSTALLATION

NABT0004S03

- Install in the reverse order of removal.

Removal and Installation

NABT0005

REMOVAL

NABT0005S02

- Bumper fascia is made of plastic. Do not use excessive force and be sure to keep oil away from it.
- Back door lock system adjustment: Adjust lock & striker so that they are in the center.
  After adjustment, check back door lock operation.
- Back door hatch lock system adjustment: Adjust lock & striker so that they are in the center.
  After adjustment, check back door hatch lock operation.
- Opener cable: Do not attempt to bend cable using excessive force.
- After installation, make sure that back door and fuel filler lid open smoothly.

WARNING:

- **Be careful not to scratch back door stay and/or back door hatch stay when installing back door and/or back door hatch. A scratched stay may cause gas leakage.**
- **The contents of the back door stay and back door hatch stay are under pressure. Do not take apart, puncture, apply heat or allow fire near them.**

Rear Bumper Assembly

NABT0005S0201

1. Remove screws securing left and right mudguards and remove the mudguards.
2. Remove clips and screws securing left and right sides of wheel protector.
3. Remove bolts and screws securing lower side and side of bumper assembly. J K
4. Remove bolts securing bumper rubber assembly.
5. Remove bolts securing spare tire hanger striker assembly.
6. Remove bolts securing spare tire hanger guide assembly.
7. Remove clips from upper side of bumper assembly. L
8. Extract bumper assembly.
9. Remove nuts securing bumper reinforcement and remove the bumper reinforcement. O

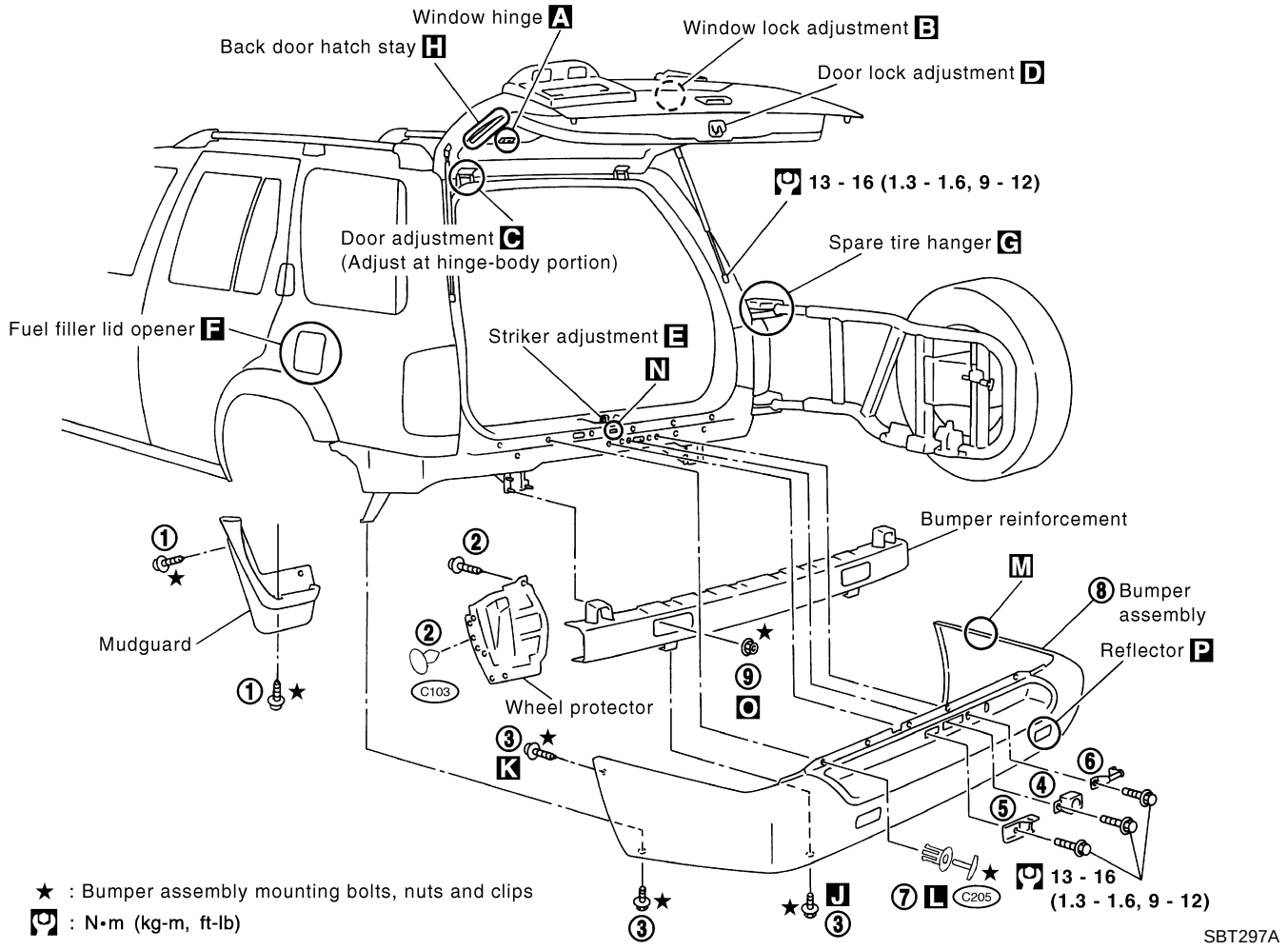
Window hinge A
Back door hatch stay H
Window lock adjustment B
Door lock adjustment D
13 - 16 (1.3 - 1.6, 9 - 12)
Door adjustment C
(Adjust at hinge-body portion)
Spare tire hanger G
Fuel filler lid opener F
Striker adjustment E
N
Bumper reinforcement
M
8 Bumper assembly
Reflector P
Mudguard
C103
Wheel protector
9
O
K
J
7 L
C205
13 - 16
(1.3 - 1.6, 9 - 12)
★ : Bumper assembly mounting bolts, nuts and clips
: N•m (kg-m, ft-lb)
SBT297A

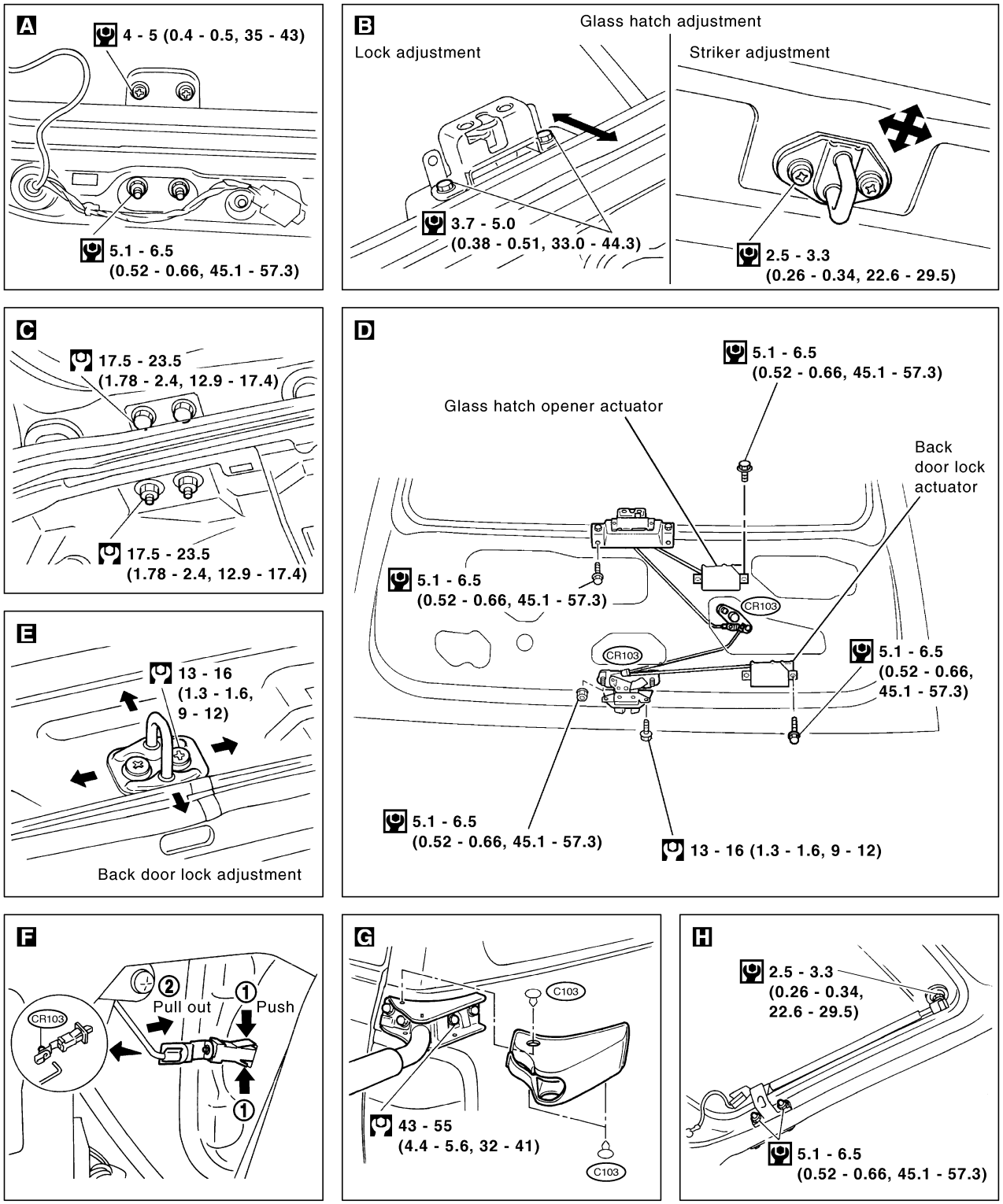

: N•m (kg-m, in-lb)

: N•m (kg-m, ft-lb)

SBT298A

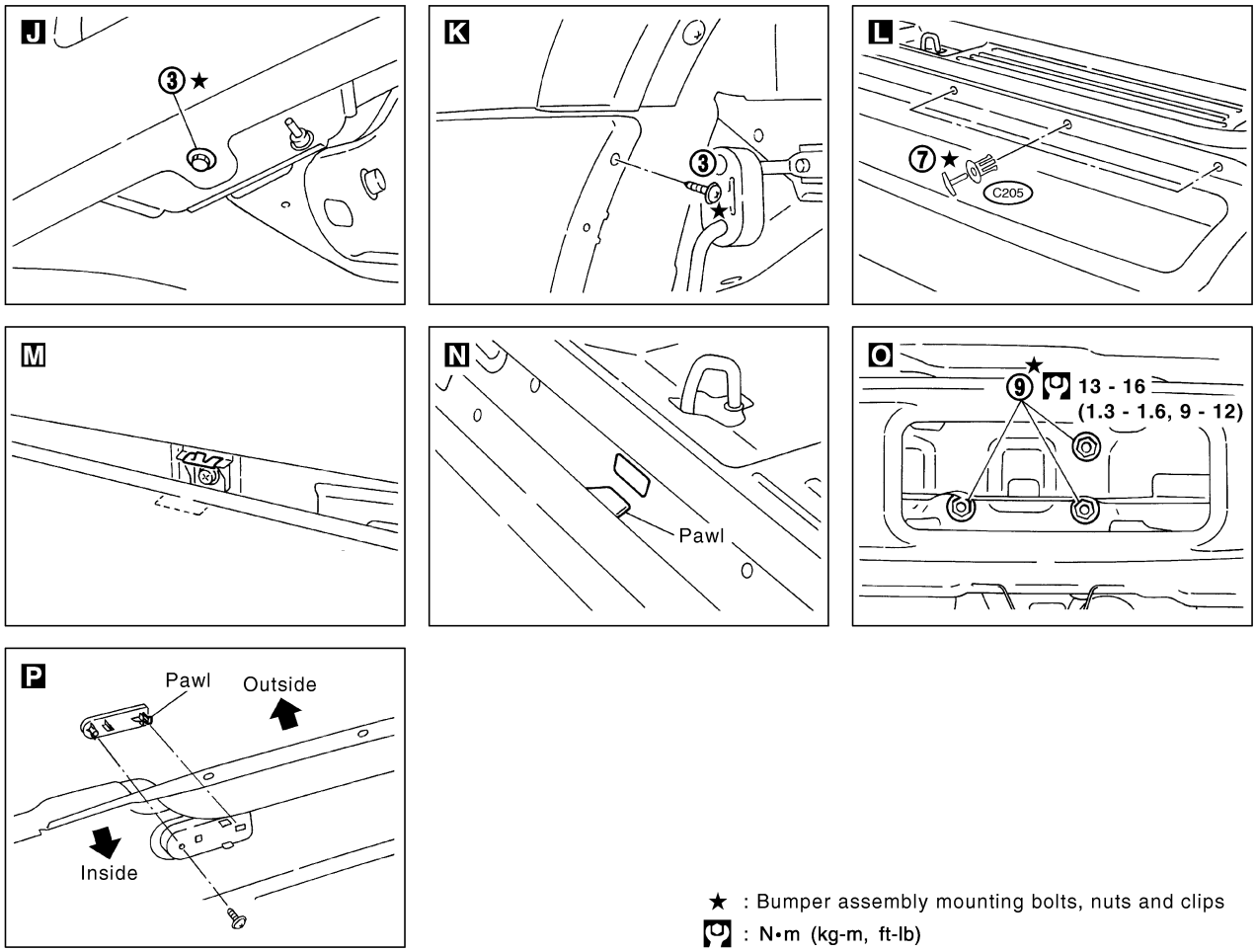

★ : Bumper assembly mounting bolts, nuts and clips

: N•m (kg-m, ft-lb)

SBT299A

INSTALLATION

NABT0005S03

- Install in the reverse order of removal.

Overhaul

NABT0006

- For removal of door trim, refer to “DOOR TRIM” (BT-33).
- After adjusting door or door lock, check door lock operation.

SEC. 800•803•805•998

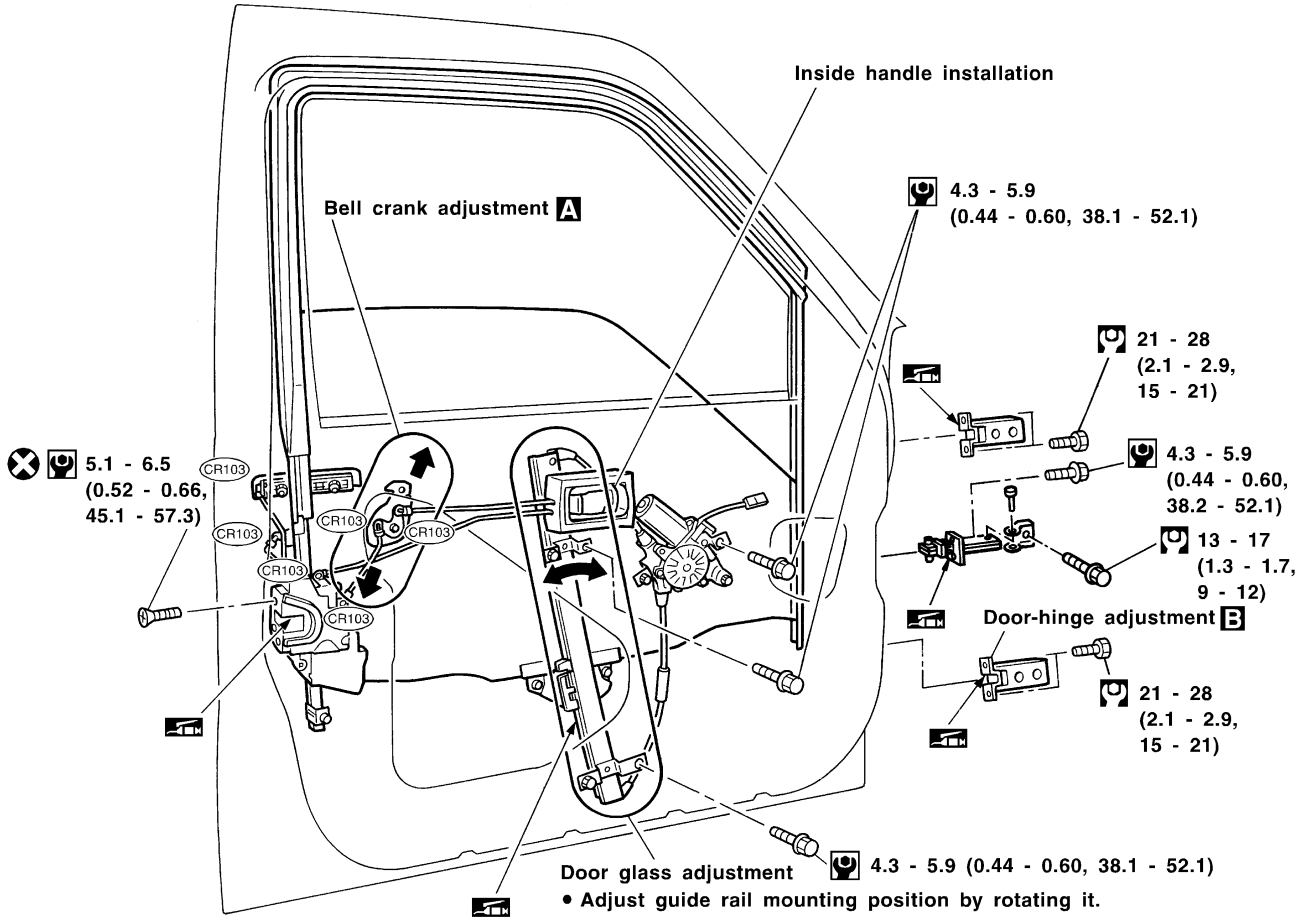

A Bell crank adjustment

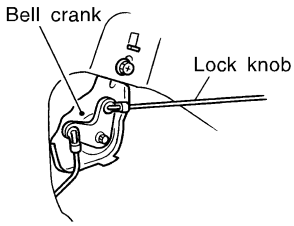

Lock door after setting door lock assembly and inside handle in position. Move bell crank in direction of arrow (shown in figure at left) to take up knob free play, and secure with bolts.

B Door-hinge adjustment

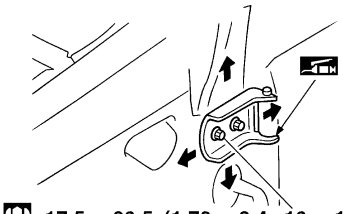

Striker adjustment

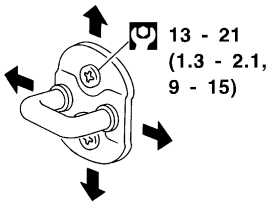

: N•m (kg-m, in-lb)

: N•m (kg-m, ft-lb)

SBT512-A

Front Door Limit Switch Reset

NABT0029

RESET CONDITIONS

NABT0029S01

After each of the following operations are performed, reset the limit switch (with built-in motor).

- Regulator removal and installation
- Removal of motor from regulator
- Operation of regulator as a single unit
- Door glass removal and installation
- Glass run removal and installation

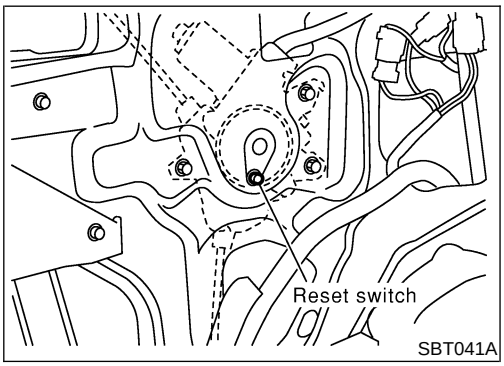

RESET PROCEDURES

NABT0029S02

After installing parts, proceed as follows:

1. Close the door window completely.
2. Press the reset switch and open the door window completely.
3. Release the reset switch. After making sure the reset switch has returned to the original position, close the door window completely.
4. The limit switch is now reset.

CAUTION:

Be sure to manually open or close the door window. (Do not use the automatic open-close procedures.)

Overhaul

NABT0007

SEC. 820•823•825

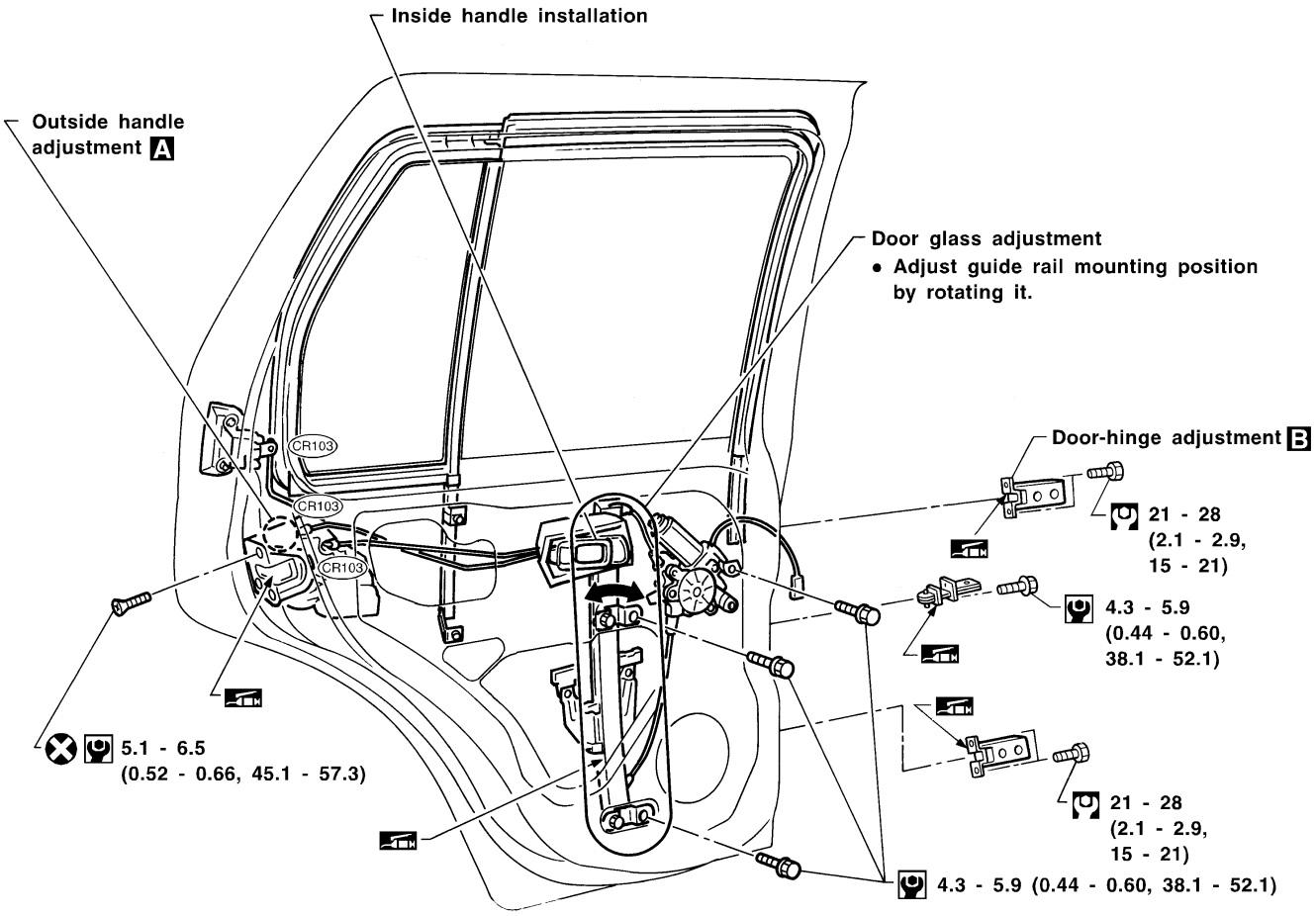

A Outside handle adjustment

Turn holder until the clearance between holder & rod is the specified value.

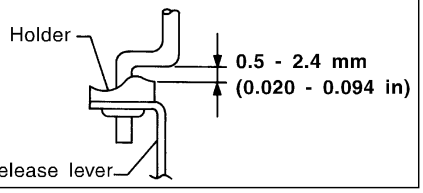

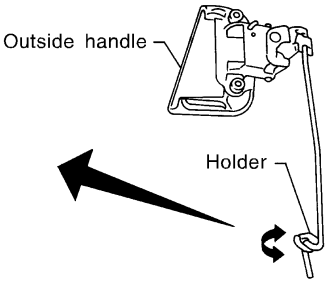

B Door-hinge adjustment

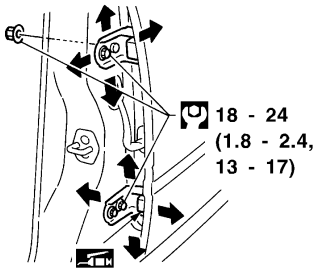

Striker adjustment

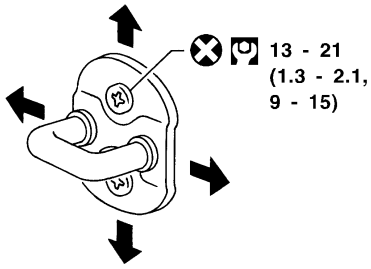

: N•m (kg-m, in-lb)

: N•m (kg-m, ft-lb)

SBT736

Removal and Installation

NABT0008

CAUTION:

- **Lock the CD changer unit mechanism (models with CD changer).**
  Refer to EL-216, "LOCKING CD CHANGER UNIT MECHANISM".
- **Disconnect both battery cables in advance.**
- **Disconnect air bag system line in advance.**
- **Never tamper with or force air bag lid open, as this may adversely affect air bag performance.**
- **Be careful not to scratch pad and other parts.**

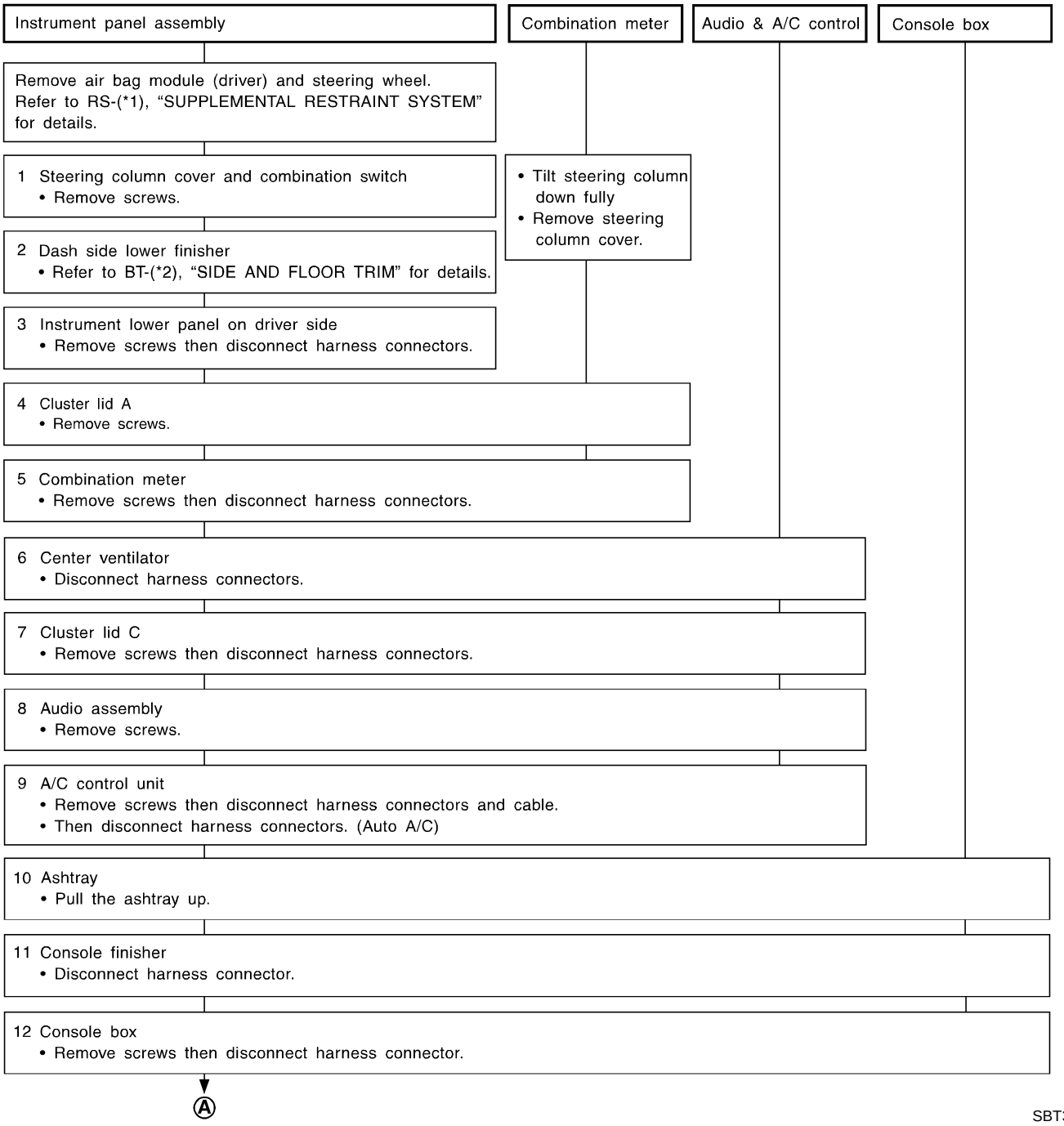

SBT302A

*1 RS-18 *2 BT-31

Ⓐ

13 Glove box
- Remove clips.

14 Instrument finisher
- Remove screws.

15 Instrument lower panel on passenger side
- Remove screws then disconnect harness connector.
- Then remove passenger air bag module bracket. Refer to RS-(*1), "SUPPLEMENTAL RESTRAINT SYSTEM" for details.

16 Defroster grille

17 Instrument mask
- Disconnect harness connectors.

18 Front pillar garnish
- Refer to "SIDE AND FLOOR TRIM" for details, (*2).

19 Instrument panel and pads
- Remove bolts and nuts.
- Then disconnect GPS antenna connector.

20 Passenger air bag module
- Refer to RS-(*1), "SUPPLEMENTAL RESTRAINT SYSTEM" for details.

SBT026A

*1 RS-20 *2 BT-31

SEC. 248•272•280•487•680•685•969

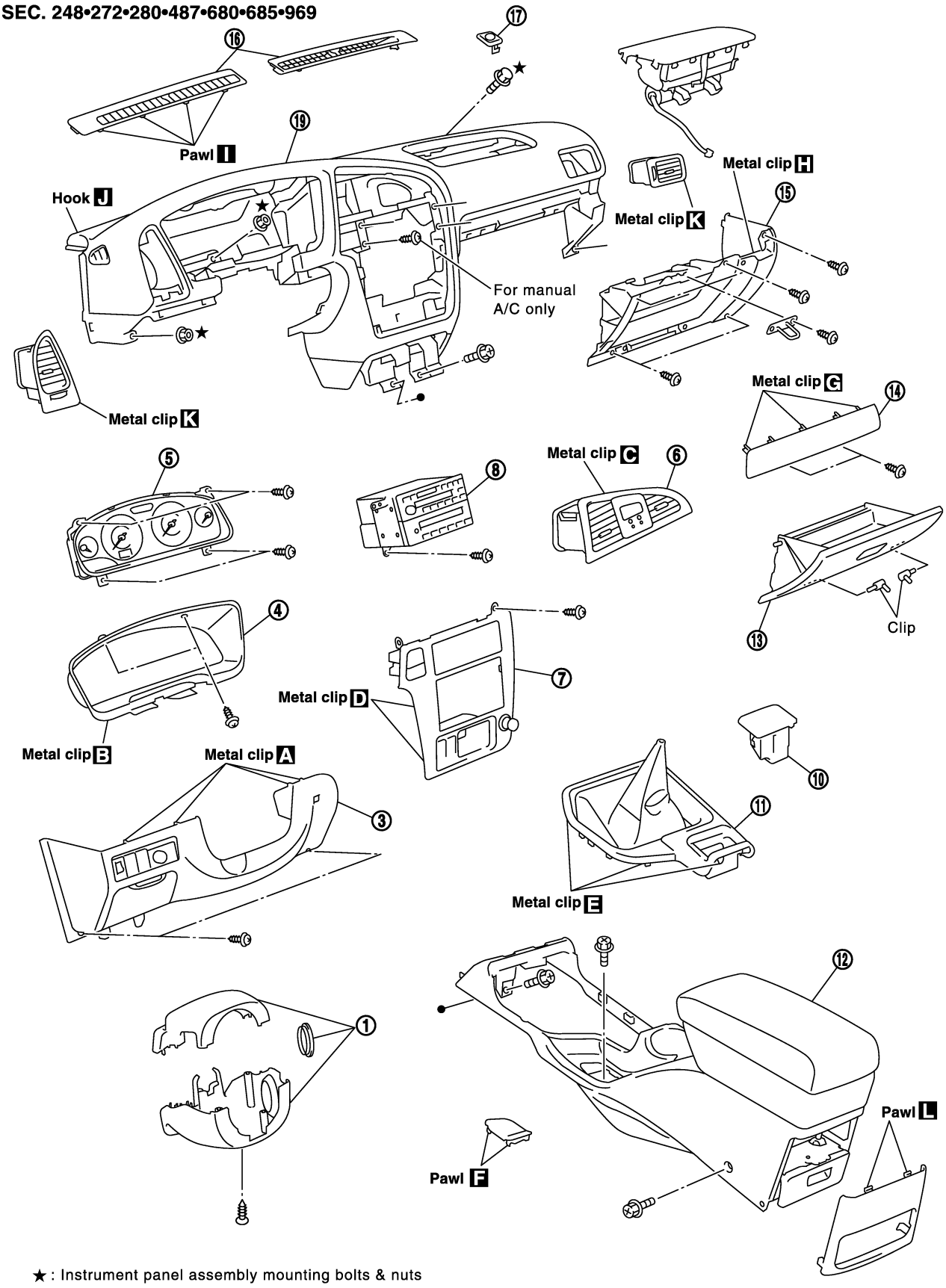

★ : Instrument panel assembly mounting bolts & nuts

SBT300A

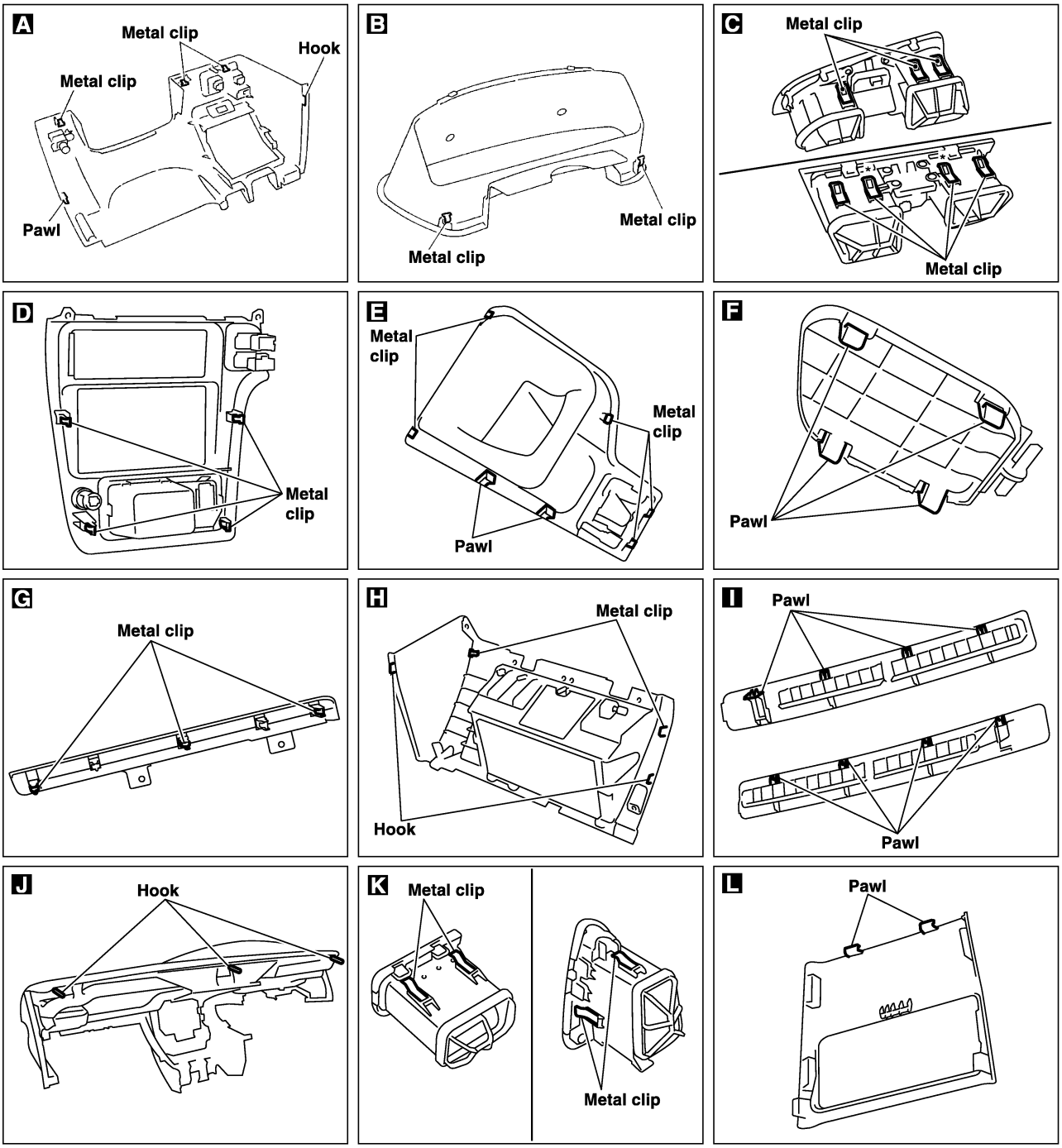
A
Metal clip
Hook
Metal clip
Pawl
B
Metal clip
Metal clip
C
Metal clip
Metal clip
D
Metal clip
E
Metal clip
Metal clip
Pawl
F
Pawl
G
Metal clip
H
Metal clip
Hook
I
Pawl
Pawl
J
Hook
K
Metal clip
Metal clip
L
Pawl

PIIA9874E

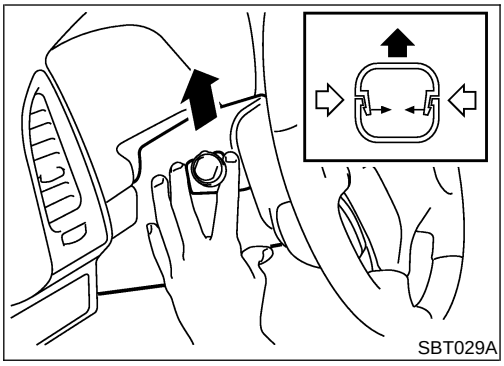

Steering column cover
After removing the screws, release the pawls by pressing on the upper cover where it meets (the bottom cover) from both sides.

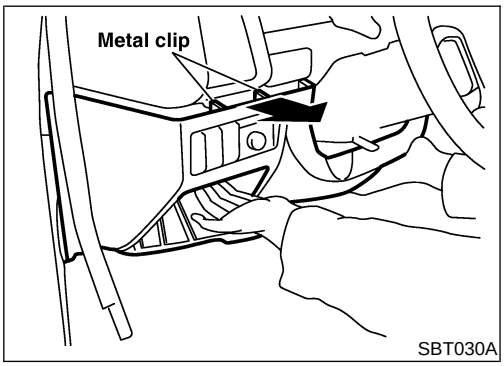

Instrument lower panel on the driver side
Open the pocket after removing the screws. Hold the opening and the bottom and pull out horizontally.

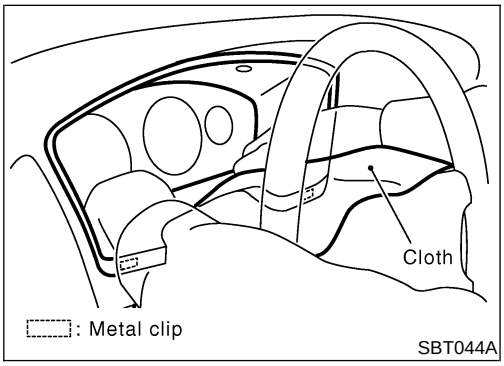

Cluster lid A
After removing the screws, hold the bottom and pull out.

CAUTION:
Cover the surroundings with a cloth to prevent damage.

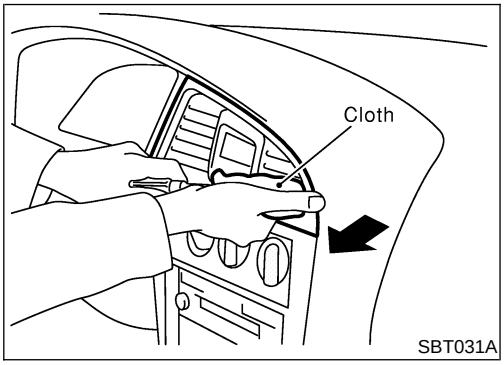

Center ventilator
Hook a cloth-covered flat-bladed screwdriver into the right-side groove section, and pull out.

CAUTION:
To prevent the screwdriver from slipping and causing damage to the surface, pull out while applying pressure on the screwdriver towards the right.

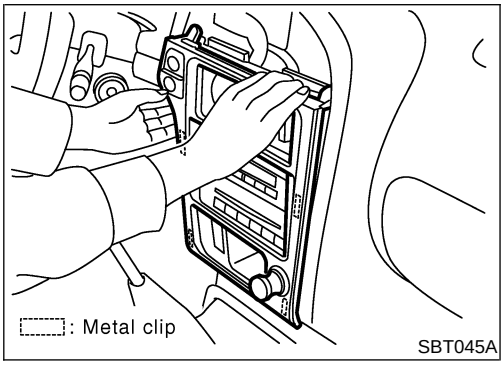

Cluster lid C
After removing the screws, place hands on the metal clip section, and pull forward to remove the metal clips.

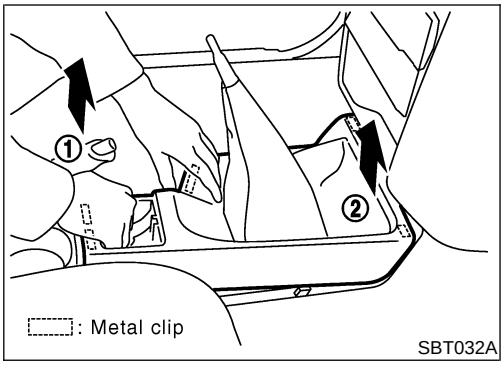

Console finisher

1) After removing the ashtray, place hands on the opening and pull out in an upward direction to remove the clips at the back.
2) Hold the front of the finisher, pull out in an upward direction and remove the clips at the front.

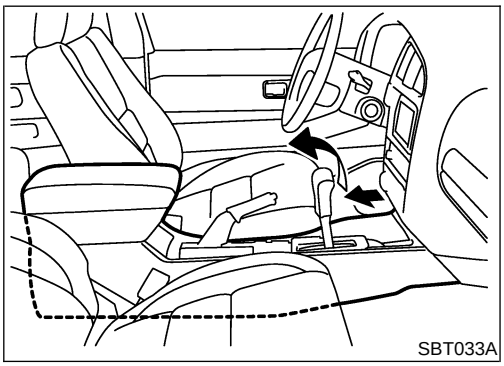

Console box

1) Pull up the parking brake lever.
2) Remove the screws, pull the console towards the back of the car until it is free of the instrument panel, lift up the front and remove.

- It will be easier to remove if the parking brake lever is pulled up for more than 10 notches.

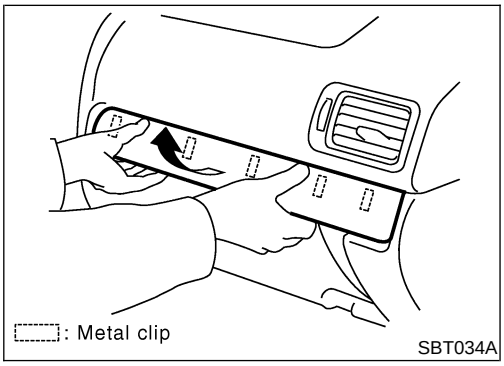

Instrument finisher

Remove the screws and pull up.

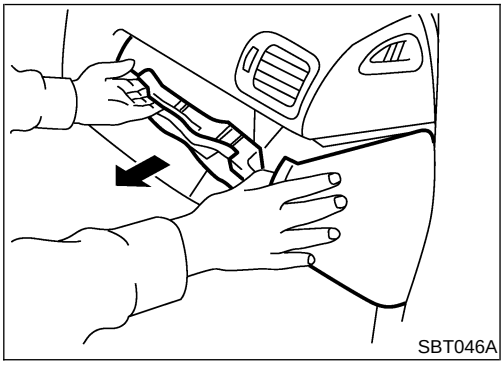

Instrument lower panel on the passenger side

After removing the screws, hold both sides and pull out horizontally.

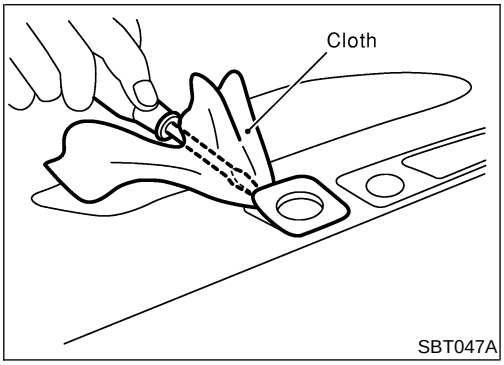

Instrument mask

Insert a cloth-covered flat-bladed screwdriver, and remove by lifting up.

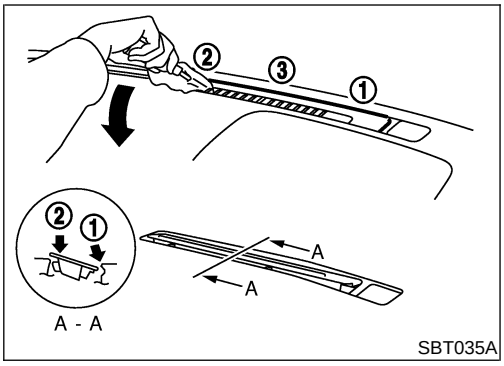

Defroster grille

REMOVAL

Insert a cloth-covered flat-bladed screwdriver into the grilles of the outside, center and central grilles, respectively, lift up the front of the grilles and remove.

INSTALLATION

After inserting the front section, insert the rear section (pawls) to attach.

CAUTION:

Confirm that the pawls at the rear are securely attached.

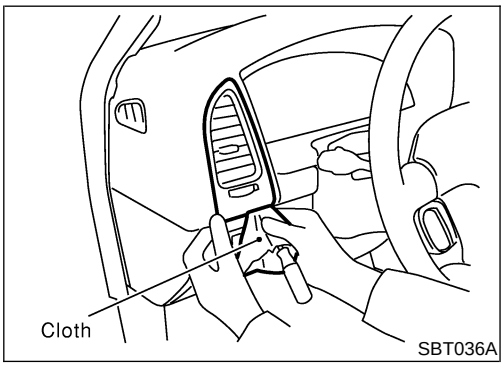

Side ventilator-left

Insert a cloth-covered flat-bladed screwdriver into the lower section, and pull out forward.

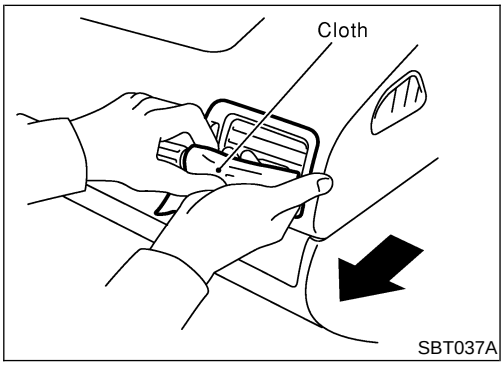

Side ventilator-right

Insert a cloth-covered flat-bladed screwdriver into the corner of the lower section, and pull out forward. (Securely press the screwdriver against the ventilator.) Or, after removing the Instrument lower panel, push the ventilator out from the back.

Side defroster grille

After removing the side ventilator, reach in with hands from the opening, push on the pawls from behind the grille, and remove by pushing out.

Removal and Installation

NABT0009

CAUTION:
Wrap the tip of flat-bladed screwdriver with a cloth when removing metal clips from garnishes.

1. Remove front and rear seats. Refer to “FRONT SEAT” and “REAR SEAT” for details, BT-45, BT-49.
2. Remove front and rear seat belts. Refer to RS-3, “SEAT BELT” for details.
3. Remove front and rear kicking plates.
4. Remove dash side lower finishers.
5. Remove front and rear body side welts.
6. Remove front pillar garnishes. B
7. Remove center assist grips.
8. Remove center pillar lower garnishes. C
9. Remove center pillar upper garnishes. C
10. Remove rear gate kicking plate.
11. Remove rear net hooks.
12. Remove tonneau cover assembly and rear parcel holder.
13. Remove rear side lower garnishes. E
14. Remove rear side upper garnishes. D

SEC. 678•738•769•799•849

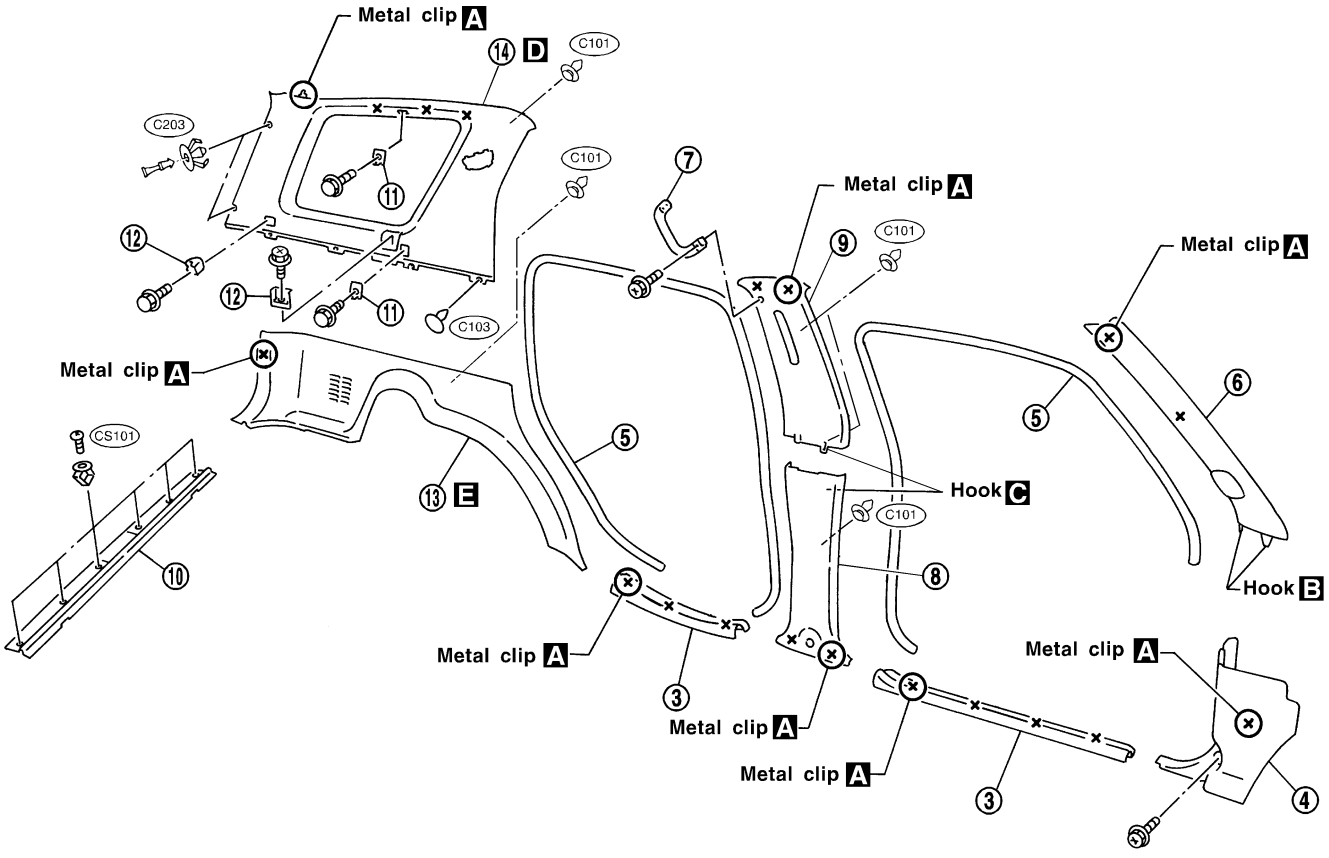

SBT694

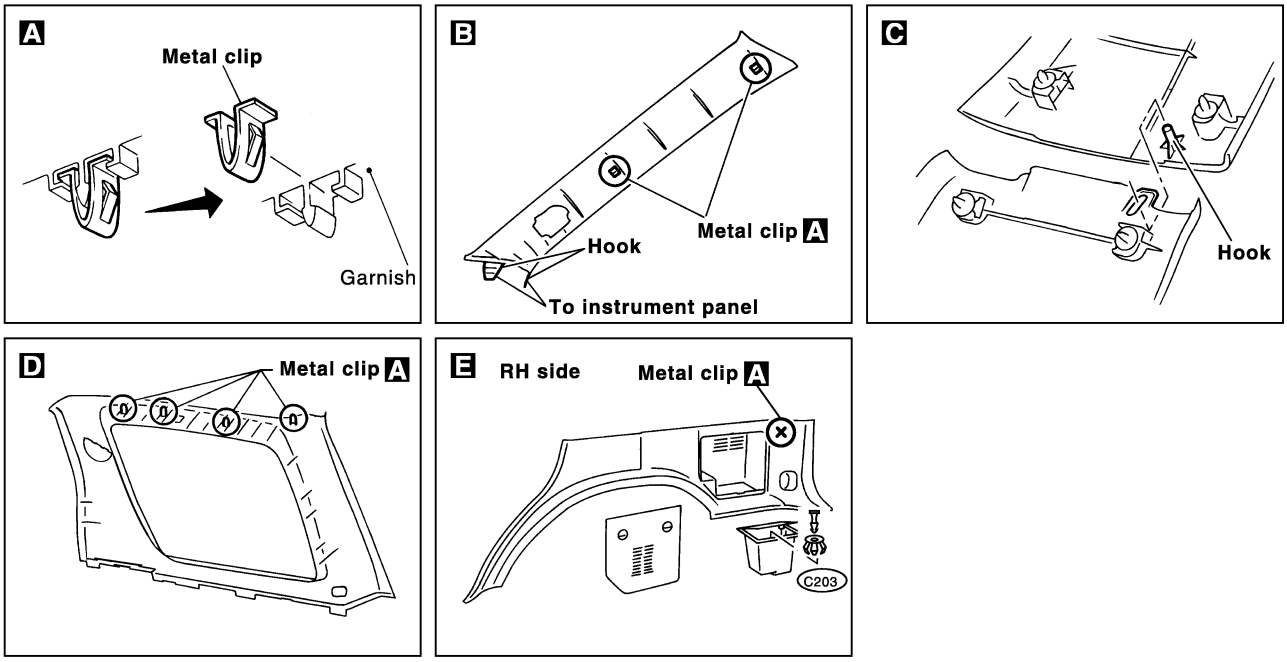
A
Metal clip
Garnish
B
Metal clip A
Hook
To instrument panel
C
Hook
D
Metal clip A
E
RH side
Metal clip A
C203

PIIA9875E

Removal and Installation

NABT0010

NABT0010S01

TYPE A

1. Remove inside handle escutcheon. A
2. Remove door armrest. (Front door only) B
3. Remove power window switches, then disconnect the connectors. C
4. Remove door finisher cover. (Rear door only) D
5. Remove bolts securing door finisher.
6. Remove clips securing door finisher.
7. Lift out door finisher.

SEC. 251•809•828

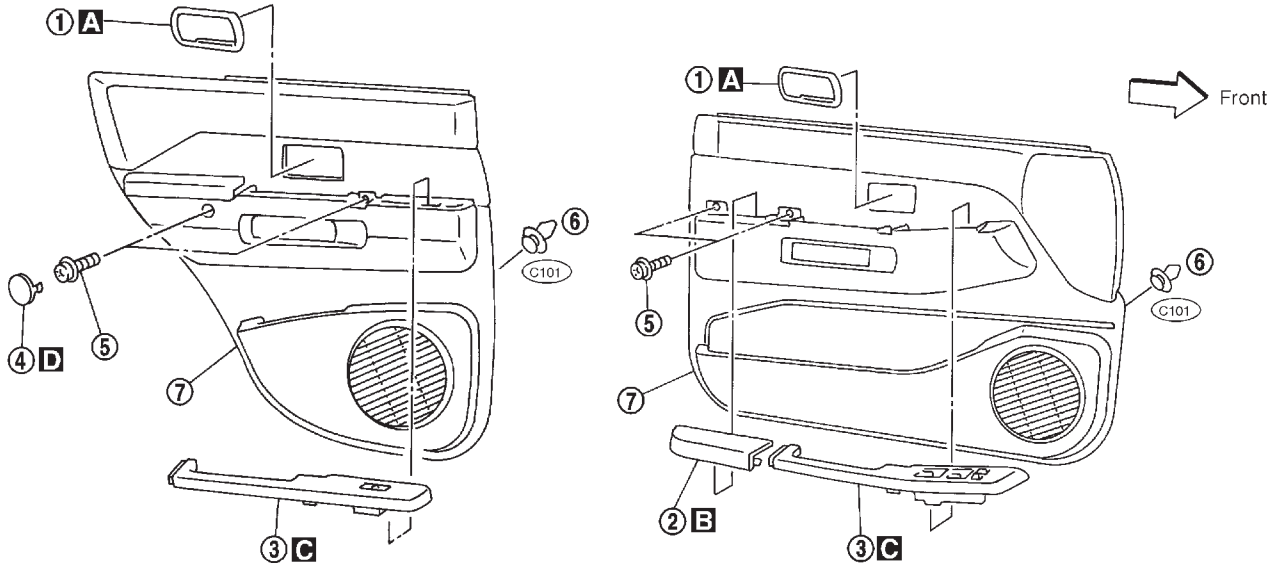

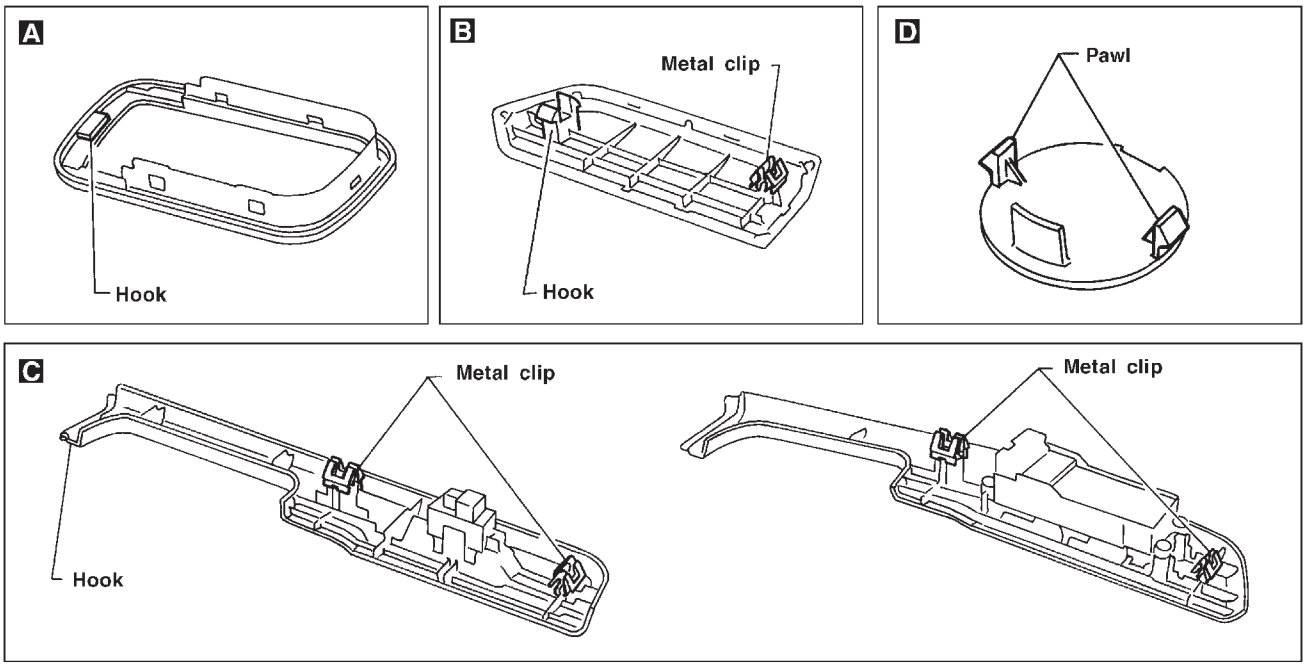

SBT207

TYPE B

=NABT0010S02

Front Door Trim

1. Remove inside handle escutcheon. A
2. Remove power window switch, then disconnect the connectors. B
3. Remove door armrest. C
4. Remove bolts securing door finisher.
5. Pull on door finisher to remove clips from door panel and remove door finisher, then disconnect glass hatch and fuel lid opener switch connector.

Rear Door Trim

6. Remove inside handle escutcheon. A
7. Remove power window switch, then disconnect the connector. D
8. Remove door armrest cap. E
9. Remove bolts securing door finisher.
10. Pull on door finisher to remove clips from door panel and remove door finisher.

SEC. 251•809•828

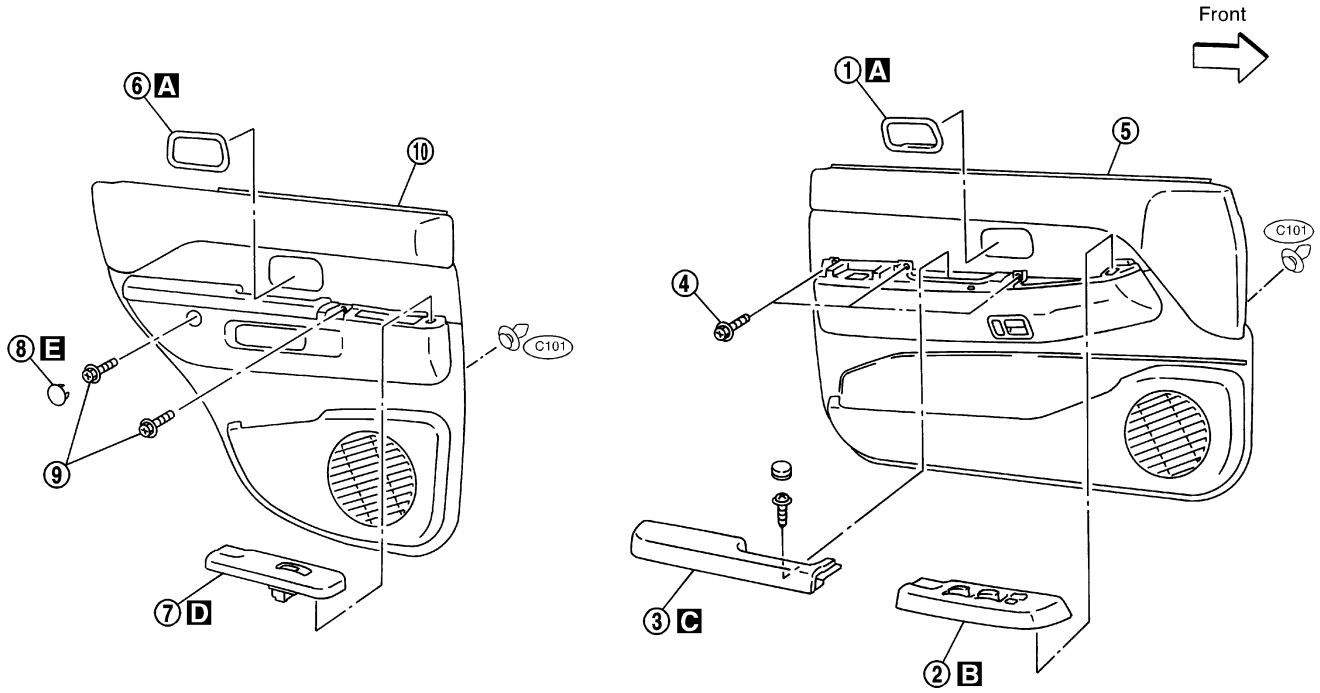

SBT696

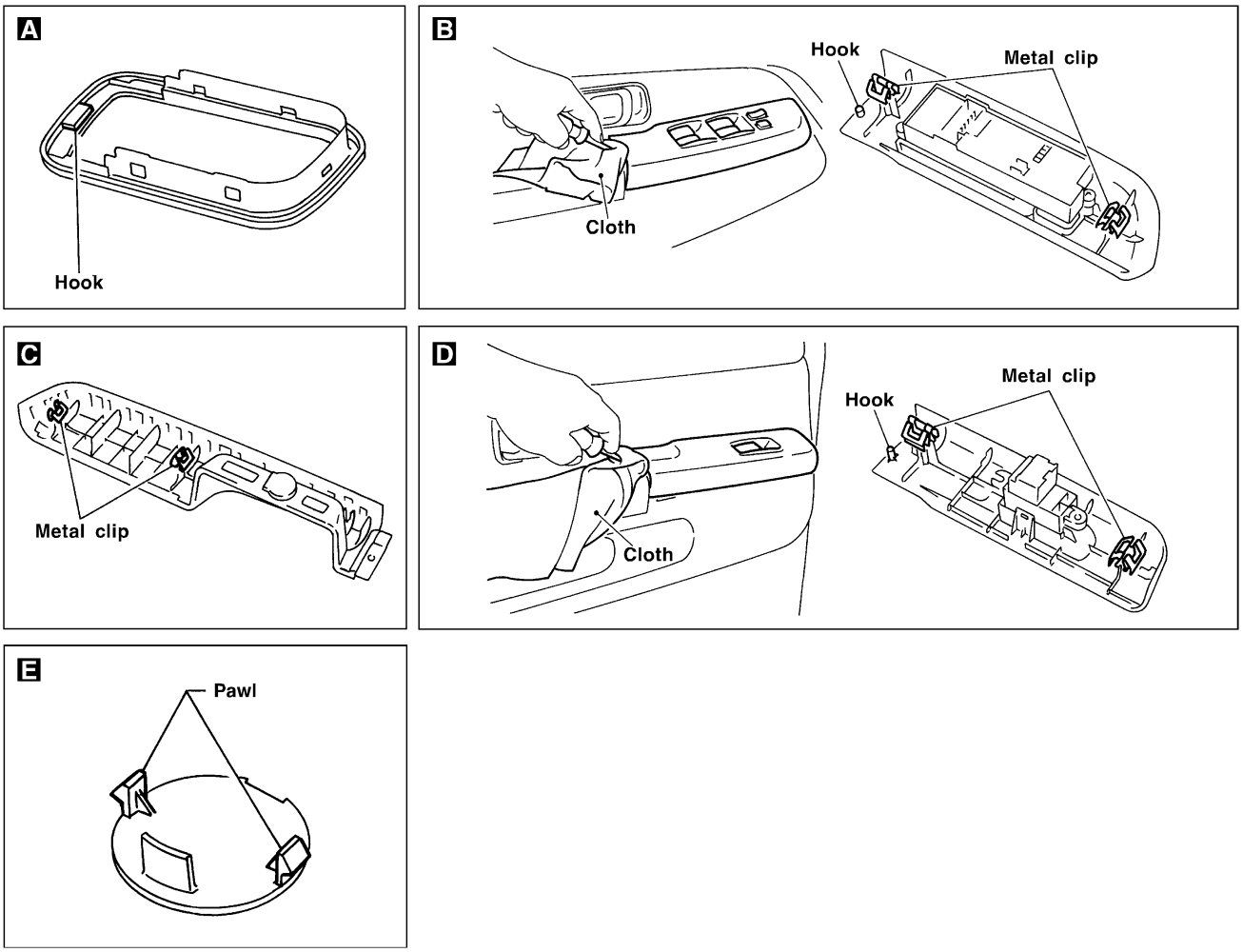
A
Hook
B
Hook
Metal clip
Cloth
C
Metal clip
D
Metal clip
Hook
Cloth
E
Pawl

SBT697

Removal and Installation

NABT0011

1. Remove front and rear seats. Refer to “FRONT SEAT” and “REAR SEAT” for details, BT-45, BT-49.
2. Remove front and rear seat belts. Refer to RS-3, “SEAT BELTS” for details.
3. Remove body side trim. Refer to “SIDE AND FLOOR TRIM” for details, BT-31.
4. Remove roof console assembly. A
5. Remove inside mirror assembly.
6. Remove sun visors.
7. Remove interior lamp assembly and luggage room lamp assembly.
8. Remove assist grips.
9. Remove clips securing headlining.
10. Remove rear roof garnish. B
11. Remove headlining from vehicle through either back door.

SEC. 264•738•963•964•970

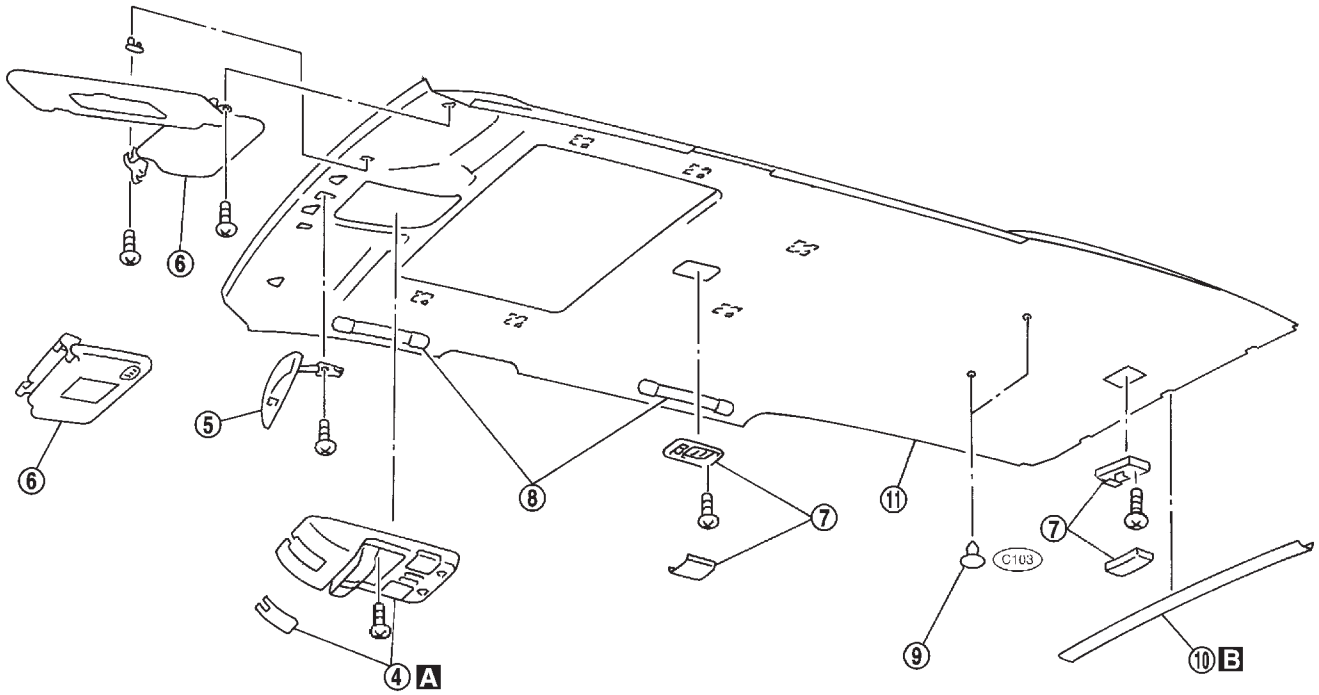

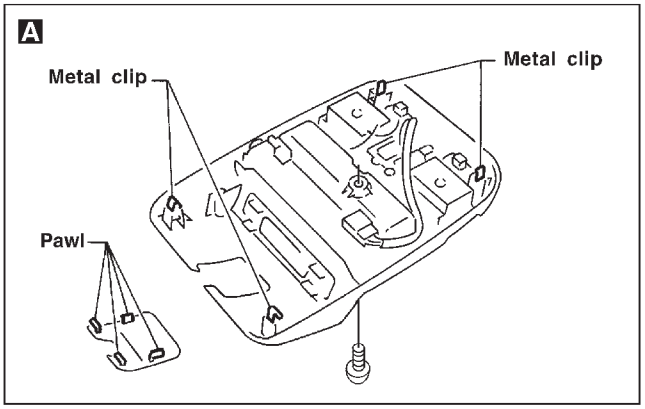

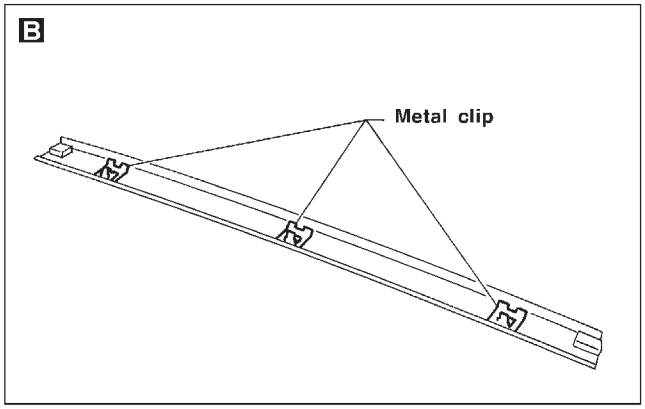

SBT487

Removal and Installation

NABT0012

1. Remove back door grip.
2. Remove back door finisher assembly.
3. Remove high-mounted stop lamp.
4. Remove back door upper finisher assembly.

SEC. 268•909

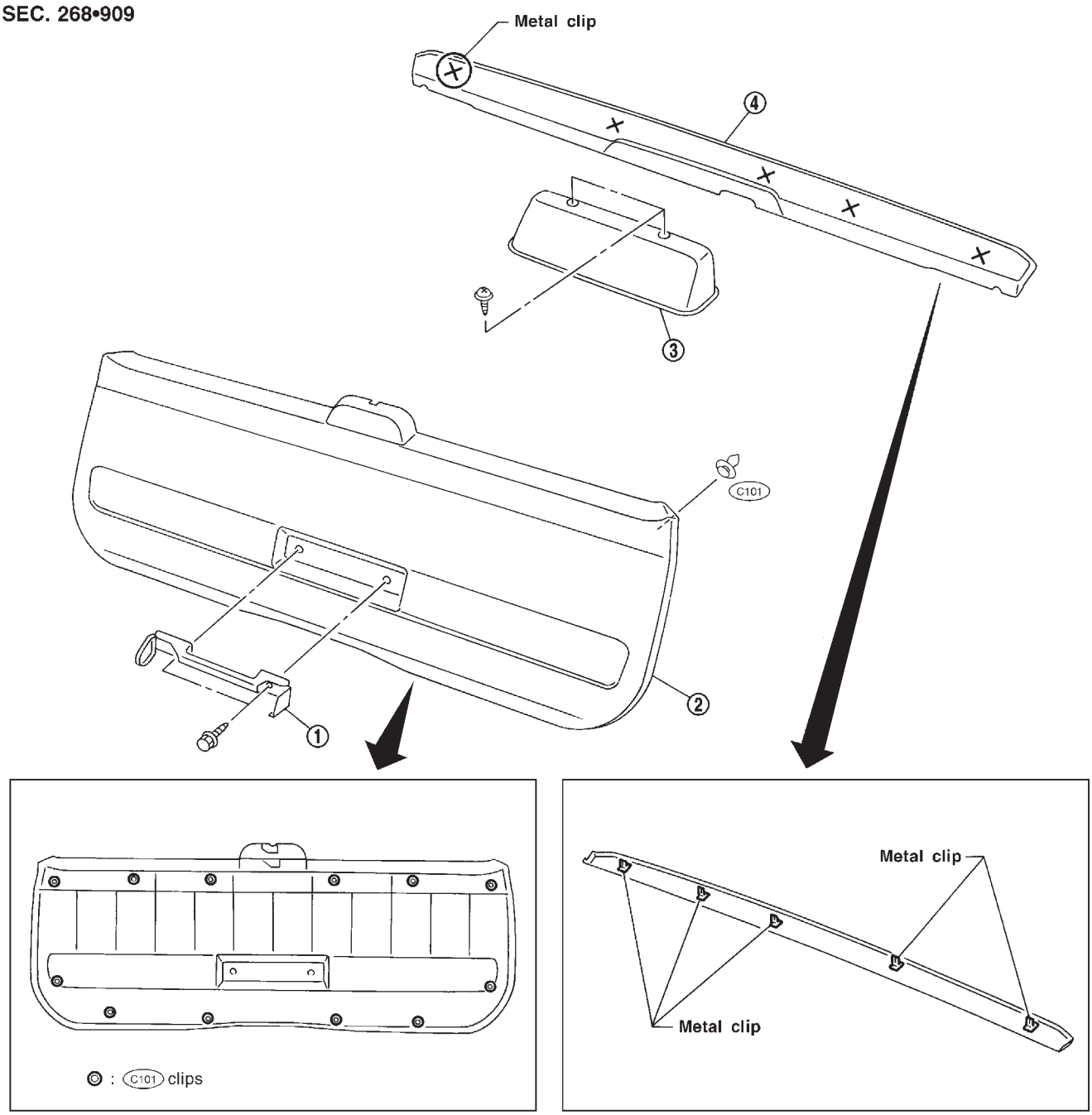

SBT223

Removal and Installation

NABT0013

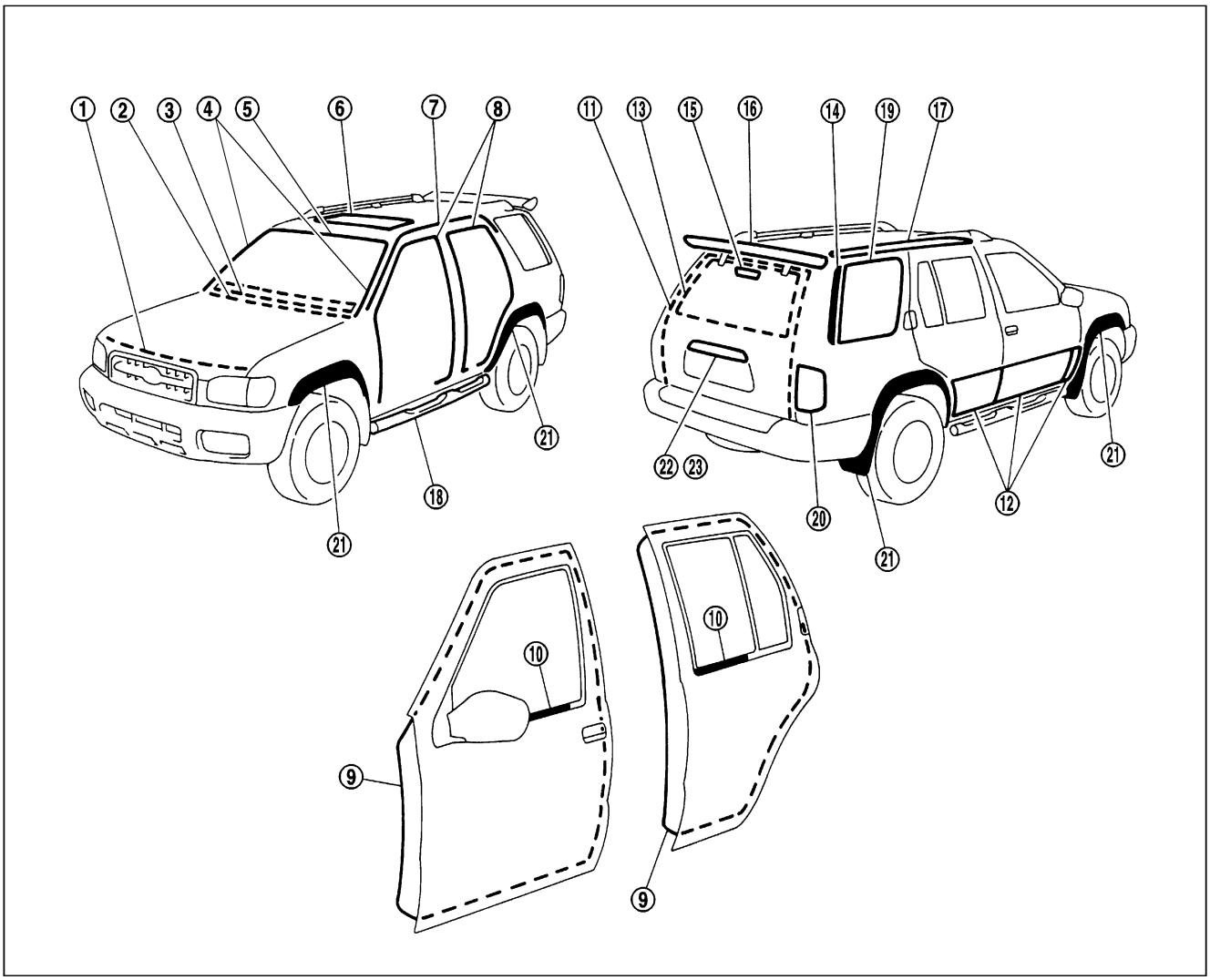

① Hood front seal

SEC. 650

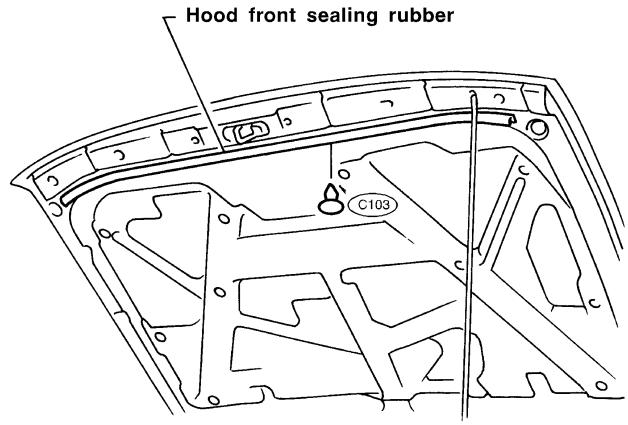

② ③ Cowl top seal and cowl top grille

SEC. 660

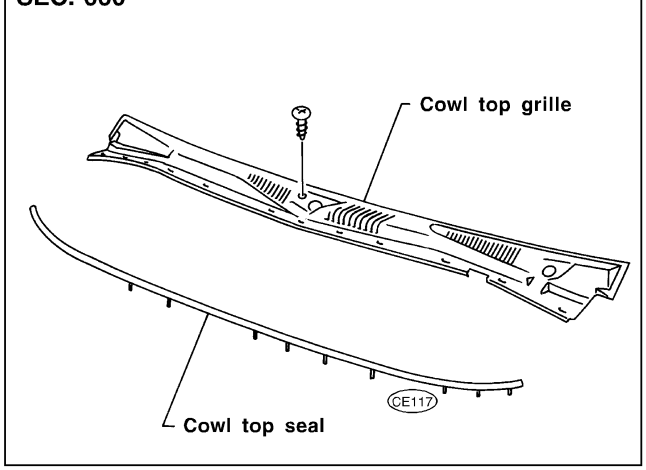

④ Windshield side molding

Mounted with screws.

SBT729

⑤ Windshield upper molding

SEC. 720

1. Cut off adhesive at glass end.
2. Remove old adhesive from panel surface.
3. Set molding fastener and apply primer to body panel, and apply adhesive to body.

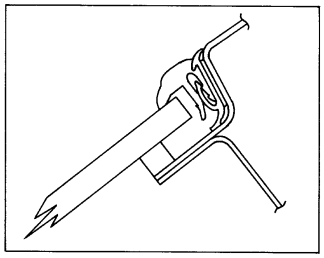

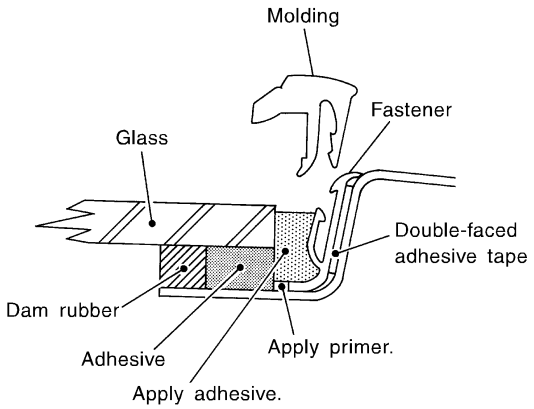

4. Install molding by aligning the molding mark located on center with vehicle center.
   Be sure to install tightly so that there is no gap around the corner.

⑥ Sunroof lid weatherstrip

SEC. 736

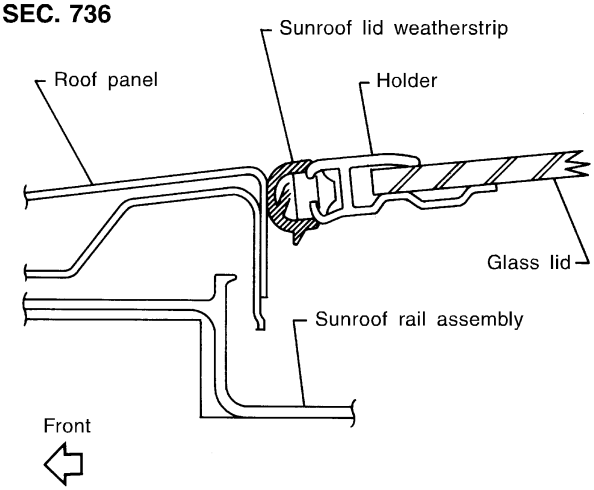

⑦ Drip weatherstrip

SEC. 767

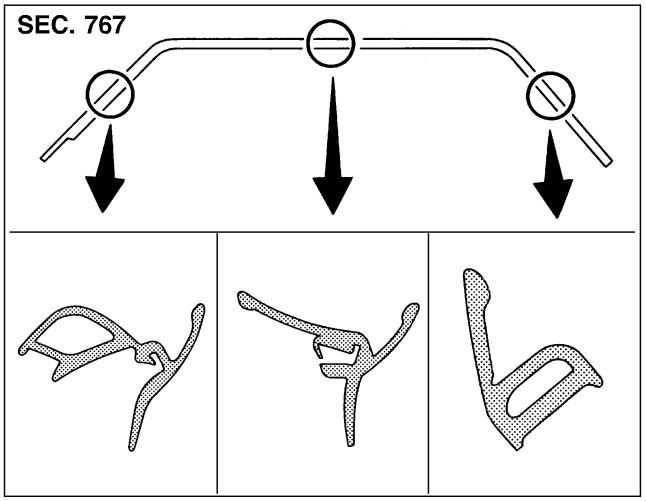

⑧ Body side welt

SEC. 769

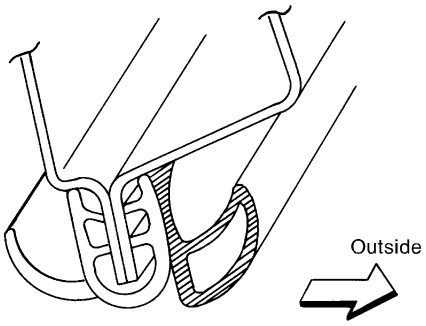

⑨ Door weatherstrip

SEC. 800•820

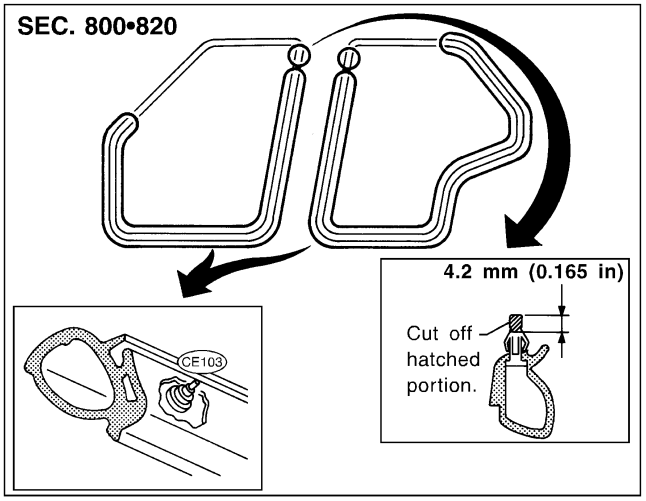

SBT730

⑩ Door outside molding

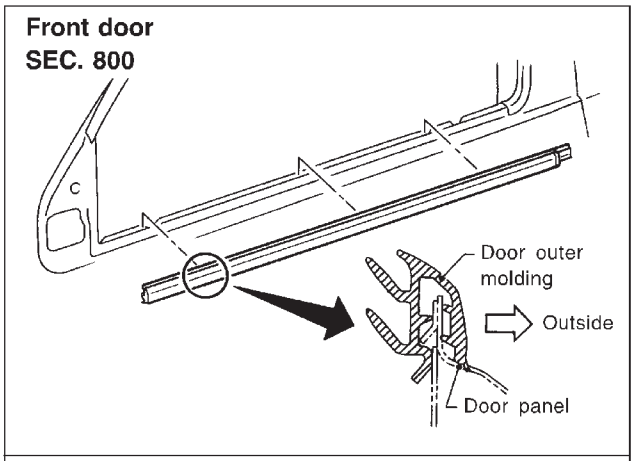

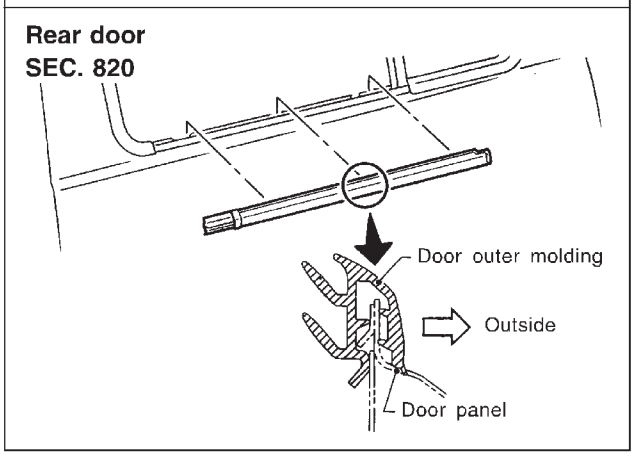

⑪ Back door weatherstrip

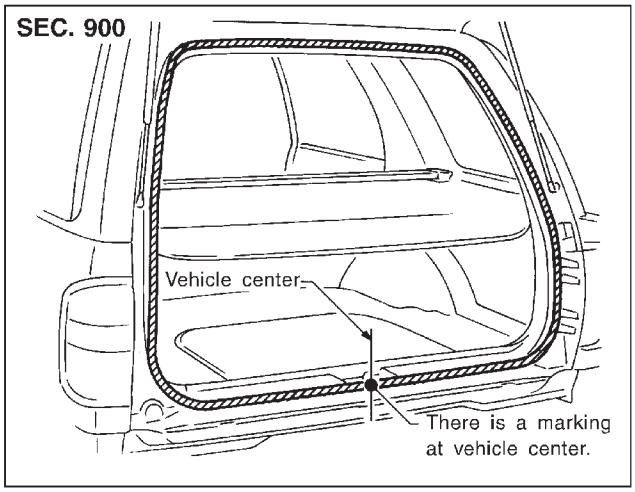

⑫ Side guard molding

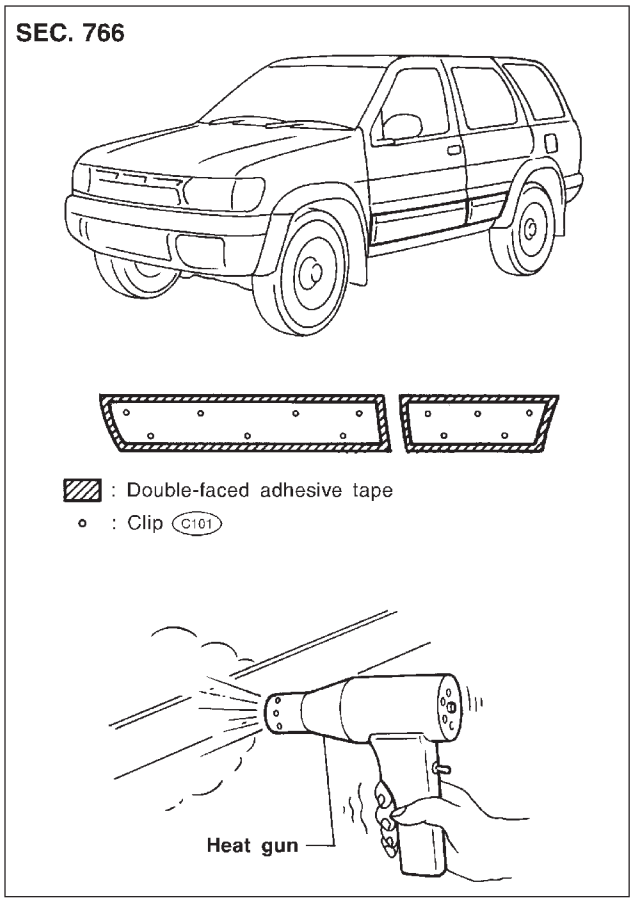

- **With a vehicle coated with Hard Clear Coat, use double-faced 3M adhesive tape Product No. 4210 or equivalent, after priming with 3M primer Product No. N-200 or C-100 or equivalent.**

⑬ Back door window weatherstrip

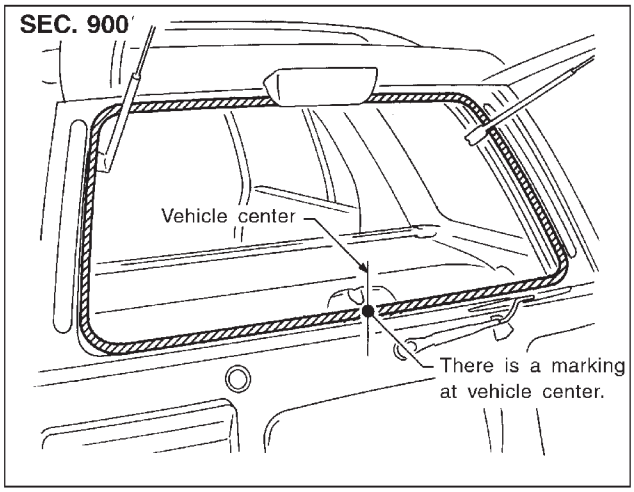

SBT490-A

⑭ Air outlet grille

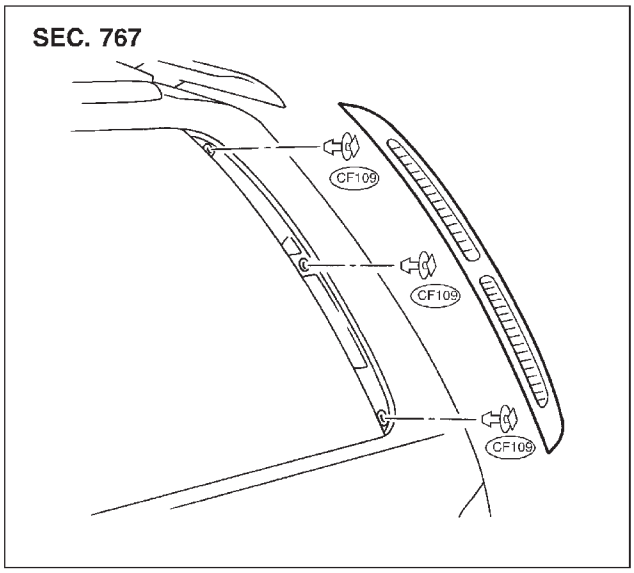

⑮ High-mounted stop lamp

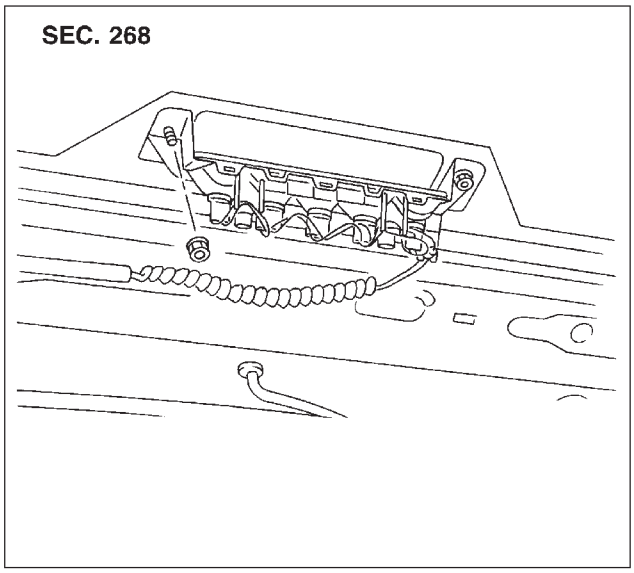

⑯ Back door deflector

- When installing, make sure that there are not gaps or waves at ends of deflector.
- Before installing deflector, clean and remove oil from surface where deflector will be mounted.

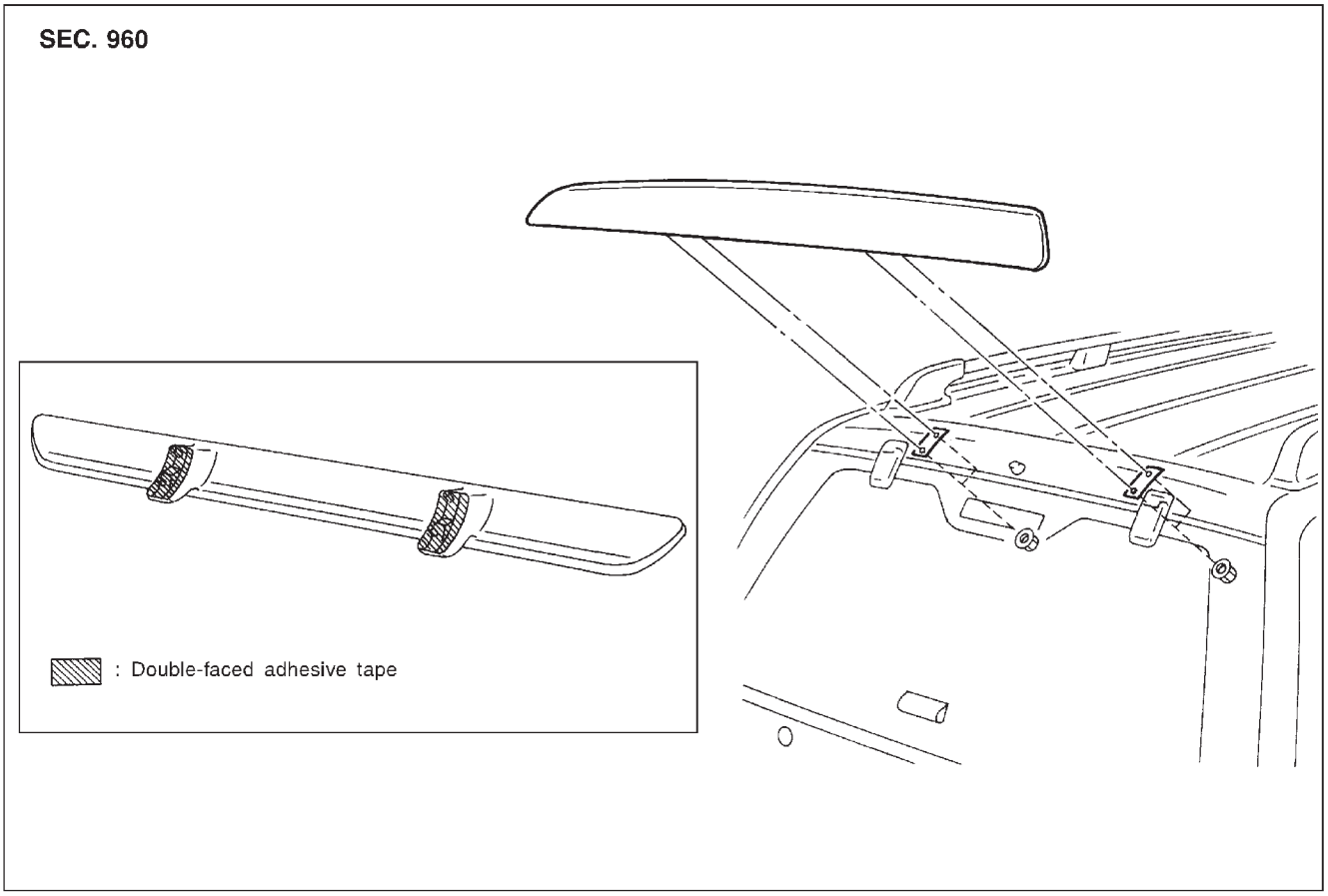

SBT491-A

⑰ Roof rack

SEC. 730

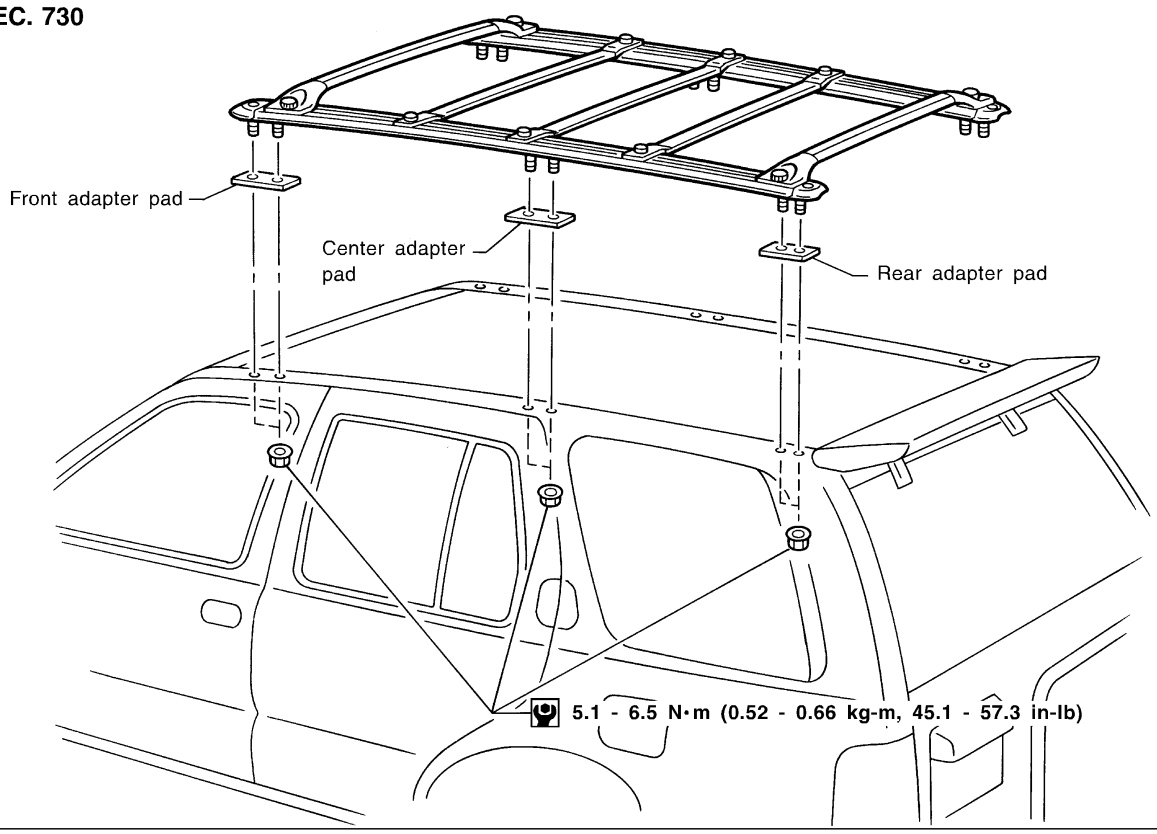

⑱ Side step

SEC. 767

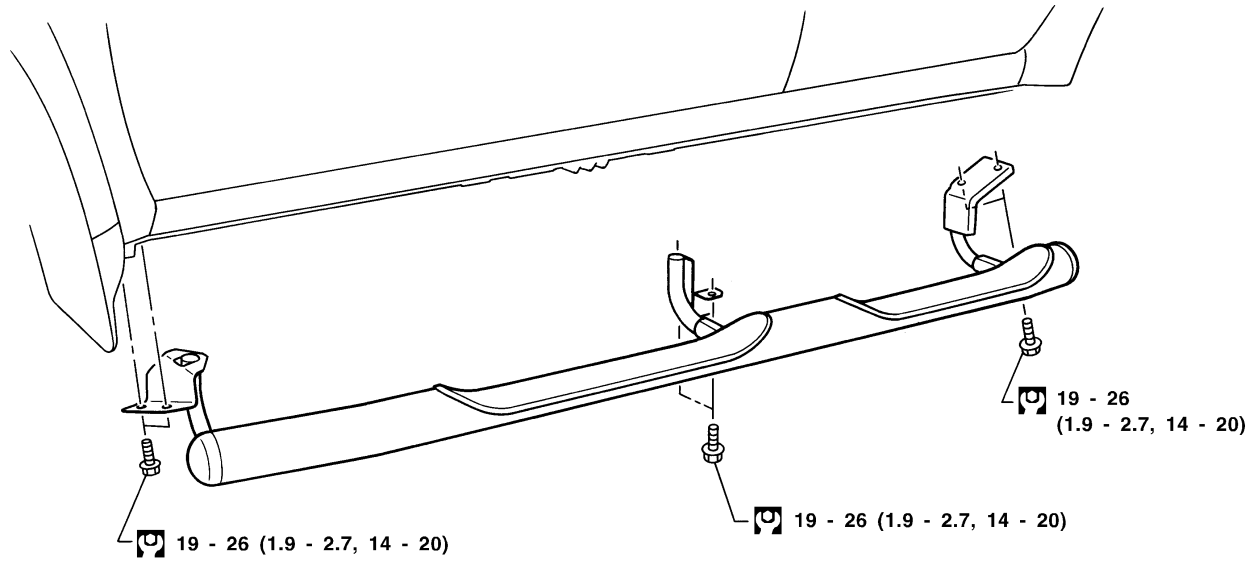

- Pipe type and board type outer steps are only different in shape. Removal and installation method for both types is the same.

: N•m (kg-m, ft-lb)

SBT492-B

⑲ Rear side window molding

Refer to the applicable sections on the preceding pages.

⑳ Rear combination lamp

Rear combination lamps are installed with nuts.

㉑ Over fender

SEC. 630•780

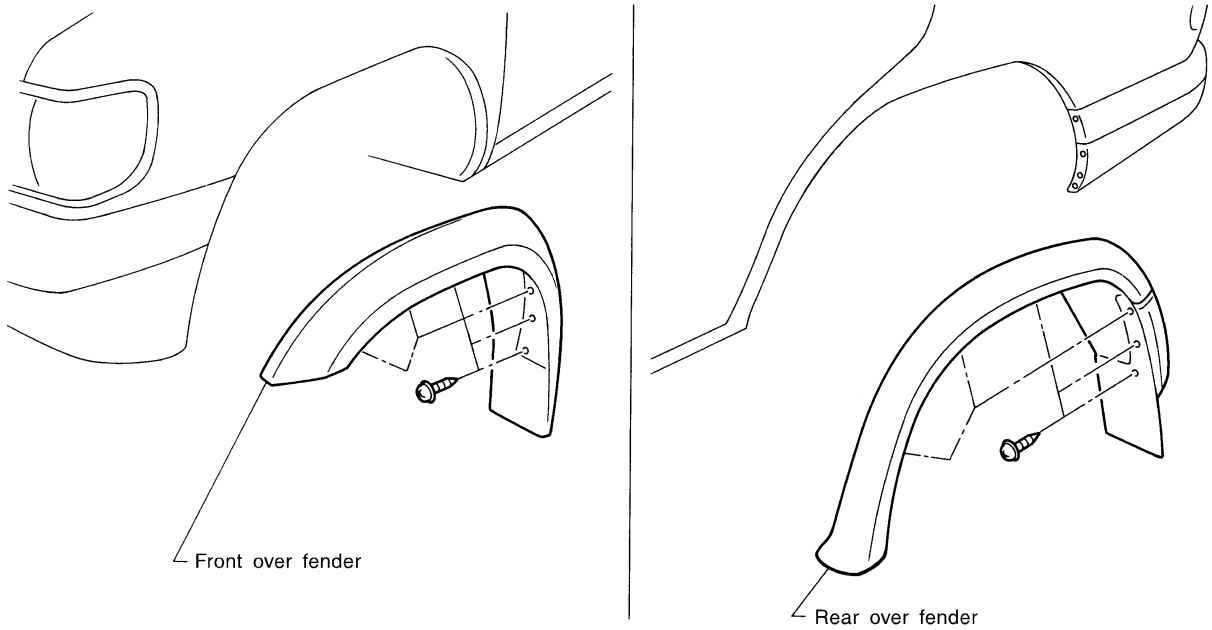

SBT493-A

㉒ License lamp finisher (Without spare tire hanger models)

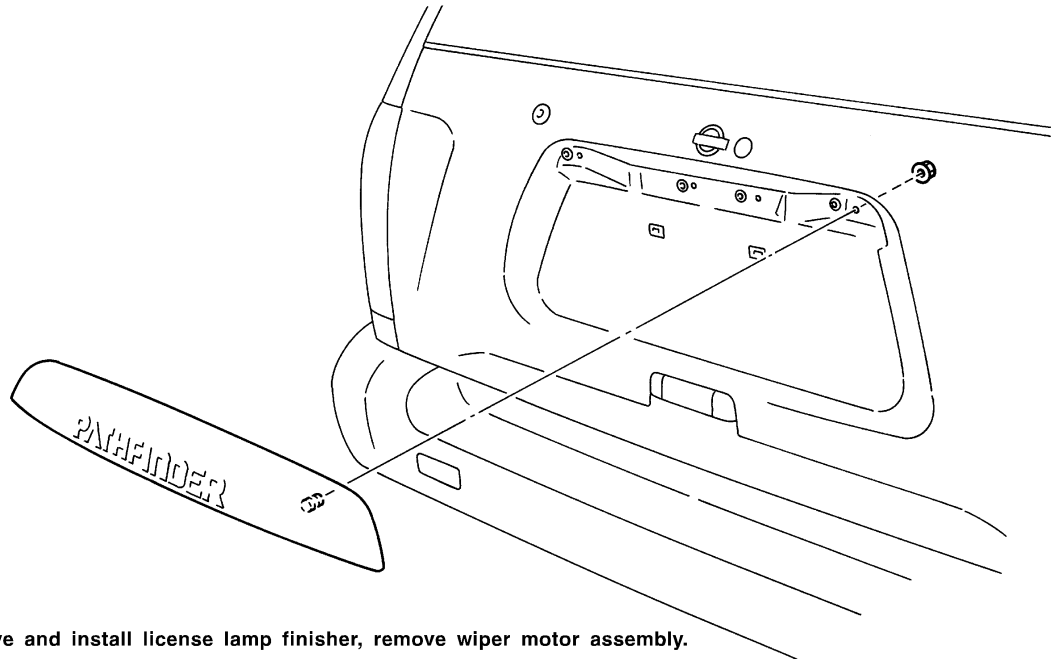

To remove and install license lamp finisher, remove wiper motor assembly.

㉓ License lamp finisher (With spare tire hanger models)

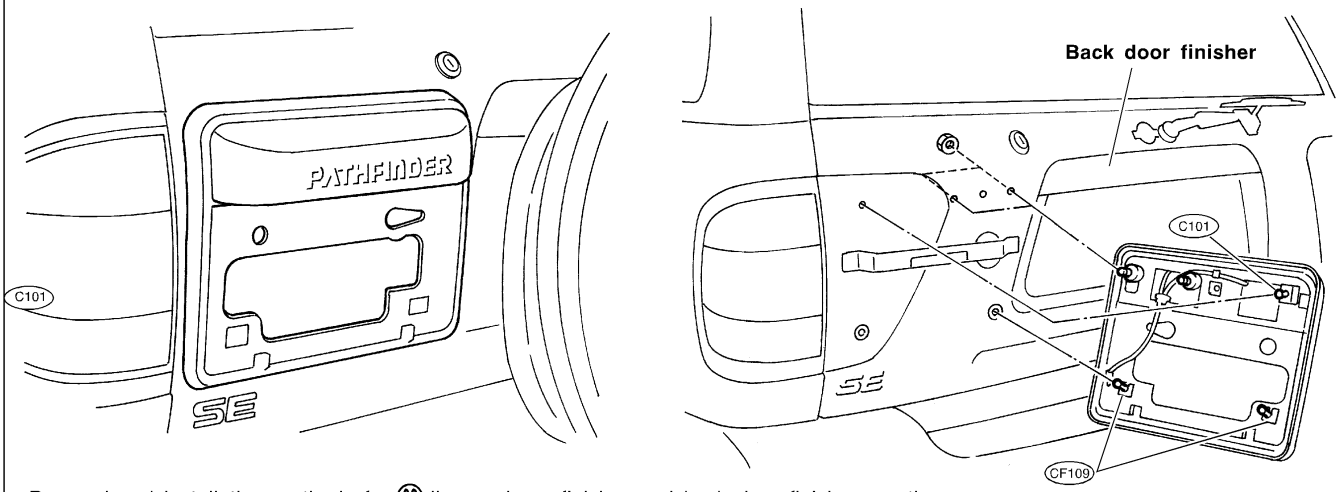

Removal and installation methods for ㉒ license lamp finisher and back door finisher are the same.

SBT731

Removal and Installation

NABT0014

- When removing or installing the seat trim, handle carefully to keep dirt out and avoid damage.

★ **For Wiring Diagram, refer to EL-230, “POWER SEAT”.**

CAUTION:

- **Before removing the front seat, turn the ignition switch off, disconnect both battery cables and wait at least 3 minutes.**
- **When checking the power seat circuit for continuity using a circuit tester, do not confuse its connector with the side air bag module connector. Such an error may cause the air bag to deploy.**
- **Do not drop, tilt, or bump the side air bag module installed in the seat. Always handle it with care.**
- **Disconnect the side air bag, power seat switch, and heated seat harness connectors from under the seat before removing the seat.**
- **Disconnect the side air bag harness connector before removing the seat back. (Refer to RS-22, “Side Air Bag Module”.)**

SLIDE COVER (REAR)

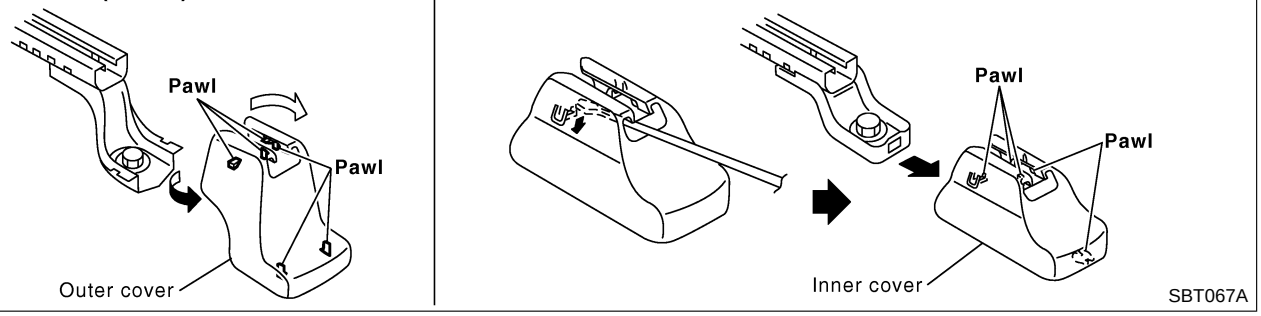

POWER SEAT

=NABT0014S01

SEC. 870

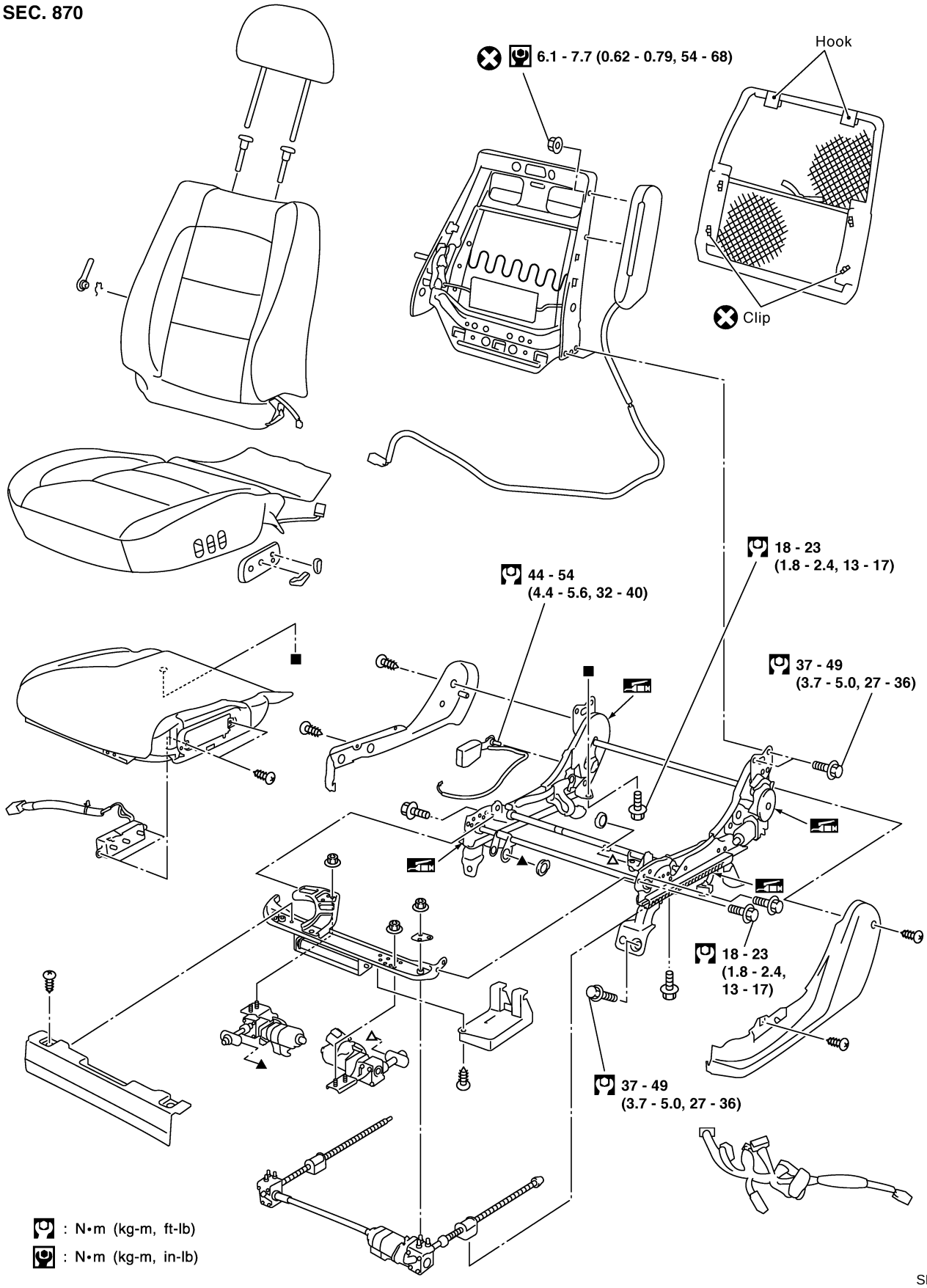

SBT019A

MANUAL SEAT

NABT0014S02

SEC. 870

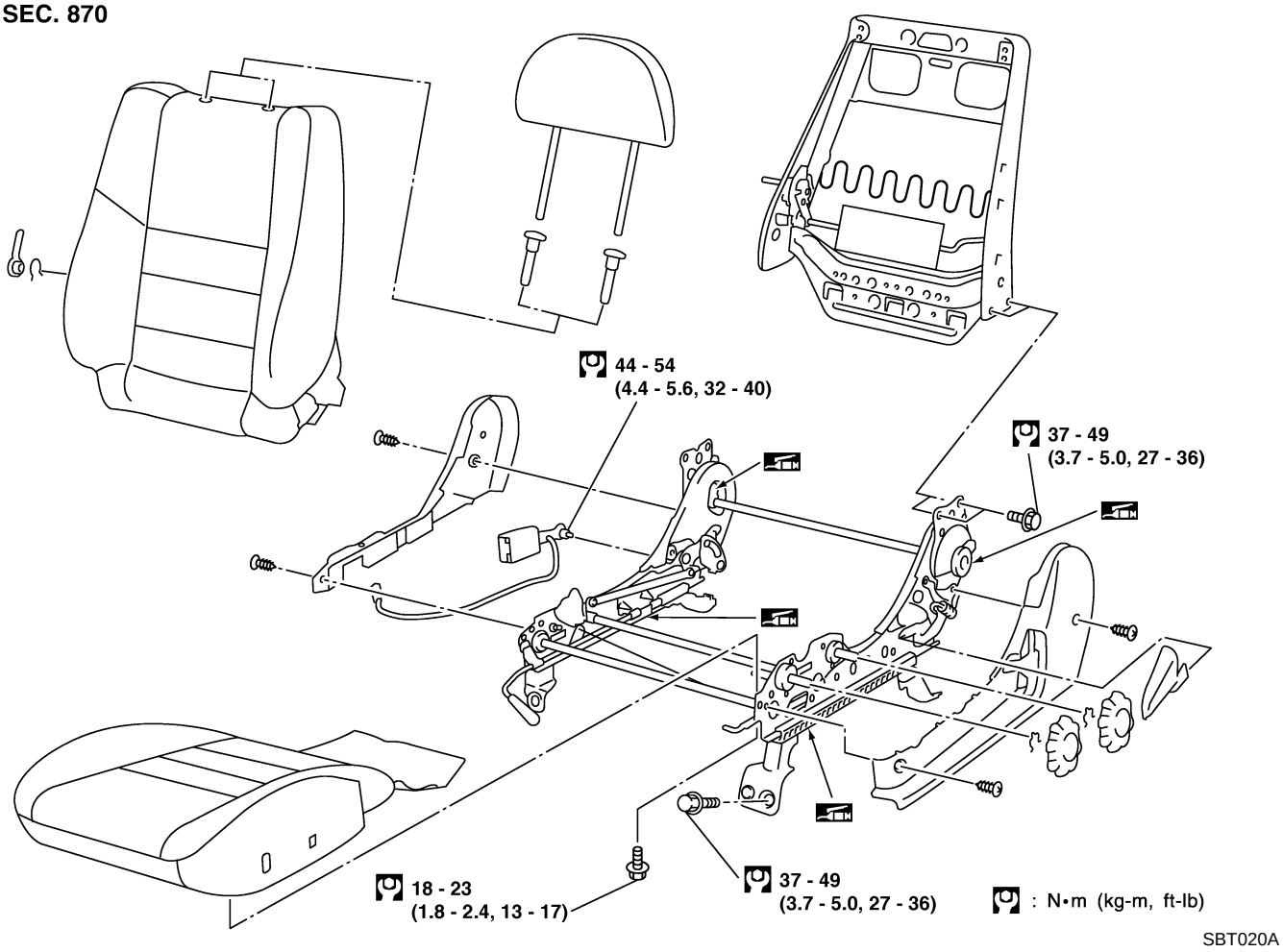

HEATED SEAT

=NABT0014S03

- When handling seat, be extremely careful not to scratch heating unit.
- To replace heating unit, seat trim and pad should be separated.
- Do not use any organic solvent, such as thinner, benzene, alcohol, gasoline, etc. to clean trims.

★ **For Wiring Diagram, refer to EL-232, "HEATED SEAT".**

Removal and Installation

NABT0015

SEC. 870

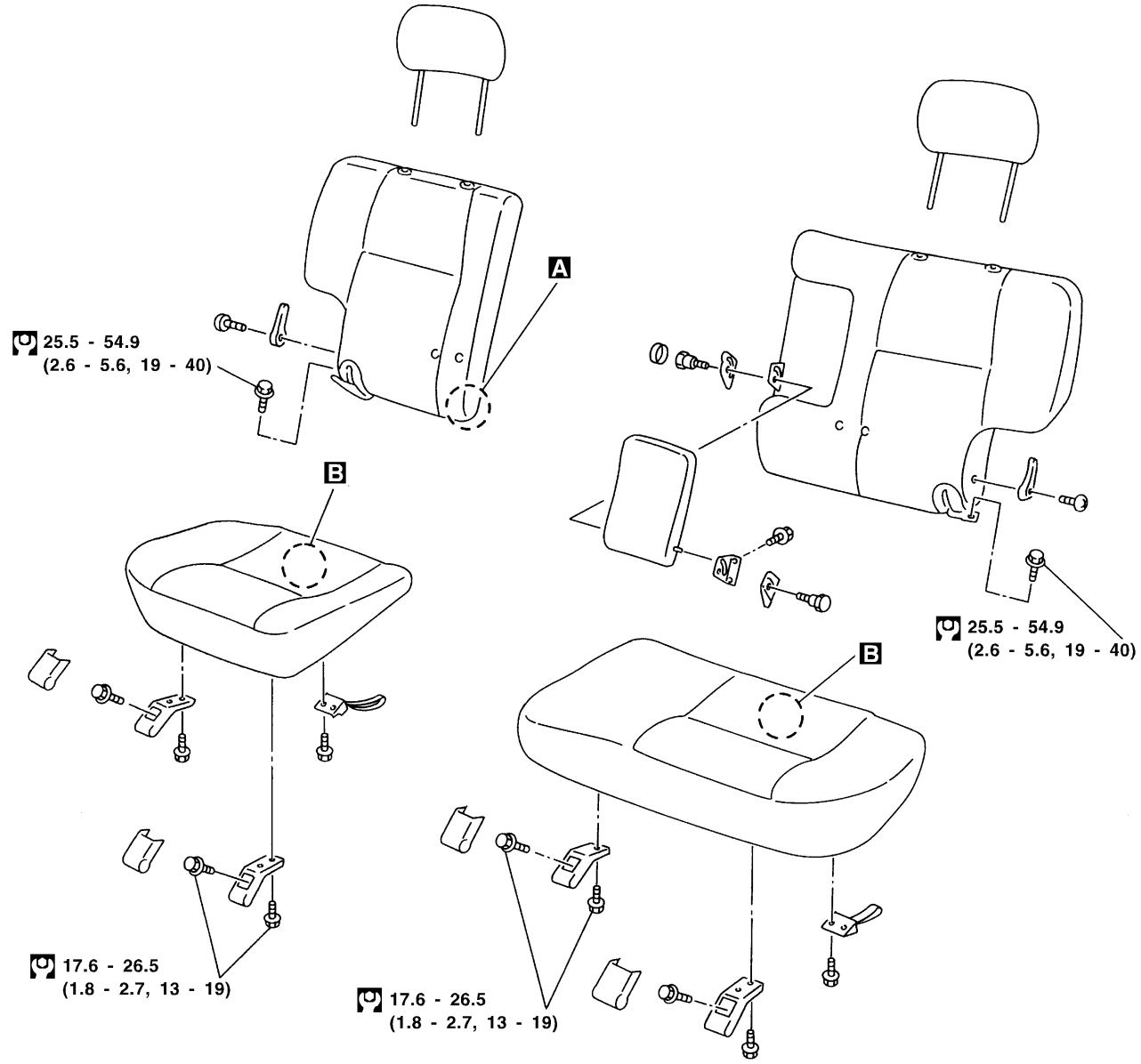

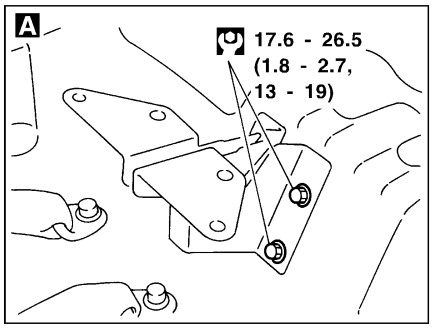

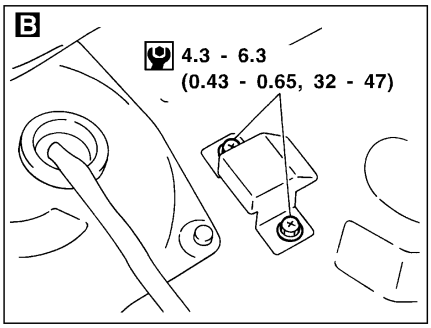

: N•m (kg-m, in-lb)

: N•m (kg-m, ft-lb)

SBT190-B

Adjustment

NABT0016

Install motor & limit SW assembly and sunroof rail assembly in the following sequence:

1. Arrange equal lengths of link and wire assemblies on both sides of sunroof opening.
2. Connect sunroof connector to vehicles harness.
3. Set lid assembly to fully closed position A by operating OPEN switch and TILT switch. After the lid has closed all the way, keep pushing the TILT switch toward tilt DOWN for more than 1 second.
4. Fit outer side of lid assembly to the surface of roof on body outer panel.
5. Press TILT-UP switch to check lid assembly for normal tilting.
6. Check sunroof lid assembly for normal operations (tilt-up, tilt-down, open, and close).

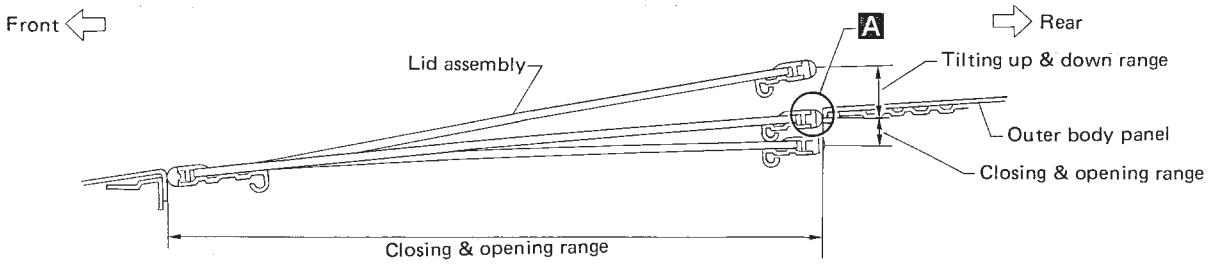

SBF920F

Contents of Working

=NABT0034

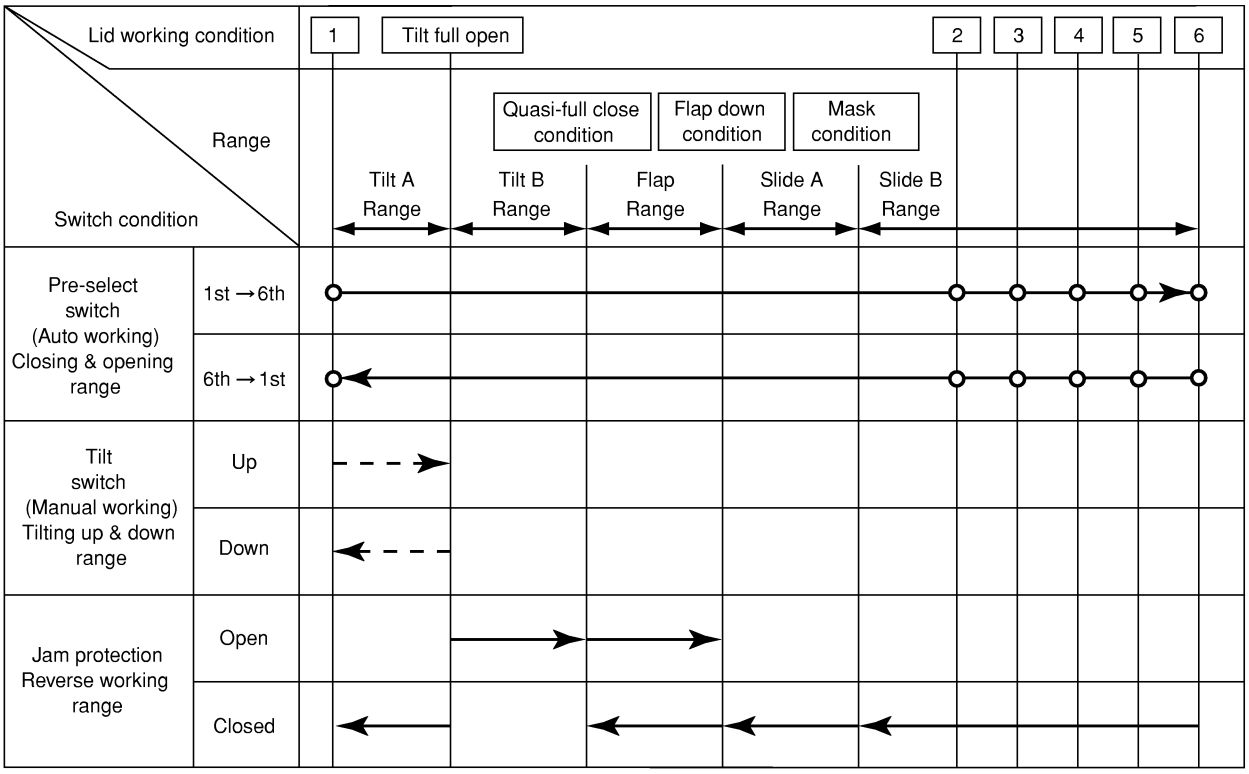

- Pre-select switch is set at 6th level.
- 1st level: Closed
- 6th level: Full open

SBT254A

Condition	Tilt		Pre-select	
	Manual		Auto	
Ignition (timer)	Normal working	Reverse working	Normal working	Reverse working
ON	◯	X	◯*1	◯
OFF	X	X	X	X*2

◯: Working
X: Not working
*1: Auto doesn't work if the position is not at the initial starting position.
*2: The motor keeps moving in reverse motion until finishing the reverse working.

Contents of Switch Working

=NABT0035

Priority of each switch is as folllows.

		Tilt switch		Slide switch (Pre-select)	
		Up	Down	Open	Close
Tilt A range	Tilting up/down & sliding open/close	Motor stop	←	Follow switch input	←
	Reverse turning	Reverse turn continued	←	Reverse turn continued	←
Tilt B range	Sliding open	Operate to tilt full open and stop	←	Follow switch input	←
	Sliding close	After continued operation, stop at tilt full open position	←	Follow switch input	←
	Reverse turning	Reverse turn continued	←	Reverse turn continued	←
Flap range	Sliding open	After continued operation, stop at flap down position	←	Follow switch input	←
	Sliding close	Operate to flap down position and stop	←	Follow switch input	←
	Reverse turning	Reverse turn continued	←	Reverse turn continued	←
Slide range	Sliding open	Motor stop	←	Follow switch input	←
	Sliding close	Motor stop	←	Follow switch input	←
	Reverse turning	Reverse turn continued	←	After reverse turn, continued, follow switch input	Reverse turn contin-ued

JAM PROTECTION

NABT0035S01

Reverse working is as follows.

	Operation direction	Reverse turn distance
Tilt A range	Open operation	Tilt full open position
Tilt B & flap range	Open operation	Tilt full open position
Flap range	Close operation	Flap down position
Slide A range	Close operation	125 mm (4.92 in) min.
Slide B range	Close operation	125 mm (4.92 in) min. (*1)

(*1): Full open position [In case of reverse start position, full open position is within 125 mm (4.92 in).]

CAUTION:

Don't pinch a foreign object or your body on purpose.

Removal and Installation

NABT0017

- After any adjustment, check sunroof operation and lid alignment.
- Handle finisher plate and glass lid with care so not to cause damage.
- It is desirable for easy installation to mark each point before removal.

CAUTION:

- **Always work with a helper.**
- **Before removal, fully close the glass lid assembly, then after removal, do not move motor assembly.**

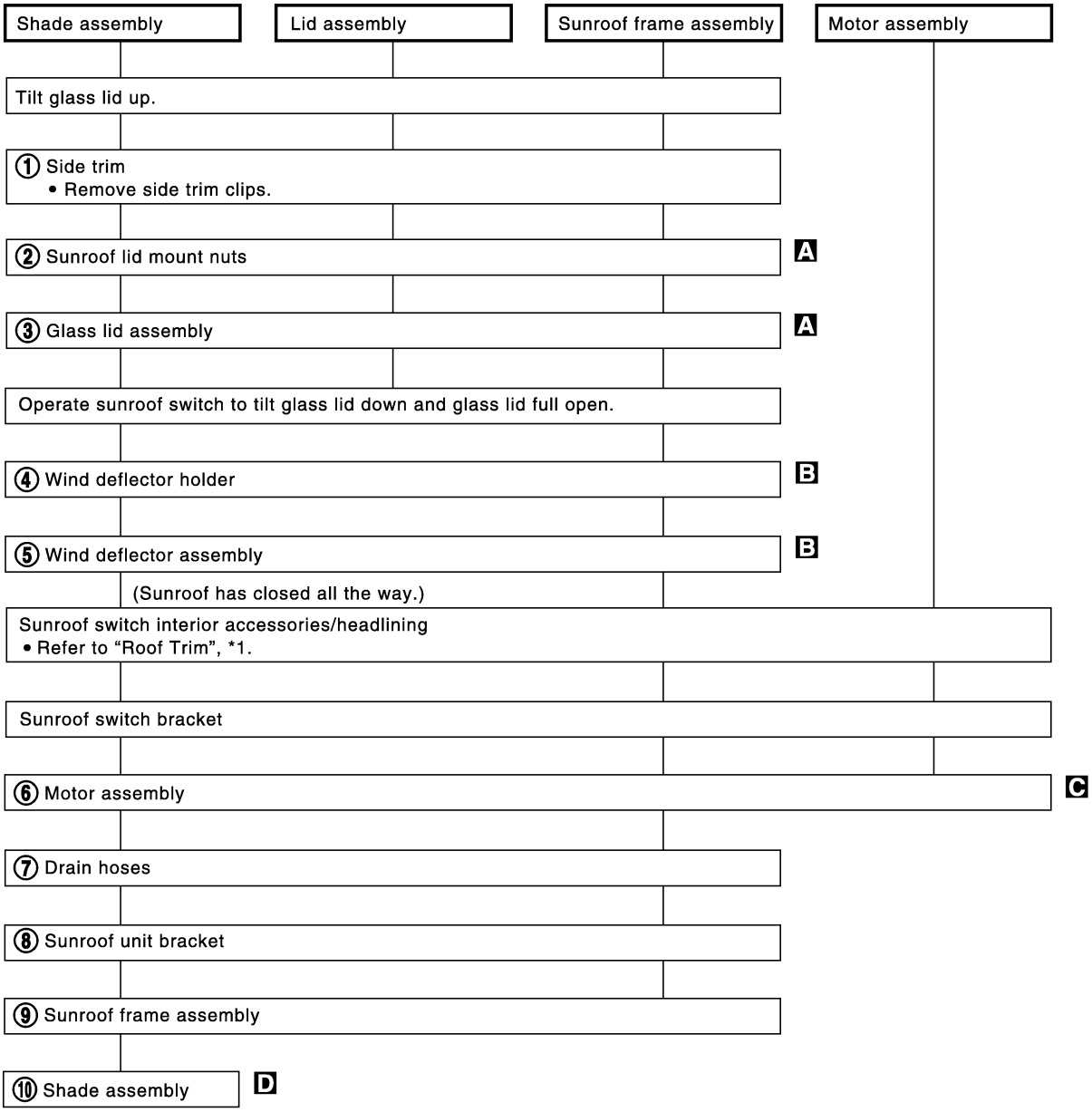

★ For Wiring Diagram, refer to (*2), "POWER SUNROOF" for details.

SBT838-B

*1 BT-36

*2 EL-223

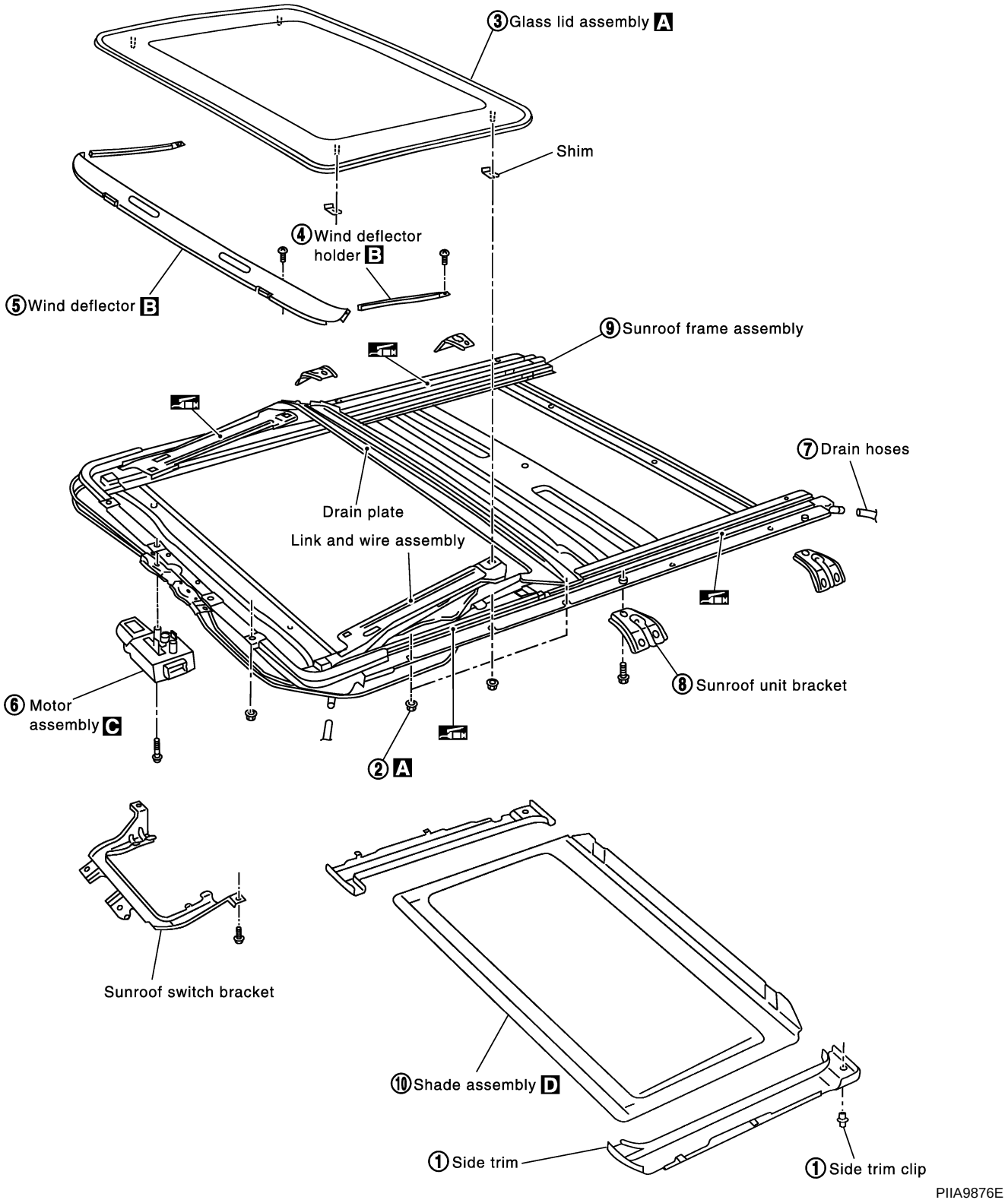
③ Glass lid assembly A
Shim
④ Wind deflector holder B
⑤ Wind deflector B
⑨ Sunroof frame assembly
⑦ Drain hoses
Drain plate
Link and wire assembly
⑧ Sunroof unit bracket
⑥ Motor assembly C
② A
Sunroof switch bracket
⑩ Shade assembly D
① Side trim
① Side trim clip
PIIA9876E

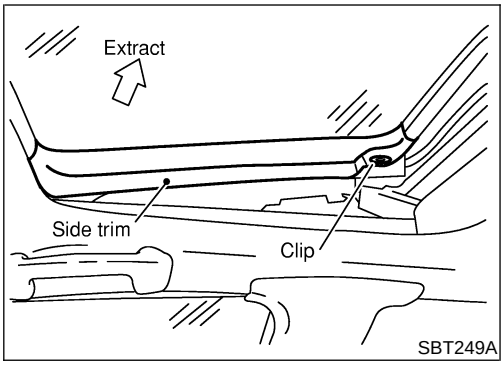

A Record the number of shims placed between glass lid assembly and link and wire assembly. Remove securing nuts and glass lid assembly.

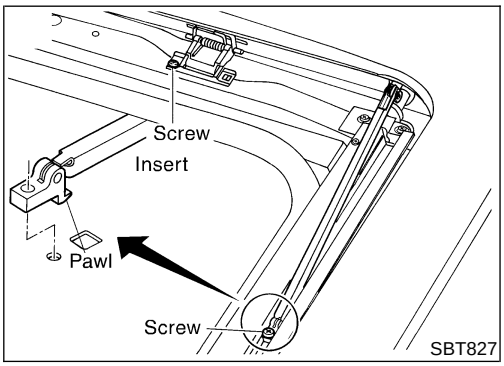

B Remove screws from left and right sides of each wind deflector holder. Extract pawls through rail holes, then remove left and right sides of wind deflector holder. Remove screws from front end of sunroof unit. Extract pawls through frame holes, then remove wind deflector from frame assembly.

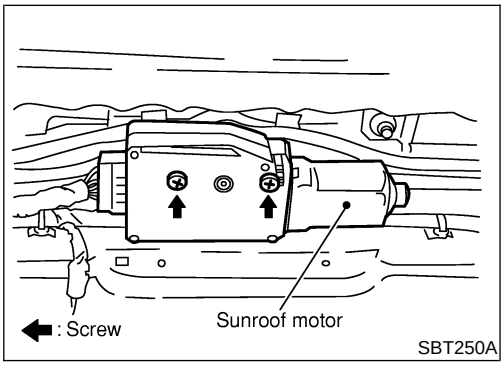

C

CAUTION:

- **Before removing sunroof motor, make sure that sunroof is fully closed.**
- **After removing sunroof motor, never attempt to rotate sunroof motor as a single unit.**
- **Power supply to the motor is off when removing sunroof motor and vehicle harness or battery. Initialize at starting position.**

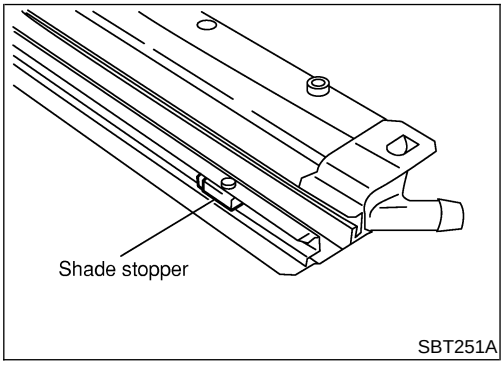

D Remove shade stoppers (2 points) from rear end of sunroof frame assembly. Remove sun shade from rear end of sunroof frame assembly.

Trouble Diagnoses

=NABT0018

DIAGNOSTIC TABLE

NABT0018S01

Sunroof is malfunctioning

Procedure		Malfunctioning item
1. Check power supply. (*1) OK	NG	Replace battery.
2. Is the position initialized at starting position? Yes	No	Initialize the sunroof switch.
3. Check sunroof switch. ● Is correct voltage value or resistance value at each position? ● Does occur chattering? OK	NG	Replace the sunroof switch.
Replace sunroof motor.		

*1: If voltage between terminal 1 (Input voltage) and terminal 8 (ground) of sunroof motor is less than approx. 8V, do not operate.

NOTE:
For diagnosing electric problem, refer to EL-226, “POWER SUNROOF”.

		Check items (Components)				
		Wind deflector	Adjustment	Drain hoses	Weatherstrip	Link and wire assembly
	Reference page	BT-56	BT-57	BT-58	BT-59	BT-59
Symptom	Excessive wind noise	1	2		3	
	Water leaks		1	2	3	
	Sunroof rattles		1	4	2	3
	Excessive operation noise		1		2	3

The numbers in this table mean checking order.

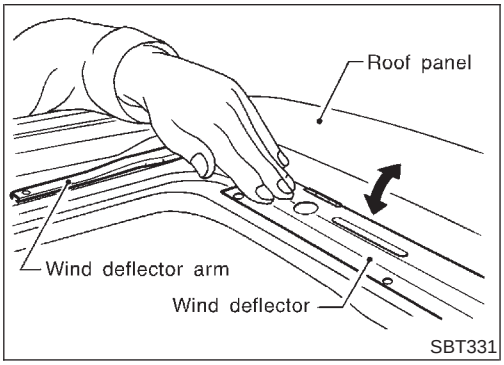

WIND DEFLECTOR

NABT0018S02

1. Open lid.
2. Check visually for proper installation.
3. Check to ensure a proper amount of petroleum jelly has been applied to wind deflector connection points; apply if necessary.

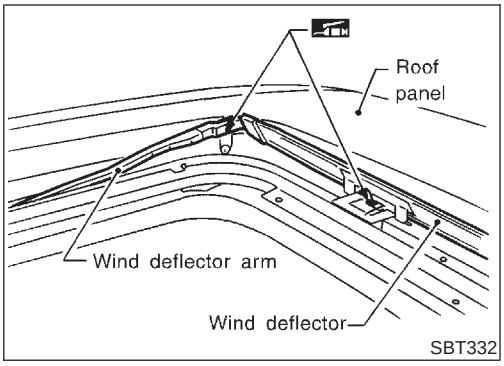

4. Check that wind deflector is properly retracted by hand. If it is not, remove and visually check condition. (Refer to removal procedures, BT-52.) If wind deflector is damaged, replace with new one. If wind deflector is not damaged, re-install properly.

ADJUSTMENT

NABT0018S03

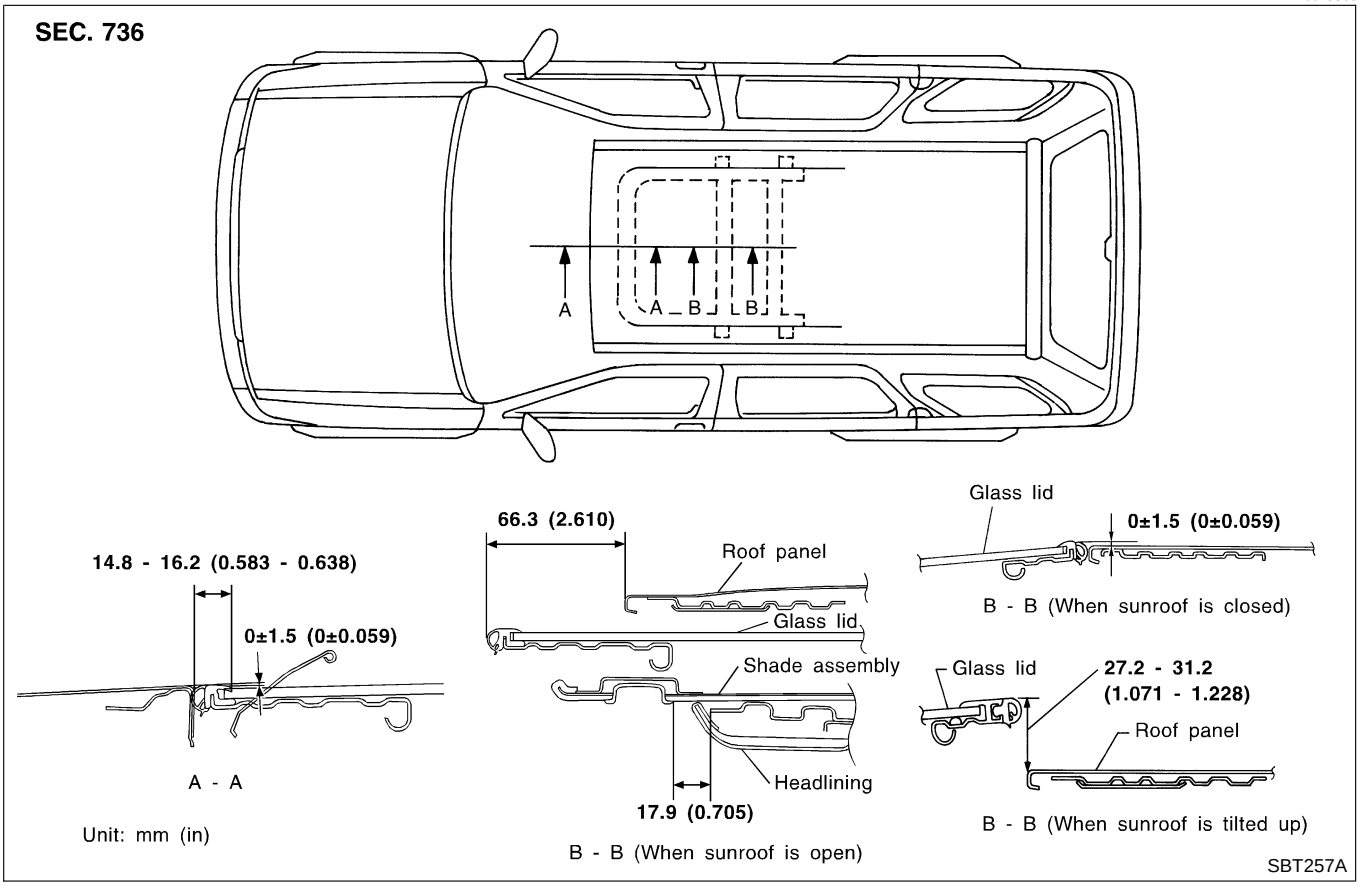

If any gap or height difference between glass lid and roof is found, check glass lid fit and adjust as follows:

Gap Adjustment

NABT0018S0301

1. Open shade assembly.
2. Tilt glass lid up then remove side trim.
3. Loosen glass lid securing nuts (3 each on left and right sides), then tilt glass lid down.
4. Adjust glass lid from outside of vehicle so it resembles "A-A" as shown in the figure above.
5. Tilt glass lid up and down until it is adjusted to "B-B" (When sunroof is closed) as shown in the figure above.
6. After adjusting glass lid, tilt glass lid up and tighten nuts.
7. Tilt glass lid up and down several times to check that it moves smoothly.

Height Difference Adjustment

NABT0018S0302

1. Tilt glass lid up and down.
2. Check height difference between roof panel and glass lid to see if it is as "A-A" as shown in the figure above.
3. If necessary, adjust it by using one of following procedures.

- Adjust by adding or removing adjustment shim(s) between glass lid and link assembly.
- If glass lid protrudes above roof panel, add shim(s) or plain washer(s) at sunroof mounting bracket or stud bolt locations to adjust sunroof installation as required.

DRAIN HOSES

NABT0018S04

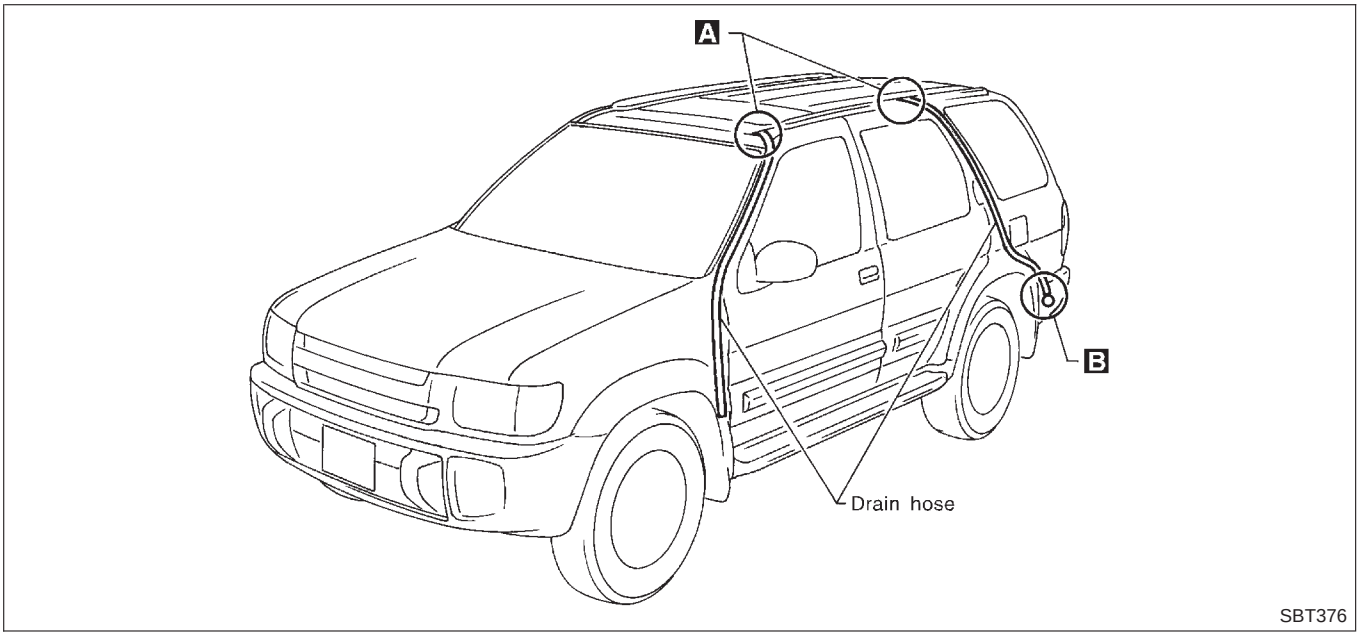

SBT376

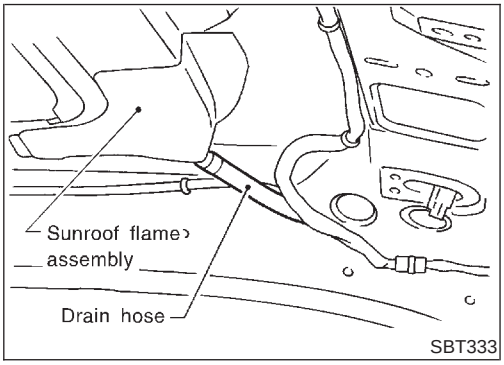

SBT333

1. Remove headlining to access drain hose connections. (Refer to "Removal and Installation" in "ROOF TRIM", BT-36, for detail.)
2. Check visually for proper connections, damage or deterioration. **A** (The figure shows only the front side.)

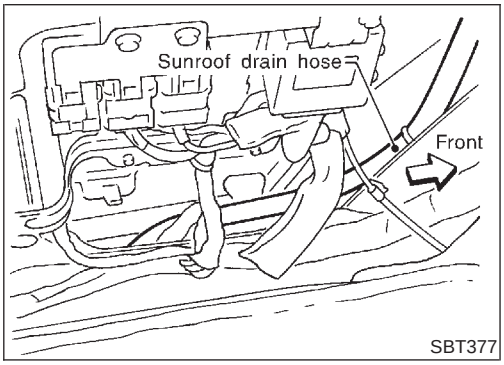

SBT377

3. If leakage occurs around luggage room, remove luggage room side trim and check connecting area. Check for proper connection, damage or tear. **B**
4. Remove drain hoses and check visually for any damage, cracks, or deterioration.
5. Pour water into drain hoses and find damaged portion.

- If any damaged portion is found at each step, replace the damaged part.

WEATHERSTRIP

NABT0018S05

- In the case of leakage around glass lid, close glass lid and pour water over glass lid to find damaged or gap portion, remove glass lid assembly. (Refer to removal procedures, BT-52, for details.)
- Check weatherstrip visually for any damage, deterioration, or flattening.
- If any damage is found, replace weatherstrip.

CAUTION:

Do not remove weatherstrip except when replacing, or filling up butyl seal.

LINK AND WIRE ASSEMBLY

NABT0018S06

NOTE:

Before replacing a suspect part, carefully ensure it is the source of noise being experienced.

1. Visually check to determine if a sufficient amount of petroleum jelly has been applied to wire or rail groove. If not, add petroleum jelly as required.
2. Check wire for any damage or deterioration. If any damage is found, remove rear guide (refer to removal procedures, BT-52 for details), then replace wire.

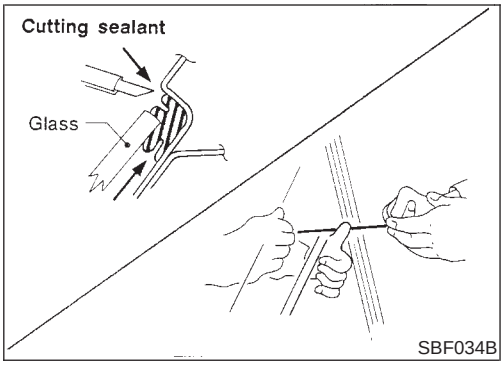

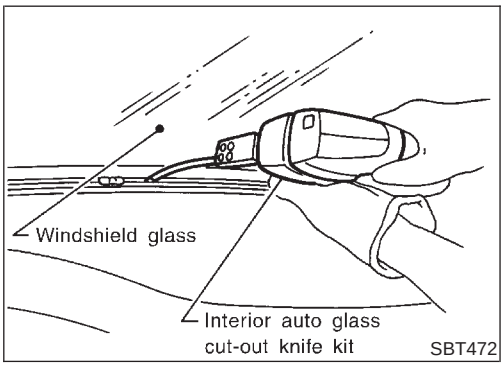

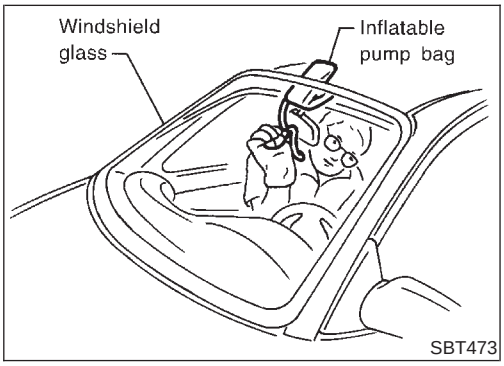

Removal and Installation

NABT0019

REMOVAL

NABT0019S01

After removing moldings, remove glass using piano wire or power cutting tool and an inflatable pump bag.

WARNING:

When cutting the glass from the vehicle, always wear safety glasses and heavy gloves to help prevent glass splinters from entering your eyes or cutting your hands.

CAUTION:

- **Be careful not to scratch the glass when removing.**
- **Do not set or stand the glass on its edge. Small chips may develop into cracks.**

INSTALLATION

NABT0019S02

- **Use a genuine Nissan Urethane Adhesive Kit or equivalent and follow the instructions furnished with it.**
- **While the urethane adhesive is curing, open a door window. This will prevent the glass from being forced out by passenger compartment air pressure when a door is closed.**
- **The molding must be installed securely so that it is in position and leaves no gap.**
- **Inform the customer that the vehicle should remain stationary until the urethane adhesive has completely cured (preferably 24 hours). Curing time varies with temperature and humidity.**

WARNING:

- **Keep heat and open flames away as primers and adhesive are flammable.**
- **The materials contained in the kit are harmful if swallowed, and may irritate skin and eyes. Avoid contact with the skin and eyes.**
- **Use in an open, well ventilated location. Avoid breathing the vapors. They can be harmful if inhaled. If affected by vapor inhalation, immediately move to an area with fresh air.**
- **Driving the vehicle before the urethane adhesive has completely cured may affect the performance of the windshield in case of an accident.**

CAUTION:

- **Do not use an adhesive which is past its usable term. Shelf life of this product is limited to six months after the date of manufacture. Carefully adhere to the expiration or manufacture date printed on the box.**
- **Keep primers and adhesive in a cool, dry place. Ideally, they should be stored in a refrigerator.**
- **Do not leave primers or adhesive cartridge unattended with their caps open or off.**
- **The vehicle should not be driven for at least 24 hours or until the urethane adhesive has completely cured. Curing time varies depending on temperature and humidities. The curing time will increase under higher temperatures and lower humidities.**

WINDSHIELD

NABT0019S03

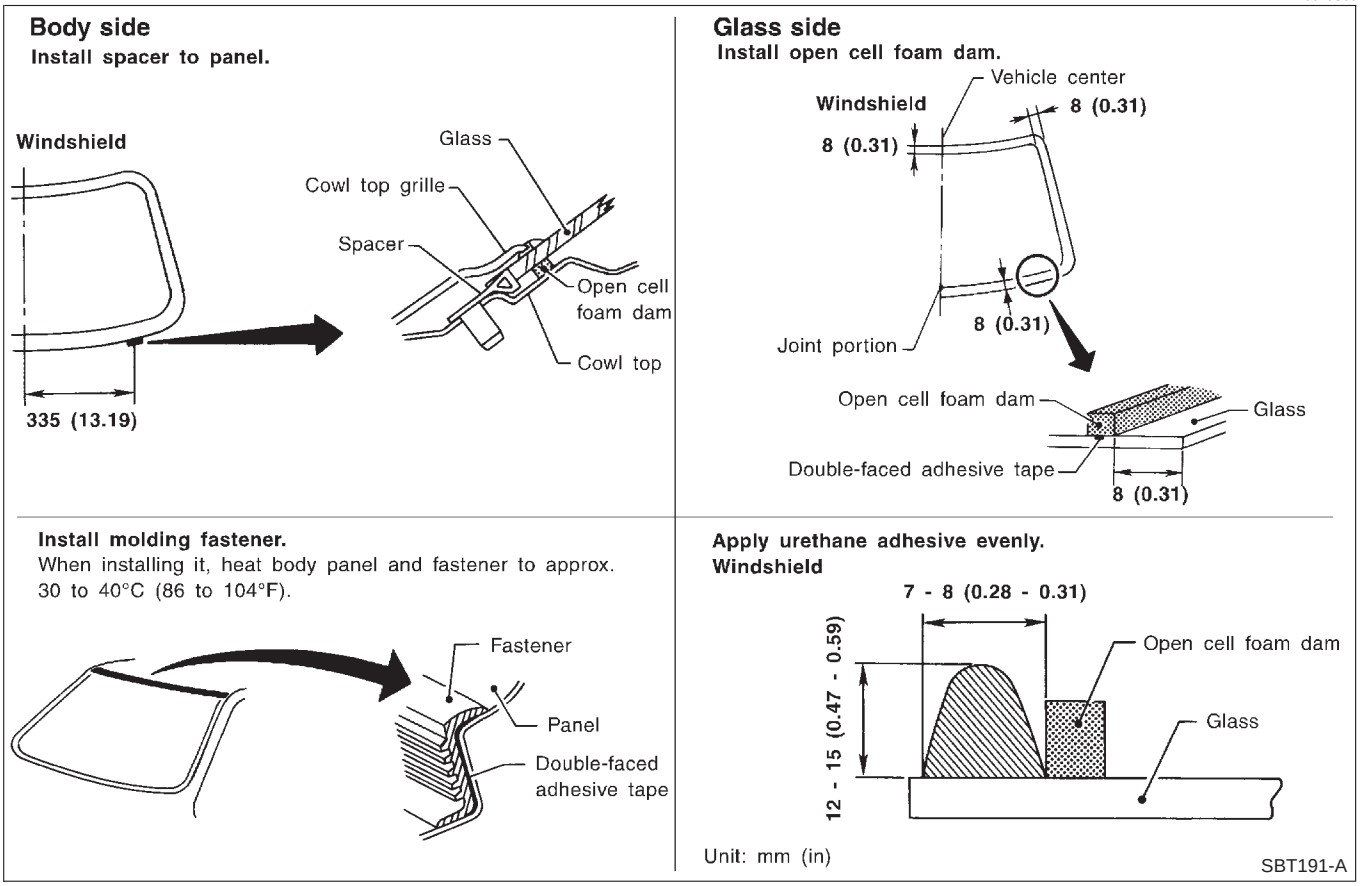

Repairing Water Leaks for Windshield

NABT0019S0301

Leaks can be repaired without removing and reinstalling glass.

If water is leaking between the urethane adhesive material and body or glass, determine the extent of leakage. This can be done by applying water to the windshield area while pushing glass outward.

To stop the leak, apply primer (if necessary) and then urethane adhesive to the leak point.

REAR SIDE WINDOW

NABT0019S04

SEC. 830

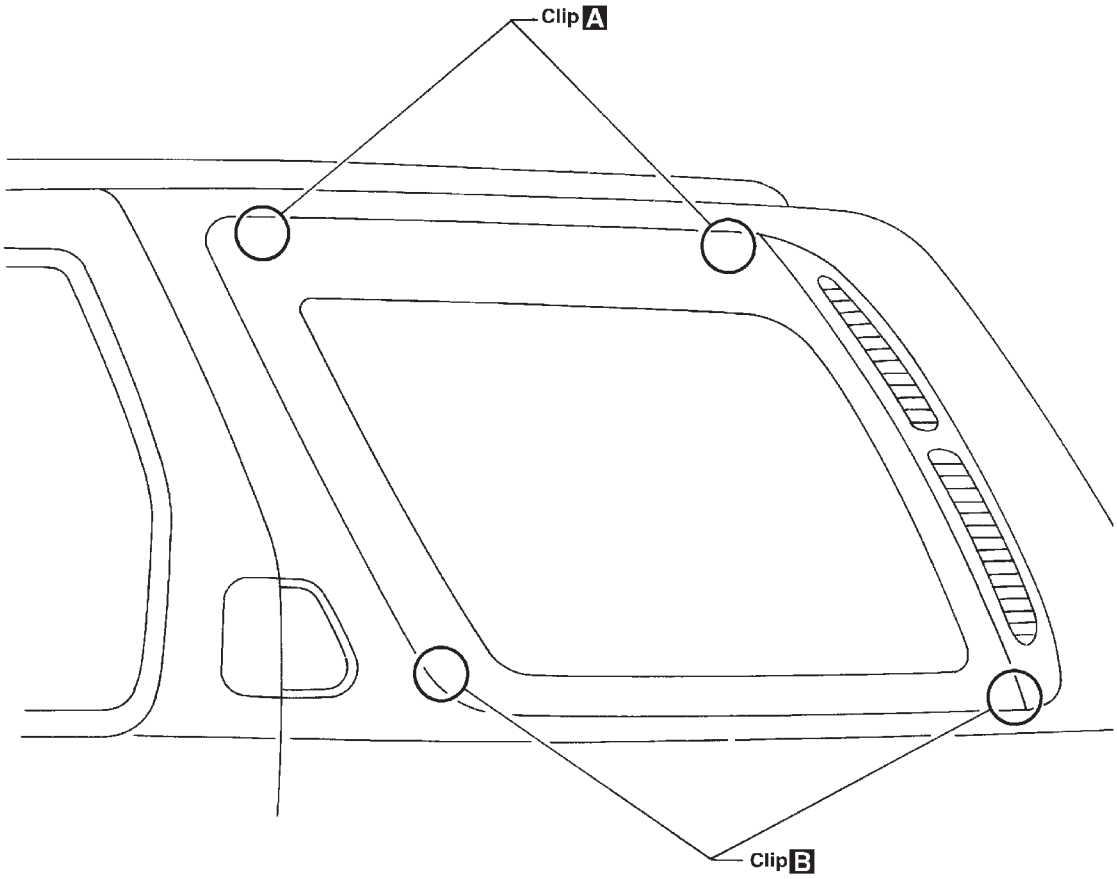

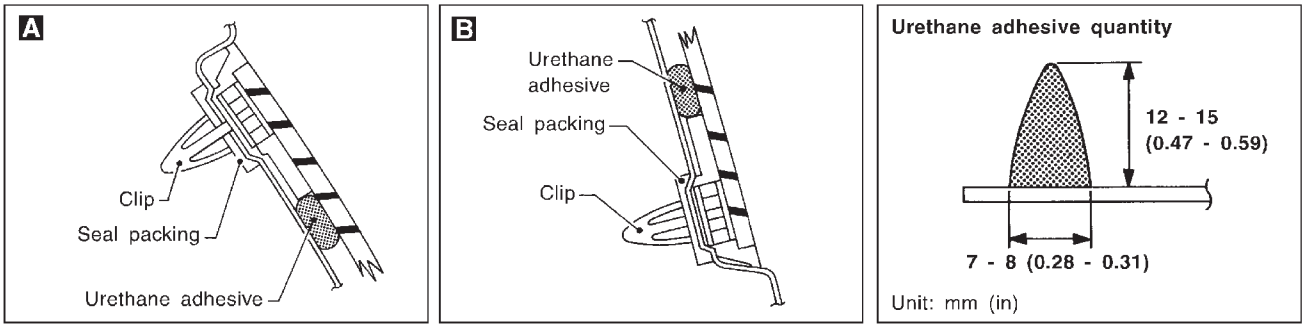

SBT359-A

Removal and Installation

NABT0020

CAUTION:
Be careful not to scratch door rearview mirror body.

★ For Wiring Diagram, refer to EL-228, "DOOR MIRROR".

1. Remove door trim. Refer to "DOOR TRIM" for details, BT-33.
2. Remove clip securing inner cover from front corner of door.
3. Disconnect door mirror harness connector.
4. Remove bolts securing door mirror, then remove door mirror assembly.

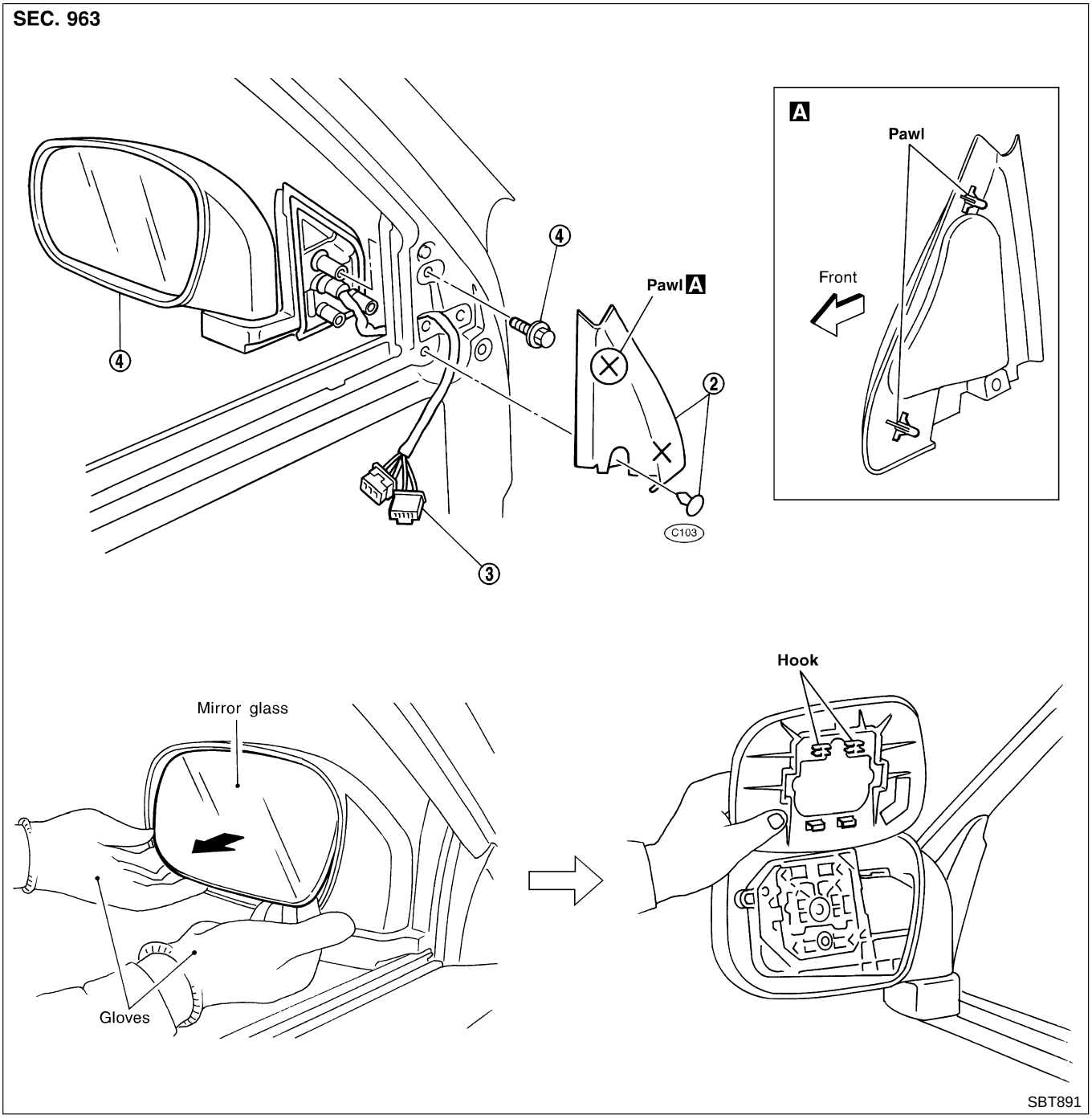

Alignment

NABT0021

- All dimensions indicated in figures are actual ones.
- When using a tracking gauge, adjust both pointers to equal length. Then check the pointers and gauge itself to make sure there is no free play.
- When a measuring tape is used, check to be sure there is no elongation, twisting or bending.
- Measurements should be taken at the center of the mounting holes.
- An asterisk (★) following the value at the measuring point indicates that the measuring point on the other side is symmetrically the same value.
- The coordinates of the measurement points are the distances measured from the standard line of “X”, “Y” and “Z”.

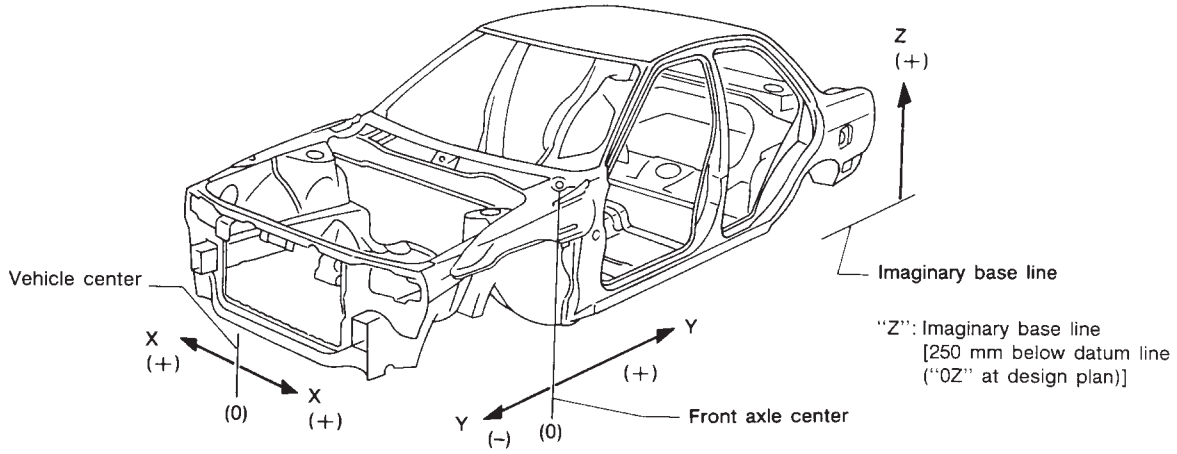

SBF874GD

ENGINE COMPARTMENT

Measurement

NABT0021S01

NABT0021S0101

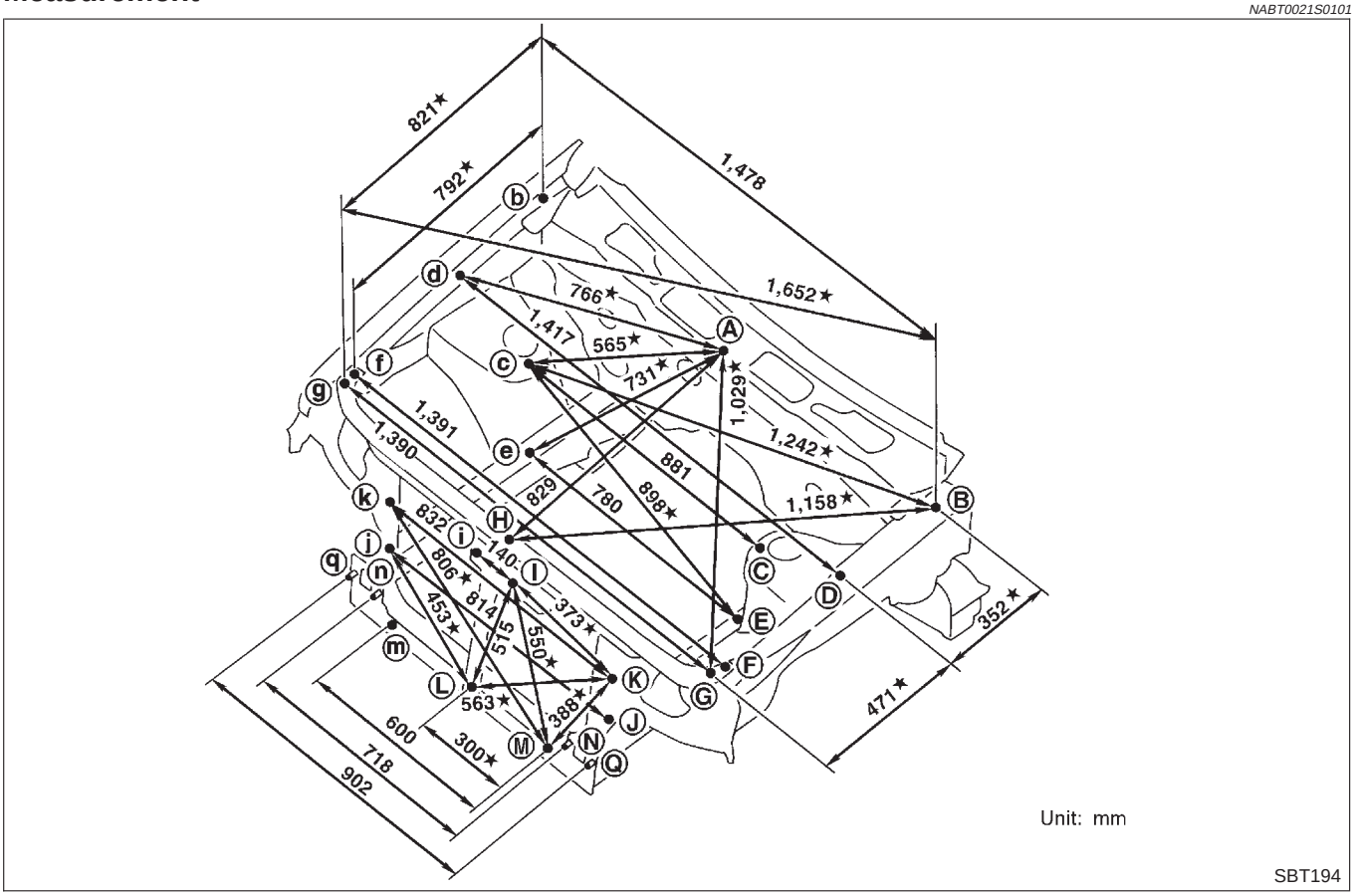

Measurement Points

NABT0021S0102

Unit: mm

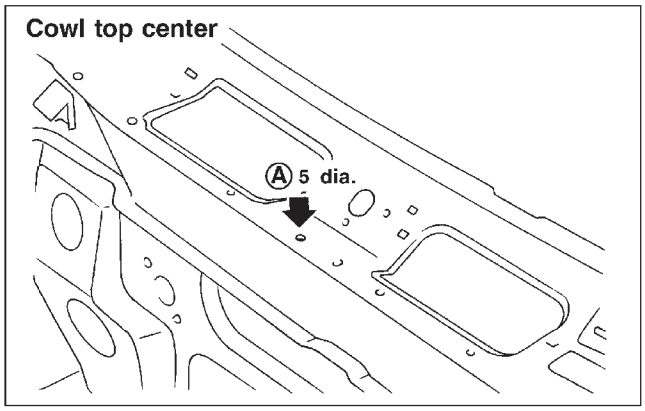

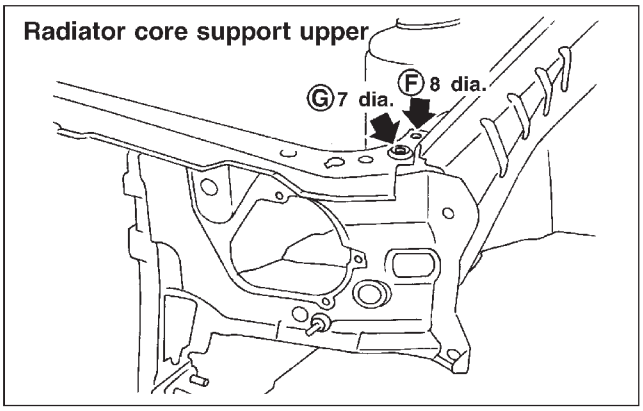

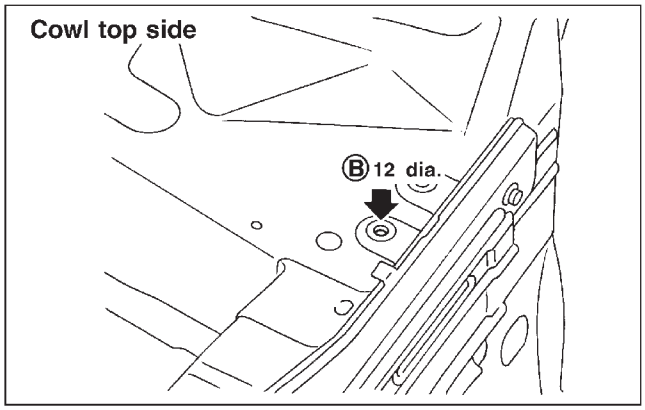

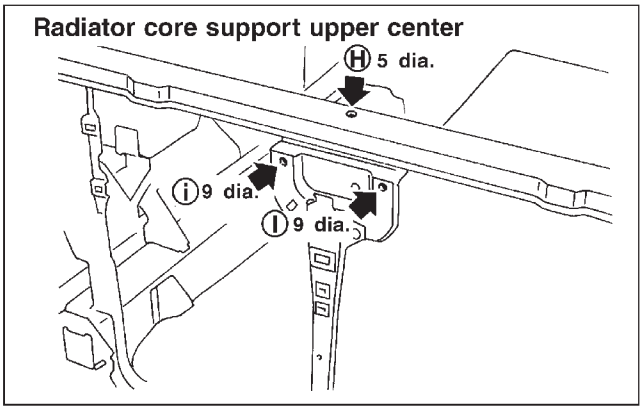

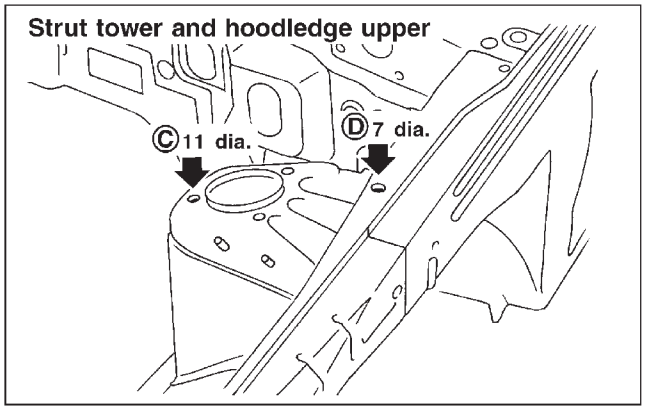

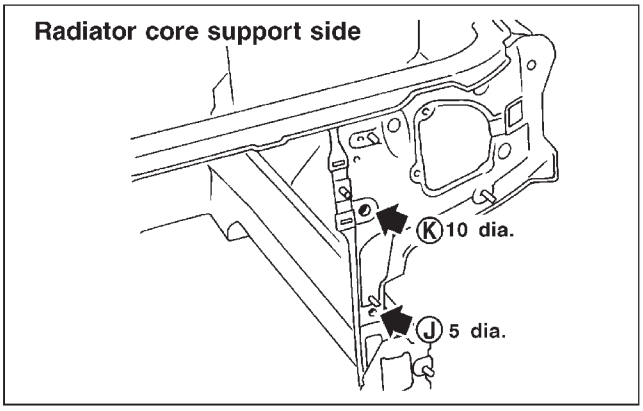

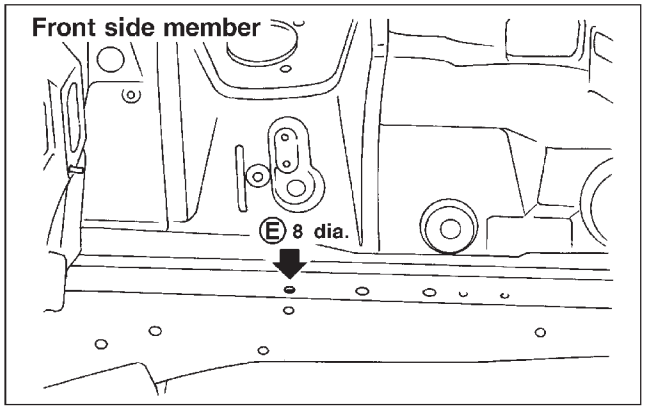

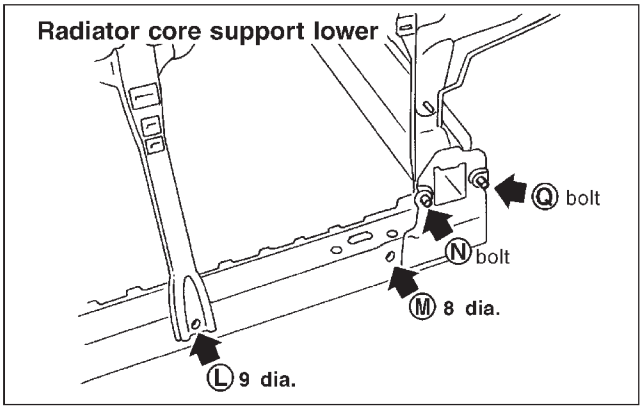

SBT195

UNDERBODY
Measurement

NABT0021S02

NABT0021S0201

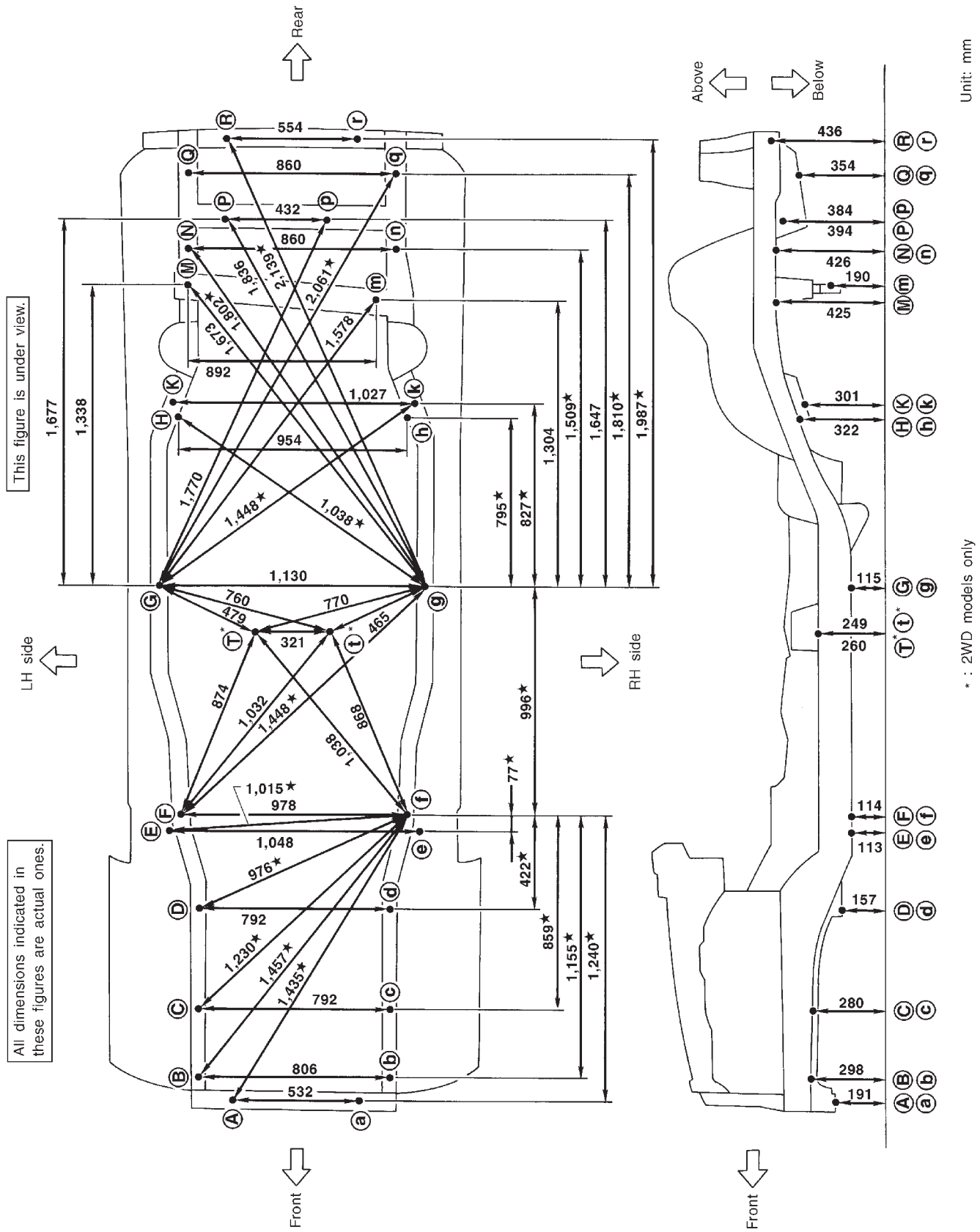

SBT196

Measurement Points

NABT0021S0202

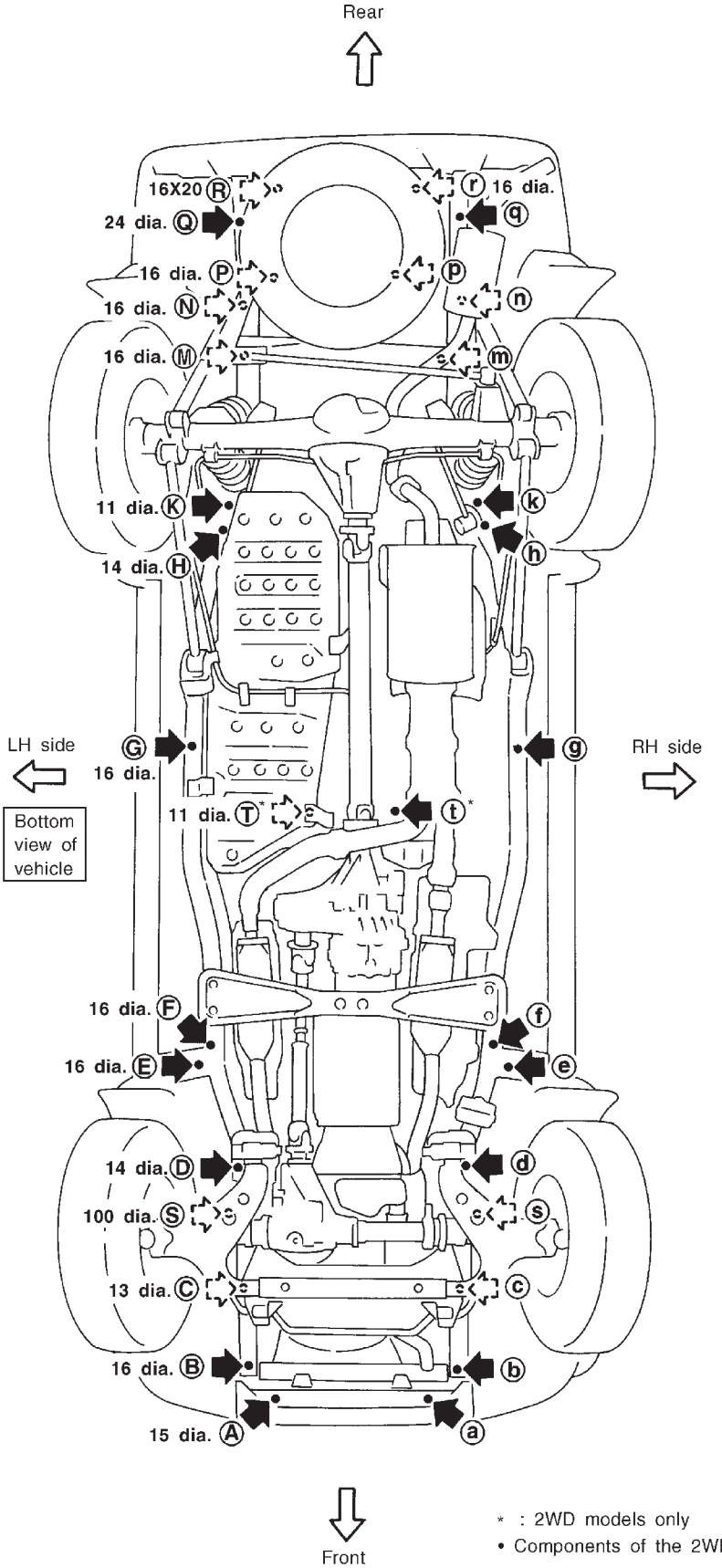

Front coordinates:	Rear coordinates:	
Ⓐ, ⓐ	Ⓖ, ⓖ	Ⓟ
X: 266	X: 565	X: –142
Y: –580.4	Y: 1,630	Y: 3,230
Z: 191.4	Z: 115	Z: 383.6
Ⓑ, ⓑ	Ⓗ, ⓗ	Ⓠ, ⓠ
X: 403	X: 476.9	X: 430
Y: –500	Y: 2,392.6	Y: 3,419.3
Z: 297.7	Z: 321.9	Z: 353.6
Ⓒ, ⓒ	Ⓚ, ⓚ	Ⓡ, ⓡ
X: 396	X: 513.3	X: 277
Y: –201	Y: 2,434.5	Y: 3,570
Z: 279.7	Z: 301.4	Z: 435.6
Ⓓ, ⓓ	Ⓜ	Ⓣ*
X: 396	X: 446.1	X: 154.5
Y: 228	Y: 2,960.2	Y: 1,431
Z: 156.7	Z: 190	Z: 259.6
Ⓔ, ⓔ	ⓜ	ⓣ*
X: 524	X: –350	X: –166.5
Y: 568	Y: 2,878	Y: 1,431
Z: 112.7	Z: 424.8	Z: 248.6
Ⓕ, ⓕ	Ⓝ, ⓝ	
X: 489	X: 430	
Y: 637	Y: 3,100	
Z: 114.1	Z: 426.2	
	Ⓟ	
	X: 290	
	Y: 3,230	
	Z: 394.1	

Unit: mm

Front strut tower center coordinates:

Ⓢ, ⓢ
X: 499.9
Y: 41.2
Z: 748.9

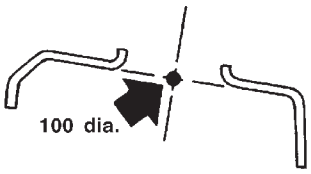

* : 2WD models only

• Components of the 2WD system are the same as for the 4WD.

SBT197

SECTION CL

CONTENTS

PRECAUTIONS 2
Precautions 2
PREPARATION 3
Special Service Tools 3
Commercial Service Tools 3
NOISE, VIBRATION AND HARSHNESS (NVH) TROUBLESHOOTING 4
NVH Troubleshooting Chart 4
CLUTCH 4
CLUTCH SYSTEM - HYDRAULIC TYPE 5
Components 5
On-Vehicle Inspection and Adjustment 6
Air Bleeding Procedure 7
CLUTCH MASTER CYLINDER 8
Components 8
Disassembly and Assembly 8
Inspection 8
OPERATING CYLINDER 9
Components 9
Inspection 9
CLUTCH RELEASE MECHANISM 10
Components 10
Removal 10
Inspection 11
Installation 11
Lubrication 11
CLUTCH DISC, CLUTCH COVER AND FLYWHEEL 12
Components 12
Removal 12
Inspection and Adjustment 12
CLUTCH DISC 12
CLUTCH COVER 13
FLYWHEEL INSPECTION 13
Installation 13
SERVICE DATA AND SPECIFICATIONS (SDS) 15
Clutch Control System 15
Clutch Master Cylinder (With damper) 15
Clutch Operating Cylinder 15
Clutch Disc 15
Clutch Cover 15
Clutch Pedal 15

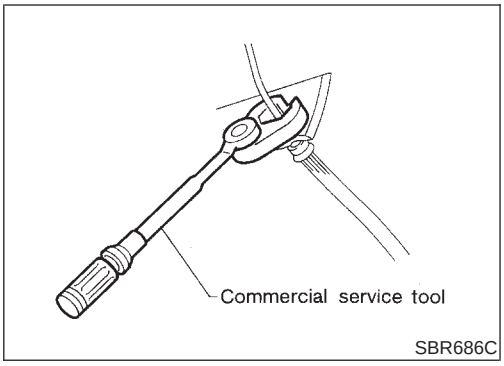

Precautions

NACL0001

- **Recommended fluid is brake fluid “DOT 3”.**
- **Never reuse drained brake fluid.**
- **Be careful not to splash brake fluid on painted areas.**
- **When removing and installing clutch piping, use Tool.**
- **Use new brake fluid to clean or wash all parts of master cylinder, operating cylinder and clutch damper.**
- **Never use mineral oils such as gasoline or kerosene. It will ruin the rubber parts of the hydraulic system.**

WARNING:

After cleaning the clutch disc, wipe it with a dust collector. Do not use compressed air.

Special Service Tools

NACL0002

The actual shapes of Kent-Moore tools may differ from those of special service tools illustrated here.

Tool number (Kent-Moore No.) Tool name	Description
ST20670000 (—) Clutch aligning bar	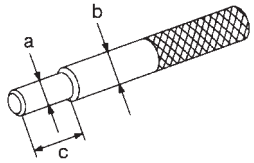 NT405 Installing clutch cover and clutch disc **a: 15 mm (0.59 in) dia.** **b: 23 mm (0.91 in) dia.** **c: 30 mm (1.18 in)**

Commercial Service Tools

NACL0003

Tool name	Description
1 Flare nut crowfoot 2 Torque wrench	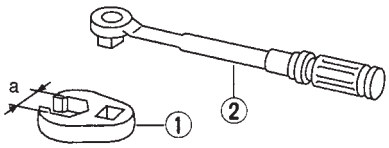 NT360 Removing and installing clutch piping **a: 10 mm (0.39 in)**
Power tool	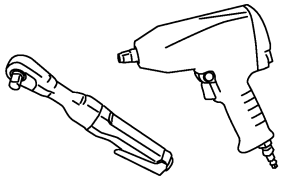 PBIC0190E Loosening bolts and nuts

NVH Troubleshooting Chart

NACL0027S01

Use the chart below to help you find the cause of the problem. The numbers indicate the priority of the likely cause of the problem. Check each part in order. If necessary, repair or replace these parts.

CLUTCH

NACL0027S0101

Reference page		CL-6	CL-7	CL-8	CL-9	Refer to EM-63, "REMOVAL".	CL-10	CL-12	CL-12	CL-12	CL-12	CL-12	CL-12	CL-12	CL-13	CL-13	CL-13	CL-13
SUSPECTED PARTS (Possible cause)		CLUTCH PEDAL (Free play out of adjustment)	CLUTCH LINE (Air in line)	MASTER CYLINDER PISTON CUP (Damaged)	OPERATING CYLINDER PISTON CUP (Damaged)	ENGINE MOUNTING (Loose)	RELEASE BEARING (Worn, dirty or damaged)	CLUTCH DISC (Out of true)	CLUTCH DISC (Runout is excessive)	CLUTCH DISC (Lining broken)	CLUTCH DISC (Dirty or burned)	CLUTCH DISC (Oily)	CLUTCH DISC (Worn out)	CLUTCH DISC (Hardened)	CLUTCH DISC (Lack of spline grease)	DIAPHRAGM SPRING (Damaged)	PRESSURE PLATE (Distortion)	FLYWHEEL (Distortion)
Symptom	Clutch grabs/chatters					1			2			2	2	2				
	Clutch pedal spongy		1	2	2													
	Clutch noisy						1											
	Clutch slips	1										2	2			3	4	5
	Clutch does not disengage	1	2	3	4			5	5	5	5	5			5	6	7	

Components

NACL0004

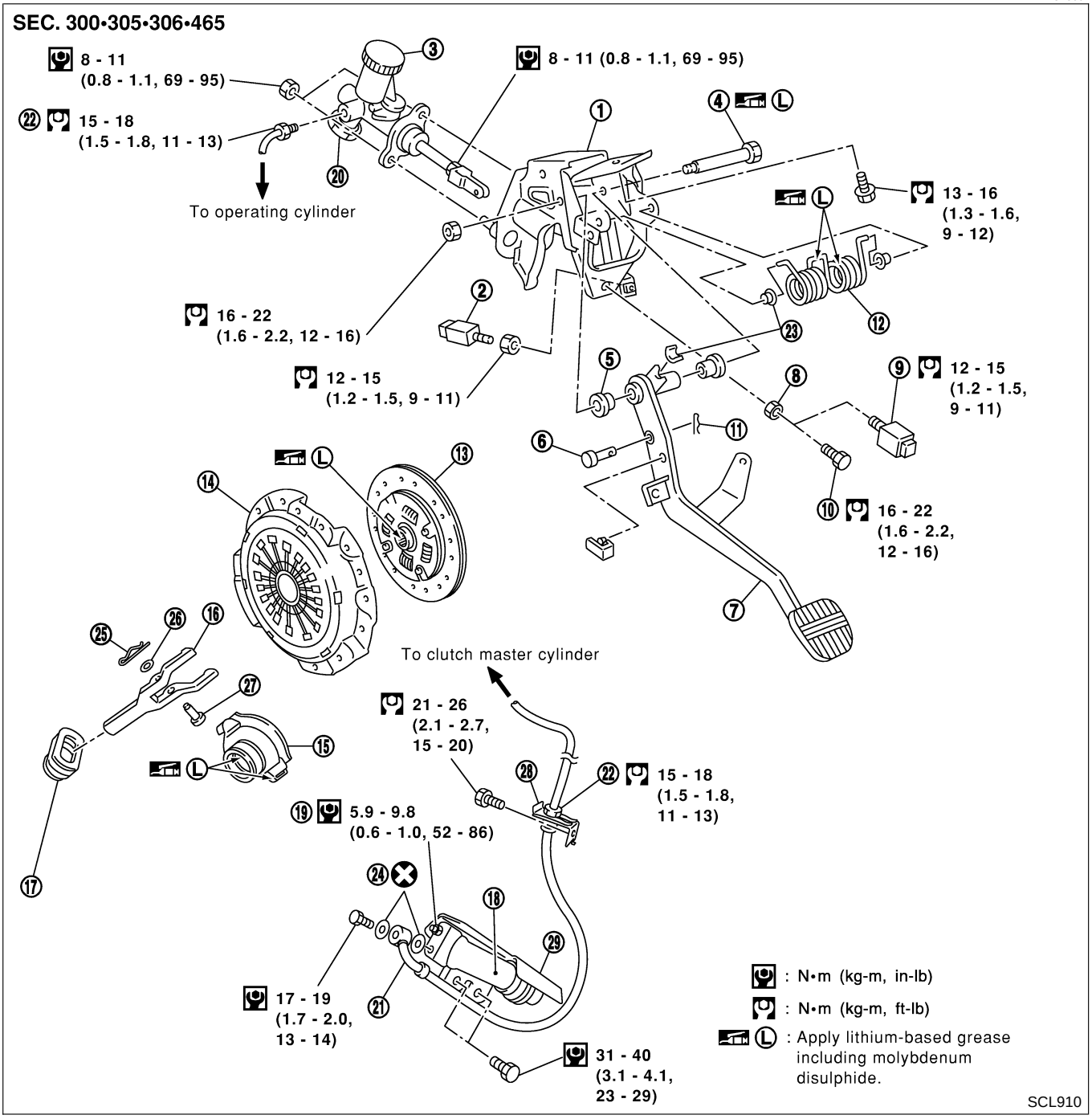

1. Clutch pedal bracket
2. Clutch interlock switch
3. Clutch master cylinder
4. Fulcrum pin
5. Bushing
6. Clevis pin
7. Clutch pedal
8. Lock nut
9. ASCD clutch switch
10. Pedal stopper bolt
11. Snap pin
12. Assist spring
13. Clutch disc
14. Clutch cover
15. Release bearing
16. Withdrawal lever
17. Dust boot
18. Operating cylinder
19. Air bleeder
20. Clutch damper (not serviceable)
21. Clutch hose
22. Flare nut
23. Bushing
24. Copper washer
25. Snap pin
26. Washer
27. Withdrawal lever shaft
28. Lock spring
29. Heat insulator

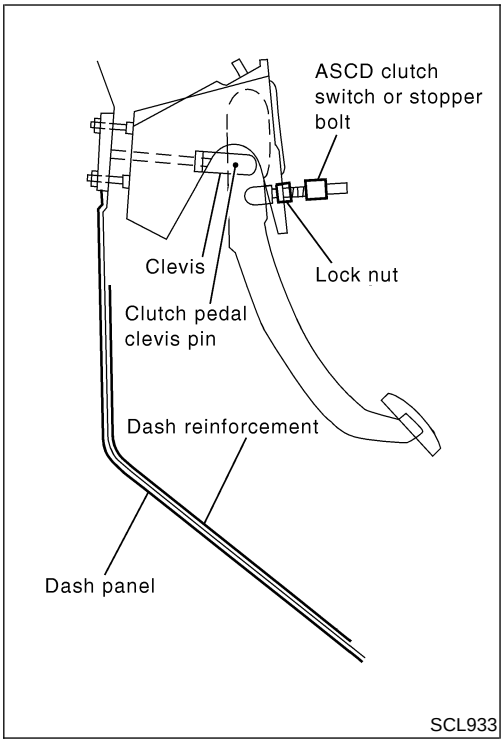

On-Vehicle Inspection and Adjustment

NACL0036

1. Check to see if the clevis pin floats freely in the bore of the clutch pedal. It should not be bound by the clevis or clutch pedal.

a. If the clevis pin is not free, check that the ASCD clutch switch or pedal stopper bolt is not applying pressure to the clutch pedal causing the clevis pin to bind. To adjust, loosen lock nut and turn ASCD clutch switch or pedal stopper bolt.

b. Tighten the lock nut.

c. Verify that the clevis pin floats in the bore of the clutch pedal. It should not be bound by the clutch pedal.

d. If the clevis pin is still not free, remove the clevis pin and check for deformation or damage. Replace clevis pin if necessary. Leave pin removed for step 2.

2. Check clutch pedal stroke for free range of movement.

a. With the clevis pin removed, manually move the clutch pedal up and down to determine if it moves freely.

b. If any sticking is noted, replace the related parts (clutch pedal bracket, assist spring, bushing etc.). Re-assemble the clutch pedal and re-verify that the clevis pin floats freely in the bore of the clutch pedal.

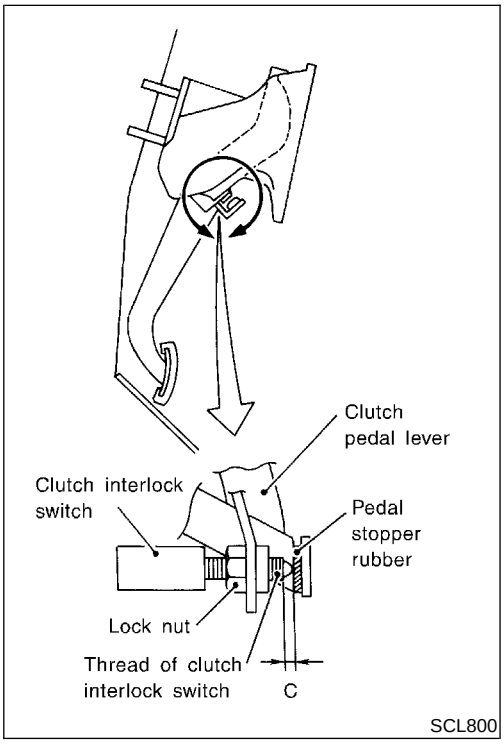

3. Adjust clearance “C” while depressing clutch pedal fully. (With clutch interlock switch)

Clearance C:
0.1 - 1.0 mm (0.004 - 0.039 in)

4. Check clutch hydraulic and system components (clutch master cylinder, clutch operating cylinder, clutch withdrawal lever, clutch release bearing, etc.) for sticking or binding.

a. If any sticking or binding noted, repair or replace related parts as necessary.

b. If hydraulic system repair was necessary, bleed the clutch hydraulic system. Refer to CL-7, “Air Bleeding Procedure”.

NOTE:
Do not use a vacuum assist or any other type of power bleeder on this system. Use of a vacuum assist or power bleeder will not purge all the air from the system.

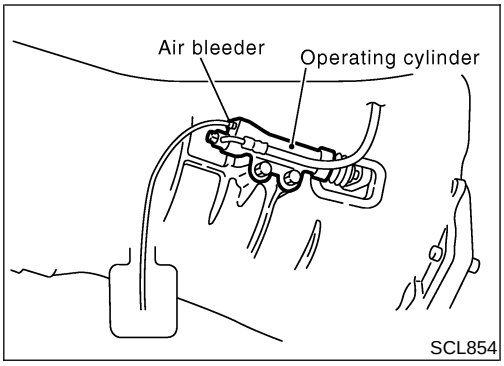

Air Bleeding Procedure

=NACL0037

CAUTION:

- **Check the clutch fluid level of the reservoir for shortage.**
- **Keep clutch fluid away from the coating surface of the body or other parts. If it adheres, remove it quickly and flush the area with water.**

1. Fill up master cylinder reservoir tank with new clutch fluid.
2. Connect a clear vinyl hose to air bleeder.
3. Carefully depress clutch pedal fully and release it. Repeat the cycle several times at an interval of 2 or 3 seconds.
4. While depressing clutch pedal, open air bleeder.
5. Close air bleeder.
6. Release clutch pedal, and wait for approx. 5 seconds.
7. Repeat steps 3 to 6 until no air is found in clutch fluid.

Components

NACL0006

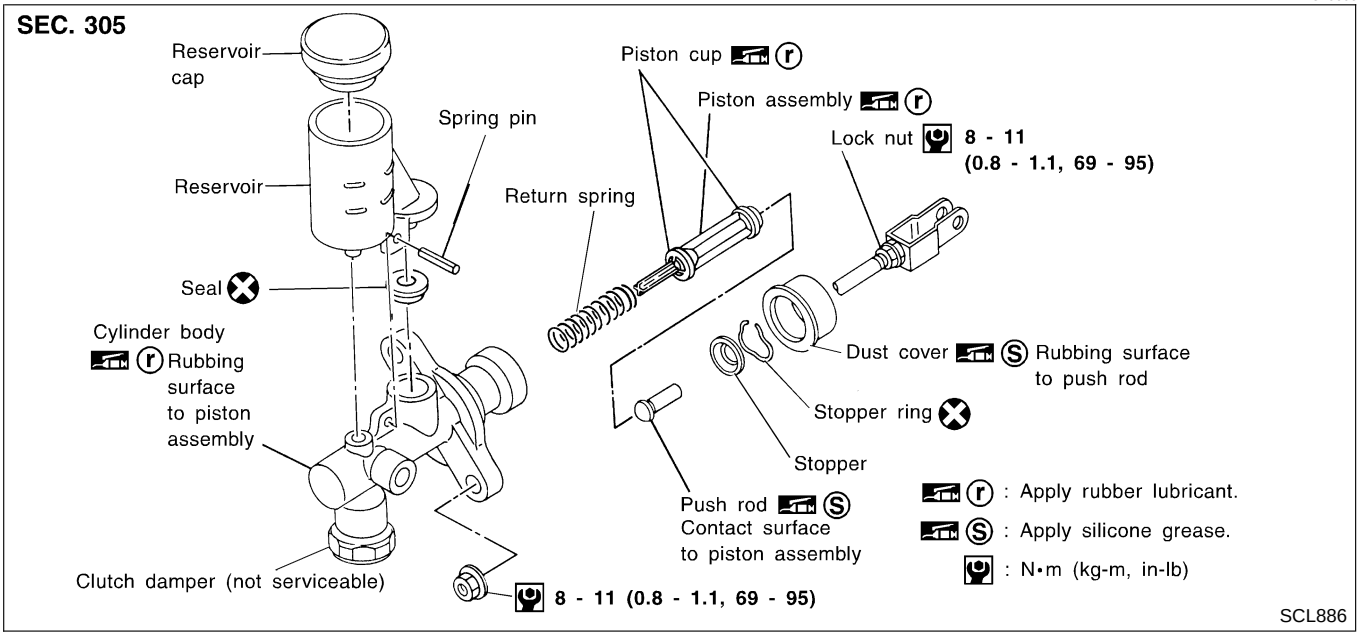

Disassembly and Assembly

NACL0007

- When removing and installing stopper ring, pry it off with screwdriver while pushing push rod into cylinder.

Inspection

NACL0008

Check the following items, and replace if necessary.

- Rubbing surface of cylinder and piston, for uneven wear, rust or damage
- Piston with piston cup, for wear or damage
- Return spring, for wear or damage
- Dust cover, for cracks, deformation or damage
- Reservoir, for deformation or damage

Components

NACL0009

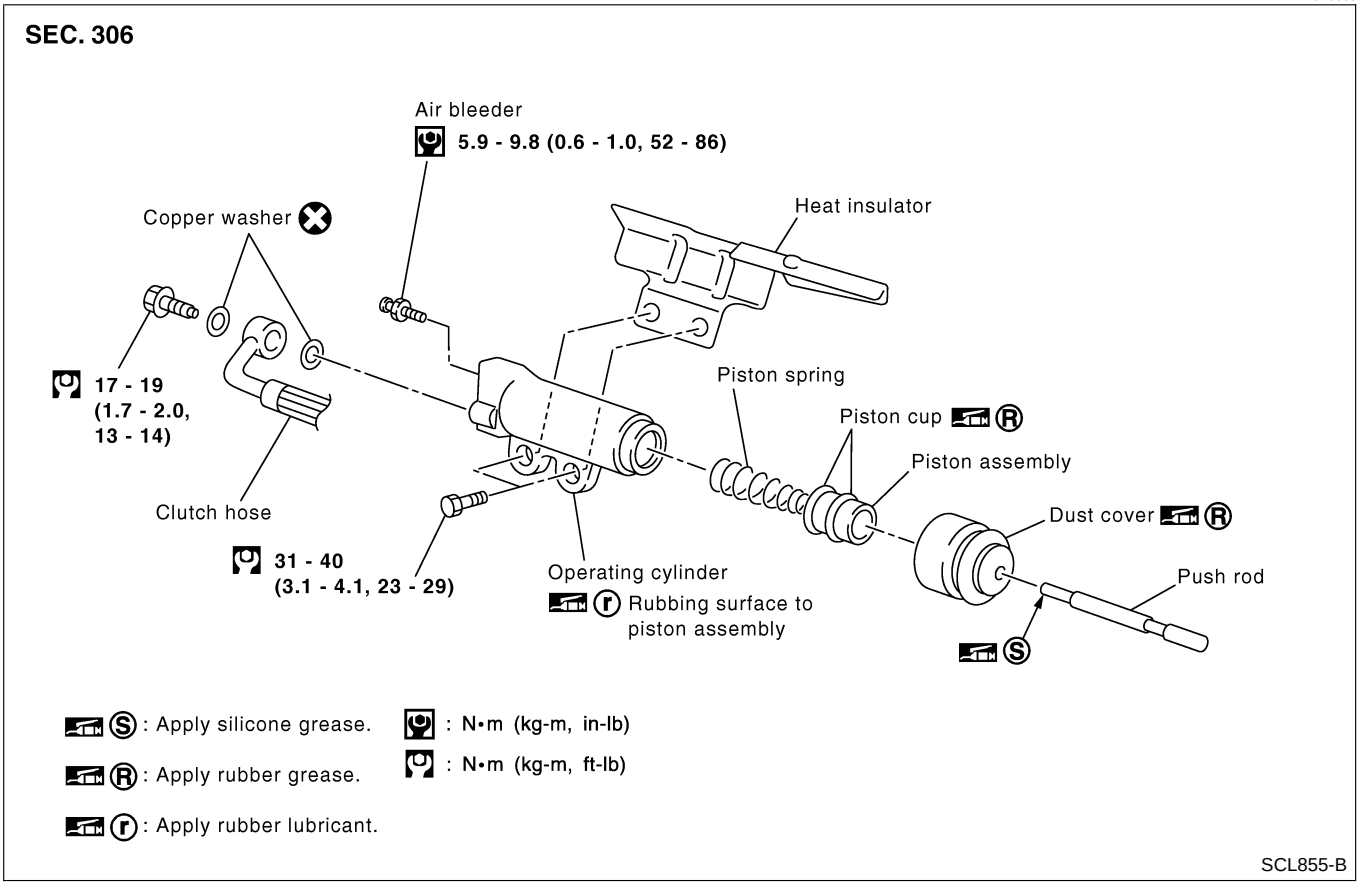

Inspection

NACL0010

Check the following items, and replace if necessary.

- Rubbing surface of cylinder and piston, for uneven wear, rust or damage
- Piston with piston cup, for wear or damage
- Piston spring, for wear or damage
- Dust cover, for cracks, deformation or damage

Components

NACL0013

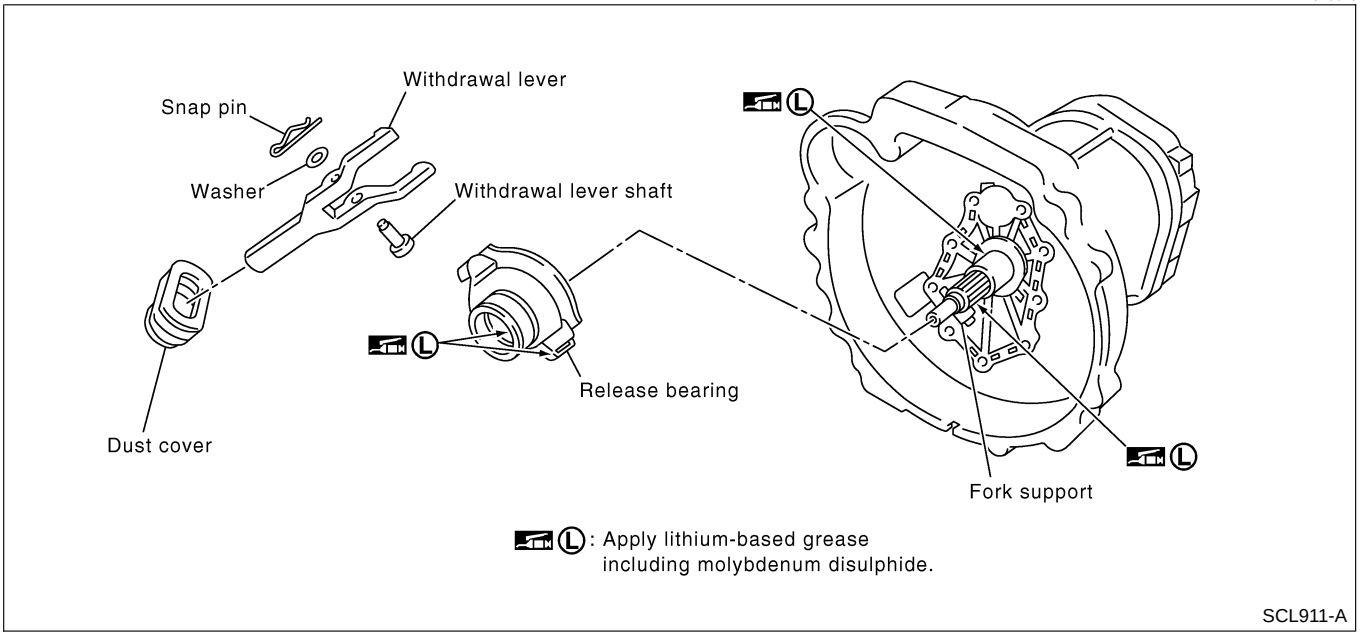

CAUTION:
Keep the clutch disc facing, pressure plate and flywheel free of oil and grease.

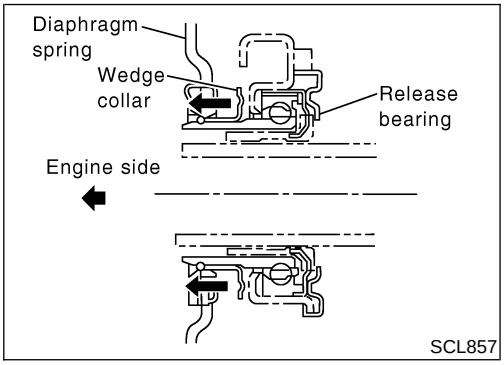

Removal

NACL0029

1. Remove manual transmission from the vehicle.
   Refer to MT-7, “Removal and Installation”.
2. Remove withdrawal lever from inside clutch housing.
3. Press wedge collar on clutch cover toward the engine.

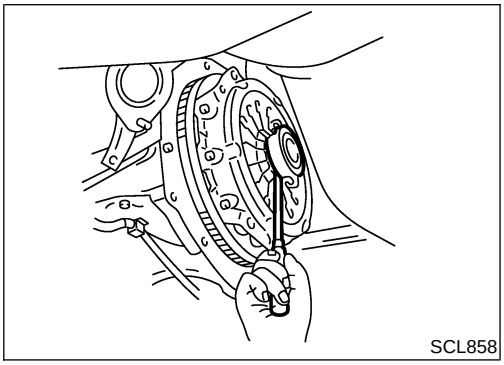

4. Using a flat-head screwdriver or the like, remove release bearing from clutch cover.

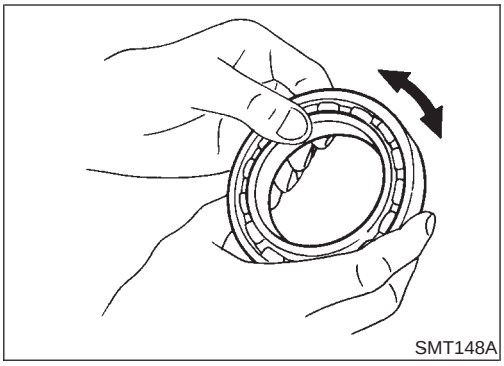

Inspection

NACL0030

Check the following items, and replace the part, if necessary.

- Release bearing seizure, damages, and rough rotation.
- Abnormal wear on contact surfaces of release bearing or withdrawal lever.
- Dust cover cracks.

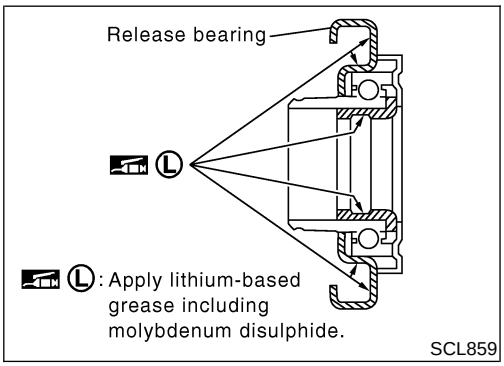

Installation

NACL0031

1. Apply clutch sleeve grease to the areas shown by the arrows in the figure.
2. Install the release bearing to main drive shaft.
3. Install withdrawal lever to fork support, and secure it with withdrawal lever shaft, washer, and snap pin.
4. Operate withdrawal lever to check sliding parts for smooth movement.

CAUTION:

Remove excessive grease coming-out.

5. Install manual transmission.
   Refer to MT-7, “Removal and Installation”.

Lubrication

NACL0016

- Apply recommended grease to contact surface and rubbing surface.
- **Too much lubricant might damage clutch disc facing.**

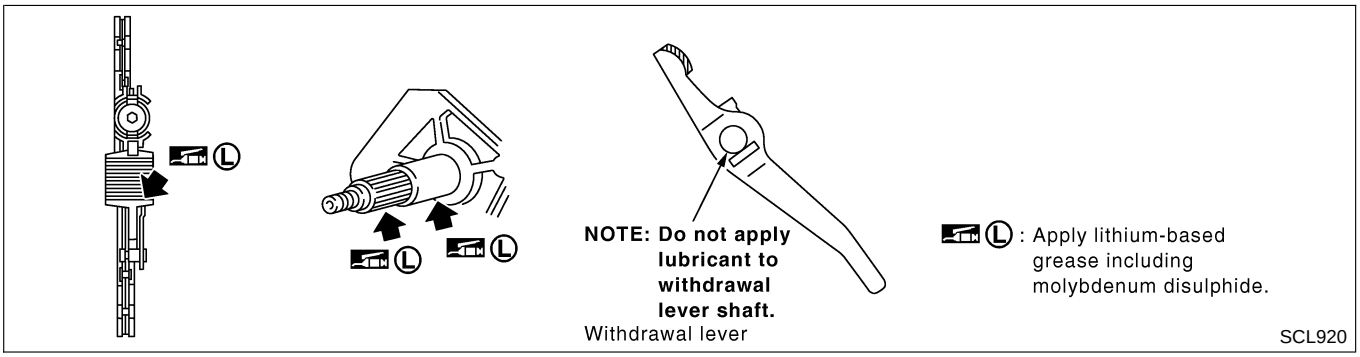

Components

NACL0032

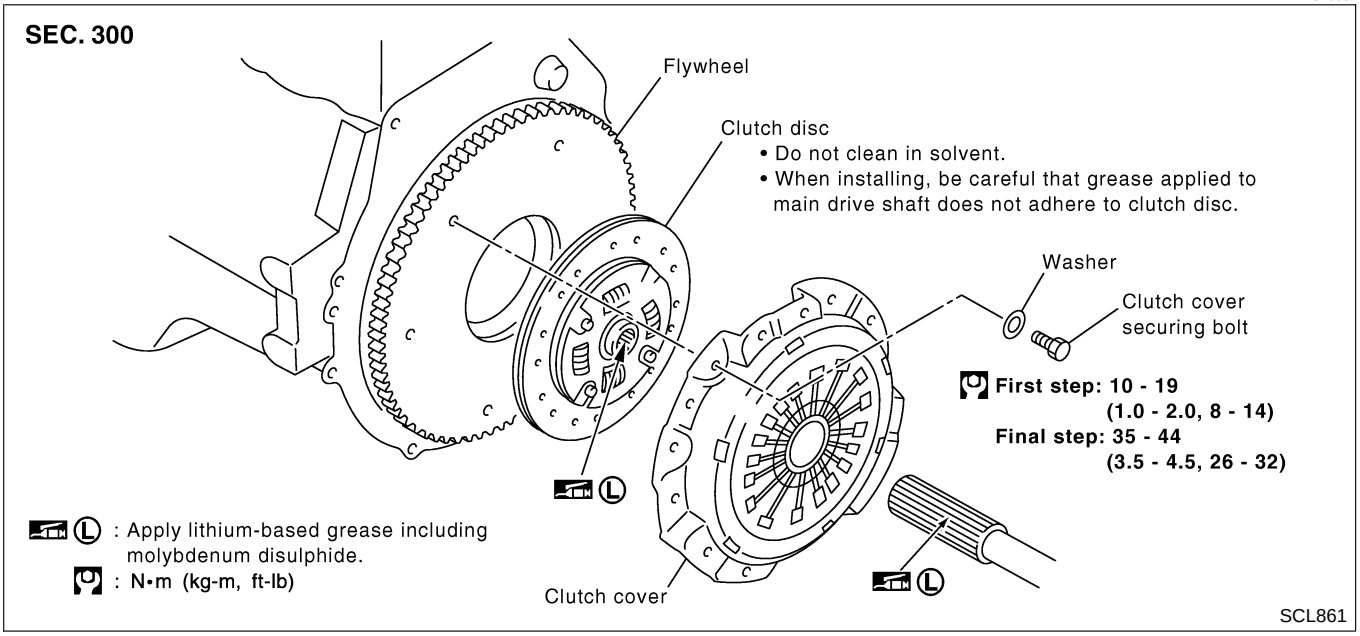

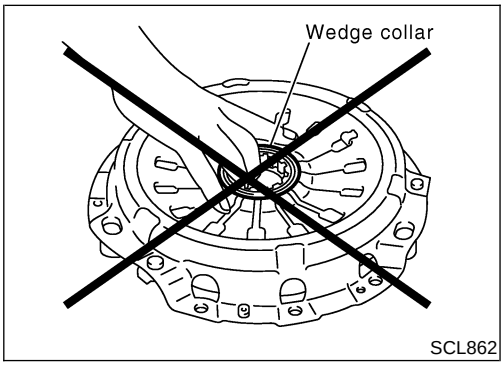

Removal

NACL0033

1. Remove manual transmission from the vehicle. Refer to MT-7, “Removal and Installation”.
2. Remove release bearing from clutch cover.
3. Loosen mounting bolts on the clutch cover evenly, and remove clutch cover and clutch disc.

CAUTION:
Do not hold the wedge collar when handling the clutch cover.

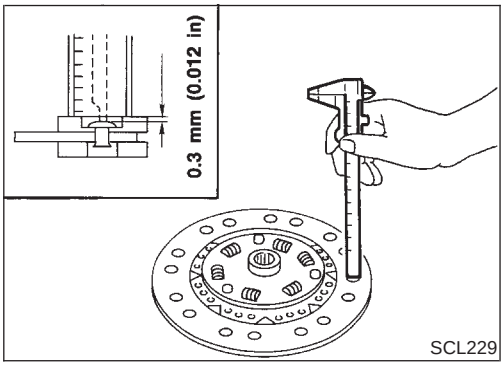

Inspection and Adjustment

NACL0019

CLUTCH DISC

NACL0019S01

Check the following items, and replace if necessary.

- Clutch disc, for burns, discoloration, oil or grease leakage
- Clutch disc, for wear of facing

  Wear limit of facing surface to rivet head:
  0.3 mm (0.012 in)

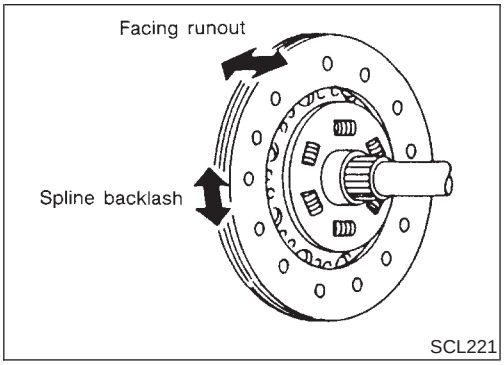

- Clutch disc, for backlash of spline and runout of facing

  Maximum backlash of spline (at outer edge of disc):
  1.0 mm (0.039 in)
  Runout limit:
  Less than 0.7 mm (0.028 in)
  Distance of runout check point (from hub center):
  120 mm (4.72 in)

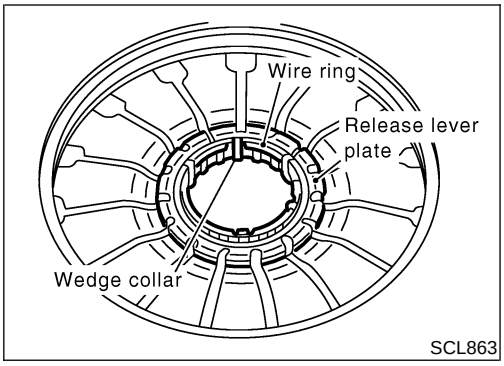

CLUTCH COVER

NACL0019S04

- Check parts (wedge collar and wiring) contacting the release bearing. If any worn or damaged parts are found, replace the clutch cover as an assembly.
- Check release lever plate for looseness. If necessary, replace clutch cover as an assembly.
- Check thrust ring of the clutch cover for wear or bending. If necessary, replace clutch cover as an assembly.
- If seizure mark or discoloration is found with the mating surfaces between pressure plate and clutch disc of clutch cover, repair them with sand-paper. If surfaces are distorted or damaged, replace clutch cover as an assembly.

REFERENCE:

- **If thrust ring is worn, chattering noise is heard when the riveted area is lightly hit with a hammer.**
- **If thrust ring is bent, jangling noise is heard when cover is swung up and down.**

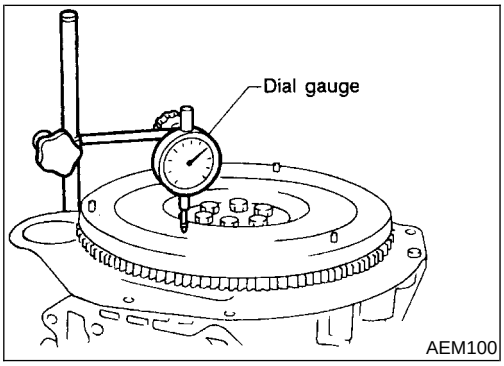

FLYWHEEL INSPECTION

NACL0019S03

CAUTION:

Do not allow any magnetic materials to contact the ring gear teeth.

- Inspect contact surface of flywheel for slight burns or discoloration. Clean flywheel with emery paper.
- Check flywheel runout.

  Maximum allowable runout:

  Refer to EM-76, "Flywheel/Drive plate Runout".

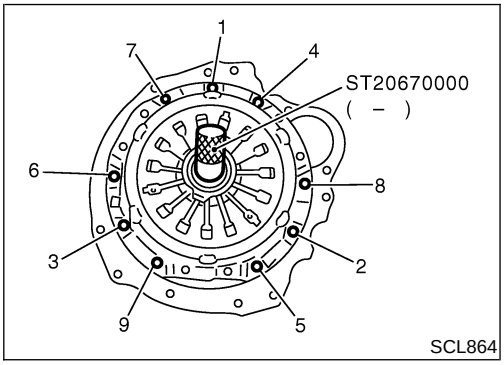

Installation

NACL0035

1. Apply specified Nissan clutch grease to clutch disc and spline of main drive shaft.

CAUTION:

Always apply grease. If no grease is applied, it may cause abnormal noise, insufficient disengagement, or damage to the clutch. Also, always remove excessive grease. If grease is applied excessively, it may cause sliding or juddering.

2. Install clutch disc and clutch cover. Tighten mounting bolts temporarily, and install clutch aligning bar (SST).
3. Tighten clutch cover mounting bolts evenly in the order shown in the figure by two steps.

   1st step:

   : 10 - 19 N·m (1.0 - 2.0 kg-m, 8 - 14 ft-lb)

   Final step:

   : 35 - 44 N·m (3.5 - 4.5 kg-m, 26 - 32 ft-lb)

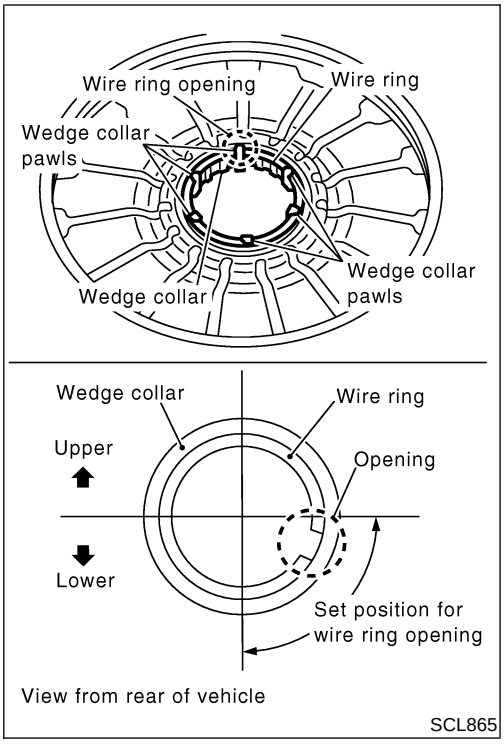

4. Check that the wire ring of clutch cover is installed securely to wedge collar pawls.
5. Turn flywheel so that the wire ring opening is positioned as shown in the figure.

CAUTION:

Always perform alignment of the wire ring opening. If transmission is installed without alignment, it may cause clutch disengagement failure or clutch pedal operation failure.

6. Install manual transmission.
   Refer to MT-7, "Removal and Installation".

Clutch Control System

NACL0028

Type of clutch control	Hydraulic

Clutch Master Cylinder (With damper)

NACL0021

Inner diameter	15.87 mm (5/8 in)

Clutch Operating Cylinder

NACL0022

Inner diameter	19.05 mm (3/4 in)

Clutch Disc

NACL0023

Unit: mm (in)

Model	250
Facing size (Outer dia. x inner dia. x thickness)	250 × 160 × 3.5 (9.84 × 6.30 × 0.138)
Thickness of disc assembly With load	7.9 - 8.3 (0.311 - 0.327) with 7,355 N (750 kg, 1,654 lb)
Wear limit of facing surface to rivet head	0.3 (0.012)
Runout limit of facing	0.7 (0.028)
Distance of runout check point (from hub center)	120 (4.72)
Maximum backlash of spline (at outer edge of disc)	1.0 (0.039)

Clutch Cover

NACL0024

Unit: mm (in)

Model	250
Set-load	7,355 N (750 kg, 1,654 lb)
Diaphragm spring height	48.2 - 50.2 (1.898 - 1.976)
Uneven limit of diaphragm spring toe height	0.6 (0.024)

Clutch Pedal

NACL0025

Unit: mm (in)

Clearance “C” between pedal stopper rubber and clutch interlock switch threaded while clutch pedal is fully depressed.	0.1 - 1.0 (0.004 - 0.039)

NOTES

ENGINE CONTROL SYSTEM

SECTION EC

CONTENTS

TROUBLE DIAGNOSIS - INDEX 9
Alphabetical Index 9
DTC No. Index.....13
PRECAUTIONS 18
Supplemental Restraint System (SRS) "AIR BAG" and "SEAT BELT PRE-TENSIONER".....18
Precautions for On Board Diagnostic (OBD) System of Engine and A/T.....18
Engine Fuel & Emission Control System 19
Precautions.....20
Wiring Diagrams and Trouble Diagnosis.....21
PREPARATION 22
Special Service Tools 22
Commercial Service Tools 23
ENGINE AND EMISSION CONTROL OVERALL SYSTEM.....25
Engine Control Component Parts Location.....25
Circuit Diagram.....30
System Diagram 31
Vacuum Hose Drawing 32
System Chart.....33
ENGINE AND EMISSION BASIC CONTROL SYSTEM DESCRIPTION.....34
Multiport Fuel Injection (MFI) System 34
Electronic Ignition (EI) System 36
Air Conditioning Cut Control.....37
Fuel Cut Control (at no load & high engine speed).....38
Evaporative Emission System.....38
On Board Refueling Vapor Recovery (ORVR).....44
Positive Crankcase Ventilation 53
CAN Communication 54
Automatic Speed Control Device (ASCD) System....54
BASIC SERVICE PROCEDURE 56
Fuel Pressure Release.....56
Fuel Pressure Check.....56
Fuel Pressure Regulator Check 57
Injector 58
How to Check Idle Speed and Ignition Timing.....59
Idle Speed/Ignition Timing/Idle Mixture Ratio Adjustment.....61
Accelerator Pedal Released Position Learning.....73
Throttle Valve Closed Position Learning 73
Idle Air Volume Learning 73
ON BOARD DIAGNOSTIC SYSTEM DESCRIPTION.....77
Introduction 77
Two Trip Detection Logic.....77
Emission-related Diagnostic Information.....78
Malfunction Indicator Lamp (MIL).....94
OBD System Operation Chart.....98
CONSULT-II 103
Generic Scan Tool (GST) 117
TROUBLE DIAGNOSIS - INTRODUCTION.....119
Introduction 119
Work Flow.....121
TROUBLE DIAGNOSIS - BASIC INSPECTION.....123
Basic Inspection.....123
TROUBLE DIAGNOSIS - GENERAL DESCRIPTION.....129
DTC Inspection Priority Chart.....129
Fail-safe Chart 130
Symptom Matrix Chart.....131
CONSULT-II Reference Value in Data Monitor Mode 135
Major Sensor Reference Graph in Data Monitor Mode 139
ECM Terminals and Reference Value 141
TROUBLE DIAGNOSIS - SPECIFICATION VALUE ..151
Description.....151
Testing Condition 151
Inspection Procedure.....151
Diagnostic Procedure 152
TROUBLE DIAGNOSIS FOR INTERMITTENT INCIDENT.....155
Description.....155
Diagnostic Procedure 155
POWER SUPPLY AND GROUND CIRCUIT 156

CONTENTS (Cont'd)

ECM Terminals and Reference Value 156
Wiring Diagram 157
Diagnostic Procedure 159
Ground Inspection 165
DTC U1000, U1001 CAN COMMUNICATION LINE...166
Description 166
On Board Diagnosis Logic.....166
DTC Confirmation Procedure 166
Wiring Diagram 167
Diagnostic Procedure 168
DTC P0011, P0021 IVT CONTROL 169
Description 169
CONSULT-II Reference Value in Data Monitor Mode 170
On Board Diagnosis Logic.....170
DTC Confirmation Procedure 170
Diagnostic Procedure 171
Component Inspection.....172
DTC P0031, P0032, P0051, P0052 HO2S1 HEATER.....173
Description 173
CONSULT-II Reference Value in Data Monitor Mode 173
ECM Terminals and Reference Value 173
On Board Diagnosis Logic.....174
DTC Confirmation Procedure 174
Wiring Diagram 176
Diagnostic Procedure 178
DTC P0037, P0038, P0057, P0058 HO2S2 HEATER.....181
Description 181
CONSULT-II Reference Value in Data Monitor Mode 181
ECM Terminals and Reference Value 181
On Board Diagnosis Logic.....182
DTC Confirmation Procedure 182
Wiring Diagram 183
Diagnostic Procedure 185
DTC P0101 MAF SENSOR 187
Component Description 187
CONSULT-II Reference Value in Data Monitor Mode 187
ECM Terminals and Reference Value 187
On Board Diagnosis Logic.....188
DTC Confirmation Procedure 188
Overall Function Check 189
Wiring Diagram 190
Diagnostic Procedure 191
DTC P0102, P0103 MAF SENSOR.....194
Component Description 194
CONSULT-II Reference Value in Data Monitor Mode 194
ECM Terminals and Reference Value 194
On Board Diagnosis Logic.....195
DTC Confirmation Procedure 195
Wiring Diagram 196
Diagnostic Procedure 197
DTC P0112, P0113 IAT SENSOR 200
Component Description 200
On Board Diagnosis Logic.....200
DTC Confirmation Procedure 200
Wiring Diagram 201
Diagnostic Procedure 202
Component Inspection.....203
DTC P0117, P0118 ECT SENSOR.....204
Component Description 204
On Board Diagnosis Logic.....204
DTC Confirmation Procedure 205
Wiring Diagram 206
Diagnostic Procedure 207
DTC P0122, P0123 TP SENSOR.....210
Component Description 210
CONSULT-II Reference Value in Data Monitor Mode 210
ECM Terminals and Reference Value 210
On Board Diagnosis Logic.....211
DTC Confirmation Procedure 211
Wiring Diagram 213
Diagnostic Procedure 214
Component Inspection.....216
DTC P0125 ECT SENSOR.....217
Description 217
On Board Diagnosis Logic.....217
DTC Confirmation Procedure 218
Diagnostic Procedure 218
DTC P0127 IAT SENSOR 220
Component Description 220
On Board Diagnosis Logic.....220
DTC Confirmation Procedure 220
Diagnostic Procedure 221
DTC P0128 THERMOSTAT FUNCTION.....222
On Board Diagnosis Logic.....222
DTC Confirmation Procedure 222
Diagnostic Procedure 223
DTC P0132, P0152 HO2S1.....224
Component Description 224
CONSULT-II Reference Value in Data Monitor Mode 224
ECM Terminals and Reference Value 224
On Board Diagnosis Logic.....225
DTC Confirmation Procedure 225
Wiring Diagram 226
Diagnostic Procedure 228
DTC P0133, P0153 HO2S1.....233

CONTENTS (Cont'd)

Component Description 233
CONSULT-II Reference Value in Data Monitor Mode 233
ECM Terminals and Reference Value 233
On Board Diagnosis Logic.....234
DTC Confirmation Procedure 234
Overall Function Check 235
Wiring Diagram 236
Diagnostic Procedure 238
DTC P0134, P0154 HO2S1.....246
Component Description 246
CONSULT-II Reference Value in Data Monitor Mode 246
ECM Terminals and Reference Value 246
On Board Diagnosis Logic.....247
DTC Confirmation Procedure 247
Overall Function Check 248
Wiring Diagram 249
Diagnostic Procedure 251
DTC P0138, P0158 HO2S2.....255
Component Description 255
CONSULT-II Reference Value in Data Monitor Mode 255
ECM Terminals and Reference Value 255
On Board Diagnosis Logic.....255
DTC Confirmation Procedure 256
Wiring Diagram 257
Diagnostic Procedure 259
DTC P0139, P0159 HO2S2.....263
Component Description 263
CONSULT-II Reference Value in Data Monitor Mode 263
ECM Terminals and Reference Value 263
On Board Diagnosis Logic.....263
DTC Confirmation Procedure 264
Overall Function Check 264
Wiring Diagram 266
Diagnostic Procedure 268
DTC P0171, P0174 FUEL INJECTION SYSTEM FUNCTION.....273
On Board Diagnosis Logic.....273
DTC Confirmation Procedure 273
Wiring Diagram 275
Diagnostic Procedure 277
DTC P0172, P0175 FUEL INJECTION SYSTEM FUNCTION.....282
On Board Diagnosis Logic.....282
DTC Confirmation Procedure 282
Wiring Diagram 284
Diagnostic Procedure 286
DTC P0181 FTT SENSOR 290
Component Description 290
On Board Diagnosis Logic.....290
DTC Confirmation Procedure 290
Diagnostic Procedure 291
DTC P0182, P0183 FTT SENSOR.....293
Component Description 293
On Board Diagnosis Logic.....293
DTC Confirmation Procedure 293
Wiring Diagram 295
Diagnostic Procedure 296
DTC P0222, P0223 TP SENSOR.....298
Component Description 298
CONSULT-II Reference Value in Data Monitor Mode 298
ECM Terminals and Reference Value 298
On Board Diagnosis Logic.....299
DTC Confirmation Procedure 299
Wiring Diagram 301
Diagnostic Procedure 302
Component Inspection.....304
DTC P0300 - P0306 MULTIPLE CYLINDER MISFIRE, NO. 1 - 6 CYLINDER MISFIRE 305
On Board Diagnosis Logic.....305
DTC Confirmation Procedure 306
Diagnostic Procedure 307
DTC P0327, P0328 KS.....314
Component Description 314
ECM Terminals and Reference Value 314
On Board Diagnosis Logic.....314
DTC Confirmation Procedure 314
Wiring Diagram 315
Diagnostic Procedure 316
DTC P0335 CKP SENSOR (POS) 319
Component Description 319
CONSULT-II Reference Value in Data Monitor Mode 319
On Board Diagnosis Logic.....319
DTC Confirmation Procedure 320
Wiring Diagram 321
Diagnostic Procedure 322
Component Inspection.....325
DTC P0340, P0345 CMP SENSOR (PHASE) 326
Component Description 326
On Board Diagnosis Logic.....326
DTC Confirmation Procedure 326
Wiring Diagram 328
Diagnostic Procedure 330
Component Inspection.....333
DTC P0420, P0430 THREE WAY CATALYST FUNCTION.....334
On Board Diagnosis Logic.....334
DTC Confirmation Procedure 334
Overall Function Check 335

CONTENTS (Cont'd)

Diagnostic Procedure 335
DTC P0441 EVAP CONTROL SYSTEM.....339
System Description.....339
On Board Diagnosis Logic.....339
DTC Confirmation Procedure 340
Overall Function Check 340
Diagnostic Procedure 342
DTC P0442 EVAP CONTROL SYSTEM.....349
On Board Diagnosis Logic.....349
DTC Confirmation Procedure 350
Diagnostic Procedure 351
DTC P0444, P0445 EVAP CANISTER PURGE VOLUME CONTROL SOLENOID VALVE 364
Description.....364
CONSULT-II Reference Value in Data Monitor Mode 364
ECM Terminals and Reference Value 365
On Board Diagnosis Logic.....365
DTC Confirmation Procedure 366
Wiring Diagram 367
Diagnostic Procedure 368
DTC P0447 EVAP CANISTER VENT CONTROL VALVE.....371
Component Description 371
CONSULT-II Reference Value in Data Monitor Mode 371
ECM Terminals and Reference Value 371
On Board Diagnosis Logic.....371
DTC Confirmation Procedure 372
Wiring Diagram 373
Diagnostic Procedure 374
DTC P0452 EVAP SYSTEM PRESSURE SENSOR ..378
Component Description 378
CONSULT-II Reference Value in Data Monitor Mode 378
ECM Terminals and Reference Value 378
On Board Diagnosis Logic.....378
DTC Confirmation Procedure 379
Wiring Diagram 380
Diagnostic Procedure 381
DTC P0453 EVAP SYSTEM PRESSURE SENSOR ..384
Component Description 384
CONSULT-II Reference Value in Data Monitor Mode 384
ECM Terminals and Reference Value 384
On Board Diagnosis Logic.....385
DTC Confirmation Procedure 385
Wiring Diagram 386
Diagnostic Procedure 387
DTC P0455 EVAP CONTROL SYSTEM.....394
On Board Diagnosis Logic.....394
DTC Confirmation Procedure 395
Diagnostic Procedure 396
DTC P0456 EVAP CONTROL SYSTEM.....407
On Board Diagnosis Logic.....407
DTC Confirmation Procedure 408
Overall Function Check 409
Diagnostic Procedure 410
DTC P0460 FUEL LEVEL SENSOR.....423
Component Description 423
On Board Diagnostic Logic.....423
DTC Confirmation Procedure 423
Diagnostic Procedure 424
DTC P0461 FUEL LEVEL SENSOR.....425
Component Description 425
On Board Diagnostic Logic.....425
Overall Function Check 425
Diagnostic Procedure 426
DTC P0462, P0463 FUEL LEVEL SENSOR 428
Component Description 428
On Board Diagnostic Logic.....428
DTC Confirmation Procedure 428
Diagnostic Procedure 429
DTC P0500 VSS 430
Description.....430
On Board Diagnosis Logic.....430
DTC Confirmation Procedure 430
Overall Function Check 431
Diagnostic Procedure 431
DTC P0506 ISC SYSTEM 432
Description.....432
On Board Diagnosis Logic.....432
DTC Confirmation Procedure 432
Diagnostic Procedure 433
DTC P0507 ISC SYSTEM 434
Description.....434
On Board Diagnosis Logic.....434
DTC Confirmation Procedure 434
Diagnostic Procedure 435
DTC P0550 PSP SENSOR.....436
Component Description 436
CONSULT-II Reference Value in Data Monitor Mode 436
On Board Diagnosis Logic.....436
DTC Confirmation Procedure 436
Wiring Diagram 437
Diagnostic Procedure 438
Component Inspection.....440
DTC P0605 ECM 441
Component Description 441
On Board Diagnosis Logic.....441
DTC Confirmation Procedure 441
Diagnostic Procedure 442
DTC P1065 ECM POWER SUPPLY (BACK UP).....443

CONTENTS (Cont'd)

Component Description 443
ECM Terminals and Reference Value 443
On Board Diagnosis Logic.....443
DTC Confirmation Procedure 443
Wiring Diagram 445
Diagnostic Procedure 446
DTC P1110, P1135 IVT CONTROL.....448
Description 448
CONSULT-II Reference Value in Data Monitor Mode 448
On Board Diagnosis Logic.....449
DTC Confirmation Procedure 449
Diagnostic Procedure 450
DTC P1111, P1136 IVT CONTROL SOLENOID VALVE.....451
Component Description 451
CONSULT-II Reference Value in Data Monitor Mode 451
ECM Terminals and Reference Value 451
On Board Diagnosis Logic.....452
DTC Confirmation Procedure 452
Wiring Diagram 453
Diagnostic Procedure 455
DTC P1121 ELECTRIC THROTTLE CONTROL ACTUATOR 457
Component Description 457
On Board Diagnosis Logic.....457
DTC Confirmation Procedure 457
Diagnostic Procedure 458
DTC P1122 ELECTRIC THROTTLE CONTROL FUNCTION.....459
Description 459
ECM Terminals and Reference Value 459
On Board Diagnosis Logic.....460
DTC Confirmation Procedure 460
Wiring Diagram 461
Diagnostic Procedure 462
Component Inspection.....466
DTC P1124, P1126 THROTTLE CONTROL MOTOR RELAY.....467
Component Description 467
CONSULT-II Reference Value in Data Monitor Mode 467
ECM Terminals and Reference Value 467
On Board Diagnosis Logic.....467
DTC Confirmation Procedure 468
Wiring Diagram 469
Diagnostic Procedure 470
Component Inspection.....471
DTC P1128 THROTTLE CONTROL MOTOR.....472
Component Description 472
ECM Terminals and Reference Value 472
On Board Diagnosis Logic.....472
DTC Confirmation Procedure 472
Wiring Diagram 474
Diagnostic Procedure 475
Component Inspection.....476
DTC P1130 SWIRL CONTROL VALVE CONTROL SOLENOID VALVE.....477
Description 477
CONSULT-II Reference Value in Data Monitor Mode 478
ECM Terminals and Reference Value 478
On Board Diagnosis Logic.....479
DTC Confirmation Procedure 479
Wiring Diagram 481
Diagnostic Procedure 482
DTC P1131 SWIRL CONTROL VALVE CONTROL SOLENOID VALVE.....498
Component Description 498
CONSULT-II Reference Value in Data Monitor Mode 498
ECM Terminals and Reference Value 498
On Board Diagnosis Logic.....498
DTC Confirmation Procedure 499
Wiring Diagram 500
Diagnostic Procedure 501
DTC P1143, P1163 HO2S1 504
Component Description 504
CONSULT-II Reference Value in Data Monitor Mode 504
ECM Terminals and Reference Value 504
On Board Diagnosis Logic.....505
DTC Confirmation Procedure 505
Overall Function Check 506
Diagnostic Procedure 507
DTC P1144, P1164 HO2S1 512
Component Description 512
CONSULT-II Reference Value in Data Monitor Mode 512
ECM Terminals and Reference Value 512
On Board Diagnosis Logic.....513
DTC Confirmation Procedure 513
Overall Function Check 514
Diagnostic Procedure 515
DTC P1146, P1166 HO2S2 521
Component Description 521
CONSULT-II Reference Value in Data Monitor Mode 521
ECM Terminals and Reference Value 521
On Board Diagnosis Logic.....521
DTC Confirmation Procedure 522
Overall Function Check 522
Wiring Diagram 524

CONTENTS (Cont'd)

Diagnostic Procedure 526
DTC P1147, P1167 HO2S2 531
Component Description 531
CONSULT-II Reference Value in Data Monitor Mode 531
ECM Terminals and Reference Value 531
On Board Diagnosis Logic.....531
DTC Confirmation Procedure 532
Overall Function Check 532
Wiring Diagram 534
Diagnostic Procedure 536
DTC P1148, P1168 CLOSED LOOP CONTROL.....541
On Board Diagnosis Logic.....541
DTC Confirmation Procedure 541
Overall Function Check 542
Diagnostic Procedure 542
DTC P1165 SWIRL CONTROL VALVE CONTROL VACUUM CHECK SWITCH.....543
Component Description 543
CONSULT-II Reference Value in Data Monitor Mode 543
ECM Terminals and Reference Value 543
On Board Diagnosis Logic.....544
DTC Confirmation Procedure 544
Wiring Diagram 545
Diagnostic Procedure 546
DTC P1211 ABS/TCS CONTROL UNIT 549
Description 549
On Board Diagnosis Logic.....549
DTC Confirmation Procedure 549
Diagnostic Procedure 550
DTC P1212 ABS/TCS COMMUNICATION LINE.....551
Description 551
On Board Diagnosis Logic.....551
DTC Confirmation Procedure 551
Diagnostic Procedure 552
DTC P1217 ENGINE OVER TEMPERATURE.....553
On Board Diagnosis Logic.....553
Overall Function Check 553
Diagnostic Procedure 554
Main 12 Causes of Overheating.....557
DTC P1225 TP SENSOR 558
Component Description 558
On Board Diagnosis Logic.....558
DTC Confirmation Procedure 558
Diagnostic Procedure 559
DTC P1226 TP SENSOR 560
Component Description 560
On Board Diagnosis Logic.....560
DTC Confirmation Procedure 560
Diagnostic Procedure 561
DTC P1229 SENSOR POWER SUPPLY.....562
ECM Terminals and Reference Value 562
On Board Diagnosis Logic.....562
DTC Confirmation Procedure 562
Wiring Diagram 564
Diagnostic Procedure 565
DTC P1442 EVAP CONTROL SYSTEM.....567
On Board Diagnosis Logic.....567
DTC Confirmation Procedure 568
Diagnostic Procedure 569
DTC P1444 EVAP CANISTER PURGE VOLUME CONTROL SOLENOID VALVE.....582
Description 582
CONSULT-II Reference Value in Data Monitor Mode 582
ECM Terminals and Reference Value 583
On Board Diagnosis Logic.....583
DTC Confirmation Procedure 583
Wiring Diagram 585
Diagnostic Procedure 586
DTC P1446 EVAP CANISTER VENT CONTROL VALVE.....594
Component Description 594
CONSULT-II Reference Value in Data Monitor Mode 594
ECM Terminals and Reference Value 594
On Board Diagnosis Logic.....594
DTC Confirmation Procedure 595
Wiring Diagram 596
Diagnostic Procedure 597
DTC P1448 EVAP CANISTER VENT CONTROL VALVE.....602
Component Description 602
CONSULT-II Reference Value in Data Monitor Mode 602
ECM Terminals and Reference Value 602
On Board Diagnosis Logic.....602
DTC Confirmation Procedure 603
Overall Function Check 604
Wiring Diagram 605
Diagnostic Procedure 606
DTC P1456 EVAP CONTROL SYSTEM.....611
On Board Diagnosis Logic.....611
DTC Confirmation Procedure 612
Overall Function Check 613
Diagnostic Procedure 614
DTC P1490 VACUUM CUT VALVE BYPASS VALVE.....627
Description 627
CONSULT-II Reference Value in Data Monitor Mode 627
ECM Terminals and Reference Value 627
On Board Diagnosis Logic.....628

CONTENTS (Cont'd)

DTC Confirmation Procedure 628
Wiring Diagram 629
Diagnostic Procedure 630
DTC P1491 VACUUM CUT VALVE BYPASS VALVE 633
Description 633
CONSULT-II Reference Value in Data Monitor Mode 633
ECM Terminals and Reference Value 633
On Board Diagnosis Logic 634
DTC Confirmation Procedure 634
Overall Function Check 635
Wiring Diagram 636
Diagnostic Procedure 637
DTC P1564 ASCD STEERING SWITCH 645
Component Description 645
CONSULT-II Reference Value in Data Monitor Mode 645
ECM Terminals and Reference Value 645
On Board Diagnosis Procedure 646
DTC Confirmation Procedure 646
Wiring Diagram 647
Diagnostic Procedure 648
Component Inspection 651
DTC P1572 ASCD BRAKE SWITCH 652
Component Description 652
CONSULT-II Reference Value in Data Monitor Mode 652
ECM Terminals and Reference Value 652
On Board Diagnosis Procedure 653
DTC Confirmation Procedure 653
Wiring Diagram 655
Diagnostic Procedure 656
Component Inspection 661
DTC P1706 PNP SWITCH 663
Component Description 663
CONSULT-II Reference Value in Data Monitor Mode 663
ECM Terminals and Reference Value 663
On Board Diagnosis Logic 663
DTC Confirmation Procedure 663
Overall Function Check 664
Wiring Diagram 665
Diagnostic Procedure 666
DTC P1805 BRAKE SWITCH 669
Description 669
CONSULT-II Reference Value in Data Monitor Mode 669
ECM Terminals and Reference Value 669
On Board Diagnosis Logic 669
DTC Confirmation Procedure 670
Wiring Diagram 671
Diagnostic Procedure 672
Component Inspection 674
DTC P2122, P2123 APP SENSOR 675
Component Description 675
CONSULT-II Reference Value in Data Monitor Mode 675
ECM Terminals and Reference Value 675
On Board Diagnosis Logic 676
DTC Confirmation Procedure 677
Wiring Diagram 678
Diagnostic Procedure 679
Component Inspection 681
DTC P2127, P2128 APP SENSOR 682
Component Description 682
CONSULT-II Reference Value in Data Monitor Mode 682
ECM Terminals and Reference Value 682
On Board Diagnosis Logic 683
DTC Confirmation Procedure 684
Wiring Diagram 685
Diagnostic Procedure 686
Component Inspection 689
DTC P2135 TP SENSOR 690
Component Description 690
CONSULT-II Reference Value in Data Monitor Mode 690
ECM Terminals and Reference Value 690
On Board Diagnosis Logic 691
DTC Confirmation Procedure 691
Wiring Diagram 693
Diagnostic Procedure 694
Component Inspection 696
DTC P2138 APP SENSOR 697
Component Description 697
CONSULT-II Reference Value in Data Monitor Mode 697
ECM Terminals and Reference Value 697
On Board Diagnosis Logic 698
DTC Confirmation Procedure 699
Wiring Diagram 700
Diagnostic Procedure 701
Component Inspection 704
VARIABLE INDUCTION AIR CONTROL SYSTEM (VIAS) 705
Description 705
ECM Terminals and Reference Value 706
Wiring Diagram 707
Diagnostic Procedure 708
IGNITION SIGNAL 714
Component Description 714
ECM Terminals and Reference Value 714
Wiring Diagram 715

CONTENTS (Cont'd)

Diagnostic Procedure 718
INJECTOR 724
Component Description 724
CONSULT-II Reference Value in Data Monitor Mode 724
ECM Terminals and Reference Value 724
Wiring Diagram 725
Diagnostic Procedure 726
FUEL PUMP 729
System Description 729
Component Description 729
CONSULT-II Reference Value in Data Monitor Mode 729
ECM Terminals and Reference Value 730
Wiring Diagram 731
Diagnostic Procedure 732
REFRIGERANT PRESSURE SENSOR 736
Description 736
ECM Terminals and Reference Value 736
Wiring Diagram 737
Diagnostic Procedure 738
ASCD BRAKE SWITCH 741
Component Description 741
CONSULT-II Reference Value in Data Monitor Mode 741
ECM Terminals and Reference Value 741
Wiring Diagram 742
Diagnostic Procedure 743
ASCD INDICATOR LAMP 749
Component Description 749
CONSULT-II Reference Value in Data Monitor Mode 749
Wiring Diagram 750
Diagnostic Procedure 751
ELECTRICAL LOAD SIGNAL 752
ECM Terminals and Reference Value 752
Wiring Diagram 753
Diagnostic Procedure 754
MIL & DATA LINK CONNECTORS 757
Wiring Diagram 757
SERVICE DATA AND SPECIFICATIONS (SDS) 758
Fuel Pressure Regulator 758
Idle Speed and Ignition Timing 758
Mass Air Flow Sensor 758
Engine Coolant Temperature Sensor 758
Heated Oxygen Sensor 1 Heater 758
Heated Oxygen Sensor 2 Heater 758
Fuel Pump 758
Injector 758
Calculated Load Value 758
Intake Air Temperature Sensor 759
Fuel Tank Temperature Sensor 759
Crankshaft Position Sensor (POS) 759
Camshaft Position Sensor (PHASE) 759

Alphabetical Index

NAEC0001

NOTE:
If DTC U1000 or U1001 is displayed with other DTC, first perform the trouble diagnosis for DTC U1000, U1001. Refer to EC-166, “DTC U1000, U1001 CAN COMMUNICATION LINE”.

X: Applicable —: Not applicable

Items (CONSULT-II screen terms)	DTC*1		Trip	MIL lighting up	Reference page
	CONSULT-II GST*2	ECM*3			
A/T 1ST GR FNCTN	P0731	0731	2	X	AT-123
A/T 2ND GR FNCTN	P0732	0732	2	X	AT-129
A/T 3RD GR FNCTN	P0733	0733	2	X	AT-135
A/T 4TH GR FNCTN	P0734	0734	2	X	AT-141
A/T TCC S/V FNCTN	P0744	0744	2	X	AT-154
APP SEN 1/CIRC	P2122	2122	1	X	EC-675
APP SEN 1/CIRC	P2123	2123	1	X	EC-675
APP SEN 2/CIRC	P2127	2127	1	X	EC-682
APP SEN 2/CIRC	P2128	2128	1	X	EC-682
APP SENSOR	P2138	2138	1	X	EC-697
ASCD BRAKE SW	P1572	1572	1	—	EC-652
ASCD SW	P1564	1564	1	—	EC-645
ATF TEMP SEN/CIRC	P0710	0710	2	X	AT-108
BRAKE SW/CIRCUIT	P1805	1805	2	—	EC-669
CAN COMM CIRCUIT	U1000	1000*5	1	X	EC-166
CAN COMM CIRCUIT	U1001	1001*5	2	—	EC-166
CKP SEN/CIRCUIT	P0335	0335	2	X	EC-319
CLOSED LOOP-B1	P1148	1148	1	X	EC-541
CLOSED LOOP-B2	P1168	1168	1	X	EC-541
CMP SEN/CIRC-B1	P0340	0340	2	X	EC-326
CMP SEN/CIRC-B2	P0345	0345	2	X	EC-326
CTP LEARNING	P1225	1225	2	—	EC-558
CTP LEARNING	P1226	1226	2	—	EC-560
CYL 1 MISFIRE	P0301	0301	2	X	EC-305
CYL 2 MISFIRE	P0302	0302	2	X	EC-305
CYL 3 MISFIRE	P0303	0303	2	X	EC-305
CYL 4 MISFIRE	P0304	0304	2	X	EC-305
CYL 5 MISFIRE	P0305	0305	2	X	EC-305
CYL 6 MISFIRE	P0306	0306	2	X	EC-305
ECM	P0605	0605	1 or 2	X or —	EC-441
ECM BACK UP/CIRCUIT	P1065	1065	2	X	EC-443
ECT SEN/CIRC	P0117	0117	1	X	EC-204
ECT SEN/CIRC	P0118	0118	1	X	EC-204

Items (CONSULT-II screen terms)	DTC*1		Trip	MIL lighting up	Reference page
	CONSULT-II GST*2	ECM*3			
ECT SENSOR	P0125	0125	1	X	EC-217
ENG OVER TEMP	P1217	1217	1	X	EC-553
ENGINE SPEED SIG	P0725	0725	2	X	AT-119
ETC ACTR	P1121	1121	1	X	EC-457
ETC FUNCTION/CIRC	P1122	1122	1	X	EC-459
ETC MOT	P1128	1128	1	X	EC-472
ETC MOT PWR	P1124	1124	1	X	EC-467
ETC MOT PWR	P1126	1126	1	X	EC-467
EVAP GROSS LEAK	P0455	0455	2	X	EC-394
EVAP PURG FLOW/MON	P0441	0441	2	X	EC-339
EVAP SMALL LEAK	P0442	0442	2	X	EC-349
EVAP SMALL LEAK	P1442	1442	2	X	EC-567
EVAP SYS PRES SEN	P0452	0452	2	X	EC-378
EVAP SYS PRES SEN	P0453	0453	2	X	EC-384
EVAP VERY SML LEAK	P0456	0456	2	X	EC-407
EVAP VERY SML LEAK	P1456	1456	2	X	EC-611
FTT SEN/CIRCUIT	P0182	0182	2	X	EC-293
FTT SEN/CIRCUIT	P0183	0183	2	X	EC-293
FTT SENSOR	P0181	0181	2	X	EC-290
FUEL LEV SEN SLOSH	P0460	0460	2	X	EC-423
FUEL LEVEL SENSOR	P0461	0461	2	X	EC-425
FUEL LEVL SEN/CIRC	P0462	0462	2	X	EC-428
FUEL LEVL SEN/CIRC	P0463	0463	2	X	EC-428
FUEL SYS-LEAN-B1	P0171	0171	2	X	EC-273
FUEL SYS-LEAN-B2	P0174	0174	2	X	EC-273
FUEL SYS-RICH-B1	P0172	0172	2	X	EC-282
FUEL SYS-RICH-B2	P0175	0175	2	X	EC-282
HO2S1 (B1)	P0132	0132	2	X	EC-224
HO2S1 (B1)	P0133	0133	2	X	EC-233
HO2S1 (B1)	P0134	0134	2	X	EC-246
HO2S1 (B1)	P1143	1143	2	X	EC-504
HO2S1 (B1)	P1144	1144	2	X	EC-512
HO2S1 (B2)	P0152	0152	2	X	EC-224
HO2S1 (B2)	P0153	0153	2	X	EC-233
HO2S1 (B2)	P0154	0154	2	X	EC-246
HO2S1 (B2)	P1163	1163	2	X	EC-504

Items (CONSULT-II screen terms)	DTC*1		Trip	MIL lighting up	Reference page
	CONSULT-II GST*2	ECM*3			
HO2S1 (B2)	P1164	1164	2	X	EC-512
HO2S1 HTR (B1)	P0031	0031	2	X	EC-173
HO2S1 HTR (B1)	P0032	0032	2	X	EC-173
HO2S1 HTR (B2)	P0051	0051	2	X	EC-173
HO2S1 HTR (B2)	P0052	0052	2	X	EC-173
HO2S2 (B1)	P0138	0138	2	X	EC-255
HO2S2 (B1)	P0139	0139	2	X	EC-263
HO2S2 (B1)	P1146	1146	2	X	EC-521
HO2S2 (B1)	P1147	1147	2	X	EC-531
HO2S2 (B2)	P0158	0158	2	X	EC-255
HO2S2 (B2)	P0159	0159	2	X	EC-263
HO2S2 (B2)	P1166	1166	2	X	EC-521
HO2S2 (B2)	P1167	1167	2	X	EC-531
HO2S2 HTR (B1)	P0037	0037	2	X	EC-181
HO2S2 HTR (B1)	P0038	0038	2	X	EC-181
HO2S2 HTR (B2)	P0057	0057	2	X	EC-181
HO2S2 HTR (B2)	P0058	0058	2	X	EC-181
IAT SEN/CIRCUIT	P0112	0112	2	X	EC-200
IAT SEN/CIRCUIT	P0113	0113	2	X	EC-200
IAT SENSOR	P0127	0127	2	X	EC-220
INT/V TIM CONT-B1	P0011	0011	2	X	EC-169
INT/V TIM CONT-B1	P1110	1110	2	X	EC-448
INT/V TIM CONT-B2	P0021	0021	2	X	EC-169
INT/V TIM CONT-B2	P1135	1135	2	X	EC-448
INT/V TIM V/CIR-B1	P1111	1111	2	X	EC-451
INT/V TIM V/CIR-B2	P1136	1136	2	X	EC-451
ISC SYSTEM	P0506	0506	2	X	EC-432
ISC SYSTEM	P0507	0507	2	X	EC-434
KNOCK SEN/CIRC-B1	P0327	0327	2	—	EC-314
KNOCK SEN/CIRC-B1	P0328	0328	2	—	EC-314
L/PRESS SOL/CIRC	P0745	0745	2	X	AT-165
MAF SEN/CIRCUIT	P0101	0101	1	X	EC-187
MAF SEN/CIRCUIT	P0102	0102	1	X	EC-194
MAF SEN/CIRCUIT	P0103	0103	1	X	EC-194
MULTI CYL MISFIRE	P0300	0300	2	X	EC-305
NATS MALFUNCTION	P1610 - P1615	1610 - 1615	2	—	EL-389

Alphabetical Index (Cont'd)

Items (CONSULT-II screen terms)	DTC*1		Trip	MIL lighting up	Reference page
	CONSULT-II GST*2	ECM*3			
NO DTC IS DETECTED. FURTHER TESTING MAY BE REQUIRED.	No DTC	Flashing*4	—	Flashing*4	EC-95
NO DTC IS DETECTED. FURTHER TESTING MAY BE REQUIRED.	**P0000**	**0000**	**—**	**—**	**—**
O/R CLTCH SOL/CIRC	P1760	1760	2	X	AT-185
P-N POS SW/CIRCUIT	P1706	1706	2	X	EC-663
PNP SW/CIRC	P0705	0705	2	X	AT-102
PURG VOLUME CONT/V	P0444	0444	2	X	EC-364
PURG VOLUME CONT/V	P0445	0445	2	X	EC-364
PURG VOLUME CONT/V	P1444	1444	2	X	EC-582
PW ST P SEN/CIRC	P0550	0550	2	—	EC-436
SENSOR POWER/CIRC	P1229	1229	1	X	EC-562
SFT SOL A/CIRC	P0750	0750	1	X	AT-171
SFT SOL B/CIRC	P0755	0755	1	X	AT-175
SWIRL CONT SOL/V	P1130	1130	2	X	EC-477
SWIRL CONT SOL/V	P1131	1131	2	X	EC-498
SWL CON VC SW/CIRC	P1165	1165	2	X	EC-543
TCC SOLENOID/CIRC	P0740	0740	2	X	AT-151
TCS C/U FUNCTN	P1211	1211	2	—	EC-549
TCS/CIRC	P1212	1212	2	—	EC-551
THERMSTAT FNCTN	P0128	0128	2	X	EC-222
TP SEN 1/CIRC	P0222	0222	1	X	EC-298
TP SEN 1/CIRC	P0223	0223	1	X	EC-298
TP SEN 2/CIRC	P0122	0122	1	X	EC-210
TP SEN 2/CIRC	P0123	0123	1	X	EC-210
TP SEN/CIRC A/T	P1705	1705	1	X	AT-179
TP SENSOR	P2135	2135	1	X	EC-690
TW CATALYST SYS-B1	P0420	0420	2	X	EC-334
TW CATALYST SYS-B2	P0430	0430	2	X	EC-334
VC CUT/V BYPASS/V	P1491	1491	2	X	EC-633
VC/V BYPASS/V	P1490	1490	2	X	EC-627
VEH SPD SEN/CIR AT*6	P0720	0720	2	X	AT-114
VEH SPEED SEN/CIRC*6	P0500	0500	2	X	EC-430
VENT CONTROL VALVE	P0447	0447	2	X	EC-371
VENT CONTROL VALVE	P1446	1446	2	X	EC-594
VENT CONTROL VALVE	P1448	1448	2	X	EC-602

*1: 1st trip DTC No. is the same as DTC No.
*2: This number is prescribed by SAE J2012.
*3: In Diagnostic Test Mode II (Self-diagnostic results), this number is controlled by NISSAN.
*4: When engine is running.
*5: The troubleshooting for this DTC needs CONSULT-II.
*6: When the fail-safe operations for both self-diagnoses occur, the MIL illuminates.

DTC No. Index

NAEC1181

NOTE:
If DTC U1000 or U1001 is displayed with other DTC, first perform the trouble diagnosis for DTC U1000, U1001. Refer to EC-166, "DTC U1000, U1001 CAN COMMUNICATION LINE".

X: Applicable —: Not applicable

DTC*1		Items (CONSULT-II screen terms)	Trip	MIL lighting up	Reference page
CONSULT-II GST*2	ECM*3				
No DTC	Flashing*4	NO DTC IS DETECTED. FURTHER TESTING MAY BE REQUIRED.	—	Flashing*4	EC-95
U1000	1000*5	CAN COMM CIRCUIT	1	X	EC-166
U1001	1001*5	CAN COMM CIRCUIT	2	—	EC-166
P0000	**0000**	**NO DTC IS DETECTED. FURTHER TESTING MAY BE REQUIRED.**	**—**	**—**	**—**
P0011	0011	INT/V TIM CONT-B1	2	X	EC-169
P0021	0021	INT/V TIM CONT-B2	2	X	EC-169
P0031	0031	HO2S1 HTR (B1)	2	X	EC-173
P0032	0032	HO2S1 HTR (B1)	2	X	EC-173
P0037	0037	HO2S2 HTR (B1)	2	X	EC-181
P0038	0038	HO2S2 HTR (B1)	2	X	EC-181
P0051	0051	HO2S1 HTR (B2)	2	X	EC-173
P0052	0052	HO2S1 HTR (B2)	2	X	EC-173
P0057	0057	HO2S2 HTR (B2)	2	X	EC-181
P0058	0058	HO2S2 HTR (B2)	2	X	EC-181
P0101	0101	MAF SEN/CIRCUIT	1	X	EC-187
P0102	0102	MAF SEN/CIRCUIT	1	X	EC-194
P0103	0103	MAF SEN/CIRCUIT	1	X	EC-194
P0112	0112	IAT SEN/CIRCUIT	2	X	EC-200
P0113	0113	IAT SEN/CIRCUIT	2	X	EC-200
P0117	0117	ECT SEN/CIRC	1	X	EC-204
P0118	0118	ECT SEN/CIRC	1	X	EC-204
P0122	0122	TP SEN 2/CIRC	1	X	EC-210
P0123	0123	TP SEN 2/CIRC	1	X	EC-210
P0125	0125	ECT SENSOR	1	X	EC-217
P0127	0127	IAT SENSOR	2	X	EC-220
P0128	0128	THERMSTAT FNCTN	2	X	EC-222

DTC No. Index (Cont'd)

DTC*1		Items (CONSULT-II screen terms)	Trip	MIL lighting up	Reference page
CONSULT-II GST*2	ECM*3				
P0132	0132	HO2S1 (B1)	2	X	EC-224
P0133	0133	HO2S1 (B1)	2	X	EC-233
P0134	0134	HO2S1 (B1)	2	X	EC-246
P0138	0138	HO2S2 (B1)	2	X	EC-255
P0139	0139	HO2S2 (B1)	2	X	EC-263
P0152	0152	HO2S1 (B2)	2	X	EC-224
P0153	0153	HO2S1 (B2)	2	X	EC-233
P0154	0154	HO2S1 (B2)	2	X	EC-246
P0158	0158	HO2S2 (B2)	2	X	EC-255
P0159	0159	HO2S2 (B2)	2	X	EC-263
P0171	0171	FUEL SYS-LEAN-B1	2	X	EC-273
P0172	0172	FUEL SYS-RICH-B1	2	X	EC-282
P0174	0174	FUEL SYS-LEAN-B2	2	X	EC-273
P0175	0175	FUEL SYS-RICH-B2	2	X	EC-282
P0181	0181	FTT SENSOR	2	X	EC-290
P0182	0182	FTT SEN/CIRCUIT	2	X	EC-293
P0183	0183	FTT SEN/CIRCUIT	2	X	EC-293
P0222	0222	TP SEN 1/CIRC	1	X	EC-298
P0223	0223	TP SEN 1/CIRC	1	X	EC-298
P0300	0300	MULTI CYL MISFIRE	2	X	EC-305
P0301	0301	CYL 1 MISFIRE	2	X	EC-305
P0302	0302	CYL 2 MISFIRE	2	X	EC-305
P0303	0303	CYL 3 MISFIRE	2	X	EC-305
P0304	0304	CYL 4 MISFIRE	2	X	EC-305
P0305	0305	CYL 5 MISFIRE	2	X	EC-305
P0306	0306	CYL 6 MISFIRE	2	X	EC-305
P0327	0327	KNOCK SEN/CIRC-B1	2	—	EC-314
P0328	0328	KNOCK SEN/CIRC-B1	2	—	EC-314
P0335	0335	CKP SEN/CIRCUIT	2	X	EC-319
P0340	0340	CMP SEN/CIRC-B1	2	X	EC-326
P0345	0345	CMP SEN/CIRC-B2	2	X	EC-326
P0420	0420	TW CATALYST SYS-B1	2	X	EC-334
P0430	0430	TW CATALYST SYS-B2	2	X	EC-334
P0441	0441	EVAP PURG FLOW/MON	2	X	EC-339
P0442	0442	EVAP SMALL LEAK	2	X	EC-349
P0444	0444	PURG VOLUME CONT/V	2	X	EC-364

DTC*1		Items (CONSULT-II screen terms)	Trip	MIL lighting up	Reference page
CONSULT-II GST*2	ECM*3				
P0445	0445	PURG VOLUME CONT/V	2	X	EC-364
P0447	0447	VENT CONTROL VALVE	2	X	EC-371
P0452	0452	EVAP SYS PRES SEN	2	X	EC-378
P0453	0453	EVAP SYS PRES SEN	2	X	EC-384
P0455	0455	EVAP GROSS LEAK	2	X	EC-394
P0456	0456	EVAP VERY SML LEAK	2	X	EC-407
P0460	0460	FUEL LEV SEN SLOSH	2	X	EC-423
P0461	0461	FUEL LEVEL SENSOR	2	X	EC-425
P0462	0462	FUEL LEVL SEN/CIRC	2	X	EC-428
P0463	0463	FUEL LEVL SEN/CIRC	2	X	EC-428
P0500	0500	VEH SPEED SEN/CIRC*6	2	X	EC-430
P0506	0506	ISC SYSTEM	2	X	EC-432
P0507	0507	ISC SYSTEM	2	X	EC-434
P0550	0550	PW ST P SEN/CIRC	2	—	EC-436
P0605	0605	ECM	1 or 2	X or —	EC-441
P0705	0705	PNP SW/CIRC	2	X	AT-102
P0710	0710	ATF TEMP SEN/CIRC	2	X	AT-108
P0720	0720	VEH SPD SEN/CIR AT*6	2	X	AT-114
P0725	0725	ENGINE SPEED SIG	2	X	AT-119
P0731	0731	A/T 1ST GR FNCTN	2	X	AT-123
P0732	0732	A/T 2ND GR FNCTN	2	X	AT-129
P0733	0733	A/T 3RD GR FNCTN	2	X	AT-135
P0734	0734	A/T 4TH GR FNCTN	2	X	AT-141
P0740	0740	TCC SOLENOID/CIRC	2	X	AT-151
P0744	0744	A/T TCC S/V FNCTN	2	X	AT-156
P0745	0745	L/PRESS SOL/CIRC	2	X	AT-165
P0750	0750	SFT SOL A/CIRC	1	X	AT-171
P0755	0755	SFT SOL B/CIRC	1	X	AT-175
P1065	1065	ECM BACK UP/CIRCUIT	2	X	EC-443
P1110	1110	INT/V TIM CONT-B1	2	X	EC-448
P1111	1111	INT/V TIM V/CIR-B1	2	X	EC-451
P1121	1121	ETC ACTR	1	X	EC-457
P1122	1122	ETC FUNCTION/CIRC	1	X	EC-459
P1124	1124	ETC MOT PWR	1	X	EC-467
P1126	1126	ETC MOT PWR	1	X	EC-467
P1128	1128	ETC MOT	1	X	EC-472

DTC No. Index (Cont'd)

DTC*1		Items (CONSULT-II screen terms)	Trip	MIL lighting up	Reference page
CONSULT-II GST*2	ECM*3				
P1130	1130	SWIRL CONT SOL/V	2	X	EC-477
P1131	1131	SWIRL CONT SOL/V	2	X	EC-498
P1135	1135	INT/V TIM CONT-B2	2	X	EC-448
P1136	1136	INT/V TIM V/CIR-B2	2	X	EC-451
P1143	1143	HO2S1 (B1)	2	X	EC-504
P1144	1144	HO2S1 (B1)	2	X	EC-512
P1146	1146	HO2S2 (B1)	2	X	EC-521
P1147	1147	HO2S2 (B1)	2	X	EC-531
P1148	1148	CLOSED LOOP-B1	1	X	EC-541
P1163	1163	HO2S1 (B2)	2	X	EC-504
P1164	1164	HO2S1 (B2)	2	X	EC-512
P1165	1165	SWL CON VC SW/CIRC	2	X	EC-543
P1166	1166	HO2S2 (B2)	2	X	EC-521
P1167	1167	HO2S2 (B2)	2	X	EC-531
P1168	1168	CLOSED LOOP-B2	1	X	EC-541
P1211	1211	TCS C/U FUNCTN	2	—	EC-549
P1212	1212	TCS/CIRC	2	—	EC-551
P1217	1217	ENG OVER TEMP	1	X	EC-553
P1225	1225	CTP LEARNING	2	—	EC-558
P1226	1226	CTP LEARNING	2	—	EC-560
P1229	1229	SENSOR POWER/CIRC	1	X	EC-562
P1442	1442	EVAP SMALL LEAK	2	X	EC-567
P1444	1444	PURG VOLUME CONT/V	2	X	EC-582
P1446	1446	VENT CONTROL VALVE	2	X	EC-594
P1448	1448	VENT CONTROL VALVE	2	X	EC-602
P1456	1456	EVAP VERY SML LEAK	2	X	EC-611
P1490	1490	VC/V BYPASS/V	2	X	EC-627
P1491	1491	VC CUT/V BYPASS/V	2	X	EC-633
P1564	1564	ASCD SW	1	—	EC-645
P1572	1572	ASCD BRAKE SW	1	—	EC-652
P1610 - P1615	1610 - 1615	NATS MALFUNCTION	2	—	EL-389
P1705	1705	TP SEN/CIRC A/T	1	X	AT-179
P1706	1706	P-N POS SW/CIRCUIT	2	X	EC-663
P1760	1760	O/R CLTCH SOL/CIRC	2	X	AT-185
P1805	1805	BRAKE SW/CIRCUIT	2	—	EC-669
P2122	2122	APP SEN 1/CIRC	1	X	EC-675

DTC*1		Items (CONSULT-II screen terms)	Trip	MIL lighting up	Reference page
CONSULT-II GST*2	ECM*3				
P2123	2123	APP SEN 1/CIRC	1	X	EC-675
P2127	2127	APP SEN 2/CIRC	1	X	EC-682
P2128	2128	APP SEN 2/CIRC	1	X	EC-682
P2135	2135	TP SENSOR	1	X	EC-690
P2138	2138	APP SENSOR	1	X	EC-697

*1: 1st trip DTC No. is the same as DTC No.
*2: This number is prescribed by SAE J2012.
*3: In Diagnostic Test Mode II (Self-diagnostic results), this number is controlled by NISSAN.
*4: When engine is running.
*5: The troubleshooting for this DTC needs CONSULT-II.
*6: When the fail-safe operations for both self-diagnoses occur, the MIL illuminates.

Supplemental Restraint System (SRS) "AIR BAG" and "SEAT BELT PRE-TENSIONER"

NAEC0002

The Supplemental Restraint System such as "AIR BAG" and "SEAT BELT PRE-TENSIONER" used along with a seat belt, helps to reduce the risk or severity of injury to the driver and front passenger for certain types of collision. The SRS composition which is available to NISSAN MODEL R50 is as follows:

- For a frontal collision
  The Supplemental Restraint System consists of driver air bag module (located in the center of the steering wheel), front passenger air bag module (located on the instrument panel on passenger side), seat belt pre-tensioners, a diagnosis sensor unit, warning lamp, wiring harness and spiral cable.
- For a side collision
  The Supplemental Restraint System consists of side air bag module (located in the outer side of front seat), side curtain air bag module (located in the headliner side of front and rear seat), satellite sensor, diagnosis sensor unit (one of components of air bags for a frontal collision), wiring harness, warning lamp (one of components of air bags for a frontal collision).

Information necessary to service the system safely is included in the **RS section** of this Service Manual.

WARNING:

- **To avoid rendering the SRS inoperative, which could increase the risk of personal injury or death in the event of a collision which would result in air bag inflation, all maintenance must be performed by an authorized NISSAN dealer.**
- **Improper maintenance, including incorrect removal and installation of the SRS, can lead to personal injury caused by unintentional activation of the system. For removal of Spiral Cable and Air Bag Module, refer to RS section.**
- **Do not use electrical test equipment on any circuit related to the SRS unless instructed to in this Service Manual. SRS wiring harnesses can be identified by yellow and/or orange harness connector (and by yellow harness protector or yellow insulation tape before the harness connectors).**

Precautions for On Board Diagnostic (OBD) System of Engine and A/T

NAEC0003

The ECM has an on board diagnostic system. It will light up the malfunction indicator lamp (MIL) to warn the driver of a malfunction causing emission deterioration.

CAUTION:

- **Be sure to turn the ignition switch OFF and disconnect the negative battery terminal before any repair or inspection work. The open/short circuit of related switches, sensors, solenoid valves, etc. will cause the MIL to light up.**
- **Be sure to connect and lock the connectors securely after work. A loose (unlocked) connector will cause the MIL to light up due to the open circuit. (Be sure the connector is free from water, grease, dirt, bent terminals, etc.)**
- **Certain systems and components, especially those related to OBD, may use a new style slide-locking type harness connector. For description and how to disconnect, refer to EL-8, "HARNESS CONNECTOR (SLIDE-LOCKING TYPE)".**
- **Be sure to route and secure the harnesses properly after work. The interference of the harness with a bracket, etc. may cause the MIL to light up due to the short circuit.**
- **Be sure to connect rubber tubes properly after work. A misconnected or disconnected rubber tube may cause the MIL to light up due to the malfunction of the fuel injection system, etc.**
- **Be sure to erase the unnecessary malfunction information (repairs completed) from the ECM and TCM (Transmission control module) before returning the vehicle to the customer.**

Engine Fuel & Emission Control System

NAEC0004

ECM
- Do not disassemble ECM.
- If a battery terminal is disconnected, the memory will return to the ECM value.
  The ECM will not start to self-control at its initial value. Engine operation can vary slightly when the terminal is disconnected. However, this is not an indication of a malfunction. Do not replace parts because of a slight variation.

WIRELESS EQUIPMENT
- When installing CB ham radio or a mobile phone, be sure to observe the following as it may adversely affect electronic control systems depending on its installation location.

1) Keep the antenna as far away as possible from the electronic control units.
2) Keep the antenna feeder line more than 20 cm (7.9 in) away from the harness of electronic controls.
   Do not let them run parallel for a long distance.
3) Adjust the antenna and feeder line so that the standing-wave ratio can be kept smaller.
4) Be sure to ground the radio to vehicle body.

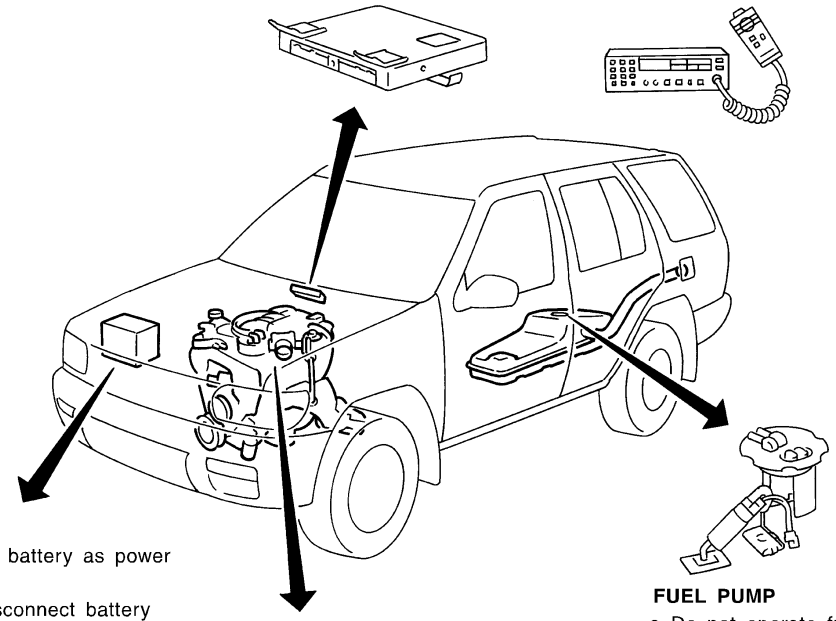

BATTERY
- Always use a 12 volt battery as power source.
- Do not attempt to disconnect battery cables while engine is running.

WHEN STARTING
- Do not depress accelerator pedal when starting.
- Immediately after starting, do not rev up engine unnecessarily.
- Do not rev up engine just prior to shutdown.

ENGINE CONTROL SYSTEM PARTS HANDLING
- Handle mass air flow sensor carefully to avoid damage.
- Do not disassemble mass air flow sensor.
- Do not clean mass air flow sensor with any type of detergent.
- Do not disassemble electric throttle control actuator.
- Even a slight leak in the air intake system can cause serious incidents.
- Do not shock or jar the camshaft position sensor (PHASE) or crankshaft position sensor (POS).

FUEL PUMP
- Do not operate fuel pump when there is no fuel in lines.
- Tighten fuel hose clamps to the specified torque. (Refer to MA section.)

ENGINE CONTROL SYSTEM HARNESS HANDLING
- Securely connect ECM harness connectors.
  A poor connection can cause an extremely high (surge) voltage to develop in coil and condenser, thus resulting in damage to ICs.
- Keep engine control system harness at least 10 cm (3.9 in.) away from adjacent harnesses to prevent an engine control system malfunction due to receiving external noise, degraded operation of ICs, etc.
- Keep engine control system parts and harnesses dry.
- Before removing parts, turn off ignition switch and then disconnect battery ground cable.

SEF952RG

Precautions

NAEC0005

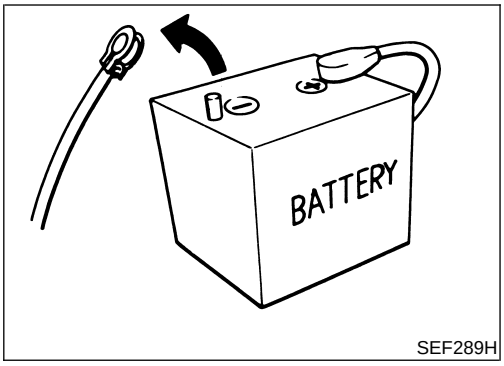

SEF289H

- **Before connecting or disconnecting the ECM harness connector, turn ignition switch OFF and disconnect negative battery terminal. Failure to do so may damage the ECM because battery voltage is applied to ECM even if ignition switch is turned off.**

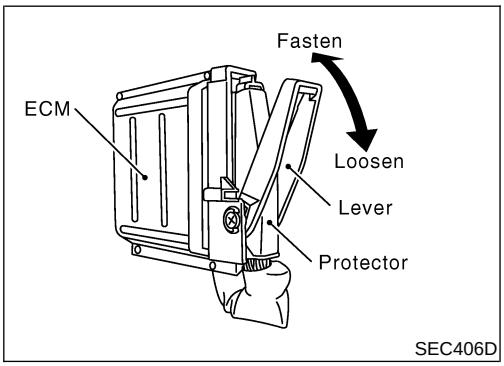

SEC406D

- **When connecting ECM harness connector, fasten it securely with a lever as far as it will go as shown at left.**

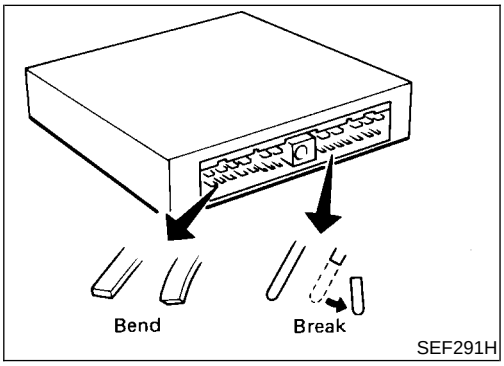

SEF291H

- **When connecting or disconnecting pin connectors into or from ECM, take care not to damage pin terminals (bend or break).**
  Make sure that there are not any bends or breaks on ECM pin terminal, when connecting pin connectors.

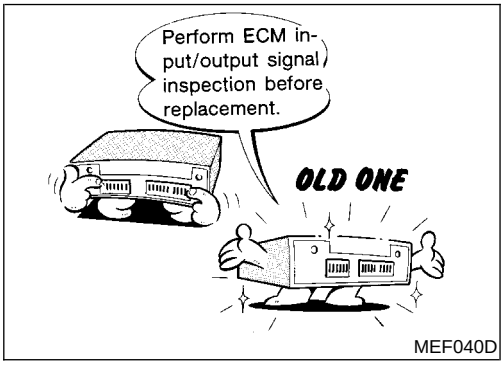

MEF040D

- **Before replacing ECM, perform "ECM Terminals and Reference Value" inspection and make sure ECM functions properly. Refer to EC-141.**

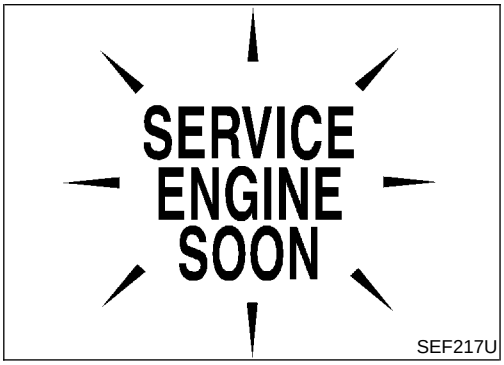

SEF217U

- **After performing each TROUBLE DIAGNOSIS, perform DTC Confirmation Procedure or Overall Function Check. The DTC should not be displayed in the DTC Confirmation Procedure if the repair is completed. The Overall Function Check should be a good result if the repair is completed.**

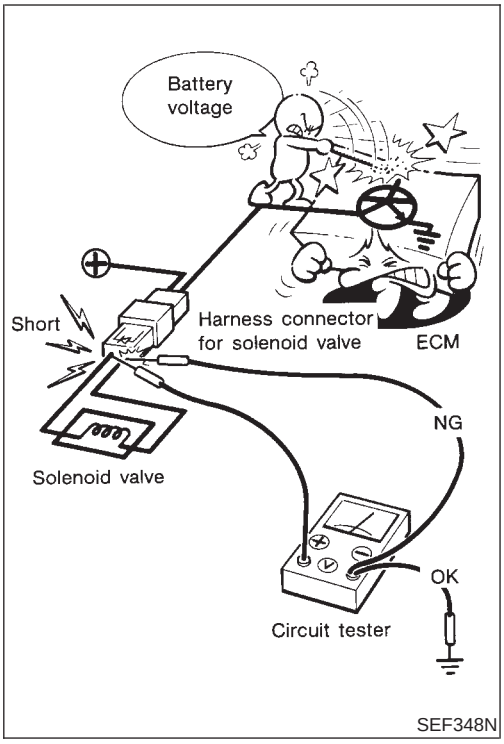

- **When measuring ECM signals with a circuit tester, never allow the two tester probes to contact.**
  Accidental contact of probes will cause a short circuit and damage the ECM power transistor.
- **Do not use ECM ground terminals when measuring input/output voltage. Doing so may result in damage to the ECM's transistor. Use a ground other than the ECM terminals, such as the ground.**

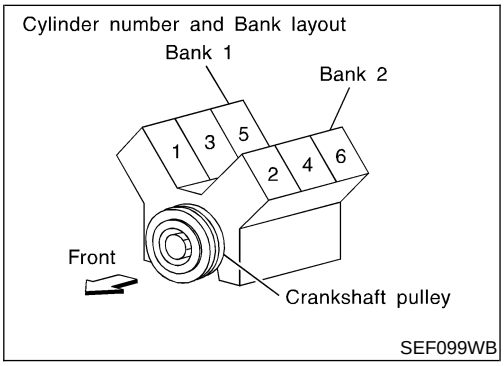

- **B1 indicates the bank 1 and B2 indicates the bank 2 as shown in the figure.**
- **Bank 1 includes No. 1 cylinder.**

Wiring Diagrams and Trouble Diagnosis

NAEC0006

When you read Wiring diagrams, refer to the following:

- GI-11, "HOW TO READ WIRING DIAGRAMS"
- EL-11, "POWER SUPPLY ROUTING" for power distribution circuit

When you perform trouble diagnosis, refer to the following:

- GI-35, "HOW TO FOLLOW TEST GROUPS IN TROUBLE DIAGNOSES"
- GI-24, "HOW TO PERFORM EFFICIENT DIAGNOSIS FOR AN ELECTRICAL INCIDENT"

Special Service Tools

NAEC0007

The actual shapes of Kent-Moore tools may differ from those of special service tools illustrated here.

Tool number (Kent-Moore No.) Tool name	Description	
EG17650301 (J-33984-A) Radiator cap tester adapter	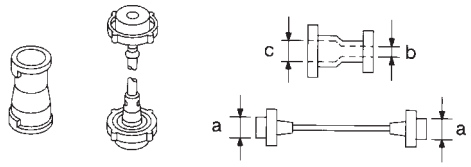 NT564	Adapting radiator cap tester to radiator cap and radiator filler neck **a: 28 (1.10) dia.** **b: 31.4 (1.236) dia.** **a: 41.3 (1.626) dia.** Unit: mm (in)
KV10117100 (J-36471-A) Heated oxygen sensor wrench	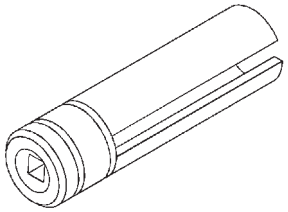 NT379	Loosening or tightening heated oxygen sensors with 22 mm (0.87 in) hexagon nut
(J-44321) Fuel pressure gauge kit	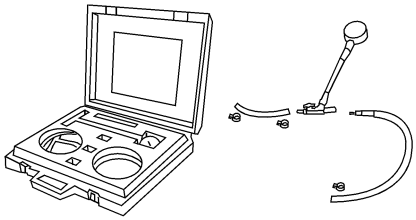 LEC642	Checking fuel pressure with pressure gauge
KV109E0010 (J-46209) Break-out box	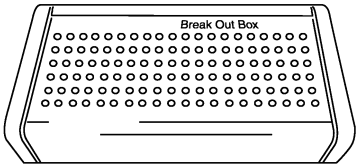 NT825	Measuring the ECM signals with a circuit tester
KV109E0080 (J-45819) Y-cable adapter	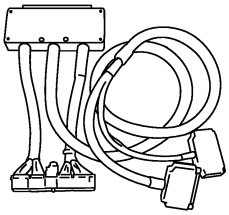 NT826	Measuring the ECM signals with a circuit tester

Commercial Service Tools

NAEC0008

Tool name (Kent-Moore No.)	Description	
Fuel filler cap adapter (i.e.: MLR-8382)	NT815	Checking fuel tank vacuum relief valve opening pressure
Leak detector (i.e., J-41416)	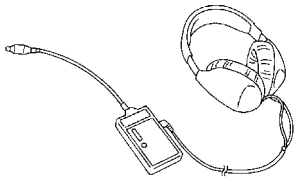 NT703	Locating the EVAP leak
EVAP service port adapter (i.e., J-41413-OBD)	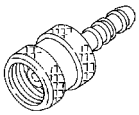 NT704	Applying positive pressure through EVAP service port
Socket wrench	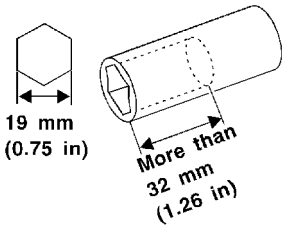 NT705	Removing and installing engine coolant temperature sensor
Oxygen sensor thread cleaner i.e.: (J-43897-18) (J-43897-12)	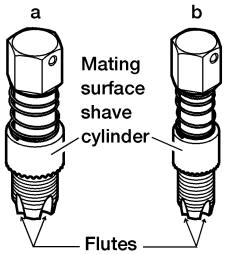 AEM488	Reconditioning the exhaust system threads before installing a new oxygen sensor. Use with anti-seize lubricant shown below. **a: J-43897-18 18 mm diameter with pitch 1.5 mm, for Zirconia Oxygen Sensor** **b: J-43897-12 12 mm diameter with pitch 1.25 mm, for Titania Oxygen Sensor**

Commercial Service Tools (Cont'd)

Tool name (Kent-Moore No.)	Description	
Anti-seize lubricant i.e.: (Permatex™ 133AR or equivalent meeting MIL specification MIL-A-907)	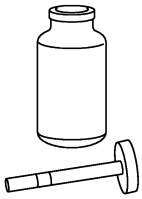 NT779	Lubricating oxygen sensor thread cleaning tool when reconditioning exhaust system threads.

Engine Control Component Parts Location

NAEC0009

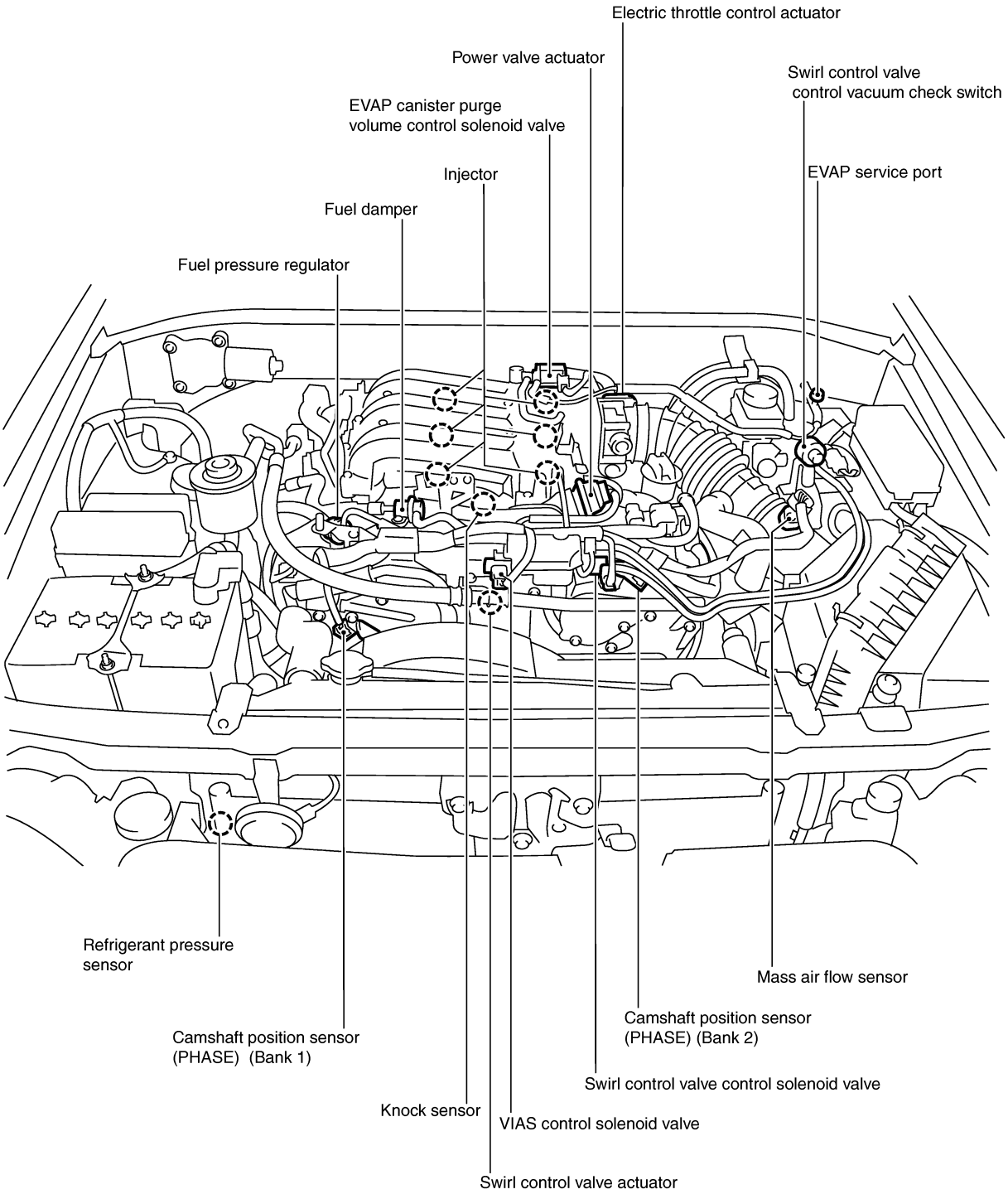

SEC407D

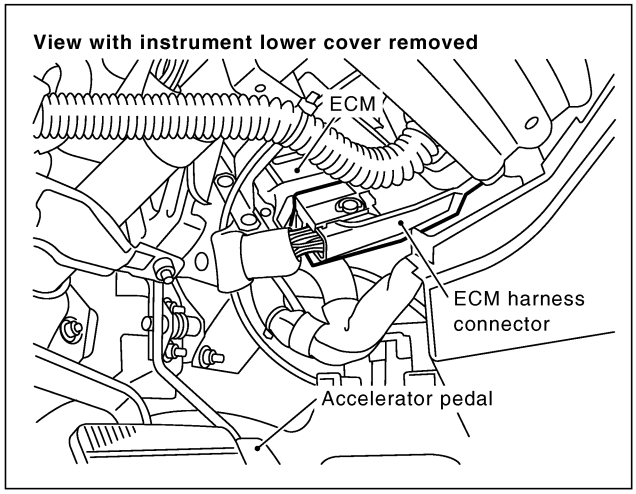
View with instrument lower cover removed
ECM
ECM harness connector
Accelerator pedal

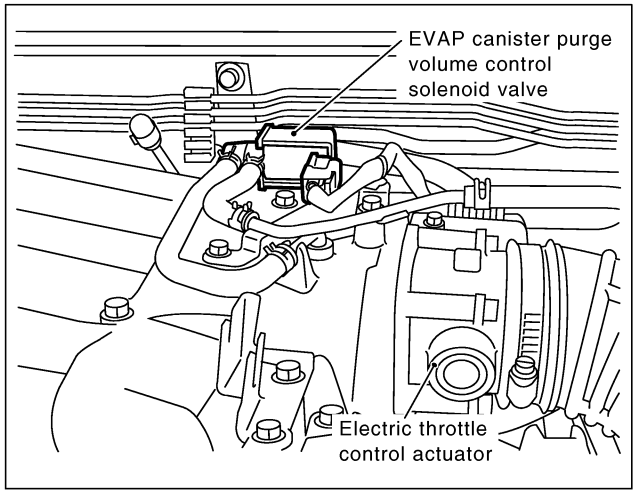
EVAP canister purge volume control solenoid valve
Electric throttle control actuator

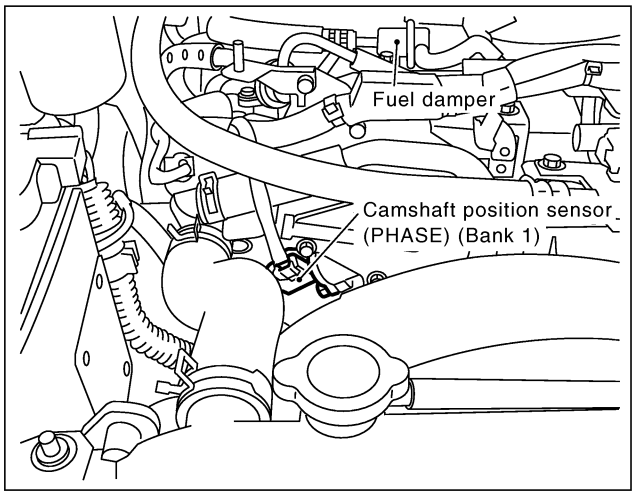
Fuel damper
Camshaft position sensor (PHASE) (Bank 1)

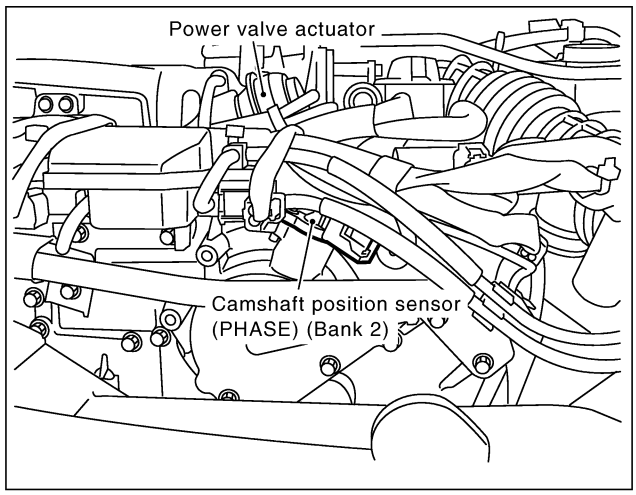
Power valve actuator
Camshaft position sensor (PHASE) (Bank 2)

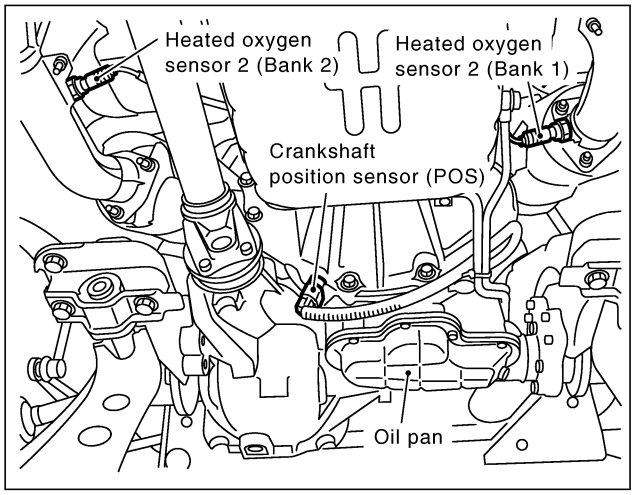
Heated oxygen sensor 2 (Bank 2)
Heated oxygen sensor 2 (Bank 1)
Crankshaft position sensor (POS)
Oil pan

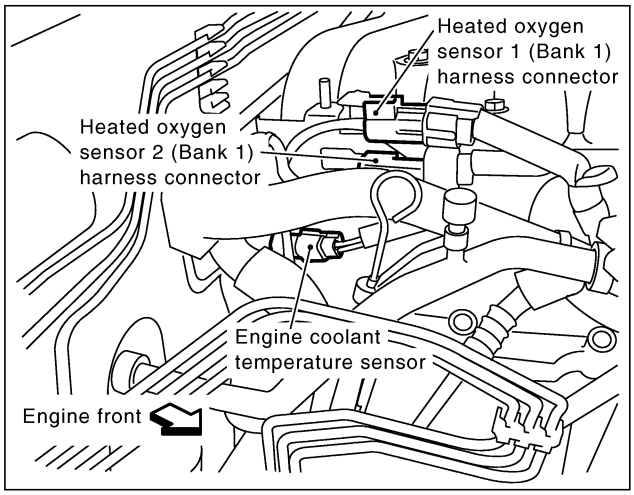
Heated oxygen sensor 1 (Bank 1) harness connector
Heated oxygen sensor 2 (Bank 1) harness connector
Engine coolant temperature sensor
Engine front

SEC408D

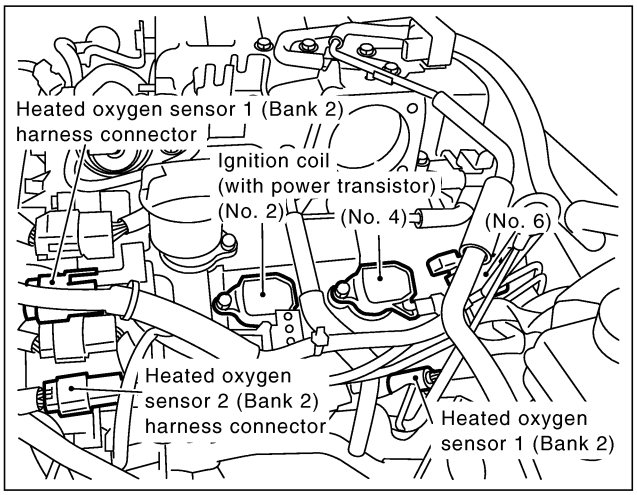
Heated oxygen sensor 1 (Bank 2) harness connector
Ignition coil (with power transistor) (No. 2)
(No. 4)
(No. 6)
Heated oxygen sensor 2 (Bank 2) harness connector
Heated oxygen sensor 1 (Bank 2)

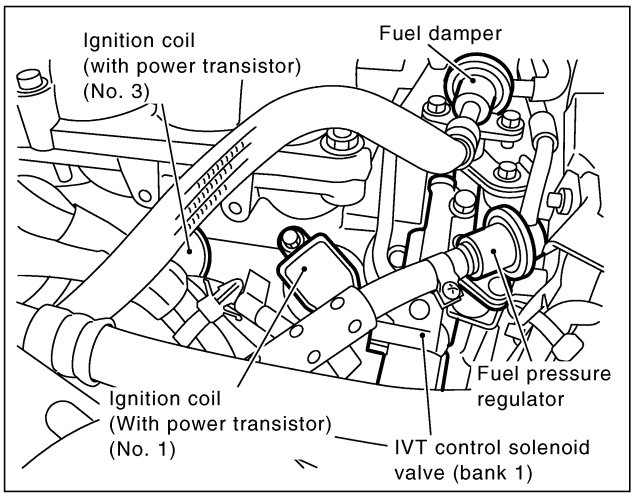
Ignition coil (with power transistor) (No. 3)
Fuel damper
Fuel pressure regulator
Ignition coil (With power transistor) (No. 1)
IVT control solenoid valve (bank 1)

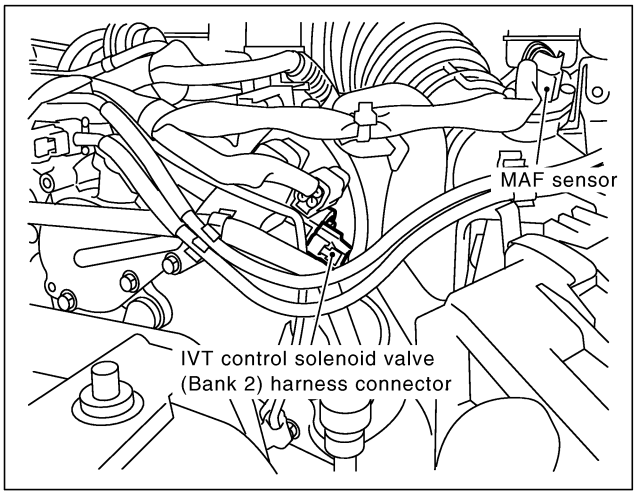
MAF sensor
IVT control solenoid valve (Bank 2) harness connector

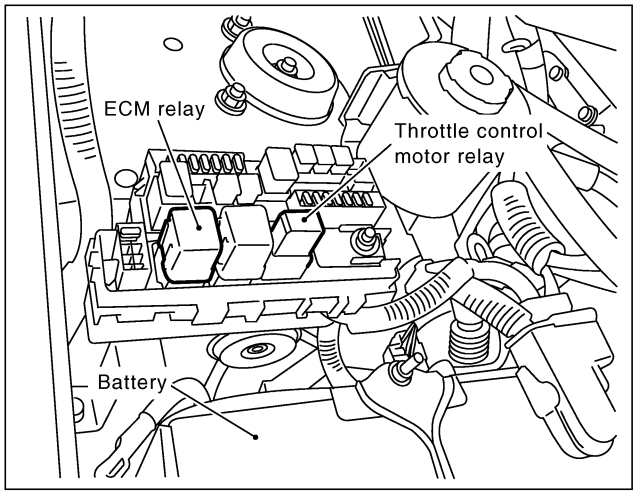
ECM relay
Throttle control motor relay
Battery

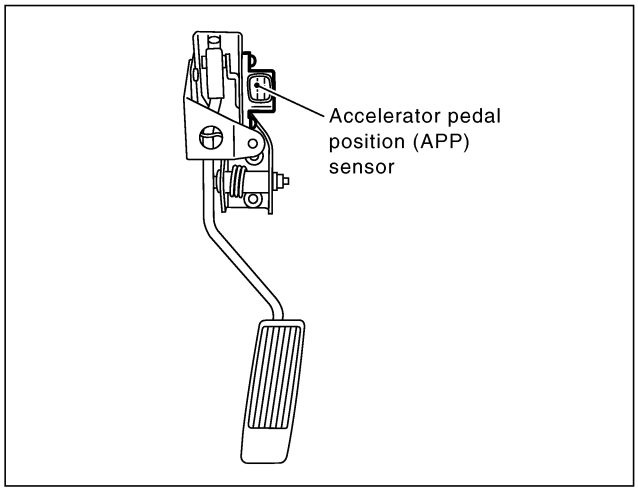
Accelerator pedal position (APP) sensor

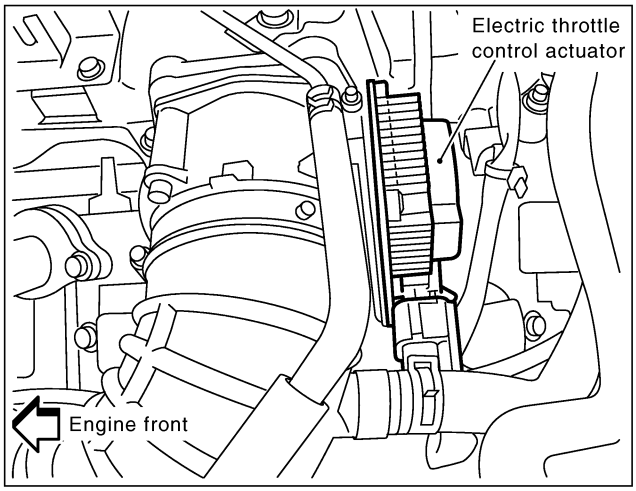
Electric throttle control actuator
Engine front

SEC409D

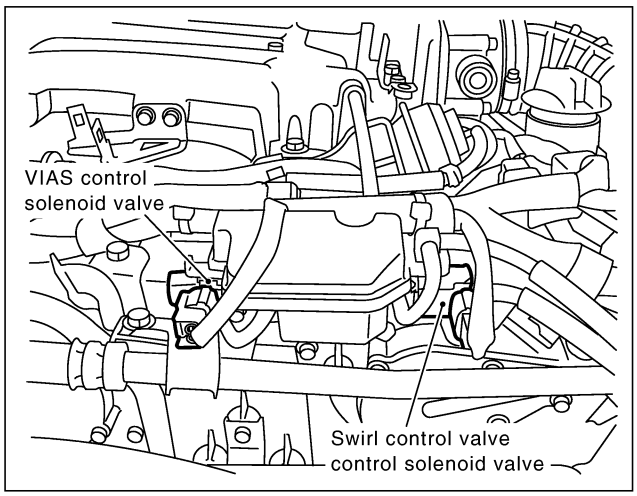
VIAS control
solenoid valve
Swirl control valve
control solenoid valve

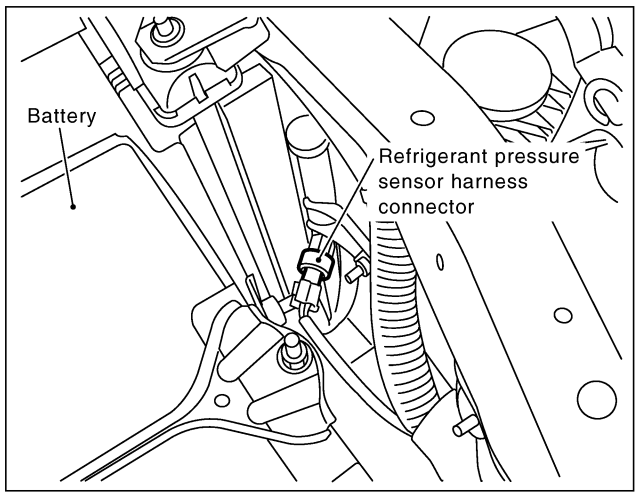
Battery
Refrigerant pressure
sensor harness
connector

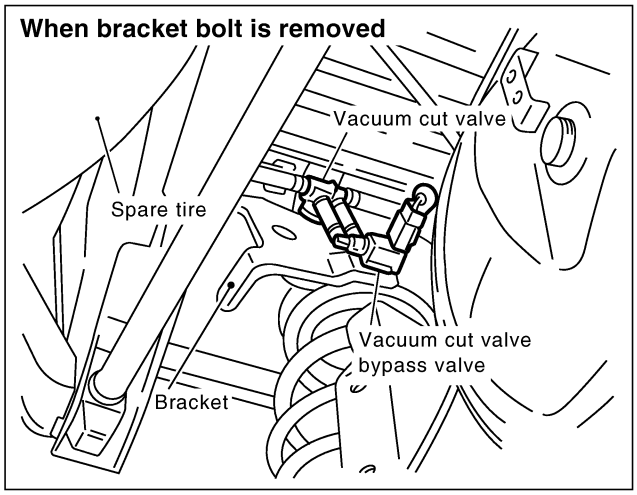
When bracket bolt is removed
Vacuum cut valve
Spare tire
Vacuum cut valve
bypass valve
Bracket

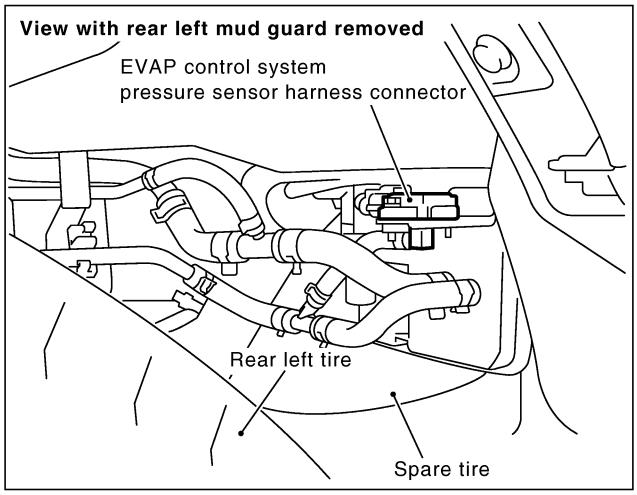
View with rear left mud guard removed
EVAP control system
pressure sensor harness connector
Rear left tire
Spare tire

SEC410D

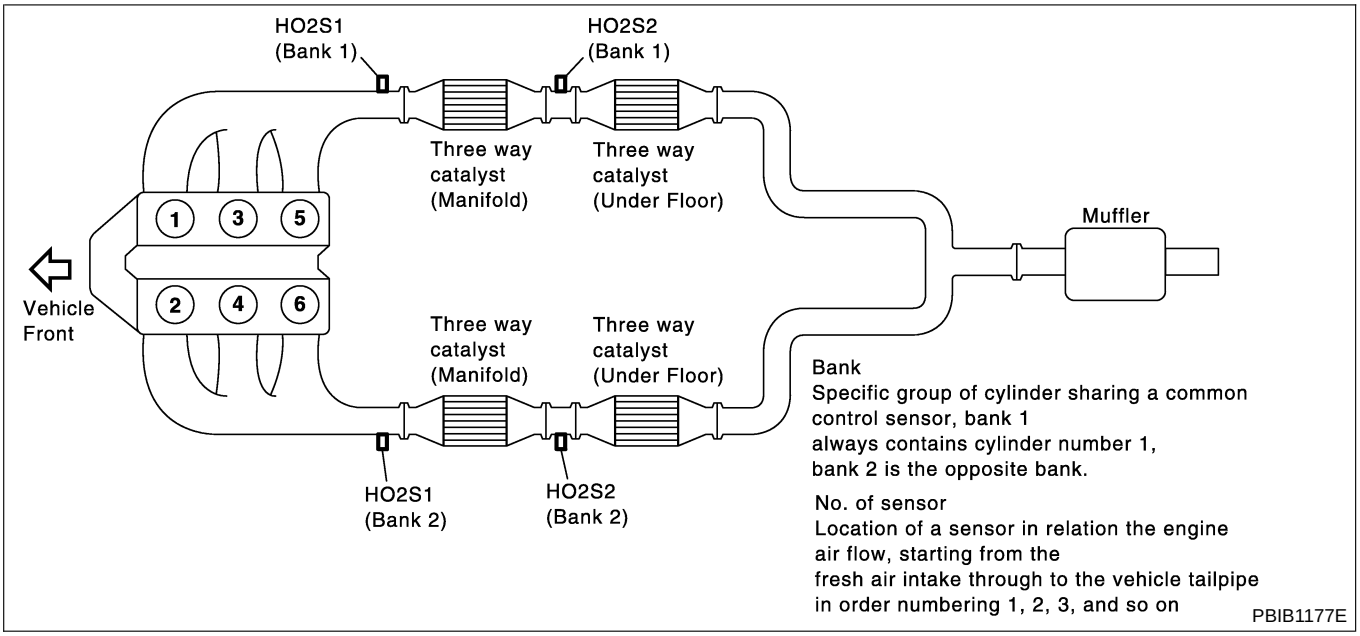
HO2S1
(Bank 1)
HO2S2
(Bank 1)
Three way
catalyst
(Manifold)
Three way
catalyst
(Under Floor)
Muffler
1
3
5
2
4
6
Vehicle
Front
Three way
catalyst
(Manifold)
Three way
catalyst
(Under Floor)
Bank
Specific group of cylinder sharing a common
control sensor, bank 1
always contains cylinder number 1,
bank 2 is the opposite bank.
HO2S1
(Bank 2)
HO2S2
(Bank 2)
No. of sensor
Location of a sensor in relation the engine
air flow, starting from the
fresh air intake through to the vehicle tailpipe
in order numbering 1, 2, 3, and so on
PBIB1177E

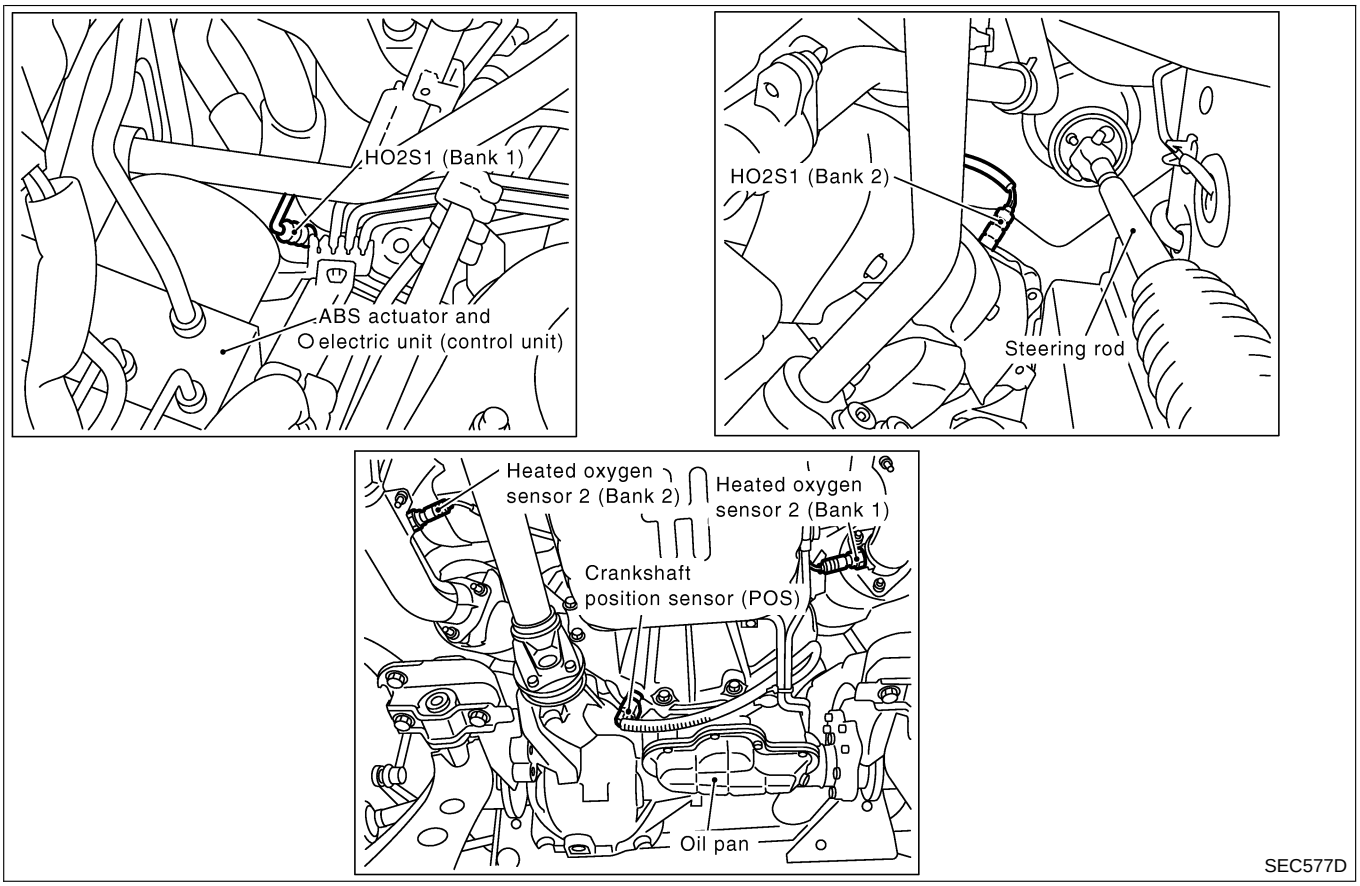
HO2S1 (Bank 1)
ABS actuator and
electric unit (control unit)
HO2S1 (Bank 2)
Steering rod
Heated oxygen
sensor 2 (Bank 2)
Heated oxygen
sensor 2 (Bank 1)
Crankshaft
position sensor (POS)
Oil pan
SEC577D

Circuit Diagram

NAEC0010

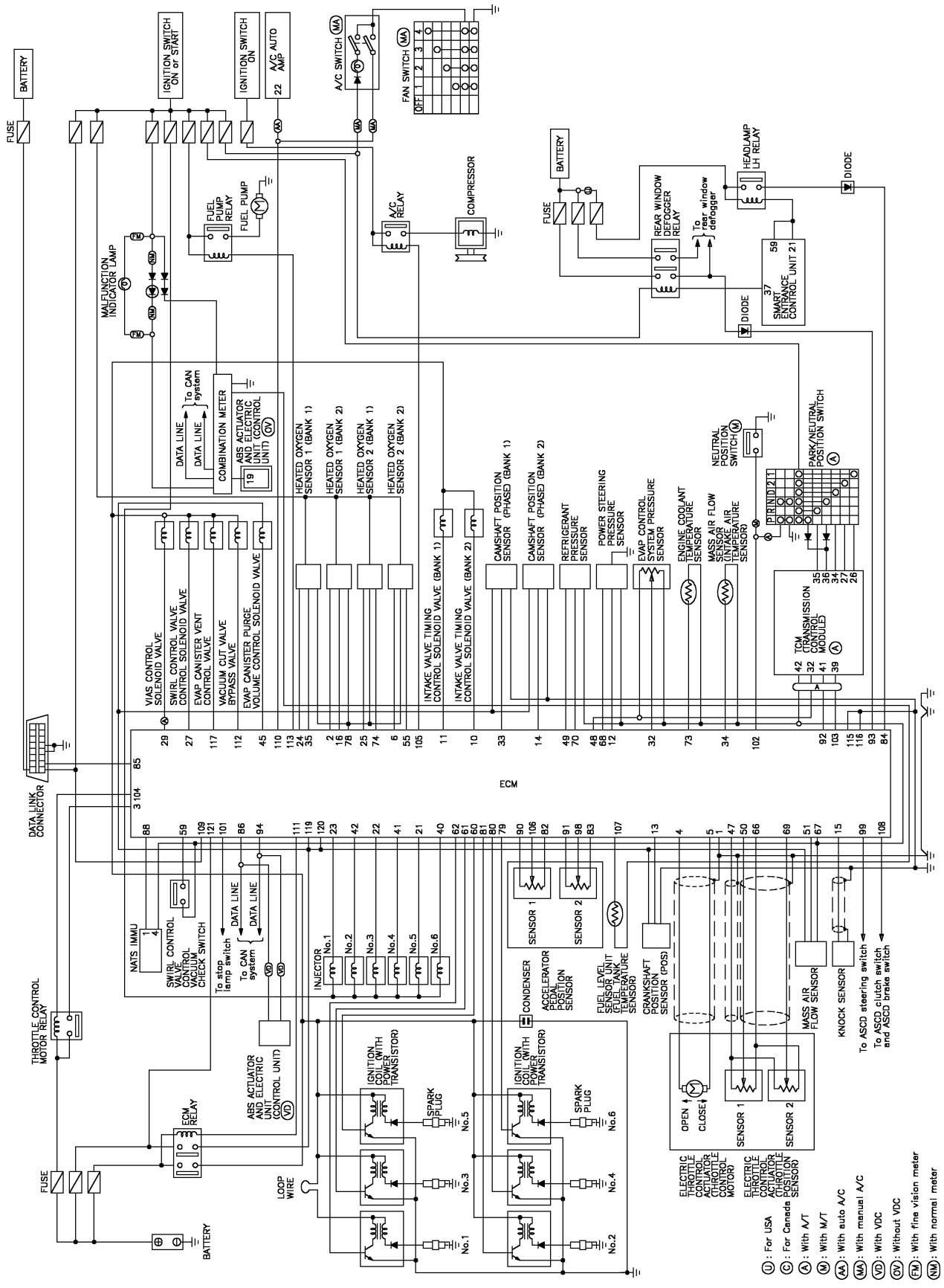

MEC663E

System Diagram

NAEC0011

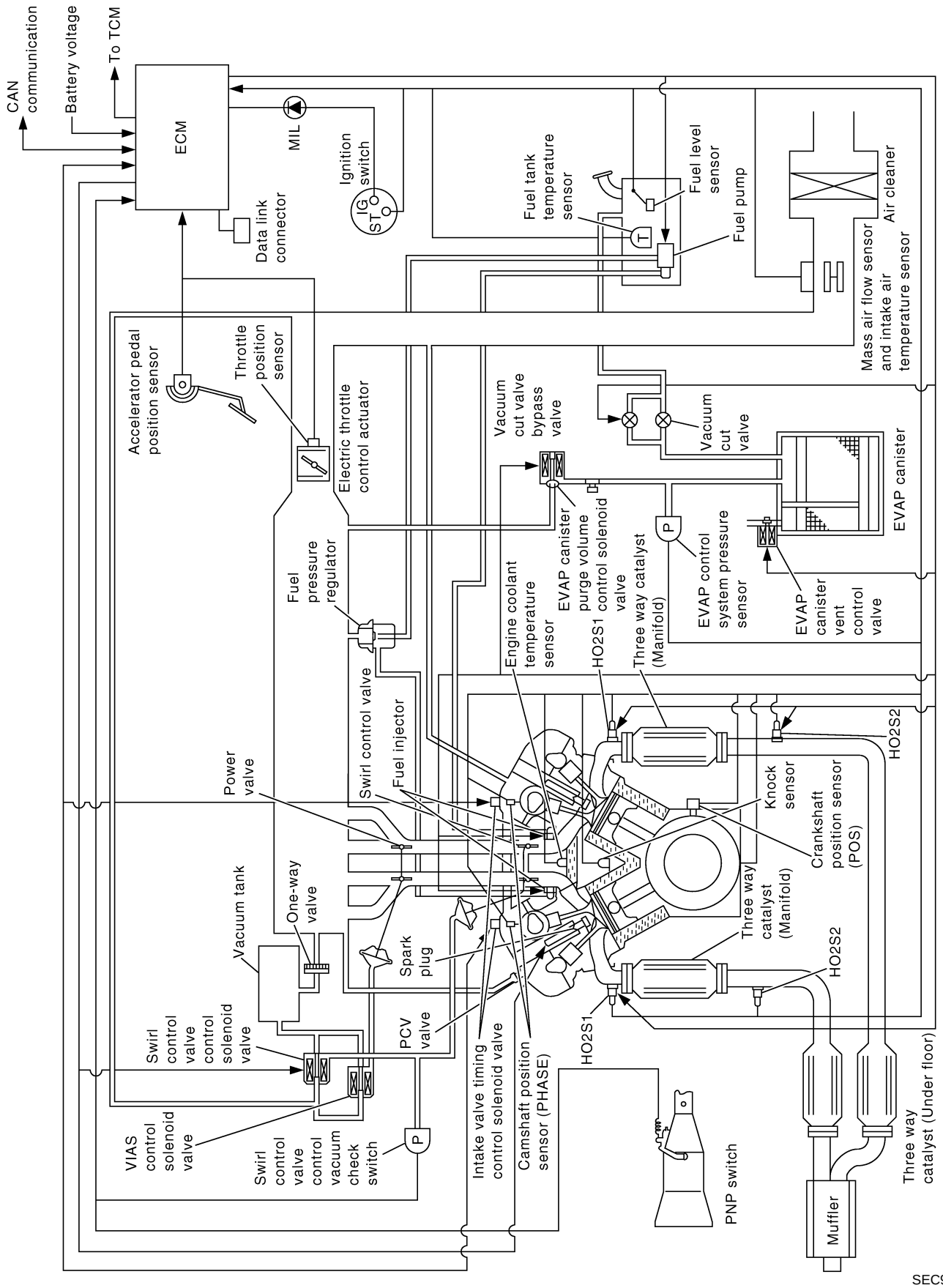

SEC946DA

Vacuum Hose Drawing

NAEC0012

Refer to “System Diagram”, EC-31 for Vacuum Control System.

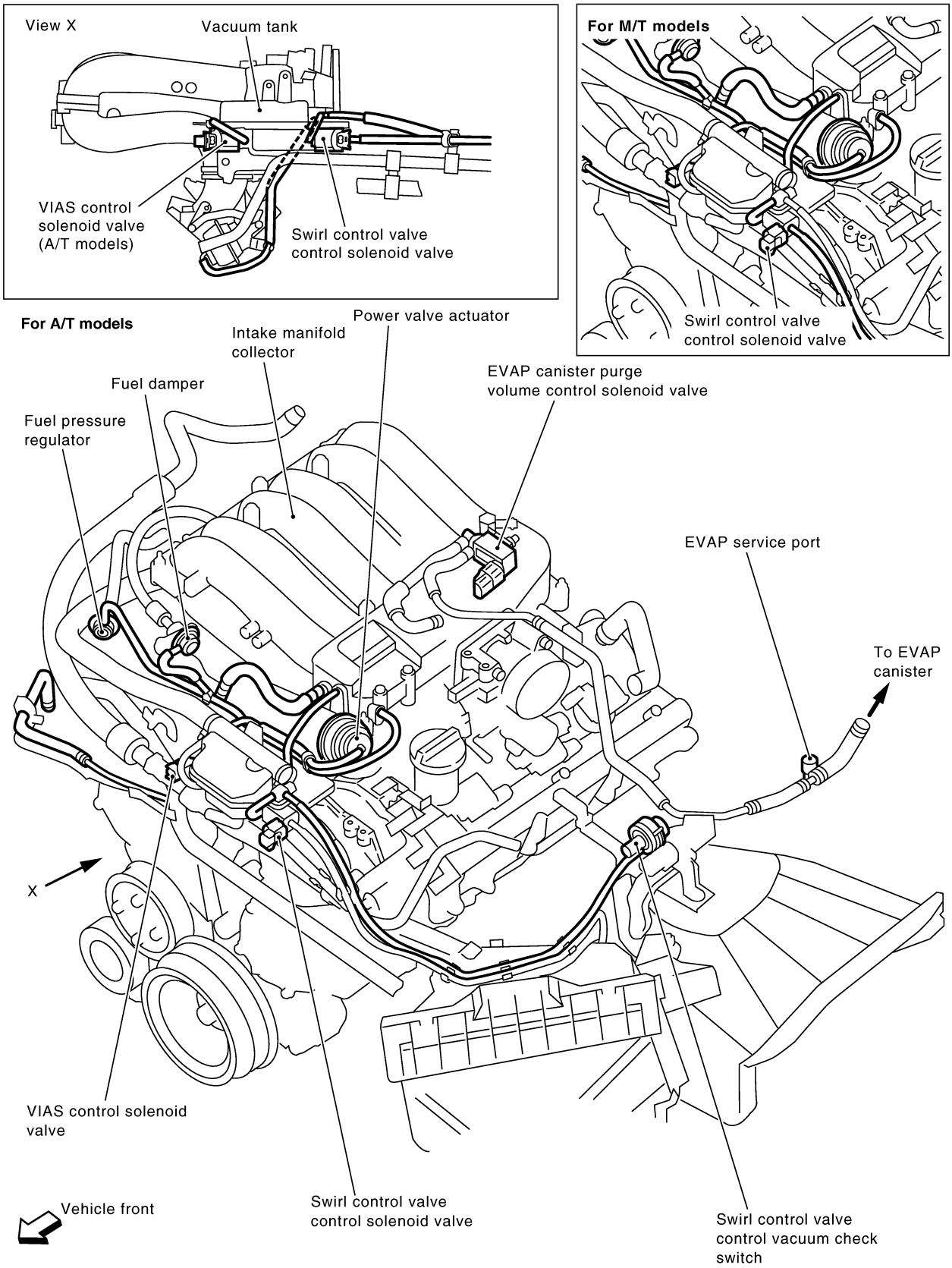

NOTE:
Do not use soapy water or any type of solvent while installing vacuum hose or purge hoses.

SEC413D

System Chart

NAEC0013

Input (Sensor)	ECM Function	Output (Actuator)
• Crankshaft position sensor (POS) • Camshaft position sensor (PHASE) • Mass air flow sensor • Engine coolant temperature sensor • Heated oxygen sensor 1 • Ignition switch • Throttle position sensor • Accelerator pedal position sensor • Park/neutral position (PNP) switch • Air conditioner switch • Knock sensor • Intake air temperature sensor • EVAP control system pressure sensor • Battery voltage • Power steering pressure sensor • Vehicle speed signal*3 • Fuel tank temperature sensor *1 • Heated oxygen sensor 2*2 • TCM (Transmission control module)*3 • ABS actuator and electric unit (Control unit)*3 • Refrigerant pressure sensor • Electrical load • Fuel level sensor*1, *3 • ASCD steering switch • ASCD brake switch • ASCD clutch switch (M/T models) • Stop lamp switch	Fuel injection & mixture ratio control	Injector
	Electronic ignition system	Power transistor
	Idle air control system ASCD vehicle speed control	Electric throttle control actuator
	Fuel pump control	Fuel pump relay
	On board diagnostic system	MIL (On the instrument panel)*4
	Swirl control valve control	Swirl control valve control solenoid valve
	Power valve control	VIAS control solenoid valve
	Heated oxygen sensor 1 heater control	Heated oxygen sensor 1 heater
	Heated oxygen sensor 2 heater control	Heated oxygen sensor 2 heater
	EVAP canister purge flow control	EVAP canister purge volume control solenoid valve
	Air conditioning cut control	Air conditioner relay
	ON BOARD DIAGNOSIS for EVAP system	• EVAP canister vent control valve • Vacuum cut valve bypass valve

*1: This sensor is not used to control the engine system. This is used only for the on board diagnosis.
*2: This sensor is not used to control the engine system under normal conditions.
*3: This input signal is sent to the ECM through CAN communication line.
*4: This output signal is sent from the ECM through CAN communication line.

Multiport Fuel Injection (MFI) System

DESCRIPTION

NAEC0014

Input/Output Signal Chart

NAEC0014S01

Sensor	Input Signal to ECM	ECM function	Actuator
Crankshaft position sensor (POS)	Engine speed*3 Piston position	Fuel injection & mixture ratio control	Injector
Camshaft position sensor (PHASE)			
Mass air flow sensor	Amount of intake air		
Engine coolant temperature sensor	Engine coolant temperature		
Heated oxygen sensor 1	Density of oxygen in exhaust gas		
Throttle position sensor	Throttle position		
Accelerator pedal position sensor	Accelerator pedal position		
Park/neutral position (PNP) switch	Gear position		
Vehicle speed signal*2	Vehicle speed		
Air conditioner switch	Air conditioner operation		
Knock sensor	Engine knocking condition		
Battery	Battery voltage*3		
EVAP control system pressure sensor	Ambient air barometric pressure		
Power steering pressure sensor	Power steering operation		
Heated oxygen sensor 2*1	Density of oxygen in exhaust gas		

*1: This sensor is not used to control the engine system under normal conditions.
*2: This signal is sent to the ECM through CAN communication line.
*3: ECM determines the start signal status by the signals of engine speed and battery voltage.

Basic Multiport Fuel Injection System

NAEC0014S02

The amount of fuel injected from the fuel injector is determined by the ECM. The ECM controls the length of time the valve remains open (injection pulse duration). The amount of fuel injected is a program value in the ECM memory. The program value is preset by engine operating conditions. These conditions are determined by input signals (for engine speed and intake air) from both the crankshaft position sensor and the mass air flow sensor.

Various Fuel Injection Increase/Decrease Compensation

NAEC0014S03

In addition, the amount of fuel injected is compensated to improve engine performance under various operating conditions as listed below.

<Fuel increase>

- During warm-up
- When starting the engine
- During acceleration
- Hot-engine operation
- When selector lever is changed from N to D
- High-load, high-speed operation

<Fuel decrease>

- During deceleration
- During high engine speed operation

Mixture Ratio Feedback Control (Closed loop control)

NAEC0014S04

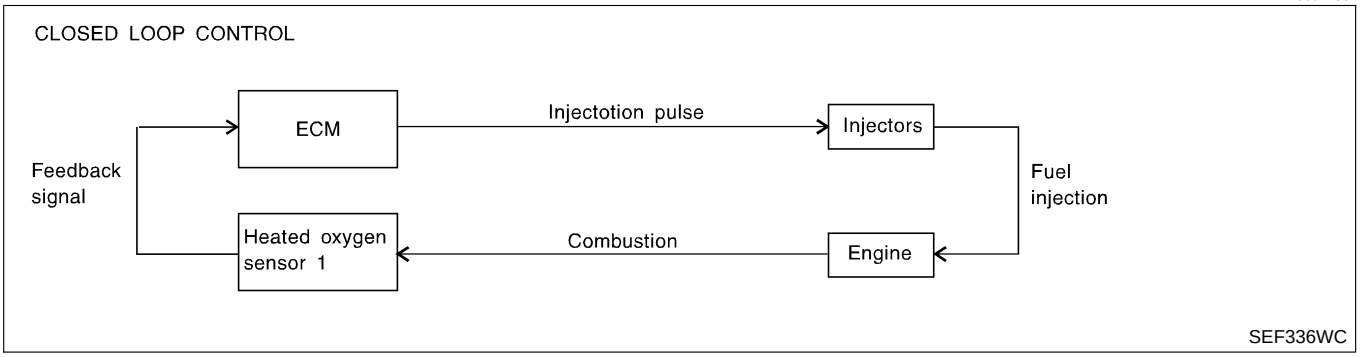

The mixture ratio feedback system provides the best air-fuel mixture ratio for driveability and emission control. The three way catalyst (manifold) can then better reduce CO, HC and NOx emissions. This system uses a heated oxygen sensor 1 in the exhaust manifold to monitor whether the engine operation is rich or lean. The ECM adjusts the injection pulse width according to the sensor voltage signal. For more information about the heated oxygen sensor 1, refer to EC-246. This maintains the mixture ratio within the range of stoichiometric (ideal air-fuel mixture).
This stage is referred to as the closed loop control condition.
Heated oxygen sensor 2 is located downstream of the three way catalyst (manifold). Even if the switching characteristics of the heated oxygen sensor 1 shift, the air-fuel ratio is controlled to stoichiometric by the signal from the heated oxygen sensor 2.

Open Loop Control

NAEC0014S05

The open loop system condition refers to when the ECM detects any of the following conditions. Feedback control stops in order to maintain stabilized fuel combustion.

- Deceleration and acceleration
- High-load, high-speed operation
- Malfunction of heated oxygen sensor 1 or its circuit
- Insufficient activation of heated oxygen sensor 1 at low engine coolant temperature
- High engine coolant temperature
- During warm-up
- After shifting from N to D (A/T models)
- When starting the engine

Mixture Ratio Self-learning Control

NAEC0014S06

The mixture ratio feedback control system monitors the mixture ratio signal transmitted from the heated oxygen sensor 1. This feedback signal is then sent to the ECM. The ECM controls the basic mixture ratio as close to the theoretical mixture ratio as possible. However, the basic mixture ratio is not necessarily controlled as originally designed. Both manufacturing differences (i.e., mass air flow sensor hot wire) and characteristic changes during operation (i.e., injector clogging) directly affect mixture ratio.
Accordingly, the difference between the basic and theoretical mixture ratios is monitored in this system. This is then computed in terms of "injection pulse duration" to automatically compensate for the difference between the two ratios.
"Fuel trim" refers to the feedback compensation value compared against the basic injection duration. Fuel trim includes short term fuel trim and long term fuel trim.
"Short term fuel trim" is the short-term fuel compensation used to maintain the mixture ratio at its theoretical value. The signal from the heated oxygen sensor 1 indicates whether the mixture ratio is RICH or LEAN compared to the theoretical value. The signal then triggers a reduction in fuel volume if the mixture ratio is rich, and an increase in fuel volume if it is lean.
"Long term fuel trim" is overall fuel compensation carried out long-term to compensate for continual deviation of the short term fuel trim from the central value. Such deviation will occur due to individual engine differences, wear over time and changes in the usage environment.

Fuel Injection Timing

NAEC0014S07

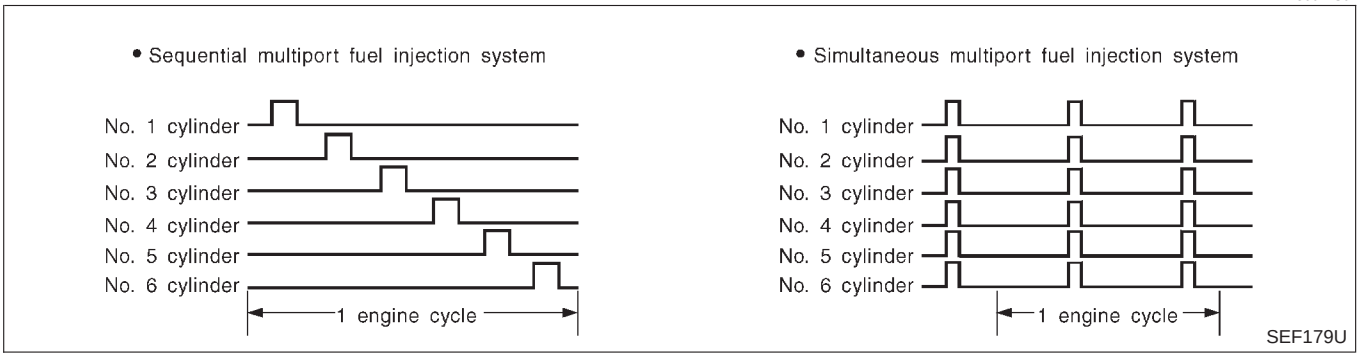

Two types of systems are used.

Sequential Multiport Fuel Injection System

NAEC0014S0701

Fuel is injected into each cylinder during each engine cycle according to the firing order. This system is used when the engine is running.

Simultaneous Multiport Fuel Injection System

NAEC0014S0702

Fuel is injected simultaneously into all six cylinders twice each engine cycle. In other words, pulse signals of the same width are simultaneously transmitted from the ECM.
The six injectors will then receive the signals two times for each engine cycle.
This system is used when the engine is being started and/or if the fail-safe system (CPU) is operating.

Fuel Shut-off

NAEC0014S08

Fuel to each cylinder is cut off during deceleration or operation of the engine at excessively high speeds.

Electronic Ignition (EI) System

DESCRIPTION

NAEC0015

Input/Output Signal Chart

NAEC0015S01

Sensor	Input Signal to ECM	ECM function	Actuator
Crankshaft position sensor (POS)	Engine speed*2 Piston position	Ignition timing control	Power transistor
Camshaft position sensor (PHASE)			
Mass air flow sensor	Amount of intake air		
Engine coolant temperature sensor	Engine coolant temperature		
Throttle position sensor	Throttle position		
Accelerator pedal position sensor	Accelerator pedal position		
Vehicle speed signal*1	Vehicle speed		
Knock sensor	Engine knocking		
Park/neutral position (PNP) switch	Gear position		
Battery	Battery voltage*2		

*1: This signal is sent to the ECM through CAN communication line.
*2: ECM determines the start signal status by the signals of engine speed and battery voltage.

System Description

NAEC0015S02

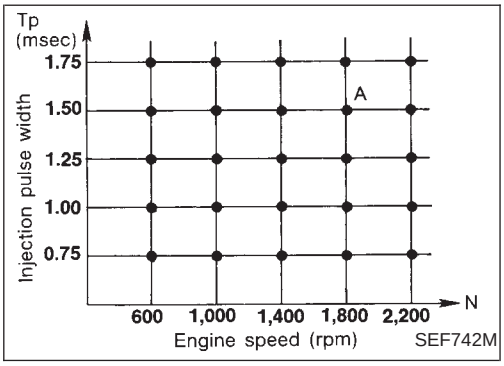

The ignition timing is controlled by the ECM to maintain the best air-fuel ratio for every running condition of the engine. The ignition timing data is stored in the ECM. This data forms the map shown.
The ECM receives information such as the injection pulse width and camshaft position sensor signal. Computing this information, ignition signals are transmitted to the power transistor.
e.g., N: 1,800 rpm, Tp: 1.50 msec
A °BTDC
During the following conditions, the ignition timing is revised by the ECM according to the other data stored in the ECM.

- At starting
- During warm-up
- At idle
- At low battery voltage
- During acceleration

The knock sensor retard system is designed only for emergencies. The basic ignition timing is programmed within the anti-knocking zone, if recommended fuel is used under dry conditions. The retard system does not operate under normal driving conditions. If engine knocking occurs, the knock sensor monitors the condition. The signal is transmitted to the ECM. The ECM retards the ignition timing to eliminate the knocking condition.

Air Conditioning Cut Control

DESCRIPTION

NAEC0016

Input/Output Signal Chart

NAEC0016S01

Sensor	Input Signal to ECM	ECM function	Actuator
Air conditioner switch*1	Air conditioner ON signal	Air conditioner cut control	Air conditioner relay
Throttle position sensor	Throttle position		
Accelerator pedal position sensor	Accelerator pedal position		
Crankshaft position sensor (POS) Camshaft position sensor (PHASE)	Engine speed*2		
Engine coolant temperature sensor	Engine coolant temperature		
Vehicle speed signal*1	Vehicle speed		
Refrigerant pressure sensor	Refrigerant pressure		
Power steering pressure sensor	Power steering operation		
Battery	Battery voltage*2		

*1: This signal is sent to the ECM through CAN communication line.
*2: ECM determines the start signal status by the signals of engine speed and battery voltage.

System Description

NAEC0016S02

This system improves engine operation when the air conditioner is used.
Under the following conditions, the air conditioner is turned off.

- When the accelerator pedal is fully depressed.

- When cranking the engine.
- At high engine speeds.
- When the engine coolant temperature becomes excessively high.
- When operating power steering during low engine speed or low vehicle speed.
- When engine speed is excessively low.
- When refrigerant pressure is excessively low or high.

Fuel Cut Control (at no load & high engine speed)

DESCRIPTION

NAEC0017

Input/Output Signal Chart

NAEC0017S01

Sensor	Input Signal to ECM	ECM function	Actuator
Vehicle speed signal*1	Vehicle speed	Fuel cut control	Injector
Park/neutral position (PNP) switch	Neutral position		
Accelerator pedal position sensor	Accelerator pedal position		
Engine coolant temperature sensor	Engine coolant temperature		
Crankshaft position sensor (POS) Camshaft position sensor (PHASE)	Engine speed		

*1: This signal is sent to the ECM through CAN communication line.

If the engine speed is above 1,800 rpm under no load (for example, the shift position is neutral and engine speed is over 1,800 rpm) fuel will be cut off after some time. The exact time when the fuel is cut off varies based on engine speed.
Fuel cut will be operated until the engine speed reaches 1,500 rpm, then fuel cut will be cancelled.

NOTE:
This function is different from deceleration control listed under "Multiport Fuel Injection (MFI) System", EC-34.

Evaporative Emission System

DESCRIPTION

NAEC0018

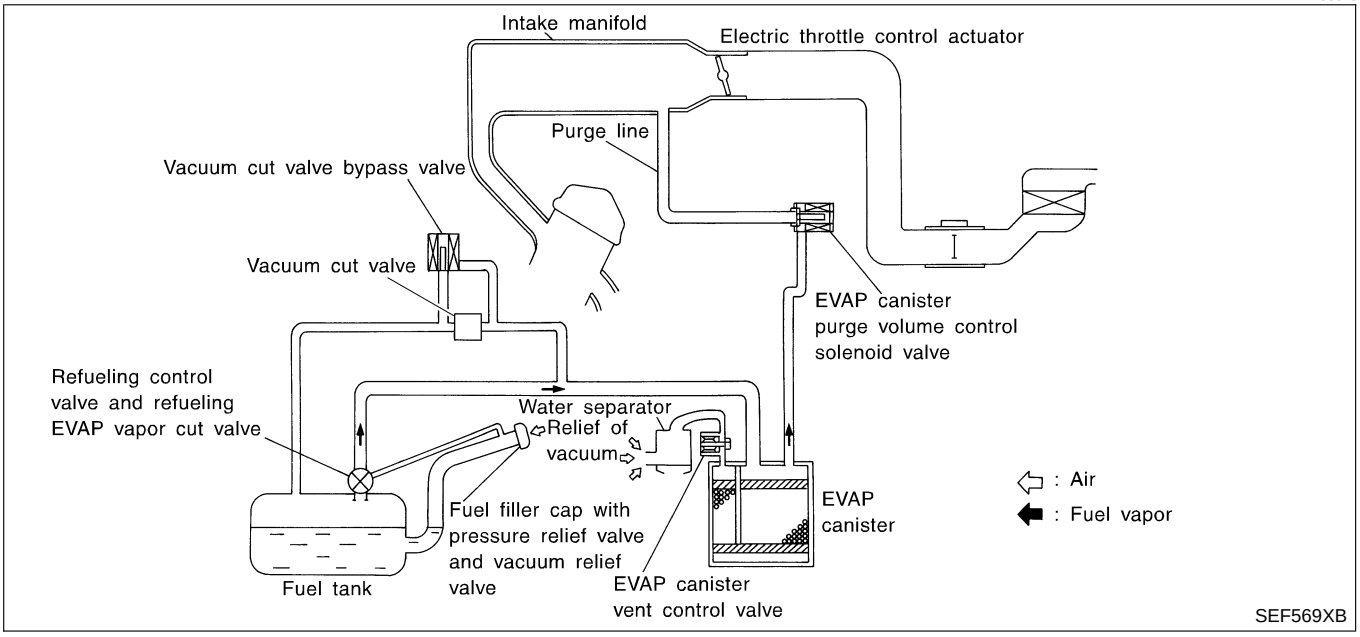

The evaporative emission system is used to reduce hydrocarbons emitted into the atmosphere from the fuel system. This reduction of hydrocarbons is accomplished by activated charcoals in the EVAP canister.
The fuel vapor in the sealed fuel tank is led into the EVAP canister which contains activated carbon and the vapor is stored there when the engine is not operating or when refueling to the fuel tank.

The vapor in the EVAP canister is purged by the air through the purge line to the intake manifold when the engine is operating. EVAP canister purge volume control solenoid valve is controlled by ECM. When the engine operates, the flow rate of vapor controlled by EVAP canister purge volume control solenoid valve is proportionally regulated as the air flow increases.
EVAP canister purge volume control solenoid valve also shuts off the vapor purge line during decelerating and idling.

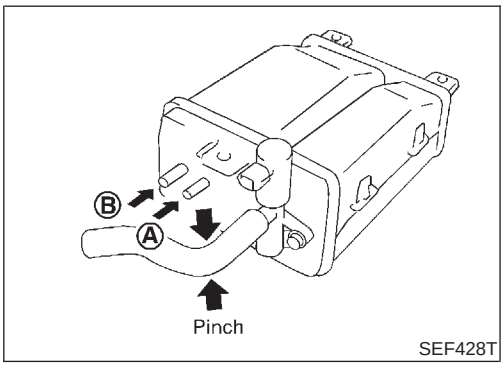

INSPECTION

NAEC0019

EVAP Canister

NAEC0019S01

Check EVAP canister as follows:

1. Pinch the fresh air hose.
2. Blow air into port **A** and check that it flows freely out of port **B**.

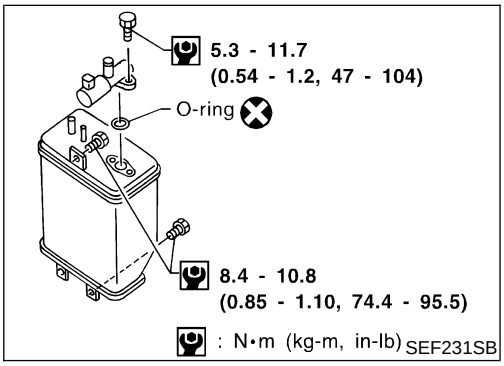

Tightening Torque

NAEC0019S02

Tighten EVAP canister as shown in the figure.
Make sure new O-ring is installed properly between EVAP canister and EVAP canister vent control valve.

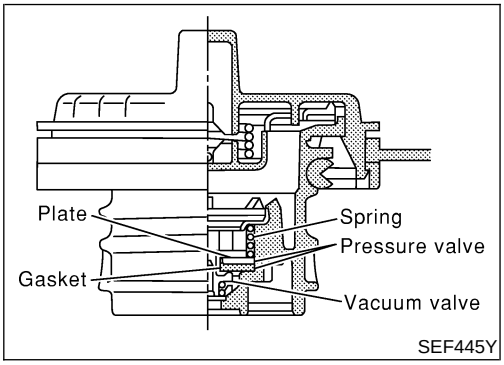

Fuel Tank Vacuum Relief Valve (Built into fuel filler cap)

NAEC0019S03

1. Wipe clean valve housing.
2. Check valve opening pressure and vacuum.

   Pressure:
   15.3 - 20.0 kPa (0.156 - 0.204 kg/cm^2, 2.22 - 2.90 psi)
   Vacuum:
   −6.0 to −3.3 kPa (−0.061 to −0.034 kg/cm^2, −0.87 to −0.48 psi)
3. If out of specification, replace fuel filler cap as an assembly.

CAUTION:
Use only a genuine fuel filler cap as a replacement. If an incorrect fuel filler cap is used, the MIL may come on.

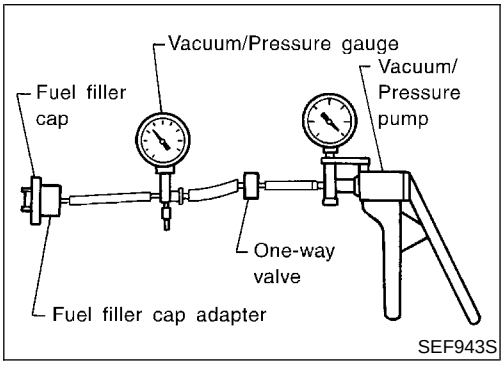

Vacuum Cut Valve and Vacuum Cut Valve Bypass Valve
NAEC0019S04

Refer to EC-633.

EVAP Canister Purge Volume Control Solenoid Valve
NAEC0019S05

Refer to EC-364.

Fuel Tank Temperature Sensor
NAEC0019S06

Refer to EC-290.

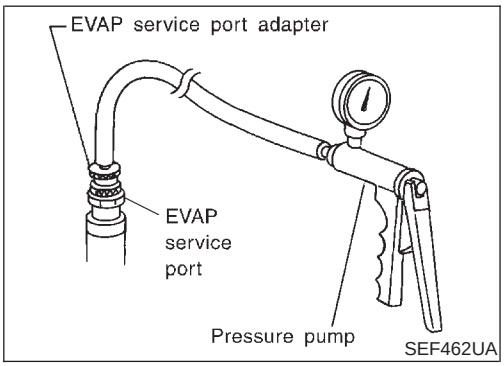

Evap Service Port
NAEC0019S07

Positive pressure is delivered to the EVAP system through the EVAP service port. If fuel vapor leakage in the EVAP system occurs, use a leak detector to locate the leak.

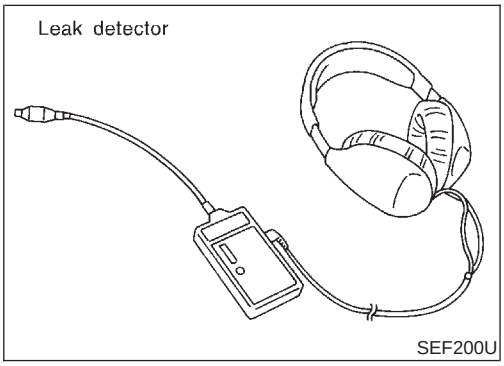

How to Detect Fuel Vapor Leakage
NAEC0019S08

CAUTION:

- **Never use compressed air or a high pressure pump.**
- **Do not exceed 4.12 kPa (0.042 kg/cm^2, 0.6 psi) of pressure in EVAP system.**

NOTE:

- Do not start engine.
- Improper installation of EVAP service port adapter to the EVAP service port may cause a leak.

With CONSULT-II
NAEC0019S0801

1) Attach the EVAP service port adapter securely to the EVAP service port.
2) Also attach the pressure pump and hose to the EVAP service port adapter.
3) Turn ignition switch ON.
4) Select the "EVAP SYSTEM CLOSE" of "WORK SUPPORT MODE" with CONSULT-II.
5) Touch "START". A bar graph (Pressure indicating display) will appear on the screen.
6) Apply positive pressure to the EVAP system until the pressure indicator reaches the middle of the bar graph.
7) Remove EVAP service port adapter and hose with pressure pump.
8) Locate the leak using a leak detector. Refer to "EVAPORATIVE EMISSION LINE DRAWING", EC-42.

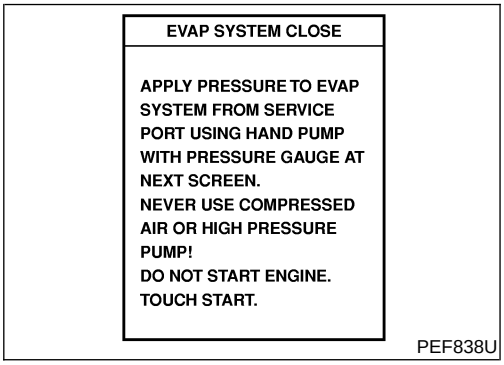

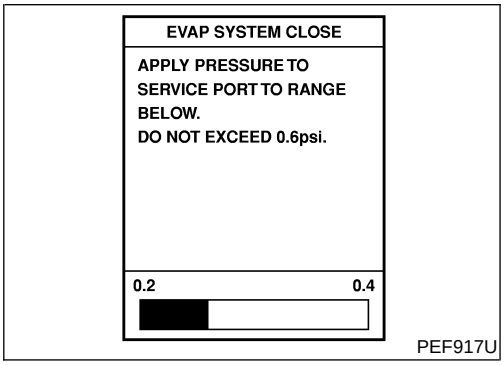

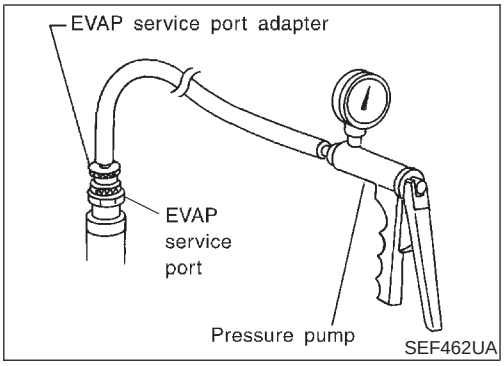

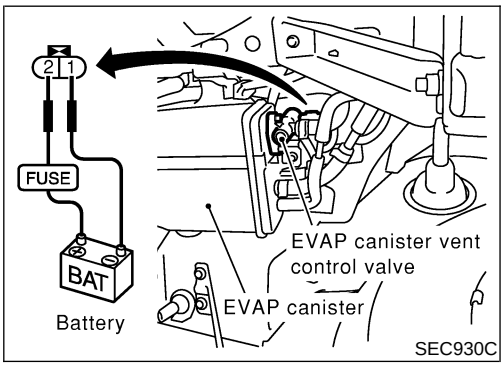

Without CONSULT-II

NAEC0019S0802

1) Attach the EVAP service port adapter securely to the EVAP service port.
2) Also attach the pressure pump with pressure gauge to the EVAP service port adapter.
3) Apply battery voltage to between the terminals of both EVAP canister vent control valve and vacuum cut valve bypass valve to make a closed EVAP system.
4) To locate the leak, deliver positive pressure to the EVAP system until pressure gauge points reach 1.38 to 2.76 kPa (0.014 to 0.028 kg/cm^2, 0.2 to 0.4 psi).
5) Remove EVAP service port adapter and hose with pressure pump.
6) Locate the leak using a leak detector. Refer to "EVAPORATIVE EMISSION LINE DRAWING", EC-42.

EVAPORATIVE EMISSION LINE DRAWING

NAEC0020

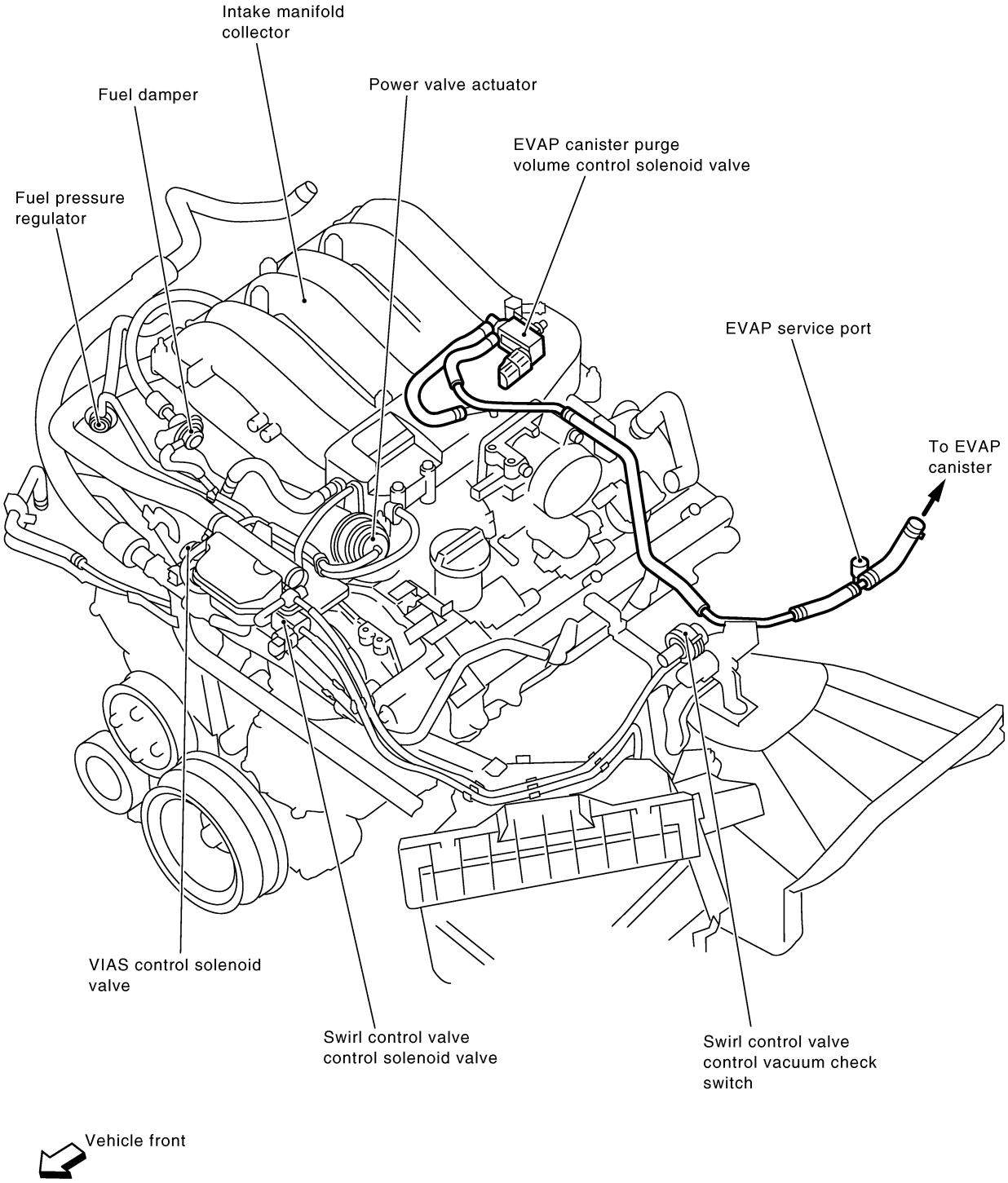

SEC414D

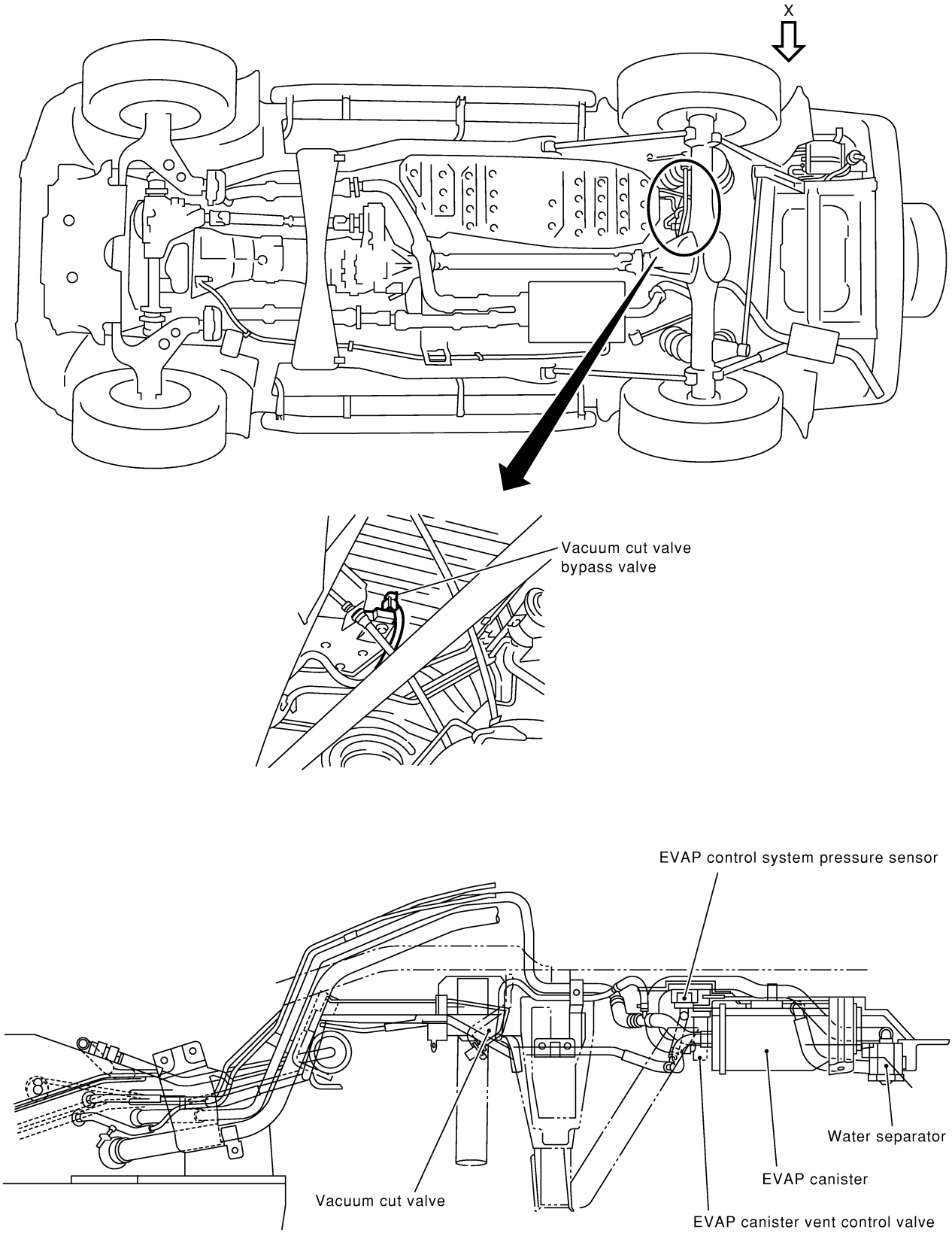

View X

SEC927C

On Board Refueling Vapor Recovery (ORVR)

NAEC0744

SYSTEM DESCRIPTION

NAEC0744S01

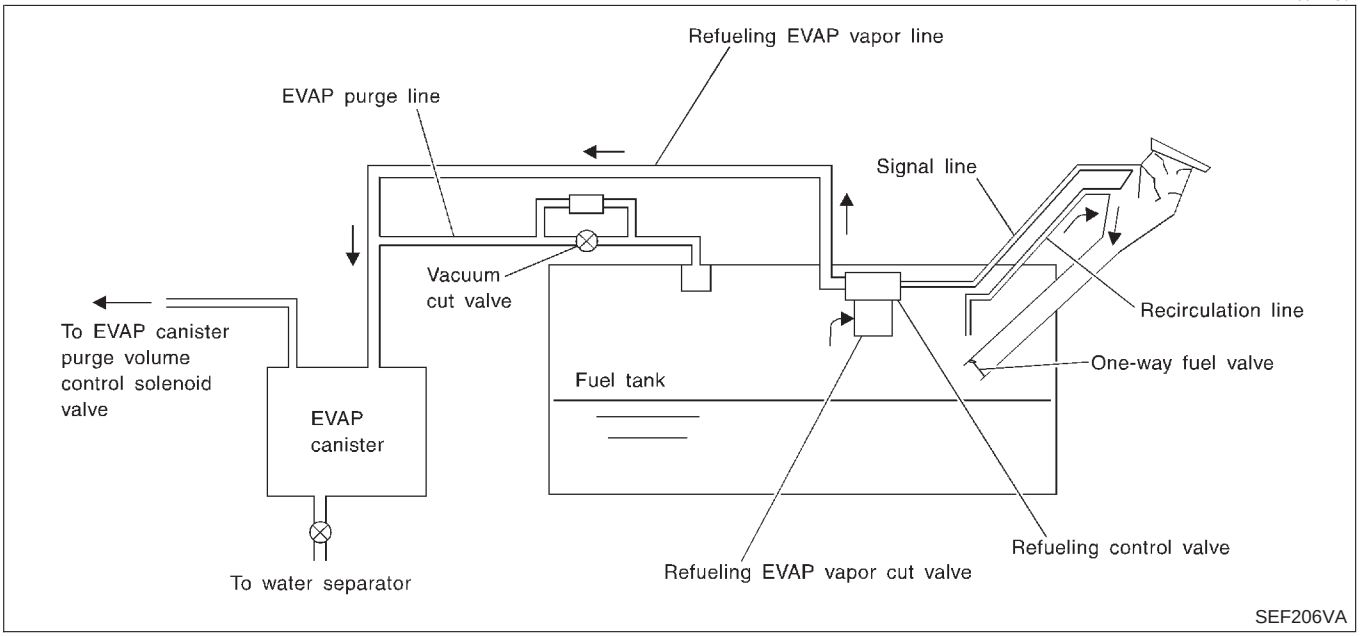

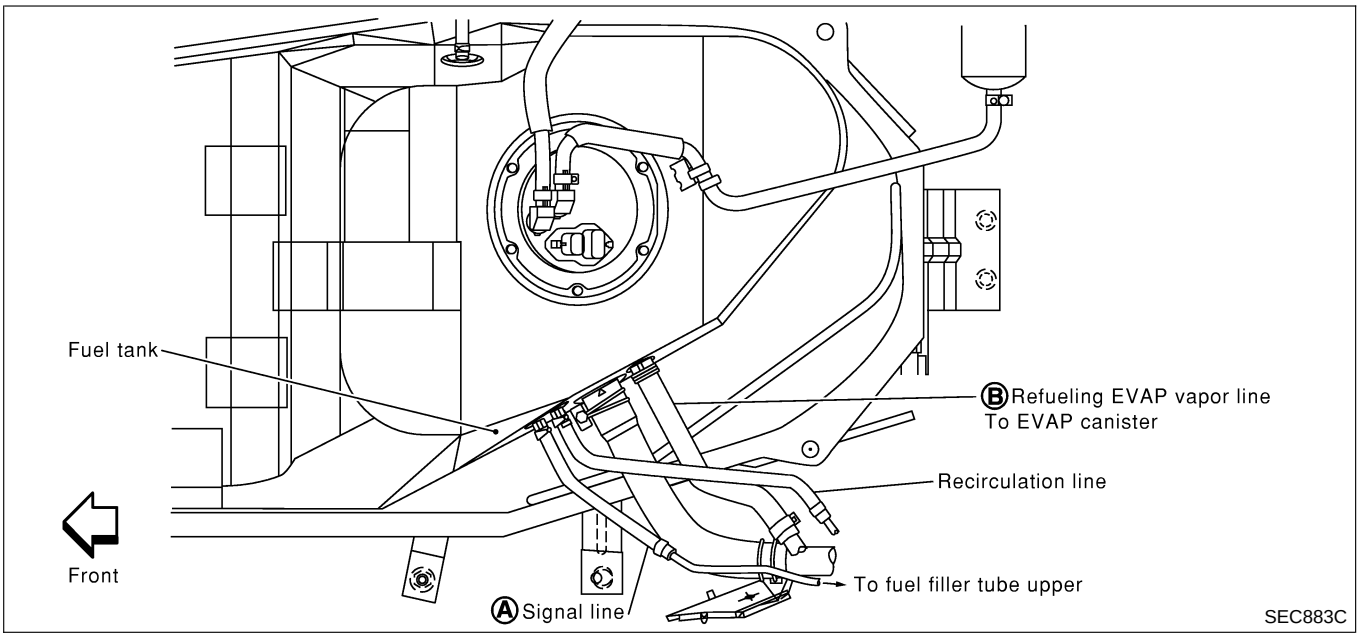

From the beginning of refueling, the fuel tank pressure goes up. When the pressure reaches the setting value of the refueling control valve (RCV) opening pressure, the RCV is opened. After RCV opens, the air and vapor inside the fuel tank go through refueling EVAP vapor cut valve, RCV and refueling vapor line to the EVAP canister. The vapor is absorbed by the EVAP canister and the air is released to the atmosphere.
When the refueling has reached the full level of the fuel tank, the refueling EVAP vapor cut valve is closed and refueling is stopped because of auto shut-off. The vapor which was absorbed by the EVAP canister is purged during driving.
The RCV is always closed during driving and the evaporative emission control system is operated the same as conventional system.

WARNING:

When conducting inspections below, be sure to observe the following:

- **Put a “CAUTION: INFLAMMABLE” sign in workshop.**
- **Do not smoke while servicing fuel system. Keep open flames and sparks away from work area.**
- **Be sure to furnish the workshop with a CO_2 fire extinguisher.**

CAUTION:

- **Before removing fuel line parts, carry out the following procedures:**

a) Put drained fuel in an explosion-proof container and put lid on securely.
b) Release fuel pressure from fuel line. Refer to "Fuel Pressure Release", EC-56.
c) Disconnect battery ground cable.

- **Always replace O-ring when the fuel gauge retainer is removed.**
- **Do not kink or twist hose and tube when they are installed.**
- **Do not tighten hose and clamps excessively to avoid damaging hoses.**
- **After installation, run engine and check for fuel leaks at connection.**
- **Do not attempt to top off the fuel tank after the fuel pump nozzle shuts off automatically. Continued refueling may cause fuel overflow, resulting in fuel spray and possibly a fire.**

DIAGNOSTIC PROCEDURE

NAEC0744S02

Symptom: Fuel Odor from EVAP Canister Is Strong.

NAEC0744S0201

1	CHECK EVAP CANISTER	
1. Remove EVAP canister with EVAP canister vent control valve attached. 2. Weigh the EVAP canister with EVAP canister vent control valve attached. The weight should be less than 1.8 kg (4.0 lb).		
OK or NG		
OK	▶	GO TO 2.
NG	▶	GO TO 3.

2	CHECK IF EVAP CANISTER SATURATED WITH WATER	
Does water drain from the EVAP canister?		
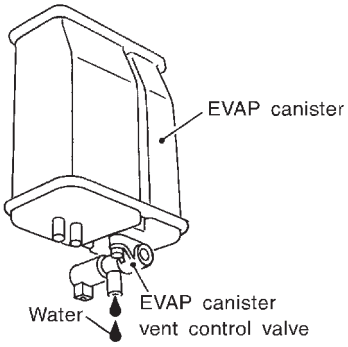 SEF596U		
Yes or No		
Yes	▶	GO TO 3.
No (With CONSULT-II)	▶	GO TO 6.
No (Without CONSULT-II)	▶	GO TO 7.

3	REPLACE EVAP CANISTER	
Replace EVAP canister with a new one.		
	▶	GO TO 4.

4	CHECK WATER SEPARATOR

1. Check visually for insect nests in the water separator air inlet.
2. Check visually for cracks or flaws in the appearance.
3. Check visually for cracks or flaws in the hose.
4. Check that **A** and **C** are not clogged by blowing air into **B** with **A**, and then **C** plugged.

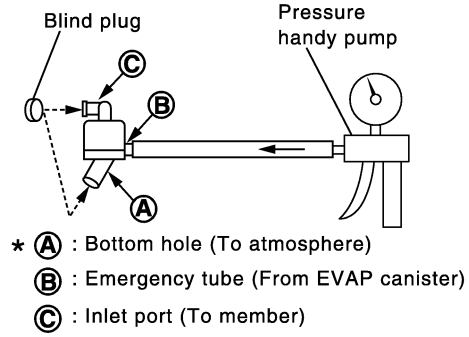

PBIB1032E

5. In case of NG in items 2 - 4, replace the parts.

NOTE:
- Do not disassemble water separator.

OK or NG

OK	▶	GO TO 5.
NG	▶	Replace water separator.

5	DETECT MALFUNCTIONING PART
Check the EVAP hose between EVAP canister and water separator for clogging or poor connection.	
▶	Repair or replace EVAP hose.

6	CHECK REFUELING EVAP VAPOR CUT VALVE

With CONSULT-II

1. Remove fuel tank. Refer to FE-4, "FUEL SYSTEM.
2. Drain fuel from the tank as follows:
a. Remove fuel feed hose located on the fuel gauge retainer.
b. Connect a spare fuel hose, one side to fuel gauge retainer where the hose was removed and the other side to a fuel container.
c. Drain fuel using "FUEL PUMP RELAY" in "ACTIVE TEST" mode with CONSULT-II.
3. Check refueling EVAP vapor cut valve for being stuck to close as follows.
Blow air into the refueling EVAP vapor cut valve (from hose end B), and check that the air flows freely into the tank.
4. Check EVAP vapor cut valve for being stuck to open as follows.
a. Connect vacuum pump to hose ends A and B using a suitable 3-way connector.
b. Remove fuel gauge retainer with fuel gauge unit.
Always replace O-ring with new one.
c. Put fuel tank upside down.
d. Apply vacuum pressure to both hose ends A and B [−13.3 kPa (−100 mmHg, −3.94 inHg)] with fuel gauge retainer remaining open and check that the pressure is applicable.

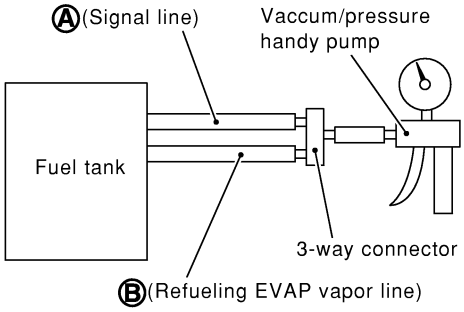

SEF968X

OK or NG

OK	▶	GO TO 8.
NG	▶	Replace refueling EVAP vapor cut valve with fuel tank.

7	CHECK REFUELING EVAP VAPOR CUT VALVE

Without CONSULT-II

1. Remove fuel tank. Refer to FE-4, "FUEL SYSTEM".
2. Drain fuel from the tank as follows:
a. Remove fuel gauge retainer.
b. Drain fuel from the tank using a hand pump into a fuel container.
3. Check refueling EVAP vapor cut valve for being stuck to close as follows.
   Blow air into the refueling EVAP vapor cut valve (from hose end B), and check that the air flows freely into the tank.
4. Check EVAP vapor cut valve for being stuck to open as follows.
a. Connect vacuum pump to hose ends A and B using a suitable 3-way connector.
b. Remove fuel gauge retainer with fuel gauge unit.
   Always replace O-ring with new one.
c. Put fuel tank upside down.
d. Apply vacuum pressure to both hose ends A and B [−13.3 kPa (−100 mmHg, −3.94 inHg)] with fuel gauge retainer remaining open and check that the pressure is applicable.

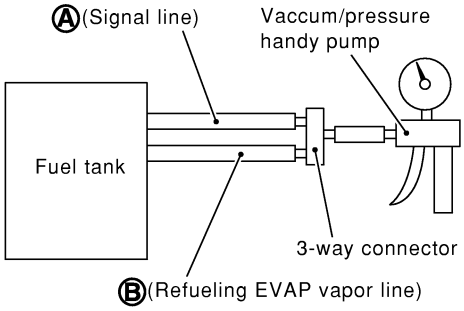

SEF968X

OK or NG

OK	▶	GO TO 8.
NG	▶	Replace refueling EVAP vapor cut valve with fuel tank.

8	CHECK REFUELING CONTROL VALVE

1. Remove fuel filler cap.
2. Check air continuity between hose ends A and B.
   Blow air into the hose end B. Air should flow freely into the fuel tank.
3. Blow air into hose end A and check there is no leakage.
4. Apply pressure to both hose ends A and B [20 kPa (150 mmHg, 5.91 inHg)] using a pressure pump and a suitable 3-way connector. Check that there is no leakage.

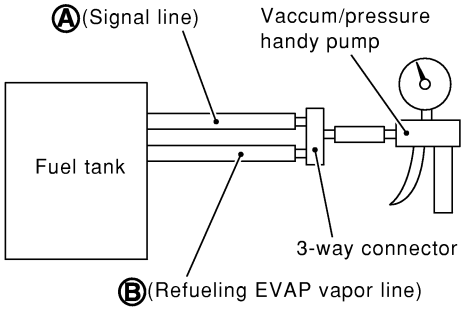

SEF968X

OK or NG

OK	▶	**INSPECTION END**
NG	▶	Replace refueling control valve with fuel tank.

Symptom: Cannot Refuel/Fuel Odor From The Fuel Filler Opening Is Strong While Refueling.

NAEC0744S0202

1	CHECK EVAP CANISTER	
1. Remove EVAP canister with EVAP canister vent control valve attached. 2. Weigh the EVAP canister with EVAP canister vent control valve attached. The weight should be less than 1.8 kg (4.0 lb).		
OK or NG		
OK	▶	GO TO 2.
NG	▶	GO TO 3.

2	CHECK IF EVAP CANISTER SATURATED WITH WATER	
Does water drain from the EVAP canister?		
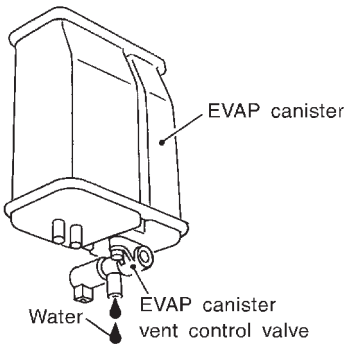 SEF596U		
Yes or No		
Yes	▶	GO TO 3.
No	▶	GO TO 6.

3	REPLACE EVAP CANISTER	
Replace EVAP canister with a new one.		
	▶	GO TO 4.

4	CHECK WATER SEPARATOR

1. Check visually for insect nests in the water separator air inlet.
2. Check visually for cracks or flaws in the appearance.
3. Check visually for cracks or flaws in the hose.
4. Check that **A** and **C** are not clogged by blowing air into **B** with **A**, and then **C** plugged.

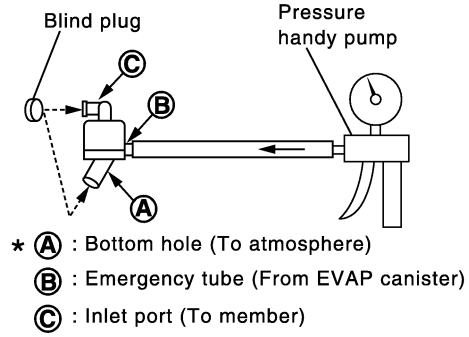

PBIB1032E

5. In case of NG in items 2 - 4, replace the parts.

NOTE:
- Do not disassemble water separator.

OK or NG

OK	▶	GO TO 5.
NG	▶	Replace water separator.

5	DETECT MALFUNCTIONING PART

Check the EVAP hose between EVAP canister and water separator for clogging or poor connection.

	▶	Repair or replace EVAP hose.

6	CHECK VENT HOSES AND VENT TUBES

Check hoses and tubes between EVAP canister and refueling control valve for clogging, kink, looseness and improper connection.

OK or NG

OK	▶	GO TO 7.
NG	▶	Repair or replace hoses and tubes.

7	CHECK FILLER NECK TUBE

Check signal line and recirculation line for clogging, dents and cracks.

OK or NG

OK	▶	GO TO 8.
NG	▶	Replace filler neck tube.

8	CHECK REFUELING CONTROL VALVE

1. Remove fuel filler cap.
2. Check air continuity between hose ends A and B.
   Blow air into the hose end B. Air should flow freely into the fuel tank.
3. Blow air into hose end A and check there is no leakage.
4. Apply pressure to both hose ends A and B [20 kPa (150 mmHg, 5.91 inHg)] using a pressure pump and a suitable 3-way connector. Check that there is no leakage.

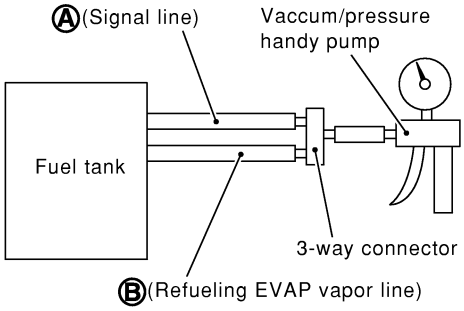

SEF968X

OK or NG

OK (With CONSULT-II)	▶	GO TO 9.
OK (Without CONSULT-II)	▶	GO TO 10.
NG	▶	Replace refueling control valve with fuel tank.

9	CHECK REFUELING EVAP VAPOR CUT VALVE

With CONSULT-II

1. Remove fuel tank. Refer to FE-4, "FUEL SYSTEM".
2. Drain fuel from the tank as follows:
a. Remove fuel feed hose located on the fuel gauge retainer.
b. Connect a spare fuel hose, one side to fuel gauge retainer where the hose was removed and the other side to a fuel container.
c. Drain fuel using "FUEL PUMP RELAY" in "ACTIVE TEST" mode with CONSULT-II.
3. Check refueling EVAP vapor cut valve for being stuck to close as follows.
   Blow air into the refueling EVAP vapor cut valve (from hose end B), and check that the air flows freely into the tank.
4. Check EVAP vapor cut valve for being stuck to open as follows.
a. Connect vacuum pump to hose ends A and B using a suitable 3-way connector.
b. Remove fuel gauge retainer with fuel gauge unit.
   Always replace O-ring with new one.
c. Put fuel tank upside down.
d. Apply vacuum pressure to both hose ends A and B [−13.3 kPa (−100 mmHg, −3.94 inHg)] with fuel gauge retainer remaining open and check that the pressure is applicable.

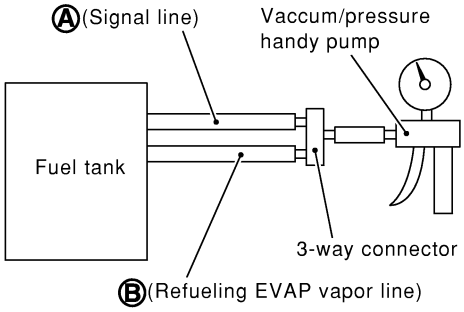

SEF968X

OK or NG

OK	▶	GO TO 11.
NG	▶	Replace refueling EVAP vapor cut valve with fuel tank.

10	CHECK REFUELING EVAP VAPOR CUT VALVE

Without CONSULT-II

1. Remove fuel tank. Refer to FE-4, "FUEL SYSTEM".
2. Drain fuel from the tank as follows:
a. Remove fuel gauge retainer.
b. Drain fuel from the tank using a hand pump into a fuel container.
3. Check refueling EVAP vapor cut valve for being stuck to close as follows.
   Blow air into the refueling EVAP vapor cut valve (from hose end B), and check that the air flows freely into the tank.
4. Check EVAP vapor cut valve for being stuck to open as follows.
a. Connect vacuum pump to hose ends A and B using a suitable 3-way connector.
b. Remove fuel gauge retainer with fuel gauge unit.
   Always replace O-ring with new one.
c. Put fuel tank upside down.
d. Apply vacuum pressure to both hose ends A and B [−13.3 kPa (−100 mmHg, −3.94 inHg)] with fuel gauge retainer remaining open and check that the pressure is applicable.

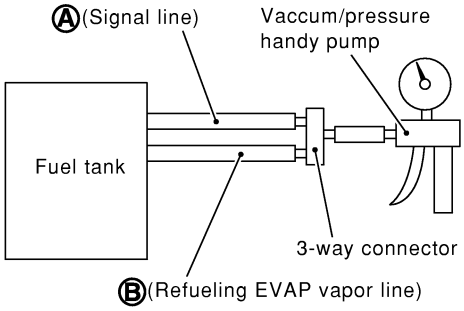

SEF968X

OK or NG

OK	▶	GO TO 11.
NG	▶	Replace refueling EVAP vapor cut valve with fuel tank.

11	CHECK FUEL FILLER TUBE

Check filler neck tube and hose connected to the fuel tank for clogging, dents and cracks.

OK or NG

OK	▶	GO TO 12.
NG	▶	Replace fuel filler tube.

12	CHECK ONE-WAY FUEL VALVE-I

Check one-way valve for clogging.

OK or NG

OK	▶	GO TO 13.
NG	▶	Repair or replace one-way fuel valve with fuel tank.

13	CHECK ONE-WAY FUEL VALVE-II

1. Make sure that fuel is drained from the tank.
2. Remove fuel filler tube and hose.
3. Check one-way fuel valve for operation as follows.
   When a stick is inserted, the valve should open, when removing stick it should close.

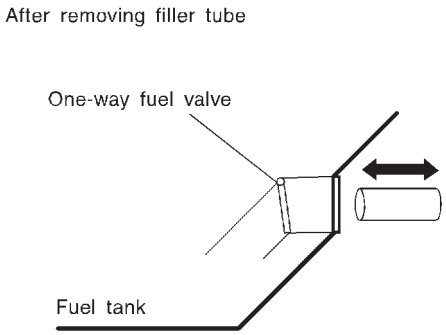

SEF665U

Do not drop any material into the tank.

OK or NG

OK	▶	**INSPECTION END**
NG	▶	Replace fuel filler tube or replace one-way fuel valve with fuel tank.

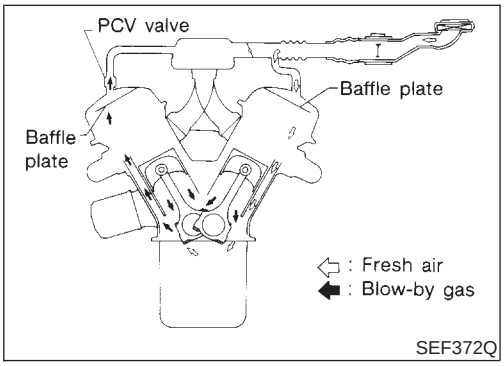

SEF372Q

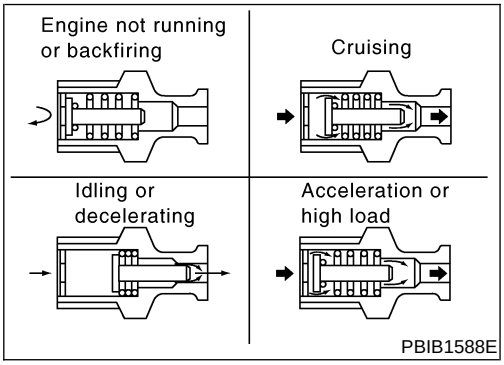

PBIB1588E

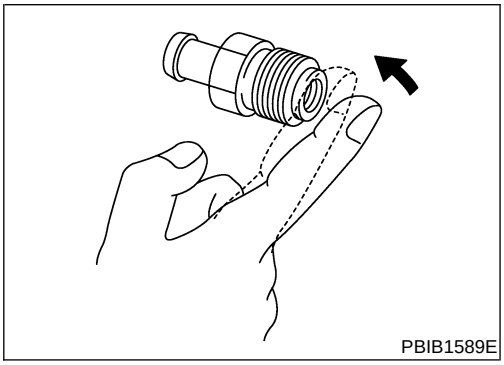

PBIB1589E

Positive Crankcase Ventilation

DESCRIPTION

NAEC0021

This system returns blow-by gas to the intake manifold.
The positive crankcase ventilation (PCV) valve is provided to conduct crankcase blow-by gas to the intake manifold.
During partial throttle operation of the engine, the intake manifold sucks the blow-by gas through the PCV valve.
Normally, the capacity of the valve is sufficient to handle any blow-by and a small amount of ventilating air.
The ventilating air is then drawn from the air inlet tubes into the crankcase. In this process the air passes through the hose connecting air inlet tubes to rocker cover.
Under full-throttle condition, the manifold vacuum is insufficient to draw the blow-by flow through the valve. The flow goes through the hose connection in the reverse direction.
On vehicles with an excessively high blow-by, the valve does not meet the requirement. This is because some of the flow will go through the hose connection to the air inlet tubes under all conditions.

INSPECTION

NAEC0022

PCV (Positive Crankcase Ventilation) Valve

NAEC0022S01

With engine running at idle, remove PCV valve ventilation hose from PCV valve; if the valve is working properly, a hissing noise will be heard as air passes through it and a strong vacuum should be felt immediately when a finger is placed over valve inlet.

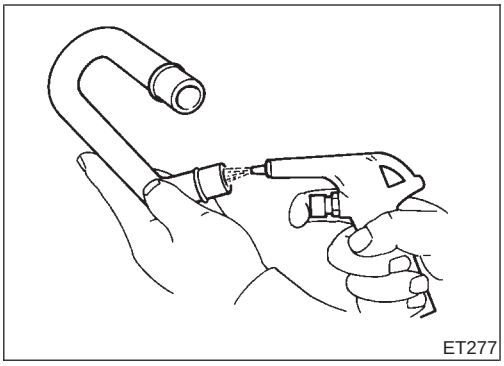

PCV Valve Ventilation Hose

NAEC0022S02

1. Check hoses and hose connections for leaks.
2. Disconnect all hoses and clean with compressed air. If any hose cannot be freed of obstructions, replace.

CAN Communication

SYSTEM DESCRIPTION

NAEC1368

CAN (Controller Area Network) is a serial communication line for real time application. It is an on-vehicle multiplex communication line with high data communication speed and excellent error detection ability. Many electronic control units are equipped onto a vehicle, and each control unit shares information and links with other control units during operation (not independent). In CAN communication, control units are connected with 2 communication lines (CAN H line, CAN L line) allowing a high rate of information transmission with less wiring. Each control unit transmits/receives data but selectively reads required data only.
Refer to EL-409, "CAN Communication Unit" for details of CAN communication.

Automatic Speed Control Device (ASCD) System

DESCRIPTION

NAEC1370

Input/Output Signal Chart

NAEC1370S01

Sensor	Input signal to ECM	ECM function	Actuator
ASCD brake switch	Brake pedal operation	ASCD vehicle speed control	Electric throttle control actuator
Stop lamp switch	Brake pedal operation		
ASCD clutch switch (M/T models)	Clutch pedal operation		
ASCD steering switch	ASCD steering switch operation		
Combination meter*	Vehicle speed		
TCM*	Power train revolution		

*: This signal is sent to the ECM through CAN communication line.

Basic ASCD System

NAEC1370S02

Refer to Owner's Manual for ASCD operating instructions.
Automatic Speed Control Device (ASCD) allows a driver to keep vehicle at predetermined constant speed without depressing accelerator pedal. Driver can set vehicle speed in advance between approximately 40 km/h (25 MPH) and 144 km/h (89 MPH).
ECM controls throttle angle of electric throttle control actuator to regulate engine speed.
Operation status of ASCD is indicated by CRUISE indicator and SET indicator in combination meter.
If any malfunction occurs in ASCD system, it automatically deactivates control.

Set Operation

NAEC1370S03

Press MAIN switch. (Then CRUISE indicator in combination meter illuminates.)
When vehicle speed reaches a desired speed between approximately 40 km/h (25 MPH) and 144 km/h (89 MPH), press SET/COAST switch. (Then SET indicator in combination meter illuminates.)

Accel Operation

NAEC1370S04

If the RESUME/ACCEL switch is pressed during cruise control driving, increase the vehicle speed until the switch is released or vehicle speed reaches maximum speed controlled by the system.
And then ASCD will keep the new set speed.

Cancel Operation

NAEC1370S05

When any of following conditions exist, cruise operation will be canceled.

- CANCEL switch is pressed.
- More than 2 switches at ASCD steering switch are pressed at the same time (Set speed will be cleared.).
- Brake pedal is depressed.
- Clutch pedal is depressed (M/T models).
- A/T selector lever is shifted to P, N or R position (A/T models).
- Vehicle speed decreased to 13 km/h (8 MPH) lower than the set speed
- TCS system is operated

When the ECM detects any of the following conditions, the ECM will cancel the cruise operation and inform the driver by blinking indicator lamp.

- Engine coolant temperature is slightly higher than the normal operating temperature: CRUISE lamp may blink slowly.
  When the engine coolant temperature decreases to the normal operating temperature, CRUISE lamp will stop blinking and the cruise operation will be able to work by pressing SET/COAST switch or RESUME/ACCEL switch.
- Malfunction for self-diagnosis regarding ASCD control: SET lamp will blink quickly.

If MAIN switch is turned to OFF while ASCD is activated, all of ASCD operations will be canceled and vehicle speed memory will be erased.

Coast Operation

NAEC1370S06

When the SET/COAST switch is pressed during cruise control driving, decrease vehicle set speed until the switch is released. And then ASCD will keep the new set speed.

Resume Operation

NAEC1370S07

When the RESUME/ACCEL switch is pressed after cancel operation other than pressing MAIN switch is performed, vehicle speed will return to last set speed. To resume vehicle set speed, vehicle condition must meet following conditions.

- Brake pedal is released.
- Clutch pedal is released (M/T models).
- A/T selector lever is in other than P, N and R positions (A/T models).
- Vehicle speed is greater than 40 km/h (25 MPH) and 144 km/h (89 MPH).

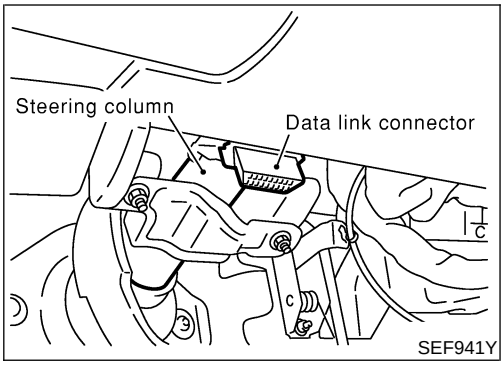

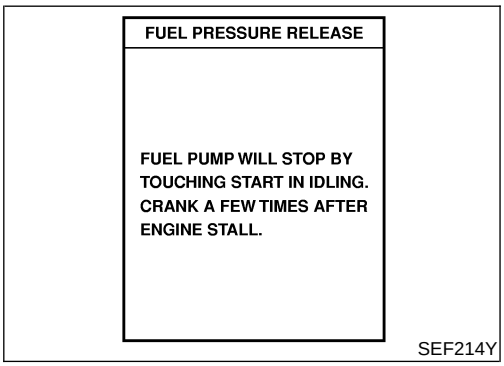

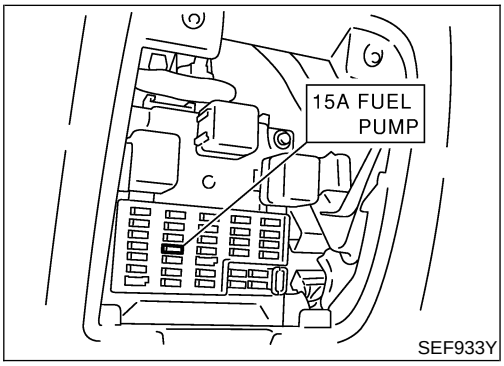

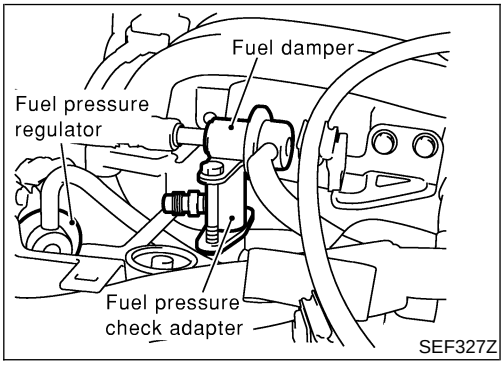

Fuel Pressure Release

NAEC0023

WITH CONSULT-II

NAEC0023S01

1. Turn ignition switch ON.
2. Perform “FUEL PRESSURE RELEASE” in “WORK SUPPORT” mode with CONSULT-II.
3. Start engine.
4. After engine stalls, crank it two or three times to release all fuel pressure.
5. Turn ignition switch OFF.

WITHOUT CONSULT-II

NAEC0023S02

1. Remove fuel pump fuse located in fuse box.
2. Start engine.
3. After engine stalls, crank it two or three times to release all fuel pressure.
4. Turn ignition switch OFF.
5. Reinstall fuel pump fuse after servicing fuel system.

Fuel Pressure Check

NAEC0024

Before disconnecting fuel line, release fuel pressure from fuel line to eliminate danger.

- **When reconnecting fuel line, always use new clamps.**
- **Make sure that clamp screw does not contact adjacent parts.**
- **Use a torque driver to tighten clamps.**
- **Use Pressure Gauge to check fuel pressure.**
- **Do not perform fuel pressure check with electrical system operating (i.e. lights, rear window defogger, A/C etc.). Fuel pressure gauge may indicate false readings due to varying engine loads and changes in manifold vacuum.**

1. Release fuel pressure to zero.
2. Disconnect fuel tube joint between fuel damper and injector tube and set fuel pressure check adapter (J-44321).

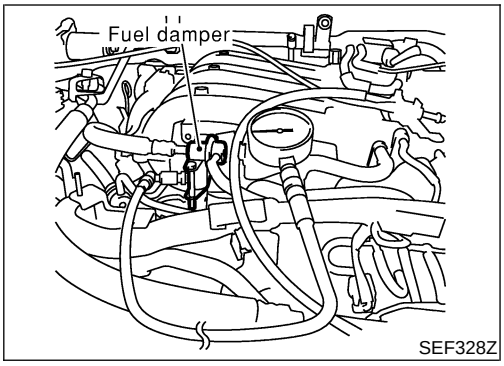

3. Install pressure gauge to the fuel pressure check adapter as shown in the figure.
4. Start engine and check for fuel leakage.
5. Read the indication of fuel pressure gauge.

At idling:

With vacuum hose connected

Approximately 235 kPa (2.4 kg/cm^2, 34 psi)

With vacuum hose disconnected

Approximately 294 kPa (3.0 kg/cm^2, 43 psi)

If results are unsatisfactory, perform Fuel Pressure Regulator Check.

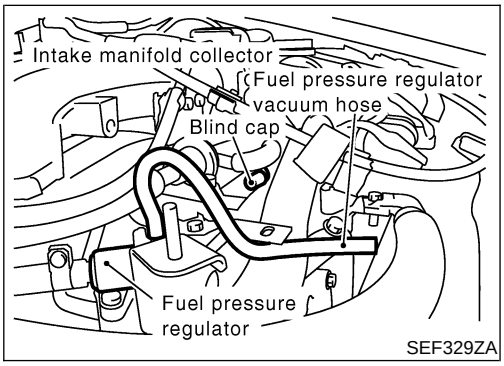

Fuel Pressure Regulator Check

NAEC0025

1. Stop engine and disconnect fuel pressure regulator vacuum hose from vacuum gallery.
2. Plug vacuum gallery with a blind cap.
3. Connect variable vacuum source to fuel pressure regulator.

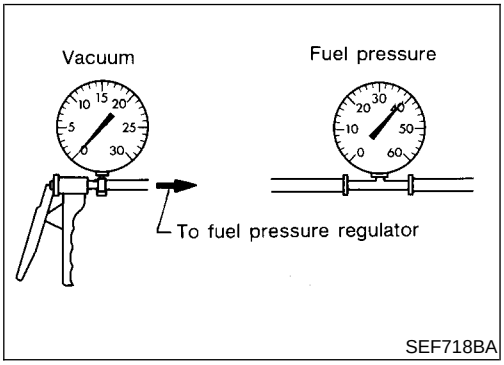

4. Start engine and read indication of fuel pressure gauge as vacuum is changed.

Fuel pressure should decrease as vacuum increases. If results are unsatisfactory, replace fuel pressure regulator.

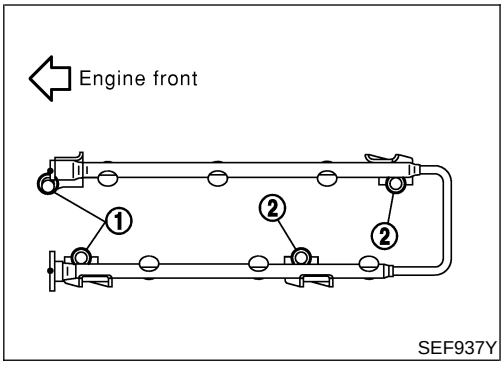

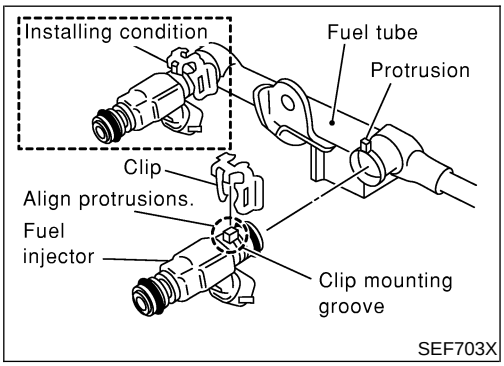

Injector

REMOVAL AND INSTALLATION

NAEC0026

1. Release fuel pressure to zero.
2. Remove intake manifold collector. Refer to EM-24, “TIMING CHAIN”.
3. Remove fuel tube assemblies in numerical sequence as shown in the figure at left.
4. Expand and remove clips securing fuel injectors.
5. Extract fuel injectors straight from fuel tubes.

- **Be careful not to damage injector nozzles during removal.**
- **Do not bump or drop fuel injectors.**

6. Carefully install O-rings, including the one used with the pressure regulator.

- **Lubricate O-rings with a smear of engine oil.**
- **Be careful not to damage O-rings with service tools, finger nails or clips. Do not expand or twist O-rings.**
- **Discard old clips; replace with new ones.**

7. Position clips in grooves on fuel injectors.

- **Make sure that protrusions of fuel injectors are aligned with cutouts of clips after installation.**

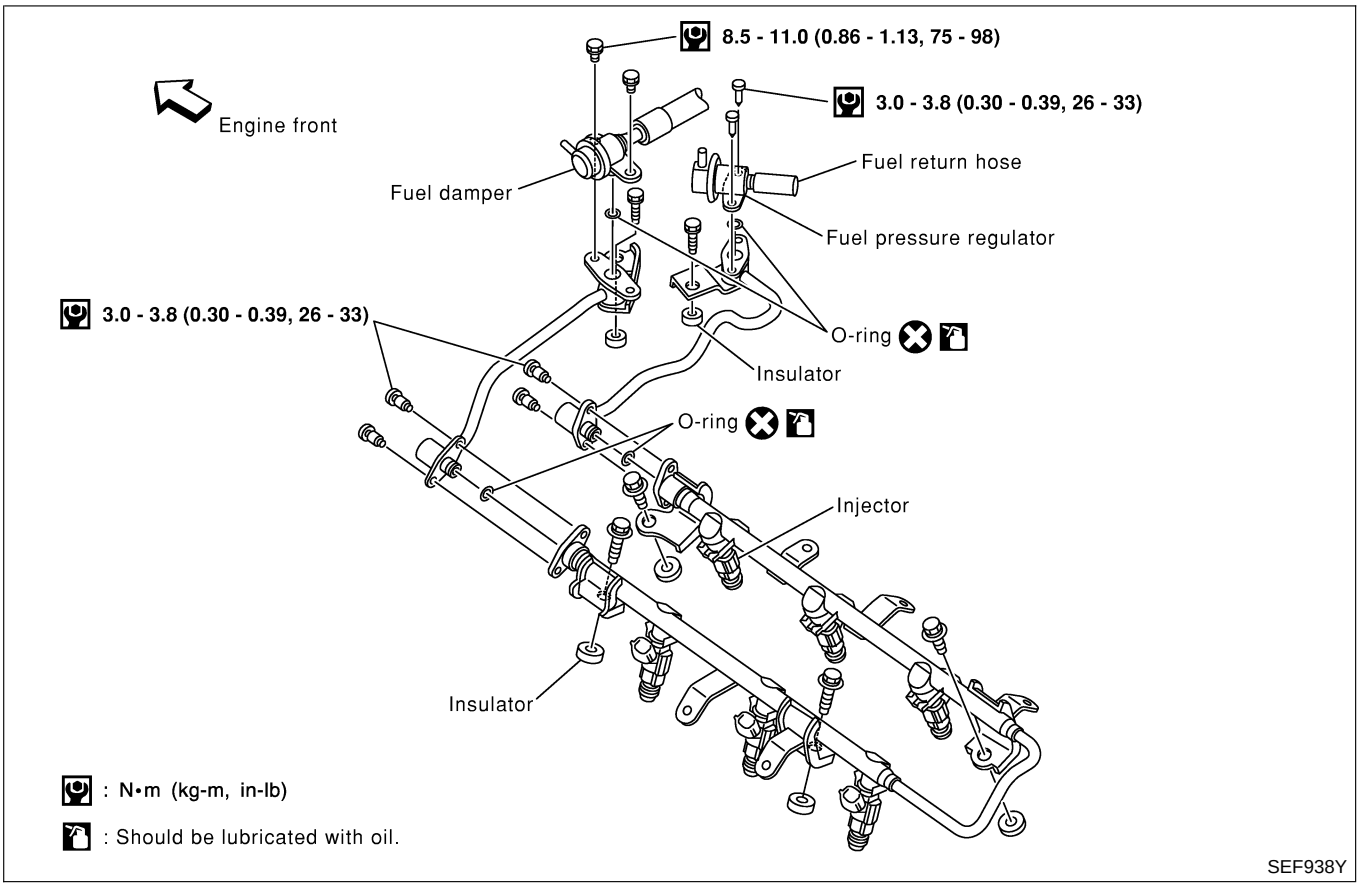

8. Align protrusions of fuel tubes with those of fuel injectors. Insert fuel injectors straight into fuel tubes.
9. After properly inserting fuel injectors, check to make sure that fuel tube protrusions are engaged with those of fuel injectors, and that flanges of fuel tubes are engaged with clips.

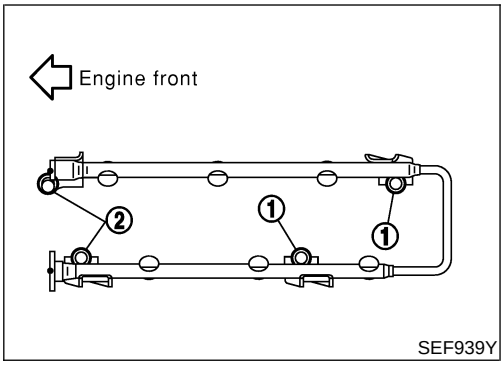

10. Tighten fuel tube assembly mounting nuts in numerical sequence (indicated in the figure at left) and in two stages.
    : Tightening torque N·m (kg-m, ft-lb)
    1st stage:
    9.3 - 10.8 (1.0 - 1.1, 6.9 - 7.9)
    2nd stage:
    20.6 - 26.5 (2.1 - 2.7, 16 - 19)
11. Install all parts removed in reverse order of removal.

CAUTION:

After properly connecting fuel tube assembly to injector and fuel hose, check connection for fuel leakage.

How to Check Idle Speed and Ignition Timing

NAEC0607

IDLE SPEED

NAEC0607S01

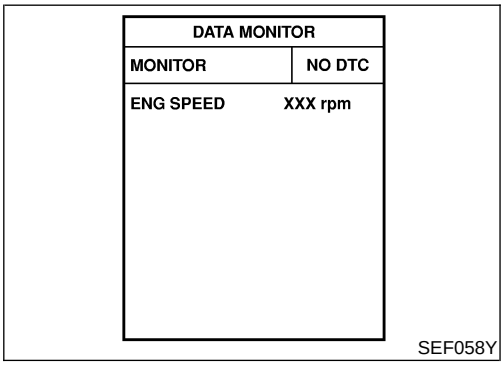

DATA MONITOR	
MONITOR	NO DTC
ENG SPEED	XXX rpm

SEF058Y

WITH CONSULT-II

Check idle speed in "DATA MONITOR" mode with CONSULT-II.

WITH GST

Check idle speed with GST.

IGNITION TIMING

NAEC0607S02

Any of following two methods may be used.

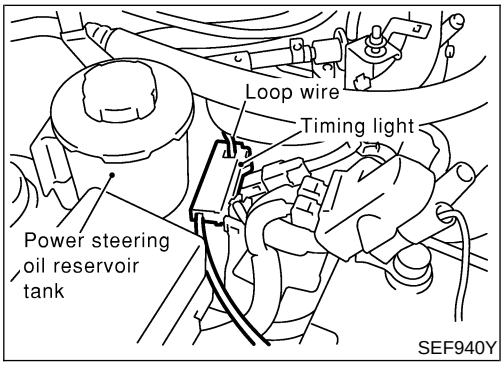

- **Method A**

a) Attach timing light to loop wire as shown.

b) Check ignition timing.

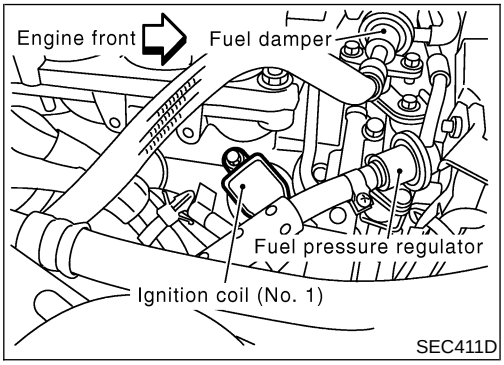

- **Method B**

a) Remove No. 1 ignition coil.

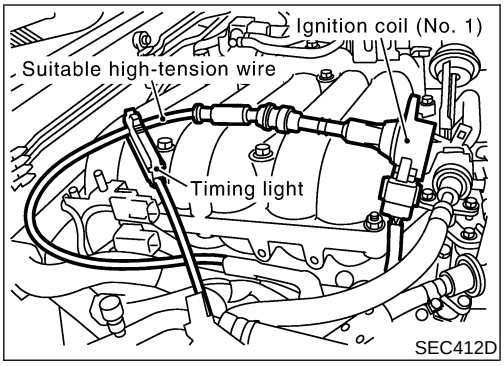

b) Connect No. 1 ignition coil and No. 1 spark plug with suitable high-tension wire as shown, and attach timing light clamp to this wire.

c) Check ignition timing.

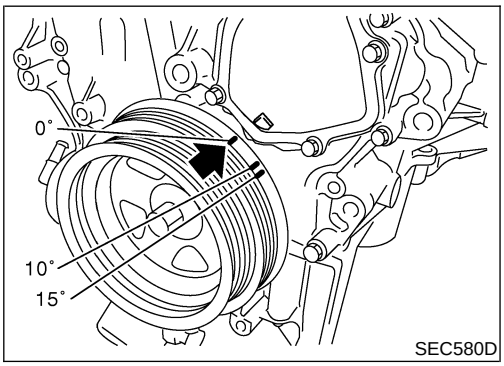

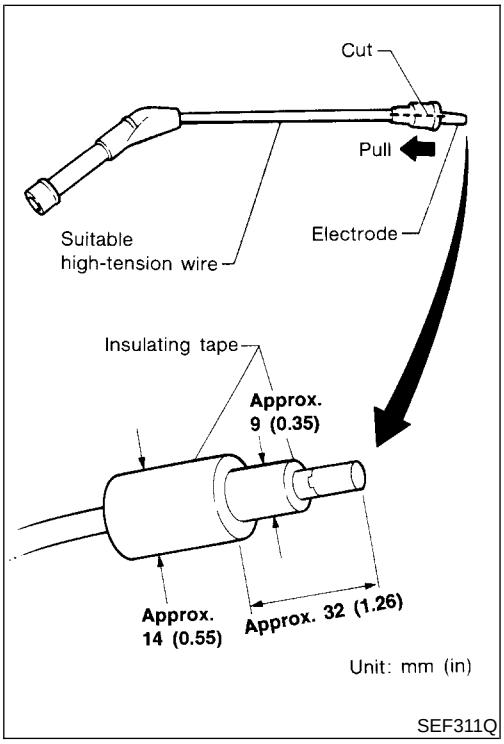

Idle Speed/Ignition Timing/Idle Mixture Ratio Adjustment

=NAEC0028

PREPARATION

NAEC0028S01

1) Make sure that the following parts are in good order.
- Battery
- Ignition system
- Engine oil and coolant levels
- Fuses
- ECM harness connector
- Vacuum hoses
- Air intake system
  (Oil filler cap, oil level gauge, etc.)
- Fuel pressure
- Engine compression
- Throttle valve
- Evaporative emission system

2) On air conditioner equipped models, checks should be carried out while the air conditioner is OFF.
3) On automatic transmission equipped models, when checking idle rpm, ignition timing and mixture ratio, checks should be carried out while shift lever is in N position.
4) When measuring CO percentage, insert probe more than 40 cm (15.7 in) into tail pipe.
5) Turn off headlamps, heater blower, rear defogger.
6) Keep front wheels pointed straight ahead.

Overall Inspection Sequence

NAEC0028S0101

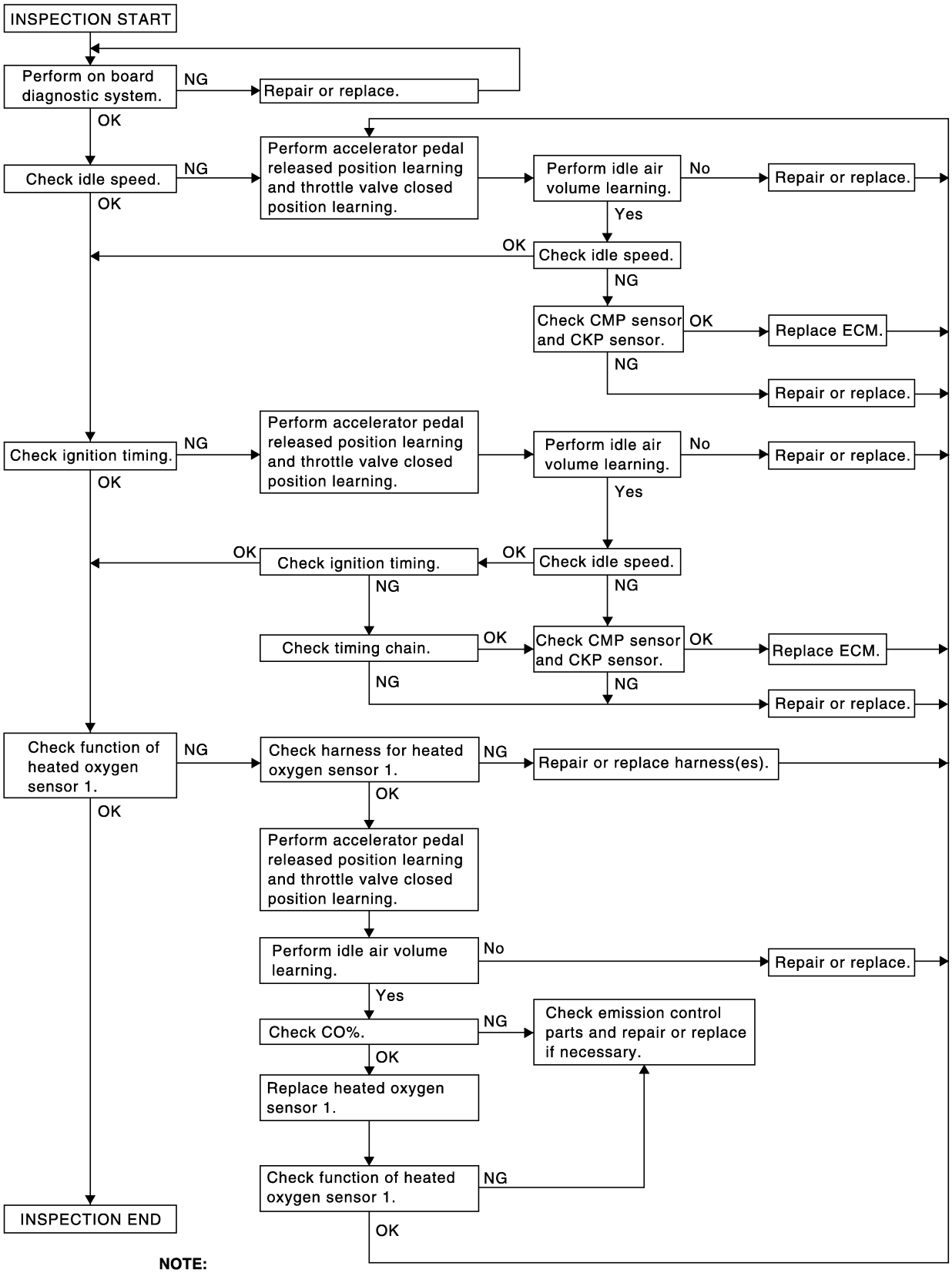

NOTE:
If a vehicle contains a part which is operating outside of design specifications with no MIL illumination, the part shall not be replaced prior to emission testing unless it is determined that the part has been tampered with or abused in such a way that the diagnostic system cannot reasonably be expected to detect the resulting malfunction.

PBIB1054E

INSPECTION PROCEDURE

=NAEC0028S02

1	INSPECTION START

1. Check service records for any recent repairs that may indicate a related malfunction, or a current need for scheduled maintenance.
2. Open engine hood and check the following:
– Harness connectors for improper connections
– Wiring harness for improper connections, pinches and cut
– Vacuum hoses for splits, kinks and improper connections
– Hoses and ducts for leaks
– Air cleaner clogging
– Gasket

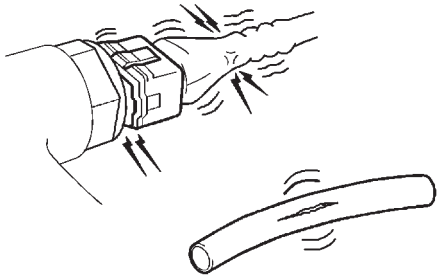

SEF983U

3. Confirm that electrical or mechanical loads are not applied.
– Headlamp switch is OFF.
– Air conditioner switch is OFF.
– Rear window defogger switch is OFF.
– Steering wheel is in the straight-ahead position, etc.
4. Start engine and warm it up until engine coolant temperature indicator points the middle of gauge. Ensure engine stays below 1,000 rpm.

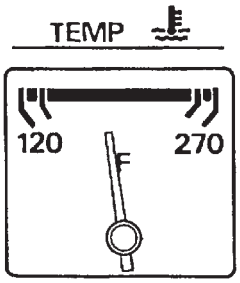

SEF976U

5. Run engine at about 2,000 rpm for about 2 minutes under no-load.

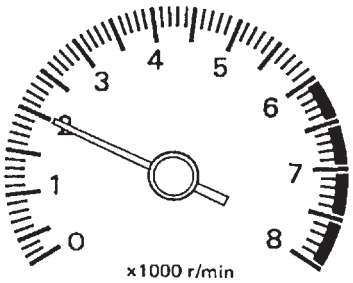

SEF977U

6. Make sure that no DTC is displayed with CONSULT-II or GST.

OK or NG

OK	▶	GO TO 3.
NG	▶	GO TO 2.

2	REPAIR OR REPLACE
Repair or replace components as necessary according to corresponding Diagnostic Procedure.	
▶	GO TO 3.

3	CHECK TARGET IDLE SPEED

With CONSULT-II

1. Run engine at about 2,000 rpm for about 2 minutes under no-load.
2. Rev engine (2,000 to 3,000 rpm) two or three times under no-load, then run engine at idle speed for about 1 minute.

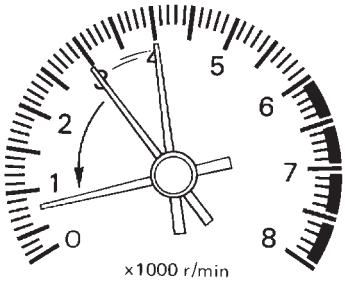

SEF978U

3. Read idle speed in "DATA MONITOR" mode with CONSULT-II.

DATA MONITOR	
MONITOR	NO DTC
ENG SPEED	XXX rpm

SEF058Y

M/T: 750±50 rpm
A/T: 750±50 rpm (in P or N position)

Without CONSULT-II

1. Run engine at about 2,000 rpm for about 2 minutes under no-load.
2. Rev engine (2,000 to 3,000 rpm) two or three times under no-load, then run engine at idle speed for about 1 minute.
3. Check idle speed.
   M/T: 750±50 rpm
   A/T: 750±50 rpm (in P or N position)

OK or NG

OK	▶	GO TO 10.
NG	▶	GO TO 4.

4	PERFORM ACCELERATOR PEDAL RELEASED POSITION LEARNING

1. Stop engine.
2. Perform "Accelerator Pedal Released Position Learning", EC-73.

	▶	GO TO 5.

5	PERFORM THROTTLE VALVE CLOSED POSITION LEARNING

Perform "Throttle Valve Closed Position Learning", EC-73.

	▶	GO TO 6.

6	PERFORM IDLE AIR VOLUME LEARNING	
Perform "Idle Air Volume Learning", EC-73. **Is Idle Air Volume Learning carried out successfully?** **Yes or No**		
Yes	▶	GO TO 7.
No	▶	1. Follow the instruction of Idle Air Volume Learning. 2. GO TO 4.

7	CHECK TARGET IDLE SPEED AGAIN	
With CONSULT-II 1. Start engine and warm it up to normal operating temperature. 2. Read idle speed in "DATA MONITOR" mode with CONSULT-II. **M/T: 750±50 rpm** **A/T: 750±50 rpm (in P or N position)**		
Without CONSULT-II 1. Start engine and warm it up to normal operating temperature. 2. Check idle speed. **M/T: 750±50 rpm** **A/T: 750±50 rpm (in P or N position)** **OK or NG**		
OK	▶	GO TO 10.
NG	▶	GO TO 8.

8	DETECT MALFUNCTIONING PART	
Check the following. ● Check camshaft position sensor (PHASE) and circuit. Refer to "DTC P0340, P0345 CMP SENSOR (PHASE)", EC-326. ● Check crankshaft position sensor (POS) and circuit. Refer to "DTC P0335 CKP SENSOR (POS)", EC-319. **OK or NG**		
OK	▶	GO TO 9.
NG	▶	1. Repair or replace. 2. GO TO 4.

9	CHECK ECM FUNCTION	
1. Substitute another known-good ECM to check ECM function. (ECM may be the cause of an incident, but this is a rare case.) 2. Perform initialization of NVIS (NATS) system and registration of all NVIS (NATS) ignition key IDs. Refer to NVIS (NISSAN VEHICLE IMMOBILIZER SYSTEM — NATS)", EC-93.		
	▶	GO TO 4.

10	CHECK IGNITION TIMING

1. Run engine at idle.
2. Check ignition timing with a timing light.

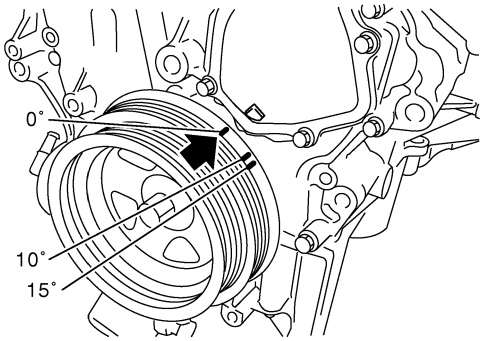

SEC580D

M/T: 15°±5° BTDC
A/T: 15°±5° BTDC (in P or N position)

OK or NG

OK (With CONSULT-II)	▶	GO TO 19.
OK (Without CONSULT-II)	▶	GO TO 20.
NG	▶	GO TO 11.

11	PERFORM ACCELERATOR PEDAL RELEASED POSITION LEARNING

1. Stop engine.
2. Perform "Accelerator Pedal Released Position Learning", EC-73.

	▶	GO TO 12.

12	PERFORM THROTTLE VALVE CLOSED POSITION LEARNING

Perform "Throttle Valve Closed Position Learning", EC-73.

	▶	GO TO 13.

13	PERFORM IDLE AIR VOLUME LEARNING

Perform "Idle Air Volume Learning", EC-73.
Is Idle Air Volume Learning carried out successfully?

Yes or No

Yes	▶	GO TO 14.
No	▶	1. Follow the instruction of Idle Air Volume Learning. 2. GO TO 4.

14	CHECK TARGET IDLE SPEED AGAIN
With CONSULT-II 1. Start engine and warm it up to normal operating temperature. 2. Read idle speed in "DATA MONITOR" mode with CONSULT-II. **M/T: 750±50 rpm** **A/T: 750±50 rpm (in P or N position)**	
Without CONSULT-II 1. Start engine and warm it up to normal operating temperature. 2. Check idle speed. **M/T: 750±50 rpm** **A/T: 750±50 rpm (in P or N position)**	
OK or NG	
OK ▶	GO TO 15.
NG ▶	GO TO 17.

15	CHECK IGNITION TIMING AGAIN
1. Run engine at idle. 2. Check ignition timing with a timing light.	

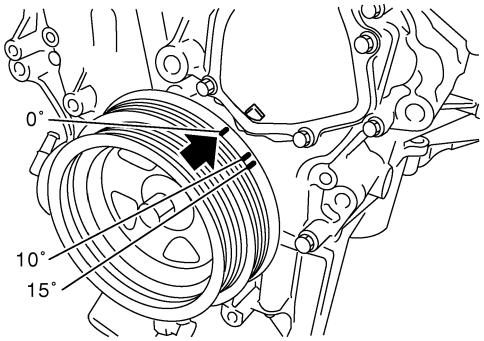

SEC580D

M/T: 15°±5° BTDC
A/T: 15°±5° BTDC (in P or N position)

OK or NG	
OK (With CONSULT-II) ▶	GO TO 19.
OK (Without CONSULT-II) ▶	GO TO 20.
NG ▶	GO TO 16.

16	CHECK TIMING CHAIN INSTALLATION
Check timing chain installation. Refer to EM-24, "TIMING CHAIN".	
OK or NG	
OK ▶	GO TO 17.
NG ▶	1. Repair the timing chain installation. 2. GO TO 4.

17	DETECT MALFUNCTIONING PART
Check the following. ● Check camshaft position sensor (PHASE) and circuit. Refer to "DTC P0340, P0345 CMP SENSOR (PHASE)", EC-326. ● Check crankshaft position sensor (POS) and circuit. Refer to "DTC P0335 CKP SENSOR (POS)", EC-319.	
OK or NG	
OK ▶	GO TO 18.
NG ▶	1. Repair or replace. 2. GO TO 4.

18	CHECK ECM FUNCTION
1. Substitute another known-good ECM to check ECM function. (ECM may be the cause of an incident, but this is a rare case.) 2. Perform initialization of NVIS (NATS) system and registration of all NVIS (NATS) ignition key IDs. Refer to "NVIS (NISSAN VEHICLE IMMOBILIZER SYSTEM — NATS)", EC-93.	
▶	GO TO 4.

19	CHECK HEATED OXYGEN SENSOR 1 (BANK 1) SIGNAL
With CONSULT-II 1. Run engine at about 2,000 rpm for about 2 minutes under no-load. 2. See "HO2S1 MNTR (B1)" in "DATA MONITOR" mode. 3. Running engine at 2,000 rpm under no-load (The engine is warmed up to normal operating temperature.), check that the monitor fluctuates between LEAN and RICH more than 5 times during 10 seconds. 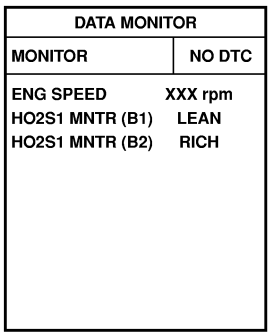 DATA MONITOR MONITOR / NO DTC ENG SPEED XXX rpm HO2S1 MNTR (B1) LEAN HO2S1 MNTR (B2) RICH PBIB0120E **1 time: RICH → LEAN → RICH** **2 times: RICH → LEAN → RICH → LEAN → RICH**	
OK or NG	
OK ▶	GO TO 21.
NG (Monitor does not fluctuate.) ▶	GO TO 23.
NG (Monitor fluctuates less than 5 times.) ▶	GO TO 31.

20	CHECK HEATED OXYGEN SENSOR 1 (BANK 1) SIGNAL

Without CONSULT-II

1. Stop engine and set ECM to Self-diagnostic mode II (Heated oxygen sensor 1 monitor). Refer to "HOW TO SWITCH DIAGNOSTIC TEST MODE", EC-95.
2. Start engine and run it at about 2,000 rpm for about 2 minutes under no-load.
3. Running engine at 2,000 rpm under no-load (The engine is warmed up to normal operating temperature.), check that the MIL comes on more than 5 times during 10 seconds.

OK or NG

OK	▶	GO TO 22.
NG (MIL does not come on)	▶	GO TO 23.
NG (MIL comes on less than 5 times)	▶	GO TO 31.

21	CHECK HEATED OXYGEN SENSOR 1 (BANK 2) SIGNAL

With CONSULT-II

1. See "HO2S1 MNTR (B2)" in "DATA MONITOR" mode.
2. Running engine at 2,000 rpm under no-load (The engine is warmed up to normal operating temperature.), check that the monitor fluctuates between LEAN and RICH more than 5 times during 10 seconds.

DATA MONITOR	
MONITOR	NO DTC
ENG SPEED	XXX rpm
HO2S1 MNTR (B1)	LEAN
HO2S1 MNTR (B2)	RICH

PBIB0120E

1 time: RICH → LEAN → RICH
2 times: RICH → LEAN → RICH → LEAN → RICH

OK or NG

OK	▶	**INSPECTION END**
NG (Monitor does not fluctuate.)	▶	GO TO 24.
NG (Monitor fluctuates less than 5 times.)	▶	GO TO 31.

22	CHECK HEATED OXYGEN SENSOR 1 (BANK 2) SIGNAL

Without CONSULT-II

1. Switch the monitored sensor from bank 1 to bank 2. Refer to "How to Switch Monitored Sensor from Bank 1 to Bank 2 or Vice Versa", EC-95.
2. Running engine at 2,000 rpm under no-load (The engine is warmed up to normal operating temperature.), check that the MIL comes on more than 5 times during 10 seconds.

OK or NG

OK	▶	**INSPECTION END**
NG (MIL does not come on)	▶	GO TO 24.
NG (MIL comes on less than 5 times)	▶	GO TO 31.

23	CHECK HEATED OXYGEN SENSOR 1 (BANK 1) HARNESS
1. Turn ignition switch OFF and disconnect battery ground cable. 2. Disconnect ECM harness connector. 3. Disconnect heated oxygen sensor 1 (bank 1) harness connector. 4. Check harness continuity between ECM terminal 35 and heated oxygen sensor 1 (bank 1) terminal 1. Refer to "Wiring Diagram", EC-226. **Continuity should exist.** 5. Also check harness for short to ground and short to power.	
OK or NG	
OK ▶	GO TO 25.
NG ▶	1. Repair or replace harness between ECM and heated oxygen sensor 1 (bank 1). 2. GO TO 4.

24	CHECK HEATED OXYGEN SENSOR 1 (BANK 2) HARNESS
1. Turn ignition switch OFF and disconnect battery ground cable. 2. Disconnect ECM harness connector. 3. Disconnect heated oxygen sensor 1 (bank 2) harness connector. 4. Check harness continuity between ECM terminal 16 and heated oxygen sensor 1 (bank 2) terminal 1. Refer to "Wiring Diagram", EC-227. **Continuity should exist.** 5. Also check harness for short to ground and short to power.	
OK or NG	
OK ▶	GO TO 25.
NG ▶	1. Repair or replace harness between ECM and heated oxygen sensor 1 (bank 2). 2. GO TO 4.

25	PERFORM ACCELERATOR PEDAL RELEASED POSITION LEARNING
1. Reconnect ECM harness connector. 2. Perform "Accelerator pedal released position learning", EC-73.	
▶	GO TO 26.

26	PERFORM THROTTLE VALVE CLOSED POSITION LEARNING
Perform "Throttle Valve Closed Position Learning", EC-73.	
▶	GO TO 27.

27	PERFORM IDLE AIR VOLUME LEARNING
Perform "Idle Air Volume Learning", EC-73. **Is Idle Air Volume Learning carried out successfully?**	
Yes or No	
Yes (With CONSULT-II) ▶	GO TO 28.
Yes (Without CONSULT-II) ▶	GO TO 29.
No ▶	1. Follow the instruction of Idle Air Volume Learning. 2. GO TO 4.

28	CHECK CO %

With CONSULT-II

1. Start engine and warm it up until engine coolant temperature indicator points to the middle of gauge.
2. Turn ignition switch OFF, wait at least 10 seconds and then turn ON.
3. Select "ENG COOLANT TEMP" in "ACTIVE TEST" mode.
4. Set "ENG COOLANT TEMP" to 5°C (41°F) by touching "DWN" and "Qd".
5. Start engine and rev it (2,000 to 3,000 rpm) two or three times under no-load, then run engine at idle speed.
6. Check CO %.

ACTIVE TEST	
ENG COOLANT TEMP	XXX °C
MONITOR	
ENG SPEED	XXX rpm
INJ PULSE-B1	XXX msec
IGN TIMING	XXX BTDC

SEF172Y

Idle CO: 0.7 - 9.9% and engine runs smoothly.

OK or NG

OK	▶	GO TO 31.
NG	▶	GO TO 30.

29	CHECK CO %

Without CONSULT-II

1. Start engine and warm it up until engine coolant temperature indicator points to the middle of gauge.
2. Turn ignition switch OFF.
3. Disconnect engine coolant temperature sensor harness connector.
4. Connect a resistor (4.4 kΩ) between terminals of engine coolant temperature sensor harness connector.
5. Start engine and rev it (2,000 to 3,000 rpm) two or three times under no-load, then run engine at idle speed.
6. Check CO %.
   Idle CO: 0.7 - 9.9% and engine runs smoothly.
7. After checking CO %, turn ignition switch OFF, disconnect the resistor from the terminals of engine coolant temperature sensor harness connector, and then connect engine coolant temperature sensor harness connector to engine coolant temperature sensor.

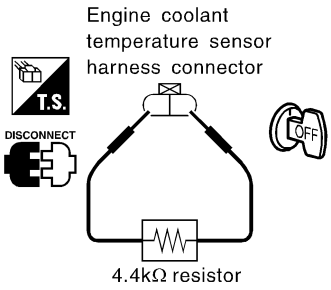

SEF982UA

OK or NG

OK	▶	GO TO 31.
NG	▶	GO TO 30.

30	RECONNECT HEATED OXYGEN SENSOR 1 HARNESS CONNECTOR

1. Turn ignition switch OFF.
2. Reconnect heated oxygen sensor 1 harness connector.

	▶	GO TO 34.

31	REPLACE HEATED OXYGEN SENSOR 1
1. Stop engine. 2. Replace heated oxygen sensor 1 on the malfunctioning bank.	
With CONSULT-II ▶	GO TO 32.
Without CONSULT-II ▶	GO TO 33.

32	CHECK HEATED OXYGEN SENSOR 1 (BANK 1)/(BANK 2) SIGNAL
With CONSULT-II 1. Start engine and warm it up until engine coolant temperature indicator points to the middle of gauge. 2. See "HO2S1 MNTR (B1)/(B2)" in "DATA MONITOR" mode. 3. Running engine at 2,000 rpm under no-load (The engine is warmed up to normal operating temperature.), check that the monitor fluctuates between LEAN and RICH more than 5 times during 10 seconds. **1 time: RICH → LEAN → RICH** **2 times: RICH → LEAN → RICH → LEAN → RICH**	
OK or NG	
OK ▶	GO TO 4.
NG ▶	GO TO 34.

33	CHECK HEATED OXYGEN SENSOR 1 (BANK 1)/(BANK 2) SIGNAL
Without CONSULT-II 1. Set ECM to Self-diagnostic mode II (Heated oxygen sensor 1 monitor). Refer to "How to Switch Diagnostic Test Mode", EC-95. 2. Switch the monitored sensor to the malfunctioning bank. Refer to "How to Switch Monitored Sensor from Bank 1 to Bank 2 or Vice Versa", EC-95. 3. Running engine at 2,000 rpm under no-load (The engine is warmed up to normal operating temperature.), check that the MIL comes on more than 5 times during 10 seconds.	
OK or NG	
OK ▶	GO TO 4.
NG ▶	GO TO 34.

34	DETECT MALFUNCTIONING PART
Check the following. ● Check mass air flow sensor and its circuit, and repair or replace if necessary. Refer to EC-187, EC-194. ● Check injector and its circuit, and repair or replace if necessary. Refer to EC-724. ● Check engine coolant temperature sensor and its circuit, and repair or replace if necessary. Refer to EC-204. ● Check fuel pressure and repair or replace if necessary. Refer to EC-56.	
OK or NG	
OK ▶	GO TO 36.
NG ▶	1. Repair or replace. 2. GO TO 35.

35	ERASE UNNECESSARY DTC
After this inspection, unnecessary DTC might be displayed. Erase the stored memory in ECM and TCM. Refer to "How to Erase Emission-related Diagnostic Information", EC-91 and AT-60.	
▶	GO TO 4.

36	CHECK ECM FUNCTION
1. Substitute another known-good ECM to check ECM function. (ECM may be the cause of an incident, but this is a rare case.) 2. Perform initialization of NVIS (NATS) system and registration of all NVIS (NATS) ignition key IDs. Refer to "NVIS (NISSAN VEHICLE IMMOBILIZER SYSTEM — NATS", EC-93.	
▶	GO TO 4.

Accelerator Pedal Released Position Learning

NAEC1183

DESCRIPTION

NAEC1183S01

Accelerator Pedal Released Position Learning is an operation to learn the fully released position of the accelerator pedal by monitoring the accelerator pedal position sensor output signal. It must be performed each time harness connector of accelerator pedal position sensor or ECM is disconnected.

OPERATION PROCEDURE

NAEC1183S02

1. Make sure that accelerator pedal is fully released.
2. Turn ignition switch ON and wait at least 2 seconds.
3. Turn ignition switch OFF wait at least 10 seconds.
4. Turn ignition switch ON and wait at least 2 seconds.
5. Turn ignition switch OFF wait at least 10 seconds.

Throttle Valve Closed Position Learning

NAEC1184

DESCRIPTION

NAEC1184S01

Throttle Valve Closed Position Learning is an operation to learn the fully closed position of the throttle valve by monitorizing the throttle position sensor output signal. It must be performed each time harness connector of electric throttle control actuator or ECM is disconnected.

OPERATION PROCEDURE

NAEC1184S02

1. Make sure that accelerator pedal is fully released.
2. Turn ignition switch ON.
3. Turn ignition switch OFF wait at least 10 seconds.
   Make sure that throttle valve moves during above 10 seconds by confirming the operating sound.

Idle Air Volume Learning

NAEC1182

DESCRIPTION

NAEC1182S01

Idle Air Volume Learning is an operation to learn the idle air volume that keeps each engine within the specific range. It must be performed under any of the following conditions:

- Each time electric throttle control actuator or ECM is replaced.
- Idle speed or ignition timing is out of specification.

PREPARATION

NAEC1182S02

Before performing Idle Air Volume Learning, make sure that all of the following conditions are satisfied.
Learning will be cancelled if any of the following conditions are missed for even a moment.

- Battery voltage: More than 12.9V (At idle)
- Engine coolant temperature: 70 - 100°C (158 - 212°F)
- PNP switch: ON
- Electric load switch: OFF
  (Air conditioner, headlamp, rear window defogger)
  On vehicles equipped with daytime light systems, if the parking brake is applied before the engine is started, the headlamp will not be illuminated.
- Steering wheel: Neutral (Straight-ahead position)

- Vehicle speed: Stopped
- Transmission: Warmed-up
  For A/T models with CONSULT-II, drive vehicle until "FLUID TEMP SE" in "DATA MONITOR" mode of "A/T" system indicates less than 0.9V.
  For A/T models without CONSULT-II and M/T models, drive vehicle for 10 minutes.

OPERATION PROCEDURE

NAEC1182S03

With CONSULT-II

NAEC1182S0301

NOTE:
Before perform Idle Air Volume Learning, make sure that Accelerator Pedal Released Position Learning and Throttle Valve Closed Position Learning are completed.
If not, perform "Accelerator Pedal Released Position Learning", EC-73 and "Throttle Valve Closed Position Learning", EC-73.

1. Start engine and warm it up to normal operating temperature.
2. Check that all items listed under the topic "PREPARATION" (previously mentioned) are in good order.

SELECT WORK ITEM
TP SW/TP SEN IDLE POSI ADJ
FUEL PRESSURE RELEASE
IDLE AIR VOL LEARN
SELF-LEARNING CONT
EVAP SYSTEM CLOSE
TARGET ING TIM ADJ

SEF452Y

3. Select "IDLE AIR VOL LEARN" in "WORK SUPPORT" mode.

WORK SUPPORT	
IDLE AIR VOL LEARN	
MONITOR	
ENG SPEED	XXX rpm
START	

SEF454Y

4. Touch "START" and wait 20 seconds.

WORK SUPPORT	
IDLE AIR VOL LEARN	CMPLT
MONITOR	
ENG SPEED	XXX rpm
START	

MBIB0238E

5. Make sure that "CMPLT" is displayed on CONSULT-II screen. If "CMPLT" is not displayed, Idle Air Volume Learning will not be carried out successfully. In this case, find the cause of the incident by referring to the Diagnostic Procedure below.
6. Rev up the engine two or three times and make sure that idle speed and ignition timing are within the specifications.

ITEM	SPECIFICATION
Idle speed	M/T: 750±50 rpm A/T: 750±50 rpm (in P or N position)

Ignition timing	M/T: 15±5° BTDC A/T: 15±5° BTDC (in P or N position)

Without CONSULT-II

NAEC1182S0302

NOTE:

- **It is better to count the time accurately with a clock.**
- **It is impossible to switch the diagnostic mode when an accelerator pedal position sensor circuit has a malfunction.**

NOTE:

Before perform Idle Air Volume Learning, make sure that Accelerator Pedal Released Position Learning and Throttle Valve Closed Position Learning are completed.
If not, perform "Accelerator Pedal Released Position Learning", EC-73 and "Throttle Valve Closed Position Learning", EC-73.

1. Start engine and warm it up to normal operating temperature.
2. Check that all items listed under the topic "PREPARATION" (previously mentioned) are in good order.
3. Turn ignition switch OFF and wait at least 10 seconds.
4. Confirm that accelerator pedal is fully released, turn ignition switch ON and wait 3 seconds.
5. Repeat the following procedure quickly five times within 5 seconds.

1) Fully depress the accelerator pedal.
2) Fully release the accelerator pedal.

6. Wait 7 seconds, fully depress the accelerator pedal and keep it for approx. 20 seconds until the MIL stops blinking and turns ON.
7. Fully release the accelerator pedal within 3 seconds after the MIL turned ON.
8. Start engine and let it idle.
9. Wait 20 seconds.

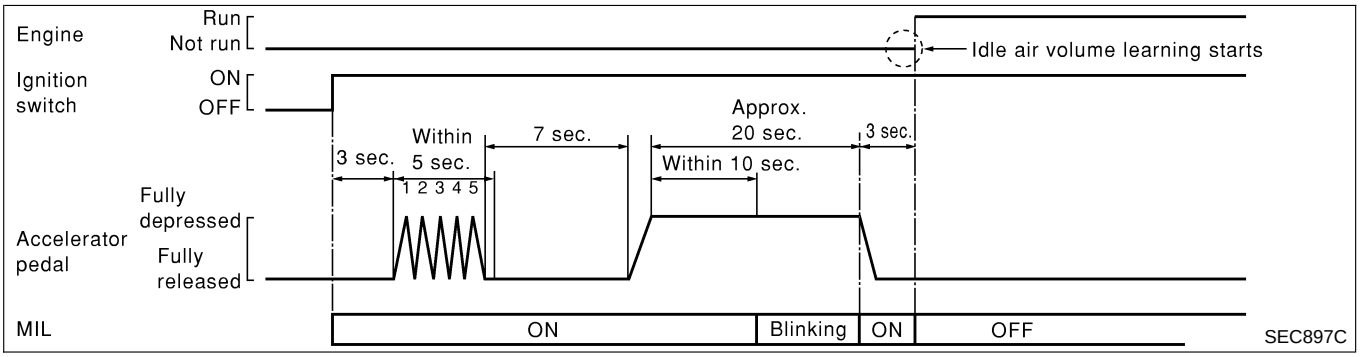

10. Rev up the engine two or three times and make sure that idle speed and ignition timing are within the specifications.

ITEM	SPECIFICATION
Idle speed	M/T: 750±50 rpm A/T: 750±50 rpm (in P or N position)
Ignition timing	M/T: 15±5° BTDC A/T: 15±5° BTDC (in P or N position)

11. If idle speed and ignition timing are not within the specification, Idle Air Volume Learning will not be carried out successfully. In this case, find the cause of the incident by referring to the Diagnostic Procedure below.

DIAGNOSTIC PROCEDURE

NAEC1182S04

If idle air volume learning cannot be performed successfully, proceed as follows:

1. **Check that throttle valve is fully closed.**
2. **Check PCV valve operation.**
3. **Check that downstream of throttle valve is free from air leakage.**
4. **When the above three items check out OK, engine component parts and their installation condition are questionable. Check and eliminate the cause of the incident.**
   It is useful to perform EC-151, "TROUBLE DIAGNOSIS - SPECIFICATION VALUE".
5. **If any of the following conditions occur after the engine has started, eliminate the cause of the incident and perform Idle Air Volume Learning all over again:**

- **Engine stalls.**
- **Erroneous idle.**

Introduction

NAEC0029

The ECM has an on board diagnostic system, which detects malfunctions related to engine sensors or actuators. The ECM also records various emission-related diagnostic information including:

Emission-related diagnostic information	SAE Mode
Diagnostic Trouble Code (DTC)	Mode 3 of SAE J1979
Freeze Frame data	Mode 2 of SAE J1979
System Readiness Test (SRT) code	Mode 1 of SAE J1979
1st Trip Diagnostic Trouble Code (1st Trip DTC)	Mode 7 of SAE J1979
1st Trip Freeze Frame data	
Test values and Test limits	Mode 6 of SAE J1979
Calibration ID	Mode 9 of SAE 1979

The above information can be checked using procedures listed in the table below.

X: Applicable —: Not applicable

	DTC	1st trip DTC	Freeze Frame data	1st trip Freeze Frame data	SRT code	Test value
CONSULT-II	X	X	X	X	X	—
GST	X	X	X	—	X	X
ECM	X	X*	—	—	—	—

*: When DTC and 1st trip DTC simultaneously appear on the display, they cannot be clearly distinguished from each other.

The malfunction indicator lamp (MIL) on the instrument panel lights up when the same malfunction is detected in two consecutive trips (Two trip detection logic), or when the ECM enters fail-safe mode. (Refer to EC-130.)

- When there is an open circuit on MIL circuit, the ECM cannot warn the driver by lighting MIL up when there is a malfunction on engine control system.
  Therefore, when electrically controlled throttle and part of ECM related diagnosis is continuously detected as NG for 5 trips, ECM warns the driver that engine control system has a malfunction and MIL circuit is open by means of operating fail-safe function.
  The fail-safe function also operates when above diagnoses except MIL circuit are detected and demands the driver to repair the malfunction.

Engine operating condition in fail-safe mode	Engine speed will not rise more than 2,500 rpm due to the fuel cut

Two Trip Detection Logic

NAEC0030

When a malfunction is detected for the first time, 1st trip DTC and 1st trip Freeze Frame data are stored in the ECM memory. The MIL will not light up at this stage. <1st trip>
If the same malfunction is detected again during the next drive, the DTC and Freeze Frame data are stored in the ECM memory, and the MIL lights up. The MIL lights up at the same time when the DTC is stored. <2nd trip> The “trip” in the “Two Trip Detection Logic” means a driving mode in which self-diagnosis is performed during vehicle operation. Specific on board diagnostic items will cause the ECM to light up or blink the MIL, and store DTC and Freeze Frame data, even in the 1st trip, as shown below.

X: Applicable —: Not Exit

Items	MIL				DTC		1st trip DTC	
	1st trip		2nd trip		1st trip displaying	2nd trip displaying	1st trip displaying	2nd trip displaying
	Blinking	Lighting up	Blinking	Lighting up				
Misfire (Possible three way catalyst damage) — DTC: P0300 - P0306 is being detected	X	—	—	—	—	—	X	—
Misfire (Possible three way catalyst damage) — DTC: P0300 - P0306 is being detected	—	—	X	—	—	X	—	—
One trip detection diagnoses (Refer to EC-9.)	—	X	—	—	X	—	—	—
Except above	—	—	—	X	—	X	X	—

*1: Except ECM

Emission-related Diagnostic Information

NAEC0031

DTC AND 1ST TRIP DTC

NAEC0031S01

The 1st trip DTC (whose number is the same as the DTC number) is displayed for the latest self-diagnostic result obtained. If the ECM memory was cleared previously, and the 1st trip DTC did not reoccur, the 1st trip DTC will not be displayed.

If a malfunction is detected during the 1st trip, the 1st trip DTC is stored in the ECM memory. The MIL will not light up (two trip detection logic). If the same malfunction is not detected in the 2nd trip (meeting the required driving pattern), the 1st trip DTC is cleared from the ECM memory. If the same malfunction is detected in the 2nd trip, both the 1st trip DTC and DTC are stored in the ECM memory and the MIL lights up. In other words, the DTC is stored in the ECM memory and the MIL lights up when the same malfunction occurs in two consecutive trips. If a 1st trip DTC is stored and a non-diagnostic operation is performed between the 1st and 2nd trips, only the 1st trip DTC will continue to be stored. For malfunctions that blink or light up the MIL during the 1st trip, the DTC and 1st trip DTC are stored in the ECM memory.

Procedures for clearing the DTC and the 1st trip DTC from the ECM memory are described in "HOW TO ERASE EMISSION-RELATED DIAGNOSTIC INFORMATION", EC-91.

For malfunctions in which 1st trip DTCs are displayed, refer to EC-87. These items are required by legal regulations to continuously monitor the system/component. In addition, the items monitored non-continuously are also displayed on CONSULT-II.

1st trip DTC is specified in Mode 7 of SAE J1979. 1st trip DTC detection occurs without lighting up the MIL and therefore does not warn the driver of a malfunction. However, 1st trip DTC detection will not prevent the vehicle from being tested, for example during Inspection/Maintenance (I/M) tests.

When a 1st trip DTC is detected, check, print out or write down and erase (1st trip) DTC and Freeze Frame data as specified in "Work Flow" procedure Step II, refer to EC-121. Then perform DTC Confirmation Procedure or Overall Function Check to try to duplicate the malfunction. If the malfunction is duplicated, the item requires repair.

How to Read DTC and 1st Trip DTC

NAEC0031S0101

DTC and 1st trip DTC can be read by the following methods.

With CONSULT-II

With GST

CONSULT-II or GST (Generic Scan Tool) Examples: P0117, P0340, P1065, etc.

These DTCs are prescribed by SAE J2012.

(CONSULT-II also displays the malfunctioning component or system.)

No TOOLS

The number of times the MIL blinks in Diagnostic Test Mode II (Self-diagnostic Results) indicates the DTC. (Example: 0117, 0340, 1065, etc.)

- **1st trip DTC No. is the same as DTC No.**
- **Output of a DTC indicates a malfunction. However, GST does not indicate whether the malfunction is still occurring or has occurred in the past and has returned to normal. CONSULT-II can identify malfunction status as shown below. Therefore, using CONSULT-II (if available) is recommended.**

A sample of CONSULT-II display for DTC and 1st trip DTC is shown below. DTC or 1st trip DTC of a malfunction is displayed in SELF-DIAGNOSTIC RESULTS mode of CONSULT-II. Time data indicates how many times the vehicle was driven after the last detection of a DTC.
If the DTC is being detected currently, the time data will be [0].
If a 1st trip DTC is stored in the ECM, the time data will be [1t].

DTC display

SELF DIAG RESULTS	
DTC RESULTS	TIME
CKP SEN/CIRCUIT [P0335]	0

1st trip DTC display

SELF DIAG RESULTS	
DTC RESULTS	TIME
CKP SEN/CIRCUIT [P0335]	1t

PBIB0911E

FREEZE FRAME DATA AND 1ST TRIP FREEZE FRAME DATA

NAEC0031S02

The ECM records the driving conditions such as fuel system status, calculated load value, engine coolant temperature, short term fuel trim, long term fuel trim, engine speed, vehicle speed and absolute pressure at the moment a malfunction is detected.
Data which are stored in the ECM memory, along with the 1st trip DTC, are called 1st trip freeze frame data. The data, stored together with the DTC data, are called freeze frame data and displayed on CONSULT-II or GST. The 1st trip freeze frame data can only be displayed on the CONSULT-II screen, not on the GST. For details, see EC-107.
Only one set of freeze frame data (either 1st trip freeze frame data or freeze frame data) can be stored in the ECM. 1st trip freeze frame data is stored in the ECM memory along with the 1st trip DTC. There is no priority for 1st trip freeze frame data and it is updated each time a different 1st trip DTC is detected. However, once freeze frame data (2nd trip detection/MIL on) is stored in the ECM memory, 1st trip freeze frame data is no longer stored. Remember, only one set of freeze frame data can be stored in the ECM. The ECM has the following priorities to update the data.

Priority	Items	
1	Freeze frame data	Misfire — DTC: P0300 - P0306 Fuel Injection System Function — DTC: P0171, P0172, P0174, P0175
2		Except the above items (Includes A/T related items)
3	1st trip freeze frame data	

For example, the EGR malfunction (Priority: 2) was detected and the freeze frame data was stored in the 2nd trip. After that when the misfire (Priority: 1) is detected in another trip, the freeze frame data will be updated from the EGR malfunction to the misfire. The 1st trip freeze frame data is updated each time a different malfunction is detected. There is no priority for 1st trip freeze frame data. However, once freeze frame data is stored in the ECM memory, 1st trip freeze data is no longer stored (because only one freeze frame data or 1st trip freeze frame data can be stored in the ECM). If freeze frame data is stored in the ECM memory and freeze frame data with the same priority occurs later, the first (original) freeze frame data remains unchanged in the ECM memory.
Both 1st trip freeze frame data and freeze frame data (along with the DTCs) are cleared when the ECM memory is erased. Procedures for clearing the ECM memory are described in "HOW TO ERASE EMISSION-RELATED DIAGNOSTIC INFORMATION", EC-91.

SYSTEM READINESS TEST (SRT) CODE

NAEC0031S03

System Readiness Test (SRT) code is specified in Mode 1 of SAE J1979.
As part of an enhanced emissions test for Inspection & Maintenance (I/M), certain states require the status of SRT be used to indicate whether the ECM has completed self-diagnosis of major emission systems and components. Completion must be verified in order for the emissions inspection to proceed.
If a vehicle is rejected for a State emissions inspection due to one or more SRT items indicating "INCMP", use the information in this Service Manual to set the SRT to "CMPLT".
In most cases the ECM will automatically complete its self-diagnosis cycle during normal usage, and the SRT status will indicate "CMPLT" for each application system. Once set as "CMPLT", the SRT status remains

"CMPLT" until the self-diagnosis memory is erased.
Occasionally, certain portions of the self-diagnostic test may not be completed as a result of the customer's normal driving pattern; the SRT will indicate "INCMP" for these items.

NOTE:
The SRT will also indicate "INCMP" if the self-diagnosis memory is erased for any reason or if the ECM memory power supply is interrupted for several hours.

If, during the state emissions inspection, the SRT indicates "CMPLT" for all test items, the inspector will continue with the emissions test. However, if the SRT indicates "INCMP" for one or more of the SRT items the vehicle is returned to the customer untested.

NOTE:
If MIL is ON during the state emissions inspection, the vehicle is also returned to the customer untested even though the SRT indicates "CMPLT" for all test items. Therefore, it is important to check SRT ("CMPLT") and DTC (No DTCs) before the inspection.

SRT Item

NAEC0031S0310

The table below shows required self-diagnostic items to set the SRT to "CMPLT".

SRT item (CONSULT-II indication)	Performance Priority*	Required self-diagnostic items to set the SRT to "CMPLT"	Corresponding DTC No.
CATALYST	2	Three way catalyst function	P0420, P0430
EVAP SYSTEM	1	EVAP control system (small leak) (negative pressure)	P0442, P1442
	2	EVAP control system (very small leak) (negative pressure)/ (positive pressure)	P0456, P1456
	2	EVAP control system purge flow monitoring	P0441
HO2S	2	Heated oxygen sensor 1 (lean shift monitoring)	P1143, P1163
		Heated oxygen sensor 1 (rich shift monitoring)	P1144, P1164
		Heated oxygen sensor 1 (response monitoring)	P0133, P0153
		Heated oxygen sensor 2 (min. voltage monitoring)	P1146, P1166
		Heated oxygen sensor 2 (max. voltage monitoring)	P1147, P1167
		Heated oxygen sensor 2 (response monitoring)	P0139, P0159
HO2S HTR	2	Heated oxygen sensor 1 heater	P0031, P0032, P0051, P0052
		Heated oxygen sensor 2 heater	P0037, P0038, P0057, P0058

*: If completion of several SRTs is required, perform driving patterns (DTC confirmation procedure), one by one based on the priority for models with CONSULT-II.

SRT Set Timing

=NAEC0031S0311

SRT is set as "CMPLT" after self-diagnosis has been performed one or more times. Completion of SRT is done regardless of whether the result is OK or NG. The set timing is different between OK and NG results and is shown in the table below.

Self-diagnosis result		Example				
		Diagnosis	Ignition cycle ← ON → OFF	← ON → OFF	← ON → OFF	← ON →
All OK	Case 1	P0400	OK (1)	— (1)	OK (2)	— (2)
		P0402	OK (1)	— (1)	— (1)	OK (2)
		P1402	OK (1)	OK (2)	— (2)	— (2)
		SRT of EGR	"CMPLT"	"CMPLT"	"CMPLT"	"CMPLT"
	Case 2	P0400	OK (1)	— (1)	— (1)	— (1)
		P0402	— (0)	— (0)	OK (1)	— (1)
		P1402	OK (1)	OK (2)	— (2)	— (2)
		SRT of EGR	"INCMP"	"INCMP"	"CMPLT"	"CMPLT"
NG exists	Case 3	P0400	OK	OK	—	—
		P0402	—	—	—	—
		P1402	NG	—	NG	NG (Consecutive NG)
		(1st trip) DTC	1st trip DTC	—	1st trip DTC	DTC (= MIL "ON")
		SRT of EGR	"INCMP"	"INCMP"	"INCMP"	"CMPLT"

OK: Self-diagnosis is carried out and the result is OK.
NG: Self-diagnosis is carried out and the result is NG.
—: Self-diagnosis is not carried out.

When all SRT related self-diagnoses showed OK results in a single cycle (Ignition OFF-ON-OFF), the SRT will indicate "CMPLT". → Case 1 above
When all SRT related self-diagnoses showed OK results through several different cycles, the SRT will indicate "CMPLT" at the time the respective self-diagnoses have at least one OK result. → Case 2 above
If one or more SRT related self-diagnoses showed NG results in 2 consecutive cycles, the SRT will also indicate "CMPLT". → Case 3 above
The table above shows that the minimum number of cycles for setting SRT as "INCMP" is one (1) for each self-diagnosis (Case 1 & 2) or two (2) for one of self-diagnoses (Case 3). However, in preparation for the state emissions inspection, it is unnecessary of each self-diagnosis to be executed twice (Case 3) for the following reasons:

- The SRT will indicate "CMPLT" at the time the respective self-diagnoses have one (1) OK result.
- The emissions inspection requires "CMPLT" of the SRT only with OK self-diagnosis results.
- When, during SRT driving pattern, 1st trip DTC (NG) is detected prior to "CMPLT" of SRT, the self-diagnosis memory must be erased from ECM after repair.
- If the 1st trip DTC is erased, all the SRT will indicate "INCMP".

NOTE:
SRT can be set as "CMPLT" together with the DTC(s). Therefore, DTC check must always be carried out prior to the state emission inspection even though the SRT indicates "CMPLT".

SRT Service Procedure

NAEC0031S0312

If a vehicle has failed the state emissions inspection due to one or more SRT items indicating "INCMP", review the flowchart diagnostic sequence on the next page.

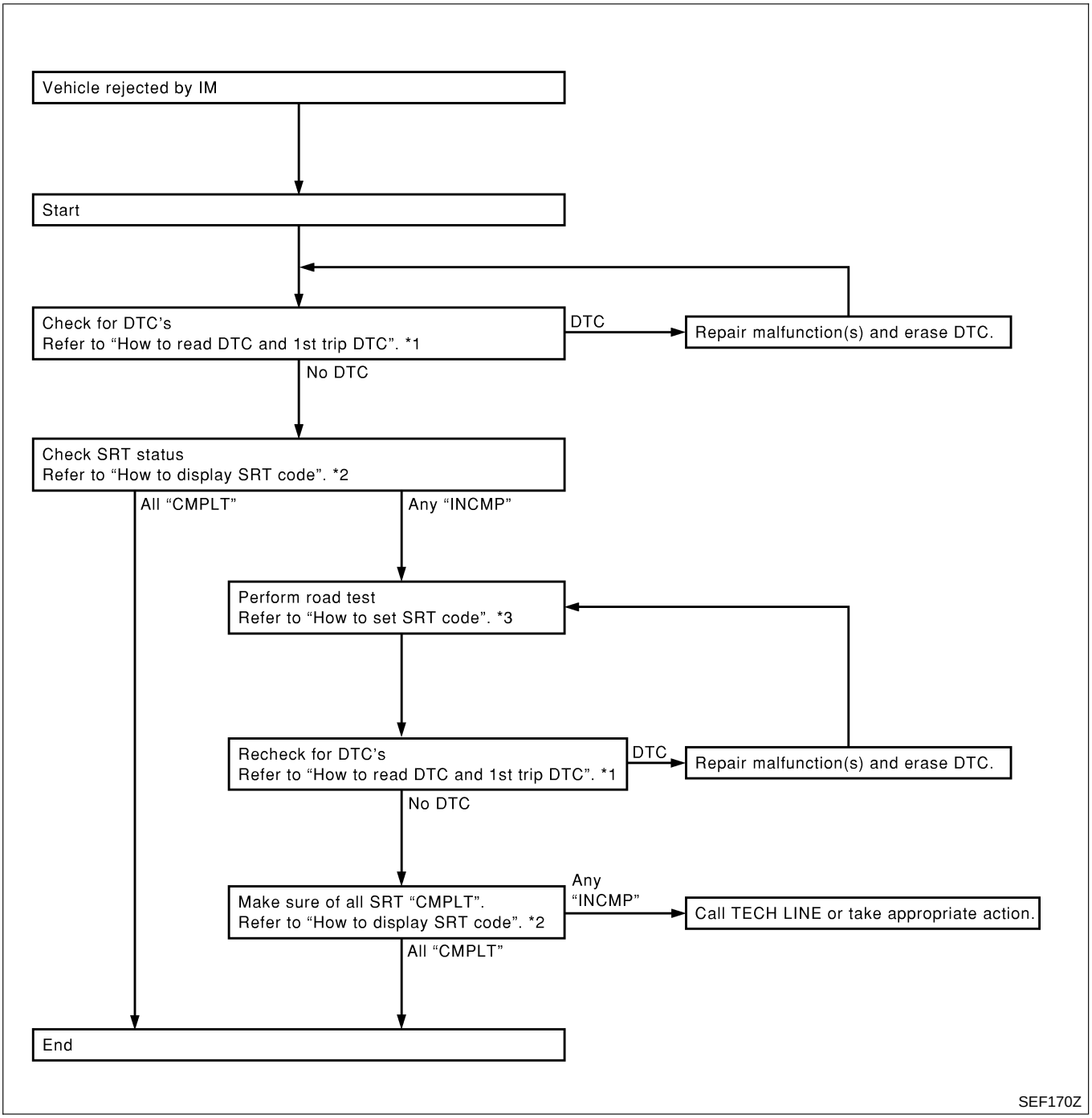

*1 EC-78 *2 EC-82 *3 EC-83

How to Display SRT Code

NAEC0031S0301

With CONSULT-II

Selecting "SRT STATUS" in "DTC CONFIRMATION" mode with CONSULT-II.

For items whose SRT codes are set, a "CMPLT" is displayed on the CONSULT-II screen; for items whose SRT codes are not set, "INCMP" is displayed.

With GST

Selecting Mode 1 with GST (Generic Scan Tool)

A sample of CONSULT-II display for SRT code is shown below.

"INCMP" means the self-diagnosis is incomplete and SRT is not set. "CMPLT" means the self-diagnosis is complete and SRT is set.

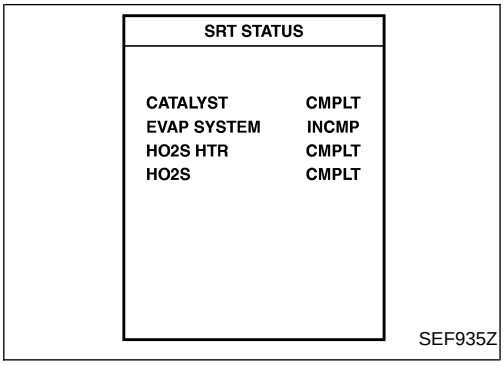

How to Set SRT Code

NAEC0031S0302

To set all SRT codes, self-diagnosis for the items indicated above must be performed one or more times. Each diagnosis may require a long period of actual driving under various conditions.

With CONSULT-II

Perform corresponding DTC Confirmation Procedure one by one based on "Performance Priority" in the table on EC-80.

Without CONSULT-II

The most efficient driving pattern in which SRT codes can be properly set is explained on the next page. The driving pattern should be performed one or more times to set all SRT codes.

Driving Pattern

NAEC0031S0303

Driving pattern

Note: Always drive vehicle in safe manner according to traffic conditions and obey all traffic laws.
Refer to next page for more information and explanation of chart.

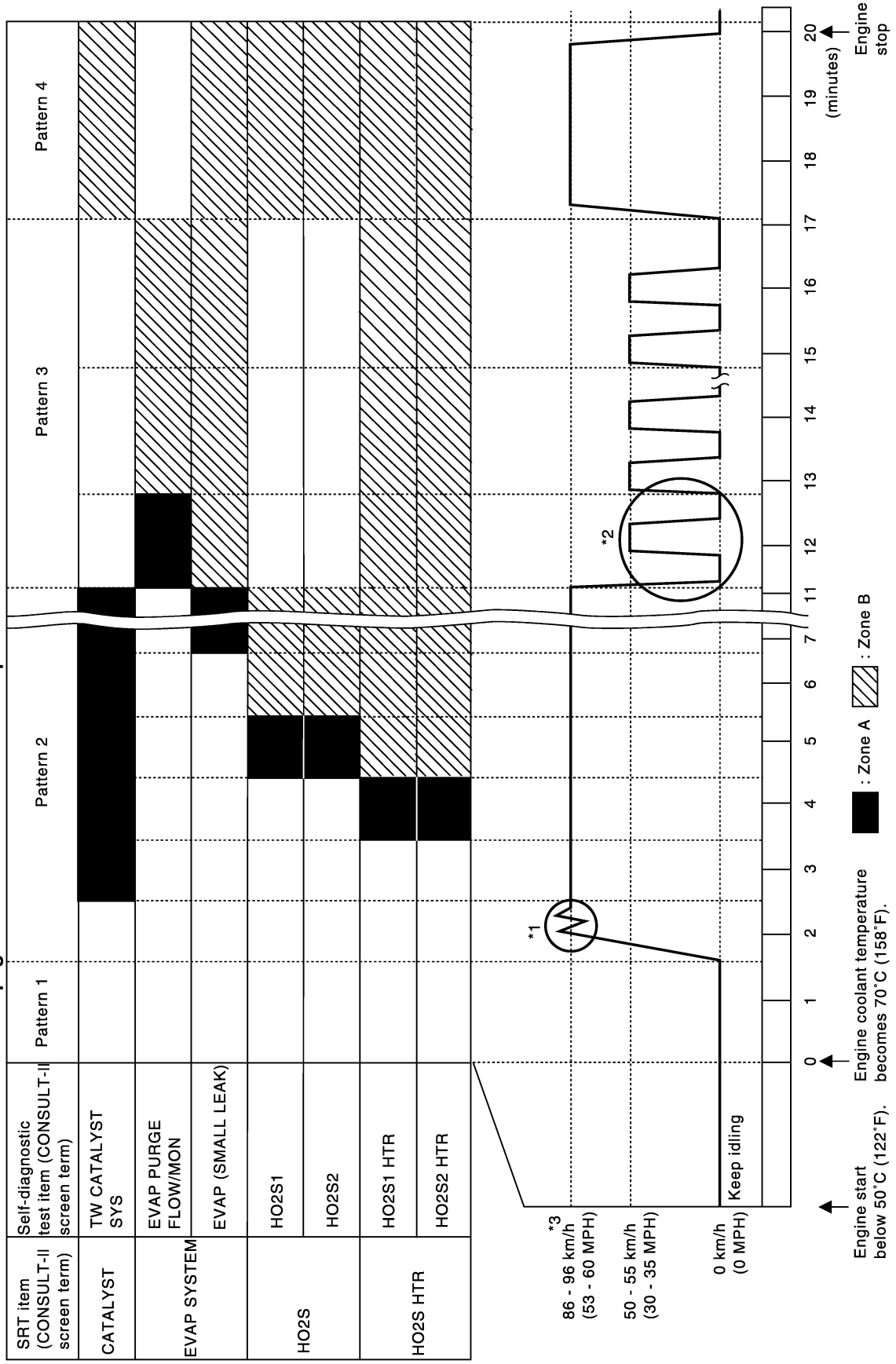

PBIB1053E

- The time required for each diagnosis varies with road surface conditions, weather, altitude, individual driving habits, etc.
  Zone A refers to the range where the time required, for the diagnosis under normal conditions*, is the shortest.
  Zone B refers to the range where the diagnosis can still be performed if the diagnosis is not completed within zone A.

*: Normal conditions refer to the following:

− Sea level
− Flat road
− Ambient air temperature: 20 - 30°C (68 - 86°F)
− Diagnosis is performed as quickly as possible under normal conditions.
  Under different conditions [For example: ambient air temperature other than 20 - 30°C (68 - 86°F)], diagnosis may also be performed.

Pattern 1:

- **The engine is started at the engine coolant temperature of −10 to 35°C (14 to 95°F) (where the voltage between the ECM terminal 73 and ground is 3.0 - 4.3V).**
- **The engine must be operated at idle speed until the engine coolant temperature is greater than 70°C (158°F) (where the voltage between the ECM terminal 73 and ground is lower than 1.4V).**
- **The engine is started at the fuel tank temperature of warmer than 0°C (32°F) (where the voltage between the ECM terminal 107 and ground is less than 4.1V).**

Pattern 2:

- When steady-state driving is performed again even after it is interrupted, each diagnosis can be conducted. In this case, the time required for diagnosis may be extended.

Pattern 3:

- The driving pattern outlined in *2 must be repeated at least 3 times.

Pattern 4:

- Tests are performed after the engine has been operated for at least 17 minutes.
- The accelerator pedal must be held very steady during steady-state driving.
- If the accelerator pedal is moved, the test must be conducted all over again.

*1: Depress the accelerator pedal until vehicle speed is 90 km/h (56 MPH), then release the accelerator pedal and keep it released for more than 10 seconds. Depress the accelerator pedal until vehicle speed is 90 km/h (56 MPH) again.

*2: Operate the vehicle in the following driving pattern.

1) Decelerate vehicle to 0 km/h (0 MPH) and let engine idle.
2) Repeat driving pattern shown below at least 10 times.

- **During acceleration, hold the accelerator pedal as steady as possible.**

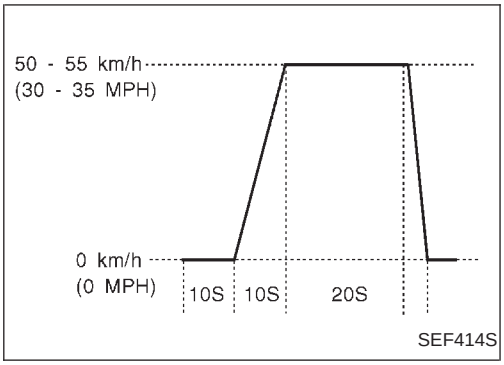

*3: Checking the vehicle speed with GST is advised.

Suggested Transmission Gear Position for A/T Models

Set the selector lever in the D position with the overdrive switch turned ON.

Suggested upshift speeds for M/T models

Shown below are suggested vehicle speeds for shifting into a higher gear. These suggestions relate to fuel economy and vehicle performance. Actual upshift speeds will vary according to road conditions, the weather and individual driving habits.

	For normal acceleration in low altitude areas [less than 1,219 m (4,000 ft)]:		For quick acceleration in low altitude areas and high altitude areas [over 1,219 m (4,000 ft)]:
Gear change	ACCEL shift point km/h (MPH)	CRUISE shift point km/h (MPH)	km/h (MPH)
1st to 2nd	21 (13)	21 (13)	24 (15)
2nd to 3rd	37 (23)	26 (16)	40 (25)
3rd to 4th	53 (33)	44 (27)	64 (40)
4th to 5th	63 (39)	58 (36)	72 (45)

Suggested Maximum Speed in Each Gear

Downshift to a lower gear if the engine is not running smoothly, or if you need to accelerate.

Do not exceed the maximum suggested speed (shown below) in any gear. For level road driving, use the highest gear suggested for that speed. Always observe posted speed limits and drive according to the road conditions to ensure safe operation. Do not over-rev the engine when shifting to a lower gear as it may cause engine damage or loss of vehicle control.

Gear	km/h (MPH)
1st	50 (30)
2nd	89 (55)
3rd	128 (80)
4th	—
5th	—

TEST VALUE AND TEST LIMIT (GST ONLY — NOT APPLICABLE TO CONSULT-II)

NAEC0031S04

The following is the information specified in Mode 6 of SAE J1979.

The test value is a parameter used to determine whether a system/circuit diagnostic test is OK or NG while being monitored by the ECM during self-diagnosis. The test limit is a reference value which is specified as the maximum or minimum value and is compared with the test value being monitored.

These data (test value and test limit) are specified by Test ID (TID) and Component ID (CID) and can be displayed on the GST screen.

SRT item	Self-diagnostic test item	DTC	Test value (GST display)		Test limit	Conversion
			TID	CID		
CATALYST	Three way catalyst function (Bank 1)	P0420	01H	01H	Max.	1/128
		P0420	02H	81H	Min.	1
	Three way catalyst function (Bank 2)	P0430	03H	02H	Max.	1/128
		P0430	04H	82H	Min.	1
EVAP SYSTEM	EVAP control system (Small leak)	P0442	05H	03H	Max.	1/128 mm^2
	EVAP control system purge flow monitoring	P0441	06H	83H	Min.	20 mV
	EVAP control system (Very small leak)	P0456	07H	03H	Max.	1/128 mm^2
		P1456	07H	03H	Max.	1/128 mm^2

SRT item	Self-diagnostic test item	DTC	Test value (GST display)		Test limit	Conversion
			TID	CID		
HO2S	Heated oxygen sensor 1 (Bank 1)	P0133	09H	04H	Max.	16 ms
		P1143	0AH	84H	Min.	10 mV
		P1144	0BH	04H	Max.	10 mV
		P0132	0CH	04H	Max.	10 mV
		P0134	0DH	04H	Max.	1 s
	Heated oxygen sensor 1 (Bank 2)	P0153	11H	05H	Max.	16 ms
		P1163	12H	85H	Min.	10 mV
		P1164	13H	05H	Max.	10 mV
		P0152	14H	05H	Max.	10 mV
		P0154	15H	05H	Max.	1 s
	Heated oxygen sensor 2 (Bank 1)	P0139	19H	86H	Min.	10 mV/500 ms
		P1147	1AH	86H	Min.	10 mV
		P1146	1BH	06H	Max.	10 mV
		P0138	1CH	06H	Max.	10 mV
	Heated oxygen sensor 2 (Bank 2)	P0159	21H	87H	Min.	10 mV/500 ms
		P1167	22H	87H	Min.	10 mV
		P1166	23H	07H	Max.	10 mV
		P0158	24H	07H	Max.	10 mV
HO2S HTR	Heated oxygen sensor 1 heater (Bank 1)	P0032	29H	08H	Max.	20 mV
		P0031	2AH	88H	Min.	20 mV
	Heated oxygen sensor 1 heater (Bank 2)	P0052	2BH	09H	Max.	20 mV
		P0051	2CH	89H	Min.	20 mV
	Heated oxygen sensor 2 heater (Bank 1)	P0038	2DH	0AH	Max.	20 mV
		P0037	2EH	8AH	Min.	20 mV
	Heated oxygen sensor 2 heater (Bank 2)	P0058	2FH	0BH	Max.	20 mV
		P0057	30H	8BH	Min.	20 mV

EMISSION-RELATED DIAGNOSTIC INFORMATION ITEMS

NAEC0031S05

X: Applicable —: Not applicable

Items (CONSULT-II screen terms)	DTC*1		SRT code	Test value/Test limit	1st trip DTC*1	Reference page
	CONSULT-II GST*2	ECM*3				
CAN COMM CIRCUIT	U1000	1000*5	—	—	—	EC-166
CAN COMM CIRCUIT	U1001	1001*5	—	—	X	EC-166
NO DTC IS DETECTED. FURTHER TESTING MAY BE REQUIRED.	**P0000**	**0000**	**—**	**—**	**—**	**—**
INT/V TIM CONT-B1	P0011	0011	—	—	X	EC-169

Items (CONSULT-II screen terms)	DTC*1		SRT code	Test value/Test limit	1st trip DTC*1	Reference page
	CONSULT-II GST*2	ECM*3				
INT/V TIM CONT-B2	P0021	0021	—	—	X	EC-169
HO2S1 HTR (B1)	P0031	0031	X	X	X	EC-173
HO2S1 HTR (B1)	P0032	0032	X	X	X	EC-173
HO2S2 HTR (B1)	P0037	0037	X	X	X	EC-181
HO2S2 HTR (B1)	P0038	0038	X	X	X	EC-181
HO2S1 HTR (B2)	P0051	0051	X	X	X	EC-173
HO2S1 HTR (B2)	P0052	0052	X	X	X	EC-173
HO2S2 HTR (B2)	P0057	0057	X	X	X	EC-181
HO2S2 HTR (B2)	P0058	0058	X	X	X	EC-181
MAF SEN/CIRCUIT	P0101	0101	—	—	—	EC-187
MAF SEN/CIRCUIT	P0102	0102	—	—	—	EC-194
MAF SEN/CIRCUIT	P0103	0103	—	—	—	EC-194
IAT SEN/CIRCUIT	P0112	0112	—	—	X	EC-200
IAT SEN/CIRCUIT	P0113	0113	—	—	X	EC-200
ECT SEN/CIRC	P0117	0117	—	—	—	EC-204
ECT SEN/CIRC	P0118	0118	—	—	—	EC-204
TP SEN 2/CIRC	P0122	0122	—	—	—	EC-210
TP SEN 2/CIRC	P0123	0123	—	—	—	EC-210
ECT SENSOR	P0125	0125	—	—	—	EC-217
IAT SENSOR	P0127	0127	—	—	X	EC-220
THERMSTAT FNCTN	P0128	0128	—	—	X	EC-222
HO2S1 (B1)	P0132	0132	—	X	X	EC-224
HO2S1 (B1)	P0133	0133	X	X	X	EC-233
HO2S1 (B1)	P0134	0134	—	X	X	EC-246
HO2S2 (B1)	P0138	0138	—	X	X	EC-255
HO2S2 (B1)	P0139	0139	X	X	X	EC-263
HO2S1 (B2)	P0152	0152	—	X	X	EC-224
HO2S1 (B2)	P0153	0153	X	X	X	EC-233
HO2S1 (B2)	P0154	0154	—	X	X	EC-246
HO2S2 (B2)	P0158	0158	—	X	X	EC-255
HO2S2 (B2)	P0159	0159	X	X	X	EC-263
FUEL SYS-LEAN-B1	P0171	0171	—	—	X	EC-273
FUEL SYS-RICH-B1	P0172	0172	—	—	X	EC-282
FUEL SYS-LEAN-B2	P0174	0174	—	—	X	EC-273
FUEL SYS-RICH-B2	P0175	0175	—	—	X	EC-282
FTT SENSOR	P0181	0181	—	—	X	EC-290

Items (CONSULT-II screen terms)	DTC*1		SRT code	Test value/Test limit	1st trip DTC*1	Reference page
	CONSULT-II GST*2	ECM*3				
FTT SEN/CIRCUIT	P0182	0182	—	—	X	EC-293
FTT SEN/CIRCUIT	P0183	0183	—	—	X	EC-293
TP SEN 1/CIRC	P0222	0222	—	—	—	EC-298
TP SEN 1/CIRC	P0223	0223	—	—	—	EC-298
MULTI CYL MISFIRE	P0300	0300	—	—	X	EC-305
CYL 1 MISFIRE	P0301	0301	—	—	X	EC-305
CYL 2 MISFIRE	P0302	0302	—	—	X	EC-305
CYL 3 MISFIRE	P0303	0303	—	—	X	EC-305
CYL 4 MISFIRE	P0304	0304	—	—	X	EC-305
CYL 5 MISFIRE	P0305	0305	—	—	X	EC-305
CYL 6 MISFIRE	P0306	0306	—	—	X	EC-305
KNOCK SEN/CIRC-B1	P0327	0327	—	—	X	EC-314
KNOCK SEN/CIRC-B1	P0328	0328	—	—	X	EC-314
CKP SEN/CIRCUIT	P0335	0335	—	—	X	EC-319
CMP SEN/CIRC-B1	P0340	0340	—	—	X	EC-326
CMP SEN/CIRC-B2	P0345	0345	—	—	X	EC-326
TW CATALYST SYS-B1	P0420	0420	X	X	X	EC-334
TW CATALYST SYS-B2	P0430	0430	X	X	X	EC-334
EVAP PURG FLOW/MON	P0441	0441	X	X	X	EC-339
EVAP SMALL LEAK	P0442	0442	X	X	X	EC-349
PURG VOLUME CONT/V	P0444	0444	—	—	X	EC-364
PURG VOLUME CONT/V	P0445	0445	—	—	X	EC-364
VENT CONTROL VALVE	P0447	0447	—	—	X	EC-371
EVAP SYS PRES SEN	P0452	0452	—	—	X	EC-378
EVAP SYS PRES SEN	P0453	0453	—	—	X	EC-384
EVAP GROSS LEAK	P0455	0455	X	X	X	EC-394
EVAP VERY SML LEAK	P0456	0456	X*4	X	X	EC-407
FUEL LEV SEN SLOSH	P0460	0460	—	—	X	EC-423
FUEL LEVEL SENSOR	P0461	0461	—	—	X	EC-425
FUEL LEVL SEN/CIRC	P0462	0462	—	—	X	EC-428
FUEL LEVL SEN/CIRC	P0463	0463	—	—	X	EC-428
VEH SPEED SEN/CIRC*6	P0500	0500	—	—	X	EC-430
ISC SYSTEM	P0506	0506	—	—	X	EC-432
ISC SYSTEM	P0507	0507	—	—	X	EC-434
PW ST P SEN/CIRC	P0550	0550	—	—	X	EC-436
ECM	P0605	0605	—	—	X	EC-441

Items (CONSULT-II screen terms)	DTC*1		SRT code	Test value/Test limit	1st trip DTC*1	Reference page
	CONSULT-II GST*2	ECM*3				
PNP SW/CIRC	P0705	0705	—	—	X	AT-102
ATF TEMP SEN/CIRC	P0710	0710	—	—	X	AT-108
VEH SPD SEN/CIR AT*6	P0720	0720	—	—	X	AT-114
ENGINE SPEED SIG	P0725	0725	—	—	X	AT-119
A/T 1ST GR FNCTN	P0731	0731	—	—	X	AT-123
A/T 2ND GR FNCTN	P0732	0732	—	—	X	AT-129
A/T 3RD GR FNCTN	P0733	0733	—	—	X	AT-135
A/T 4TH GR FNCTN	P0734	0734	—	—	X	AT-141
TCC SOLENOID/CIRC	P0740	0740	—	—	X	AT-151
A/T TCC S/V FNCTN	P0744	0744	—	—	X	AT-156
L/PRESS SOL/CIRC	P0745	0745	—	—	X	AT-165
SFT SOL A/CIRC	P0750	0750	—	—	—	AT-171
SFT SOL B/CIRC	P0755	0755	—	—	—	AT-175
ECM BACK UP/CIRCUIT	P1065	1065	—	—	X	EC-443
INT/V TIM CONT-B1	P1110	1110	—	—	X	EC-448
INT/V TIM V/CIR-B1	P1111	1111	—	—	X	EC-451
ETC ACTR	P1121	1121	—	—	—	EC-457
ETC FUNCTION/CIRC	P1122	1122	—	—	—	EC-459
ETC MOT PWR	P1124	1124	—	—	—	EC-467
ETC MOT PWR	P1126	1126	—	—	—	EC-467
ETC MOT	P1128	1128	—	—	—	EC-472
SWIRL CONT SOL/V	P1130	1130	—	—	X	EC-477
SWIRL CONT SOL/V	P1131	1131	—	—	X	EC-498
INT/V TIM CONT-B2	P1135	1135	—	—	X	EC-448
INT/V TIM V/CIR-B2	P1136	1136	—	—	X	EC-451
HO2S1 (B1)	P1143	1143	X	X	X	EC-504
HO2S1 (B1)	P1144	1144	X	X	X	EC-512
HO2S2 (B1)	P1146	1146	X	X	X	EC-521
HO2S2 (B1)	P1147	1147	X	X	X	EC-531
CLOSED LOOP-B1	P1148	1148	—	—	—	EC-541
HO2S1 (B2)	P1163	1163	X	X	X	EC-504
HO2S1 (B2)	P1164	1164	X	X	X	EC-512
SWL CON VC SW/CIRC	P1165	1165	—	—	X	EC-543
HO2S2 (B2)	P1166	1166	X	X	X	EC-521
HO2S2 (B2)	P1167	1167	X	X	X	EC-531
CLOSED LOOP-B2	P1168	1168	—	—	—	EC-541

Items (CONSULT-II screen terms)	DTC*1		SRT code	Test value/Test limit	1st trip DTC*1	Reference page
	CONSULT-II GST*2	ECM*3				
TCS C/U FUNCTN	P1211	1211	—	—	X	EC-549
TCS/CIRC	P1212	1212	—	—	X	EC-551
ENG OVER TEMP	P1217	1217	—	—	—	EC-553
CTP LEARNING	P1225	1225	—	—	X	EC-558
CTP LEARNING	P1226	1226	—	—	X	EC-560
SENSOR POWER/CIRC	P1229	1229	—	—	—	EC-562
EVAP SMALL LEAK	P1442	1442	X	X	X	EC-567
PURG VOLUME CONT/V	P1444	1444	—	—	X	EC-582
VENT CONTROL VALVE	P1446	1446	—	—	X	EC-594
VENT CONTROL VALVE	P1448	1448	—	—	X	EC-602
EVAP VERY SML LEAK	P1456	1456	X*4	X	X	EC-611
VC/V BYPASS/V	P1490	1490	—	—	X	EC-627
VC CUT/V BYPASS/V	P1491	1491	—	—	X	EC-633
ASCD SW	P1564	1564	—	—	—	EC-645
ASCD BRAKE SW	P1572	1572	—	—	—	EC-652
NATS MALFUNCTION	P1610 - P1615	1610 - 1615	—	—	X	EL-389
TP SEN/CIRC A/T	P1705	1705	—	—	—	AT-179
P-N POS SW/CIRCUIT	P1706	1706	—	—	X	EC-663
O/R CLTCH SOL/CIRC	P1760	1760	—	—	X	AT-185
BRAKE SW/CIRCUIT	P1805	1805	—	—	X	EC-669
APP SEN 1/CIRC	P2122	2122	—	—	—	EC-675
APP SEN 1/CIRC	P2123	2123	—	—	—	EC-675
APP SEN 2/CIRC	P2127	2127	—	—	—	EC-682
APP SEN 2/CIRC	P2128	2128	—	—	—	EC-682
TP SENSOR	P2135	2135	—	—	—	EC-690
APP SENSOR	P2138	2138	—	—	—	EC-697

*1: 1st trip DTC No. is the same as DTC No.
*2: This number is prescribed by SAE J2012.
*3: In Diagnostic Test Mode II (Self-diagnostic results), these numbers are controlled by NISSAN.
*4: SRT code will not be set if the self-diagnostic result is NG.
*5: The troubleshooting for this DTC needs CONSULT-II.
*6: When the fail-safe operations for both self-diagnoses occur, the MIL illuminates.

HOW TO ERASE EMISSION-RELATED DIAGNOSTIC INFORMATION

NAEC0031S06

How to Erase DTC (With CONSULT-II)

NAEC0031S0601

NOTE:
If the DTC is not for A/T related items (see EC-9), skip steps 2 through 4.

1. If the ignition switch stays ON after repair work, be sure to turn ignition switch OFF once. Wait at least 10 seconds and then turn it ON (engine stopped) again.
2. Turn CONSULT-II "ON" and touch "A/T".
3. Touch "SELF-DIAG RESULTS".

4. Touch "ERASE". [The DTC in the TCM (Transmission control module) will be erased.] Then touch "BACK" twice.
5. Touch "ENGINE".
6. Touch "SELF-DIAG RESULTS".
7. Touch "ERASE". (The DTC in the ECM will be erased.)

- If DTCs are displayed for both ECM and TCM (Transmission control module), they need to be erased individually from the ECM and TCM (Transmission control module).

How to erase DTC (With CONSULT-II)

1. If the ignition switch stays "ON" after repair work, be sure to turn ignition switch "OFF" once. Wait at least 5 seconds and then turn it "ON" (engine stopped) again.

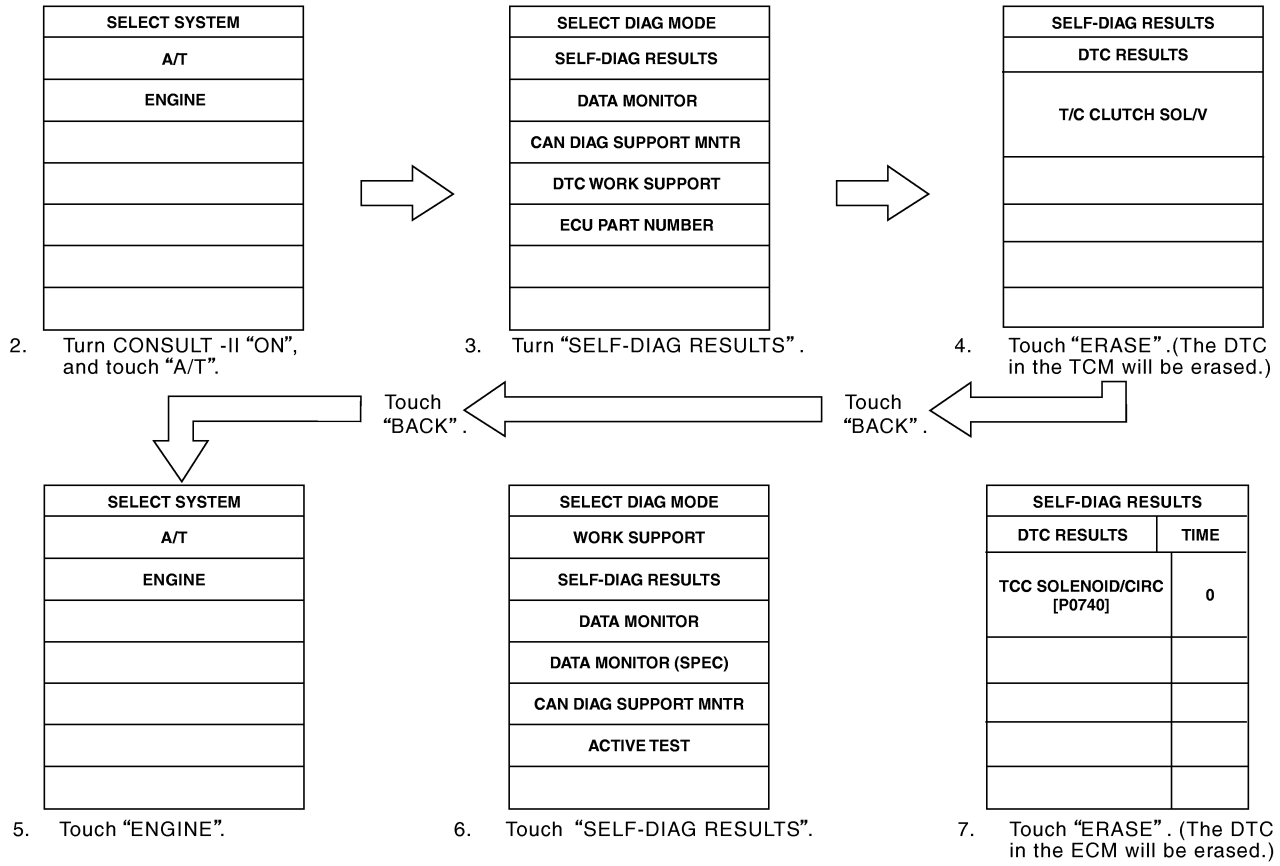

SAT857K

The emission related diagnostic information in the ECM can be erased by selecting "ERASE" in the "SELF-DIAG RESULTS" mode with CONSULT-II.
If DTCs are displayed for both ECM and TCM (Transmission control module), they need to be erased individually from the ECM and TCM (Transmission control module).

How to Erase DTC (With GST)

NAEC0031S0604

The emission related diagnostic information in the ECM can be erased by selecting Mode 4 with GST.

NOTE:
If the DTC is not for A/T related items (see EC-9), skip step 2.

1. If the ignition switch stays ON after repair work, be sure to turn ignition switch OFF once. Wait at least 10 seconds and then turn it ON (engine stopped) again.
2. Perform "HOW TO ERASE DTC (WITH GST)". Refer to AT-36. (The DTC in TCM will be erased.)
3. Select Mode 4 with GST (Generic Scan Tool).

How to Erase DTC (No Tools)

NAEC0031S0605

NOTE:
If the DTC is not for A/T related items (see EC-9), skip step 2.

1. If the ignition switch stays ON after repair work, be sure to turn ignition switch OFF once. Wait at least 10

seconds and then turn it ON (engine stopped) again.

2. Perform "How to Erase DTC (No Tools)", AT-36. (The DTC in TCM will be erased.)
3. Change the diagnostic test mode from Mode II to Mode I by depressing the accelerator pedal. Refer to EC-95, "HOW TO SWITCH DIAGNOSTIC MODE".

- **If the battery is disconnected, the emission-related diagnostic information will be lost within 24 hours.**
- **The following data are cleared when the ECM memory is erased.**

1) Diagnostic trouble codes
2) 1st trip diagnostic trouble codes
3) Freeze frame data
4) 1st trip freeze frame data
5) System readiness test (SRT) codes
6) Test values
7) Others

Actual work procedures are explained using a DTC as an example. Be careful so that not only the DTC, but all of the data listed above, are cleared from the ECM memory during work procedures.

NVIS (NISSAN VEHICLE IMMOBILIZER SYSTEM — NATS)

NAEC0031S08

SELF DIAG RESULTS	
DTC RESULTS	TIME
NATS MALFUNCTION [P1610]	0

SEF515Y

- **If the security indicator lights up with the ignition switch in the ON position or "NATS MALFUNCTION" is displayed on "SELF-DIAG RESULTS" screen, perform self-diagnostic results mode with CONSULT-II using NATS program card. Refer to EL-389, "NVIS (Nissan Vehicle Immobilizer System — NATS)".**
- **Confirm no self-diagnostic results of NVIS (NATS) is displayed before touching "ERASE" in "SELF-DIAG RESULTS" mode with CONSULT-II.**
- **When replacing ECM, initialization of NVIS (NATS) system and registration of all NVIS (NATS) ignition key IDs must be carried out with CONSULT-II using NATS program card.**
  Therefore, be sure to receive all keys from vehicle owner. Regarding the procedures of NVIS (NATS) initialization and NVIS (NATS) ignition key ID registration, refer to CONSULT-II operation manual, IVIS/NVIS.

Malfunction Indicator Lamp (MIL)

DESCRIPTION

NAEC0032

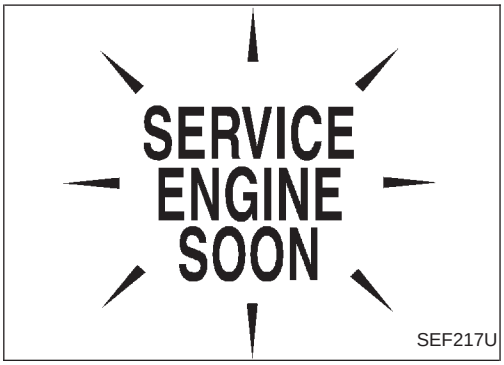

The MIL is located on the instrument panel.

1. The MIL will light up when the ignition switch is turned ON without the engine running. This is a bulb check.
- If the MIL does not light up, refer to EL-145, “WARNING LAMPS” or see EC-757.
2. When the engine is started, the MIL should go off.
   If the MIL remains on, the on board diagnostic system has detected an engine system malfunction.

On Board Diagnostic System Function

NAEC0032S01

The on board diagnostic system has the following four functions.

Diagnostic Test Mode	KEY and ENG. Status	Function	Explanation of Function
Mode I	Ignition switch in ON position Engine stopped	BULB CHECK	This function checks the MIL bulb for damage (blown, open circuit, etc.). If the MIL does not come on, check MIL circuit.
	Engine running	MALFUNCTION WARNING	This is a usual driving condition. When a malfunction is detected twice in two consecutive driving cycles (two trip detection logic), the MIL will light up to inform the driver that a malfunction has been detected. The following malfunctions will light up or blink the MIL in the 1st trip. ● One trip detection diagnoses ● “Misfire (Possible three way catalyst damage)”
Mode II	Ignition switch in ON position Engine stopped	SELF-DIAGNOSTIC RESULTS	This function allows DTCs and 1st trip DTCs to be read.
	Engine running	HEATED OXYGEN SENSOR 1 MONITOR	This function allows the fuel mixture condition (lean or rich), monitored by heated oxygen sensor 1, to be read.

- When there is an open circuit on MIL circuit, the ECM cannot warn the driver by lighting MIL up when there is a malfunction on engine control system.
  Therefore, when electrically controlled throttle and part of ECM related diagnosis is continuously detected as NG for 5 trips, ECM warns the driver that engine control system has a malfunction and MIL circuit is open by means of operating fail-safe function.

The fail-safe function also operates when above diagnoses except MIL circuit are detected and demands the driver to repair the malfunction.

Engine operating condition in fail-safe mode	Engine speed will not rise more than 2,500 rpm due to the fuel cut

MIL Flashing without DTC

NAEC0032S0102

If the ECM is in Diagnostic Test Mode II, MIL may flash when engine is running. In this case, check ECM diagnostic test mode. How to Switch Diagnostic Test Mode.
How to switch the diagnostic test (function) modes, and details of the above functions are described later.How to Switch Diagnostic Test Mode.
The following emission-related diagnostic information is cleared when the ECM memory is erased.

1. Diagnostic trouble codes
2. 1st trip diagnostic trouble codes
3. Freeze frame data
4. 1st trip freeze frame data
5. System readiness test (SRT) codes
6. Test values
7. Others

How to Switch Diagnostic Test Mode

NAEC0032S07

NOTE:

- **It is better to count the time accurately with a clock.**
- **It is impossible to switch the diagnostic mode when an accelerator pedal position sensor circuit has a malfunction.**
- **Always ECM returns to Diagnostic Test Mode I after ignition switch is turned OFF.**

How to Set Diagnostic Test Mode II (Self-diagnostic Results)

NAEC0032S0701

1. Confirm that accelerator pedal is fully released, turn ignition switch ON and wait 3 seconds.
2. Repeat the following procedure quickly five times within 5 seconds.

1) Fully depress the accelerator pedal.
2) Fully release the accelerator pedal.

3. Wait 7 seconds, fully depress the accelerator pedal and keep it for approx. 10 seconds until the MIL starts blinking.
4. Fully release the accelerator pedal.
   ECM has entered to Diagnostic Test Mode II (Self-diagnostic results).

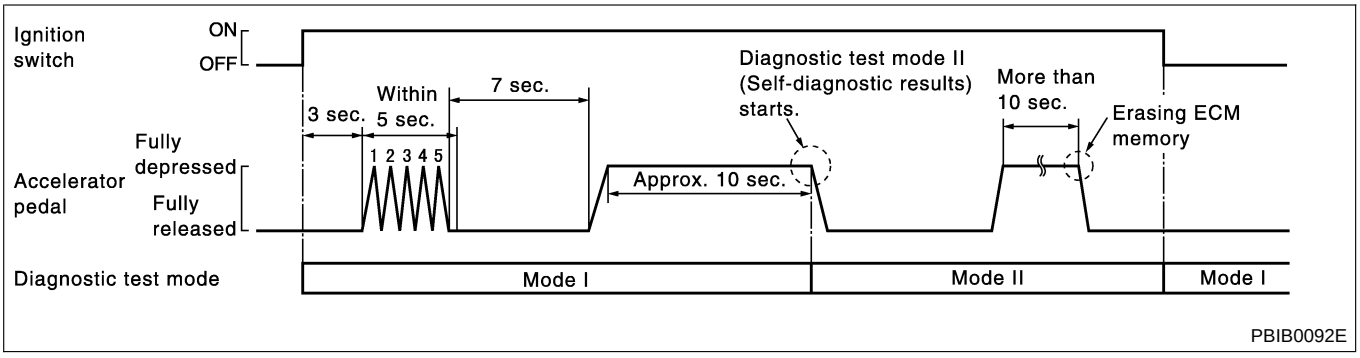

How to Set Diagnostic Test Mode II (Heated Oxygen Sensor 1 Monitor)

NAEC0032S0702

1. Set the ECM in Diagnostic Test Mode II (Self-diagnostic results). Refer to How to Set Diagnostic Test Mode II (Self-diagnostic Results).
2. Start Engine.
   ECM has entered to Diagnostic Test Mode II (Heated oxygen sensor 1 monitor).
   ECM will start heated oxygen sensor 1 monitoring from the bank 1 sensor.

How to Set Diagnostic Switch Monitored Sensor from Bank 1 to Bank 2 or Vice versa

NAEC0032S0703

1. Fully depress the accelerator pedal quickly and then release it immediately.
2. Make sure that monitoring sensor has changed by MIL blinking as follows.

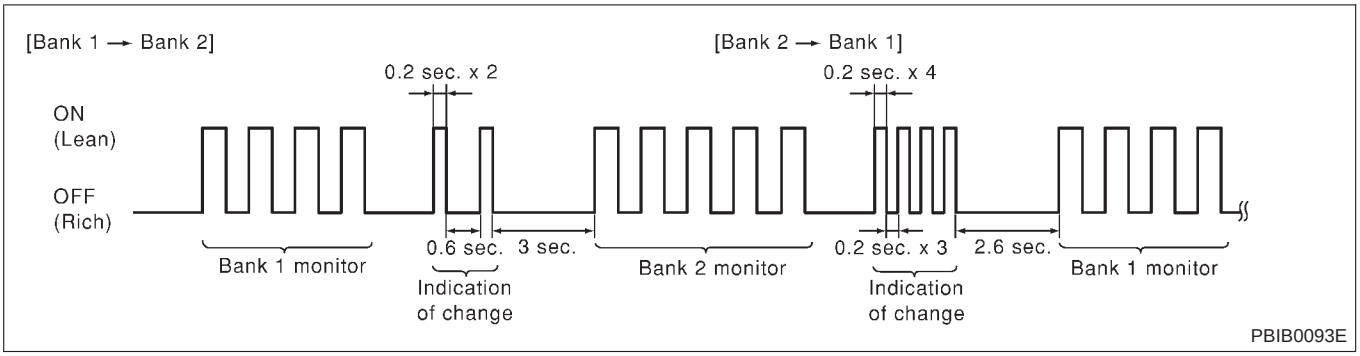

How to Erase Diagnostic Test Mode II (Self-diagnostic Results)

NAEC0032S0704

1. Set ECM in Diagnostic Test Mode II (Self-diagnostic results). Refer to How to Set Diagnostic Test Mode II (Self-diagnostic Results).
2. Fully depress the accelerator pedal and keep it for more than 10 seconds. The emission-related diagnostic information has been erased from the backup memory in the ECM.
3. Fully release the accelerator pedal, and confirm the DTC 0000 is displayed.

Diagnostic Test Mode I — Bulb Check

NAEC0032S03

In this mode, the MIL on the instrument panel should stay ON. If it remains OFF, check the bulb. Refer to EL-145, "WARNING LAMPS" or see EC-757.

Diagnostic Test Mode I — Malfunction Warning

NAEC0032S04

MIL	Condition
ON	When the malfunction is detected or the ECM's CPU is malfunctioning.
OFF	No malfunction.

- These DTC numbers are clarified in Diagnostic Test Mode II (SELF-DIAGNOSTIC RESULTS).

Diagnostic Test Mode II — Self-Diagnostic Results

NAEC0032S08

In this mode, the DTC and 1st trip DTC are indicated by the number of blinks of the MIL as shown below. The DTC and 1st trip DTC are displayed at the same time. If the MIL does not illuminate in diagnostic test mode I (Malfunction warning), all displayed items are 1st trip DTCs. If only one code is displayed when the MIL illuminates in diagnostic test mode II (SELF-DIAGNOSTIC RESULTS), it is a DTC; if two or more codes are displayed, they may be either DTCs or 1st trip DTCs. DTC No. is same as that of 1st trip DTC. These unidentified codes can be identified by using the CONSULT-II or GST. A DTC will be used as an example for how to read a code.

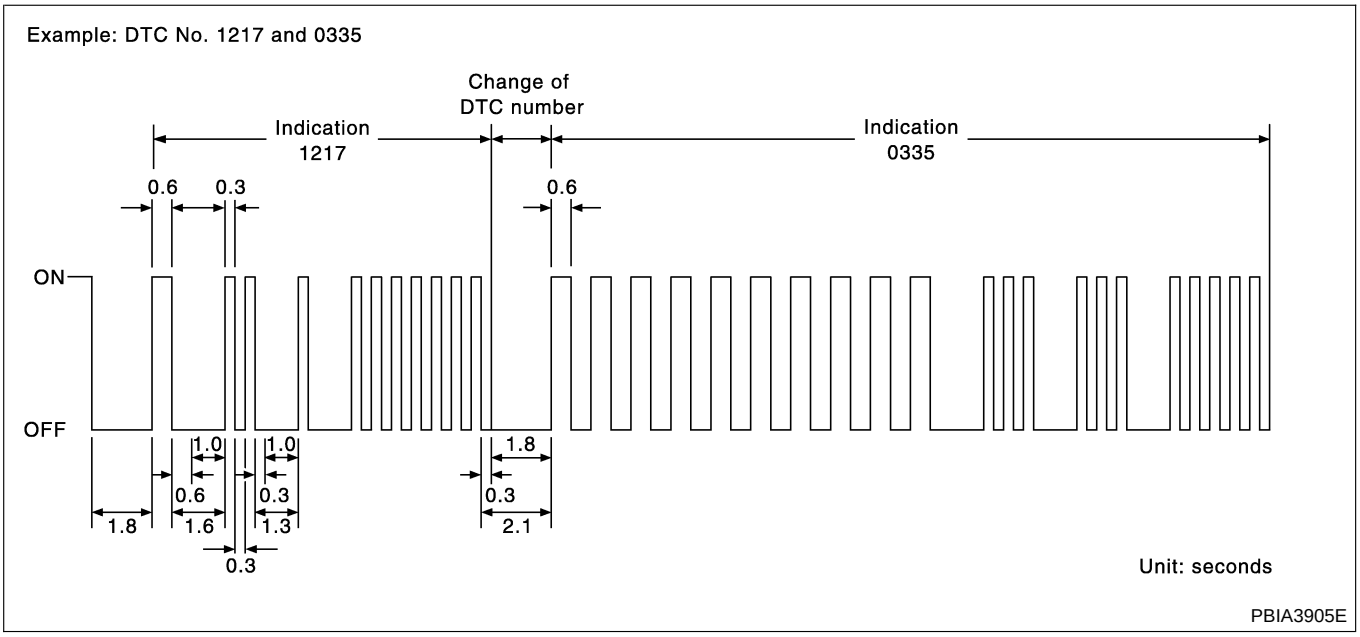

A particular trouble code can be identified by the number of four-digit numeral flashes. The "zero" is indicated by the number of ten flashes. The length of time the 1,000th-digit numeral flashes on and off is 1.2 seconds consisting of an ON (0.6-second) - OFF (0.6-second) cycle.
The 100th-digit numeral and lower digit numerals consist of a 0.3-second ON and 0.3-second OFF cycle.
A change from one digit numeral to another occurs at an interval of 1.0-second OFF. In other words, the later numeral appears on the display 1.3 seconds after the former numeral has disappeared.
A change from one trouble code to another occurs at an interval of 1.8-second OFF.
In this way, all the detected malfunctions are classified by their DTC numbers. The DTC 0000 refers to no malfunction. (See "TROUBLE DIAGNOSIS — INDEX", EC-9.)

How to Erase Diagnostic Test Mode II (Self-diagnostic Results)

NAEC0032S0801

The DTC can be erased from the back up memory in the ECM by depressing accelerator pedal. Refer to How to Switch Diagnostic Test Mode.

- **If the battery is disconnected, the DTC will be lost from the backup memory within 24 hours.**
- **Be careful not to erase the stored memory before starting trouble diagnoses.**

Diagnostic Test Mode II — Heated Oxygen Sensor 1 Monitor

NAEC0032S09

In this mode, the MIL displays the condition of the fuel mixture (lean or rich) which is monitored by the heated oxygen sensor 1.

MIL	Fuel mixture condition in the exhaust gas	Air fuel ratio feedback control condition
ON	Lean	Closed loop system
OFF	Rich	
*Remains ON or OFF	Any condition	Open loop system

*: Maintains conditions just before switching to open loop.

To check the heated oxygen sensor 1 function, start engine in the Diagnostic Test Mode II and warm it up until engine coolant temperature indicator points to the middle of the gauge.
Next run engine at about 2,000 rpm for about 2 minutes under no-load conditions. Then make sure that the MIL comes ON more than 5 times within 10 seconds with engine running at 2,000 rpm under no-load.

OBD System Operation Chart

=NAEC0033

RELATIONSHIP BETWEEN MIL, 1ST TRIP DTC, DTC, AND DETECTABLE ITEMS

NAEC0033S01

- When a malfunction is detected for the first time, the 1st trip DTC and the 1st trip freeze frame data are stored in the ECM memory.
- When the same malfunction is detected in two consecutive trips, the DTC and the freeze frame data are stored in the ECM memory, and the MIL will come on. For details, refer to “Two Trip Detection Logic” on EC-77.
- The MIL will go off after the vehicle is driven 3 times with no malfunction. The drive is counted only when the recorded driving pattern is met (as stored in the ECM). If another malfunction occurs while counting, the counter will reset.
- The DTC and the freeze frame data will be stored until the vehicle is driven 40 times (driving pattern A) without the same malfunction recurring (except for Misfire and Fuel Injection System). For Misfire and Fuel Injection System, the DTC and freeze frame data will be stored until the vehicle is driven 80 times (driving pattern C) without the same malfunction recurring. The “TIME” in “SELF-DIAGNOSTIC RESULTS” mode of CONSULT-II will count the number of times the vehicle is driven.
- The 1st trip DTC is not displayed when the self-diagnosis results in OK for the 2nd trip.

SUMMARY CHART

NAEC0033S02

Items	Fuel Injection System	Misfire	Other
MIL (goes off)	3 (pattern B)	3 (pattern B)	3 (pattern B)
DTC, Freeze Frame Data (no display)	80 (pattern C)	80 (pattern C)	40 (pattern A)
1st Trip DTC (clear)	1 (pattern C), *1	1 (pattern C), *1	1 (pattern B)
1st Trip Freeze Frame Data (clear)	*1, *2	*1, *2	1 (pattern B)

For details about patterns B and C under “Fuel Injection System” and “Misfire”, see EC-100.

For details about patterns A and B under “Other”, see EC-102.

*1: Clear timing is at the moment OK is detected.

*2: Clear timing is when the same malfunction is detected in the 2nd trip.

RELATIONSHIP BETWEEN MIL, DTC, 1ST TRIP DTC AND DRIVING PATTERNS FOR "MISFIRE" <EXHAUST QUALITY DETERIORATION>, "FUEL INJECTION SYSTEM"

=NAEC0033S03

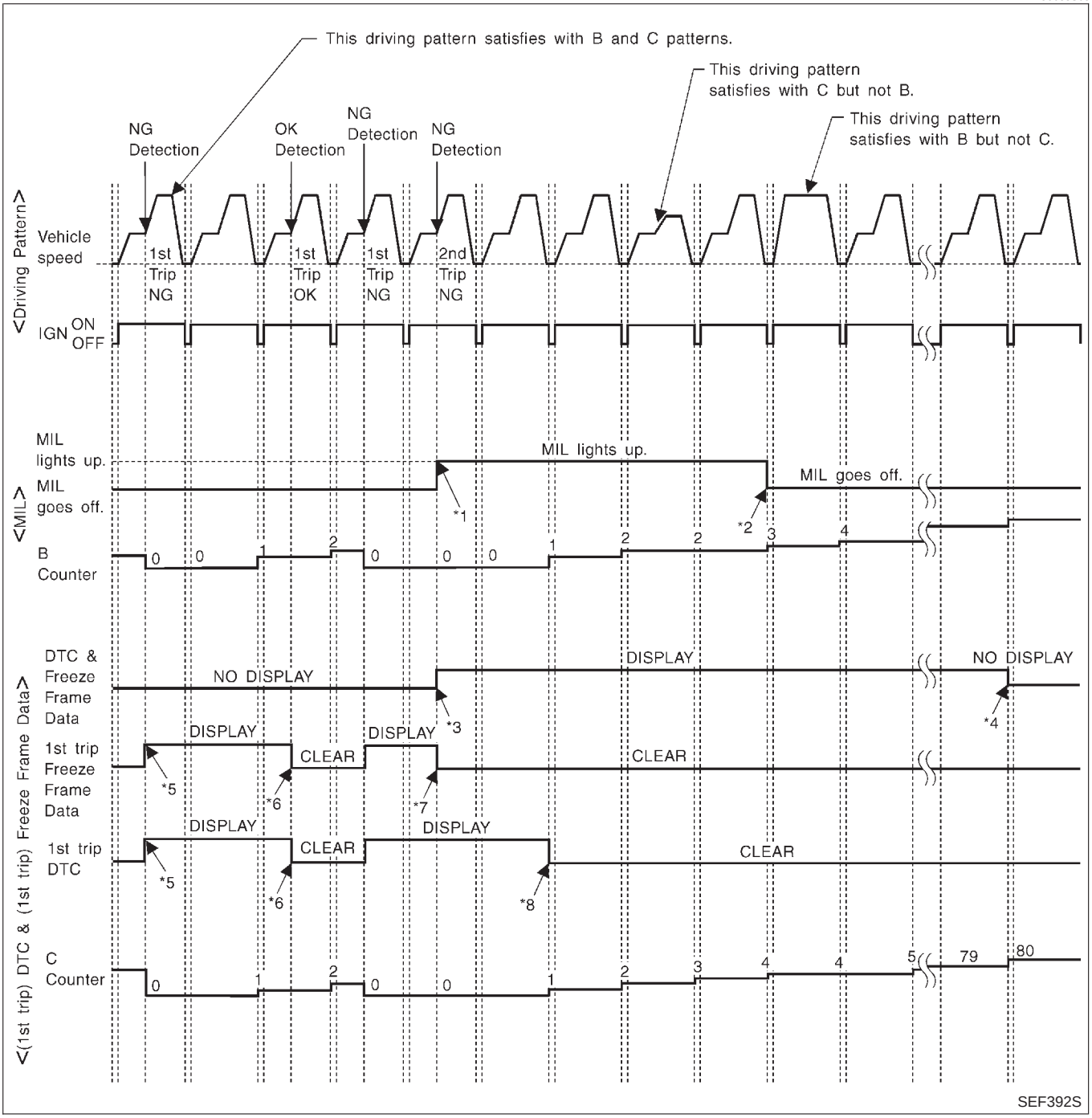

*1: When the same malfunction is detected in two consecutive trips, MIL will light up.

*2: MIL will go off after vehicle is driven 3 times (pattern B) without any malfunctions.

*3: When the same malfunction is detected in two consecutive trips, the DTC and the freeze frame data will be stored in ECM.

*4: The DTC and the freeze frame data will not be displayed any longer after vehicle is driven 80 times (pattern C) without the same malfunction. (The DTC and the freeze frame data still remain in ECM.)

*5: When a malfunction is detected for the first time, the 1st trip DTC and the 1st trip freeze frame data will be stored in ECM.

*6: The 1st trip DTC and the 1st trip freeze frame data will be cleared at the moment OK is detected.

*7: When the same malfunction is detected in the 2nd trip, the 1st trip freeze frame data will be cleared.

*8: 1st trip DTC will be cleared when vehicle is driven once (pattern C) without the same malfunction after DTC is stored in ECM.

EXPLANATION FOR DRIVING PATTERNS FOR "MISFIRE <EXHAUST QUALITY DETERIORATION>", "FUEL INJECTION SYSTEM"

NAEC0033S04

<Driving Pattern B>

NAEC0033S0401

Driving pattern B means the vehicle operation as follows:
All components and systems should be monitored at least once by the OBD system.

- The B counter will be cleared when the malfunction is detected once regardless of the driving pattern.
- The B counter will be counted up when driving pattern B is satisfied without any malfunction.
- The MIL will go off when the B counter reaches 3. (*2 in OBD SYSTEM OPERATION CHART)

<Driving Pattern C>

NAEC0033S0402

Driving pattern C means the vehicle operation as follows:

1) The following conditions should be satisfied at the same time:
   Engine speed: (Engine speed in the freeze frame data) ±375 rpm
   Calculated load value: (Calculated load value in the freeze frame data) x (1±0.1) [%]
   Engine coolant temperature (T) condition:

- When the freeze frame data shows lower than 70°C (158°F), T should be lower than 70°C (158°F).
- When the freeze frame data shows higher than or equal to 70°C (158°F), T should be higher than or equal to 70°C (158°F).

Example:
If the stored freeze frame data is as follows:
Engine speed: 850 rpm, Calculated load value: 30%, Engine coolant temperature: 80°C (176°F)
To be satisfied with driving pattern C, the vehicle should run under the following conditions:
Engine speed: 475 - 1,225 rpm, Calculated load value: 27 - 33%, Engine coolant temperature: more than 70°C (158°F)

- The C counter will be cleared when the malfunction is detected regardless of (1).
- The C counter will be counted up when (1) is satisfied without the same malfunction.
- The DTC will not be displayed after C counter reaches 80.
- The 1st trip DTC will be cleared when C counter is counted once without the same malfunction after DTC is stored in ECM.

RELATIONSHIP BETWEEN MIL, DTC, 1ST TRIP DTC AND DRIVING PATTERNS EXCEPT FOR "MISFIRE <EXHAUST QUALITY DETERIORATION>", "FUEL INJECTION SYSTEM"

NAEC0033S05

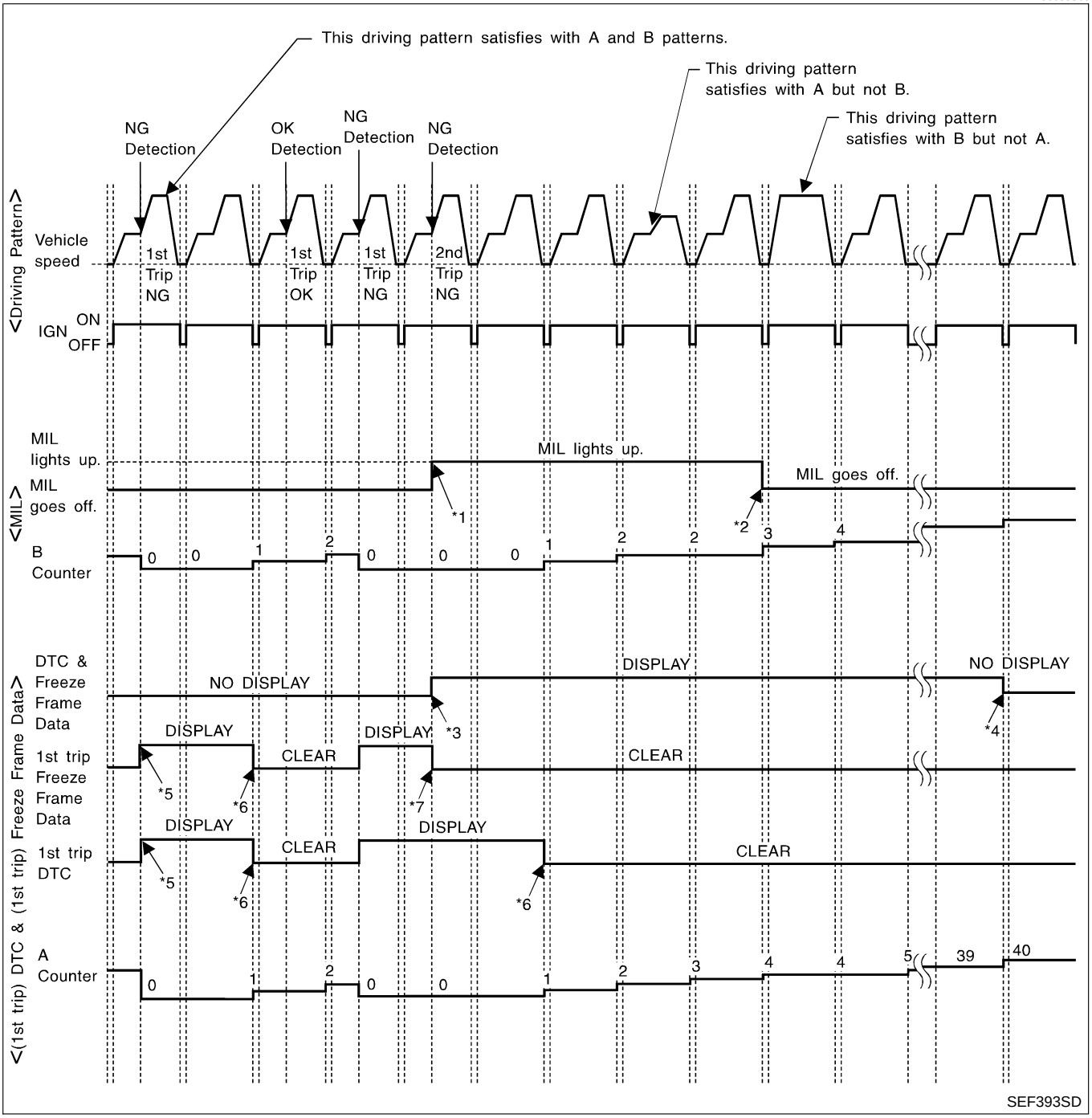

*1: When the same malfunction is detected in two consecutive trips, MIL will light up.

*2: MIL will go off after vehicle is driven 3 times (pattern B) without any malfunctions.

*3: When the same malfunction is detected in two consecutive trips, the DTC and the freeze frame data will be stored in ECM.

*4: The DTC and the freeze frame data will not be displayed any longer after vehicle is driven 40 times (pattern A) without the same malfunction.
(The DTC and the freeze frame data still remain in ECM.)

*5: When a malfunction is detected for the first time, the 1st trip DTC and the 1st trip freeze frame data will be stored in ECM.

*6: 1st trip DTC will be cleared after vehicle is driven once (pattern B) without the same malfunction.

*7: When the same malfunction is detected in the 2nd trip, the 1st trip freeze frame data will be cleared.

EXPLANATION FOR DRIVING PATTERNS EXCEPT FOR "MISFIRE <EXHAUST QUALITY DETERIORATION>", "FUEL INJECTION SYSTEM"

NAEC0033S06

<Driving Pattern A>

NAEC0033S0601

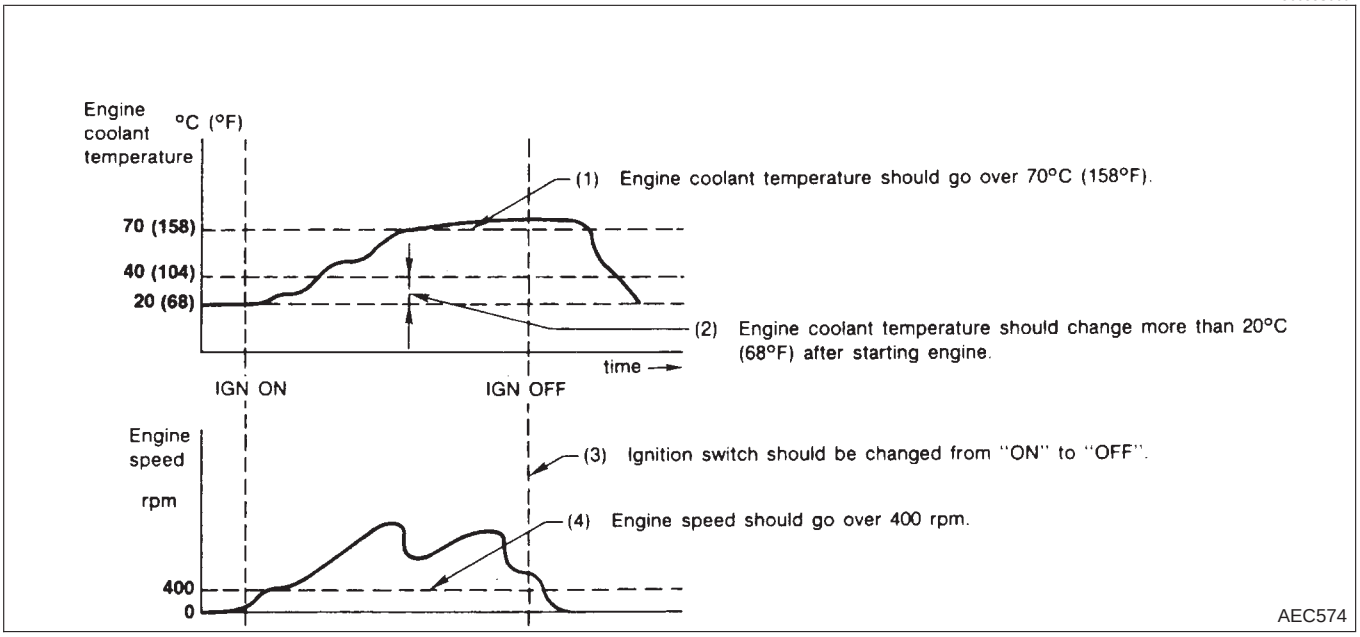

- The A counter will be cleared when the malfunction is detected regardless of (1) - (4).
- The A counter will be counted up when (1) - (4) are satisfied without the same malfunction.
- The DTC will not be displayed after the A counter reaches 40.

<Driving Pattern B>

NAEC0033S0602

Driving pattern B means the vehicle operation as follows:
All components and systems should be monitored at least once by the OBD system.

- The B counter will be cleared when the malfunction is detected once regardless of the driving pattern.
- The B counter will be counted up when driving pattern B is satisfied without any malfunctions.
- The MIL will go off when the B counter reaches 3 (*2 in "OBD System Operation Chart", EC-98).

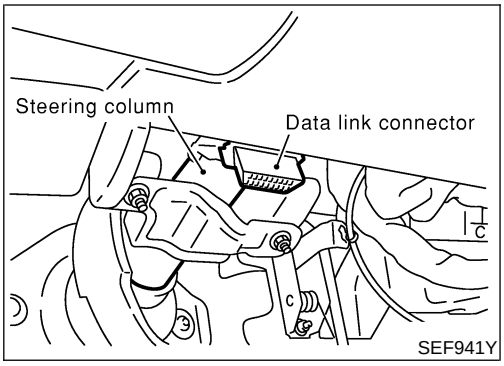

SEF941Y

CONSULT-II

=NAEC0034

INSPECTION PROCEDURE

NAEC0034S01

1. Turn ignition switch OFF.
2. Connect CONSULT-II and CONSULT-II CONVERTER to data link connector, which is located under LH dash panel near the fuse box cover.

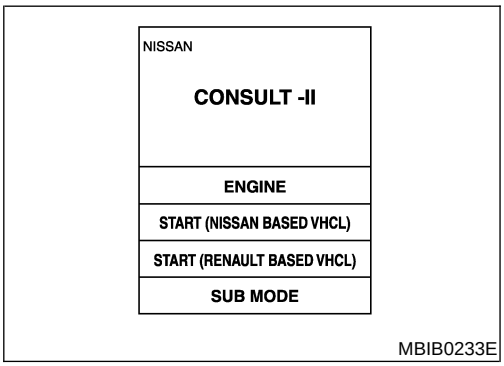

MBIB0233E

3. Turn ignition switch ON.
4. Touch “START (NISSAN BASED VHCL)”.

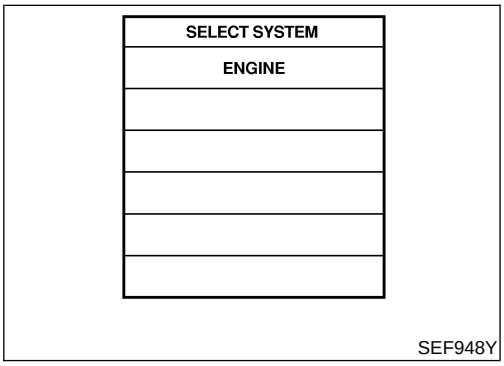

SEF948Y

5. Touch “ENGINE”.

If “ENGINE” is not indicated, go to GI-41, “CONSULT-II Data Link Connector (DLC) Circuit”.

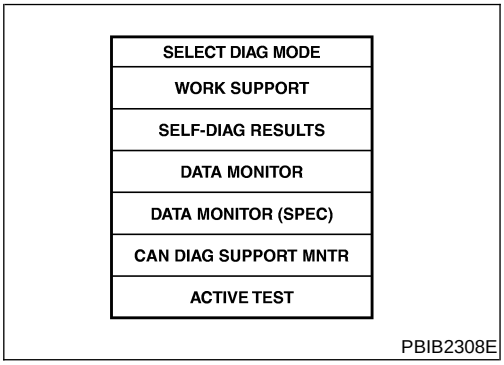

PBIB2308E

6. Perform each diagnostic test mode according to each service procedure.

For further information, see the CONSULT-II Operation Manual.

ENGINE CONTROL COMPONENT PARTS/CONTROL SYSTEMS APPLICATION

NAEC0034S02

Item			DIAGNOSTIC TEST MODE							
			WORK SUP-PORT	SELF-DIAGNOSTIC RESULTS		DATA MONI-TOR	DATA MONI-TOR (SPEC)	ACTIVE TEST	DTC & SRT CONFIRMATION	
				DTC*1	FREEZE FRAME DATA*2				SRT STATUS	DTC WORK SUP-PORT
ENGINE CONTROL COMPONENT PARTS	INPUT	Crankshaft position sensor (POS)		X	X	X	X			
		Crankshaft position sensor (PHASE)		X						
		Mass air flow sensor		X		X	X			
		Engine coolant temperature sensor		X	X	X	X	X		
		Heated oxygen sensor 1		X		X	X		X	X
		Heated oxygen sensor 2		X		X	X		X	X
		Vehicle speed sensor		X	X	X	X			
		Accelerator pedal position sensor		X		X	X			
		Throttle position sensor		X		X	X			
		Fuel tank temperature sensor		X		X	X	X		
		EVAP control system pressure sensor		X		X	X			
		Intake air temperature sensor		X	X	X	X			
		Knock sensor		X						
		Refrigerant pressure sensor				X	X			
		Ignition switch (start signal)				X	X			
		Closed throttle position switch (Accelerator pedal position sensor signal)				X	X			
		Air conditioner switch				X	X			
		Park/neutral position (PNP) switch		X		X	X			
		Power steering pressure sensor		X		X	X			
		Battery voltage				X	X			
		Load signal				X	X			
		Swirl control valve control vacuum check switch		X		X	X			
		Fuel level sensor		X		X	X			
		Intake valve timing control position sensor		X		X	X			
		ASCD steering switch		X		X	X			
		ASCD brake switch		X		X	X			

Item			DIAGNOSTIC TEST MODE							
			WORK SUP-PORT	SELF-DIAGNOSTIC RESULTS		DATA MONI-TOR	DATA MONI-TOR (SPEC)	ACTIVE TEST	DTC & SRT CONFIRMATION	
				DTC*1	FREEZE FRAME DATA*2				SRT STATUS	DTC WORK SUP-PORT
ENGINE CONTROL COMPONENT PARTS	OUTPUT	Injectors				X	X	X		
		Power transistor (Ignition timing)				X	X	X		
		Throttle control motor		X						
		Throttle control motor relay		X		X	X			
		EVAP canister purge volume control solenoid valve		X		X	X	X		X
		Air conditioner relay				X	X			
		Fuel pump relay	X			X	X	X		
		Heated oxygen sensor 1 heater		X		X	X		X	
		Heated oxygen sensor 2 heater		X		X	X		X	
		EVAP canister vent control valve	X	X		X	X	X		
		Vacuum cut valve bypass valve	X	X		X	X	X		X
		Swirl control valve control sole-noid valve		X		X	X	X		
		VIAS control solenoid valve				X	X	X		
		Intake valve timing control sole-noid valve		X		X	X	X		
		Calculated load value			X	X	X			

X: Applicable

*1: This item includes 1st trip DTCs.

*2: This mode includes 1st trip freeze frame data or freeze frame data. The items appear on CONSULT-II screen in freeze frame data mode only if a 1st trip DTC or DTC is detected. For details, refer to EC-79.

FUNCTION

=NAEC0034S03

Diagnostic test mode	Function
WORK SUPPORT	This mode enables a technician to adjust some devices faster and more accurately by following the indications on the CONSULT-II unit.
SELF-DIAG RESULTS	Self-diagnostic results such as 1st trip DTC, DTCs and 1st trip freeze frame data or freeze frame data can be read and erased quickly.*1
DATA MONITOR	Input/Output data in the ECM can be read.
DATA MONITOR (SPEC)	Input/Output specification of the basic fuel schedule, AFM, A/F feedback control value and the other data monitor items can be read.
CAN DIAGNOSTIC SUPPORT MONITOR	The results of transmit/receive diagnosis of CAN communication can be read.
ACTIVE TEST	Diagnostic Test Mode in which CONSULT-II drives some actuators apart from the ECMs and also shifts some parameters in a specified range.
FUNCTION TEST	Conducted by CONSULT-II instead of a technician to determine whether each system is OK or NG.
DTC & SRT CONFIRMATION	The status of system monitoring tests and the self-diagnosis status/result can be confirmed.
ECM PART NUMBER	ECM part number can be read.

*1 The following emission-related diagnostic information is cleared when the ECM memory is erased.
1) Diagnostic trouble codes
2) 1st trip diagnostic trouble codes
3) Freeze frame data
4) 1st trip freeze frame data
5) System readiness test (SRT) codes
6) Test values
7) Others

WORK SUPPORT MODE

NAEC0034S04

WORK ITEM	CONDITION	USAGE
FUEL PRESSURE RELEASE	● FUEL PUMP WILL STOP BY TOUCHING "START" DURING IDLING. CRANK A FEW TIMES AFTER ENGINE STALLS.	When releasing fuel pressure from fuel line
IDLE AIR VOL LEARN	● THE IDLE AIR VOLUME THAT KEEPS THE ENGINE WITHIN THE SPECIFIED RANGE IS MEMORIZED IN ECM.	When learning the idle air volume
SELF-LEARNING CONT	● THE COEFFICIENT OF SELF-LEARNING CONTROL MIXTURE RATIO RETURNS TO THE ORIGINAL COEFFICIENT.	When clearing the coefficient of self-learning control value
EVAP SYSTEM CLOSE	OPEN THE VACUUM CUT VALVE BYPASS VALVE AND CLOSE THE EVAP CANISTER VENT CONTROL VALVE IN ORDER TO MAKE EVAP SYSTEM CLOSE UNDER THE FOLLOWING CONDITIONS. ● IGN SW ON ● ENGINE NOT RUNNING ● AMBIENT TEMPERATURE IS ABOVE 0°C (32°F). ● NO VACUUM AND NO HIGH PRESSURE IN EVAP SYSTEM ● TANK FUEL TEMP. IS MORE THAN 0°C (32°F). ● WITHIN 10 MINUTES AFTER STARTING "EVAP SYSTEM CLOSE" ● WHEN TRYING TO EXECUTE "EVAP SYSTEM CLOSE" UNDER THE CONDITION EXCEPT ABOVE, CONSULT-II WILL DISCONTINUE IT AND DISPLAY APPROPRIATE INSTRUCTION. **NOTE:** **WHEN STARTING ENGINE, CONSULT-II MAY DISPLAY "BATTERY VOLTAGE IS LOW. CHARGE BATTERY", EVEN IN USING CHARGED BATTERY.**	When detecting EVAP vapor leak point of EVAP system

WORK ITEM	CONDITION	USAGE
TARGET IGN TIM ADJ*	● IDLE CONDITION	● When adjusting target ignition timing ● If once the "TARGET IDLE RPM ADJ" has been done, the Idle Air Volume Learning procedure will not be completed.
TARGET IDLE RPM ADJ*	● IDLE CONDITION	When setting target idle speed

*: This function is not necessary in the usual service procedure.

SELF-DIAGNOSTIC MODE

NAEC0034S05

DTC and 1st Trip DTC

NAEC0034S0501

Regarding items of DTC and 1st trip DTC, refer to "TROUBLE DIAGNOSIS — INDEX" (See EC-9.)

Freeze Frame Data and 1st Trip Freeze Frame Data

NAEC0034S0502

Freeze frame data item*1	Description
DIAG TROUBLE CODE [PXXXX]	● The engine control component part/control system has a trouble code, it is displayed as PXXXX. (Refer to "TROUBLE DIAGNOSIS — INDEX", EC-9.)
FUEL SYS-B1	● "Fuel injection system status" at the moment a malfunction is detected is displayed. ● One mode in the following is displayed. "Mode2": Open loop due to detected system malfunction "Mode3": Open loop due to driving conditions (power enrichment, deceleration enleanment) "Mode4": Closed loop - using oxygen sensor(s) as feedback for fuel control "Mode5": Open loop - has not yet satisfied condition to go to closed loop
FUEL SYS-B2	
CAL/LD VALUE [%]	● The calculated load value at the moment a malfunction is detected is displayed.
COOLANT TEMP [°C] or [°F]	● The engine coolant temperature at the moment a malfunction is detected is displayed.
S-FUEL TRM-B1 [%]	● "Short-term fuel trim" at the moment a malfunction is detected is displayed. ● The short-term fuel trim indicates dynamic or instantaneous feedback compensation to the base fuel schedule.
S-FUEL TRM-B2 [%]	
L-FUEL TRM-B1 [%]	● "Long-term fuel trim" at the moment a malfunction is detected is displayed. ● The long-term fuel trim indicates much more gradual feedback compensation to the base fuel schedule than short-term fuel trim.
L-FUEL TRM-B2 [%]	
ENGINE SPEED [rpm]	● The engine speed at the moment a malfunction is detected is displayed.
VEHICL SPEED [km/h] or [mph]	● The vehicle speed at the moment a malfunction is detected is displayed.
B/FUEL SCHDL [msec]	● The base fuel schedule at the moment a malfunction is detected is displayed.
INT/A TEMP SE [°C] or [°F]	● The intake air temperature at the moment a malfunction is detected is displayed.

*1: The items are the same as those of 1st trip freeze frame data.

DATA MONITOR MODE

=NAEC0034S06

X: Applicable

Monitored item [Unit]	ECM input signals	Main signals	Description	Remarks
ENG SPEED [rpm]	X	X	• Indicates the engine speed computed from the signal of the crankshaft position sensor (POS) and camshaft position sensor (PHASE)	• Accuracy becomes poor if engine speed drops below the idle rpm. • If the signal is interrupted while the engine is running, an abnormal value may be indicated.
MAS A/F SE-B1 [V]	X	X	• The signal voltage of the mass air flow sensor is displayed.	• When the engine is stopped, a certain value is indicated.
COOLAN TEMP/S [°C] or [°F]	X	X	• The engine coolant temperature (determined by the signal voltage of the engine coolant temperature sensor) is displayed.	• When the engine coolant temperature sensor is open or short-circuited, ECM enters fail-safe mode. The engine coolant temperature determined by the ECM is displayed.
HO2S1 (B1) [V]	X	X	• The signal voltage of the front heated oxygen sensor is displayed.	
HO2S1 (B2) [V]	X			
HO2S2 (B1) [V]	X		• The signal voltage of the rear heated oxygen sensor is displayed.	
HO2S2 (B2) [V]	X			
HO2S1 MNTR (B1) [RICH/LEAN]	X	X	• Display of heated oxygen sensor 1 signal during air-fuel ratio feedback control: RICH ... means the mixture became "rich", and control is being affected toward a leaner mixture. LEAN ... means the mixture became "lean", and control is being affected toward a rich mixture.	• After turning ON the ignition switch, "RICH" is displayed until air-fuel mixture ratio feedback control begins. • When the air-fuel ratio feedback is clamped, the value just before the clamping is displayed continuously.
HO2S1 MNTR (B2) [RICH/LEAN]	X			
HO2S2 MNTR (B1) [RICH/LEAN]	X		• Display of heated oxygen sensor 2 signal: RICH ... means the amount of oxygen after three way catalyst is relatively small. LEAN ... means the amount of oxygen after three way catalyst is relatively large.	• When the engine is stopped, a certain value is indicated.
HO2S2 MNTR (B2) [RICH/LEAN]	X			
VHCL SPEED SE [km/h] or [mph]	X	X	• The vehicle speed computed from the vehicle speed sensor signal is displayed.	
BATTERY VOLT [V]	X	X	• The power supply voltage of ECM is displayed.	
ACCEL SEN 1 [V]	X	X	• The accelerator pedal position sensor signal voltage is displayed.	• ACCEL SEN 2 signal is converted by ECM internally. Thus, it differs from ECM terminal voltage signal.
ACCEL SEN 2 [V]	X			
THRTL SEN 1 [V]	X	X	• The throttle position sensor signal voltage is displayed.	• THRTL SEN 2 signal is converted by ECM internally. Thus, it differs from ECM terminal voltage signal.
THRTL SEN 2 [V]	X			
FUEL T/TMP SE [°C] or [°F]	X		• The fuel temperature judged from the tank fuel temperature sensor signal voltage is displayed.	
INT/A TEMP SE [°C] or [°F]	X	X	• The intake air temperature determined by the signal voltage of the intake air temperature sensor is indicated.	

Monitored item [Unit]	ECM input signals	Main signals	Description	Remarks
EVAP SYS PRES [V]	X		• The signal voltage of EVAP control system pressure sensor is displayed.	
FUEL LEVEL SE [V]	X		• The signal voltage of the fuel level sensor is displayed.	
START SIGNAL [ON/OFF]	X	X	• Indicates start signal status [ON/OFF] computed by the ECM according to the signals of engine speed and battery voltage.	• After starting the engine, [OFF] is displayed regardless of the starter signal.
CLSD THL POS [ON/OFF]	X	X	• Indicates idle position [ON/OFF] computed by ECM according to the accelerator pedal position sensor signal.	
AIR COND SIG [ON/OFF]	X	X	• Indicates [ON/OFF] condition of the air conditioner switch as determined by the air conditioner signal.	
P/N POSI SW [ON/OFF]	X	X	• Indicates [ON/OFF] condition from the park/neutral position (PNP) switch signal.	
PW/ST SIGNAL [ON/OFF]	X	X	• [ON/OFF] condition of the power steering oil pressure switch determined by the power steering oil pressure signal is indicated.	
LOAD SIGNAL [ON/OFF]	X	X	• Indicates [ON/OFF] condition from the electrical load signal and/or lighting switch. ON ... rear defogger is operating and/or lighting switch is on. OFF ... rear defogger is not operating and lighting switch is not on.	
IGNITION SW [ON/OFF]	X		• Indicates [ON/OFF] condition from ignition switch.	
BRAKE SW [ON/OFF]			• Indicates [ON/OFF] condition from the stop lamp switch signal.	
SWRL CONT S/V [ON/OFF]			• The control condition of the swirl control valve control solenoid valve (determined by ECM according to the input signals) is indicated. • ON ... Swirl control valve is closed. OFF ... Swirl control valve is opened.	
INJ PULSE-B1 [msec]		X	• Indicates the actual fuel injection pulse width compensated by ECM according to the input signals.	• When the engine is stopped, a certain computed value is indicated.
INJ PULSE-B2 [msec]				
B/FUEL SCHDL [msec]		X	• "Base fuel schedule" indicates the fuel injection pulse width programmed into ECM, prior to any learned on board correction.	
IGN TIMING [BTDC]		X	• Indicates the ignition timing computed by ECM according to the input signals.	• When the engine is stopped, a certain value is indicated.

Monitored item [Unit]	ECM input signals	Main signals	Description	Remarks
PURG VOL C/V [%]			• Indicates the EVAP canister purge volume control solenoid valve control value computed by the ECM according to the input signals. • The opening becomes larger as the value increases.	
A/F ALPHA-B1 [%]		X	• The mean value of the air-fuel ratio feedback correction factor per cycle is indicated.	• When the engine is stopped, a certain value is indicated. • This data also includes the data for the air-fuel ratio learning control.
A/F ALPHA-B2 [%]		X		
AIR COND RLY [ON/OFF]		X	• The air conditioner relay control condition (determined by ECM according to the input signal) is indicated.	
FUEL PUMP RLY [ON/OFF]		X	• Indicates the fuel pump relay control condition determined by ECM according to the input signals.	
VENT CONT/V [ON/OFF]			• The control condition of the EVAP canister vent control valve (determined by ECM according to the input signal) is indicated. • ON ... Closed OFF ... Open	
THRTL RELAY [ON/OFF]			• Indicates the throttle control motor relay control condition determined by the ECM according to the input signals.	
HO2S1 HTR (B1) [ON/OFF]			• Indicates [ON/OFF] condition of front heated oxygen sensor heater determined by ECM according to the input signals.	
HO2S1 HTR (B2) [ON/OFF]				
HO2S2 HTR (B1) [ON/OFF]			• Indicates [ON/OFF] condition of rear heated oxygen sensor heater determined by ECM according to the input signals.	
HO2S2 HTR (B2) [ON/OFF]				
VC/V BYPASS/V [ON/OFF]			• The control condition of the vacuum cut valve bypass valve (determined by ECM according to the input signal) is indicated. • ON ... Open OFF ... Closed	
CAL/LD VALUE [%]			• "Calculated load value" indicates the value of the current airflow divided by peak airflow.	
MASS AIRFLOW [g·m/s]			• Indicates the mass airflow computed by ECM according to the signal voltage of the mass airflow sensor.	
INT/V TIM (B1) [°CA]			• Indicate [°CA] of intake camshaft advanced angle.	
INT/V TIM (B2) [°CA]				

Monitored item [Unit]	ECM input signals	Main signals	Description	Remarks
INT/V SOL (B1) [%]			• The control value of the intake valve timing control solenoid valve (determined by ECM according to the input signals) is indicated. • The advance angle becomes larger as the value increases.	
INT/V SOL (B2) [%]				
TRVL AFTER MIL [km] or [Mile]			• Distance traveled while MIL is activated	
VIAS S/V [ON/OFF]			• The control condition of the VIAS control solenoid valve (determined by ECM according to the input signal) is indicated. • OFF ... VIAS control solenoid valve is not operating. ON ... VIAS control solenoid valve is operating.	
SWL CON VC SW	X		• Indicates [ON/OFF] condition from the swirl control valve control vacuum check switch. ON ... Swirl control valve is not operational. OFF ... Swirl control valve is operational.	
IDL A/V LEARN			• Display the condition of idle air volume learning YET ... Idle air volume learning has not been performed yet. CMPLT ... Idle air volume learning has already been performed successfully.	
AC PRESS SEN [V]			• The signal voltage from the refrigerant pressure sensor is displayed.	
SET VHCL SPD [km/h] or [mph]			• The preset vehicle speed is displayed.	
MAIN SW [ON/OFF]			• Indicates [ON/OFF] condition from MAIN switch signal.	
CANCEL SW [ON/OFF]			• Indicates [ON/OFF] condition from CANCEL switch signal.	
RESUME/ACC SW [ON/OFF]			• Indicates [ON/OFF] condition from RESUME/ACCEL switch signal.	
SET SW [ON/OFF]			• Indicates [ON/OFF] condition from SET/COAST switch signal.	
BRAKE SW1 [ON/OFF]			• Indicates [ON/OFF] condition from ASCD brake switch signal, and ASCD clutch switch signal (M/T models).	
BRAKE SW2 [ON/OFF]			• Indicates [ON/OFF] condition of stop lamp switch signal.	
VHCL SPD CUT [NON/CUT]			• Indicates the vehicle cruise condition. NON ... Vehicle speed is maintained at the ASCD set speed. CUT ...Vehicle speed increased to excessively high compared with the ASCD set speed, and ASCD operation is cut off.	

Monitored item [Unit]	ECM input signals	Main signals	Description	Remarks
LO SPEED CUT [NON/CUT]			● Indicates the vehicle cruise condition. NON ... Vehicle speed is maintained at the ASCD set speed. CUT ...Vehicle speed decreased to excessively low compared with the ASCD set speed, and ASCD operation is cut off.	
AT OD MONITOR [ON/OFF]			● Indicates [ON/OFF] condition of A/T O/D according to the input signal from the TCM.	
AT OD CANCEL [ON/OFF]			● Indicates [ON/OFF] condition of A/T O/D cancel signal sent from the TCM.	
CRUISE LAMP [ON/OFF]			● Indicates [ON/OFF] condition of CRUISE lamp determined by the ECM according to the input signals.	
SET LAMP [ON/OFF]			● Indicates [ON/OFF] condition of SET lamp determined by the ECM according to the input signals.	
Voltage [V]			● Voltage, frequency, duty cycle or pulse width measured by the probe.	● Only "#" is displayed if item is unable to be measured. ● Figures with "#"s are temporary ones. They are the same figures as an actual piece of data which was just previously measured.
Frequenty [msec], [Hz] or [%]				
DUTY-HI				
DUTY-LOW				
PLS WIDTH-HI				
PLS WIDTH-LOW				

NOTE:

- Any monitored item that does not match the vehicle being diagnosed is deleted from the display automatically.

DATA MONITOR (SPEC) MODE

NAEC0034S11

X: Applicable

Monitored item [Unit]	ECM input signals	Main signals	Description	Remarks
MAS A/F SE-B1 [V]	X	X	● The signal voltage of the mass air flow sensor specification is displayed.	● When the engine is running, specification range is indicated.
B/FUEL SCHDL [msec]			● "Base fuel schedule" indicates the fuel injection pulse width programmed into ECM, prior to any learned on board correction.	● When the engine is running, specification range is indicated.
A/F ALPHA-B1 [%]		X	● Indicates the mean value of the air-fuel ratio feedback correction factor per cycle.	● When the engine is running, specification range is indicated. ● This data also includes the data for the air-fuel ratio learning control.
A/F ALPHA-B2 [%]		X		

NOTE:

- Any monitored item that does not match the vehicle being diagnosed is deleted from the display automatically.

ACTIVE TEST MODE

NAEC0034S07

TEST ITEM	CONDITION	JUDGEMENT	CHECK ITEM (REMEDY)
FUEL INJECTION	• Engine: Return to the original trouble condition • Change the amount of fuel injection using CONSULT-II.	If trouble symptom disappears, see CHECK ITEM.	• Harness and connector • Fuel injectors • Heated oxygen sensor
IGNITION TIMING	• Engine: Return to the original trouble condition • Timing light: Set • Retard the ignition timing using CONSULT-II.	If trouble symptom disappears, see CHECK ITEM.	• Adjust initial ignition timing
POWER BALANCE	• Engine: After warming up, idle the engine. • A/C switch OFF • Shift lever N • Cut off each injector signal one at a time using CONSULT-II.	Engine runs rough or dies.	• Harness and connector • Compression • Injectors • Power transistor • Spark plugs • Ignition coils
ENG COOLANT TEMP	• Engine: Return to the original trouble condition • Change the engine coolant temperature using CONSULT-II.	If trouble symptom disappears, see CHECK ITEM.	• Harness and connector • Engine coolant temperature sensor • Fuel injectors
FUEL PUMP RELAY	• Ignition switch: ON (Engine stopped) • Turn the fuel pump relay ON and OFF using CONSULT-II and listen to operating sound.	Fuel pump relay makes the operating sound.	• Harness and connector • Fuel pump relay
VIAS SOL VALVE	• Ignition switch: ON • Turn solenoid valve ON and OFF with CONSULT-II and listen for operating sound.	Solenoid valve makes an operating sound.	• Harness and connector • Solenoid valve
SWIRL CONT SOL VALVE	• Ignition switch: ON • Turn solenoid valve ON and OFF with CONSULT-II and listen for operating sound.	Solenoid valve makes an operating sound.	• Harness and connector • Solenoid valve
PURG VOL CONT/V	• Engine: After warming up, run engine at 1,500 rpm. • Change the EVAP canister purge volume control solenoid valve opening percent using CONSULT-II.	Engine speed changes according to the opening percent.	• Harness and connector • Solenoid valve
FUEL/T TEMP SEN	• Change the fuel tank temperature using CONSULT-II.		
VENT CONTROL/V	• Ignition switch: ON (Engine stopped) • Turn solenoid valve ON and OFF with the CONSULT-II and listen to operating sound.	Solenoid valve makes an operating sound.	• Harness and connector • Solenoid valve
VC/V BYPASS/V	• Ignition switch: ON (Engine stopped) • Turn solenoid valve ON and OFF with the CONSULT-II and listen to operating sound.	Solenoid valve makes an operating sound.	• Harness and connector • Solenoid valve
V/T ASSIGN ANGLE	• Engine: After warming up, hold engine speed at 2,500 rpm. • Change the intake valve timing using CONSULT-II.	If trouble symptom disappears, see CHECK ITEM.	• Harness and connector • Intake valve timing control solenoid valve

DTC & SRT CONFIRMATION MODE

NAEC0034S08

SRT STATUS Mode

NAEC0034S0801

For details, refer to "SYSTEM READINESS TEST (SRT) CODE", EC-79.

SRT Work Support Mode

NAEC0034S0803

This mode enables a technician to drive a vehicle to set the SRT while monitoring the SRT status.

DTC Work Support Mode

NAEC0034S0802

Test mode	Test item	Condition	Reference page
EVAPORATIVE SYSTEM	EVP SML LEAK P0442/P1442	Refer to corresponding trouble diagnosis for DTC.	EC-349, 567
	EVP V/S LEAK P0456/P1456		EC-407, 611
	PURG VOL CN/V P1444		EC-582
	PURGE FLOW P0441		EC-339
	VC CUT/V BP/V P1491		EC-633
HO2S1	HO2S1 (B1) P0134		EC-246
	HO2S1 (B1) P1143		EC-504
	HO2S1 (B1) P1144		EC-512
	HO2S1 (B1) P0133		EC-233
	HO2S1 (B2) P0154		EC-246
	HO2S1 (B2) P1163		EC-504
	HO2S1 (B2) P1164		EC-512
	HO2S1 (B2) P0153		EC-233
HO2S2	HO2S2 (B1) P1146		EC-521
	HO2S2 (B1) P1147		EC-531
	HO2S2 (B1) P0139		EC-263
	HO2S2 (B2) P1166		EC-521
	HO2S2 (B2) P1167		EC-531
	HO2S2 (B2) P0159		EC-263

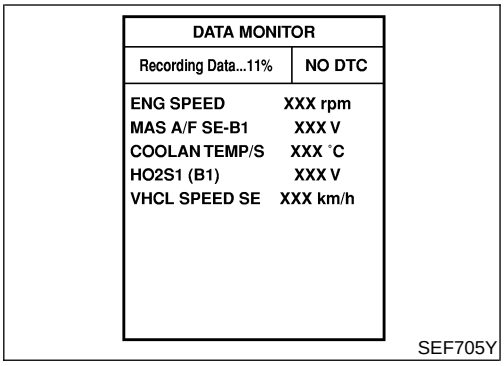

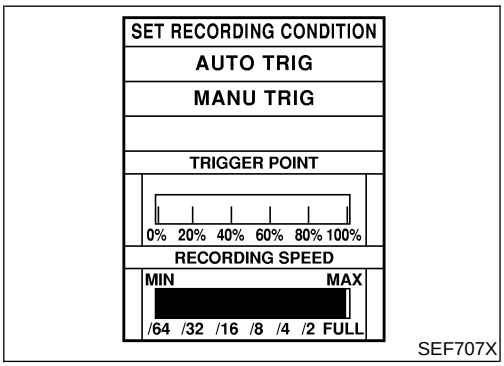

REAL TIME DIAGNOSIS IN DATA MONITOR MODE (RECORDING VEHICLE DATA)

NAEC0034S10

CONSULT-II has two kinds of triggers and they can be selected by touching "SETTING" in "DATA MONITOR" mode.

1) "AUTO TRIG" (Automatic trigger):

- The malfunction will be identified on the CONSULT-II screen in real time.
  In other words, DTC/1st trip DTC and malfunction item will be displayed if the malfunction is detected by ECM.
  At the moment a malfunction is detected by ECM, "MONITOR" in "DATA MONITOR" screen is changed to "Recording Data ... xx%" as shown at left, and the data after the malfunction detection is recorded. Then when the percentage reached 100%, "REAL-TIME DIAG" screen is displayed. If "STOP" is touched on the screen during " Recording Data ... xx%", "REAL-TIME DIAG" screen is also displayed.
  The recording time after the malfunction detection and the recording speed can be changed by "TRIGGER POINT" and "Recording Speed". Refer to CONSULT-II OPERATION MANUAL.

2) "MANU TRIG" (Manual trigger):

- DTC/1st trip DTC and malfunction item will not be displayed automatically on CONSULT-II screen even though a malfunction is detected by ECM.
  DATA MONITOR can be performed continuously even though a malfunction is detected.

Use these triggers as follows:

1) "AUTO TRIG"

- While trying to detect the DTC/1st trip DTC by performing the "DTC Confirmation Procedure", be sure to select to "DATA MONITOR (AUTO TRIG)" mode. You can confirm the malfunction at the moment it is detected.
- While narrowing down the possible causes, CONSULT-II should be set in "DATA MONITOR (AUTO TRIG)" mode, especially in case the incident is intermittent.
  When you are inspecting the circuit by gently shaking (or twisting) the suspicious connectors, components and harness in the "DTC Confirmation Procedure", the moment a malfunction is found the DTC/1st trip DTC will be displayed. (Refer to GI-25, "Incident Simulation Tests".)

2) "MANU TRIG"

- If the malfunction is displayed as soon as "DATA MONITOR" is selected, reset CONSULT-II to "MANU TRIG". By selecting "MANU TRIG" you can monitor and store the data. The data can be utilized for further diagnosis, such as a comparison with the value for the normal operating condition.

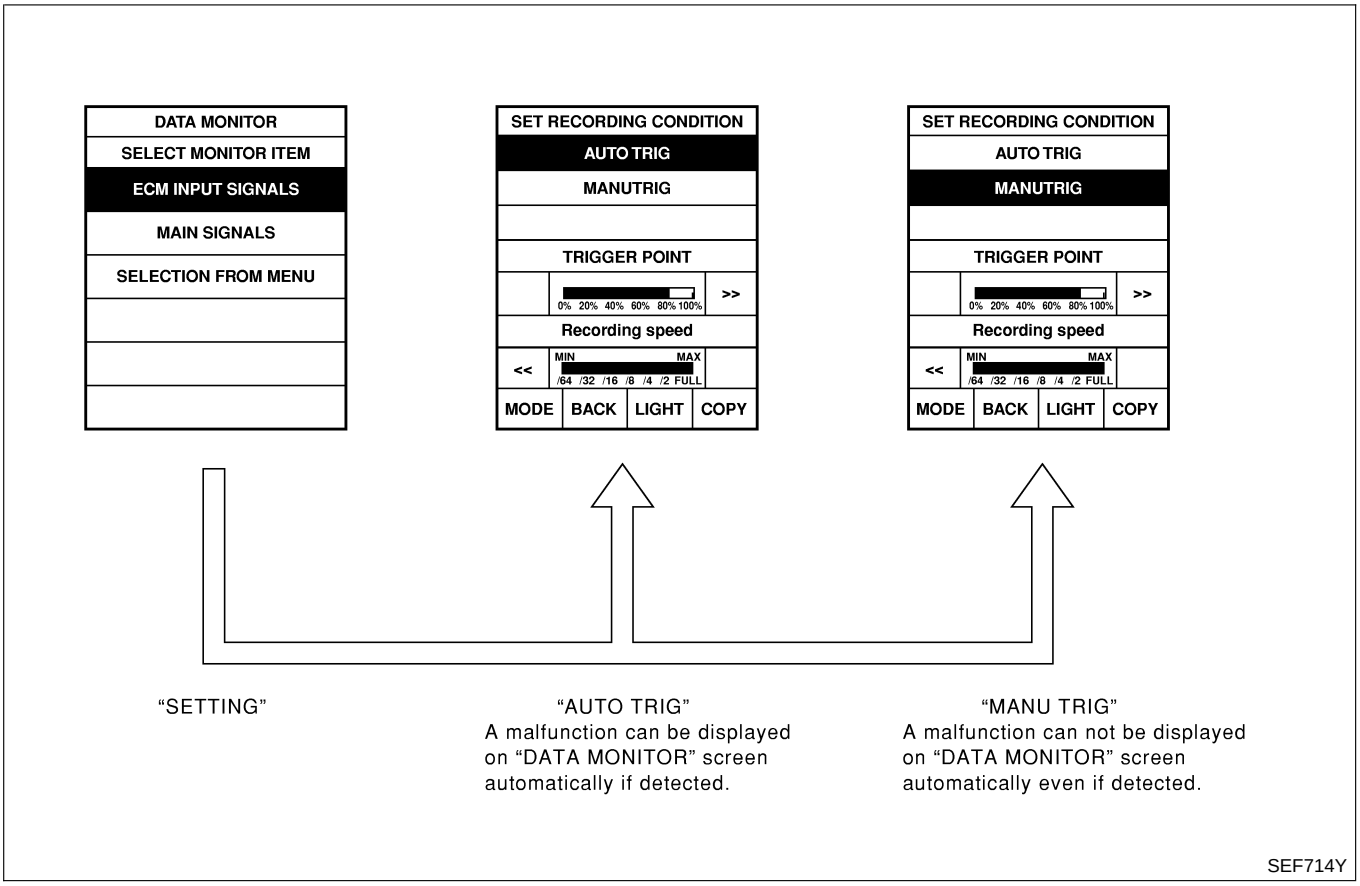

"SETTING"

"AUTO TRIG"
A malfunction can be displayed on "DATA MONITOR" screen automatically if detected.

"MANU TRIG"
A malfunction can not be displayed on "DATA MONITOR" screen automatically even if detected.

SEF714Y

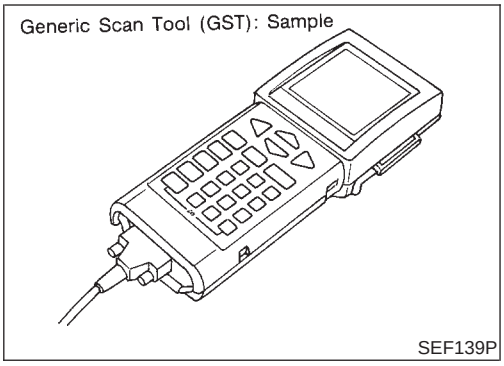

Generic Scan Tool (GST)

=NAEC0035

DESCRIPTION

NAEC0035S01

Generic Scan Tool (OBDII scan tool) complying with SAE J1978 has 8 different functions explained on the next page.
ISO9141 is used as the protocol.
The name “GST” or “Generic Scan Tool” is used in this service manual.

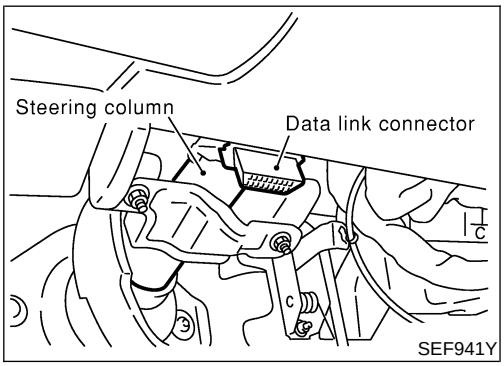

INSPECTION PROCEDURE

NAEC0035S02

1. Turn ignition switch OFF.
2. Connect GST to data link connector, which is located under LH dash panel near the fuse box cover.

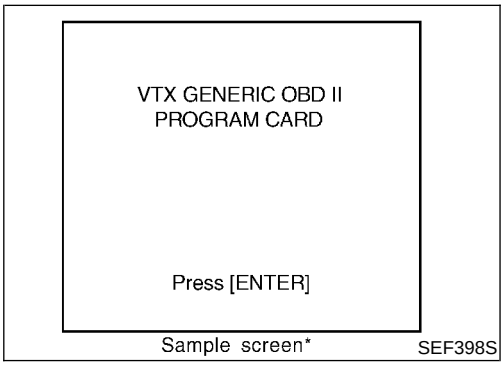

3. Turn ignition switch ON.
4. Enter the program according to instruction on the screen or in the operation manual.

(*: Regarding GST screens in this section, sample screens are shown.)

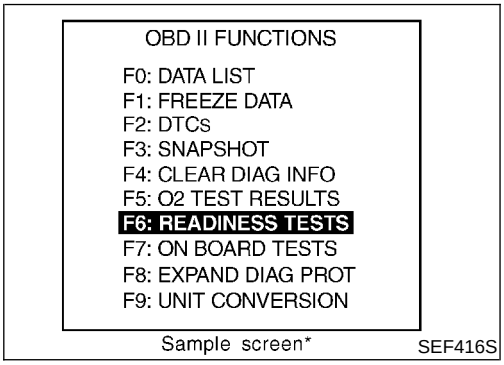

5. Perform each diagnostic mode according to each service procedure.

For further information, see the GST Operation Manual of the tool maker.

FUNCTION

NAEC0035S03

Diagnostic test mode		Function
MODE 1	READINESS TESTS	This mode gains access to current emission-related data values, including analog inputs and outputs, digital inputs and outputs, and system status information.
MODE 2	(FREEZE DATA)	This mode gains access to emission-related data value which were stored by ECM during the freeze frame. [For details, refer to "Freeze Frame Data" (EC-107).]
MODE 3	DTCs	This mode gains access to emission-related power train trouble codes which were stored by ECM.
MODE 4	CLEAR DIAG INFO	This mode can clear all emission-related diagnostic information. This includes: ● Clear number of diagnostic trouble codes (MODE 1) ● Clear diagnostic trouble codes (MODE 3) ● Clear trouble code for freeze frame data (MODE 1) ● Clear freeze frame data (MODE 2) ● Reset status of system monitoring test (MODE 1) ● Clear on board monitoring test results (MODE 6 and 7)
MODE 6	(ON BOARD TESTS)	This mode accesses the results of on board diagnostic monitoring tests of specific components/systems that are not continuously monitored.
MODE 7	(ON BOARD TESTS)	This mode enables the off board test drive to obtain test results for emission-related powertrain components/systems that are continuously monitored during normal driving conditions.
MODE 8	—	This mode can close EVAP system in ignition switch ON position (Engine stopped). When this mode is performed, the following parts can be opened or closed. ● EVAP canister vent control valve open ● Vacuum cut valve bypass valve closed In the following conditions, this mode cannot function. ● Low ambient temperature ● Low battery voltage ● Engine running ● Ignition switch OFF ● Low fuel temperature ● Too much pressure is applied to EVAP system
MODE 9	(CALIBRATION ID)	This mode enables the off-board test device to request specific vehicle information such as Vehicle Identification Number (VIN) and Calibration IDs.

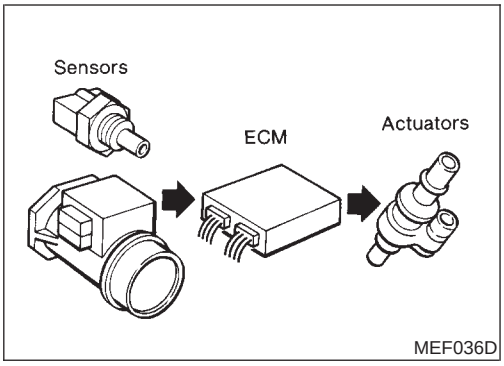

MEF036D

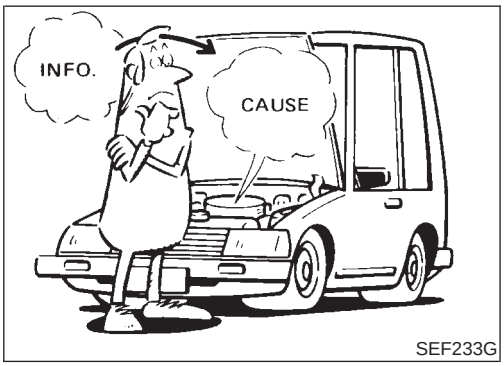

SEF233G

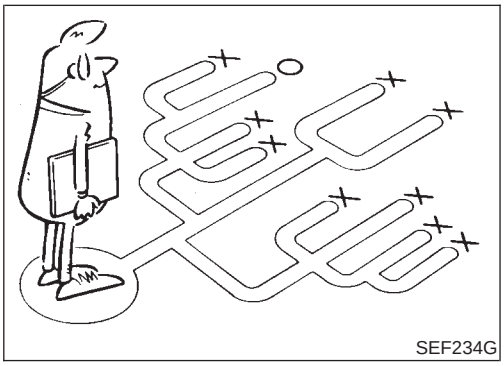
SEF234G

KEY POINTS

WHAT ..... Vehicle & engine model
WHEN ..... Date, Frequencies
WHERE..... Road conditions
HOW ..... Operating conditions, Weather conditions, Symptoms

SEF907L

Introduction

NAEC0036

The engine has an ECM to control major systems such as fuel control, ignition control, idle air control system, etc. The ECM accepts input signals from sensors and instantly drives actuators. It is essential that both input and output signals are proper and stable. At the same time, it is important that there are no incidents such as vacuum leaks, fouled spark plugs, or other incidents with the engine.

It is much more difficult to diagnose an incident that occurs intermittently rather than continuously. Most intermittent incidents are caused by poor electric connections or improper wiring. In this case, careful checking of suspected circuits may help prevent the replacement of good parts.

A visual check only may not find the cause of the incidents. A road test with CONSULT-II (or GST) or a circuit tester connected should be performed. Follow the “Work Flow” on EC-121.

Before undertaking actual checks, take a few minutes to talk with a customer who approaches with a driveability complaint. The customer can supply good information about such incidents, especially intermittent ones. Find out what symptoms are present and under what conditions they occur. A Diagnostic Worksheet like the example on next page should be used.

Start your diagnosis by looking for “conventional” malfunctions first. This will help troubleshoot driveability malfunctions on an electronically controlled engine vehicle.

DIAGNOSTIC WORKSHEET

NAEC0036S01

There are many operating conditions that lead to the malfunction of engine components. A good grasp of such conditions can make trouble-shooting faster and more accurate.

In general, each customer feels differently about an incident. It is important to fully understand the symptoms or conditions for a customer complaint.

Utilize a diagnostic worksheet like the one on the next page in order to organize all the information for troubleshooting.

Some conditions may cause the MIL to come on steady or blink and DTC to be detected. Examples:

- Vehicle ran out of fuel, which caused the engine to misfire.
- Fuel filler cap was left off or incorrectly screwed on, allowing fuel to evaporate into the atmosphere.

Worksheet Sample

NAEC0036S0101

Customer name MR/MS		Model & Year	VIN
Engine #		Trans.	Mileage
Incident Date		Manuf. Date	In Service Date
Fuel and fuel filler cap		☐ Vehicle ran out of fuel causing misfire ☐ Fuel filler cap was left off or incorrectly screwed on.	
Symptoms	☐ Startability	☐ Impossible to start ☐ No combustion ☐ Partial combustion ☐ Partial combustion affected by throttle position ☐ Partial combustion NOT affected by throttle position ☐ Possible but hard to start ☐ Others [ ]	
	☐ Idling	☐ No fast idle ☐ Unstable ☐ High idle ☐ Low idle ☐ Others [ ]	
	☐ Driveability	☐ Stumble ☐ Surge ☐ Knock ☐ Lack of power ☐ Intake backfire ☐ Exhaust backfire ☐ Others [ ]	
	☐ Engine stall	☐ At the time of start ☐ While idling ☐ While accelerating ☐ While decelerating ☐ Just after stopping ☐ While loading	
Incident occurrence		☐ Just after delivery ☐ Recently ☐ In the morning ☐ At night ☐ In the daytime	
Frequency		☐ All the time ☐ Under certain conditions ☐ Sometimes	
Weather conditions		☐ Not affected	
	Weather	☐ Fine ☐ Raining ☐ Snowing ☐ Others [ ]	
	Temperature	☐ Hot ☐ Warm ☐ Cool ☐ Cold ☐ Humid ˚F	
Engine conditions		☐ Cold ☐ During warm-up ☐ After warm-up Engine speed 0 2,000 4,000 6,000 8,000 rpm	
Road conditions		☐ In town ☐ In suburbs ☐ Highway ☐ Off road (up/down)	
Driving conditions		☐ Not affected ☐ At starting ☐ While idling ☐ At racing ☐ While accelerating ☐ While cruising ☐ While decelerating ☐ While turning (RH/LH) Vehicle speed 0 10 20 30 40 50 60 MPH	
Malfunction indicator lamp		☐ Turned on ☐ Not turned on	

MTBL0017

Work Flow

NAEC0037

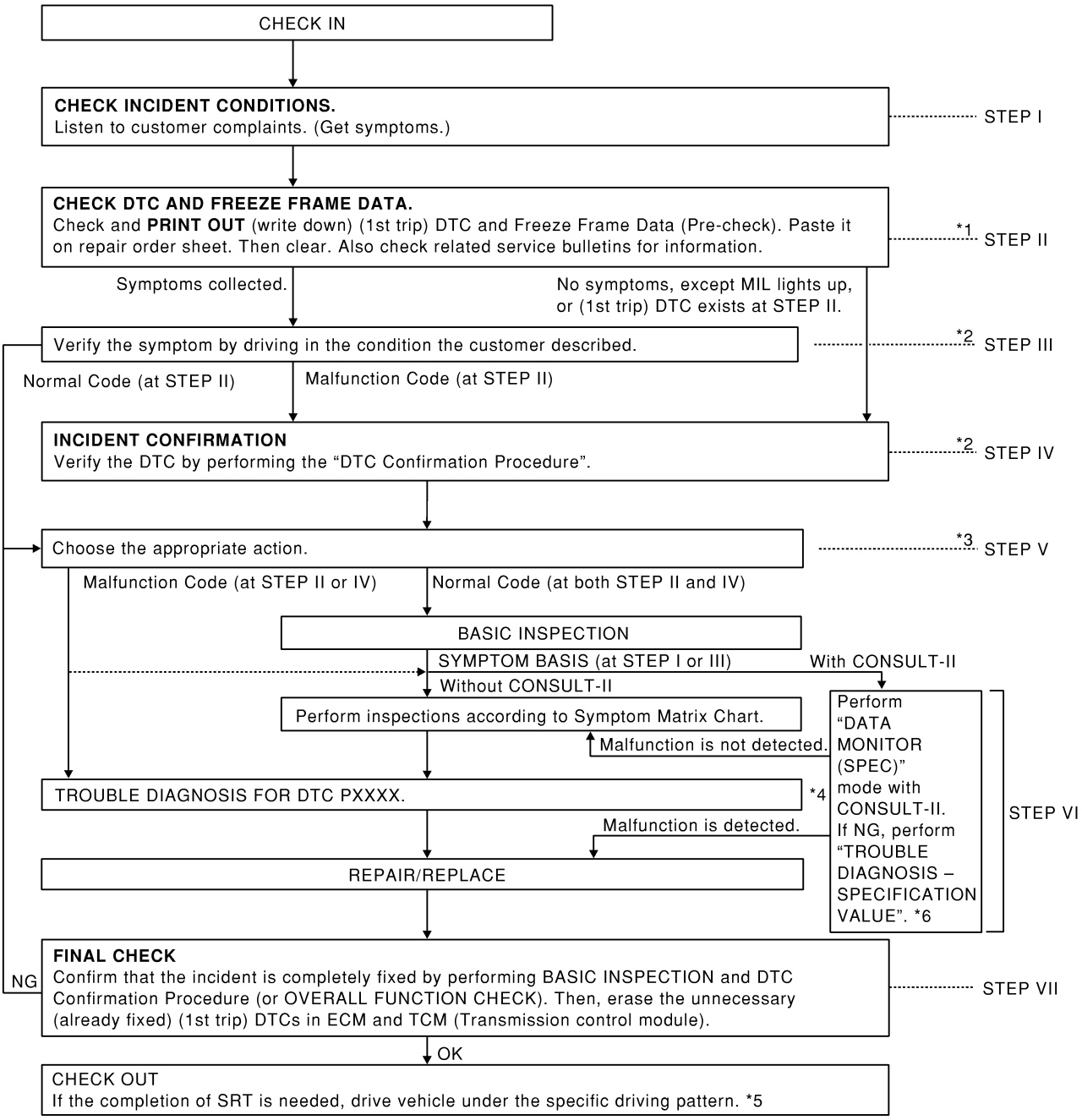

PBIB1043E

*1 If time data of "SELF-DIAG RESULTS" is other than [0] or [1t], perform "TROUBLE DIAGNOSIS FOR INTERMITTENT INCIDENT", EC-155.

*2 If the incident cannot be verified, perform "TROUBLE DIAGNOSIS FOR INTERMITTENT INCIDENT", EC-155.

*3 If the on board diagnostic system cannot be performed, check main power supply and ground circuit. Refer to "TROUBLE DIAGNOSIS FOR POWER SUPPLY", EC-157.

*4 If malfunctioning part cannot be detected, perform "TROUBLE DIAGNOSIS FOR INTERMITTENT INCIDENT", EC-155.

*5 EC-84

*6 EC-151

DESCRIPTION FOR WORK FLOW

NAEC0037S01

STEP	DESCRIPTION
STEP I	Get detailed information about the conditions and the environment when the incident/symptom occurred using the "DIAGNOSTIC WORK SHEET", EC-120.
STEP II	Before confirming the concern, check and write down (print out using CONSULT-II or GST) the (1st trip) DTC and the (1st trip) freeze frame data, then erase the DTC and the data. (Refer to EC-91.) The (1st trip) DTC and the (1st trip) freeze frame data can be used when duplicating the incident at STEP III & IV. If the incident cannot be verified, perform "TROUBLE DIAGNOSIS FOR INTERMITTENT INCIDENT", EC-155. Study the relationship between the cause, specified by (1st trip) DTC, and the symptom described by the customer. (The "Symptom Matrix Chart" will be useful. See EC-131.) Also check related service bulletins for information.
STEP III	Try to confirm the symptom and under what conditions the incident occurs. The "DIAGNOSTIC WORK SHEET" and the freeze frame data are useful to verify the incident. Connect CONSULT-II to the vehicle in DATA MONITOR (AUTO TRIG) mode and check real time diagnosis results. If the incident cannot be verified, perform "TROUBLE DIAGNOSIS FOR INTERMITTENT INCIDENT", EC-155. If the malfunction code is detected, skip STEP IV and perform STEP V.
STEP IV	Try to detect the (1st trip) DTC by driving in (or performing) the DTC Confirmation Procedure. Check and read the (1st trip) DTC and (1st trip) freeze frame data by using CONSULT-II or GST. During the (1st trip) DTC verification, be sure to connect CONSULT-II to the vehicle in DATA MONITOR (AUTO TRIG) mode and check real time diagnosis results. If the incident cannot be verified, perform "TROUBLE DIAGNOSIS FOR INTERMITTENT INCIDENT", EC-155. In case the DTC Confirmation Procedure is not available, perform the Overall Function Check instead. The (1st trip) DTC cannot be displayed by this check, however, this simplified "check" is an effective alternative. The NG result of the Overall Function Check is the same as the (1st trip) DTC detection.
STEP V	Take the appropriate action based on the results of STEP I through IV. If the malfunction code is indicated, proceed to TROUBLE DIAGNOSIS FOR DTC PXXXX. If the normal code is indicated, proceed to the BASIC INSPECTION. (Refer to EC-123.) If CONSULT-II is available, perform "DATA MONITOR (SPEC)" mode with CONSULT-II and proceed to the "TROUBLE DIAGNOSIS — SPECIFICATION VALUE", EC-151. (If malfunction is detected, proceed to "REPAIR REPLACE".) Then perform inspections according to the Symptom Matrix Chart. (Refer to EC-131.)
STEP VI	Identify where to begin diagnosis based on the relationship study between symptom and possible causes. Inspect the system for mechanical binding, loose connectors or wiring damage using (tracing) Harness Layouts. Gently shake the related connectors, components or wiring harness with CONSULT-II set in "DATA MONITOR (AUTO TRIG)" mode. Check the voltage of the related ECM terminals or monitor the output data from the related sensors with CONSULT-II. Refer to EC-135, 141. The Diagnostic Procedure in EC section contains a description based on open circuit inspection. A short circuit inspection is also required for the circuit check in the Diagnostic Procedure. For details, refer to GI-27, "Circuit Inspection". Repair or replace the malfunction parts. If malfunctioning part cannot be detected, perform "TROUBLE DIAGNOSIS FOR INTERMITTENT INCIDENT", EC-155.
STEP VII	Once you have repaired the circuit or replaced a component, you need to run the engine in the same conditions and circumstances which resulted in the customer's initial complaint. Perform the DTC Confirmation Procedure and confirm the normal code [DTC No. P0000] is detected. If the incident is still detected in the final check, perform STEP VI by using a different method from the previous one. Before returning the vehicle to the customer, be sure to erase the unnecessary (already fixed) (1st trip) DTC in ECM and TCM (Transmission control module). (Refer to EC-91 and AT-35.)

Basic Inspection

NAEC0038

Precaution:

Perform Basic Inspection without electrical or mechanical loads applied;

- Headlamp switch is OFF.
- Air conditioner switch is OFF.
- Rear window defogger switch is OFF.
- Steering wheel is in the straight-ahead position, etc.

1	INSPECTION START
1. Check service records for any recent repairs that may indicate a related malfunction, or a current need for scheduled maintenance. 2. Open engine hood and check the following: ● Harness connectors for improper connections ● Vacuum hoses for splits, kinks and improper connections ● Wiring for improper connections, pinches and cuts ● Air cleaner clogging ● Hoses and ducts for leaks 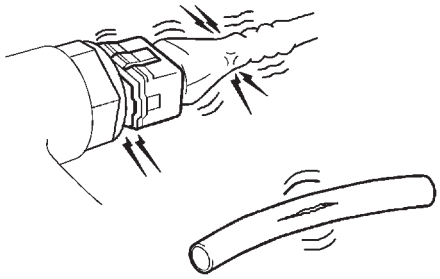 SEF983U	
▶	GO TO 2.

2	REPAIR OR REPLACE
Repair or replace components as necessary according to corresponding “Diagnostic Procedure”.	
▶	GO TO 3.

3	CHECK TARGET IDLE SPEED

With CONSULT-II

1. Run engine at about 2,000 rpm for about 2 minutes under no-load.
2. Rev engine (2,000 to 3,000 rpm) two or three times under no-load, then run engine at idle speed for about 1 minute.

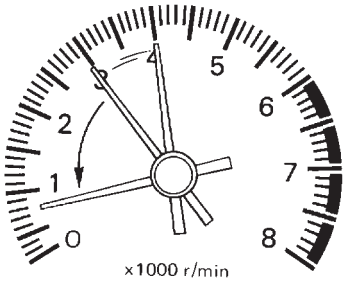

SEF978U

3. Read idle speed in "DATA MONITOR" mode with CONSULT-II.
   M/T: 750±50 rpm
   A/T: 750±50 rpm (in P or N position)

DATA MONITOR	
MONITOR	NO DTC
ENG SPEED	XXX rpm

SEF058Y

Without CONSULT-II

1. Run engine at about 2,000 rpm for about 2 minutes under no-load.
2. Rev engine (2,000 to 3,000 rpm) two or three times under no-load, then run engine at idle speed for about 1 minute.
3. Check idle speed.
   M/T: 750±50 rpm
   A/T: 750±50 rpm (in P or N position)

OK or NG

OK	▶	GO TO 10.
NG	▶	GO TO 4.

4	PERFORM ACCELERATOR PEDAL RELEASED POSITION LEARNING

1. Stop engine.
2. Perform "Accelerator Pedal Released Position Learning", EC-73.

▶ GO TO 5.

5	PERFORM THROTTLE VALVE CLOSED POSITION LEARNING

Perform "Throttle Valve Closed Position Learning", EC-73.

▶ GO TO 6.

6	PERFORM IDLE AIR VOLUME LEARNING	
Refer to "Idle Air Volume Learning", EC-73. **Is Idle Air Volume Learning carried out successfully?** **Yes or No**		
Yes	▶	GO TO 7.
No	▶	1. Follow the instruction of Idle Air Volume Learning. 2. GO TO 4.

7	CHECK TARGET IDLE SPEED AGAIN	
With CONSULT-II 1. Start engine and warm it up to normal operating temperature. 2. Read idle speed in "DATA MONITOR" mode with CONSULT-II. **M/T: 750±50 rpm** **A/T: 750±50 rpm (in P or N position)**		
Without CONSULT-II 1. Start engine and warm it up to normal operating temperature. 2. Check idle speed. **M/T: 750±50 rpm** **A/T: 750±50 rpm (in P or N position)** **OK or NG**		
OK	▶	GO TO 10.
NG	▶	GO TO 8.

8	DETECT MALFUNCTIONING PART	
Check the following. ● Check camshaft position sensor (PHASE) and circuit. Refer to EC-326. ● Check crankshaft position sensor (POS) and circuit. Refer to EC-319. **OK or NG**		
OK	▶	GO TO 9.
NG	▶	1. Repair or replace. 2. GO TO 4.

9	CHECK ECM FUNCTION	
1. Substitute another known-good ECM to check ECM function. (ECM may be the cause of an incident, but this is the rarely the case.) 2. Perform initialization of NVIS (NATS) system and registration of all NVIS (NATS) ignition key IDs. Refer to "NVIS (NISSAN VEHICLE IMMOBILIZER SYSTEM — NATS)", EC-93.		
	▶	GO TO 4.

10	CHECK IGNITION TIMING

1. Run engine at idle.
2. Check ignition timing with a timing light.

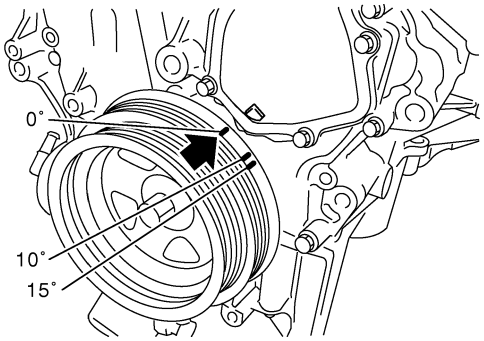

SEC580D

M/T: 15°±5° BTDC
A/T: 15°±5° BTDC (in P or N position)

OK or NG

OK	▶	**INSPECTION END**
NG	▶	GO TO 11.

11	PERFORM ACCELERATOR PEDAL RELEASED POSITION LEARNING

1. Stop engine.
2. Perform "Accelerator Pedal Released Position Learning", EC-73.

	▶	GO TO 12.

12	PERFORM THROTTLE VALVE CLOSED POSITION LEARNING

Perform "Throttle Valve Closed Position Learning", EC-73.

	▶	GO TO 13.

13	PERFORM IDLE AIR VOLUME LEARNING

Refer to "Idle Air Volume Learning", EC-73.
Is Idle Air Volume Learning carried out successfully?

Yes or No

Yes	▶	GO TO 14.
No	▶	1. Follow the instruction of Idle Air Volume Learning. 2. GO TO 4.

14	CHECK TARGET IDLE SPEED AGAIN

With CONSULT-II
1. Start engine and warm it up to normal operating temperature.
2. Read idle speed in "DATA MONITOR" mode with CONSULT-II.
   MT: 750±50 rpm
   AT: 750±50 rpm (in P or N position)

Without CONSULT-II
1. Start engine and warm it up to normal operating temperature.
2. Check idle speed.
   M/T: 750±50 rpm
   A/T: 750±50 rpm (in P or N position)

OK or NG

OK	▶	GO TO 15.
NG	▶	GO TO 17.

15	CHECK IGNITION TIMING AGAIN

1. Run engine at idle.
2. Check ignition timing with a timing light.

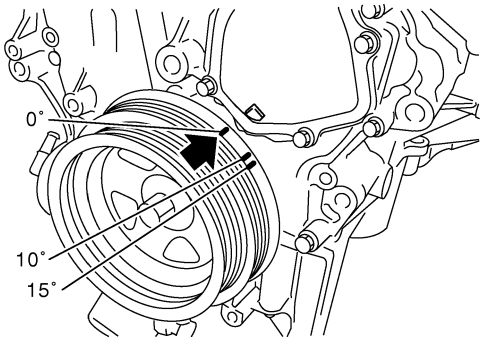

SEC580D

M/T: 15°±5° BTDC
A/T: 15°±5° BTDC (in P or N position)

OK or NG

OK	▶	**INSPECTION END**
NG	▶	GO TO 16.

16	CHECK TIMING CHAIN INSTALLATION

Check timing chain installation. Refer to EM-24, "TIMING CHAIN".

OK or NG

OK	▶	GO TO 17.
NG	▶	1. Repair the timing chain installation. 2. GO TO 4.

17	DETECT MALFUNCTIONING PART

Check the following.
- Check camshaft position sensor (PHASE) and circuit. Refer to EC-326.
- Check crankshaft position sensor (POS) and circuit. Refer to EC-319.

OK or NG

OK	▶	GO TO 18.
NG	▶	1. Repair or replace. 2. GO TO 4.

18	CHECK ECM FUNCTION
1. Substitute another known-good ECM to check ECM function. (ECM may be the cause of an incident, but this is a rare case.) 2. Perform initialization of NVIS (NATS) system and registration of all NVIS (NATS) ignition key IDs. Refer to "NVIS (NISSAN VEHICLE IMMOBILIZER SYSTEM — NATS)", EC-93.	
▶	GO TO 4.

DTC Inspection Priority Chart

NAEC0039

If some DTCs are displayed at the same time, perform inspections one by one based on the following priority chart.

Priority	Detected items (DTC)
1	• U1000, U1001 CAN communication line • P0101, P0102, P0103 MAF sensor • P0112, P0113, P0127 IAT sensor • P0117, P0118, P0125 ECT sensor • P0122, P0123, P0222, P0223, P1225, P1226, P2135 Throttle position sensor • P0128 Thermostat function • P0181, P0182, P0183 FTT sensor • P0327, P0328 KS • P0335 CKP sensor (POS) • P0340, P0345 CMP sensor (PHASE) • P0460, P0461, P0462, P0463 Fuel level sensor • P0500 VSS • P0605 ECM • P1229 Sensor power supply • P1706 PNP switch • P2122, P2123, P2127, P2128, P2138 Accelerator pedal position sensor
2	• P0031, P0032, P0051, P0052 HO2S1 heater • P0037, P0038, P0057, P0058 HO2S2 heater • P0132-P0134, P1143, P1144 and P0152-P0154, P1163, P1164 HO2S1 • P0138, P0139, P1146, P1147 and P0158, P0159, P1166, P1167 HO2S2 • P0441 EVAP control system purge flow monitoring • P0444, P0445, P1444 EVAP canister purge volume control solenoid valve • P0447, P1446, P1448 EVAP canister vent control valve • P0452, P0453 EVAP control system pressure sensor • P0550 Power steering pressure sensor • P0705-P0755, P1705, P1760 A/T related sensors, solenoid valves and switches • P1065 ECM power supply • P1111 Intake valve timing control solenoid valve • P1122 Electric throttle control function • P1165 Swirl control valve control vacuum check switch • P1217 Engine over temperature (OVERHEAT) • P1490, P1491 Vacuum cut valve bypass valve • P1805 Brake switch
3	• P0011, P0021, P1110, P1135 Intake valve timing control • P0171, P0172 and P0174, P0175 Fuel injection system function • P0300-P0306 Misfire • P0420, P0430 Three way catalyst function • P0442, P0455, P0456, P1442, P1456 EVAP control system • P0506, P0507 ISC system • P0731-P0734, P0744 A/T function • P1121 Electric throttle control actuator • P1124, P1126, P1128 Electric throttle control actuator • P1130, P1131 Swirl control valve control solenoid valve • P1148, P1168 Closed loop control • P1211 ABS/TCS control unit • P1212 ABS/TCS communication line • P1564 ASCD steering switch • P1572 ASCD brake switch

Fail-safe Chart

=NAEC0040

When the DTC listed below is detected, the ECM enters fail-safe mode and the MIL lights up.

DTC No.	Detected items	Engine operating condition in fail-safe mode
P0102 P0103	Mass air flow sensor circuit	Engine speed will not rise more than 2,400 rpm due to the fuel cut.
P0117 P0118	Engine coolant temperature sensor circuit	Engine coolant temperature will be determined by ECM based on the time after turning ignition switch ON or START. CONSULT-II displays the engine coolant temperature decided by ECM.
		Condition: Engine coolant temperature decided (CONSULT-II display)
		Just as ignition switch is turned ON or Start: 40°C (104°F)
		More than approx. 4 minutes after ignition ON or Start: 80°C (176°F)
		Except as shown above: 40 - 80°C (104 - 176°F) (Depends on the time)
		When the fail-safe system for engine coolant temperature sensor is activated, the cooling fan operates while engine is running.
P0122 P0123 P0222 P0223 P2135	Throttle position sensor	The ECM controls the electric throttle control actuator in regulating the throttle opening in order for the idle position to be within +10 degrees. The ECM regulates the opening speed of the throttle valve to be slower than the normal condition. So, the acceleration will be poor.
P1121	Electric throttle control actuator	(When electric throttle control actuator does not function properly due to the return spring malfunction:) ECM controls the electric throttle actuator by regulating the throttle opening around the idle position. The engine speed will not rise more than 2,000 rpm.
		(When throttle valve opening angle in fail-safe mode is not in specified range:) ECM controls the electric throttle control actuator by regulating the throttle opening to 20 degrees or less.
		(When ECM detects the throttle valve is stuck open:) While the vehicle is driving, it slows down gradually by fuel cut. After the vehicle stops, the engine stalls. The engine can restart in N or P position, and engine speed will not exceed 1,000 rpm or more.
P1122	Electric throttle control function	ECM stops the electric throttle control actuator control, throttle valve is maintained at a fixed opening (approx. 5 degrees) by the return spring.
P1124 P1126	Throttle control relay	ECM stops the electric throttle control actuator control, throttle valve is maintained at a fixed opening (approx. 5 degrees) by the return spring.
P1128	Throttle control motor	ECM stops the electric throttle control actuator control, throttle valve is maintained at a fixed opening (approx. 5 degrees) by the return spring.
P1229	Sensor power supply	ECM stops the electric throttle control actuator control, throttle valve is maintained at a fixed opening (approx. 5 degrees) by the return spring.
P2122 P2123 P2127 P2128 P2138	Accelerator pedal position sensor	The ECM controls the electric throttle control actuator in regulating the throttle opening in order for the idle position to be within +10 degrees. The ECM regulates the opening speed of the throttle valve to be slower than the normal condition. So, the acceleration will be poor.

- When there is an open circuit on MIL circuit, the ECM cannot warn the driver by lighting MIL up when there is a malfunction on engine control system.
  Therefore, when electrically controlled throttle and part of ECM related diagnosis is continuously detected as NG for 5 trips, ECM warns the driver that engine control system has a malfunction and MIL circuit is open by means of operating fail-safe function.

Fail-safe Chart (Cont'd)

The fail-safe function also operates when above diagnoses except MIL circuit are detected and demands the driver to repair the malfunction.

Engine operating condition in fail-safe mode	Engine speed will not rise more than 2,500 rpm due to the fuel cut

Symptom Matrix Chart

NAEC0041

SYSTEM — BASIC ENGINE CONTROL SYSTEM

NAEC0041S01

		SYMPTOM													
		HARD/NO START/RESTART (EXCP. HA)	ENGINE STALL	HESITATION/SURGING/FLAT SPOT	SPARK KNOCK/DETONATION	LACK OF POWER/POOR ACCELERATION	HIGH IDLE/LOW IDLE	ROUGH IDLE/HUNTING	IDLING VIBRATION	SLOW/NO RETURN TO IDLE	OVERHEATS/WATER TEMPERATURE HIGH	EXCESSIVE FUEL CONSUMPTION	EXCESSIVE OIL CONSUMPTION	BATTERY DEAD (UNDER CHARGE)	Reference page
Warranty symptom code		AA	AB	AC	AD	AE	AF	AG	AH	AJ	AK	AL	AM	HA	
Fuel	Fuel pump circuit	1	1	2	3	2		2	2			3		2	EC-729
	Fuel pressure regulator system	3	3	4	4	4	4	4	4	4		4			EC-57
	Injector circuit	1	1	2	3	2		2	2			2			EC-724
	Evaporative emission system	3	3	4	4	4	4	4	4	4		4			EC-38
Air	Positive crankcase ventilation system												1		EC-53
	Incorrect idle speed adjustment						1	1	1	1		1			EC-123
	Electric throttle control actuator	1	1	2	3	3	2	2	2	2		2		2	EC-457, 459, 467, 472
Ignition	Incorrect ignition timing adjustment	3	3	1	1	1		1	1			1			EC-123
	Ignition circuit	1	1	2	2	2		2	2			2			EC-714
Main power supply and ground circuit		2	2	3	3	3		3	3		2	3			EC-157
Air conditioner circuit							3			3				2	HA section

1 - 6: The numbers refer to the order of inspection.

(continued on next page)

Symptom Matrix Chart (Cont'd)

		SYMPTOM													Reference page
		HARD/NO START/RESTART (EXCP. HA)	ENGINE STALL	HESITATION/SURGING/FLAT SPOT	SPARK KNOCK/DETONATION	LACK OF POWER/POOR ACCELERATION	HIGH IDLE/LOW IDLE	ROUGH IDLE/HUNTING	IDLING VIBRATION	SLOW/NO RETURN TO IDLE	OVERHEATS/WATER TEMPERATURE HIGH	EXCESSIVE FUEL CONSUMPTION	EXCESSIVE OIL CONSUMPTION	BATTERY DEAD (UNDER CHARGE)	
Warranty symptom code		AA	AB	AC	AD	AE	AF	AG	AH	AJ	AK	AL	AM	HA	
Engine control	Crankshaft position sensor (POS) circuit	2	2												EC-319
	Camshaft position sensor (PHASE) circuit	3	2												EC-326
	Mass air flow sensor circuit	1			2										EC-187, EC-194
	Heated oxygen sensor 1 circuit														EC-246
	Engine coolant temperature sensor circuit	1	1	2	3	2	3	2	2	3		2			EC-204, 217
	Throttle position sensor circuit						2			2					EC-210, 298, 558, 560, 562, 690
	Accelerator pedal position sensor circuit			3	2	1	2			2					EC-675, 682, 697
	Vehicle speed sensor circuit		2	3		3									EC-430
	Knock sensor circuit			2								3			EC-314
	ECM	2	2	3	3	3	3	3	3	3	3				EC-441
	Park/Neutral position switch circuit			3		3						3			EC-663
	Power steering pressure sensor circuit		2					3	3						EC-436
	Electrical load signal circuit														EC-753
	Intake valve timing control solenoid valve circuit		3	2		1	3	2	2	3		3			EC-451
	Refrigerant pressure sensor circuit		2				3			3		4			EC-736
	ABS actuator and electric unit (control unit)			4											EC-549, 551
	Swirl control valve control solenoid valve circuit					1									EC-477
	VIAS control solenoid valve circuit					1									EC-705

1 - 6: The numbers refer to the order of inspection.

(continued on next page)

SYSTEM — ENGINE MECHANICAL & OTHER

NAEC0041S02

		SYMPTOM													Reference section
		HARD/NO START/RESTART (EXCP. HA)	ENGINE STALL	HESITATION/SURGING/FLAT SPOT	SPARK KNOCK/DETONATION	LACK OF POWER/POOR ACCELERATION	HIGH IDLE/LOW IDLE	ROUGH IDLE/HUNTING	IDLING VIBRATION	SLOW/NO RETURN TO IDLE	OVERHEATS/WATER TEMPERATURE HIGH	EXCESSIVE FUEL CONSUMPTION	EXCESSIVE OIL CONSUMPTION	BATTERY DEAD (UNDER CHARGE)	
Warranty symptom code		AA	AB	AC	AD	AE	AF	AG	AH	AJ	AK	AL	AM	HA	
Fuel	Fuel tank	5	5												FE section
	Fuel piping			5	5	5		5	5			5			—
	Vapor lock														
	Valve deposit	5		5	5	5		5	5			5			
	Poor fuel (Heavy weight gasoline, Low octane)														
Air	Air duct		5	5		5		5	5			5			
	Air cleaner														
	Air leakage from air duct (Mass air flow sensor — electric throttle control actuator				5		5			5					
	Air leakage from intake manifold/ Collector/Gasket	5													
Cranking	Battery	1	1	1		1		1	1			1		1	EL section
	Alternator circuit														
	Starter circuit	3													
	Flywheel/Drive plate	6													EM section
	PNP switch	4													AT section

1 - 6: The numbers refer to the order of inspection.

(continued on next page)

Symptom Matrix Chart (Cont'd)

		SYMPTOM													Reference section
		HARD/NO START/RESTART (EXCP. HA)	ENGINE STALL	HESITATION/SURGING/FLAT SPOT	SPARK KNOCK/DETONATION	LACK OF POWER/POOR ACCELERATION	HIGH IDLE/LOW IDLE	ROUGH IDLE/HUNTING	IDLING VIBRATION	SLOW/NO RETURN TO IDLE	OVERHEATS/WATER TEMPERATURE HIGH	EXCESSIVE FUEL CONSUMPTION	EXCESSIVE OIL CONSUMPTION	BATTERY DEAD (UNDER CHARGE)	
Warranty symptom code		AA	AB	AC	AD	AE	AF	AG	AH	AJ	AK	AL	AM	HA	
Engine	Cylinder head	5	5	5	5	5		5	5			5			EM section
	Cylinder head gasket										4		3		
	Cylinder block	6	6	6	6	6		6	6			6	4		
	Piston														
	Piston ring														
	Connecting rod														
	Bearing														
	Crankshaft														
Valve mechanism	Timing chain	5	5	5	5	5		5	5			5			
	Camshaft														
	Intake valve timing control														
	Intake valve												3		
	Exhaust valve														
Exhaust	Exhaust manifold/Tube/Muffler/Gasket	5	5	5	5	5	5	5		5					FE section
	Three way catalyst														
Lubrication	Oil pan/Oil strainer/Oil pump/Oil filter/Oil gallery	5	5	5	5	5		5	5			5			MA, EM, LC section
	Oil level (Low)/Filthy oil														LC section
Cooling	Radiator/Hose/Radiator filler cap	5	5	5	5	5		5	5		4	5			
	Thermostat									5					
	Water pump														
	Water gallery														
	Coolant level (low)/Contaminated coolant														MA section

1 - 6: The numbers refer to the order of inspection.

	SYMPTOM													Reference section
	HARD/NO START/RESTART (EXCP. HA)	ENGINE STALL	HESITATION/SURGING/FLAT SPOT	SPARK KNOCK/DETONATION	LACK OF POWER/POOR ACCELERATION	HIGH IDLE/LOW IDLE	ROUGH IDLE/HUNTING	IDLING VIBRATION	SLOW/NO RETURN TO IDLE	OVERHEATS/WATER TEMPERATURE HIGH	EXCESSIVE FUEL CONSUMPTION	EXCESSIVE OIL CONSUMPTION	BATTERY DEAD (UNDER CHARGE)	
Warranty symptom code	AA	AB	AC	AD	AE	AF	AG	AH	AJ	AK	AL	AM	HA	
NVIS (NISSAN Vehicle Immobilizer System — NATS)	1	1												EC-93 or EL section

1 - 6: The numbers refer to the order of inspection.

CONSULT-II Reference Value in Data Monitor Mode

NAEC0042

Remarks:

- Specification data are reference values.
- Specification data are output/input values which are detected or supplied by the ECM at the connector.

  * Specification data may not be directly related to their components signals/values/operations.

  i.e. Adjust ignition timing with a timing light before monitoring IGN TIMING, because the monitor may show the specification data in spite of the ignition timing not being adjusted to the specification data. This IGN TIMING monitors the data calculated by the ECM according to the signals input from the camshaft position sensor and other ignition timing related sensors.

MONITOR ITEM	CONDITION		SPECIFICATION
ENG SPEED	• Run engine and compare CONSULT-II value with the tachometer indication.		Almost the same speed as the tachometer indication.
MAS A/F SE-B1	• Engine: After warming up • Air conditioner switch: OFF • Shift lever: N • No-load	Idle	1.0 - 1.3V
		2,500 rpm	1.7 - 2.1V
COOLAN TEMP/S	• Engine: After warming up		More than 70°C (158°F)
HO2S1 (B1) HO2S1 (B2)	• Engine: After warming up	Maintaining engine speed at 2,000 rpm	0 - 0.3V ⟷ Approx. 0.6 - 1.0V
HO2S1 MNTR (B1) HO2S1 MNTR (B2)			LEAN ⟷ RICH Changes more than 5 times during 10 seconds.
HO2S2 (B1) HO2S2 (B2)	• Engine: After warming up • After keeping engine speed between 3,500 and 4,000 rpm for 1 minute and at idle for 1 minute under no load	Revving engine from idle up to 3,000 rpm quickly	0 - 0.3V ⟷ Approx. 0.6 - 1.0V
HO2S2 MNTR (B1) HO2S2 MNTR (B2)			LEAN ⟷ RICH
BATTERY VOLT	• Ignition switch: ON (Engine stopped)		11 - 14V
ACCEL SEN 1	• Ignition switch: ON (Engine stopped) • Shift lever: D (A/T models) 1st (M/T models)	Accelerator pedal: Fully released	0.5 - 1.0V
		Accelerator pedal: Fully depressed	4.0 - 4.7V

CONSULT-II Reference Value in Data Monitor Mode (Cont'd)

MONITOR ITEM	CONDITION		SPECIFICATION
ACCEL SEN 2*	• Ignition switch: ON (Engine stopped) • Shift lever: D (A/T models) 1st (M/T models)	Accelerator pedal: Fully released	0.3 - 1.2V
		Accelerator pedal: Fully depressed	3.9 - 4.8V
THRTL SEN 1 THRTL SEN 2*	• Ignition switch: ON (Engine stopped) • Shift lever: D (A/T models) 1st (M/T models)	Accelerator pedal: Fully released	More than 0.36V
		Accelerator pedal: Fully depressed	Less than 4.75V
START SIGNAL	• Ignition switch: ON → START → ON		OFF → ON → OFF
CLSD THL POS	• Ignition switch: ON (Engine stopped) • Shift lever: D (A/T models) 1st (M/T models)	Accelerator pedal: Fully released	ON
		Accelerator pedal: Slightly depressed	OFF
AIR COND SIG	• Engine: After warming up, idle the engine	Air conditioner switch: OFF	OFF
		Air conditioner switch: ON (Compressor operates.)	ON
P/N POSI SW	• Ignition switch: ON	Shift lever: P or N	ON
		Except above	OFF
PW/ST SIGNAL	• Engine: After warming up, idle the engine	Steering wheel in neutral position (forward direction)	OFF
		The steering wheel is turned	ON
IGNITION SW	• Ignition switch: ON → OFF → ON		ON → OFF → ON
INJ PULSE-B1 INJ PULSE-B2	• Engine: After warming up • Air conditioner switch: OFF • Shift lever: N • No-load	Idle	2.4 - 3.2 msec
		2,000 rpm	1.9 - 2.8 msec
B/FUEL SCHDL	• Engine: After warming up • Air conditioner switch: OFF • Shift lever: N • No-load	Idle	2.0 - 3.2 msec
		2,000 rpm	1.4 - 2.6 msec
IGN TIMING	• Engine: After warming up • Air conditioner switch: OFF • Shift lever: N • No-load	Idle	15°±5° BTDC
		2,000 rpm	More than 25° BTDC
LOAD SIGNAL	• Ignition switch: ON	Rear window defogger switch is ON and/or lighting switch is in 2nd.	ON
		Rear window defogger switch is OFF and lighting switch is OFF.	OFF
PURG VOL C/V	• Engine: After warming up • Air conditioner switch: OFF • Shift lever: N • No-load	Idle	0 %
		2,000 rpm	—
A/F ALPHA-B1 A/F ALPHA-B2	• Engine: After warming up	Maintaining engine speed at 2,000 rpm	54 - 155%
EVAP SYS PRES	• Ignition switch: ON		1.8 - 4.8V
AIR COND RLY	• Air conditioner switch: OFF → ON		OFF → ON
FUEL PUMP RLY	• Ignition switch is turned to ON (Operates for 1 second) • Engine running and cranking		ON
	Except as shown above		OFF

MONITOR ITEM	CONDITION		SPECIFICATION
VENT CONT/V	• Ignition switch: ON		OFF
HO2S1 HTR (B1) HO2S1 HTR (B2)	• Engine: After warming up • Engine speed: Below 3,600 rpm		ON
	• Engine speed: Above 3,600 rpm		OFF
HO2S2 HTR (B1) HO2S2 HTR (B2)	• Ignition switch: ON (Engine stopped) • Engine speed: Above 3,200 rpm		OFF
	• Engine speed: Below 3,200 rpm after the following conditions are met. • After warming up • After keeping the engine speed between 3,500 and 4,000 rpm for 1 minute and at idle for 1 minute under no load		ON
VC/V BYPASS/V	Ignition switch: ON		OFF
CAL/LD VALUE	• Engine: After warming up • Air conditioner switch: OFF • Shift lever: N • No-load	Idle	14.0 - 33.0%
		2,500 rpm	12.0 - 25.0%
BRAKE SW	• Ignition switch: ON	Brake pedal: Fully released	OFF
		Brake pedal: Slightly depressed	ON
MASS AIRFLOW	• Engine: After warming up • Air conditioner switch: OFF • Shift lever: N • No-load	Idle	2.0 - 6.0 g·m/s
		2,500 rpm	7.0 - 20.0 g·m/s
SWRL CONT S/V	• Engine speed: Idle	Engine coolant temperature is between 15°C (59°F) to 50°C (122°F).	ON
		Engine coolant temperature is above 55°C (131°F).	OFF
SWL CON VC SW	• Engine speed: Idle • Engine coolant temperature is between 15°C (59°F) to 50°C (122°F).		OFF
	• Engine speed: Idle • Engine coolant temperature is above 55°C (131°F).		ON
VIAS S/V	• Engine: After warming up	1,800 - 3,600 rpm	ON
		Except above conditions	OFF
AC PRESS SEN	• Ignition switch: ON (Engine stopped)		Approx. 0V
	• Engine: Idle • Air conditioner switch: OFF		1.0 - 4.0V
INT/V TIM (B1) INT/V TIM (B2)	• Engine: After warming up • Shift lever N • Quickly depressed accelerator pedal • No-load	Idle	0° CA
		2,000 rpm	Approximately 12 - 18° CA
INT/V SOL (B1) INT/V SOL (B2)	• Engine: After warming up • Shift lever N • Quickly depressed accelerator pedal • No-load	Idle	0%
		2,000 rpm	Approximately 40%
TRVL AFTER MIL	• Ignition switch: ON	Vehicle has traveled after MIL has turned ON.	0 - 65,535 km (0 - 40,723 mile)
VEH SPEED SE	• Turn drive wheels and compare CONSULT-II value with the speedometer indication.		Almost the same speed as the speedometer indication

CONSULT-II Reference Value in Data Monitor Mode (Cont'd)

MONITOR ITEM	CONDITION		SPECIFICATION
SET VHCL SPD	● Engine: Running	ASCD: Operating	The preset vehicle speed is displayed.
MAIN SW	● Ignition switch: ON	MAIN switch: Pressed	ON
		MAIN switch: Released	OFF
CANCEL SW	● Ignition switch: ON	CANCEL switch: Pressed	ON
		CANCEL switch: Released	OFF
RESUME/ACC SW	● Ignition switch: ON	RESUME/ACCEL switch: Pressed	ON
		RESUME/ACCEL switch: Released	OFF
SET SW	● Ignition switch: ON	SET/COAST switch: Pressed	ON
		SET/COAST switch: Released	OFF
BRAKE SW1	● Ignition switch: ON	Brake pedal: Fully released Clutch pedal: Fully released (M/T)	ON
		Brake pedal: Slightly depressed Clutch pedal: Slightly depressed (M/T)	OFF
BRAKE SW2	● Ignition switch: ON	Brake pedal: Fully released	OFF
		Brake pedal: Slightly depressed	ON
CRUISE LAMP	● Ignition switch: ON	CRUISE lamp: Illuminated	ON
		CRUISE lamp: Not illuminated	OFF
SET LAMP	● Ignition switch: ON	SET lamp: Illuminated	ON
		SET lamp: Not illuminated	OFF

*: Accelerator pedal position sensor 2 signal and throttle position sensor 2 signal are converted by ECM internally. Thus, they differ from ECM terminals voltage signal.

Major Sensor Reference Graph in Data Monitor Mode

=NAEC0043

The following are the major sensor reference graphs in “DATA MONITOR” mode.

CLSD THL POS, ACCEL SEN 1, THRTL SEN 1

NAEC0043S01

Below is the data for “CLSD THL POS”, “ACCEL SEN 1” and “THRTL SEN 1” when depressing the accelerator pedal with the ignition switch ON and with selector lever in D position (A/T models) or with shift lever in 1st position (M/T models).
The signal of “ACCEL SEN 1” and “THRTL SEN 1” should rise gradually without any intermittent drop or rise after “CLSD THL POS” is changed from ON to OFF.

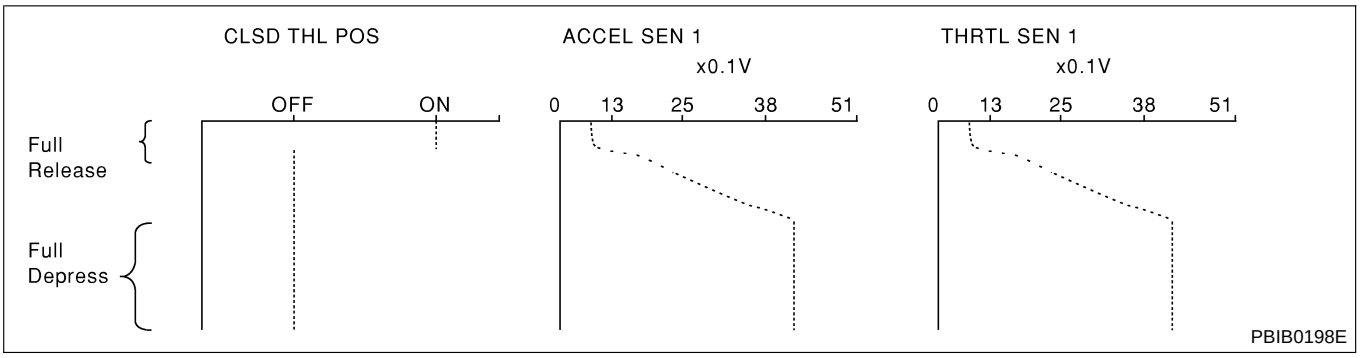

ENG SPEED, MAS A/F SE-B1, THRTL SEN 1, HO2S2 (B1), HO2S1 (B1), INJ PULSE-B1

NAEC0043S02

Below is the data for “ENG SPEED”, “MAS A/F SE-B1”, “THRTL SEN 1”, “HO2S2 (B1)”, “HO2S1 (B1)” and “INJ PULSE-B1” when revving engine quickly up to 4,800 rpm under no load after warming up engine sufficiently.
Each value is for reference, the exact value may vary.

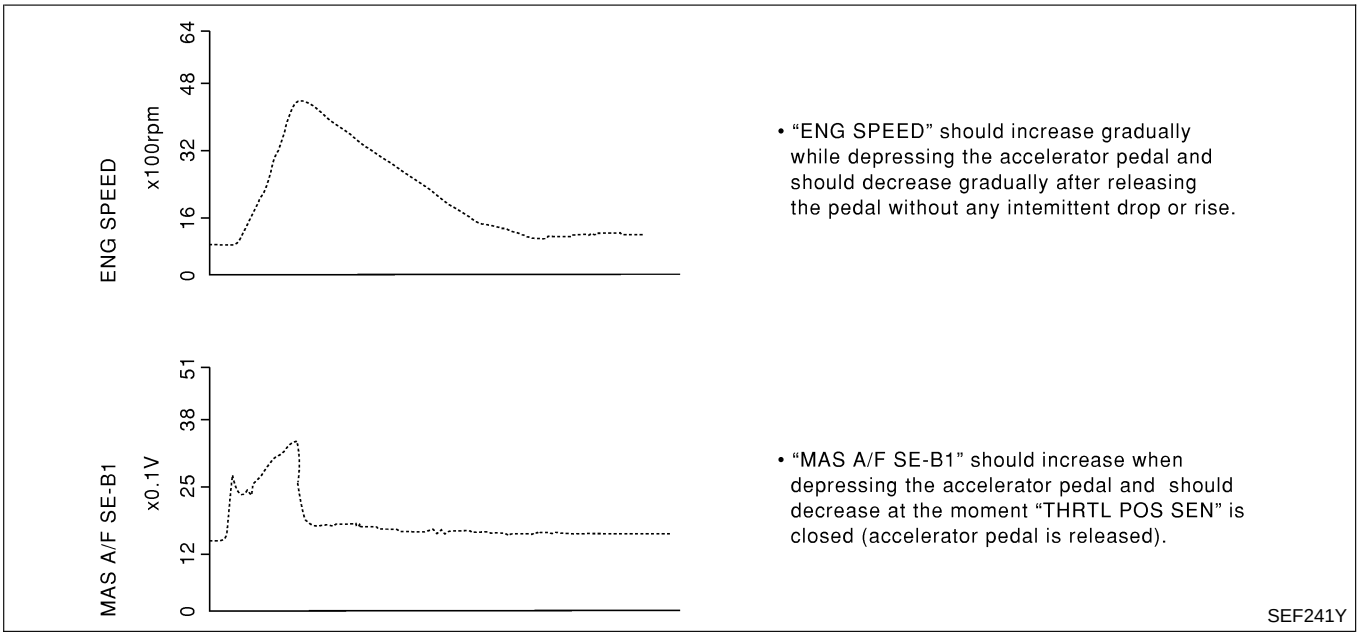

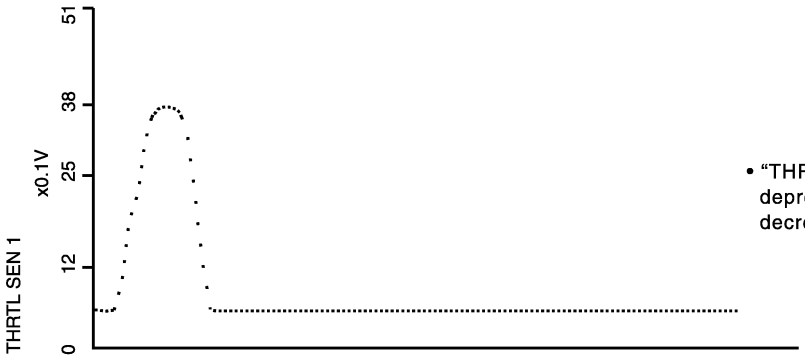

- "THRTL SEN 1" should increase while depressing the accelerator pedal and should decrease while releasing it.

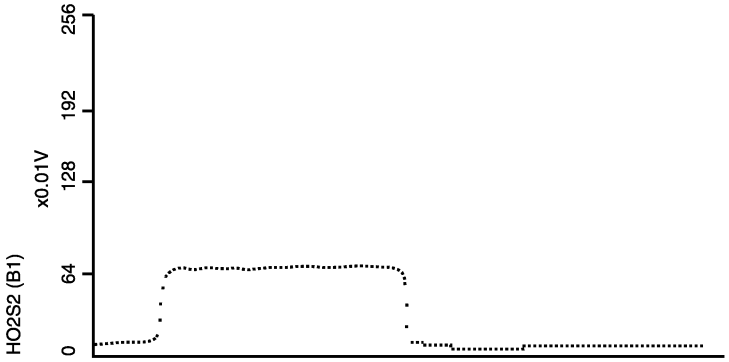

- "HO2S2 (B1)" may increase immediately after depressing the accelerator pedal and may decrease after releasing the pedal.

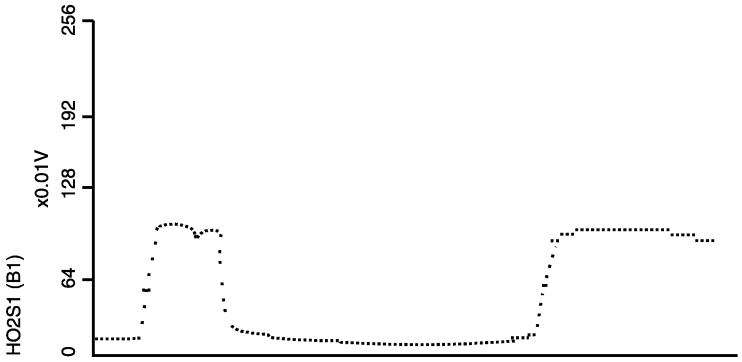

- "HO2S1 (B1)" may increase immediately after depressing the accelerator pedal and may decrease after releasing the pedal.

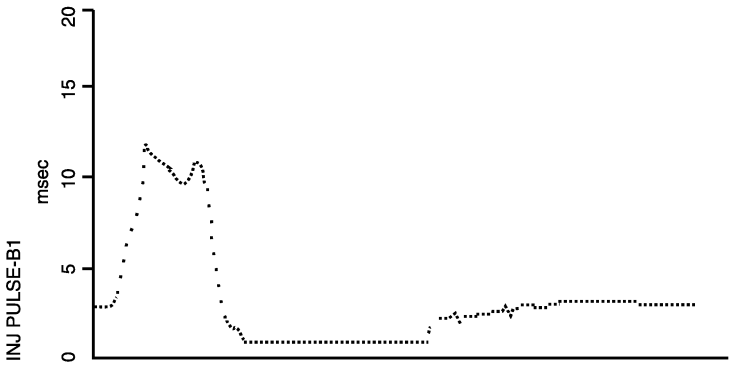

- "INJ PULSE-B1" should increase when depressing the accelerator pedal and should decrease when the pedal is released.

PBIB0668E

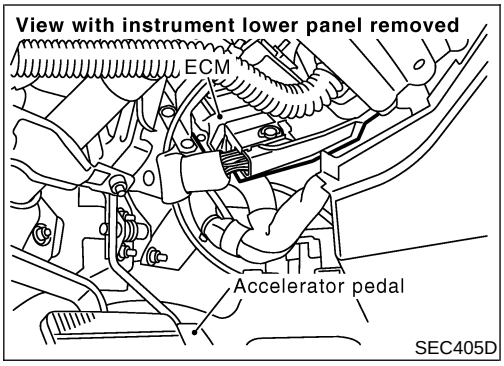

SEC405D

ECM Terminals and Reference Value

NAEC0044

PREPARATION

NAEC0044S01

1. ECM is located behind the driver side instrument lower panel. For this inspection, remove driver side instrument lower panel.
2. Remove ECM harness connector.

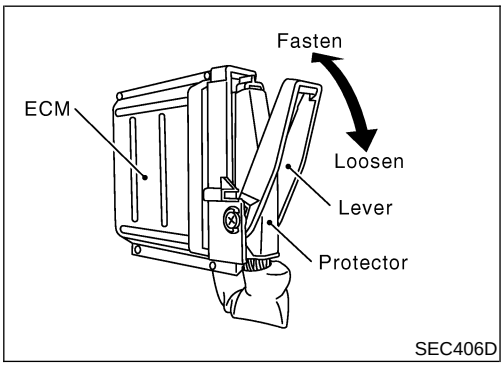

SEC406D

3. When disconnecting ECM harness connector, loosen it with levers as far as they will go as shown in the figure.
4. Connect a break-out box (SST) and Y-cable adapter (SST) between the ECM and ECM harness connector.

- Use extreme care not to touch 2 pins at one time.
- Data is for comparison and may not be exact.

ECM HARNESS CONNECTOR TERMINAL LAYOUT

NAEC0044S02

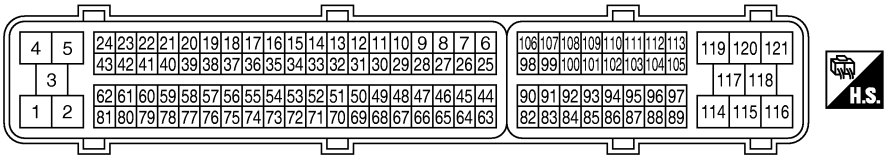

PBIB1192E

ECM INSPECTION TABLE

NAEC0044S03

Specification data are reference values and are measured between each terminal and ground. Pulse signal is measured by CONSULT-II.

CAUTION:

Do not use ECM ground terminals when measuring the input/output voltage. Doing so may result in damage to the ECM's transistor. Use ground other than the ECM terminals, such as the ground.

TERMINAL NO.	WIRE COLOR	ITEM	CONDITION	DATA (DC Voltage)
1	B	ECM ground	**[Engine is running]** ● Idle speed	Body ground

TERMINAL NO.	WIRE COLOR	ITEM	CONDITION	DATA (DC Voltage)
2	R/G	Heated oxygen sensor 1 heater (bank 2)	**[Engine is running]** ● **Warm-up condition** ● Engine speed is below 3,600 rpm.	Approximately 7V★ 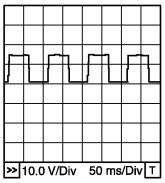 PBIB0519E
			[Engine is running] ● Engine speed is above 3,600 rpm.	BATTERY VOLTAGE (11 - 14V)
3	OR	Throttle control motor relay power supply	**[Ignition switch ON]**	BATTERY VOLTAGE (11 - 14V)
4	L/W	Throttle control motor (Close)	**[Ignition switch ON]** ● Engine stopped ● Shift lever: D (A/T models) ● Shift lever position is 1st (M/T models) ● Accelerator pedal is released	0 - 14V★ 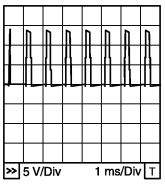 PBIB1104E
5	L/B	Throttle control motor (Open)	**[Ignition switch ON]** ● Engine stopped ● Shift lever: D (A/T models) ● Shift lever position is 1st (M/T models) ● Accelerator pedal is fully depressed	0 - 14V★ 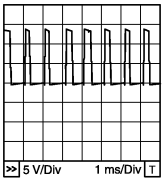 PBIB1105E
6	R/W	Heated oxygen sensor 2 heater (bank 2)	**[Engine is running]** ● **Warm-up condition** ● Engine speed is below 3,200 rpm. ● After keeping engine speed between 3,500 and 4,000 rpm for 1 minute and at idle for 1 minute under no load	Approximately 3V★ 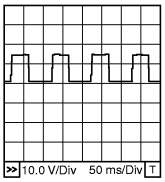 SEC981D
			[Ignition switch ON] ● Engine stopped **[Engine is running]** ● Engine speed is above 3,200 rpm.	BATTERY VOLTAGE (11 - 14V)
10	P/L	Intake valve timing control solenoid valve (bank 2)	**[Engine is running]** ● **Warm-up condition** ● Idle speed	BATTERY VOLTAGE (11 - 14V)
			[Engine is running] ● **Warm-up condition** ● When revving engine up to 2,000 rpm quickly.	7 - 8V★ 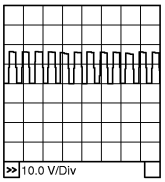 PBIB1790E

TERMINAL NO.	WIRE COLOR	ITEM	CONDITION	DATA (DC Voltage)
11	OR/B	Intake valve timing control solenoid valve (bank 1)	**[Engine is running]** ● **Warm-up condition** ● Idle speed	BATTERY VOLTAGE (11 - 14V)
			[Engine is running] ● **Warm-up condition** ● When revving engine up to 2,000 rpm quickly.	7 - 8V★ 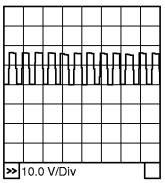 PBIB1790E
12	R/B	Power steering pressure sensor	**[Engine is running]** ● Steering wheel is being turned.	0.5 - 4.0V
			[Engine is running] ● Steering wheel is not being turned.	0.4 - 0.8V
13	Y	Crankshaft position sensor (POS)	**[Engine is running]** ● **Warm-up condition** ● Idle speed **NOTE:** The pulse cycle changes depending on rpm at idle.	Approximately 1.6V★ 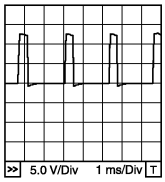 PBIB1041E
			[Engine is running] ● Engine speed is 2,000 rpm.	Approximately 1.5V★ 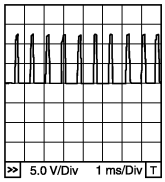 PBIB1042E
14	OR	Camshaft position sensor (PHASE) (bank 2)	**[Engine is running]** ● **Warm-up condition** ● Idle speed **NOTE:** The pulse cycle changes depending on rpm at idle.	1.0 - 4.0V★ 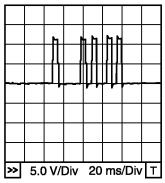 PBIB1039E
			[Engine is running] ● Engine speed is 2,000 rpm.	1.0 - 4.0V★ 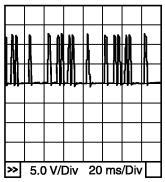 PBIB1040E
15	W	Knock sensor	**[Engine is running]** ● Idle speed	Approximately 2.5V

ECM Terminals and Reference Value (Cont'd)

TERMINAL NO.	WIRE COLOR	ITEM	CONDITION	DATA (DC Voltage)
16	G/B	Heated oxygen sensor 1 (bank 2)	**[Engine is running]** ● **Warm-up condition** ● Engine speed is 2,000 rpm.	0 - Approximately 1.0V (Periodically change)
21 22 23	L/W R/Y R/B	Injector No. 5 Injector No. 3 Injector No. 1	**[Engine is running]** ● **Warm-up condition** ● Idle speed **NOTE:** The pulse cycle changes depending on rpm at idle.	BATTERY VOLTAGE (11 - 14V)★ 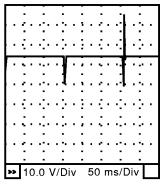 SEC984C
			[Engine is running] ● **Warm-up condition** ● Engine speed is 2,000 rpm	BATTERY VOLTAGE (11 - 14V)★ 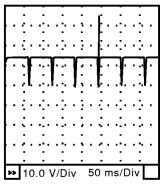 SEC985C
24	L/OR	Heated oxygen sensor 1 heater (bank 1)	**[Engine is running]** ● **Warm-up condition** ● Engine speed is below 3,600 rpm.	Approximately 7V★ 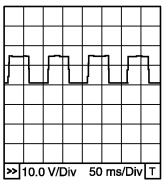 PBIB0519E
			[Engine is running] ● Engine speed is above 3,600 rpm.	BATTERY VOLTAGE (11 - 14V)
25	P/B	Heated oxygen sensor 2 heater (bank 1)	**[Engine is running]** ● **Warm-up condition** ● Engine speed is below 3,200 rpm. ● After keeping engine speed between 3,500 and 4,000 rpm for 1 minute and at idle for 1 minute under no load	Approximately 3V★ 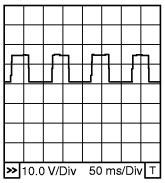 SEC981D
			[Ignition switch ON] ● Engine stopped **[Engine is running]** ● Engine speed is above 3,200 rpm.	BATTERY VOLTAGE (11 - 14V)
27	G	Swirl control valve control solenoid valve	**[Engine is running]** ● Idle speed ● Engine coolant temperature is between 15 - 50°C (59 - 122°F).	0 - 1.0V
			[Engine is running] ● Idle speed ● Engine coolant temperature is above 55°C (131°F).	BATTERY VOLTAGE (11 - 14V)

TERMINAL NO.	WIRE COLOR	ITEM	CONDITION	DATA (DC Voltage)
29	Y/G	VIAS control solenoid valve	**[Engine is running]** ● Idle speed	BATTERY VOLTAGE (11 - 14V)
			[Engine is running] ● Engine speed is above 5,000 rpm.	0 - 1.0V
32	L/G	EVAP control system pressure sensor	**[Ignition switch ON]**	1.8 - 4.8V
33	Y/G	Camshaft position sensor (PHASE) (bank 1)	**[Engine is running]** ● **Warm-up condition** ● Idle speed **NOTE:** The pulse cycle changes depending on rpm at idle.	1.0 - 4.0V★ 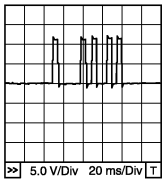 PBIB1039E
			[Engine is running] ● Engine speed is 2,000 rpm.	1.0 - 4.0V★ 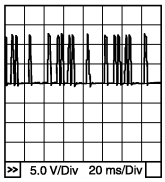 PBIB1040E
34	B/P	Intake air temperature sensor	**[Engine is running]**	Approximately 0 - 4.8V Output voltage varies with intake air temperature.
35	G	Heated oxygen sensor 1 (bank 1)	**[Engine is running]** ● **Warm-up condition** ● Engine speed is 2,000 rpm.	0 - Approximately 1.0V (Periodically change)
40 41 42	PU/R R/L R/W	Injector No. 6 Injector No. 4 Injector No. 2	**[Engine is running]** ● **Warm-up condition** ● Idle speed **NOTE:** The pulse cycle changes depending on rpm at idle.	BATTERY VOLTAGE (11 - 14V)★ 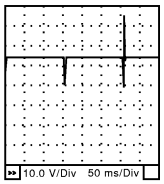 SEC984C
			[Engine is running] ● **Warm-up condition** ● Engine speed is 2,000 rpm	BATTERY VOLTAGE (11 - 14V)★ 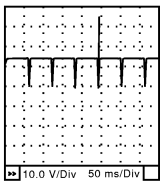 SEC985C

TERMINAL NO.	WIRE COLOR	ITEM	CONDITION	DATA (DC Voltage)
45	L/Y	EVAP canister purge volume control solenoid valve	**[Engine is running]** ● Idle speed	BATTERY VOLTAGE (11 - 14V)★ 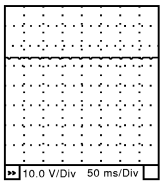 SEC990C
			[Engine is running] ● Engine speed is about 2,000 rpm (More than 100 seconds after starting engine).	BATTERY VOLTAGE (11 - 14V)★ 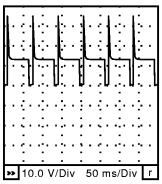 SEC991C
47	L	Sensor power supply (Throttle position sensor)	**[Ignition switch ON]**	Approximately 5V
48	P/B	Sensor power supply	**[Ignition switch ON]**	Approximately 5V
49	P/B	Sensor power supply (Refrigerant pressure sensor)	**[Ignition switch ON]**	Approximately 5V
50	BR	Throttle position sensor 1	**[Ignition switch ON]** ● Engine stopped ● Gear position: D (A/T models) ● Shift lever position is 1st (M/T models) ● Accelerator pedal fully released	More than 0.36V
			[Ignition switch ON] ● Engine stopped ● Gear position: D (A/T models) ● Shift lever position is 1st (M/T models) ● Accelerator pedal fully depressed	Less than 4.75V
51	OR	Mass air flow sensor	**[Engine is running]** ● **Warm-up condition** ● Idle speed	1.0 - 1.3V
			[Engine is running] ● **Warm-up condition** ● Engine speed is 2,500 rpm.	1.7 - 2.1V
55	OR/L	Heated oxygen sensor 2 (bank 2)	**[Engine is running]** ● **Warm-up condition** ● Revving engine from idle up to 3,000 rpm after the following conditions are met. ● After keeping the engine speed between 3,500 and 4,000 rpm for 1 minute and at idle for 1 minute under no load	0 - Approximately 1.0V

TERMINAL NO.	WIRE COLOR	ITEM	CONDITION	DATA (DC Voltage)
59	W/B	Swirl control valve control vacuum check switch	**[Engine is running]** ● Idle speed ● Engine coolant temperature is between 15 - 50°C (59 - 122°F).	Approximately 5V
			[Engine is running] ● Idle speed ● Engine coolant temperature is above 55°C (131°F).	0 - 1.0V
60 61 62	PU/W L/R Y/R	Ignition signal No. 5 Ignition signal No. 3 Ignition signal No. 1	**[Engine is running]** ● **Warm-up condition** ● Idle speed **NOTE:** The pulse cycle changes depending on rpm at idle.	0 - 0.2V★ 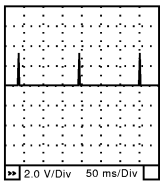 SEC986C
			[Engine is running] ● **Warm-up condition** ● Engine speed is 2,500 rpm.	0.1 - 0.3V★ 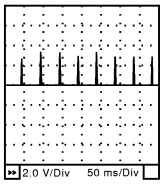 SEC987C
66	BR/Y	Sensor ground (Throttle position sensor)	**[Engine is running]** ● **Warm-up condition** ● Idle speed	Approximately 0V
67	B/P	Sensor ground	**[Engine is running]** ● **Warm-up condition** ● Idle speed	Approximately 0V
68	L	Sensor power supply (Power steering pressure sensor)	**[Ignition switch ON]**	Approximately 5V
69	BR/W	Throttle position sensor 2	**[Ignition switch ON]** ● Engine stopped ● Gear position: D (A/T models) ● Shift lever position is 1st. (M/T models) ● Accelerator pedal fully released	Less than 4.75V
			[Ignition switch ON] ● Engine stopped ● Gear position: D (A/T models) ● Shift lever position is 1st. (M/T models) ● Accelerator pedal fully depressed	More than 0.36V
70	W/PU	Refrigerant pressure sensor	**[Engine is running]** ● **Warm-up condition** ● Both A/C switch and blower switch are ON. (Compressor operates.)	1.0 - 4.0V
73	LG/R	Engine coolant temperature sensor	**[Engine is running]**	Approximately 0 - 4.8V Output voltage varies with engine coolant temperature.

TERMINAL NO.	WIRE COLOR	ITEM	CONDITION	DATA (DC Voltage)
74	OR	Heated oxygen sensor 2 (bank 1)	**[Engine is running]** ● **Warm-up condition** ● Revving engine from idle up to 3,000 rpm after the following conditions are met. ● After keeping the engine speed between 3,500 and 4,000 rpm for 1 minute and at idle for 1 minute under no load	0 - Approximately 1.0V
78	B	Sensor ground (Heated oxygen sensor)	**[Engine is running]** ● **Warm-up condition** ● Idle speed	Approximately 0V
79 80 81	GY/R GY G/R	Ignition signal No. 6 Ignition signal No. 4 Ignition signal No. 2	**[Engine is running]** ● **Warm-up condition** ● Idle speed **NOTE:** The pulse cycle changes depending on rpm at idle.	0 - 0.2V★ 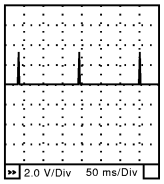 SEC986C
			[Engine is running] ● **Warm-up condition** ● Engine speed is 2,500 rpm.	0.1 - 0.3V★ 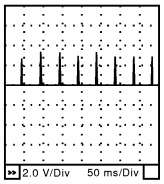 SEC987C
82	B/R	Sensor ground (APP sensor 1)	**[Engine is running]** ● **Warm-up condition** ● Idle speed	Approximately 0V
83	L	Sensor ground (APP sensor 2)	**[Engine is running]** ● **Warm-up condition** ● Idle speed	Approximately 0V
84	OR	Lighting switch	**[Ignition switch ON]** ● Lighting switch is in 2nd.	BATTERY VOLTAGE (11 - 14V)
			[Ignition switch ON] ● Lighting switch is OFF.	0V
85	LG/R	Data link connector	**[Ignition switch ON]** ● CONSULT-II or GST is disconnected.	Approximately 5V
86	R	CAN communication line	**[Ignition switch ON]**	Approximately 1.7 - 2.3V Output voltage varies with the communication status.
90	L	Sensor power supply (APP sensor 1)	**[Ignition switch ON]**	Approximately 5V
91	W/R	Sensor power supply (APP sensor 2)	**[Ignition switch ON]**	Approximately 5V
93	B/L	Rear window defogger switch	**[Ignition switch ON]** ● Rear window defogger switch is ON.	BATTERY VOLTAGE (11 - 14V)
			[Ignition switch ON] ● Rear window defogger switch is OFF.	0V

TERMINAL NO.	WIRE COLOR	ITEM	CONDITION	DATA (DC Voltage)
94	L	CAN communication line	**[Ignition switch ON]**	Approximately 2.6 - 3.2V Output voltage varies with the communication status.
98	R	Accelerator pedal position sensor 2	**[Ignition switch ON]** ● Engine stopped ● Shift lever: D (A/T models) ● Shift lever position is 1st (M/T models) ● Accelerator pedal fully released	0.15 - 0.6V
			[Ignition switch ON] ● Engine stopped ● Shift lever: D (A/T models) ● Shift lever position is 1st (M/T models) ● Accelerator pedal fully depressed	1.95 - 2.4V
99	L/Y	ASCD steering switch	**[Ignition switch ON]** ● ASCD steering switch: OFF	Approximately 4V
			[Ignition switch ON] ● MAIN switch: Pressed	Approximately 0V
			[Ignition switch ON] ● CANCEL switch: Pressed	Approximately 1V
			[Ignition switch ON] ● SET/COAST switch: Pressed	Approximately 2V
			[Ignition switch ON] ● RESUME/ACCEL switch: Pressed	Approximately 3V
101	G/Y	Stop lamp switch	**[Ignition switch ON]** ● Brake pedal is fully released	Approximately 0V
			[Ignition switch ON] ● Brake pedal is depressed	BATTERY VOLTAGE (11 - 14V)
102	L	PNP switch	**[Ignition switch ON]** ● Gear position is P or N.	Approximately 0V
			[Ignition switch "ON"] ● Except the above gear position	BATTERY VOLTAGE (11 - 14V)
104	L	Throttle control motor relay	**[Ignition switch OFF]**	BATTERY VOLTAGE (11 - 14V)
			[Ignition switch ON]	0 - 1.0V
106	L	Accelerator pedal position sensor 1	**[Ignition switch ON]** ● Engine stopped ● Shift lever: D (A/T models) ● Shift lever position is 1st (M/T models) ● Accelerator pedal fully released	0.5 - 1.0V
			[Ignition switch ON] ● Engine stopped ● Shift lever: D (A/T models) ● Shift lever position is 1st (M/T models) ● Accelerator pedal fully depressed	3.9 - 4.7V
107	G/B	Fuel tank temperature sensor	**[Engine is running]**	Approximately 0 - 4.8V Output voltage varies with fuel tank temperature.

ECM Terminals and Reference Value (Cont'd)

TERMINAL NO.	WIRE COLOR	ITEM	CONDITION	DATA (DC Voltage)
108	L/Y	ASCD brake switch	**[Ignition switch ON]** ● Brake pedal is depressed ● Clutch pedal is depressed (M/T models)	Approximately 0V
			[Ignition switch ON] ● Brake pedal is fully released ● Clutch pedal is fully released (M/T models)	BATTERY VOLTAGE (11 - 14V)
109	R	Ignition switch	**[Ignition switch OFF]**	0V
			[Ignition switch ON]	BATTERY VOLTAGE (11 - 14V)
111	L/B	ECM relay (Self shut-off)	**[Engine is running]** **[Ignition switch OFF]** ● For a few seconds after turning ignition switch OFF	0 - 1.5V
			[Ignition switch OFF] ● A few seconds passed after turning ignition switch OFF	BATTERY VOLTAGE (11 - 14V)
112	G/W	Vacuum cut valve bypass valve	**[Ignition switch ON]**	BATTERY VOLTAGE (11 - 14V)
113	R/L	Fuel pump relay	**[Ignition switch ON]** ● For 1 second after turning ignition switch ON **[Engine is running]**	0 - 1.5V
			[Ignition switch ON] ● More than 1 second after turning ignition switch ON.	BATTERY VOLTAGE (11 - 14V)
115 116	B B	ECM ground	**[Engine is running]** ● Idle speed	Body ground
117	G/R	EVAP canister vent control valve	**[Ignition switch ON]**	BATTERY VOLTAGE (11 - 14V)
119 120	B/W B/W	Power supply for ECM	**[Ignition switch ON]**	BATTERY VOLTAGE (11 - 14V)
121	W/R	Power supply for ECM (Back-up)	**[Ignition switch OFF]**	BATTERY VOLTAGE (11 - 14V)

★: Average voltage for pulse signal (Actual pulse signal can be confirmed by oscilloscope.)

Description

NAEC0717

The specification (SP) value indicates the tolerance of the value that is displayed in “DATA MONITOR (SPEC)” mode of CONSULT-II during normal operation of the Engine Control System. When the value in “DATA MONITOR (SPEC)” mode is within the SP value, the Engine Control System is confirmed OK. When the value in “DATA MONITOR (SPEC)” mode is NOT within the SP value, the Engine Control System may have one or more malfunctions.

The SP value is used to detect malfunctions that may affect the Engine Control System, but will not light the MIL.

The SP value will be displayed for the following three items:

- B/FUEL SCHDL (The fuel injection pulse width programmed into ECM prior to any learned on board correction)
- A/F ALPHA-B1/B2 (The mean value of air-fuel ratio feedback correction factor per cycle)
- MAS A/F SE-B1 (The signal voltage of the mass air flow sensor)

Testing Condition

NAEC0718

- Vehicle driven distance: More than 5,000 km (3,107 miles)
- Barometric pressure: 98.3 - 104.3 kPa (1.003 - 1.064 kg/cm^2, 14.25 - 15.12 psi)
- Atmospheric temperature: 20 - 30°C (68 - 86°F)
- Engine coolant temperature: 75 - 95°C (167 - 203°F)
- Transmission: Warmed-up*1
- Electrical load: Not applied*2
- Engine speed: Idle

*1: For A/T models, after the engine is warmed up to normal operating temperature, drive vehicle until “FLUID TEMP SE” (A/T fluid temperature sensor signal) indicates less than 0.9V. For M/T models, drive vehicle for 10 minutes after the engine is warmed up to normal operating temperature.

*2: Rear window defogger switch, air conditioner switch, lighting switch are OFF. Steering wheel is straight ahead.

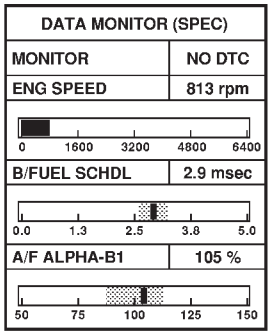

SEF601Z

Inspection Procedure

NAEC0719

NOTE:

Perform “DATA MONITOR (SPEC)” mode in maximum scale display.

1. Perform “Basic Inspection”, EC-123.
2. Confirm that the testing conditions indicated above are met.
3. Select “B/FUEL SCHDL”, “A/F ALPHA-B1”, “A/F ALPHA-B2” and “MAS A/F SE-B1” in “DATA MONITOR (SPEC)” mode with CONSULT-II.
4. Make sure that monitor items are within the SP value.
5. If NG, go to “Diagnostic Procedure”, EC-152.

Diagnostic Procedure

NAEC0720

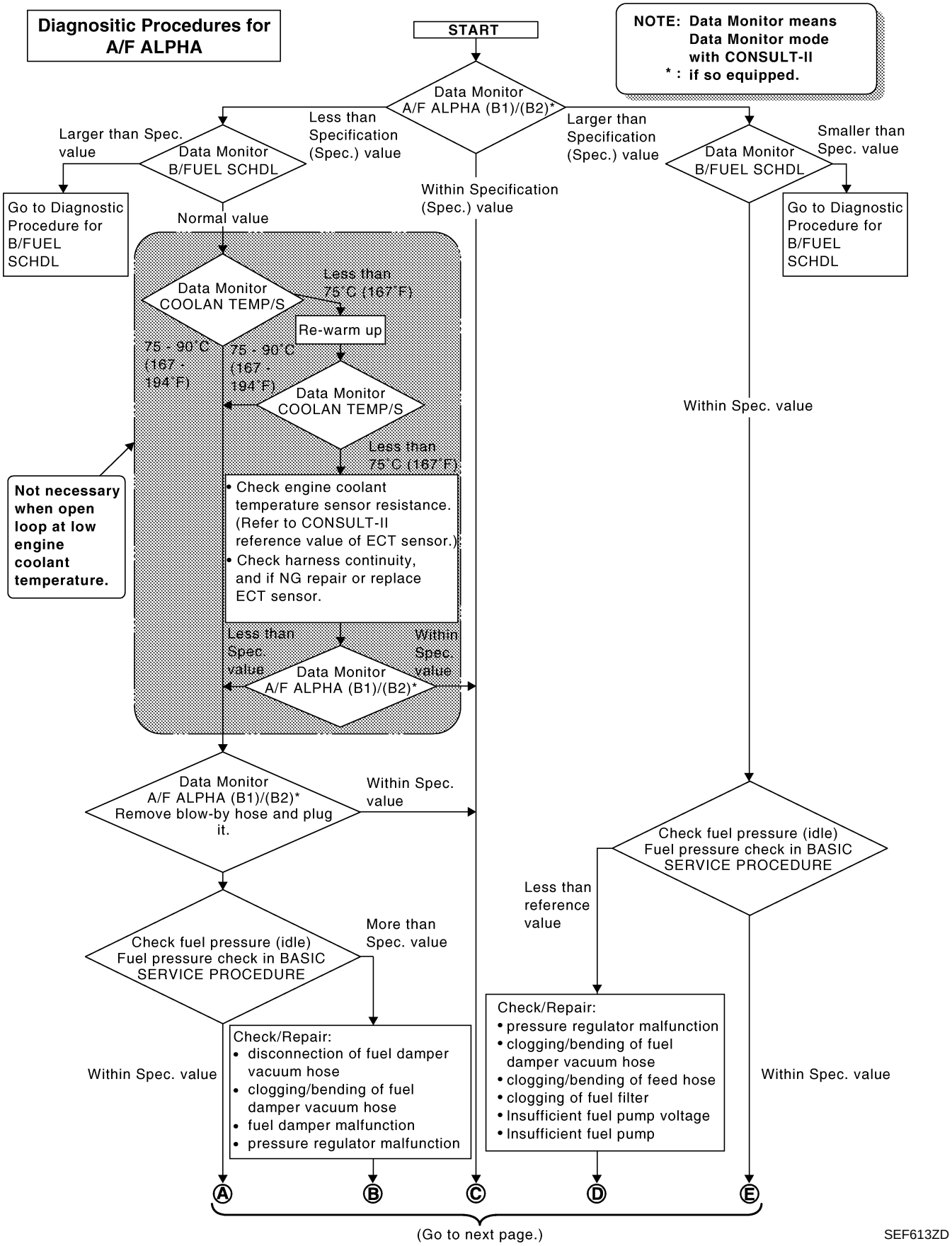

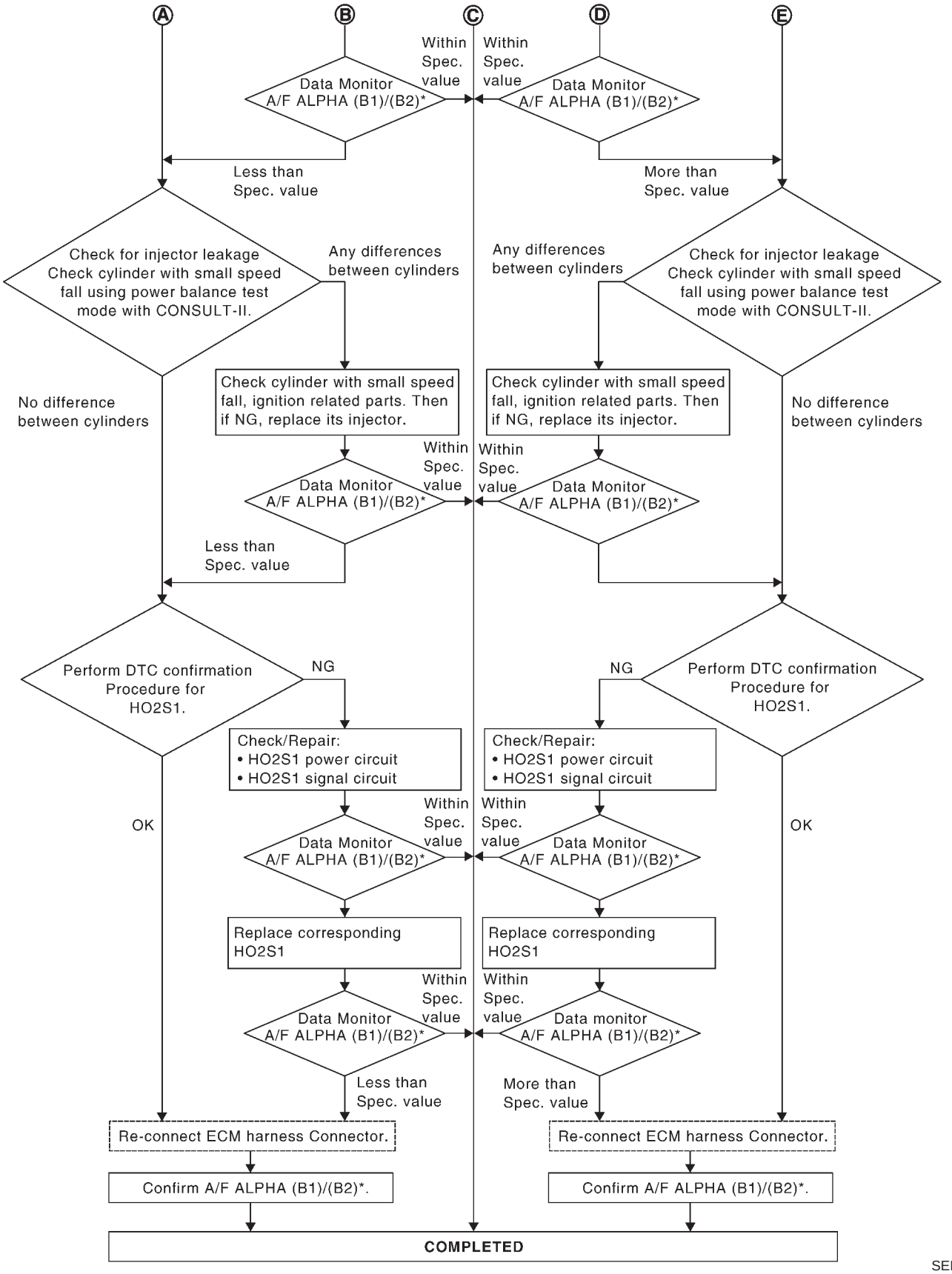
A
B
C
D
E
Data Monitor
A/F ALPHA (B1)/(B2)*
Within Spec. value
Less than Spec. value
More than Spec. value
Check for injector leakage
Check cylinder with small speed fall using power balance test mode with CONSULT-II.
Any differences between cylinders
No difference between cylinders
Check cylinder with small speed fall, ignition related parts. Then if NG, replace its injector.
Perform DTC confirmation Procedure for HO2S1.
NG
OK
Check/Repair:
• HO2S1 power circuit
• HO2S1 signal circuit
Replace corresponding HO2S1
Data monitor
Re-connect ECM harness Connector.
Confirm A/F ALPHA (B1)/(B2)*.
COMPLETED

SEF768Z

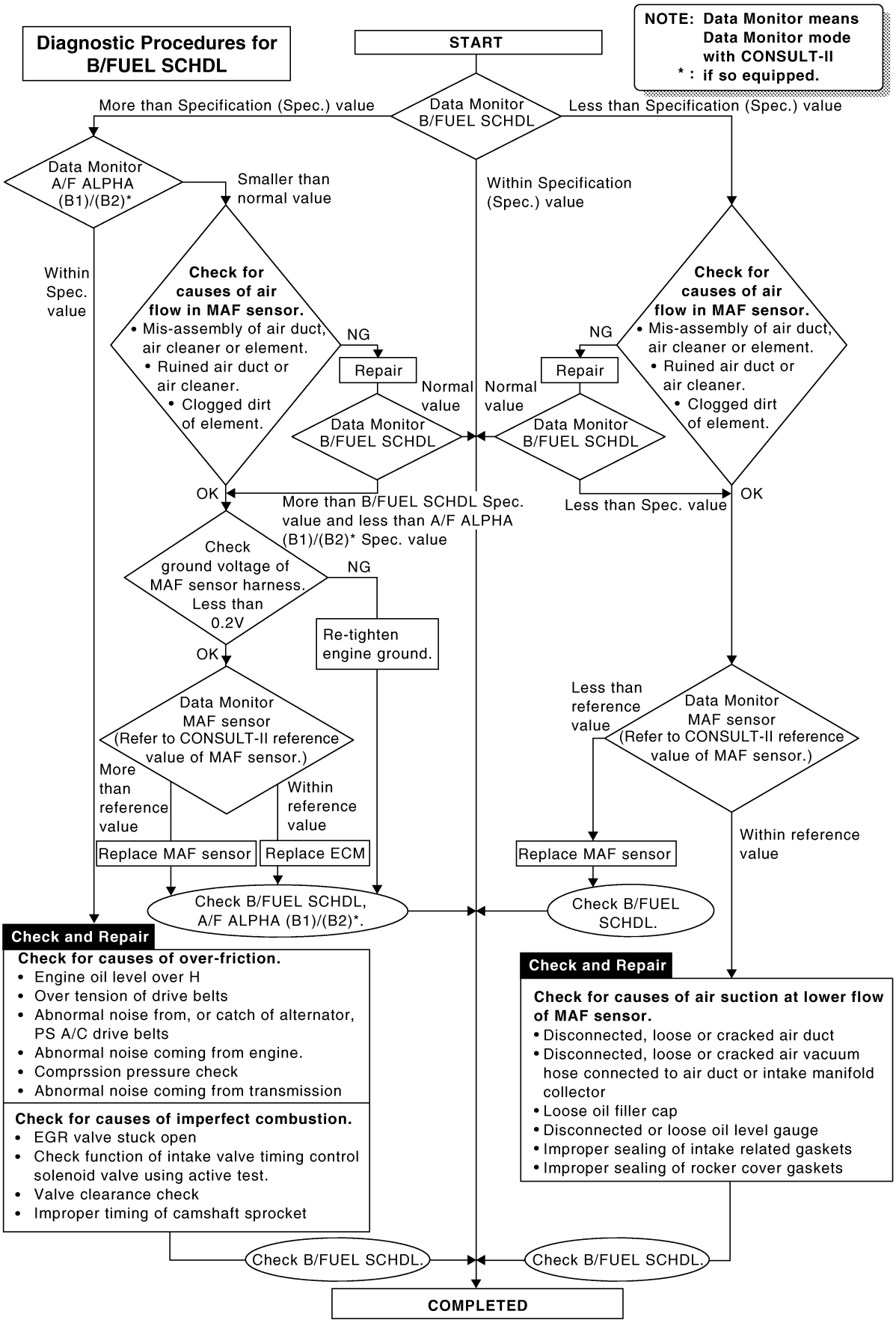
Diagnostic Procedures for B/FUEL SCHDL
START
NOTE: Data Monitor means Data Monitor mode with CONSULT-II
* : if so equipped.
Data Monitor B/FUEL SCHDL
More than Specification (Spec.) value
Less than Specification (Spec.) value
Within Specification (Spec.) value
Data Monitor A/F ALPHA (B1)/(B2)*
Smaller than normal value
Within Spec. value
Check for causes of air flow in MAF sensor.
• Mis-assembly of air duct, air cleaner or element.
• Ruined air duct or air cleaner.
• Clogged dirt of element.
NG
Repair
Normal value
Data Monitor B/FUEL SCHDL
OK
More than B/FUEL SCHDL Spec. value and less than A/F ALPHA (B1)/(B2)* Spec. value
Less than Spec. value
Check ground voltage of MAF sensor harness. Less than 0.2V
Re-tighten engine ground.
Data Monitor MAF sensor (Refer to CONSULT-II reference value of MAF sensor.)
More than reference value
Within reference value
Less than reference value
Replace MAF sensor
Replace ECM
Check B/FUEL SCHDL, A/F ALPHA (B1)/(B2)*.
Check B/FUEL SCHDL.
Check and Repair
Check for causes of over-friction.
• Engine oil level over H
• Over tension of drive belts
• Abnormal noise from, or catch of alternator, PS A/C drive belts
• Abnormal noise coming from engine.
• Comprssion pressure check
• Abnormal noise coming from transmission
Check for causes of imperfect combustion.
• EGR valve stuck open
• Check function of intake valve timing control solenoid valve using active test.
• Valve clearance check
• Improper timing of camshaft sprocket
Check for causes of air suction at lower flow of MAF sensor.
• Disconnected, loose or cracked air duct
• Disconnected, loose or cracked air vacuum hose connected to air duct or intake manifold collector
• Loose oil filler cap
• Disconnected or loose oil level gauge
• Improper sealing of intake related gaskets
• Improper sealing of rocker cover gaskets
COMPLETED
SEF615ZA

Description

NAEC0045

Intermittent incidents (I/I) may occur. In many cases, the malfunction resolves itself (the part or circuit function returns to normal without intervention). It is important to realize that the symptoms described in the customer's complaint often do not recur on (1st trip) DTC visits. Realize also that the most frequent cause of I/I occurrences is poor electrical connections. Because of this, the conditions under which the incident occurred may not be clear. Therefore, circuit checks made as part of the standard diagnostic procedure may not indicate the specific malfunctioning area.

COMMON I/I REPORT SITUATIONS

NAEC0045S01

STEP in Work Flow	Situation
II	The CONSULT-II is used. The SELF-DIAG RESULTS screen shows time data other than [0] or [1t].
III	The symptom described by the customer does not recur.
IV	(1st trip) DTC does not appear during the DTC Confirmation Procedure.
VI	The Diagnostic Procedure for PXXXX does not indicate the malfunctioning area.

Diagnostic Procedure

NAEC0046

1	**INSPECTION START**
Erase (1st trip) DTCs. Refer to "HOW TO ERASE EMISSION — RELATED INFORMATION", EC-91.	
▶	GO TO 2.

2	**CHECK GROUND TERMINALS**
Check ground terminals for corroding or loose connection. Refer to GI-30, "GROUND INSPECTION".	
OK or NG	
OK ▶	GO TO 3.
NG ▶	Repair or replace.

3	**SEARCH FOR ELECTRICAL INCIDENT**
Perform GI-25, "Incident Simulation Tests".	
OK or NG	
OK ▶	GO TO 4.
NG ▶	Repair or replace.

4	**CHECK CONNECTOR TERMINALS**
Refer to GI-22, "How to Check Enlarged Contact Spring of Terminal".	
OK or NG	
OK ▶	**INSPECTION END**
NG ▶	Repair or replace connector.

ECM Terminals and Reference Value

NAEC0648

Specification data are reference values and are measured between each terminal and ground.

CAUTION:

Do not use ECM ground terminals when measuring input/output voltage. Doing so may result in damage to the ECM's transistor. Use a ground other than ECM terminals, such as the ground.

TERMINAL NO.	WIRE COLOR	ITEM	CONDITION	DATA (DC Voltage)
1	B	ECM ground	**[Engine is running]** ● Idle speed	Body ground
109	R	Ignition switch	**[Ignition switch OFF]**	0V
			[Ignition switch ON]	BATTERY VOLTAGE (11 - 14V)
111	L/B	ECM relay (Self shutt-off)	**[Engine is running]** **[Ignition switch OFF]** ● For a few seconds after turning ignition switch OFF	0 - 1.5V
			[Ignition switch OFF] ● A few seconds passed after turning ignition switch OFF	BATTERY VOLTAGE (11 - 14V)
115	B	ECM ground	**[Engine is running]** ● Idle speed	Body ground
116	B	ECM ground	**[Engine is running]** ● Idle speed	Body ground
119 120	B/W B/W	Power supply for ECM	**[Ignition switch ON]**	BATTERY VOLTAGE (11 - 14V)

Wiring Diagram

NAEC0047

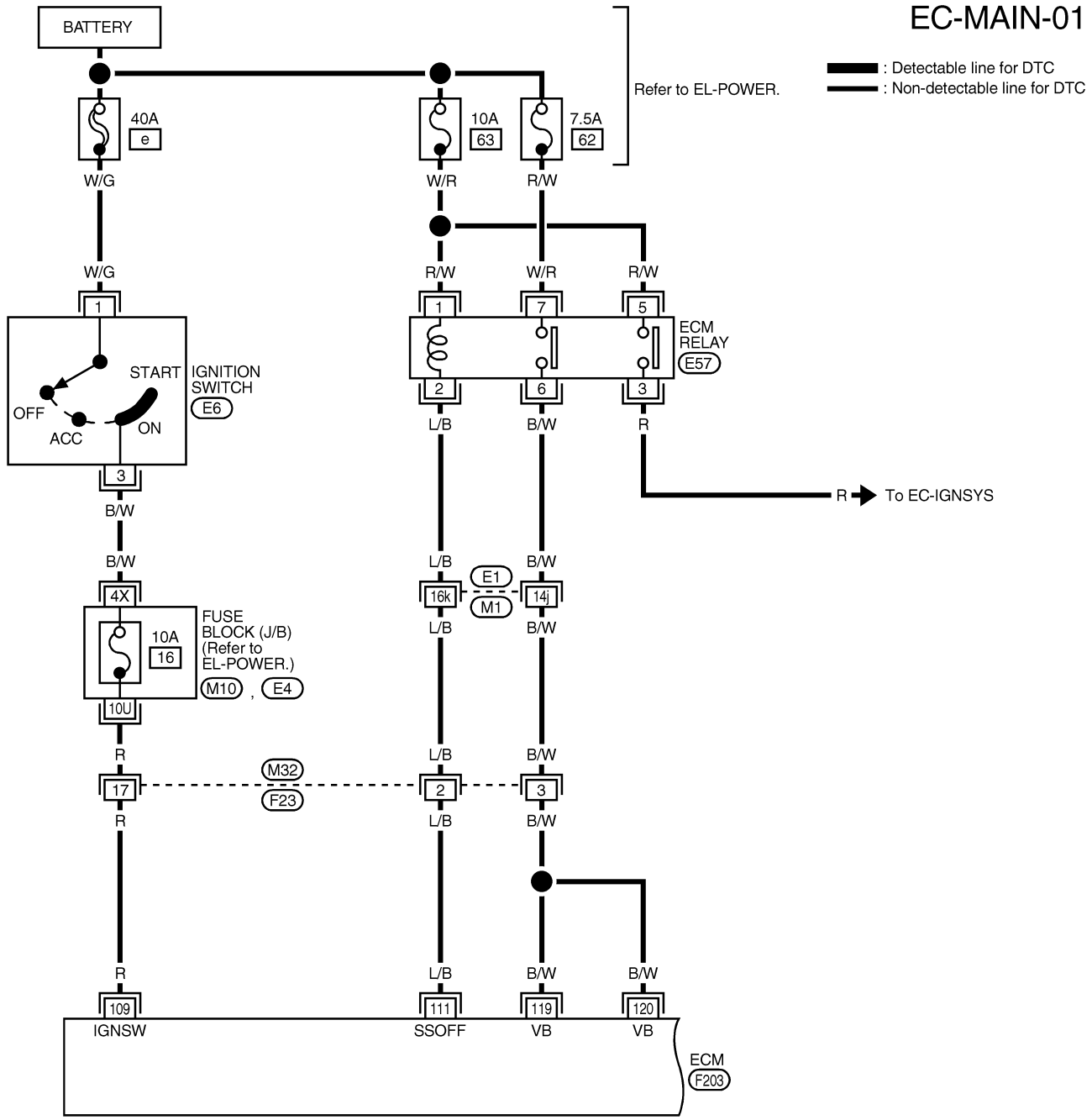

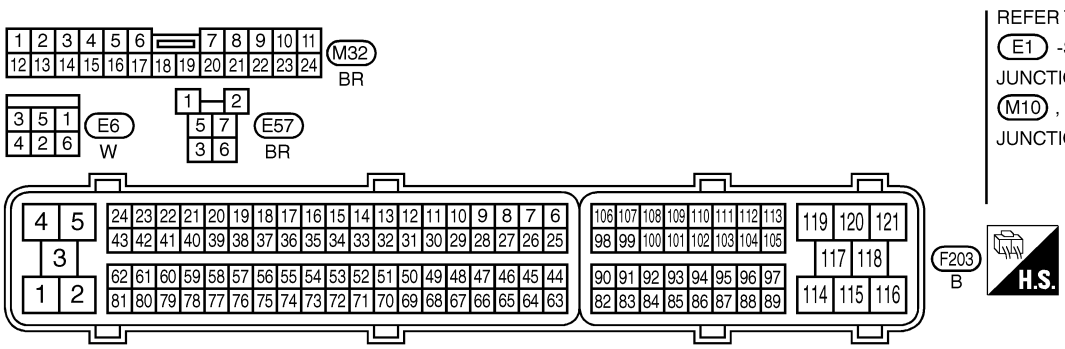

REFER TO THE FOLLOWING.
E1 -SUPER MULTIPLE JUNCTION (SMJ)
M10 , E4 -FUSE BLOCK-JUNCTION BOX (J/B)

MEC076E

EC-MAIN-02

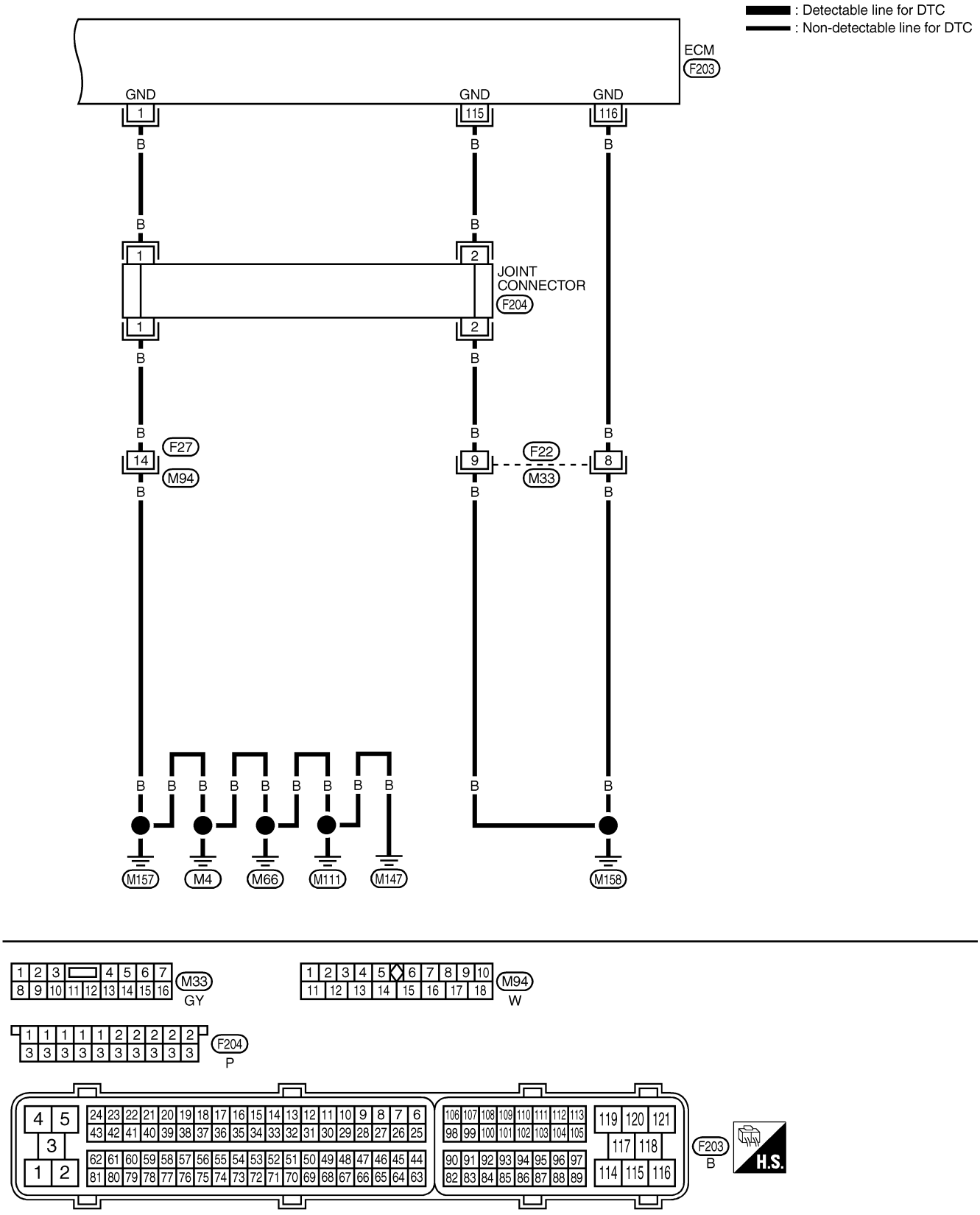

MEC077E

Diagnostic Procedure

NAEC0049

1	INSPECTION START	
Start engine. **Is engine running?**		
	Yes or No	
Yes	▶	GO TO 11.
No	▶	GO TO 2.

2	CHECK ECM POWER SUPPLY CIRCUIT-I	
1. Turn ignition switch OFF and then ON. 2. Check voltage between ECM terminal 109 and ground with CONSULT-II or tester.		

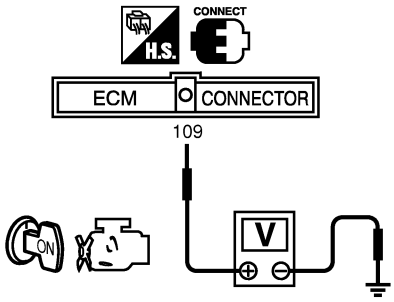

MBIB0015E

Voltage: Battery voltage

	OK or NG	
OK	▶	GO TO 4.
NG	▶	GO TO 3.

3	DETECT MALFUNCTIONING PART	
Check the following. ● 10A fuse ● Harness connectors M32, F23 ● Fuse block (J/B) connectors E4, M10 ● Harness for open or short between ECM and ignition switch		
	▶	Repair harness or connectors.

4	CHECK GROUND CONNECTIONS

1. Turn ignition switch OFF.
2. Loosen and retighten three ground screws on the body.
   Refer to "Ground Inspection", EC-165.

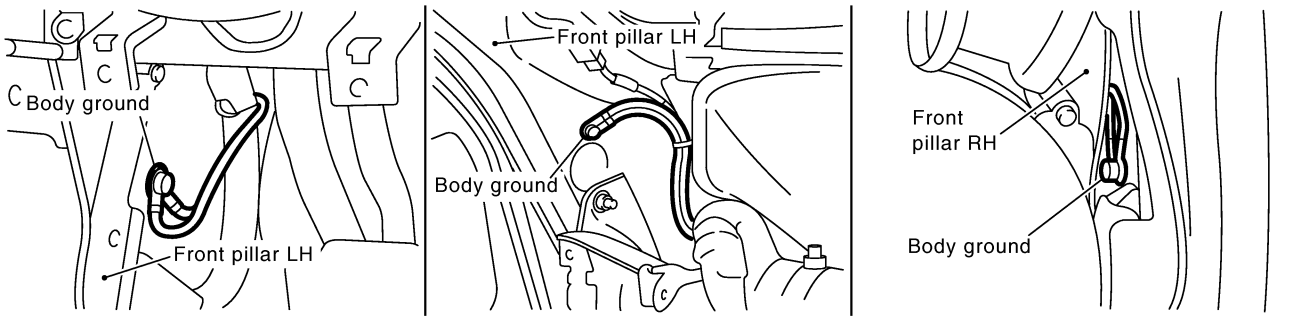

SEC997D

OK or NG

OK	▶	GO TO 5.
NG	▶	Repair or replace ground connections.

5	CHECK ECM GROUND CIRCUIT FOR OPEN AND SHORT-I

1. Turn ignition switch OFF.
2. Disconnect ECM harness connector.
3. Check harness continuity between ECM terminals 1, 115, 116 and ground.
   Refer to WIRING DIAGRAM.
   Continuity should exist.
4. Also check harness for short to power.

OK or NG

OK	▶	GO TO 7.
NG	▶	GO TO 6.

6	DETECT MALFUNCTIONING PART

Check the following.
- Joint connector
- Harness connectors F27, M94
- Harness connectors F22, M33
- Harness for open between ECM and ground

	▶	Repair open circuit or short to power in harness or connectors.

7	CHECK ECM POWER SUPPLY CIRCUIT-II

1. Disconnect ECM relay.

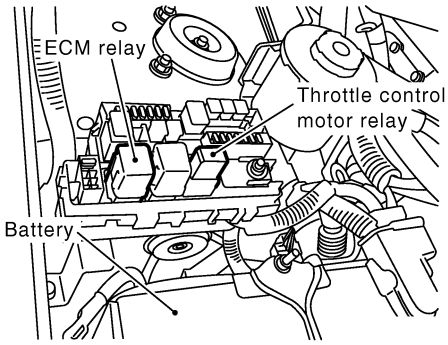

SEC425D

2. Check voltage between ECM relay terminals 1, 5 and ground with CONSULT-II or tester.

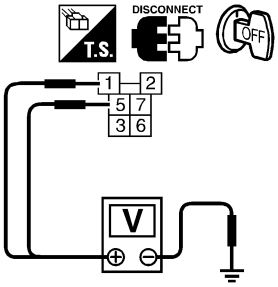

Voltage: Battery voltage

SEF956Y

OK or NG

OK	▶	GO TO 9.
NG	▶	GO TO 8.

8	DETECT MALFUNCTIONING PART

Check the following.
- 10A fuse
- Harness for open or short between ECM relay and battery

	▶	Repair open circuit or short to ground or short to power in harness or connectors.

9	CHECK OUTPUT SIGNAL CIRCUIT FOR OPEN AND SHORT

1. Check harness continuity between ECM terminal 111 and ECM relay terminal 2. Refer to wiring diagram.
   Continuity should exist.
2. Also check harness for short to ground and short to power.

OK or NG

OK	▶	Go to "IGNITION SIGNAL", EC-714.
NG	▶	GO TO 10.

10	DETECT MALFUNCTIONING PART

Check the following.
- Harness connectors E1, M1
- Harness connectors M32, F23
- Harness for open or short between ECM relay and ECM

	▶	Repair open circuit or short to ground or short to power in harness or connectors.

11	CHECK ECM POWER SUPPLY CIRCUIT-III

1. Stop engine.
2. Turn ignition switch ON and then OFF.
3. Check voltage between ECM terminals 119, 120 and ground with CONSULT-II or tester.

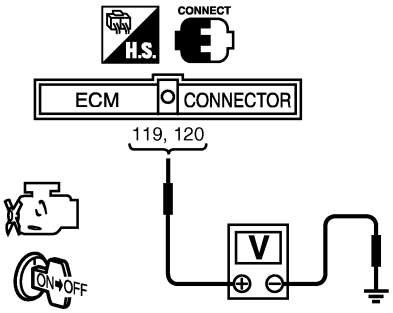

PBIB1630E

Voltage:
After turning ignition switch OFF, battery voltage will exist for a few seconds, then drop approximately 0V.

OK or NG

OK	▶	GO TO 17.
NG (Battery voltage does not exist.)	▶	GO TO 12.
NG (Battery voltage exists for more than a few seconds.)	▶	GO TO 14.

12	CHECK ECM POWER SUPPLY CIRCUIT-IV

1. Disconnect ECM relay.

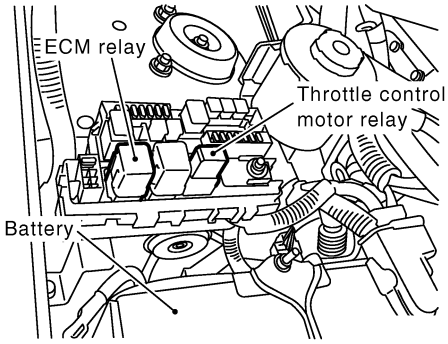

SEC425D

2. Check voltage between ECM relay terminal 7 and ground with CONSULT-II or tester.

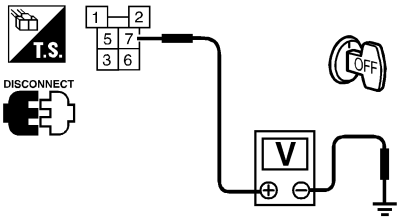

Voltage: Battery voltage

SEF957Y

OK or NG

OK	▶	GO TO 14.
NG	▶	GO TO 13.

13	DETECT MALFUNCTIONING PART
Check the following. ● 7.5A fuse ● Harness for open or short between ECM relay and fuse	
▶	Repair open circuit or short to ground or short to power in harness or connectors.

14	CHECK ECM POWER SUPPLY CIRCUIT-V
1. Disconnect ECM harness connector. 2. Check harness continuity between ECM terminals 119, 120 and ECM relay terminal 6. Refer to WIRING DIAGRAM. **Continuity should exist.** 3. Also check harness for short to ground and short to power.	
OK or NG	
OK ▶	GO TO 16.
NG ▶	GO TO 15.

15	DETECT MALFUNCTIONING PART
Check the following. ● Harness connectors E1, M1 ● Harness connectors M32, F23 ● Harness for open or short between ECM and ECM relay	
▶	Repair open circuit or short to ground or short to power in harness or connectors.

16 CHECK ECM RELAY

1. Apply 12V direct current between ECM relay terminals 1 and 2.
2. Check continuity between relay terminals 3 and 5, 6 and 7.

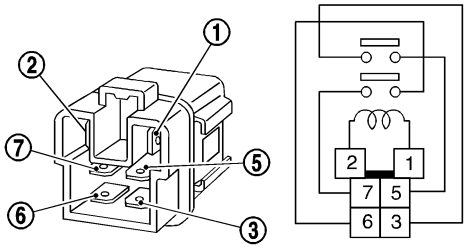

Condition	Continuity
12V direct current supply between terminals 1 and 2	Yes
OFF	No

SEF296X

OK or NG

OK ▶	GO TO 17.
NG ▶	Replace ECM relay.

17	CHECK GROUND CONNECTIONS

1. Turn ignition switch OFF.
2. Loosen and retighten three ground screws on the body.
   Refer to "Ground Inspection", EC-165.

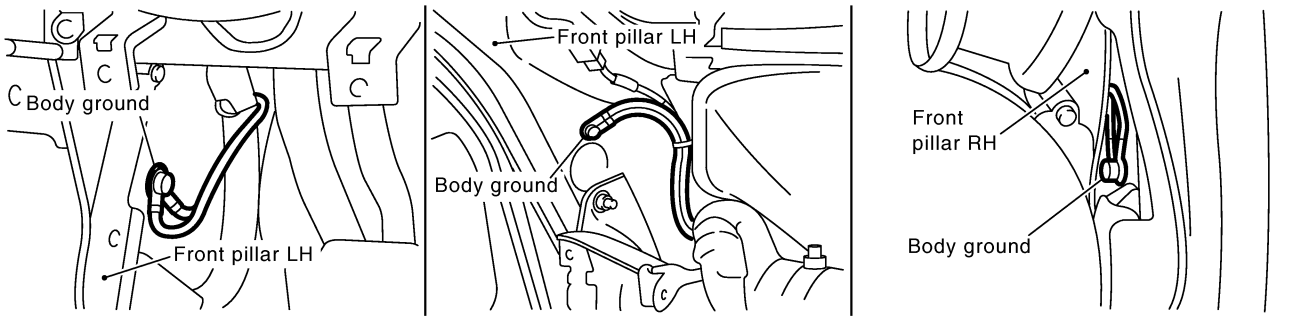

SEC997D

OK or NG

OK	▶	GO TO 18.
NG	▶	Repair or replace ground connections.

18	CHECK ECM GROUND CIRCUIT FOR OPEN AND SHORT-II

1. Turn ignition switch OFF.
2. Disconnect ECM harness connector.
3. Check harness continuity between ECM terminals 1, 115, 116 and ground.
   Refer to WIRING DIAGRAM.
   Continuity should exist.
4. Also check harness for short to power.

OK or NG

OK	▶	GO TO 20.
NG	▶	GO TO 19.

19	DETECT MALFUNCTIONING PART

Check the following.
- Joint connector
- Harness connectors F27, M94
- Harness connectors F22, M33
- Harness for open between ECM relay and ground

	▶	Repair open circuit or short to power in harness or connectors.

20	CHECK INTERMITTENT INCIDENT

Refer to "TROUBLE DIAGNOSIS FOR INTERMITTENT INCIDENT", EC-155.

	▶	**INSPECTION END**

Ground Inspection

=NAEC1415

Ground connections are very important to the proper operation of electrical and electronic circuits. Ground connections are often exposed to moisture, dirt and other corrosive elements. The corrosion (rust) can become an unwanted resistance. This unwanted resistance can change the way a circuit works.

Electronically controlled circuits are very sensitive to proper grounding. A loose or corroded ground can drastically affect an electronically controlled circuit. A poor or corroded ground can easily affect the circuit. Even when the ground connection looks clean, there can be a thin film of rust on the surface.

When inspecting a ground connection follow these rules:

1) Remove the ground bolt or screw.
2) Inspect all mating surfaces for tarnish, dirt, rust, etc.
3) Clean as required to assure good contact.
4) Reinstall bolt or screw securely.
5) Inspect for “add-on” accessories which may be interfering with the ground circuit.
6) If several wires are crimped into one ground eyelet terminal, check for proper crimps. Make sure all of the wires are clean, securely fastened and providing a good ground path. If multiple wires are cased in one eyelet make sure no ground wires have excess wire insulation.

For detailed ground distribution information, refer to “Ground Distribution”, EL-19.

Ground Inspection

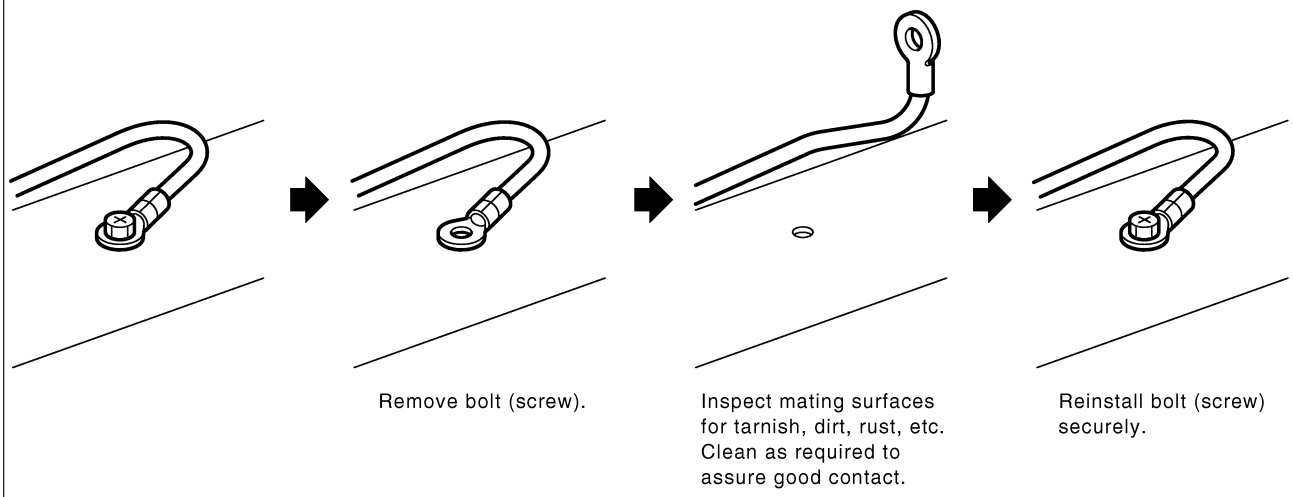

PBIB1870E

Description

NAEC1185

CAN (Controller Area Network) is a serial communication line for real time application. It is an on-vehicle multiplex communication line with high data communication speed and excellent error detection ability. Many electonic control units are equipped onto a vehicle, and each control unit shares information and links with other control units during operation (not independent). In CAN communication, control units are connected with 2 communication lines (CAN H line, CAN L line) allowing a high rate of information transmission with less wiring. Each control unit transmits/receives data but selectively reads required data only.

On Board Diagnosis Logic

NAEC1186

DTC No.	Trouble diagnosis name	DTC detecting condition	Possible cause
U1000*1 1000*1	CAN communication line	● ECM cannot communicate to other control units. ● ECM cannot communicate for more than the specified time.	● Harness or connectors (CAN communication line is open or shorted.)
U1001*2 1001*2			

*1: This self-diagnosis has the one trip detection logic.

*2: The MIL will not light up for this diagnosis.

DTC Confirmation Procedure

NAEC1187

1. Turn ignition switch ON and wait at least 3 seconds.
2. Select “DATA MONITOR” mode with CONSULT-II.
3. If 1st trip DTC is detected, go to “Diagnostic Procedure” EC-168.

Wiring Diagram

NAEC1188

EC-CAN-01

: DATA LINE

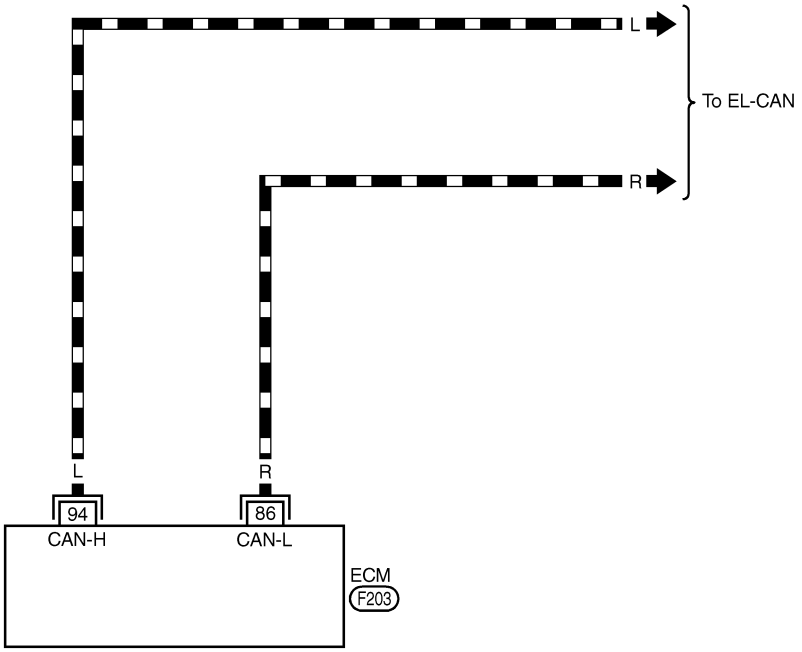

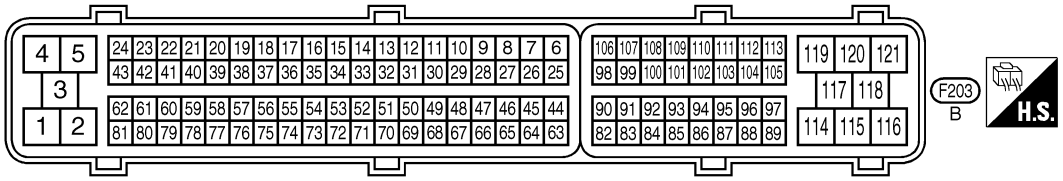

MEC124E

Diagnostic Procedure

NAEC1189

Go to EL-409, “CAN Communication Unit”.

Description

NAEC0821

SYSTEM DESCRIPTION

NAEC0821S01

Sensor	Input signal to ECM function	ECM	Actuator
Crankshaft position sensor (POS)	Engine speed and piston position	Intake valve timing control	Intake valve timing control solenoid valve
Camshaft position sensor (PHASE)			
Engine coolant temperature sensor	Engine coolant temperature		
Vehicle speed signal*1	Vehicle speed		

*1: This signal is sent to the ECM through CAN communication line.

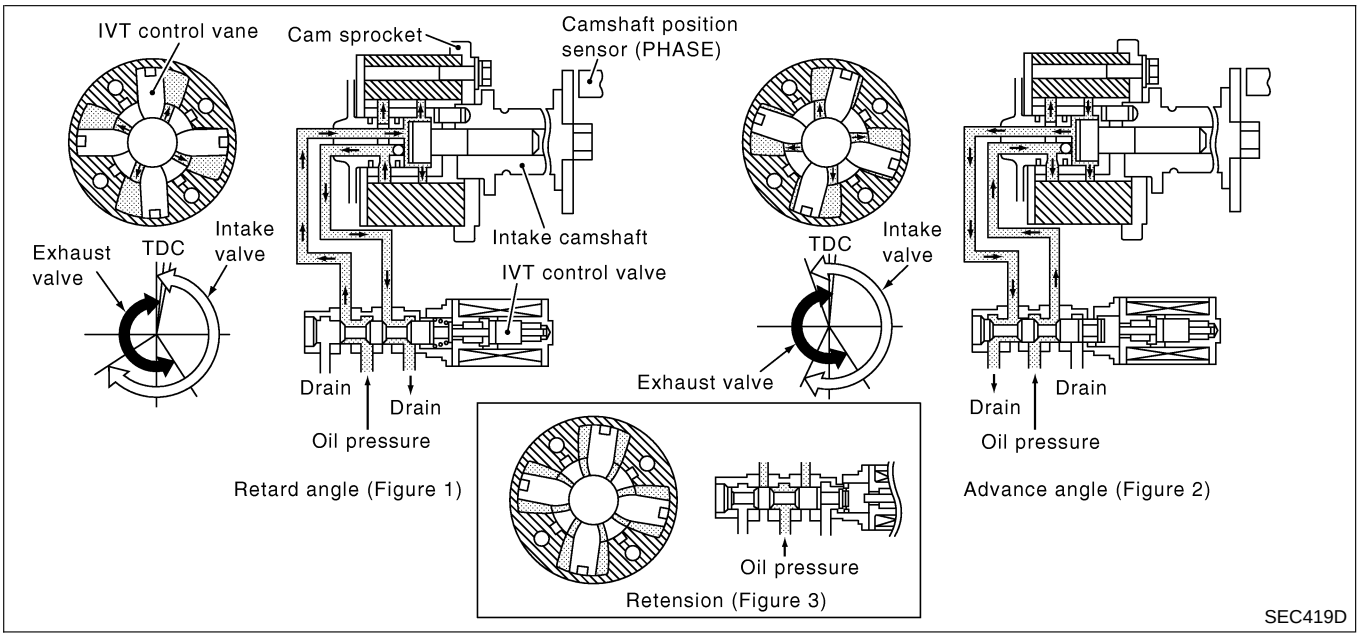

This mechanism hydraulically controls cam phases continuously with the fixed operating angle of the intake valve.
The ECM receives signals such as crankshaft position, camshaft position, engine speed, and engine coolant temperature. Then, the ECM sends ON/OFF pulse duty signals to the intake valve timing control solenoid valve depending on driving status. This makes it possible to control the shut/open timing of the intake valve to increase engine torque in low/mid speed range and output in high-speed range.

CONSULT-II Reference Value in Data Monitor Mode

=NAEC0822

Specification data are reference values.

MONITOR ITEM	CONDITION		SPECIFICATION
INT/V TIM (B1) INT/V TIM (B2)	• Engine: After warming up • Shift lever: N (A/T), Neutral (M/T) • Quickly depressed accelerator pedal • No-load	Idle	0° CA
		2,000 rpm	Approximately 12 - 18° CA
INT/V SOL (B1) INT/V SOL (B2)	• Engine: After warming up • Shift lever: N (A/T), Neutral (M/T) • Quickly depressed accelerator pedal • No-load	Idle	0%
		2,000 rpm	Approximately 40%

On Board Diagnosis Logic

NAEC0824

DTC No.	Trouble diagnosis name	DTC Detecting Condition	Possible Cause
P0011 0011 (Bank 1)	Intake valve timing control performance	There is a gap between angle of target and phase-control angle degree.	• Crankshaft position sensor (POS) • Camshaft position sensor (PHASE) • Accumulation of debris to the signal pick-up portion of the camshaft
P0021 0021 (Bank 2)			

FAIL-SAFE MODE

NAEC0824S01

When malfunction is detected, the ECM enters fail-safe mode.

Detected items	Engine operating condition in fail-safe mode
Intake valve timing control	The signal is not energized to the solenoid valve and the valve control does not function.

DTC Confirmation Procedure

NAEC0825

CAUTION:

Always drive at a safe speed.

NOTE:

- **If DTC P0011 or P0021 is displayed with DTC P1111 or P1136, first perform trouble diagnosis for DTC P1111 or P1136, EC-451.**
- **If DTC Confirmation Procedure has been previously conducted, always turn ignition switch OFF and wait at least 10 seconds before conducting the next test.**

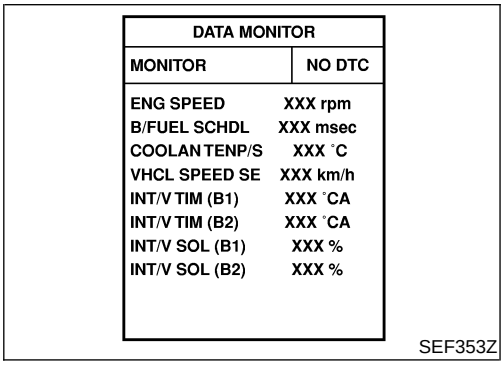

WITH CONSULT-II

NAEC0825S03

1) Turn ignition switch ON.
2) Select “DATA MONITOR” mode with CONSULT-II.
3) Maintain the following conditions for at least 20 conecutive seconds.

ENG SPEED	1,200 - 2,000 rpm (A constant rotation is maintained.)
COOLAN TEMPS	More than 60°C (140°F)
Selector lever	1st position

Driving location	Driving vehicle uphill (Increased engine load will help maintain the driving conditions required for this test.)

4) If 1st trip DTC is detected, go to "Diagnostic Procedure", EC-171.

WITH GST

NAEC0825S04

Follow the procedure "With CONSULT-II" above.

Diagnostic Procedure

NAEC1191

1	CHECK INTAKE VALVE TIMING CONTROL SOLENOID VALVE	
Refer to "Component Inspection", EC-172.		
	OK or NG	
OK	▶	GO TO 2.
NG	▶	Replace intake valve timing control solenoid valve.

2	CHECK INTERMITTENT INCIDENT	
Refer to "TROUBLE DIAGNOSIS FOR INTERMITTENT INCIDENT", EC-155. For Wiring Diagram, refer to EC-321 for CKP sensor (POS) and EC-328 for CMP sensor (PHASE).		
	OK or NG	
	▶	**INSPECTION END**

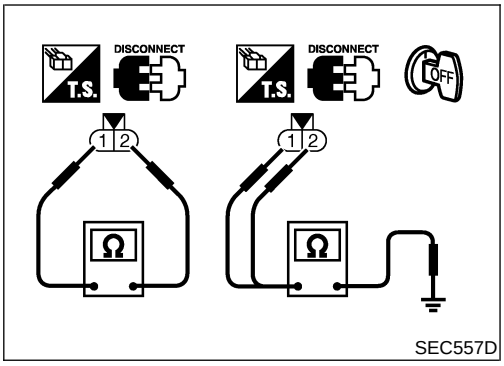

Component Inspection

=NAEC1192

INTAKE VALVE TIMING CONTROL SOLENOID VALVE

NAEC1192S01

1. Disconnect intake valve timing control solenoid valve harness connector.
2. Check resistance between intake valve timing control solenoid valve terminals as follows.

Terminals	Resistance
1 and 2	7.0 - 7.5Ω at 20°C (68°F)
1 or 2 and ground	∞Ω (Continuity should not exist)

Description

NAEC0826

SYSTEM DESCRIPTION

NAEC0826S01

Sensor	Input Signal to ECM	ECM function	Actuator
Crankshaft position sensor (POS) Camshaft position sensor (PHASE)	Engine speed	Heated oxygen sensor 1 heater control	Heated oxygen sensor 1 heater
Engine coolant temperature sensor	Engine coolant temperature		

The ECM performs ON/OFF control of the heated oxygen sensor 1 heater corresponding to the engine speed and engine coolant temperature. The duty percent varies with engine coolant temperature when engine is started.

OPERATION

NAEC0826S02

Engine speed rpm	Heated oxygen sensor 1 heater
Above 3,600	OFF
Below 3,600 after warming up	ON

CONSULT-II Reference Value in Data Monitor Mode

NAEC0827

Specification data are reference values.

MONITOR ITEM	CONDITION	SPECIFICATION
HO2S1 HTR (B1) HO2S1 HTR (B2)	● Engine: After warming up ● Engine speed: Below 3,600 rpm	ON
	● Engine speed: Above 3,600 rpm	OFF

ECM Terminals and Reference Value

NAEC0828

Specification data are reference values and are measured between each terminal and ground.
Pulse signal is measured by CONSULT-II.

CAUTION:

Do not use ECM ground terminals when measuring input/output voltage. Doing so may result in damage to the ECM's transistor. Use a ground other than ECM terminals, such as the ground.

TERMINAL NO.	WIRE COLOR	ITEM	CONDITION	DATA (DC Voltage)
2	R/G	Heated oxygen sensor 1 heater (bank 2)	**[Engine is running]** ● **Warm-up condition** ● Engine speed is below 3,600 rpm.	Approximately 7V★ 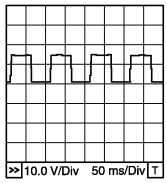 PBIB0519E
			[Engine is running] ● Engine speed is above 3,600 rpm.	BATTERY VOLTAGE (11 - 14V)

ECM Terminals and Reference Value (Cont'd)

TERMINAL NO.	WIRE COLOR	ITEM	CONDITION	DATA (DC Voltage)
24	L/OR	Heated oxygen sensor 1 heater (bank 1)	**[Engine is running]** ● **Warm-up condition** ● Engine speed is below 3,600 rpm.	Approximately 7V★ 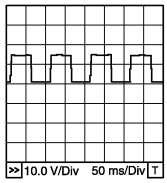 PBIB0519E
			[Engine is running] ● Engine speed is above 3,600 rpm.	BATTERY VOLTAGE (11 - 14V)

★: Average voltage for pulse signal (Actual pulse signal can be confirmed by oscilloscope.)

On Board Diagnosis Logic

NAEC0829

DTC No.	Trouble diagnosis name	DTC Detecting Condition	Possible Cause
P0031 0031 (Bank 1) P0051 0051 (Bank 2)	Heated oxygen sensor 1 heater control circuit low	The current amperage in the heated oxygen sensor 1 heater circuit is out of the normal range. (An excessively low voltage signal is sent to ECM through the heated oxygen sensor 1 heater.)	● Harness or connectors (The heated oxygen sensor 1 heater circuit is open or shorted.) ● Heated oxygen sensor 1 heater
P0032 0032 (Bank 1) P0052 0052 (Bank 2)	Heated oxygen sensor 1 heater control circuit high	The current amperage in the heated oxygen sensor 1 heater circuit is out of the normal range. (An excessively high voltage signal is sent to ECM through the heated oxygen sensor 1 heater.)	● Harness or connectors (The heated oxygen sensor 1 heater circuit is shorted.) ● Heated oxygen sensor 1 heater

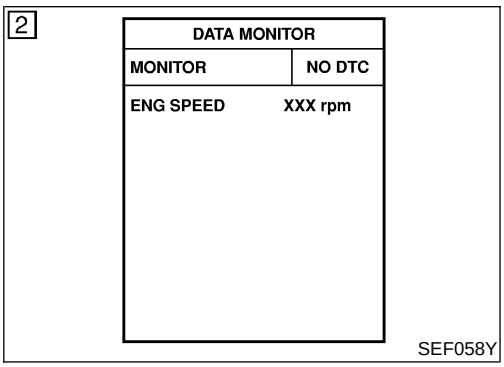

DTC Confirmation Procedure

NAEC0830

NOTE:

If DTC Confirmation Procedure has been previously conducted, always turn ignition switch OFF and wait at least 10 seconds before conducting the next test.

TESTING CONDITION:

Before performing the following procedure, confirm that battery voltage is between 11V and 16V at idle.

WITH CONSULT-II

NAEC0830S01

1) Start engine and warm it up to normal operating temperature.

2) Turn ignition switch OFF and wait at least 10 seconds.
3) Turn ignition switch ON and select "DATA MONITOR" mode with CONSULT-II.
4) Start engine and run it for at least 6 seconds at idle speed.
5) If 1st trip DTC is detected, go to "Diagnostic Procedure", EC-178.

WITH GST

NAEC0830S02

Follow the procedure "With CONSULST-II" above.

Wiring Diagram

NAEC0831

BANK 1

NAEC0831S01

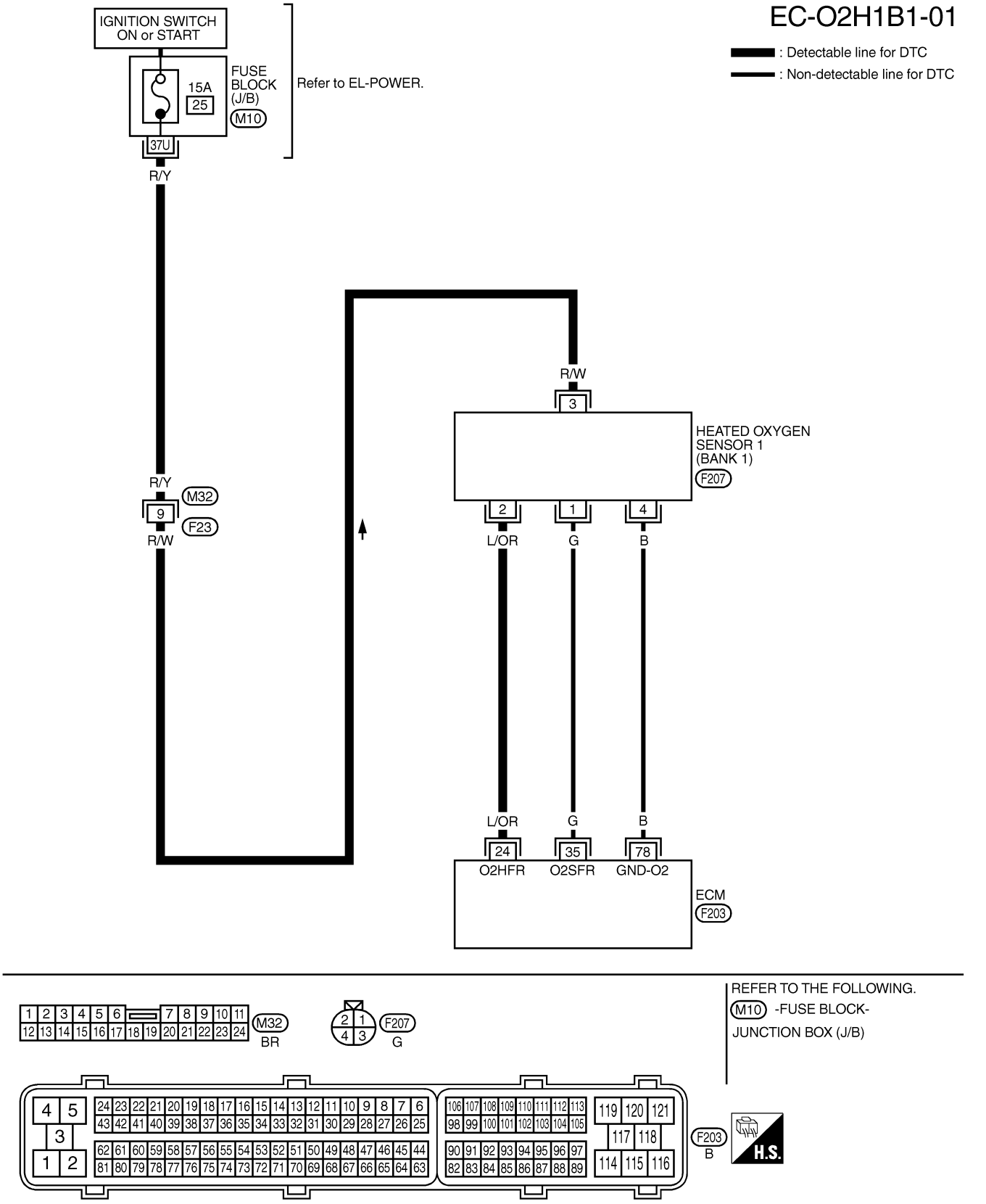

MEC078E

BANK 2

NAEC0831S02

EC-O2H1B2-01

: Detectable line for DTC
: Non-detectable line for DTC

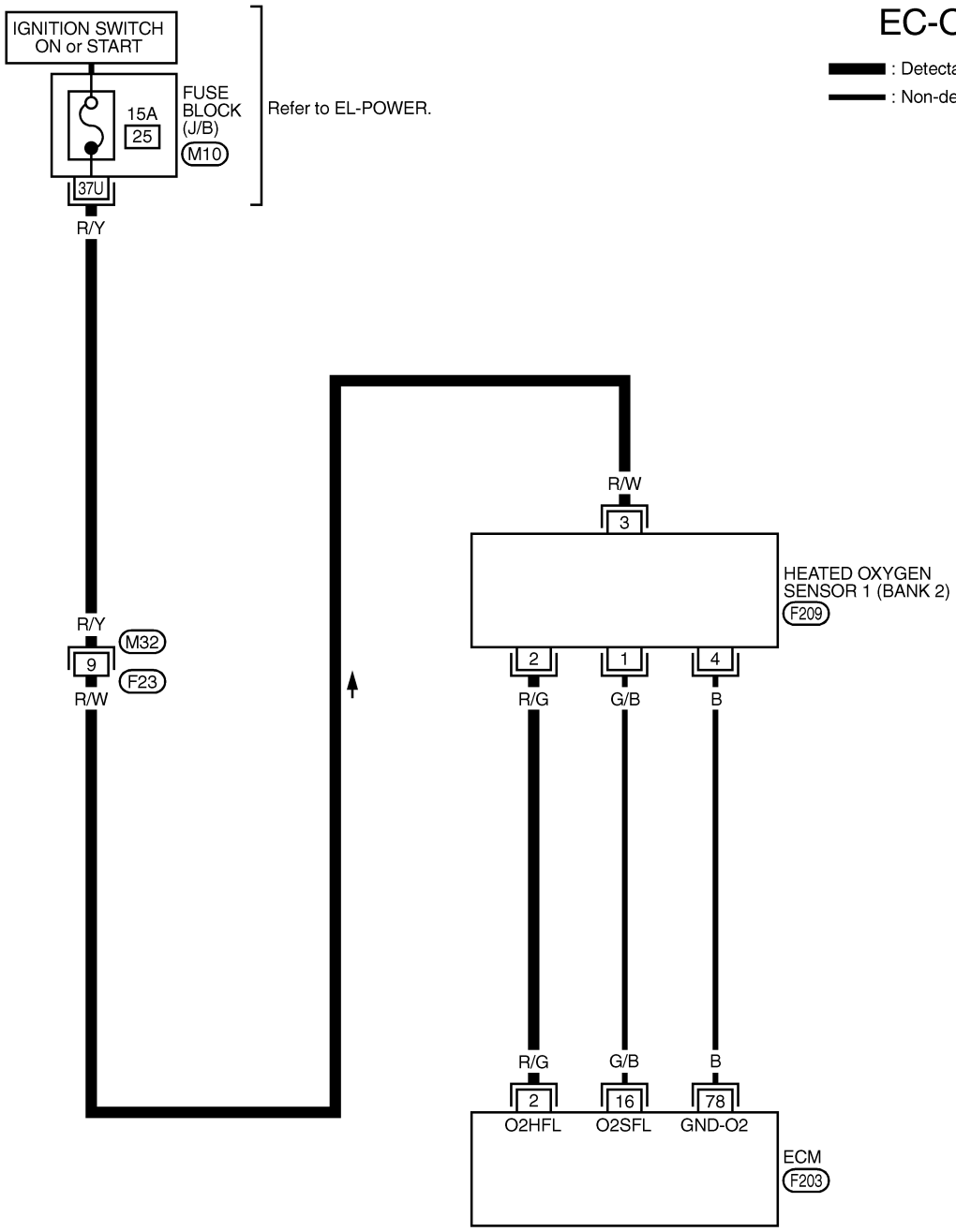

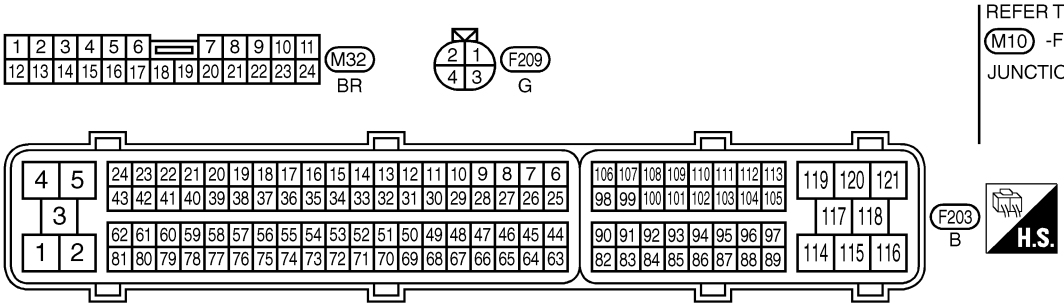

REFER TO THE FOLLOWING.
M10 -FUSE BLOCK-
JUNCTION BOX (J/B)

MEC079E

Diagnostic Procedure

NAEC0832

1	CHECK GROUND CONNECTIONS

1. Turn ignition switch OFF.
2. Loosen and retighten three ground screws on the body.
   Refer to “Ground Inspection”, EC-165.

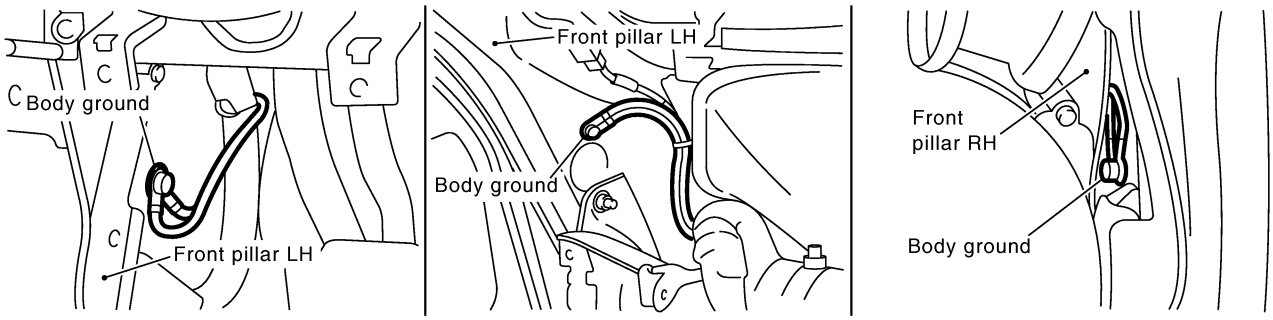

SEC997D

OK or NG

OK	▶	GO TO 2.
NG	▶	Repair or replace ground connections.

2	CHECK HO2S1 POWER SUPPLY CIRCUIT

1. Disconnect heated oxygen sensor 1 harness connector.

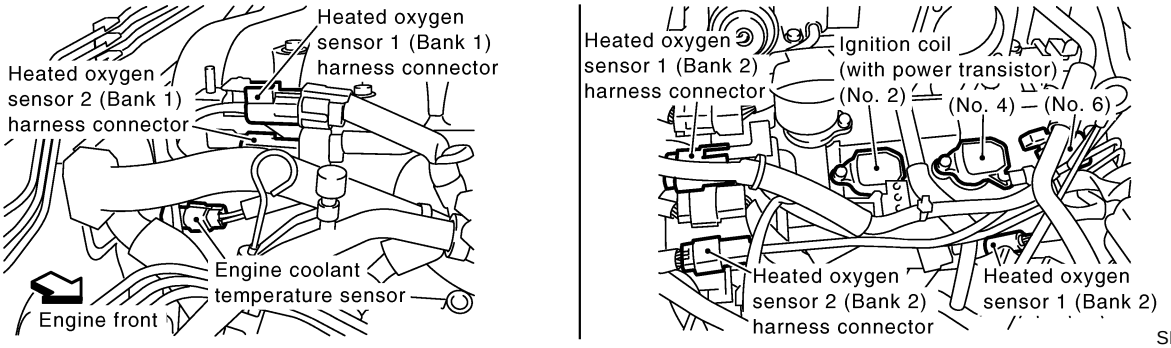

SEC999D

2. Turn ignition switch ON.
3. Check voltage between HO2S1 terminal 3 and ground with CONSULT-II or tester.

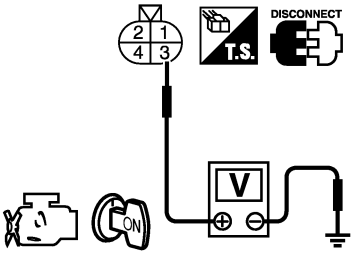

PBIB0112E

Voltage: Battery voltage

OK or NG

OK	▶	GO TO 4.
NG	▶	GO TO 3.

3	DETECT MALFUNCTIONING PART
Check the following. ● Harness connectors M32, F23 ● Fuse block (J/B) connector M10 ● 15A fuse ● Harness for open or short between heated oxygen sensor 1 and fuse	
▶	Repair harness or connectors.

4	CHECK HO2S1 OUTPUT SIGNAL CIRCUIT FOR OPEN AND SHORT

1. Turn ignition switch OFF.
2. Disconnect ECM harness connector.
3. Check harness continuity between ECM terminal and HO2S1 terminal as follows. Refer to Wiring Diagram.

DTC	Terminals		Bank
	ECM	Sensor	
P0031, P0032	24	2	Bank 1
P0051, P0052	2	2	Bank 2

MTBL1349

Continuity should exist.

4. Also check harness for short to ground and short to power.

OK or NG

OK	▶	GO TO 5.
NG	▶	Repair open circuit or short to ground or short to power in harness or connectors.

5	CHECK HEATED OXYGEN SENSOR 1 HEATER

Check resistance between HO2S1 terminals as follows.

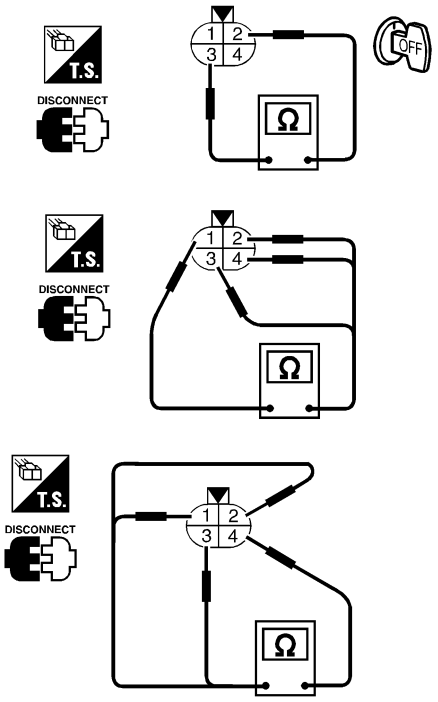

SEF249Y

Terminals	Resistance
2 and 3	3.3 - 4.0Ω at 25 °C (77 °F)
1 and 2, 3, 4 4 and 1, 2, 3	∞Ω (Continuity should not exist.)

MTBL1782

CAUTION:

- **Discard any heated oxygen sensor which has been dropped from a height of more than 0.5 m (19.7 in) onto a hard surface such as a concrete floor; use a new one.**
- **Before installing new oxygen sensor, clean exhaust system threads using Oxygen Sensor Thread Cleaner tool J-43897-18 or J-43897-12 and approved anti-seize lubricant.**

OK or NG

OK	▶	GO TO 6.
NG	▶	Replace malfunctioning heated oxygen sensor 1.

6	CHECK INTERMITTENT INCIDENT

Refer to "TROUBLE DIAGNOSIS FOR INTERMITTENT INCIDENT", EC-155.

	▶	**INSPECTION END**

Description

NAEC0833

SYSTEM DESCRIPTION

NAEC0833S01

Sensor	Input Signal to ECM	ECM function	Actuator
Crankshaft position sensor (POS) Camshaft position sensor (PHASE)	Engine speed	Heated oxygen sensor heater 2 control	Heated oxygen sensor 2 heater
Engine coolant temperature sensor	Engine coolant temperature		
Mass air flow sensor	Amount of intake air		

The ECM performs ON/OFF control of the heated oxygen sensor 2 heater corresponding to the engine speed, amount of intake air and engine coolant temperature.

OPERATION

NAEC0833S02

Engine speed rpm	Heated oxygen sensor 2 heater
Above 3,200	OFF
Below 3,200 (After the following conditions are met.) ● After warming up ● After keeping the engine speed between 3,500 and 4,000 rpm for 1 minute and at idle for 1 minute under no load	ON

CONSULT-II Reference Value in Data Monitor Mode

NAEC0834

Specification data are reference values.

MONITOR ITEM	CONDITION	SPECIFICATION
HO2S2 HTR (B1) HO2S2 HTR (B2)	● Ignition switch: ON (Engine stopped) ● Engine is running above 3,200 rpm.	OFF
	● Engine speed: Below 3,200 rpm after the following conditions are met. ● After warming up ● After keeping the engine speed between 3,500 and 4,000 rpm for 1 minute and at idle for 1 minute under no load	ON

ECM Terminals and Reference Value

NAEC0835

Specification data are reference values and are measured between each terminal and ground.

CAUTION:

Do not use ECM ground terminals when measuring input/output voltage. Doing so may result in damage to the ECM's transistor. Use a ground other than ECM terminals, such as the ground.

TERMINAL NO.	WIRE COLOR	ITEM	CONDITION	DATA (DC Voltage)
6	R/W	Heated oxygen sensor 2 heater (bank 2)	**[Engine is running]** ● **Warm-up condition** ● Engine speed is below 3,200 rpm. ● After keeping engine speed between 3,500 and 4,000 rpm for 1 minute and at idle for 1 minute under no load	Approximately 3V★ 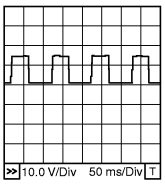 SEC981D
			[Ignition switch ON] ● Engine stopped **[Engine is running]** ● Engine speed is above 3,200 rpm.	BATTERY VOLTAGE (11 - 14V)

ECM Terminals and Reference Value (Cont'd)

TERMINAL NO.	WIRE COLOR	ITEM	CONDITION	DATA (DC Voltage)
25	P/B	Heated oxygen sensor 2 heater (bank 1)	**[Engine is running]** ● **Warm-up condition** ● Engine speed is below 3,200 rpm. ● After keeping engine speed between 3,500 and 4,000 rpm for 1 minute and at idle for 1 minute under no load	Approximately 3V★ 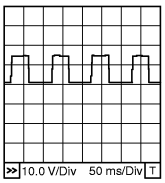 SEC981D
			[Ignition switch ON] ● Engine stopped **[Engine is running]** ● Engine speed is above 3,200 rpm.	BATTERY VOLTAGE (11 - 14V)

★: Average voltage for pulse signal (Actual pulse signal can be confirmed by oscilloscope.)

On Board Diagnosis Logic

NAEC0836

DTC No.	Trouble diagnosis name	DTC Detecting Condition	Possible Cause
P0037 0037 (Bank 1)	Heated oxygen sensor 2 heater control circuit low	The current amperage in the heated oxygen sensor 2 heater circuit is out of the normal range. (An excessively low voltage signal is sent to ECM through the heated oxygen sensor 2 heater.)	● Harness or connectors (The heated oxygen sensor 2 heater circuit is open or shorted.) ● Heated oxygen sensor 2 heater
P0057 0057 (Bank 2)			
P0038 0038 (Bank 1)	Heated oxygen sensor 2 heater control circuit high	The current amperage in the heated oxygen sensor 2 heater circuit is out of the normal range. (An excessively high voltage signal is sent to ECM through the heated oxygen sensor 2 heater.)	● Harness or connectors (The heated oxygen sensor 2 heater circuit is shorted.) ● Heated oxygen sensor 2 heater
P0058 0058 (Bank 2)			

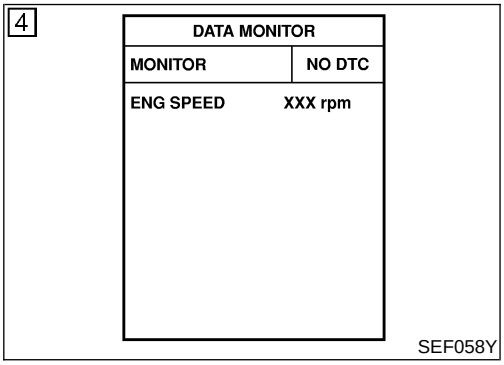

DTC Confirmation Procedure

NAEC0837

NOTE:

If DTC Confirmation Procedure has been previously conducted, always turn ignition switch OFF and wait at least 10 seconds before conducting the next test.

TESTING CONDITION:

Before performing the following procedure, confirm that battery voltage is between 11V and 16V at idle.

WITH CONSULT-II

NAEC0837S01

1) Turn ignition switch ON and select "DATA MONITOR" mode with CONSULT-II.
2) Start engine and warm it up to the normal operating temperature.
3) Turn ignition switch OFF and wait at least 10 seconds.
4) Start engine and keep the engine speed between 3,500 and 4,000 rpm for at least 1 minute under no load.
5) Let engine idle for 1 minute.
6) If 1st trip DTC is detected, go to "Diagnostic Procedure", EC-185.

WITH GST

NAEC0837S02

Follow the procedure "With CONSULST-II" above.

Wiring Diagram

NAEC0838

BANK 1

NAEC0838S01

EC-O2H2B1-01

: Detectable line for DTC
: Non-detectable line for DTC

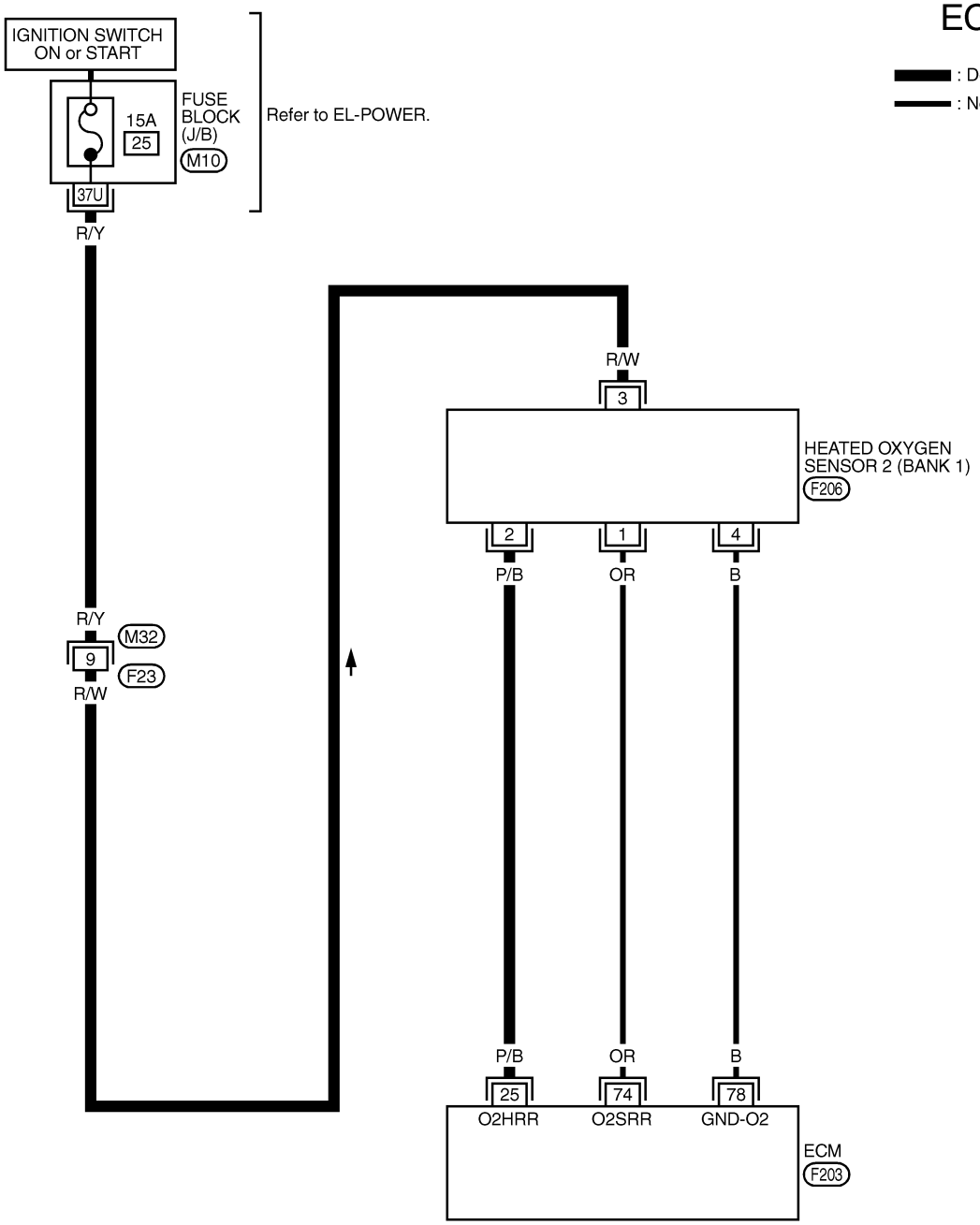

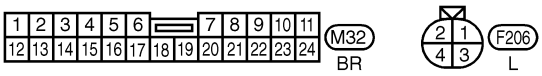

REFER TO THE FOLLOWING.
M10 -FUSE BLOCK-JUNCTION BOX (J/B)

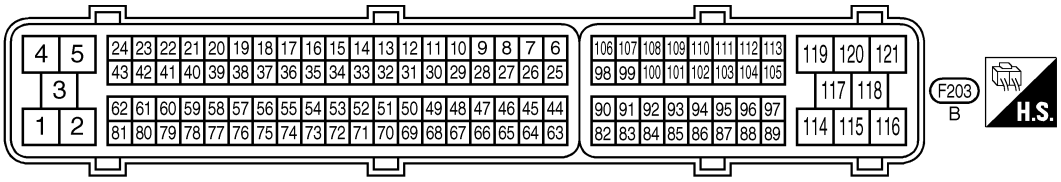

MEC080E

BANK 2

NAEC0838S02

EC-O2H2B2-01

: Detectable line for DTC
: Non-detectable line for DTC

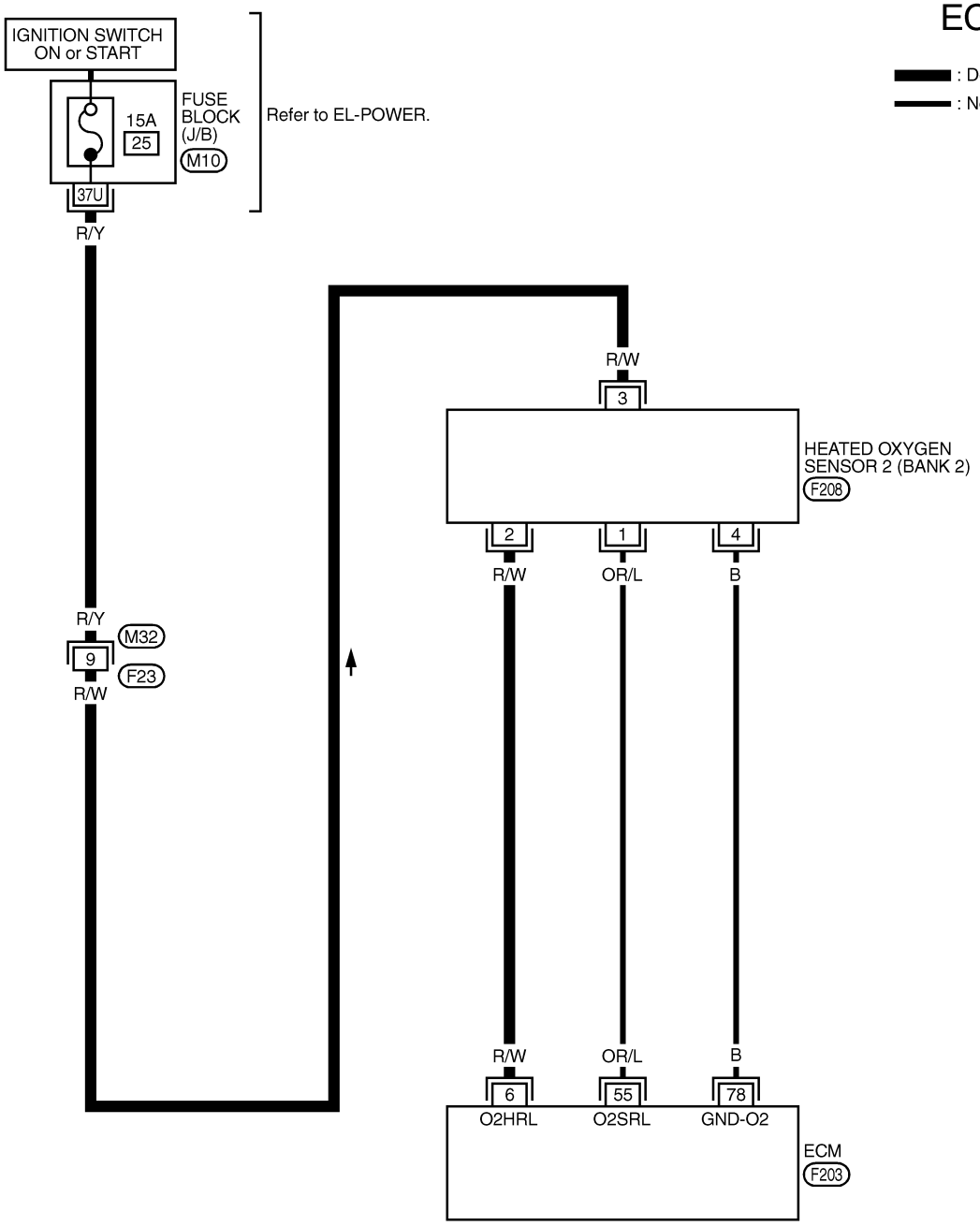

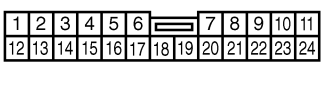

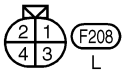

REFER TO THE FOLLOWING.
M10 -FUSE BLOCK-JUNCTION BOX (J/B)

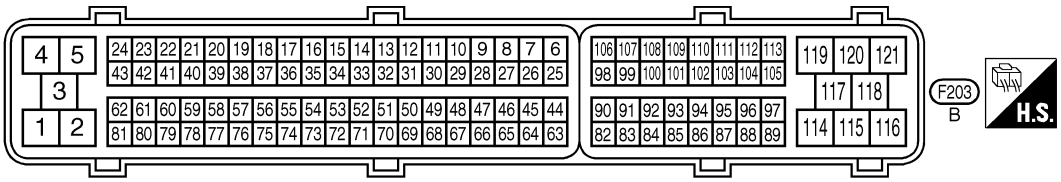

MEC081E

Diagnostic Procedure

NAEC0839

1	CHECK GROUND CONNECTIONS

1. Turn ignition switch OFF.
2. Loosen and retighten three ground screws on the body.
   Refer to “Ground Inspection”, EC-165.

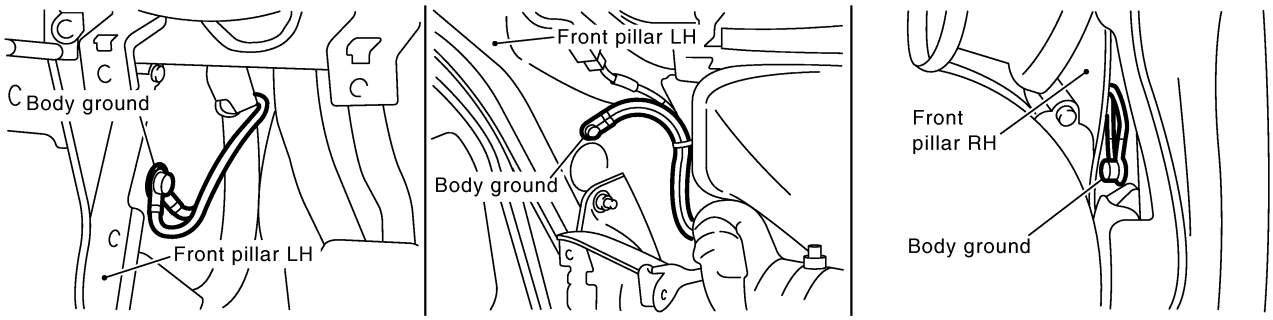

SEC997D

OK or NG

OK	▶	GO TO 2.
NG	▶	Repair or replace ground connections.

2	CHECK HO2S2 POWER SUPPLY CIRCUIT

1. Disconnect heated oxygen sensor 2 harness connector.

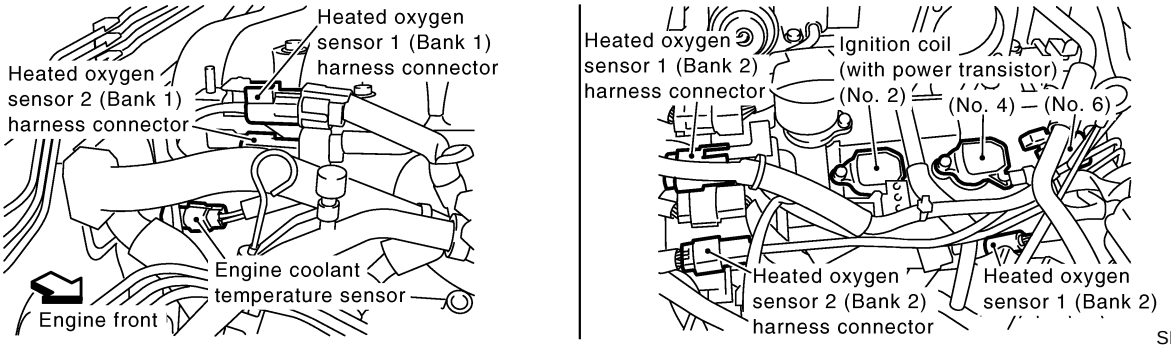

SEC999D

2. Turn ignition switch ON.
3. Check voltage between HO2S2 terminal 3 and ground.

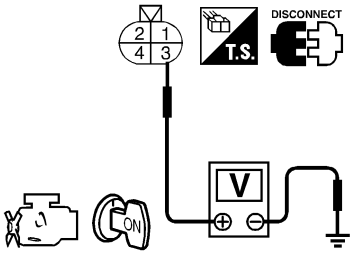

Voltage: Battery voltage

SEF314X

OK or NG

OK	▶	GO TO 4.
NG	▶	GO TO 3.

3	DETECT MALFUNCTIONING PART

Check the following.
- Harness connectors M32, F23
- Fuse block (J/B) connector M10
- 15A fuse
- Harness for open or short between heated oxygen sensor 2 and fuse

	▶	Repair harness or connectors.

4	CHECK HO2S2 OUTPUT SIGNAL CIRCUIT FOR OPEN AND SHORT

1. Turn ignition switch OFF.
2. Disconnect ECM harness connector.
3. Check harness continuity between ECM terminal and HO2S2 terminal as follows. Refer to Wiring Diagram.

DTC	Terminals		Bank
	ECM	Sensor	
P0037, P0038	25	2	Bank 1
P0057, P0058	6	2	Bank 2

MTBL1351

Continuity should exist.

4. Also check harness for short to ground and short to power.

OK or NG

OK	▶	GO TO 5.
NG	▶	Repair open circuit or short to ground or short to power in harness or connectors.

5	CHECK HEATED OXYGEN SENSOR 2 HEATER

Check the resistance between HO2S2 terminals as follows.

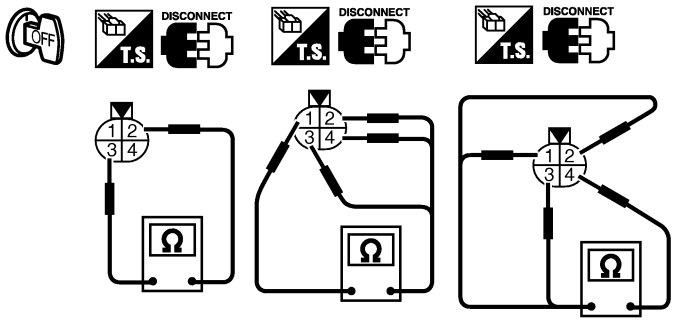

Terminal No.	Resistance
2 and 3	Approximately 11Ω at 23˚C (73˚F)
1 and 2, 3, 4	∞ Ω
4 and 1, 2, 3	(Continuity should not exist.)

SEF315XF

CAUTION:
- **Discard any heated oxygen sensor which has been dropped from a height of more than 0.5 m (19.7 in) onto a hard surface such as a concrete floor; use a new one.**
- **Before installing new oxygen sensor, clean exhaust system threads using Oxygen Sensor Thread Cleaner tool J-43897-18 or J-43897-12 and approved anti-seize lubricant.**

OK or NG

OK	▶	GO TO 6.
NG	▶	Replace malfunctioning heated oxygen sensor 2.

6	CHECK INTERMITTENT INCIDENT

Refer to "TROUBLE DIAGNOSIS FOR INTERMITTENT INCIDENT", EC-155.

	▶	**INSPECTION END**

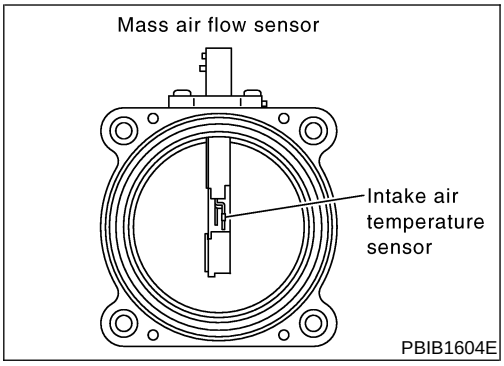

Component Description

NAEC1385

The mass air flow sensor is placed in the stream of intake air. It measures the intake flow rate by measuring a part of the entire intake flow. The mass air flow sensor controls the temperature of the hot wire to a certain amount. The heat generated by the hot wire is reduced as the intake air flows around it. The more air, the greater the heat loss.
Therefore, the electric current supplied to hot wire is changed to maintain the temperature of the hot wire as air flow increases. The ECM detects the air flow by means of this current change.

CONSULT-II Reference Value in Data Monitor Mode

NAEC1386

Specification data are reference values.

MONITOR ITEM	CONDITION		SPECIFICATION
MAS A/F SE-B1	• Engine: After warming up • Air conditioner switch: OFF • Shift lever: N (A/T), Neutral (M/T) • No-load	Idle	1.0 - 1.3V
		2,500 rpm	1.7 - 2.1V
CAL/LD VALUE	ditto	Idle	14.0 - 33.0%
		2,500 rpm	12.0 - 25.0%
MASS AIRFLOW	ditto	Idle	2.0 - 6.0 g·m/s
		2,500 rpm	7.0 - 20.0 g·m/s

ECM Terminals and Reference Value

NAEC1387

Specification data are reference values and are measured between each terminal and ground.

CAUTION:

Do not use ECM ground terminals when measuring input/output voltage. Doing so may result in damage to the ECM's transistor. Use a ground other than ECM terminals, such as the ground.

TERMINAL NO.	WIRE COLOR	ITEM	CONDITION	DATA (DC Voltage)
51	OR	Mass air flow sensor	**[Engine is running]** • **Warm-up condition** • Idle speed	1.0 - 1.3V
			[Engine is running] • **Warm-up condition** • Engine speed is 2,500 rpm.	1.7 - 2.1V
67	B/P	Mass air flow sensor ground	**[Engine is running]** • **Warm-up condition** • Idle speed	Approximately 0V
111	L/B	ECM relay (Self shutt-off)	**[Engine is running]** **[Ignition switch OFF]** • For a few seconds after turning ignition switch OFF	0 - 1.5V
			[Ignition switch OFF] • A few seconds passed after turning ignition switch OFF	BATTERY VOLTAGE (11 - 14V)
119 120	B/W B/W	Power supply for ECM	**[Ignition switch ON]**	BATTERY VOLTAGE (11 - 14V)

On Board Diagnosis Logic

NAEC1388

This self-diagnosis has the one trip detection logic.

DTC No.	Trouble diagnosis name	DTC Detecting Condition		Possible Cause
P0101 0101	Mass air flow sensor circuit range/ performance problem	A)	A high voltage from the sensor is sent to ECM under light load driving condition.	● Harness or connectors (The sensor circuit is open or shorted.) ● Mass air flow sensor
		B)	A low voltage from the sensor is sent to ECM under heavy load driving condition.	● Harness or connectors (The sensor circuit is open or shorted.) ● Intake air leaks ● Mass air flow sensor

DTC Confirmation Procedure

NAEC1389

Perform PROCEDURE FOR MALFUNCTION A first. If the DTC cannot be confirmed, perform PROCEDURE FOR MALFUNCTION B.

NOTE:
If DTC Confirmation Procedure has been previously conducted, always turn ignition switch OFF and wait at least 10 seconds before conducting the next test.

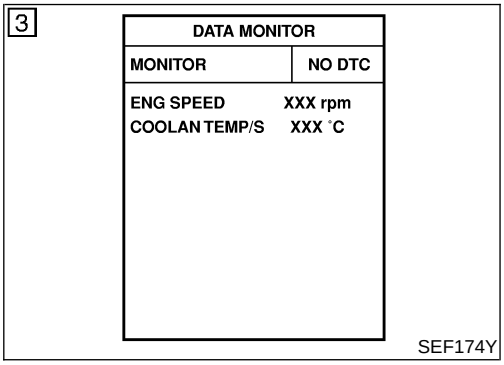

PROCEDURE FOR MALFUNCTION A

NAEC1389S01

NOTE:
If engine will not start or stops soon, wait at least 10 seconds with engine stopped (Ignition switch ON) instead of running engine at idle speed.

With CONSULT-II

NAEC1389S0101

1) Turn ignition switch ON.
2) Select “DATA MONITOR” mode with CONSULT-II.
3) Start engine and warm it up to normal operating temperature.
4) Run engine for at least 10 seconds at idle speed.
5) If DTC is detected, go to “Diagnostic Procedure”, EC-191.

With GST

NAEC1389S0102

Follow the procedure “With CONSULT-II” above.

6

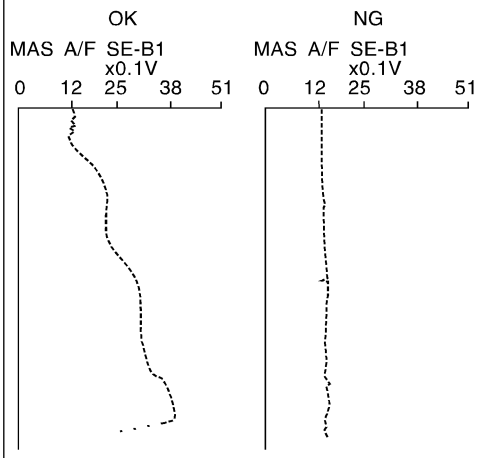

SEF243Y

7

DATA MONITOR	
MONITOR	NO DTC
ENG SPEED	XXX rpm
VHCL SPEED SE	XXX km/h
THRTL SEN 1	XXX V
THRTL SEN 2	XXX V

PBIB0199E

CALC LOAD	20%
COOLANT TEMP	95°C
SHORT FT #1	2%
LONG FT #1	0%
SHORT FT #2	4%
LONG FT #2	0%
ENGINE SPD	2637RPM
VEHICLE SPD	0MPH
IGN ADVANCE	41.0°
INTAKE AIR	41°C
MAF	14.1gm/sec
THROTTLE POS	3%

SEF534P

PROCEDURE FOR MALFUNCTION B

NAEC1389S02

CAUTION:

Always drive vehicle at a safe speed.

With CONSULT-II

NAEC1389S0201

1) Turn ignition switch ON.
2) Start engine and warm it up to normal operating temperature. **If engine cannot be started, go to "Diagnostic Procedure", EC-191.**
3) Select "DATA MONITOR" mode with CONSULT-II.
4) Check the voltage of MAS AIR/FL SE with "DATA MONITOR".
5) Increases engine speed to about 4,000 rpm.
6) Monitor the linear voltage rise in response to engine speed increases.
   If NG, go to "Diagnostic Procedure", EC-191.
   If OK, go to following step.
7) Maintain the following conditions for at least 10 consecutive seconds.

ENG SPEED	More than 2,000 rpm
THRTL SEN 1 THRTL SEN 2	More than 3V
Selector lever	Suitable position
Driving location	Driving vehicle uphill (Increased engine load) will help maintain the driving conditions required for this test.

8) If DTC is detected, go to "Diagnostic Procedure", EC-191.

Overall Function Check

NAEC1390

PROCEDURE FOR MALFUNCTION B

NAEC1390S01

Use this procedure to check the overall function of the mass air flow sensor circuit. During this check, a DTC might not be confirmed.

With GST

NAEC1390S0101

1) Start engine and warm it up to normal operating temperature.
2) Select "MODE 1" with GST.
3) Check the mass air flow sensor signal with "MODE 1".
4) Check for linear mass air flow sensor signal value rise in response to increases to about 4,000 rpm in engine speed.
5) If NG, go to "Diagnostic Procedure", EC-191.

Wiring Diagram

NAEC1391

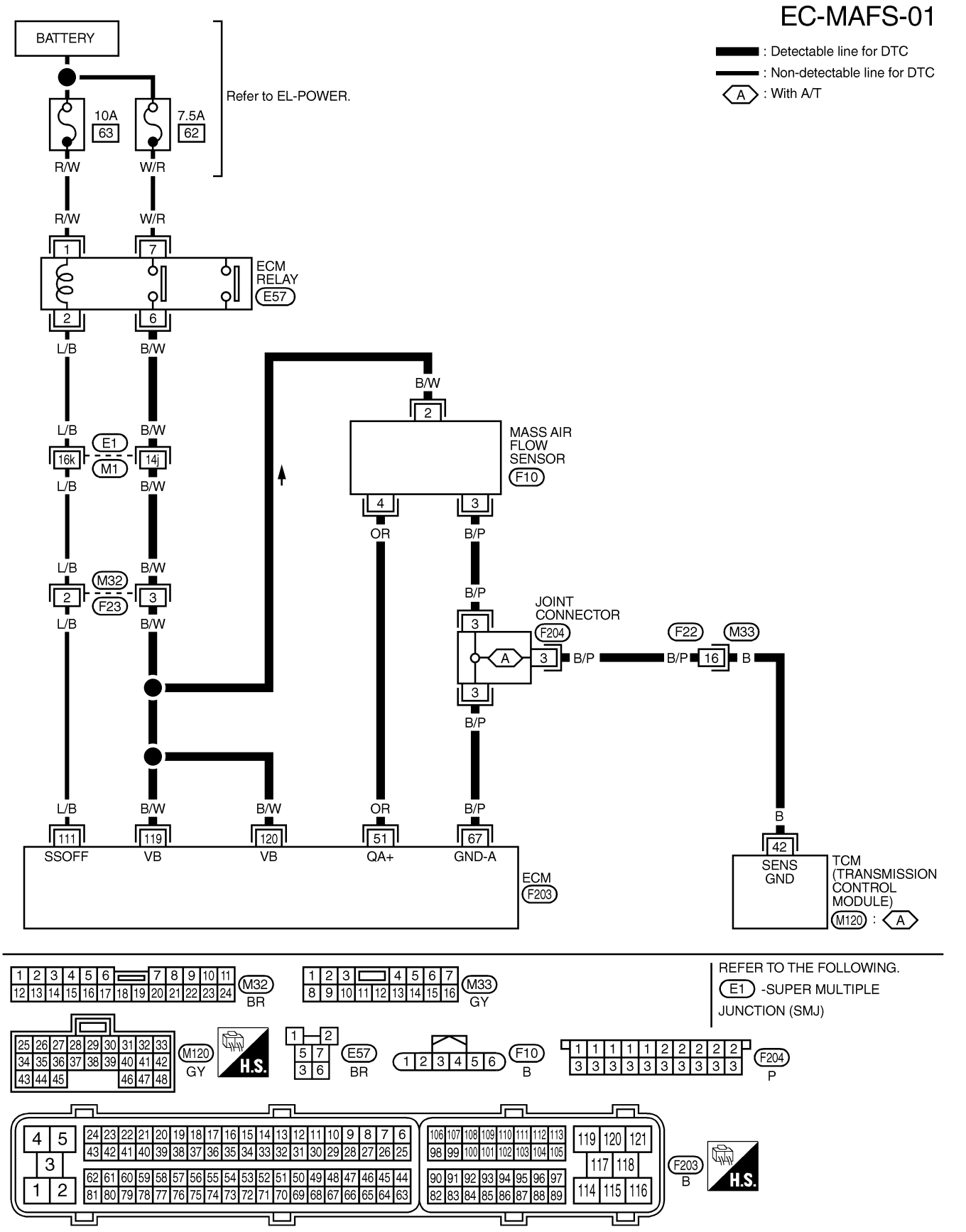

Diagnostic Procedure

NAEC1392

1	INSPECTION START	
Which malfunction (A or B) is duplicated?		
A or B		
A	▶	GO TO 3.
B	▶	GO TO 2.

2	CHECK INTAKE SYSTEM	
Check the following for connection. ● Air duct ● Vacuum hoses ● Intake air passage between air duct and intake manifold collector		
OK or NG		
OK	▶	GO TO 3.
NG	▶	Reconnect the parts.

3	CHECK GROUND CONNECTIONS	
1. Turn ignition switch OFF. 2. Loosen and retighten three ground screws on the body. Refer to “Ground Inspection”, EC-165.		

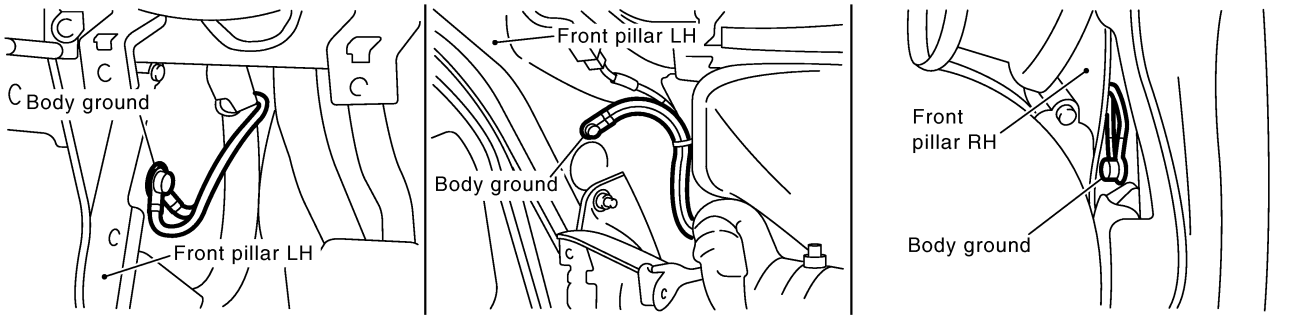

SEC997D

OK or NG		
OK	▶	GO TO 4.
NG	▶	Repair or replace ground connections.

4	CHECK MAF SENSOR POWER SUPPLY CIRCUIT

1. Disconnect mass air flow (MAF) sensor harness connector.

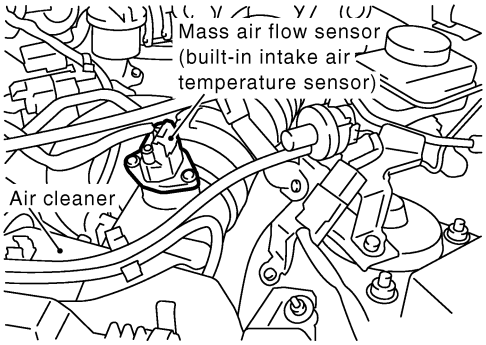

SEF960YA

2. Turn ignition switch ON.
3. Check voltage between MAF sensor terminal 2 and ground with CONSULT-II or tester.

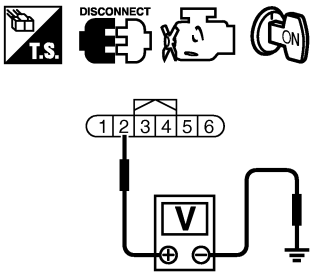

PBIB1168E

Voltage: Battery voltage

OK or NG

OK	▶	GO TO 6.
NG	▶	GO TO 5.

5	DETECT MALFUNCTIONING PART

Check the following.
- Harness connector E1, M1
- Harness connector M32, F23
- Harness for open or short between ECM relay and mass air flow sensor
- Harness for open or short between mass air flow sensor and ECM

	▶	Repair harness or connectors.

6	CHECK MAF SENSOR GROUND CIRCUIT FOR OPEN AND SHORT

1. Turn ignition switch OFF.
2. Disconnect ECM harness connector.
3. Disconnect TCM harness connector.
4. Check harness continuity between MAF sensor terminal 3 and ECM terminal 67, TCM terminal 42.
   Refer to Wiring Diagram.
   Continuity should exist.
5. Also check harness for short to ground and short to power.

OK or NG

OK	▶	GO TO 8.
NG	▶	GO TO 7.

7	DETECT MALFUNCTIONING PART
Check the following. ● Harness connectors F22, M33 ● Joint connector ● Harness for open or short between mass air flow sensor and ECM ● Harness for open or short between mass air flow sensor and TCM	
▶	Repair open circuit or short to gorund or short to power in harness or connectors.

8	CHECK MAF SENSOR INPUT SIGNAL CIRCUIT FOR OPEN AND SHORT
1. Check harness continuity between MAF sensor terminal 4 and ECM terminal 51. Refer to Wiring Diagram. **Continuity should exist.** 2. Also check harness for short to ground and short to power.	
OK or NG	
OK ▶	GO TO 9.
NG ▶	Repair open circuit or short to ground or short to power in harness or connectors.

9	CHECK MASS AIR FLOW SENSOR
1. Reconnect harness connectors disconnected. 2. Start engine and warm it up to normal operating temperature. 3. Check voltage between ECM terminal 51 (Mass air flow sensor signal) and ground.	

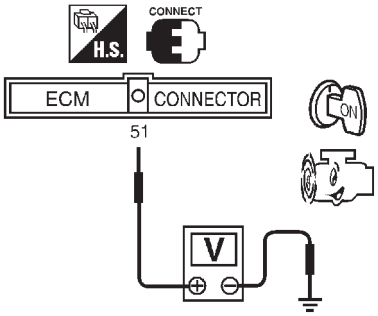

SEF100V

Condition	Voltage V
Ignition switch "ON" (Engine stopped.)	Approx. 0.4
Idle (Engine is warmed-up to normal operating temperature.)	1.0 - 1.3
2,500 rpm (Engine is warmed-up to normal operating temperature.)	1.7 - 2.1
Idle to about 4,000 rpm*	1.0 - 1.3 to Approx. 3.7

*: Check for linear voltage rise in response to engine being increased to about 4,000 rpm.

MTBL1806

4. If the voltage is out of specification, disconnect MAF sensor harness connector and connect it again. Then repeat above check.	
OK or NG	
OK ▶	GO TO 10.
NG ▶	Replace mass air flow sensor.

10	CHECK INTERMITTENT INCIDENT
Refer to "TROUBLE DIAGNOSIS FOR INTERMITTENT INCIDENT", EC-155.	
▶	**INSPECTION END**

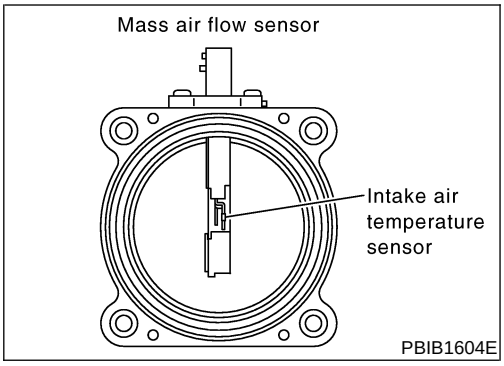

Component Description

NAEC1395

The mass air flow sensor is placed in the stream of intake air. It measures the intake flow rate by measuring a part of the entire intake flow. The mass air flow sensor controls the temperature of the hot wire to a certain amount. The heat generated by the hot wire is reduced as the intake air flows around it. The more air, the greater the heat loss.
Therefore, the electric current supplied to hot wire is changed to maintain the temperature of the hot wire as air flow increases. The ECM detects the air flow by means of this current change.

CONSULT-II Reference Value in Data Monitor Mode

NAEC1396

Specification data are reference values.

MONITOR ITEM	CONDITION		SPECIFICATION
MAS A/F SE-B1	• Engine: After warming up • Air conditioner switch: OFF • Shift lever: N (A/T), Neutral (M/T) • No-load	Idle	1.0 - 1.3V
		2,500 rpm	1.7 - 2.1V
CAL/LD VALUE	ditto	Idle	14.0 - 33.0%
		2,500 rpm	12.0 - 25.0%
MASS AIRFLOW	ditto	Idle	2.0 - 6.0 g·m/s
		2,500 rpm	7.0 - 20.0 g·m/s

ECM Terminals and Reference Value

NAEC1397

Specification data are reference values and are measured between each terminal and ground.

CAUTION:

Do not use ECM ground terminals when measuring input/output voltage. Doing so may result in damage to the ECM's transistor. Use a ground other than ECM terminals, such as the ground.

TERMINAL NO.	WIRE COLOR	ITEM	CONDITION	DATA (DC Voltage)
51	OR	Mass air flow sensor	**[Engine is running]** • **Warm-up condition** • Idle speed	1.0 - 1.3V
			[Engine is running] • **Warm-up condition** • Engine speed is 2,500 rpm.	1.7 - 2.1V
67	B/P	Mass air flow sensor ground	**[Engine is running]** • **Warm-up condition** • Idle speed	Approximately 0V
111	L/B	ECM relay (Self shutt-off)	**[Engine is running]** **[Ignition switch OFF]** • For a few seconds after turning ignition switch OFF	0 - 1.5V
			[Ignition switch OFF] • A few seconds passed after turning ignition switch OFF	BATTERY VOLTAGE (11 - 14V)
119 120	B/W B/W	Power supply for ECM	**[Ignition switch ON]**	BATTERY VOLTAGE (11 - 14V)

On Board Diagnosis Logic

NAEC1398

These self-diagnoses have the one trip detection logic.

DTC No.	Trouble diagnosis name	DTC Detecting Condition	Possible Cause
P0102 0102	Mass air flow sensor circuit low input	An excessively low voltage from the sensor is sent to ECM when engine is running.	● Harness or connectors (The sensor circuit is open or shorted.) ● Intake air leaks ● Mass air flow sensor
P0103 0103	Mass air flow sensor circuit high input	An excessively high voltage from the sensor is sent to ECM.	● Harness or connectors (The sensor circuit is open or shorted.) ● Mass air flow sensor

FAIL-SAFE MODE

NAEC1398S01

When the malfunction is detected, the ECM enters fail-safe mode and the MIL lights up.

Detected items	Engine operating condition in fail-safe mode
Mass air flow sensor circuit	Engine speed will not rise more than 2,400 rpm due to the fuel cut.

DTC Confirmation Procedure

NAEC1399

NOTE:

If DTC Confirmation Procedure has been previously conducted, always turn ignition switch OFF and wait at least 10 seconds before conducting the next test.

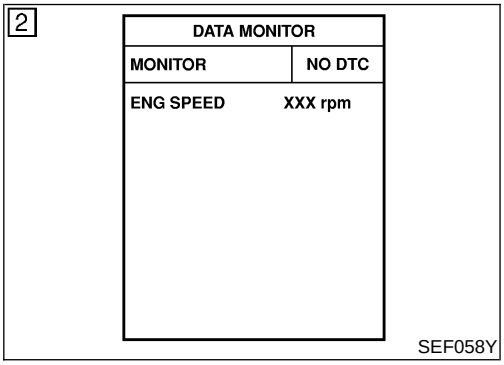

PROCEDURE FOR DTC P0103

NAEC1399S01

With CONSULT-II

NAEC1399S0101

1) Turn ignition switch ON.
2) Select “DATA MONITOR” mode with CONSULT-II.
3) Wait at least 6 seconds.
4) If DTC is detected, go to “Diagnostic Procedure”, EC-197.

With GST

NAEC1399S0102

Follow the procedure “With CONSULT-II” above.

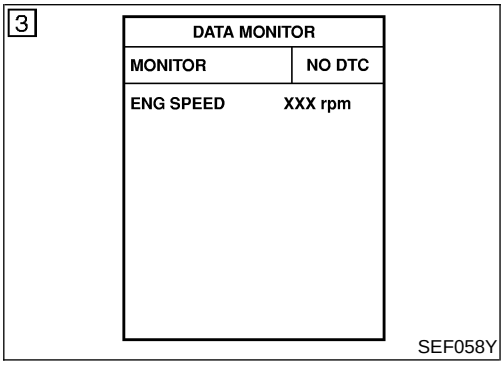

PROCEDURE FOR DTC P0102

NAEC1399S02

With CONSULT-II

NAEC1399S0201

1) Turn ignition switch ON.
2) Select “DATA MONITOR” mode with CONSULT-II.
3) Start engine and wait at least 5 seconds.
4) If DTC is detected, go to “Diagnostic Procedure”, EC-197.

With GST

NAEC1399S0202

Follow the procedure “With CONSULT-II” above.

Wiring Diagram

NAEC1400

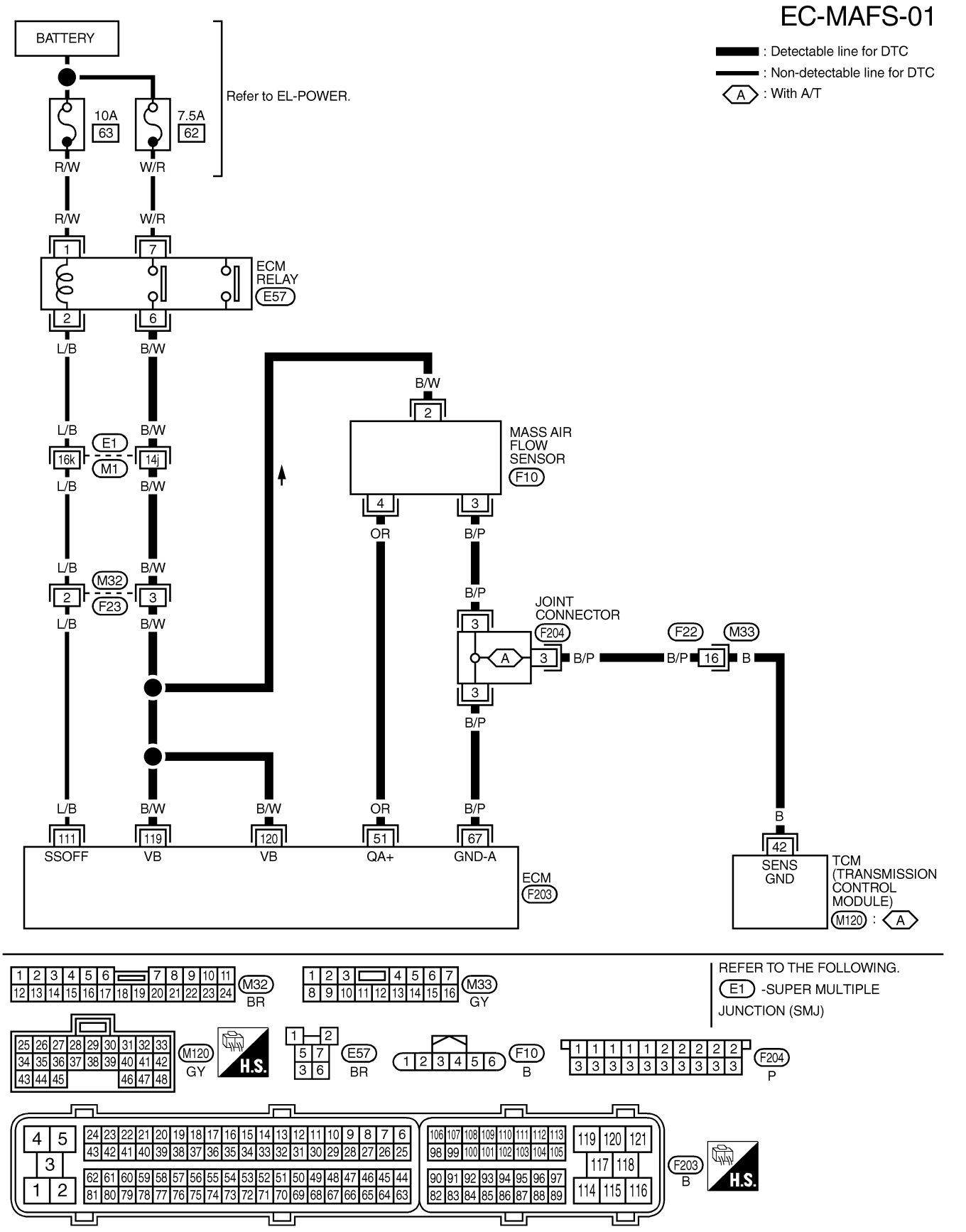

Diagnostic Procedure

NAEC1401

1	INSPECTION START	
Which malfunction (P0102 or P0103) is duplicated?		
P0102 or P0103		
P0103	▶	GO TO 3.
P0102	▶	GO TO 2.

2	CHECK INTAKE SYSTEM	
Check the following for connection. ● Air duct ● Vacuum hoses ● Intake air passage between air duct and intake manifold collector		
OK or NG		
OK	▶	GO TO 3.
NG	▶	Reconnect the parts.

3	CHECK GROUND CONNECTIONS	
1. Turn ignition switch OFF. 2. Loosen and retighten three ground screws on the body. Refer to “Ground Inspection”, EC-165.		

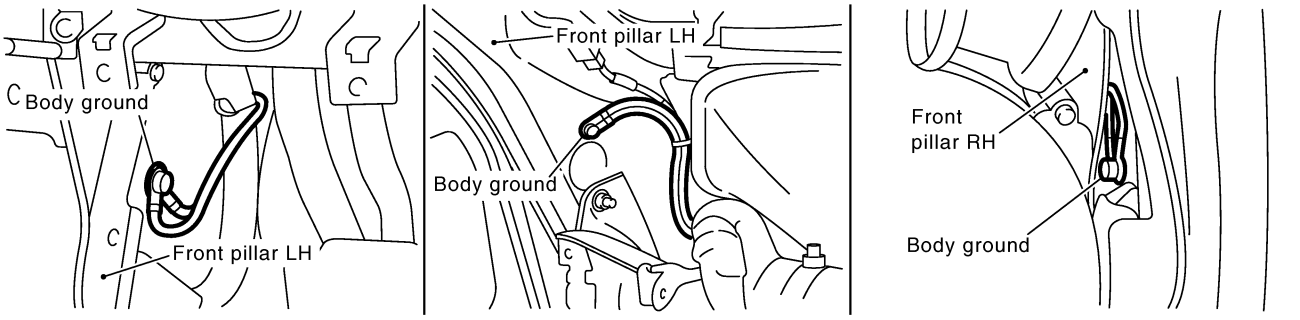

SEC997D

OK or NG		
OK	▶	GO TO 4.
NG	▶	Repair or replace ground connections.

4	CHECK MAF SENSOR POWER SUPPLY CIRCUIT

1. Disconnect mass air flow (MAF) sensor harness connector.

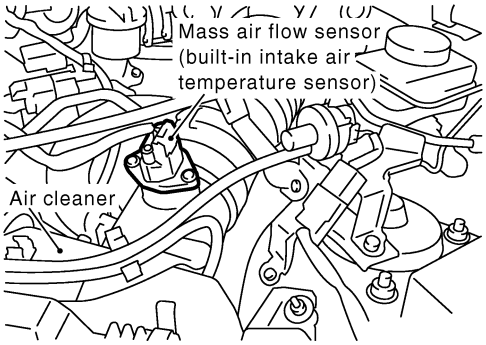

SEF960YA

2. Turn ignition switch ON.
3. Check voltage between MAF sensor terminal 2 and ground with CONSULT-II or tester.

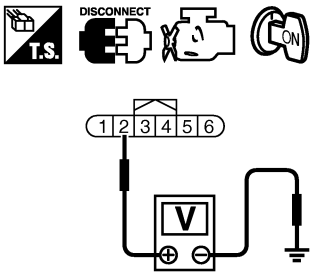

PBIB1168E

Voltage: Battery voltage

OK or NG

OK	▶	GO TO 6.
NG	▶	GO TO 5.

5	DETECT MALFUNCTIONING PART

Check the following.
- Harness connector E1, M1
- Harness connector M32, F23
- Harness for open or short between ECM relay and mass air flow sensor
- Harness for open or short between mass air flow sensor and ECM

	▶	Repair harness or connectors.

6	CHECK MAF SENSOR GROUND CIRCUIT FOR OPEN AND SHORT

1. Turn ignition switch OFF.
2. Disconnect ECM harness connector.
3. Disconnect TCM harness connector
4. Check harness continuity between MAF sensor terminal 3 and ECM terminal 67, TCM terminal 42.
   Refer to Wiring Diagram.
   Continuity should exist.
5. Also check harness for short to ground and short to power.

OK or NG

OK	▶	GO TO 8.
NG	▶	GO TO 7.

7	DETECT MALFUNCTIONING PART
Check the following. ● Harness connector F22, M33 ● Joint connector ● Harness for open or short between mass air flow sensor and ECM ● Harness for open or short between mass air flow sensor and TCM	
▶	Repair open circuit or short to ground or short to power in harness or connectors.

8	CHECK MAF SENSOR INPUT SIGNAL CIRCUIT FOR OPEN AND SHORT
1. Check harness continuity between MAF sensor terminal 4 and ECM terminal 51. Refer to Wiring Diagram. **Continuity should exist.** 2. Also check harness for short to ground and short to power.	
OK or NG	
OK ▶	GO TO 9.
NG ▶	Repair open circuit or short to ground or short to power in harness or connectors.

9	CHECK MASS AIR FLOW SENSOR
1. Reconnect harness connectors disconnected. 2. Start engine and warm it up to normal operating temperature. 3. Check voltage between ECM terminal 51 (Mass air flow sensor signal) and ground.	

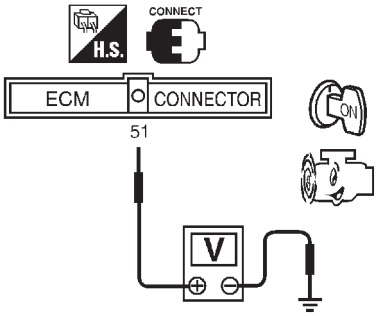

SEF100V

Condition	Voltage V
Ignition switch "ON" (Engine stopped.)	Approx. 0.4
Idle (Engine is warmed-up to normal operating temperature.)	1.0 - 1.3
2,500 rpm (Engine is warmed-up to normal operating temperature.)	1.7 - 2.1
Idle to about 4,000 rpm*	1.0 - 1.3 to Approx. 3.7

*: Check for linear voltage rise in response to engine being increased to about 4,000 rpm.

MTBL1806

4. If the voltage is out of specification, disconnect MAF sensor harness connector and connect it again. Then repeat above check.

OK or NG	
OK ▶	GO TO 10.
NG ▶	Replace mass air flow sensor.

10	CHECK INTERMITTENT INCIDENT
Refer to "TROUBLE DIAGNOSIS FOR INTERMITTENT INCIDENT", EC-155.	
▶	**INSPECTION END**

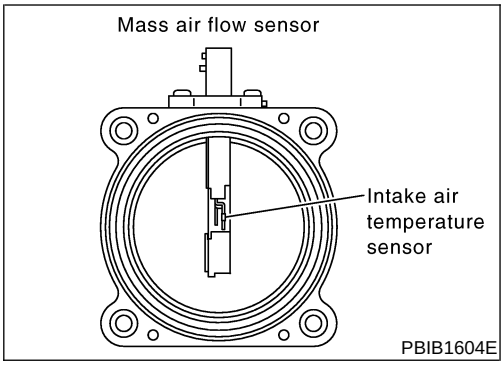

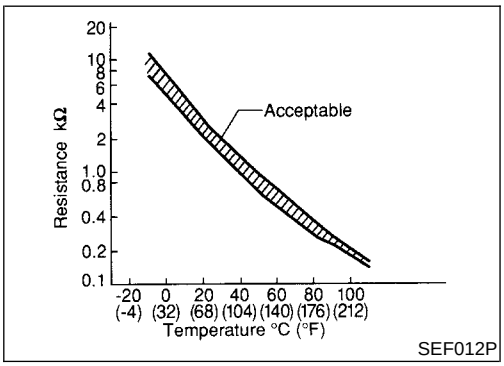

Component Description

NAEC1404

The intake air temperature sensor is mounted to the air duct housing. The sensor detects intake air temperature and transmits a signal to the ECM.

The temperature sensing unit uses a thermistor which is sensitive to the change in temperature. Electrical resistance of the thermistor decreases in response to the temperature rise.

<Reference data>

Intake air temperature °C (°F)	Voltage* V	Resistance kΩ
25 (77)	3.32	1.9 - 2.1

*: This data is reference value and is measured between ECM terminal 34 (Intake air temperature sensor) and ground.

CAUTION:

Do not use ECM ground terminals when measuring input/output voltage. Doing so may result in damage to the ECM's transistor. Use a ground other than ECM terminals, such as the ground.

On Board Diagnosis Logic

NAEC1405

DTC No.	Trouble diagnosis name	DTC Detecting Condition	Possible Cause
P0112 0112	Intake air temperature sensor circuit low input	An excessively low voltage from the sensor is sent to ECM.	• Harness or connectors (The sensor circuit is open or shorted.) • Intake air temperature sensor
P0113 0113	Intake air temperature sensor circuit high input	An excessively high voltage from the sensor is sent to ECM.	

DTC Confirmation Procedure

NAEC1406

NOTE:

If DTC Confirmation Procedure has been previously conducted, always turn ignition switch OFF and wait at least 10 seconds before conducting the next test.

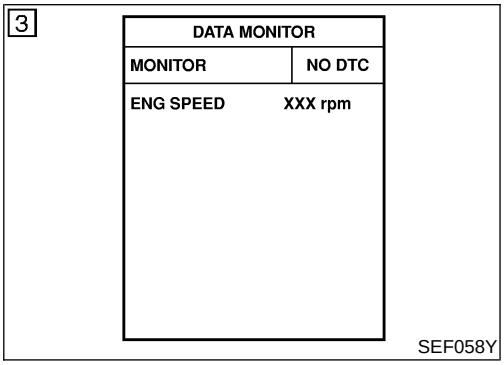

WITH CONSULT-II

NAEC1406S01

1) Turn ignition switch ON.
2) Select "DATA MONITOR" mode with CONSULT-II.
3) Wait at least 5 seconds.
4) If 1st trip DTC is detected, go to "Diagnostic Procedure", EC-202.

WITH GST

NAEC1406S02

Follow the procedure "With CONSULT-II" above.

Wiring Diagram

NAEC1407

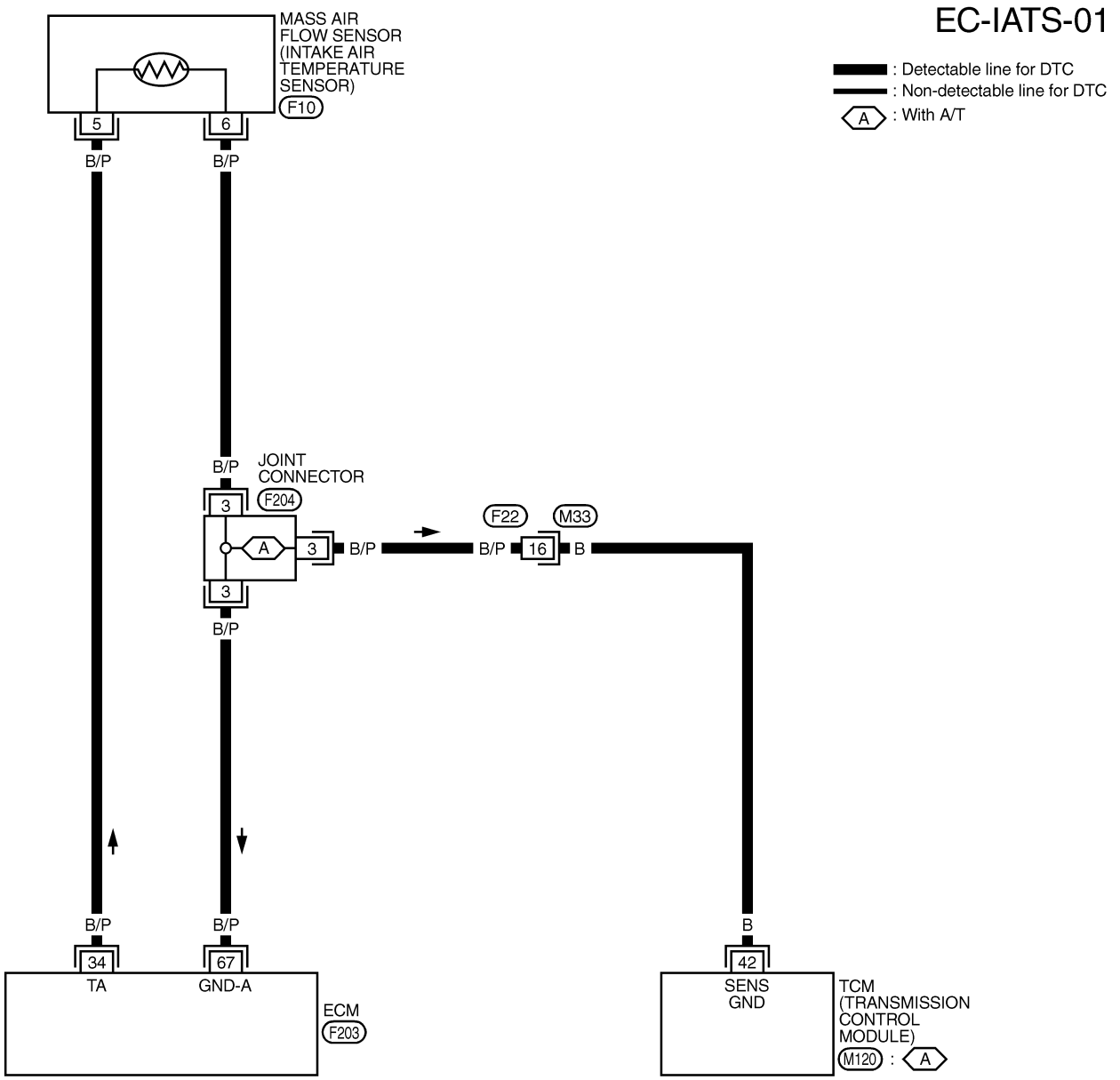

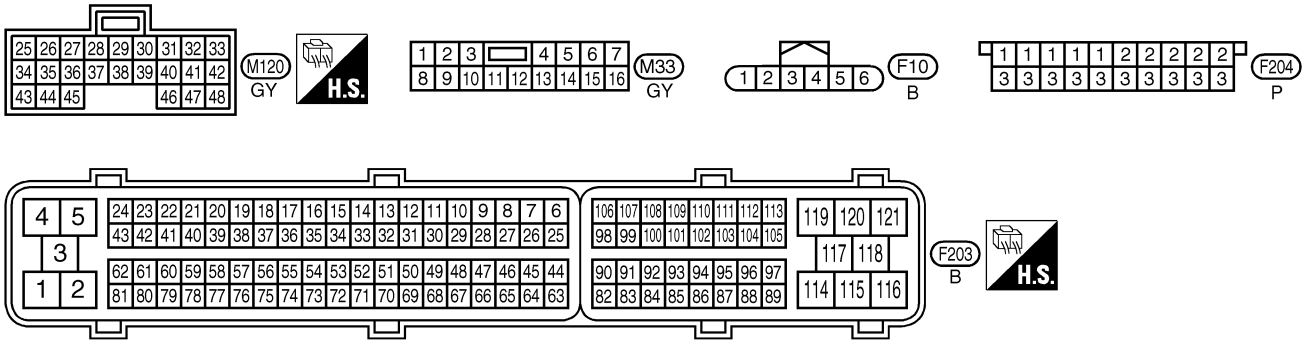

MEC666E

Diagnostic Procedure

NAEC1408

1	CHECK GROUND CONNECTIONS

1. Turn ignition switch OFF.
2. Loosen and retighten three ground screws on the body.
   Refer to “Ground Inspection”, EC-165.

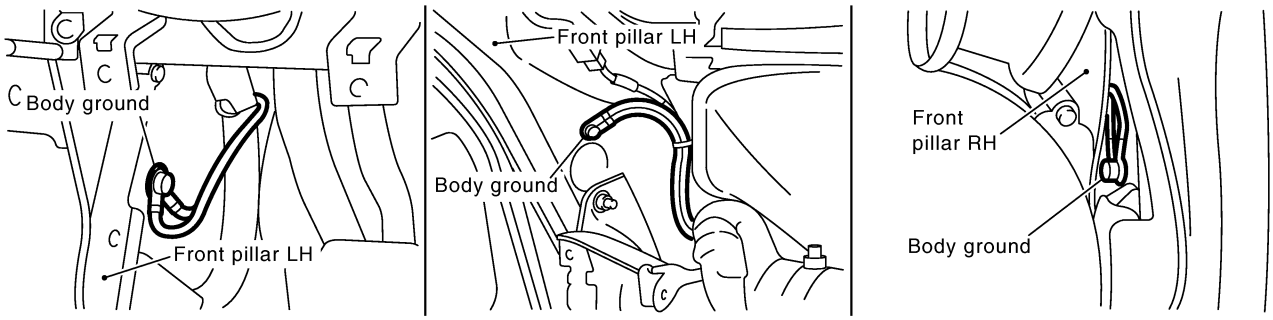

SEC997D

OK or NG

OK	▶	GO TO 2.
NG	▶	Repair or replace ground connections.

2	CHECK INTAKE AIR TEMPERATURE SENSOR POWER SUPPLY CIRCUIT

1. Disconnect mass air flow sensor (built-in intake air temperature sensor) harness connector.

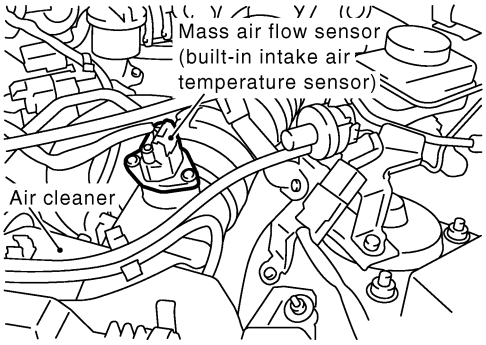

SEF960YA

2. Turn ignition switch ON.
3. Check voltage between terminal 5 and ground.

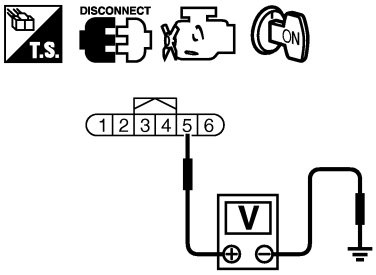

PBIB1169E

Voltage: Approximately 5V

OK or NG

OK	▶	GO TO 3.
NG	▶	Repair harness or connectors.

3	CHECK INTAKE AIR TEMPERATURE SENSOR GROUND CIRCUIT FOR OPEN AND SHORT
1. Turn ignition switch OFF. 2. Disconnect ECM harness connector. 3. Disconnect TCM harness connector. 4. Check harness continuity between MAF sensor terminal 6 and ECM terminal 67, TCM terminal 42. Refer to Wiring Diagram. **Continuity should exist.** 5. Also check harness for short to ground and short to power.	
OK or NG	
OK ▶	GO TO 5.
NG ▶	GO TO 4.

4	DETECT MALFUNCTIONING PART
Check the following. ● Harness connectors F22, M33 ● Joint connector ● Harness for open or short between mass air flow sensor and ECM ● Harness for open or short between mass air flow sensor and TCM	
▶	Repair open circuit or short to ground or short to power in harness or connectors.

5	CHECK INTAKE AIR TEMPERATURE SENSOR
Refer to EC-203, "Component Inspection".	
OK or NG	
OK ▶	GO TO 6.
NG ▶	Replace mass air flow sensor (with intake air temperature sensor).

6	CHECK INTERMITTENT INCIDENT
Refer to "TROUBLE DIAGNOSIS FOR INTERMITTENT INCIDENT", EC-155.	
▶	**INSPECTION END**

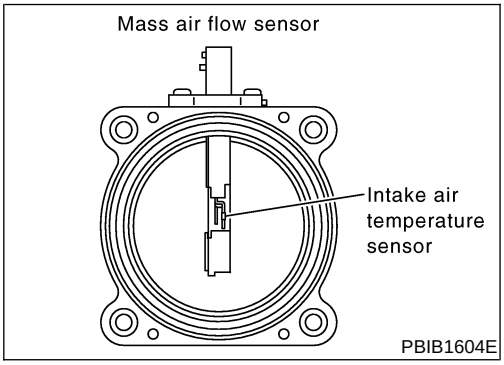

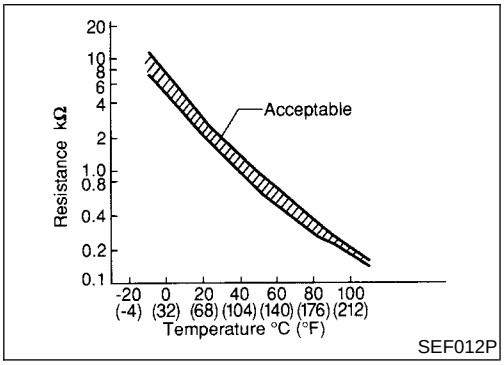

Component Inspection

NAEC1409

INTAKE AIR TEMPERATURE SENSOR

NAEC1409S01

1. Check resistance between intake air temperature sensor terminals 1 and 3 under the following conditions.

Intake air temperature °C (°F)	Resistance kΩ
25 (77)	1.9 - 2.1

2. If NG, replace mass air flow sensor (with intake air temperature sensor).

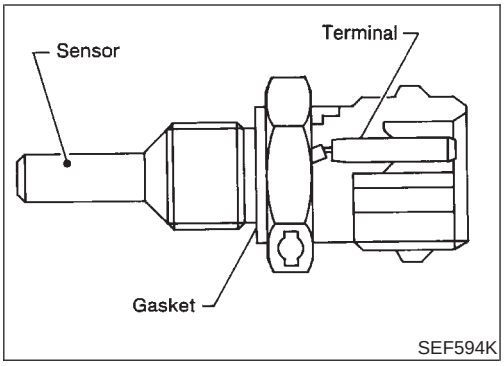

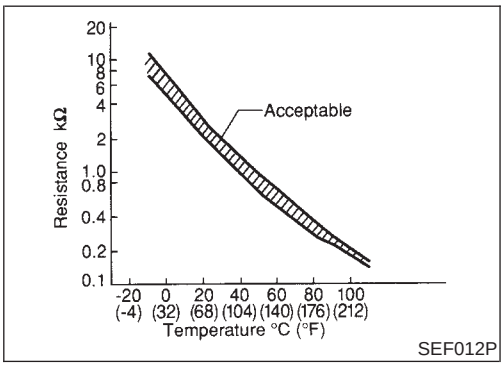

Component Description

NAEC0857

The engine coolant temperature sensor is used to detect the engine coolant temperature. The sensor modifies a voltage signal from the ECM. The modified signal returns to the ECM as the engine coolant temperature input. The sensor uses a thermistor which is sensitive to the change in temperature. The electrical resistance of the thermistor decreases as temperature increases.

<Reference data>

Engine coolant temperature °C (°F)	Voltage* V	Resistance kΩ
20 (68)	3.5	2.1 - 2.9
50 (122)	2.2	0.68 - 1.00
90 (194)	0.9	0.236 - 0.260

*: This data is reference value and is measured between ECM terminal 73 (Engine coolant temperature sensor) and ground.

CAUTION:

Do not use ECM ground terminals when measuring input/output voltage. Doing so may result in damage to the ECM's transistor. Use a ground other than ECM terminals, such as the ground.

On Board Diagnosis Logic

NAEC0858

These self-diagnoses have the one trip detection logic.

DTC No.	Trouble diagnosis name	DTC Detecting Condition	Possible Cause
P0117 0117	Engine coolant temperature sensor circuit low input	An excessively low voltage from the sensor is sent to ECM.	• Harness or connectors (The sensor circuit is open or shorted.) • Engine coolant temperature sensor
P0118 0118	Engine coolant temperature sensor circuit high input	An excessively high voltage from the sensor is sent to ECM.	

FAIL-SAFE MODE

NAEC0858S01

When this malfunction is detected, the ECM enters fail-safe mode and the MIL lights up.

Detected items	Engine operating condition in fail-safe mode	
Engine coolant temperature sensor circuit	Engine coolant temperature will be determined by ECM based on the time after turning ignition switch ON or START. CONSULT-II displays the engine coolant temperature decided by ECM.	
	Condition	Engine coolant temperature decided (CONSULT-II display)
	Just as ignition switch is turned ON or Start	40°C (104°F)
	More than approx. 4 minutes after ignition ON or Start	80°C (176°F)
	Except as shown above	40 - 80°C (104 - 176°F) (Depends on the time)
	When the fail-safe system for engine coolant temperature is activated, the cooling fan operates while engine is running.	

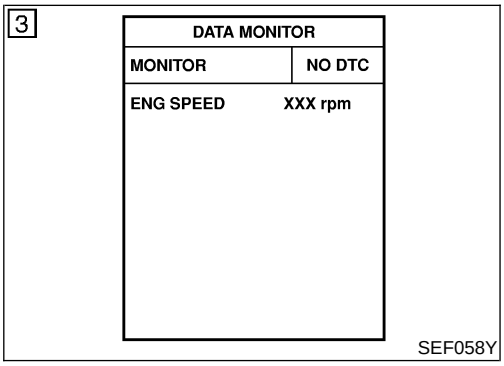

DTC Confirmation Procedure

NAEC0859

NOTE:
If DTC Confirmation Procedure has been previously conducted, always turn ignition switch OFF and wait at least 10 seconds before conducting the next test.

WITH CONSULT-II

NAEC0859S01

1) Turn ignition switch ON.
2) Select "DATA MONITOR" mode with CONSULT-II.
3) Wait at least 5 seconds.
4) If DTC is detected, go to "Diagnostic Procedure", EC-207.

WITH GST

NAEC0859S02

Follow the procedure "WITH CONSULT-II" above.

Wiring Diagram

NAEC0860

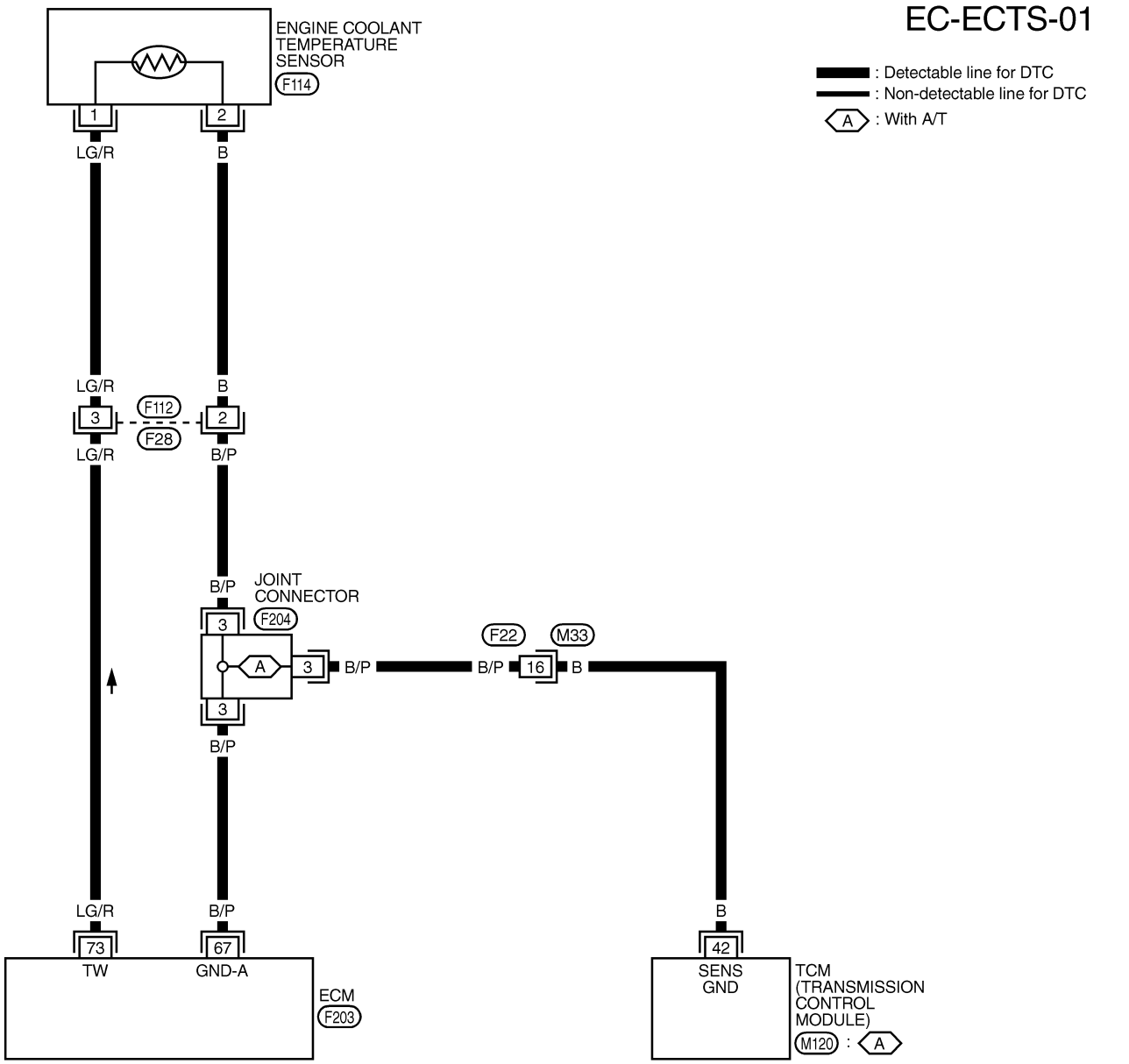

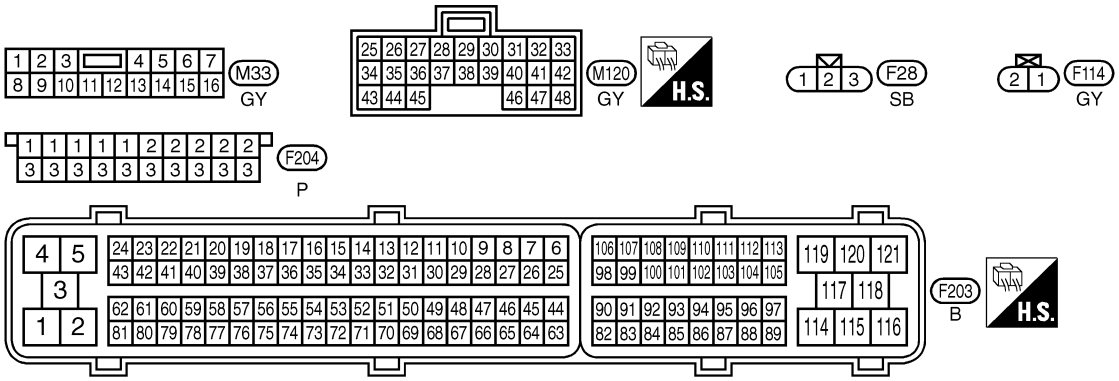

MEC084E

Diagnostic Procedure

NAEC0861

1	CHECK GROUND CONNECTIONS

1. Turn ignition switch OFF.
2. Loosen and retighten three ground screws on the body.
   Refer to “Ground Inspection”, EC-165.

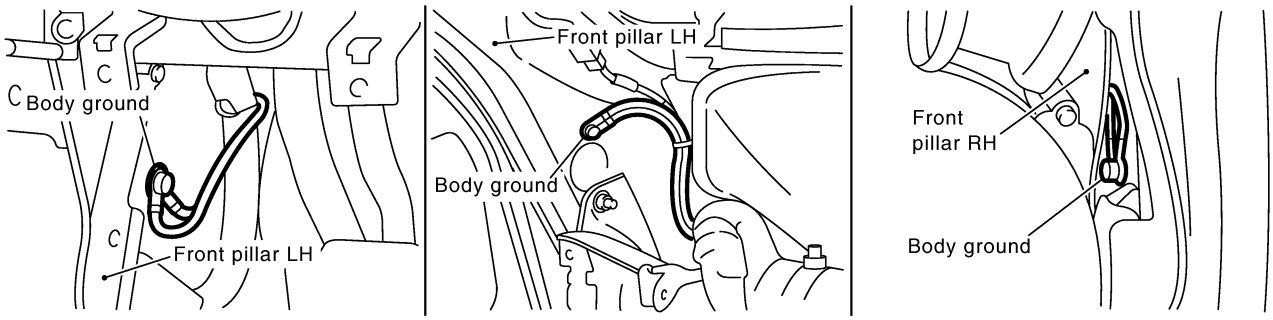

SEC997D

OK or NG

OK	▶	GO TO 2.
NG	▶	Repair or replace ground connections.

2	CHECK ECT SENSOR POWER SUPPLY CIRCUIT

1. Disconnect engine coolant temperature (ECT) sensor connector.

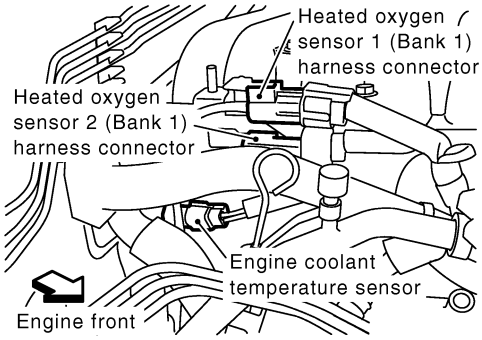

SEC426D

2. Turn ignition switch ON.
3. Check voltage between ECT sensor connector terminal 1 and ground with CONSULT-II or tester.

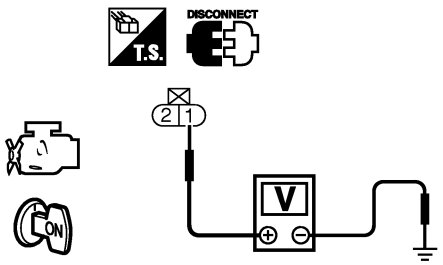

Voltage: Approximately 5V

SEC106D

OK or NG

OK	▶	GO TO 4.
NG	▶	GO TO 3.

3	DETECT MALFUNCTIONING PART
Check the following. ● Harness connectors F112, F28 ● Harness for open or short between ECM and engine coolant temperature sensor	
▶	Repair harness or connectors.

4	CHECK ECT SENSOR GROUND CIRCUIT FOR OPEN AND CIRCUIT
1. Turn ignition switch OFF. 2. Disconnect ECM harness connector. 3. Disconnect TCM harness connector. 4. Check harness continuity between ECT sensor terminal 2 and ECM terminal 67, TCM terminal 42. Refer to Wiring Diagram. **Continuity should exist.** 5. Also check harness for short to ground and short to power.	
OK or NG	
OK ▶	GO TO 6.
NG ▶	GO TO 5.

5	DETECT MALFUNCTIONING PART
Check the following. ● Harness connectors F112, F28 ● Joint connector F204 ● Harness for open between ECM and engine coolant temperature sensor ● Harness for open between TCM and engine coolant temperature sensor	
▶	Repair open circuit or short to ground or short to power in harness or connectors.

6	CHECK ENGINE COOLANT TEMPERATURE SENSOR
Check resistance between engine coolant temperature sensor terminals 1 and 2 as shown in the figure.	

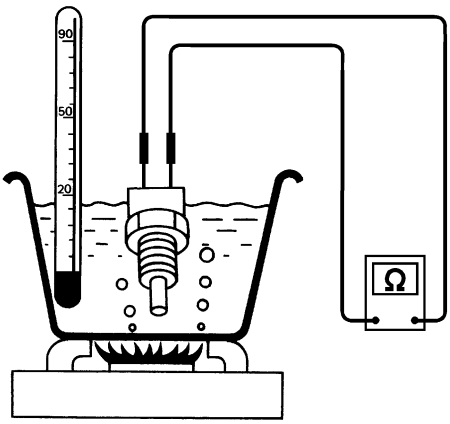

<Reference data>

Temperature °C (°F)	Resistance kΩ
20 (68)	2.1 - 2.9
50 (122)	0.68 - 1.00
90 (194)	0.236 - 0.260

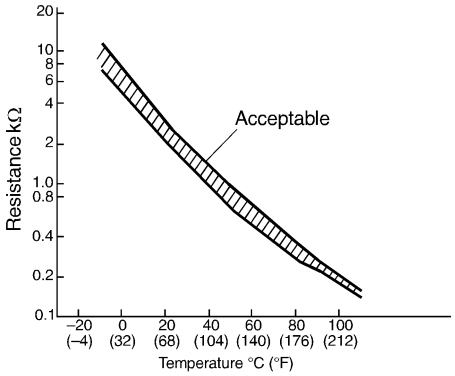

SEF304X

OK or NG	
OK ▶	GO TO 7.
NG ▶	Replace engine coolant temperature sensor.

7	CHECK INTERMITTENT INCIDENT
Refer to "TROUBLE DIAGNOSIS FOR INTERMITTENT INCIDENT", EC-155.	
▶	INSPECTION END

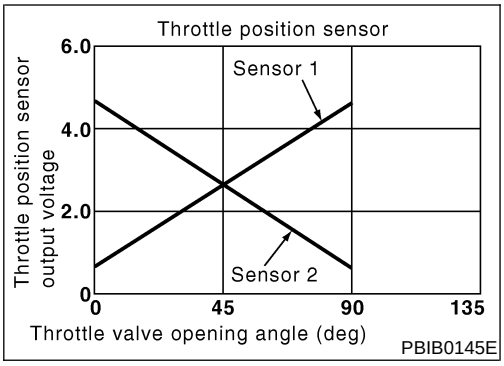

Component Description

=NAEC1194

Electric throttle control actuator consists of throttle control motor, throttle position sensor, etc. The throttle position sensor responds to the throttle valve movement.

The throttle position sensor has the two sensors. These sensors are a kind of potentiometers which transform the throttle valve position into output voltage, and emit the voltage signal to the ECM. In addition, these sensors detect the opening and closing speed of the throttle valve and feed the voltage signals to the ECM. The ECM judges the current opening angle of the throttle valve from these signals and the ECM controls the throttle control motor to make the throttle valve opening angle properly in response to driving condition.

CONSULT-II Reference Value in Data Monitor Mode

NAEC1195

Specification data are reference values.

MONITOR ITEM	CONDITION		SPECIFICATION
THRTL SEN2*	• Ignition switch: ON (Engine stopped) • Shift lever: D (A/T model) 1st (M/T model)	Accelerator pedal: Fully released	More than 0.36V
		Accelerator pedal: Fully depressed	Less than 4.75V

*: Throttle position sensor 2 signal is converted by ECM internally. Thus, it differs from ECM terminal voltage signal.

ECM Terminals and Reference Value

NAEC1201

Specification data are reference values and are measured between each terminal and ground.

CAUTION:

Do not use ECM ground terminals when measuring input/output voltage. Doing so may result in damage to the ECM's transistor. Use a ground other than ECM terminals, such as the ground.

TERMINAL NO.	WIRE COLOR	ITEM	CONDITION	DATA (DC Voltage)
47	L	Sensor power supply	**[Ignition switch ON]**	Approximately 5V
50	BR	Throttle position sensor 1	**[Ignition switch ON]** • Engine stopped • Shift lever position is D (A/T models) • Shift lever position is 1st (M/T models) • Accelerator pedal fully released	More than 0.36V
			[Ignition switch ON] • Engine stopped • Shift lever position is D (A/T models) • Shift lever position is 1st (M/T models) • Accelerator pedal fully depressed	Less than 4.75V

TERMINAL NO.	WIRE COLOR	ITEM	CONDITION	DATA (DC Voltage)
66	BR/Y	Sensor ground	**[Engine is running]** ● **Warm-up condition** ● Idle speed	Approximately 0V
69	BR/W	Throttle position sensor 2	**[Ignition switch ON]** ● Engine stopped ● Shift lever position is D (A/T models) ● Shift lever position is 1st (M/T models) ● Accelerator pedal fully released	Less than 4.75V
			[Ignition switch ON] ● Engine stopped ● Shift lever position is D (A/T models) ● Shift lever position is 1st (M/T models) ● Accelerator pedal fully depressed	More than 0.36V
91	W/R	Sensor power supply (APP sensor 2)	**[Ignition switch ON]**	Approximately 5V

On Board Diagnosis Logic

NAEC1196

These self-diagnoses have the one trip detection logic.

DTC No.	Trouble diagnosis name	DTC Detecting Condition	Possible Cause
P0122 0122	Throttle position sensor 2 circuit low input	An excessively low voltage from the TP sensor 2 is sent to ECM.	● Harness or connectors (The TP sensor 2 circuit is open or shorted.) (APP sensor 2 circuit is shorted.) ● Electric throttle control actuator (TP sensor 2) ● Accelerator pedal position sensor
P0123 0123	Throttle position sensor 2 circuit high input	An excessively high voltage from the TP sensor 2 is sent to ECM.	

FAIL-SAFE MODE

NAEC1196S01

When the malfunction is detected, ECM enters fail-safe mode and the MIL lights up.

Engine operation condition in fail-safe mode
The ECM controls the electric throttle control actuator in regulating the throttle opening in order for the idle position to be within +10 degrees. The ECM regulates the opening speed of the throttle valve to be slower than the normal condition. So, the acceleration will be poor.

DTC Confirmation Procedure

NAEC1197

NOTE:

If DTC Confirmation Procedure has been previously conducted, always turn ignition switch OFF and wait at least 10 seconds before conducting the next test.

TESTING CONDITION:

Before performing the following procedure, confirm that battery voltage is more than 10V at idle.

DATA MONITOR	
MONITOR	NO DTC
ENG SPEED	XXX rpm

SEF058Y

With CONSULT-II

1) Turn ignition switch ON.
2) Select "DATA MONITOR" mode with CONSULT-II.
3) Start engine and let it idle for 1 second.
4) If DTC is detected, go to "Diagnostic Procedure", EC-214.

With GST

Follow the procedure "With CONSULT-II" above.

Wiring Diagram

NAEC1198

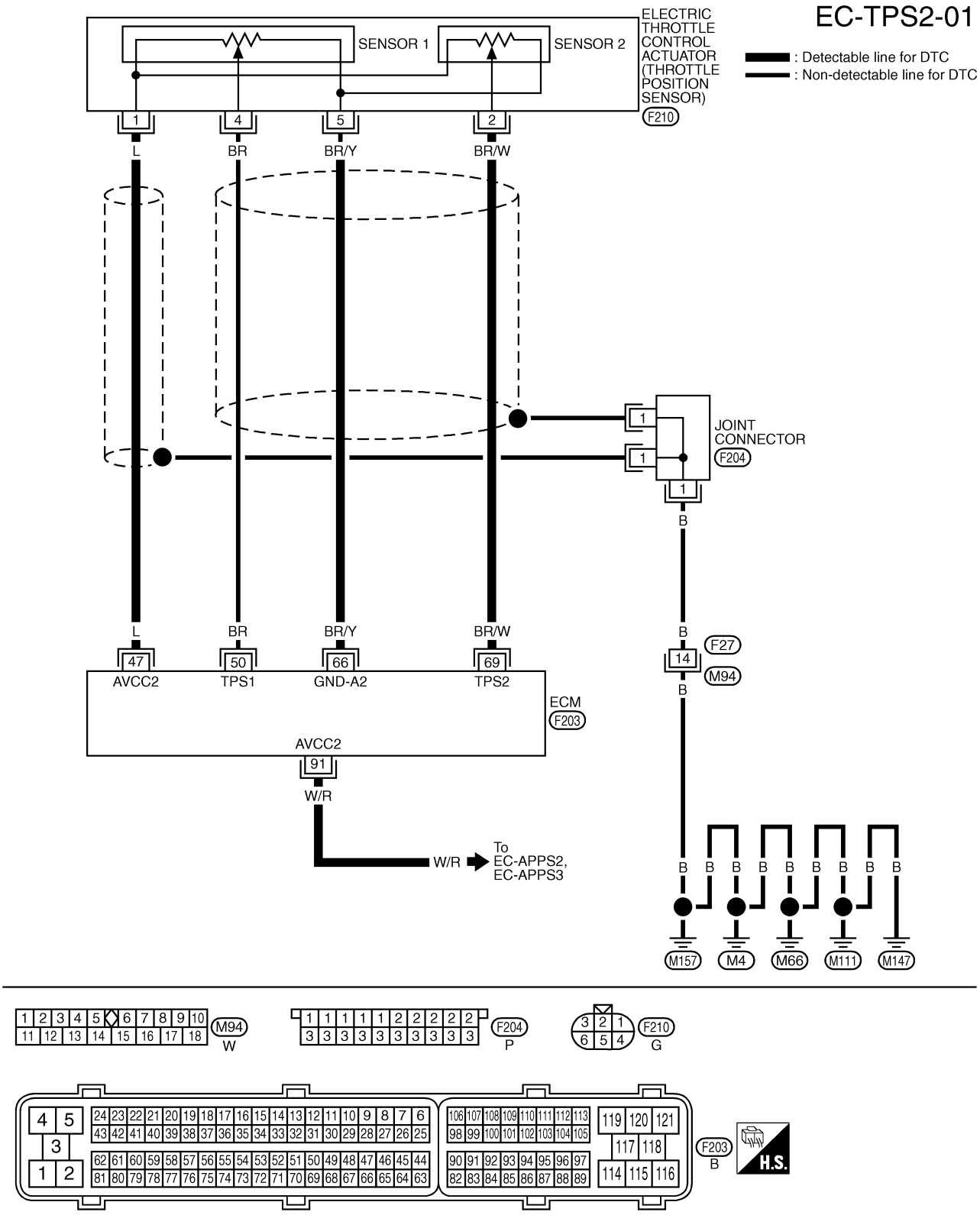

MEC744E

Diagnostic Procedure

NAEC1199

1	CHECK GROUND CONNECTIONS

1. Turn ignition switch OFF.
2. Loosen and retighten three ground screws on the body.
   Refer to “Ground Inspection”, EC-165.

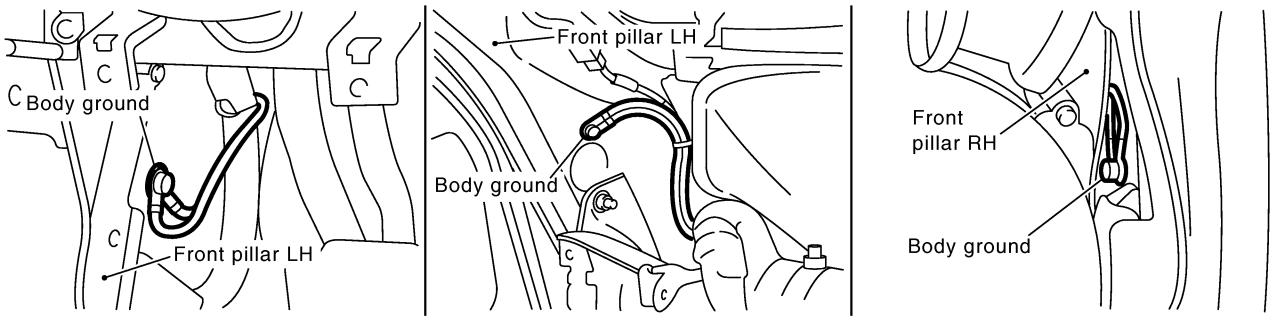

SEC997D

OK or NG

OK	▶	GO TO 2.
NG	▶	Repair or replace ground connections.

2	CHECK THROTTLE POSITION SENSOR 2 POWER SUPPLY CIRCUIT-I

1. Disconnect electric throttle control actuator harness connector.
2. Turn ignition switch ON.

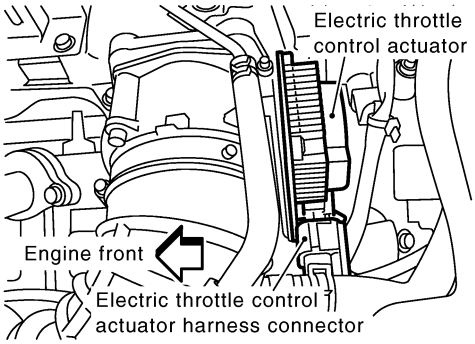

SEC433D

3. Check voltage between electric throttle control actuator terminal 1 and ground with CONSULT-II or tester.

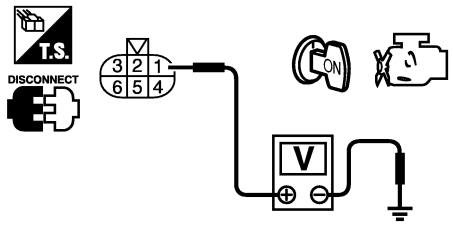

PBIB0082E

Voltage: Approximately 5V

OK or NG

OK	▶	GO TO 7.
NG	▶	GO TO 3.

3	CHECK THROTTLE POSITION SENSOR 2 POWER SUPPLY CIRCUIT-II
1. Turn ignition switch OFF. 2. Disconnect ECM harness connector. 3. Check harness continuity between electric throttle control actuator terminal 1 and ECM terminal 47. Refer to Wiring Diagram. **Continuity should exist.**	
OK or NG	
OK ▶	GO TO 4.
NG ▶	Repair or replace open circuit.

4	CHECK THROTTLE POSITION SENSOR 2 POWER SUPPLY CIRCUIT-III
Check harness for short to power and short to ground, between the following terminals. ● ECM terminal 47 and electric throttle control actuator terminal 1. Refer to "Wiring Diagram", EC-693. ● ECM terminal 91 and APP sensor terminal 10. Refer to "Wiring Diagram", EC-685.	
OK or NG	
OK ▶	GO TO 5.
NG ▶	Repair short to ground or short to power in harness or connectors.

5	CHECK APP SENSOR
Refer to "Component Inspection", EC-689.	
OK or NG	
OK ▶	GO TO 11.
NG ▶	GO TO 6.

6	REPLACE ACCELERATOR PEDAL ASSEMBLY
1. Replace accelerator pedal assembly. 2. Perform "Accelerator Pedal Released Position Learning", EC-73. 3. Perform "Throttle Valve Closed Position Learning", EC-73. 4. Perform "Idle Air Volume Learning", EC-73.	
▶	**INSPECTION END**

7	CHECK THROTTLE POSITION SENSOR 2 GROUND CIRCUIT FOR OPEN AND SHORT
1. Turn ignition switch OFF. 2. Disconnect ECM harness connector. 3. Check harness continuity between electric throttle control actuator terminal 5 and ECM terminal 66. Refer to Wiring Diagram. **Continuity should exist.** 4. Also check harness for short to ground and short to power.	
OK or NG	
OK ▶	GO TO 8.
NG ▶	Repair open circuit or short to ground or short to power in harness or connectors.

8	CHECK THROTTLE POSITION SENSOR 2 INPUT SIGNAL CIRCUIT FOR OPEN AND SHORT	
1. Check harness continuity between ECM terminal 69 and electric throttle control actuator terminal 2. Refer to Wiring Diagram. **Continuity should exist.** 2. Also check harness for short to ground and short to power.		
	OK or NG	
OK	▶	GO TO 9.
NG	▶	Repair open circuit or short to ground or short to power in harness or connectors.

9	CHECK THROTTLE POSITION SENSOR	
Refer to "Component Inspection", EC-216.		
	OK or NG	
OK	▶	GO TO 11.
NG	▶	GO TO 10.

10	REPLACE ELECTRIC THROTTLE CONTROL ACTUATOR	
1. Replace the electric throttle control actuator. 2. Perform "Throttle Valve Closed Position Learning", EC-73. 3. Perform "Idle Air Volume Learning", EC-73.		
	▶	**INSPECTION END**

11	CHECK INTERMITTENT INCIDENT	
Refer to "TROUBLE DIAGNOSIS FOR INTERMITTENT INCIDENT", EC-155.		
	▶	**INSPECTION END**

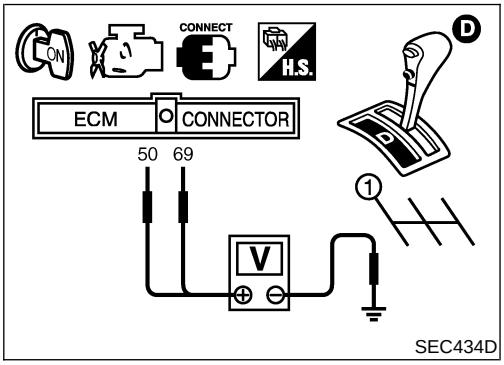

Component Inspection

NAEC1200

THROTTLE POSITION SENSOR

1. Reconnect all harness connectors disconnected.
2. Perform "Throttle Valve Closed Position Learning", EC-73.
3. Turn ignition switch ON.
4. Set selector lever to D position (A/T models) or 1st position (M/T models).
5. Check voltage between ECM terminals 50 (TP sensor 1), 69 (TP sensor 2) and ground under the following conditions.

Terminal	Accelerator pedal	Voltage
50 (Throttle position sensor 1)	Fully released	More than 0.36V
	Fully depressed	Less than 4.75V
69 (Throttle position sensor 2)	Fully released	Less than 4.75V
	Fully depressed	More than 0.36V

6. If NG, replace electric throttle control actuator and go to the next step.
7. Perform "Throttle Valve Closed Position Learning", EC-73.
8. Perform "Idle Air Volume Learning", EC-73.

Description

NAEC0869

NOTE:
If DTC P0125 is displayed with P0117, P0118, first perform the trouble diagnosis for DTC P0117, P0118. Refer to EC-204.

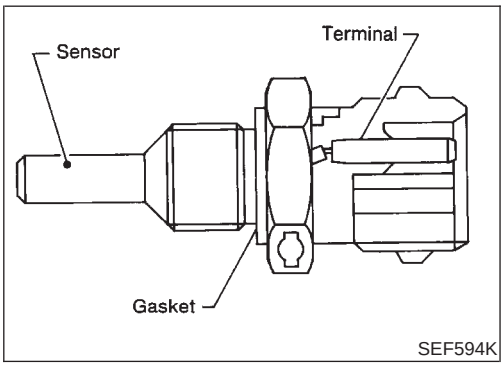

COMPONENT DESCRIPTION

NAEC0869S01

The engine coolant temperature sensor is used to detect the engine coolant temperature. The sensor modifies a voltage signal from the ECM. The modified signal returns to the ECM as the engine coolant temperature input. The sensor uses a thermistor which is sensitive to the change in temperature. The electrical resistance of the thermistor decreases as temperature increases.

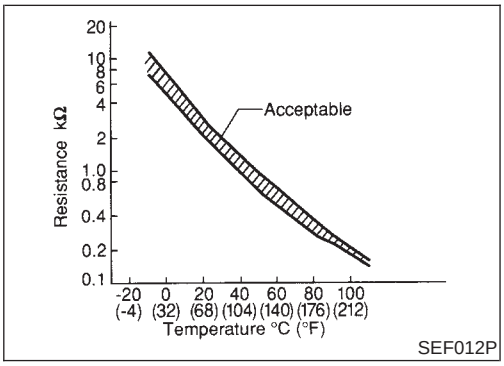

<Reference data>

Engine coolant temperature °C (°F)	Voltage* V	Resistance kΩ
20 (68)	3.5	2.1 - 2.9
50 (122)	2.2	0.68 - 1.00
90 (194)	0.9	0.236 - 0.260

*: This data is reference value and is measured between ECM terminal 73 (Engine coolant temperature sensor) and ground.

CAUTION:
Do not use ECM ground terminals when measuring input/output voltage. Doing so may result in damage to the ECM's transistor. Use a ground other than ECM terminals, such as the ground.

On Board Diagnosis Logic

NAEC0870

DTC No.	Trouble diagnosis name	DTC Detecting Condition	Possible Cause
P0125 0125	Insufficient engine coolant temperature for closed loop fuel control	• Voltage sent to ECM from the sensor is not practical, even when some time has passed after starting the engine. • Engine coolant temperature is insufficient for closed loop fuel control.	• Harness or connectors (High resistance in the circuit) • Engine coolant temperature sensor • Thermostat

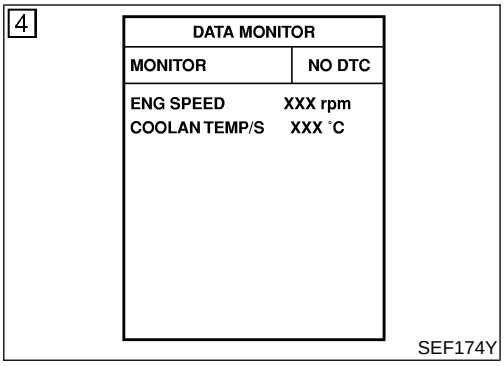

DTC Confirmation Procedure

NAEC0871

CAUTION:

Be careful not to overheat engine.

NOTE:

If DTC Confirmation Procedure has been previously conducted, always turn ignition switch OFF and wait at least 10 seconds before conducting the next test.

WITH CONSULT-II

NAEC0871S01

1) Turn ignition switch ON.
2) Select “DATA MONITOR” mode with CONSULT-II.
3) Check that “COOLAN TEMP/S” is above 10°C (50°F).
   If it is above 10°C (50°F), the test result will be OK.
   If it is below 10°C (50°F), go to following step.
4) Start engine and run it for 65 minutes at idle speed.
   If “COOLAN TEMP/S” increases to more than 10°C (50°F) within 65 minutes, stop engine because the test result will be OK.
5) If 1st trip DTC is detected, go to “Diagnostic Procedure”, EC-218.

WITH GST

NAEC0871S02

Follow the procedure “WITH CONSULT-II” above.

Diagnostic Procedure

NAEC0872

1	CHECK GROUND CONNECTIONS

1. Turn ignition switch OFF.
2. Loosen and retighten three ground screws on the body.
   Refer to “Ground Inspection”, EC-165.

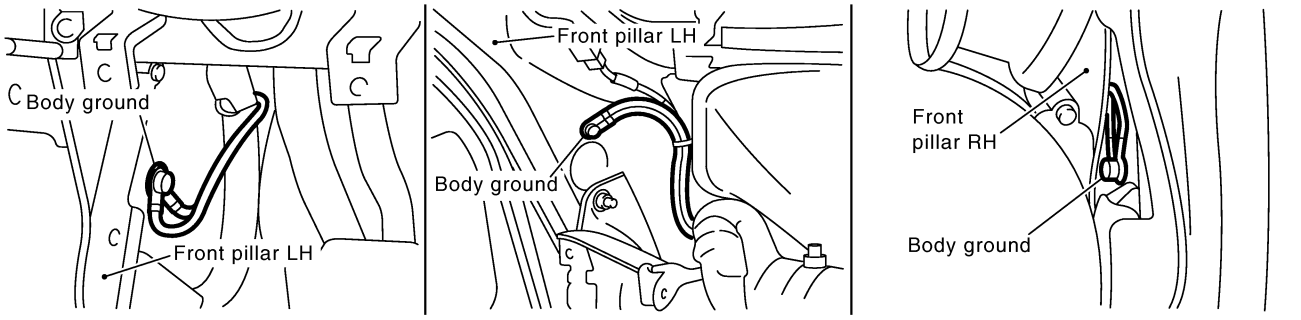

OK or NG

OK	▶	GO TO 2.
NG	▶	Repair or replace ground connections.

2	CHECK ENGINE COOLANT TEMPERATURE SENSOR

Check resistance between engine coolant temperature sensor connector terminals 1 and 2 as shown in the figure.

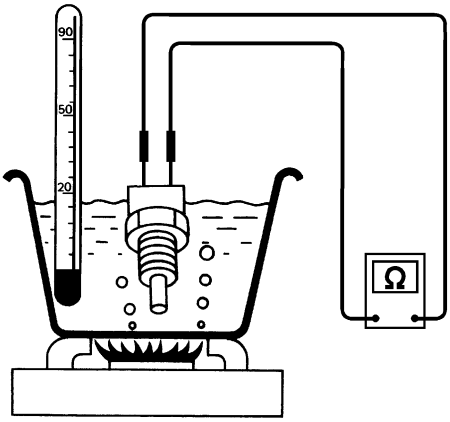

<Reference data>

Temperature °C (°F)	Resistance kΩ
20 (68)	2.1 - 2.9
50 (122)	0.68 - 1.00
90 (194)	0.236 - 0.260

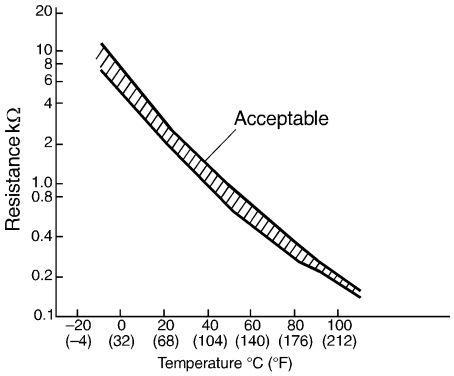

SEF304X

OK or NG

OK	▶	GO TO 3.
NG	▶	Replace engine coolant temperature sensor.

3	CHECK THERMOSTAT OPERATION

When the engine is cold [lower than 70°C (158°F)] condition, grasp lower radiator hose and confirm the engine coolant does not flow.

OK or NG

OK	▶	GO TO 4.
NG	▶	Repair or replace thermostat. Refer to LC-19, "Thermostat".

4	CHECK INTERMITTENT INCIDENT

- Refer to "TROUBLE DIAGNOSIS FOR INTERMITTENT INCIDENT", EC-155.
- Refer to wiring diagram, EC-206.

	▶	**INSPECTION END**

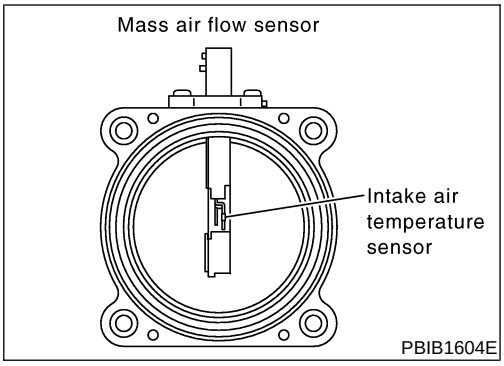

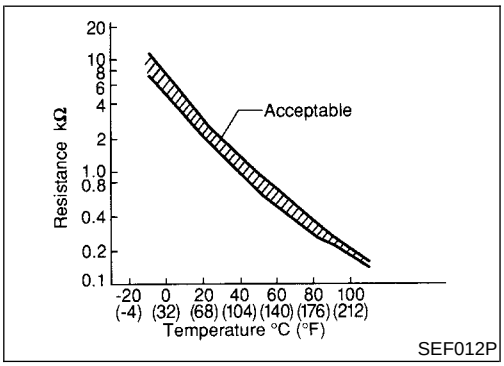

Component Description

NAEC0767

The intake air temperature sensor is mounted to the air duct housing. The sensor detects intake air temperature and transmits a signal to the ECM.

The temperature sensing unit uses a thermistor which is sensitive to the change in temperature. Electrical resistance of the thermistor decreases in response to the temperature rise.

<Reference data>

Intake air temperature °C (°F)	Voltage* V	Resistance kΩ
25 (77)	3.32	1.9 - 2.1

*: This data is reference value and is measured between ECM terminal 34 (Intake air temperature sensor) and ground.

CAUTION:

Do not use ECM ground terminals when measuring input/output voltage. Doing so may result in damage to the ECM's transistor. Use a ground other than ECM terminals, such as the ground.

On Board Diagnosis Logic

NAEC0768

DTC No.	Trouble diagnosis name	DTC Detecting Condition	Possible Cause
P0127 0127	Intake air temperature too high	Rationally incorrect voltage from the sensor is sent to ECM, compared with the voltage signal from engine coolant temperature sensor.	● Harness or connectors (The sensor circuit is open or shorted.) ● Intake air temperature sensor

DTC Confirmation Procedure

NAEC0770

NOTE:

If DTC Confirmation Procedure has been previously conducted, always turn ignition switch OFF and wait at least 10 seconds before conducting the next test.

CAUTION:

Always drive vehicle at a safe speed.

TESTING CONDITION:

This test may be conducted with the drive wheels lifted in the shop or by driving the vehicle. If a road test is expected to be easier, it is unnecessary to lift the vehicle.

5

DATA MONITOR	
MONITOR	NO DTC
ENG SPEED	XXX rpm
COOLAN TEMP/S	XXX °C
VHCL SPEED SE	XXX km/h
B/FUEL SCHDL	XXX msec

SEF189Y

WITH CONSULT-II

NAEC0770S03

1) Wait until engine coolant temperature is less than 90°C (194°F).

a) Turn ignition switch ON.

b) Select "DATA MONITOR" mode with CONSULT-II.

c) Check the engine coolant temperature.

d) If the engine coolant temperature is not less than 90°C (194°F), turn ignition switch OFF and cool down engine.

- Perform the following steps before engine coolant temperature is above 90°C (194°F).

2) Turn ignition switch ON.

3) Select "DATA MONITOR" mode with CONSULT-II.
4) Start engine.
5) Hold vehicle speed at more than 70 km/h (43 MPH) for 100 consecutive seconds.
6) If 1st trip DTC is detected, go to "Diagnostic Procedure", EC-221.

WITH GST

NAEC0770S04

Follow the procedure "With CONSULT-II" above.

Diagnostic Procedure

NAEC0772

1	CHECK GROUND CONNECTIONS

1. Turn ignition switch OFF.
2. Loosen and retighten three ground screws on the body.
   Refer to "Ground Inspection", EC-165.

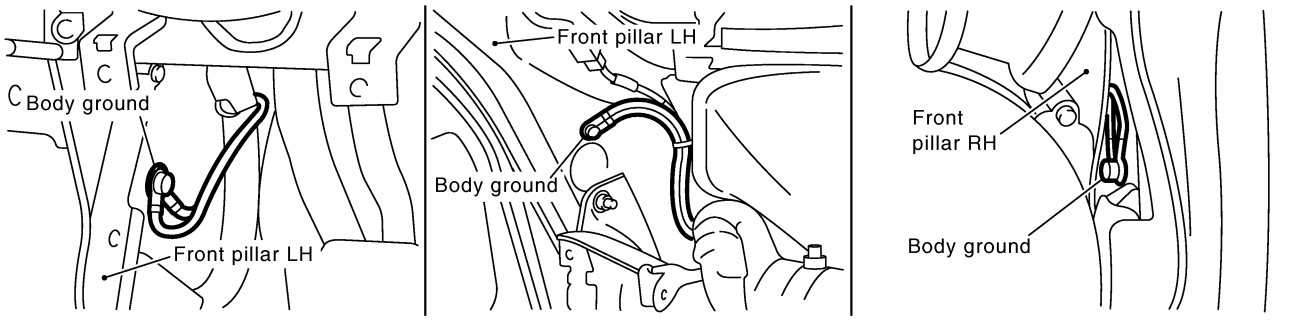

OK or NG

OK	▶	GO TO 2.
NG	▶	Repair or replace ground connections.

2	CHECK INTAKE AIR TEMPERATURE SENSOR

Refer to "Component Inspection", EC-203.

OK or NG

OK	▶	GO TO 3.
NG	▶	Replace mass air flow sensor (with intake air temperature sensor).

3	CHECK INTERMITTENT INCIDENT

- Refer to "TROUBLE DIAGNOSIS FOR INTERMITTENT INCIDENT", EC-155.
- Refer to wiring diagram, EC-201.

	▶	**INSPECTION END**

On Board Diagnosis Logic

NAEC1202

Engine coolant temperature has not risen enough to open the thermostat even though the engine has run long enough.
This is due to a leak in the seal or the thermostat open stuck.

DTC No.	Trouble diagnosis name	DTC Detecting Condition	Possible Cause
P0128 0128	Thermostat function	The engine coolant temperature does not reach to specified temperature even though the engine has run long enough.	• Thermostat • Leakage from sealing portion of thermostat • Engine coolant temperature sensor

DTC Confirmation Procedure

NAEC1203

NOTE:
If DTC Confirmation Procedure has been previously conducted, always turn ignition switch OFF and wait at least 10 seconds before conducting the next test.

TESTING CONDITION:

- **For best results, perform at ambient temperature of –10°C (14°F) or higher.**
- **For best results, perform at engine coolant temperature of –10°C (14°F) to 65°C (149°F).**

WITH CONSULT-II

NAEC1203S01

1) Replace thermostat with new one. Refer to LC-19, “Thermostat”. Use only a genuine NISSAN thermostat as a replacement. If an incorrect thermostat is used, the MIL may come on.
2) Turn ignition switch ON.
3) Select “COOLAN TEMP/S” in “DATA MONITOR” mode with CONSULT-II.
4) Check that the “COOLAN TEMP/S” is above 60°C (140°F).
   If it is below 65°C (149°F), go to following step.
   If it is above 65°C (149°F), cool down the engine to less than 65°C (149°F), then retry from step 1.
5) Drive vehicle for 10 consecutive minutes under the following conditions.

VHCL SPEED SE	80 - 120 km/h (50 - 75 MPH)

If 1st trip DTC is detected, go to “Diagnostic Procedure”, EC-223.

WITH GST

NAEC1203S02

1) Follow the prodedure “WITH CONSULT-II” above.

Diagnostic Procedure

NAEC1204

1	CHECK ENGINE COOLANT TEMPERATURE SENSOR

1. Turn ignition switch OFF.
2. Remove engine coolant temperature sensor.
3. Check resistance between engine coolant temperature sensor terminals under the following conditions.

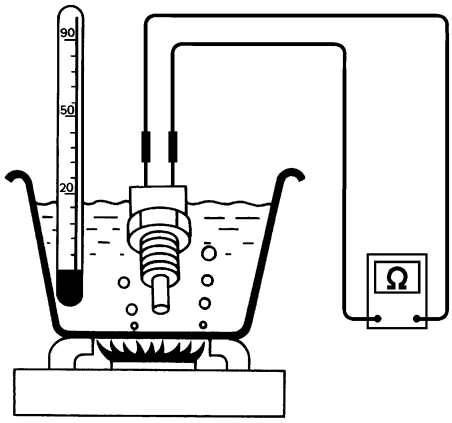

<Reference data>

Temperature °C (°F)	Resistance kΩ
20 (68)	2.1 - 2.9
50 (122)	0.68 - 1.00
90 (194)	0.236 - 0.260

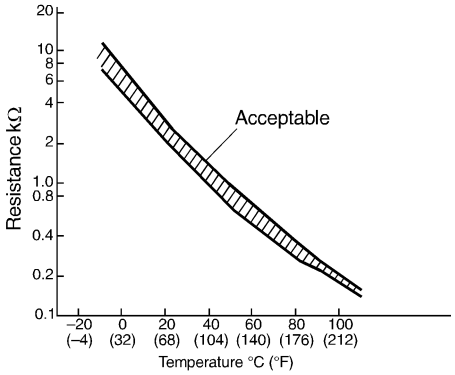

SEF304X

OK or NG

OK	▶	**INSPECTION END**
NG	▶	Replace engine coolant temperature sensor.

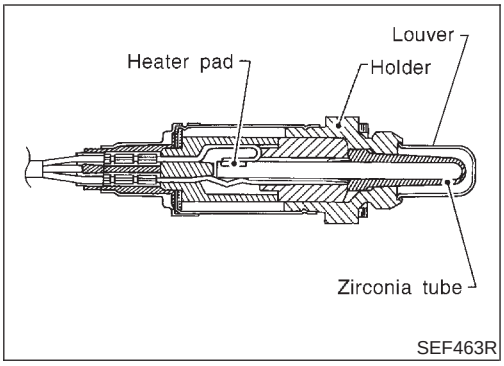

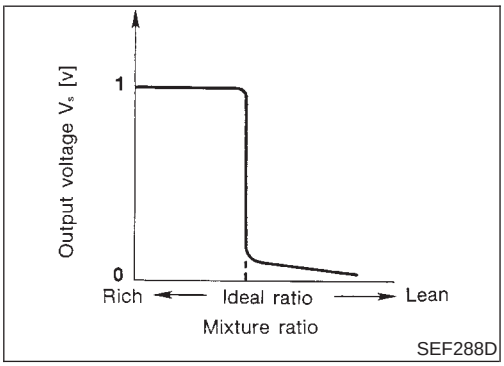

Component Description

NAEC0873

The heated oxygen sensor 1 is placed into the exhaust manifold. It detects the amount of oxygen in the exhaust gas compared to the outside air. The heated oxygen sensor 1 has a closed-end tube made of ceramic zirconia. The zirconia generates voltage from approximately 1V in richer conditions to 0V in leaner conditions. The heated oxygen sensor 1 signal is sent to the ECM. The ECM adjusts the injection pulse duration to achieve the ideal air-fuel ratio. The ideal air-fuel ratio occurs near the radical change from 1V to 0V.

CONSULT-II Reference Value in Data Monitor Mode

NAEC0874

Specification data are reference values.

MONITOR ITEM	CONDITION		SPECIFICATION
HO2S1 (B1) HO2S1 (B2)	● Engine: After warming up	Maintaining engine speed at 2,000 rpm	0 - 0.3V ⟷ Approx. 0.6 - 1.0V
HO2S1 MNTR (B1) HO2S1 MNTR (B2)			LEAN ⟷ RICH Changes more than 5 times during 10 seconds.

ECM Terminals and Reference Value

NAEC0875

Specification data are reference values and are measured between each terminal and ground.

CAUTION:

Do not use ECM ground terminals when measuring input/output voltage. Doing so may result in damage to the ECM's transistor. Use a ground other than ECM terminals, such as the ground.

TERMINAL NO.	WIRE COLOR	ITEM	CONDITION	DATA (DC Voltage)
16	G/B	Heated oxygen sensor 1 (bank 2)	**[Engine is running]** ● **Warm-up condition** ● Engine speed is 2,000 rpm.	0 - Approximately 1.0V (Periodically change)
35	G	Heated oxygen sensor 1 (bank 1)	**[Engine is running]** ● **Warm-up condition** ● Engine speed is 2,000 rpm.	0 - Approximately 1.0V (Periodically change)

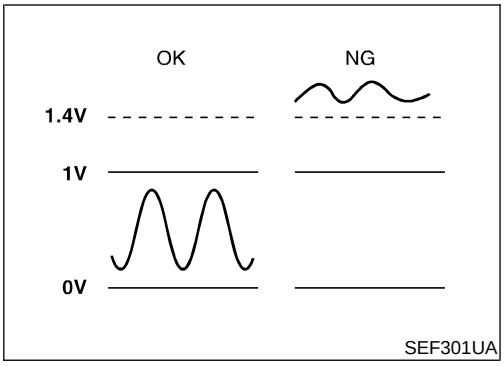

On Board Diagnosis Logic

NAEC0876

To judge the malfunction, the diagnosis checks that the heated oxygen sensor 1 output is not inordinately high.

DTC No.	Trouble diagnosis name	DTC Detecting Condition	Possible Cause
P0132 0132 (Bank 1)	Heated oxygen sensor 1 circuit high voltage	An excessively high voltage from the sensor is sent to ECM.	• Harness or connectors (The sensor circuit is open or shorted.) • Heated oxygen sensor 1
P0152 0152 (Bank 2)			

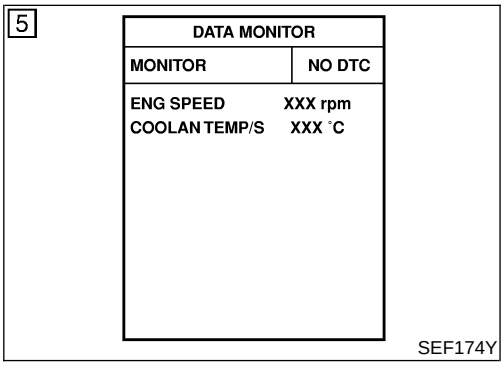

DTC Confirmation Procedure

NAEC0877

NOTE:

If DTC Confirmation Procedure has been previously conducted, always turn ignition switch OFF and wait at least 10 seconds before conducting the next test.

WITH CONSULT-II

NAEC0877S01

1) Start engine and warm it up to normal operating temperature.
2) Turn ignition switch OFF and wait at least 10 seconds.
3) Turn ignition switch ON.
4) Select “DATA MONITOR” mode with CONSULT-II.
5) Restart engine and let it idle for 2 minutes.
6) If 1st trip DTC is detected, go to “Diagnostic Procedure”, EC-228.

WITH GST

NAEC0877S02

Follow the procedure “With CONSULST-II” above.

Wiring Diagram

NAEC0878

BANK 1

NAEC0878S01

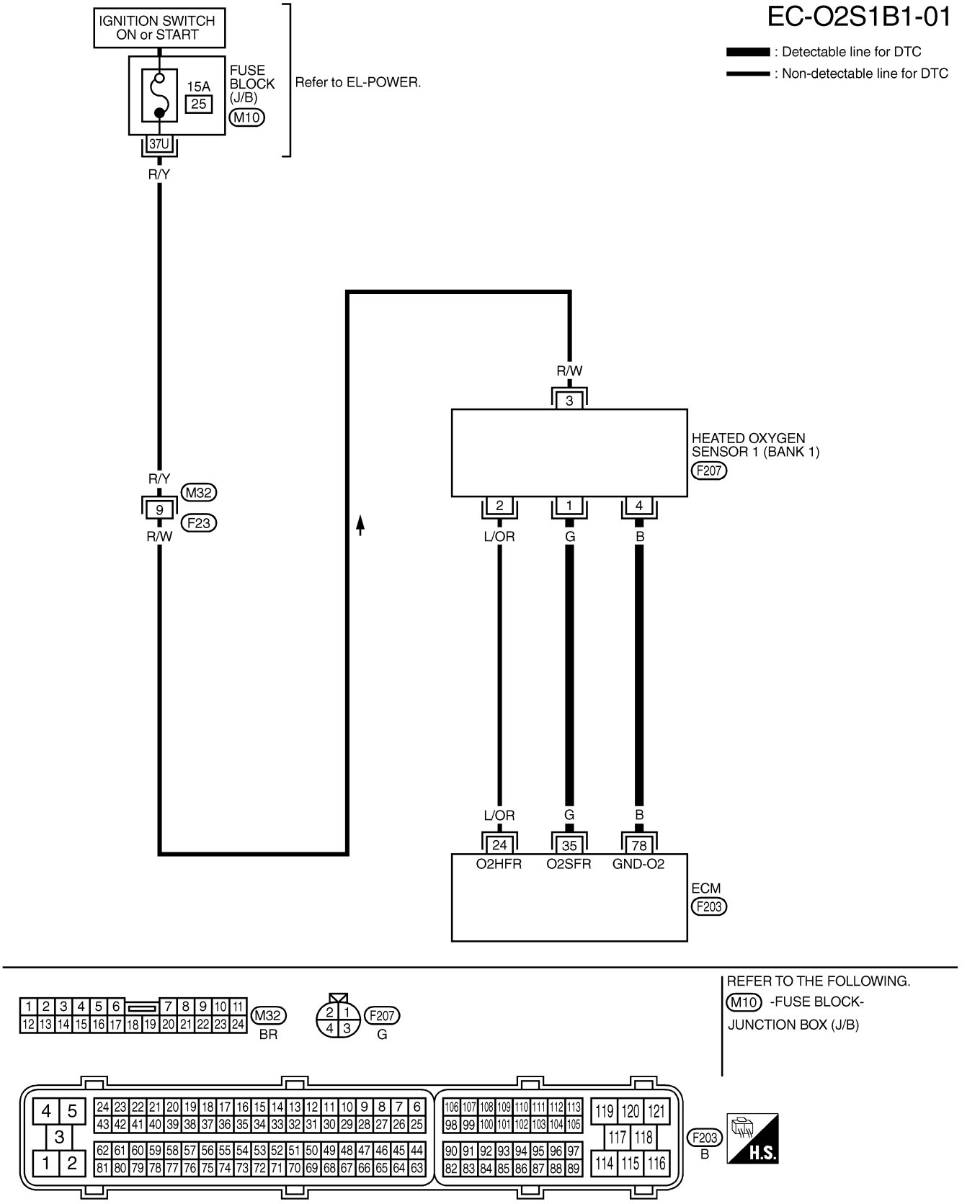

MEC087E

BANK 2

NAEC0878S02

EC-O2S1B2-01

: Detectable line for DTC

: Non-detectable line for DTC

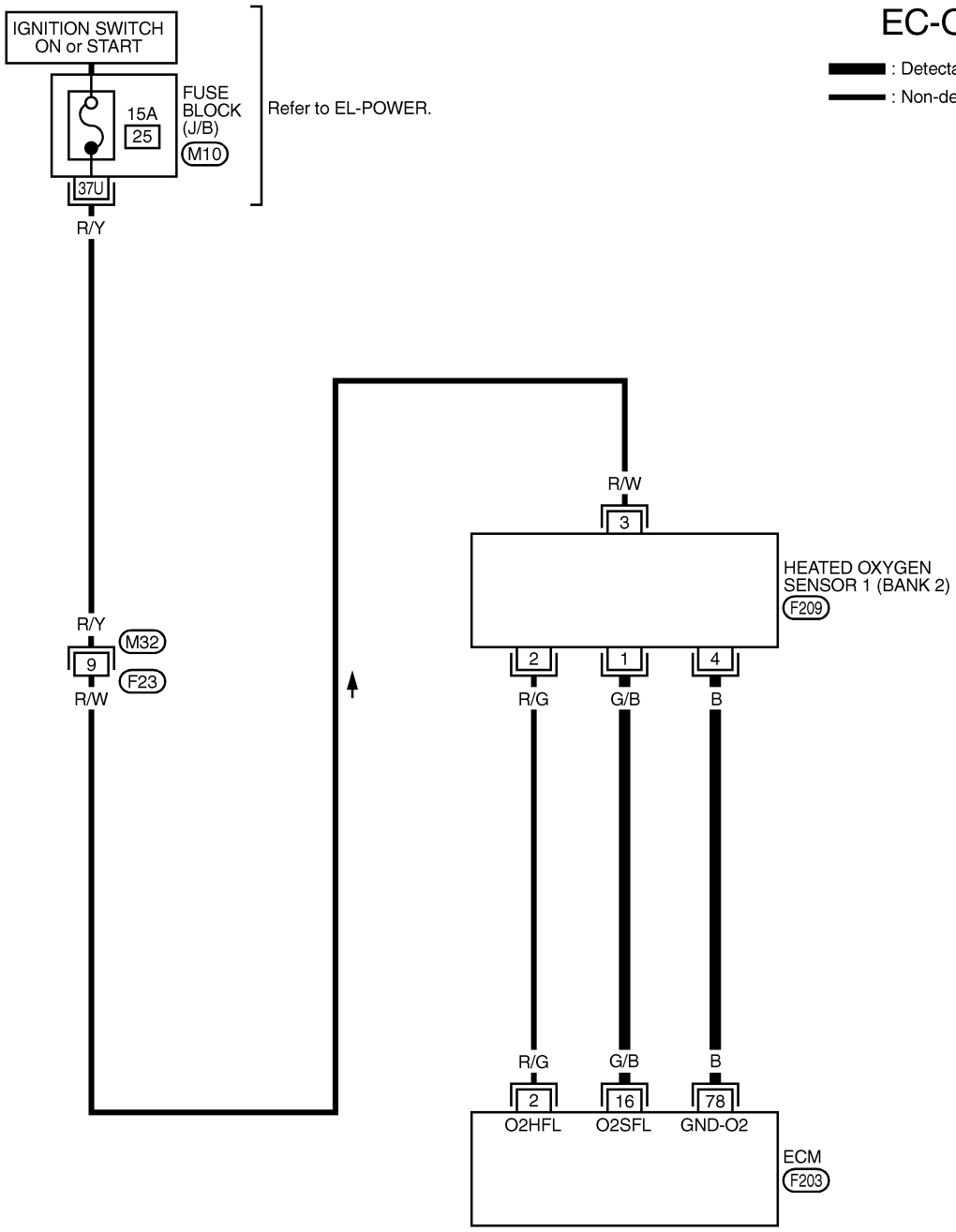

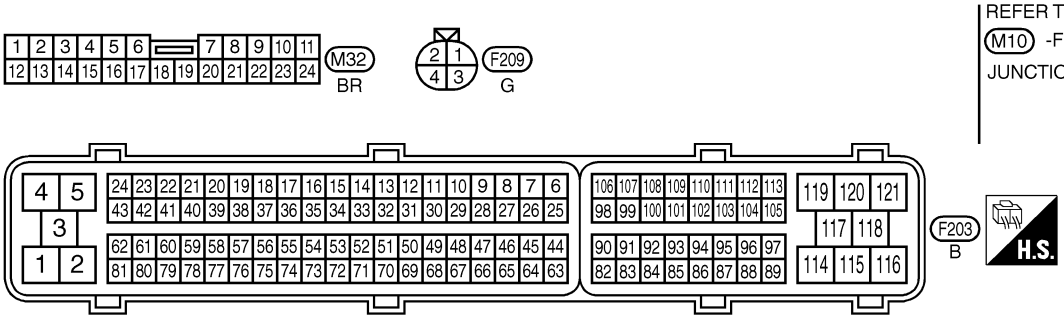

REFER TO THE FOLLOWING.
M10 -FUSE BLOCK-
JUNCTION BOX (J/B)

MEC088E

Diagnostic Procedure

NAEC0879

1	CHECK GROUND CONNECTIONS

1. Turn ignition switch OFF.
2. Loosen and retighten three ground screws on the body.
   Refer to “Ground Inspection”, EC-165.

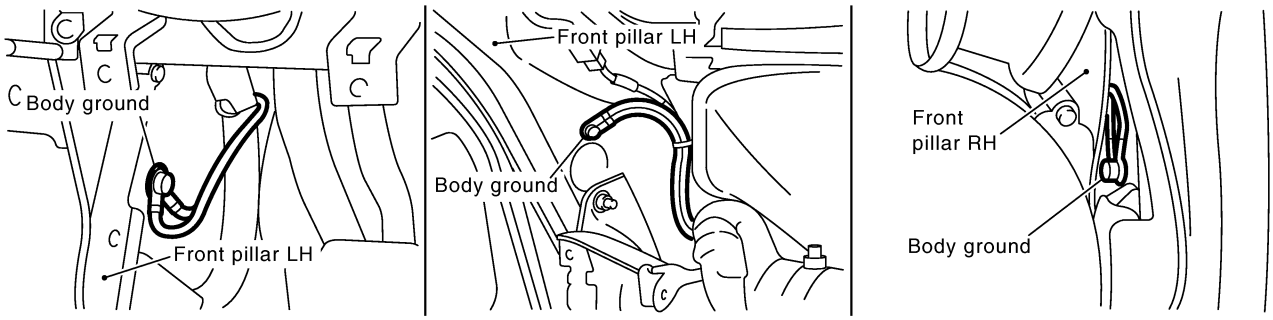

SEC997D

OK or NG

OK	▶	GO TO 2.
NG	▶	Repair or replace ground connections.

2	RETIGHTEN HEATED OXYGEN SENSOR 1

Loosen and retighten corresponding heated oxygen sensor 1.

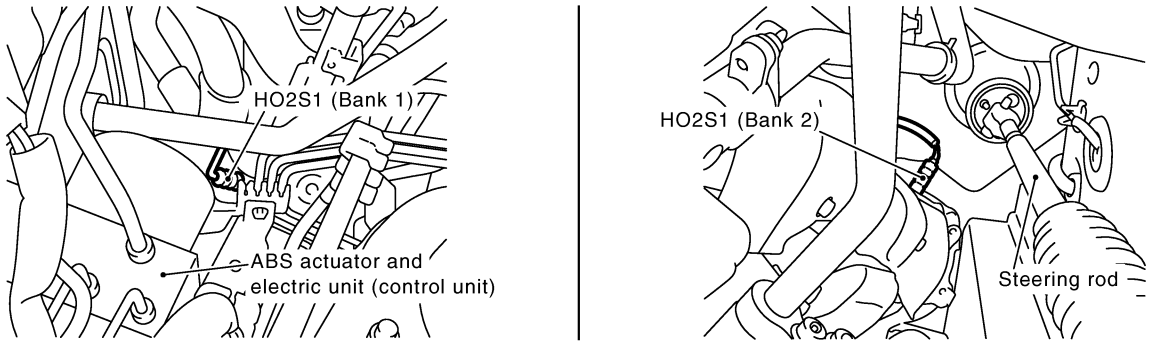

SEC001E

Tightening torque:
40 - 60 N·m (4.1 - 6.1 kg-m, 30 - 44 ft-lb)

	▶	GO TO 3.

3	CHECK HO2S1 GROUND CIRCUIT FOR OPEN AND SHORT

1. Disconnect heated oxygen sensor 1 harness connector.

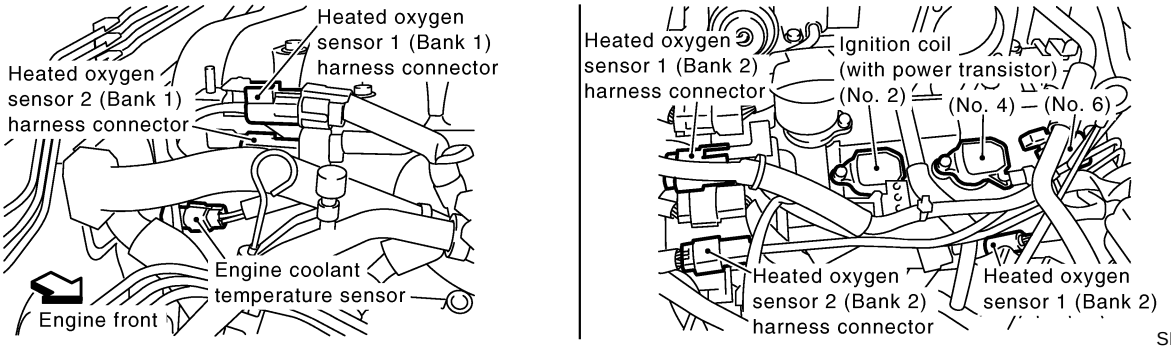

2. Disconnect ECM harness connector.
3. Check harness continuity between HO2S1 terminal 4 and ECM terminal 78.
   Refer to Wiring Diagram.
   Continuity should exist.
4. Also check harness for short to ground and short to power.

OK or NG

OK	▶	GO TO 4.
NG	▶	Repair open circuit or short to ground or short to power in harness or connectors.

4	CHECK HO2S1 INPUT SIGNAL CIRCUIT FOR OPEN AND SHORT

1. Check harness continuity between ECM terminal and HO2S1 terminal as follows.
   Refer to Wiring Diagram.

DTC	Terminals		Bank
	ECM	Sensor	
P0132	35	1	Bank 1
P0152	16	1	Bank 2

MTBL1354

   Continuity should exist.
2. Check harness continuity between the following terminals and ground.
   Refer to Wiring Diagram.

DTC	Terminals		Bank
	ECM	Sensor	
P0132	35	1	Bank 1
P0152	16	1	Bank 2

MTBL1354

   Continuity should not exist.
3. Also check harness for short to ground and short to power.

OK or NG

OK	▶	GO TO 5.
NG	▶	Repair open circuit or short to ground or short to power in harness or connectors.

5	CHECK HO2S1 CONNECTOR FOR WATER
1. Disconnect heated oxygen sensor 1 harness connector. 2. Check connectors for water. **Water should not exist.**	
OK or NG	
OK (With CONSULT-II) ▶	GO TO 6.
OK (Without CONSULT-II) ▶	GO TO 7.
NG ▶	Repair or replace harness or connectors.

6	CHECK HEATED OXYGEN SENSOR 1

With CONSULT-II

1. Start engine and warm it up to normal operating temperature.
2. Select "MANU TRIG" and adjust "TRIGGER POINT" to 100% in "DATA MONITOR" mode with CONSULT-II.
3. Select "HO2S1 (B1)/(B2)" and "HO2S1 MNTR (B1)/(B2)".
4. Hold engine speed at 2,000 rpm under no load during the following steps.
5. Touch "RECORD" on CONSULT-II screen.

DATA MONITOR	
MONITOR	NO DTC
ENG SPEED	XXX rpm
COOLAN TEMP/S	XXX °C
HO2S1 (B1)	XXX V
HO2S2 (B2)	XXX V

SEF967Y

6. Check the following.

- "HO2S1 MNTR (B1)/(B2)" in "DATA MONITOR" mode changes from "RICH" to "LEAN" to "RICH" more than 5 times in 10 seconds.
  5 times (cycles) are counted as shown left:

Bank 1

cycle	1	2	3	4	5
HO2S1 MNTR (B1)	R-L-R-L-R-L-R-L-R-L-R				

Bank 2

cycle	1	2	3	4	5
HO2S1 MNTR (B2)	R-L-R-L-R-L-R-L-R-L-R				

R means HO2S1 MNTR (B1)/(B2) indicates RICH

L means HO2S1 MNTR (B1)/(B2) indicates LEAN

SEF647Y

- "HO2S1 (B1)/(B2)" voltage goes above 0.6V at least once.
- "HO2S1 (B1)/(B2)" voltage goes below 0.3V at least once.
- "HO2S1 (B1)/(B2)" voltage never exceeds 1.0V.

Trigger	ENG SPEED	HO2S1 (B1)
	rpm	V
XXX	XXX	XXX
XXX	XXX	XXX
XXX	XXX	XXX
XXX	XXX	XXX
XXX	XXX	XXX
XXX	XXX	XXX
XXX	XXX	XXX
XXX	XXX	XXX
XXX	XXX	XXX
XXX	XXX	XXX
XXX	XXX	XXX
XXX	XXX	XXX
XXX	XXX	XXX

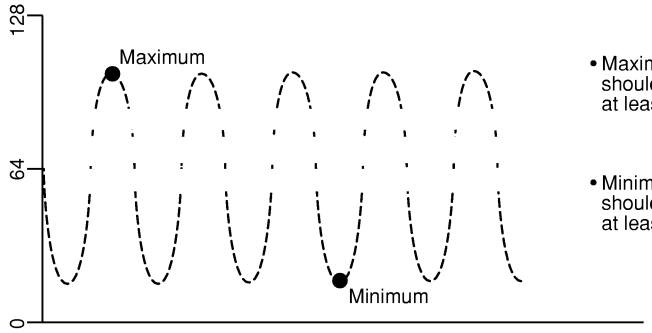

- Maximum voltage should be over 0.6V at least one time.
- Minimum voltage should be below 0.30V at least one time.

SEF648Y

CAUTION:

- **Discard any heated oxygen sensor which has been dropped from a height of more than 0.5 m (19.7 in) onto a hard surface such as a concrete floor; use a new one.**
- **Before installing new oxygen sensor, clean exhaust system threads using Oxygen Sensor Thread Cleaner tool J-43897-18 or J-43897-12 and approved anti-seize lubricant.**

OK or NG

OK	▶	GO TO 8.
NG	▶	Replace malfunctioning heated oxygen sensor 1.

7	CHECK HEATED OXYGEN SENSOR 1

Without CONSULT-II

1. Start engine and warm it up to normal operating temperature.
2. Set voltmeter probes between ECM terminal 35 (HO2S1 bank 1 signal) or 16 (HO2S1 bank 2 signal) and ground.
3. Check the following with engine speed held at 2,000 rpm constant under no load.

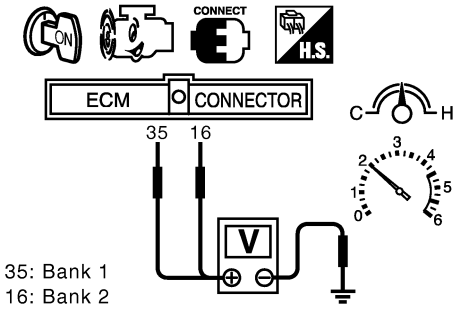

SEC430D

- The voltage fluctuates between 0 to 0.3V and 0.6 to 1.0V more than 5 times within 10 seconds.
- The maximum voltage is over 0.6V at least one time.
- The minimum voltage is below 0.3V at least one time.
- The voltage never exceeds 1.0V.
  1 time: 0 - 0.3V → 0.6 - 1.0V → 0 - 0.3V
  2 times: 0 - 0.3V → 0.6 - 1.0V → 0 - 0.3V → 0.6 - 1.0V → 0 - 0.3V

CAUTION:

- **Discard any heated oxygen sensor which has been dropped from a height of more than 0.5 m (19.7 in) onto a hard surface such as a concrete floor; use a new one.**
- **Before installing new oxygen sensor, clean exhaust system threads using Oxygen Sensor Thread Cleaner tool J-43897-18 or J-43897-12 and approved anti-seize lubricant.**

OK or NG

OK	▶	GO TO 8.
NG	▶	Replace malfunctioning heated oxygen sensor 1.

8	CHECK INTERMITTENT INCIDENT
Refer to "TROUBLE DIAGNOSIS FOR INTERMITTENT INCIDENT", EC-155.	
▶	**INSPECTION END**

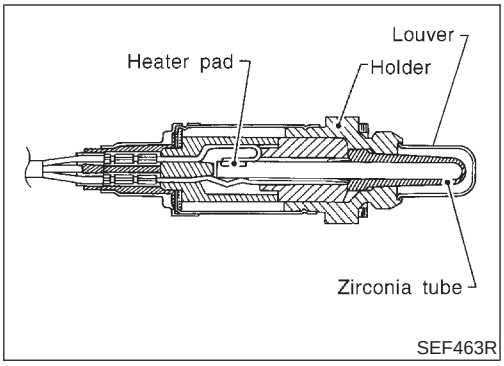

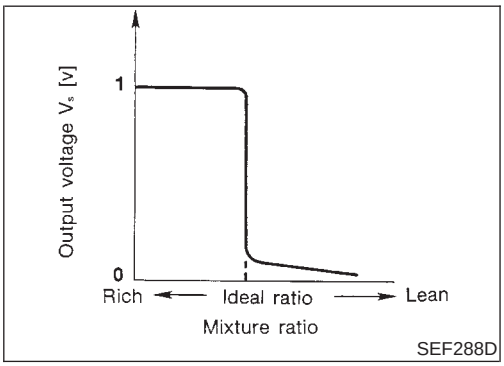

Component Description

NAEC0880

The heated oxygen sensor 1 is placed into the exhaust manifold. It detects the amount of oxygen in the exhaust gas compared to the outside air. The heated oxygen sensor 1 has a closed-end tube made of ceramic zirconia. The zirconia generates voltage from approximately 1V in richer conditions to 0V in leaner conditions. The heated oxygen sensor 1 signal is sent to the ECM. The ECM adjusts the injection pulse duration to achieve the ideal air-fuel ratio. The ideal air-fuel ratio occurs near the radical change from 1V to 0V.

CONSULT-II Reference Value in Data Monitor Mode

NAEC0881

Specification data are reference values.

MONITOR ITEM	CONDITION		SPECIFICATION
HO2S1 (B1) HO2S1 (B2)	● Engine: After warming up	Maintaining engine speed at 2,000 rpm	0 - 0.3V ⟷ Approx. 0.6 - 1.0V
HO2S1 MNTR (B1) HO2S1 MNTR (B2)			LEAN ⟷ RICH Changes more than 5 times during 10 seconds.

ECM Terminals and Reference Value

NAEC0882

Specification data are reference values and are measured between each terminal and ground.

CAUTION:

Do not use ECM ground terminals when measuring input/output voltage. Doing so may result in damage to the ECM's transistor. Use a ground other than ECM terminals, such as the ground.

TERMINAL NO.	WIRE COLOR	ITEM	CONDITION	DATA (DC Voltage)
16	G/B	Heated oxygen sensor 1 (bank 2)	**[Engine is running]** ● **Warm-up condition** ● Engine speed is 2,000 rpm.	0 - Approximately 1.0V (Periodically change)
35	G	Heated oxygen sensor 1 (bank 1)	**[Engine is running]** ● **Warm-up condition** ● Engine speed is 2,000 rpm.	0 - Approximately 1.0V (Periodically change)

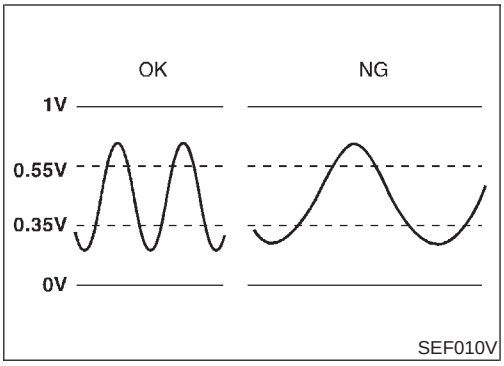

On Board Diagnosis Logic

NAEC0883

To judge the malfunction of heated oxygen sensor 1, this diagnosis measures response time of heated oxygen sensor 1 signal. The time is compensated by engine operating (speed and load), fuel feedback control constant, and heated oxygen sensor 1 temperature index. Judgment is based on whether the compensated time [heated oxygen sensor 1 cycling time index] is inordinately long or not.

DTC No.	Trouble diagnosis name	DTC Detecting Condition	Possible Cause
P0133 0133 (Bank 1)	Heated oxygen sensor 1 circuit slow response	The response of the voltage signal from the sensor takes more than the specified time.	• Harness or connectors (The sensor circuit is open or shorted.) • Heated oxygen sensor 1 • Fuel pressure • Injector • Intake air leaks • Exhaust gas leaks • PCV valve • Mass air flow sensor
P0153 0153 (Bank 2)			

DTC Confirmation Procedure

NAEC0884

CAUTION:

Always drive vehicle at a safe speed.

NOTE:

If DTC Confirmation Procedure has been previously conducted, always turn ignition switch OFF and wait at least 10 seconds before conducting the next test.

TESTING CONDITION:

- **Always perform at a temperature above −10°C (14°F).**
- **Before performing the following procedure, confirm that battery voltage is more than 11V at idle.**

6

HO2S1 (B1) P0133	
OUT OF CONDITION	
MONITOR	
ENG SPEED	XXX rpm
B/FUEL SCHDL	XXX msec
COOLAN TEMP/S	XXX °C
VHCL SPEED SEN	XXX km/h

SEF338Z

6

HO2S1 (B1) P0133	
TESTING	
MONITOR	
ENG SPEED	XXX rpm
B/FUEL SCHDL	XXX msec
COOLAN TEMP/S	XXX °C
VHCL SPEED SEN	XXX km/h

SEF339Z

6

HO2S1 (B1) P0133
COMPLETED

SEF658Y

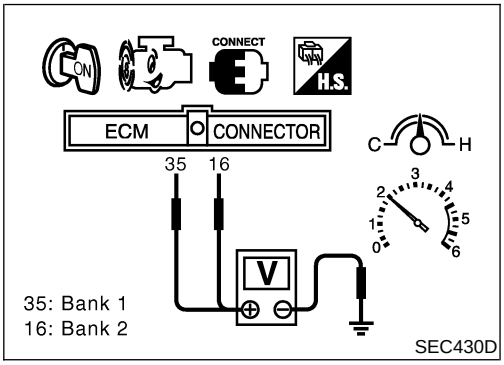

SEC430D

WITH CONSULT-II

NAEC0884S01

1) Start engine and warm it up to normal operating temperature.
2) Stop engine and wait at least 10 seconds.
3) Turn ignition switch ON and select "HO2S1 (B1)/(B2) P0133/ P0153" of "HO2S1" in "DTC WORK SUPPORT" mode with CONSULT-II.
4) Touch "START".
5) Start engine and let it idle for at least 3 minutes.

NOTE:
Never raise engine speed above 3,600 rpm after this step. If the engine speed limit is exceeded, return to step 5.

6) When the following conditions are met, "TESTING" will be displayed on the CONSULT-II screen. Maintain the conditions continuously until "TESTING" changes to "COMPLETED". (It will take approximately 40 to 50 seconds.)

ENG SPEED	1,600 - 3,100 rpm
Vehicle speed	More than 80 km/h (50 MPH)
B/FUEL SCHDL	5 - 12 msec
Selector lever	Suitable position

If "TESTING" is not displayed after 5 minutes, retry from step 2.

7) Make sure that "OK" is displayed after touching "SELF-DIAG RESULTS". If "NG" is displayed, refer to "Diagnostic Procedure", EC-238.

Overall Function Check

NAEC0885

Use this procedure to check the overall function of the heated oxygen sensor 1 circuit. During this check, a 1st trip DTC might not be confirmed.

WITH GST

NAEC0885S01

1) Start engine and warm it up to normal operating temperature.
2) Set voltmeter probes between ECM terminal 35 (HO2S1 bank 1 signal) or 16 (HO2S1 bank 2 signal) and ground.
3) Check the following with engine speed held at 2,000 rpm constant under no load.

- The voltage fluctuates between 0 to 0.3V and 0.6 to 1.0V more than 5 times within 10 seconds.
  1 time: 0 - 0.3V → 0.6 - 1.0V → 0 - 0.3V
  2 times: 0 - 0.3V → 0.6 - 1.0V → 0 - 0.3V → 0.6 - 1.0V → 0 - 0.3V

4) If NG, go to "Diagnostic Procedure", EC-238.

Wiring Diagram

NAEC0886

BANK 1

NAEC0886S01

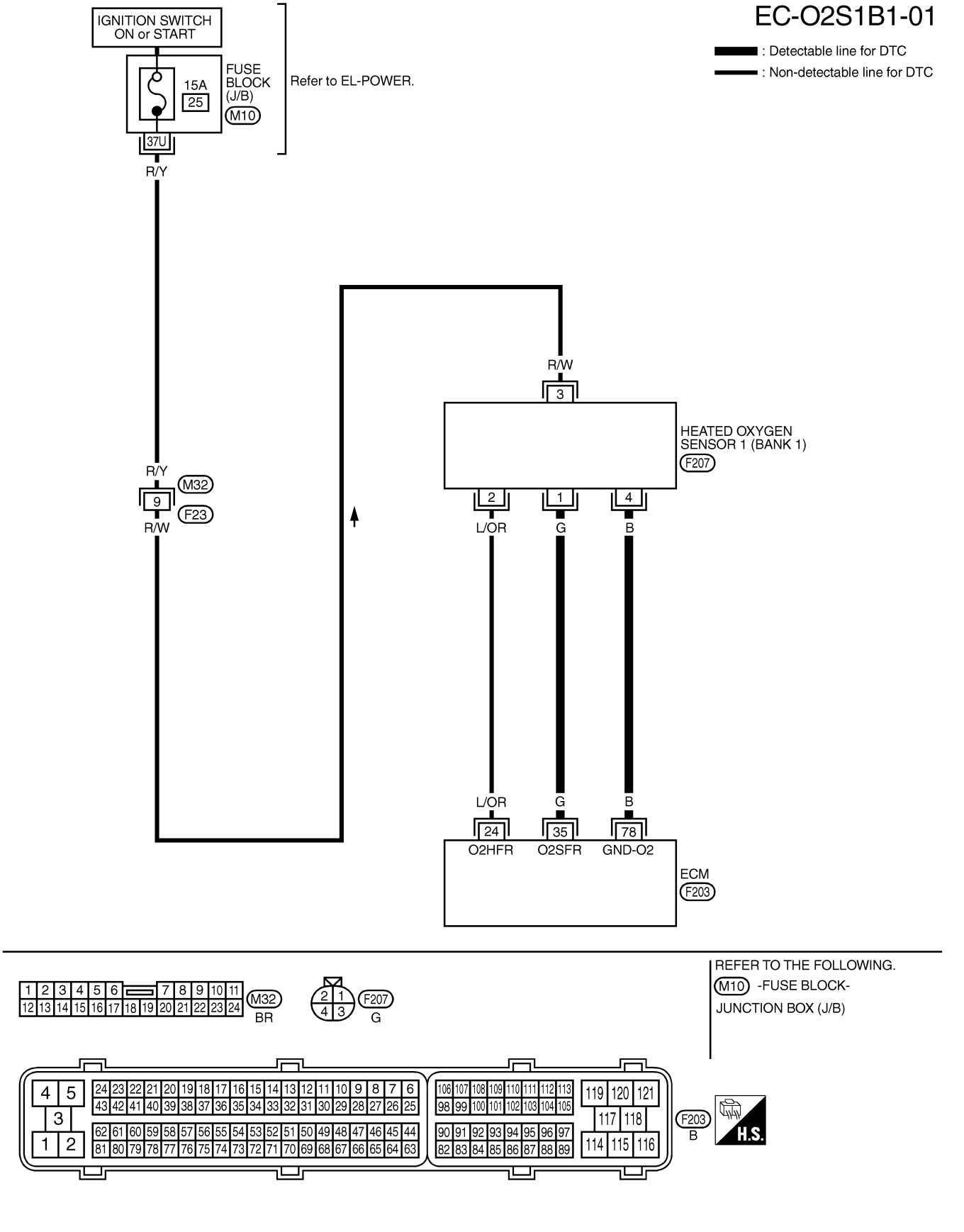

MEC087E

BANK 2

NAEC0886S02

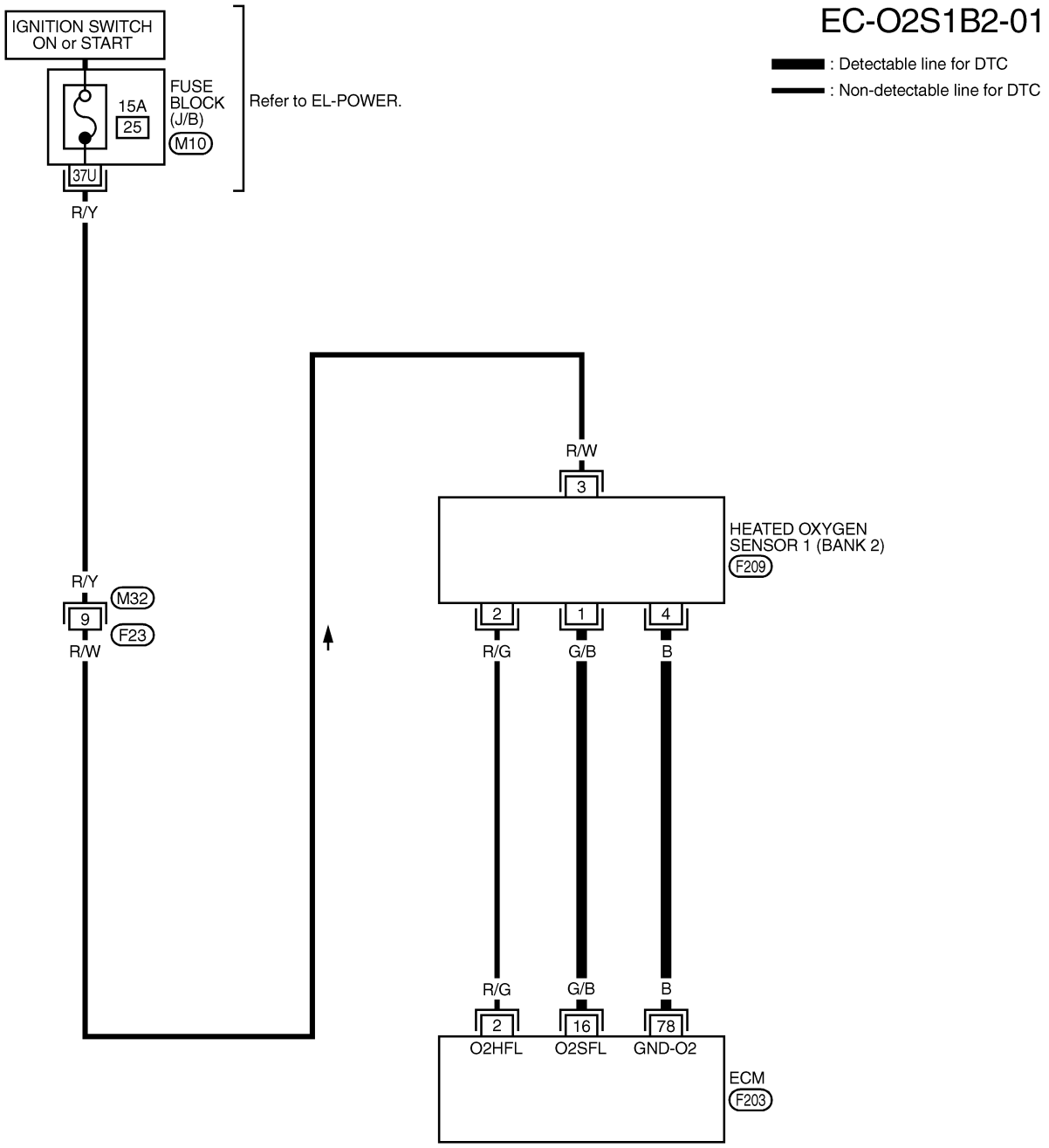

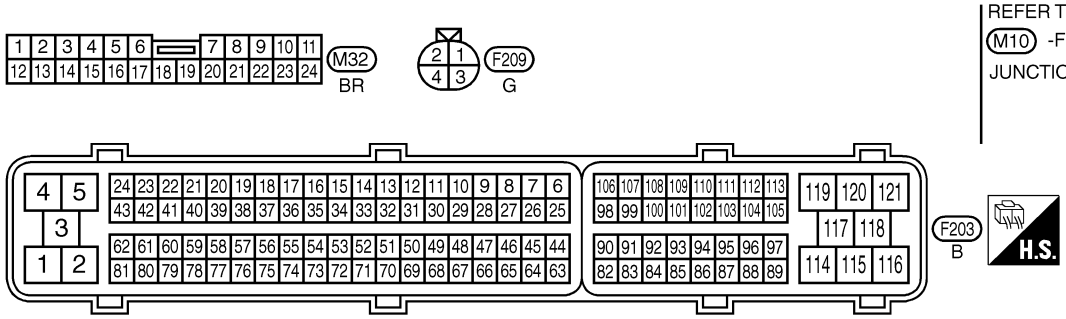

REFER TO THE FOLLOWING.
M10 -FUSE BLOCK-JUNCTION BOX (J/B)

MEC088E

Diagnostic Procedure

NAEC0887

1	CHECK GROUND CONNECTIONS

1. Turn ignition switch OFF.
2. Loosen and retighten three ground screws on the body.
   Refer to “Ground Inspection”, EC-165.

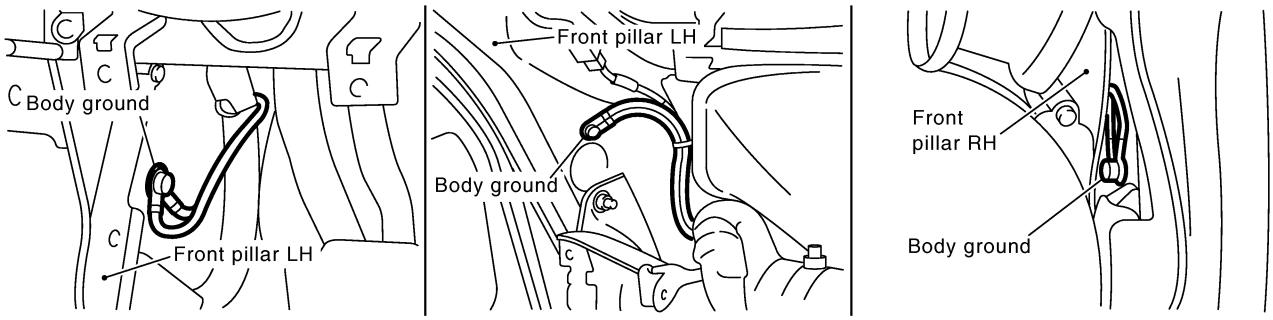

SEC997D

OK or NG

OK	▶	GO TO 2.
NG	▶	Repair or replace ground connections.

2	RETIGHTEN HEATED OXYGEN SENSOR 1

Loosen and retighten corresponding heated oxygen sensor 1.

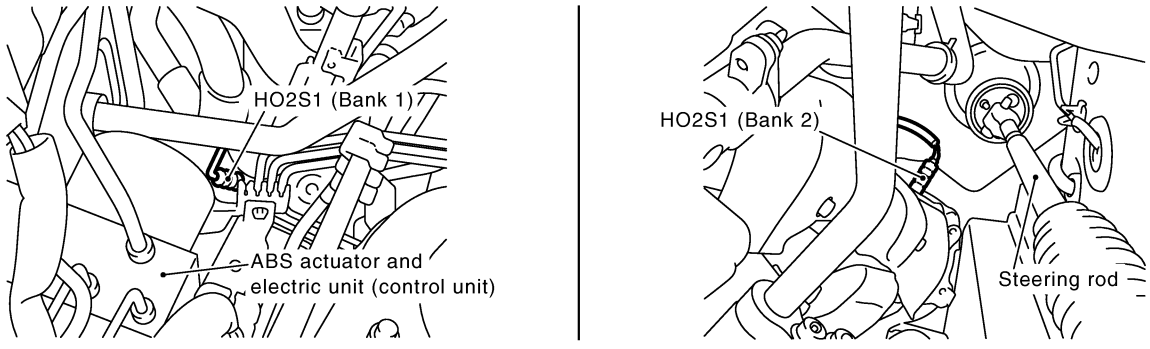

SEC001E

Tightening torque:
40 - 60 N·m (4.1 - 6.1 kg-m, 30 - 44 ft-lb)

	▶	GO TO 3.

3	CHECK FOR EXHAUST GAS LEAK

1. Start engine and run it at idle.
2. Listen for an exhaust gas leak before three way catalyst (manifold).

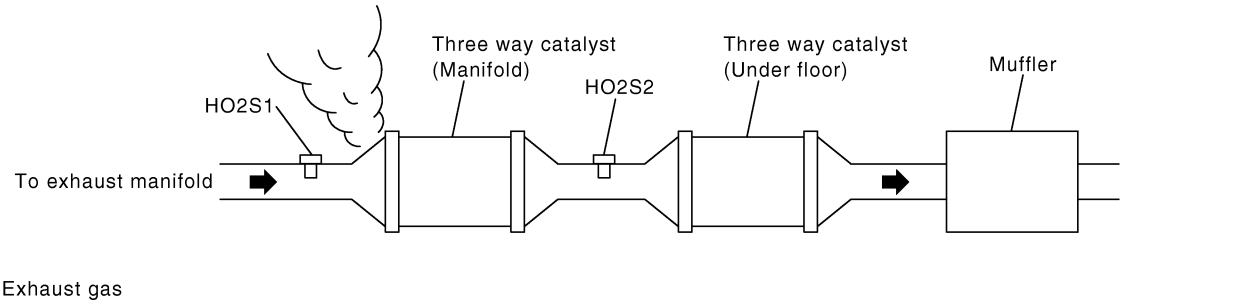

OK or NG

OK	▶	GO TO 4.
NG	▶	Repair or replace.

4	CHECK FOR INTAKE AIR LEAK

Listen for an intake air leak after the mass air flow sensor.

OK or NG

OK	▶	GO TO 5.
NG	▶	Repair or replace.

5	CLEAR THE SELF-LEARNING DATA

With CONSULT-II

1. Start engine and warm it up to normal operating temperature.
2. Select "SELF-LEARNING CONT" in "WORK SUPPORT" mode with CONSULT-II.
3. Clear the self-learning control coefficient by touching "CLEAR".

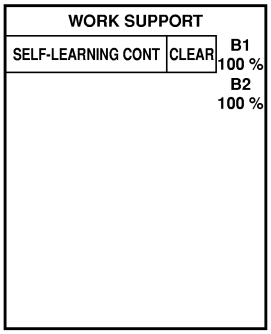

SEF968Y

4. Run engine for at least 10 minutes at idle speed.
   Is the 1st trip DTC P0171, P0172, P0174 or P0175 detected?
   Is it difficult to start engine?

Without CONSULT-II

1. Start engine and warm it up to normal operating temperature.
2. Turn ignition switch OFF.
3. Disconnect mass air flow sensor harness connector, and restart and run engine for at least 5 seconds at idle speed.

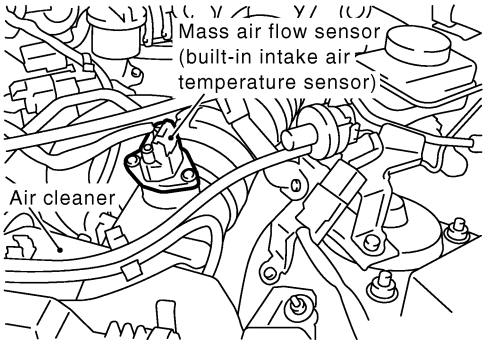

SEF960YA

4. Stop engine and reconnect mass air flow sensor harness connector.
5. Make sure DTC P0102 is displayed.
6. Erase the DTC memory. Refer to "HOW TO ERASE EMISSION-RELATED DIAGNOSTIC INFORMATION", EC-91.
7. Make sure DTC P0000 is displayed.
8. Run engine for at least 10 minutes at idle speed.
   Is the 1st trip DTC P0171, P0172, P0174 or P0175 detected?
   Is it difficult to start engine?

Yes or No

Yes	▶	Perform trouble diagnosis for DTC P0171, P0174 or P0172, P0175. Refer to EC-273, 282.
No	▶	GO TO 6.

6	CHECK HO2S1 GROUND CIRCUIT FOR OPEN AND SHORT

1. Turn ignition switch OFF.
2. Disconnect heated oxygen sensor 1 harness connector.

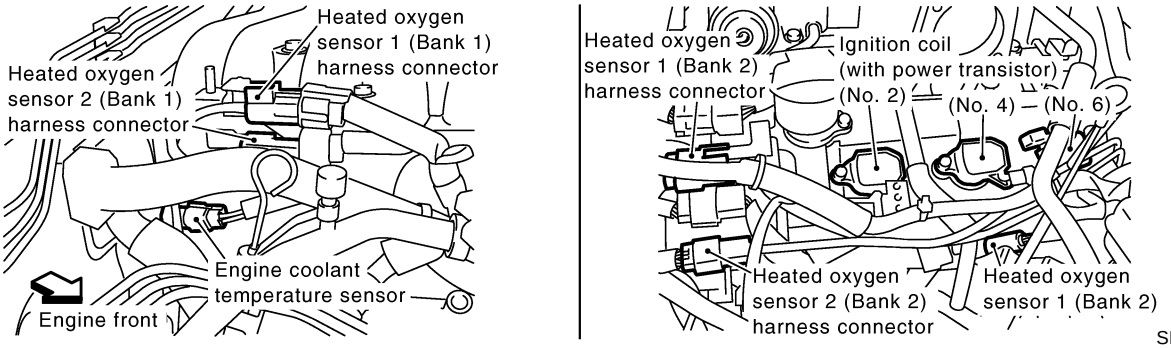

3. Disconnect ECM harness connector.
4. Check harness continuity between HO2S1 terminal 4 and ECM terminal 78.
   Refer to Wiring Diagram.
   Continuity should exist.
5. Also check harness for short to ground and short to power.

OK or NG

OK	▶	GO TO 7.
NG	▶	Repair open circuit or short to ground or short to power in harness or connectors.

7	CHECK HO2S1 INPUT SIGNAL CIRCUIT FOR OPEN AND SHORT

1. Check harness continuity between ECM terminal and HO2S1 terminal as follows.
   Refer to Wiring Diagram.

DTC	Terminals		Bank
	ECM	Sensor	
P0133	35	1	Bank 1
P0153	16	1	Bank 2

MTBL1356

   Continuity should exist.
2. Check harness continuity between the following terminals and ground.
   Refer to Wiring Diagram.

DTC	Terminals		Bank
	ECM	Sensor	
P0133	35	1	Bank 1
P0153	16	1	Bank 2

MTBL1356

   Continuity should not exist.
3. Also check harness for short to power.

OK or NG

OK	▶	GO TO 8.
NG	▶	Repair open circuit or short to ground or short to power in harness or connectors.

8	CHECK MASS AIR FLOW SENSOR

1. Reconnect harness connectors disconnected.
2. Start engine and warm it up to normal operating temperature.
3. Check voltage between ECM terminal 51 (Mass air flow sensor signal) and ground.

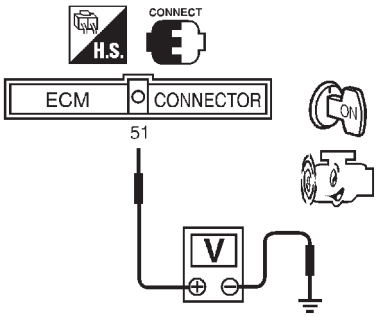

SEF100V

Condition	Voltage V
Ignition switch ON (Engine stopped.)	Approx. 0.4
Idle (Engine is warmed-up to normal operating temperature.)	1.0 - 1.3
2,500 rpm (Engine is warmed-up to normal operating temperature.)	1.7 - 2.1
Idle to about 4,000 rpm*	1.0 - 1.3 to Approx. 3.7

*: Check for linear voltage rise in response to engine being increased to about 4,000 rpm.

MTBL1844

4. If the voltage is out of specification, disconnect mass air flow sensor harness connector and connect it again. Then repeat above check.

OK or NG

OK	▶	GO TO 9.
NG	▶	Replace mass air flow sensor.

9	CHECK PCV VALVE

1. Install all removed parts.
2. Start engine and let it idle.
3. Remove PCV valve ventilation hose from PCV valve.
4. Make sure that a hissing noise will be heard as air passes through it and a strong vacuum should be felt immediately when a finger is placed over valve inlet.

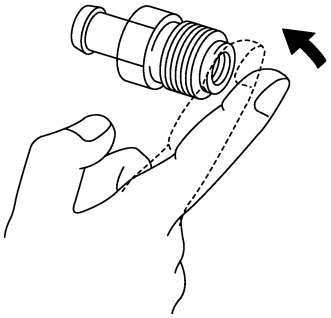

PBIB1589E

OK or NG

OK (With CONSULT-II)	▶	GO TO 10.
OK (Without CONSULT-II)	▶	GO TO 11.
NG	▶	Replace PCV valve.

10	CHECK HEATED OXYGEN SENSOR 1

With CONSULT-II

1. Start engine and warm it up to normal operating temperature.
2. Select "MANU TRIG" and adjust "TRIGGER POINT" to 100% in "DATA MONITOR" mode with CONSULT-II.
3. Select "HO2S1 (B1)/(B2)" and "HO2S1 MNTR (B1)/(B2)".
4. Hold engine speed at 2,000 rpm under no load during the following steps.
5. Touch "RECORD" on CONSULT-II screen.

DATA MONITOR	
MONITOR	NO DTC
ENG SPEED	XXX rpm
COOLAN TEMP/S	XXX °C
HO2S1 (B1)	XXX V
HO2S2 (B2)	XXX V

SEF967Y

6. Check the following.

- "HO2S1 MNTR (B1)/(B2)" in "DATA MONITOR" mode changes from "RICH" to "LEAN" to "RICH" more than 5 times in 10 seconds.
  5 times (cycles) are counted as shown below.

Bank 1

cycle	1	2	3	4	5
HO2S1 MNTR (B1)	R-L-R-L-R-L-R-L-R-L-R				

Bank 2

cycle	1	2	3	4	5
HO2S1 MNTR (B2)	R-L-R-L-R-L-R-L-R-L-R				

R means HO2S1 MNTR (B1)/(B2) indicates RICH

L means HO2S1 MNTR (B1)/(B2) indicates LEAN

SEF647Y

- "HO2S1 (B1)/(B2)" voltage goes above 0.6V at least once.
- "HO2S1 (B1)/(B2)" voltage goes below 0.3V at least once.
- "HO2S1 (B1)/(B2)" voltage never exceeds 1.0V.

Trigger	ENG SPEED	HO2S1 (B1)
	rpm	V
XXX	XXX	XXX
XXX	XXX	XXX
XXX	XXX	XXX
XXX	XXX	XXX
XXX	XXX	XXX
XXX	XXX	XXX
XXX	XXX	XXX
XXX	XXX	XXX
XXX	XXX	XXX
XXX	XXX	XXX
XXX	XXX	XXX
XXX	XXX	XXX

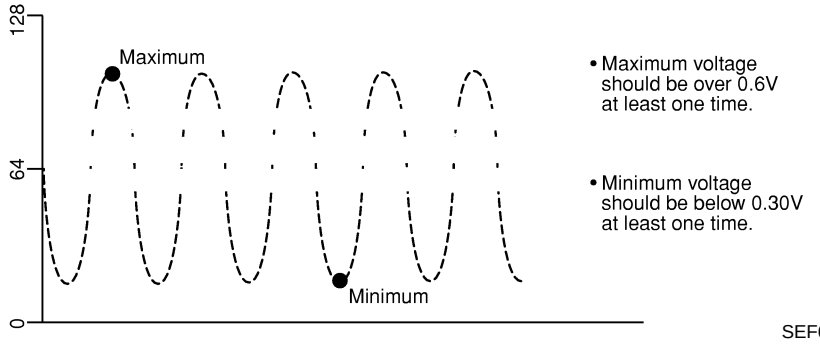

SEF648Y

CAUTION:

- **Discard any heated oxygen sensor which has been dropped from a height of more than 0.5 m (19.7 in) onto a hard surface such as a concrete floor; use a new one.**
- **Before installing new oxygen sensor, clean exhaust system threads using Oxygen Sensor Thread Cleaner tool J-43897-18 or J-43897-12 and approved anti-seize lubricant.**

OK or NG

OK	▶	GO TO 12.
NG	▶	Replace malfunctioning heated oxygen sensor 1.

11	CHECK HEATED OXYGEN SENSOR 1

Without CONSULT-II

1. Start engine and warm it up to normal operating temperature.
2. Set voltmeter probes between ECM terminal 35 (HO2S1 bank 1 signal) or 16 (HO2S1 bank 2 signal) and ground.
3. Check the following with engine speed held at 2,000 rpm constant under no load.

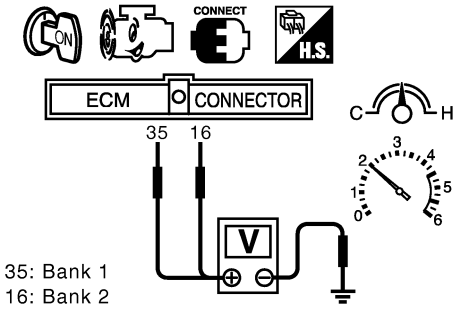

SEC430D

- The voltage fluctuates between 0 to 0.3V and 0.6 to 1.0V more than 5 times within 10 seconds.
- The maximum voltage is over 0.6V at least one time.
- The minimum voltage is below 0.3V at least one time.
- The voltage never exceeds 1.0V.
  1 time: 0 - 0.3V → 0.6 - 1.0V → 0 - 0.3V
  2 times: 0 - 0.3V → 0.6 - 1.0V → 0 - 0.3V → 0.6 - 1.0V → 0 - 0.3V

CAUTION:

- **Discard any heated oxygen sensor which has been dropped from a height of more than 0.5 m (19.7 in) onto a hard surface such as a concrete floor; use a new one.**
- **Before installing new oxygen sensor, clean exhaust system threads using Oxygen Sensor Thread Cleaner tool J-43897-18 or J-43897-12 and approved anti-seize lubricant.**

OK or NG

OK	▶	GO TO 12.
NG	▶	Replace malfunctioning heated oxygen sensor 1.

12	CHECK INTERMITTENT INCIDENT
Refer to "TROUBLE DIAGNOSIS FOR INTERMITTENT INCIDENT", EC-155.	
▶	**INSPECTION END**

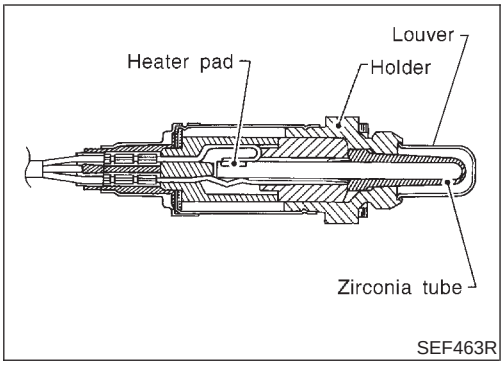

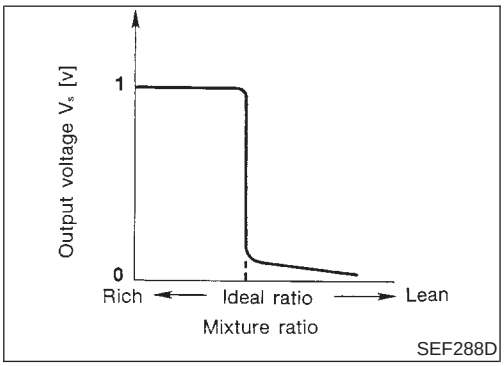

Component Description

NAEC0888

The heated oxygen sensor 1 is placed into the exhaust manifold. It detects the amount of oxygen in the exhaust gas compared to the outside air. The heated oxygen sensor 1 has a closed-end tube made of ceramic zirconia. The zirconia generates voltage from approximately 1V in richer conditions to 0V in leaner conditions. The heated oxygen sensor 1 signal is sent to the ECM. The ECM adjusts the injection pulse duration to achieve the ideal air-fuel ratio. The ideal air-fuel ratio occurs near the radical change from 1V to 0V.

CONSULT-II Reference Value in Data Monitor Mode

NAEC0889

Specification data are reference values.

MONITOR ITEM	CONDITION		SPECIFICATION
HO2S1 (B1) HO2S1 (B2)	● Engine: After warming up	Maintaining engine speed at 2,000 rpm	0 - 0.3V ⟷ Approx. 0.6 - 1.0V
HO2S1 MNTR (B1) HO2S1 MNTR (B2)			LEAN ⟷ RICH Changes more than 5 times during 10 seconds.

ECM Terminals and Reference Value

NAEC0890

Specification data are reference values and are measured between each terminal and ground.

CAUTION:

Do not use ECM ground terminals when measuring input/output voltage. Doing so may result in damage to the ECM's transistor. Use a ground other than ECM terminals, such as the ground.

TERMINAL NO.	WIRE COLOR	ITEM	CONDITION	DATA (DC Voltage)
16	G/B	Heated oxygen sensor 1 (bank 2)	**[Engine is running]** ● **Warm-up condition** ● Engine speed is 2,000 rpm.	0 - Approximately 1.0V (Periodically change)
35	G	Heated oxygen sensor 1 (bank 1)	**[Engine is running]** ● **Warm-up condition** ● Engine speed is 2,000 rpm.	0 - Approximately 1.0V (Periodically change)

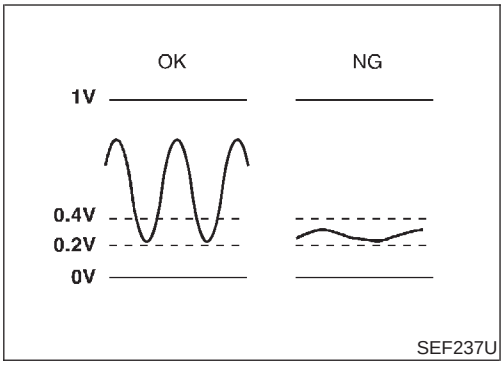

On Board Diagnosis Logic

NAEC0891

Under the condition in which the heated oxygen sensor 1 signal is not input, the ECM circuits will read a continuous approximately 0.3V. Therefore, for this diagnosis, the time that output voltage is within 200 to 400 mV range is monitored, and the diagnosis checks that this time is not inordinately long.

DTC No.	Trouble diagnosis name	DTC Detecting Condition	Possible Cause
P0134 0134 (Bank 1)	Heated oxygen sensor 1 circuit no activity detected	The voltage from the sensor is constantly approx. 0.3V.	• Harness or connectors (The sensor circuit is open or shorted.) • Heated oxygen sensor 1
P0154 0154 (Bank 2)			

5

HO2S1 (B1) P0134	
OUT OF CONDITION	
MONITOR	
ENG SPEED	XXX rpm
B/FUEL SCHDL	XXX msec
COOLAN TEMP/S	XXX ˚C
VHCL SPEED SEN	XXX km/h

PBIB0544E

5

HO2S1 (B1) P0134	
TESTING	
MONITOR	
ENG SPEED	XXX rpm
B/FUEL SCHDL	XXX msec
COOLAN TEMP/S	XXX ˚C
VHCL SPEED SEN	XXX km/h

PBIB0545E

5

HO2S1 (B1) P0134
COMPLETED

SEC750C

DTC Confirmation Procedure

NAEC0892

CAUTION:

Always drive vehicle at a safe speed.

NOTE:

If DTC Confirmation Procedure has been previously conducted, always turn ignition switch OFF and wait at least 10 seconds before conducting the next test.

TESTING CONDITION:

Before performing the following procedure, confirm that battery voltage is more than 11V at idle.

WITH CONSULT-II

NAEC0892S01

1) Start engine and warm it up to normal operating temperature.
2) Select “HO2S1 (B1)/(B2) P0134/P0154” of “HO2S1” in “DTC WORK SUPPORT” mode with CONSULT-II.
3) Touch “START”.
4) Let it idle for at least 3 minutes.

NOTE:

Never raise engine speed above 3,600 rpm after this step. If the engine speed limit is exceeded, return to step 4.

5) When the following conditions are met, “TESTING” will be displayed on the CONSULT-II screen. Maintain the conditions continuously until “TESTING” changes to “COMPLETED”. (It will take approximately 10 to 60 seconds.)

ENG SPEED	1,500 - 2,800 rpm
Vehicle speed	More than 64 km/h (40 MPH)
B/FUEL SCHDL	3.0 - 14 msec
Selector lever	Suitable position

If “TESTING” is not displayed after 5 minutes, retry from step 2.

6) Make sure that “OK” is displayed after touching “SELF-DIAG

RESULTS". If "NG" is displayed, refer to "Diagnostic Procedure", EC-251.
During this test, P1148 and P1168 may be stored in ECM.

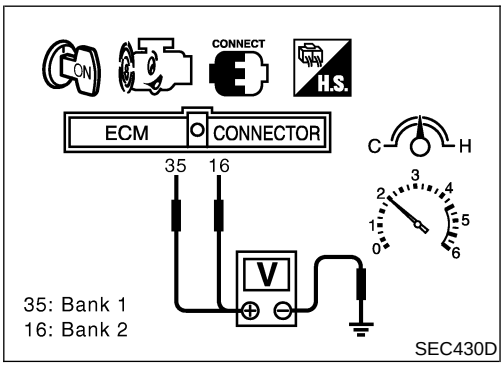

Overall Function Check

NAEC0893

Use this procedure to check the overall function of the heated oxygen sensor 1 circuit. During this check, a 1st trip DTC might not be confirmed.

WITH GST

NAEC0893S01

1) Start engine and warm it up to normal operating temperature.
2) Set voltmeter probes between ECM terminal 35 (HO2S1 bank 1 signal) or 16 (HO2S1 bank 2 signal) and ground.
3) Check the following with engine speed held at 2,000 rpm constant under no load.

- The voltage does not remain in the range of 0.2 to 0.4V.

4) If NG, go to "Diagnostic Procedure", EC-251.

Wiring Diagram

=NAEC0894

BANK 1

NAEC0894S01

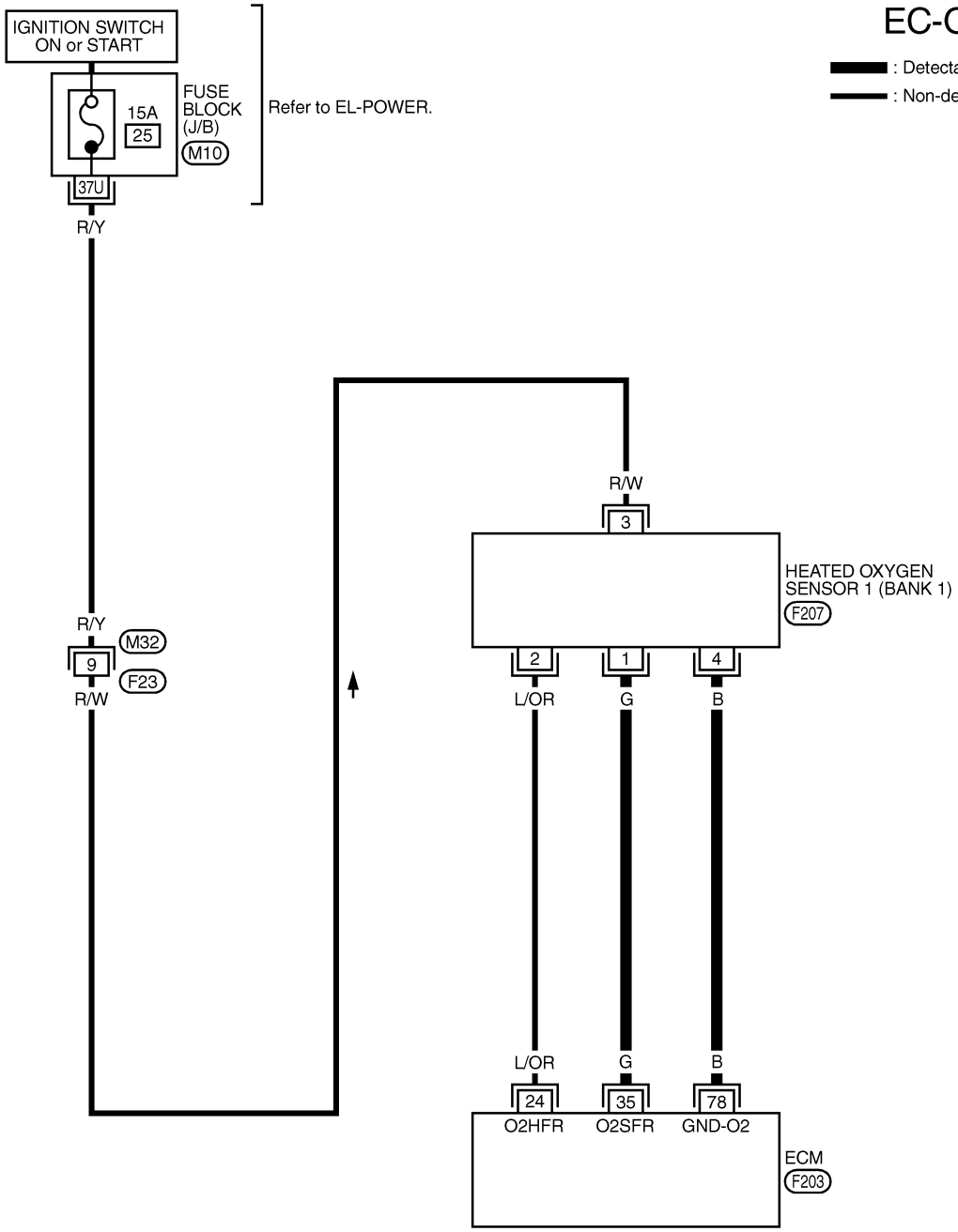

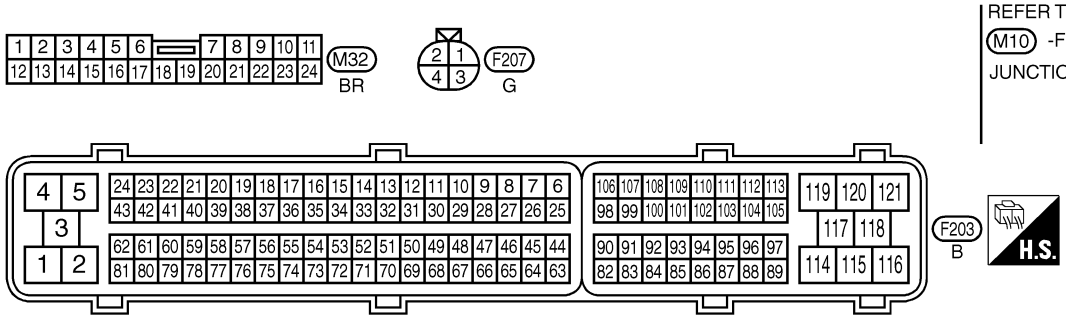

REFER TO THE FOLLOWING.
M10 -FUSE BLOCK-JUNCTION BOX (J/B)

MEC087E

BANK 2

NAEC0894S02

EC-O2S1B2-01

: Detectable line for DTC

: Non-detectable line for DTC

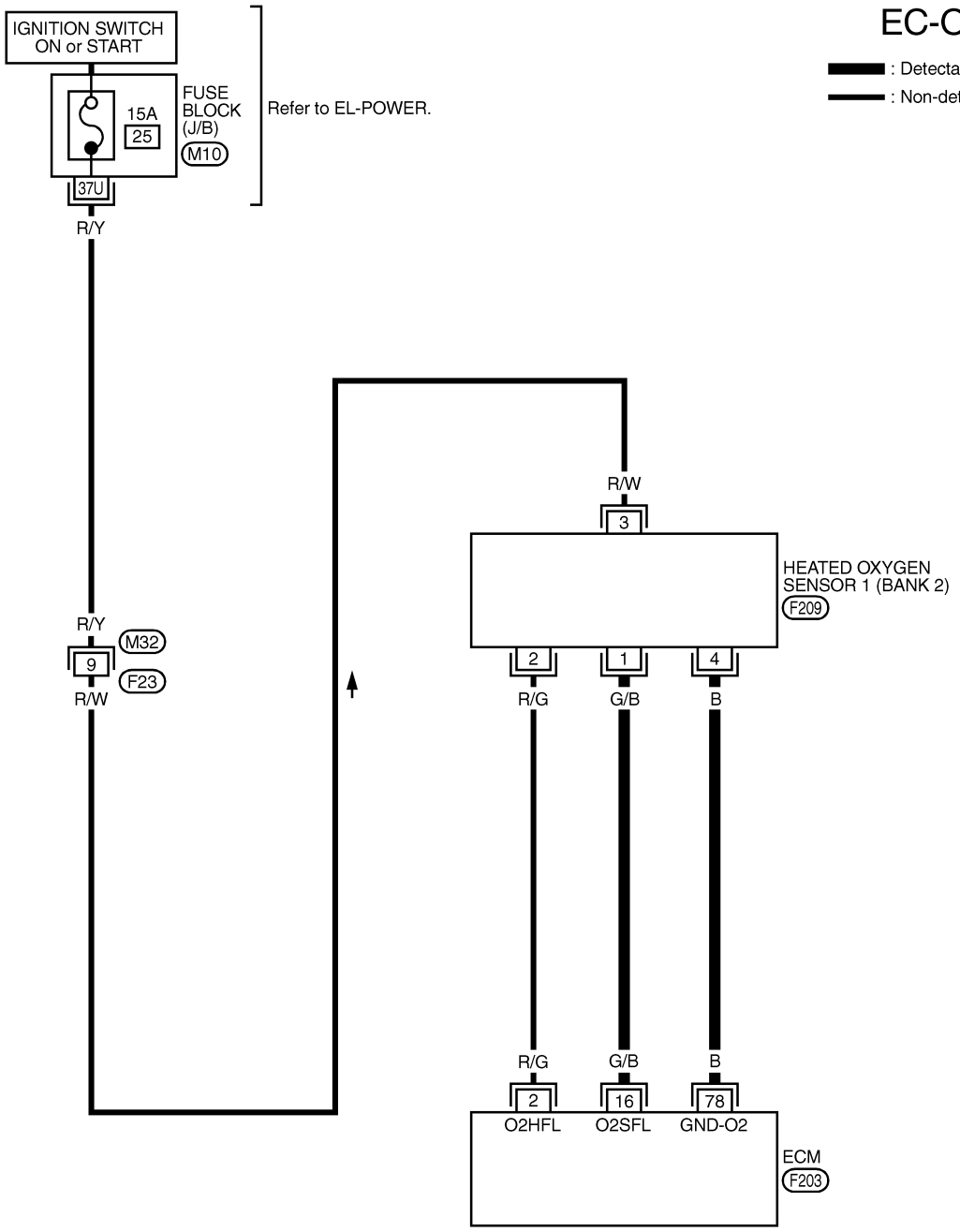

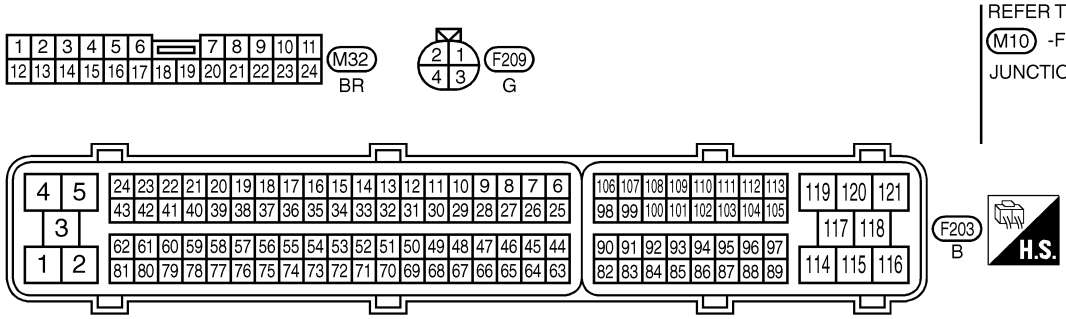

REFER TO THE FOLLOWING.
M10 -FUSE BLOCK-
JUNCTION BOX (J/B)

MEC088E

Diagnostic Procedure

NAEC0895

1	CHECK GROUND CONNECTIONS

1. Turn ignition switch OFF.
2. Loosen and retighten three ground screws on the body.
   Refer to “Ground Inspection”, EC-165.

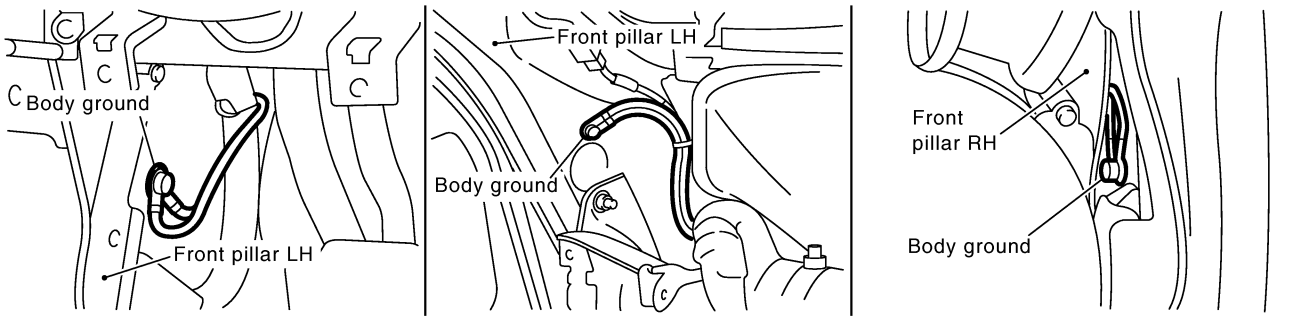

SEC997D

OK or NG

OK	▶	GO TO 2.
NG	▶	Repair or replace ground connections.

2	CHECK HO2S1 GROUND CIRCUIT FOR OPEN AND SHORT

1. Disconnect heated oxygen sensor 1 harness connector.

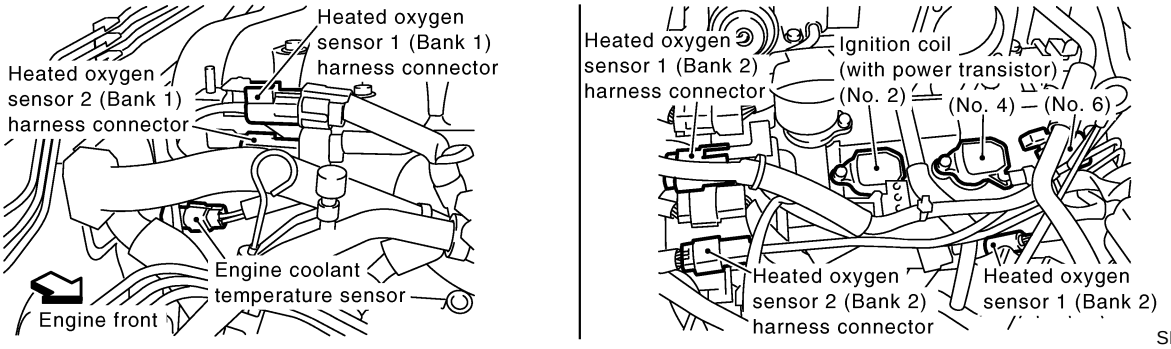

SEC999D

2. Disconnect ECM harness connector.
3. Check harness continuity between HO2S1 terminal 4 and ECM terminal 78.
   Refer to Wiring Diagram.
   Continuity should exist.
4. Also check harness for short to ground and short to power.

OK or NG

OK	▶	GO TO 3.
NG	▶	Repair open circuit or short to ground or short to power in harness or connectors.

3	CHECK HO2S1 INPUT SIGNAL CIRCUIT FOR OPEN AND SHORT

1. Check harness continuity between ECM terminal and HO2S1 terminal as follows.
   Refer to Wiring Diagram.

DTC	Terminals		Bank
	ECM	Sensor	
P0134	35	1	Bank 1
P0154	16	1	Bank 2

MTBL1358

Continuity should exist.

2. Check harness continuity between the following terminals and ground.
   Refer to Wiring Diagram.

DTC	Terminals		Bank
	ECM	Sensor	
P0134	35	1	Bank 1
P0154	16	1	Bank 2

MTBL1358

Continuity should not exist.

3. Also check harness for short to ground and short to power.

OK or NG

OK (With CONSULT-II) ▶	GO TO 4.
OK (Without CONSULT-II) ▶	GO TO 5.
NG ▶	Repair open circuit or short to ground or short to power in harness or connectors.

4	CHECK HEATED OXYGEN SENSOR 1

With CONSULT-II

1. Start engine and warm it up to normal operating temperature.
2. Select "MANU TRIG" and adjust "TRIGGER POINT" to 100% in "DATA MONITOR" mode with CONSULT-II.
3. Select "HO2S1 (B1)/(B2)" and "HO2S1 MNTR (B1)/(B2)".
4. Hold engine speed at 2,000 rpm under no load during the following steps.
5. Touch "RECORD" on CONSULT-II screen.

DATA MONITOR	
MONITOR	NO DTC
ENG SPEED	XXX rpm
COOLAN TEMP/S	XXX °C
HO2S1 (B1)	XXX V
HO2S2 (B2)	XXX V

SEF967Y

6. Check the following.

- "HO2S1 MNTR (B1)/(B2)" in "DATA MONITOR" mode changes from "RICH" to "LEAN" to "RICH" more than 5 times in 10 seconds.
  5 times (cycles) are counted as shown below.

Bank 1

cycle	1	2	3	4	5
HO2S1 MNTR (B1)	R-L-R-L-R-L-R-L-R-L-R				

Bank 2

cycle	1	2	3	4	5
HO2S1 MNTR (B2)	R-L-R-L-R-L-R-L-R-L-R				

R means HO2S1 MNTR (B1)/(B2) indicates RICH

L means HO2S1 MNTR (B1)/(B2) indicates LEAN

SEF647Y

- "HO2S1 (B1)/(B2)" voltage goes above 0.6V at least once.
- "HO2S1 (B1)/(B2)" voltage goes below 0.3V at least once.
- "HO2S1 (B1)/(B2)" voltage never exceeds 1.0V.

Trigger	ENG SPEED	HO2S1 (B1)
	rpm	V
XXX	XXX	XXX
XXX	XXX	XXX
XXX	XXX	XXX
XXX	XXX	XXX
XXX	XXX	XXX
XXX	XXX	XXX
XXX	XXX	XXX
XXX	XXX	XXX
XXX	XXX	XXX
XXX	XXX	XXX
XXX	XXX	XXX
XXX	XXX	XXX
XXX	XXX	XXX

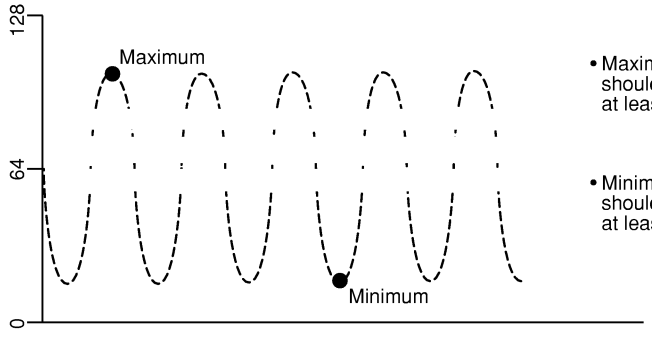

- Maximum voltage should be over 0.6V at least one time.
- Minimum voltage should be below 0.30V at least one time.

SEF648Y

CAUTION:

- **Discard any heated oxygen sensor which has been dropped from a height of more than 0.5 m (19.7 in) onto a hard surface such as a concrete floor; use a new one.**
- **Before installing new oxygen sensor, clean exhaust system threads using Oxygen Sensor Thread Cleaner tool J-43897-18 or J-43897-12 and approved anti-seize lubricant.**

OK or NG

OK	▶	GO TO 6.
NG	▶	Replace malfunctioning heated oxygen sensor 1.

5	CHECK HEATED OXYGEN SENSOR 1

Without CONSULT-II

1. Start engine and warm it up to normal operating temperature.
2. Set voltmeter probes between ECM terminal 35 (HO2S1 bank 1 signal) or 16 (HO2S1 bank 2 signal) and ground.
3. Check the following with engine speed held at 2,000 rpm constant under no load.

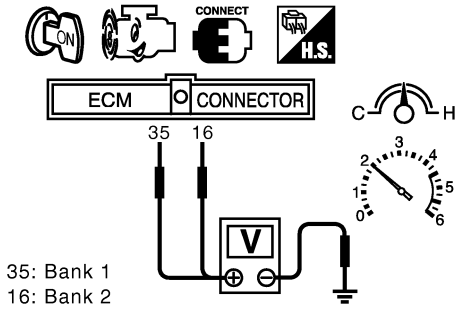

SEC430D

- The voltage fluctuates between 0 to 0.3V and 0.6 to 1.0V more than 5 times within 10 seconds.
- The maximum voltage is over 0.6V at least one time.
- The minimum voltage is below 0.3V at least one time.
- The voltage never exceeds 1.0V.
  1 time: 0 - 0.3V → 0.6 - 1.0V → 0 - 0.3V
  2 times: 0 - 0.3V → 0.6 - 1.0V → 0 - 0.3V → 0.6 - 1.0V → 0 - 0.3V

CAUTION:

- **Discard any heated oxygen sensor which has been dropped from a height of more than 0.5 m (19.7 in) onto a hard surface such as a concrete floor; use a new one.**
- **Before installing new oxygen sensor, clean exhaust system threads using Oxygen Sensor Thread Cleaner tool J-43897-18 or J-43897-12 and approved anti-seize lubricant.**

OK or NG

OK	▶	GO TO 6.
NG	▶	Replace malfunctioning heated oxygen sensor 1.

6	CHECK INTERMITTENT INCIDENT
Refer to "TROUBLE DIAGNOSIS FOR INTERMITTENT INCIDENT", EC-155.	
▶	**INSPECTION END**

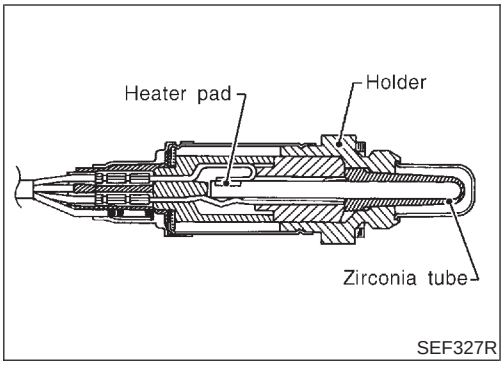

Component Description

NAEC0896

The heated oxygen sensor 2, after three way catalyst (manifold), monitors the oxygen level in the exhaust gas on each bank.
Even if switching characteristics of the heated oxygen sensor 1 are shifted, the air-fuel ratio is controlled to stoichiometric, by the signal from the heated oxygen sensor 2.
This sensor is made of ceramic zirconia. The zirconia generates voltage from approximately 1V in richer conditions to 0V in leaner conditions.
Under normal conditions the heated oxygen sensor 2 is not used for engine control operation.

CONSULT-II Reference Value in Data Monitor Mode

NAEC0897

Specification data are reference values.

MONITOR ITEM	CONDITION		SPECIFICATION
HO2S2 (B1) HO2S2 (B2)	• Engine: After warming up • After keeping engine speed between 3,500 and 4,000 rpm for 1 minute and at idle for 1 minute under no load	Revving engine from idle up to 3,000 rpm	0 - 0.3V ⟷ Approx. 0.6 - 1.0V
HO2S2 MNTR (B1) HO2S2 MNTR (B2)			LEAN ⟷ RICH

ECM Terminals and Reference Value

NAEC0898

Specification data are reference values and are measured between each terminal and ground.

CAUTION:

Do not use ECM ground terminals when measuring input/output voltage. Doing so may result in damage to the ECM's transistor. Use a ground other than ECM terminals, such as the ground.

TERMINAL NO.	WIRE COLOR	ITEM	CONDITION	DATA (DC Voltage)
55	OR/L	Heated oxygen sensor 2 (bank 2)	**[Engine is running]** • **Warm-up condition** • Revving engine from idle up to 3,000 rpm after the following conditions are met. • After keeping the engine speed between 3,500 and 4,000 rpm for 1 minute and at idle for 1 minute under no load	0 - Approximately 1.0V
74	OR	Heated oxygen sensor 2 (bank 1)	**[Engine is running]** • **Warm-up condition** • Revving engine from idle up to 3,000 rpm after the following conditions are met. • After keeping the engine speed between 3,500 and 4,000 rpm for 1 minute and at idle for 1 minute under no load	0 - Approximately 1.0V

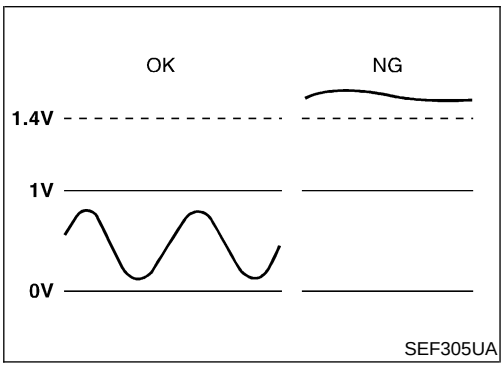

On Board Diagnosis Logic

NAEC0899

The heated oxygen sensor 2 has a much longer switching time between rich and lean than the heated oxygen sensor 1. The oxygen storage capacity before the three way catalyst (manifold) causes the longer switching time. To judge the malfunctions of heated oxygen sensor 2, ECM monitors whether the voltage is unusually high during the various driving condition such as fuel-cut.

On Board Diagnosis Logic (Cont'd)

DTC No.	Trouble diagnosis name	DTC Detecting Condition	Possible Cause
P0138 0138 (Bank 1)	Heated oxygen sensor 2 circuit high voltage	An excessively high voltage from the sensor is sent to ECM.	• Harness or connectors (The sensor circuit is open or shorted.) • Heated oxygen sensor 2
P0158 0158 (Bank 2)			

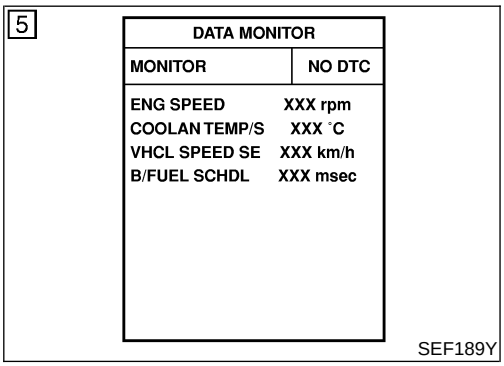

DTC Confirmation Procedure

NAEC0900

CAUTION:

Always drive vehicle at a safe speed.

NOTE:

If DTC Confirmation Procedure has been previously conducted, always turn ignition switch OFF and wait at least 10 seconds before conducting the next test.

WITH CONSULT-II

NAEC0900S01

1) Turn ignition switch ON and select "DATA MONITOR" mode with CONSULT-II.
2) Start engine and warm it up to the normal operating temperature.
3) Turn ignition switch OFF and wait at least 10 seconds.
4) Start engine and keep the engine speed between 3,500 and 4,000 rpm for at least 1 minute under no load.
5) Let engine idle for 2 minutes.
6) If 1st trip DTC is detected, go to "Diagnostic Procedure", EC-259.

WITH GST

NAEC0900S02

Follow the procedure "With CONSULST-II" above.

Wiring Diagram

NAEC0902

BANK 1

NAEC0902S01

EC-O2S2B1-01

: Detectable line for DTC

: Non-detectable line for DTC

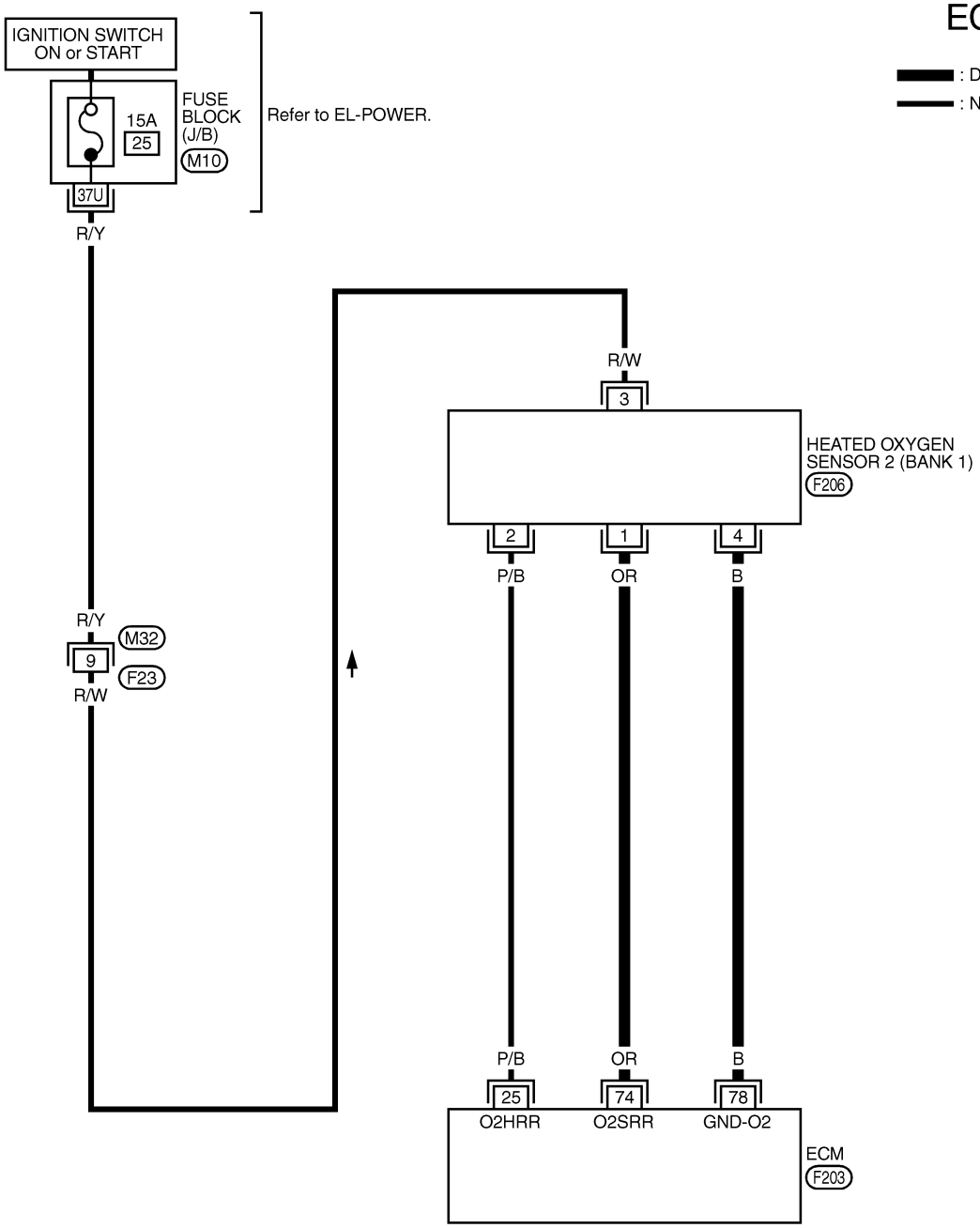

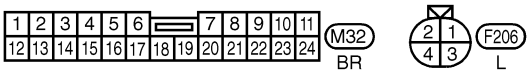

REFER TO THE FOLLOWING.
M10 -FUSE BLOCK-JUNCTION BOX (J/B)

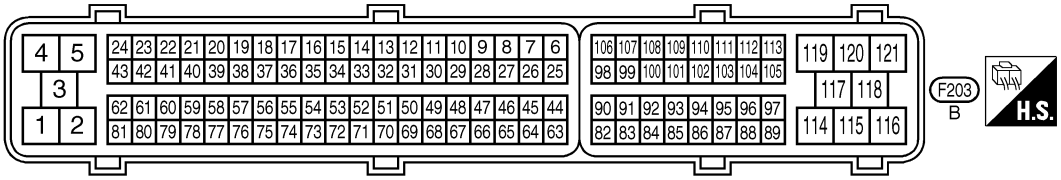

MEC089E

Wiring Diagram (Cont'd)

BANK 2

NAEC0902S02

EC-O2S2B2-01

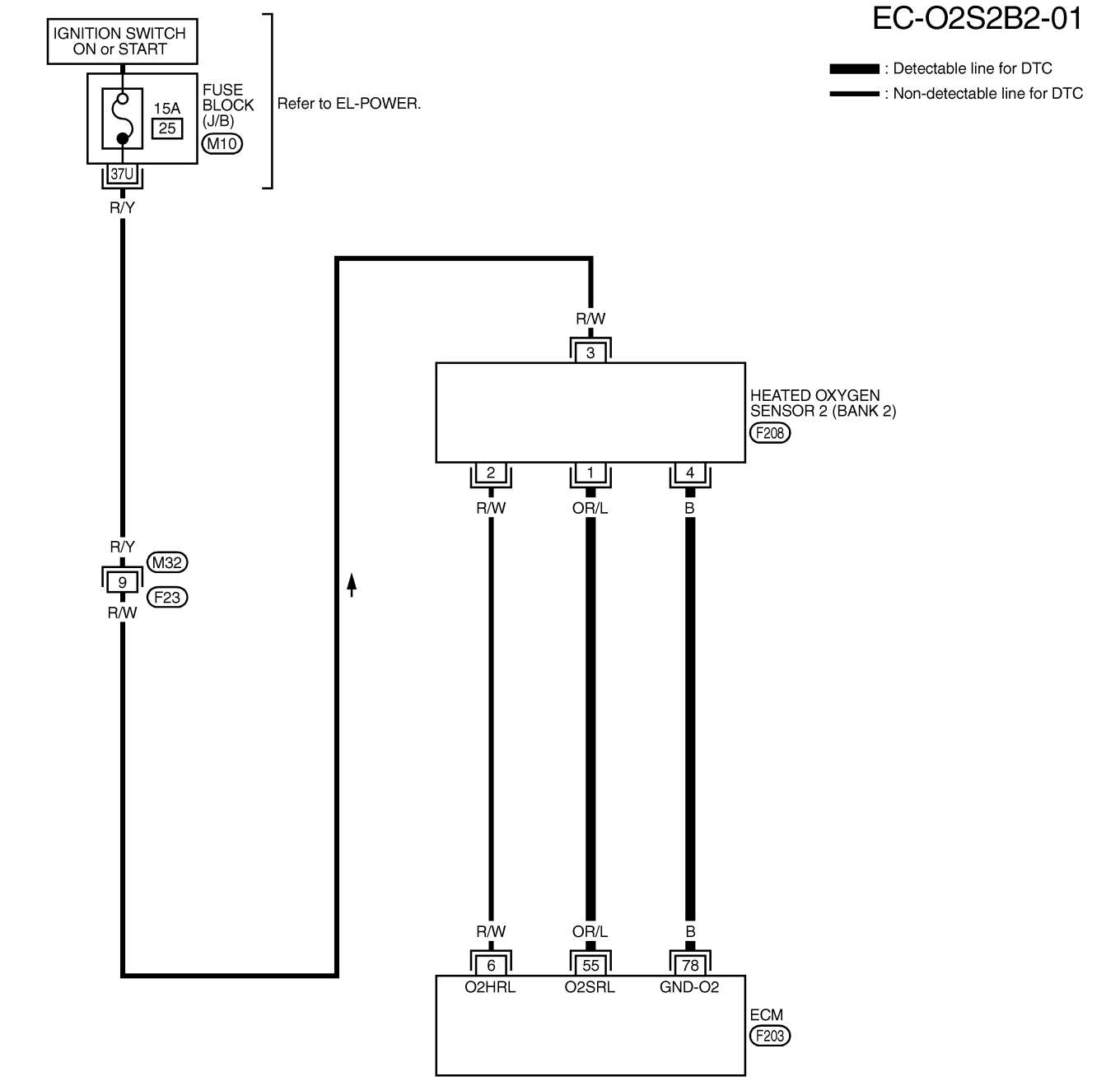

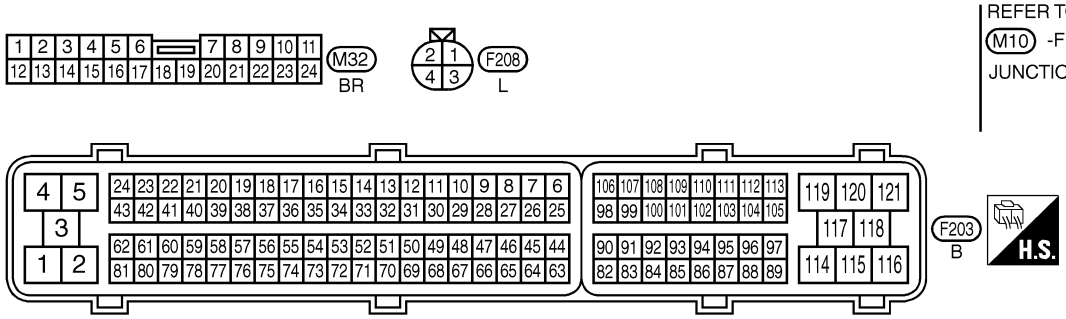

REFER TO THE FOLLOWING.
M10 -FUSE BLOCK-JUNCTION BOX (J/B)

MEC090E

Diagnostic Procedure

NAEC0903

1	CHECK GROUND CONNECTIONS

1. Turn ignition switch OFF.
2. Loosen and retighten three ground screws on the body.
   Refer to “Ground Inspection”, EC-165.

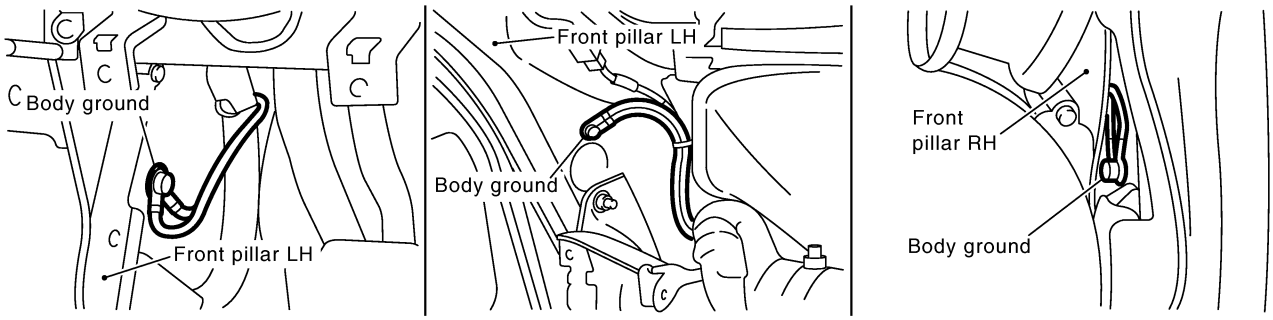

SEC997D

OK or NG

OK	▶	GO TO 2.
NG	▶	Repair or replace ground connections.

2	CHECK HO2S2 GROUND CIRCUIT FOR OPEN AND SHORT

1. Disconnect ECM harness connector.
2. Disconnect heated oxygen sensor 2 harness connector.

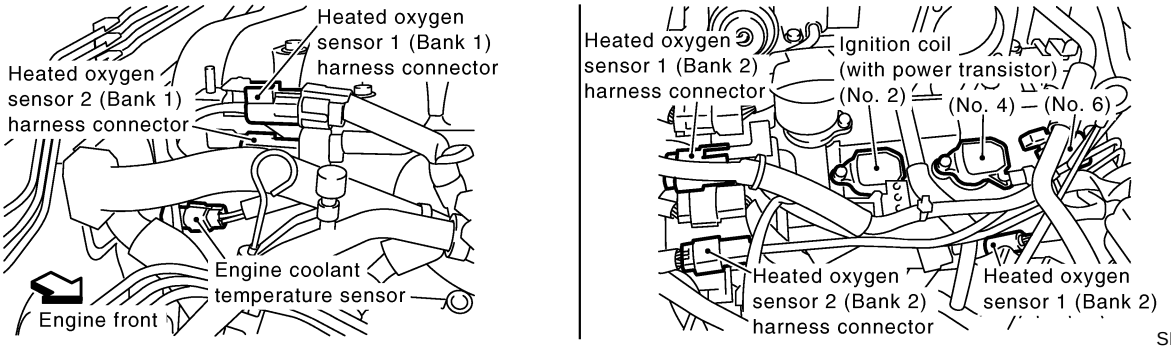

SEC999D

3. Check harness continuity between HO2S2 terminal 4 and ECM terminal 78.
   Refer to Wiring Diagram.
   Continuity should exist.
4. Also check harness for short to ground and short to power.

OK or NG

OK	▶	GO TO 3.
NG	▶	Repair open circuit or short to ground or short to power in harness or connectors.

3	CHECK HO2S2 INPUT SIGNAL CIRCUIT FOR OPEN AND SHORT

1. Check harness continuity between ECM terminal and HO2S2 terminal as follows. Refer to Wiring Diagram.

DTC	Terminals		Bank
	ECM	Sensor	
P0138	74	1	Bank 1
P0158	55	1	Bank 2

MTBL1360

Continuity should exist.

2. Check harness continuity between the following terminals and ground. Refer to Wiring Diagram.

DTC	Terminals		Bank
	ECM	Sensor	
P0138	74	1	Bank 1
P0158	55	1	Bank 2

MTBL1360

Continuity should not exist.

3. Also check harness for short to power.

OK or NG

OK	▶	GO TO 4.
NG	▶	Repair open circuit or short to ground or short to power in harness or connectors.

4	CHECK HO2S2 CONNECTORS FOR WATER

Check heated oxygen sensor 2 connector and harness connector for water.

Water should not exist.

OK or NG

OK (With CONSULT-II)	▶	GO TO 5.
OK (Without CONSULT-II)	▶	GO TO 6.
NG	▶	Repair or replace harness or connectors.

5	CHECK HEATED OXYGEN SENSOR 2

With CONSULT-II

1. Start engine and warm it up to the normal operating temperature.
2. Turn ignition switch OFF and wait at least 10 seconds.
3. Start engine and keep the engine speed between 3,500 and 4,000 rpm for at least 1 minute under no load.
4. Let engine idle for 1 minute.
5. Select "FUEL INJECTION" in "ACTIVE TEST" mode, and select "HO2S2 (B1)/(B2)" as the monitor item with CONSULT-II.
6. Check "HO2S2 (B1)/(B2)" at idle speed when adjusting "FUEL INJECTION" to ±25%.

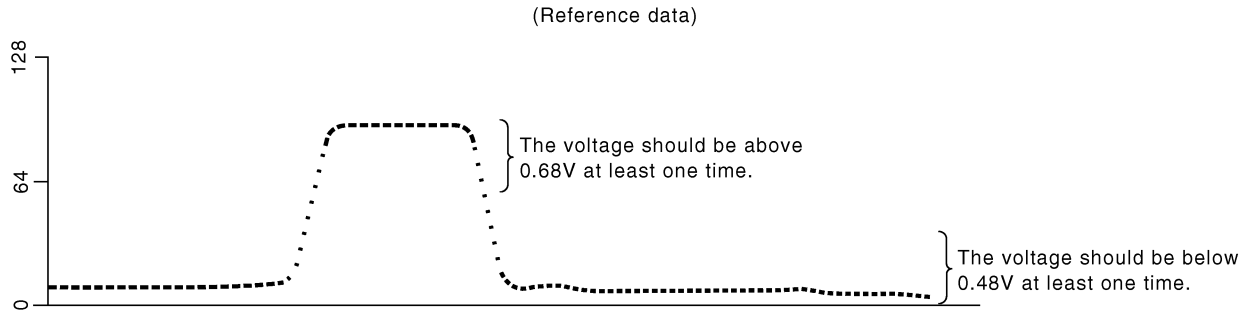

SEF972YA

"HO2S2 (B1)/(B2)" should be above 0.68V at least once when the "FUEL INJECTION" is +25%.
"HO2S2 (B1)/(B2)" should be below 0.48V at least once when the "FUEL INJECTION" is −25%.

CAUTION:

- **Discard any heated oxygen sensor which has been dropped from a height of more than 0.5 m (19.7 in) onto a hard surface such as a concrete floor; use a new one.**
- **Before installing new oxygen sensor, clean exhaust system threads using Oxygen Sensor Thread Cleaner tool J-43897-18 or J-43897-12 and approved anti-seize lubricant.**

OK or NG

OK	▶	GO TO 8.
NG	▶	Replace malfunctioning heated oxygen sensor 2.

6	CHECK HEATED OXYGEN SENSOR 2-I

Without CONSULT-II

1. Start engine and warm it up to the normal operating temperature.
2. Turn ignition switch OFF and wait at least 10 seconds.
3. Start engine and keep the engine speed between 3,500 and 4,000 rpm for at least 1 minute under no load.
4. Let engine idle for 1 minute.
5. Set voltmeter probes between ECM terminal 74 (HO2S2 bank 1 signal) or 55 (HO2S2 bank 2 signal) and ground.
6. Check the voltage when revving up to 4,000 rpm under no load at least 10 times.
   (Depress and release accelerator pedal as soon as possible.)

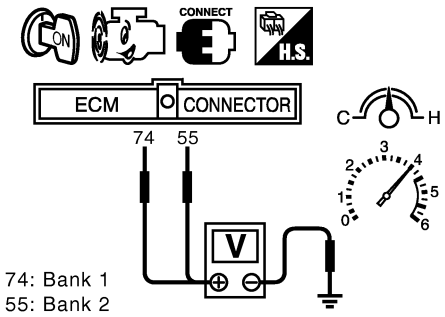

SEC432D

The voltage should be above 0.68V at least once during this procedure.

OK or NG

OK	▶	GO TO 8.
NG	▶	GO TO 7.

7	CHECK HEATED OXYGEN SENSOR 2-II	
Idle vehicle for 10 minutes, then check voltage between the same terminals as in Test No. 6; or check voltage when coasting from 80 km/h (50 MPH) in 3rd gear position (M/T), "D" position with "OD" OFF (A/T). **The voltage should go below 0.48V at least once during this procedure.** **CAUTION:** • **Discard any heated oxygen sensor which has been dropped from a height of more than 0.5 m (19.7 in) onto a hard surface such as a concrete floor; use a new one.** • **Before installing new oxygen sensor, clean exhaust system threads using Oxygen Sensor Thread Cleaner tool J-43897-18 or J-43897-12 and approved anti-seize lubricant.**		
OK or NG		
OK	▶	GO TO 8.
NG	▶	Replace malfunctioning heated oxygen sensor 2.

8	CHECK INTERMITTENT INCIDENT
Refer to "TROUBLE DIAGNOSIS FOR INTERMITTENT INCIDENT", EC-155.	
▶	**INSPECTION END**

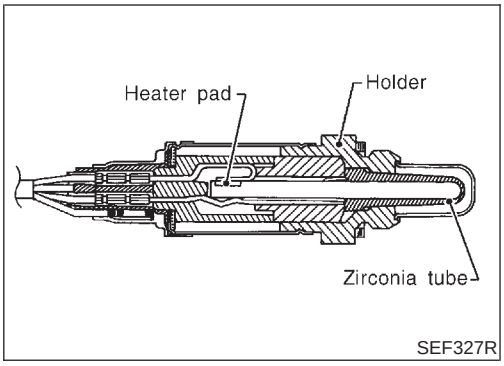

Component Description

NAEC0904

The heated oxygen sensor 2, after three way catalyst (manifold), monitors the oxygen level in the exhaust gas on each bank.
Even if switching characteristics of the heated oxygen sensor 1 are shifted, the air-fuel ratio is controlled to stoichiometric, by the signal from the heated oxygen sensor 2.
This sensor is made of ceramic zirconia. The zirconia generates voltage from approximately 1V in richer conditions to 0V in leaner conditions.
Under normal conditions the heated oxygen sensor 2 is not used for engine control operation.

CONSULT-II Reference Value in Data Monitor Mode

NAEC0905

Specification data are reference values.

MONITOR ITEM	CONDITION		SPECIFICATION
HO2S2 (B1) HO2S2 (B2)	• Engine: After warming up • After keeping engine speed between 3,500 and 4,000 rpm for 1 minute and at idle for 1 minute under no load	Revving engine from idle up to 3,000 rpm	0 - 0.3V ⟷ Approx. 0.6 - 1.0V
HO2S2 MNTR (B1) HO2S2 MNTR (B2)			LEAN ⟷ RICH

ECM Terminals and Reference Value

NAEC0906

Specification data are reference values and are measured between each terminal and ground.

CAUTION:

Do not use ECM ground terminals when measuring input/output voltage. Doing so may result in damage to the ECM's transistor. Use a ground other than ECM terminals, such as the ground.

TERMINAL NO.	WIRE COLOR	ITEM	CONDITION	DATA (DC Voltage)
55	OR/L	Heated oxygen sensor 2 (bank 2)	**[Engine is running]** • **Warm-up condition** • Revving engine from idle up to 3,000 rpm after the following conditions are met. • After keeping the engine speed between 3,500 and 4,000 rpm for 1 minute and at idle for 1 minute under no load	0 - Approximately 1.0V
74	OR	Heated oxygen sensor 2 (bank 1)	**[Engine is running]** • **Warm-up condition** • Revving engine from idle up to 3,000 rpm after the following conditions are met. • After keeping the engine speed between 3,500 and 4,000 rpm for 1 minute and at idle for 1 minute under no load	0 - Approximately 1.0V

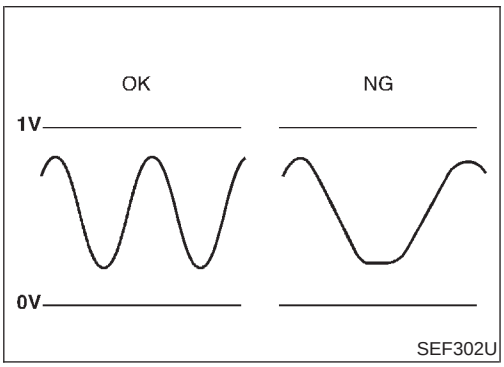

On Board Diagnosis Logic

NAEC0907

The heated oxygen sensor 2 has a much longer switching time between rich and lean than the heated oxygen sensor 1. The oxygen storage capacity before the three way catalyst (manifold) causes the longer switching time. To judge the malfunctions of heated oxygen sensor 2, ECM monitors whether the switching response of the sensor's voltage is faster than specified during the various driving condition such as fuel-cut.

On Board Diagnosis Logic (Cont'd)

DTC No.	Trouble diagnosis name	DTC Detecting Condition	Possible Cause
P0139 0139 (Bank 1)	Heated oxygen sensor 2 circuit slow response	It takes more time for the sensor to respond between rich and lean than the specified time.	• Harness or connectors (The sensor circuit is open or shorted.) • Heated oxygen sensor 2 • Fuel pressure • Injector • Intake air leaks
P0159 0159 (Bank 2)			

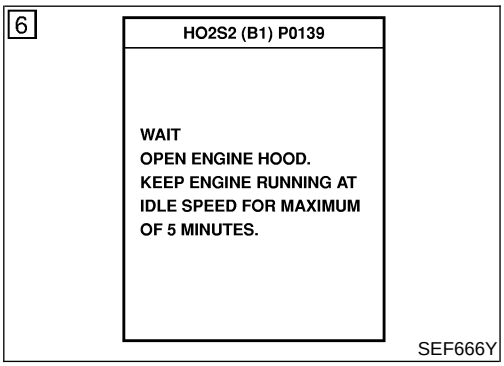

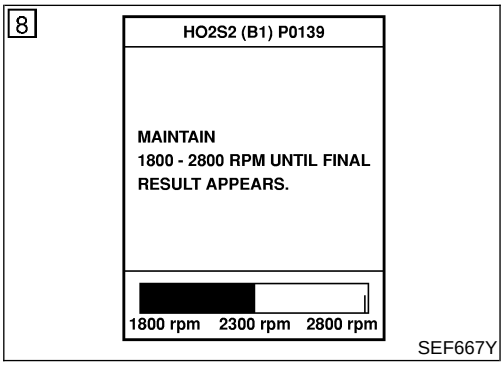

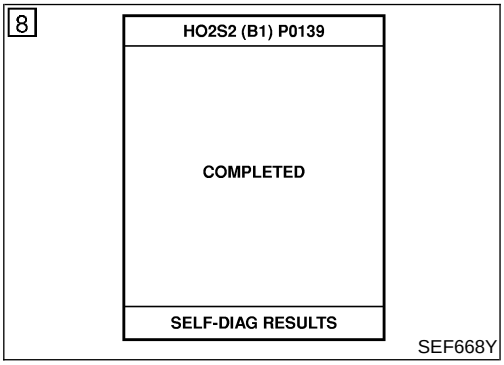

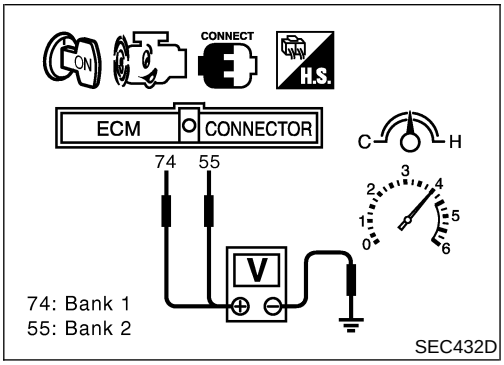

DTC Confirmation Procedure

NAEC0908

NOTE:

If DTC Confirmation Procedure has been previously conducted, always turn ignition switch OFF and wait at least 10 seconds before conducting the next test.

TESTING CONDITION:

- **Open engine hood before conducting following procedure.**
- **For the best results, perform "DTC WORK SUPPORT" at a temperature of 0 to 30°C (32 to 86°F).**

WITH CONSULT-II

NAEC0908S01

1) Start engine and warm it up to the normal operating temperature.
2) Turn ignition switch OFF and wait at least 10 seconds.
3) Start engine and keep the engine speed between 3,500 and 4,000 rpm for at least 1 minute under no load.
4) Let engine idle for 1 minute.
5) Select "HO2S2 (B1) P0139" or "HO2S2 (B2) P0159" of "HO2S2" in "DTC WORK SUPPORT" mode with CONSULT-II.
6) Follow the instruction of CONSULT-II.
7) Make sure that "OK" is displayed after touching "SELF-DIAG RESULTS".
   If NG is displayed, refer to EC-268, "Diagnostic Procedure".
   If "CAN NOT BE DIAGNOSED" is displayed, perform the following.

a) Turn ignition switch OFF and leave the vehicle in a cool place (soak the vehicle).
b) Turn ignition switch ON and select "COOLAN TEMP/S" in "DATA MONITOR" mode with CONSULT-II.
c) Start engine and warm it up while monitoring "COOLAN TEMP/S" indication on CONSULT-II.
d) When "COOLAN TEMP/S" indication reaches to 70°C (158°F), go to step 3.

Overall Function Check

NAEC0909

Use this procedure to check the overall function of the rear heated oxygen sensor circuit. During this check, a 1st trip DTC might not be confirmed.

WITH GST

NAEC0909S01

1) Start engine and warm it up to the normal operating temperature.
2) Turn ignition switch OFF and wait at least 10 seconds.
3) Start engine and keep the engine speed between 3,500 and 4,000 rpm for at least 1 minute under no load.

4) Let engine idle for 1 minute.
5) Set voltmeter probes between ECM terminal 74 (HO2S2 bank 1 signal) or 55 (HO2S2 bank 2 signal) and ground.
6) Check the voltage when racing up to 4,000 rpm under no load at least 10 times.
   (Depress and release accelerator pedal as soon as possible.)
   A change of voltage should be more than 0.06V for 1 second during this procedure.
   If the voltage can be confirmed in step 6, step 7 is not necessary.
7) Keep vehicle at idling for 10 minutes, then check the voltage. Or check the voltage when coasting from 80 km/h (50 MPH) in 3rd gear position (M/T), D position with "OD" OFF (A/T).
   A change of voltage should be more than 0.06V for 1 second during this procedure.
8) If NG, go to "Diagnostic Procedure", EC-268.

Wiring Diagram

=NAEC0910

BANK 1

NAEC0910S01

EC-O2S2B1-01

: Detectable line for DTC

: Non-detectable line for DTC

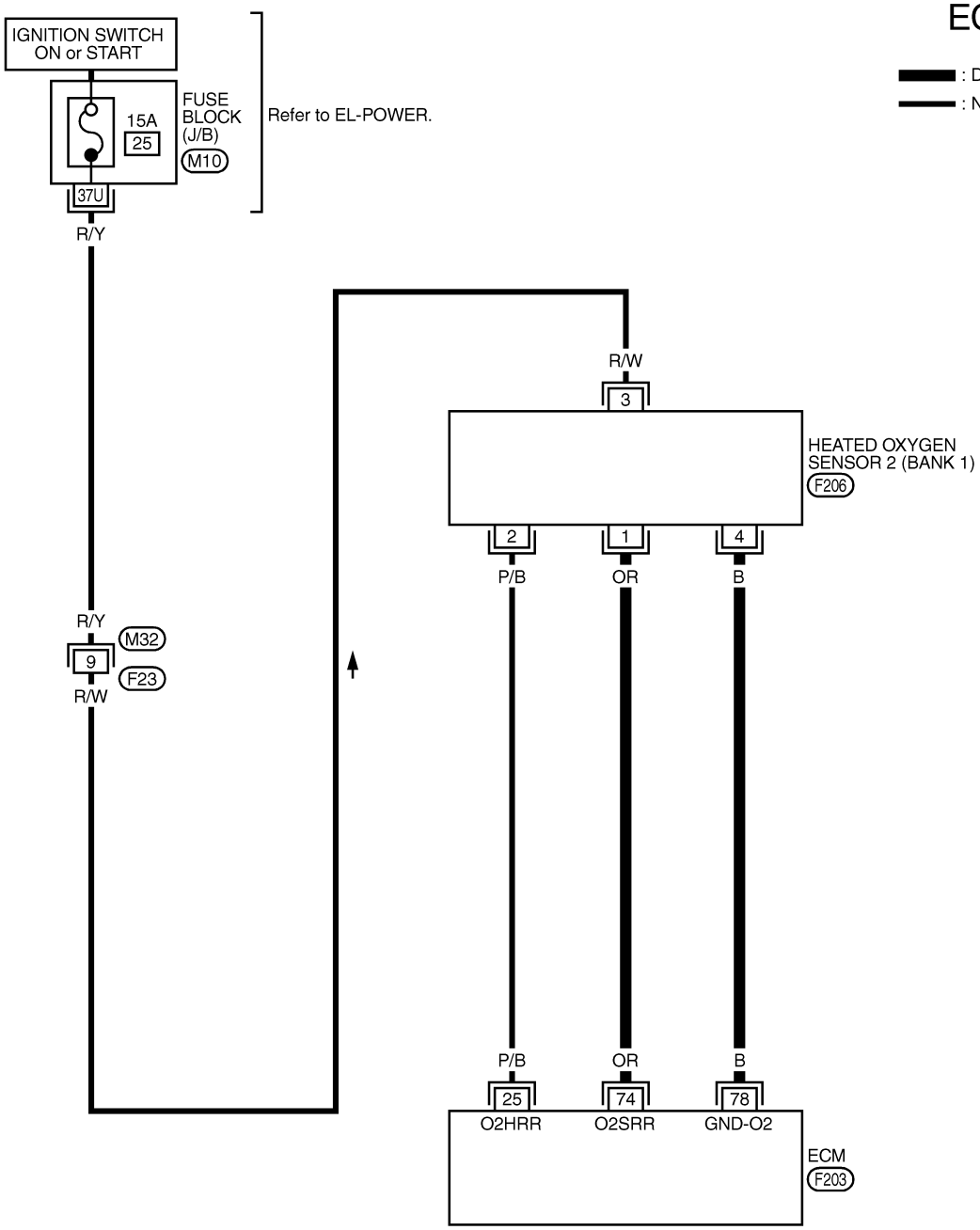

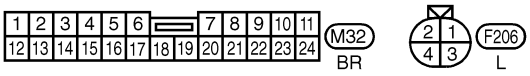

REFER TO THE FOLLOWING.
M10 -FUSE BLOCK-JUNCTION BOX (J/B)

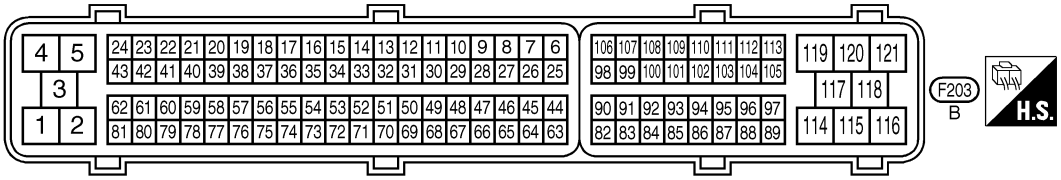

MEC089E

BANK 2

NAEC0910S02

EC-O2S2B2-01

: Detectable line for DTC

: Non-detectable line for DTC

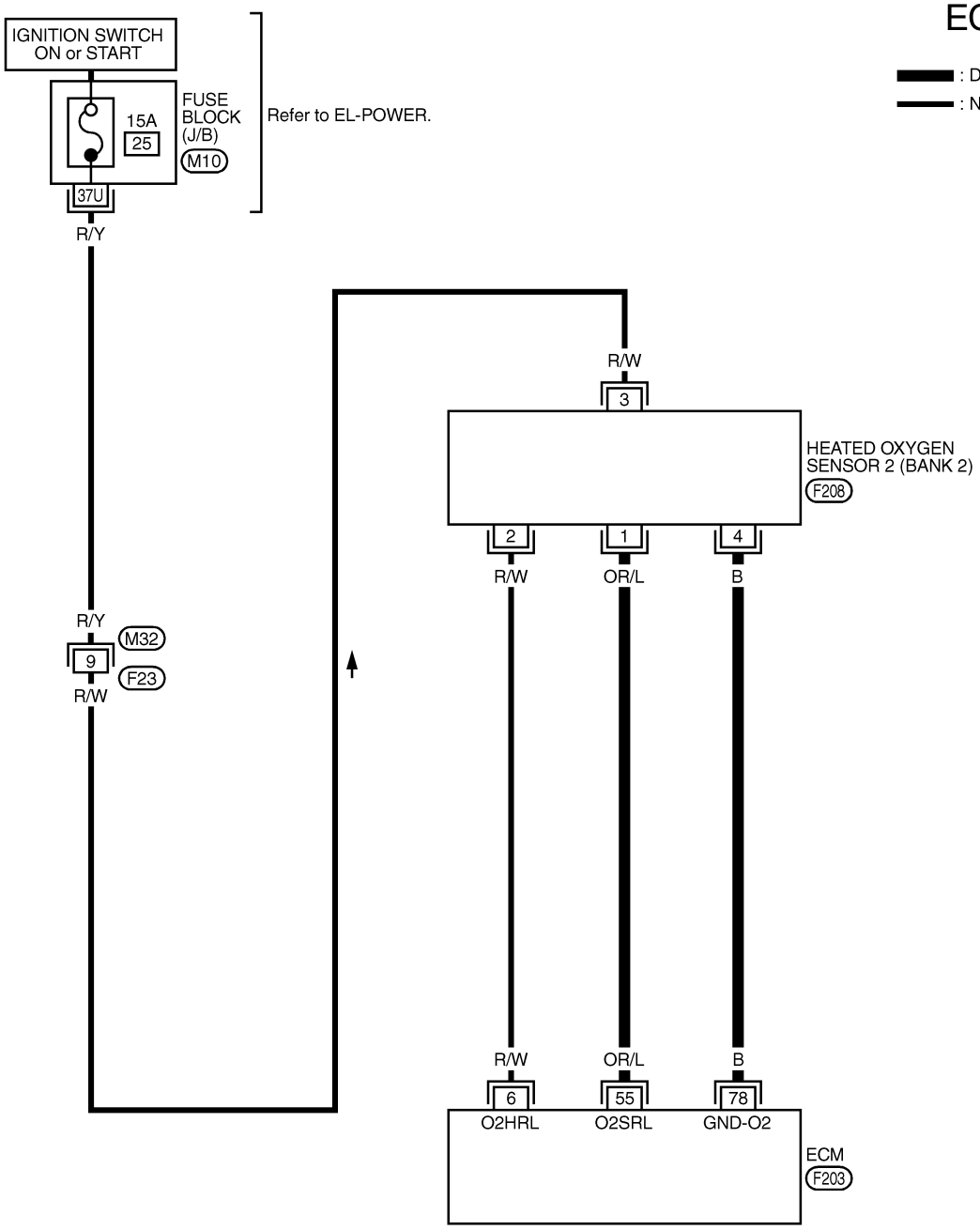

REFER TO THE FOLLOWING.
M10 -FUSE BLOCK-
JUNCTION BOX (J/B)

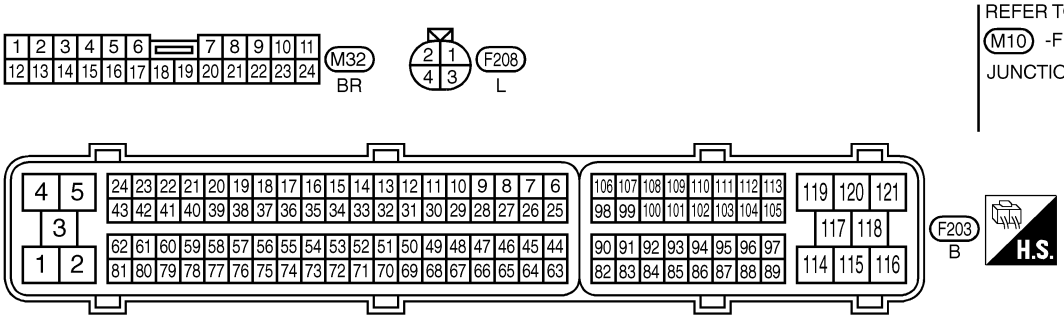

MEC090E

Diagnostic Procedure

NAEC0911

1	CHECK GROUND CONNECTIONS

1. Turn ignition switch OFF.
2. Loosen and retighten three ground screws on the body.
   Refer to “Ground Inspection”, EC-165.

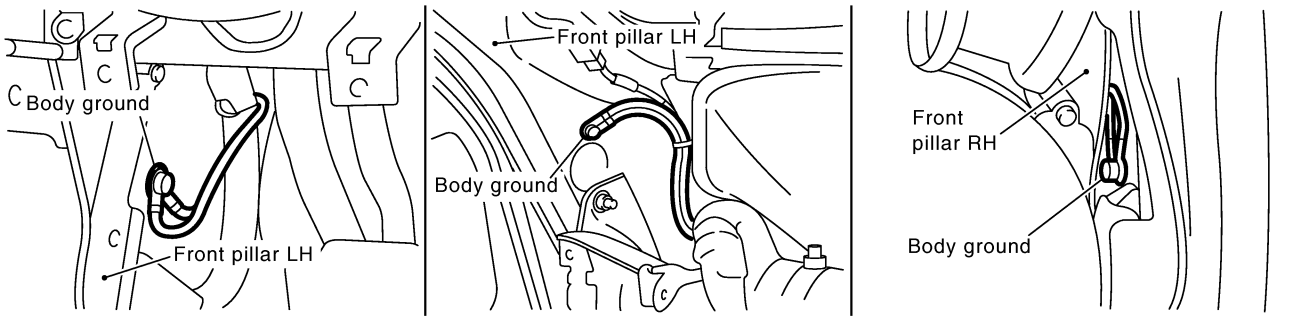

SEC997D

OK or NG

OK	▶	GO TO 2.
NG	▶	Repair or replace ground connections.

2	CLEAR THE SELF-LEARNING DATA

With CONSULT-II

1. Start engine and warm it up to normal operating temperature.
2. Select "SELF-LEARNING CONT" in "WORK SUPPORT" mode with CONSULT-II.
3. Clear the self-learning control coefficient by touching "CLEAR".

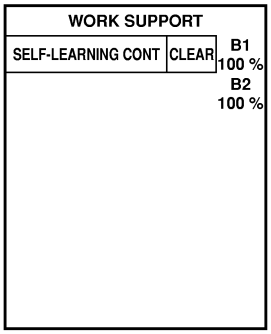

SEF968Y

4. Run engine for at least 10 minutes at idle speed.
   Is the 1st trip DTC P0171, P0172, P0174 or P0175 detected?
   Is it difficult to start engine?

Without CONSULT-II

1. Start engine and warm it up to normal operating temperature.
2. Turn ignition switch OFF.
3. Disconnect mass air flow sensor harness connector, and restart and run engine for at least 5 seconds at idle speed.

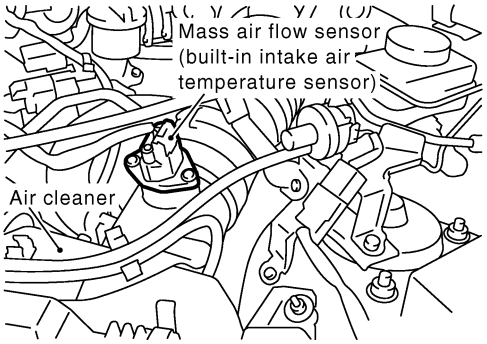

SEF960YA

4. Stop engine and reconnect mass air flow sensor harness connector.
5. Make sure DTC No. P0102 is displayed.
6. Erase the DTC memory. Refer to "HOW TO ERASE EMISSION-RELATED DIAGNOSTIC INFORMATION", EC-91.
7. Make sure DTC No. P0000 is displayed.
8. Run engine for at least 10 minutes at idle speed.
   Is the 1st trip DTC P0171, P0172, P0174 or P0175 detected?
   Is it difficult to start engine?

Yes or No

Yes	▶	Perform trouble diagnosis for DTC P0171, P0174 or P0172, P0175. Refer to EC-273, 282.
No	▶	GO TO 3.

3	CHECK HO2S2 GROUND CIRCUIT FOR OPEN AND SHORT

1. Turn ignition switch OFF.
2. Disconnect heated oxygen sensor 2 harness connector.

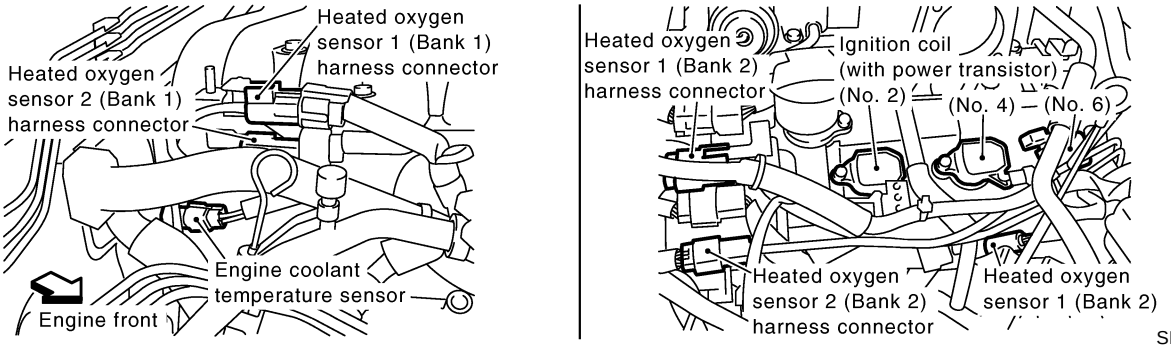

3. Disconnect ECM harness connector.
4. Check harness continuity between HO2S2 terminal 4 and ECM terminal 78.
   Refer to Wiring Diagram.
   Continuity should exist.
5. Also check harness for short to ground and short to power.

OK or NG

OK	▶	GO TO 4.
NG	▶	Repair open circuit or short to ground or short to power in harness or connectors

4	CHECK HO2S2 INPUT SIGNAL CIRCUIT FOR OPEN AND SHORT

1. Check harness continuity between ECM terminal and HO2S2 terminal as follows.
   Refer to Wiring Diagram.

DTC	Terminals		Bank
	ECM	Sensor	
P0139	74	1	Bank 1
P0159	55	1	Bank 2

MTBL1362

   Continuity should exist.
2. Check harness continuity between the following terminals and ground.
   Refer to Wiring Diagram.

DTC	Terminals		Bank
	ECM	Sensor	
P0139	74	1	Bank 1
P0159	55	1	Bank 2

MTBL1362

   Continuity should not exist.
3. Also check harness for short to ground and short to power.

OK or NG

OK (With CONSULT-II)	▶	GO TO 5.
OK (Without CONSULT-II)	▶	GO TO 6.
NG	▶	Repair open circuit or short to ground or short to power in harness or connectors.

5	CHECK HEATED OXYGEN SENSOR 2

With CONSULT-II

1. Start engine and warm it up to the normal operating temperature.
2. Turn ignition switch OFF and wait at least 10 seconds.
3. Start engine and keep the engine speed between 3,500 and 4,000 rpm for at least 1 minute under no load.
4. Let engine idle for 1 minute.
5. Select "FUEL INJECTION" in "ACTIVE TEST" mode, and select "HO2S2 (B1)/(B2)" as the monitor item with CONSULT-II.
6. Check "HO2S2 (B1)/(B2)" at idle speed when adjusting "FUEL INJECTION" to ±25%.

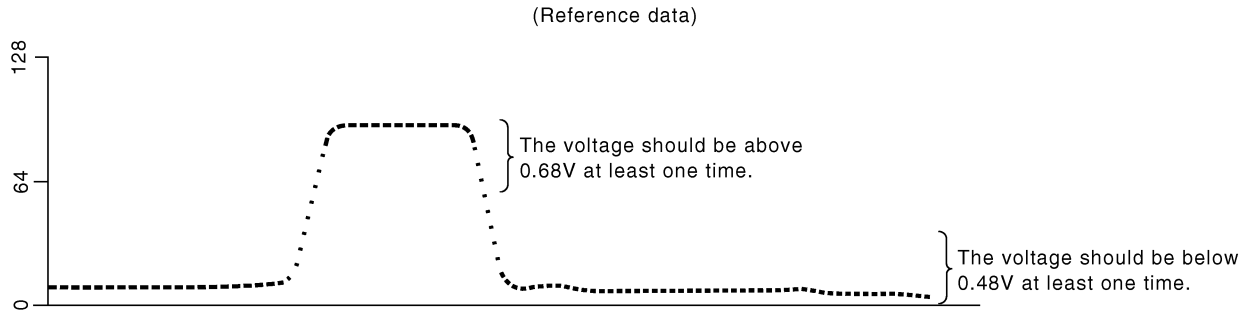

SEF972YA

"HO2S2 (B1)/(B2)" should be above 0.68V at least once when the "FUEL INJECTION" is +25%.
"HO2S2 (B1)/(B2)" should be below 0.48V at least once when the "FUEL INJECTION" is −25%.

CAUTION:

- **Discard any heated oxygen sensor which has been dropped from a height of more than 0.5 m (19.7 in) onto a hard surface such as a concrete floor; use a new one.**
- **Before installing new oxygen sensor, clean exhaust system threads using Oxygen Sensor Thread Cleaner tool J-43897-18 or J-43897-12 and approved anti-seize lubricant.**

OK or NG

OK	▶	GO TO 8.
NG	▶	Replace malfunctioning heated oxygen sensor 2.

6	CHECK HEATED OXYGEN SENSOR 2-I

Without CONSULT-II

1. Start engine and warm it up to the normal operating temperature.
2. Turn ignition switch OFF and wait at least 10 seconds.
3. Start engine and keep the engine speed between 3,500 and 4,000 rpm for at least 1 minute under no load.
4. Let engine idle for 1 minute.
5. Set voltmeter probes between ECM terminal 74 (HO2S2 bank 1 signal) or 55 (HO2S2 bank 2 signal) and ground.
6. Check the voltage when revving up to 4,000 rpm under no load at least 10 times.
   (Depress and release accelerator pedal as soon as possible.)

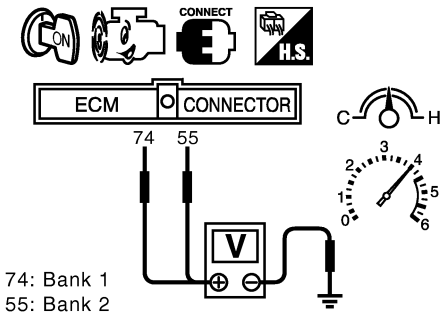

SEC432D

The voltage should be above 0.68V at least once during this procedure.

OK or NG

OK	▶	GO TO 8.
NG	▶	GO TO 7.

7	CHECK HEATED OXYGEN SENSOR 2-II	
Idle vehicle for 10 minutes, then check voltage between the same terminals as in Test No. 6; or check voltage when coasting from 80 km/h (50 MPH) in 3rd gear position (M/T), "D" position with "OD" OFF (A/T). **The voltage should go below 0.48V at least once during this procedure.** **CAUTION:** • **Discard any heated oxygen sensor which has been dropped from a height of more than 0.5 m (19.7 in) onto a hard surface such as a concrete floor; use a new one.** • **Before installing new oxygen sensor, clean exhaust system threads using Oxygen Sensor Thread Cleaner tool J-43897-18 or J-43897-12 and approved anti-seize lubricant.**		
OK or NG		
OK	▶	GO TO 8.
NG	▶	Replace malfunctioning heated oxygen sensor 2.

8	CHECK INTERMITTENT INCIDENT
Refer to "TROUBLE DIAGNOSIS FOR INTERMITTENT INCIDENT", EC-155.	
▶	**INSPECTION END**

On Board Diagnosis Logic

NAEC0912

With the Air/Fuel Mixture Ratio Self-Learning Control, the actual mixture ratio can be brought closely to the theoretical mixture ratio based on the mixture ratio feedback signal from the heated oxygen sensors 1. The ECM calculates the necessary compensation to correct the offset between the actual and the theoretical ratios.
In case the amount of the compensation value is extremely large (The actual mixture ratio is too lean.), the ECM judges the condition as the fuel injection system malfunction and lights up the MIL (2 trip detection logic).

Sensor	Input Signal to ECM	ECM function	Actuator
Heated oxygen sensor 1	Density of oxygen in exhaust gas (Mixture ratio feedback signal)	Fuel injection control	Injector

DTC No.	Trouble diagnosis name	DTC Detecting Condition	Possible Cause
P0171 0171 (Bank 1)	Fuel injection system too lean	Fuel injection system does not operate Properly, the amount of mixture ratio compensation is too large. (The mixture ratio is too lean.)	• Intake air leaks • Heated oxygen sensor 1 • Injector • Exhaust gas leaks • Incorrect fuel pressure • Lack of fuel • Mass air flow sensor • Incorrect PCV hose connection
P0174 0174 (Bank 2)			

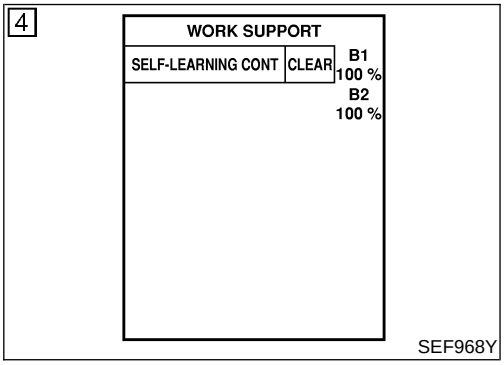

DTC Confirmation Procedure

NAEC0913

NOTE:
If DTC Confirmation Procedure has been previously conducted, always turn ignition switch OFF and wait at least 10 seconds before conducting the next test.

WITH CONSULT-II

NAEC0913S01

1) Start engine and warm it up to normal operating temperature.
2) Turn ignition switch OFF and wait at least 10 seconds.
3) Turn ignition switch ON and select “SELF-LEARN CONTROL” in “WORK SUPPORT” mode with CONSULT-II.
4) Clear the self-learning control coefficient by touching “CLEAR”.
5) Select “DATA MONITOR” mode with CONSULT-II.
6) Start engine again and let it idle for at least 10 minutes.
   The 1st trip DTC P0171 or P0174 should be detected at this stage, if a malfunction exists. If so, go to “Diagnostic Procedure”, EC-277.
7) If it is difficult to start engine at step 6, the fuel injection system has a malfunction, too.
8) Crank engine while depressing accelerator pedal. If engine starts, go to “Diagnostic Procedure”, EC-277. If engine does not start, check exhaust and intake air leak visually.

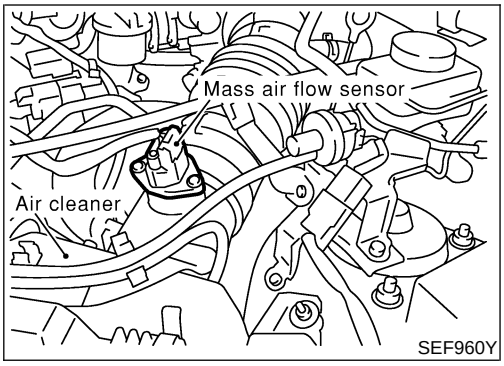

WITH GST

NAEC0913S02

1) Start engine and warm it up to normal operating temperature.
2) Turn ignition switch OFF and wait at least 10 seconds.
3) Disconnect mass air flow sensor harness connector. Then restart and run engine for at least 5 seconds at idle speed.
4) Stop engine and reconnect mass air flow sensor harness connector.
5) Select MODE 3 with GST. Make sure DTC P0102 is detected.
6) Select MODE 4 with GST and erase the DTC P0102.
7) Start engine again and let it idle for at least 10 minutes.
8) Select MODE 7 with GST. The 1st trip DTC P0171 or P0174 should be detected at this stage, if a malfunction exists. If so, go to "Diagnostic Procedure", EC-277.
9) If it is difficult to start engine at step 7, the fuel injection system has a malfunction.
10) Crank engine while depressing accelerator pedal. If engine starts, go to "Diagnostic Procedure", EC-277. If engine does not start, check exhaust and intake air leak visually.

Wiring Diagram

NAEC0914

BANK 1

NAEC0914S01

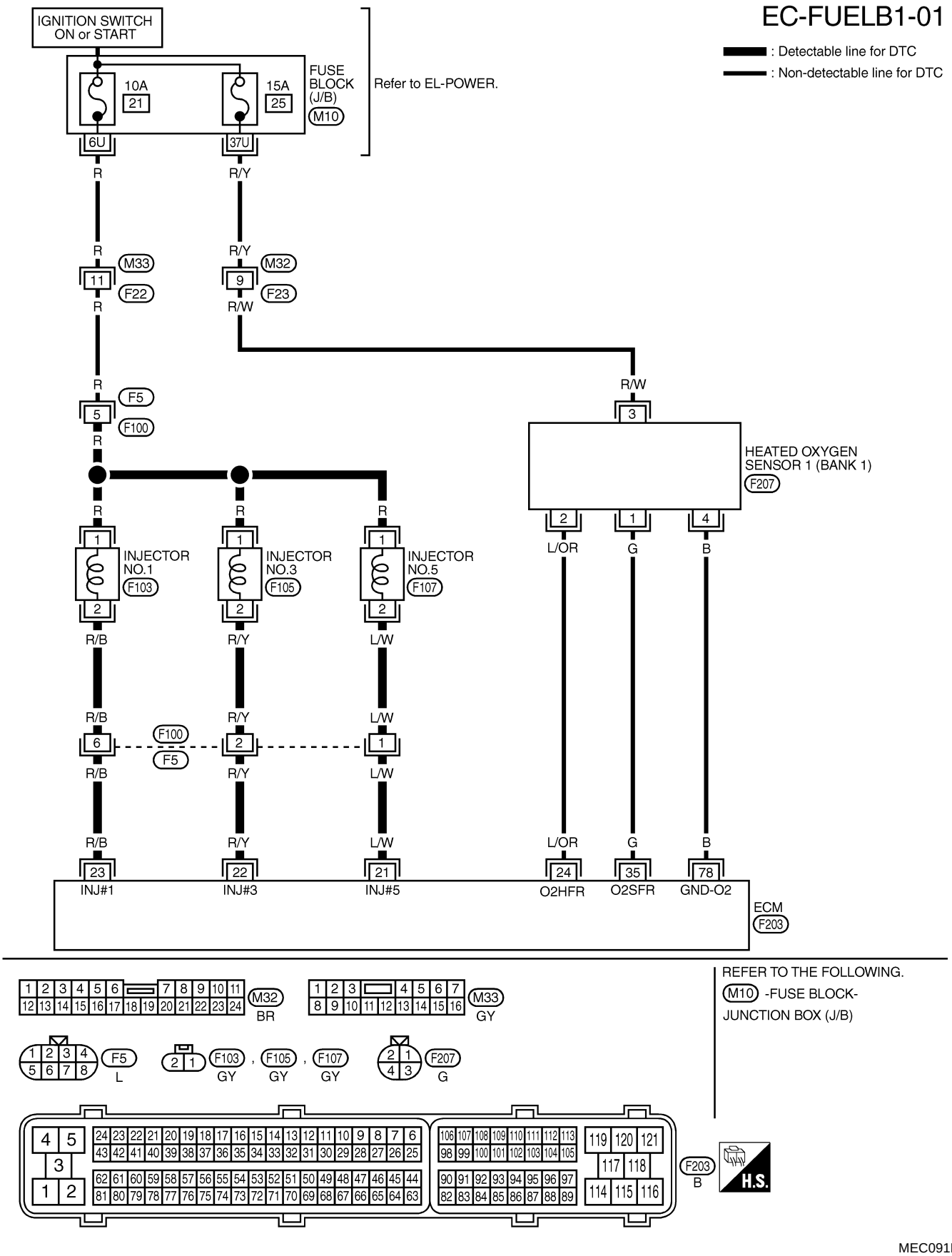

MEC091E

BANK 2

NAEC0914S02

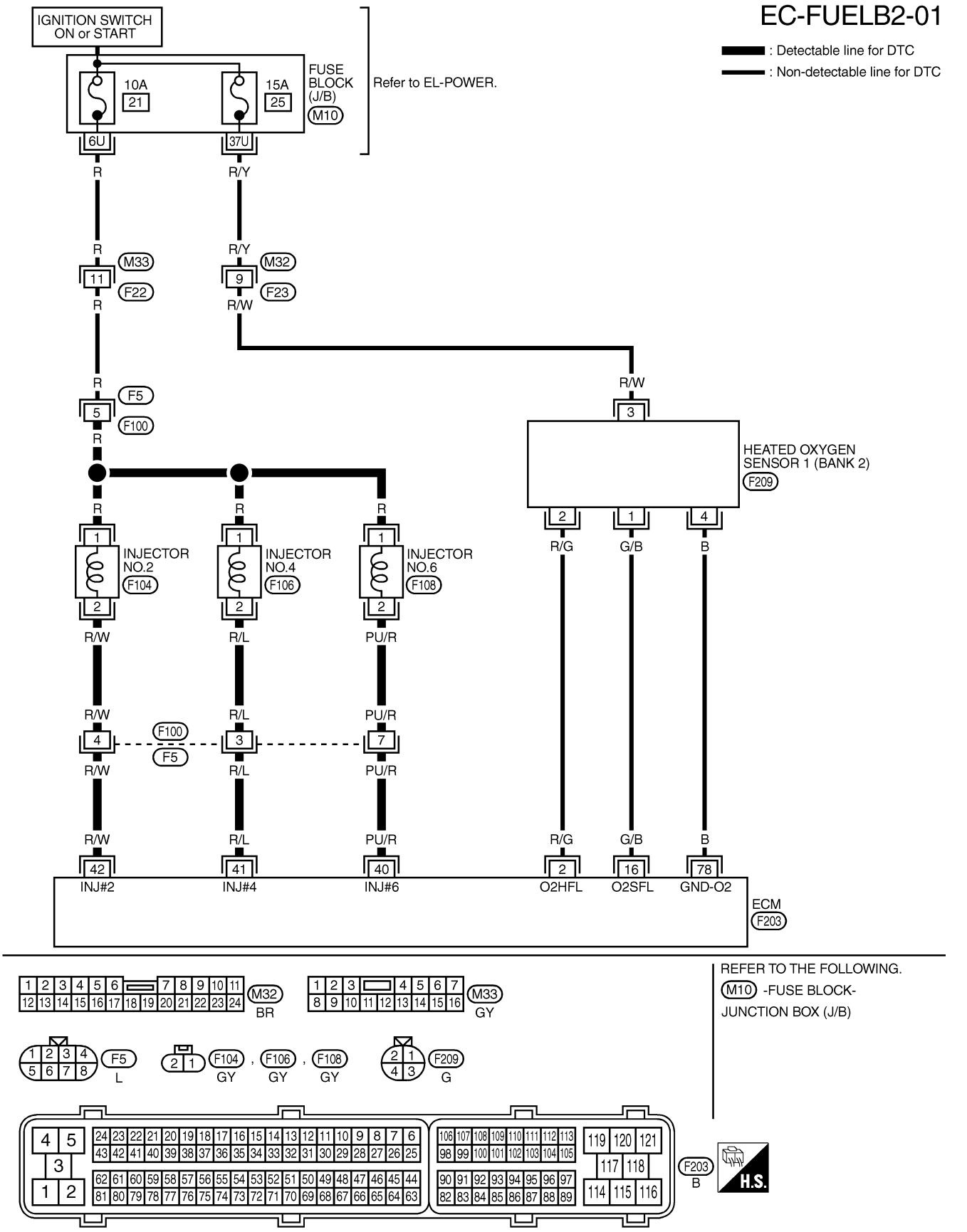

MEC092E

Diagnostic Procedure

NAEC0915

1	CHECK EXHAUST GAS LEAK

1. Start engine and run it at idle.
2. Listen for an exhaust gas leak before three way catalyst (manifold).

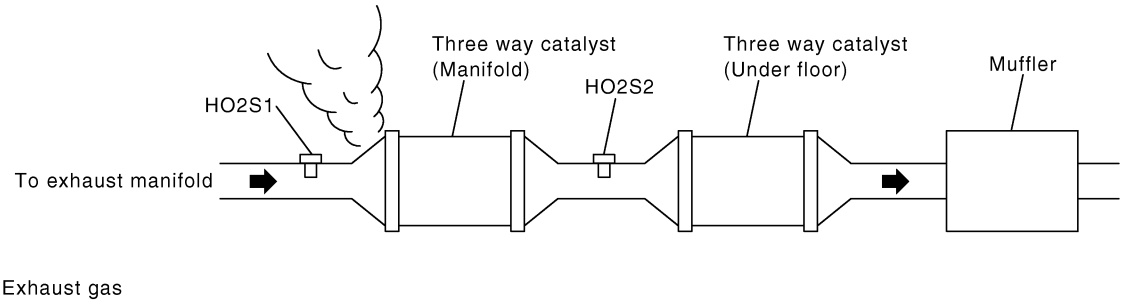

SEC502D

OK or NG

OK	▶	GO TO 2.
NG	▶	Repair or replace.

2	CHECK FOR INTAKE AIR LEAK

1. Listen for an intake air leak after the mass air flow sensor.
2. Check PCV hose connection.

OK or NG

OK	▶	GO TO 3.
NG	▶	Repair or replace.

3 CHECK HEATED OXYGEN SENSOR 1 CIRCUIT FOR OPEN AND SHORT

1. Turn ignition switch OFF.
2. Disconnect corresponding heated oxygen sensor 1 harness connector.

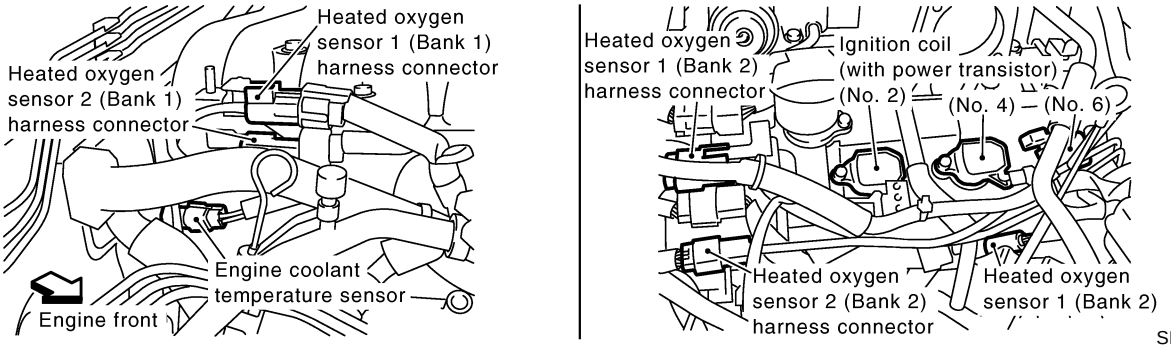

SEC999D

3. Disconnect ECM harness connector.
4. Check harness continuity between ECM terminal and HO2S1 terminal as follows.
   Refer to Wiring Diagram.

DTC	Terminals		Bank
	ECM	Sensor	
P0171	35	1	Bank 1
P0174	16	1	Bank 2

MTBL1364

Continuity should exist.

5. Check harness continuity between the following terminals and ground.
   Refer to Wiring Diagram.

DTC	Terminals		Bank
	ECM	Sensor	
P0171	35	1	Bank 1
P0174	16	1	Bank 2

MTBL1364

Continuity should not exist.

6. Check harness continuity between HO2S1 terminal 4 and ECM terminal 78.
   Continuity should exist.
7. Also check harness for short to ground and short to power.

OK or NG

OK	▶	GO TO 4.
NG	▶	Repair open circuit or short to ground or short to power in harness or connectors.

4 CHECK FUEL PRESSURE

1. Release fuel pressure to zero. Refer to EC-56.
2. Install fuel pressure gauge and check fuel pressure. Refer to EC-56.
   At idling:
   When fuel pressure regulator valve vacuum hose is connected.
   235 kPa (2.4 kg/cm^2, 34 psi)
   When fuel pressure regulator valve vacuum hose is disconnected.
   294 kPa (3.0 kg/cm^2, 43 psi)

OK or NG

OK	▶	GO TO 6.
NG	▶	GO TO 5.

5	DETECT MALFUNCTIONING PART
Check the following. ● Fuel pump and circuit (Refer to EC-729.) ● Fuel pressure regulator (Refer to EC-57.) ● Fuel lines (Refer to MA-17, "Checking Fuel Lines".) ● Fuel filter for clogging	
▶	Repair or replace.

6	CHECK MASS AIR FLOW SENSOR
With CONSULT-II 1. Install all removed parts. 2. Check "MASS AIR FLOW" in "DATA MONITOR" mode with CONSULT-II. **2.0 - 6.0 g·m/sec: at idling** **7.0 - 20.0 g·m/sec: at 2,500 rpm**	
With GST 1. Install all removed parts. 2. Check mass air flow sensor signal in MODE 1 with GST. **2.0 - 6.0 g·m/sec: at idling** **7.0 - 20.0 g·m/sec: at 2,500 rpm**	
OK or NG	
OK ▶	GO TO 7.
NG ▶	Check connectors for rusted terminals or loose connections in the mass air flow sensor circuit or ground. Refer to EC-194.

7	CHECK FUNCTION OF INJECTORS

With CONSULT-II

1. Start engine.
2. Perform "POWER BALANCE" in "ACTIVE TEST" mode with CONSULT-II.

ACTIVE TEST	
POWER BALANCE	
MONITOR	
ENG SPEED	XXX rpm
MAS AIF SE-B1	XXX V
IACV-AAC/V	XXX step

SEF070Y

3. Make sure that each circuit produces a momentary engine speed drop.

Without CONSULT-II

1. Start engine.
2. Listen to each injector operating sound.

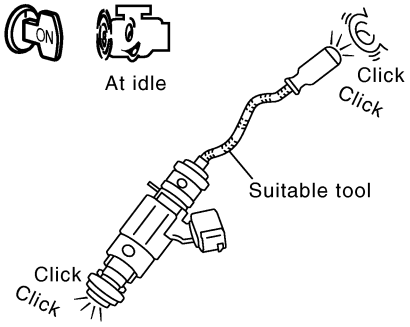

PBIB1725E

Clicking noise should be heard.

OK or NG

OK	▶	GO TO 8.
NG	▶	Perform trouble diagnosis for "INJECTORS", EC-724.

8	CHECK INJECTOR

1. Confirm that the engine is cooled down and there are no fire hazards near the vehicle.
2. Turn ignition switch OFF.
3. Disconnect injector harness connectors.
4. Remove injector gallery assembly. Refer to EC-58.
   Keep fuel hose and all injectors connected to injector gallery.
5. For DTC P0171, reconnect injector harness connectors on bank 1.
   For DTC P0174, reconnect injector harness connectors on bank 2.
6. Disconnect all ignition coil harness connectors.
7. Prepare pans or saucers under each injector.
8. Crank engine for about 3 seconds.
   For DTC P0171, make sure that fuel sprays out from injectors on bank 1.
   For DTC P0174, make sure that fuel sprays out from injectors on bank 2.

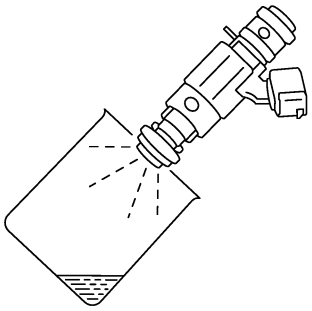

PBIB1726E

Fuel should be sprayed evenly for each injector.

OK or NG

OK	▶	GO TO 9.
NG	▶	Replace injectors from which fuel does not spray out. Always replace O-ring with new ones.

9	CHECK INTERMITTENT INCIDENT
Refer to "TROUBLE DIAGNOSIS FOR INTERMITTENT INCIDENT", EC-155.	
▶	**INSPECTION END**

On Board Diagnosis Logic

NAEC0916

With the Air/Fuel Mixture Ratio Self-Learning Control, the actual mixture ratio can be brought closely to the theoretical mixture ratio based on the mixture ratio feedback signal from the heated oxygen sensors 1. The ECM calculates the necessary compensation to correct the offset between the actual and the theoretical ratios.
In case the amount of the compensation value is extremely large (The actual mixture ratio is too rich.), the ECM judges the condition as the fuel injection system malfunction and lights up the MIL (2 trip detection logic).

Sensor	Input Signal to ECM	ECM function	Actuator
Heated oxygen sensor 1	Density of oxygen in exhaust gas (Mixture ratio feedback signal)	Fuel injection control	Injector

DTC No.	Trouble diagnosis name	DTC Detecting Condition	Possible Cause
P0172 0172 (Bank 1)	Fuel injection system too rich	Fuel injection system does not operate properly, the amount of mixture ratio compensation is too large. (The mixture ratio is too rich.)	• Heated oxygen sensor 1 • Injector • Exhaust gas leaks • Incorrect fuel pressure • Mass air flow sensor
P0175 0175 (Bank 2)			

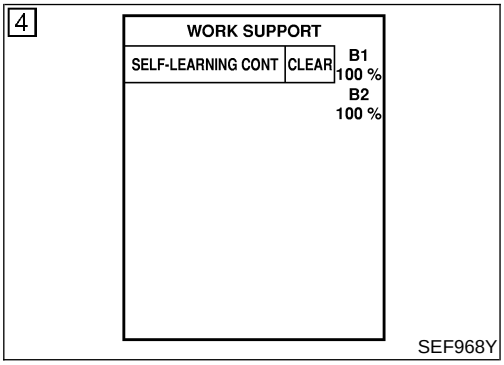

DTC Confirmation Procedure

NAEC0917

NOTE:
If DTC Confirmation Procedure has been previously conducted, always turn ignition switch OFF and wait at least 10 seconds before conducting the next test.

WITH CONSULT-II

NAEC0917S01

1) Start engine and warm it up to normal operating temperature.
2) Turn ignition switch OFF and wait at least 10 seconds.
3) Turn ignition switch ON and select “SELF-LEARN CONTROL” in “WORK SUPPORT” mode with CONSULT-II.
4) Clear the self-learning control coefficient by touching “CLEAR”.
5) Select “DATA MONITOR” mode with CONSULT-II.
6) Start engine again and let it idle for at least 10 minutes.
   The 1st trip DTC P0172, P0175 should be detected at this stage, if a malfunction exists. If so, go to “Diagnostic Procedure”, EC-286.
7) If it is difficult to start engine at step 6, the fuel injection system has a malfunction, too.
8) Crank engine while depressing accelerator pedal.
   If engine starts, go to “Diagnostic Procedure”, EC-286. If engine does not start, remove ignition plugs and check for fouling, etc.

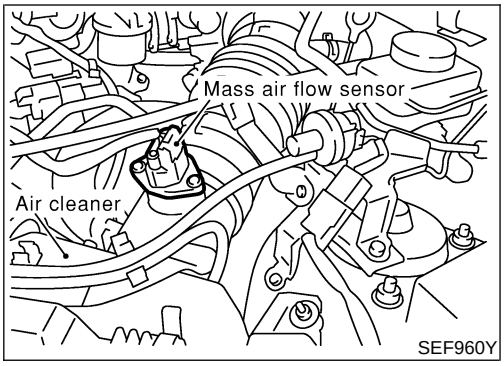

WITH GST

NAEC0917S02

1) Start engine and warm it up to normal operating temperature.
2) Turn ignition switch OFF and wait at least 10 seconds.
3) Disconnect mass air flow sensor harness connector. Then restart and run engine for at least 5 seconds at idle speed.
4) Stop engine and reconnect mass air flow sensor harness connector.
5) Select MODE 3 with GST. Make sure DTC P0102 is detected.
6) Select MODE 4 with GST and erase the DTC P0102.
7) Start engine again and let it idle for at least 10 minutes.
8) Select MODE 7 with GST. The 1st trip DTC P0172 or P0175 should be detected at this stage, if a malfunction exists. If so, go to "Diagnostic Procedure", EC-286.
9) If it is difficult to start engine at step 7, the fuel injection system has a malfunction.
10) Crank engine while depressing accelerator pedal.
If engine starts, go to "Diagnostic Procedure", EC-286. If engine does not start, remove ignition plugs and check for fouling, etc.

Wiring Diagram

NAEC0918

BANK 1

NAEC0918S01

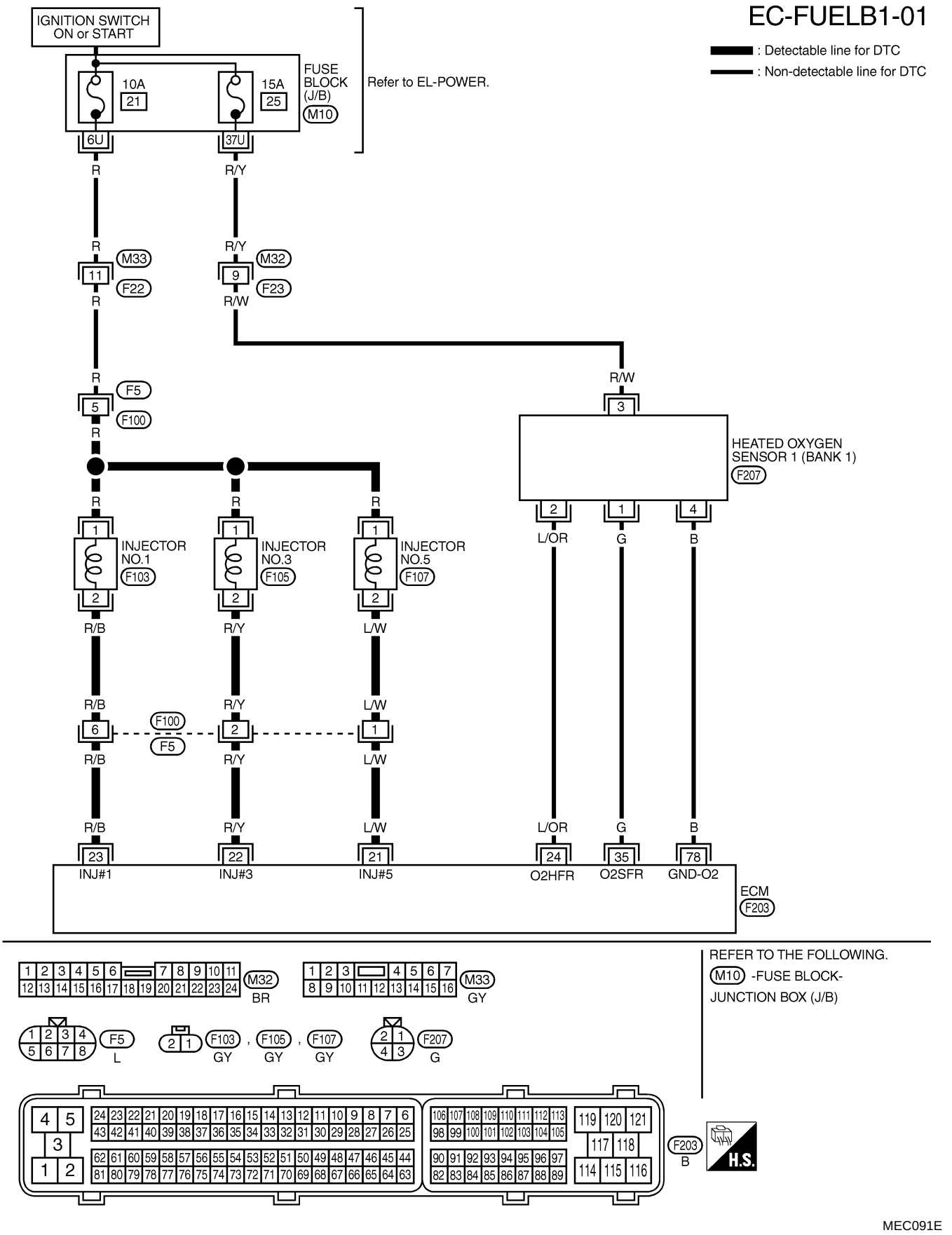

MEC091E

BANK 2

NAEC0918S02

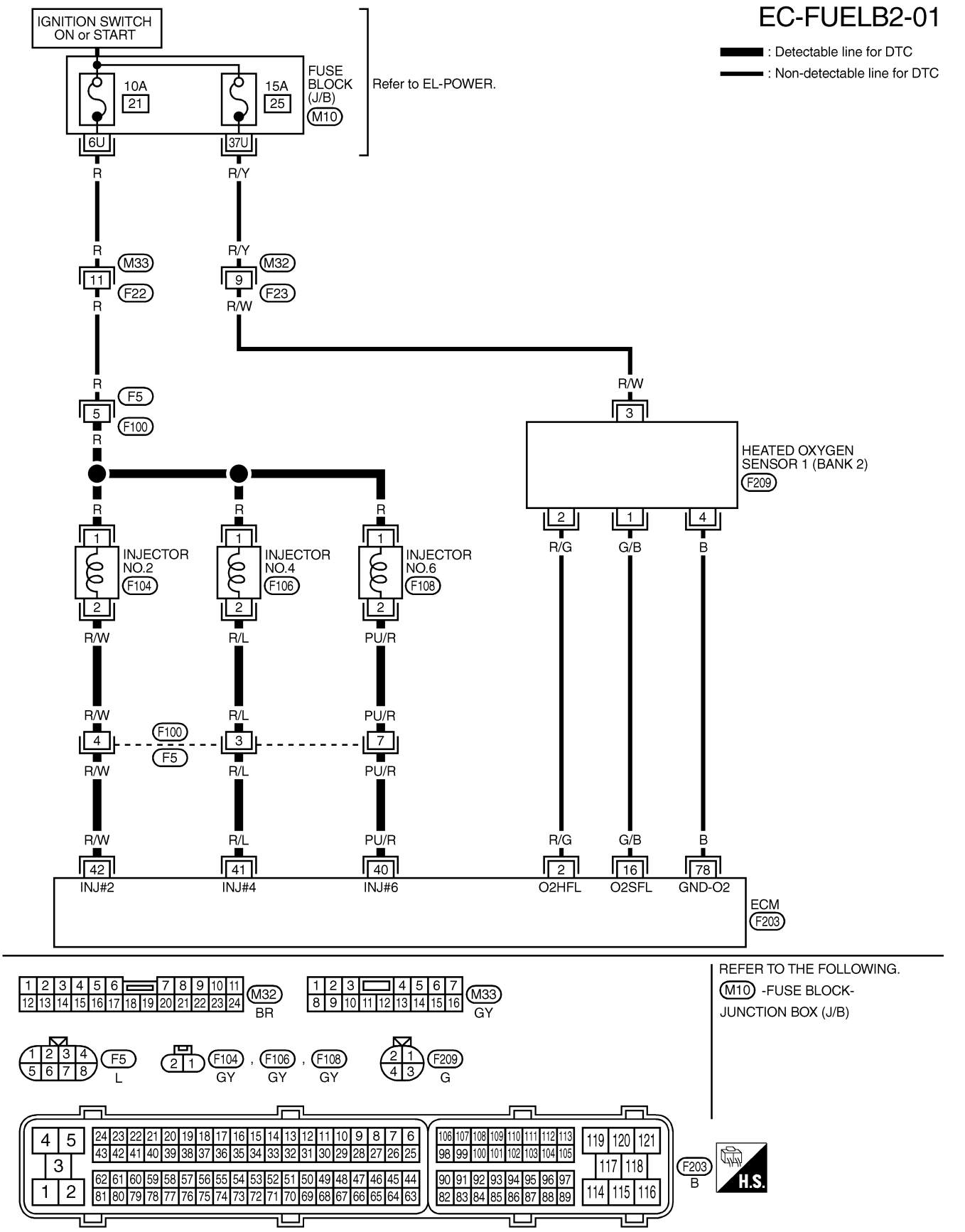

Diagnostic Procedure

NAEC0919

1	CHECK EXHAUST GAS LEAK

1. Start engine and run it at idle.
2. Listen for an exhaust gas leak before three way catalyst (manifold).

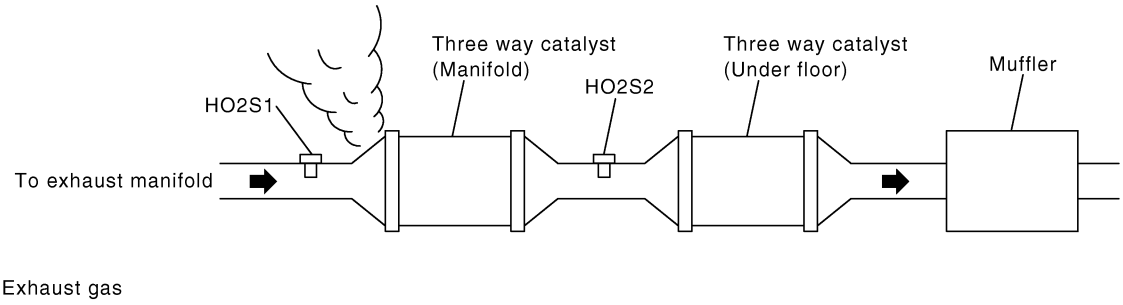

SEC502D

OK or NG

OK	▶	GO TO 2.
NG	▶	Repair or replace.

2	CHECK FOR INTAKE AIR LEAK

Listen for an intake air leak after the mass air flow sensor.

OK or NG

OK	▶	GO TO 3.
NG	▶	Repair or replace.

3	CHECK HEATED OXYGEN SENSOR 1 CIRCUIT FOR OPEN AND SHORT

1. Turn ignition switch OFF.
2. Disconnect corresponding heated oxygen sensor 1 harness connector.

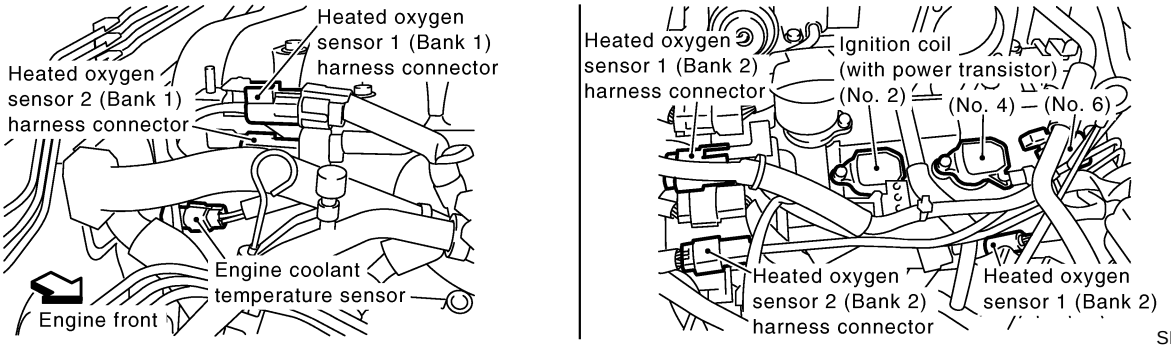

SEC999D

3. Disconnect ECM harness connector.
4. Check harness continuity between ECM terminal and HO2S1 terminal as follows. Refer to Wiring Diagram.

DTC	Terminals		Bank
	ECM	Sensor	
P0172	35	1	Bank 1
P0175	16	1	Bank 2

MTBL1366

Continuity should exist.

5. Check harness continuity between the following terminals and ground. Refer to Wiring Diagram.

DTC	Terminals		Bank
	ECM	Sensor	
P0172	35	1	Bank 1
P0175	16	1	Bank 2

MTBL1366

Continuity should not exist.

6. Check harness continuity between HO2S1 terminal 4 and ECM terminal 78.
   Continuity should exist.
7. Also check harness for short to ground and short to power.

OK or NG

OK	▶	GO TO 4.
NG	▶	Repair open circuit or short to ground or short to power in harness or connectors.

4	CHECK FUEL PRESSURE

1. Release fuel pressure to zero. Refer to EC-56.
2. Install fuel pressure gauge and check fuel pressure. Refer to EC-56.
   At idling:
   When fuel pressure regulator valve vacuum hose is connected.
   235 kPa (2.4 kg/cm^2, 34 psi)
   When fuel pressure regulator valve vacuum hose is disconnected.
   294 kPa (3.0 kg/cm^2, 43 psi)

OK or NG

OK	▶	GO TO 6.
NG	▶	GO TO 5.

5	DETECT MALFUNCTIONING PART
Check the following. ● Fuel pump and circuit (Refer to EC-729.) ● Fuel pressure regulator (Refer to EC-57.)	
▶	Repair or replace.

6	CHECK MASS AIR FLOW SENSOR
With CONSULT-II 1. Install all removed parts. 2. Check "MASS AIR FLOW" in "DATA MONITOR" mode with CONSULT-II. **2.0 - 6.0 g·m/sec: at idling** **7.0 - 20.0 g·m/sec: at 2,500 rpm**	
With GST 1. Install all removed parts. 2. Check mass air flow sensor signal in MODE 1 with GST. **2.0 - 6.0 g·m/sec: at idling** **7.0 - 20.0 g·m/sec: at 2,500 rpm**	
OK or NG	
OK ▶	GO TO 7.
NG ▶	Check connectors for rusted terminals or loose connections in the mass air flow sensor circuit or ground. Refer to EC-194.

7	CHECK FUNCTION OF INJECTORS

With CONSULT-II
1. Start engine.
2. Perform "POWER BALANCE" in "ACTIVE TEST" mode with CONSULT-II.

ACTIVE TEST	
POWER BALANCE	
MONITOR	
ENG SPEED	XXX rpm
MAS AIF SE-B1	XXX V
IACV-AAC/V	XXX step

SEF070Y

3. Make sure that each circuit produces a momentary engine speed drop.

Without CONSULT-II
1. Start engine.
2. Listen to each injector operating sound.

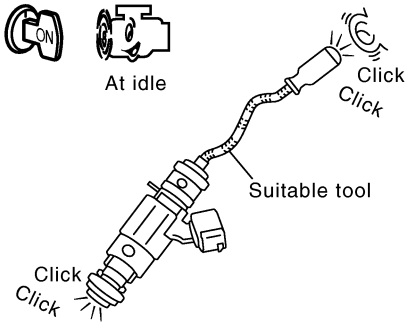

PBIB1725E

Clicking noise should be heard.

OK or NG

OK	▶	GO TO 8.
NG	▶	Perform trouble diagnosis for "INJECTORS", EC-724.

8	CHECK INJECTOR

1. Remove injector assembly. Refer to EC-58.
   Keep fuel hose and all injectors connected to injector gallery.
2. Confirm that the engine is cooled down and there are no fire hazards near the vehicle.
3. Disconnect all injector harness connectors.
4. Disconnect all ignition coil harness connectors.
5. Prepare pans or saucers under each injectors.
6. Crank engine for about 3 seconds.
   Make sure fuel does not drip from injector.

OK or NG

OK (Does not drip.)	▶	GO TO 9.
NG (Drips.)	▶	Replace the injectors from which fuel is dripping. Always replace O-ring with new one.

9	CHECK INTERMITTENT INCIDENT
Refer to "TROUBLE DIAGNOSIS FOR INTERMITTENT INCIDENT", EC-155.	
▶	**INSPECTION END**

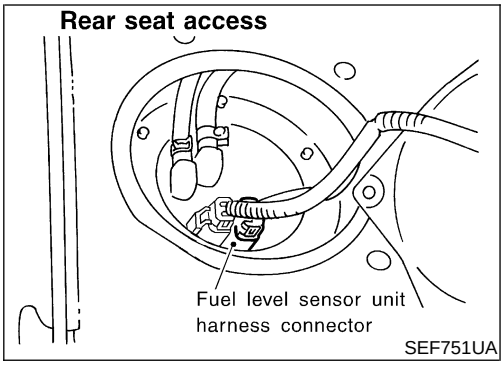

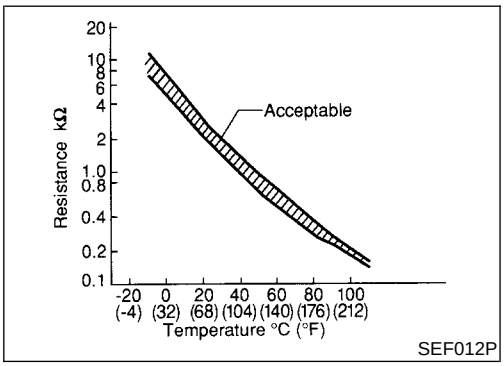

Component Description

NAEC0773

The fuel tank temperature sensor is used to detect the fuel temperature inside the fuel tank. The sensor modifies a voltage signal from the ECM. The modified signal returns to the ECM as the fuel temperature input. The sensor uses a thermistor which is sensitive to the change in temperature. The electrical resistance of the thermistor decreases as temperature increases.

<Reference data>

Fuel temperature °C (°F)	Voltage* V	Resistance kΩ
20 (68)	3.5	2.3 - 2.7
50 (122)	2.2	0.79 - 0.90

*: This data is reference value and is measured between ECM terminal 107 (Fuel tank temperature sensor) and ground.

CAUTION:

Do not use ECM ground terminals when measuring input/output voltage. Doing so may result in damage to the ECM's transistor. Use a ground other than ECM terminals, such as the ground.

On Board Diagnosis Logic

NAEC0774

DTC No.	Trouble diagnosis name	DTC Detecting Condition	Possible Cause
P0181 0181	Fuel tank temperature sensor circuit range/performance	Rationally incorrect voltage from the sensor is sent to ECM, compared with the voltage signals from engine coolant temperature sensor and intake air temperature sensor.	● Harness or connectors (The sensor circuit is open or shorted.) ● Fuel tank temperature sensor

DTC Confirmation Procedure

NAEC0776

NOTE:

If DTC Confirmation Procedure has been previously conducted, always turn ignition switch OFF and wait at least 10 seconds before conducting the next test.

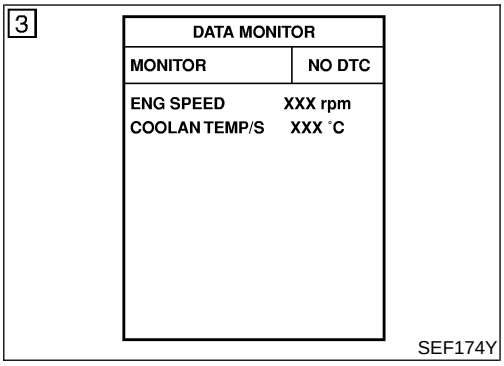

WITH CONSULT-II

NAEC0776S01

1) Turn ignition switch ON.
2) Select "DATA MONITOR" mode with CONSULT-II.
3) Wait at least 10 seconds.
   If the result is NG, go to "Diagnostic Procedure", EC-291.
   If the result is OK, go to following step.
4) Check "COOLAN TEMP/S" value.
   If "COOLAN TEMP/S" is less than 60°C (140°F), the result will be OK.
   If "COOLAN TEMP/S" is above 60°C (140°F), go to the following step.
5) Cool engine down until "COOLAN TEMP/S" is less than 60°C (140°F).
6) Wait at least 10 seconds.
7) If 1st trip DTC is detected, go to "Diagnostic Procedure", EC-291.

WITH GST

NAEC0776S02

Follow the procedure "With CONSULT-II" above.

Diagnostic Procedure

NAEC0778

1	CHECK FUEL TANK TEMPERATURE SENSOR

1. Remove fuel level sensor unit.
2. Check resistance between fuel level sensor unit terminals 1 and 2 by heating with hot water or heat gun as shown in the figure.

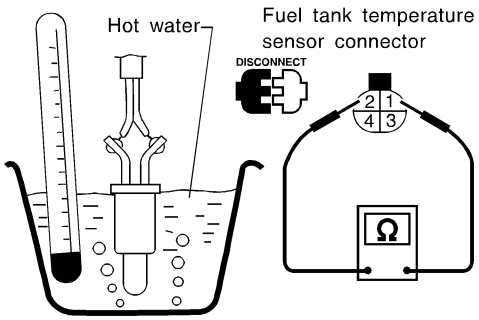

Temperature °C (°F)	Resistance kΩ
20 (68)	2.3 - 2.7
50 (122)	0.79 - 0.90

SEF974Y

OK or NG

OK	▶	GO TO 2.
NG	▶	Replace fuel level sensor unit.

2	CHECK INTERMITTENT INCIDENT
● Refer to "TROUBLE DIAGNOSIS FOR INTERMITTENT INCIDENT", EC-155. ● Refer to wiring diagram, EC-295.	
▶	INSPECTION END

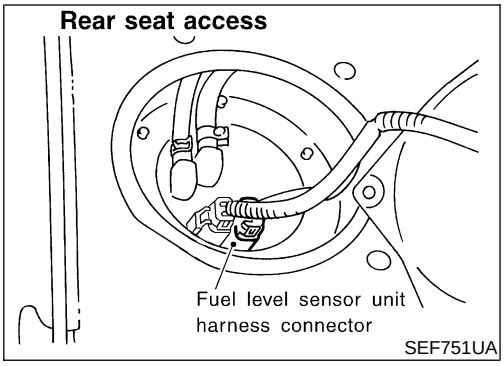

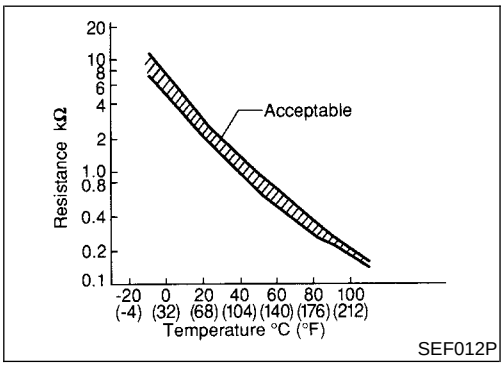

Component Description

NAEC0920

The fuel tank temperature sensor is used to detect the fuel temperature inside the fuel tank. The sensor modifies a voltage signal from the ECM. The modified signal returns to the ECM as the fuel temperature input. The sensor uses a thermistor which is sensitive to the change in temperature. The electrical resistance of the thermistor decreases as temperature increases.

<Reference data>

Fuel temperature °C (°F)	Voltage* V	Resistance kΩ
20 (68)	3.5	2.3 - 2.7
50 (122)	2.2	0.79 - 0.90

*: This data is reference value and is measured between ECM terminal 107 (Fuel tank temperature sensor) and ground.

CAUTION:

Do not use ECM ground terminals when measuring input/output voltage. Doing so may result in damage to the ECM's transistor. Use a ground other than ECM terminals, such as the ground.

On Board Diagnosis Logic

NAEC0921

DTC No.	Trouble diagnosis name	DTC Detecting Condition	Possible Cause
P0182 0182	Fuel tank temperature sensor circuit low input	An excessively low voltage from the sensor is sent to ECM.	• Harness or connectors (The sensor circuit is open or shorted.) • Fuel tank temperature sensor
P0183 0183	Fuel tank temperature sensor circuit high input	An excessively high voltage from the sensor is sent to ECM.	

DTC Confirmation Procedure

NAEC0922

NOTE:

If DTC Confirmation Procedure has been previously conducted, always turn ignition switch OFF and wait at least 10 seconds before conducting the next test.

3

DATA MONITOR	
MONITOR	NO DTC
ENG SPEED	XXX rpm
COOLAN TEMP/S	XXX °C

SEF174Y

WITH CONSULT-II

NAEC0922S01

1) Turn ignition switch ON.
2) Select "DATA MONITOR" mode with CONSULT-II.
3) Wait at least 10 seconds.
   If the result is NG, go to "Diagnostic Procedure", EC-296.
   If the result is OK, go to following step.
4) Check "COOLAN TEMP/S" value.
   If "COOLAN TEMP/S" is less than 60°C (140°F), the result will be OK.
   If "COOLAN TEMP/S" is above 60°C (140°F), go to the following step.
5) Cool engine down until "COOLAN TEMP/S" is less than 60°C (140°F).
6) Wait at least 10 seconds.
7) If 1st trip DTC is detected, go to "Diagnostic Procedure", EC-296.

WITH GST

NAEC0922S02

Follow the procedure "With CONSULT-II" above.

Wiring Diagram

NAEC0923

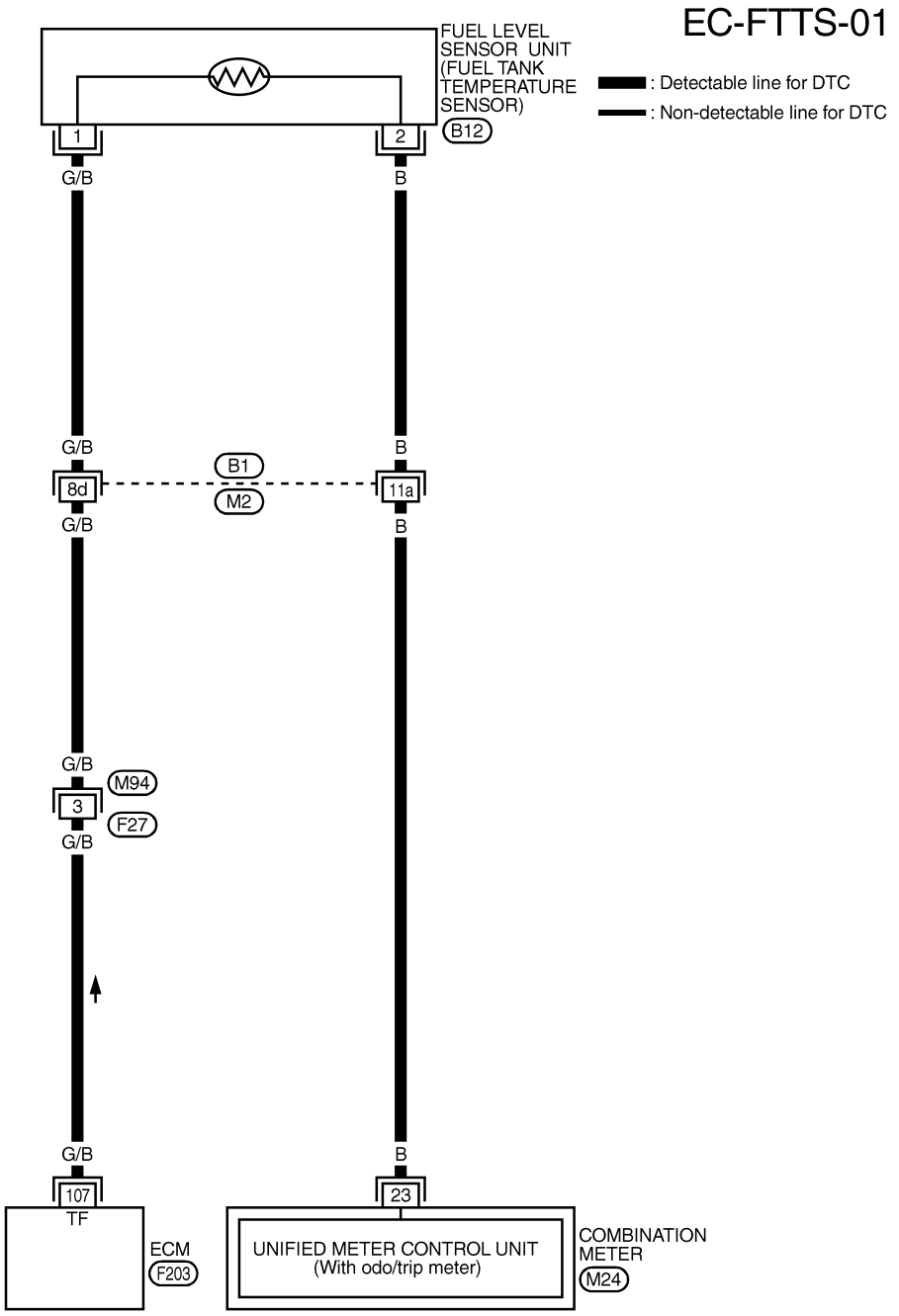

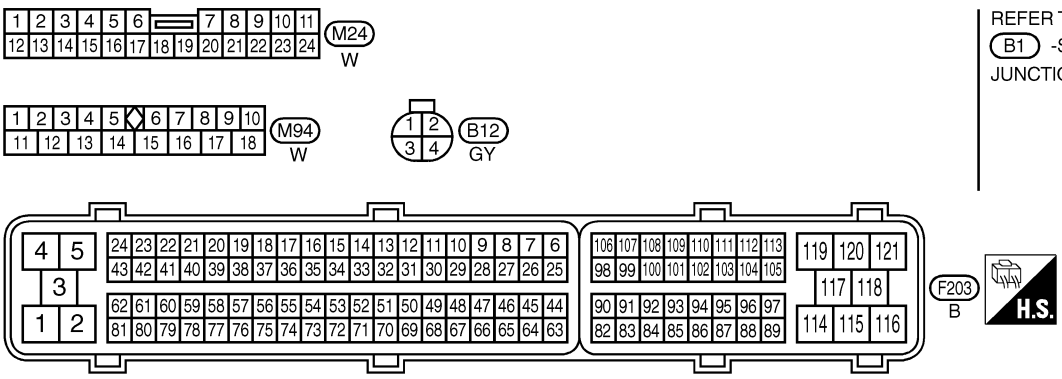

REFER TO THE FOLLOWING.
B1 -SUPER MULTIPLE JUNCTION (SMJ)

MEC093E

Diagnostic Procedure

NAEC0924

1	CHECK GROUND CONNECTIONS

1. Turn ignition switch OFF.
2. Loosen and retighten three ground screws on the body.
   Refer to “Ground Inspection”, EC-165.

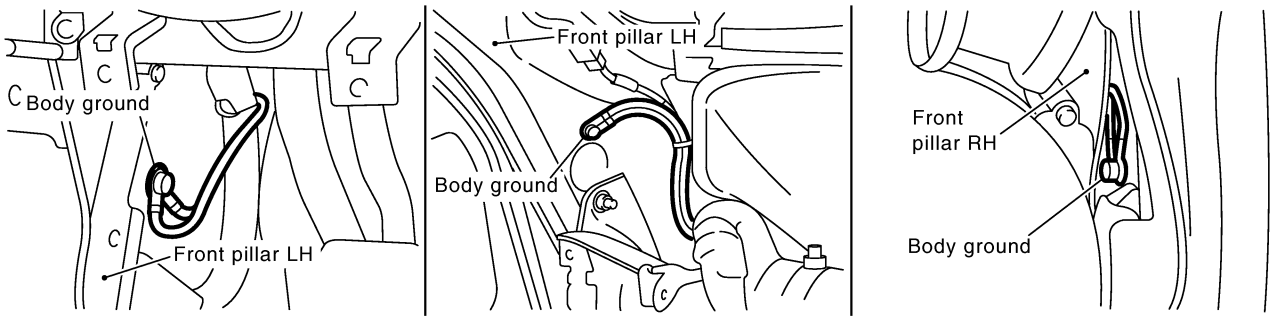

SEC997D

OK or NG

OK	▶	GO TO 2.
NG	▶	Repair or replace ground connections.

2	CHECK FUEL TANK TEMPERATURE SENSOR POWER SUPPLY CIRCUIT

1. Turn ignition switch OFF.
2. Disconnect fuel level sensor unit harness connector.

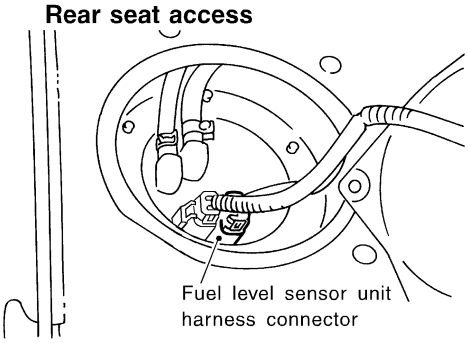

SEF751UA

3. Turn ignition switch ON.
4. Check voltage between fuel level sensor unit terminal 1 and ground with CONSULT-II or tester.

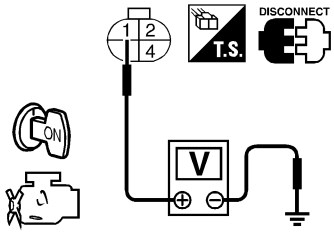

Voltage: Approximately 5V

SEF973Y

OK or NG

OK	▶	GO TO 4.
NG	▶	GO TO 3.

3	DETECT MALFUNCTIONING PART
Check the following. ● Harness connectors B1, M2 ● Harness connectors M94, F27 ● Harness for open or short between ECM and fuel level sensor unit	
▶	Repair harness or connector.

4	CHECK FUEL TANK TEMPERATURE SENSOR GROUND CIRCUIT FOR OPEN AND SHORT
1. Turn ignition switch OFF. 2. Disconnect combination meter harness connector. 3. Check harness continuity between fuel level sensor unit terminal 2 and combination meter terminal 23. Refer to Wiring Diagram. **Continuity should exist.** 4. Also check harness for short to ground and short to power.	
OK or NG	
OK ▶	GO TO 6.
NG ▶	GO TO 5.

5	DETECT MALFUNCTIONING PART
Check the following. ● Harness connectors B1, M2 ● Harness for open or short between combination meter and fuel level sensor unit	
▶	Repair open circuit or short to ground or short to power in harness or connectors.

6	CHECK FUEL TANK TEMPERATURE SENSOR
1. Remove fuel level sensor unit. 2. Check resistance between fuel level sensor unit terminals 1 and 2 by heating with hot water or heat gun as shown in the figure.	

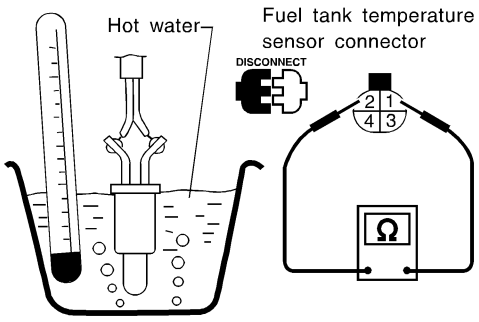

Temperature °C (°F)	Resistance kΩ
20 (68)	2.3 - 2.7
50 (122)	0.79 - 0.90

SEF974Y

OK or NG	
OK ▶	GO TO 7.
NG ▶	Replace fuel level sensor unit.

7	CHECK INTERMITTENT INCIDENT
Refer to "TROUBLE DIAGNOSIS FOR INTERMITTENT INCIDENT", EC-155.	
▶	**INSPECTION END**

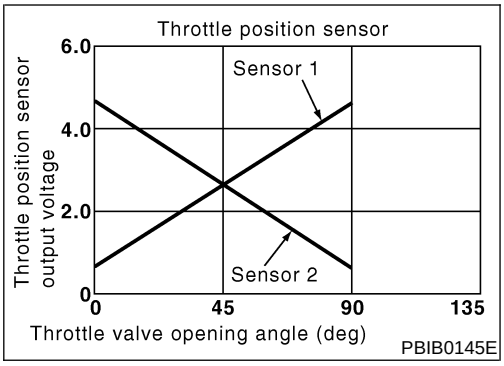

Component Description

NAEC1205

Electric throttle control actuator consists of throttle control motor, throttle position sensor, etc. The throttle position sensor responds to the throttle valve movement.

The throttle position sensor has the two sensors. These sensors are a kind of potentiometers which transform the throttle valve position into output voltage, and emit the voltage signal to the ECM. In addition, these sensors detect the opening and closing speed of the throttle valve and feed the voltage signals to the ECM. The ECM judges the current opening angle of the throttle valve from these signals and the ECM controls the throttle control motor to make the throttle valve opening angle properly in response to driving condition.

CONSULT-II Reference Value in Data Monitor Mode

NAEC1206

Specification data are reference values.

MONITOR ITEM	CONDITION		SPECIFICATION
THRTL SEN1	• Ignition switch: ON (Engine stopped) • Shift lever: D (A/T model) 1st (M/T model)	Accelerator pedal: Fully released	More than 0.36V
		Accelerator pedal: Fully depressed	Less than 4.75V

ECM Terminals and Reference Value

NAEC1212

Specification data are reference values and are measured between each terminal and ground.

CAUTION:

Do not use ECM ground terminals when measuring input/output voltage. Doing so may result in damage to the ECM's transistor. Use a ground other than ECM terminals, such as the ground.

TERMINAL NO.	WIRE COLOR	ITEM	CONDITION	DATA (DC Voltage)
47	L	Sensor power supply	**[Ignition switch ON]**	Approximately 5V
50	BR	Throttle position sensor 1	**[Ignition switch ON]** • Engine stopped • Shift lever position is D (A/T models) • Shift lever position is 1st (M/T models) • Accelerator pedal fully released	More than 0.36V
			[Ignition switch ON] • Engine stopped • Shift lever position is D (A/T models) • Shift lever position is 1st (M/T models) • Accelerator pedal fully depressed	Less than 4.75V
66	BR/Y	Sensor ground	**[Engine is running]** • **Warm-up condition** • Idle speed	Approximately 0V

ECM Terminals and Reference Value (Cont'd)

TERMINAL NO.	WIRE COLOR	ITEM	CONDITION	DATA (DC Voltage)
69	BR/W	Throttle position sensor 2	**[Ignition switch ON]** ● Engine stopped ● Shift lever position is D (A/T models) ● Shift lever position is 1st (M/T models) ● Accelerator pedal fully released	Less than 4.75V
			[Ignition switch ON] ● Engine stopped ● Shift lever position is D (A/T models) ● Shift lever position is 1st (M/T models) ● Accelerator pedal fully depressed	More than 0.36V
91	W/R	Sensor power supply (APP sensor 2)	**[Ignition switch ON]**	Approximately 5V

On Board Diagnosis Logic

NAEC1207

These self-diagnoses have the one trip detection logic.

DTC No.	Trouble diagnosis name	DTC Detecting Condition	Possible Cause
P0222 0222	Throttle position sensor 1 circuit low input	An excessively low voltage from the TP sensor 1 is sent to ECM.	● Harness or connectors (The TP sensor 1 circuit is open or shorted.) (APP sensor 2 circuit is shorted.) ● Electric throttle control actuator (TP sensor 1) ● Accelerator pedal position sensor
P0223 0223	Throttle position sensor 1 circuit high input	An excessively high voltage from the TP sensor 1 is sent to ECM.	

FAIL-SAFE MODE

NAEC1207S01

When the malfunction is detected, ECM enters fail-safe mode and the MIL lights up.

Engine operation condition in fail-safe mode
The ECM controls the electric throttle control actuator in regulating the throttle opening in order for the idle position to be within +10 degrees. The ECM regulates the opening speed of the throttle valve to be slower than the normal condition. So, the acceleration will be poor.

DTC Confirmation Procedure

NAEC1208

NOTE:

If DTC Confirmation Procedure has been previously conducted, always turn ignition switch OFF and wait at least 10 seconds before conducting the next test.

TESTING CONDITION:

Before performing the following procedure, confirm that battery voltage is more than 10V at idle.

DATA MONITOR	
MONITOR	NO DTC
ENG SPEED	XXX rpm

SEF058Y

With CONSULT-II

1. Turn ignition switch ON.
2. Select "DATA MONITOR" mode with CONSULT-II.
3. Start engine and let it idle for 1 second.
4. If DTC is detected, go to "Diagnostic Procedure", EC-302.

With GST

Follow the procedure "WITH CONSULT-II" above.

Wiring Diagram

NAEC1209

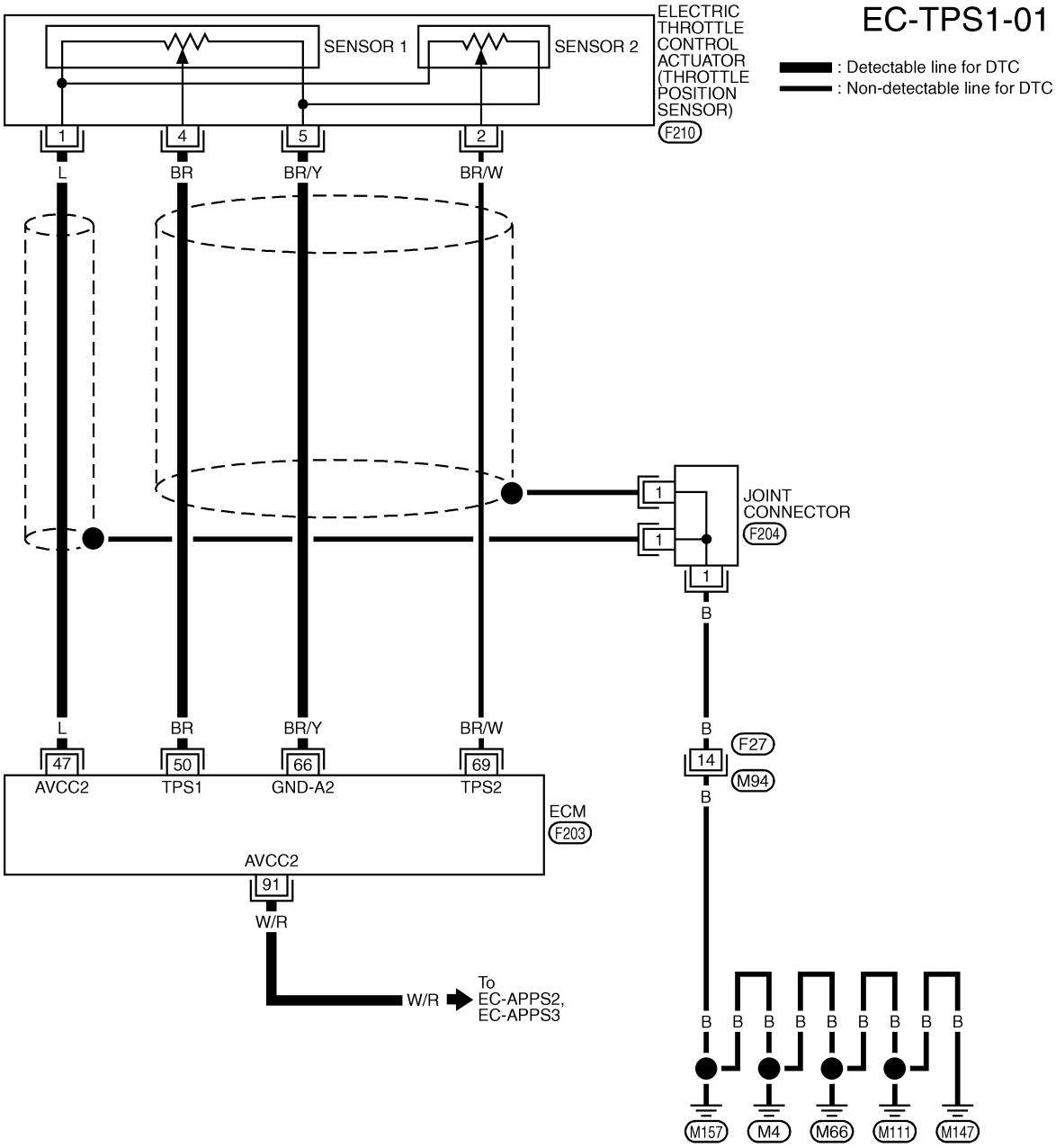

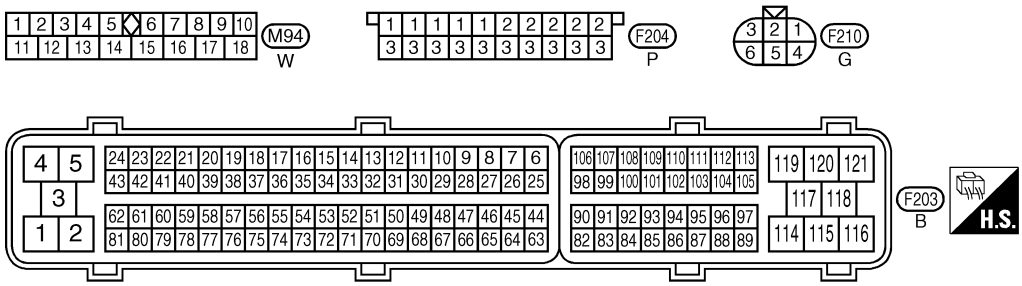

MEC745E

Diagnostic Procedure

NAEC1210

1	CHECK GROUND CONNECTIONS

1. Turn ignition switch OFF.
2. Loosen and retighten three ground screws on the body.
   Refer to “Ground Inspection”, EC-165.

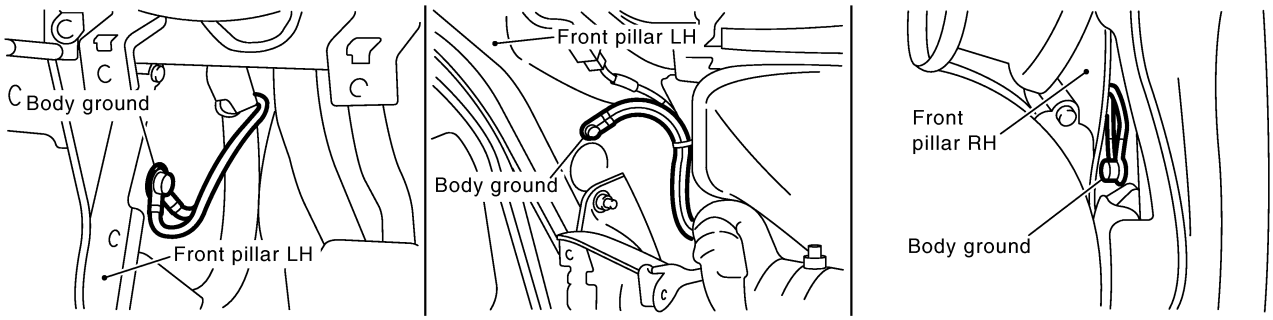

SEC997D

OK or NG

OK	▶	GO TO 2.
NG	▶	Repair or replace ground connections.

2	CHECK THROTTLE POSITION SENSOR 1 POWER SUPPLY CIRCUIT-I

1. Disconnect electric throttle control actuator harness connector.
2. Turn ignition switch ON.

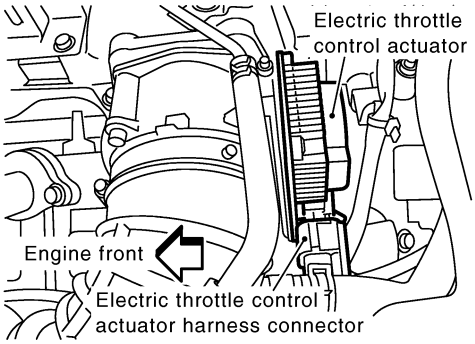

SEC433D

3. Check voltage between electric throttle control actuator terminal 1 and ground with CONSULT-II or tester.

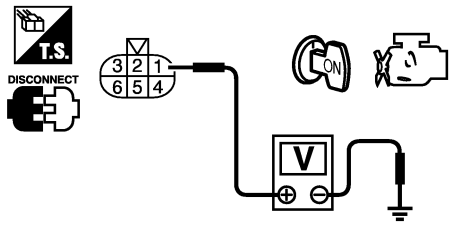

PBIB0082E

Voltage: Approximately 5V

OK or NG

OK	▶	GO TO 7.
NG	▶	GO TO 3.

3	CHECK THROTTLE POSITION SENSOR 2 POWER SUPPLY CIRCUIT-II
1. Turn ignition switch OFF. 2. Disconnect ECM harness connector. 3. Check harness continuity between electric throttle control actuator terminal 1 and ECM terminal 47. Refer to Wiring Diagram. **Continuity should exist.**	
OK or NG	
OK ▶	GO TO 4.
NG ▶	Repair or replace open circuit.

4	CHECK THROTTLE POSITION SENSOR 2 POWER SUPPLY CIRCUIT-III
Check harness for short to power and short to ground, between the following terminals. ● ECM terminal 47 and electric throttle control actuator terminal 1. Refer to "Wiring Diagram", EC-693. ● ECM terminal 91 and APP sensor terminal 10. Refer to "Wiring Diagram", EC-685.	
OK or NG	
OK ▶	GO TO 5.
NG ▶	Repair short to ground or short to power in harness or connectors.

5	CHECK APP SENSOR
Refer to "Component Inspection", EC-689.	
OK or NG	
OK ▶	GO TO 11.
NG ▶	GO TO 6.

6	REPLACE ACCELERATOR PEDAL ASSEMBLY
1. Replace accelerator pedal assembly. 2. Perform "Accelerator Pedal Released Position Learning", EC-73. 3. Perform "Throttle Valve Closed Position Learning", EC-73. 4. Perform "Idle Air Volume Learning", EC-73.	
▶	**INSPECTION END**

7	CHECK THROTTLE POSITION SENSOR 1 GROUND CIRCUIT FOR OPEN AND SHORT
1. Turn ignition switch OFF. 2. Disconnect ECM harness connector. 3. Check harness continuity between electric throttle control actuator terminal 5 and ECM terminal 66. Refer to Wiring Diagram. **Continuity should exist.** 4. Also check harness for short to ground and short to power.	
OK or NG	
OK ▶	GO TO 8.
NG ▶	Repair open circuit or short to ground or short to power in harness or connectors.

8	CHECK THROTTLE POSITION SENSOR 1 INPUT SIGNAL CIRCUIT FOR OPEN AND SHORT	
1. Check harness continuity between ECM terminal 50 and electric throttle control actuator terminal 4. Refer to Wiring Diagram. **Continuity should exist.** 2. Also check harness for short to ground and short to power.		
OK or NG		
OK	▶	GO TO 9.
NG	▶	Repair open circuit or short to ground or short to power in harness or connectors.

9	CHECK THROTTLE POSITION SENSOR	
Refer to "Component Inspection", EC-304.		
OK or NG		
OK	▶	GO TO 11.
NG	▶	GO TO 10.

10	REPLACE ELECTRIC THROTTLE CONTROL ACTUATOR	
1. Replace the electric throttle control actuator. 2. Perform "Throttle Valve Closed Position Learning", EC-73. 3. Perform "Idle Air Volume Learning", EC-73.		
	▶	**INSPECTION END**

11	CHECK INTERMITTENT INCIDENT	
Refer to "TROUBLE DIAGNOSIS FOR INTERMITTENT INCIDENT", EC-155.		
	▶	**INSPECTION END**

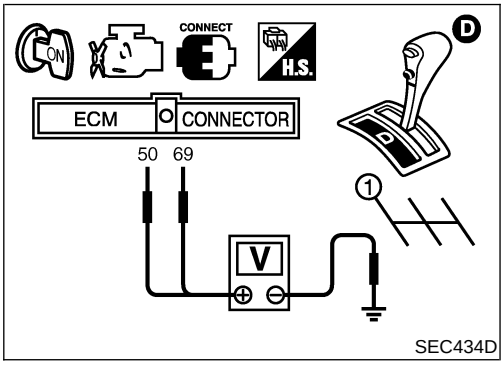

Component Inspection

NAEC1211

THROTTLE POSITION SENSOR

1. Reconnect all harness connectors disconnected.
2. Perform "Throttle Valve Closed Position Learning", EC-73.
3. Turn ignition switch ON.
4. Set selector lever to D position (A/T models) or "1st" position (M/T models).
5. Check voltage between ECM terminals 50 (TP sensor 1), 69 (TP sensor 2) and ground under the following conditions.

Terminal	Accelerator pedal	Voltage
50 (Throttle position sensor 1)	Fully released	More than 0.36V
	Fully depressed	Less than 4.75V
69 (Throttle position sensor 2)	Fully released	Less than 4.75V
	Fully depressed	More than 0.36V

6. If NG, replace electric throttle control actuator and go to the next step.
7. Perform "Throttle Valve Closed Position Learning", EC-73.
8. Perform "Idle Air Volume Learning", EC-73.

On Board Diagnosis Logic

NAEC0929

When a misfire occurs, engine speed will fluctuate. If the engine speed fluctuates enough to cause the CKP sensor signal to vary, ECM can determine that a misfire is occurring.

Sensor	Input Signal to ECM	ECM function
Crankshaft position sensor (POS) Camshaft position sensor (PHASE)	Engine speed	On board diagnosis of misfire

The misfire detection logic consists of the following two conditions.

1. One Trip Detection Logic (Three Way Catalyst Damage)
   On the first trip that a misfire condition occurs that can damage the three way catalyst (TWC) due to overheating, the MIL will blink.
   When a misfire condition occurs, the ECM monitors the CKP sensor signal every 200 engine revolutions for a change.
   When the misfire condition decreases to a level that will not damage the TWC, the MIL will turn off.
   If another misfire condition occurs that can damage the TWC on a second trip, the MIL will blink.
   When the misfire condition decreases to a level that will not damage the TWC, the MIL will remain on.
   If another misfire condition occurs that can damage the TWC, the MIL will begin to blink again.
2. Two Trip Detection Logic (Exhaust quality deterioration)
   For misfire conditions that will not damage the TWC (but will affect vehicle emissions), the MIL will only light when the misfire is detected on a second trip. During this condition, the ECM monitors the CKP sensor signal every 1,000 engine revolutions.
   A misfire malfunction can be detected on any one cylinder or on multiple cylinders.

DTC No.	Trouble diagnosis name	DTC Detecting Condition	Possible Cause
P0300 0300	Multiple cylinder misfire detected	Multiple cylinders misfire, No. 1 cylinder misfires, No. 2 cylinder misfires, No. 3 cylinder misfires, No. 4 cylinder misfires, No. 5 cylinder misfires and No. 6 cylinder misfires.	• Improper spark plug • Insufficient compression • Incorrect fuel pressure • The injector circuit is open or shorted • Injector • Intake air leak • The ignition secondary circuit is open or shorted • Lack of fuel • Drive plate or flywheel • Heated oxygen sensor 1 • Incorrect PCV hose connection
P0301 0301	No. 1 cylinder misfire detected		
P0302 0302	No. 2 cylinder misfire detected		
P0303 0303	No. 3 cylinder misfire detected		
P0304 0304	No. 4 cylinder misfire detected		
P0305 0305	No. 5 cylinder misfire detected		
P0306 0306	No. 6 cylinder misfire detected		

4

DATA MONITOR	
MONITOR	NO DTC
ENG SPEED	XXX rpm
COOLAN TEMP/S	XXX °C
VHCL SPEED SE	XXX km/h
P/N POSI SW	OFF
B/FUEL SCHDL	XXX msec

SEF213Y

DTC Confirmation Procedure

NAEC0930

CAUTION:

Always drive vehicle in safe manner according to traffic conditions and obey all traffic laws when driving.

NOTE:

If DTC Confirmation Procedure has been previously conducted, always turn ignition switch OFF and wait at least 10 seconds before conducting the next test.

WITH CONSULT-II

NAEC0930S01

1) Turn ignition switch ON, and select “DATA MONITOR” mode with CONSULT-II.
2) Start engine and warm it up to normal operating temperature.
3) Turn ignition switch OFF and wait at least 10 seconds.
4) Restart engine and let it idle for about 15 minutes.
5) If 1st trip DTC is detected, go to “Diagnostic Procedure”, EC-307.

NOTE:

If 1st trip DTC is not detected during above procedure, performing the following procedure is advised.

1) Turn ignition switch OFF and wait at least 10 seconds.
2) Start engine and drive the vehicle under the similar conditions to (1st trip) Freeze Frame Data for a certain time. Refer to the table below.
   Hold the accelerator pedal as steady as possible.

The similar conditions to (1st trip) Freeze Frame Data means the vehicle operation that the following conditions should be satisfied at the same time.

Engine speed	Engine speed in the freeze frame data ±400 rpm
Vehicle speed	Vehicle speed in the freeze frame data ±10 km/h (6 MPH)
Engine coolant temperature (T) condition	When the freeze frame data shows lower than 70°C (158°F), T should be lower than 70°C (158°F).
	When the freeze frame data shows higher than or equal to 70°C (158°F), T should be higher than or equal to 70°C (158°F).

The time to driving varies according to the engine speed in the freeze frame data.

Engine speed	Time
Around 1,000 rpm	Approximately 10 minutes
Around 2,000 rpm	Approximately 5 minutes
More than 3,000 rpm	Approximately 3.5 minutes

WITH GST

NAEC0930S02

Follow the procedure “With CONSULT-II” above.

Diagnostic Procedure

NAEC0931

1	CHECK FOR INTAKE AIR LEAK	
1. Start engine and run it at idle speed. 2. Listen for the sound of the intake air leak. 3. Check PCV hose connection.		
OK or NG		
OK	▶	GO TO 2.
NG	▶	Discover air leak location and repair.

2	CHECK FOR EXHAUST SYSTEM CLOGGING	
1. Stop engine and visually check exhaust tube, three way catalyst and muffler for dents.		
OK or NG		
OK	▶	GO TO 3.
NG	▶	Repair or replace it.

3 PERFORM POWER BALANCE TEST

With CONSULT-II

1. Perform “POWER BALANCE” in “ACTIVE TEST” mode.

ACTIVE TEST	
POWER BALANCE	
MONITOR	
ENG SPEED	XXX rpm
MAS A/F SE-B1	XXX V

PBIB0133E

2. Is there any cylinder which does not produce a momentary engine speed drop?

Without CONSULT-II

When disconnecting each ignition coil harness connector one at a time, is there any cylinder which does not produce a momentary engine speed drop?

View with intake air duct and throttle body removed.

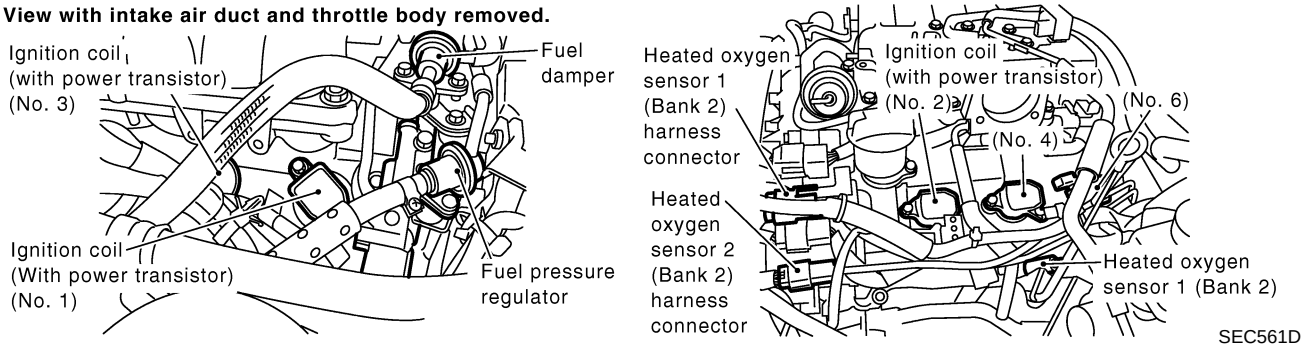

Yes or No

Yes	▶	GO TO 5.
No	▶	GO TO 4.

4	CHECK INJECTOR

Does each injector make an operating sound at idle?

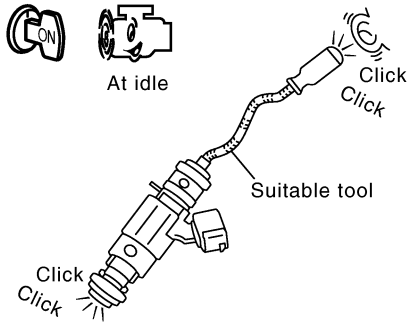

PBIB1725E

Yes or No

Yes	▶	GO TO 5.
No	▶	Check injector(s) and circuit(s). Refer to EC-724.

5	CHECK IGNITION SPARK

1. Turn ignition switch OFF.
2. Remove ignition coil assembly from rocker cover.
3. Connect a known-good spark plug to the ignition coil assembly.
4. Disconnect all injector harness connectors.
5. Place end of spark plug against a suitable ground and crank engine.
6. Check for spark.

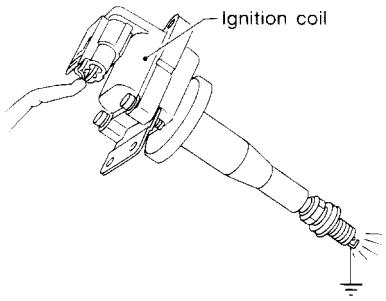

SEF575Q

OK or NG

OK	▶	GO TO 6.
NG	▶	Check ignition coil, power transistor and their circuits. Refer to "IGNITION SIGNAL", EC-714.

6	CHECK SPARK PLUGS

Remove the spark plugs and check for fouling, etc.

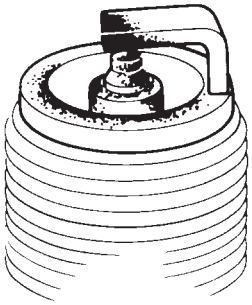

SEF156I

OK or NG

OK	▶	GO TO 7.
NG	▶	Repair or replace spark plug(s) with standard type one(s). For spark plug type, refer to MA-32, "ENGINE MAINTENANCE".

7	CHECK COMPRESSION PRESSURE

Check compression pressure. Refer to EM-17, "Measurement of Compression Pressure".

Standard:
1,275 kPa (13.0 kg/cm^2, 185 psi)/300 rpm
Minimum:
981 kPa (10.0 kg/cm^2, 142 psi)/300 rpm
Difference between each cylinder:
98 kPa (1.0 kg/cm^2, 14 psi)/300 rpm

OK or NG

OK	▶	GO TO 8.
NG	▶	Check pistons, piston rings, valves, valve seats and cylinder head gaskets.

8	CHECK FUEL PRESSURE

1. Install all removed parts.
2. Release fuel pressure to zero. Refer to EC-56.
3. Install fuel pressure gauge and check fuel pressure. Refer to EC-56.

At idling:
With vacuum hose connected
Approximately 235 kPa (2.4 kg/cm^2, 34 psi)
With vacuum hose disconnected
Approximately 294 kPa (3.0 kg/cm^2, 43 psi)

OK or NG

OK	▶	GO TO 10.
NG	▶	GO TO 9.

9	DETECT MALFUNCTIONING PART

Check the following.
- Fuel pump and circuit (Refer to EC-729.)
- Fuel pressure regulator (Refer to EC-57.)
- Fuel lines (Refer to MA-17, "Checking Fuel Lines".)
- Fuel filter for clogging

	▶	Repair or replace.

10	CHECK IGNITION TIMING

Check the following items. Refer to "Basic Inspection", EC-123.

Items	Specifications
Ignition timing	15° ± 5° BTDC
Target idle speed	M/T: 750 ± 50 rpm A/T: 750 ± 50 rpm (in "P" or "N" position)

MTBL1368

OK or NG

OK (With CONSULT-II)	▶	GO TO 11.
OK (Without CONSULT-II)	▶	GO TO 12.
NG	▶	Follow the "Basic Inspection".

11	CHECK HEATED OXYGEN SENSOR 1

With CONSULT-II

1. Start engine and warm it up to normal operating temperature.
2. Select "MANU TRIG" and "HI SPEED" in "DATA MONITOR" mode with CONSULT-II, and select "HO2S1 (B1)/(B2)" and "HO2S1 MNTR (B1)/(B2)".
3. Hold engine speed at 2,000 rpm under no load during the following steps.
4. Touch "RECORD" on CONSULT-II screen.

DATA MONITOR	
MONITOR	NO DTC
ENG SPEED	XXX rpm
COOLAN TEMP/S	XXX °C
HO2S1 (B1)	XXX V
HO2S2 (B2)	XXX V

SEF967Y

5. Check the following.

- "HO2S1 MNTR (B1)/(B2)" in "DATA MONITOR" mode changes from "RICH" to "LEAN" to "RICH" more than 5 times in 10 seconds.
  5 times (cycles) are counted as shown left:

Bank 1

cycle	1	2	3	4	5
HO2S1 MNTR (B1)	R-L-R-L-R-L-R-L-R-L-R				

Bank 2

cycle	1	2	3	4	5
HO2S1 MNTR (B2)	R-L-R-L-R-L-R-L-R-L-R				

R means HO2S1 MNTR (B1)/(B2) indicates RICH

L means HO2S1 MNTR (B1)/(B2) indicates LEAN

SEF647Y

- "HO2S1 (B1)/(B2)" voltage goes above 0.6V at least once.
- "HO2S1 (B1)/(B2)" voltage goes below 0.3V at least once.
- "HO2S1 (B1)/(B2)" voltage never exceeds 1.0V.

Trigger	ENG SPEED	HO2S1 (B1)
	rpm	V
XXX	XXX	XXX
XXX	XXX	XXX
XXX	XXX	XXX
XXX	XXX	XXX
XXX	XXX	XXX
XXX	XXX	XXX
XXX	XXX	XXX
XXX	XXX	XXX
XXX	XXX	XXX
XXX	XXX	XXX
XXX	XXX	XXX
XXX	XXX	XXX

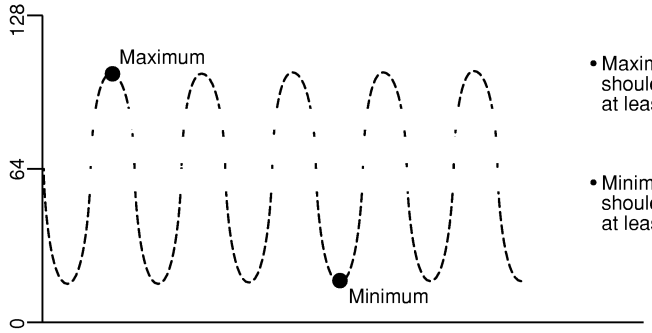

- Maximum voltage should be over 0.6V at least one time.
- Minimum voltage should be below 0.30V at least one time.

SEF648Y

CAUTION:

- **Discard any heated oxygen sensor which has been dropped from a height of more than 0.5 m (19.7 in) onto a hard surface such as a concrete floor; use a new one.**
- **Before installing new oxygen sensor, clean exhaust system threads using Oxygen Sensor Thread Cleaner tool J-43897-18 or J-43897-12 and approved anti-seize lubricant.**

OK or NG

OK	▶	GO TO 13.
NG	▶	Replace malfunctioning heated oxygen sensor 1.

12	CHECK HEATED OXYGEN SENSOR 1

Without CONSULT-II

1. Start engine and warm it up to normal operating temperature.
2. Set voltmeter probes between ECM terminal 35 (HO2S1 bank 1 signal) or 16 (HO2S1 bank 2 signal) and ground.
3. Check the following with engine speed held at 2,000 rpm constant under no load.

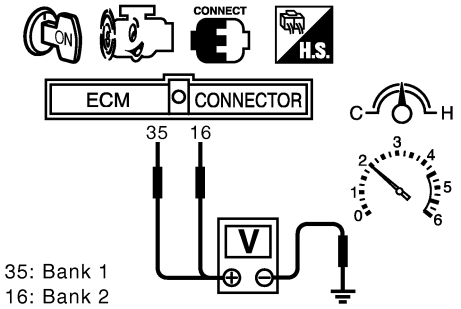

SEC430D

- The voltage fluctuates between 0 to 0.3V and 0.6 to 1.0V more than 5 times within 10 seconds.
- The maximum voltage is over 0.6V at least one time.
- The minimum voltage is below 0.3V at least one time.
- The voltage never exceeds 1.0V.
  1 time: 0 - 0.3V → 0.6 - 1.0V → 0 - 0.3V
  2 times: 0 - 0.3V → 0.6 - 1.0V → 0 - 0.3V → 0.6 - 1.0V → 0 - 0.3V

CAUTION:

- **Discard any heated oxygen sensor which has been dropped from a height of more than 0.5 m (19.7 in) onto a hard surface such as a concrete floor; use a new one.**
- **Before installing new oxygen sensor, clean exhaust system threads using Oxygen Sensor Thread Cleaner tool J-43897-18 or J-43897-12 and approved anti-seize lubricant.**

OK or NG

OK	▶	GO TO 13.
NG	▶	Replace malfunctioning heated oxygen sensor 1.

13	CHECK MASS AIR FLOW SENSOR

With CONSULT-II

Check mass air flow sensor signal in "DATA MONITOR" mode with CONSULT-II.

2.0 - 6.0 g·m/sec: at idling
7.0 - 20.0 g·m/sec: at 2,500 rpm

With GST

Check mass air flow sensor signal in MODE 1 with GST.

2.0 - 6.0 g·m/sec: at idling
7.0 - 20.0 g·m/sec: at 2,500 rpm

OK or NG

OK	▶	GO TO 14.
NG	▶	Check connectors for rusted terminals or loose connections in the mass air flow sensor circuit or ground. Refer to EC-194.

14	CHECK SYMPTOM MATRIX CHART

Check items on the rough idle symptom in "Symptom Matrix Chart", EC-131.

OK or NG

OK	▶	GO TO 15.
NG	▶	Repair or replace.

15	ERASE THE 1ST TRIP DTC
Erase the 1st trip DTC from the ECM memory after performing the tests. Refer to EC-91. Some tests may cause a 1st trip DTC to be set.	
▶	GO TO 16.

16	CHECK INTERMITTENT INCIDENT
Refer to "TROUBLE DIAGNOSIS FOR INTERMITTENT INCIDENT", EC-155.	
▶	**INSPECTION END**

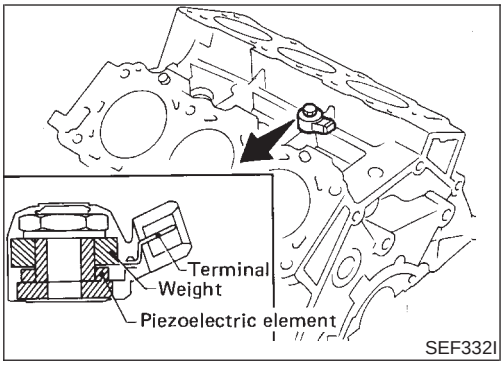

Component Description

NAEC0932

The knock sensor is attached to the cylinder block. It senses engine knocking using a piezoelectric element. A knocking vibration from the cylinder block is sensed as vibrational pressure. This pressure is converted into a voltage signal and sent to the ECM.

ECM Terminals and Reference Value

NAEC0933

Specification data are reference values and are measured between each terminal and ground.

CAUTION:

Do not use ECM ground terminals when measuring input/output voltage. Doing so may result in damage to the ECM's transistor. Use a ground other than ECM terminals, such as the ground.

TERMINAL NO.	WIRE COLOR	ITEM	CONDITION	DATA (DC Voltage)
15	W	Knock sensor	**[Engine is running]** ● Idle speed	Approximately 2.5V

On Board Diagnosis Logic

NAEC0934

The MIL will not light up for these self-diagnoses.

DTC No.	Trouble diagnosis name	DTC Detecting Condition	Possible Cause
P0327 0327	Knock sensor circuit low input	An excessively low voltage from the sensor is sent to ECM.	● Harness or connectors (The sensor circuit is open or shorted.) ● Knock sensor
P0328 0328	Knock sensor circuit high input	An excessively high voltage from the sensor is sent to ECM.	

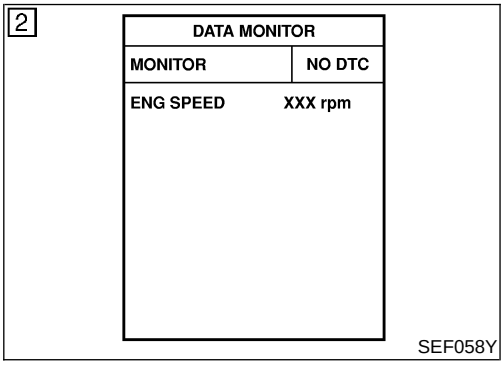

DTC Confirmation Procedure

NAEC0935

NOTE:

If DTC Confirmation Procedure has been previously conducted, always turn ignition switch OFF and wait at least 10 seconds before conducting the next test.

TESTING CONDITION:

Before performing the following procedure, confirm that battery voltage is more than 10V at idle.

WITH CONSULT-II

NAEC0935S01

1) Turn ignition switch ON and select "DATA MONITOR" mode with CONSULT-II
2) Start engine and run it for at least 5 seconds at idle speed.
3) If 1st trip DTC is detected, go to "Diagnostic Procedure", EC-316.

WITH GST

NAEC0935S03

Follow the procedure "WITH CONSULT-II" above.

Wiring Diagram

NAEC0936

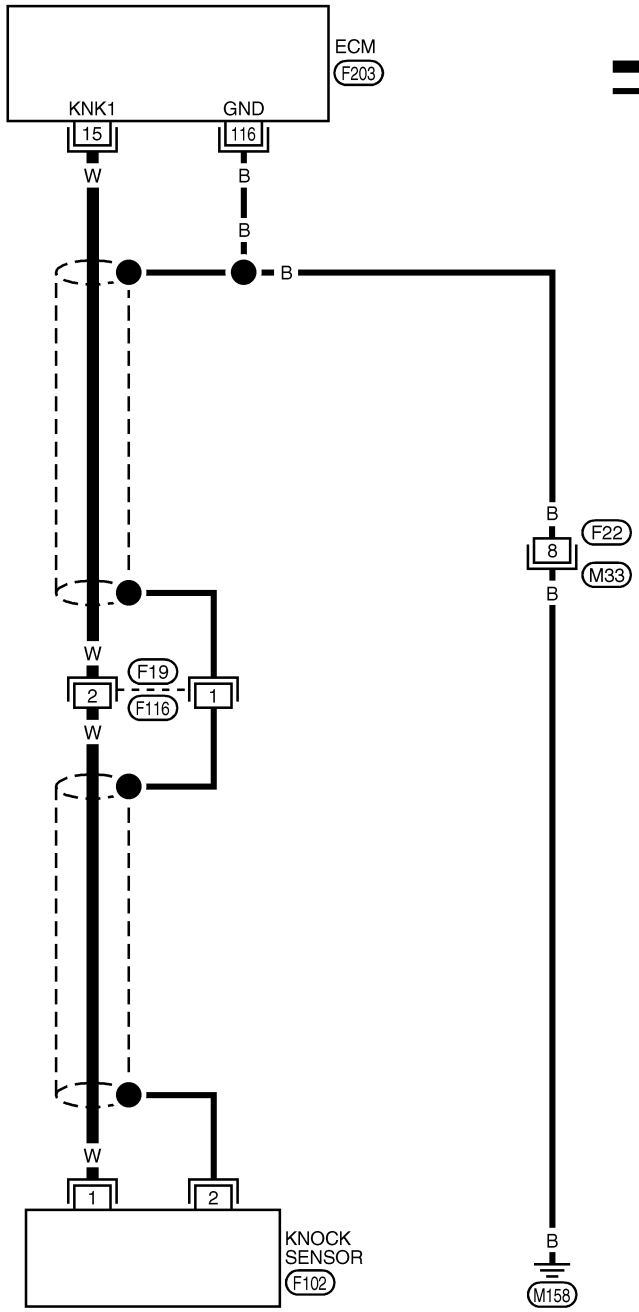

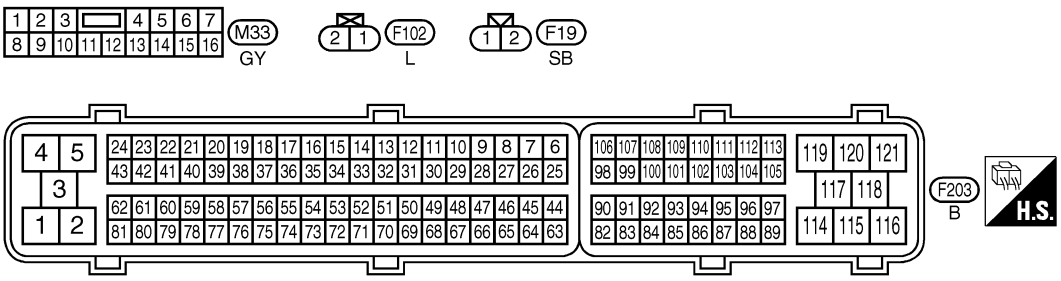

MEC094E

Diagnostic Procedure

NAEC0937

1	CHECK KNOCK SENSOR INPUT SIGNAL CIRCUIT FOR OPEN AND SHORT-I

1. Turn ignition switch OFF.
2. Disconnect ECM harness connector.
3. Check resistance between ECM terminal 15 and ground.
   NOTE:
   It is necessary to use an ohmmeter which can measure more than 10 MΩ.

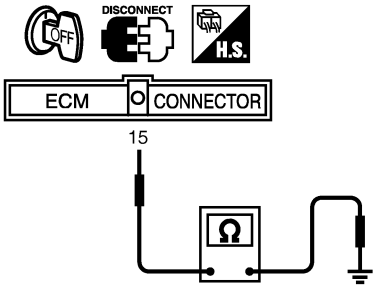

SEC438D

Resistance:
Approximately 500 - 620 kΩ [at 25°C (77°F)]

4. Also check harness for short to ground and short to power.

OK or NG

OK	▶	GO TO 5.
NG	▶	GO TO 2.

2	CHECK KNOCK SENSOR INPUT SIGNAL CIRCUIT FOR OPEN AND SHORT-II

1. Disconnect knock sensor harness connector.
2. Check harness continuity between ECM terminal 15 and knock sensor terminal 1. Refer to Wiring Diagram.
   Continuity should exist.
3. Also check harness for short to ground and short to power.

OK or NG

OK	▶	GO TO 4.
NG	▶	GO TO 3.

3	DETECT MALFUNCTIONING PART

Check the following.
- Harness connectors F19, F116
- Harness for open or short between ECM and knock sensor

	▶	Repair open circuit or short to ground or short to power in harness or connectors.

4	CHECK KNOCK SENSOR

Check resistance between knock sensor terminal 1 and ground.

NOTE:

It is necessary to use an ohmmeter which can measure more than 10 MΩ.

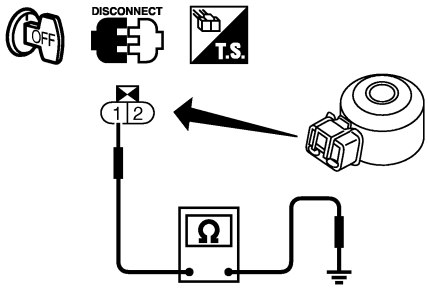

SEC439D

Resistance: 500 - 620 kΩ [at 25°C (77°F)]

CAUTION:

Do not use any knock sensors that have been dropped or physically damaged. Use only new ones.

OK or NG

OK	▶	GO TO 8.
NG	▶	Replace knock sensor.

5	CHECK GROUND CONNECTIONS

1. Turn ignition switch OFF.
2. Loosen and retighten three ground screws on the body.
   Refer to "Ground Inspection", EC-165.

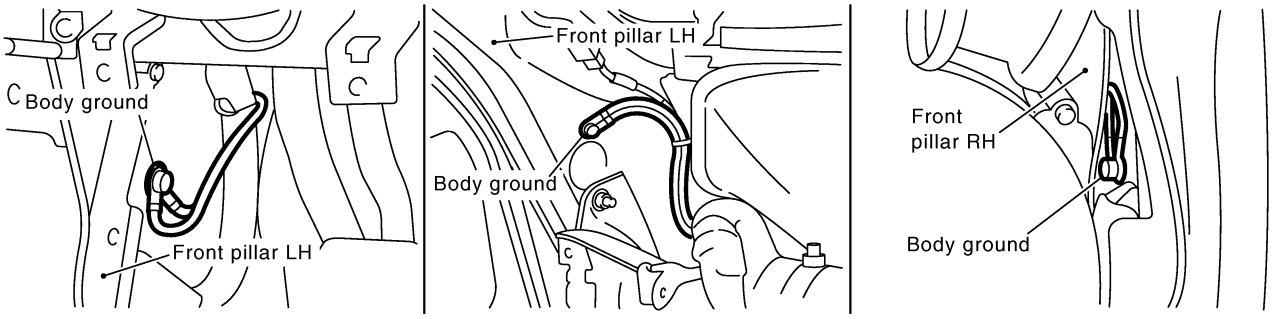

SEC997D

OK or NG

OK	▶	GO TO 6.
NG	▶	Repair or replace ground connections.

6	CHECK KNOCK SENSOR SHIELD CIRCUIT FOR OPEN AND SHORT

1. Check harness continuity between knock sensor terminal 2 and ground. Refer to Wiring Diagram.
   Continuity should exist.
2. Also check harness for short to power.

OK or NG

OK	▶	GO TO 8.
NG	▶	GO TO 7.

7	DETECT MALFUNCTIONING PART
Check the following. ● Harness connectors F19, F116 ● Harness connectors F22, M33 ● Harness for open between harness connector knock sensor and ground	
▶	Repair open circuit or short to power in harness or connectors.

8	CHECK INTERMITTENT INCIDENT
Refer to "TROUBLE DIAGNOSIS FOR INTERMITTENT INCIDENT", EC-155.	
▶	**INSPECTION END**

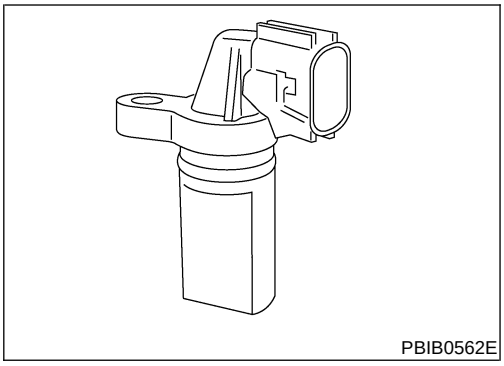

Component Description

NAEC1213

The crankshaft position sensor (POS) is located on the oil pan facing the gear teeth (cogs) of the signal plate. It detects the fluctuation of the engine revolution.
The sensor consists of a permanent magnet and Hall IC.
When the engine is running, the high and low parts of the teeth cause the gap with the sensor to change.
The changing gap causes the magnetic field near the sensor to change.
Due to the changing magnetic field, the voltage from the sensor changes.
The ECM receives the voltage signal and detects the fluctuation of the engine revolution.

CONSULT-II Reference Value in Data Monitor Mode

NAEC1214

Specification data are reference values.

MONITOR ITEM	CONDITION	SPECIFICATION
ENG SPEED	• Tachometer: Connect • Run engine and compare CONSULT-II value with the tachometer indication.	Almost the same speed as the tachometer indication.

On Board Diagnosis Logic

NAEC1215

DTC No.	Trouble diagnosis name	DTC Detecting Condition	Possible Cause
P0335 0335	Crankshaft position sensor (POS) circuit	• The crankshaft position sensor (POS) signal is not detected by the ECM during the first few seconds of engine cranking. • The proper pulse signal from the crankshaft position sensor (POS) is not sent to ECM while the engine is running. • The crankshaft position sensor signal (POS) is not in the normal pattern during engine running.	• Harness or connectors [The crankshaft position sensor (POS) circuit is open or shorted.] • Crankshaft position sensor (POS) • Signal plate

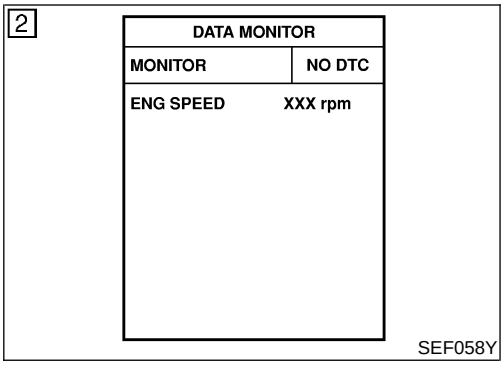

DTC Confirmation Procedure

=NAEC1216

NOTE:
If DTC Confirmation Procedure has been previously conducted, always turn ignition switch OFF and wait at least 10 seconds before conducting the next test.

TESTING CONDITION:
Before performing the following procedure, confirm that battery voltage is more than 10.5V with ignition switch ON.

With CONSULT-II

1) Turn ignition switch ON and select “DATA MONITOR” mode with CONSULT-II.
2) Crank engine for at least 2 seconds and run it for at least 5 seconds at idle speed.
3) If 1st trip DTC is detected, go to “Diagnostic Procedure”, EC-322.
   If 1st trip DTC is not detected, go to next step.
4) Maintaining engine speed at more than 1,000 rpm for at least 5 seconds.
5) If 1st trip DTC is detected, go to “Diagnostic Procedure”, EC-322

With GST

Follow the procedure “With CONSULT-II” above.

Wiring Diagram

NAEC1217

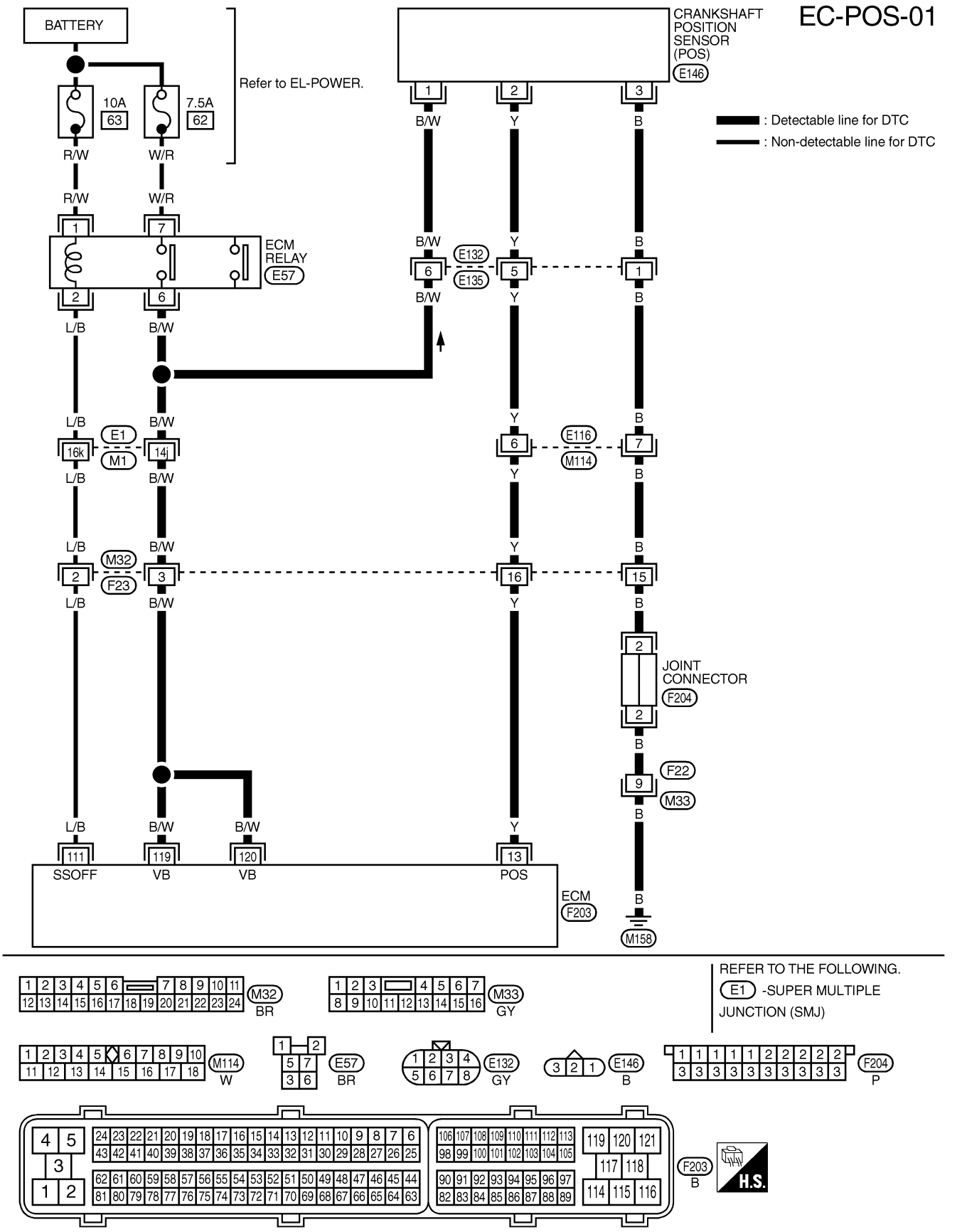

MEC095E

Wiring Diagram (Cont'd)

Specification data are reference values and are measured between each terminal and ground.
Pulse signal is measured by CONSULT-II.

CAUTION:

Do not use ECM ground terminals when measuring input/output voltage. Doing so may result in damage to the ECM's transistor. Use a ground other than ECM terminals, such as the ground.

TERMINAL NO.	WIRE COLOR	ITEM	CONDITION	DATA (DC Voltage)
13	Y	Crankshaft position sensor (POS)	**[Engine is running]** ● Idle speed	Approximately 1.6V★ 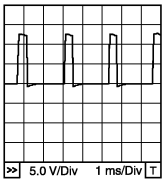 PBIB1041E
			[Engine is running] ● Engine speed is 2,000 rpm.	Approximately 1.5V★ 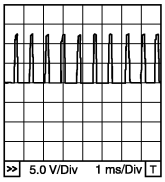 PBIB1042E

★: Average voltage for pulse signal (Actual pulse signal can be confirmed by oscilloscope.)

Diagnostic Procedure

NAEC1218

1	CHECK GROUND CONNECTIONS

1. Turn ignition switch OFF.
2. Loosen and retighten three ground screws on the body.
   Refer to "Ground Inspection", EC-165.

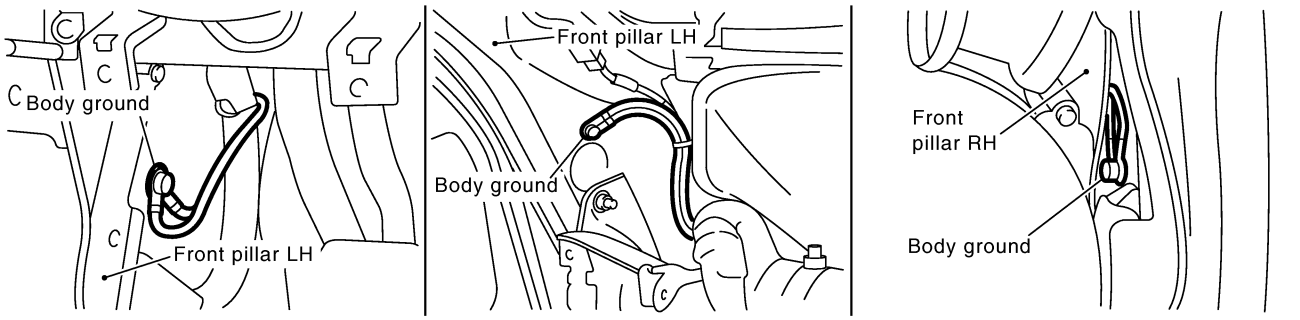

SEC997D

OK or NG

OK	▶	GO TO 2.
NG	▶	Repair or replace ground connections.

2	CHECK CKP SENSOR (POS) POWER SUPPLY CIRCUIT

1. Disconnect crankshaft position sensor (POS) harness connector.

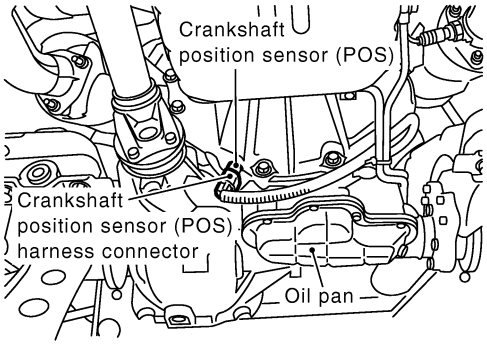

SEC440D

2. Turn ignition switch ON.
3. Check voltage between crankshaft position sensor (POS) terminal 1 and ground with CONSULT-II or tester.

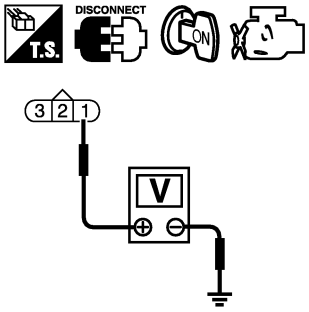

PBIB0664E

Voltage: Battery voltage

4. Also check harness for short to ground and short to power.

OK or NG

OK	▶	GO TO 4.
NG	▶	GO TO 3.

3	DETECT MALFUNCTIONING PART

Check the following.
- Harness connectors E132, E135
- Harness connectors E1, M1
- Harness connectors M32, F23
- Harness for open or short between ECM relay and crankshaft position sensor (POS)
- Harness for open or short between ECM and crankshaft position sensor (POS)

	▶	Repair open circuit or short to ground or short to power in harness or connectors.

4	CHECK CKP SENSOR (POS) GROUND CIRCUIT FOR OPEN AND SHORT

1. Turn ignition switch OFF.
2. Check harness continuity between crankshaft position sensor (POS) terminal 3 and ground. Refer to Wiring Diagram.
   Continuity should exist.
3. Also check harness for short to power.

OK or NG

OK	▶	GO TO 6.
NG	▶	GO TO 5.

5	DETECT MALFUNCTIONING PART
Check the following. ● Harness connectors E132, E135 ● Harness connectors E116, M114 ● Harness connectors M32, F23 ● Joint connector F204 ● Harness connectors F22, M33 ● Harness for open between crankshaft position sensor (POS) and ground	
▶	Repair open circuit or short to power in harness or connectors.

6	CHECK CKP SENSOR (POS) INPUT SIGNAL CIRCUIT FOR OPEN AND SHORT
1. Disconnect ECM harness connector. 2. Check harness continuity between ECM terminal 13 and crankshaft position sensor (POS) terminal 2. Refer to Wiring Diagram. **Continuity should exist.** 3. Also check harness for short to ground and short to power.	
OK or NG	
OK ▶	GO TO 8.
NG ▶	GO TO 7.

7	DETECT MALFUNCTIONING PART
Check the following. ● Harness connectors E132, E135 ● Harness connectors E116, M114 ● Harness connectors M32, F23 ● Harness for open or short between ECM and crankshaft position sensor (POS)	
▶	Repair open circuit or short to ground or short to power in harness or connectors.

8	CHECK CRANKSHAFT POSITION SENSOR (POS)
Refer to "Component Inspection", EC-325.	
OK or NG	
OK ▶	GO TO 9.
NG ▶	Replace crankshaft position sensor (POS).

9	CHECK GEAR TOOTH
Visually check for chipping signal plate gear tooth.	
OK or NG	
OK ▶	GO TO 10.
NG ▶	Replace the signal plate.

10	CHECK INTERMITTENT INCIDENT
Refer to "TROUBLE DIAGNOSIS FOR INTERMITTENT INCIDENT", EC-155.	
▶	**INSPECTION END**

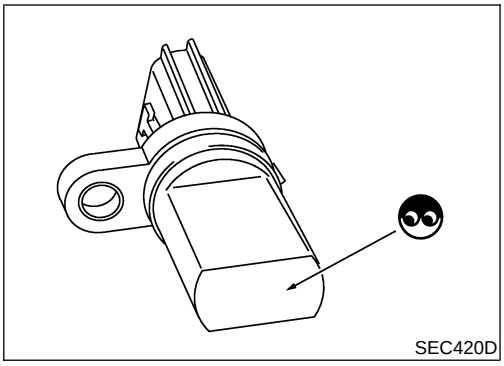

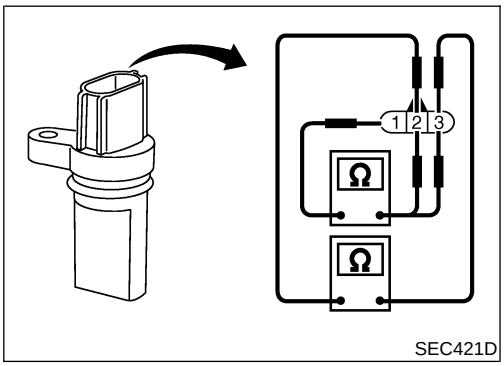

Component Inspection

NAEC1219

CRANKSHAFT POSITION SENSOR (POS)

NAEC1219S01

1. Loosen the fixing bolt of the sensor.
2. Disconnect crankshaft position sensor (POS) harness connector.
3. Remove the sensor.
4. Visually check the sensor for chipping.
5. Check resistance as shown in the figure.

Terminal No. (Polarity)	Resistance Ω [at 25°C (77°F)]
1 (+) - 2 (−)	Except 0 or ∞
1 (+) - 3 (−)	
2 (+) - 3 (−)	

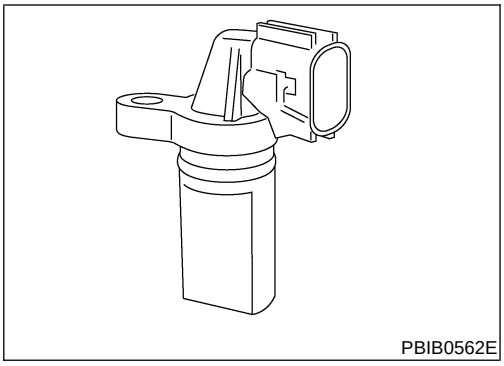

Component Description

NAEC1220

The camshaft position sensor (PHASE) senses the retraction of intake valve camshaft to identify a particular cylinder. The crankshaft position sensor (POS) senses the piston position. When the crankshaft position sensor (POS) system becomes inoperative, the camshaft position sensor (PHASE) provides various controls of engine parts instead, utilizing timing of cylinder identification signals. The sensor consists of a permanent magnet and Hall IC. When engine is running, the high and low parts of the teeth cause the gap with the sensor to change. The changing gap causes the magnetic field near the sensor to change. Due to the changing magnetic field, the voltage from the sensor changes.

On Board Diagnosis Logic

NAEC1221

DTC No.	Trouble diagnosis name	DTC Detecting Condition	Possible Cause
P0340 0340 (Bank 1)	Camshaft position sensor (PHASE) circuit	• The cylinder No. signal is not sent to ECM for the first few seconds during engine cranking. • The cylinder No. signal is not sent to ECM during engine running. • The cylinder No. signal is not in the normal pattern during engine running.	• Harness or connectors [The camshaft position sensor (PHASE) circuit is open or shorted.] • Camshaft position sensor (PHASE) • Camshaft (Intake) • Starter motor (Refer to SC section.) • Starting system circuit (Refer to SC section.) • Dead (Weak) battery
P0345 0345 (Bank 2)			

DTC Confirmation Procedure

NAEC1222

NOTE:

If DTC Confirmation Procedure has been previously conducted, always turn ignition switch OFF and wait at least 10 seconds before conducting the next test.

TESTING CONDITION:

Before performing the following procedure, confirm that battery voltage is more than 10.5V with ignition switch ON.

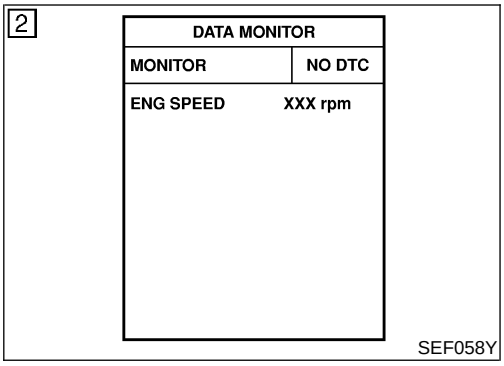

WITH CONSULT-II

NAEC1222S01

1) Turn ignition switch ON.
2) Select "DATA MONITOR" mode with CONSULT-II.
3) Crank engine for at least 2 seconds and run it for at least 5 seconds at idle speed.
4) If 1st trip DTC is detected, go to "Diagnostic Procedure", EC-330. If 1st trip DTC is not detected, go to next step.
5) Maintaining engine speed at more than 1,000 rpm for at least 5 seconds.
6) If 1st trip DTC is detected, go to "Diagnostic Procedure", EC-330.

WITH GST

NAEC1222S02

Follow the procedure "With CONSULT-II" above.

Wiring Diagram

NAEC1223

BANK 1

NAEC1223S01

EC-PHSB1-01

: Detectable line for DTC
: Non-detectable line for DTC

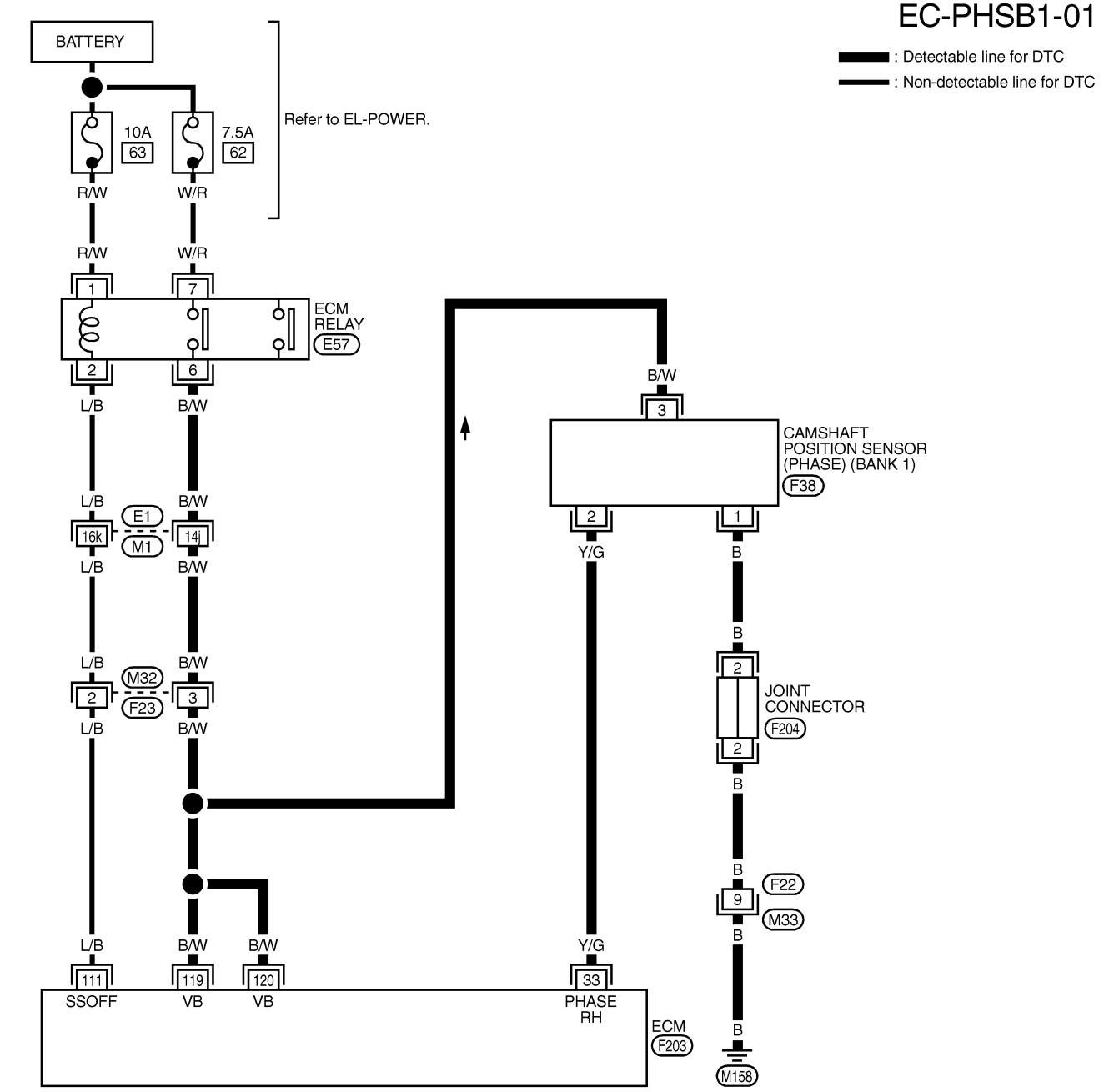

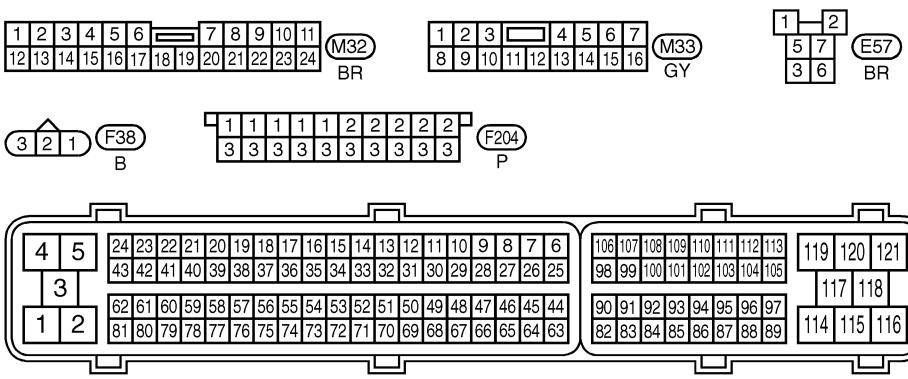

REFER TO THE FOLLOWING.
E1 -SUPER MULTIPLE JUNCTION (SMJ)

MEC102E

BANK 2

NAEC1223S02

EC-PHSB2-01

: Detectable line for DTC

: Non-detectable line for DTC

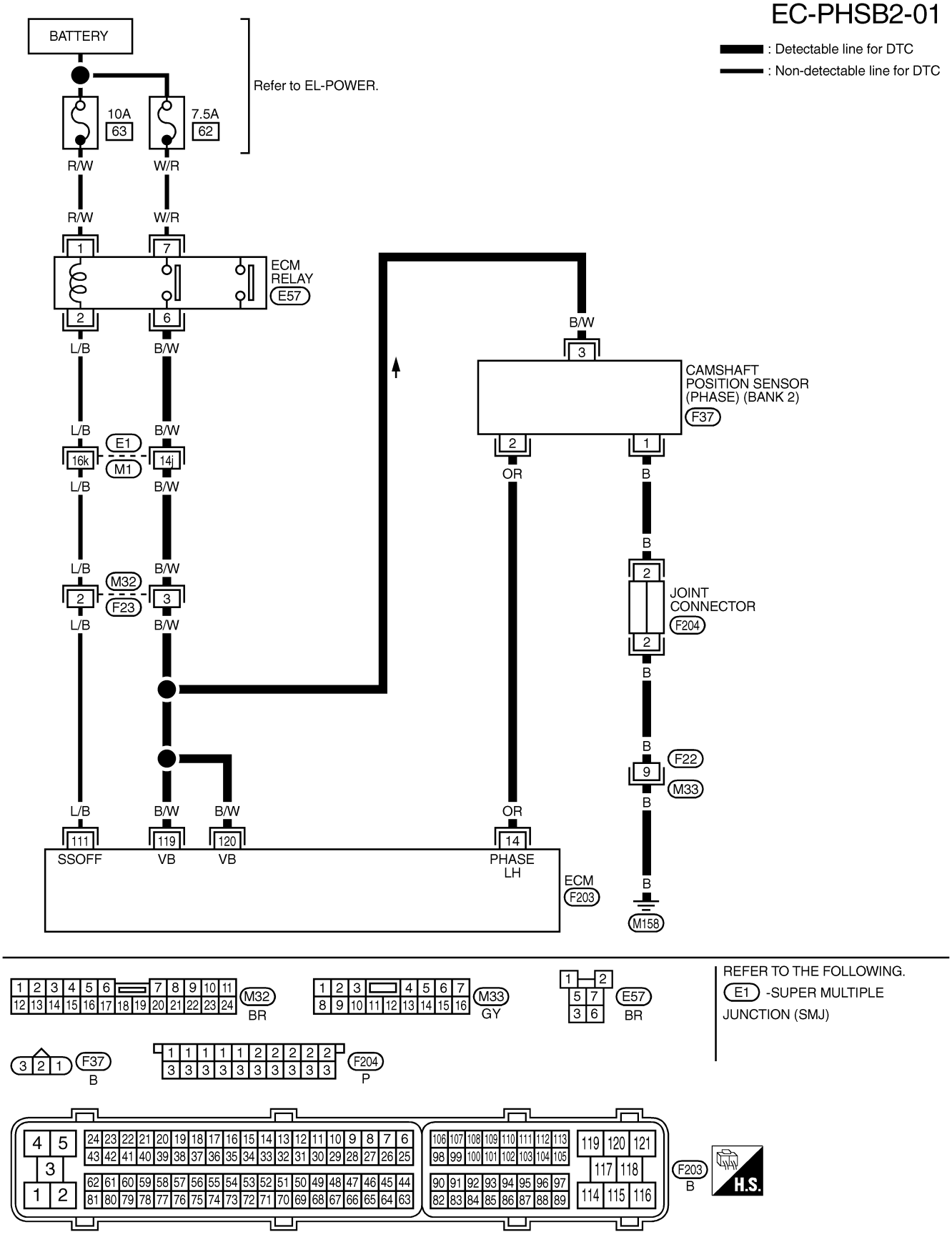

MEC103E

Specification data are reference values and are measured between each terminal and ground.
Pulse signal is measured by CONSULT-II.

CAUTION:
Do not use ECM ground terminals when measuring input/output voltage. Doing so may result in damage to the ECM's transistor. Use a ground other than ECM terminals, such as the ground.

TERMINAL NO.	WIRE COLOR	ITEM	CONDITION	DATA (DC Voltage)
33	Y/G	Camshaft position sensor (PHASE) (Bank 1)	**[Engine is running]** ● **Warm-up condition** ● Idle speed	1.0 - 4.0V★ 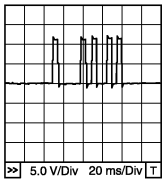 PBIB1039E
			[Engine is running] ● **Warm-up condition** ● Engine speed is 2,000 rpm.	1.0 - 4.0V★ 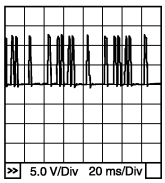 PBIB1040E
14	OR	Camshaft position sensor (PHASE) (Bank 2)	**[Engine is running]** ● **Warm-up condition** ● Idle speed	1.0 - 4.0V★ 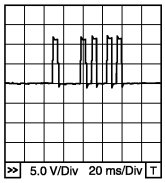 PBIB1039E
			[Engine is running] ● **Warm-up condition** ● Engine speed is 2,000 rpm.	1.0 - 4.0V★ 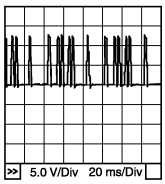 PBIB1040E

★: Average voltage for pulse signal (Actual pulse signal can be confirmed by oscilloscope.)

Diagnostic Procedure

NAEC1224

1	CHECK STARTING SYSTEM	
Turn ignition switch to "START" position. **Does the engine turn over?** **Does the starter motor operate?**		
	Yes or No	
Yes	▶	GO TO 2.
No	▶	Check starting system. (Refer to SC-10, "STARTING SYSTEM".)

2	CHECK GROUND CONNECTIONS

1. Turn ignition switch OFF.
2. Loosen and retighten three ground screws on the body.
   Refer to "Ground Inspection", EC-165.

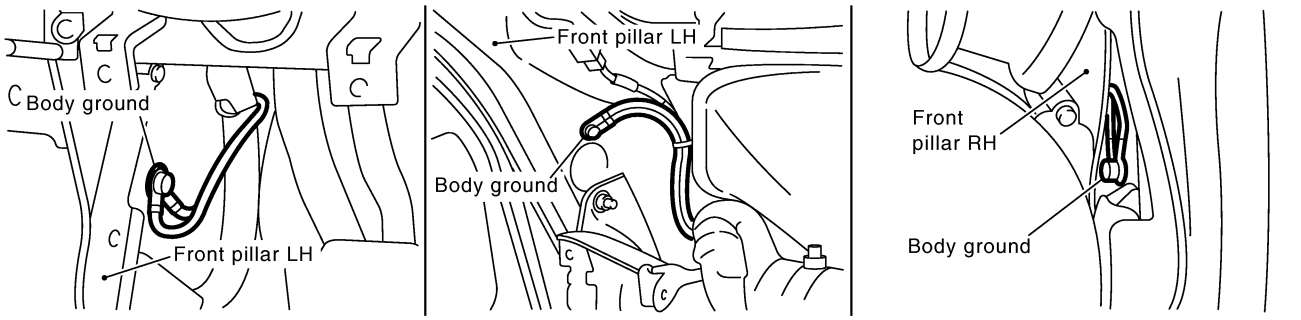

SEC997D

OK or NG

OK	▶	GO TO 3.
NG	▶	Repair or replace ground connections.

3	CHECK CMP SENSOR (PHASE) POWER SUPPLY CIRCUIT

1. Disconnect CMP sensor (PHASE) harness connector (bank 1) or (bank 2).

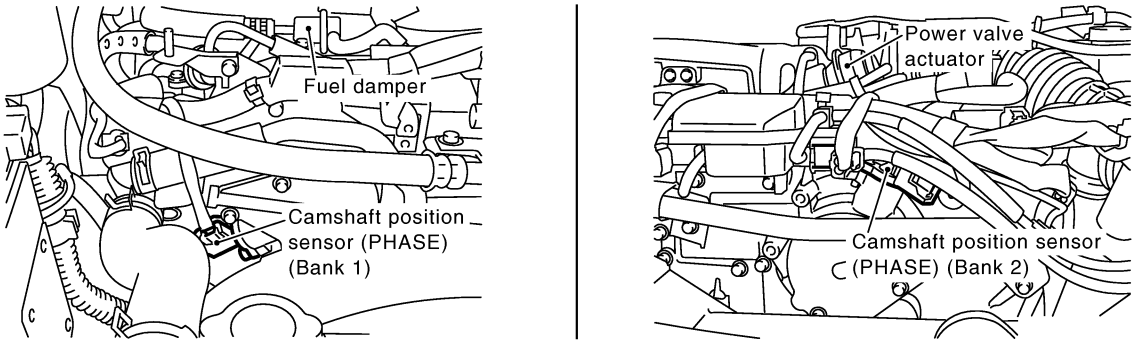

SEC002E

2. Turn ignition switch ON.
3. Check voltage between CMP sensor (PHASE) terminal 3 and ground with CONSULT-II or tester.

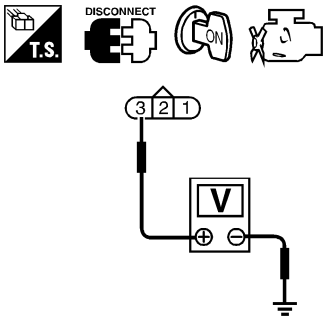

SEF479Y

Voltage: Battery voltage

4. Also check harness for short to ground and short to power.

OK or NG

OK	▶	GO TO 5.
NG	▶	GO TO 4.

4	DETECT MALFUNCTIONING PART
Check the following. ● Harness connectors E1, M1 ● Harness connectors M32, F23 ● Harness for open or short between ECM and camshaft position sensor (PHASE) ● Harness for open or short between ECM relay and camshaft position sensor (PHASE)	
▶	Repair open circuit or short to ground or short to power in harness or connectors.

5	CHECK CMP SENSOR (PHASE) GROUND CIRCUIT FOR OPEN AND SHORT
1. Turn ignition switch OFF. 2. Check CMP sensor (PHASE) terminal 1 and ground. Refer to Wiring Diagram. **Continuity should exist.** 3. Also check harness for short to power.	
OK or NG	
OK ▶	GO TO 7.
NG ▶	GO TO 6.

6	DETECT MALFUNCTIONING PART
Check the following. ● Joint connector F204 ● Harness connectors F22, M33 ● Harness for open between camshaft position sensor (PHASE) and ground	
▶	Repair open circuit or short to ground or short to power in harness or connectors.

7	CHECK CMP SENSOR (PHASE) INPUT SIGNAL CIRCUIT FOR OPEN AND SHORT
1. Disconnect ECM harness connector. 2. Check harness continuity between ECM terminal 33 and CMP sensor (PHASE) (Bank 1) terminal 2. 3. Check harness continuity between ECM terminal 14 and CMP sensor (PHASE) (Bank 2) terminal 2. Refer to Wiring Diagram. **Continuity should exist.** 4. Also check harness for short to ground and short to power.	
OK or NG	
OK ▶	GO TO 8.
NG ▶	Repair harness or connectors.

8	CHECK CAMSHAFT POSITION SENSOR (PHASE)
Refer to "Component Inspection", EC-333.	
OK or NG	
OK ▶	GO TO 9.
NG ▶	Replace camshaft position sensor (PHASE).

9	CHECK CAMSHAFT (INTAKE)	
Visually check for chipped signal plate at camshaft.		
OK or NG		
OK	▶	GO TO 10.
NG	▶	Replace camshaft.

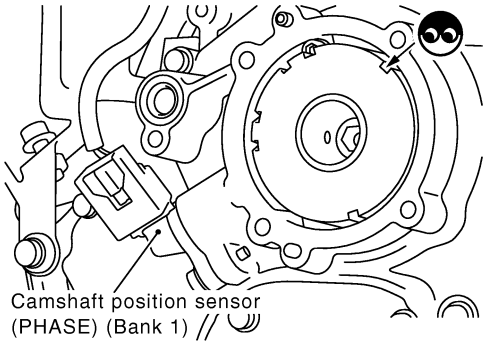

SEC578D

10	CHECK INTERMITTENT INCIDENT
Refer to "TROUBLE DIAGNOSIS FOR INTERMITTENT INCIDENT", EC-155.	
▶	**INSPECTION END**

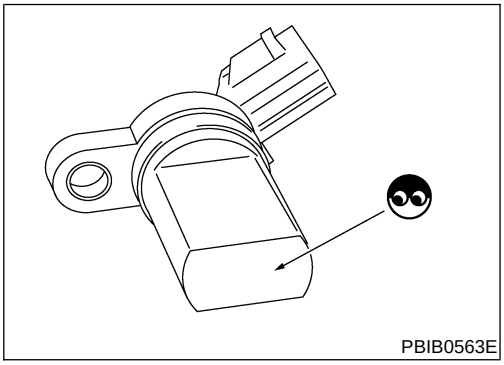

PBIB0563E

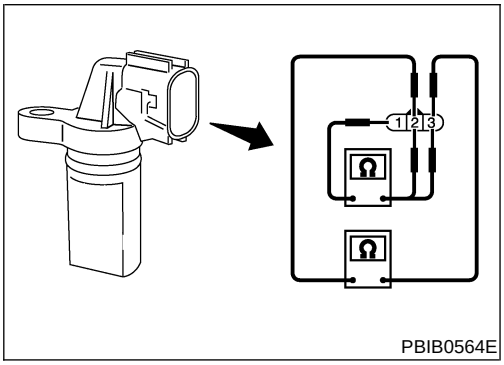

PBIB0564E

Component Inspection

NAEC1225

CAMSHAFT POSITION SENSOR (PHASE)

NAEC1225S01

1. Loosen the fixing bolt of the sensor.
2. Disconnect camshaft position sensor (PHASE) harness connector.
3. Remove the sensor.
4. Visually check the sensor for chipping.
5. Check resistance as shown inthe figure.

Terminal No. (Polarity)	Resistance Ω [at 25°C (77°F)]
1 (+) - 2 (−)	Except 0 or ∞
1 (+) - 3 (−)	
2 (+) - 3 (−)	

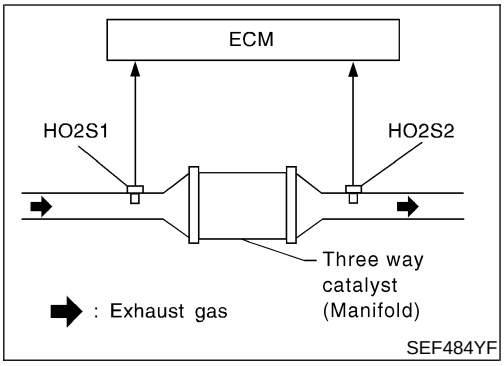

SEF484YF

On Board Diagnosis Logic

NAEC0951

The ECM monitors the switching frequency ratio of heated oxygen sensors 1 and 2.
A three way catalyst (manifold) with high oxygen storage capacity will indicate a low switching frequency of heated oxygen sensor 2. As oxygen storage capacity decreases, the heated oxygen sensor 2 switching frequency will increase.
When the frequency ratio of heated oxygen sensors 1 and 2 approaches a specified limit value, the three way catalyst (manifold) malfunction is diagnosed.

DTC No.	Trouble diagnosis name	DTC Detecting Condition	Possible Cause
P0420 0420 (Bank 1)	Catalyst system efficiency below threshold	• Three way catalyst (manifold) does not operate properly. • Three way catalyst (manifold) does not have enough oxygen storage capacity.	• Three way catalyst (manifold) • Exhaust tube • Intake air leaks • Injector • Injector leaks • Spark plug • Improper ignition timing
P0430 0430 (Bank 2)			

SRT WORK SUPPORT	
CATALYST	INCMP
EVAP SYSTEM	INCMP
HO2S HTR	CMPLT
HO2S	INCMP
MONITOR	
ENG SPEED	XXX rpm
B/FUEL SCHDL	XXX msec

SEC138D

SRT WORK SUPPORT	
CATALYST	CMPLT
EVAP SYSTEM	INCMP
HO2S HTR	CMPLT
HO2S	INCMP
MONITOR	
ENG SPEED	XXX rpm
B/FUEL SCHDL	XXX msec

SEC139D

SELF DIAG RESULTS	
DTC RESULTS	TIME
NO DTC IS DETECTED. FURTHER TESTING MAY BE REQUIRED.	

SEF560X

DTC Confirmation Procedure

NAEC0952

NOTE:
If DTC Confirmation Procedure has been previously conducted, always turn ignition switch OFF and wait at least 10 seconds before conducting the next test.

WITH CONSULT-II

NAEC0952S01

TESTING CONDITION:

- **Open engine hood before conducting the following procedure.**
- **Do not hold engine speed for more than the specified minutes below.**

1) Start engine and warm it up to the normal operating temperature.
2) Turn ignition switch OFF and wait at least 10 seconds.
3) Start engine and keep the engine speed between 3,500 and 4,000 rpm for at least 1 minute under no load.
4) Let engine idle for 1 minute.
5) Open engine hood.
6) Select “DTC & SRT CONFIRMATION” then “SRT WORK SUPPORT” mode with CONSULT-II.
7) Rev engine up to 2,000 to 3,000 rpm and hold it for 3 consecutive minutes then release the accelerator pedal completely. If “INCMP” of “CATALYST” changed to “COMPLT”, go to step 10.
8) Wait 5 seconds at idle.
9) Rev engine up to 2,000 to 3,000 rpm and maintain it until “INCMP” of “CATALYST” changes to “CMPLT” (It will take approximately 5 minutes). If not “CMPLT”, perform the following.

a) Turn ignition switch OFF and leave the vehicle in a cool place (soak the vehicle).
b) Turn ignition switch ON and select “COOLAN TEMP/S” in “DATA MONITOR” mode with CONSULT-II.
c) Start engine and warm it up while monitoring “COOLAN

TEMP/S" indication on CONSULT-II.

d) When "COOLAN TEMP/S" indication reaches to 70°C (158°F), go to step 3.

10) Select "SELF-DIAG RESULTS" mode with CONSULT-II.

11) Confirm that the 1st trip DTC is not detected.
If the 1st trip DTC is detected, go to "Diagnostic Procedure", EC-335.

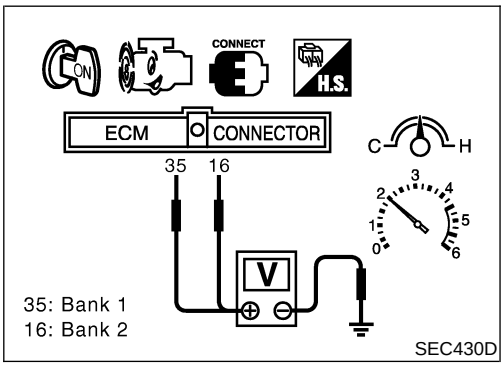

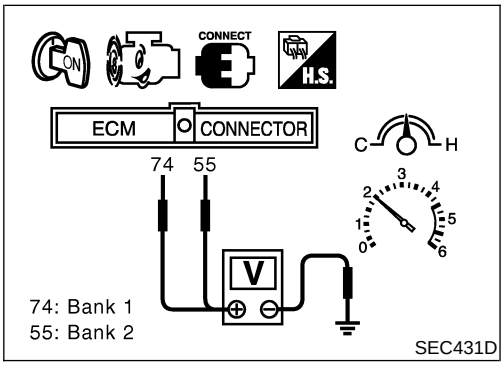

Overall Function Check

NAEC0953

Use this procedure to check the overall function of the warm-up three way catalyst. During this check, a 1st trip DTC might not be confirmed.

CAUTION:
Always drive vehicle at a safe speed.

WITH GST

NAEC0953S01

1) Start engine and warm it up to the normal operating temperature.
2) Turn ignition switch OFF and wait at least 10 seconds.
3) Start engine and keep the engine speed between 3,500 and 4,000 rpm for at least 1 minute under no load.
4) Let engine idle for 1 minute.
5) Set voltmeters probes between ECM terminals 35 [heated oxygen sensor 1 bank 1 signal], 16 [heated oxygen sensor 1 bank 2 signal] and ground, and ECM terminals 74 [heated oxygen sensor 2 bank 1 signal], 55 [heated oxygen sensor 2 bank 2 signal] and ground.
6) Keep engine speed at 2,000 rpm constant under no load.
7) Make sure that the voltage switching frequency (high & low) between ECM terminals 74 and ground, or 55 and ground is very less than that of ECM terminals 35 and ground, or 16 and ground.
Switching frequency ratio = A/B
A: Heated oxygen sensor 2 voltage switching frequency
B: Heated oxygen sensor 1 voltage switching frequency
This ratio should be less than 0.75.
If the ratio is greater than above, it means warm-up three way catalyst does not operate properly. Go to "Diagnostic Procedure", EC-335.

NOTE:
If the voltage at terminal 16 or 35 does not switch periodically more than 5 times within 10 seconds at step 5, perform trouble diagnosis for "DTC P0133, P0153" first. (See EC-233.)

Diagnostic Procedure

NAEC0954

1	CHECK EXHAUST SYSTEM	
Visually check exhaust tubes and muffler for dent. **OK or NG**		
OK	▶	GO TO 2.
NG	▶	Repair or replace.

2	CHECK EXHAUST GAS LEAK

1. Start engine and run it at idle.
2. Listen for an exhaust gas leak before the three way catalyst (manifold).

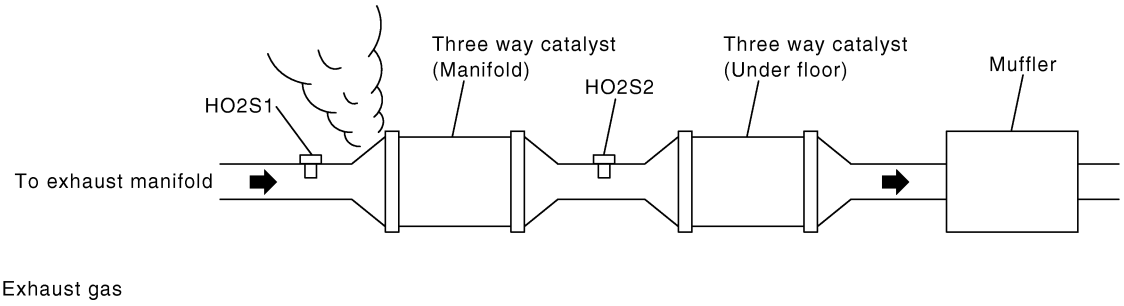

SEC502D

OK or NG

OK	▶	GO TO 3.
NG	▶	Repair or replace.

3	CHECK INTAKE AIR LEAK

Listen for an intake air leak after the mass air flow sensor.

OK or NG

OK	▶	GO TO 4.
NG	▶	Repair or replace.

4	CHECK IGNITION TIMING

Check the following items. Refer to "Basic Inspection", EC-123.

Items	Specifications
Ignition timing	15° ± 5° BTDC
Target idle speed	M/T: 750 ± 50 rpm A/T: 750 ± 50 rpm (in "P" or "N" position)

MTBL1368

OK or NG

OK	▶	GO TO 5.
NG	▶	Follow the "Basic Inspection".

5	CHECK INJECTORS

1. Stop engine and then turn ignition switch ON.
2. Check voltage between ECM terminals 21, 22, 23, 40, 41, 42 and ground with CONSULT-II or tester. Refer to WIRING DIAGRAM for Injectors, EC-725.

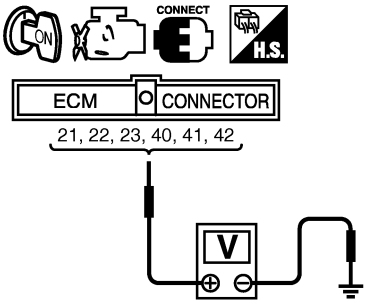

SEC516D

Voltage: Battery voltage

OK or NG

OK	▶	GO TO 6.
NG	▶	Perform "Diagnostic Procedure", "INJECTOR", EC-726.

6	CHECK IGNITION SPARK

1. Turn ignition switch OFF.
2. Remove ignition coil assembly from rocker cover.
3. Connect a known-good spark plug to the ignition coil assembly.
4. Disconnect all injector harness connectors.
5. Place end of spark plug against a suitable ground and crank engine.
6. Check for spark.

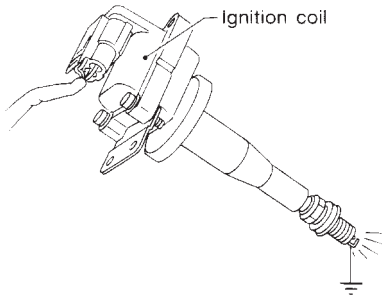

SEF575Q

OK or NG

OK	▶	GO TO 7.
NG	▶	Check ignition coil with power transistor and their circuit. Refer to EC-714.

7	CHECK INJECTOR	
1. Turn ignition switch OFF. 2. Remove injector assembly. Refer to EC-58. Keep fuel hose and all injectors connected to injector gallery. 3. Disconnect all ignition coil harness connectors. 4. Reconnect injector harness connectors. 5. Turn ignition switch ON. Make sure fuel does not drip from injector.		
OK or NG		
OK (Does not drip.)	▶	GO TO 8.
NG (Drips.)	▶	Replace the injector(s) from which fuel is dripping.

8	CHECK INTERMITTENT INCIDENT	
Refer to "TROUBLE DIAGNOSIS FOR INTERMITTENT INCIDENT", EC-155.		
Trouble is fixed.	▶	**INSPECTION END**
Trouble is not fixed.	▶	Replace three way catalyst (manifold).

System Description

NAEC0955

NOTE:
If DTC P0441 is displayed with other DTC such as P2122, P2123, P2127, P2128 or P2138, first perform trouble diagnosis for other DTC.

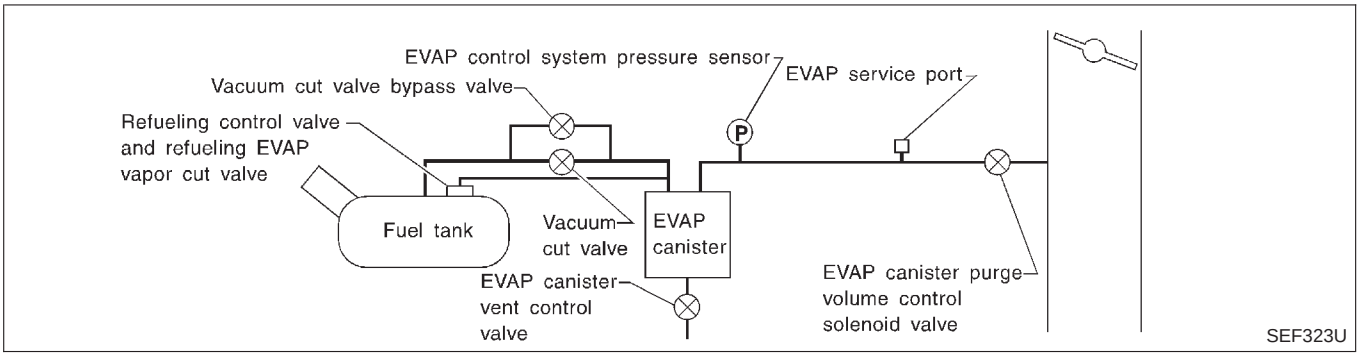

In this evaporative emission (EVAP) control system, purge flow occurs during non-closed throttle conditions. Purge volume is related to air intake volume. Under normal purge conditions (non-closed throttle), the EVAP canister purge volume control solenoid valve is open to admit purge flow. Purge flow exposes the EVAP control system pressure sensor to intake manifold vacuum.

On Board Diagnosis Logic

NAEC0956

Under normal conditions (non-closed throttle), sensor output voltage indicates if pressure drop and purge flow are adequate. If not, a fault is determined.

DTC No.	Trouble diagnosis name	DTC Detecting Condition	Possible Cause
P0441 0441	EVAP control system incorrect purge flow	EVAP control system does not operate properly, EVAP control system has a leak between intake manifold and EVAP control system pressure sensor.	• EVAP canister purge volume control solenoid valve stuck closed • EVAP control system pressure sensor and the circuit • Loose, disconnected or improper connection of rubber tube • Blocked rubber tube • Cracked EVAP canister • EVAP canister purge volume control solenoid valve circuit • Accelerator pedal position sensor • Blocked purge port • EVAP canister vent control valve

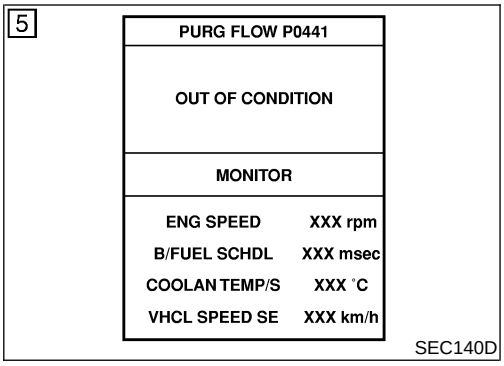

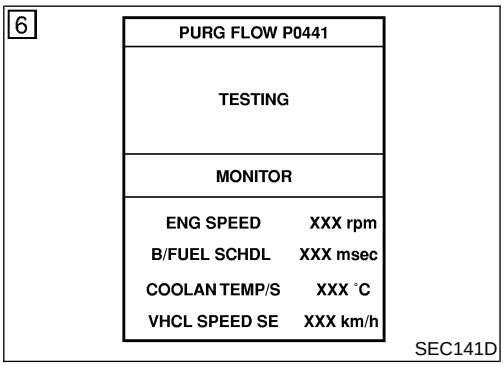

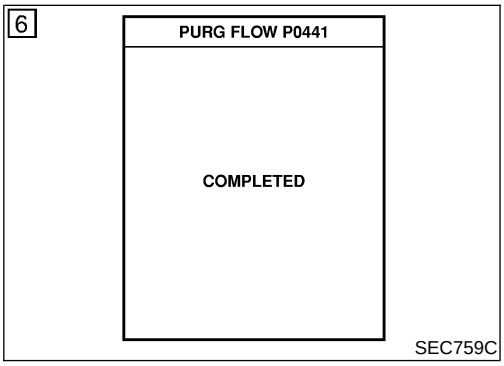

DTC Confirmation Procedure

NAEC0957

CAUTION:
Always drive vehicle at a safe speed.

NOTE:
If DTC Confirmation Procedure has been previously conducted, always turn ignition switch OFF and wait at least 10 seconds before conducting the next test.

TESTING CONDITION:
Always perform test at a temperature of 5°C (41°F) or more.

WITH CONSULT-II

NAEC0957S01

1) Start engine and warm it up to normal operating temperature.
2) Turn ignition switch OFF and wait at least 10 seconds.
3) Start engine and let it idle for at least 70 seconds.
4) Select “PURG FLOW P0441” of “EVAPORATIVE SYSTEM” in “DTC CONFIRMATION” mode with CONSULT-II.
5) Touch “START”.
   If “COMPLETED” is displayed, go to step 7.
6) When the following conditions are met, “TESTING” will be displayed on the CONSULT-II screen. Maintain the conditions continuously until “TESTING” changes to “COMPLETED”. (It will take at least 35 seconds.)

Selector lever	Suitable position
Vehicle speed	32 - 120 km/h (20 - 75 MPH)
ENG SPEED	500 - 3,000 rpm
B/FUEL SCHDL	1.0 - 10 msec
Engine coolant temperature	More than 20°C (68°F)

   If “TESTING” is not changed for a long time, retry from step 2.
7) Make sure that “OK” is displayed after touching “SELF-DIAG RESULTS”. If “NG” is displayed, refer to “Diagnostic Procedure”, EC-342.

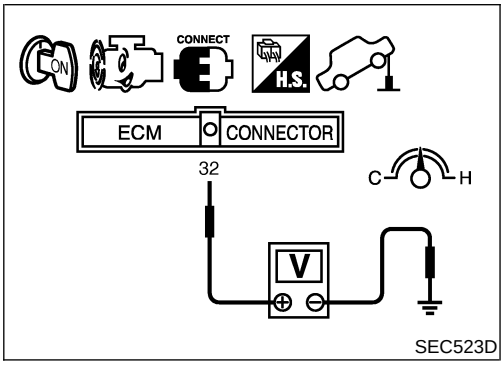

Overall Function Check

NAEC0958

Use this procedure to check the overall monitoring function of the EVAP control system purge flow monitoring. During this check, a 1st trip DTC might not be confirmed.

WITH GST

NAEC0958S01

1) Lift up drive wheels.
2) Start engine (TCS switch OFF) and warm it up to normal operating temperature.
3) Turn ignition switch OFF, wait at least 10 seconds.
4) Start engine and wait at least 70 seconds.

5) Set voltmeter probes to ECM terminals 32 (EVAP control system pressure sensor signal) and ground.
6) Check EVAP control system pressure sensor value at idle speed and note it.
7) Establish and maintain the following conditions for at least 1 minute.

Air conditioner switch	ON
Headlamp switch	ON
Rear window defogger switch	ON
Engine speed	Approx. 3,000 rpm
Gear position	Any position other than P, N or R

8) Verify that EVAP control system pressure sensor value stays 0.1V less than the value at idle speed (measured at step 6) for at least 1 second.
9) If NG, go to "Diagnostic Procedure", EC-342.

Diagnostic Procedure

=NAEC0959

1	CHECK EVAP CANISTER

1. Turn ignition switch OFF.
2. Check EVAP canister for cracks.

OK or NG

OK (With CONSULT-II)	▶	GO TO 2.
OK (Without CONSULT-II)	▶	GO TO 3.
NG	▶	Replace EVAP canister.

2	CHECK PURGE FLOW

With CONSULT-II

1. Disconnect vacuum hose connected to EVAP canister purge volume control solenoid valve at EVAP service port and install vacuum gauge.

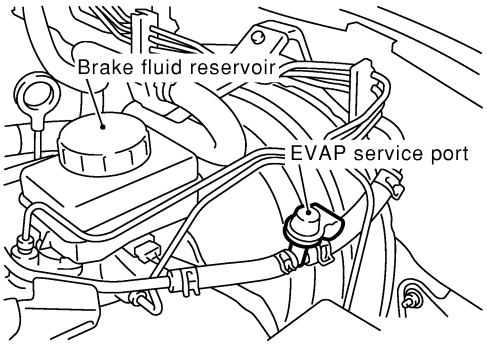

SEF983Y

2. Start engine and let it idle.
3. Select “PURG VOL CONT/V” in “ACTIVE TEST” mode with CONSULT-II.
4. Rev engine up to 2,000 rpm.
5. Touch “Qd” and “Qu” on CONSULT-II screen to adjust “PURG VOL CONT/V” opening and check vacuum existence.

ACTIVE TEST	
PURG VOL CONT/V	XXX %
MONITOR	
ENG SPEED	XXX rpm
A/F ALPHA-B1	XX %
A/F ALPHA-B2	XX %

PBIB1678E

PURG VOL CONT/V	VACUUM
100%	Should exist
0%	Should not exist

MTBL1805

OK or NG

OK	▶	GO TO 7.
NG	▶	GO TO 4.

3	CHECK PURGE FLOW

Without CONSULT-II

1. Start engine and warm it up to normal operating temperature.
2. Stop engine.
3. Disconnect vacuum hose connected to EVAP canister purge volume control solenoid valve at EVAP service port and install vacuum gauge.

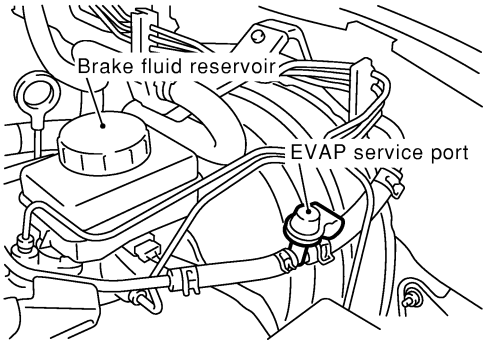

SEF983Y

4. Start engine and let it idle for at least 80 seconds.
5. Check vacuum gauge indication when revving engine up to 2,000 rpm.
   Vacuum should exist.
6. Release the accelerator pedal fully and let idle.
   Vacuum should not exist.

OK or NG

OK	▶	GO TO 7.
NG	▶	GO TO 4.

4	CHECK EVAP PURGE LINE

1. Turn ignition switch OFF.
2. Check EVAP purge line for improper connection or disconnection.
   Refer to "EVAPORATIVE EMISSION LINE DRAWING", EC-42.

OK or NG

OK	▶	GO TO 5.
NG	▶	Repair it.

5	CHECK EVAP PURGE HOSE AND PURGE PORT

1. Disconnect purge hoses connected to EVAP service port **A** and EVAP canister purge volume control solenoid valve **B**.

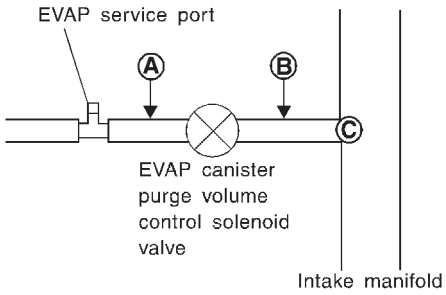

SEF367U

2. Blow air into each hose and EVAP purge port **C**.
3. Check that air flows freely.

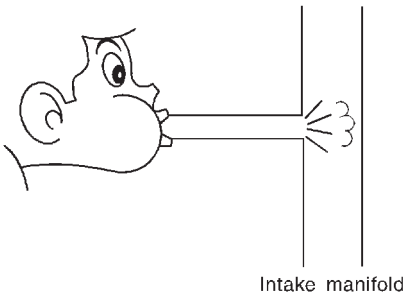

SEF368U

OK or NG

OK (With CONSULT-II)	▶	GO TO 6.
OK (Without CONSULT-II)	▶	GO TO 7.
NG	▶	Repair or clean hoses and/or purge port.

6	CHECK EVAP CANISTER PURGE VOLUME CONTROL SOLENOID VALVE

With CONSULT-II

1. Start engine.
2. Perform "PURG VOL CONT/V" in "ACTIVE TEST" mode with CONSULT-II. Check that engine speed varies according to the valve opening.

ACTIVE TEST	
PURG VOL CONT/V	XXX %
MONITOR	
ENG SPEED	XXX rpm
A/F ALPHA-B1	XX %
A/F ALPHA-B2	XX %

PBIB1678E

OK or NG

OK	▶	GO TO 8.
NG	▶	GO TO 7.

7	CHECK EVAP CANISTER PURGE VOLUME CONTROL SOLENOID VALVE

With CONSULT-II

Check air passage continuity of EVAP canister purge volume control solenoid valve under the following conditions.

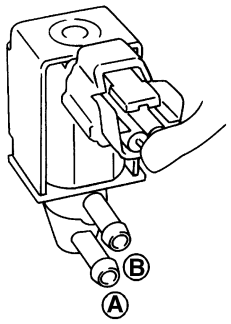

Condition PURG VOL CONT/V value	Air passage continuity between A and B
100%	Yes
0%	No

SEF334XA

Without CONSULT-II

Check air passage continuity of EVAP canister purge volume control solenoid valve under the following conditions.

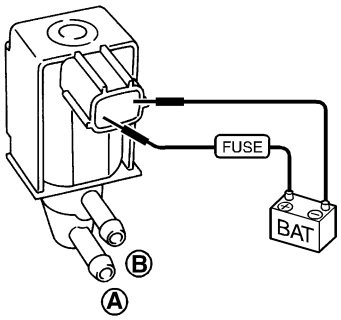

Condition	Air passage continuity between A and B
12V direct current supply between terminals 1 and 2	Yes
No supply	No

SEF335X

OK or NG

OK	▶	GO TO 8.
NG	▶	Replace EVAP canister purge volume control solenoid valve.

8	CHECK EVAP CONTROL SYSTEM PRESSURE SENSOR HOSE

1. Turn ignition switch OFF.
2. Check disconnection or improper connection of hose connected to EVAP control system pressure sensor.

OK or NG

OK	▶	GO TO 9.
NG	▶	Repair it.

9	CHECK EVAP CONTROL SYSTEM PRESSURE SENSOR CONNECTOR

1. Disconnect EVAP control system pressure sensor harness connector.

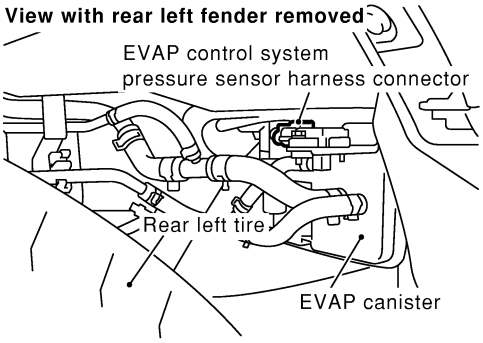

SEC931C

2. Check connectors for water.
   Water should not exist.

OK or NG

OK	▶	GO TO 10.
NG	▶	Replace EVAP control system pressure sensor.

10	CHECK EVAP CONTROL SYSTEM PRESSURE SENSOR FUNCTION

Refer to "DTC Confirmation Procedure" for DTC P0452, EC-378 and P0453, EC-384.

OK or NG

OK	▶	GO TO 11.
NG	▶	Replace EVAP control system pressure sensor.

11	CHECK RUBBER TUBE FOR CLOGGING

1. Disconnect rubber tube connected to EVAP canister vent control valve.
2. Check the rubber tube for clogging.

OK or NG

OK	▶	GO TO 12.
NG	▶	Clean the rubber tube using an air blower.

12	CHECK EVAP CANISTER VENT CONTROL VALVE-I

1. Remove EVAP canister vent control valve from EVAP canister.
2. Check portion **B** of EVAP canister vent control valve for being rusted.

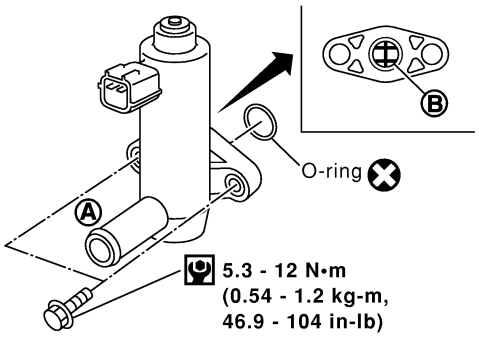

SEF376Z

OK or NG

OK	▶	GO TO 13.
NG	▶	Replace EVAP canister vent control valve.

13	CHECK EVAP CANISTER VENT CONTROL VALVE-II

With CONSULT-II

1. Reconnect harness connectors disconnected.
2. Turn ignition switch ON.
3. Perform "VENT CONTROL/V" in "ACTIVE TEST" mode.
4. Check air passage continuity and operation delay time.

ACTIVE TEST	
VENT CONTROL/V	OFF
MONITOR	
ENG SPEED	XXX rpm
A/F ALPHA-B1	XXX %
A/F ALPHA-B2	XXX %
HO2S1 MNTR (B1)	LEAN
HO2S1 MNTR (B2)	LEAN

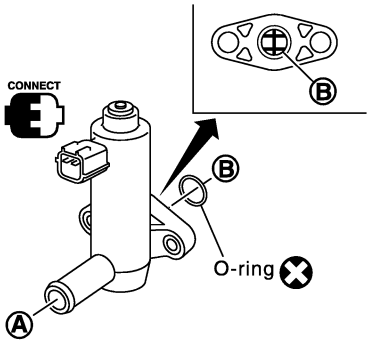

Condition VENT CONTROL/V	Air passage continuity between A and B
ON	No
OFF	Yes

Operation takes less than 1 second.

SEC158D

Without CONSULT-II

Check air passage continuity and operation delay time under the following conditions.

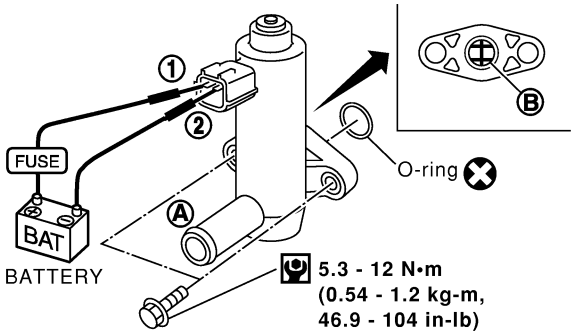

Condition	Air passage continuity between A and B
12V direct current supply between terminals 1 and 2	No
OFF	Yes

Operation takes less than 1 second.

SEF378Z

Make sure new O-ring is installed properly.

OK or NG

OK	▶	GO TO 15.
NG	▶	GO TO 14.

14	CHECK EVAP CANISTER VENT CONTROL VALVE-III

1. Clean the air passage (Portion **A** to **B**) of EVAP canister vent control valve using an air blower.
2. Perform Test No. 13 again.

OK or NG

OK	▶	GO TO 15.
NG	▶	Replace EVAP canister vent control valve.

15	CHECK EVAP PURGE LINE

Inspect EVAP purge line (pipe and rubber tube). Check for evidence of leaks.
Refer to "EVAPORATIVE EMISSION LINE DRAWING", EC-42.

OK or NG

OK	▶	GO TO 16.
NG	▶	Replace it.

16	**CLEAN EVAP PURGE LINE**
Clean EVAP purge line (pipe and rubber tube) using air blower.	
▶	GO TO 17.

17	**CHECK INTERMITTENT INCIDENT**
Refer to "TROUBLE DIAGNOSIS FOR INTERMITTENT INCIDENT", EC-155.	
▶	**INSPECTION END**

On Board Diagnosis Logic

NAEC0960

NOTE:
If DTC P0442 is displayed with P1448, first perform trouble diagnosis for DTC P1448. (See EC-602.)

This diagnosis detects leaks in the EVAP purge line using engine intake manifold vacuum.
If pressure does not increase, the ECM will check for leaks in the line between the fuel tank and EVAP canister purge volume control solenoid valve, under the following “Vacuum test” conditions.
The vacuum cut valve bypass valve is opened to clear the line between the fuel tank and the EVAP canister purge volume control solenoid valve. The EVAP canister vent control valve will then be closed to shut the EVAP purge line off. The EVAP canister purge volume control solenoid valve is opened to depressurize the EVAP purge line using intake manifold vacuum. After this occurs, the EVAP canister purge volume control solenoid valve will be closed.

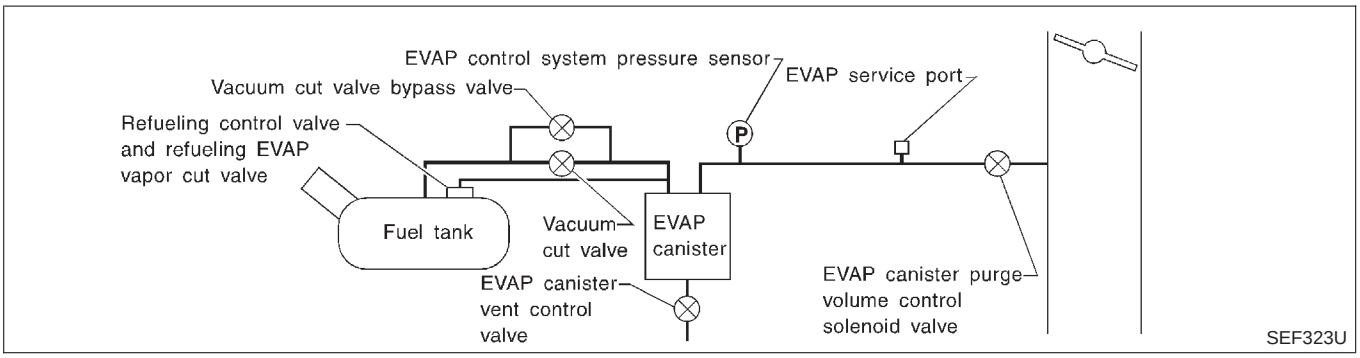

DTC No.	Trouble diagnosis name	DTC Detecting Condition	Possible Cause
P0442 0442	EVAP control system small leak detected (negative pressure)	EVAP control system has a leak, EVAP control system does not operate properly.	• Incorrect fuel tank vacuum relief valve • Incorrect fuel filler cap used • Fuel filler cap remains open or fails to close. • Foreign matter caught in fuel filler cap • Leak is in line between intake manifold and EVAP canister purge volume control solenoid valve. • Foreign matter caught in EVAP canister vent control valve • EVAP canister or fuel tank leaks • EVAP purge line (pipe and rubber tube) leaks • EVAP purge line rubber tube bent • Blocked or bent rubber tube to EVAP control system pressure sensor • Loose or disconnected rubber tube • EVAP canister vent control valve and the circuit • EVAP canister purge volume control solenoid valve and the circuit • Fuel tank temperature sensor • O-ring of EVAP canister vent control valve is missing or damaged. • Water separator • EVAP canister is saturated with water. • EVAP control system pressure sensor • Fuel level sensor and the circuit • Refueling control valve • ORVR system leaks

CAUTION:

- **Use only a genuine NISSAN fuel filler cap as a replacement. If an incorrect fuel filler cap is used, the MIL may come on.**
- **If the fuel filler cap is not tightened properly, the MIL may come on.**
- **Use only a genuine NISSAN rubber tube as a replacement.**

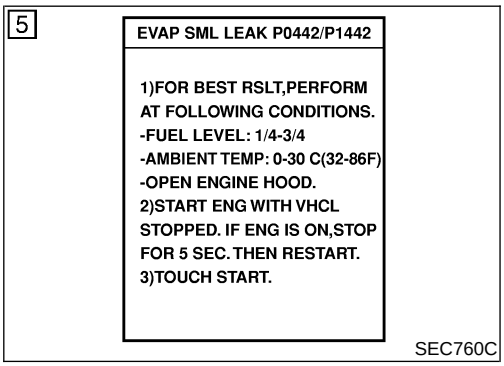

SEC760C

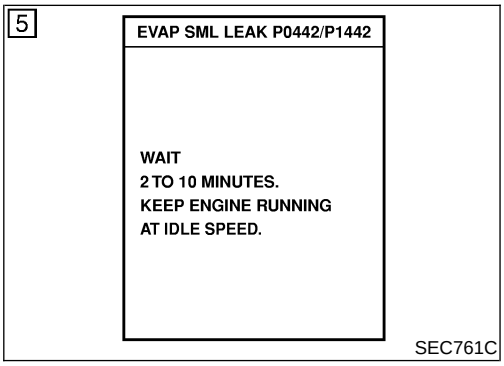

SEC761C

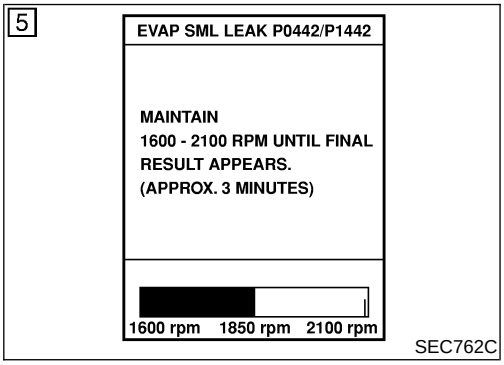

SEC762C

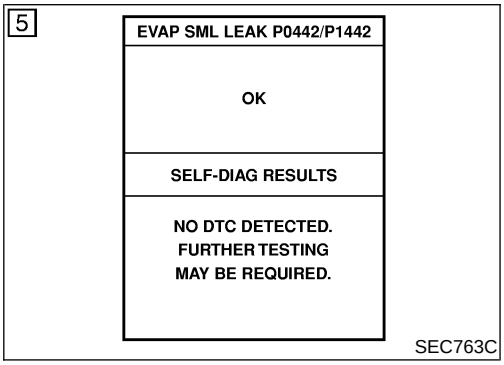

SEC763C

DTC Confirmation Procedure

NAEC0961

NOTE:

- **If DTC P0442 is displayed with P1448, first perform trouble diagnosis for DTC P1448 (See EC-602).**
- If DTC Confirmation Procedure has been previously conducted, always turn ignition switch OFF and wait at least 10 seconds before conducting the next test.

TESTING CONDITION:

- **Perform "DTC WORK SUPPORT" when the fuel level is between 1/4 and 3/4 full, and vehicle is placed on flat level surface.**
- **Open engine hood before conducting the following procedure.**

WITH CONSULT-II

NAEC0961S01

1) Turn ignition switch ON.
2) Turn ignition switch OFF and wait at least 10 seconds.
3) Turn ignition switch ON and select "DATA MONITOR" mode with CONSULT-II.
4) Make sure that the following conditions are met.
   COOLAN TEMP/S: 0 - 70°C (32 - 158°F)
   INT/A TEMP SE: 0 - 30°C (32 - 86°F)
5) Select "EVP SML LEAK P0442/P1442" of "EVAPORATIVE SYSTEM" in "DTC WORK SUPPORT" mode with CONSULT-II.
   Follow the instruction displayed.

NOTE:
If the engine speed cannot be maintained within the range displayed on the CONSULT-II screen, go to "Basic Inspection", EC-123.

6) Make sure that "OK" is displayed.
   If "NG" is displayed, refer to "Diagnostic Procedure", EC-351.

NOTE:
Make sure that EVAP hoses are connected to EVAP canister purge volume control solenoid valve properly.

WITH GST

NAEC0961S02

NOTE:
Be sure to read the explanation of "Driving Pattern" on EC-84 before driving vehicle.

1) Start engine.
2) Drive vehicle according to "Driving Pattern", EC-84.
3) Stop vehicle.
4) Turn ignition switch OFF, wait at least 10 seconds and then turn ON.
5) Select "MODE 7" with GST.

- If P0442 is displayed on the screen, go to "Diagnostic Procedure", EC-351.
- If P0441 is displayed on the screen, go to "Diagnostic Procedure" for DTC P0441, EC-342.

Diagnostic Procedure

NAEC0962

1	CHECK FUEL FILLER CAP DESIGN
1. Turn ignition switch OFF. 2. Check for genuine NISSAN fuel filler cap design.	

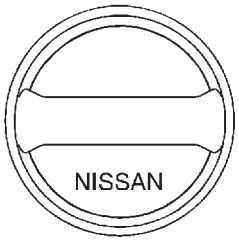

SEF915U

OK or NG

OK	▶	GO TO 2.
NG	▶	Replace with genuine NISSAN fuel filler cap.

2	CHECK FUEL FILLER CAP INSTALLATION
Check that the cap is tightened properly by rotating the cap clockwise.	

OK or NG

OK	▶	GO TO 3.
NG	▶	• Open fuel filler cap, then clean cap and fuel filler neck threads using air blower. • Retighten until ratcheting sound is heard.

3	CHECK FUEL FILLER CAP FUNCTION
Check for air releasing sound while opening the fuel filler cap.	

OK or NG

OK	▶	GO TO 5.
NG	▶	GO TO 4.

4	CHECK FUEL TANK VACUUM RELIEF VALVE

1. Wipe clean valve housing.
2. Check valve opening pressure and vacuum.

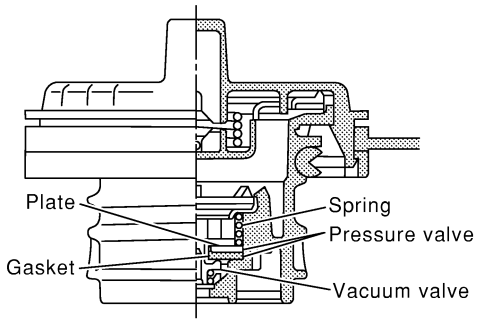

SEF445Y

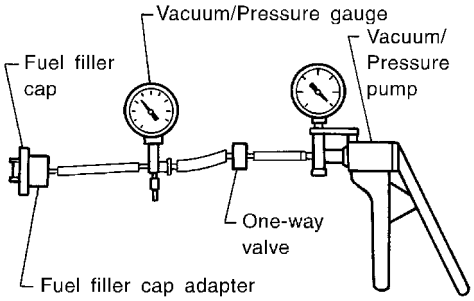

SEF943S

Pressure:
15.3 - 20.0 kPa (0.156 - 0.204 kg/cm^2, 2.22 - 2.90 psi)
Vacuum:
−6.0 to −3.3 kPa (−0.061 to −0.034 kg/cm^2, −0.87 to −0.48 psi)

CAUTION:
Use only a genuine fuel filler cap as a replacement. If an incorrect fuel filler cap is used, the MIL may come on.

OK or NG

OK	▶	GO TO 5.
NG	▶	Replace fuel filler cap with a genuine one.

5	INSTALL THE PRESSURE PUMP

To locate the EVAP leak, install EVAP service port adapter and pressure pump to EVAP service port securely.

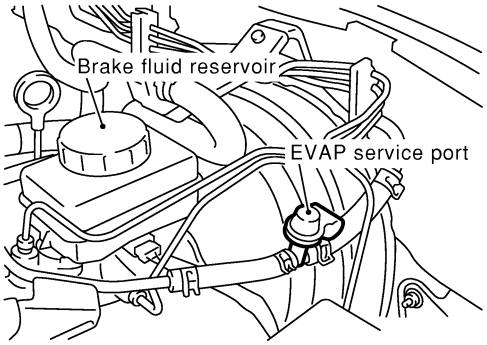

SEF983Y

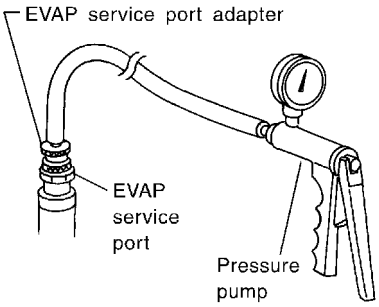

SEF916U

NOTE:
Improper installation of the EVAP service port adapter to the EVAP service port may cause leaking.

With CONSULT-II	▶	GO TO 6.
Without CONSULT-II	▶	GO TO 7.

6	CHECK FOR EVAP LEAK

With CONSULT-II

1. Turn ignition switch ON.
2. Select "EVAP SYSTEM CLOSE" of "WORK SUPPORT" mode with CONSULT-II.
3. Touch "START" and apply pressure into the EVAP line until the pressure indicator reaches the middle of the bar graph.
   NOTE:
   - **Never use compressed air or a high pressure pump.**
   - **Do not exceed 4.12 kPa (0.042 kg/cm^2, 0.6 psi) of pressure in the system.**

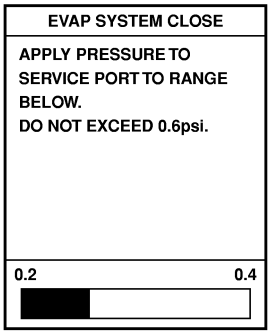

PEF917U

4. Using EVAP leak detector, locate the EVAP leak. For the leak detector, refer to the instruction manual for more details. Refer to "EVAPORATIVE EMISSION LINE DRAWING", EC-42.

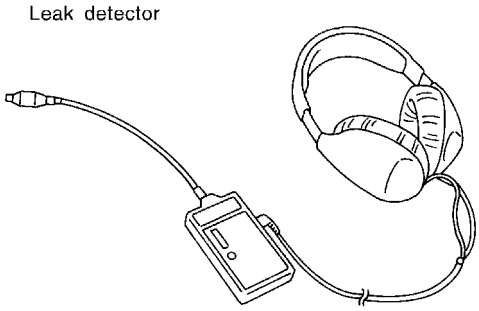

SEF200U

OK or NG

OK	▶	GO TO 8.
NG	▶	Repair or replace.

7	CHECK FOR EVAP LEAK

Without CONSULT-II

1. Turn ignition switch OFF.
2. Apply 12 volts DC to EVAP canister vent control valve. The valve will close. (Continue to apply 12 volts until the end of test.)

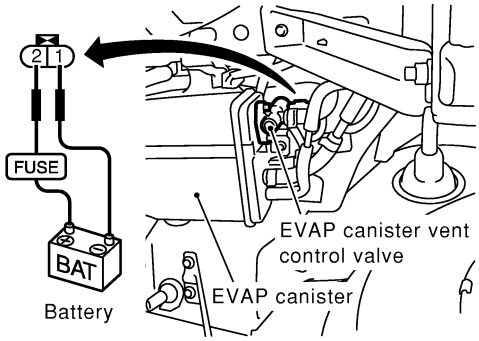

SEC930C

3. Apply 12 volts DC to vacuum cut valve bypass valve. The valve will open. (Continue to apply 12V until the end of test.)

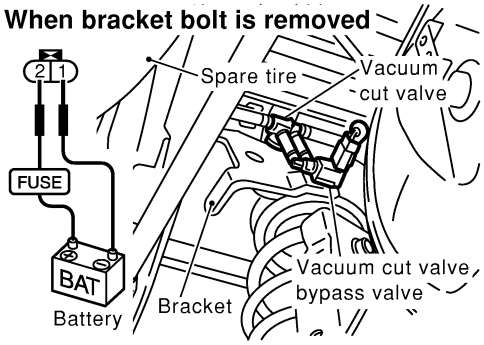

SEC932C

4. Pressurize the EVAP line using pressure pump with 1.3 to 2.7 kPa (10 to 20 mmHg, 0.39 to 0.79 inHg), then remove pump and EVAP service port adapter.
   NOTE:
   - **Never use compressed air or a high pressure pump.**
   - **Do not exceed 4.12 kPa (0.042 kg/cm^2, 0.6 psi) of pressure in the system.**
5. Using EVAP leak detector, locate the EVAP leak. For the leak detector, refer to the instruction manual for more details. Refer to "EVAPORATIVE EMISSION LINE DRAWING", EC-42.

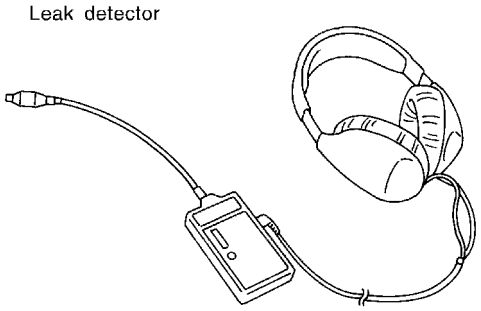

SEF200U

OK or NG

OK	▶	GO TO 8.
NG	▶	Repair or replace.

8	CHECK WATER SEPARATOR

1. Check visually for insect nests in the water separator air inlet.
2. Check visually for cracks or flaws in the appearance.
3. Check visually for cracks or flaws in the hose.
4. Check that **A** and **C** are not clogged by blowing air into **B** with **A**, and then **C** plugged.

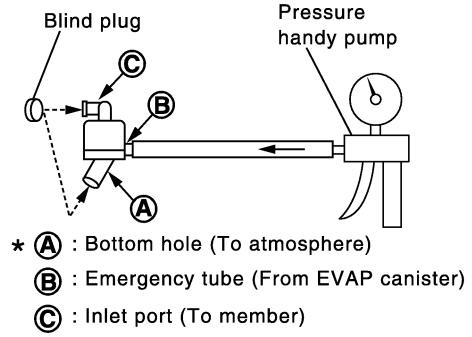

PBIB1032E

5. In case of NG in items 2 - 4, replace the parts.

NOTE:
- Do not disassemble water separator.

OK or NG

OK	▶	GO TO 9.
NG	▶	Replace water separator.

9	CHECK EVAP CANISTER VENT CONTROL VALVE, O-RING AND CIRCUIT

Refer to "DTC Confirmation Procedure", EC-372.

OK or NG

OK	▶	GO TO 10.
NG	▶	Repair or replace EVAP canister vent control valve and O-ring or harness/connector.

10	CHECK IF EVAP CANISTER SATURATED WITH WATER

1. Remove EVAP canister with EVAP canister vent control valve attached.
2. Does water drain from the EVAP canister?

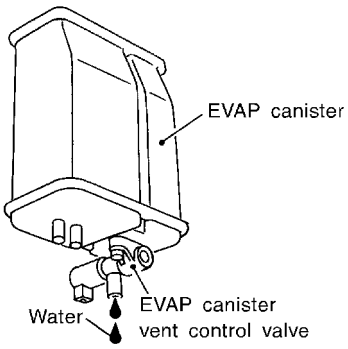

SEF596U

Yes or No

Yes	▶	GO TO 11.
No (With CONSULT-II)	▶	GO TO 13.
No (Without CONSULT-II)	▶	GO TO 14.

11	CHECK EVAP CANISTER
Weigh the EVAP canister with the EVAP canister vent control valve attached. **The weight should be less than 1.8 kg (4.0 lb).**	
OK or NG	
OK (With CONSULT-II) ▶	GO TO 13.
OK (Without CONSULT-II) ▶	GO TO 14.
NG ▶	GO TO 12.

12	DETECT MALFUNCTIONING PART
Check the following. ● EVAP canister for damage ● EVAP hose between EVAP canister and water separator for clogging or poor connection	
▶	Repair hose or replace EVAP canister.

13	CHECK EVAP CANISTER PURGE VOLUME CONTROL SOLENOID VALVE OPERATION

With CONSULT-II

1. Disconnect vacuum hose to EVAP canister purge volume control solenoid valve at EVAP service port.
2. Start engine.
3. Perform "PURG VOL CONT/V" in "ACTIVE TEST" mode.
4. Touch "Qu" on CONSULT-II screen to increase "PURG VOL CONT/V" opening to 100%.
5. Check vacuum hose for vacuum when revving engine up to 2,000 rpm.

ACTIVE TEST	
PURG VOL CONT/V	XXX %
MONITOR	
ENG SPEED	XXX rpm
A/F ALPHA-B1	XX %
A/F ALPHA-B2	XX %

PBIB1678E

Vacuum should exist.

OK or NG	
OK ▶	GO TO 16.
NG ▶	GO TO 15.

14	CHECK EVAP CANISTER PURGE VOLUME CONTROL SOLENOID VALVE OPERATION

Without CONSULT-II

1. Start engine and warm it up to normal operating temperature.
2. Stop engine.
3. Disconnect vacuum hose to EVAP canister purge volume control solenoid valve at EVAP service port.
4. Start engine and let it idle for at least 80 seconds.
5. Check vacuum hose for vacuum when revving engine up to 2,000 rpm.

Vacuum should exist.

OK or NG	
OK ▶	GO TO 17.
NG ▶	GO TO 15.

15	CHECK VACUUM HOSE
Check vacuum hoses for clogging or disconnection. Refer to "Vacuum Hose Drawing", EC-32.	
OK or NG	
OK (With CONSULT-II) ▶	GO TO 16.
OK (Without CONSULT-II) ▶	GO TO 17.
NG ▶	Repair or reconnect the hose.

16	CHECK EVAP CANISTER PURGE VOLUME CONTROL SOLENOID VALVE

With CONSULT-II

1. Start engine.
2. Perform "PURG VOL CONT/V" in "ACTIVE TEST" mode with CONSULT-II. Check that engine speed varies according to the valve opening.

ACTIVE TEST	
PURG VOL CONT/V	XXX %
MONITOR	
ENG SPEED	XXX rpm
A/F ALPHA-B1	XX %
A/F ALPHA-B2	XX %

PBIB1678E

OK or NG	
OK ▶	GO TO 18.
NG ▶	GO TO 17.

17	CHECK EVAP CANISTER PURGE VOLUME CONTROL SOLENOID VALVE

With CONSULT-II

Check air passage continuity of EVAP canister purge volume control solenoid valve under the following conditions.

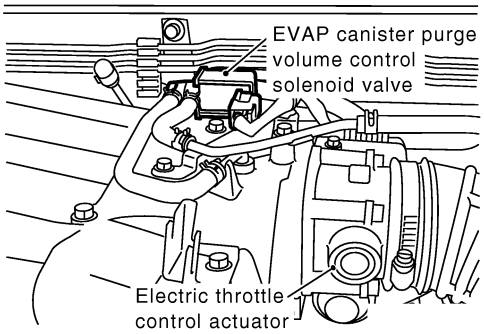

SEC524D

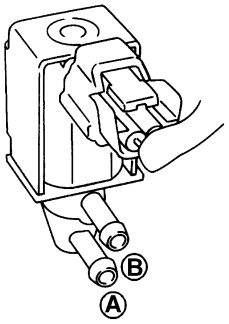

Condition PURG VOL CONT/V value	Air passage continuity between A and B
100%	Yes
0%	No

SEF334XA

Without CONSULT-II

Check air passage continuity of EVAP canister purge volume control solenoid valve under the following conditions.

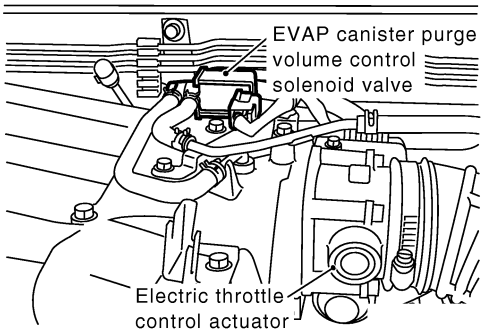

SEC524D

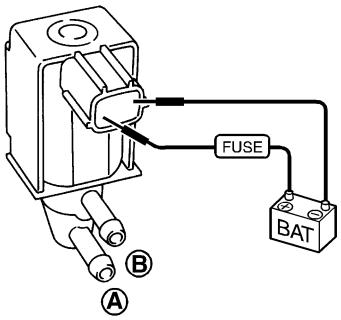

Condition	Air passage continuity between A and B
12V direct current supply between terminals 1 and 2	Yes
No supply	No

SEF335X

OK or NG

OK	▶	GO TO 18.
NG	▶	Replace EVAP canister purge volume control solenoid valve.

18	CHECK FUEL TANK TEMPERATURE SENSOR

1. Remove fuel level sensor unit.
2. Check resistance between fuel level sensor unit terminals 1 and 2 by heating with hot water or heat gun as shown in the figure.

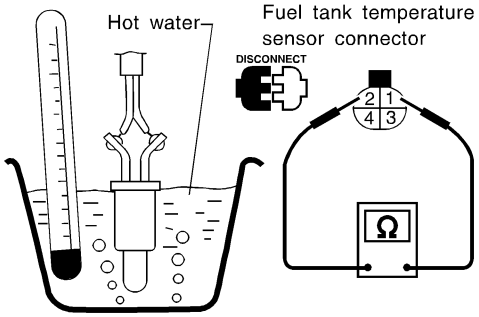

Temperature °C (°F)	Resistance kΩ
20 (68)	2.3 - 2.7
50 (122)	0.79 - 0.90

SEF974Y

OK or NG

OK	▶	GO TO 19.
NG	▶	Replace fuel level sensor unit.

19	CHECK EVAP CONTROL SYSTEM PRESSURE SENSOR

1. Remove EVAP control system pressure sensor with its harness connector connected.
   - **Never apply force to the air hole protector of the sensor if equipped.**

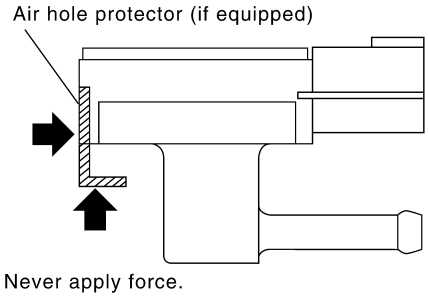

SEF799W

2. Remove EVAP control system pressure sensor from EVAP canister.
   Do not reuse the O-ring, replace it with a new one.
3. Install a vacuum pump to EVAP control system pressure sensor.
4. Turn ignition switch "ON" and check output voltage between ECM terminal 32 and ground under the following conditions.

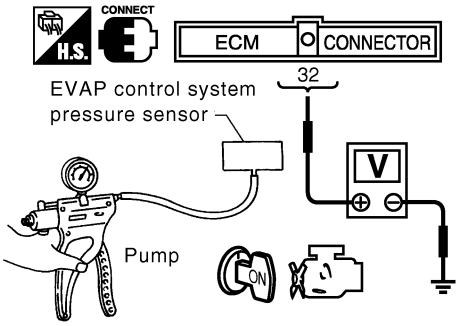

Applied vacuum kPa (mmHg, inHg)	Voltage V
Not applied	1.8 - 4.8
–26.7 (–200, –7.87)	2.1 to 2.5V lower than above value

SEC422D

CAUTION:
- **Always calibrate the vacuum pump gauge when using it.**
- **Do not apply below −93.3 kPa (−700 mmHg, −27.56 inHg) or pressure over 101.3 kPa (760 mmHg, 29.92 inHg).**
- **Discard and EVAP control system pressure sensor which has been dropped from a height of more than 0.5 m (19.7 in) onto a hard surface such as a concrete floor; use a new one.**

OK or NG

OK	▶	GO TO 20.
NG	▶	Replace EVAP control system pressure sensor.

20	CHECK EVAP PURGE LINE

Check EVAP purge line (pipe, rubber tube, fuel tank and EVAP canister) for cracks or improper connection.
Refer to "Evaporative Emission System", EC-38.

OK or NG

OK	▶	GO TO 21.
NG	▶	Repair or reconnect the hose.

21	CLEAN EVAP PURGE LINE

Clean EVAP purge line (pipe and rubber tube) using air blower.

	▶	GO TO 22.

22	CHECK REFUELING EVAP VAPOR LINE	
● Check refueling EVAP vapor line between EVAP canister and fuel tank for clogging, kink, looseness and improper connection. For location, refer to "EVAPORATIVE EMISSION LINE DRAWING", EC-42.		
OK or NG		
OK	▶	GO TO 23.
NG	▶	Repair or replace hoses and tubes.

23	CHECK SIGNAL LINE AND RECIRCULATION LINE	
● Check signal line and recirculation line between filler neck tube and fuel tank for clogging, kink, cracks, looseness and improper connection.		
OK or NG		
OK	▶	GO TO 24.
NG	▶	Repair or replace hoses, tubes or filler neck tube.

24 CHECK REFUELING CONTROL VALVE

1. Remove fuel filler cap.
2. Check air continuity between hose ends A and B.
   Blow air into hose end B. Air should flow freely into the fuel tank.
3. Blow air into hose end A and check that there is no leakage.
4. Apply pressure to both hose ends A and B [20 kPa (150 mmHg, 5.91 inHg)] using a pressure pump and a suitable 3-way connector. Check that there is no leakage.

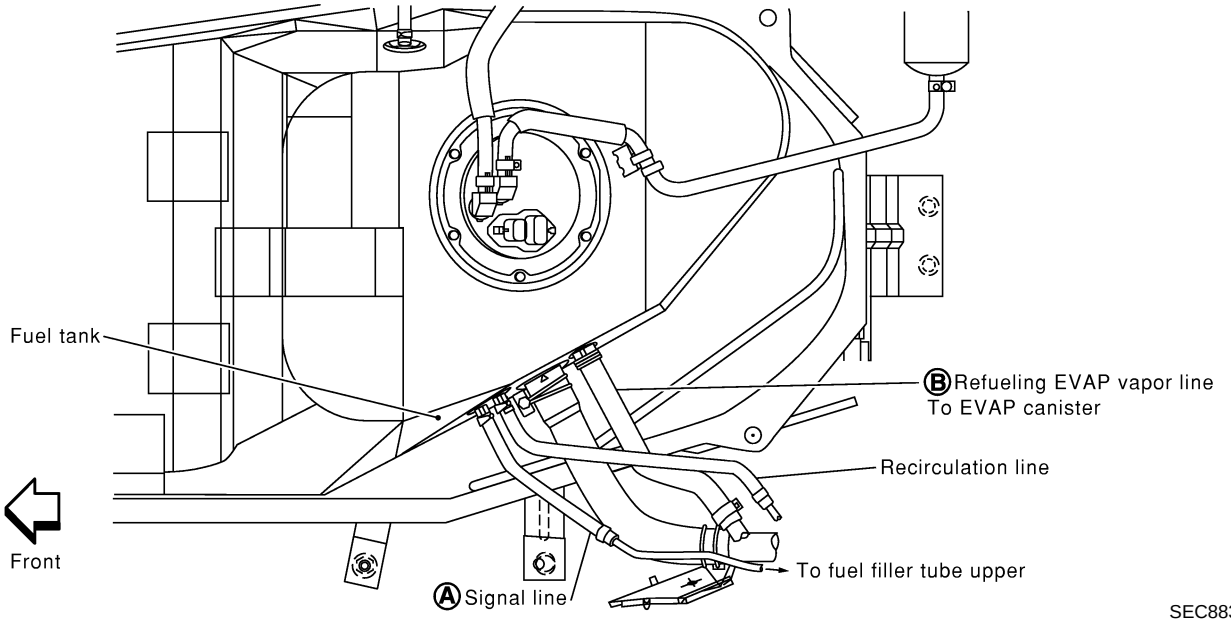

OK or NG		
OK	▶	GO TO 25.
NG	▶	Replace or refueling control valve with fuel tank.

25	CHECK FUEL LEVEL SENSOR	
Refer to EL-125, "Fuel Level Sensor Unit Check".		
OK or NG		
OK	▶	GO TO 26.
NG	▶	Replace fuel level sensor unit.

26	CHECK INTERMITTENT INCIDENT
Refer to "TROUBLE DIAGNOSIS FOR INTERMITTENT INCIDENT", EC-155.	
▶	INSPECTION END

Description

NAEC0963

SYSTEM DESCRIPTION

NAEC0963S01

Sensor	Input Signal to ECM	ECM function	Actuator
Crankshaft position sensor (POS) Camshaft position sensor (PHASE)	Engine speed*2 and piston position	EVAP canister purge flow control	EVAP canister purge volume control solenoid valve
Mass air flow sensor	Amount of intake air		
Engine coolant temperature sensor	Engine coolant temperature		
Battery	Battery voltage*2		
Throttle position sensor	Throttle position		
Accelerator pedal position sensor	Accelerator pedal position		
Heated oxygen sensor 1	Density of oxygen in exhaust gas (Mixture ratio feedback signal)		
Fuel tank temperature sensor	Fuel temperature in fuel tank		
Vehicle speed signal*1	Vehicle speed		

*1: This signal is sent to the ECM through CAN communication line.

*2: ECM determines the start signal status by the signals of engine speed and battery voltage.

This system controls flow rate of fuel vapor from the EVAP canister. The opening of the vapor by-pass passage in the EVAP canister purge volume control solenoid valve changes to control the flow rate. The EVAP canister purge volume control solenoid valve repeats ON/OFF operation according to the signal sent from the ECM. The opening of the valve varies for optimum engine control. The optimum value stored in the ECM is determined by considering various engine conditions. When the engine is operating, the flow rate of fuel vapor from the EVAP canister is regulated as the air flow changes.

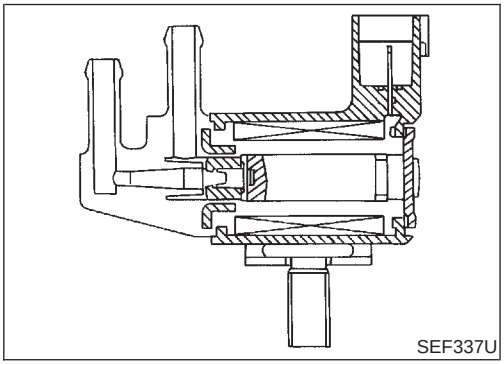

COMPONENT DESCRIPTION

NAEC0963S02

The EVAP canister purge volume control solenoid valve uses a ON/OFF duty to control the flow rate of fuel vapor from the EVAP canister. The EVAP canister purge volume control solenoid valve is moved by ON/OFF pulses from the ECM. The longer the ON pulse, the greater the amount of fuel vapor that will flow through the valve.

CONSULT-II Reference Value in Data Monitor Mode

NAEC0964

Specification data are reference values.

MONITOR ITEM	CONDITION		SPECIFICATION
PURG VOL C/V	• Engine: After warming up • Air conditioner switch OFF • Shift lever: N • No-load	Idle (Vehicle stopped)	0%
		2,000 rpm	—

ECM Terminals and Reference Value

NAEC0965

Specification data are reference values and are measured between each terminal and ground.
Pulse signal is measured by CONSULT-II.

CAUTION:

Do not use ECM ground terminals when measuring input/output voltage. Doing so may result in damage to the ECM's transistor. Use a ground other than ECM terminals, such as the ground.

TERMINAL NO.	WIRE COLOR	ITEM	CONDITION	DATA (DC Voltage)
45	L/Y	EVAP canister purge volume control solenoid valve	**[Engine is running]** ● Idle speed	BATTERY VOLTAGE (11 - 14V)★ 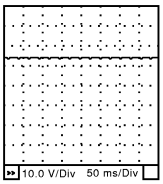 SEC990C
			[Engine is running] ● Engine speed is about 2,000 rpm (More than 100 seconds after starting engine).	BATTERY VOLTAGE (11 - 14V)★ 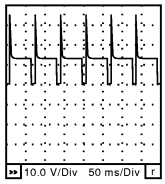 SEC991C

★: Average voltage for pulse signal (Actual pulse signal can be confirmed by oscilloscope.)

On Board Diagnosis Logic

NAEC0966

DTC No.	Trouble diagnosis name	DTC Detecting Condition	Possible Cause
P0444 0444	EVAP canister purge volume control solenoid valve circuit open	An excessively low voltage signal is sent to ECM through the valve.	● Harness or connectors (The sensor circuit is open or shorted.) ● EVAP canister purge volume control solenoid valve
P0445 0445	EVAP canister purge volume control solenoid valve circuit shorted	An excessively high voltage signal is sent to ECM through the valve.	● Harness or connectors (The sensor circuit is shorted.) ● EVAP canister purge volume control solenoid valve

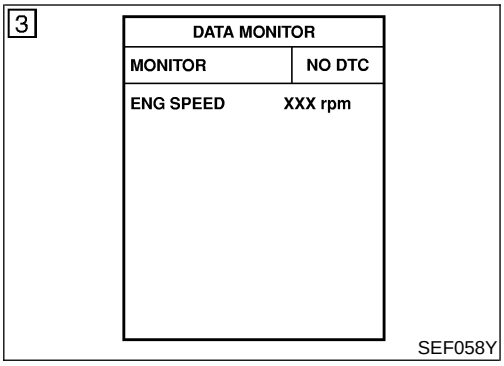

DTC Confirmation Procedure

NAEC0967

NOTE:

If DTC Confirmation Procedure has been previously conducted, always turn ignition switch OFF and wait at least 10 seconds before conducting the next test.

TESTING CONDITION:

Before performing the following procedure, confirm battery voltage is more than 11V at idle.

WITH CONSULT-II

NAEC0967S01

1) Turn ignition switch ON.
2) Select “DATA MONITOR” mode with CONSULT-II.
3) Start engine and let it idle for at least 13 seconds.
4) If 1st trip DTC is detected, go to “Diagnostic Procedure”, EC-368.

WITH GST

NAEC0967S02

Follow the proocedure “WITH CONSULT-II” above.

Wiring Diagram

NAEC0968

EC-PGC/V-01

: Detectable line for DTC

: Non-detectable line for DTC

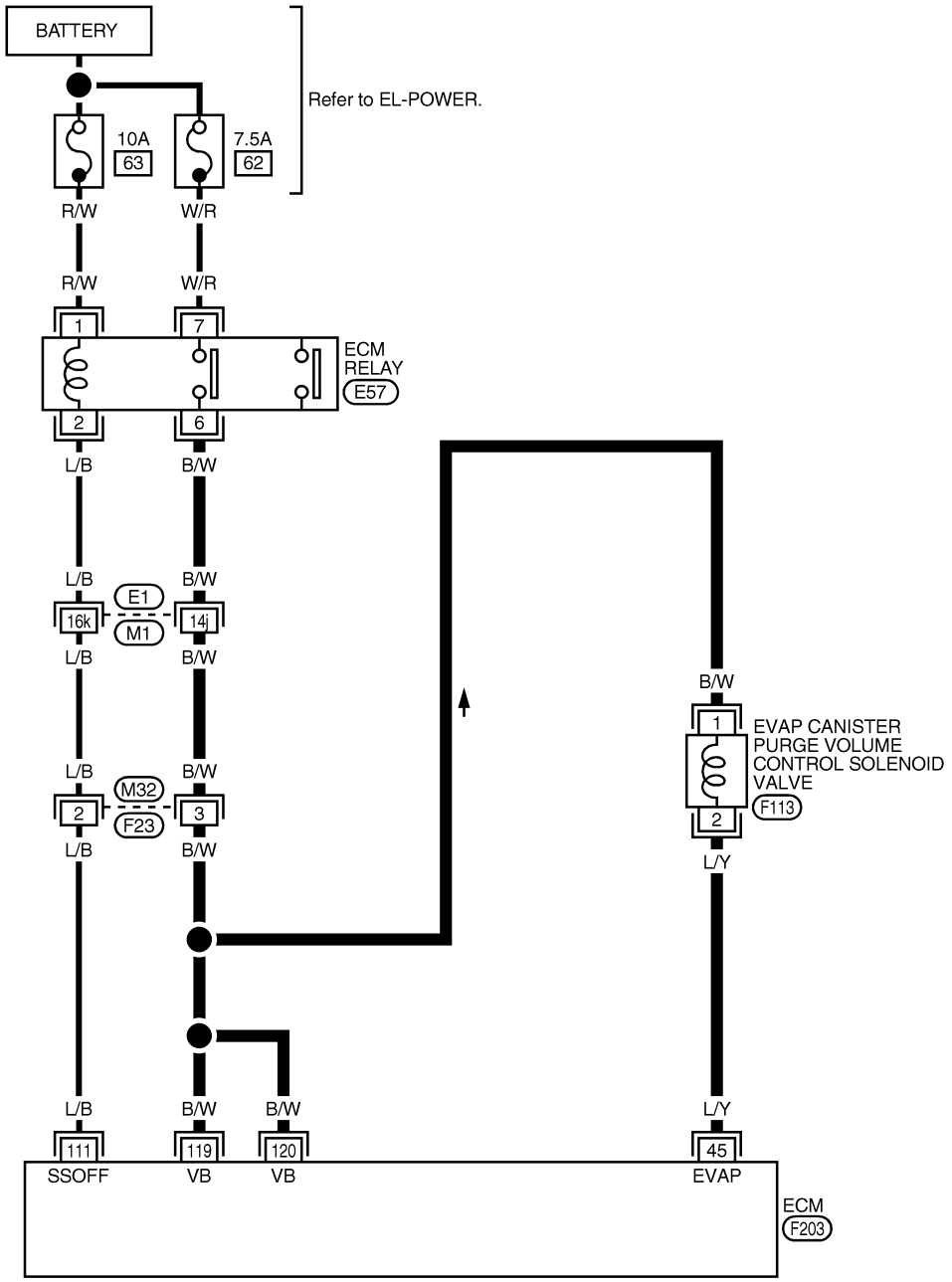

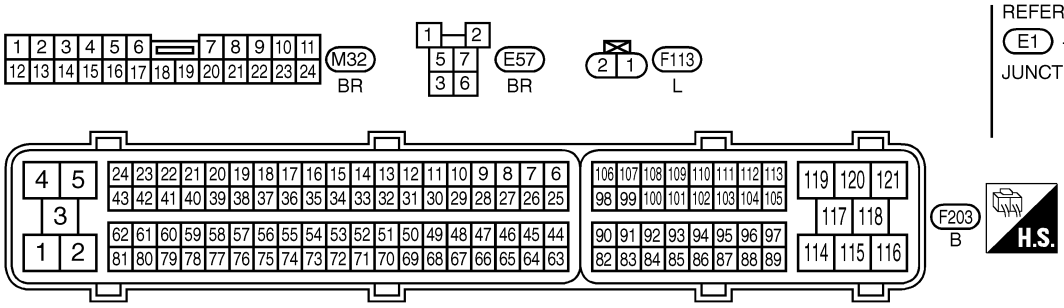

REFER TO THE FOLLOWING.
E1 -SUPER MULTIPLE JUNCTION (SMJ)

MEC096E

Diagnostic Procedure

NAEC0969

1	CHECK EVAP CANISTER PURGE VOLUME CONTROL SOLENOID VALVE POWER SUPPLY CIRCUIT

1. Turn ignition switch OFF.
2. Disconnect EVAP canister purge volume control solenoid valve harness connector.

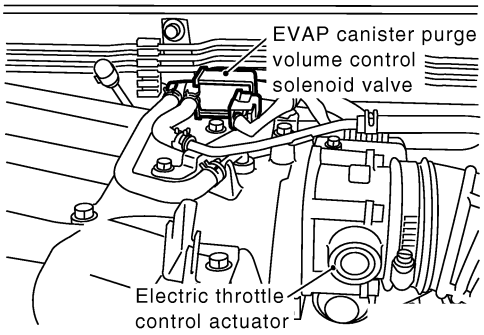

SEC524D

3. Turn ignition switch ON.
4. Check voltage between EVAP canister purge volume control solenoid valve terminal 1 and ground with CONSULT-II or tester.

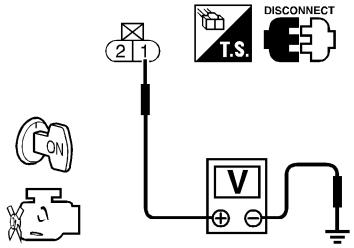

Voltage: Battery voltage

SEF988Y

OK or NG

OK	▶	GO TO 3.
NG	▶	GO TO 2.

2	DETECT MALFUNCTIONING PART

Check the following.
- Harness connectors E1, M1
- Harness connectors M32, F23
- Harness for open or short between EVAP canister purge volume control solenoid valve and ECM
- Harness for open or short between EVAP canister purge volume control solenoid valve and ECM relay

	▶	Repair open circuit or short to ground and short to power in harness or connectors.

3	CHECK EVAP CANISTER PURGE VOLUME CONTROL SOLENOID VALVE OUTPUT SIGNAL CIRCUIT FOR OPEN AND SHORT

1. Turn ignition switch OFF.
2. Disconnect ECM harness connector.
3. Check harness continuity between ECM terminal 45 and EVAP canister purge volume control solenoid valve terminal 2. Refer to Wiring Diagram.
   Continuity should exist.
4. Also check harness for short to ground and short to power.

OK or NG

OK (With CONSULT-II)	▶	GO TO 4.
OK (Without CONSULT-II)	▶	GO TO 5.
NG	▶	Repair open circuit or short to ground and short to power in harness or connetors.

4	CHECK EVAP CANISTER PURGE VOLUME CONTROL SOLENOID VALVE OPERATION

With CONSULT-II

1. Start engine.
2. Perform "PURG VOL CONT/V" in "ACTIVE TEST" mode with CONSULT-II. Check that engine speed varies according to the valve opening.

ACTIVE TEST	
PURG VOL CONT/V	XXX %
MONITOR	
ENG SPEED	XXX rpm
A/F ALPHA-B1	XX %
A/F ALPHA-B2	XX %

PBIB1678E

OK or NG

OK	▶	GO TO 6.
NG	▶	GO TO 5.

5	CHECK EVAP CANISTER PURGE VOLUME CONTROL SOLENOID VALVE

With CONSULT-II

Check air passage continuity of EVAP canister purge volume control solenoid valve under the following conditions.

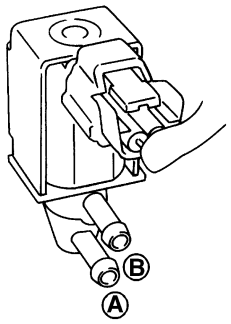

Condition PURG VOL CONT/V value	Air passage continuity between A and B
100%	Yes
0%	No

SEF334XA

Without CONSULT-II

Check air passage continuity of EVAP canister purge volume control solenoid valve under the following conditions.

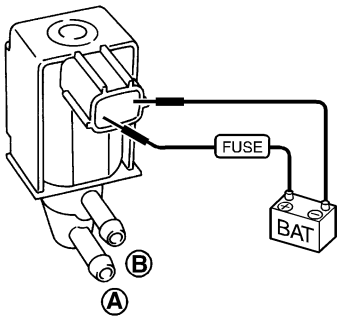

Condition	Air passage continuity between A and B
12V direct current supply between terminals 1 and 2	Yes
No supply	No

SEF335X

OK or NG

OK	▶	GO TO 6.
NG	▶	Replace EVAP canister purge volume control solenoid valve.

6	CHECK INTERMITTENT INCIDENT
Refer to "TROUBLE DIAGNOSIS FOR INTERMITTENT INCIDENT", EC-155.	
▶	**INSPECTION END**

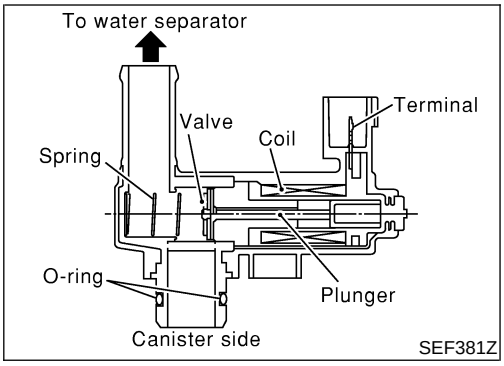

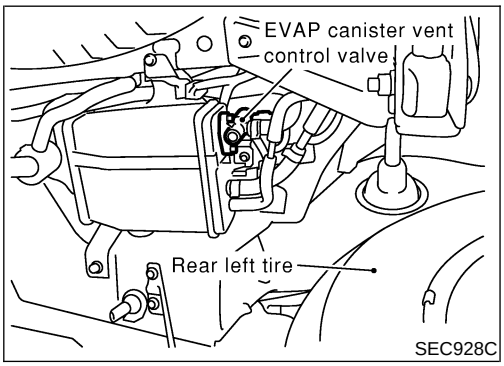

Component Description

NAEC0970

The EVAP canister vent control valve is located on the EVAP canister and is used to seal the canister vent.
This solenoid valve responds to signals from the ECM. When the ECM sends an ON signal, the coil in the solenoid valve is energized. A plunger will then move to seal the canister vent. The ability to seal the vent is necessary for the on board diagnosis of other evaporative emission control system components.
This solenoid valve is used only for diagnosis, and usually remains opened.
When the vent is closed, under normal purge conditions, the evaporative emission control system is depressurized and allows “EVAP Control System (Small Leak)” diagnosis.

CONSULT-II Reference Value in Data Monitor Mode

NAEC0971

Specification data are reference values.

MONITOR ITEM	CONDITION	SPECIFICATION
VENT CONT/V	● Ignition switch: ON	OFF

ECM Terminals and Reference Value

NAEC0972

Specification data are reference values and are measured between each terminal and ground.

CAUTION:
Do not use ECM ground terminals when measuring input/output voltage. Doing so may result in damage to the ECM’s transistor. Use a ground other than ECM terminals, such as the ground.

TERMINAL NO.	WIRE COLOR	ITEM	CONDITION	DATA (DC Voltage)
117	G/R	EVAP canister vent control valve	**[Ignition switch ON]**	BATTERY VOLTAGE (11 - 14V)

On Board Diagnosis Logic

NAEC0973

DTC No.	Trouble diagnosis name	DTC Detecting Condition	Possible Cause
P0447 0447	EVAP canister vent control valve circuit open	An improper voltage signal is sent to ECM through EVAP canister vent control valve.	● Harness or connectors (The valve circuit is open or shorted.) ● EVAP canister vent control valve

DTC Confirmation Procedure

NAEC0974

NOTE:
If DTC Confirmation Procedure has been previously conducted, always turn ignition switch OFF and wait at least 10 seconds before conducting the next test.

TESTING CONDITION:
Before performing the following procedure, confirm battery voltage is more than 11V at idle.

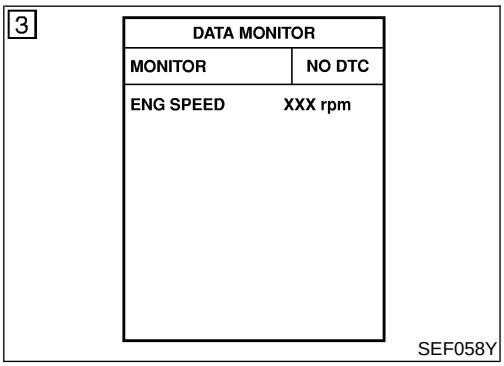

WITH CONSULT-II

NAEC0974S01

1) Turn ignition switch ON.
2) Select “DATA MONITOR” mode with CONSULT-II.
3) Start engine and wait at least 8 seconds.
4) If 1st trip DTC is detected, go to “Diagnostic Procedure”, EC-374.

WITH GST

NAEC0974S02

Follow the procedure “WITH CONSULT-II” above.

Wiring Diagram

NAEC0975

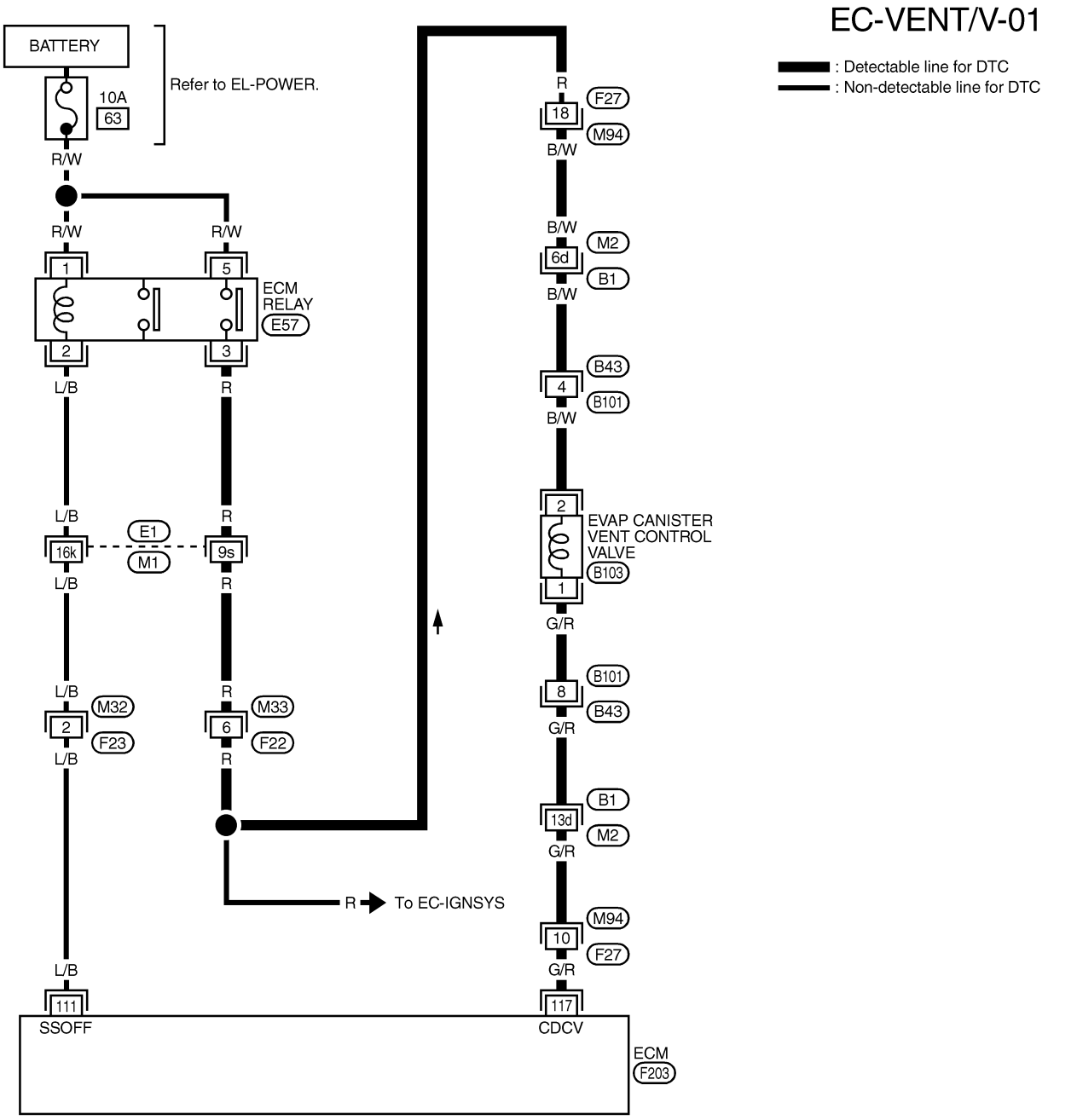

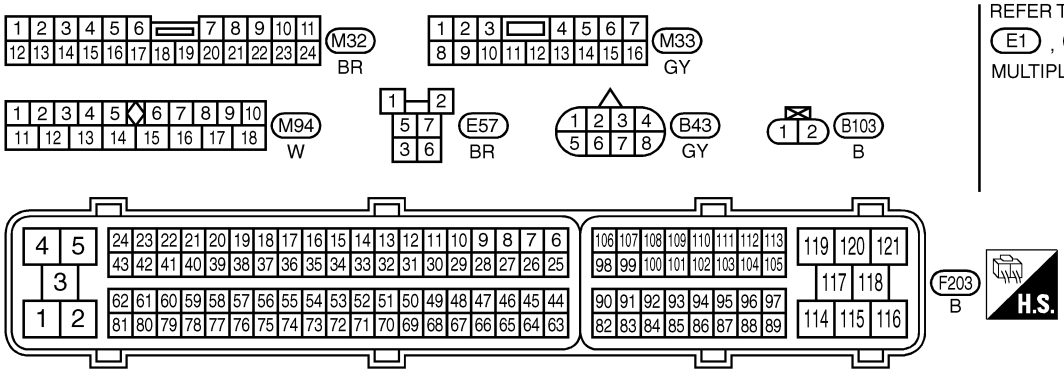

REFER TO THE FOLLOWING.
E1 , B1 -SUPER MULTIPLE JUNCTION (SMJ)

MEC097E

Diagnostic Procedure

NAEC0976

1	INSPECTION START	
1. Do you have CONSULT-II?		
Yes or No		
Yes	▶	GO TO 2.
No	▶	GO TO 3.

2	CHECK EVAP CANISTER VENT CONTROL VALVE CIRCUIT	

With CONSULT-II

1. Turn ignition switch OFF and then turn ON.
2. Select “VENT CONTROL/V” in “ACTIVE TEST” mode with CONSULT-II.
3. Touch “ON/OFF” on CONSULT-II screen.

ACTIVE TEST	
VENT CONTROL/V	OFF
MONITOR	
ENG SPEED	XXX rpm
A/F ALPHA-B1	XXX %
A/F ALPHA-B2	XXX %
HO2S1 (B1)	XXX V
HO2S1 (B2)	XXX V

PBIB0151E

4. Check for operating sound of the valve.
   Clicking noise should be heard.

OK or NG		
OK	▶	GO TO 7.
NG	▶	GO TO 3.

3	CHECK EVAP CANISTER VENT CONTROL VALVE POWER SUPPLY CIRCUIT

1. Turn ignition switch OFF.
2. Disconnect EVAP canister vent control valve harness connector.

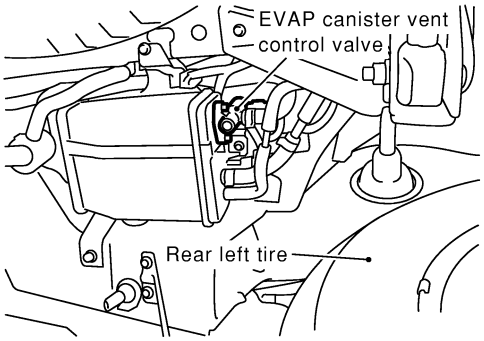

SEC928C

3. Turn ignition switch ON.
4. Check voltage between EVAP canister vent control valve terminal 2 and ground with CONSULT-II or tester.

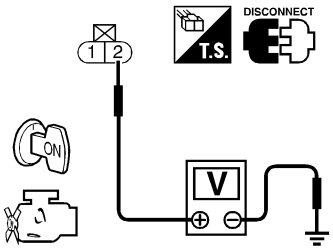

Voltage: Battery voltage

SEF990Y

OK or NG

OK	▶	GO TO 5.
NG	▶	GO TO 4.

4	DETECT MALFUNCTIONING PART

Check the following.
- Harness connectors E1, M1
- Harness connectors M33, F22
- Harness connectors F27, M94
- Harness connectors M2, B1
- Harness connectors B43, M101
- Harness for open or short between EVAP canister vent control valve and ECM relay

	▶	Repair open circuit or short to ground or short to power in harness or connectors.

5	CHECK EVAP CANISTER VENT CONTROL VALVE OUTPUT SIGNAL CIRCUIT FOR OPEN AND SHORT

1. Turn ignition switch OFF.
2. Disconnect ECM harness connector.
3. Check harness continuity between ECM terminal 117 and EVAP canister vent control valve terminal 1.
   Refer to Wiring Diagram.
   Continuity should exist.
4. Also check harness for short to ground and short to power.

OK or NG

OK	▶	GO TO 7.
NG	▶	GO TO 6.

6	DETECT MALFUNCTIONING PART
Check the following. ● Harness connectors B101, B43 ● Harness connectors B1, M2 ● Harness connectors M94, F27 ● Harness for open or short between EVAP canister vent control valve and ECM	
▶	Repair open circuit or short to ground or short to power in harness or connectors.

7	CHECK RUBBER TUBE FOR CLOGGING
1. Disconnect rubber tube connected to EVAP canister vent control valve. 2. Check the rubber tube for clogging.	
OK or NG	
OK ▶	GO TO 8.
NG ▶	Clean the rubber tube using an air blower.

8	CHECK EVAP CANISTER VENT CONTROL VALVE-I
1. Remove EVAP canister vent control valve from EVAP canister. 2. Check portion **B** of EVAP canister vent control valve for being rusted.	

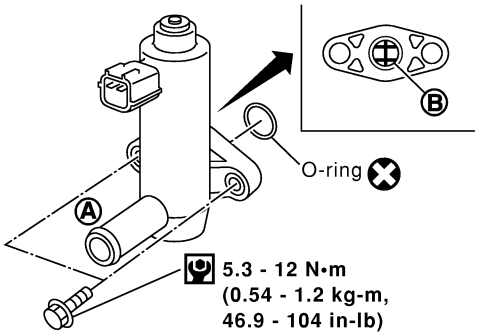

SEF376Z

OK or NG	
OK ▶	GO TO 9.
NG ▶	Replace EVAP canister vent control valve.

9	CHECK EVAP CANISTER VENT CONTROL VALVE-II

With CONSULT-II

1. Reconnect harness connectors disconnected.
2. Turn ignition switch ON.
3. Perform "VENT CONTROL/V" in "ACTIVE TEST" mode.
4. Check air passage continuity and operation delay time.

ACTIVE TEST	
VENT CONTROL/V	OFF
MONITOR	
ENG SPEED	XXX rpm
A/F ALPHA-B1	XXX %
A/F ALPHA-B2	XXX %
HO2S1 MNTR (B1)	LEAN
HO2S1 MNTR (B2)	LEAN

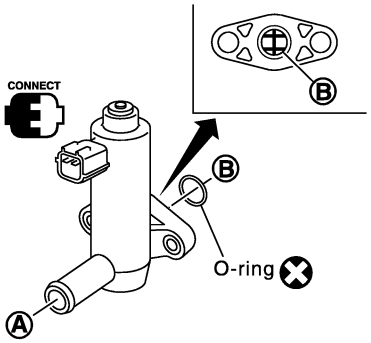

Condition VENT CONTROL/V	Air passage continuity between A and B
ON	No
OFF	Yes

Operation takes less than 1 second.

SEC158D

Without CONSULT-II

Check air passage continuity and operation delay time under the following conditions.

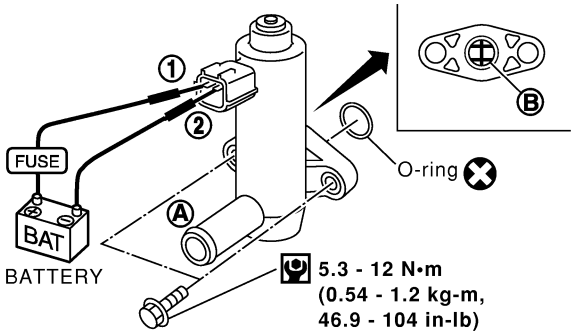

Condition	Air passage continuity between A and B
12V direct current supply between terminals 1 and 2	No
OFF	Yes

Operation takes less than 1 second.

SEF378Z

Make sure new O-ring is installed properly.

OK or NG

OK	▶	GO TO 11.
NG	▶	GO TO 10.

10	CHECK EVAP CANISTER VENT CONTROL VALVE-III

1. Clean the air passage (Portion **A** to **B**) of EVAP canister vent control valve using an air blower.
2. Perform Test No. 9 again.

OK or NG

OK	▶	GO TO 11.
NG	▶	Replace EVAP canister vent control valve.

11	CHECK INTERMITTENT INCIDENT
Refer to "TROUBLE DIAGNOSIS FOR INTERMITTENT INCIDENT", EC-155.	
▶	**INSPECTION END**

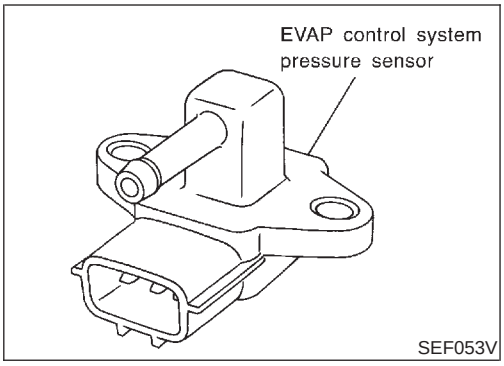

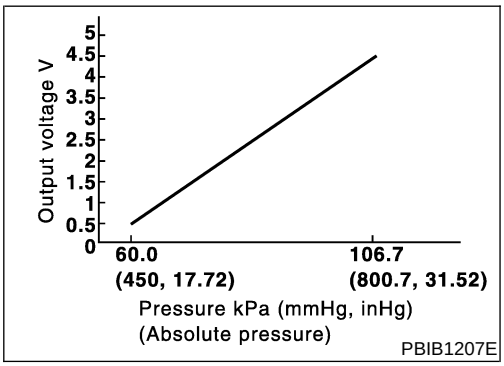

Component Description

NAEC0779

The EVAP control system pressure sensor detects pressure in the purge line. The sensor output voltage to the ECM increases as pressure increases.

CONSULT-II Reference Value in Data Monitor Mode

NAEC0780

Specification data are reference values.

MONITOR ITEM	CONDITION	SPECIFICATION
EVAP SYS PRES	• Ignition switch: ON	1.8 - 4.8V

ECM Terminals and Reference Value

NAEC0781

Specification data are reference values and are measured between each terminal and ground.

CAUTION:

Do not use ECM ground terminals when measuring input/output voltage. Doing so may result in damage to the ECM's transistor. Use a ground other than ECM terminals, such as the ground.

TERMINAL NO.	WIRE COLOR	ITEM	CONDITION	DATA (DC Voltage)
32	L/G	EVAP control system pressure sensor	**[Ignition switch ON]**	1.8 - 4.8V
48	P/B	Sensors' power supply	**[Ignition switch ON]**	Approximately 5V
67	B/P	Sensors' ground	**[Engine is running]** • **Warm-up condition** • Idle speed	Approximately 0V

On Board Diagnosis Logic

NAEC0782

NOTE:

If DTC P0452 is displayed with DTC P1229, first perform the trouble diagnosis for DTC P1229. Refer to EC-562.

DTC No.	Trouble diagnosis name	DTC Detecting Condition	Possible Cause
P0452 0452	EVAP control system pressure sensor low input	An excessively low voltage from the sensor is sent to ECM.	• Harness or connectors (The sensor circuit is open or shorted.) • EVAP control system pressure sensor

DTC Confirmation Procedure

NAEC0784

NOTE:

If DTC Confirmation Procedure has been previously conducted, always turn ignition switch OFF and wait at least 10 seconds before conducting the next test.

TESTING CONDITION:

Always perform test at a temperature of 5°C (41°F) or more.

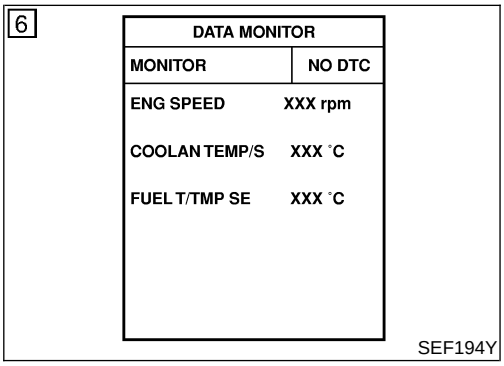

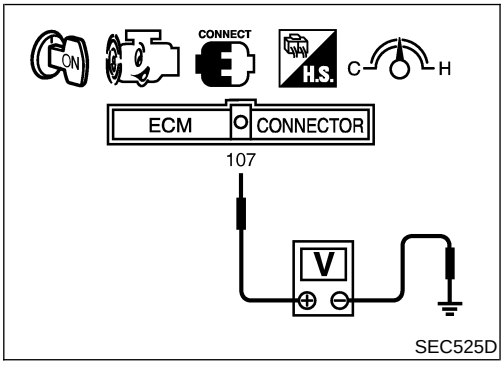

WITH CONSULT-II

NAEC0784S01

1) Start engine and warm it up to normal operating temperature.
2) Turn ignition switch OFF and wait at least 10 seconds.
3) Turn ignition switch ON.
4) Select "DATA MONITOR" mode with CONSULT-II.
5) Make sure that "FUEL T/TEMP SE" is more than 0°C (32°F).
6) Start engine and wait at least 20 seconds.
7) If 1st trip DTC is detected, go to "Diagnostic Procedure", EC-381.
   If 1st trip DTC is not detected, go to next step.
8) Stop engine and install EVAP service port adapter and pressure pump to EVAP service port securely.
9) Pressurize the EVAP line using pressure pump.
10) Confirm the pressure does not go up.
11) If pressure go up, go to "Diagnostic Procedure", EC-381.

WITH GST

NAEC0784S02

1) Start engine and warm it up to normal operating temperature.
2) Check that voltage between ECM terminal 107 (Fuel tank temperature sensor signal) and ground is less than 4.2V.
3) Turn ignition switch OFF and wait at least 10 seconds.
4) Start engine and wait at least 20 seconds.
5) Select "MODE 7" with GST.
6) If 1st trip DTC is detected, go to "Diagnostic Procedure", EC-381.

Wiring Diagram

NAEC0785

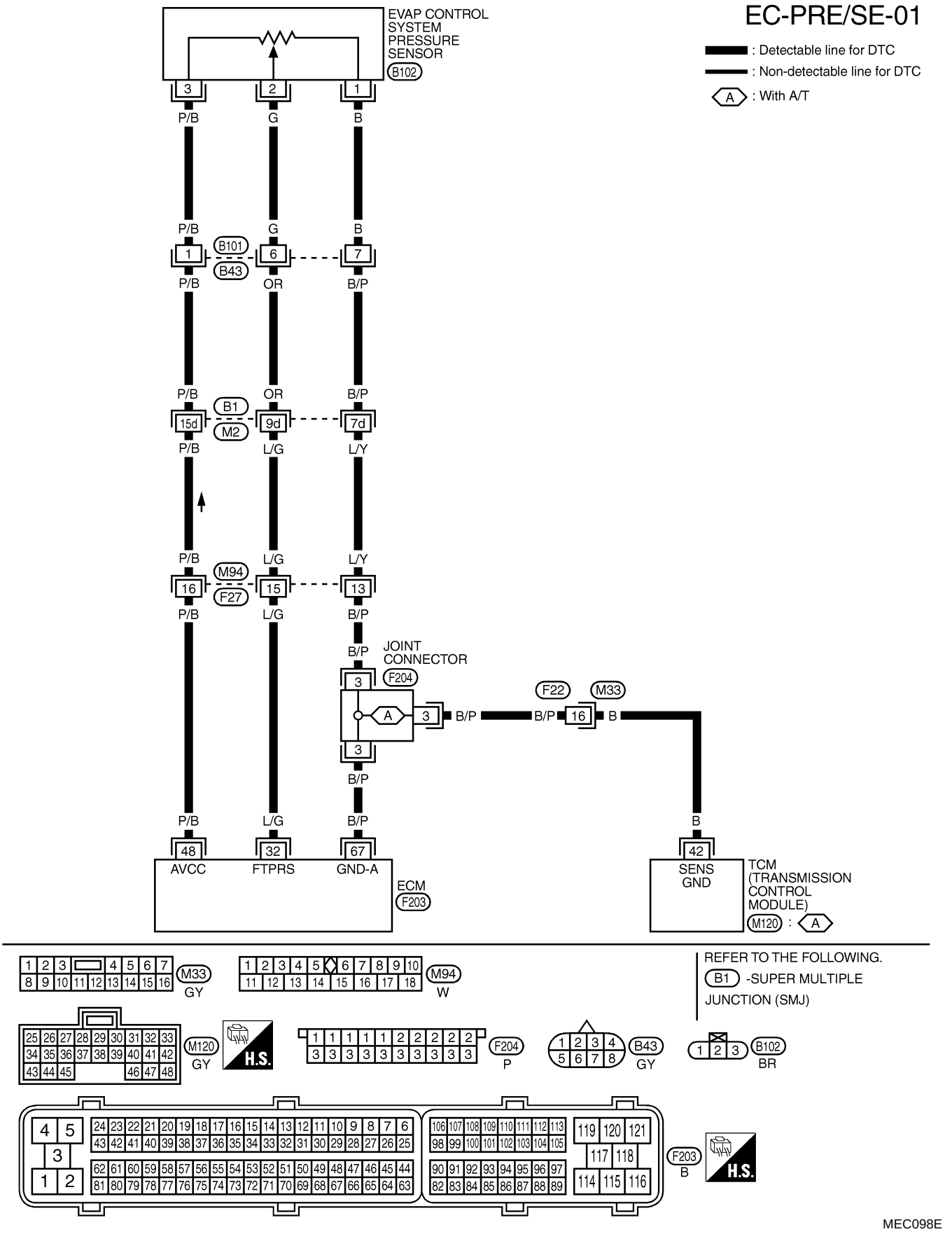

Diagnostic Procedure

NAEC0786

1	CHECK GROUND CONNECTIONS

1. Turn ignition switch OFF.
2. Loosen and retighten three ground screws on the body.
   Refer to “Ground Inspection”, EC-165.

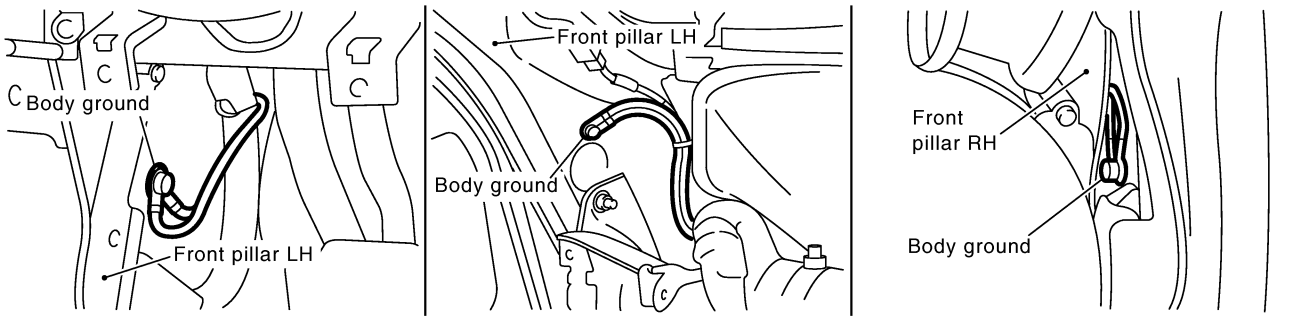

SEC997D

OK or NG

OK	▶	GO TO 2.
NG	▶	Repair or replace ground connections.

2	CHECK CONNECTOR

1. Disconnect EVAP control system pressure sensor harness connector.
2. Check sensor harness connector for water.
   Water should not exist.

OK or NG

OK	▶	GO TO 3.
NG	▶	Repair or replace harness connector.

3	CHECK EVAP CONTROL SYSTEM PRESSURE SENSOR POWER SUPPLY CIRCUIT

1. Turn ignition switch ON.
2. Check voltage between EVAP control system pressure sensor terminal 3 and ground with CONSULT-II or tester.

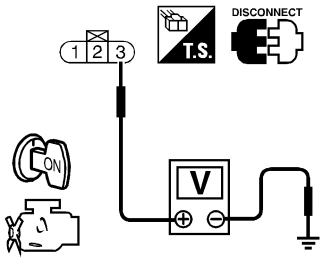

Voltage: Approximately 5V

SEF992Y

OK or NG

OK	▶	GO TO 5.
NG	▶	GO TO 4.

4	DETECT MALFUNCTIONING PART
Check the following. ● Harness connectors B101, B43 ● Harness connectors B1, M2 ● Harness connectors M94, F27 ● Harness for open or short between EVAP control system pressure sensor and ECM	
▶	Repair harness or connectors.

5	CHECK EVAP CONTROL SYSTEM PRESSURE SENSOR GROUND CIRCUIT FOR OPEN AND SHORT
1. Turn ignition switch OFF. 2. Disconnect ECM harness connector. 3. Disconnect TCM harness connector. 4. Check harness continuity between EVAP control system pressure sensor terminal 1 and ECM terminal 67, TCM terminal 42. Refer to Wiring Diagram. **Continuity should exist.** 5. Also check harness for short to ground and short to power.	
OK or NG	
OK ▶	GO TO 7.
NG ▶	GO TO 6.

6	DETECT MALFUNCTIONING PART
Check the following. ● Harness connectors B101, B43 ● Harness connectors B1, M2 ● Harness connectors M94, F27 ● Harness connectors F22, M23 ● Joint connector F204 ● Harness for open between EVAP control system pressure sensor and ECM ● Harness for open between EVAP control system pressure sensor and TCM	
▶	Repair open circuit or short to ground or short to power in harness or connectors.

7	CHECK EVAP CONTROL SYSTEM PRESSURE SENSOR INPUT SIGNAL CIRCUIT FOR OPEN AND SHORT
1. Check harness continuity between ECM terminal 32 and EVAP control system pressure sensor terminal 2. Refer to Wiring Diagram. **Continuity should exist.** 2. Also check harness for short to ground and short to power.	
OK or NG	
OK ▶	GO TO 9.
NG ▶	GO TO 8.

8	DETECT MALFUNCTIONING PART
Check the following. ● Harness connectors B101, B43 ● Harness connectors B1, M2 ● Harness connectors M94, F27 ● Harness for open or short between ECM and EVAP control system pressure sensor	
▶	Repair open circuit or short to ground or short to power in harness or connectors.

9	CHECK EVAP CONTROL SYSTEM PRESSURE SENSOR

1. Remove EVAP control system pressure sensor with its harness connector connected.
   - **Never apply force to the air hole protector of the sensor if equipped.**

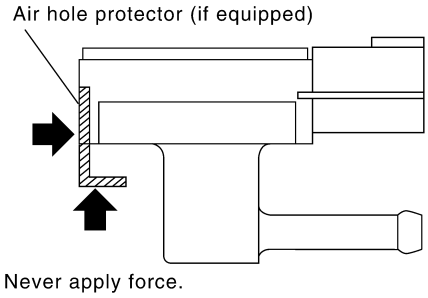

SEF799W

2. Remove EVAP control system pressure sensor from EVAP canister.
   Do not reuse the O-ring, replace it with a new one.
3. Install a vacuum pump to EVAP control system pressure sensor.
4. Turn ignition switch ON and check output voltage between ECM terminal 32 and ground under the following conditions.

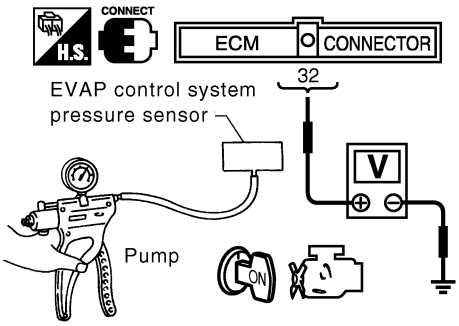

Applied vacuum kPa (mmHg, inHg)	Voltage V
Not applied	1.8 - 4.8
–26.7 (–200, –7.87)	2.1 to 2.5V lower than above value

SEC422D

CAUTION:
- **Always calibrate the vacuum pump gauge when using it.**
- **Do not apply below −93.3 kPa (−700 mmHg, −27.56 inHg) or pressure over 101.3 kPa (760 mmHg, 29.92 inHg).**
- **Discard and EVAP control system pressure sensor which has been dropped from a height of more than 0.5 m (19.7 in) onto a hard surface such as a concrete floor; use a new one.**

OK or NG

OK	▶	GO TO 10.
NG	▶	Replace EVAP control system pressure sensor.

10	CHECK INTERMITTENT INCIDENT
Refer to "TROUBLE DIAGNOSIS FOR INTERMITTENT INCIDENT", EC-155.	
▶	**INSPECTION END**

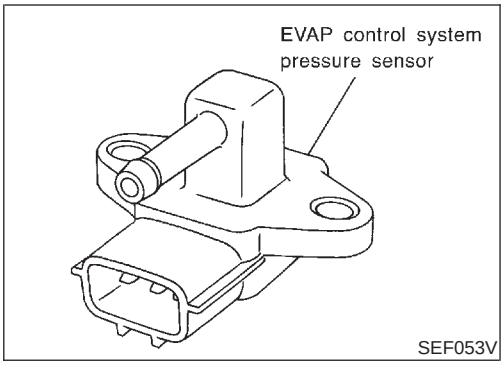

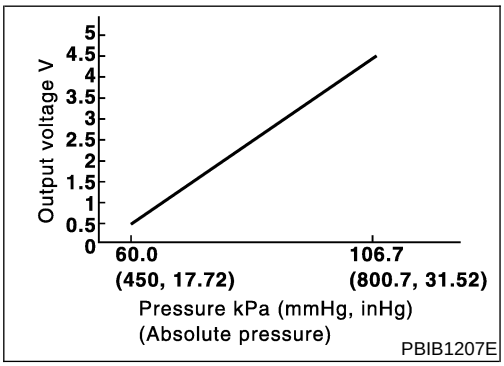

Component Description

NAEC0977

The EVAP control system pressure sensor detects pressure in the purge line. The sensor output voltage to the ECM increases as pressure increases.

CONSULT-II Reference Value in Data Monitor Mode

NAEC0978

Specification data are reference values.

MONITOR ITEM	CONDITION	SPECIFICATION
EVAP SYS PRES	• Ignition switch: ON	1.8 - 4.8V

ECM Terminals and Reference Value

NAEC0979

Specification data are reference values and are measured between each terminal and ground.

CAUTION:

Do not use ECM ground terminals when measuring input/output voltage. Doing so may result in damage to the ECM's transistor. Use a ground other than ECM terminals, such as the ground.

TERMINAL NO.	WIRE COLOR	ITEM	CONDITION	DATA (DC Voltage)
32	L/G	EVAP control system pressure sensor	**[Ignition switch ON]**	1.8 - 4.8V
48	P/B	Sensor power supply	**[Ignition switch ON]**	Approximately 5V
67	B/P	Sensor ground	**[Engine is running]** • **Warm-up condition** • Idle speed	Approximately 0V

On Board Diagnosis Logic

NAEC0980

NOTE:
If DTC P0453 is displayed with DTC P1229, first perform the trouble diagnosis for DTC P1229. Refer to EC-562.

DTC No.	Trouble diagnosis name	DTC Detecting Condition	Possible Cause
P0453 0453	EVAP control system pressure sensor high input	An excessively high voltage from the sensor is sent to ECM.	• Harness or connectors (The sensor circuit is open or shorted.) • EVAP control system pressure sensor • EVAP canister vent control valve • EVAP canister • Water separator • Rubber hose from EVAP canister vent control valve to water separator

DTC Confirmation Procedure

NAEC0981

NOTE:
If DTC Confirmation Procedure has been previously conducted, always turn ignition switch OFF and wait at least 10 seconds before conducting the next test.

TESTING CONDITION:
Always perform test at a temperature of 5°C (41°F) or more.

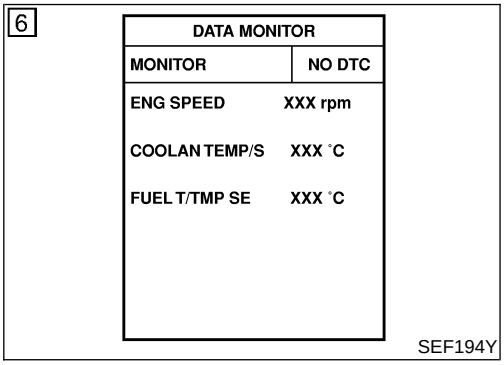

WITH CONSULT-II

NAEC0981S01

1) Start engine and warm it up to normal operating temperature.
2) Turn ignition switch OFF and wait at least 10 seconds.
3) Turn ignition switch ON.
4) Select “DATA MONITOR” mode with CONSULT-II.
5) Make sure that “FUEL T/TEMP SE” is more than 0°C (32°F).
6) Start engine and wait at least 20 seconds.
7) If 1st trip DTC is detected, go to “Diagnostic Procedure”, EC-387.

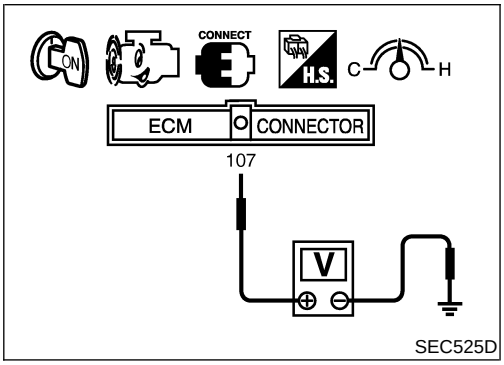

WITH GST

NAEC0981S02

1) Start engine and warm it up to normal operating temperature.
2) Check that voltage between ECM terminal 107 (Fuel tank temperature sensor signal) and ground is less than 4.2V.
3) Turn ignition switch OFF and wait at least 10 seconds.
4) Start engine and wait at least 20 seconds.
5) Select “MODE 7” with GST.
6) If 1st trip DTC is detected, go to “Diagnostic Procedure”, EC-387.

Wiring Diagram

NAEC0982

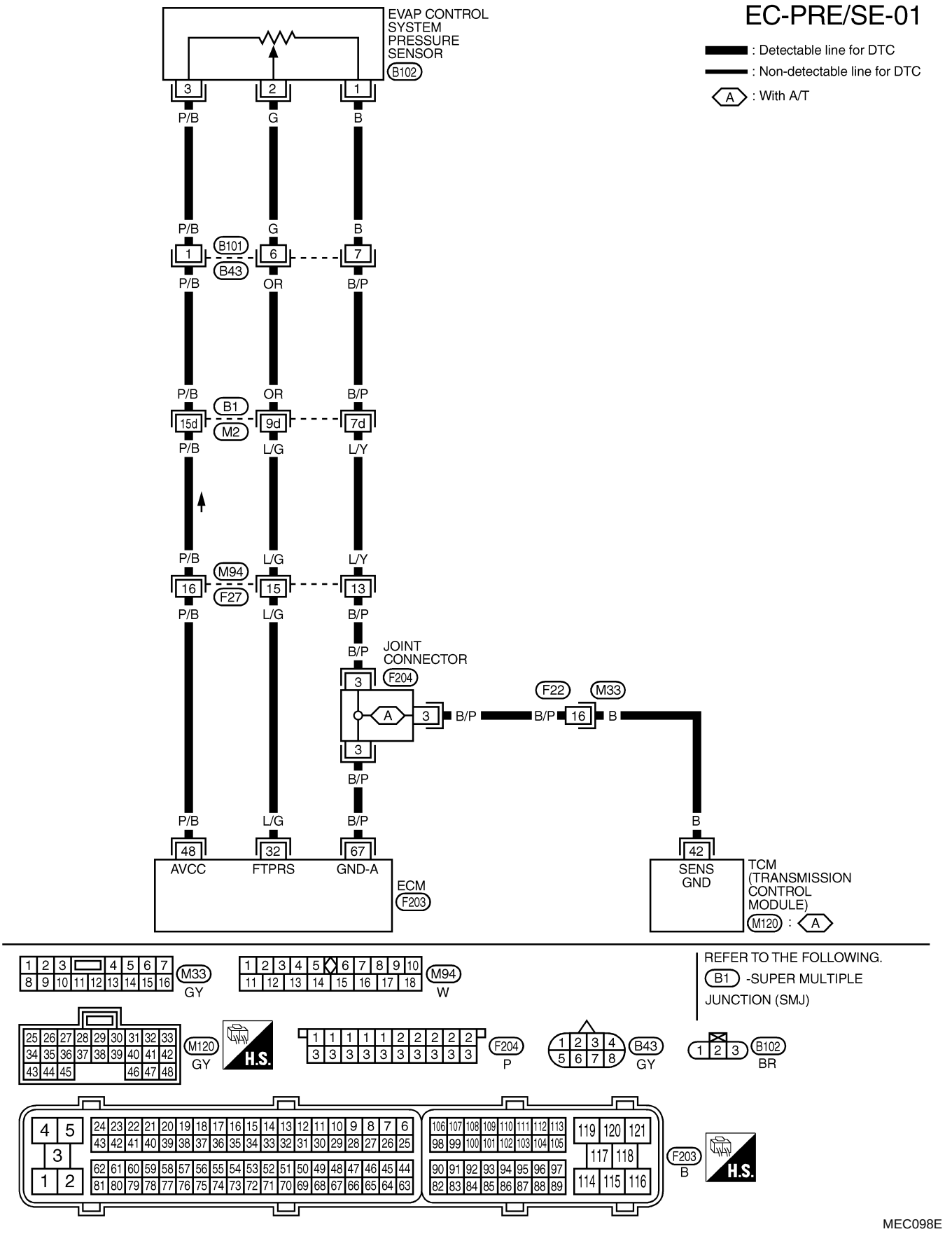

Diagnostic Procedure

NAEC0983

1	CHECK GROUND CONNECTIONS

1. Turn ignition switch OFF.
2. Loosen and retighten three ground screws on the body.
   Refer to “Ground Inspection”, EC-165.

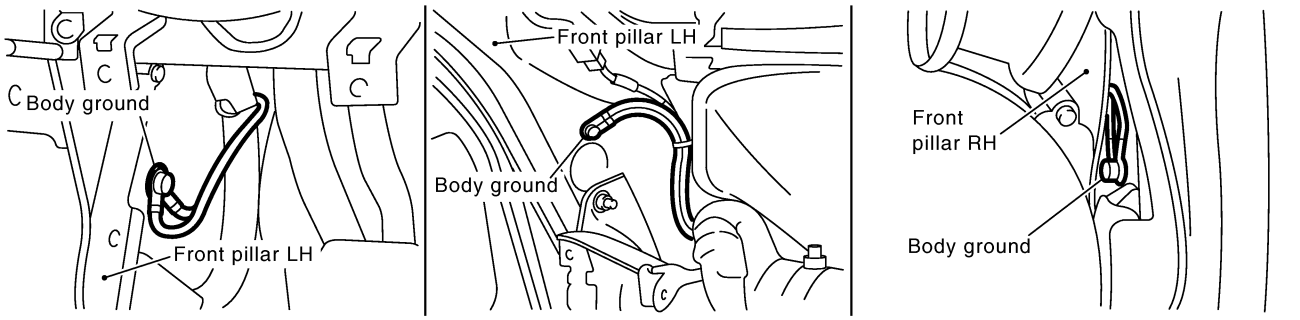

SEC997D

OK or NG

OK	▶	GO TO 2.
NG	▶	Repair or replace ground connections.

2	CHECK CONNECTOR

1. Disconnect EVAP control system pressure sensor harness connector.
2. Check sensor harness connector for water.
   Water should not exist.

OK or NG

OK	▶	GO TO 3.
NG	▶	Repair or replace harness connector.

3	CHECK EVAP CONTROL SYSTEM PRESSURE SENSOR POWER SUPPLY CIRCUIT

1. Turn ignition switch ON.
2. Check voltage between EVAP control system pressure sensor terminal 3 and ground with CONSULT-II or tester.

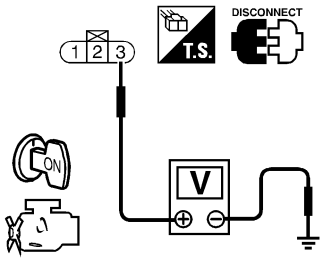

Voltage: Approximately 5V

SEF992Y

OK or NG

OK	▶	GO TO 5.
NG	▶	GO TO 4.

4	DETECT MALFUNCTIONING PART
Check the following. ● Harness connectors B101, B43 ● Harness connectors B1, M2 ● Harness connectors M94, F27 ● Harness for open or short between EVAP control system pressure sensor and ECM	
▶	Repair open circuit or short to ground or short to power in harness or connectors.

5	CHECK EVAP CONTROL SYSTEM PRESSURE SENSOR GROUND CIRCUIT FOR OPEN AND SHORT
1. Turn ignition switch OFF. 2. Disconnect ECM harness connector. 3. Disconnect TCM harness connector. 4. Check harness continuity between EVAP control system pressure sensor terminal 1 and ECM terminal 67, TCM terminal 42. Refer to Wiring Diagram. **Continuity should exist.** 5. Also check harness for short to ground and short to power.	
OK or NG	
OK ▶	GO TO 7.
NG ▶	GO TO 6.

6	DETECT MALFUNCTIONING PART
Check the following. ● Harness connectors B101, B43 ● Harness connectors B1, M2 ● Harness connectors M94, F27 ● Harness connectors F22, M33 ● Joint connector F204 ● Harness for open between EVAP control system pressure sensor and ECM ● Harness for open between EVAP control system pressure sensor and TCM	
▶	Repair open circuit or short to ground or short to power in harness or connectors.

7	CHECK EVAP CONTROL SYSTEM PRESSURE SENSOR INPUT SIGNAL CIRCUIT FOR OPEN AND SHORT
1. Check harness continuity between ECM terminal 32 and EVAP control system pressure sensor terminal 2. Refer to Wiring Diagram. **Continuity should exist.** 2. Also check harness for short to ground and short to power.	
OK or NG	
OK ▶	GO TO 9.
NG ▶	GO TO 8.

8	DETECT MALFUNCTIONING PART
Check the following. ● Harness connectors B101, B43 ● Harness connectors B1, M2 ● Harness connectors M94, F27 ● Harness for open or short between ECM and EVAP control system pressure sensor	
▶	Repair open circuit or short to ground or short to power in harness or connectors.

9	CHECK RUBBER TUBE FOR CLOGGING	
1. Disconnect rubber tube connected to EVAP canister vent control valve. 2. Check the rubber tube for clogging.		
OK or NG		
OK	▶	GO TO 10.
NG	▶	Clean the rubber tube using an air blower.

10	CHECK EVAP CANISTER VENT CONTROL VALVE-I	
1. Remove EVAP canister vent control valve from EVAP canister. 2. Check portion **B** of EVAP canister vent control valve for being rusted.		

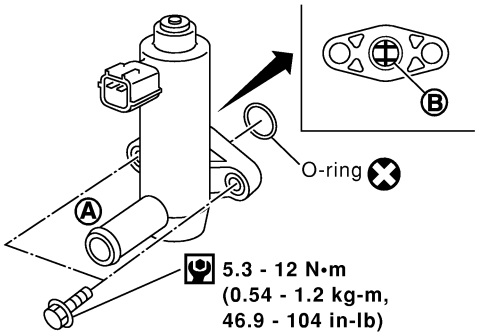

SEF376Z

OK or NG		
OK	▶	GO TO 11.
NG	▶	Replace EVAP canister vent control valve.

11	CHECK EVAP CANISTER VENT CONTROL VALVE

With CONSULT-II

1. Perform "VENT CONTROL/V" in "ACTIVE TEST" mode.
2. Check air passage continuity and operation delay time under the following conditions.

ACTIVE TEST	
VENT CONTROL/V	OFF
MONITOR	
ENG SPEED	XXX rpm
A/F ALPHA-B1	XXX %
A/F ALPHA-B2	XXX %
HO2S1 MNTR (B1)	LEAN
HO2S1 MNTR (B2)	LEAN

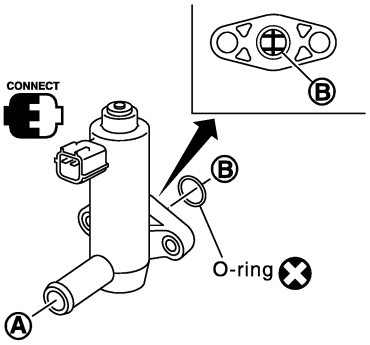

Condition VENT CONTROL/V	Air passage continuity between A and B
ON	No
OFF	Yes

Operation takes less than 1 second.

SEC158D

Without CONSULT-II

Check air passage continuity and operation delay time under the following conditions.

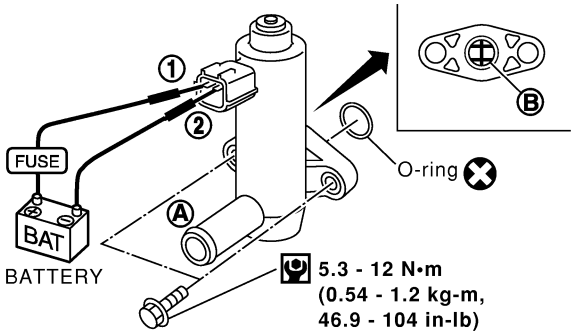

Condition	Air passage continuity between A and B
12V direct current supply between terminals 1 and 2	No
OFF	Yes

Operation takes less than 1 second.

SEF378Z

Make sure new O-ring is installed properly.

OK or NG

OK	▶	GO TO 13.
NG	▶	GO TO 12.

12	CHECK EVAP CANISTER VENT CONTROL VALVE-III

1. Clean the air passage (portion **A** to **B**) of EVAP canister vent control valve using an air blower.
2. Perform Test No. 14 again.

OK or NG

OK	▶	GO TO 13.
NG	▶	Replace EVAP canister vent control valve.

13	CHECK EVAP CONTROL SYSTEM PRESSURE SENSOR

1. Remove EVAP control system pressure sensor with its harness connector connected.
   - **Never apply force to the air hole protector of the sensor if equipped.**

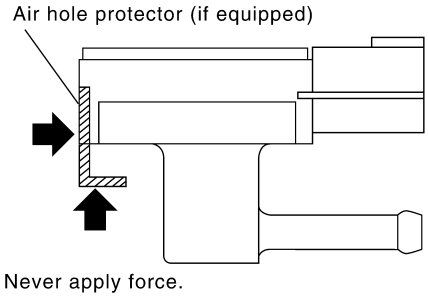

SEF799W

2. Remove EVAP control system pressure sensor from EVAP canister.
   Do not reuse the O-ring, replace it with a new one.
3. Install a vacuum pump to EVAP control system pressure sensor.
4. Turn ignition switch ON and check output voltage between ECM terminal 32 and ground under the following conditions.

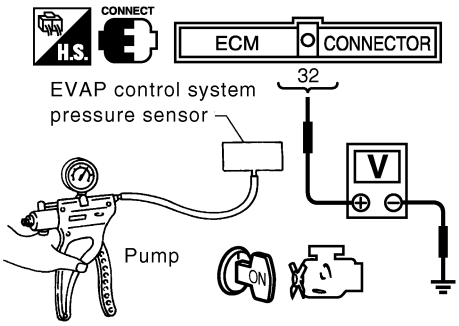

Applied vacuum kPa (mmHg, inHg)	Voltage V
Not applied	1.8 - 4.8
–26.7 (–200, –7.87)	2.1 to 2.5V lower than above value

SEC422D

CAUTION:
- **Always calibrate the vacuum pump gauge when using it.**
- **Do not apply below −93.3 kPa (−700 mmHg, −27.56 inHg) or pressure over 101.3 kPa (760 mmHg, 29.92 inHg).**
- **Discard and EVAP control system pressure sensor which has been dropped from a height of more than 0.5m (19.7in) onto a hard surface such as a concrete floor; use a new one.**

OK or NG

OK	▶	GO TO 14.
NG	▶	Replace EVAP control system pressure sensor.

14	CHECK RUBBER TUBE

Check obstructed rubber tube connected to EVAP canister vent control valve.

OK or NG

OK	▶	GO TO 15.
NG	▶	Clean rubber tube using an air blower, repair or replace rubber tube.

15	CHECK WATER SEPARATOR

1. Check visually for insect nests in the water separator air inlet.
2. Check visually for cracks or flaws in the appearance.
3. Check visually for cracks or flaws in the hose.
4. Check that **A** and **C** are not clogged by blowing air into **B** with **A**, and then **C** plugged.

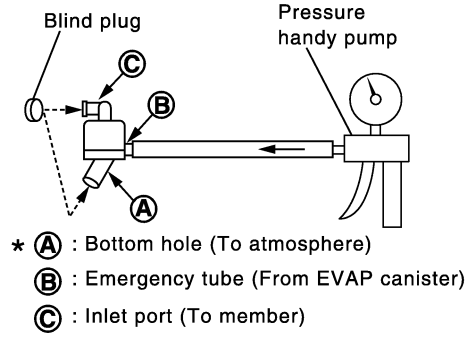

PBIB1032E

5. In case of NG in items 2 - 4, replace the parts.

NOTE:
- Do not disassemble water separator.

OK or NG

OK	▶	GO TO 16.
NG	▶	Replace water separator.

16	CHECK IF EVAP CANISTER SATURATED WITH WATER

1. Remove EVAP canister with EVAP canister vent control valve attached.
2. Check if water will drain from the EVAP canister.

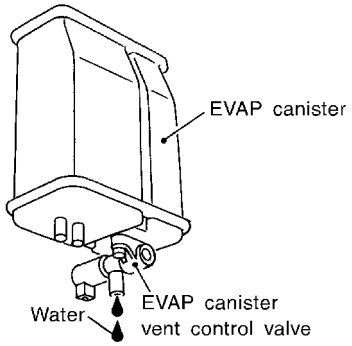

SEF596U

Yes or No

Yes	▶	GO TO 17.
No	▶	GO TO 19.

17	CHECK EVAP CANISTER

Weigh the EVAP canister with the EVAP canister vent control valve attached.
The weight should be less than 1.8 kg (4.0 lb).

OK or NG

OK	▶	GO TO 19.
NG	▶	GO TO 18.

18	DETECT MALFUNCTIONING PART
Check the following. ● EVAP canister for damage ● EVAP hose between EVAP canister and water separator for clogging or poor connection	
▶	Repair hose or replace EVAP canister.

19	CHECK INTERMITTENT INCIDENT
Refer to "TROUBLE DIAGNOSIS FOR INTERMITTENT INCIDENT", EC-155.	
▶	**INSPECTION END**

On Board Diagnosis Logic

NAEC0984

NOTE:
If DTC P0455 is displayed with P1448, first perform trouble diagnosis for DTC P1448. (See EC-602.)

This diagnosis detects a very large leak (fuel filler cap fell off etc.) in EVAP system between the fuel tank and EVAP canister purge volume control solenoid valve.

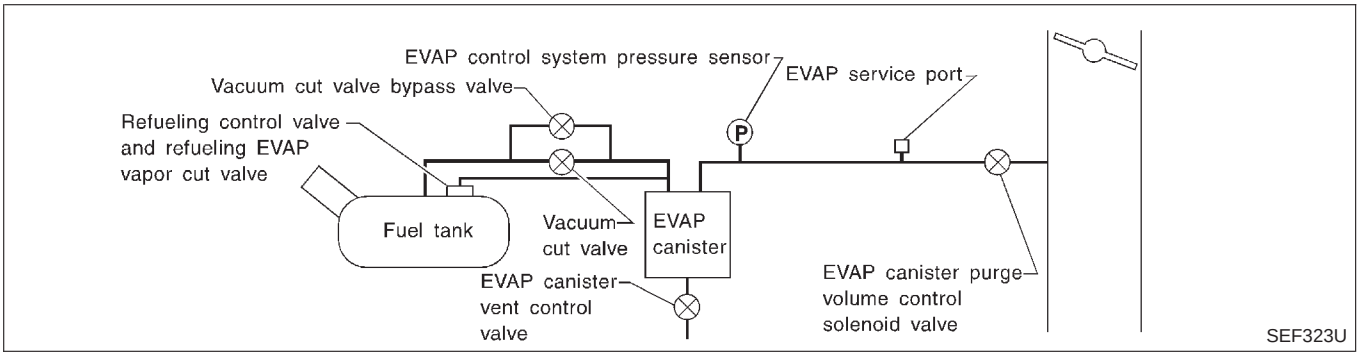

DTC No.	Trouble diagnosis name	DTC Detecting Condition	Possible Cause
P0455 0455	EVAP control system gross leak detected	EVAP control system has a very large leak such as fuel filler cap fell off, EVAP control system does not operate properly.	• Fuel filler cap remains open or fails to close. • Incorrect fuel tank vacuum relief valve • Incorrect fuel filler cap used • Foreign matter caught in fuel filler cap • Leak is in line between intake manifold and EVAP canister purge volume control solenoid valve. • Foreign matter caught in EVAP canister vent control valve • EVAP canister or fuel tank leaks • EVAP purge line (pipe and rubber tube) leaks • EVAP purge line rubber tube bent • Blocked or bent rubber tube to EVAP control system pressure sensor • Loose or disconnected rubber tube • EVAP canister vent control valve and the circuit • EVAP canister purge volume control solenoid valve and the circuit • Fuel tank temperature sensor • O-ring of EVAP canister vent control valve is missing or damaged. • EVAP control system pressure sensor • Refueling control valve • ORVR system leaks

CAUTION:

- **Use only a genuine NISSAN fuel filler cap as a replacement. If an incorrect fuel filler cap is used, the MIL may come on.**
- **If the fuel filler cap is not tightened properly, the MIL may come on.**
- **Use only a genuine NISSAN rubber tube as a replacement.**

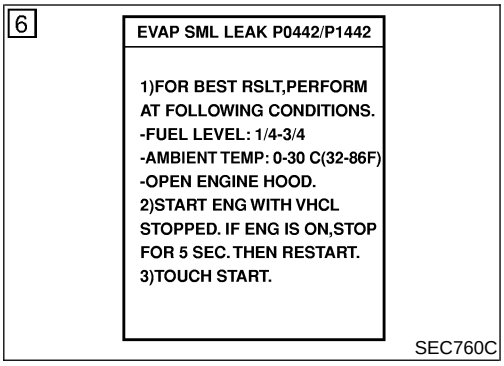

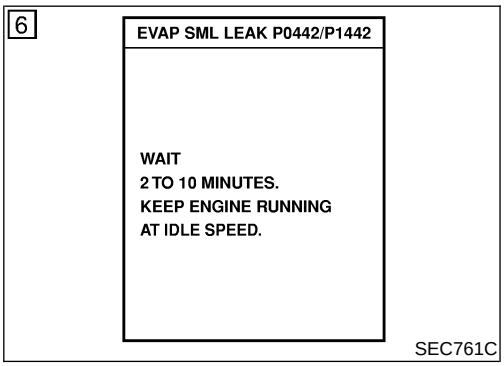

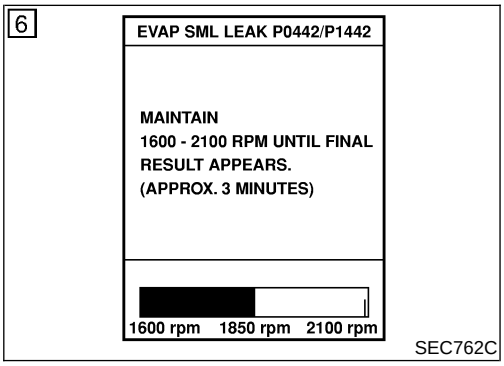

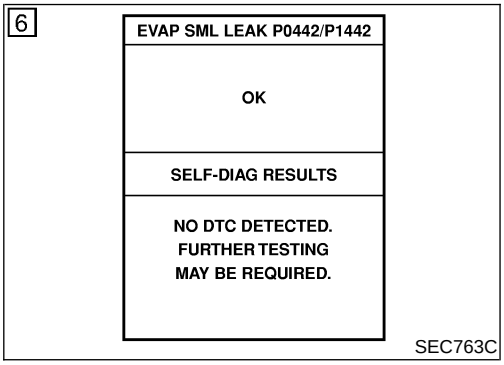

DTC Confirmation Procedure

NAEC0985

CAUTION:

Never remove fuel filler cap during the DTC Confirmation Procedure.

NOTE:

- **If DTC P0455 is displayed with P1448, first perform trouble diagnosis for DTC P1448. (See EC-602.)**
- **Make sure that EVAP hoses are connected to EVAP canister purge volume control solenoid valve properly.**
- If DTC Confirmation Procedure has been previously conducted, always turn ignition switch OFF and wait at least 10 seconds before conducting the next test.

TESTING CONDITION:

- **Perform "DTC WORK SUPPORT" when the fuel level is between 1/4 and 3/4 full, and vehicle is placed on flat level surface.**
- **Open engine hood before conducting the following procedures.**

WITH CONSULT-II

NAEC0985S01

1) Tighten fuel filler cap securely until ratcheting sound is heard.
2) Turn ignition switch ON.
3) Turn ignition switch OFF and wait at least 10 seconds.
4) Turn ignition switch ON and select "DATA MONITOR" mode with CONSULT-II.
5) Make sure that the following conditions are met.
   COOLAN TEMP/S: 0 - 70°C (32 - 158°F)
   INT/A TEMP SE: 0 - 60°C (32 - 140°F)
6) Select "EVP SML LEAK P0442/P1442" of "EVAPORATIVE SYSTEM" in "DTC WORK SUPPORT" mode with CONSULT-II.
   Follow the instruction displayed.

NOTE:

If the engine speed cannot be maintained within the range displayed on the CONSULT-II screen, go to "Basic Inspection", EC-123.

7) Make sure that "OK" is displayed.
   If "NG" is displayed, select "SELF-DIAG RESULTS" mode and make sure that "EVAP GROSS LEAK [P0455]" is displayed. If it is displayed, refer to "Diagnostic Procedure", EC-396.
   If P0442 is displayed, perform "Diagnostic Procedure" for DTC P0442.

WITH GST

NAEC0985S02

NOTE:

Be sure to read the explanation of "Driving Pattern" on EC-84 before driving vehicle.

1) Start engine.
2) Drive vehicle according to "Driving Pattern", EC-84.
3) Stop vehicle.
4) Turn ignition switch OFF, wait at least 10 seconds and then turn ON.
5) Select "MODE 7" with GST.

- If P0455 is displayed on the screen, go to "Diagnostic Procedure", EC-396.
- If P0442 is displayed on the screen, go to "Diagnostic Procedure", for DTC P0442, EC-349.

- If P0441 is displayed on the screen, go to "Diagnostic Procedure" for DTC P0441, EC-339.

Diagnostic Procedure

NAEC0986

1	CHECK FUEL FILLER CAP DESIGN
1. Turn ignition switch OFF. 2. Check for genuine NISSAN fuel filler cap design. 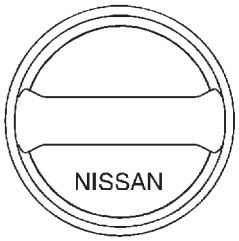 SEF915U	
OK or NG	
OK ▶	GO TO 2.
NG ▶	Replace with genuine NISSAN fuel filler cap.

2	CHECK FUEL FILLER CAP INSTALLATION
Check that the cap is tightened properly by rotating the cap clockwise.	
OK or NG	
OK ▶	GO TO 3.
NG ▶	• Open fuel filler cap, then clean cap and fuel filler neck threads using air blower. • Retighten until ratcheting sound is heard.

3	CHECK FUEL FILLER CAP FUNCTION
Check for air releasing sound while opening the fuel filler cap.	
OK or NG	
OK ▶	GO TO 5.
NG ▶	GO TO 4.

4	CHECK FUEL TANK VACUUM RELIEF VALVE

1. Wipe clean valve housing.
2. Check valve opening pressure and vacuum.

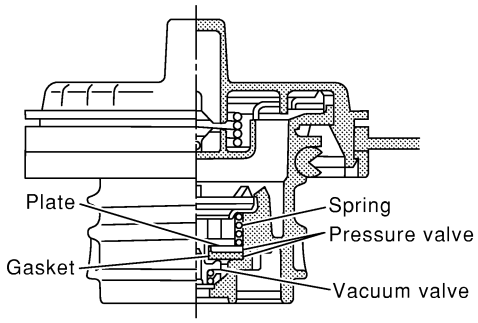

SEF445Y

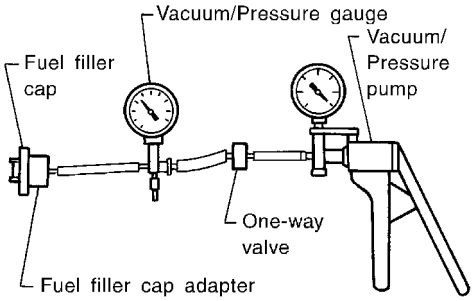

SEF943S

Pressure:
15.3 - 20.0 kPa (0.156 - 0.204 kg/cm^2, 2.22 - 2.90 psi)
Vacuum:
−6.0 to −3.3 kPa (−0.061 to −0.034 kg/cm^2, −0.87 to −0.48 psi)

CAUTION:
Use only a genuine fuel filler cap as a replacement. If an incorrect fuel filler cap is used, the MIL may come on.

OK or NG

OK	▶	GO TO 5.
NG	▶	Replace fuel filler cap with a genuine one.

5	CHECK EVAP PURGE LINE

Check EVAP purge line (pipe, rubber tube, fuel tank and EVAP canister) for cracks, improper connection or disconnection. Refer to "Evaporative Emission System", EC-38.

OK or NG

OK	▶	GO TO 6.
NG	▶	Repair or reconnect the hose.

6	CLEAN EVAP PURGE LINE

Clean EVAP purge line (pipe and rubber tube) using air blower.

	▶	GO TO 7.

7	CHECK EVAP CANISTER VENT CONTROL VALVE, O-RING AND CIRCUIT

Refer to "DTC Confirmation Procedure", EC-372.

OK or NG

OK	▶	GO TO 8.
NG	▶	Repair or replace EVAP canister vent control valve and O-ring or harness/connector.

8	INSTALL THE PRESSURE PUMP

To locate the EVAP leak, install EVAP service port adapter and pressure pump to EVAP service port securely.

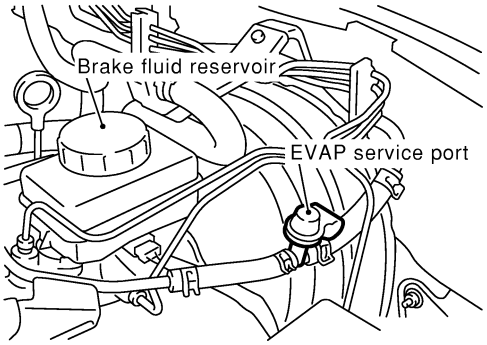

SEF983Y

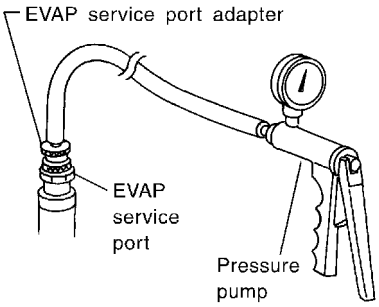

SEF916U

NOTE:
Improper installation of the EVAP service port adapter to the EVAP service port may cause leaking.

With CONSULT-II	▶	GO TO 9.
Without CONSULT-II	▶	GO TO 10.

9	CHECK FOR EVAP LEAK

With CONSULT-II

1. Turn ignition switch ON.
2. Select "EVAP SYSTEM CLOSE" of "WORK SUPPORT" mode with CONSULT-II.
3. Touch "START" and apply pressure into the EVAP line until the pressure indicator reaches the middle of the bar graph.
   NOTE:
   - **Never use compressed air or a high pressure pump.**
   - **Do not exceed 4.12 kPa (0.042 kg/cm^2, 0.6 psi) of pressure in the system.**

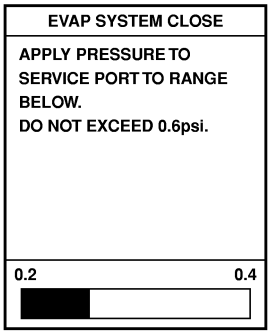

PEF917U

4. Using EVAP leak detector, locate the EVAP leak. For the leak detector, refer to the instruction manual for more details. Refer to "EVAPORATIVE EMISSION LINE DRAWING", EC-42.

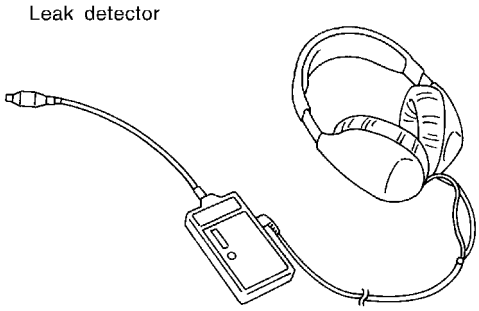

SEF200U

OK or NG

OK	▶	GO TO 11.
NG	▶	Repair or replace.

10	CHECK FOR EVAP LEAK

Without CONSULT-II

1. Turn ignition switch OFF.
2. Apply 12 volts DC to EVAP canister vent control valve. The valve will close. (Continue to apply 12 volts until the end of test.)

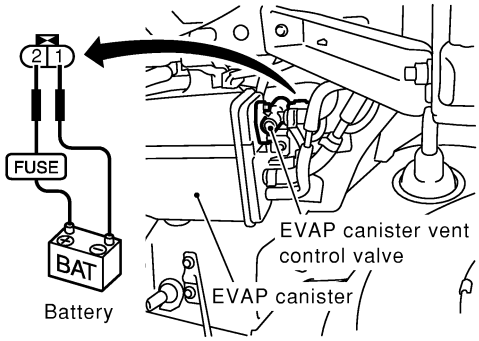

SEC930C

3. Apply 12 volts DC to vacuum cut valve bypass valve. The valve will open. (Continue to apply 12V until the end of test.)

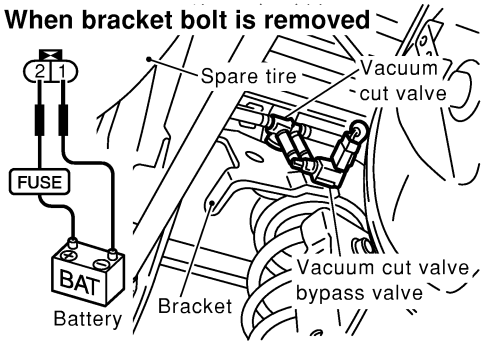

SEC932C

4. Pressurize the EVAP line using pressure pump with 1.3 to 2.7 kPa (10 to 20 mmHg, 0.39 to 0.79 inHg), then remove pump and EVAP service port adapter.
   NOTE:
   - **Never use compressed air or a high pressure pump.**
   - **Do not exceed 4.12 kPa (0.042 kg/cm^2, 0.6 psi) of pressure in the system.**
5. Using EVAP leak detector, locate the EVAP leak. For the leak detector, refer to the instruction manual for more details. Refer to "EVAPORATIVE EMISSION LINE DRAWING", EC-42.

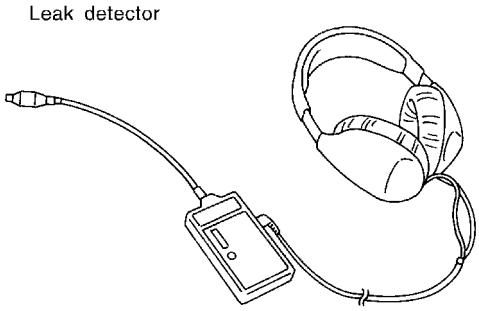

SEF200U

OK or NG

OK	▶	GO TO 12.
NG	▶	Repair or replace.

11	CHECK EVAP CANISTER PURGE VOLUME CONTROL SOLENOID VALVE OPERATION

With CONSULT-II

1. Disconnect vacuum hose to EVAP canister purge volume control solenoid valve at EVAP service port.
2. Start engine.
3. Perform "PURG VOL CONT/V" in "ACTIVE TEST" mode.
4. Touch "Qu" on CONSULT-II screen to increase "PURG VOL CONT/V" opening to 100%.
5. Check vacuum hose for vacuum when revving engine up to 2,000 rpm.

ACTIVE TEST	
PURG VOL CONT/V	XXX %
MONITOR	
ENG SPEED	XXX rpm
A/F ALPHA-B1	XX %
A/F ALPHA-B2	XX %

PBIB1678E

Vacuum should exist.

OK or NG

OK	▶	GO TO 14.
NG	▶	GO TO 13.

12	CHECK EVAP CANISTER PURGE VOLUME CONTROL SOLENOID VALVE OPERATION

Without CONSULT-II

1. Start engine and warm it up to normal operating temperature.
2. Stop engine.
3. Disconnect vacuum hose to EVAP canister purge volume control solenoid valve at EVAP service port.
4. Start engine and let it idle for at least 80 seconds.
5. Check vacuum hose for vacuum when revving engine up to 2,000 rpm.

Vacuum should exist.

OK or NG

OK	▶	GO TO 15.
NG	▶	GO TO 13.

13	CHECK VACUUM HOSE

Check vacuum hoses for clogging or disconnection. Refer to "Vacuum Hose Drawing", EC-32.

OK or NG

OK (With CONSULT-II)	▶	GO TO 14.
OK (Without CONSULT-II)	▶	GO TO 15.
NG	▶	Repair or reconnect the hose.

14	CHECK EVAP CANISTER PURGE VOLUME CONTROL SOLENOID VALVE

With CONSULT-II

1. Start engine.
2. Perform "PURG VOL CONT/V" in "ACTIVE TEST" mode with CONSULT-II. Check that engine speed varies according to the valve opening.

ACTIVE TEST	
PURG VOL CONT/V	XXX %
MONITOR	
ENG SPEED	XXX rpm
A/F ALPHA-B1	XX %
A/F ALPHA-B2	XX %

PBIB1678E

OK or NG

OK	▶	GO TO 16.
NG	▶	GO TO 15.

15	CHECK EVAP CANISTER PURGE VOLUME CONTROL SOLENOID VALVE

With CONSULT-II

Check air passage continuity of EVAP canister purge volume control solenoid valve under the following conditions.

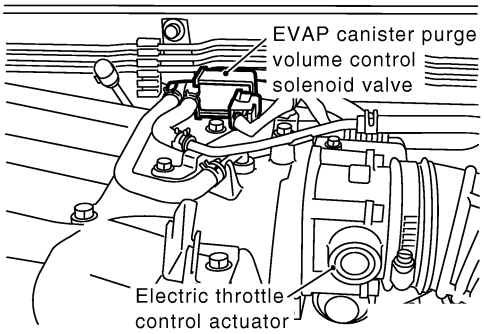

SEC524D

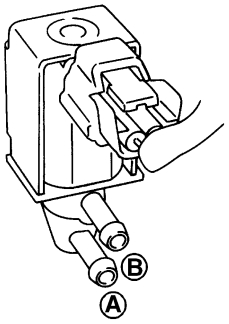

Condition PURG VOL CONT/V value	Air passage continuity between A and B
100%	Yes
0%	No

SEF334XA

Without CONSULT-II

Check air passage continuity of EVAP canister purge volume control solenoid valve under the following conditions.

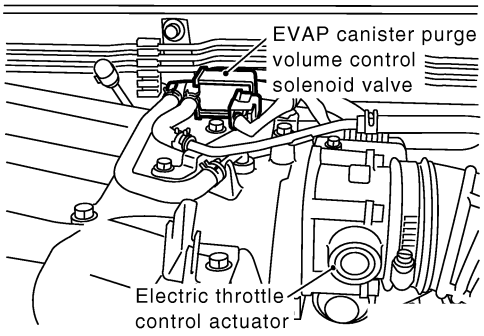

SEC524D

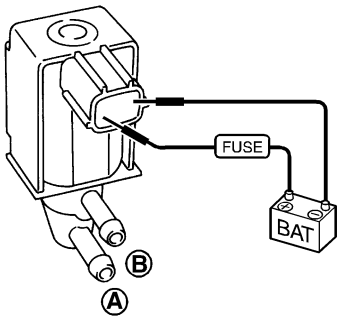

Condition	Air passage continuity between A and B
12V direct current supply between terminals 1 and 2	Yes
No supply	No

SEF335X

OK or NG

OK	▶	GO TO 16.
NG	▶	Replace EVAP canister purge volume control solenoid valve.

16	CHECK FUEL TANK TEMPERATURE SENSOR

1. Remove fuel level sensor unit.
2. Check resistance between fuel level sensor unit terminals 1 and 2 by heating with hot water or heat gun as shown in the figure.

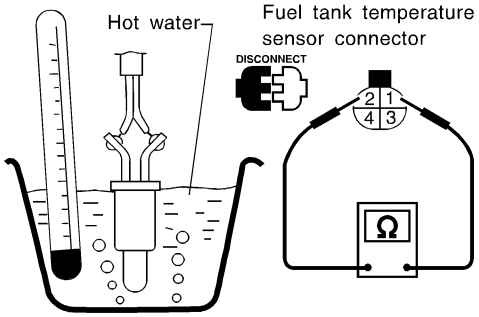

Temperature °C (°F)	Resistance kΩ
20 (68)	2.3 - 2.7
50 (122)	0.79 - 0.90

SEF974Y

OK or NG

OK	▶	GO TO 17.
NG	▶	Replace fuel level sensor unit.

17	CHECK EVAP CONTROL SYSTEM PRESSURE SENSOR

1. Remove EVAP control system pressure sensor with its harness connector connected.
   - **Never apply force to the air hole protector of the sensor if equipped.**

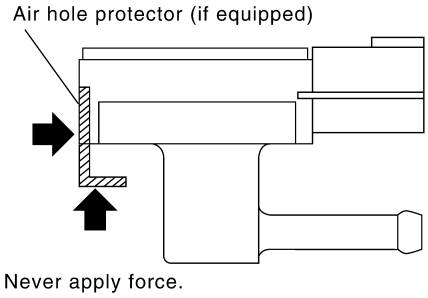

SEF799W

2. Remove EVAP control system pressure sensor from EVAP canister.
   Do not reuse the O-ring, replace it with a new one.
3. Install a vacuum pump to EVAP control system pressure sensor.
4. Turn ignition switch "ON" and check output voltage between ECM terminal 32 and ground under the following conditions.

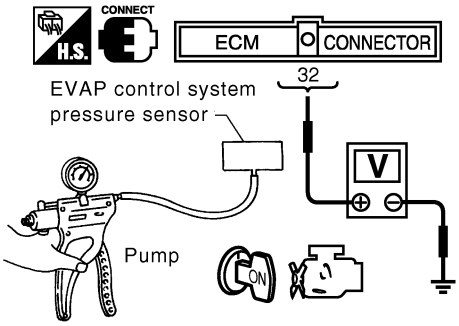

Applied vacuum kPa (mmHg, inHg)	Voltage V
Not applied	1.8 - 4.8
–26.7 (–200, –7.87)	2.1 to 2.5V lower than above value

SEC422D

CAUTION:
- **Always calibrate the vacuum pump gauge when using it.**
- **Do not apply below −93.3 kPa (−700 mmHg, −27.56 inHg) or pressure over 101.3 kPa (760 mmHg, 29.92 inHg).**
- **Discard and EVAP control system pressure sensor which has been dropped from a height of more than 0.5 m (19.7 in) onto a hard surface such as a concrete floor; use a new one.**

OK or NG

OK	▶	GO TO 18.
NG	▶	Replace EVAP control system pressure sensor.

18	CHECK REFUELING EVAP VAPOR LINE

- Check refueling EVAP vapor line between EVAP canister and fuel tank for clogging, kink, looseness and improper connection. For location, refer to "EVAPORATIVE EMISSION LINE DRAWING", EC-42.

OK or NG

OK	▶	GO TO 19.
NG	▶	Repair or replace hoses and tubes.

19	CHECK SIGNAL LINE AND RECIRCULATION LINE

- Check signal line and recirculation line between filler neck tube and fuel tank for clogging, kink, cracks, looseness and improper connection.

OK or NG

OK	▶	GO TO 20.
NG	▶	Repair or replace hoses, tubes or filler neck tube.

20	CHECK REFUELING CONTROL VALVE

1. Remove fuel filler cap.
2. Check air continuity between hose ends A and B.
   Blow air into hose end B. Air should flow freely into the fuel tank.
3. Blow air into hose end A and check that there is no leakage.
4. Apply pressure to both hose ends A and B [20 kPa (150 mmHg, 5.91 inHg)] using a pressure pump and a suitable 3-way connector. Check that there is no leakage.

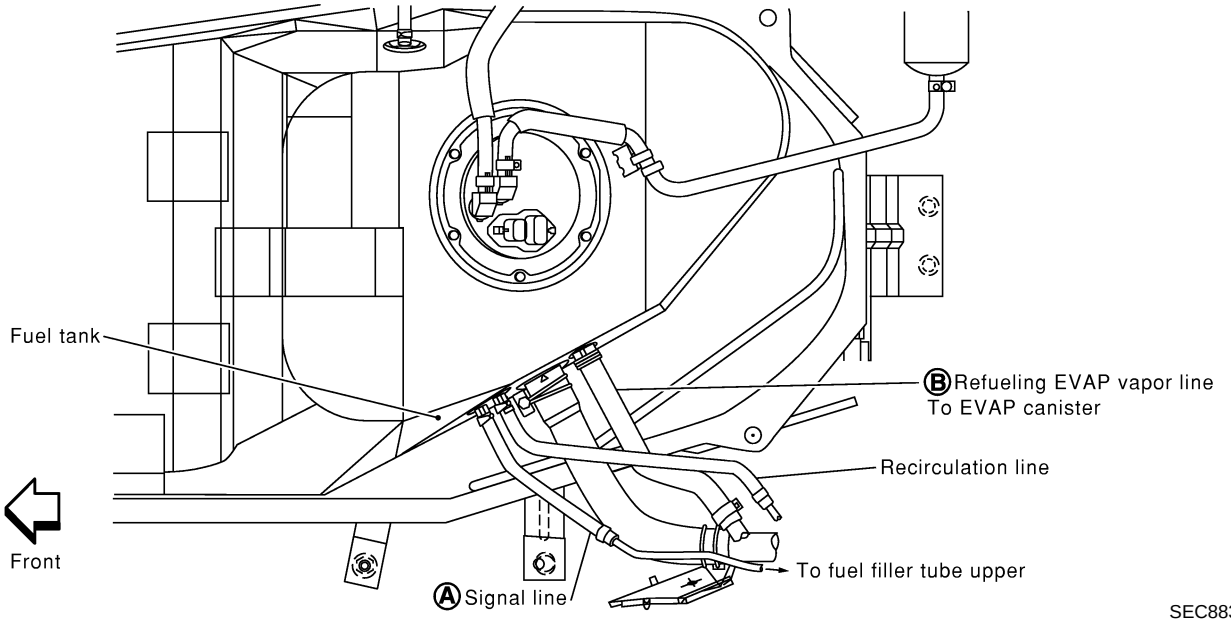

OK or NG

OK	▶	GO TO 21.
NG	▶	Replace or refueling control valve with fuel tank.

21	CHECK INTERMITTENT INCIDENT
Refer to "TROUBLE DIAGNOSIS FOR INTERMITTENT INCIDENT", EC-155.	
▶	**INSPECTION END**

On Board Diagnosis Logic

NAEC0987

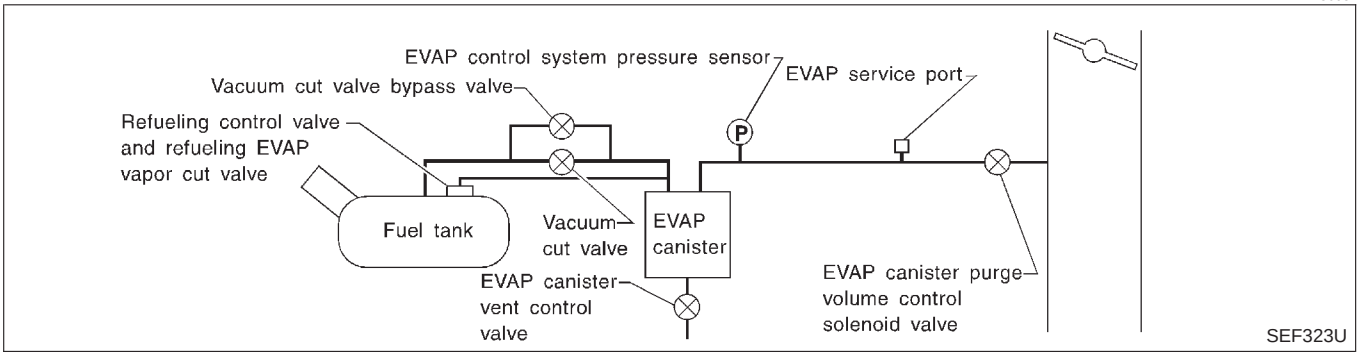

This diagnosis detects very small leaks in the EVAP line between fuel tank and EVAP canister purge volume control solenoid valve, using the intake manifold same as a conventional EVAP small leak diagnosis.
If ECM judges a leak which corresponds to a very small leak, the very small leak P0456 will be detected.
If ECM judges a leak equivalent to a small leak, EVAP small leak P0442 will be detected.
If ECM judges there are no leaks, the diagnosis will be OK.

DTC No.	Trouble diagnosis name	DTC Detecting Condition	Possible Cause
P0456 0456	Evaporative emission control system very small leak (negative pressure check)	● EVAP system has a very small leak. ● EVAP system does not operate properly.	● Incorrect fuel tank vacuum relief valve ● Incorrect fuel filler cap used ● Fuel filler cap remains open or fails to close. ● Foreign matter caught in fuel filler cap ● Leak is in line between intake manifold and EVAP canister purge volume control solenoid valve. ● Foreign matter caught in EVAP canister vent control valve ● EVAP canister or fuel tank leaks ● EVAP purge line (Pipe and rubber tube) leaks ● EVAP purge line rubber tube bent ● Blocked or bent rubber tube to EVAP control system pressure sensor ● Loose or disconnected rubber tube ● EVAP canister vent control valve and the circuit ● EVAP canister purge volume control solenoid valve and the circuit ● Fuel tank temperature sensor ● O-ring of EVAP canister vent control valve is missing or damaged. ● Water separator ● EVAP canister saturated with water ● EVAP control system pressure sensor ● Refueling control valve ● ORVR system leaks ● Fuel level sensor and the circuit ● Foreign matter caught in EVAP canister purge volume control solenoid valve

CAUTION:

- **Use only a genuine NISSAN fuel filler cap as a replacement. If an incorrect fuel filler cap is used, the MIL may come on.**
- **If the fuel filler cap is not tightened properly, the MIL may come on.**
- **Use only a genuine NISSAN rubber tube as a replacement.**

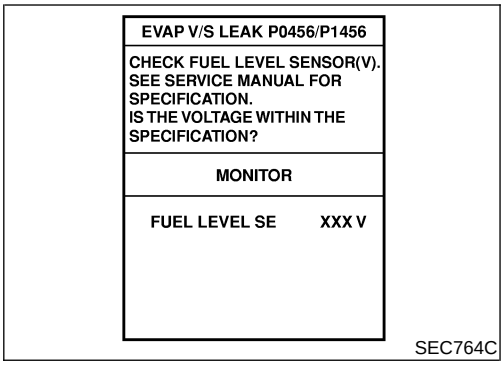

SEC764C

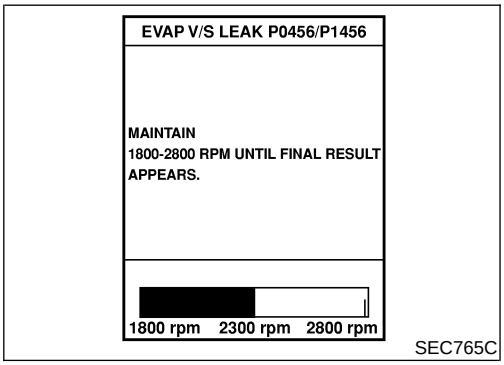

SEC765C

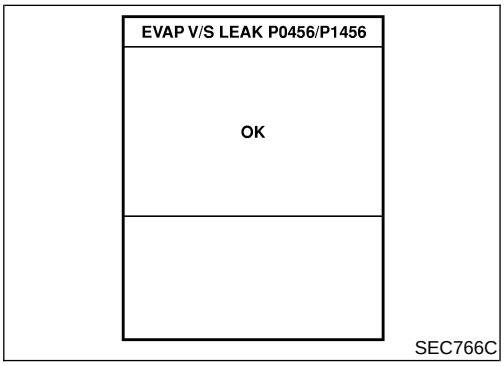

SEC766C

DTC Confirmation Procedure

NAEC0988

CAUTION:

Never remove fuel filler cap during the DTC confirmation procedure.

NOTE:

- **If DTC P0456 is displayed with P0442, first perform trouble diagnosis for DTC P0456.**
- If DTC Confirmation Procedure has been previously conducted, always turn ignition switch OFF and wait at least 10 seconds before conducting the next test.
- **After repair, make sure that the hoses and clips are installed properly.**

TESTING CONDITION:

- **Open engine hood before conducting following procedure.**
- **If any of following condition is met just before the DTC confirmation procedure, leave the vehicle for more than 1 hour.**

a) **Fuel filler cap is removed.**
b) **Refilled or drained the fuel.**
c) **EVAP component parts is/are removed.**

- **Before performing the following procedure, confirm that battery voltage is more than 11V at idle.**

With CONSULT-II

1) Turn ignition switch ON and select “DATA MONITOR” mode with CONSULT-II.
2) Make sure the following conditions are met.
   FUEL LEVEL SE: 1.08 - 0.2V
   COOLAN TEMP/S: 0 - 32°C (32 - 90°F)
   FUEL T/TMP SE: 0 - 35°C (32 - 95°F)
   INT A/TEMP SE: More than 0°C (32°F)
   If NG, turn ignition switch OFF and leave the vehicle in a cool place (soak the vehicle) or refilling/draining fuel until the output voltage condition of the “FUEL LEVEL SE” meets within the range above and leave the vehicle for more than 1 hour. Then start from step 1).
3) Turn ignition switch OFF and wait at least 5 seconds.
4) Turn ignition switch ON.
5) Select “EVP V/S LEAK P0456/P1456” of “EVAPORATIVE SYSTEM” in “DTC WORK SUPPORT” mode with CONSULT-II.
   Follow the instruction displayed.
6) Make sure that “OK” is displayed.
   If “NG” is displayed, refer to “Diagnostic Procedure”, EC-410.

NOTE:

- **If the engine speed cannot be maintained within the range displayed on CONSULT-II screen, go to “Basic inspection”, EC-123.**
- **Make sure that EVAP hoses are connected to EVAP canister purge volume control solenoid valve properly.**

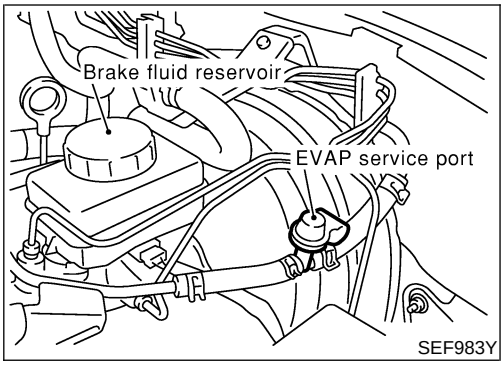

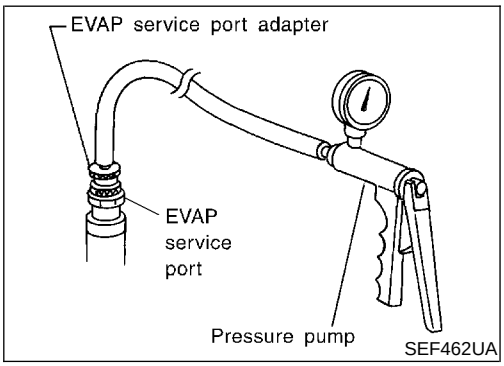

Overall Function Check

NAEC0989

WITH GST

NAEC0989S01

Use this procedure to check the overall function of the EVAP very small leak function. During this check, a 1st trip DTC might not be confirmed.

CAUTION:

- **Never use compressed air, doing so may damage the EVAP system.**
- **Do not start engine.**
- **Do not exceeded 4.12 kPa (0.042 kg/cm^2, 0.6 psi).**

1) Attach the EVAP service port adapter securely to the EVAP service port.
2) Set the pressure pump and a hose.
3) Also set a vacuum gauge via 3-way connector and a hose.
4) Turn ignition switch ON.
5) Connect GST and select mode 8.
6) Using mode 8 control the EVAP canister vent control valve (close) and vacuum cut valve bypass valve (open).
7) Apply pressure and make sure the following conditions are satisfied.
   Pressure to be applied: 2.7 kPa (20 mmHg, 0.79 inHg)
   Time to be waited after the pressure drawn in to the EVAP system and the pressure to be dropped: 60 seconds and the pressure should not be dropped more than 0.4 kPa (3 mmHg, 0.12 inHg)
   If NG, go to diagnostic procedure, EC-410.
   If OK, go to next step.
8) Disconnect GST.
9) Start engine and warm it up to normal operating temperature.
10) Turn ignition switch OFF and wait at least 10 seconds.
11) Restart engine and let it idle for 90 seconds.
12) Keep engine speed at 2,000 rpm for 30 seconds.
13) Turn ignition switch OFF.

NOTE:
For more information, refer to GST instruction manual.

Diagnostic Procedure

NAEC0990

1	CHECK FUEL FILLER CAP DESIGN

1. Turn ignition switch OFF.
2. Check for genuine NISSAN fuel filler cap design.

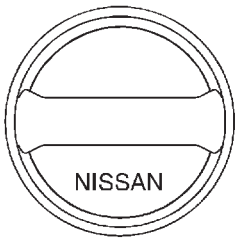

SEF915U

OK or NG

OK	▶	GO TO 2.
NG	▶	Replace with genuine NISSAN fuel filler cap.

2	CHECK FUEL FILLER CAP INSTALLATION

Check that the cap is tightened properly by rotating the cap clockwise.

OK or NG

OK	▶	GO TO 3.
NG	▶	● Open fuel filler cap, then clean cap and fuel filler neck threads using air blower. ● Retighten until ratcheting sound is heard.

3	CHECK FUEL FILLER CAP FUNCTION

Check for air releasing sound while opening the fuel filler cap.

OK or NG

OK	▶	GO TO 5.
NG	▶	GO TO 4.

4	CHECK FUEL TANK VACUUM RELIEF VALVE

1. Wipe clean valve housing.
2. Check valve opening pressure and vacuum.

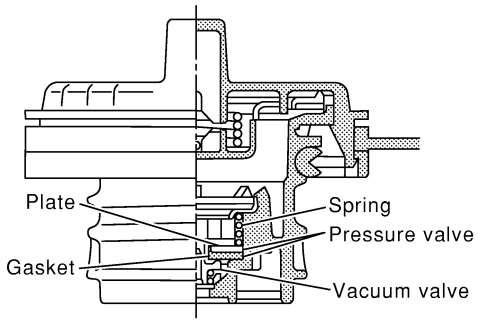

SEF445Y

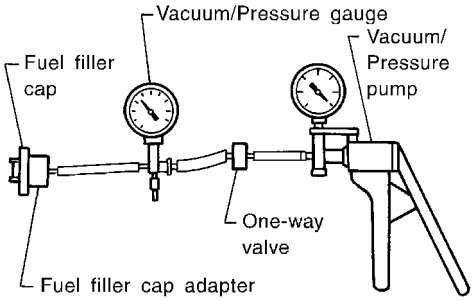

SEF943S

Pressure:

15.3 - 20.0 kPa (0.156 - 0.204 kg/cm^2, 2.22 - 2.90 psi)

Vacuum:

−6.0 to −3.3 kPa (−0.061 to −0.034 kg/cm^2, −0.87 to −0.48 psi)

CAUTION:

Use only a genuine fuel filler cap as a replacement. If an incorrect fuel filler cap is used, the MIL may come on.

OK or NG

OK	▶	GO TO 5.
NG	▶	Replace fuel filler cap with a genuine one.

5	INSTALL THE PRESSURE PUMP

To locate the EVAP leak, install EVAP service port adapter and pressure pump to EVAP service port securely.

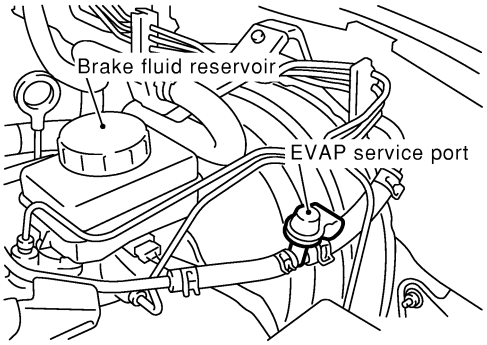

SEF983Y

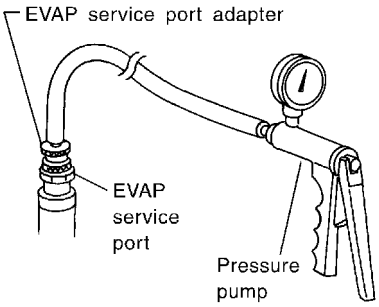

SEF916U

NOTE:
Improper installation of the EVAP service port adapter to the EVAP service port may cause leaking.

With CONSULT-II	▶	GO TO 6.
Without CONSULT-II	▶	GO TO 7.

6	CHECK FOR EVAP LEAK

With CONSULT-II

1. Turn ignition switch ON.
2. Select "EVAP SYSTEM CLOSE" of "WORK SUPPORT" mode with CONSULT-II.
3. Touch "START" and apply pressure into the EVAP line until the pressure indicator reaches the middle of the bar graph.
   NOTE:
   - **Never use compressed air or a high pressure pump.**
   - **Do not exceed 4.12 kPa (0.042 kg/cm^2, 0.6 psi) of pressure in the system.**

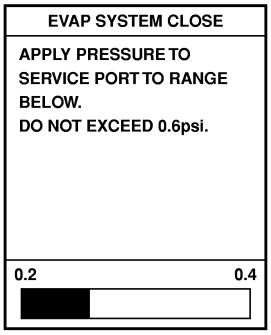

PEF917U

4. Using EVAP leak detector, locate the EVAP leak. For the leak detector, refer to the instruction manual for more details. Refer to "EVAPORATIVE EMISSION LINE DRAWING", EC-42.

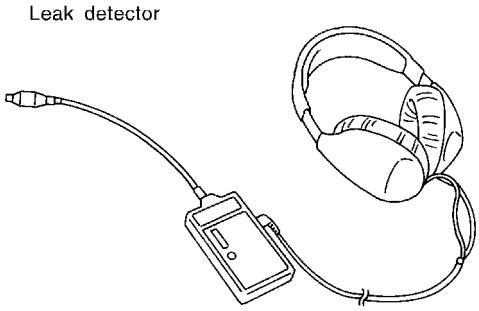

SEF200U

OK or NG

OK	▶	GO TO 8.
NG	▶	Repair or replace.

7	CHECK FOR EVAP LEAK

Without CONSULT-II

1. Turn ignition switch OFF.
2. Apply 12 volts DC to EVAP canister vent control valve. The valve will close. (Continue to apply 12 volts until the end of test.)

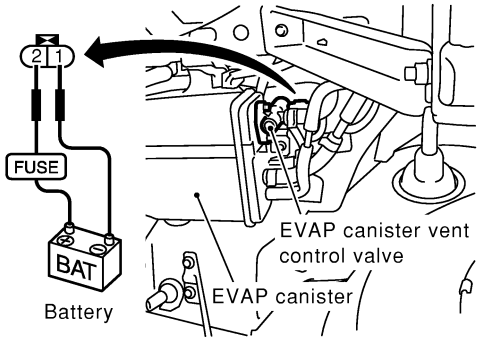

SEC930C

3. Apply 12 volts DC to vacuum cut valve bypass valve. The valve will open. (Continue to apply 12V until the end of test.)

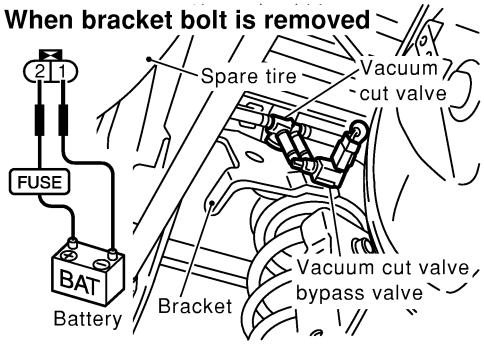

SEC932C

4. Pressurize the EVAP line using pressure pump with 1.3 to 2.7 kPa (10 to 20 mmHg, 0.39 to 0.79 inHg), then remove pump and EVAP service port adapter.
   NOTE:
   - **Never use compressed air or a high pressure pump.**
   - **Do not exceed 4.12 kPa (0.042 kg/cm^2, 0.6 psi) of pressure in the system.**
5. Using EVAP leak detector, locate the EVAP leak. For the leak detector, refer to the instruction manual for more details. Refer to "EVAPORATIVE EMISSION LINE DRAWING", EC-42.

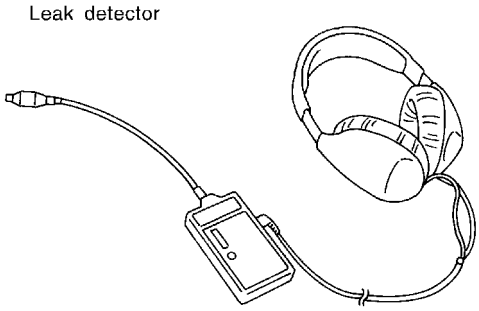

SEF200U

OK or NG

OK	▶	GO TO 8.
NG	▶	Repair or replace.

8	CHECK WATER SEPARATOR

1. Check visually for insect nests in the water separator air inlet.
2. Check visually for cracks or flaws in the appearance.
3. Check visually for cracks or flaws in the hose.
4. Check that **A** and **C** are not clogged by blowing air into **B** with **A**, and then **C** plugged.

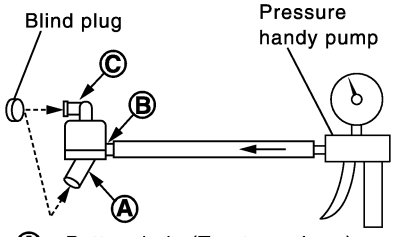

* Ⓐ : Bottom hole (To atmosphere)
Ⓑ : Emergency tube (From EVAP canister)
Ⓒ : Inlet port (To member)

PBIB1032E

5. In case of NG in items 2 - 4, replace the parts.

NOTE:
- Do not disassemble water separator.

OK or NG

OK	▶	GO TO 9.
NG	▶	Replace water separator.

9	CHECK EVAP CANISTER VENT CONTROL VALVE, O-RING AND CIRCUIT

Refer to "DTC Confirmation Procedure", EC-372.

OK or NG

OK	▶	GO TO 10.
NG	▶	Repair or replace EVAP canister vent control valve and O-ring or harness/connector.

10	CHECK IF EVAP CANISTER SATURATED WITH WATER

1. Remove EVAP canister with EVAP canister vent control valve attached.
2. Does water drain from the EVAP canister?

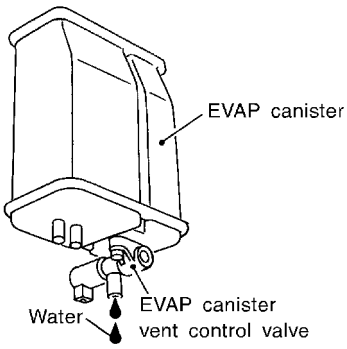

SEF596U

Yes or No

Yes	▶	GO TO 11.
No (With CONSULT-II)	▶	GO TO 13.
No (Without CONSULT-II)	▶	GO TO 14.

11	CHECK EVAP CANISTER
Weigh the EVAP canister with the EVAP canister vent control valve attached. **The weight should be less than 1.8 kg (4.0 lb).**	
OK or NG	
OK (With CONSULT-II) ▶	GO TO 13.
OK (Without CONSULT-II) ▶	GO TO 14.
NG ▶	GO TO 12.

12	DETECT MALFUNCTIONING PART
Check the following. ● EVAP canister for damage ● EVAP hose between EVAP canister and water separator for clogging or poor connection	
▶	Repair hose or replace EVAP canister.

13	CHECK EVAP CANISTER PURGE VOLUME CONTROL SOLENOID VALVE OPERATION

With CONSULT-II

1. Disconnect vacuum hose to EVAP canister purge volume control solenoid valve at EVAP service port.
2. Start engine.
3. Perform "PURG VOL CONT/V" in "ACTIVE TEST" mode.
4. Touch "Qu" on CONSULT-II screen to increase "PURG VOL CONT/V" opening to 100%.
5. Check vacuum hose for vacuum when revving engine up to 2,000 rpm.

ACTIVE TEST	
PURG VOL CONT/V	XXX %
MONITOR	
ENG SPEED	XXX rpm
A/F ALPHA-B1	XX %
A/F ALPHA-B2	XX %

PBIB1678E

Vacuum should exist.

OK or NG

OK ▶	GO TO 16.
NG ▶	GO TO 15.

14	CHECK EVAP CANISTER PURGE VOLUME CONTROL SOLENOID VALVE OPERATION

Without CONSULT-II

1. Start engine and warm it up to normal operating temperature.
2. Stop engine.
3. Disconnect vacuum hose to EVAP canister purge volume control solenoid valve at EVAP service port.
4. Start engine and let it idle for at least 80 seconds.
5. Check vacuum hose for vacuum when revving engine up to 2,000 rpm.

Vacuum should exist.

OK or NG

OK ▶	GO TO 17.
NG ▶	GO TO 15.

15	CHECK VACUUM HOSE
Check vacuum hoses for clogging or disconnection. Refer to "Vacuum Hose Drawing", EC-32.	
OK or NG	
OK (With CONSULT-II) ▶	GO TO 16.
OK (Without CONSULT-II) ▶	GO TO 17.
NG ▶	Repair or reconnect the hose.

16	CHECK EVAP CANISTER PURGE VOLUME CONTROL SOLENOID VALVE

With CONSULT-II

1. Start engine.
2. Perform "PURG VOL CONT/V" in "ACTIVE TEST" mode with CONSULT-II. Check that engine speed varies according to the valve opening.

ACTIVE TEST	
PURG VOL CONT/V	XXX %
MONITOR	
ENG SPEED	XXX rpm
A/F ALPHA-B1	XX %
A/F ALPHA-B2	XX %

PBIB1678E

OK or NG	
OK ▶	GO TO 18.
NG ▶	GO TO 17.

17	CHECK EVAP CANISTER PURGE VOLUME CONTROL SOLENOID VALVE

With CONSULT-II

Check air passage continuity of EVAP canister purge volume control solenoid valve under the following conditions.

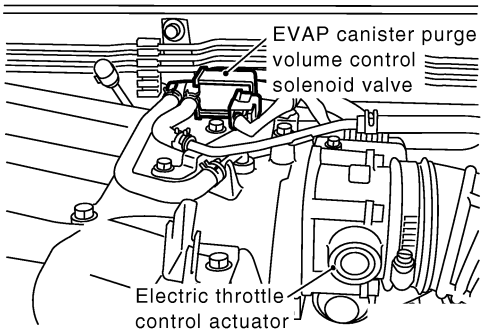

SEC524D

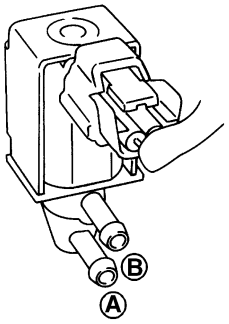

Condition PURG VOL CONT/V value	Air passage continuity between A and B
100%	Yes
0%	No

SEF334XA

Without CONSULT-II

Check air passage continuity of EVAP canister purge volume control solenoid valve under the following conditions.

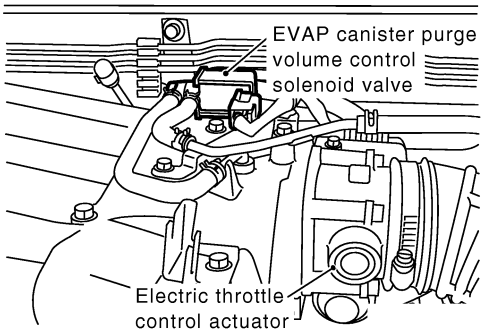

SEC524D

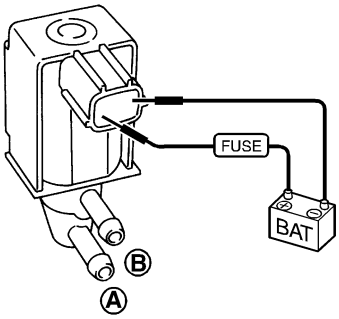

Condition	Air passage continuity between A and B
12V direct current supply between terminals 1 and 2	Yes
No supply	No

SEF335X

OK or NG

OK	▶	GO TO 18.
NG	▶	Replace EVAP canister purge volume control solenoid valve.

18	CHECK FUEL TANK TEMPERATURE SENSOR

1. Remove fuel level sensor unit.
2. Check resistance between fuel level sensor unit terminals 1 and 2 by heating with hot water or heat gun as shown in the figure.

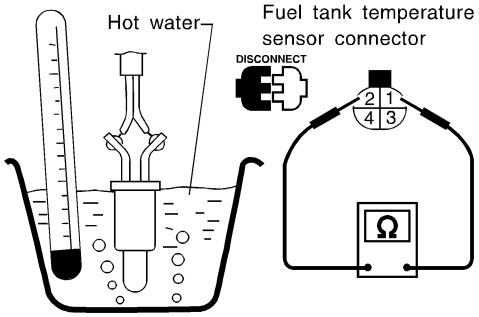

Temperature °C (°F)	Resistance kΩ
20 (68)	2.3 - 2.7
50 (122)	0.79 - 0.90

SEF974Y

OK or NG

OK	▶	GO TO 19.
NG	▶	Replace fuel level sensor unit.

19	CHECK EVAP CONTROL SYSTEM PRESSURE SENSOR

1. Remove EVAP control system pressure sensor with its harness connector connected.
   - **Never apply force to the air hole protector of the sensor if equipped.**

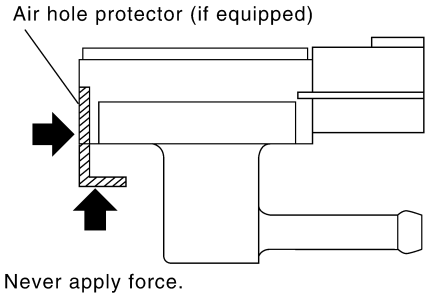

SEF799W

2. Remove EVAP control system pressure sensor from EVAP canister.
   Do not reuse the O-ring, replace it with a new one.
3. Install a vacuum pump to EVAP control system pressure sensor.
4. Turn ignition switch "ON" and check output voltage between ECM terminal 32 and ground under the following conditions.

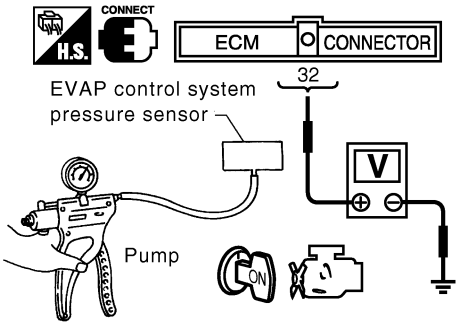

Applied vacuum kPa (mmHg, inHg)	Voltage V
Not applied	1.8 - 4.8
–26.7 (–200, –7.87)	2.1 to 2.5V lower than above value

SEC422D

CAUTION:
- **Always calibrate the vacuum pump gauge when using it.**
- **Do not apply below −93.3 kPa (−700 mmHg, −27.56 inHg) or pressure over 101.3 kPa (760 mmHg, 29.92 inHg).**
- **Discard and EVAP control system pressure sensor which has been dropped from a height of more than 0.5 m (19.7 in) onto a hard surface such as a concrete floor; use a new one.**

OK or NG

OK	▶	GO TO 20.
NG	▶	Replace EVAP control system pressure sensor.

20	CHECK EVAP PURGE LINE

Check EVAP purge line (pipe, rubber tube, fuel tank and EVAP canister) for cracks or improper connection.
Refer to "Evaporative Emission System", EC-38.

OK or NG

OK	▶	GO TO 21.
NG	▶	Repair or reconnect the hose.

21	CLEAN EVAP PURGE LINE

Clean EVAP purge line (pipe and rubber tube) using air blower.

	▶	GO TO 22.

22	CHECK REFUELING EVAP VAPOR LINE	
● Check refueling EVAP vapor line between EVAP canister and fuel tank for clogging, kink, looseness and improper connection. For location, refer to "EVAPORATIVE EMISSION LINE DRAWING", EC-42.		
OK or NG		
OK	▶	GO TO 23.
NG	▶	Repair or replace hoses and tubes.

23	CHECK SIGNAL LINE AND RECIRCULATION LINE	
● Check signal line and recirculation line between filler neck tube and fuel tank for clogging, kink, cracks, looseness and improper connection.		
OK or NG		
OK	▶	GO TO 24.
NG	▶	Repair or replace hoses, tubes or filler neck tube.

24 CHECK REFUELING CONTROL VALVE

1. Remove fuel filler cap.
2. Check air continuity between hose ends A and B.
   Blow air into hose end B. Air should flow freely into the fuel tank.
3. Blow air into hose end A and check that there is no leakage.
4. Apply pressure to both hose ends A and B [20 kPa (150 mmHg, 5.91 inHg)] using a pressure pump and a suitable 3-way connector. Check that there is no leakage.

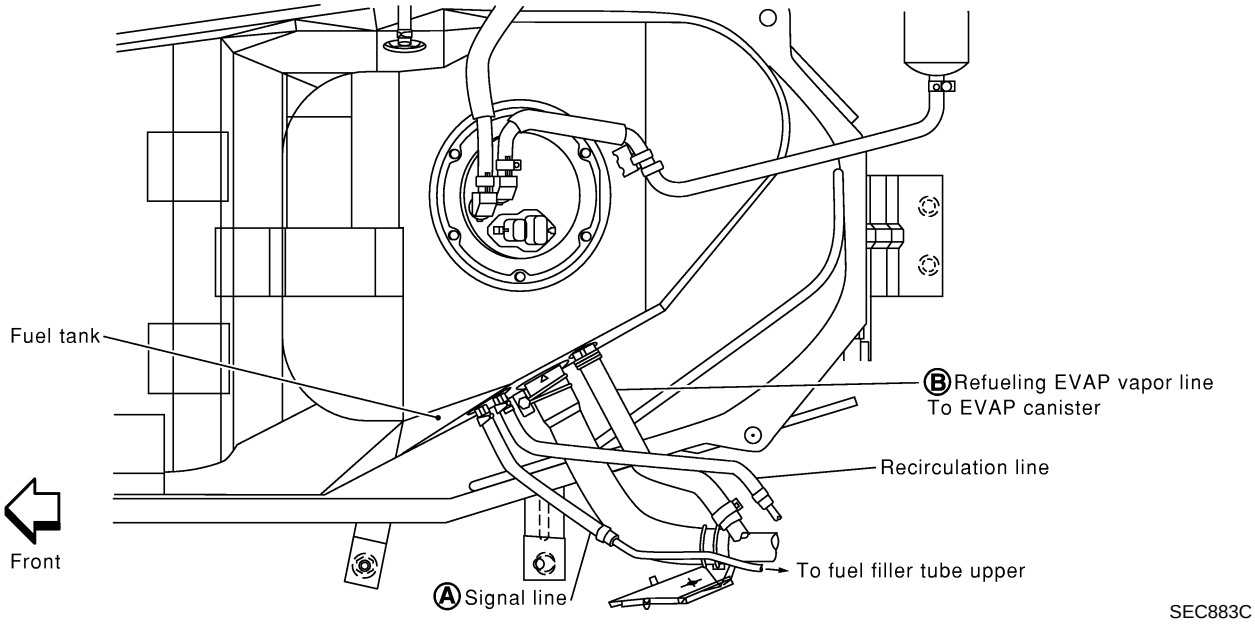

OK or NG		
OK	▶	GO TO 25.
NG	▶	Replace or refueling control valve with fuel tank.

25	CHECK FUEL LEVEL SENSOR	
Refer to EL-140, "Fuel Level Sensor Unit Check".		
OK or NG		
OK	▶	GO TO 26.
NG	▶	Replace fuel level sensor unit.

26	**CHECK INTERMITTENT INCIDENT**
Refer to "TROUBLE DIAGNOSIS FOR INTERMITTENT INCIDENT", EC-155.	
▶	**INSPECTION END**

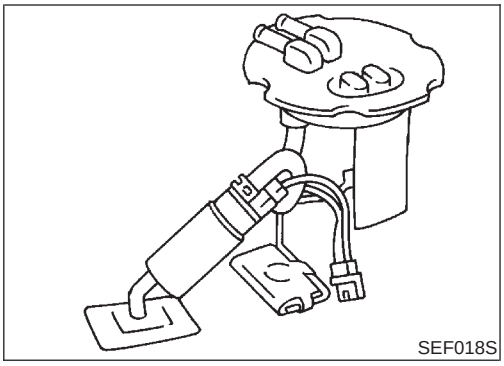

Component Description

NAEC0991

The fuel level sensor is mounted in the fuel level sensor unit. The sensor detects a fuel level in the fuel tank and transmits a signal to the combination meter. The combination meter sends the fuel level sensor signal to the ECM through CAN communication line.
It consists of two parts, one is mechanical float and the other is variable resistor. Fuel level sensor output voltage changes depending on the movement of the fuel mechanical float.

On Board Diagnostic Logic

NAEC0992

NOTE:
If DTC P0460 is displayed with DTC U1000, U1001, first perform the trouble diagnosis for DTC U1000, U1001. Refer to "DTC U1000, U1001 CAN COMMUNICATION LINE", EC-166.

When the vehicle is parked, naturally the fuel level in the fuel tank is stable. It means that output signal of the fuel level sensor does not change. If ECM senses sloshing signal from the sensor, fuel level sensor malfunction is detected.

DTC No.	Trouble diagnosis name	DTC Detecting Condition	Possible Cause
P0460 0460	Fuel level sensor circuit noise	Even though the vehicle is parked, a signal being varied is sent from the fuel level sensor to ECM.	• Fuel level sensor circuit (The fuel level sensor circuit is open or shorted.) • Fuel level sensor

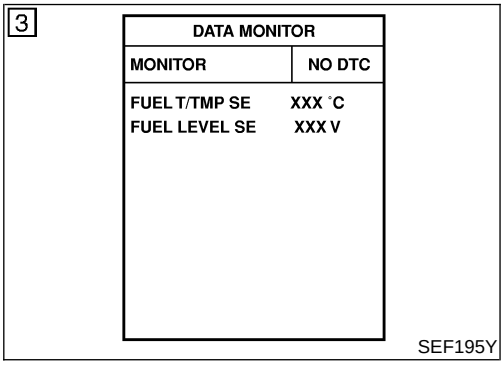

DTC Confirmation Procedure

NAEC0993

NOTE:
If DTC Confirmation Procedure has been previously conducted, always turn ignition switch OFF and wait at least 10 seconds before conducting the next test.

WITH CONSULT-II

NAEC0993S01

1) Turn ignition switch ON.
2) Select "DATA MONITOR" mode with CONSULT-II.
3) Start engine and wait maximum of 2 consecutive minutes.
4) If 1st trip DTC is detected, go to "Diagnostic Procedure", EC-424.

WITH GST

NAEC0993S02

Follow the procedure "WITH CONSULT-II" above.

Diagnostic Procedure

=NAEC0995

1	CHECK FUEL GAUGE OPERATION	
Refer to EL-133, “Meter/Gauge Operation and Odo/Trip Meter Segment Check in Diagnosis Mode”.		
OK or NG		
OK	▶	GO TO 2.
NG	▶	Follow the instruction of “Meter/Gauge Operation and Odo/Trip Meter Segment Check in Diagnosis Mode”, Refer to EL-133.

2	CHECK FUEL LEVEL SENSOR AND CIRCUIT	
Refer to EL-139, “INSPECTION/FUEL LEVEL SENSOR”.		
OK or NG		
OK	▶	GO TO 3.
NG	▶	Repair or replace malfunctioning parts.

3	CHECK INTERMITTENT INCIDENT	
Refer to “TROUBLE DIAGNOSIS FOR INTERMITTENT INCIDENT”, EC-155.		
	▶	**INSPECTION END**

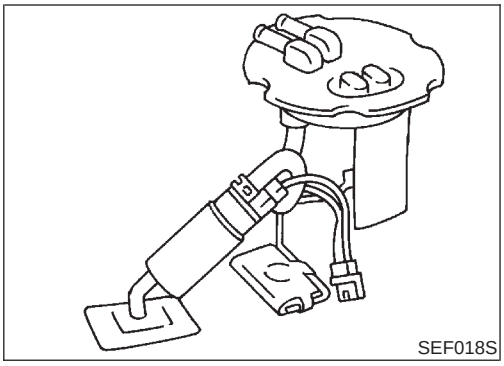
SEF018S

Component Description

=NAEC0996

The fuel level sensor is mounted in the fuel level sensor unit. The sensor detects a fuel level in the fuel tank and transmits a signal to the combination meter. The combination meter sends the fuel level sensor signal to the ECM through CAN communication line. It consists of two parts, one is mechanical float and the other is variable resistor. Fuel level sensor output voltage changes depending on the movement of the fuel mechanical float.

On Board Diagnostic Logic

NAEC0997

NOTE:
If DTC P0461 is displayed with DTC U1000, U1001, first perform the trouble diagnosis for DTC U1000, U1001. Refer to "DTC U1000, U1001 CAN COMMUNICATION LINE", EC-166.

Driving long distances naturally affect fuel gauge level.
This diagnosis detects the fuel gauge malfunction of the gauge not moving even after a long distance has been driven.

DTC No.	Trouble diagnosis name	DTC Detecting Condition	Possible Cause
P0461 0461	Fuel level sensor circuit range/ performance	The output signal of the fuel level sensor does not change within the specified range even though the vehicle has been driven a long distance.	• Harness or connectors (The CAN communication line is open or shorted.) • Harness or connectors (The level sensor circuit is open or shorted.) • Fuel level sensor

Overall Function Check

NAEC0998

Use this procedure to check the overall function of the fuel level sensor function. During this check, a 1st trip DTC might not be confirmed.

WARNING:
When performing following procedure, be sure to observe the handling of the fuel. Refer to FE-5, "Fuel Tank".

TESTING CONDITION:
Before starting overall function check, preparation of draining fuel and refilling fuel is required.

7

DATA MONITOR	
MONITOR	NO DTC
FUEL T/TMP SE	XXX °C
FUEL LEVEL SE	XXX V

SEF195Y

WITH CONSULT-II

NAEC0998S01

NOTE:
Start from step 11, if it is possible to confirm that the fuel cannot be drained by 30ℓ (7-7/8 US gal, 6-5/8 Imp gal) in advance.

1) Prepare a fuel container and a spare hose.
2) Release fuel pressure from fuel line, refer to "Fuel Pressure Release", EC-56.
3) Remove the fuel feed hose on the fuel level sensor unit.
4) Connect a spare fuel hose where the fuel feed hose was removed.

5) Turn ignition switch OFF and wait at least 10 seconds then turn ON.
6) Select "FUEL LEVEL SE" in "DATA MONITOR" mode with CONSULT-II.
7) Check "FUEL LEVEL SE" output voltage and note it.
8) Select "FUEL PUMP" in "ACTIVE TEST" mode with CONSULT-II.
9) Touch "ON" and drain fuel approximately 30ℓ (7-7/8 US gal, 6-5/8 Imp gal) and stop it.
10) Check "FUEL LEVEL SE" output voltage and note it.
11) Fill fuel into the fuel tank for 30ℓ (7-7/8 US gal, 6-5/8 Imp gal).
12) Check "FUEL LEVEL SE" output voltage and note it.
13) Check "FUEL LEVEL SE" output voltage and confirm whether the voltage changes more than 0.03V during step 7 to 10 and 10 to 12.
    If NG, go to "Diagnostic Procedure", EC-426.

WITH GST

NAEC0998S02

NOTE:
Start from step 11, if it is possible to confirm that the fuel cannot be drained by 30ℓ (7-7/8 US gal, 6-5/8 Imp gal) in advance.

1) Prepare a fuel container and a spare hose.
2) Release fuel pressure from fuel line, refer to "Fuel Pressure Release", EC-56.
3) Remove the fuel feed hose on the fuel level sensor unit.
4) Connect a spare fuel hose where the fuel feed hose was removed.
5) Turn ignition switch ON.
6) Drain fuel by 30ℓ (7-7/8 US gal, 6-5/8 Imp gal) from the fuel tank using proper equipment.
7) Confirm that the fuel gauge indication varies.
8) Fill fuel into the fuel tank for 30ℓ (7-7/8 US gal, 6-5/8 Imp gal).
9) Confirm that the fuel gauge indication varies.
10) If NG, go to "Diagnostic Procedure", EC-426.

Diagnostic Procedure

NAEC1226

1	CHECK FUEL GAUGE OPERATION	
Refer to EL-133, "Meter/Gauge Operation and Odo/Trip Meter Segment Check in Diagnosis Mode".		
OK or NG		
OK	▶	GO TO 2.
NG	▶	Follow the instruction of "Meter/Gauge Operation and Odo/Trip Meter Segment Check in Diagnosis Mode". Refer to EL-133.

2	CHECK FUEL LEVEL SENSOR AND CIRCUIT	
Refer to EL-139, "INSPECTION/FUEL LEVEL SENSOR".		
	OK or NG	
OK	▶	GO TO 3.
NG	▶	Repair or replace malfunctioning parts.

3	CHECK INTERMITTENT INCIDENT
Refer to "TROUBLE DIAGNOSIS FOR INTERMITTENT INCIDENT", EC-155.	
▶	**INSPECTION END**

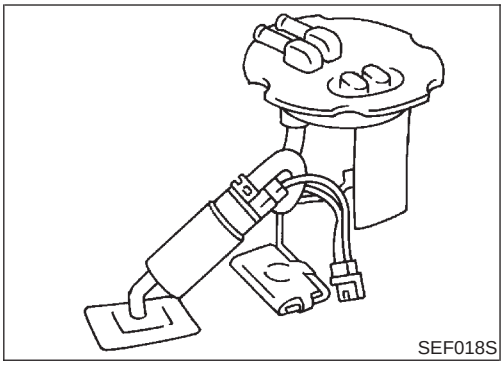
SEF018S

Component Description

NAEC0999

The fuel level sensor is mounted in the fuel level sensor unit. The sensor detects a fuel level in the fuel tank and transmits a signal to the combination meter. The combination meter sends the fuel level sensor signal to the ECM through CAN communication line.
It consists of two parts, one is mechanical float and the other is variable resistor. Fuel level sensor output voltage changes depending on the movement of the fuel mechanical float.

On Board Diagnostic Logic

NAEC1000

NOTE:
If DTC P0462, P0463 is displayed with DTC U1000, U1001, first perform the trouble diagnosis for DTC U1000, U1001. Refer to "DTC U1000, U1001 CAN COMMUNICATION LINE", EC-166.

ECM receives two signals from the fuel level sensor circuit.
One is fuel level sensor power supply circuit, and the other is fuel level sensor ground circuit.
This diagnosis indicates the former, to detect open or short circuit malfunction.

DTC No.	Trouble diagnosis name	DTC Detecting Condition	Possible Cause
P0462 0462	Fuel level sensor circuit low input	An excessively low voltage from the sensor is sent to ECM.	• Harness or connectors (The CAN communication line is open or shorted.) • Harness or connectors (The sensor circuit is open or shorted.) • Fuel level sensor
P0463 0463	Fuel level sensor circuit high input	An excessively high voltage from the sensor is sent to ECM.	

DTC Confirmation Procedure

NAEC1001

NOTE:
If DTC Confirmation Procedure has been previously conducted, always turn ignition switch OFF and wait at least 10 seconds before conducting the next test.

TESTING CONDITION:
Before performing the following procedure, confirm that battery voltage is more than 11V at ignition switch ON.

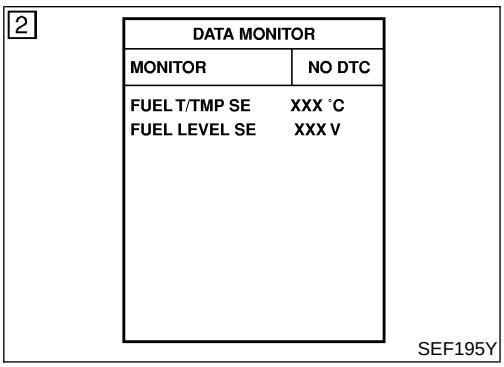

SEF195Y

WITH CONSULT-II

NAEC1001S01

1) Turn ignition switch ON.
2) Select "DATA MONITOR" mode with CONSULT-II.
3) Wait at least 5 seconds.
4) If 1st trip DTC is detected, go to "Diagnostic Procedure", EC-429.

WITH GST

NAEC1001S02

Follow the procedure "WITH CONSULT-II" above.

Diagnostic Procedure

=NAEC1003

1	CHECK FUEL GAUGE OPERATION	
Refer to EL-133, “Meter/Gauge Operation and Odo/Trip Meter Segment Check in Diagnosis Mode”.		
OK or NG		
OK	▶	GO TO 2.
NG	▶	Follow the instruction of “Meter/Gauge Operation and Odo/Trip Meter Segment Check in Diagnosis Mode”. Refer to EL-133.

2	CHECK FUEL LEVEL SENSOR AND CIRCUIT	
Refer to EL-139, “INSPECTION/FUEL LEVEL SENSOR”.		
OK or NG		
OK	▶	GO TO 3.
NG	▶	Repair or replace malfunctioning parts.

3	CHECK INTERMITTENT INCIDENT	
Refer to “TROUBLE DIAGNOSIS FOR INTERMITTENT INCIDENT”, EC-155.		
	▶	**INSPECTION END**

Description

=NAEC1004

NOTE:
If DTC P0500 is displayed with DTC U1000 or U1001, first perform the trouble diagnosis for DTC U1000, U1001. Refer to EC-166.

The vehicle speed sensor is installed in the transmission. It contains a pulse generator which provides a vehicle speed signal to the combination meter. The combination meter then sends a signal to the ECM through CAN communication line.

On Board Diagnosis Logic

NAEC1006

DTC No.	Trouble diagnosis name	DTC Detecting Condition	Possible Cause
P0500 0500	Vehicle speed sensor	The almost 0 km/h (0 MPH) signal from vehicle speed sensor is sent to ECM even when vehicle is being driven.	● Harness or connectors (The CAN communication line is open or shorted) ● Harness or connectors (The vehicle speed sensor circuit is open or shorted) ● Vehicle speed sensor ● Combination meter

DTC Confirmation Procedure

NAEC1007

CAUTION:
Always drive vehicle at a safe speed.

NOTE:
If DTC Confirmation Procedure has been previously conducted, always turn ignition switch OFF and wait at least 10 seconds before conducting the next test.

TESTING CONDITION:
Steps 1 and 2 may be conducted with the drive wheels lifted in the shop or by driving the vehicle. If a road test is expected to be easier, it is unnecessary to lift the vehicle.

WITH CONSULT-II

NAEC1007S01

1) Start engine.
2) Read “VHCL SPEED SE” in “DATA MONITOR” mode with CONSULT-II. The vehicle speed on CONSULT-II should exceed 10 km/h (6 MPH) when rotating wheels with suitable gear position.
   If NG, go to “Diagnostic Procedure”, EC-431.
   If OK, go to following step.
3) Select “DATA MONITOR” mode with CONSULT-II.
4) Warm engine up to normal operating temperature.

DATA MONITOR	
MONITOR	NO DTC
ENG SPEED	XXX rpm
COOLAN TEMP/S	XXX °C
B/FUEL SCHDL	XXX msec
PW/ST SIGNAL	OFF
VHCL SPEED SE	XXX km/h

SEF196Y

5) Maintain the following conditions for at least 60 consecutive seconds.

ENG SPEED	More than 1,800 rpm (A/T models) More than 2,000 rpm (M/T models)
COOLAN TEMP/S	More than 70°C (158°F)
B/FUEL SCHDL	More than 5.5 msec
Selector lever	Except P or N position
PW/ST SIGNAL	OFF

6) If 1st trip DTC is detected, go to "Diagnostic Procedure", EC-431.

Overall Function Check

NAEC1008

Use this procedure to check the overall function of the vehicle speed sensor signal circuit. During this check, a 1st trip DTC might not be confirmed.

WITH GST

NAEC1008S01

1) Lift up drive wheels.
2) Start engine.
3) Read vehicle speed sensor signal in "MODE 1" with GST. The vehicle speed sensor signal on GST should be able to exceed 10 km/h (6 MPH) when rotating wheels with suitable gear position.
4) If NG, go to "Diagnostic Procedure", EC-431.

Diagnostic Procedure

NAEC1010

1	CHECK VEHICLE SPEED SENSOR CIRCUIT	
Refer to EL-134, "Trouble Diagnosis".		
	OK or NG	
OK	▶	GO TO 2.
NG	▶	Repair or replace.

2	CHECK COMBINATION METER
Check combination meter function. Refer to EL-126, "COMBINATION METERS".	
▶	**INSPECTION END**

Description

NAEC1227

NOTE:

If DTC P0506 is displayed with other DTC, first perform the trouble diagnosis for the other DTC.

The ECM controls the engine idle speed to a specified level through the fine adjustment of the air, which is let into the intake manifold, by operating the electric throttle control actuator. The operating of the throttle valve is varied to allow for optimum control of the engine idling speed. The crankshaft position sensor (POS) detects the actual engine speed and sends a signal to the ECM.

The ECM controls the electric throttle control actuator so that the engine speed coincides with the target value memorized in the ECM. The target engine speed is the lowest speed at which the engine can operate steadly. The optimum value stored in the ECM is determined by taking into consideration various engine conditions, such as during warming up, deceleration, and engine load (air conditioner and power steering operation, etc.).

On Board Diagnosis Logic

NAEC1228

DTC No.	Trouble diagnosis name	DTC Detecting Condition	Possible Cause
P0506 0506	Idle speed control system RPM lower than expected	The idle speed is not in the specified range.	● Electric throttle control actuator ● Intake air leak

DTC Confirmation Procedure

NAEC1229

NOTE:

- If DTC Confirmation Procedure has been previously conducted, always turn ignition switch OFF and wait at least 10 seconds before conducting the next test.
- **If the target idle speed is out of the specified value, perform Idle Air Volume Learning before conducting DTC Confirmation Procedure. For the target idle speed, refer to the “Service Data and Specifications (SDS)”, EC-758.**

TESTING CONDITION:

- **Before performing the following procedure, confirm that battery voltage is more than 11V at idle.**
- **Always perform the test at a temperature above −10°C (14°F).**

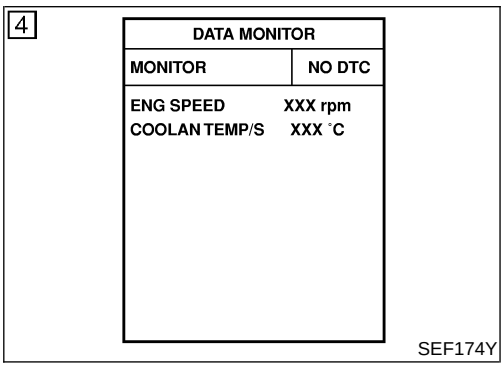

WITH CONSULT-II

NAEC1229S01

1) Open engine hood.
2) Start engine and warm it up to normal operating temperature.
3) Turn ignition switch OFF and wait at least 10 seconds.
4) Turn ignition switch ON again and select “DATA MONITOR” mode with CONSULT-II.
5) Start engine and run it for at least 1 minute at idle speed.
6) If 1st trip DTC is detected, go to “Diagnostic Procedure”, EC-433.

WITH GST

NAEC1229S02

Follow the procedure "With CONSULT-II" above.

Diagnostic Procedure

NAEC1230

1	CHECK INTAKE AIR LEAK	
1. Start engine and let it idle. 2. Listen for an intake air leak after the mass air flow sensor. **OK or NG**		
OK	▶	GO TO 2.
NG	▶	Discover air leak location and repair.

2	REPLACE ECM	
1. Stop engine. 2. Replace ECM. 3. Perform initialization of NVIS (NATS) system and registration of all NVIS (NATS) ignition key IDs. Refer to "NVIS (NISSAN VEHICLE IMMOBILIZER SYSTEM — NATS)", EC-93. 4. Perform "Accelerator Pedal Released Position Learning", EC-73. 5. Perform "Throttle Valve Closed Position Learning", EC-73. 6. Perform "Idle Air Volume Learning", EC-73.		
	▶	**INSPECTION END**

Description

NAEC1231

NOTE:
If DTC P0507 is displayed with other DTC, first perform the trouble diagnosis for the other DTC.

The ECM controls the engine idle speed to a specified level through the fine adjustment of the air, which is let into the intake manifold, by operating the electric throttle control actuator. The operating of the throttle valve is varied to allow for optimum control of the engine idling speed. The crankshaft position sensor (POS) detects the actual engine speed and sends a signal to the ECM.
The ECM controls the electric throttle control actuator so that the engine speed coincides with the target value memorized in the ECM. The target engine speed is the lowest speed at which the engine can operate steadly. The optimum value stored in the ECM is determined by taking into consideration various engine conditions, such as during warming up, deceleration, and engine load (air conditioner and power steering operation, etc.).

On Board Diagnosis Logic

NAEC1232

DTC No.	Trouble diagnosis name	DTC Detecting Condition	Possible Cause
P0507 0507	Idle speed control system RPM higher than expected	The idle speed is not in the specified range.	● Electric throttle control actuator ● Intake air leak ● PCV system

DTC Confirmation Procedure

NAEC1233

NOTE:

- If DTC Confirmation Procedure has been previously conducted, always turn ignition switch OFF and wait at least 10 seconds before conducting the next test.
- **If the target idle speed is out of the specified value, perform Idle Air Volume Learning before conducting DTC Confirmation Procedure. For the target idle speed, refer to the “Service Data and Specifications (SDS)”, EC-758.**

TESTING CONDITION:

- **Before performing the following procedure, confirm that battery voltage is more than 11V at idle.**
- **Always perform the test at a temperature above −10°C (14°F).**

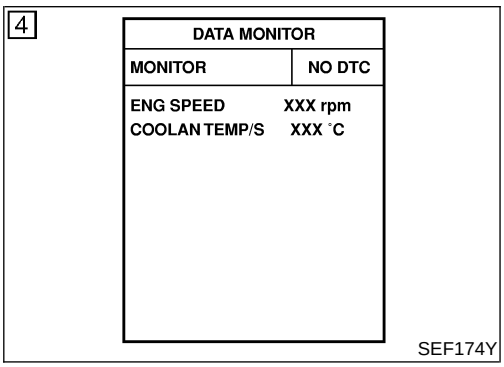

WITH CONSULT-II

NAEC1233S01

1) Open engine hood.
2) Start engine and warm it up to normal operating temperature.
3) Turn ignition switch OFF and wait at least 10 seconds.
4) Turn ignition switch ON again and select “DATA MONITOR” mode with CONSULT-II.
5) Start engine and run it for at least 1 minute at idle speed.
6) If 1st trip DTC is detected, go to “Diagnostic Procedure”, EC-435.

WITH GST

NAEC1233S02

Follow the procedure "With CONSULT-II" above.

Diagnostic Procedure

NAEC1234

1	CHECK PCV HOSE CONNECTION	
Confirm that PCV hose is connected correctly.		
	OK or NG	
OK	▶	GO TO 2.
NG	▶	Repair or replace.

2	CHECK INTAKE AIR LEAK	
1. Start engine and let it idle. 2. Listen for an intake air leak after the mass air flow sensor.		
	OK or NG	
OK	▶	GO TO 3.
NG	▶	Discover air leak location and repair.

3	REPLACE ECM	
1. Stop engine. 2. Replace ECM. 3. Perform initialization of NVIS (NATS) system and registration of all NVIS (NATS) ignition key IDs. Refer to "NVIS (NISSAN VEHICLE IMMOBILIZER SYSTEM — NATS)", EC-93. 4. Perform "Accelerator Pedal Released Position Learning", EC-73. 5. Perform "Throttle Valve Closed Position Learning", EC-73. 6. Perform "Idle Air Volume Learning", EC-73.		
	▶	**INSPECTION END**

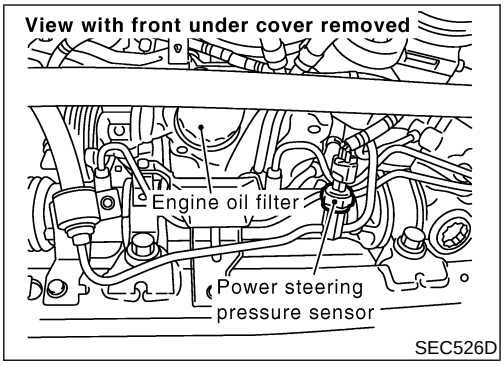

Component Description

NAEC1359

Power steering pressure (PSP) sensor is installed to the power steering high-pressure tube and detects a power steering load. This sensor is a potentiometer which transforms the power steering load into output voltage, and emits the voltage signal to the ECM. The ECM controls the electric throttle control actuator and adjusts the throttle valve opening angle to increase the engine speed and adjusts the idle speed for the increased load.

CONSULT-II Reference Value in Data Monitor Mode

NAEC1360

Specification data are reference values.

MONITOR ITEM	CONDITION		SPECIFICATION
PW/ST SIGNAL	● Engine: After warming up, idle the engine	Steering wheel is in neutral position. (Forward direction)	OFF
		Steering wheel is turned.	ON

On Board Diagnosis Logic

NAEC1361

The MIL will not light up for this self-diagnosis.

NOTE:
If DTC P0550 is displayed with DTC P1229, first perform the trouble diagnosis for DTC P1229. Refer to EC-562.

DTC No.	Trouble diagnosis name	DTC detecting condition	Possible cause
P0550 0550	Power steering pressure sensor circuit	An excessively low or high voltage from the sensor is sent to ECM.	● Harness or connectors (The sensor circuit is open or shorted.) ● Power steering pressure sensor

DTC Confirmation Procedure

NAEC1362

NOTE:
If DTC Confirmation Procedure has been previously conducted, always turn ignition switch OFF and wait at least 10 seconds before conducting the next test.

With CONSULT-II

1. Turn ignition switch ON.
2. Select “DATA MONITOR” mode with CONSULT-II.
3. Start engine and let it idle for at least 5 seconds.
4. If 1st trip DTC is detected, go to EC-438, “Diagnostic Procedure”.

With GST

Follow the procedure “WITH CONSULT-II” above.

Wiring Diagram

NAEC1363

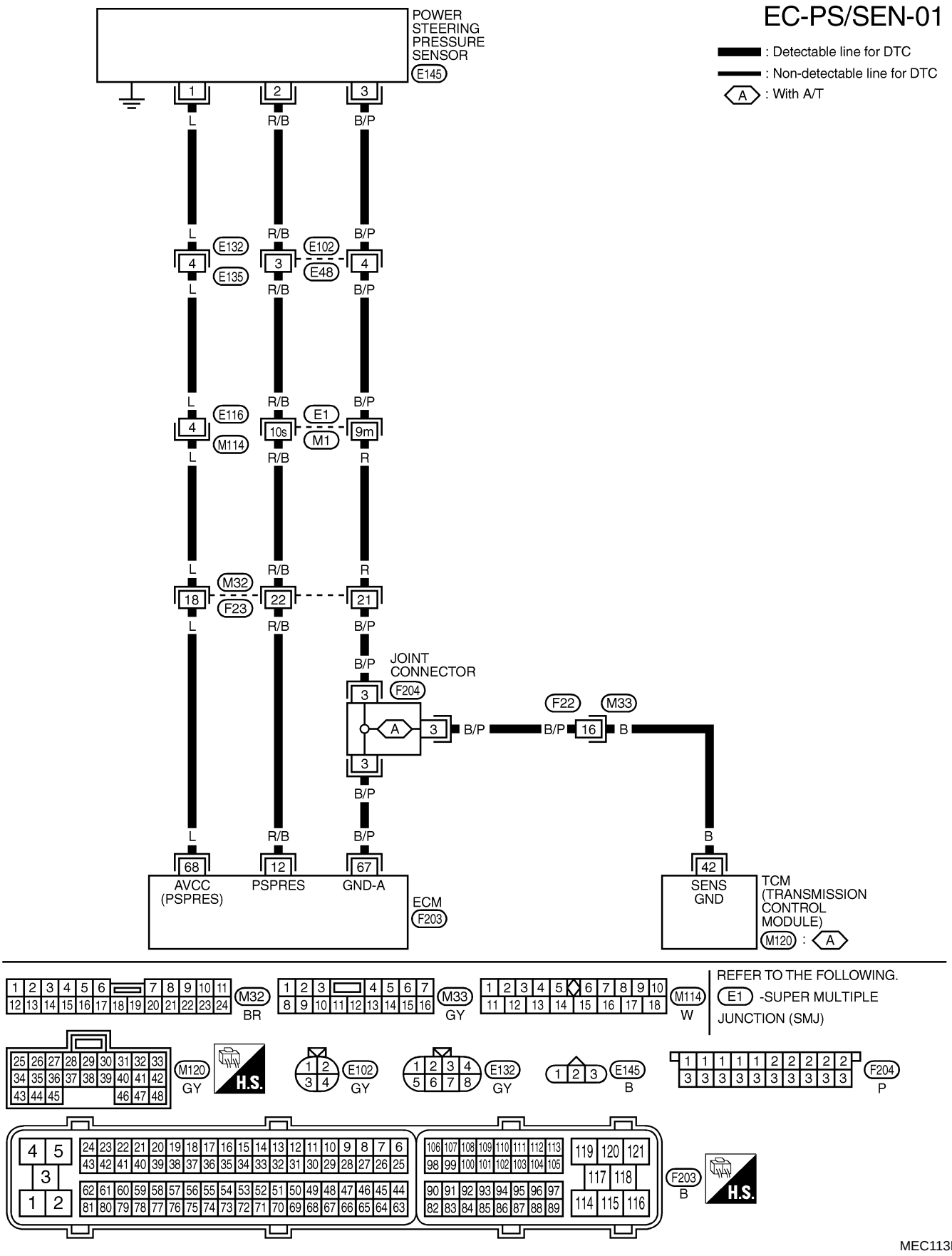

Specification data are reference values and are measured between each terminal and body ground.

CAUTION:

Do not use ECM ground terminals when measuring input/output voltage. Doing so may result in damage to the ECM's transistor. Use a ground other than ECM terminals, such as the ground.

TERMINAL NO.	WIRE COLOR	ITEM	CONDITION	DATA (DC Voltage)
12	R/B	Power steering pressure sensor	**[Engine is running]** ● Steering wheel is being turned.	0.5 - 4.0V
			[Engine is running] ● Steering wheel is not being turned.	0.4 - 0.8V
67	B/P	Sensor ground	**[Engine is running]** ● **Warm-up condition** ● Idle speed	Approximately 0V
68	L	Sensor power supply	**[Ignition switch ON]**	Approximately 5V

Diagnostic Procedure

NAEC1364

1 CHECK GROUND CONNECTIONS

1. Turn ignition switch OFF.
2. Loosen and retighten three ground screws on the body.
   Refer to "Ground Inspection", EC-165.

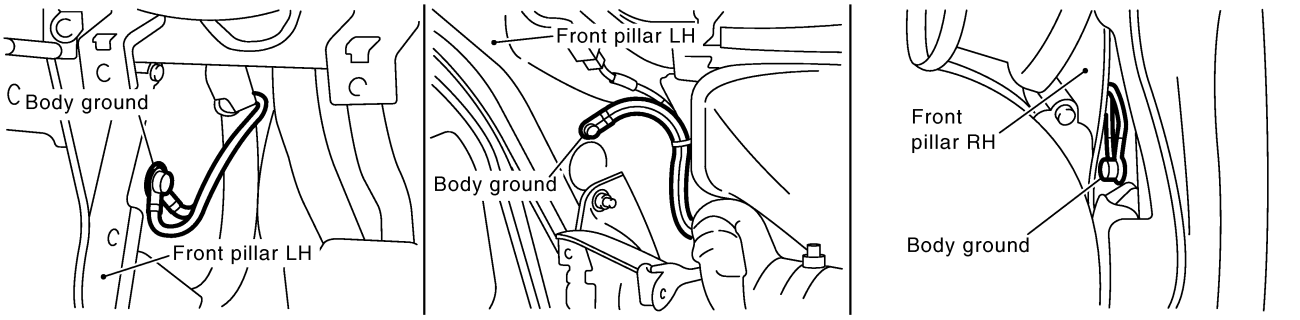

SEC997D

OK or NG

OK	▶	GO TO 2.
NG	▶	Repair or replace ground connections.

2	CHECK PSP SENSOR POWER SUPPLY CIRCUIT

1. Disconnect PSP sensor harness connector.
2. Turn ignition switch ON.

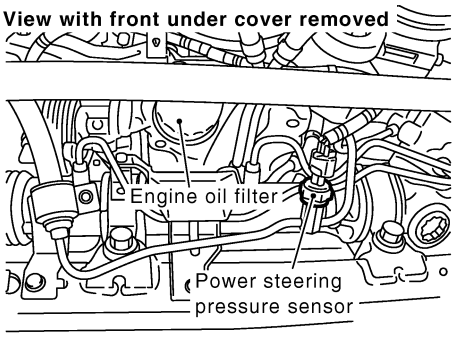

SEC526D

3. Check voltage between PSP sensor terminal 1 and ground with CONSULT-II or tester.

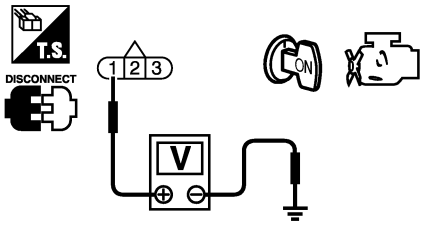

SEC048D

Voltage: Approximately 5V

OK or NG

OK	▶	GO TO 4.
NG	▶	GO TO 3.

3	DETECT MALFUNCTIONING PART

Check the following.
- Harness connectors E132, E135
- Harness connectors E116, M114
- Harness connectors M32, F23
- Harness for open or short between ECM and power steering pressure sensor

	▶	Repair open circuit or short to ground or short to power in harness or connectors.

4	CHECK PSP SENSOR GROUND CIRCUIT FOR OPEN AND SHORT

1. Turn ignition switch OFF.
2. Disconnect ECM harness connector.
3. Disconnect TCM harness connector.
4. Check harness continuity between PSP sensor terminal 3 and ECM terminal 67, TCM terminal 42.
   Refer to Wiring Diagram.
   Continuity should exist.
5. Also check harness for short to ground and short to power.

OK or NG

OK	▶	GO TO 6.
NG	▶	GO TO 5.

5	DETECT MALFUNCTIONING PART
Check the following. ● Harness connectors E102, E48 ● Harness connectors E1, M1 ● Harness connectors M32, F23 ● Harness connectors F22, M33 ● Joint connector F204 ● Harness for open or short between ECM and PSP sensor ● Harness for open or short between TCM and PSP sensor.	
▶	Repair open circuit or short to ground or short to power in harness or connectors.

6	CHECK PSP SENSOR INPUT SIGNAL CIRCUIT FOR OPEN AND SHORT
1. Check harness continuity between ECM terminal 12 and PSP sensor terminal 2. Refer to wiring diagram. **Continuity should exist.** 2. Also check harness for short to ground and short to power.	
OK or NG	
OK ▶	GO TO 8.
NG ▶	GO TO 7.

7	DETECT MALFUNCTIONING PART
Check the following. ● Harness connectors E102, E48 ● Harness connectors E1, M1 ● Harness connectors M32, F23 ● Harness for open or short between ECM and power steering pressure sensor	
▶	Repair open circuit or short to ground or short to power in harness or connectors.

8	CHECK PSP SENSOR
Refer to "Component Inspection", EC-440.	
OK or NG	
OK ▶	GO TO 9.
NG ▶	Replace PSP sensor.

9	CHECK INTERMITTENT INCIDENT
Refer to "TROUBLE DIAGNOSIS FOR INTERMITTENT INCIDENT", EC-155.	
▶	**INSPECTION END**

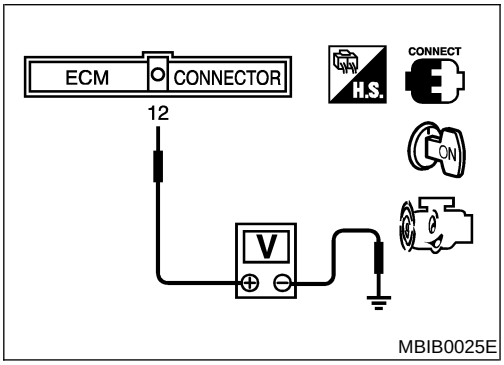

Component Inspection

NAEC1365

POWER STEERING PRESSURE SENSOR

1. Reconnect all harness connectors disconnected.
2. Start engine and let it idle.
3. Check voltage between ECM terminal 12 and ground under the following conditions.

Condition	Voltage
Steering wheel is turned fully.	Approximately 0.5 - 4.0V
Steering wheel is not turned.	Approximately 0.4 - 0.8V

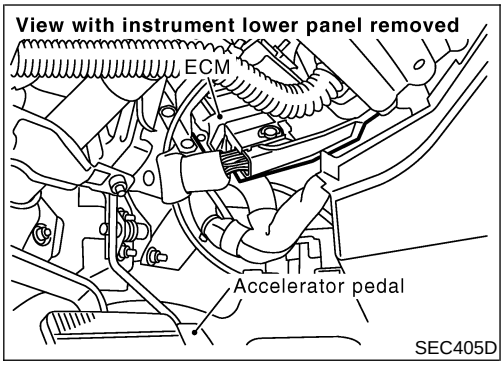

Component Description

NAEC1235

The ECM consists of a microcomputer and connectors for signal input and output and for power supply. The unit controls the engine.

On Board Diagnosis Logic

NAEC1236

This self-diagnosis has one or two trip detection logic.

DTC No.	Trouble diagnosis name	DTC Detecting Condition		Possible Cause
P0605 0605	Engine control module	A)	ECM calculation function is malfunctioning.	● ECM
		B)	ECM EEP-ROM system is malfunctioning.	
		C)	ECM self shut-off function is malfunctioning.	

FAIL-SAFE MODE

ECM enters fail-safe mode when the malfunction A is detected.

Detected items	Engine operation condition in fail-safe mode
Malfunction A	● ECM stops the electric throttle control actuator control, throttle valve is maintained at a fixed opening (approx. 5 degrees) by the return spring. ● ECM deactivates ASCD operation.

DTC Confirmation Procedure

NAEC1237

Perform PROCEDURE FOR MALFUNCTION A first. If the 1st trip DTC cannot be confirmed, perform PROCEDURE FOR MALFUNCTION B. If there is no malfunction on PROCEDURE FOR MALFUNCTION B, perform PROCEDURE FOR MALFUNCTION C.

NOTE:

If DTC Confirmation Procedure has been previously conducted, always turn ignition switch OFF and wait at least 10 seconds before conducting the next test.

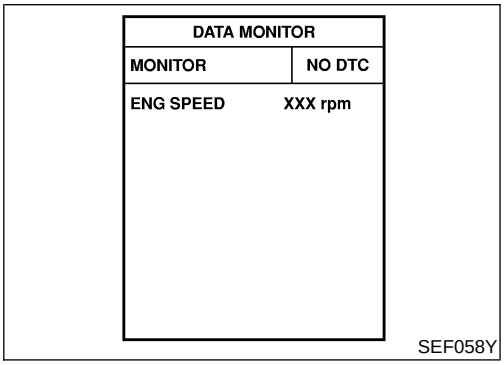

PROCEDURE FOR MALFUNCTION A

With CONSULT-II

1) Turn ignition switch ON.
2) Select “DATA MONITOR” mode with CONSULT-II.
3) If 1st trip DTC is detected, go to EC-442, “Diagnostic Procedure”.

With GST

Follow the procedure “With CONSULT-II” above.

DATA MONITOR	
MONITOR	NO DTC
ENG SPEED	XXX rpm

SEF058Y

PROCEDURE FOR MALFUNCTION B

With CONSULT-II

1) Turn ignition switch ON and wait at least 1 second.
2) Select "DATA MONITOR" mode with CONSULT-II.
3) Turn ignition switch OFF, wait at least 10 seconds, and then turn ON.
4) If 1st trip DTC is detected, go to EC-442, "Diagnostic Procedure".

With GST

Follow the procedure "With CONSULT-II" above.

DATA MONITOR	
MONITOR	NO DTC
ENG SPEED	XXX rpm

SEF058Y

PROCEDURE FOR MALFUNCTION C

With CONSULT-II

1) Turn ignition switch ON and wait at least 1 second.
2) Select "DATA MONITOR" mode with CONSULT-II.
3) Turn ignition switch OFF, wait at least 10 seconds, and then turn ON.
4) Repeat "step 3" 32 times.
5) If 1st trip DTC is detected, go to EC-442, "Diagnostic Procedure".

With GST

Follow the procedure "With CONSULT-II" above.

Diagnostic Procedure

NAEC1238

1	INSPECTION START
With CONSULT-II 1. Turn ignition switch ON. 2. Select "SELF DIAG RESULTS" mode with CONSULT-II. 3. Touch "ERASE". 4. **Perform "DTC Confirmation Procedure".** See EC-441. 5. Is the 1st trip DTC P0605 displayed again?	
With GST 1. Turn ignition switch ON. 2. Select MODE 4 with GST. 3. Touch "ERASE". 4. **Perform "DTC Confirmation Procedure".** See EC-441. 5. Is the 1st trip DTC P0605 displayed again?	
Yes or No	
Yes ▶	GO TO 2.
No ▶	**INSPECTION END**

2	REPLACE ECM
1. Replace ECM. 2. Perform initialization of NVIS (NATS) system and registration of all NVIS (NATS) ignition key IDs. Refer to "NVIS (NISSAN VEHICLE IMMOBILIZER SYSTEM — NATS)", EC-93. 3. Perform "Accelerator Pedal Released Position Learning", EC-73. 4. Perform "Throttle Valve Closed Position Learning", EC-73. 5. Perform "Idle Air Volume Learning", EC-73.	
▶	**INSPECTION END**

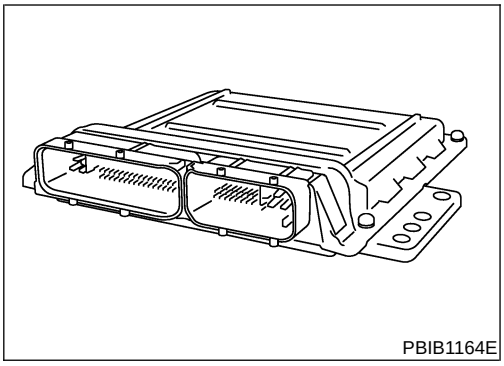
PBIB1164E

Component Description

NAEC1239

Battery voltage is supplied to the ECM even when the ignition switch is turned OFF for the ECM memory function of the DTC memory, the air-fuel ratio feedback compensation value memory, the idle air volume learning value memory, etc.

ECM Terminals and Reference Value

NAEC1244

Specification data are reference values and are measured between each terminal and body ground.

CAUTION:

Do not use ECM ground terminals when measuring input/output voltage. Doing so may result in damage to the ECM's transistor. Use a ground other than ECM terminals, such as the ground.

TERMINAL NO.	WIRE COLOR	ITEM	CONDITION	DATA (DC Voltage)
121	W/R	Power supply for ECM (Back-up)	**[Ignition switch OFF]**	BATTERY VOLTAGE (11 - 14V)

On Board Diagnosis Logic

NAEC1240

DTC No.	Trouble diagnosis name	DTC detecting condition	Possible cause
P1065 1065	ECM power supply circuit	ECM back-up RAM system does not function properly.	● Harness or connectors [ECM power supply (back-up) circuit is open or shorted.] ● ECM

DTC Confirmation Procedure

NAEC1241

NOTE:

If DTC Confirmation Procedure has been previously conducted, always turn ignition switch OFF and wait at least 10 seconds before conducting the next test.

DATA MONITOR	
MONITOR	NO DTC
ENG SPEED	XXX rpm

SEF058Y

With CONSULT-II

1. Turn ignition switch ON and wait at least 1 second.
2. Select "DATA MONITOR" mode with CONSULT-II.
3. Start engine and let it idle for 1 second.
4. Turn ignition switch OFF, wait at least 10 seconds, and then turn ON.
5. Repeat steps 3 and 4 four times.
6. If 1st trip DTC is detected, go to "Diagnostic Procedure", EC-446.

With GST

Follow the procedure "WITH CONSULT-II" above.

Wiring Diagram

NAEC1242

EC-ECM/PW-01

: Detectable line for DTC
: Non-detectable line for DTC

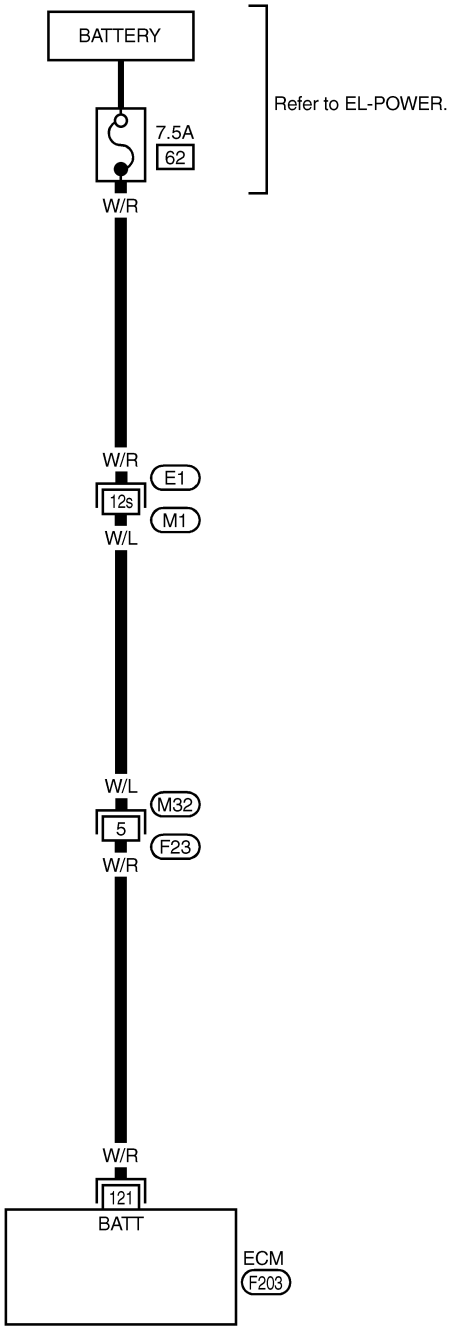

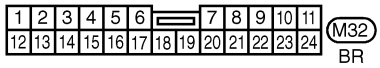

REFER TO THE FOLLOWING.
E1 -SUPER MULTIPLE JUNCTION (SMJ)

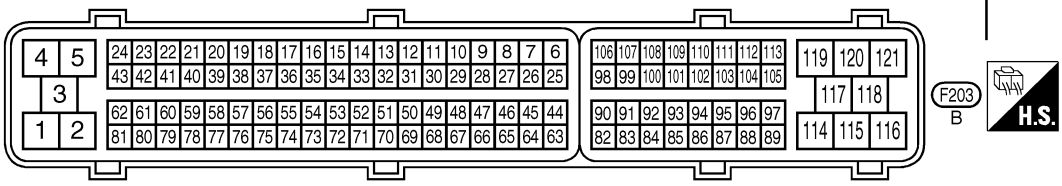

MEC345E

Diagnostic Procedure

NAEC1243

1	CHECK ECM POWER SUPPLY

1. Turn ignition switch OFF.
2. Disconnect ECM harness connector.
3. Check voltage between ECM terminal 121 and ground with CONSULT-II or tester.

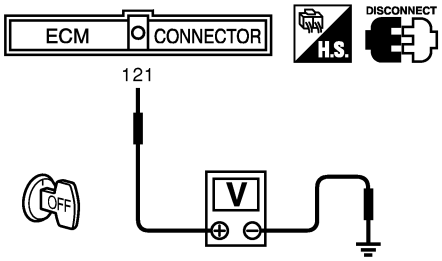

MBIB0026E

Voltage: Battery voltage

OK or NG

OK	▶	GO TO 3.
NG	▶	GO TO 2.

2	DETECT MALFUNCTIONING PART

Check the following.
- Harness connectors E1, M1
- Harness connectors M32, F23
- 7.5A fuse
- Harness for open or short between ECM and fuse

	▶	Repair or replace harness or connectors.

3	CHECK INTERMITTENT INCIDENT

Refer to “TROUBLE DIAGNOSIS FOR INTERMITTENT INCIDENT”, EC-155.

OK or NG

OK	▶	GO TO 4.
NG	▶	Repair or replace harness or connectors.

4	PERFORM DTC CONFIRMATION PROCEDURE
With CONSULT-II 1. Turn ignition switch ON. 2. Select "SELF DIAG RESULTS" mode with CONSULT-II. 3. Touch "ERASE". 4. **Perform "DTC Confirmation Procedure".** See EC-443. 5. Is the 1st trip DTC P1065 displayed again?	
With GST 1. Turn ignition switch ON. 2. Select MODE 4 with GST. 3. Touch "ERASE". 4. **Perform "DTC Confirmation Procedure".** See EC-443. 5. Is the 1st trip DTC P1065 displayed again?	
Yes or No	
Yes ▶	GO TO 5.
No ▶	**INSPECTION END**

5	REPLACE ECM
1. Replace ECM. 2. Perform initialization of NVIS (NATS) system and registration of all NVIS (NATS) ignition key IDs. Refer to "NVIS (NISSAN VEHICLE IMMOBILIZER SYSTEM — NATS)", EC-93. 3. Perform "Accelerator Pedal Released Position Learning", EC-73. 4. Perform "Throttle Valve Closed Position Learning", EC-73. 5. Perform "Idle Air Volume Learning", EC-73.	
▶	**INSPECTION END**

Description

NAEC1371

SYSTEM DESCRIPTION

NAEC1371S01

Sensor	Input signal to ECM function	ECM	Actuator
Crankshaft position sensor (POS)	Engine speed and piston position	Intake valve timing control	Intake valve timing control solenoid valve
Camshaft position sensor (PHASE)			
Engine coolant temperature sensor	Engine coolant temperature		
Vehicle speed signal*1	Vehicle speed		

*1: This signal is sent to the ECM through CAN communication line.

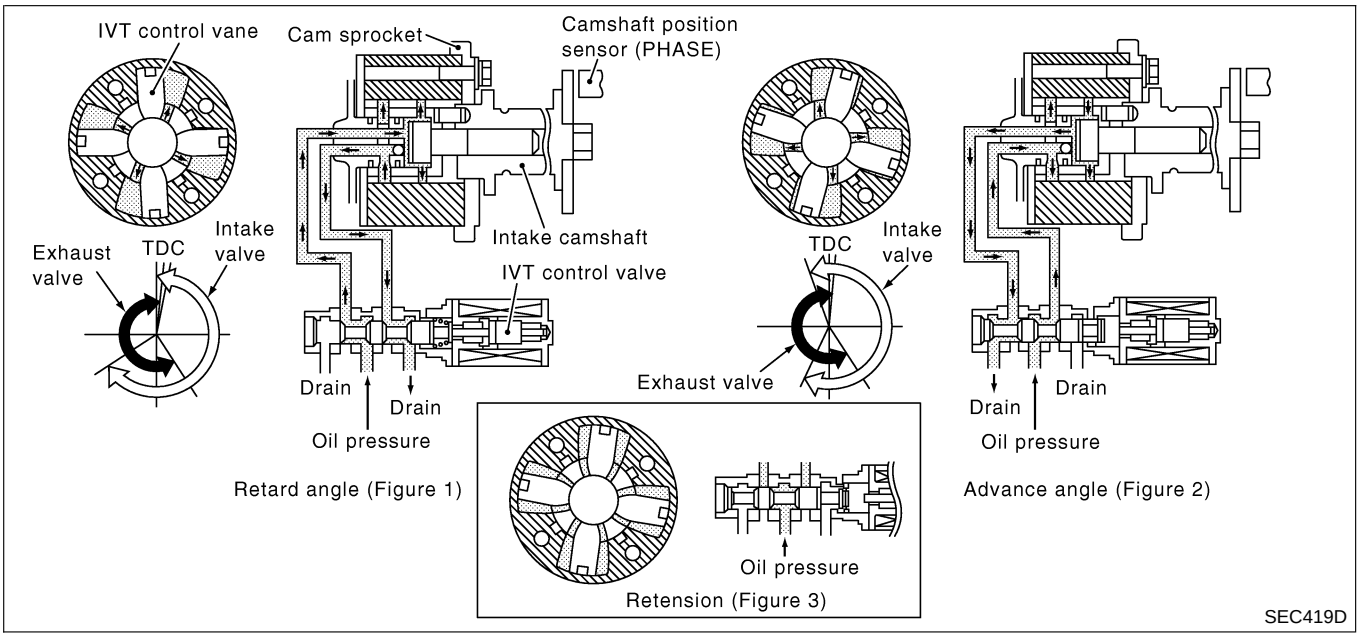

This mechanism hydraulically controls cam phases continuously with the fixed operating angle of the intake valve.
The ECM receives signals such as crankshaft position, camshaft position, engine speed, and engine coolant temperature. Then, the ECM sends ON/OFF pulse duty signals to the camshaft timing control valve depending on driving status. This makes it possible to control the shut/open timing of the intake valve to increase engine torque in low/mid speed range and output in high-speed range.

CONSULT-II Reference Value in Data Monitor Mode

NAEC1372

Specification data are reference values.

MONITOR ITEM	CONDITION		SPECIFICATION
INT/V TIM (B1) INT/V TIM (B2)	• Engine: After warming up • Shift lever N • Quickly depressed accelerator pedal • No-load	Idle	0° CA
		2,000 rpm	Approximately 12 - 18° CA
INT/V SOL (B1) INT/V SOL (B2)	• Engine: After warming up • Shift lever N • Quickly depressed accelerator pedal • No-load	Idle	0%
		2,000 rpm	Approximately 40%

On Board Diagnosis Logic

=NAEC1373

DTC No.	Trouble diagnosis name	DTC Detecting Condition	Possible Cause
P1110 1110 (Bank 1)	Intake valve timing control performance	The alignment of the intake valve timing control has been misregistered.	• Crankshaft position sensor (POS) • Camshaft position sensor (PHASE) • Accumulation of debris to the signal pick-up portion of the camshaft
P1135 1135 (Bank 2)			

FAIL-SAFE MODE

NAEC1373S01

When malfunction is detected, the ECM enters fail-safe mode.

Detected items	Engine operating condition in fail-safe mode
Intake valve timing control	The signal is not energized to the solenoid valve and the valve control does not function.

DTC Confirmation Procedure

NAEC1374

CAUTION:

Always drive at a safe speed.

NOTE:

- **If DTC P1110 or P1135 is displayed with DTC P1111 or P1136, first perform trouble diagnosis for DTC P1111 or P1136, EC-451.**
- **If DTC Confirmation Procedure has been previously conducted, always turn ignition switch OFF and wait at least 10 seconds before conducting the next test.**

WITH CONSULT-II

NAEC1374S01

1) Turn ignition switch ON.
2) Select “DATA MONITOR” mode with CONSULT-II.
3) Maintain the following conditions for at least 10 conecutive seconds.

ENG SPEED	1,200 - 2,000 rpm (A constant rotation is maintained.)
COOLAN TEMPS	More than 60°C (140°F)
Selector lever	1st position
Driving location	Driving vehicle uphill (Increased engine load will help maintain the driving conditions required for this test.)

4) Maintain the following conditions for at least 20 conecutive seconds.

ENG SPEED	Idle
COOLAN TEMPS	More than 60°C (140°F)
Selector lever	P or N position

DATA MONITOR	
MONITOR	NO DTC
ENG SPEED	XXX rpm
B/FUEL SCHDL	XXX msec
COOLAN TENP/S	XXX °C
VHCL SPEED SE	XXX km/h
INT/V TIM (B1)	XXX °CA
INT/V TIM (B2)	XXX °CA
INT/V SOL (B1)	XXX %
INT/V SOL (B2)	XXX %

SEF353Z

5) If 1st trip DTC is detected, go to "Diagnostic Procedure", EC-450.

WITH GST

NAEC1374S02

Follow the procedure "With CONSULT-II" above.

Diagnostic Procedure

NAEC1375

1	CHECK CRANKSHAFT POSITION SENSOR (POS)	
Refer to "Component Inspection", EC-325.		
	OK or NG	
OK	▶	GO TO 2.
NG	▶	Replace crankshaft position sensor (POS).

2	CHECK CAMSHAFT POSITION SENSOR (PHASE)	
Refer to "Component Inspection", EC-333.		
	OK or NG	
OK	▶	GO TO 3.
NG	▶	Replace.

3	CHECK CAMSHAFT (INTAKE)	
Visually check for chipped signal plate at camshaft.		

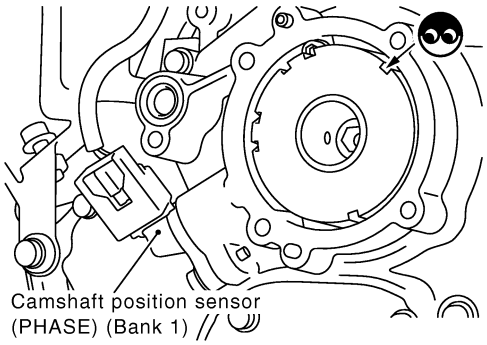

SEC578D

	OK or NG	
OK	▶	GO TO 4.
NG	▶	Replace camshaft.

4	CHECK INTERMITTENT INCIDENT	
Refer to "TROUBLE DIAGNOSIS FOR INTERMITTENT INCIDENT", EC-155. For Wiring Diagram, refer to EC-321 CKP sensor (POS), and EC-328 for CMP sensor (PHASE).		
	OK or NG	
	▶	**INSPECTION END**

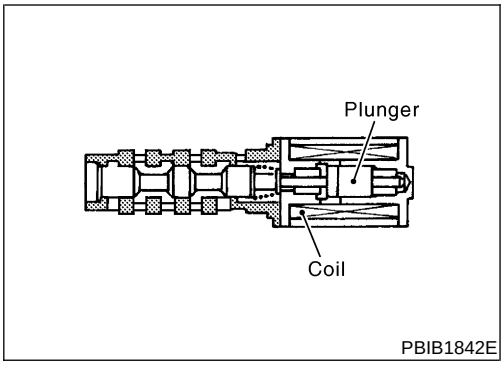

Component Description

NAEC1036

Intake valve timing control solenoid valve is activated by ON/OFF pulse duty (ratio) signals from the ECM.
The intake valve timing control solenoid valve changes the oil amount and direction of flow through intake valve timing control unit or stops oil flow.
The longer pulse width advances valve angle.
The shorter pulse width retards valve angle.
When ON and OFF pulse widths become equal, the solenoid valve stops oil pressure flow to fix the intake valve angle at the control position.

CONSULT-II Reference Value in Data Monitor Mode

NAEC1037

Specification data are reference values.

MONITOR ITEM	CONDITION		SPECIFICATION
INT/V SOL (B1) INT/V SOL (B2)	• Engine: After warming up • Shift lever N • Quickly depressed accelerator pedal • No-load	Idle	0%
		2,000 rpm	Approximately 40%

ECM Terminals and Reference Value

NAEC1038

Specification data are reference values, and are measured between each terminal and ground.
Pulse signal is measured by CONSULT-II.

CAUTION:
Do not use ECM ground terminals when measuring input/output voltage. Doing so may result in damage to the ECM's transistor. Use a ground other than the ECM terminals, such as the ground.

TERMINAL NO.	WIRE COLOR	ITEM	CONDITION	DATA (DC Voltage)
10	P/L	Intake valve timing control solenoid valves (bank 2)	**[Engine is running]** • **Warm-up condition** • Idle speed	BATTERY VOLTAGE (11 - 14V)
			[Engine is running] • **Warm-up condition** • When revving engine up to 2,000 rpm quickly.	7 - 8V★ 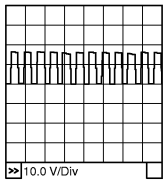 PBIB1790E
11	OR/B	Intake valve timing control solenoid valves (bank 1)	**[Engine is running]** • **Warm-up condition** • Idle speed	BATTERY VOLTAGE (11 - 14V)
			[Engine is running] • **Warm-up condition** • When revving engine up to 2,000 rpm quickly.	7 - 8V★ 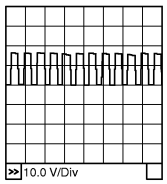 PBIB1790E

★: Average voltage for pulse signal (Actual pulse signal can be confirmed by oscilloscope.)

On Board Diagnosis Logic

NAEC1039

DTC No.	Trouble diagnosis name	DTC Detecting Condition	Possible Cause
P1111 1111 (Bank 1)	Intake valve timing control solenoid valve circuit	An improper voltage is sent to the ECM through intake valve timing control solenoid valve.	● Harness or connectors (Intake valve timing control solenoid valve circuit is open or shorted.) ● Intake valve timing control solenoid valve
P1136 1136 (Bank 2)			

DATA MONITOR	
MONITOR	NO DTC
ENG SPEED	XXX rpm
B/FUEL SCHDL	XXX msec
COOLAN TEMP/S	XXX °C
VHCL SPEED SE	XXX km/h
INT/V TIM (B1)	XXX °CA
INT/V TIM (B2)	XXX °CA
INT/V SOL (B1)	XXX %
INT/V SOL (B2)	XXX %

SEF353Z

DTC Confirmation Procedure

NAEC1040

NOTE:
If DTC Confirmation Procedure has been previously conducted, always turn ignition switch OFF and wait at least 10 seconds before conducting the next test.

WITH CONSULT-II

NAEC1040S01

1) Turn ignition switch ON.
2) Select “DATA MONITOR” mode with CONSULT-II.
3) Start engine and let it idle for 5 seconds.
4) If 1st trip DTC is detected, go to “Diagnostic Procedure”, EC-455.

WITH GST

NAEC1040S02

Follow the procedure “With CONSULT-II” above.

Wiring Diagram

NAEC1041

BANK 1

NAEC1041S01

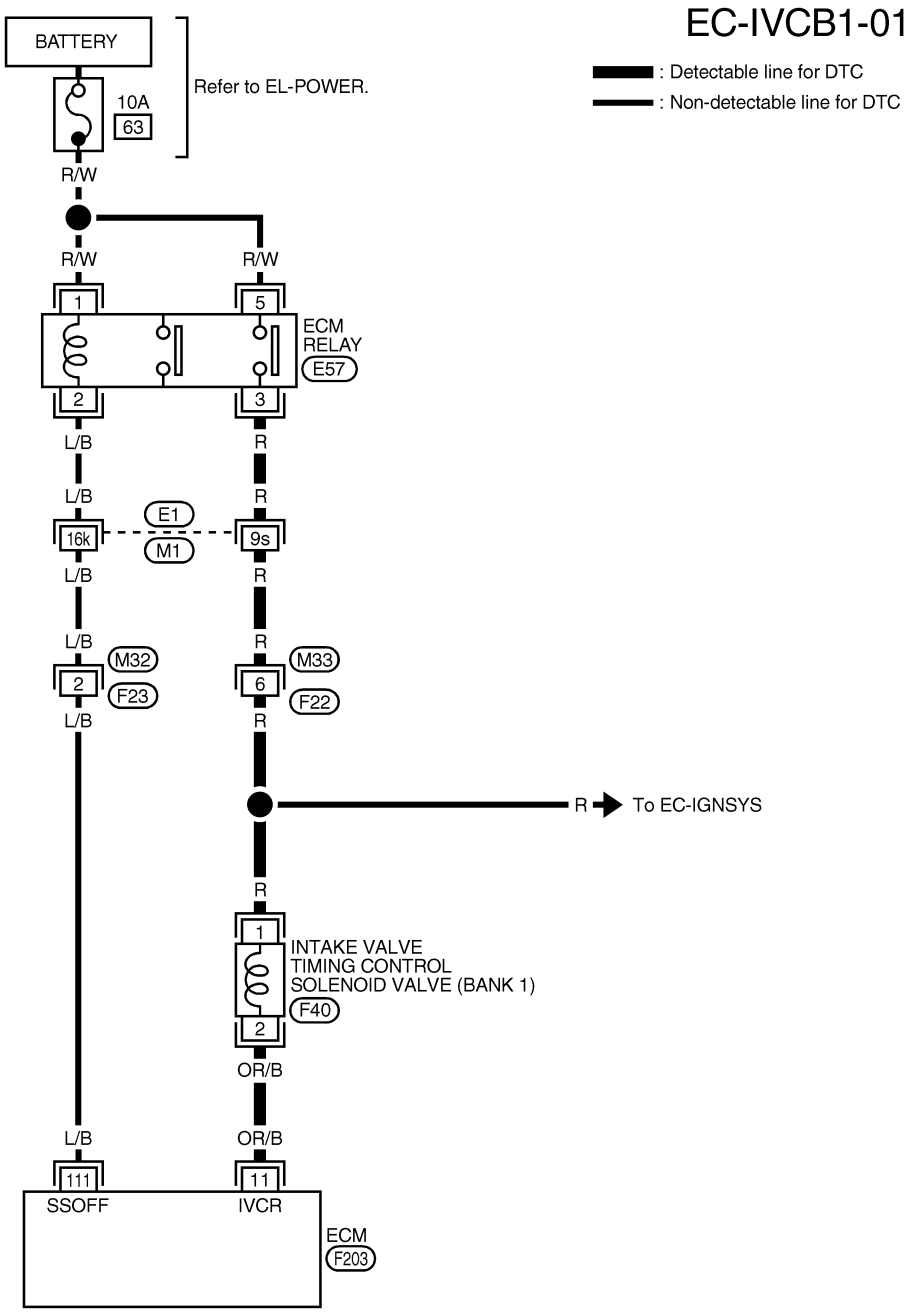

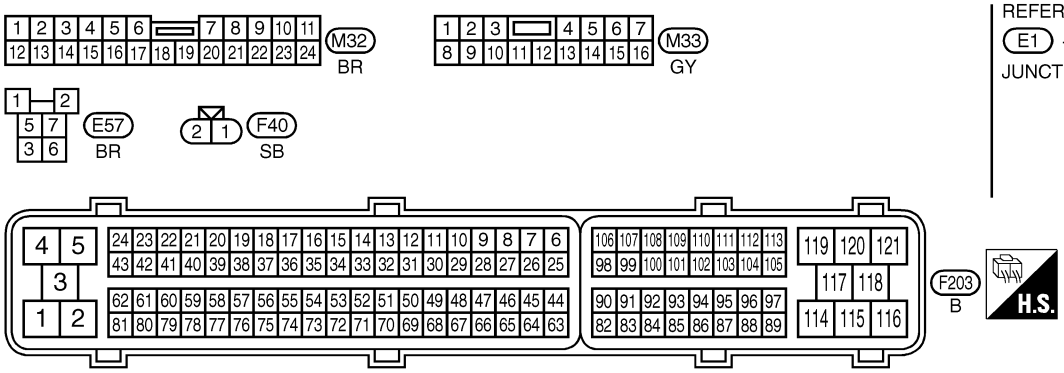

REFER TO THE FOLLOWING.
E1 -SUPER MULTIPLE JUNCTION (SMJ)

MEC099E

BANK 2

NAEC1041S02

EC-IVCB2-01

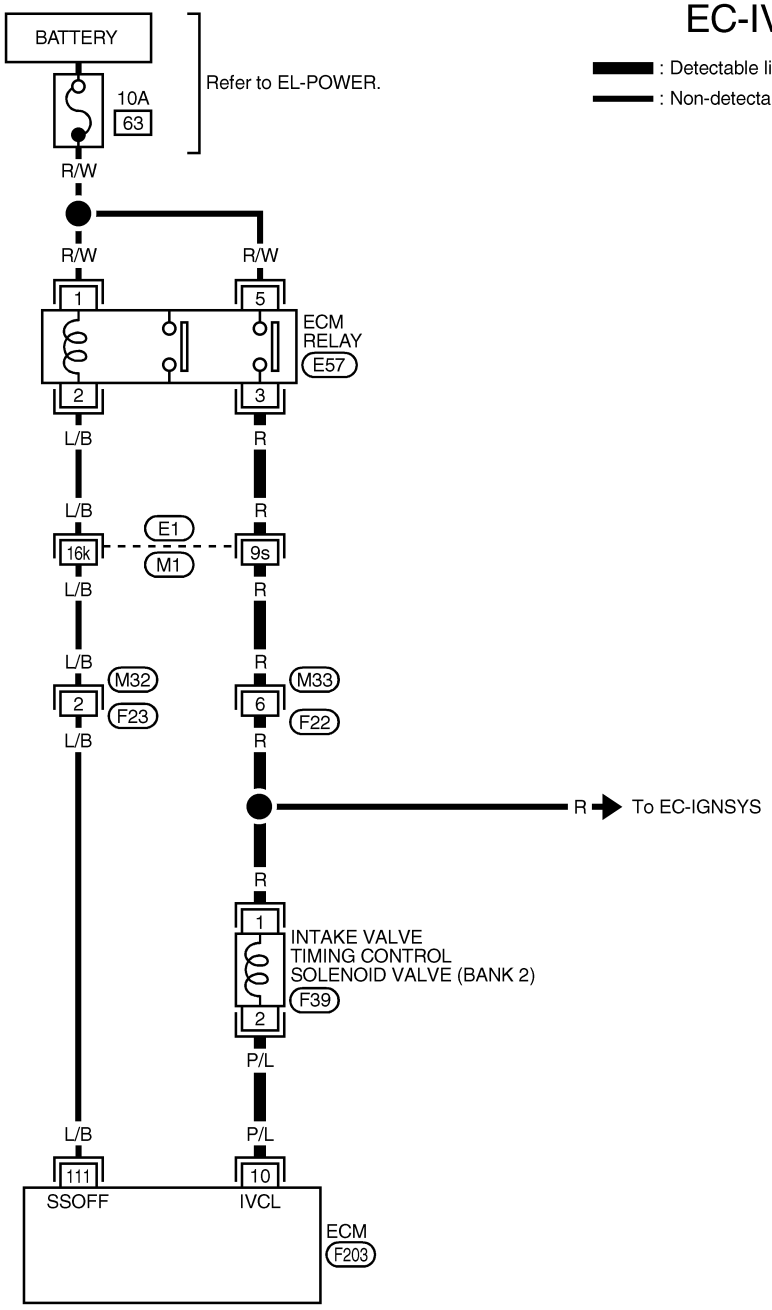

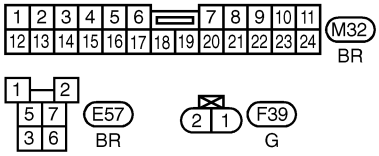

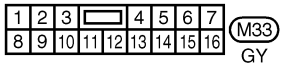

REFER TO THE FOLLOWING.
E1 -SUPER MULTIPLE JUNCTION (SMJ)

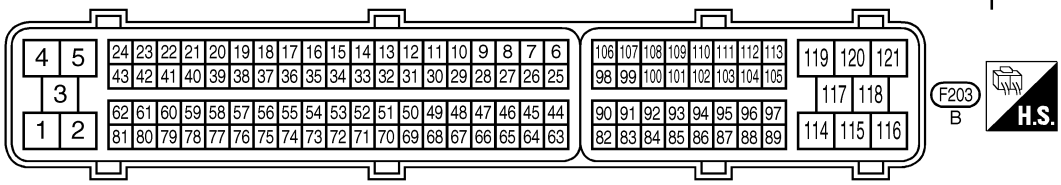

MEC100E

Diagnostic Procedure

NAEC1042

1	INTAKE VALVE TIMING CONTROL SOLENOID VALVE POWER SUPPLY CIRCUIT

1. Turn ignition switch OFF.
2. Disconnect intake valve timing control solenoid valve harness connector.

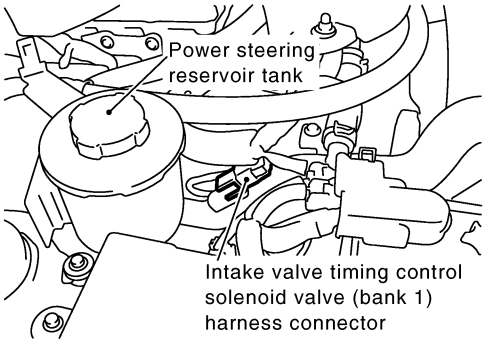

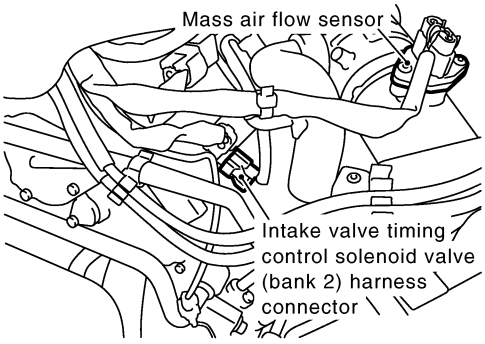

SEC003E

3. Turn ignition switch ON.
4. Check voltage between intake valve timing control solenoid valve terminal 1 and ground with CONSULT-II or tester.

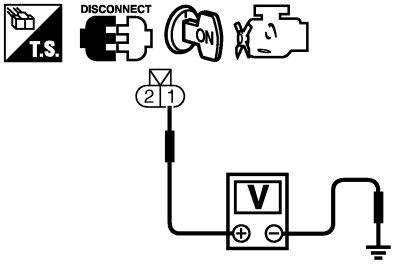

SEC556D

Voltage: Battery voltage

OK or NG

OK	▶	GO TO 3.
NG	▶	GO TO 2.

2	DETECT MALFUNCTION PART

Check the following.
- Harness connectors E1, M1
- Harness connectors M33, F22
- Harness continuity between intake valve timing control solenoid valve and ECM relay

	▶	Repair harness or connectors.

3	CHECK INTAKE VALVE TIMING CONTROL SOLENOID VALVE OUTPUT CIRCUIT FOR OPEN AND SHORT

1. Turn ignition switch OFF.
2. Disconnect ECM harness connector.
3. Check harness connectors continuity between ECM terminal 11 (bank 1) or 10 (bank 2) and intake valve timing control solenoid valve terminal 2. Refer to Wiring Diagram.
   Continuity should exist.
4. Also check harness for short to ground and short to power.

OK or NG

OK	▶	GO TO 4.
NG	▶	Repair open circuit or short to ground or short to power in harness or connectors.

4	CHECK INTAKE VALVE TIMING CONTROL SOLENOID VALVE

Check resistance between intake valve timing control solenoid valve terminals as follows.

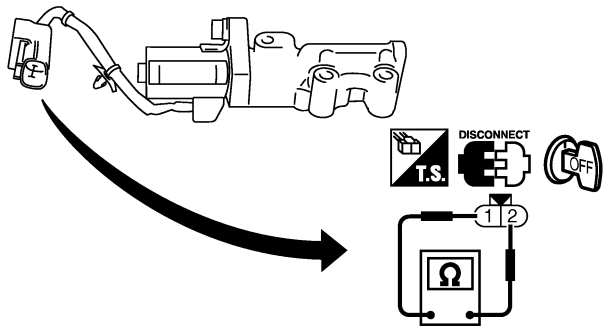

Terminals	Resistance
1 and 2	7.0 - 7.7Ω at 20˚C (68˚F)
1 or 2 and ground	∞ Ω (Continuity should not exist.)

SEC555D

OK or NG

OK	▶	GO TO 5.
NG	▶	Repair intake valve timing control solenoid valve.

5	CHECK INTERMITTENT INCIDENT

Refer to "TROUBLE DIAGNOSIS FOR INTERMITTENT INCIDENT", EC-155.

	▶	**INSPECTION END**

Component Description

NAEC1245

Electric throttle control actuator consists of throttle control motor, throttle position sensor, etc.
The throttle control motor is operated by the ECM and it opens and closes the throttle valve.
The throttle position sensor detects the throttle valve position, and the opening and closing speed of the throttle valve and feeds the voltage signals to the ECM. The ECM judges the current opening angle of the throttle valve from these signals and the ECM controls the throttle control motor to make the throttle valve opening angle properly in response to driving condition.

On Board Diagnosis Logic

NAEC1246

This self-diagnosis has the one trip detection logic.

DTC No.	Trouble diagnosis name	DTC detecting condition		Possible cause
P1121 1121	Electric throttle control actuator	A)	Electric throttle control actuator does not function properly due to the return spring malfunction.	● Electric throttle control actuator
		B)	Throttle valve opening angle in fail-safe mode is not in specified range.	
		C)	ECM detects that the throttle valve is stuck open.	

FAIL-SAFE MODE

When the malfunction is detected, ECM enters fail-safe mode and the MIL lights up.

Detected items	Engine operating condition in fail-safe mode
Malfunction A	The ECM controls the electric throttle throttle actuator by regulating the throttle opening around the idle position. The engine speed will not rise more than 2,000 rpm.
Malfunction B	ECM controls the electric throttle control actuator by regulating the throttle opening to 20 degrees or less.
Malfunction C	While the vehicle is driving, it slows down gradually by fuel cut. After the vehicle stops, the engine stalls. The engine can restart in N or P position, and engine speed will not exceed 1,000 rpm or more.

DTC Confirmation Procedure

NAEC1247

NOTE:

- **Perform PROCEDURE FOR MALFUNCTION A AND B first. If the DTC cannot be confirmed, perform PROCEDURE FOR MALFUNCTION C.**
- If DTC Confirmation Procedure has been previously conducted, always turn ignition switch OFF and wait at least 10 seconds before conducting the next test.

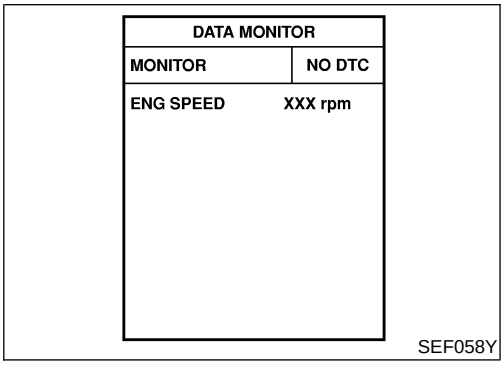

PROCEDURE FOR MALFUNCTION A AND B

With CONSULT-II

1) Turn ignition switch ON and wait at least 1 second.
2) Select “DATA MONITOR” mode with CONSULT-II.
3) Shift selector lever to D position (A/T) or 1st position (M/T), and wait at least 3 seconds.
4) Shift selector lever to P position (A/T) or Neutral position (M/T).
5) Turn ignition switch OFF and wait at least 10 seconds.
6) Turn ignition switch ON and wait at least 1 second.
7) Shift selector lever to D position (A/T) or 1st position (M/T), and wait at least 3 seconds.

8) Shift selector lever to P position (A/T) or Neutral position (M/T).
9) Turn ignition switch OFF, wait at least 10 seconds, and then turn ON.
10) If DTC is detected, go to "Diagnostic Procedure", EC-458.

With GST
Follow the procedure "WITH CONSULT-II" above.

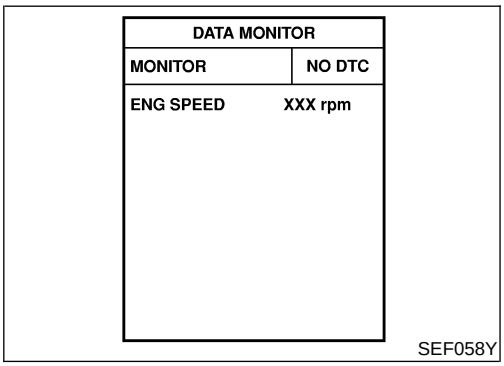

PROCEDURE FOR MALFUNCTION C

With CONSULT-II

1) Turn ignition switch ON and wait at least 1 second.
2) Select "DATA MONITOR" mode with CONSULT-II.
3) Shift selector lever to D position (A/T) or 1st position (M/T), and wait at least 3 seconds.
4) Shift selector lever to N or P position.
5) Start engine and let it idle for 3 seconds.
6) If DTC is detected, go to "Diagnostic Procedure", EC-458.

With GST
Follow the procedure "WITH CONSULT-II" above.

Diagnostic Procedure

NAEC1248

1	CHECK ELECTRIC THROTTLE CONTROL ACTUATOR VISUALLY

1. Remove the intake air duct.
2. Check if a foreign matter is caught between the throttle valve and the housing.

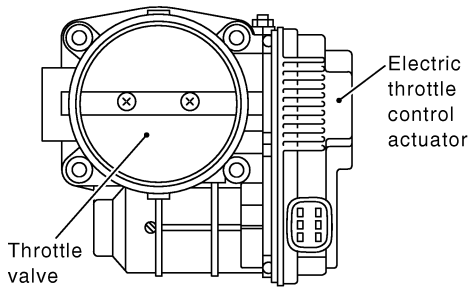

SEC513D

OK or NG

OK	▶	GO TO 2.
NG	▶	Remove the foreign matter and clean the electric throttle control actuator inside.

2	REPLACE ELECTRIC THROTTLE CONTROL ACTUATOR

1. Replace the electric throttle control actuator.
2. Perform "Throttle Valve Closed Position Learning", EC-73.
3. Perform "Idle Air Volume Learning", EC-73.

	▶	**INSPECTION END**

Description

NAEC1249

NOTE:
If DTC P1122 is displayed with DTC P1121 or P1126, first perform the trouble diagnosis for DTC P1121 or P1126. Refer to EC-457, 467.

Electric throttle control actuator consists of throttle control motor, throttle position sensor, etc.
The throttle control motor is operated by the ECM and it opens and closes the throttle valve.
The current opening angle of the throttle valve is detected by the throttle position sensor and it provides the feedback to the ECM to control the throttle control motor to make the throttle valve opening angle properly in response to driving condition.

ECM Terminals and Reference Value

NAEC1268

Specification data are reference values and are measured between each terminal and ground.
Pulse signal is measured by CONSULT-II.

CAUTION:
Do not use ECM ground terminals when measuring input/output voltage. Doing so may result in damage to the ECM's transistor. Use a ground other than ECM terminals, such as the ground.

TERMINAL NO.	WIRE COLOR	ITEM	CONDITION	DATA (DC Voltage)
3	OR	Throttle control motor relay power supply	**[Ignition switch ON]**	BATTERY VOLTAGE (11 - 14V)
4	L/W	Throttle control motor (Close)	**[Ignition switch ON]** ● Engine stopped ● Shift lever position is D (A/T models) ● Shift lever position is 1st (M/T models) ● Accelerator pedal is released	0 - 14V★ 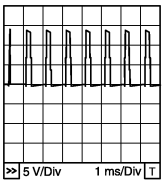 PBIB1104E
5	L/B	Throttle control motor (Open)	**[Ignition switch ON]** ● Engine stopped ● Shift lever position is D (A/T models) ● Shift lever position is 1st (M/T models) ● Accelerator pedal is fully depressed	0 - 14V★ 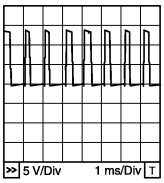 PBIB1105E
104	L	Throttle control motor relay	**[Ignition switch OFF]**	BATTERY VOLTAGE (11 - 14V)
			[Ignition switch ON]	0 - 1.0V

★: Average voltage for pulse signal (Actual pulse signal can be confirmed by oscilloscope.)

On Board Diagnosis Logic

=NAEC1250

This self-diagnosis has the one trip detection logic.

DTC No.	Trouble diagnosis name	DTC Detecting Condition	Possible Cause
P1122 1122	Electric throttle control performance problem	Electric throttle control function does not operate properly.	● Harness or connectors (Throttle control motor circuit is open or shorted.) ● Electric throttle control actuator

FAIL-SAFE MODE

When the malfunction is detected, the ECM enters fail-safe mode and the MIL lights up.

Engine operating condition in fail-safe mode
ECM stops the electric throttle control actuator control, throttle valve is maintained at a fixed opening (approx. 5 degrees) by the return spring.

DTC Confirmation Procedure

NAEC1251

NOTE:

If DTC Confirmation Procedure has been previously conducted, always turn ignition switch OFF and wait at least 10 seconds before conducting the next test.

TESTING CONDITION:

Before performing the following procedure, confirm that battery voltage is more than 11V when engine is running.

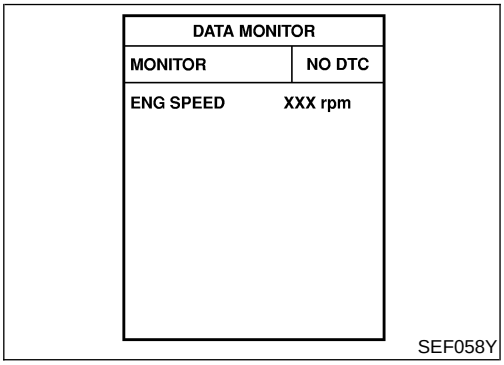

With CONSULT-II

1) Turn ignition switch ON and wait at least 2 seconds.
2) Select “DATA MONITOR” mode with CONSULT-II.
3) Start engine and let it idle for 5 seconds.
4) If DTC is detected, go to “Diagnostic Procedure”, EC-462.

With GST

Follow the procedure “WITH CONSULT-II” above.

Wiring Diagram

NAEC1252

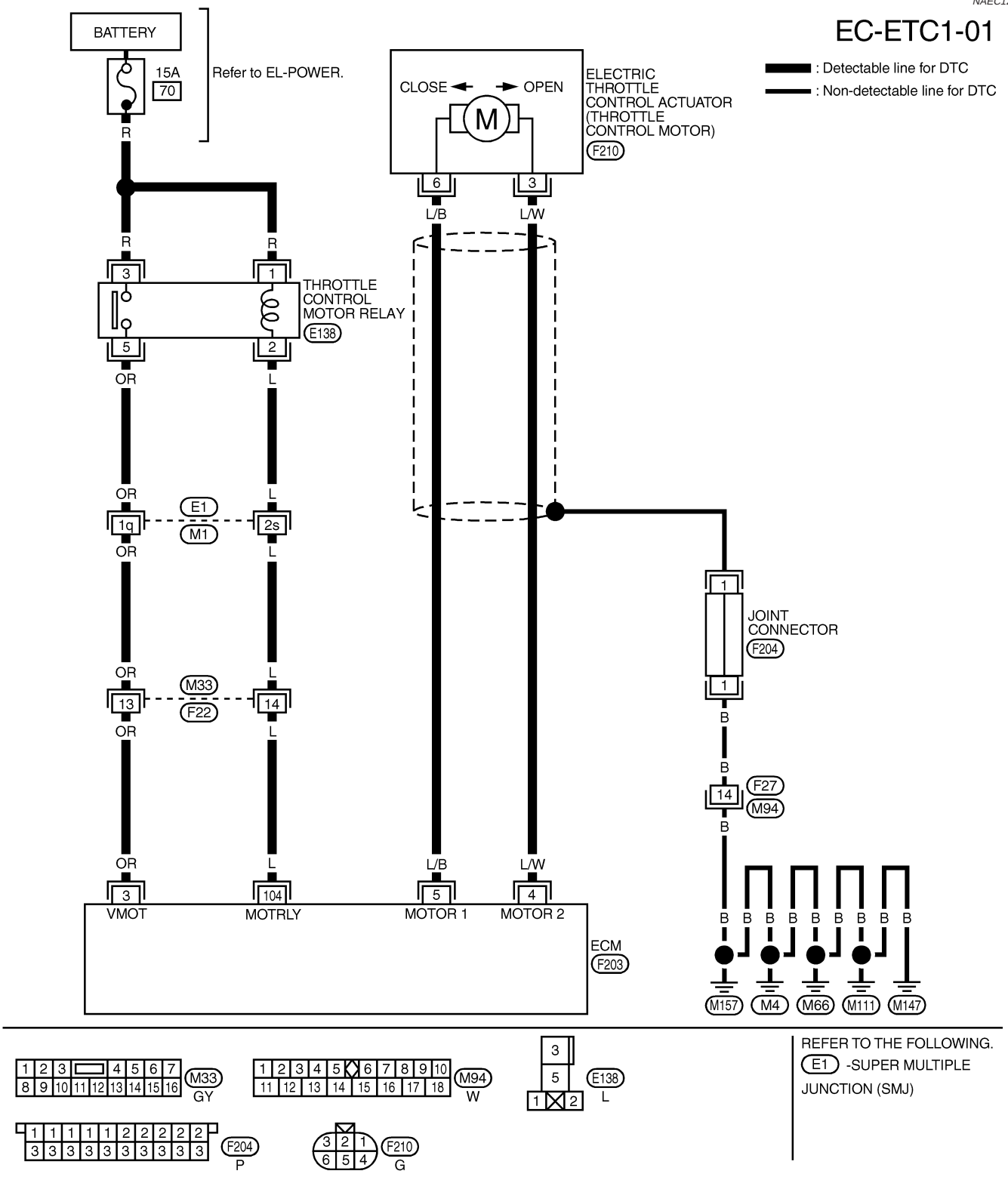

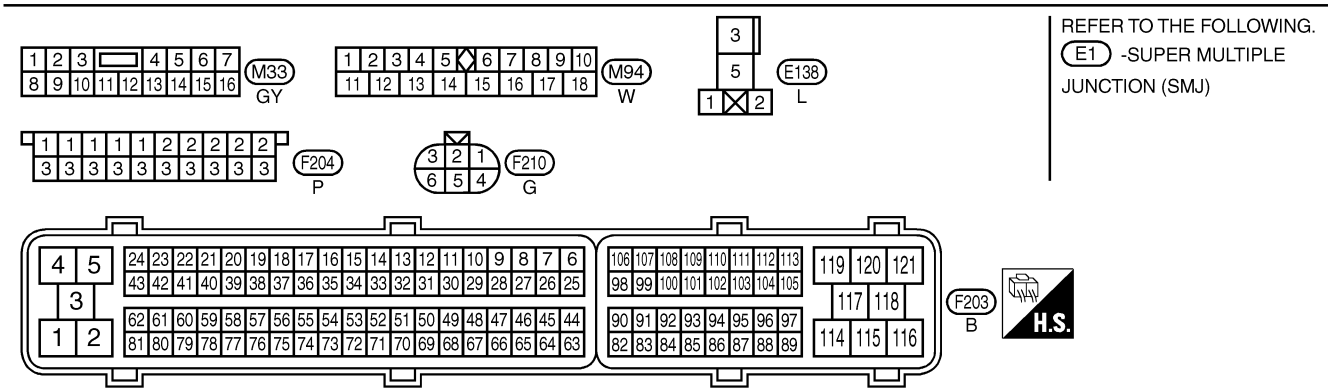

MEC121E

Diagnostic Procedure

NAEC1253

1	CHECK GROUND CONNECTIONS

1. Turn ignition switch OFF.
2. Loosen and retighten three ground screws on the body.
   Refer to “Ground Inspection”, EC-165.

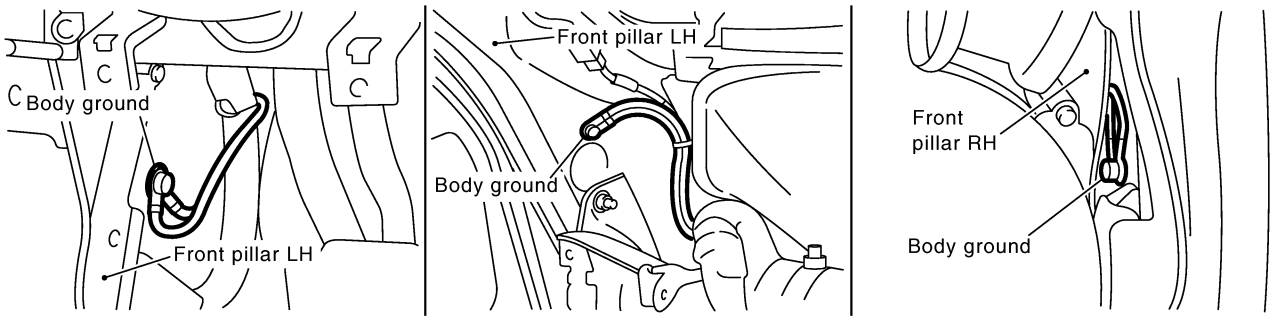

SEC997D

OK or NG

OK	▶	GO TO 2.
NG	▶	Repair or replace ground connections.

2	CHECK THROTTLE CONTROL MOTOR RELAY INPUT SIGNAL CIRCUIT FOR OPEN AND SHORT-I

Check voltage between ECM terminal 3 and ground under the following conditions with CONSULT-II or tester.

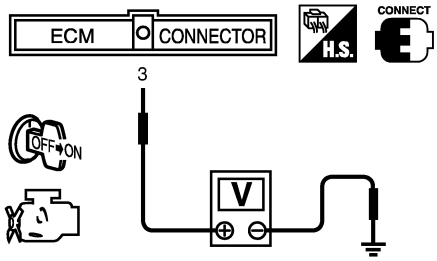

MBIB0028E

Ignition switch	Voltage
OFF	Approximately 0V
ON	Battery voltage (11- 14V)

MTBL1168

OK or NG

OK	▶	GO TO 11.
NG	▶	GO TO 3.

3	CHECK THROTTLE CONTROL MOTOR RELAY POWER SUPPLY CIRCUIT

1. Turn ignition switch OFF.
2. Disconnect throttle control motor relay.

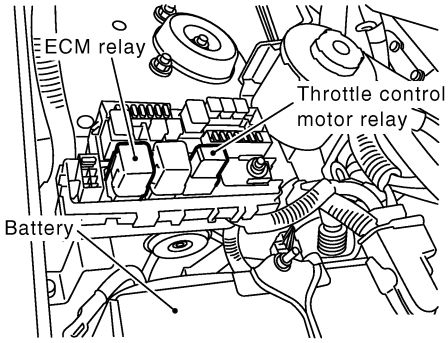

SEC425D

3. Check voltage between throttle control motor relay terminals 1, 3 and ground with CONSULT-II or tester.

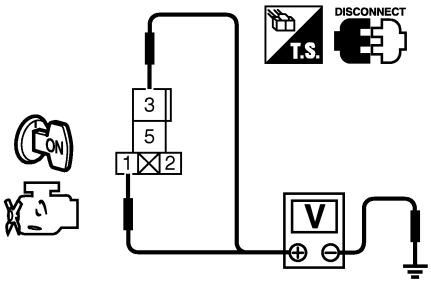

SEC538D

Voltage: Battery voltage

OK or NG

OK	▶	GO TO 5.
NG	▶	GO TO 4.

4	DETECT MALFUNCTIONING PART

Check the following.
- 15A fuse
- Harness for open and short between throttle control motor relay and battery

	▶	Repair open circuit or short to ground or short to power in harness or connectors.

5	CHECK THROTTLE CONTROL MOTOR RELAY INPUT SIGNAL CIRCUIT FOR OPEN AND SHORT-II

1. Turn ignition switch OFF.
2. Disconnect ECM harness connector.
3. Check harness continuity between ECM terminal 3 and throttle control motor relay terminal 5.
   Refer to Wiring Diagram.
   Continuity should exist.
4. Also check harness for short to ground and short to power.

OK or NG

OK	▶	GO TO 7.
NG	▶	GO TO 6.

6	DETECT MALFUNCTIONING PART
Check the following. ● Harness connectors E1, M11 ● Harness connectors M33, F22 ● Harness for open and short between throttle control motor relay and ECM	
▶	Repair open circuit or short to ground or short to power in harness or connectors.

7	CHECK THROTTLE CONTROL MOTOR RELAY OUTPUT SIGNAL CIRCUIT FOR OPEN AND SHORT
1. Check harness continuity between ECM terminal 104 and throttle control motor relay terminal 2. Refer to Wiring Diagram. **Continuity should exist.** 2. Also check harness for short to ground and short to power.	
OK or NG	
OK ▶	GO TO 9.
NG ▶	GO TO 8.

8	DETECT MALFUNCTIONING PART
Check the following. ● Harness connectors E1, M1 ● Harness connectors M33, F22 ● Harness for open and short between throttle control motor relay and ECM	
▶	Repair open circuit or short to ground or short to power in harness or connectors.

9	CHECK THROTTLE CONTROL MOTOR RELAY
Refer to "Component Inspection", EC-466.	
OK or NG	
OK ▶	GO TO 10.
NG ▶	Replace throttle control motor relay.

10	CHECK INTERMITTENT INCIDENT
Perform "TROUBLE DIAGNOSIS FOR INTERMITTENT INCIDENT", EC-155.	
▶	**INSPECTION END**

11	CHECK THROTTLE CONTROL MOTOR OUTPUT SIGNAL CIRCUIT FOR OPEN OR SHORT

1. Turn ignition switch OFF.
2. Disconnect electric throttle control actuator harness connector.

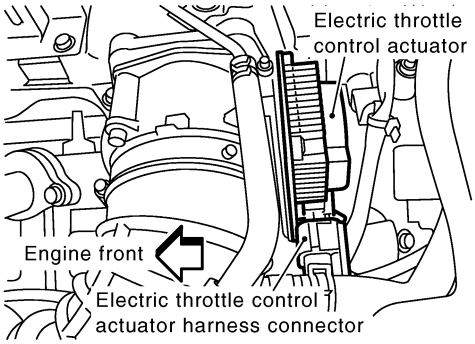

SEC433D

3. Disconnect ECM harness connector.
4. Check harness continuity between the following terminals.
   Refer to Wiring Diagram.

Electric throttle control actuator terminal	ECM terminal	Continuity
3	5	Should not exist
	4	Should exist
6	5	Should exist
	4	Should not exist

MTBL1377

5. Also check harness for short to ground and short to power.

OK or NG

OK	▶	GO TO 12.
NG	▶	Repair open circuit or short to ground or short to power in harness or connectors.

12	CHECK ELECTRIC THROTTLE CONTROL ACTUATOR VISUALLY

1. Remove the intake air duct.
2. Check if foreign matter is caught between the throttle valve and the housing.

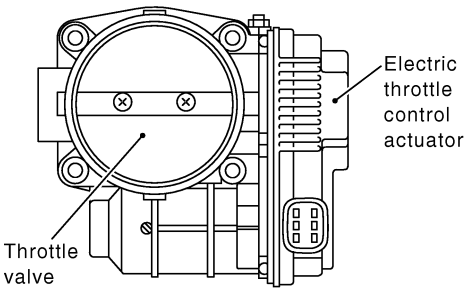

SEC513D

OK or NG

OK	▶	GO TO 13.
NG	▶	Remove the foreign matter and clean the electric throttle control actuator inside.

13	CHECK THROTTLE CONTROL MOTOR	
Refer to "Component Inspection", EC-466.		
	OK or NG	
OK	▶	GO TO 14.
NG	▶	GO TO 15.

14	CHECK INTERMITTENT INCIDENT	
Refer to "TROUBLE DIAGNOSIS FOR INTERMITTENT INCIDENT", EC-155.		
	OK or NG	
OK	▶	GO TO 15.
NG	▶	Repair or replace harness or connectors.

15	REPLACE ELECTRIC THROTTLE CONTROL ACTUATOR	
1. Replace the electric throttle control actuator. 2. Perform "Throttle Valve Closed Position Learning", EC-73. 3. Perform "Idle Air Volume Learning", EC-73.		
	▶	**INSPECTION END**

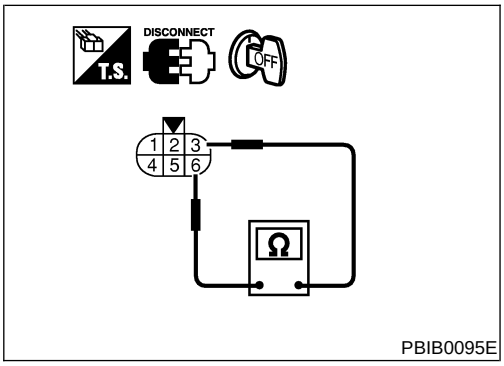

PBIB0095E

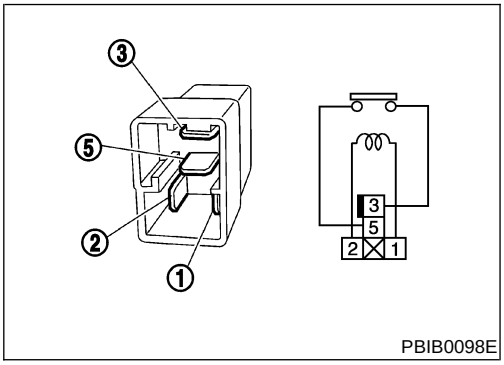

PBIB0098E

Component Inspection

NAEC1254

THROTTLE CONTROL MOTOR

NAEC1254S01

1. Disconnect electric throttle control actuator harness connector.
2. Check resistance between terminals 3 and 6.

   Resistance: Approximately 1 - 15Ω [at 25°C (77°F)]
3. If NG, replace electric throttle control actuator and go to next step.
4. Perform "Throttle Valve Closed Position Learning", EC-73.
5. Perform "Idle Air Volume Learning", EC-73.

THROTTLE CONTROL MOTOR RELAY

NAEC1254S02

1. Apply 12V direct current between relay terminals 1 and 2.
2. Check continuity between relay terminals 3 and 5.

Conditions	Continuity
12V direct current supply between terminals 1 and 2	Yes
No current supply	No

3. If NG, replace throttle control motor relay.

Component Description

NAEC1255

Power supply for the Throttle Control motor is provided to the ECM via throttle control motor relay. The throttle control motor relay is ON/OFF controlled by the ECM. When the ignition switch is turned ON, the ECM sends an ON signal to throttle control motor relay and battery voltage is provided to the ECM. When the ignition switch is turned OFF, the ECM sends an OFF signal to throttle control motor relay and battery voltage is not provided to the ECM.

CONSULT-II Reference Value in Data Monitor Mode

NAEC1256

Specification data are reference values.

MONITOR ITEM	CONDITION	SPECIFICATION
THRTL RELAY	● Ignition switch: ON	ON

ECM Terminals and Reference Value

NAEC1269

Specification data are reference values and are measured between each terminal and ground.

CAUTION:

Do not use ECM ground terminals when measuring input/output voltage. Doing so may result in damage to the ECM's transistor. Use a ground other than ECM terminals, such as the ground.

TERMINAL NO.	WIRE COLOR	ITEM	CONDITION	DATA (DC Voltage)
3	OR	Throttle control motor relay power supply	**[Ignition switch ON]**	BATTERY VOLTAGE (11 - 14V)
104	L	Throttle control motor relay	**[Ignition switch OFF]**	BATTERY VOLTAGE (11 - 14V)
			[Ignition switch ON]	0 - 1.0V

On Board Diagnosis Logic

NAEC1257

These self-diagnoses have the one trip detection logic.

DTC No.	Trouble diagnosis name	DTC Detecting Condition	Possible Cause
P1124 1124	Throttle control motor relay circuit short	ECM detects that the throttle control motor relay is stuck ON.	● Harness or connectors (Throttle control motor relay circuit is shorted) ● Throttle control motor relay
P1126 1126	Throttle control motor relay circuit open	ECM detects that a voltage of power source for throttle control motor is excessively low.	● Harness or connectors (Throttle control motor relay circuit is open) ● Throttle control motor relay

FAIL-SAFE MODE

NAEC1257S01

When the malfunction is detected, ECM enters fail-safe mode and the MIL lights up.

Engine operating condition in fail-safe mode
ECM stops the electric throttle control actuator control, throttle valve is maintained at a fixed opening (approx. 5 degrees) by the return spring.

DTC Confirmation Procedure

NAEC1258

NOTE:
If DTC Confirmation Procedure has been previously conducted, always turn ignition switch OFF and wait at least 10 seconds before conducting the next test.

PROCEDURE FOR DTC P1124
TESTING CONDITION:
Before performing the following procedure, confirm that battery voltage is more than 8V at idle.

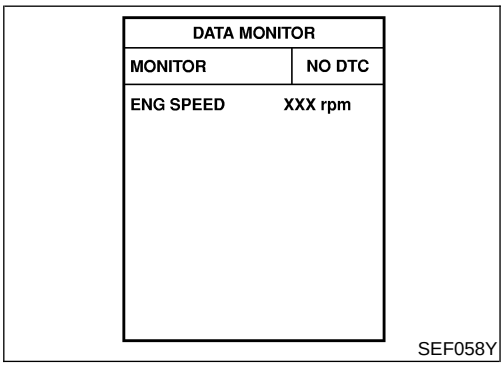

With CONSULT-II

1) Turn ignition switch ON and wait at least 1 second.
2) Select “DATA MONITOR” mode with CONSULT-II.
3) If DTC is detected, go to “Diagnostic Procedure”, EC-470.

With GST

Follow the procedure “With CONSULT-II” above.

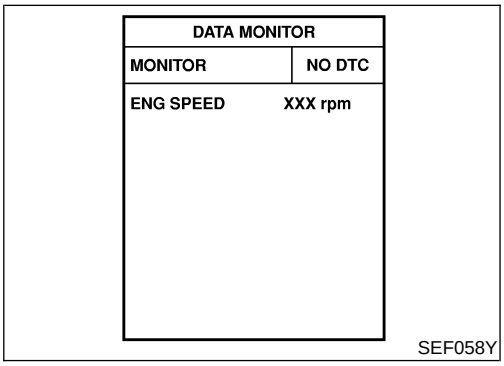

PROCEDURE FOR DTC P1126

With CONSULT-II

1) Turn ignition switch ON and wait at least 2 seconds.
2) Select “DATA MONITOR” mode with CONSULT-II.
3) Start engine and let it idle for 5 seconds.
4) If DTC is detected, go to “Diagnostic Procedure”, EC-470.

With GST

Follow the procedure “With CONSULT-II” above.

Wiring Diagram

NAEC1259

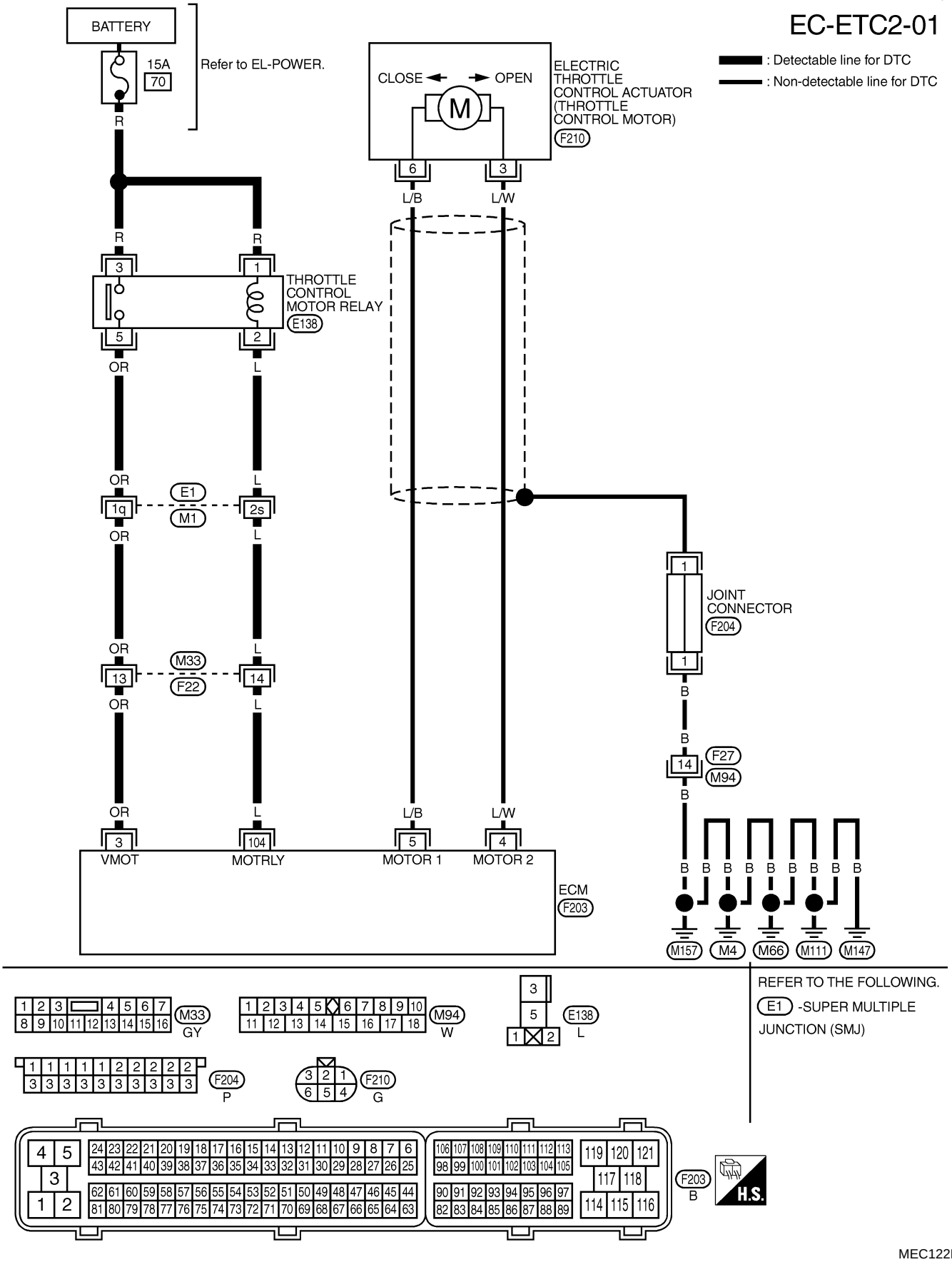

MEC122E

Diagnostic Procedure

NAEC1260

1	CHECK THROTTLE CONTROL MOTOR RELAY POWER SUPPLY CIRCUIT

1. Turn ignition switch OFF.
2. Disconnect throttle control motor relay.

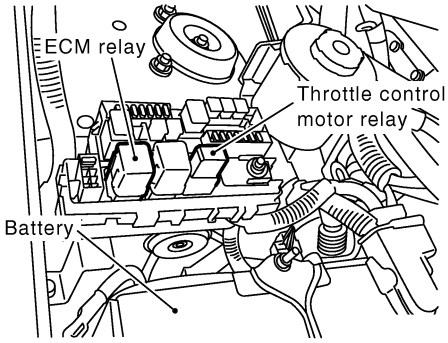

SEC425D

3. Check voltage between throttle control motor relay terminals 1, 3 and ground with CONSULT-II or tester.

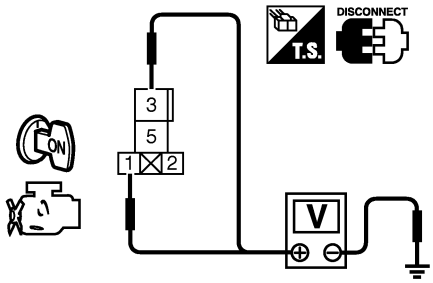

SEC538D

Voltage: Battery voltage

OK or NG

OK	▶	GO TO 3.
NG	▶	GO TO 2.

2	DETECT MALFUNCTIONING PART

Check the following.
- 15A fuse
- Harness for open and short between throttle control motor relay and battery

	▶	Repair open circuit or short to ground or short to power in harness or connectors.

3	CHECK THROTTLE CONTROL MOTOR RELAY INPUT SIGNAL CIRCUIT FOR OPEN AND SHORT

1. Turn ignition switch OFF.
2. Disconnect ECM harness connector.
3. Check harness continuity between ECM terminal 3 and throttle control motor relay terminal 5.
   Refer to Wiring Diagram.
   Continuity should exist.
4. Also check harness for short to ground and short to power.

OK or NG

OK	▶	GO TO 5.
NG	▶	GO TO 4.

4	DETECT MALFUNCTIONING PART
Check the following. ● Harness connectors E1, M1 ● Harness connectors M33, F22 ● Harness for open and short between throttle control motor relay and ECM	
▶	Repair open circuit or short to ground or short to power in harness or connectors.

5	CHECK THROTTLE CONTROL MOTOR RELAY OUTPUT SIGNAL CIRCUIT FOR OPEN AND SHORT
1. Check harness continuity between ECM terminal 104 and throttle control motor relay terminal 2. Refer to Wiring Diagram. **Continuity should exist.** 2. Also check harness for short to ground and short to power.	
OK or NG	
OK ▶	GO TO 7.
NG ▶	GO TO 6.

6	DETECT MALFUNCTIONING PART
Check the following. ● Harness connectors E1, M1 ● Harness connectors M33, F22 ● Harness for open and short between throttle control motor relay and ECM	
▶	Repair open circuit or short to ground or short to power in harness or connectors.

7	CHECK THROTTLE CONTROL MOTOR RELAY
Refer to "Component Inspection", EC-471.	
OK or NG	
OK ▶	GO TO 8.
NG ▶	Replace throttle control motor relay.

8	CHECK INTERMITTENT INCIDENT
Refer to "TROUBLE DIAGNOSIS FOR INTERMITTENT INCIDENT", EC-155.	
▶	**INSPECTION END**

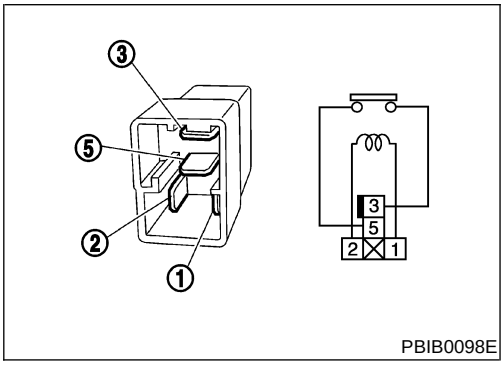

PBIB0098E

Component Inspection

NAEC1261

THROTTLE CONTROL MOTOR RELAY

1. Apply 12V direct current between relay terminals 1 and 2.
2. Check continuity between relay terminals 3 and 5.

Conditions	Continuity
12V direct current supply between terminals 1 and 2	Yes
No current supply	No

3. If NG, replace throttle control motor relay.

Component Description

NAEC1262

The throttle control motor is operated by the ECM and it opens and closes the throttle valve.
The current opening angle of the throttle valve is detected by the throttle position sensor and it provides feedback to the ECM to control the throttle control motor to make the throttle valve opening angle properly in response to driving condition.

ECM Terminals and Reference Value

NAEC1270

Specification data are reference values and are measured between each terminal and ground.
Pulse signal is measured by CONSULT-II.

CAUTION:
Do not use ECM ground terminals when measuring input/output voltage. Doing so may result in damage to the ECM's transistor. Use a ground other than ECM terminals, such as the ground.

TERMINAL NO.	WIRE COLOR	ITEM	CONDITION	DATA (DC Voltage)
4	L/W	Throttle control motor (Close)	**[Ignition switch ON]** ● Engine stopped ● Shift lever position is D (A/T models) ● Shift lever position is 1st (M/T models) ● Accelerator pedal is released	0 - 14V★ 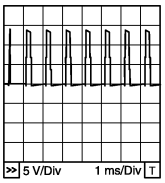 PBIB1104E
5	L/B	Throttle control motor (Open)	**[Ignition switch ON]** ● Engine stopped ● Shift lever position is D (A/T models) ● Shift lever position is 1st (M/T models) ● Accelerator pedal is fully depressed	0 - 14V★ 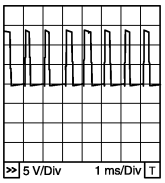 PBIB1105E

★: Average voltage for pulse signal (Actual pulse signal can be confirmed by oscilloscope.)

On Board Diagnosis Logic

NAEC1263

This self-diagnosis has the one trip detection logic.

DTC No.	Trouble diagnosis name	DTC Detecting Condition	Possible Cause
P1128 1128	Throttle control motor circuit short	ECM detects short in both circuits between ECM and throttle control motor.	● Harness or connectors (Throttle control motor circuit is shorted.) ● Electric throttle control actuator (Throttle control motor)

DTC Confirmation Procedure

NAEC1264

NOTE:
If DTC Confirmation Procedure has been previously conducted, always turn ignition switch OFF and wait at least 10 seconds before conducting the next test.

DATA MONITOR	
MONITOR	NO DTC
ENG SPEED	XXX rpm

SEF058Y

With CONSULT-II

1) Turn ignition switch ON and wait at least 2 seconds.
2) Select "DATA MONITOR" mode with CONSULT-II.
3) Start engine and let it idle for 5 seconds.
4) If DTC is detected, go to "Diagnostic Procedure", EC-475.

With GST

Follow the procedure "With CONSULT-II" above.

Wiring Diagram

NAEC1265

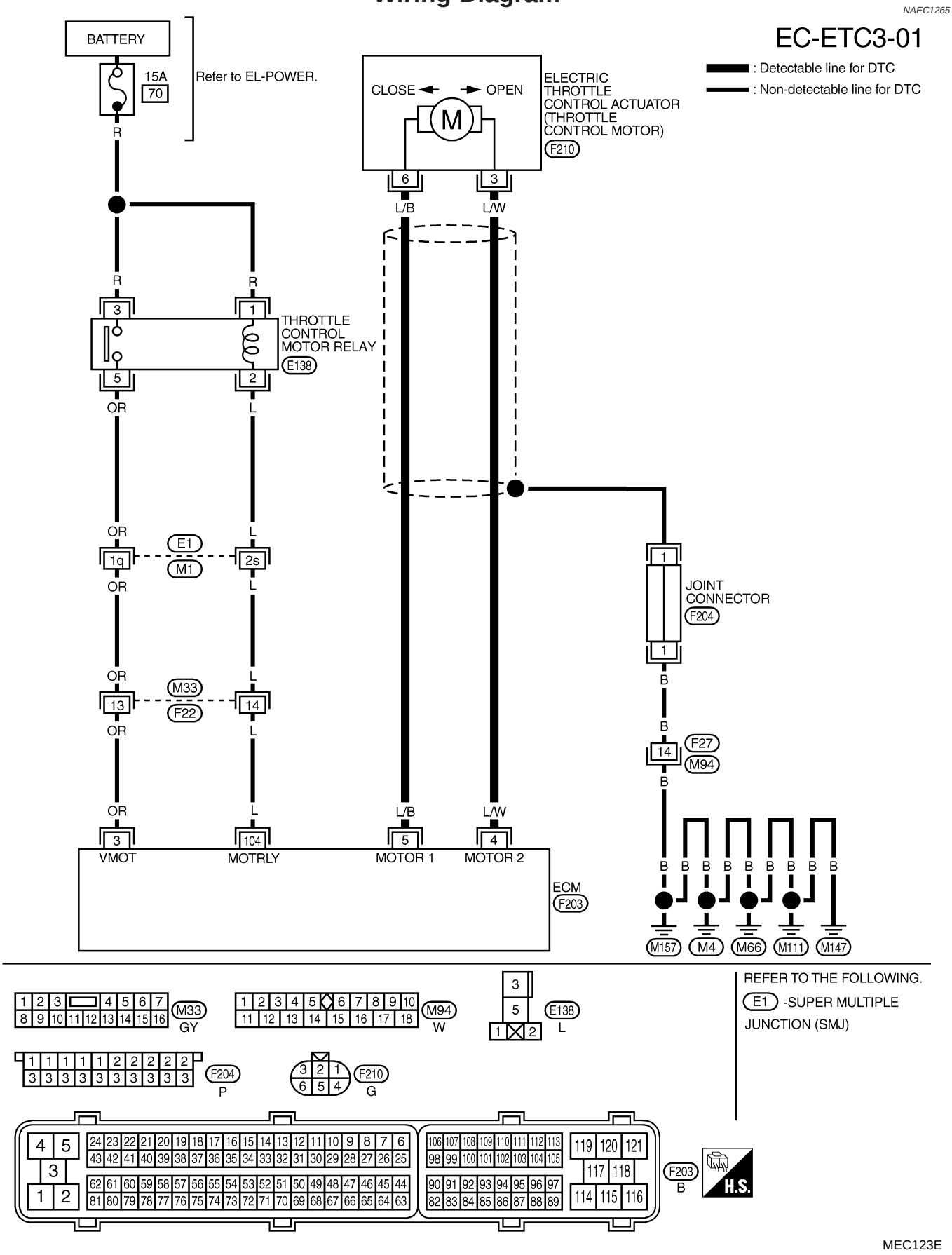

Diagnostic Procedure

NAEC1266

1	CHECK GROUND CONNECTIONS

1. Turn ignition switch OFF.
2. Loosen and retighten three ground screws on the body.
   Refer to “Ground Inspection”, EC-165.

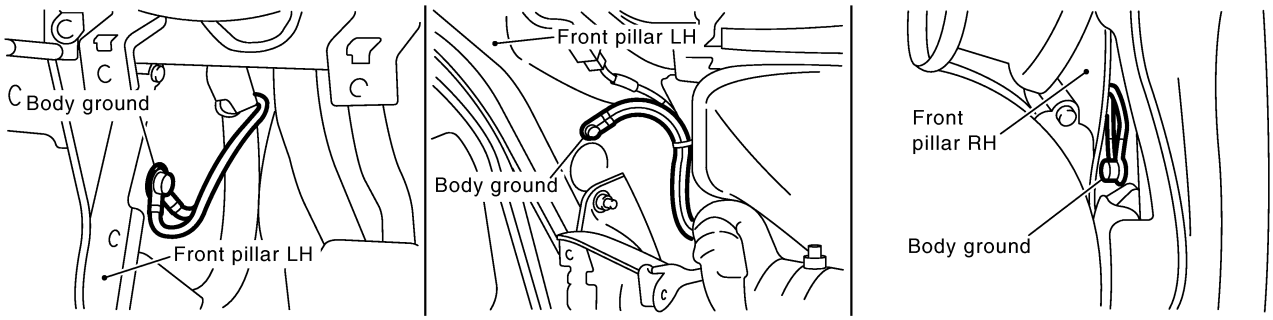

SEC997D

OK or NG

OK	▶	GO TO 2.
NG	▶	Repair or replace ground connections.

2	CHECK THROTTLE CONTROL MOTOR OUTPUT SIGNAL CIRCUIT FOR OPEN OR SHORT

1. Disconnect electric throttle control actuator harness connector.
2. Disconnect ECM harness connector.
3. Check harness continuity between the following terminals.
   Refer to Wiring Diagram.

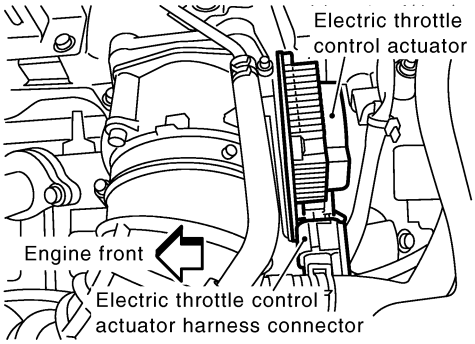

SEC433D

Electric throttle control actuator terminal	ECM terminal	Continuity
3	5	Should not exist
	4	Should exist
6	5	Should exist
	4	Should not exist

MTBL1377

4. Also check harness for short to ground and short to power.

OK or NG

OK	▶	GO TO 3.
NG	▶	Repair open circuit or short to ground or short to power in harness or connectors.

3	CHECK THROTTLE CONTROL MOTOR	
Refer to "Component Inspection", EC-476.		
	OK or NG	
OK	▶	GO TO 4.
NG	▶	GO TO 5.

4	CHECK INTERMITTENT INCIDENT	
Refer to "TROUBLE DIAGNOSIS FOR INTERMITTENT INCIDENT", EC-155.		
	OK or NG	
OK	▶	GO TO 5.
NG	▶	Repair or replace harness or connectors.

5	REPLACE ELECTRIC THROTTLE CONTROL ACTUATOR	
1. Replace the electric throttle control actuator. 2. Perform "Throttle Valve Closed Position Learning", EC-73. 3. Perform "Idle Air Volume Learning", EC-73.		
	▶	**INSPECTION END**

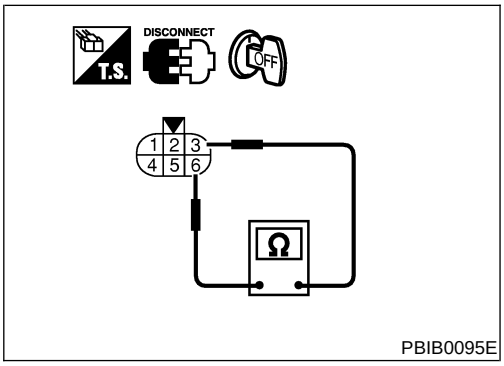

PBIB0095E

Component Inspection

NAEC1267

THROTTLE CONTROL MOTOR

1. Disconnect electric throttle control actuator harness connector.
2. Check resistance between terminals 3 and 6.

   Resistance: Approximately 1 - 15Ω [at 25°C (77°F)]
3. If NG, replace electric throttle control actuator and go to next step.
4. Perform "Throttle Valve Closed Position Learning", EC-73.
5. Perform "Idle Air Volume Learning", EC-73.

Description

NAEC1043

If DTC P1130 is displayed with P1165, first perform trouble diagnosis for DTC P1165, EC-543.

SYSTEM DESCRIPTION

NAEC1043S01

Sensor	Input Signal to ECM	ECM function	Actuator
Throttle position sensor	Throttle position	Swirl control valve control	Swirl control valve control solenoid valve ↓ Vacuum signal Swirl control valve actuator ↓ Swirl control valve
Accelerator pedal position sensor	Accelerator pedal position		
Crankshaft position sensor (POS) Camshaft position sensor (PHASE)	Engine speed		
Mass air flow sensor	Amount of intake air		
Engine coolant temperature sensor	Engine coolant temperature		

This system has a swirl control valve in the intake passage of each cylinder.
While idling and during low engine speed operation, the swirl control valve closes. Thus the velocity of the air in the intake passage increases, promoting the vaporization of the fuel and producing a swirl in the combustion chamber.
Because of this operation, this system tends to increase the burning speed of the gas mixture, improve fuel consumption, and increase the stability in running conditions.
Also, except when idling and during low engine speed operation, this system opens the swirl control valve. In this condition, this system tends to increase power by improving intake efficiency via reduction of intake flow resistance, intake flow.
The solenoid valve controls swirl control valve's shut/open condition. This solenoid valve is operated by the ECM.

Accelerator pedal position sensor (Idle position)	Engine speed (A/T)	Engine speed (M/T)	Swirl control valve control solenoid valve	Swirl control valve
ON	Below 3,200 rpm	Below 2,400 rpm	ON	Closed
OFF	Less than 3,200 rpm	Less than 2,400 rpm	ON	Closed
	More than 3,600 rpm	More than 2,800 rpm	OFF	Open

When engine coolant temperature is below 10°C (50°F) and above 55°C (131°F), swirl control valve is kept open regardless of above condition.

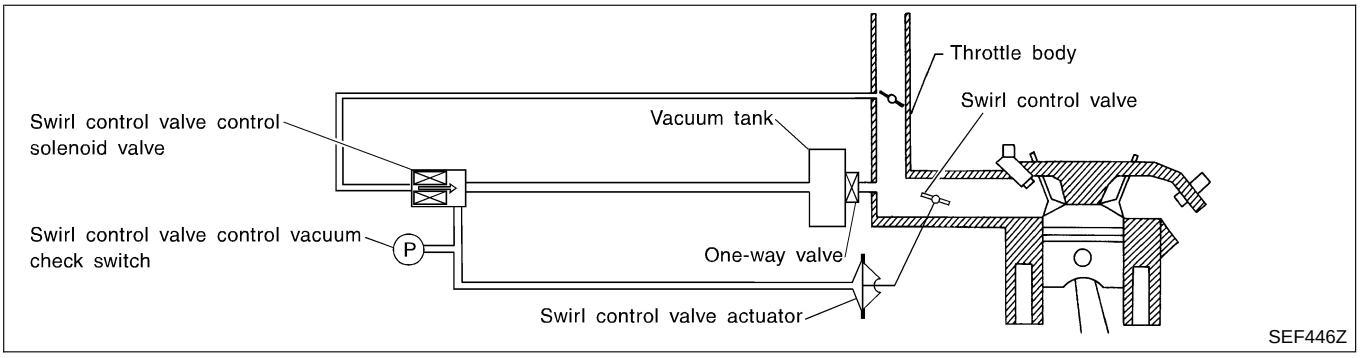

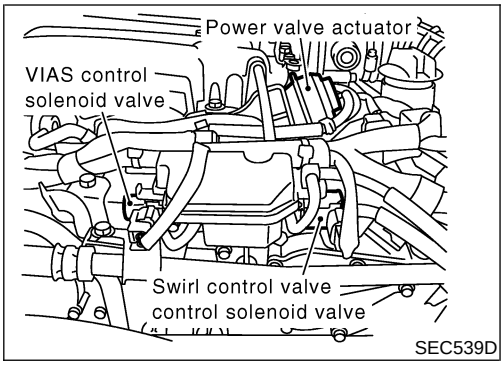

COMPONENT DESCRIPTION

NAEC1043S02

Swirl Control Valve Control Solenoid Valve

NAEC1043S0201

The swirl control valve control solenoid valve responds to signals from the ECM. When the ECM sends an ON (ground) signal, the solenoid valve is bypassed to apply intake manifold vacuum to the swirl control valve actuator. This operation closes the swirl control valve. When the ECM sends an OFF signal, the vacuum signal is cut and the swirl control valve opens.

CONSULT-II Reference Value in Data Monitor Mode

NAEC1044

Specification data are reference values.

MONITOR ITEM	CONDITION		SPECIFICATION
SWRL CONT S/V	● Engine speed: Idle	Engine coolant temperature is between 15°C (59°F) to 50°C (122°F).	ON
		Engine coolant temperature is above 55°C (131°F).	OFF

ECM Terminals and Reference Value

NAEC1045

Specification data are reference values and are measured between each terminal and ground.

CAUTION:

Do not use ECM ground terminals when measuring input/output voltage. Doing so may result in damage to the ECM's transistor. Use a ground other than ECM terminals, such as the ground.

TERMINAL NO.	WIRE COLOR	ITEM	CONDITION	DATA (DC Voltage)
27	G	Swirl control valve control solenoid valve	**[Engine is running]** ● Idle speed ● Engine coolant temperature is between 15 to 50°C (59 to 122°F).	0 - 1.0V
			[Engine is running] ● Idle speed ● Engine coolant temperature is above 55°C (131°F).	BATTERY VOLTAGE (11 - 14V)

On Board Diagnosis Logic

NAEC1046

DTC No.	Trouble diagnosis name	DTC Detecting Condition		Possible Cause
P1130 1130	Swirl control valve control solenoid valve	A)	An improper voltage signal is sent to ECM through swirl control valve control solenoid valve.	● Harness or connectors (The swirl control valve control solenoid valve circuit is open or shorted.) ● Swirl control valve control solenoid valve
		B)	The vacuum signal is not sent to swirl control valve under specified driving conditions, even though swirl control valve control solenoid valve is ON.	● Harness or connector (The swirl control valve control solenoid valve circuit is open.) ● Swirl control valve control solenoid valve ● Intake system (Intake air leaks) ● Hoses and tubes between intake manifold, vacuum tank and swirl control valve actuator ● Swirl control valve actuator ● Swirl control valve control vacuum check switch ● Mass air flow sensor ● Camshaft position sensor (PHASE) ● Throttle position sensor ● Accelerator pedal position sensor
		C)	The vacuum signal is sent to swirl control valve even though swirl control valve control solenoid valve is OFF.	● Harness or connector (The swirl control valve control solenoid valve circuit is shorted.) ● Swirl control valve control vacuum check switch ● Camshaft position sensor (PHASE) ● Throttle position sensor ● Accelerator pedal position sensor ● Hoses and tubes between air cleaner and swirl control valve vacuum check switch ● Swirl control valve control solenoid valve

DTC Confirmation Procedure

NAEC1047

Perform Procedure for malfunction A first. If the 1st trip DTC cannot be confirmed, perform Procedure for malfunction B. If the 1st trip DTC is not confirmed on Procedure for malfunction B, perform Procedure for malfunction C.

NOTE:
If DTC Confirmation Procedure has been previously conducted, always turn ignition switch OFF and wait at least 10 seconds before conducting the next test.

2

DATA MONITOR	
MONITOR	NO DTC
ENG SPEED	XXX rpm

SEF058Y

PROCEDURE FOR MALFUNCTION A

NAEC1047S01

With CONSULT-II

NAEC1047S0101

1) Turn ignition switch ON.
2) Select "DATA MONITOR" mode with CONSULT-II.
3) Wait at least 5 seconds.
   If 1st trip DTC is detected, go to "Diagnostic Procedure", EC-482.

With GST

NAEC1047S0102

Follow the procedure "With CONSULT-II" above.

4

DATA MONITOR	
MONITOR	NO DTC
ENG SPEED	XXX rpm
COOLAN TEMP/S	XXX °C

SEF174Y

PROCEDURE FOR MALFUNCTION B

NAEC1047S02

TESTING CONDITION:

- **For best results, perform the test at a temperature above 5°C (41°F).**
- **Before performing the following procedure, confirm that battery voltage is more than 10V at idle, then stop engine immediately.**

With CONSULT-II

NAEC1047S0201

1) Turn ignition switch OFF and wait at least 10 seconds.
2) Turn ignition switch ON.
3) Check "COOLAN TEMP/S" in "DATA MONITOR" mode with CONSULT-II.
4) Confirm COOLAN TEMP/S value is 40°C (104°F) or less.
   If the value is more than 40°C (104°F), park the vehicle in a cool place and retry from step 1.
5) Start engine and wait until COOLAN TEMP/S value increases to more than 55°C (131°F).
   If 1st trip DTC is detected, go to "Diagnostic Procedure", EC-482.

With GST

NAEC1047S0202

Follow the procedure "With CONSULT-II" above.

4

DATA MONITOR	
MONITOR	NO DTC
ENG SPEED	XXX rpm
COOLAN TEMP/S	XXX °C

SEF174Y

PROCEDURE FOR MALFUNCTION C

NAEC1047S03

TESTING CONDITION:

- **For best results, perform the test at a temperature above 5°C (41°F).**
- **Before performing the following procedure, confirm that battery voltage is more than 10V at idle.**

With CONSULT-II

NAEC1047S0301

1) Start engine and warm it up to normal operating temperature.
2) Turn ignition switch OFF and wait at least 10 seconds.
3) Turn ignition switch ON again and select "DATA MONITOR" mode with CONSULT-II.
4) Start engine and let it idle for at least 20 seconds. If 1st trip DTC is detected, go to "Diagnostic Procedure", EC-482.

With GST

NAEC1047S0302

Follow the procedure "With CONSULT-II" above.

Wiring Diagram

NAEC1048

EC-SWL/V-01

: Detectable line for DTC
: Non-detectable line for DTC

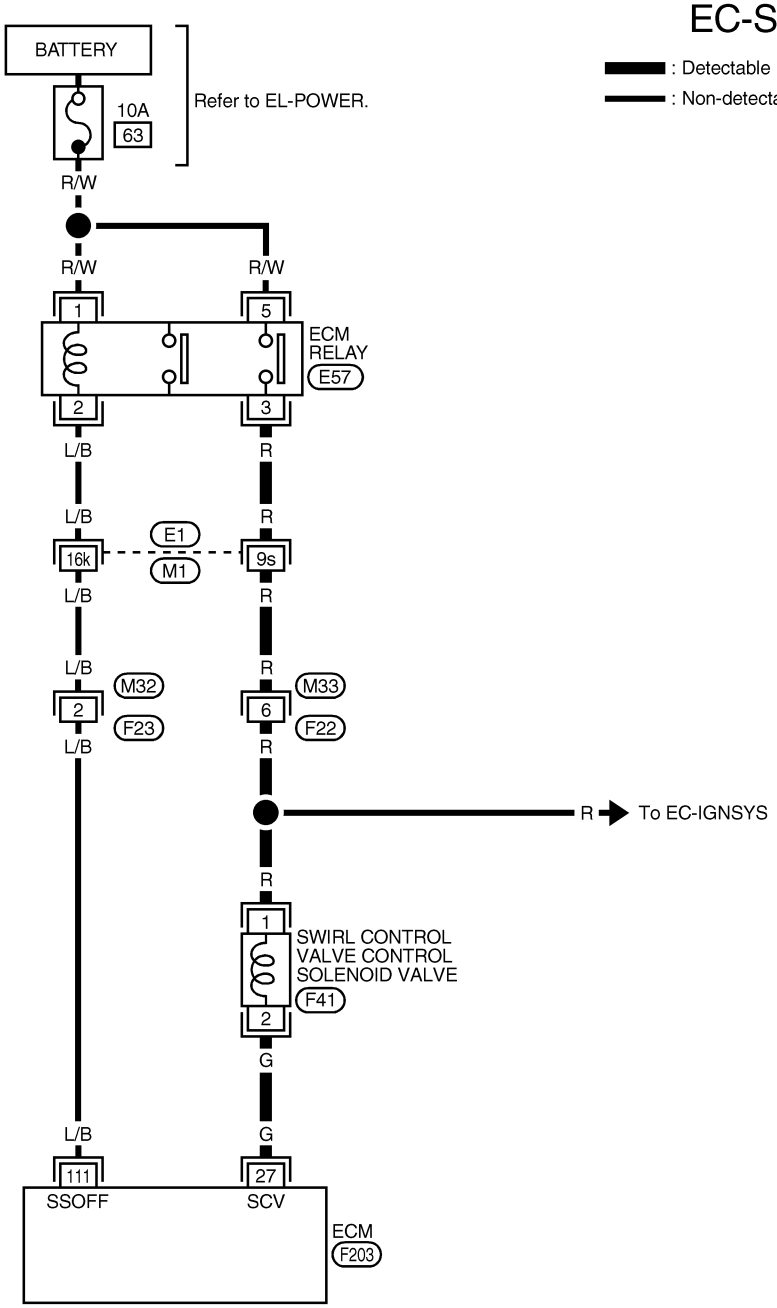

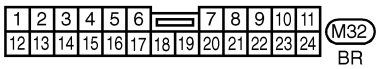

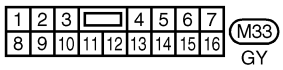

REFER TO THE FOLLOWING.
E1 -SUPER MULTIPLE JUNCTION (SMJ)

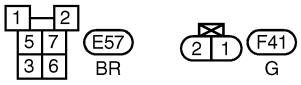

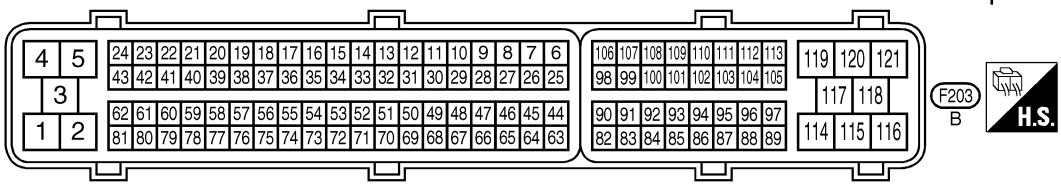

MEC101E

Diagnostic Procedure

NAEC1049

PROCEDURE A

NAEC1049S01

1	INSPECTION START	
Do you have CONSULT-II?		
	Yes or No	
Yes	▶	GO TO 2.
No	▶	GO TO 3.

2	CHECK SWIRL CONTROL VALVE CONTROL SOLENOID VALVE CIRCUIT	
With CONSULT-II 1. Turn ignition switch ON. 2. Select “SWIRL CONT SOL VALVE” in “ACTIVE TEST” mode with CONSULT-II. 3. Touch “ON” and “OFF” on CONSULT-II screen.		

ACTIVE TEST	
SWIRL CONT SOL VALVE	OFF
MONITOR	
ENG SPEED	XXX rpm

SEC004E

4. Make sure that clicking sound is heard from the swirl control valve control solenoid valve.

	OK or NG	
OK	▶	GO TO 6.
NG	▶	GO TO 3.

3	CHECK SWIRL CONTROL VALVE CONTROL SOLENOID VALVE POWER SUPPLY CIRCUIT

1. Turn ignition switch OFF.
2. Disconnect swirl control valve control solenoid valve harness connector.

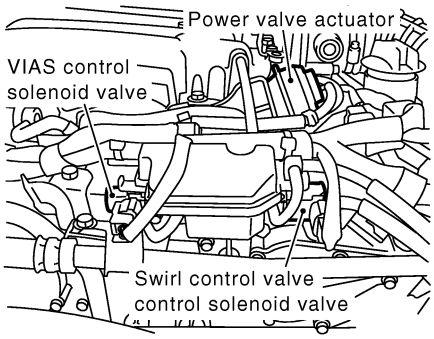

SEC539D

3. Turn ignition switch ON.
4. Check voltage between swirl control valve control solenoid valve terminal 1 and ground with CONSULT-II or tester.

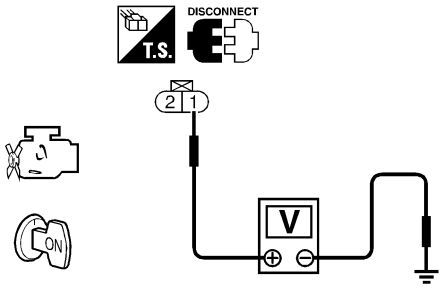

Voltage: Battery voltage

SEF619X

OK or NG

OK	▶	GO TO 5.
NG	▶	GO TO 4.

4	DETECT MALFUNCTIONING PART

Check the following.
- Harness connectors E1, M1
- Harness connectors M33, F22
- Harness for open or short between swirl control valve control solenoid valve and ECM relay

	▶	Repair open circuit or short to ground or short to power in harness connectors.

5	CHECK SWIRL CONTROL VALVE CONTROL SOLENOID VALVE OUTPUT SIGNAL CIRCUIT FOR OPEN AND SHORT

1. Turn ignition switch OFF.
2. Disconnect ECM harness connector.
3. Check harness continuity between ECM terminal 27 and swirl control valve control solenoid valve terminal 2. Refer to Wiring Diagram.
   Continuity should exist.
4. Also check harness for short to ground and short to power.

OK or NG

OK	▶	GO TO 6.
NG	▶	Repair open circuit or short to ground or short to power in harness connectors.

6	CHECK SWIRL CONTROL VALVE CONTROL SOLENOID VALVE

With CONSULT-II

1. Reconnect the disconnected harness connectors.
2. Start engine and let it idle.
3. Remove vacuum hose connected to swirl control valve actuator.
4. Select "SWIRL CONT SOL VALVE" in "ACTIVE TEST" mode with CONSULT-II.
5. Touch "ON" and "OFF" on CONSULT-II screen.
6. Check vacuum existence and operation delay time under the following conditions.

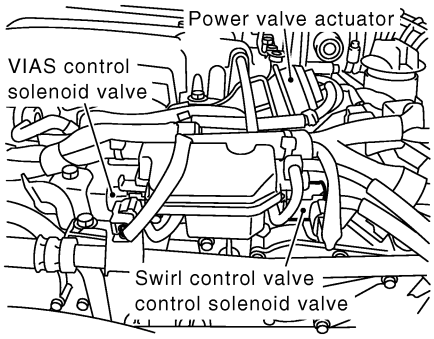

SWIRL CONT SOL VALVE	Vacuum
ON	Should exist.
OFF	Should not exist.

Operation takes less than 1 second.

SEC540D

Without CONSULT-II

1. Reconnect ECM harness connector.
2. Remove vacuum hose connected to swirl control valve actuator.
3. Start engine and let it idle.
4. Apply 12V of direct current between swirl control valve control solenoid valve terminals 1 and 2.
5. Check vacuum existence and operation delay time under the following conditions.

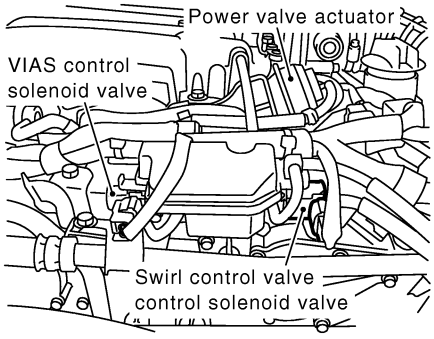

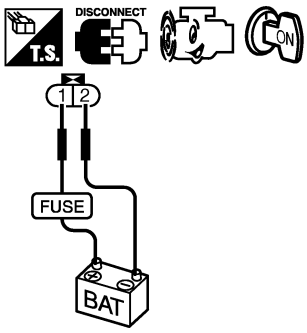

Condition	Vacuum
12V direct current supply	Should exist.
No supply	Should not exist.

Operation takes less than 1 second.

SEC541D

OK or NG

OK	▶	GO TO 7.
NG	▶	Replace intake manifold collector assembly.

7	CHECK INTERMITTENT INCIDENT
Perform "TROUBLE DIAGNOSIS FOR INTERMITTENT INCIDENT", EC-155.	
▶	**INSPECTION END**

PROCEDURE B

NAEC1049S02

1	CHECK INTAKE SYSTEM
1. Start engine and let it idle. 2. Check intake air system for air leaks.	
OK or NG	
OK (With CONSULT-II) ▶	GO TO 2.
OK (Without CONSULT-II) ▶	GO TO 3.
NG ▶	Repair intake system.

2	CHECK SWIRL CONTROL VALVE CONTROL SOLENOID VALVE CIRCUIT

With CONSULT-II

1. Select "SWIRL CONT SOL VALVE" in "ACTIVE TEST" mode with CONSULT-II.
2. Touch "ON" and "OFF" on CONSULT-II screen.

ACTIVE TEST	
SWIRL CONT SOL VALVE	OFF
MONITOR	
ENG SPEED	XXX rpm

SEC004E

3. Make sure that clicking sound is heard from the swirl control valve control solenoid valve.

OK or NG	
OK ▶	GO TO 6.
NG ▶	GO TO 3.

3	CHECK SWIRL CONTROL VALVE CONTROL SOLENOID VALVE POWER SUPPLY CIRCUIT

1. Turn ignition switch OFF.
2. Disconnect swirl control valve control solenoid valve harness connector.

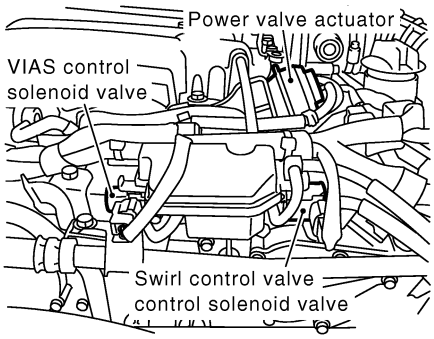

SEC539D

3. Turn ignition switch ON.
4. Check voltage between swirl control valve control solenoid valve terminal 1 and ground with CONSULT-II or tester.

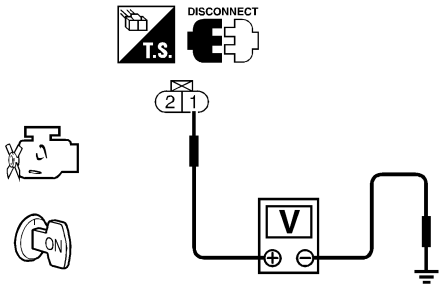

Voltage: Battery voltage

SEF619X

OK or NG

OK	▶	GO TO 5.
NG	▶	GO TO 4.

4	DETECT MALFUNCTIONING PART

Check the following.
- Harness connectors E1, M1
- Harness connectors M33, F22
- Harness for open or short between swirl control valve control solenoid valve and ECM relay

	▶	Repair open circuit or short to ground or short to power in harness connectors.

5	CHECK SWIRL CONTROL VALVE CONTROL SOLENOID VALVE OUTPUT SIGNAL CIRCUIT FOR OPEN AND SHORT

1. Turn ignition switch OFF.
2. Disconnect ECM harness connector.
3. Check harness continuity between ECM terminal 27 and swirl control valve control solenoid valve terminal 2. Refer to Wiring Diagram.
   Continuity should exist.
4. Also check harness for short to ground and short to power.

OK or NG

OK	▶	GO TO 6.
NG	▶	Repair open circuit or short to ground or short to power in harness connectors.

6	CHECK HOSES

Check hoses and tubes between intake manifold, and swirl control valve actuator for crack, clogging, improper connection or disconnection.

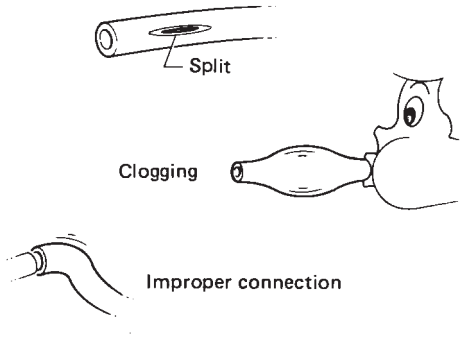

SEF109L

OK or NG

OK	▶	GO TO 7.
NG	▶	Repair hoses or tubes.

7	CHECK SWIRL CONTROL VALVE CONTROL SOLENOID VALVE

With CONSULT-II

1. Reconnect the disconnected harness connectors.
2. Start engine and let it idle.
3. Remove vacuum hose connected to swirl control valve actuator.
4. Select "SWIRL CONT SOL/V" in "ACTIVE TEST" mode with CONSULT-II.
5. Touch "ON" and "OFF" on CONSULT-II screen.
6. Check vacuum existence and operation delay time under the following conditions.

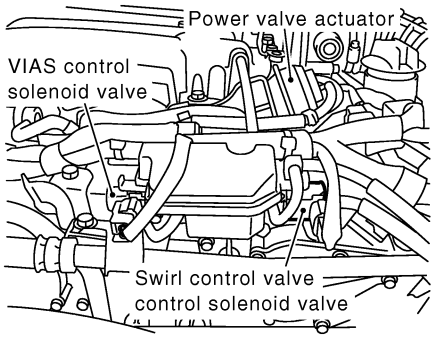

SWIRL CONT SOL VALVE	Vacuum
ON	Should exist.
OFF	Should not exist.

Operation takes less than 1 second.

SEC540D

Without CONSULT-II

1. Reconnect ECM harness connector.
2. Remove vacuum hose connected to swirl control valve actuator.
3. Start engine and let it idle.
4. Apply 12V of direct current between swirl control valve control solenoid valve terminals 1 and 2.
5. Check vacuum existence and operation delay time under the following conditions.

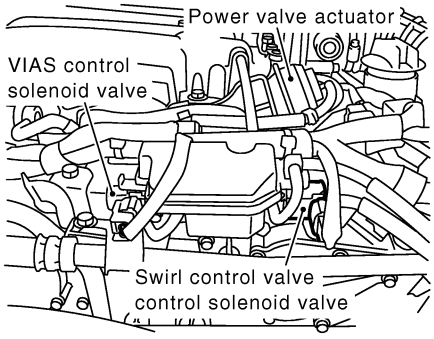

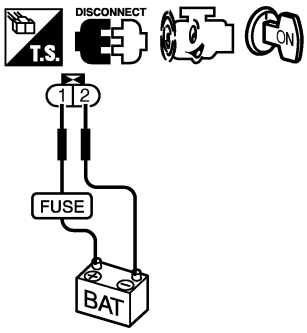

Condition	Vacuum
12V direct current supply	Should exist.
No supply	Should not exist.

Operation takes less than 1 second.

SEC541D

OK or NG

OK	▶	GO TO 8.
NG	▶	Replace intake manifold collector assembly.

8	CHECK SWIRL CONTROL VALVE ACTUATOR

With CONSULT-II

1. Reconnect vacuum hose between swirl control valve actuator and swirl control valve control solenoid valve.
2. Start engine and let it idle.
3. Select "SWIRL CONT SOL/V" in "ACTIVE TEST" mode.
4. Touch "ON" and "OFF" on CONSULT-II screen.
5. Make sure that swirl control valve actuator rod moves according to "SWIRL CONT SOL/V indication.

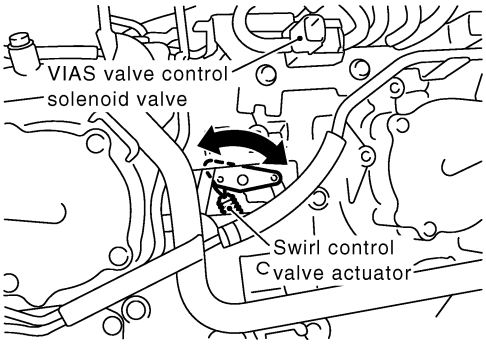

SEF006ZA

Without CONSULT-II

1. Reconnect vacuum hose between swirl control valve actuator and swirl control valve control solenoid valve.
2. Start engine and let it idle.
3. Apply 12V direct current between swirl control valve control solenoid valve terminals 1 and 2.
4. Make sure that swirl control valve actuator rod moves according to 12V direct current being applied.

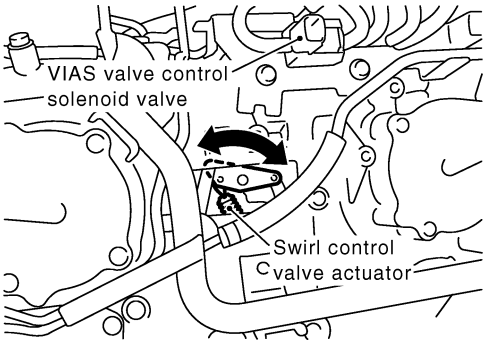

SEF006ZA

OK or NG

OK	▶	GO TO 9.
NG	▶	Replace swirl control valve actuator.

9	CHECK SWIRL CONTROL VALVE CONTROL VACUUM CHECK SWITCH

1. Turn ignition switch OFF.
2. Disconnect vacuum hose connected to swirl control valve control vacuum check switch.
3. Attach vacuum pump to swirl control valve control vacuum check switch.
4. Turn ignition switch ON.
5. Check voltage between ECM terminal 59 and ground under the following conditions.

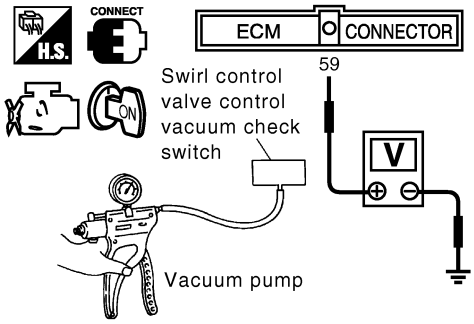

SEC542D

Applied pressure	Voltage V
More than –20.0 kPa (–150 mmHg, –5.91 inHg)	Engine ground
–20.0 to –23.0 kPa (–150 to –172 mmHg, –5.91 to –6.77 inHg)	Engine ground or Approx. 4.8
Less than –23.0 kPa (–172 mmHg, –6.77 inHg)	Approx. 4.8

MTBL1369

OK or NG

OK	▶	GO TO 10.
NG	▶	Replace swirl control valve control vacuum check switch.

10	CHECK MASS AIR FLOW SENSOR

1. Reconnect harness connectors disconnected.
2. Start engine and warm it up to normal operating temperature.
3. Check voltage between ECM terminal 51 (Mass air flow sensor signal) and ground.

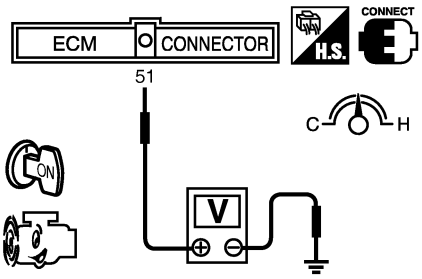

SEC543D

Condition	Voltage V
Ignition switch ON (Engine stopped.)	Approx. 0.4
Idle (Engine is warmed-up to normal operating temperature.)	1.0 - 1.3
2,500 rpm (Engine is warmed-up to normal operating temperature.)	1.7 - 2.1
Idle to about 4,000 rpm*	1.0 - 1.3 to Approx. 3.7

*: Check for linear voltage rise in response to engine being increased to about 4,000 rpm.

MTBL1844

4. If the voltage is out of specification, disconnect MAF sensor harness connector and connect it again. Then repeat above check.

OK or NG

OK	▶	GO TO 11.
NG	▶	Replace mass air flow sensor.

11	CHECK ACCELERATOR PEDAL POSITION SENSOR

Refer to EC-704, "Component Inspection".

OK or NG

OK	▶	GO TO 12.
NG	▶	Replace accelerator pedal assembly.

12	CHECK THROTTLE POSITION SENSOR

Refer to EC-696, "Component Inspection".

OK or NG

OK	▶	GO TO 13.
NG	▶	Replace electric throttle control actuator.

13	CHECK CAMSHAFT POSITION SENSOR (PHASE)

Refer to EC-333, "Component Inspection".

OK or NG

OK	▶	GO TO 14.
NG	▶	Replace crankshaft position sensor (PHASE).

14	CHECK INTERMITTENT INCIDENT
Perform "TROUBLE DIAGNOSIS FOR INTERMITTENT INCIDENT", EC-155.	
▶	**INSPECTION END**

PROCEDURE C

NAEC1049S03

1	INSPECTION START
Do you have CONSULT-II?	
Yes or No	
Yes ▶	GO TO 2.
No ▶	GO TO 3.

2	CHECK SWIRL CONTROL VALVE CONTROL SOLENOID VALVE CIRCUIT

With CONSULT-II

1. Turn ignition switch OFF.
2. Select "SWIRL CONT SOL VALVE" in "ACTIVE TEST" mode with CONSULT-II.
3. Touch "ON" and "OFF" on CONSULT-II screen.

ACTIVE TEST	
SWIRL CONT SOL VALVE	OFF
MONITOR	
ENG SPEED	XXX rpm

SEC004E

4. Make sure that clicking sound is heard from the swirl control valve control solenoid valve.

OK or NG

OK ▶	GO TO 6.
NG ▶	GO TO 3.

3	CHECK SWIRL CONTROL VALVE CONTROL SOLENOID VALVE POWER SUPPLY CIRCUIT

1. Turn ignition switch OFF.
2. Disconnect swirl control valve control solenoid valve harness connector.

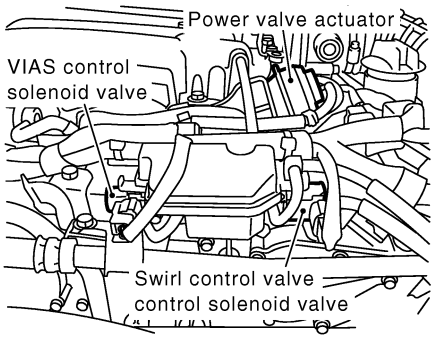

SEC539D

3. Turn ignition switch ON.
4. Check voltage between swirl control valve control solenoid valve terminal 1 and ground with CONSULT-II or tester.

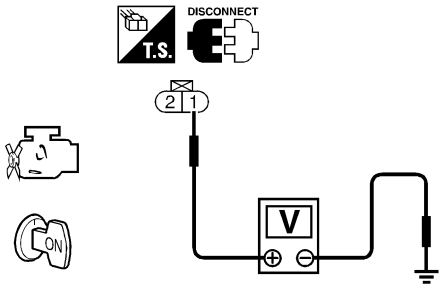

Voltage: Battery voltage

SEF619X

OK or NG

OK	▶	GO TO 5.
NG	▶	GO TO 4.

4	DETECT MALFUNCTIONING PART

Check the following.
- Harness connectors E1, M1
- Harness connectors M33, F22
- Harness for open or short between swirl control valve control solenoid valve and ECM relay

	▶	Repair open circuit or short to ground or short to power in harness connectors.

5	CHECK SWIRL CONTROL VALVE CONTROL SOLENOID VALVE OUTPUT SIGNAL CIRCUIT FOR OPEN AND SHORT

1. Turn ignition switch OFF.
2. Disconnect ECM harness connector.
3. Check harness continuity between ECM terminal 27 and swirl control valve control solenoid valve terminal 2. Refer to Wiring Diagram.
   Continuity should exist.
4. Also, check harness for short to ground and short to power.

OK or NG

OK	▶	GO TO 6.
NG	▶	Repair open circuit or short to ground or short to power in harness connectors.

6	CHECK HOSES

Check hoses and tubes between air cleaner and swirl control valve vacuum check switch for clogging or improper connection.

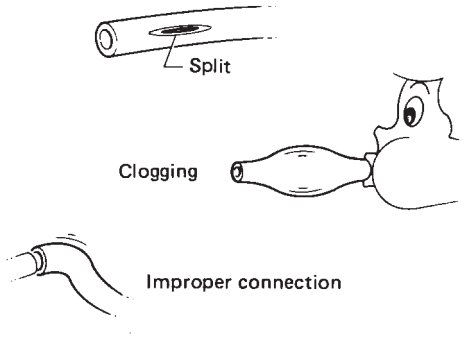

SEF109L

OK or NG

OK	▶	GO TO 7.
NG	▶	Repair hoses or tubes.

7	CHECK SWIRL CONTROL VALVE CONTROL SOLENOID VALVE

With CONSULT-II

1. Reconnect the disconnected harness connectors.
2. Start engine and let it idle.
3. Remove vacuum hose connected to swirl control valve actuator.
4. Select "SWIRL CONT SOL/V" in "ACTIVE TEST" mode with CONSULT-II.
5. Touch "ON" and "OFF" on CONSULT-II screen.
6. Check vacuum existence and operation delay time under the following conditions.

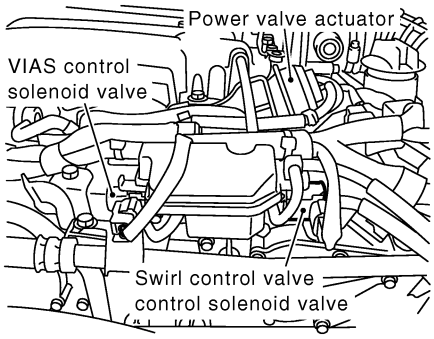

SWIRL CONT SOL VALVE	Vacuum
ON	Should exist.
OFF	Should not exist.

Operation takes less than 1 second.

SEC540D

Without CONSULT-II

1. Reconnect ECM harness connector.
2. Remove vacuum hose connected to swirl control valve actuator.
3. Start engine and let it idle.
4. Apply 12V of direct current between swirl control valve control solenoid valve terminals 1 and 2.
5. Check vacuum existence and operation delay time under the following conditions.

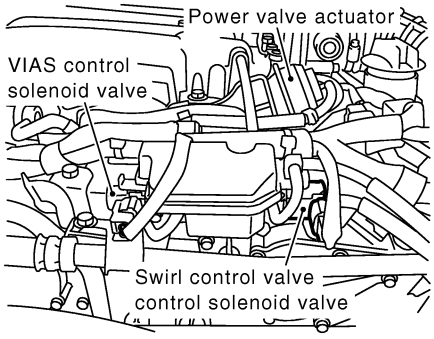

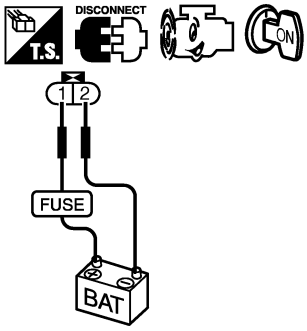

Condition	Vacuum
12V direct current supply	Should exist.
No supply	Should not exist.

Operation takes less than 1 second.

SEC541D

OK or NG

OK	▶	GO TO 8.
NG	▶	Replace intake manifold collector assembly.

8	CHECK SWIRL CONTROL VALVE CONTROL VACUUM CHECK SWITCH

1. Turn ignition switch OFF.
2. Disconnect vacuum hose connected to swirl control valve control vacuum check switch.
3. Attach vacuum pump to swirl control valve control vacuum check switch.
4. Turn ignition switch ON.
5. Check voltage between ECM terminal 59 and ground under the following conditions.

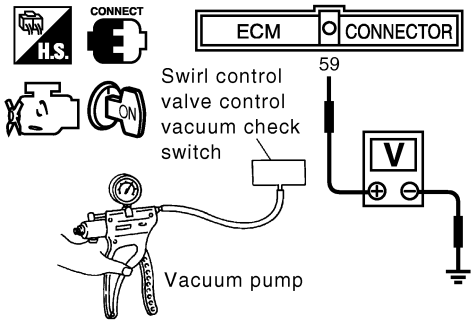

SEC542D

Applied pressure	Voltage V
More than –20.0 kPa (–150 mmHg, –5.91 inHg)	Engine ground
–20.0 to –23.0 kPa (–150 to –172 mmHg, –5.91 to –6.77 inHg)	Engine ground or Approx. 4.8
Less than –23.0 kPa (–172 mmHg, –6.77 inHg)	Approx. 4.8

MTBL1369

OK or NG

OK	▶	GO TO 9.
NG	▶	Replace swirl control valve control vacuum check switch.

9	CHECK CAMSHAFT POSITION SENSOR (PHASE)

Refer to EC-333, "Component Inspection".

OK or NG

OK	▶	GO TO 10.
NG	▶	Replace camshaft position sensor (PHASE).

10	CHECK THROTTLE POSITION SENSOR

Refer to EC-696, "Component Inspection".

OK or NG

OK	▶	GO TO 11.
NG	▶	Replace electric throttle control actuator.

11	CHECK ACCELERATOR PEDAL POSITION SENSOR

Refer to EC-704, "Component Inspection".

OK or NG

OK	▶	GO TO 12.
NG	▶	Replace accelerator pedal assembly.

12	CHECK INTERMITTENT INCIDENT
Perform "TROUBLE DIAGNOSIS FOR INTERMITTENT INCIDENT", EC-155.	
▶	INSPECTION END

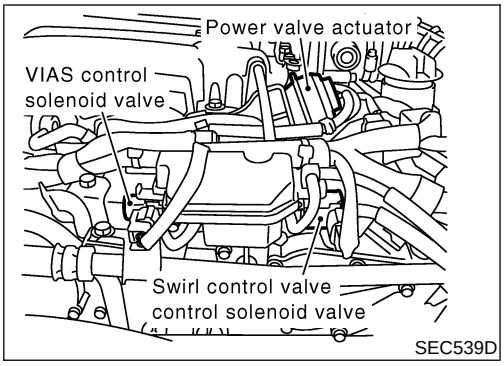

Component Description

NAEC1050

The swirl control valve control solenoid valve responds to signals from the ECM. When the ECM sends an ON (ground) signal, the solenoid valve is bypassed to apply intake manifold vacuum to the swirl control valve actuator. This operation closes the swirl control valve. When the ECM sends an OFF signal, the vacuum signal is cut and the swirl control valve opens.

CONSULT-II Reference Value in Data Monitor Mode

NAEC1051

Specification data are reference values.

MONITOR ITEM	CONDITION		SPECIFICATION
SWRL CONT S/V	● Engine speed: Idle	Engine coolant temperature is between 15°C (59°F) to 50°C (122°F).	ON
		Engine coolant temperature is above 55°C (131°F).	OFF

ECM Terminals and Reference Value

NAEC1052

Specification data are reference values and are measured between each terminal and ground.

CAUTION:

Do not use ECM ground terminals when measuring input/output voltage. Doing so may result in damage to the ECM's transistor. Use a ground other than ECM terminals, such as the ground.

TERMINAL NO.	WIRE COLOR	ITEM	CONDITION	DATA (DC Voltage)
27	G	Swirl control valve control solenoid valve	**[Engine is running]** ● Idle speed ● Engine coolant temperature is between 15 to 50°C (59 to 122°F).	0 - 1.0V
			[Engine is running] ● Idle speed ● Engine coolant temperature is above 55°C (131°F).	BATTERY VOLTAGE (11 - 14V)

On Board Diagnosis Logic

NAEC1053

DTC No.	Trouble diagnosis name	DTC Detecting Condition	Possible Cause
P1131 1131	Swirl control valve control solenoid valve circuit	An improper voltage signal is sent to ECM through swirl control valve control solenoid valve.	● Harness or connectors (The swirl control valve control solenoid valve circuit is open or shorted.) ● Swirl control valve control solenoid valve

DATA MONITOR	
MONITOR	NO DTC
ENG SPEED	XXX rpm

SEF058Y

DTC Confirmation Procedure

NAEC1054

NOTE:
If DTC Confirmation Procedure has been previously conducted, always turn ignition switch OFF and wait at least 10 seconds before conducting the next test.

WITH CONSULT-II

NAEC1054S01

1) Turn ignition switch ON.
2) Select “DATA MONITOR” mode with CONSULT-II.
3) Wait at least 5 seconds.
   If 1st trip DTC is detected, go to “Diagnostic Procedure”, EC-501.

WITH GST

NAEC1054S02

Follow the procedure “With CONSULT-II” above.

Wiring Diagram

=NAEC1055

EC-SWL/V-01

: Detectable line for DTC
: Non-detectable line for DTC

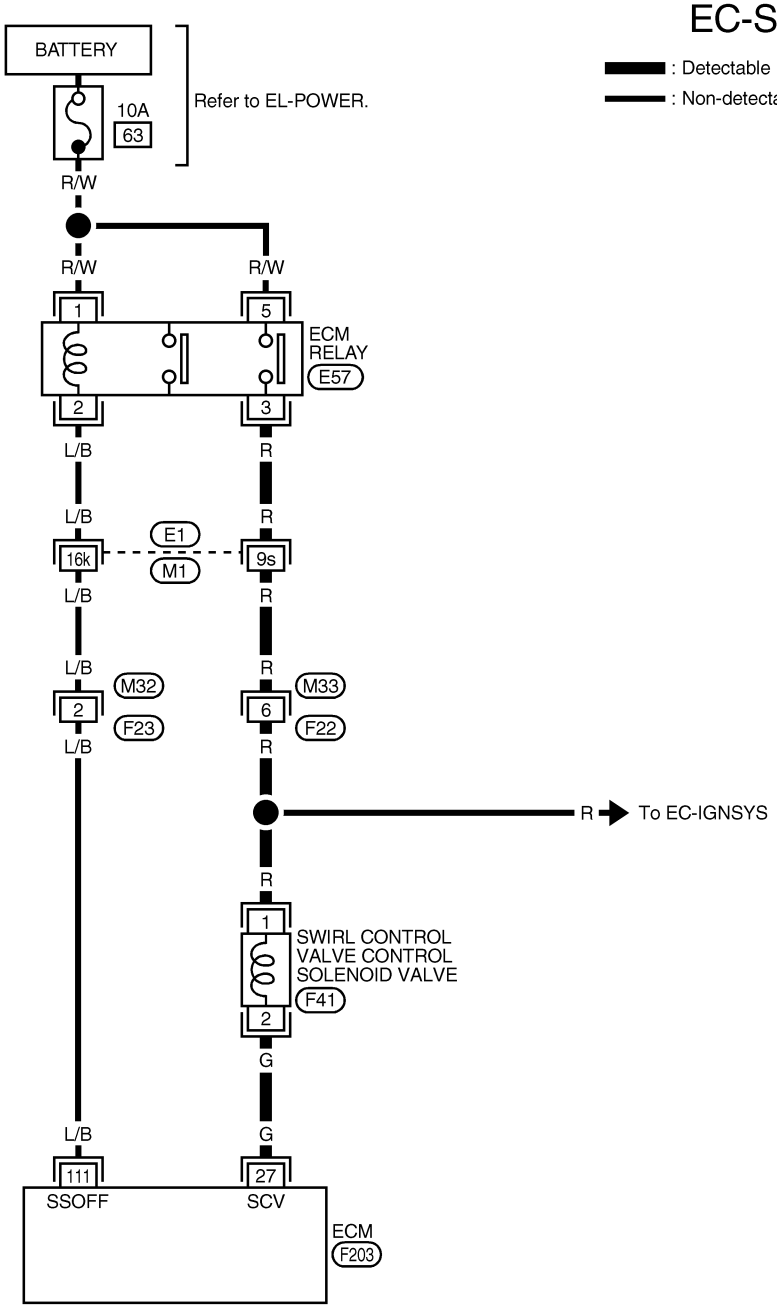

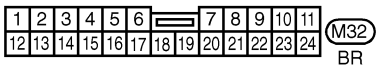

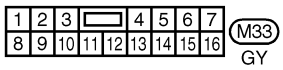

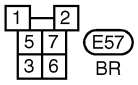

REFER TO THE FOLLOWING.
E1 -SUPER MULTIPLE JUNCTION (SMJ)

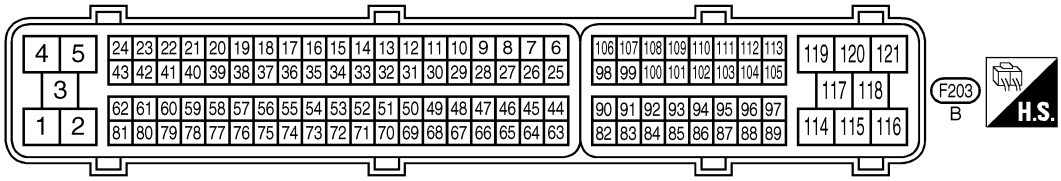

MEC101E

Diagnostic Procedure

NAEC1056

1	INSPECTION START	
Do you have CONSULT-II?		
	Yes or No	
Yes	▶	GO TO 2.
No	▶	GO TO 3.

2	CHECK SWIRL CONTROL VALVE CONTROL SOLENOID VALVE CIRCUIT	

With CONSULT-II

1. Turn ignition switch ON.
2. Select “SWIRL CONT SOL VALVE” in “ACTIVE TEST” mode with CONSULT-II.
3. Touch “ON” and “OFF” on CONSULT-II screen.

ACTIVE TEST	
SWIRL CONT SOL VALVE	OFF
MONITOR	
ENG SPEED	XXX rpm

SEC004E

4. Make sure that clicking sound is heard from the swirl control valve control solenoid valve.

	OK or NG	
OK	▶	GO TO 6.
NG	▶	GO TO 3.

3	CHECK SWIRL CONTROL VALVE CONTROL SOLENOID VALVE POWER SUPPLY CIRCUIT

1. Turn ignition switch OFF.
2. Disconnect swirl control valve control solenoid valve harness connector.

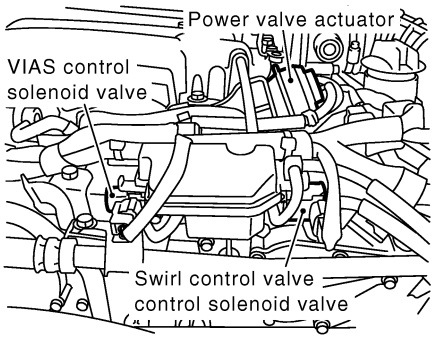

SEC539D

3. Turn ignition switch ON.
4. Check voltage between swirl control valve control solenoid valve terminal 1 and ground with CONSULT-II or tester.

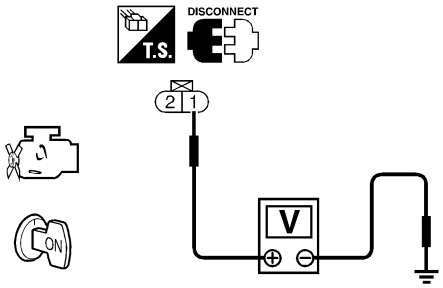

Voltage: Battery voltage

SEF619X

OK or NG

OK	▶	GO TO 5.
NG	▶	GO TO 4.

4	DETECT MALFUNCTIONING PART

Check the following.
- Harness connectors E1, M1
- Harness connectors M33, F22
- Harness for open or short between swirl control valve control solenoid valve and ECM relay

	▶	Repair open circuit or short to ground or short to power in harness connectors.

5	CHECK SWIRL CONTROL VALVE CONTROL SOLENOID VALVE OUTPUT SIGNAL CIRCUIT FOR OPEN AND SHORT

1. Turn ignition switch OFF.
2. Disconnect ECM harness connector.
3. Check harness continuity between ECM terminal 27 and swirl control valve control solenoid valve terminal 2.
   Refer to Wiring Diagram.
   Continuity should exist.
4. Also check harness for short to ground and short to power.

OK or NG

OK	▶	GO TO 6.
NG	▶	Repair open circuit or short to ground or short to power in harness connectors.

6	CHECK SWIRL CONTROL VALVE CONTROL SOLENOID VALVE

With CONSULT-II

1. Reconnect the disconnected harness connectors.
2. Start engine and let it idle.
3. Remove vacuum hose connected to swirl control valve actuator.
4. Select "SWIRL CONT SOL VALVE" in "ACTIVE TEST" mode with CONSULT-II.
5. Touch "ON" and "OFF" on CONSULT-II screen.
6. Check vacuum existence and operation delay time under the following conditions.

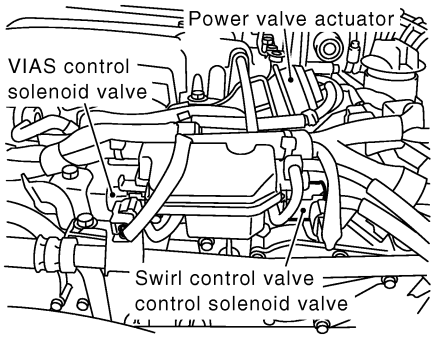

SWIRL CONT SOL VALVE	Vacuum
ON	Should exist.
OFF	Should not exist.

Operation takes less than 1 second.

SEC540D

Without CONSULT-II

1. Reconnect ECM harness connector.
2. Remove vacuum hose connected to swirl control valve actuator.
3. Start engine and let it idle.
4. Apply 12V of direct current between swirl control valve control solenoid valve terminals 1 and 2.
5. Check vacuum existence and operation delay time under the following conditions.

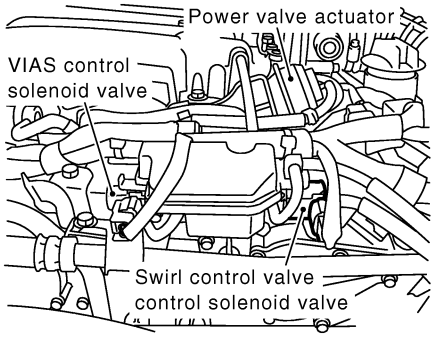

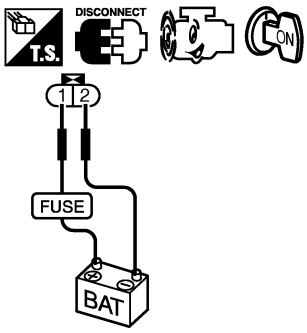

Condition	Vacuum
12V direct current supply	Should exist.
No supply	Should not exist.

Operation takes less than 1 second.

SEC541D

OK or NG

OK	▶	GO TO 7.
NG	▶	Replace intake manifold collector assembly.

7	CHECK INTERMITTENT INCIDENT
Perform "TROUBLE DIAGNOSIS FOR INTERMITTENT INCIDENT", EC-155.	
▶	**INSPECTION END**

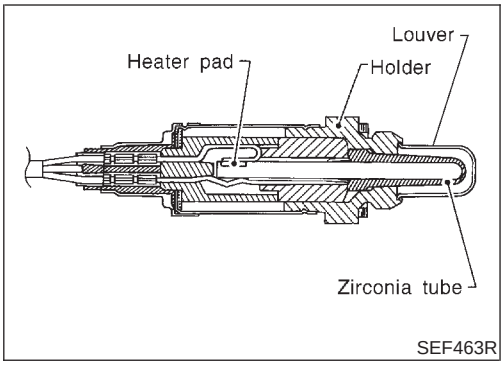

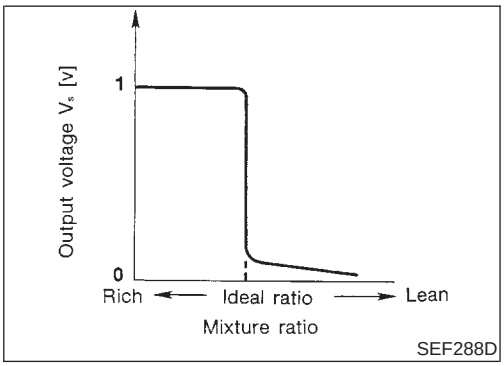

Component Description

NAEC1147

The heated oxygen sensor 1 is placed into the exhaust manifold. It detects the amount of oxygen in the exhaust gas compared to the outside air. The heated oxygen sensor 1 has a closed-end tube made of ceramic zirconia. The zirconia generates voltage from approximately 1V in richer conditions to 0V in leaner conditions. The heated oxygen sensor 1 signal is sent to the ECM. The ECM adjusts the injection pulse duration to achieve the ideal air-fuel ratio. The ideal air-fuel ratio occurs near the radical change from 1V to 0V.

CONSULT-II Reference Value in Data Monitor Mode

NAEC1148

Specification data are reference values.

MONITOR ITEM	CONDITION		SPECIFICATION
HO2S1 (B1) HO2S1 (B2)	● Engine: After warming up	Maintaining engine speed at 2,000 rpm	0 - 0.3V ⟷ Approx. 0.6 - 1.0V
HO2S1 MNTR (B1) HO2S1 MNTR (B2)			LEAN ⟷ RICH Changes more than 5 times during 10 seconds.

ECM Terminals and Reference Value

NAEC1149

Specification data are reference values and are measured between each terminal and ground.

CAUTION:

Do not use ECM ground terminals when measuring input/output voltage. Doing so may result in damage to the ECM's transistor. Use a ground other than ECM terminals, such as the ground.

TERMINAL NO.	WIRE COLOR	ITEM	CONDITION	DATA (DC Voltage)
16	G/B	Heated oxygen sensor 1 (bank 2)	**[Engine is running]** ● **Warm-up condition** ● Engine speed is 2,000 rpm.	0 - Approximately 1.0V (Periodically change)
35	G	Heated oxygen sensor 1 (bank 1)	**[Engine is running]** ● **Warm-up condition** ● Engine speed is 2,000 rpm.	0 - Approximately 1.0V (Periodically change)

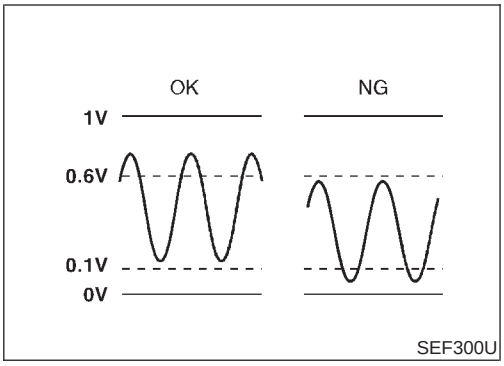

On Board Diagnosis Logic

NAEC1150

To judge the malfunction, the output from the heated oxygen sensor 1 is monitored to determine whether the “rich” output is sufficiently high and whether the “lean” output is sufficiently low. When both the outputs are shifting to the lean side, the malfunction will be detected.

DTC No.	Trouble diagnosis name	DTC Detecting Condition	Possible Cause
P1143 1143 (Bank 1)	Heated oxygen sensor 1 lean shift monitoring	The maximum and minimum voltage from the sensor are not reached to the specified voltages.	• Heated oxygen sensor 1 • Heated oxygen sensor 1 heater • Fuel pressure • Injector • Intake air leaks
P1163 1163 (Bank 2)			

DTC Confirmation Procedure

NAEC1151

CAUTION:

Always drive vehicle at a safe speed.

NOTE:

If DTC Confirmation Procedure has been previously conducted, always turn ignition switch OFF and wait at least 10 seconds before conducting the next test.

TESTING CONDITION:

- **Always perform at a temperature above −10°C (14°F).**
- **Before performing following procedure, confirm that battery voltage is more than 11V at idle.**

6

HO2S1 (B1) P1143	
OUT OF CONDITION	
MONITOR	
ENG SPEED	XXX rpm
B/FUEL SCHDL	XXX msec
COOLAN TEMP/S	XXX ˚C
VHCL SPEED SEN	XXX km/h

PBIB0546E

6

HO2S1 (B1) P1143	
TESTING	
MONITOR	
ENG SPEED	XXX rpm
B/FUEL SCHDL	XXX msec
COOLAN TEMP/S	XXX ˚C
VHCL SPEED SEN	XXX km/h

PBIB0547E

6

HO2S1 (B1) P1143
COMPLETED

SEC769C

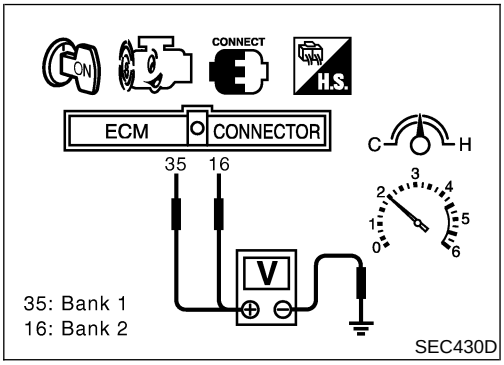

SEC430D

WITH CONSULT-II

NAEC1151S01

1) Start engine and warm it up to normal operating temperature.
2) Stop engine and wait at least 10 seconds.
3) Turn ignition switch ON and select "HO2S1 (B1)/(B2) P1143/ P0154" of "HO2S1" in "DTC WORK SUPPORT" mode with CONSULT-II.
4) Touch "START".
5) Start engine and let it idle for at least 3 minutes.

NOTE:
Never raise engine speed above 3,600 rpm after this step. If the engine speed limit is exceeded, return to step 5.

6) When the following conditions are met, "TESTING" will be displayed on the CONSULT-II screen. Maintain the conditions continuously until "TESTING" changes to "COMPLETED". (It will take approximately 50 seconds or more.)

ENG SPEED	1,300 - 2,800 rpm
Vehicle speed	Less than 100 km/h (62 MPH)
B/FUEL SCHDL	3 - 14 msec
Selector lever	Suitable position

If "TESTING" is not displayed after 5 minutes, retry from step 2.

7) Make sure that "OK" is displayed after touching "SELF-DIAG RESULTS". If "NG" is displayed, refer to "Diagnostic Procedure", EC-507.

Overall Function Check

NAEC1152

Use this procedure to check the overall function of the heated oxygen sensor 1 circuit. During this check, a 1st trip DTC might not be confirmed.

WITH GST

NAEC1152S01

1) Start engine and warm it up to normal operating temperature.
2) Set voltmeter probes between ECM terminal 35 (HO2S1 bank 1 signal) or 16 (HO2S1 bank 2 signal) and ground.
3) Check one of the following with engine speed held at 2,000 rpm constant under no load.

- The maximum voltage is over 0.6V at least one time.
- The minimum voltage is over 0.1V at least one time.

4) If NG, go to "Diagnostic Procedure", EC-507.

Diagnostic Procedure

NAEC1153

1	CHECK GROUND CONNECTIONS

1. Turn ignition switch OFF.
2. Loosen and retighten three ground screws on the body.
   Refer to “Ground Inspection”, EC-165.

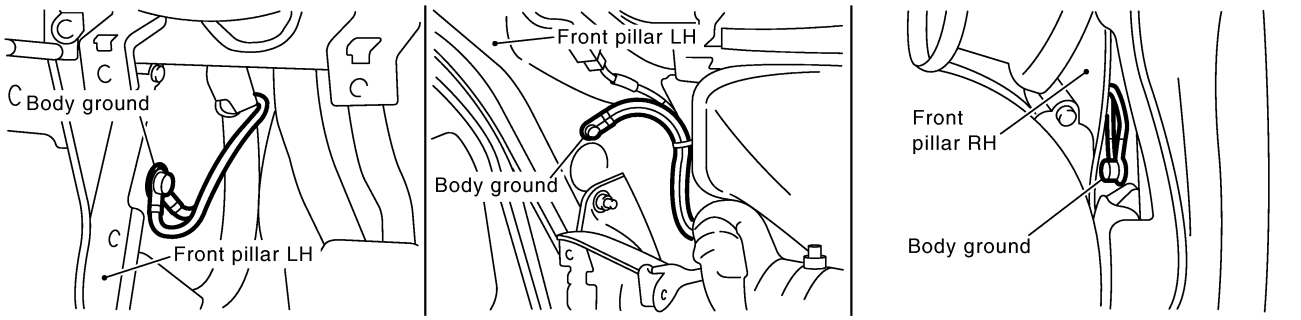

SEC997D

OK or NG

OK	▶	GO TO 2.
NG	▶	Repair or replace ground connections.

2	RETIGHTEN HEATED OXYGEN SENSOR 1

Loosen and retighten corresponding heated oxygen sensor 1.

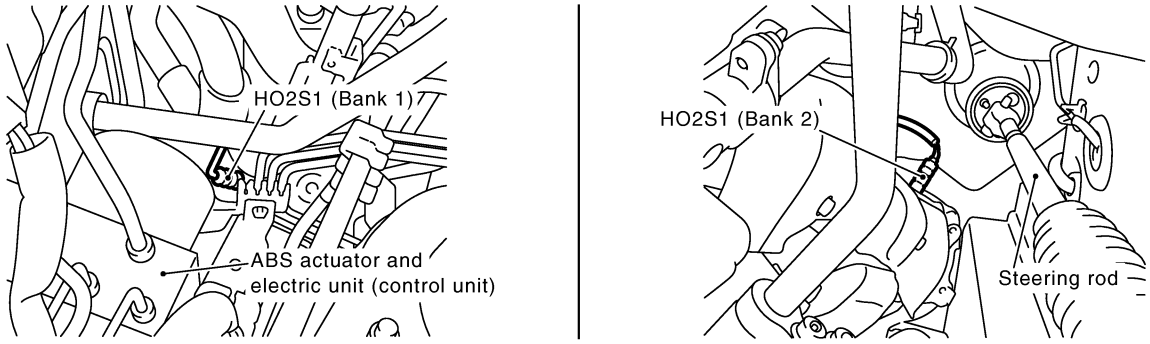

SEC001E

Tightening torque:
40 - 60 N·m (4.1 - 6.1 kg-m, 30 - 44 ft-lb)

	▶	GO TO 3.

3	CLEAR THE SELF-LEARNING DATA

With CONSULT-II

1. Start engine and warm it up to normal operating temperature.
2. Select "SELF-LEARNING CONT" in "WORK SUPPORT" mode with CONSULT-II.
3. Clear the self-learning control coefficient by touching "CLEAR".

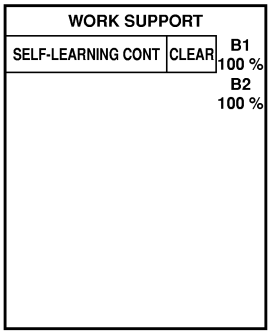

SEF968Y

4. Run engine for at least 10 minutes at idle speed.
   Is the 1st trip DTC P0171 or P0174 detected?
   Is it difficult to start engine?

Without CONSULT-II

1. Start engine and warm it up to normal operating temperature.
2. Turn ignition switch OFF.
3. Disconnect mass air flow sensor harness connector, and restart and run engine for at least 5 seconds at idle speed.

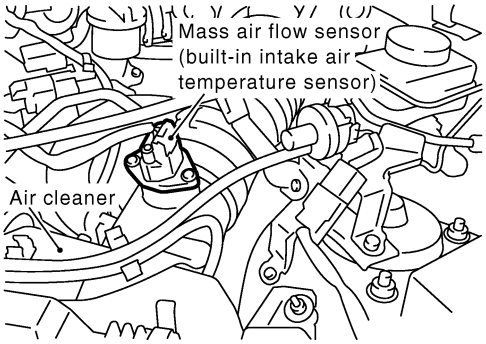

SEF960YA

4. Stop engine and reconnect mass air flow sensor harness connector.
5. Make sure DTC P0102 is displayed.
6. Erase the DTC memory. Refer to "HOW TO ERASE EMISSION-RELATED DIAGNOSTIC INFORMATION", EC-91.
7. Make sure DTC P0000 is displayed.
8. Run engine for at least 10 minutes at idle speed.
   Is the 1st trip DTC P0171 or P0174 detected?
   Is it difficult to start engine?

Yes or No

Yes	▶	Perform trouble diagnosis for DTC P0171, P0174. Refer to EC-273.
No	▶	GO TO 4.

4	CHECK HEATED OXYGEN SENSOR HEATER 1

1. Stop engine.
2. Disconnect HO2S1 harness connector.
3. Check resistance between HO2S1 terminals as follows.

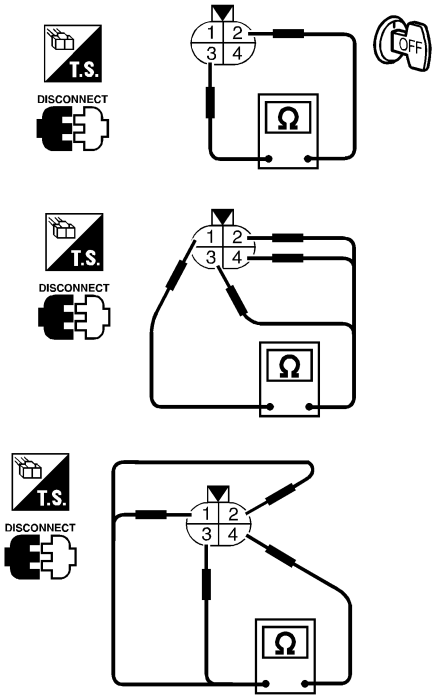

SEF249Y

Terminals	Resistance
2 and 3	3.3 - 4.0Ω at 25 °C (77 °F)
1 and 2, 3, 4 4 and 1, 2, 3	∞Ω (Continuity should not exist.)

MTBL1782

CAUTION:

- **Discard any heated oxygen sensor which has been dropped from a height of more than 0.5 m (19.7 in) onto a hard surface such as a concrete floor; use a new one.**
- **Before installing new oxygen sensor, clean exhaust system threads using Oxygen Sensor Thread Cleaner tool J-43897-18 or J-43897-12 and approved anti-seize lubricant.**

OK or NG

OK (With CONSULT-II) ▶	GO TO 5.
OK (Without CONSULT-II) ▶	GO TO 6.
NG ▶	Replace malfunctioning heated oxygen sensor 1.

5	CHECK HEATED OXYGEN SENSOR 1

With CONSULT-II

1. Start engine and warm it up to normal operating temperature.
2. Select "MANU TRIG" and adjust "TRIGGER POINT" to 100% in "DATA MONITOR" mode with CONSULT-II.
3. Select "HO2S1 (B1)/(B2)" and "HO2S1 MNTR (B1)/(B2)".
4. Hold engine speed at 2,000 rpm under no load during the following steps.
5. Touch "RECORD" on CONSULT-II screen.

DATA MONITOR	
MONITOR	NO DTC
ENG SPEED	XXX rpm
COOLAN TEMP/S	XXX °C
HO2S1 (B1)	XXX V
HO2S2 (B2)	XXX V

SEF967Y

6. Check the following.

- "HO2S1 MNTR (B1)/(B2)" in "DATA MONITOR" mode changes from "RICH" to "LEAN" to "RICH" more than 5 times in 10 seconds.
  5 times (cycles) are counted as shown below.

Bank 1

cycle	1	2	3	4	5
HO2S1 MNTR (B1)	R-L-R-L-R-L-R-L-R-L-R				

Bank 2

cycle	1	2	3	4	5
HO2S1 MNTR (B2)	R-L-R-L-R-L-R-L-R-L-R				

R means HO2S1 MNTR (B1)/(B2) indicates RICH

L means HO2S1 MNTR (B1)/(B2) indicates LEAN

SEF647Y

- "HO2S1 (B1)/(B2)" voltage goes above 0.6V at least once.
- "HO2S1 (B1)/(B2)" voltage goes below 0.3V at least once.
- "HO2S1 (B1)/(B2)" voltage never exceeds 1.0V.

Trigger	ENG SPEED	HO2S1 (B1)
	rpm	V
XXX	XXX	XXX
XXX	XXX	XXX
XXX	XXX	XXX
XXX	XXX	XXX
XXX	XXX	XXX
XXX	XXX	XXX
XXX	XXX	XXX
XXX	XXX	XXX
XXX	XXX	XXX
XXX	XXX	XXX
XXX	XXX	XXX
XXX	XXX	XXX

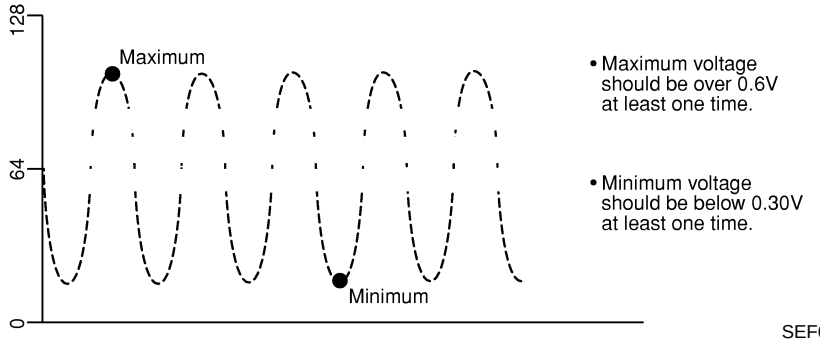

SEF648Y

CAUTION:

- **Discard any heated oxygen sensor which has been dropped from a height of more than 0.5 m (19.7 in) onto a hard surface such as a concrete floor; use a new one.**
- **Before installing new oxygen sensor, clean exhaust system threads using Oxygen Sensor Thread Cleaner tool J-43897-18 or J-43897-12 and approved anti-seize lubricant.**

OK or NG

OK	▶	GO TO 7.
NG	▶	Replace malfunctioning heated oxygen sensor 1.

6	CHECK HEATED OXYGEN SENSOR 1

Without CONSULT-II

1. Start engine and warm it up to normal operating temperature.
2. Set voltmeter probes between ECM terminal 35 (HO2S1 bank 1 signal) or 16 (HO2S1 bank 2 signal) and ground.
3. Check the following with engine speed held at 2,000 rpm constant under no load.

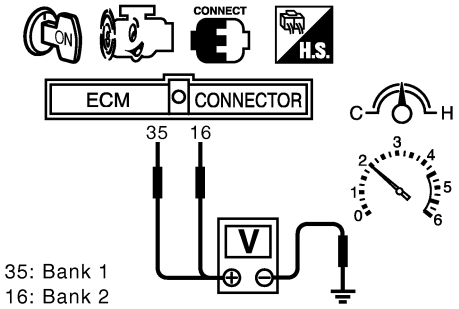

SEC430D

- The voltage fluctuates between 0 to 0.3V and 0.6 to 1.0V more than 5 times within 10 seconds.
- The maximum voltage is over 0.6V at least one time.
- The minimum voltage is below 0.3V at least one time.
- The voltage never exceeds 1.0V.
  1 time: 0 - 0.3V → 0.6 - 1.0V → 0 - 0.3V
  2 times: 0 - 0.3V → 0.6 - 1.0V → 0 - 0.3V → 0.6 - 1.0V → 0 - 0.3V

CAUTION:

- **Discard any heated oxygen sensor which has been dropped from a height of more than 0.5 m (19.7 in) onto a hard surface such as a concrete floor; use a new one.**
- **Before installing new oxygen sensor, clean exhaust system threads using Oxygen Sensor Thread Cleaner tool J-43897-18 or J-43897-12 and approved anti-seize lubricant.**

OK or NG

OK	▶	GO TO 7.
NG	▶	Replace malfunctioning heated oxygen sensor 1.

7	CHECK INTERMITTENT INCIDENT
Refer to "TROUBLE DIAGNOSIS FOR INTERMITTENT INCIDENT", EC-155. For circuit, refer to "Wiring Diagram", EC-246.	
▶	**INSPECTION END**

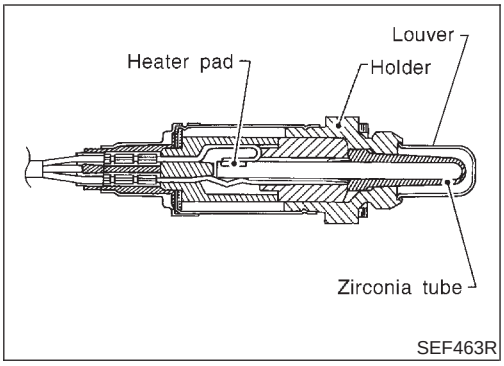

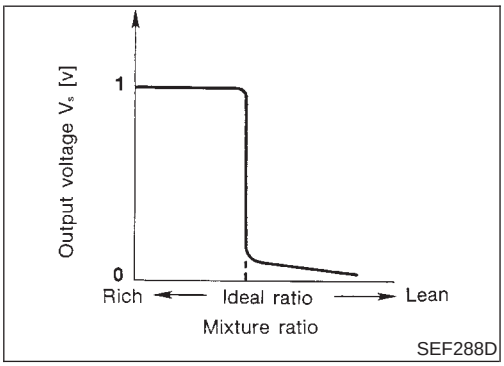

Component Description

NAEC1154

The heated oxygen sensor 1 is placed into the exhaust manifold. It detects the amount of oxygen in the exhaust gas compared to the outside air. The heated oxygen sensor 1 has a closed-end tube made of ceramic zirconia. The zirconia generates voltage from approximately 1V in richer conditions to 0V in leaner conditions. The heated oxygen sensor 1 signal is sent to the ECM. The ECM adjusts the injection pulse duration to achieve the ideal air-fuel ratio. The ideal air-fuel ratio occurs near the radical change from 1V to 0V.

CONSULT-II Reference Value in Data Monitor Mode

NAEC1155

Specification data are reference values.

MONITOR ITEM	CONDITION		SPECIFICATION
HO2S1 (B1) HO2S1 (B2)	● Engine: After warming up	Maintaining engine speed at 2,000 rpm	0 - 0.3V ⟷ Approx. 0.6 - 1.0V
HO2S1 MNTR (B1) HO2S1 MNTR (B2)			LEAN ⟷ RICH Changes more than 5 times during 10 seconds.

ECM Terminals and Reference Value

NAEC1156

Specification data are reference values and are measured between each terminal and ground.

CAUTION:

Do not use ECM ground terminals when measuring input/output voltage. Doing so may result in damage to the ECM's transistor. Use a ground other than ECM terminals, such as the ground.

TERMINAL NO.	WIRE COLOR	ITEM	CONDITION	DATA (DC Voltage)
16	G/B	Heated oxygen sensor 1 (bank 2)	**[Engine is running]** ● **Warm-up condition** ● Engine speed is 2,000 rpm.	0 - Approximately 1.0V (Periodically change)
35	G	Heated oxygen sensor 1 (bank 1)	**[Engine is running]** ● **Warm-up condition** ● Engine speed is 2,000 rpm.	0 - Approximately 1.0V (Periodically change)

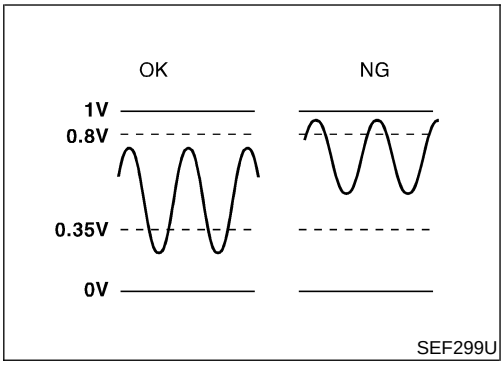

On Board Diagnosis Logic

NAEC1157

To judge the malfunction, the output from the heated oxygen sensor 1 is monitored to determine whether the “rich” output is sufficiently high and “lean” output is sufficiently low. When both the outputs are shifting to the rich side, the malfunction will be detected.

DTC No.	Trouble diagnosis name	DTC Detecting Condition	Possible Cause
P1144 1144 (Bank 1)	Heated oxygen sensor 1 rich shift monitoring	The maximum and minimum voltages from the sensor are outside the specified voltages.	• Heated oxygen sensor 1 • Fuel pressure • Injector • Heated oxygen sensor 1 heater
P1164 1164 (Bank 2)			

DTC Confirmation Procedure

NAEC1158

CAUTION:

Always drive vehicle at a safe speed.

NOTE:

If DTC Confirmation Procedure has been previously conducted, always turn ignition switch OFF and wait at least 10 seconds before conducting the next test.

TESTING CONDITION:

- **Always perform at a temperature above −10°C (14°F).**
- **Before performing the following procedure, confirm that battery voltage is more than 11V at idle.**

6

HO2S1 (B1) P1144	
OUT OF CONDITION	
MONITOR	
ENG SPEED	XXX rpm
B/FUEL SCHDL	XXX msec
COOLAN TEMP/S	XXX ˚C
VHCL SPEED SEN	XXX km/h

PBIB0548E

6

HO2S1 (B1) P1144	
TESTING	
MONITOR	
ENG SPEED	XXX rpm
B/FUEL SCHDL	XXX msec
COOLAN TEMP/S	XXX ˚C
VHCL SPEED SEN	XXX km/h

PBIB0549E

6

HO2S1 (B1) P1144
COMPLETED

SEC772C

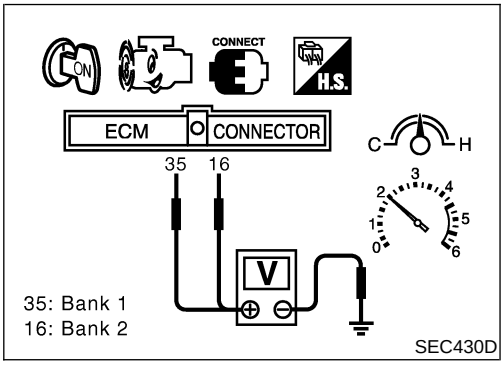

SEC430D

WITH CONSULT-II

NAEC1158S01

1) Start engine and warm it up to normal operating temperature.
2) Stop engine and wait at least 5 seconds.
3) Turn ignition switch ON and select "HO2S1 (B1)/(B2) P1144/P1164" of "HO2S1" in "DTC WORK SUPPORT" mode with CONSULT-II.
4) Touch "START".
5) Start engine and let it idle for at least 3 minutes.

NOTE:
Never raise engine speed above 3,600 rpm after this step. If the engine speed limit is exceeded, return to step 5.

6) When the following conditions are met, "TESTING" will be displayed on the CONSULT-II screen. Maintain the conditions continuously until "TESTING" changes to "COMPLETED". (It will take approximately 50 seconds or more.)

ENG SPEED	1,300 - 2,800 rpm
Vehicle speed	Less than 100 km/h (62 MPH)
B/FUEL SCHDL	3 - 14 msec
Selector lever	Suitable position

If "TESTING" is not displayed after 5 minutes, retry from step 2.

7) Make sure that "OK" is displayed after touching "SELF-DIAG RESULTS". If "NG" is displayed, refer to "Diagnostic Procedure", EC-515.

Overall Function Check

NAEC1159

Use this procedure to check the overall function of the heated oxygen sensor 1 circuit. During this check, a 1st trip DTC might not be confirmed.

WITH GST

NAEC1159S01

1) Start engine and warm it up to normal operating temperature.
2) Set voltmeter probes between ECM terminal 35 (HO2S1 bank 1 signal) or 16 (HO2S1 bank 2 signal) and ground.
3) Check one of the following with engine speed held at 2,000 rpm constant under no load.

- The maximum voltage is below 0.8V at least one time.
- The minimum voltage is below 0.35V at least one time.

4) If NG, go to "Diagnostic Procedure", EC-515.

Diagnostic Procedure

NAEC1160

1	CHECK GROUND CONNECTIONS

1. Turn ignition switch OFF.
2. Loosen and retighten three ground screws on the body.
   Refer to “Ground Inspection”, EC-165.

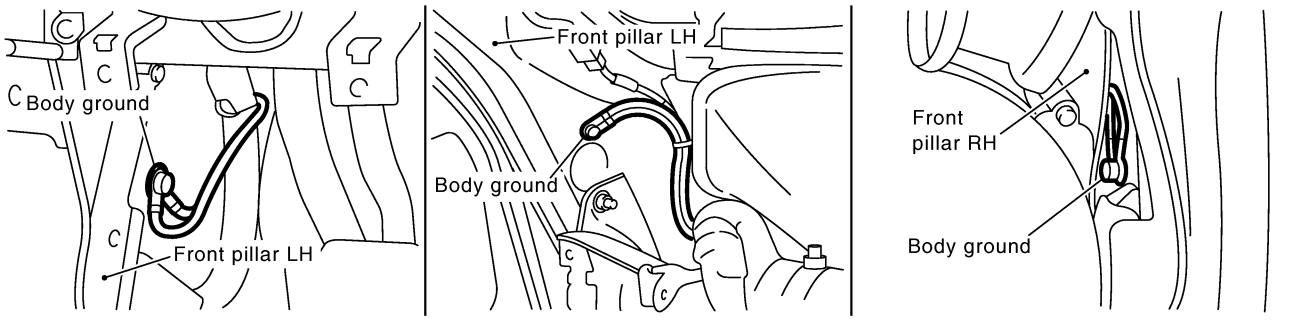

OK or NG

OK	▶	GO TO 2.
NG	▶	Repair or replace ground connections.

2	RETIGHTEN HEATED OXYGEN SENSOR 1

Loosen and retighten corresponding heated oxygen sensor 1.

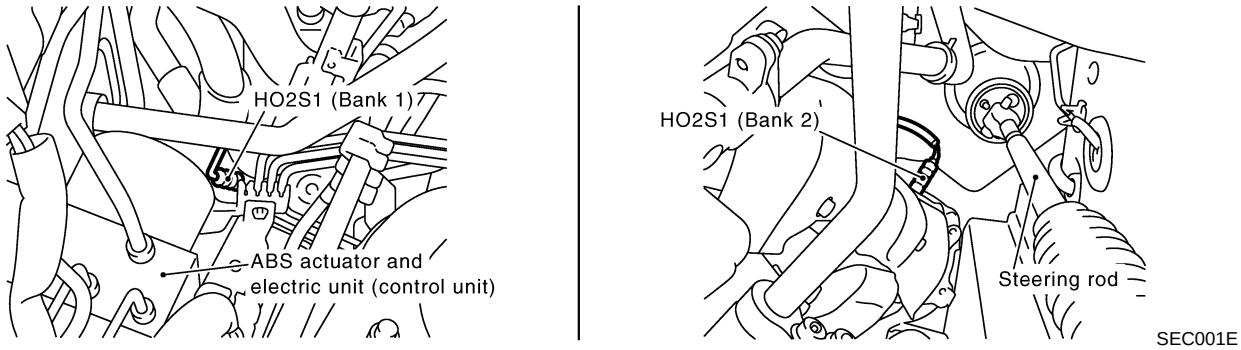

Tightening torque:
40 - 60 N·m (4.1 - 6.1 kg-m, 30 - 44 ft-lb)

	▶	GO TO 3.

3	CLEAR THE SELF-LEARNING DATA

With CONSULT-II

1. Start engine and warm it up to normal operating temperature.
2. Select "SELF-LEARNING CONT" in "WORK SUPPORT" mode with CONSULT-II.
3. Clear the self-learning control coefficient by touching "CLEAR".

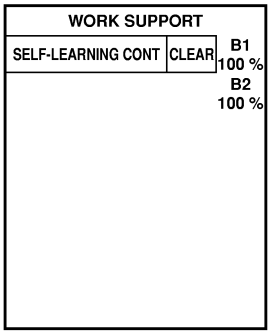

SEF968Y

4. Run engine for at least 10 minutes at idle speed.
   Is the 1st trip DTC P0172 or P0175 detected?
   Is it difficult to start engine?

Without CONSULT-II

1. Start engine and warm it up to normal operating temperature.
2. Turn ignition switch OFF.
3. Disconnect mass air flow sensor harness connector, and restart and run engine for at least 5 seconds at idle speed.

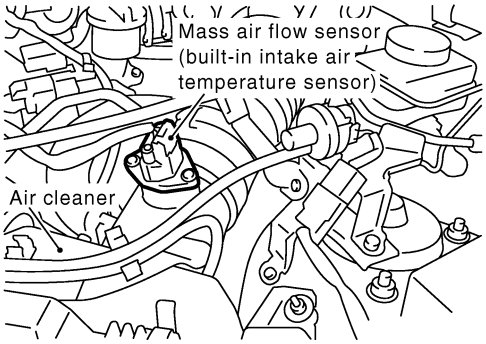

SEF960YA

4. Stop engine and reconnect mass air flow sensor harness connector.
5. Make sure DTC P0102 is displayed.
6. Erase the DTC memory. Refer to "HOW TO ERASE EMISSION-RELATED DIAGNOSTIC INFORMATION", EC-91.
7. Make sure DTC P0000 is displayed.
8. Run engine for at least 10 minutes at idle speed.
   Is the 1st trip DTC P0172 or P0175 detected?
   Is it difficult to start engine?

Yes or No

Yes	▶	Perform trouble diagnosis for DTC P0172, P0175. Refer to EC-282.
No	▶	GO TO 4.

4	CHECK HO2S 1 CONNECTOR FOR WATER

1. Turn ignition switch OFF.
2. Disconnect heated oxygen sensor 1 harness connector.

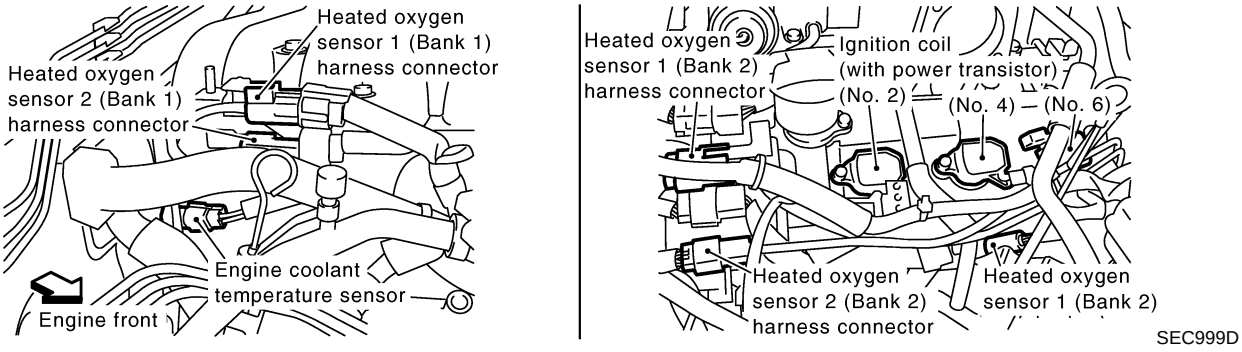

3. Check connectors for water.
   Water should not exist.

OK or NG

OK	▶	GO TO 5.
NG	▶	Repair or replace harness or connectors.

5	CHECK HEATED OXYGEN SENSOR 1 HEATER

Check resistance between HO2S1 terminals as follows.

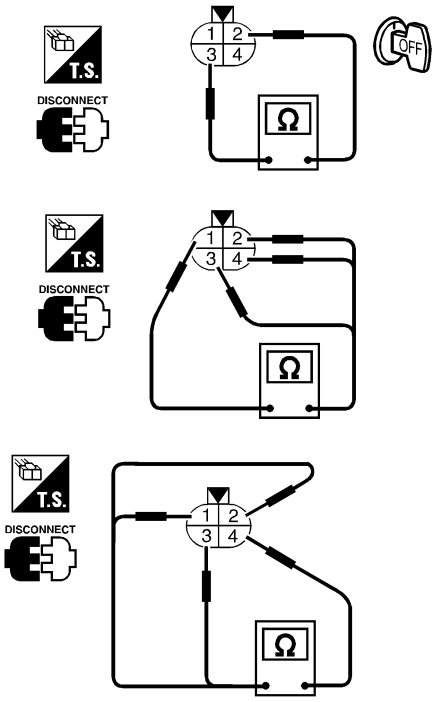

SEF249Y

Terminals	Resistance
2 and 3	3.3 - 4.0Ω at 25 °C (77 °F)
1 and 2, 3, 4 4 and 1, 2, 3	∞Ω (Continuity should not exist.)

MTBL1782

CAUTION:

- **Discard any heated oxygen sensor which has been dropped from a height of more than 0.5 m (19.7 in) onto a hard surface such as a concrete floor; use a new one.**
- **Before installing new oxygen sensor, clean exhaust system threads using Oxygen Sensor Thread Cleaner tool J-43897-18 or J-43897-12 and approved anti-seize lubricant.**

OK or NG

OK (With CONSULT-II)	▶	GO TO 6.
OK (Without CONSULT-II)	▶	GO TO 7.
NG	▶	Replace malfunctioning heated oxygen sensor 1.

6	CHECK HEATED OXYGEN SENSOR 1

With CONSULT-II

1. Start engine and warm it up to normal operating temperature.
2. Select "MANU TRIG" and adjust "TRIGGER POINT" to 100% in "DATA MONITOR" mode with CONSULT-II.
3. Select "HO2S1 (B1)/(B2)" and "HO2S1 MNTR (B1)/(B2)".
4. Hold engine speed at 2,000 rpm under no load during the following steps.
5. Touch "RECORD" on CONSULT-II screen.

DATA MONITOR	
MONITOR	NO DTC
ENG SPEED	XXX rpm
MAS A/F SE-B1	XXX V
COOLAN TEMP/S	XXX °C
HO2S1 (B1)	XXX V
HO2S1 MNTR (B1)	LEAN

SEF646Y

6. Check the following.

- "HO2S1 MNTR (B1)/(B2)" in "DATA MONITOR" mode changes from "RICH" to "LEAN" to "RICH" more than 5 times in 10 seconds.
  5 times (cycles) are counted as shown below.

Bank 1

cycle	1	2	3	4	5
HO2S1 MNTR (B1)	R-L-R-L-R-L-R-L-R-L-R				

Bank 2

cycle	1	2	3	4	5
HO2S1 MNTR (B2)	R-L-R-L-R-L-R-L-R-L-R				

R means HO2S1 MNTR (B1)/(B2) indicates RICH

L means HO2S1 MNTR (B1)/(B2) indicates LEAN

SEF647Y

- "HO2S1 (B1)/(B2)" voltage goes above 0.6V at least once.
- "HO2S1 (B1)/(B2)" voltage goes below 0.3V at least once.
- "HO2S1 (B1)/(B2)" voltage never exceeds 1.0V.

Trigger	ENG SPEED	HO2S1 (B1)
	rpm	V
XXX	XXX	XXX
XXX	XXX	XXX
XXX	XXX	XXX
XXX	XXX	XXX
XXX	XXX	XXX
XXX	XXX	XXX
XXX	XXX	XXX
XXX	XXX	XXX
XXX	XXX	XXX
XXX	XXX	XXX
XXX	XXX	XXX
XXX	XXX	XXX

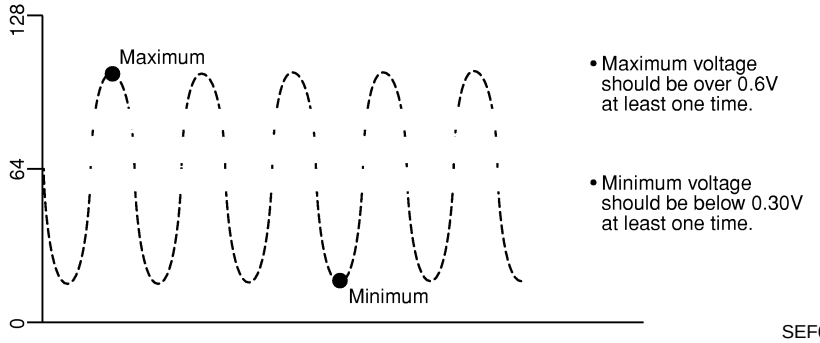

SEF648Y

CAUTION:

- **Discard any heated oxygen sensor which has been dropped from a height of more than 0.5 m (19.7 in) onto a hard surface such as a concrete floor; use a new one.**
- **Before installing new oxygen sensor, clean exhaust system threads using Oxygen Sensor Thread Cleaner tool J-43897-18 or J-43897-12 and approved anti-seize lubricant.**

OK or NG

OK	▶	GO TO 8.
NG	▶	Replace malfunctioning heated oxygen sensor 1.

7	CHECK HEATED OXYGEN SENSOR 1

Without CONSULT-II

1. Start engine and warm it up to normal operating temperature.
2. Set voltmeter probes between ECM terminal 35 (HO2S1 bank 1 signal) or 16 (HO2S1 bank 2 signal) and ground.
3. Check the following with engine speed held at 2,000 rpm constant under no load.

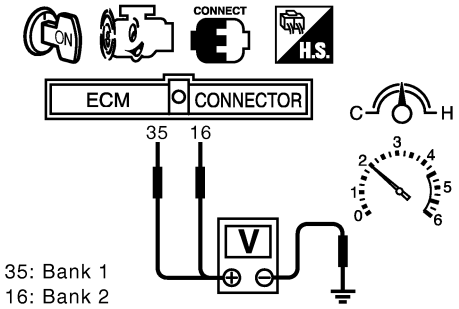

SEC430D

- The voltage fluctuates between 0 to 0.3V and 0.6 to 1.0V more than 5 times within 10 seconds.
- The maximum voltage is over 0.6V at least one time.
- The minimum voltage is below 0.3V at least one time.
- The voltage never exceeds 1.0V.
  1 time: 0 - 0.3V → 0.6 - 1.0V → 0 - 0.3V
  2 times: 0 - 0.3V → 0.6 - 1.0V → 0 - 0.3V → 0.6 - 1.0V → 0 - 0.3V

CAUTION:

- **Discard any heated oxygen sensor which has been dropped from a height of more than 0.5 m (19.7 in) onto a hard surface such as a concrete floor; use a new one.**
- **Before installing new oxygen sensor, clean exhaust system threads using Oxygen Sensor Thread Cleaner tool J-43897-18 or J-43897-12 and approved anti-seize lubricant.**

OK or NG

OK	▶	GO TO 8.
NG	▶	Replace malfunctioning heated oxygen sensor 1.

8	CHECK INTERMITTENT INCIDENT
Refer to "TROUBLE DIAGNOSIS FOR INTERMITTENT INCIDENT", EC-155. For circuit, refer to "Wiring Diagram", EC-246.	
▶	**INSPECTION END**

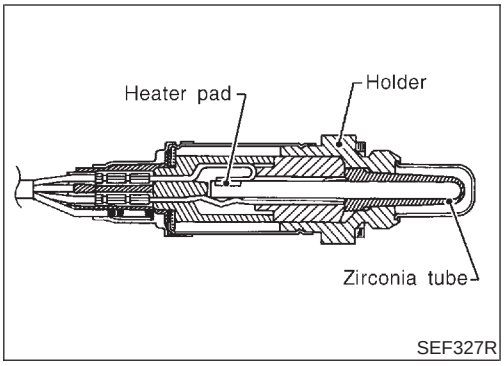

Component Description

NAEC1161

The heated oxygen sensor 2, after three way catalyst (manifold), monitors the oxygen level in the exhaust gas on each bank.
Even if switching characteristics of the heated oxygen sensor 1 are shifted, the air fuel ratio is controlled to stoichiometric, by the signal from the heated oxygen sensor 2.
This sensor is made of ceramic zirconia. The zirconia generates voltage from approximately 1V in richer conditions to 0V in leaner conditions.
Under normal conditions the heated oxygen sensor 2 is not used for engine control operation.

CONSULT-II Reference Value in Data Monitor Mode

NAEC1162

Specification data are reference values.

MONITOR ITEM	CONDITION		SPECIFICATION
HO2S2 (B1) HO2S2 (B2)	• Engine: After warming up • After keeping engine speed between 3,500 and 4,000 rpm for 1 minute and at idle for 1 minute under no load	Revving engine from idle up to 3,000 rpm	0 - 0.3V ⟷ Approx. 0.6 - 1.0V
HO2S2 MNTR (B1) HO2S2 MNTR (B2)			LEAN ⟷ RICH

ECM Terminals and Reference Value

NAEC1163

Specification data are reference values and are measured between each terminal and ground.

CAUTION:

Do not use ECM ground terminals when measuring input/output voltage. Doing so may result in damage to the ECM's transistor. Use a ground other than ECM terminals, such as the ground.

TERMINAL NO.	WIRE COLOR	ITEM	CONDITION	DATA (DC Voltage)
55	OR/L	Heated oxygen sensor 2 (bank 2)	**[Engine is running]** • **Warm-up condition** • Revving engine from idle up to 3,000 rpm after the following conditions are met. • After keeping the engine speed between 3,500 and 4,000 rpm for 1 minute and at idle for 1 minute under no load	0 - Approximately 1.0V
74	OR	Heated oxygen sensor 2 (bank 1)	**[Engine is running]** • **Warm-up condition** • Revving engine from idle up to 3,000 rpm after the following conditions are met. • After keeping the engine speed between 3,500 and 4,000 rpm for 1 minute and at idle for 1 minute under no load	0 - Approximately 1.0V

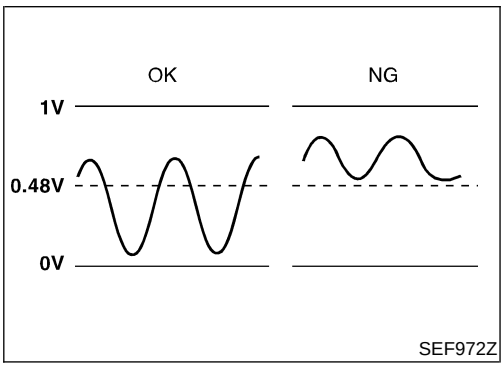

On Board Diagnosis Logic

NAEC1164

The heated oxygen sensor 2 has a much longer switching time between rich and lean than the heated oxygen sensor 1. The oxygen storage capacity of the three way catalyst (manifold) causes the longer switching time. To judge the malfunctions of heated oxygen sensor 2, ECM monitors whether the minimum voltage of sensor is sufficiently low during the various driving condition such as fuel-cut.

DTC No.	Trouble diagnosis name	DTC Detecting Condition	Possible Cause
P1146 1146 (Bank 1)	Heated oxygen sensor 2 minimum voltage monitoring	The minimum voltage from the sensor is not reached to the specified voltage.	• Harness or connectors (The sensor circuit is open or shorted.) • Heated oxygen sensor 2 • Fuel pressure • Injector
P1166 1166 (Bank 2)			

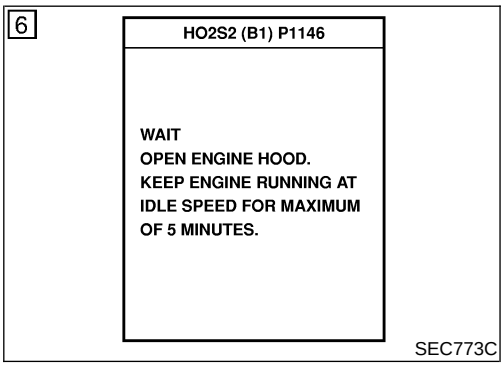

SEC773C

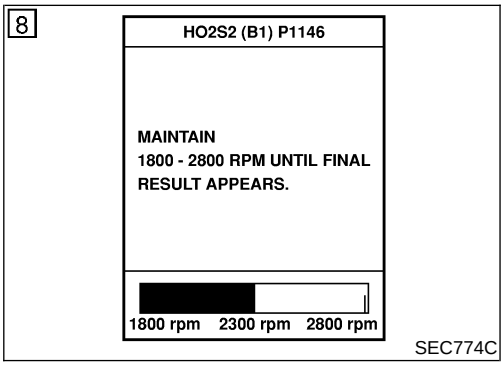

SEC774C

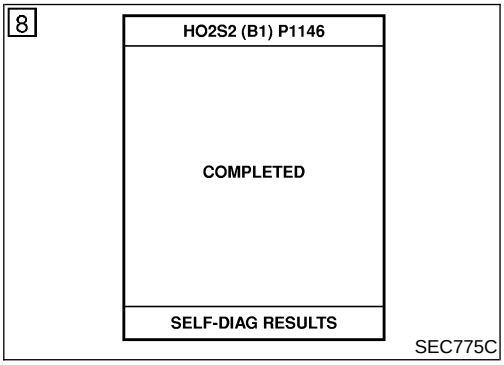

SEC775C

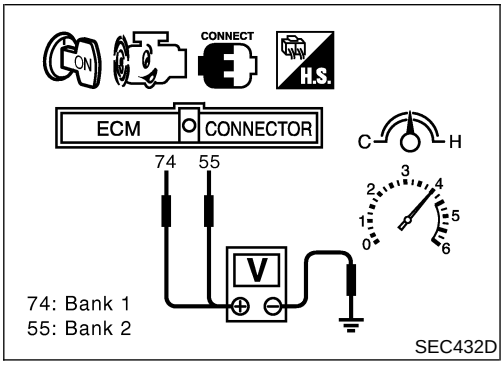

SEC432D

DTC Confirmation Procedure

NAEC1165

NOTE:

If DTC Confirmation Procedure has been previously conducted, always turn ignition switch OFF and wait at least 10 seconds before conducting the next test.

TESTING CONDITION:

- **Open engine hood before conducting following procedure.**
- **For the best results, perform "DTC WORK SUPPORT" at a temperature of 0 to 30°C (32 to 86°F).**

WITH CONSULT-II

NAEC1165S01

1) Start engine and warm it up to the normal operating temperature.
2) Turn ignition switch OFF and wait at least 10 seconds.
3) Start engine and keep the engine speed between 3,500 and 4,000 rpm for at least 1 minute under no load.
4) Let engine idle for 1 minute.
5) Select "HO2S2 (B1) P1146" or "HO2S2 (B2) P1166" of "HO2S2" in "DTC WORK SUPPORT" mode with CONSULT-II.
6) Follow the instruction of CONSULT-II.
7) Make sure that "OK" is displayed after touching "SELF-DIAG RESULTS".
   If NG is displayed, refer to EC-526, "Diagnostic Procedure".
   If "CAN NOT BE DIAGNOSED" is displayed, perform the following.

a) Turn ignition switch OFF and leave the vehicle in a cool place (soak the vehicle).
b) Turn ignition switch ON and select "COOLAN TEMP/S" in "DATA MONITOR" mode with CONSULT-II.
c) Start engine and warm it up while monitoring "COOLAN TEMP/S" indication on CONSULT-II.
d) When "COOLAN TEMP/S" indication reaches to 70°C (158°F), go to step 3.

Overall Function Check

NAEC1166

Use this procedure to check the overall function of the heated oxygen sensor 2 circuit. During this check, a 1st trip DTC might not be confirmed.

WITH GST

NAEC1166S01

1) Start engine and warm it up to the normal operating temperature.
2) Turn ignition switch OFF and wait at least 10 seconds.
3) Start engine and keep the engine speed between 3,500 and 4,000 rpm for at least 1 minute under no load.

4) Let engine idle for 1 minute.
5) Set voltmeter probes between ECM terminal 74 (HO2S2 bank 1 signal) or 55 (HO2S2 bank 2 signal) and ground.
6) Check the voltage when racing up to 4,000 rpm under no load at least 10 times.
   (Depress and release accelerator pedal as soon as possible.)
   The voltage should be below 0.48V at least once during this procedure.
   If the voltage can be confirmed in step 6, step 7 is not necessary.
7) Keep vehicle at idling for 10 minutes, then check the voltage. Or check the voltage when coasting from 80 km/h (50 MPH) in 3rd gear position (M/T), D position with "OD" OFF (A/T).
   The voltage should be below 0.48V at least once during this procedure.
8) If NG, go to "Diagnostic Procedure", EC-526.

Wiring Diagram

=NAEC1167

BANK 1

NAEC1167S01

EC-O2S2B1-01

: Detectable line for DTC

: Non-detectable line for DTC

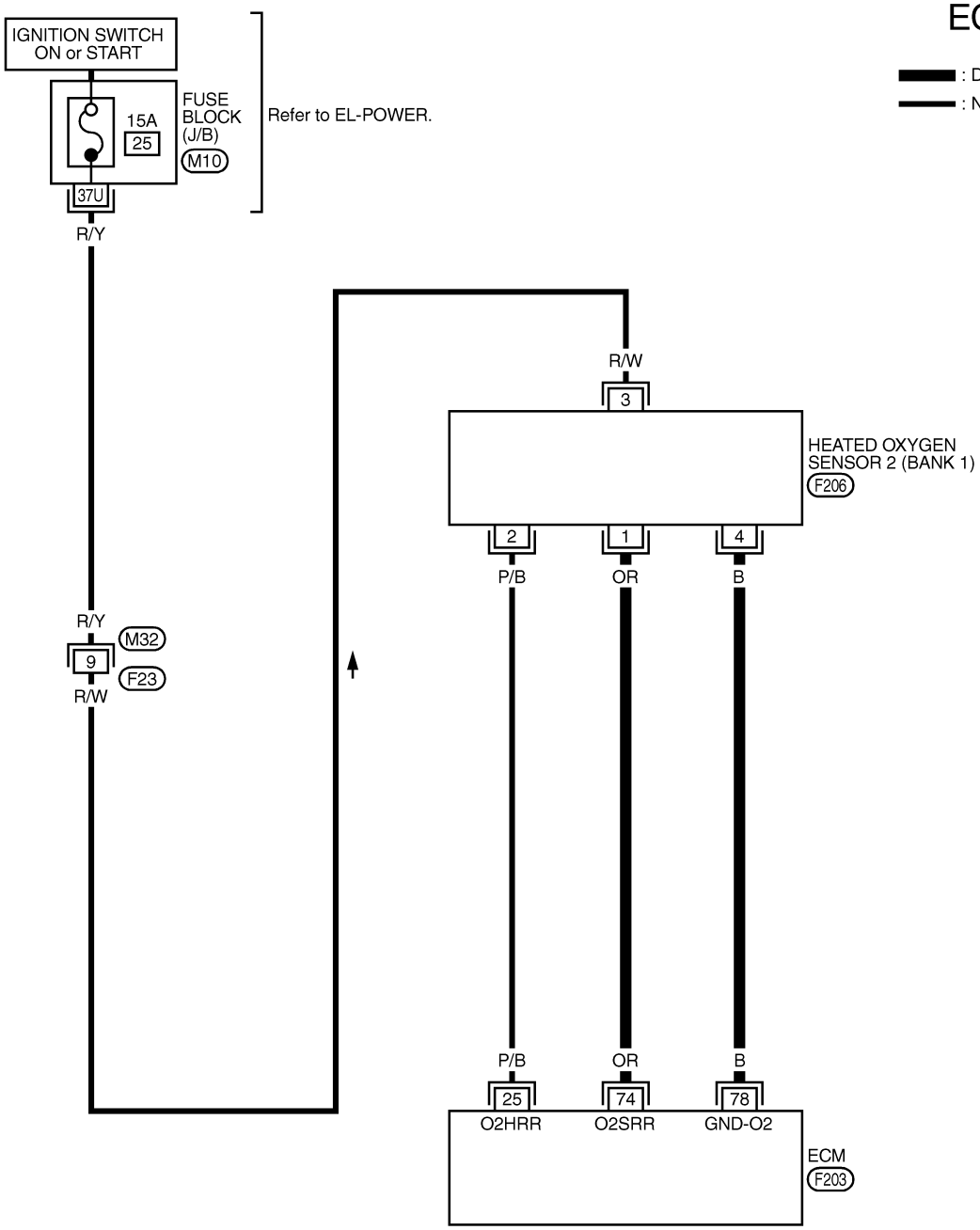

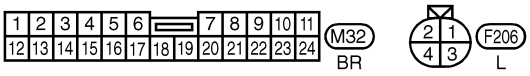

REFER TO THE FOLLOWING.
M10 -FUSE BLOCK-JUNCTION BOX (J/B)

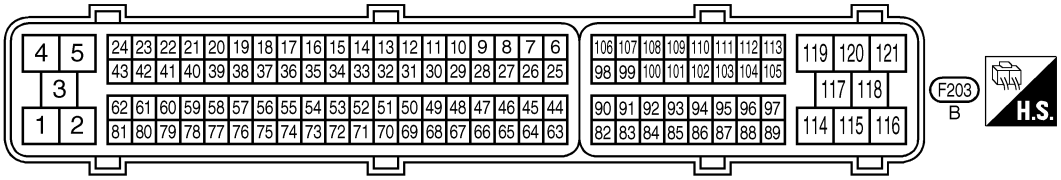

MEC089E

BANK 2

NAEC1167S02

EC-O2S2B2-01

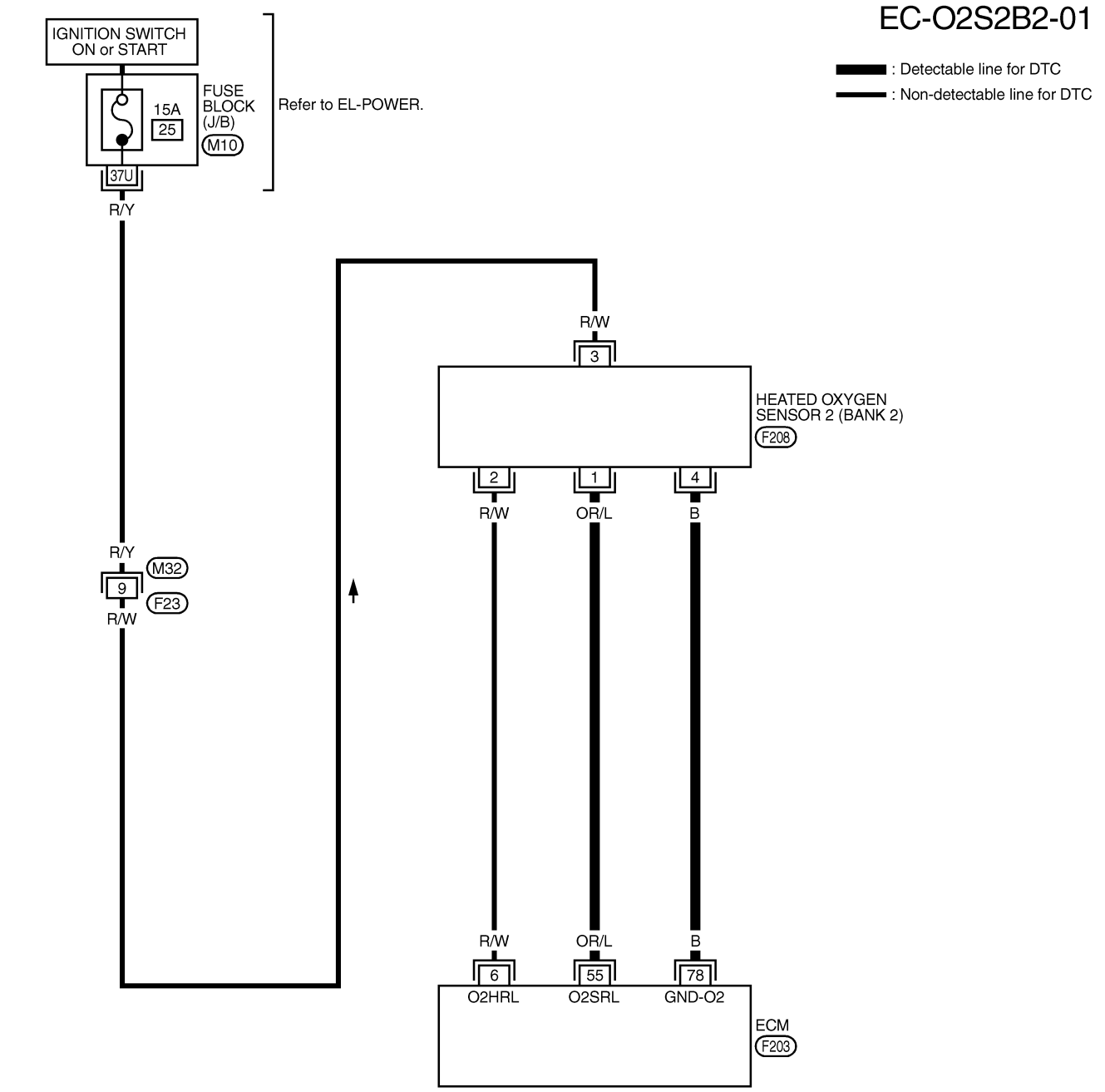

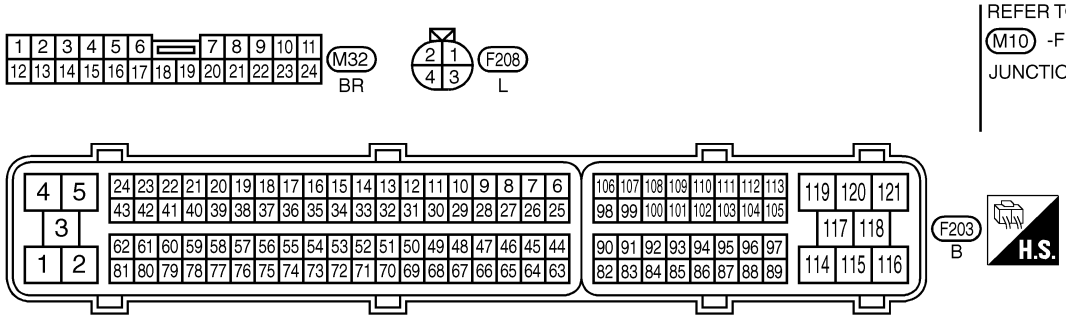

REFER TO THE FOLLOWING.
M10 -FUSE BLOCK-JUNCTION BOX (J/B)

MEC090E

Diagnostic Procedure

NAEC1168

1	CHECK GROUND CONNECTIONS

1. Turn ignition switch OFF.
2. Loosen and retighten three ground screws on the body.
   Refer to “Ground Inspection”, EC-165.

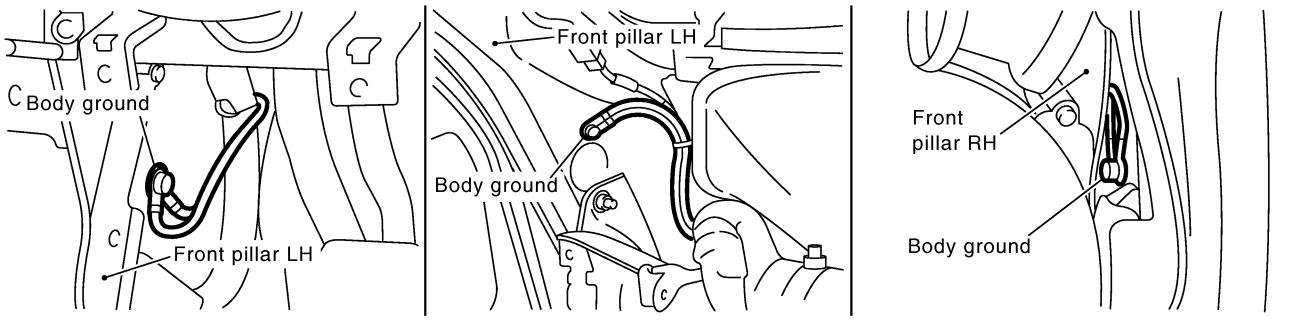

SEC997D

OK or NG

OK	▶	GO TO 2.
NG	▶	Repair or replace ground connections.

2	CLEAR THE SELF-LEARNING DATA

With CONSULT-II

1. Start engine and warm it up to normal operating temperature.
2. Select "SELF-LEARNING CONT" in "WORK SUPPORT" mode with CONSULT-II.
3. Clear the self-learning control coefficient by touching "CLEAR".

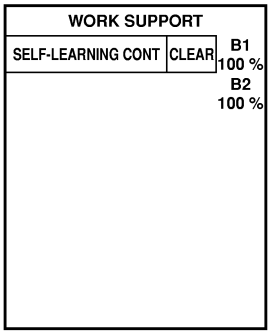

SEF968Y

4. Run engine for at least 10 minutes at idle speed.
   Is the 1st trip DTC P0172 or P0175 detected?
   Is it difficult to start engine?

Without CONSULT-II

1. Start engine and warm it up to normal operating temperature.
2. Turn ignition switch OFF.
3. Disconnect mass air flow sensor harness connector, and restart and run engine for at least 5 seconds at idle speed.

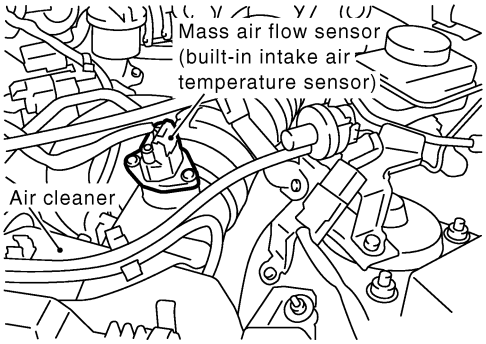

SEF960YA

4. Stop engine and reconnect mass air flow sensor harness connector.
5. Make sure DTC P0102 is displayed.
6. Erase the DTC memory. Refer to "HOW TO ERASE EMISSION-RELATED DIAGNOSTIC INFORMATION", EC-91.
7. Make sure DTC P0000 is displayed.
8. Run engine for at least 10 minutes at idle speed.
   Is the 1st trip DTC P0172 or P0175 detected?
   Is it difficult to start engine?

Yes or No

Yes	▶	Perform trouble diagnosis for DTC P0172, P0175. Refer to EC-282.
No	▶	GO TO 3.

3	CHECK HO2S2 GROUND CIRCUIT FOR OPEN AND SHORT

1. Turn ignition switch OFF.
2. Disconnect heated oxygen sensor 2 harness connector.

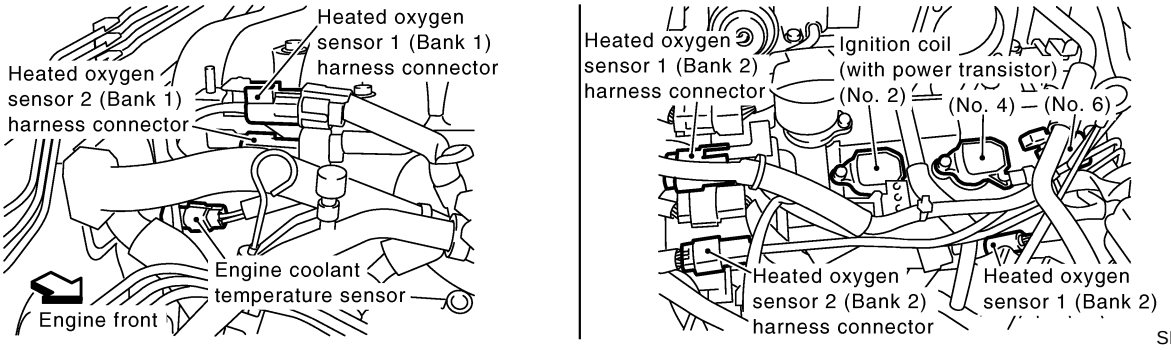

3. Disconnect ECM harness connector.
4. Check harness continuity between HO2S2 terminal 4 and ECM terminal 78.
   Refer to Wiring Diagram.
   Continuity should exist.
5. Also check harness for short to ground and short to power.

OK or NG

OK	▶	GO TO 4.
NG	▶	Repair open circuit or short to ground or short to power in harness or connectors.

4	CHECK HO2S2 INPUT SIGNAL CIRCUIT FOR OPEN AND SHORT

1. Check harness continuity between ECM terminal and rear HO2S terminal as follows.
   Refer to Wiring Diagram.

DTC	Terminals		Bank
	ECM	Sensor	
P1146	74	1	Bank 1
P1166	55	1	Bank 2

MTBL1371

   Continuity should exist.
2. Check harness continuity between the following terminals and ground.
   Refer to Wiring Diagram.

DTC	Terminals		Bank
	ECM	Sensor	
P1146	74	1	Bank 1
P1166	55	1	Bank 2

MTBL1371

   Continuity should not exist.
3. Also check harness for short to ground and short to power.

OK or NG

OK (With CONSULT-II)	▶	GO TO 5.
OK (Without CONSULT-II)	▶	GO TO 6.
NG	▶	Repair open circuit or short to ground or short to power in harness or connectors.

5	CHECK HEATED OXYGEN SENSOR 2

With CONSULT-II

1. Start engine and warm it up to the normal operating temperature.
2. Turn ignition switch OFF and wait at least 10 seconds.
3. Start engine and keep the engine speed between 3,500 and 4,000 rpm for at least 1 minute under no load.
4. Let engine idle for 1 minute.
5. Select "FUEL INJECTION" in "ACTIVE TEST" mode, and select "HO2S2 (B1)/(B2)" as the monitor item with CONSULT-II.
6. Check "HO2S2 (B1)/(B2)" at idle speed when adjusting "FUEL INJECTION" to ±25%.

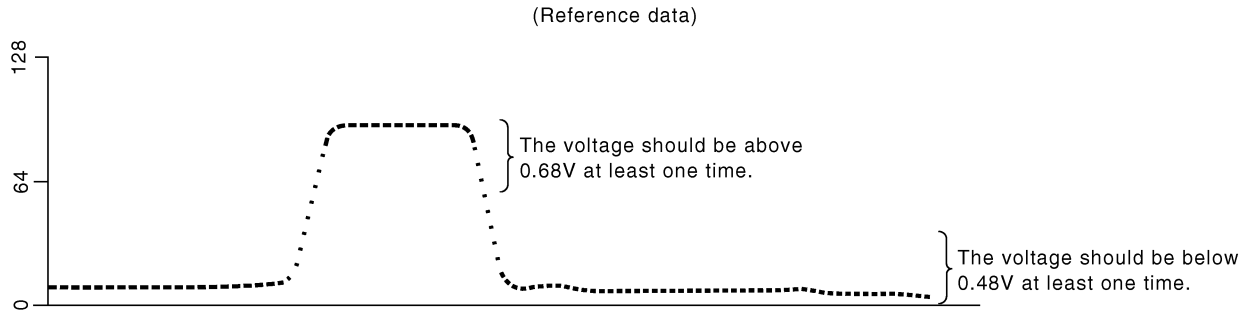

SEF972YA

"HO2S2 (B1)/(B2)" should be above 0.68V at least once when the "FUEL INJECTION" is +25%.
"HO2S2 (B1)/(B2)" should be below 0.48V at least once when the "FUEL INJECTION" is −25%.

CAUTION:

- **Discard any heated oxygen sensor which has been dropped from a height of more than 0.5 m (19.7 in) onto a hard surface such as a concrete floor; use a new one.**
- **Before installing new oxygen sensor, clean exhaust system threads using Oxygen Sensor Thread Cleaner tool J-43897-18 or J-43897-12 and approved anti-seize lubricant.**

OK or NG

OK	▶	GO TO 8.
NG	▶	Replace malfunctioning heated oxygen sensor 2.

6	CHECK HEATED OXYGEN SENSOR 2-I

Without CONSULT-II

1. Start engine and warm it up to the normal operating temperature.
2. Turn ignition switch OFF and wait at least 10 seconds.
3. Start engine and keep the engine speed between 3,500 and 4,000 rpm for at least 1 minute under no load.
4. Let engine idle for 1 minute.
5. Set voltmeter probes between ECM terminal 74 (HO2S2 bank 1 signal) or 55 (HO2S2 bank 2 signal) and ground.
6. Check the voltage when rewing up to 4,000 rpm under no load at least 10 times.
   (Depress and release accelerator pedal as soon as possible.)

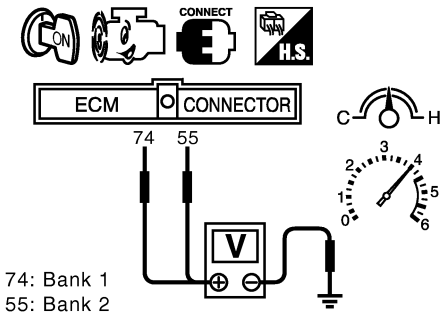

SEC432D

The voltage should be above 0.68V at least once during this procedure.

OK or NG

OK	▶	GO TO 8.
NG	▶	GO TO 7.

7	CHECK HEATED OXYGEN SENSOR 2-II	
Idle vehicle for 10 minutes, then check voltage between the same terminals as in Test No. 6; or check voltage when coasting from 80 km/h (50 MPH) in 3rd gear position (M/T), "D" position with "OD" OFF (A/T). **The voltage should go below 0.48V at least once during this procedure.** **CAUTION:** • **Discard any heated oxygen sensor which has been dropped from a height of more than 0.5 m (19.7 in) onto a hard surface such as a concrete floor; use a new one.** • **Before installing new oxygen sensor, clean exhaust system threads using Oxygen Sensor Thread Cleaner tool J-43897-18 or J-43897-12 and approved anti-seize lubricant.**		
OK or NG		
OK	▶	GO TO 8.
NG	▶	Replace malfunctioning heated oxygen sensor 2.

8	CHECK INTERMITTENT INCIDENT
Refer to "TROUBLE DIAGNOSIS FOR INTERMITTENT INCIDENT", EC-155.	
▶	**INSPECTION END**

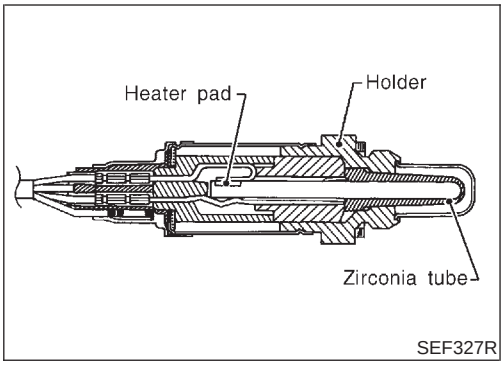

Component Description

NAEC1169

The heated oxygen sensor 2, after three way catalyst (manifold), monitors the oxygen level in the exhaust gas on each bank.
Even if switching characteristics of the heated oxygen sensor 1 are shifted, the air fuel ratio is controlled to stoichiometric, by the signal from the heated oxygen sensor 2.
This sensor is made of ceramic zirconia. The zirconia generates voltage from approximately 1V in richer conditions to 0V in leaner conditions.
Under normal conditions the heated oxygen sensor 2 is not used for engine control operation.

CONSULT-II Reference Value in Data Monitor Mode

NAEC1170

Specification data are reference values.

MONITOR ITEM	CONDITION		SPECIFICATION
HO2S2 (B1) HO2S2 (B2)	• Engine: After warming up • After keeping engine speed between 3,500 and 4,000 rpm for 1 minute and at idle for 1 minute under no load	Revving engine from idle up to 3,000 rpm	0 - 0.3V ⟷ Approx. 0.6 - 1.0V
HO2S2 MNTR (B1) HO2S2 MNTR (B2)			LEAN ⟷ RICH

ECM Terminals and Reference Value

NAEC1171

Specification data are reference values and are measured between each terminal and ground.

CAUTION:

Do not use ECM ground terminals when measuring input/output voltage. Doing so may result in damage to the ECM's transistor. Use a ground other than ECM terminals, such as the ground.

TERMINAL NO.	WIRE COLOR	ITEM	CONDITION	DATA (DC Voltage)
55	OR/L	Heated oxygen sensor 2 (bank 2)	**[Engine is running]** • **Warm-up condition** • Revving engine from idle up to 3,000 rpm after the following conditions are met. • After keeping the engine speed between 3,500 and 4,000 rpm for 1 minute and at idle for 1 minute under no load	0 - Approximately 1.0V
74	OR	Heated oxygen sensor 2 (bank 1)	**[Engine is running]** • **Warm-up condition** • Revving engine from idle up to 3,000 rpm after the following conditions are met. • After keeping the engine speed between 3,500 and 4,000 rpm for 1 minute and at idle for 1 minute under no load	0 - Approximately 1.0V

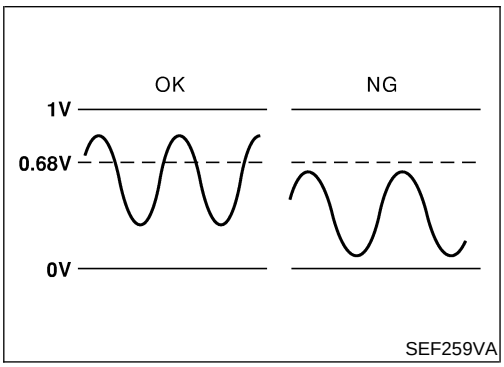

On Board Diagnosis Logic

NAEC1172

The heated oxygen sensor 2 has a much longer switching time between rich and lean than the heated oxygen sensor 1. The oxygen storage capacity before the three way catalyst (manifold) causes the longer switching time. To judge the malfunctions of heated oxygen sensor 2, ECM monitors whether the maximum voltage of the sensor is sufficiently high during the various driving condition such as fuel-cut.

DTC No.	Trouble diagnosis name	DTC Detecting Condition	Possible Cause
P1147 1147 (Bank 1)	Heated oxygen sensor 2 maximum voltage monitoring	The maximum voltage from the sensor is not reached to the specified voltage.	• Harness or connectors (The sensor circuit is open or shorted.) • Heated oxygen sensor 2 • Fuel pressure • Injector • Intake air leaks
P1167 1167 (Bank 2)			

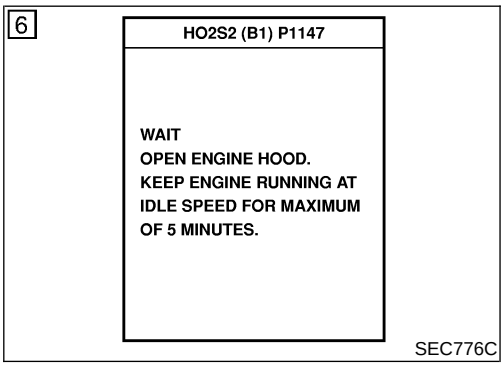

SEC776C

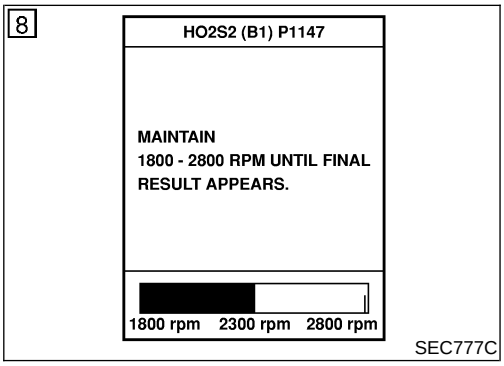

SEC777C

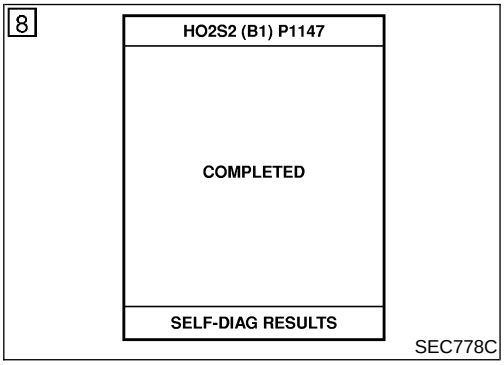

SEC778C

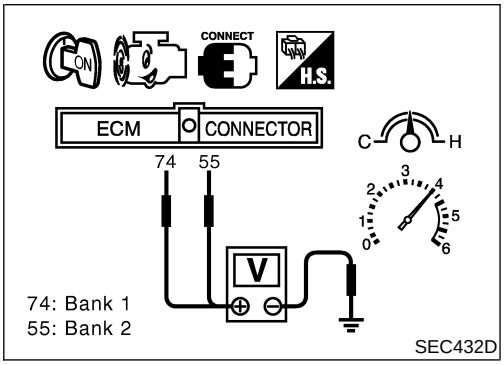

SEC432D

DTC Confirmation Procedure

NAEC1173

NOTE:

If DTC Confirmation Procedure has been previously conducted, always turn ignition switch OFF and wait at least 10 seconds before conducting the next test.

TESTING CONDITION:

- **Open engine hood before conducting following procedure.**
- **For the best results, perform "DTC WORK SUPPORT" at a temperature of 0 to 30°C (32 to 86°F).**

WITH CONSULT-II

NAEC1173S01

1) Start engine and warm it up to the normal operating temperature.
2) Turn ignition switch OFF and wait at least 10 seconds.
3) Start engine and keep the engine speed between 3,500 and 4,000 rpm for at least 1 minute under no load.
4) Let engine idle for 1 minute.
5) Select "HO2S2 (B1) P1147" or "HO2S2 (B2) P1167" of "HO2S2" in "DTC WORK SUPPORT" mode with CONSULT-II.
6) Start engine and follow the instruction of CONSULT-II.
7) Make sure that "OK" is displayed after touching "SELF-DIAG RESULTS".
   If "NG" is displayed, refer to EC-536, "Diagnostic Procedure".
   If "CAN NOT BE DIAGNOSED" is displayed, perform the following.

a) Turn ignition switch OFF and leave the vehicle in a cool place (soak the vehicle).
b) Turn ignition switch ON and select "COOLAN TEMP/S" in "DATA MONITOR" mode with CONSULT-II.
c) Start engine and warm it up while monitoring "COOLAN TEMP/S" indication on CONSULT-II.
d) When "COOLAN TEMP/S" indication reaches to 70°C (158°F), go to step 3.

Overall Function Check

NAEC1174

Use this procedure to check the overall function of the heated oxygen sensor 2 circuit. During this check, a 1st trip DTC might not be confirmed.

WITH GST

NAEC1174S01

1) Start engine and warm it up to the normal operating temperature.
2) Turn ignition switch OFF and wait at least 10 seconds.
3) Start engine and keep the engine speed between 3,500 and 4,000 rpm for at least 1 minute under no load.

4) Let engine idle for 1 minute.
5) Set voltmeter probes between ECM terminal 74 (HO2S2 bank 1 signal) or 55 (HO2S2 bank 2 signal) and ground.
6) Check the voltage when racing up to 4,000 rpm under no load at least 10 times.
   (Depress and release accelerator pedal as soon as possible.)
   The voltage should be above 0.68V at least once during this procedure.
   If the voltage can be confirmed in step 6, step 7 is not necessary.
7) Keep vehicle at idling for 10 minutes, then check the voltage. Or check the voltage when coasting from 80 km/h (50 MPH) in 3rd gear position (M/T), D position with "OD" OFF (A/T).
   The voltage should be above 0.68V at least once during this procedure.
8) If NG, go to "Diagnostic Procedure", EC-536.

Wiring Diagram

=NAEC1175

BANK 1

NAEC1175S01

EC-O2S2B1-01

: Detectable line for DTC

: Non-detectable line for DTC

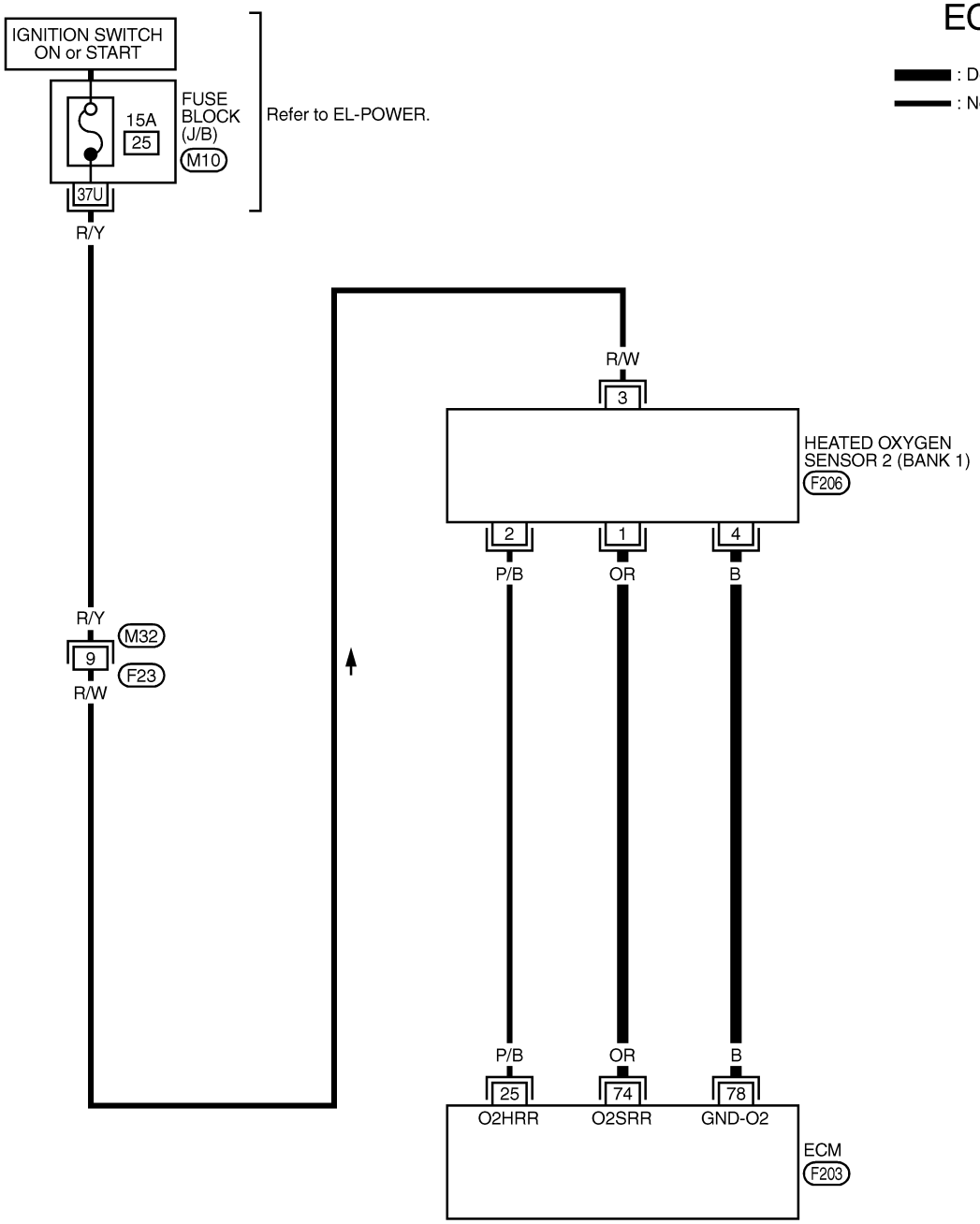

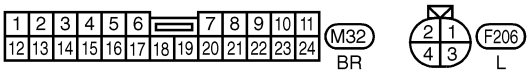

REFER TO THE FOLLOWING.
M10 -FUSE BLOCK-JUNCTION BOX (J/B)

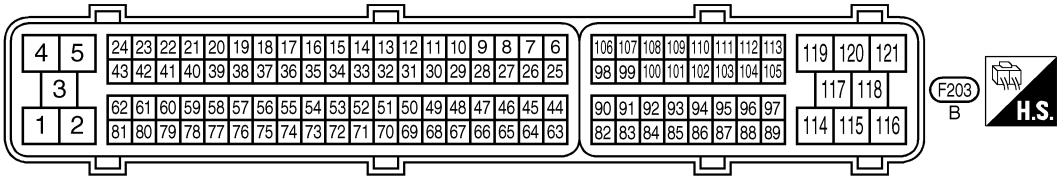

MEC089E

BANK 2

NAEC1175S02

EC-O2S2B2-01

: Detectable line for DTC

: Non-detectable line for DTC

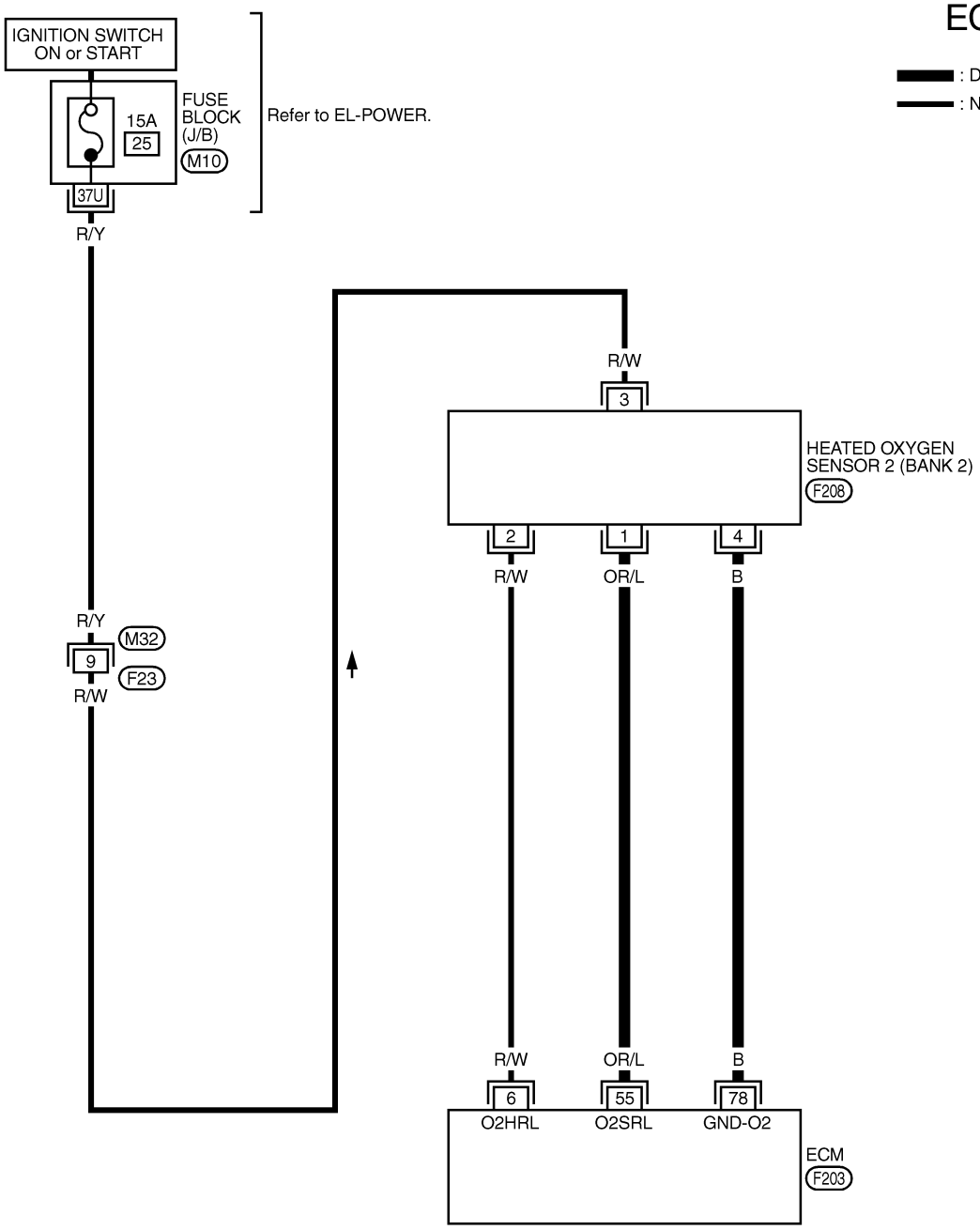

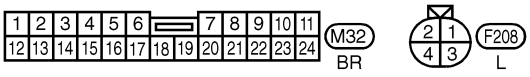

REFER TO THE FOLLOWING.
M10 -FUSE BLOCK-JUNCTION BOX (J/B)

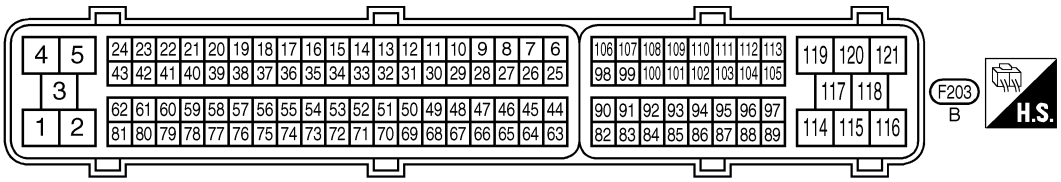

MEC090E

Diagnostic Procedure

NAEC1176

1	CHECK GROUND CONNECTIONS

1. Turn ignition switch OFF.
2. Loosen and retighten three ground screws on the body.
   Refer to “Ground Inspection”, EC-165.

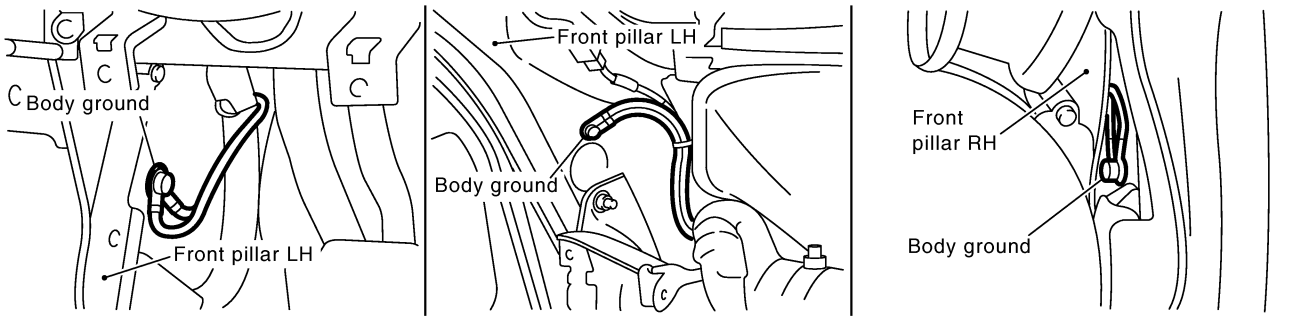

SEC997D

OK or NG

OK	▶	GO TO 2.
NG	▶	Repair or replace ground connections.

2	CLEAR THE SELF-LEARNING DATA

With CONSULT-II

1. Start engine and warm it up to normal operating temperature.
2. Select "SELF-LEARNING CONT" in "WORK SUPPORT" mode with CONSULT-II.
3. Clear the self-learning control coefficient by touching "CLEAR".

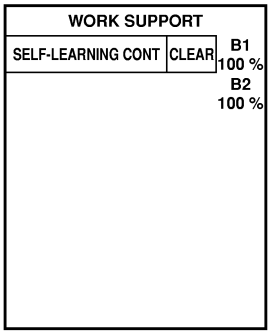

SEF968Y

4. Run engine for at least 10 minutes at idle speed.
   Is the 1st trip DTC P0171 or P0174 detected?
   Is it difficult to start engine?

Without CONSULT-II

1. Start engine and warm it up to normal operating temperature.
2. Turn ignition switch OFF.
3. Disconnect mass air flow sensor harness connector, and restart and run engine for at least 5 seconds at idle speed.

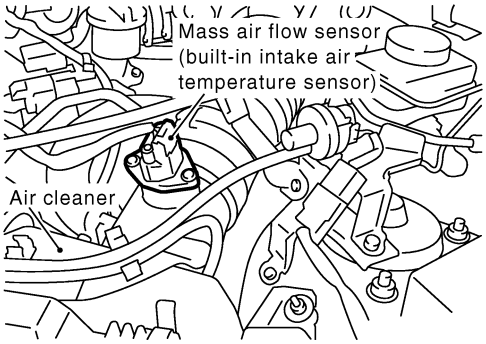

SEF960YA

4. Stop engine and reconnect mass air flow sensor harness connector.
5. Make sure DTC P0102 is displayed.
6. Erase the DTC memory. Refer to "HOW TO ERASE EMISSION-RELATED DIAGNOSTIC INFORMATION", EC-91.
7. Make sure DTC P0000 is displayed.
8. Run engine for at least 10 minutes at idle speed.
   Is the 1st trip DTC P0171 or P0174 detected?
   Is it difficult to start engine?

Yes or No

Yes	▶	Perform trouble diagnosis for DTC P0171, P0174. Refer to EC-273.
No	▶	GO TO 3.

3	CHECK HO2S2 GROUND CIRCUIT FOR OPEN AND SHORT

1. Turn ignition switch OFF.
2. Disconnect heated oxygen sensor 2 harness connector.

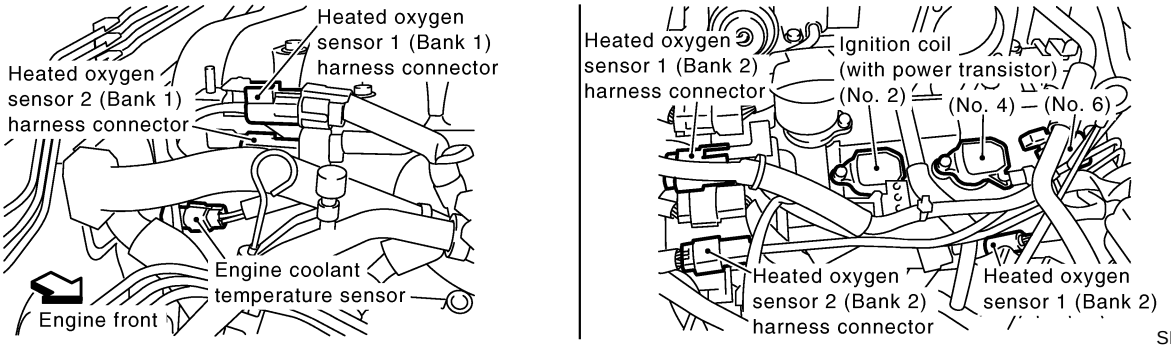

3. Disconnect ECM harness connector.
4. Check harness continuity between HO2S2 terminal 4 and ECM terminal 78.
   Refer to Wiring Diagram.
   Continuity should exist.
5. Also check harness for short to ground and short to power.

OK or NG

OK	▶	GO TO 4.
NG	▶	Repair open circuit or short to ground or short to power in harness or connectors.

4	CHECK HO2S2 INPUT SIGNAL CIRCUIT FOR OPEN AND SHORT

1. Check harness continuity between ECM terminal and HO2S2 terminal as follows.
   Refer to Wiring Diagram.

DTC	Terminals		Bank
	ECM	Sensor	
P1147	74	1	Bank 1
P1167	55	1	Bank 2

MTBL1379

   Continuity should exist.
2. Check harness continuity between the following terminals and ground.
   Refer to Wiring Diagram.

DTC	Terminals		Bank
	ECM	Sensor	
P1147	74	1	Bank 1
P1167	55	1	Bank 2

MTBL1379

   Continuity should not exist.
3. Also check harness for short to ground and short to power.

OK or NG

OK (With CONSULT-II)	▶	GO TO 5.
OK (Without CONSULT-II)	▶	GO TO 6.
NG	▶	Repair open circuit or short to ground or short to power in harness or connectors.

5	CHECK HEATED OXYGEN SENSOR 2

With CONSULT-II

1. Start engine and warm it up to the normal operating temperature.
2. Turn ignition switch OFF and wait at least 10 seconds.
3. Start engine and keep the engine speed between 3,500 and 4,000 rpm for at least 1 minute under no load.
4. Let engine idle for 1 minute.
5. Select "FUEL INJECTION" in "ACTIVE TEST" mode, and select "HO2S2 (B1)/(B2)" as the monitor item with CONSULT-II.
6. Check "HO2S2 (B1)/(B2)" at idle speed when adjusting "FUEL INJECTION" to ±25%.

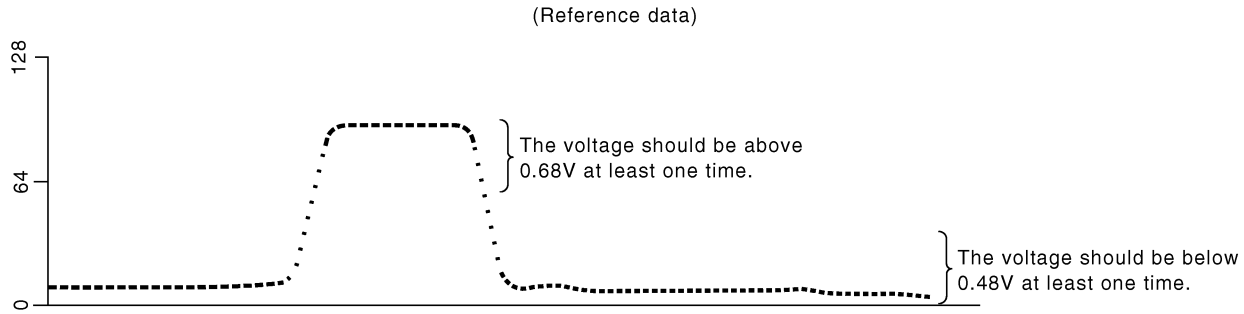

SEF972YA

"HO2S2 (B1)/(B2)" should be above 0.68V at least once when the "FUEL INJECTION" is +25%.
"HO2S2 (B1)/(B2)" should be below 0.48V at least once when the "FUEL INJECTION" is −25%.

CAUTION:

- **Discard any heated oxygen sensor which has been dropped from a height of more than 0.5 m (19.7 in) onto a hard surface such as a concrete floor; use a new one.**
- **Before installing new oxygen sensor, clean exhaust system threads using Oxygen Sensor Thread Cleaner tool J-43897-18 or J-43897-12 and approved anti-seize lubricant.**

OK or NG

OK	▶	GO TO 8.
NG	▶	Replace malfunctioning heated oxygen sensor 2.

6	CHECK HEATED OXYGEN SENSOR 2-I

Without CONSULT-II

1. Start engine and warm it up to the normal operating temperature.
2. Turn ignition switch OFF and wait at least 10 seconds.
3. Start engine and keep the engine speed between 3,500 and 4,000 rpm for at least 1 minute under no load.
4. Let engine idle for 1 minute.
5. Set voltmeter probes between ECM terminal 74 (HO2S2 bank 1 signal) or 55 (HO2S bank 2 signal) and ground.
6. Check the voltage when revving up to 4,000 rpm under no load at least 10 times.
   (Depress and release accelerator pedal as soon as possible.)

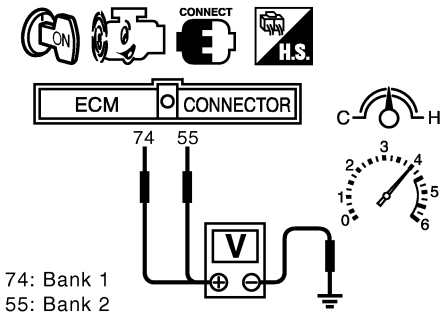

SEC432D

The voltage should be above 0.68V at least once during this procedure.

OK or NG

OK	▶	GO TO 8.
NG	▶	GO TO 7.

7	CHECK HEATED OXYGEN SENSOR 2-II	
Idle vehicle for 10 minutes, then check voltage between the same terminals as in Test No. 6; or check voltage when coasting from 80 km/h (50 MPH) in 3rd gear position (M/T), "D" position with "OD" OFF (A/T). **The voltage should go below 0.48V at least once during this procedure.** **CAUTION:** • **Discard any heated oxygen sensor which has been dropped from a height of more than 0.5 m (19.7 in) onto a hard surface such as a concrete floor; use a new one.** • **Before installing new oxygen sensor, clean exhaust system threads using Oxygen Sensor Thread Cleaner tool J-43897-18 or J-43897-12 and approved anti-seize lubricant.**		
OK or NG		
OK	▶	GO TO 8.
NG	▶	Replace malfunctioning heated oxygen sensor 2.

8	CHECK INTERMITTENT INCIDENT
Refer to "TROUBLE DIAGNOSIS FOR INTERMITTENT INCIDENT", EC-155.	
▶	**INSPECTION END**

On Board Diagnosis Logic

NAEC1064

★ The closed loop control has the one trip detection logic.

DTC No.	Trouble diagnosis name	DTC Detecting Condition	Possible Cause
P1148 1148 (Bank 1)	Closed loop control	The closed loop control function for right bank does not operate even when vehicle is driving in the specified condition, the closed loop control function for left bank does not operate even when vehicle is driving in the specified condition.	● The front heated oxygen sensor circuit is open or shorted. ● Heated oxygen sensor 1 ● Heated oxygen sensor 1 heater
P1168 1168 (Bank 2)			

DTC Confirmation Procedure

NAEC1065

CAUTION:

Always drive vehicle at a safe speed.

NOTE:

If DTC Confirmation Procedure has been previously conducted, always turn ignition switch OFF and wait at least 10 seconds before conducting the next test.

TESTING CONDITION:

- **Never raise engine speed above 3,600 rpm during the DTC Confirmation Procedure. If the engine speed limit is exceeded, retry the procedure from step 2.**
- **Before performing the following procedure, confirm that battery voltage is more than 11V at idle.**

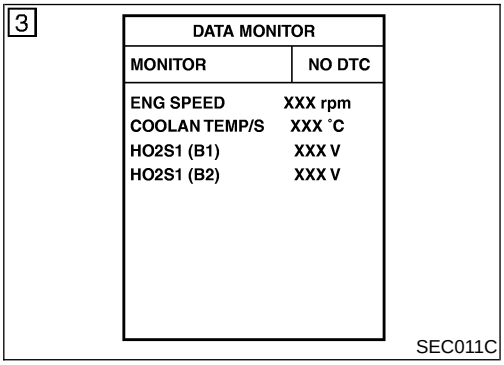

WITH CONSULT-II

NAEC1065S01

1) Start engine and warm it up to the normal operating temperature.
2) Turn ignition switch OFF and wait at least 10 seconds.
3) Start engine and keep the engine speed between 3,500 and 4,000 rpm for at least 1 minute under no load.
4) Let engine idle for 1 minute.
5) Select “DATA MONITOR” mode with CONSULT-II.
6) Hold engine speed at 2,000 rpm and check one of the following.

- “HO2S1 (B1)/(B2)” voltage should go above 0.70V at least once.
- “HO2S1 (B1)/(B2)” voltage should go below 0.21V at least once.

  If the check result is NG, perform “Diagnosis Procedure”, EC-542.

  If the check result is OK, perform the following step.

7) Let engine idle at least 5 minutes.
8) Maintain the following condition at least 50 consecutive seconds.

B/FUEL SCHDL	3.6 msec or more (A/T) 3.0 msec or more (M/T)
ENG SPEED	1,500 rpm or more
Selector lever	Suitable position
VHCL SPEED SE	More than 70 km/h (43 MPH)

During this test, P0134 and/or P0154 may be displayed on CONSULT-II screen.

9) If DTC is detected, go to "Diagnostic Procedure", EC-542.

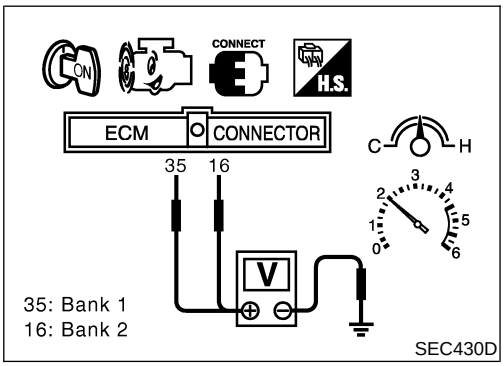

Overall Function Check

NAEC1066

Use this procedure to check the overall function of the closed loop control. During this check, a DTC might not be confirmed.

WITH GST

NAEC1066S01

1) Start engine and warm it up to the normal operating temperature.
2) Turn ignition switch OFF and wait at least 10 seconds.
3) Start engine and keep the engine speed between 3,500 and 4,000 rpm for at least 1 minute under no load.
4) Let engine idle for 1 minute.
5) Set voltmeter probes between ECM terminal 35 [Heated oxygen sensor 1 bank 1 signal] or 16 [Heated oxygen sensor 1 bank 2 signal] and ground.
6) Check the following with engine speed held at 2,000 rpm constant under no-load.

- The voltage should go above 0.70V at least once.
- The voltage should go below 0.21V at least once.

7) If NG, go to "Diagnostic Procedure", EC-542.

Diagnostic Procedure

NAEC1067

Perform trouble diagnosis for "DTC P0133, P0153", EC-233.

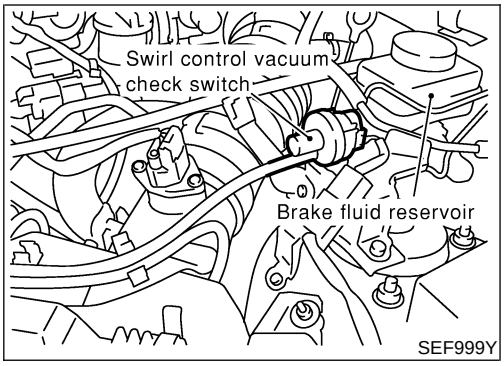

Component Description

NAEC1068

The swirl control valve control vacuum check switch detects vacuum signal to the swirl control valve, and sends ON or OFF signal to the ECM.
When vacuum is supplied to the valve, the swirl control valve control vacuum check switch sends OFF signal to the ECM.
The swirl control valve control vacuum check switch is not used to control the engine system, it is used for on board diagnosis.

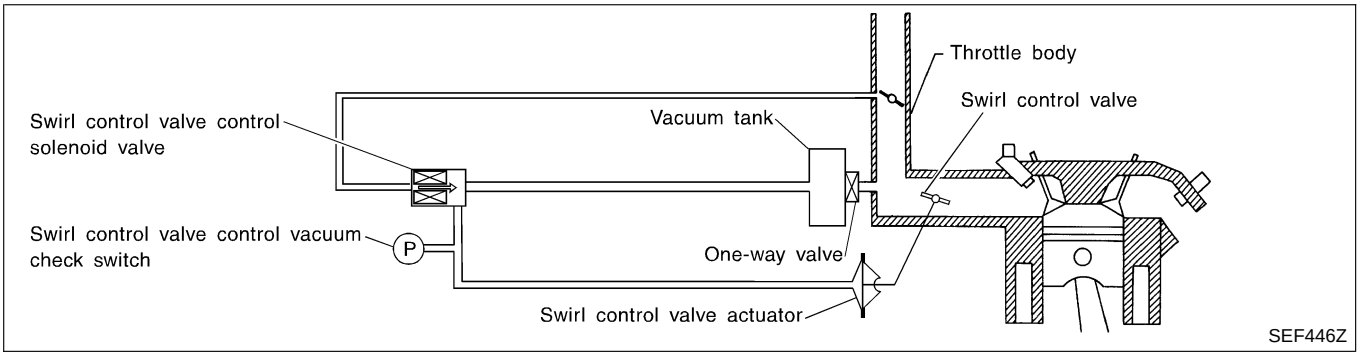

CONSULT-II Reference Value in Data Monitor Mode

NAEC1069

Specification data are reference values.

MONITOR ITEM	CONDITION	SPECIFICATION
SWL CON VC SW	• Engine speed: Idle • Engine coolant temperature is between 15°C (59°F) to 50°C (122°F).	OFF
	• Engine speed: Idle • Engine coolant temperature is above 55°C (131°F).	ON

ECM Terminals and Reference Value

NAEC1070

Specification data are reference values and are measured between each terminal and ground.

CAUTION:
Do not use ECM ground terminals when measuring input/output voltage. Doing so may result in damage to the ECM's transistor. Use a ground other than ECM terminals, such as the ground.

TERMINAL NO.	WIRE COLOR	ITEM	CONDITION	DATA (DC Voltage)
59	W/B	Swirl control valve control vacuum check switch	**[Engine is running]** • Idle speed • Engine coolant temperature is between 15 to 50°C (59 to 122°F).	Approximately 5V
			[Engine is running] • Idle speed • Engine coolant temperature is above 55°C (131°F).	0 - 1.0V

On Board Diagnosis Logic

NAEC1071

DTC No.	Trouble diagnosis name	DTC Detecting Condition	Possible Cause
P1165 1165	Swirl control valve control vacuum check switch	The swirl control valve control vacuum check switch remains OFF under specified engine conditions.	● Harness or connectors (Swirl control valve control vacuum check switch circuit is open.) ● Hoses (Hoses are clogged or connected incorrectly.) ● Swirl control valve control solenoid valve ● Swirl control valve control vacuum check switch

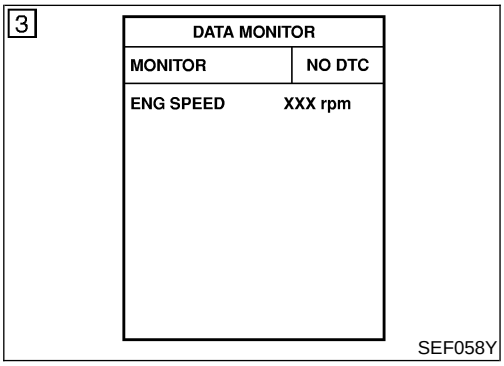

DTC Confirmation Procedure

NAEC1072

NOTE:
If DTC Confirmation Procedure has been previously conducted, always turn ignition switch OFF and wait at least 10 seconds before conducting the next test.

TESTING CONDITION:
For best results, perform the test at a temperature above 5°C (41°F).

WITH CONSULT-II

NAEC1072S01

1) Turn ignition switch OFF and wait at least 10 seconds.
2) Turn ignition switch ON.
3) Select “DATA MONITOR” mode with CONSULT-II and wait at least 5 seconds.
   If 1st trip DTC is detected, go to “Diagnostic Procedure”, EC-546.

WITH GST

NAEC1072S02

Follow the procedure “WITH CONSULT-II” above.

Wiring Diagram

NAEC1073

EC-S/VCSW-01

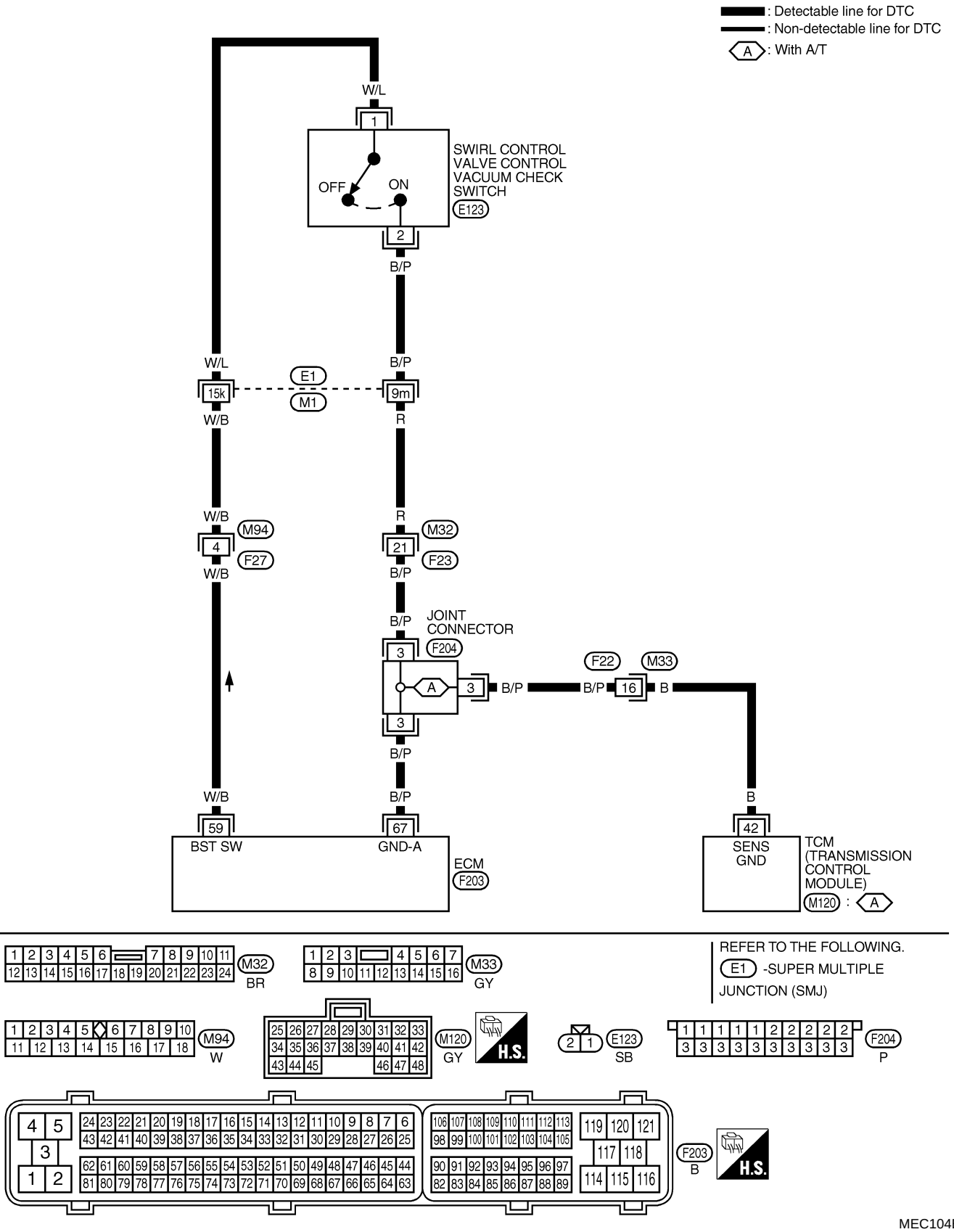

Diagnostic Procedure

NAEC1074

1	CHECK HOSES

1. Turn ignition switch OFF.
2. Check hose for clogging or improper connection.

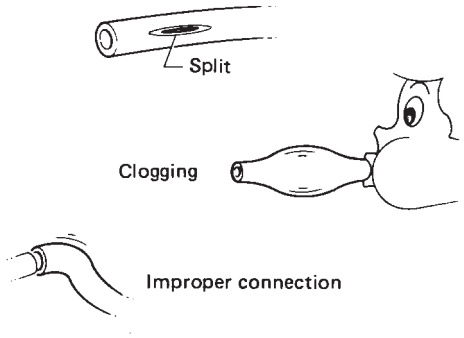

SEF109L

OK or NG

OK	▶	GO TO 2.
NG	▶	Repair or reconnect the hose.

2	CHECK SWIRL CONTROL VALVE CONTROL VACUUM CHECK SWITCH GROUND CIRCUIT FOR OPEN AND SHORT

1. Disconnect swirl control valve control vacuum check switch harness connector.

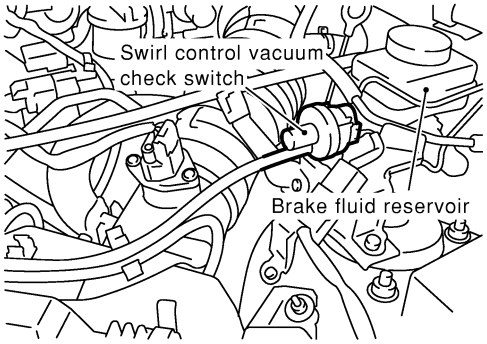

SEF999Y

2. Disconnect ECM harness connector.
3. Disconnect TCM harness connector.
4. Check harness continuity between terminal 2 and ECM terminal 67, TCM terminal 42. Refer to Wiring Diagram.
   Continuity should exist.
5. Also check harness for short to power.

OK or NG

OK	▶	GO TO 4.
NG	▶	GO TO 3.

3	DETECT MALFUNCTIONING PART

Check the following.
- Harness connectors E1, M1
- Harness connectors M32, F23
- Harness connectors F22, M33 (A/T models)
- Joint connector F204
- Harness for open or short between swirl control valve control vacuum check switch and ECM
- Harness for open or short between swirl control valve control vacuum check switch and TCM

	▶	Repair open circuit or short to ground or short to power in harness or connectors.

4	CHECK SWIRL CONTROL VALVE CONTROL VACUUM CHECK SWITCH INPUT SIGNAL CIRCUIT FOR OPEN AND SHORT

1. Check harness continuity between ECM terminal 59 and swirl control valve control vacuum check switch terminal 1. Refer to Wiring Diagram.
   Continuity should exist.
2. Also check harness for short to ground and short to power.

OK or NG

OK	▶	GO TO 6.
NG	▶	GO TO 5.

5	DETECT MALFUNCTIONING PART

Check the following.
- Harness connectors E1, M1
- Harness connectors M94, F27
- Harness for open or short between swirl control valve control vacuum check switch and ECM

	▶	Repair open circuit or short to ground or short to power in harness connectors.

6	CHECK SWIRL CONTROL VALVE CONTROL VACUUM CHECK SWITCH

1. Turn ignition switch OFF.
2. Disconnect vacuum hose connected to swirl control valve control vacuum check switch.
3. Attach vacuum pump to swirl control valve control vacuum check switch.
4. Turn ignition switch ON.
5. Check voltage between ECM terminal 59 and ground under the following conditions.

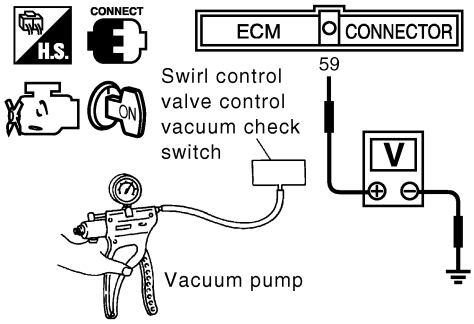

SEC542D

Applied pressure	Voltage V
More than –20.0 kPa (–150 mmHg, –5.91 inHg)	Engine ground
–20.0 to –23.0 kPa (–150 to –172 mmHg, –5.91 to –6.77 inHg)	Engine ground or Approx. 4.8
Less than –23.0 kPa (–172 mmHg, –6.77 inHg)	Approx. 4.8

MTBL1369

OK or NG

OK	▶	GO TO 7.
NG	▶	Replace swirl control valve control vacuum check switch.

7	CHECK SWIRL CONTROL VALVE CONTROL SOLENOID VALVE

With CONSULT-II

1. Reconnect the disconnected harness connectors.
2. Start engine and let it idle.
3. Remove vacuum hose connected to swirl control valve actuator.
4. Select "SWIRL CONT SOL VALVE" in "ACTIVE TEST" mode with CONSULT-II.
5. Touch "ON" and "OFF" on CONSULT-II screen.
6. Check vacuum existence and operation delay time under the following conditions.

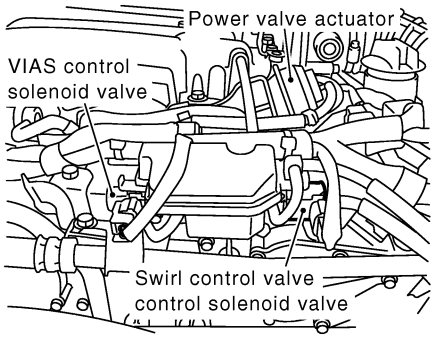

SWIRL CONT SOL VALVE	Vacuum
ON	Should exist.
OFF	Should not exist.

Operation takes less than 1 second.

SEC540D

Without CONSULT-II

1. Reconnect ECM harness connector.
2. Remove vacuum hose connected to swirl control valve actuator.
3. Start engine and let it idle.
4. Apply 12V of direct current between swirl control valve control solenoid valve terminals and 2.
5. Check vacuum existence and operation delay time under the following conditions.

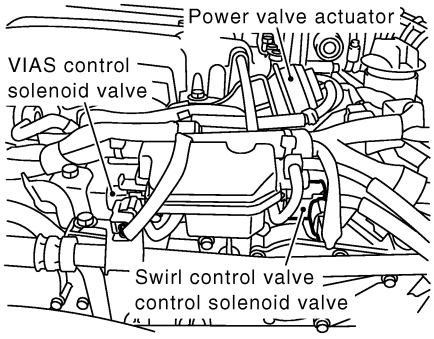

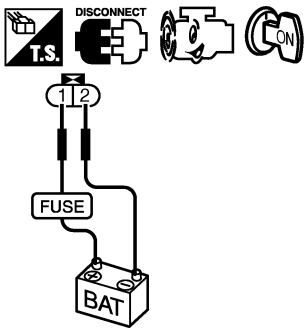

Condition	Vacuum
12V direct current supply	Should exist.
No supply	Should not exist.

Operation takes less than 1 second.

SEC541D

OK or NG

OK	▶	GO TO 8.
NG	▶	Replace intake manifold collector assembly.

8	CHECK INTERMITTENT INCIDENT
Perform "TROUBLE DIAGNOSIS FOR INTERMITTENT INCIDENT", EC-155.	
▶	**INSPECTION END**

Description

NAEC1271

The malfunction information related to TCS is transferred through the CAN communication line from ABS actuator and electric unit (control unit) to ECM.

Be sure to erase the malfunction information such as DTC not only for ABS actuator and electric unit (control unit) but also for ECM after TCS related repair.

On Board Diagnosis Logic

NAEC1272

Freeze frame data is not stored in the ECM for this self-diagnosis. The MIL will not light up for this self-diagnosis.

DTC No.	Trouble diagnosis name	DTC detecting condition	Possible cause
P1211 1211	TCS control unit	ECM receives a malfunction information from ABS actuator and electric unit (Control unit).	● ABS actuator and electric unit (control unit) ● TCS related parts

DTC Confirmation Procedure

NAEC1273

TESTING CONDITION:

Before performing the following procedure, confirm that battery voltage is more than 10V at idle.

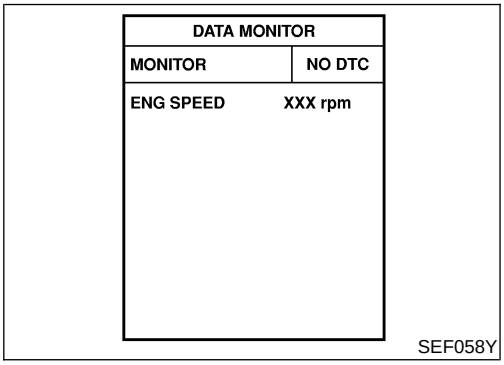

With CONSULT-II

1. Turn ignition switch ON.
2. Select “DATA MONITOR” mode with CONSULT-II.
3. Start engine and let it idle for at least 60 seconds.
4. If 1st trip DTC is detected, go to “Diagnostic Procedure”, EC-550.

WITH GST

Follow the procedure “WITH CONSULT-II” above.

Diagnostic Procedure

NAEC1274

Go to BR-91, “TROUBLE DIAGNOSIS”.

Description

NAEC1275

NOTE:
If DTC P1212 is displayed with DTC U1000, U1001, first perform the trouble diagnosis for DTC U1000, U1001. Refer to "DTC U1000, U1001 CAN COMMUNICATION LINE", EC-166.

This CAN communication line is used to control the smooth engine operation during the TCS operation. Pulse signals are exchanged between ECM and ABS actuator and electric unit (control unit).
Be sure to erase the malfunction information such as DTC not only in ABS actuator and electric unit (control unit) but also ECM after the ABS related repair.

On Board Diagnosis Logic

NAEC1276

Freeze frame data is not stored in the ECM for this self-diagnosis. The MIL will not light up for this self-diagnosis.

DTC No.	Trouble diagnosis name	DTC detecting condition	Possible cause
P1212 1212	TCS communication line	ECM cannot receive the information from ABS actuator and electric unit (control unit) continuously.	● Harness or connectors (The CAN communication line is open or shorted.) ● ABS actuator and electric unit (control unit) ● Dead (Weak) battery

DTC Confirmation Procedure

NAEC1277

TESTING CONDITION:
Before performing the following procedure, confirm that battery voltage is more than 10V at idle.

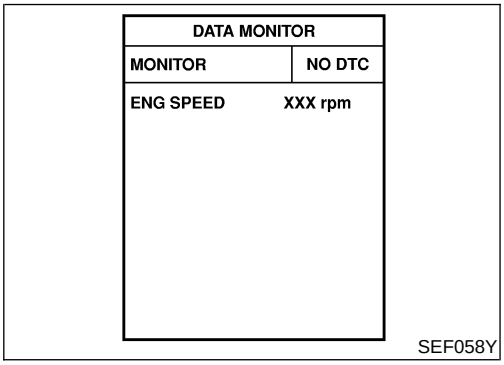

WITH CONSULT-II

1. Turn ignition switch ON.
2. Select "DATA MONITOR" mode with CONSULT-II.
3. Start engine and let it idle for at least 10 seconds.
4. If 1st trip DTC is detected, go to "Diagnostic Procedure", EC-552.

WITH GST

Follow the procedure "WITH CONSULT-II" above.

Diagnostic Procedure

NAEC1278

Go to BR-91, “TROUBLE DIAGNOSIS”.

On Board Diagnosis Logic

NAEC1177

If the cooling fan or another component in the cooling system malfunctions, engine coolant temperature will rise. When the engine coolant temperature reaches an abnormally high temperature condition, a malfunction is indicated.
This self-diagnosis has the one trip detection logic.

DTC No.	Trouble diagnosis name	DTC Detecting Condition	Possible Cause
P1217 1217	Engine over temperature	• Cooling fan does not operate properly (Overheat). • Cooling fan system does not operate properly (Overheat). • Engine coolant was not added to the system using the proper filling method. • Engine coolant is not within the specified range.	• Cooling fan (Crankshaft driven) • Thermostat • Radiator hose • Radiator • Radiator cap • Water pump For more information, refer to “MAIN 12 CAUSES OF OVERHEATING”, EC-557.

CAUTION:
When a malfunction is indicated be sure to replace the coolant, follow the procedure in “Changing Engine Coolant”, “ENGINE MAINTENANCE”, MA-15. Also, replace the engine oil.

1) **Fill radiator with coolant up to specified level with a filling speed of 2 liters per minute like pouring coolant by kettle. Be sure to use coolant with the proper mixture ratio. Refer to “Anti-freeze Coolant Mixture Ratio”, “RECOMMENDED FLUIDS AND LUBRICANTS”, MA-13.**
2) **After refilling coolant, run engine to ensure that no water-flow noise is emitted.**

Overall Function Check

NAEC1178

Use this procedure to check the overall function of the coolant overtemperature enrichment protection check, a DTC might not be confirmed.

WARNING:
Never remove the radiator cap when the engine is hot. Serious burns could be caused by high-pressure fluid escaping from the radiator.
Wrap a thick cloth around the cap. Carefully remove the cap by turning it a quarter turn to allow built-up pressure to escape. Then turn the cap all the way off.

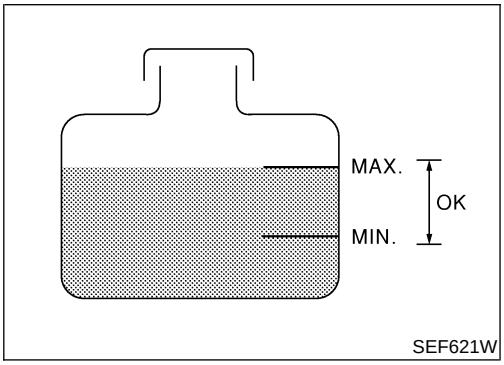

WITH CONSULT-II

NAEC1178S01

1) Check the coolant level in the reservoir tank and radiator.
Allow engine to cool before checking coolant level.
If the coolant level in the reservoir and/or radiator is below the proper range, go to “Diagnostic Procedure”, EC-554.
2) Confirm whether customer filled the coolant or not. If customer filled the coolant, go to “Diagnostic Procedure”, EC-554.

WITH GST

NAEC1178S02

1) Check the coolant level in the reservoir tank and radiator.
Allow engine to cool before checking coolant level.
If the coolant level in the reservoir and/or radiator is below the

proper range, and go to "Diagnostic Procedure", EC-554.

2) Confirm whether customer filled the coolant or not. If customer filled the coolant, go to "Diagnostic Procedure", EC-554.

Diagnostic Procedure

NAEC1179

1	CHECK COOLING FAN (CRANKSHAFT DRIVEN) OPERATION	
Start engine and make sure that cooling fan (crankshaft driven) operates.		
OK or NG		
OK	▶	GO TO 2.
NG	▶	Check cooling fan (crankshaft driven). Refer to LC-23, "Cooling Fan (Crankshaft driven)".

2	CHECK COOLING SYSTEM FOR LEAK	
Apply pressure to the cooling system with a tester, and check if the pressure drops. **CAUTION:** **Higher than the specified pressure may cause radiator damage.** **Testing pressure: 157 kPa (1.6 kg/cm^2, 23 psi)** 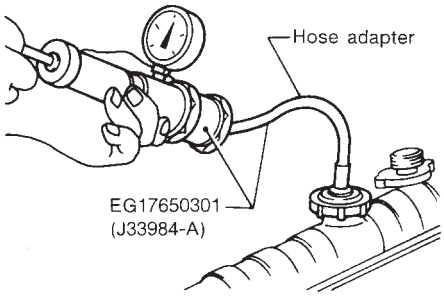 SLC754A **Pressure should not drop.**		
OK or NG		
OK	▶	GO TO 3.
NG	▶	**Check the following for leak** ● Hose ● Radiator ● Water pump Refer to "Water Pump", LC-14.

3	CHECK RADIATOR CAP

Apply pressure to cap with a tester and check radiator cap relief pressure.

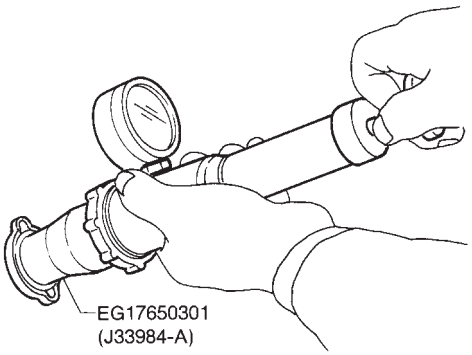

SLC755A

Radiator cap relief pressure:
59 - 98 kPa (0.6 - 1.0 kg/cm^2, 9 - 14 psi)

OK or NG

OK	▶	GO TO 4.
NG	▶	Replace radiator cap.

4	CHECK THERMOSTAT

1. Check valve seating condition at normal room temperatures.
   It should seat tightly.
2. Check valve opening temperature and valve lift.

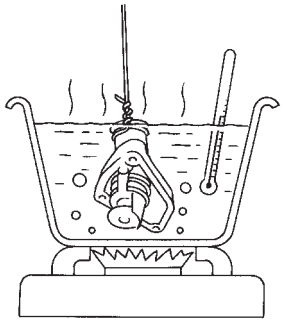

SLC949A

Valve opening temperature:
76.5°C (170°F) [standard]
Valve lift:
More than 8.6 mm/90°C (0.339 in/194°F)

3. Check if valve is closed at 5°C (9°F) below valve opening temperature.

For details, refer to "Thermostat", LC-19.

OK or NG

OK	▶	GO TO 5.
NG	▶	Replace thermostat

5	CHECK ENGINE COOLANT TEMPERATURE SENSOR

Check resistance as shown in the figure.

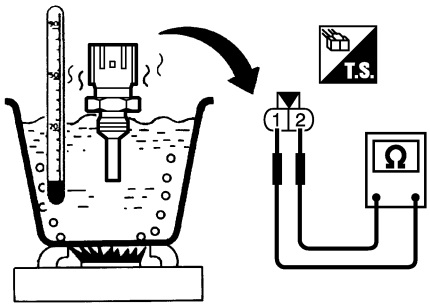

PBIB2064E

<Reference data>

Temperature °C (°F)	Resistance kΩ
20 (68)	2.1 - 2.9
50 (122)	0.68 - 1.00
90 (194)	0.236 - 0.260

MTBL0229

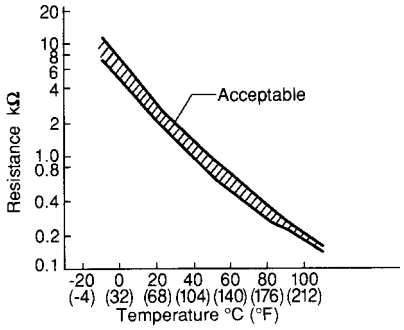

SEF012P

OK or NG

OK	▶	GO TO 6.
NG	▶	Replace engine coolant temperature sensor.

6	CHECK MAIN 12 CAUSES

If the cause cannot be isolated, go to "MAIN 12 CAUSES OF OVERHEATING", EC-557.

	▶	**INSPECTION END**

Main 12 Causes of Overheating

=NAEC1180

Engine	Step	Inspection item	Equipment	Standard	Reference page
OFF	1	• Blocked radiator • Blocked condenser • Blocked radiator grille • Blocked bumper	• Visual	No blocking	—
	2	• Coolant mixture	• Coolant tester	50 - 50% coolant mixture	See “RECOMMENDED FLUIDS AND LUBRICANTS”, MA-12.
	3	• Coolant level	• Visual	Coolant up to MAX level in reservoir tank and radiator filler neck	See “Changing Engine Coolant”, “ENGINE MAINTENANCE”, MA-15.
	4	• Radiator cap	• Pressure tester	59 - 98 kPa (0.6 - 1.0 kg/cm^2, 9 - 14 psi) (Limit)	See “System Check”, “ENGINE COOLING SYSTEM”, LC-12.
ON*1	5	• Coolant leaks	• Visual	No leaks	See “System Check”, “ENGINE COOLING SYSTEM”, LC-12.
ON*1	6	• Thermostat	• Touch the upper and lower radiator hoses	Both hoses should be hot	See “Thermostat” and “Radiator”, “ENGINE COOLING SYSTEM”, LC-19, LC-22.
ON*1	7	• Cooling fan (Crankshaft driven)	• Visual	Operating	See LC-23, “Cooling Fan (Crankshaft driven)”.
OFF	8	• Combustion gas leak	• Color checker chemical tester 4 Gas analyzer	Negative	—
ON*2	9	• Coolant temperature gauge	• Visual	Gauge less than 3/4 when driving	—
		• Coolant overflow to reservoir tank	• Visual	No overflow during driving and idling	See “Changing Engine Coolant”, “ENGINE MAINTENANCE”, MA-15.
OFF*3	10	• Coolant return from reservoir tank to radiator	• Visual	Should be initial level in reservoir tank	See “ENGINE MAINTENANCE”, MA-14.
OFF	11	• Cylinder head	• Straight gauge feeler gauge	0.1 mm (0.004 in) Maximum distortion (warping)	See “Inspection”, “CYLINDER HEAD DISTORTION”, EM-48.
	12	• Cylinder block and pistons	• Visual	No scuffing on cylinder walls or piston	See “Inspection”, “CYLINDER BLOCK DISTORTION AND WEAR”, EM-70.

*1: Engine running at 3,000 rpm for 10 minutes.
*2: Drive at 90 km/h (55 MPH) for 30 minutes and then let idle for 10 minutes.
*3: After 60 minutes of cool down time.
For more information, refer to “Engine Cooling System”, “OVERHEATING CAUSE ANALYSIS”, LC-27.

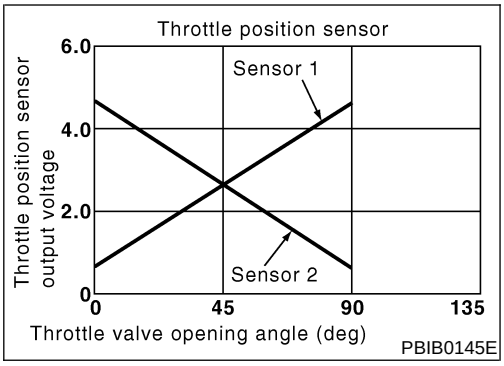

Component Description

NAEC1279

Electric throttle control actuator consists of throttle control motor, throttle position sensor, etc. The throttle position sensor responds to the throttle valve movement.

The throttle position sensor has the two sensors. These sensors are a kind of potentiometers which transform the throttle valve position into output voltage, and emit the voltage signal to the ECM. In addition, these sensors detect the opening and closing speed of the throttle valve and feed the voltage signals to the ECM. The ECM judges the current opening angle of the throttle valve from these signals and the ECM controls the throttle control motor to make the throttle valve opening angle properly in response to driving condition.

On Board Diagnosis Logic

NAEC1280

The MIL will not light up for this self-diagnosis.

DTC No.	Trouble diagnosis name	DTC Detecting Condition	Possible Cause
P1225 1225	Closed throttle position learning performance problem	Closed throttle position learning value is excessively low.	● Electric throttle control actuator (TP sensor 1 and 2)

DTC Confirmation Procedure

NAEC1281

NOTE:

If DTC Confirmation Procedure has been previously conducted, always turn ignition switch OFF and wait at least 10 seconds before conducting the next test.

TESTING CONDITION:

Before performing the following procedure, confirm that battery voltage is more than 10V at idle.

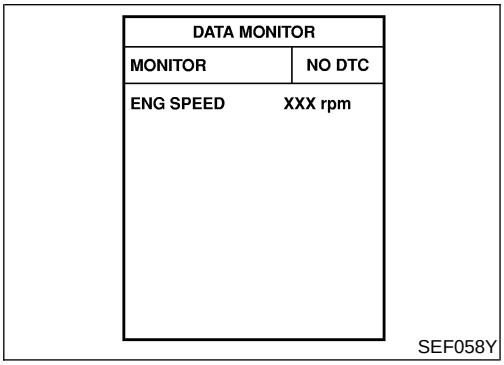

With CONSULT-II

1) Turn ignition switch ON.
2) Select “DATA MONITOR” mode with CONSULT-II.
3) Turn ignition switch OFF, wait at least 10 seconds.
4) Turn ignition switch ON.
5) If 1st trip DTC is detected, go to “Diagnostic Procedure”, EC-559.

With GST

Follow the procedure "With CONSULT-II" above.

Diagnostic Procedure

NAEC1282

1	CHECK ELECTRIC THROTTLE CONTROL ACTUATOR VISUALLY

1. Turn ignition switch OFF.
2. Remove the intake air duct.
3. Check if foreign matter is caught between the throttle valve and the housing.

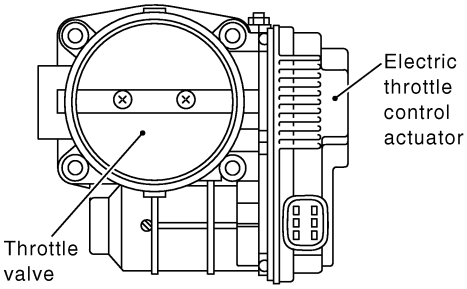

SEC513D

OK or NG

OK	▶	GO TO 2.
NG	▶	Remove the foreign matter and clean the electric throttle control actuator inside.

2	REPLACE ELECTRIC THROTTLE CONTROL ACTUATOR

1. Replace the electric throttle control actuator.
2. Perform "Throttle Valve Closed Position Learning", EC-73.
3. Perform "Idle Air Volume Learning", EC-73.

	▶	**INSPECTION END**

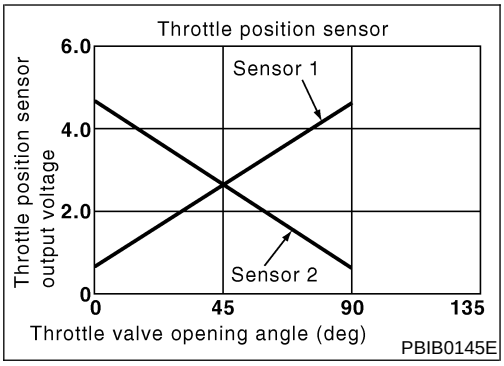

Component Description

NAEC1283

Electric throttle control actuator consists of throttle control motor, throttle position sensor, etc. The throttle position sensor responds to the throttle valve movement.

The throttle position sensor has the two sensors. These sensors are a kind of potentiometers which transform the throttle valve position into output voltage, and emit the voltage signal to the ECM. In addition, these sensors detect the opening and closing speed of the throttle valve and feed the voltage signals to the ECM. The ECM judges the current opening angle of the throttle valve from these signals and the ECM controls the throttle control motor to make the throttle valve opening angle properly in response to driving condition.

On Board Diagnosis Logic

NAEC1284

The MIL will not light up for this self-diagnosis.

DTC No.	Trouble diagnosis name	DTC Detecting Condition	Possible Cause
P1226 1226	Closed throttle position learning performance problem	Closed throttle position learning is not performed successfully, repeatedly.	● Electric throttle control actuator (TP sensor 1 and 2)

DTC Confirmation Procedure

NAEC1285

NOTE:

If DTC Confirmation Procedure has been previously conducted, always turn ignition switch OFF and wait at least 10 seconds before conducting the next test.

TESTING CONDITION:

Before performing the following procedure, confirm that battery voltage is more than 10V at idle.

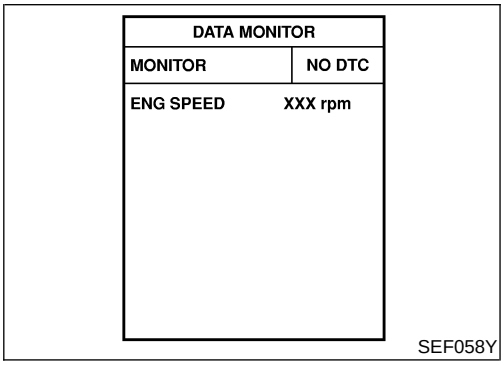

With CONSULT-II

1) Turn ignition switch ON.
2) Select “DATA MONITOR” mode with CONSULT-II.
3) Turn ignition switch OFF, wait at least 10 seconds.
4) Turn ignition switch ON.
5) Repeat steps 3 and 4, 32 times.
6) If 1st trip DTC is detected, go to “Diagnostic Procedure”, EC-561.

With GST

Follow the procedure "With CONSULT-II" above.

Diagnostic Procedure

NAEC1286

1	CHECK ELECTRIC THROTTLE CONTROL ACTUATOR VISUALLY

1. Turn ignition switch OFF.
2. Remove the intake air duct.
3. Check if foreign matter is caught between the throttle valve and the housing.

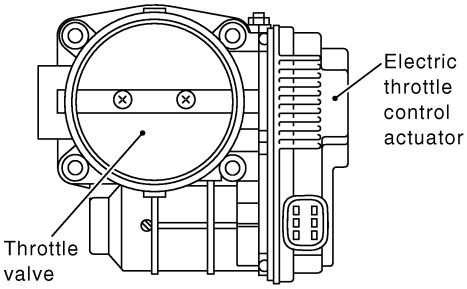

SEC513D

OK or NG

OK	▶	GO TO 2.
NG	▶	Remove the foreign matter and clean the electric throttle control actuator inside.

2	REPLACE ELECTRIC THROTTLE CONTROL ACTUATOR

1. Replace the electric throttle control actuator.
2. Perform "Throttle Valve Closed Position Learning", EC-73.
3. Perform "Idle Air Volume Learning", EC-73.

	▶	**INSPECTION END**

ECM Terminals and Reference Value

NAEC1291

Specification data are reference values and are measured between each terminal and ground.

CAUTION:

Do not use ECM ground terminals when measuring input/output voltage. Doing so may result in damage to the ECM's transistor. Use a ground other than ECM terminals, such as the ground.

TERMINAL NO.	WIRE COLOR	ITEM	CONDITION	DATA (DC Voltage)
48	P/B	Sensor power supply (EVAP control system pressure sensor)	**[Ignition switch ON]**	Approximately 5V
49	P/B	Sensor power supply (Refrigerant pressure sensor)	**[Ignition switch ON]**	Approximately 5V
68	L	Sensor power supply (Power steering pressure sensor)	**[Ignition switch ON]**	Approximately 5V
90	L	Sensor power supply (APP sensor 1)	**[Ignition switch ON]**	Approximately 5V

On Board Diagnosis Logic

NAEC1287

This self-diagnosis has the one trip detection logic.

DTC No.	Trouble diagnosis name	DTC Detecting Condition	Possible Cause
P1229 1229	Sensor power supply circuit short	ECM detects a voltage of power source for sensor is excessively low or high.	• Harness or connectors (APP sensor 1 circuit is shorted.) (PSP sensor circuit is shorted.) (Refrigerant pressure sensor circuit is shorted.) (EVAP control system pressure sensor circuit is shorted.) • Accelerator pedal position sensor • Power steering pressure sensor • EVAP control system pressure sensor • Refrigerant pressure sensor

FAIL-SAFE MODE

NAEC1287S01

When the malfunction is detected, ECM enters fail-safe mode and the MIL lights up.

Engine operation condition in fail-safe mode
ECM stops the electric throttle control actuator control, throttle valve is maintained at a fixed opening (approx. 5 degrees) by the return spring.

DTC Confirmation Procedure

NAEC1288

NOTE:

If DTC Confirmation Procedure has been previously conducted, always turn ignition switch OFF and wait at least 10 seconds before conducting the next test.

TESTING CONDITION:

Before performing the following procedure, confirm that battery voltage is more than 10V at idle.

DATA MONITOR	
MONITOR	NO DTC
ENG SPEED	XXX rpm

SEF058Y

With CONSULT-II

1) Turn ignition switch ON.
2) Select "DATA MONITOR" mode with CONSULT-II.
3) Start engine and let it idle for 1 second.
4) If DTC is detected, go to "Diagnostic Procedure", EC-565.

With GST

Follow the procedure "With CONSULT-II" above.

Wiring Diagram

NAEC1289

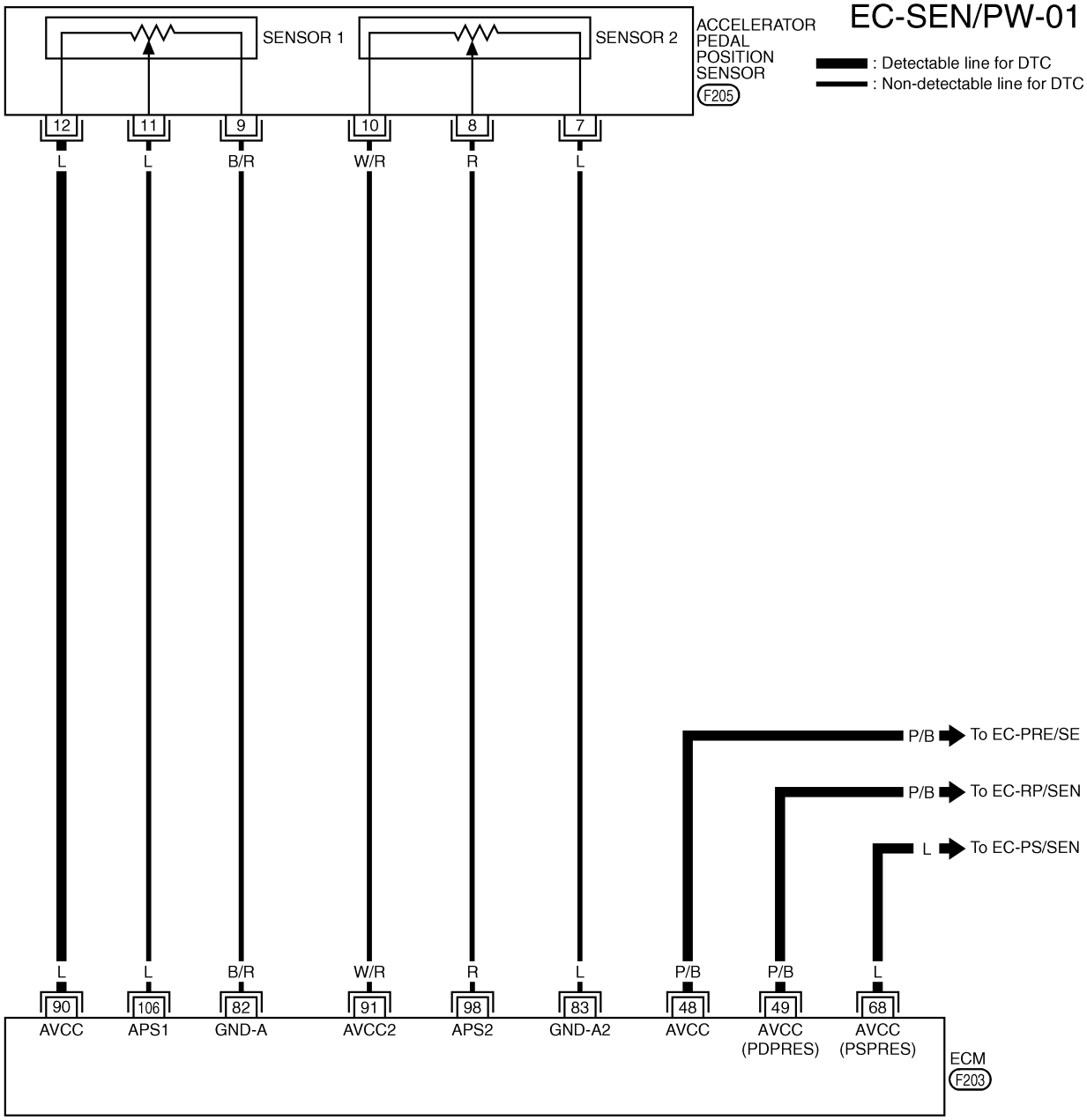

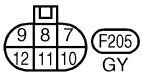

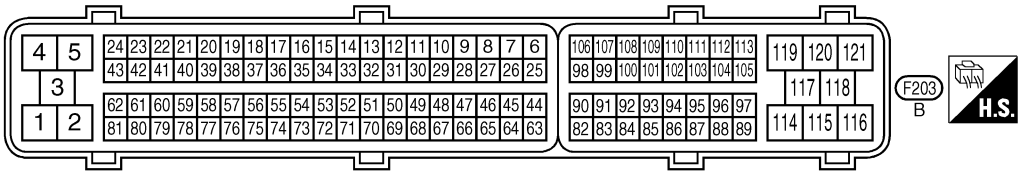

MEC746E

Diagnostic Procedure

NAEC1290

1	CHECK GROUND CONNECTIONS

1. Turn ignition switch OFF.
2. Loosen and retighten three ground screws on the body.
   Refer to “Ground Inspection”, EC-165.

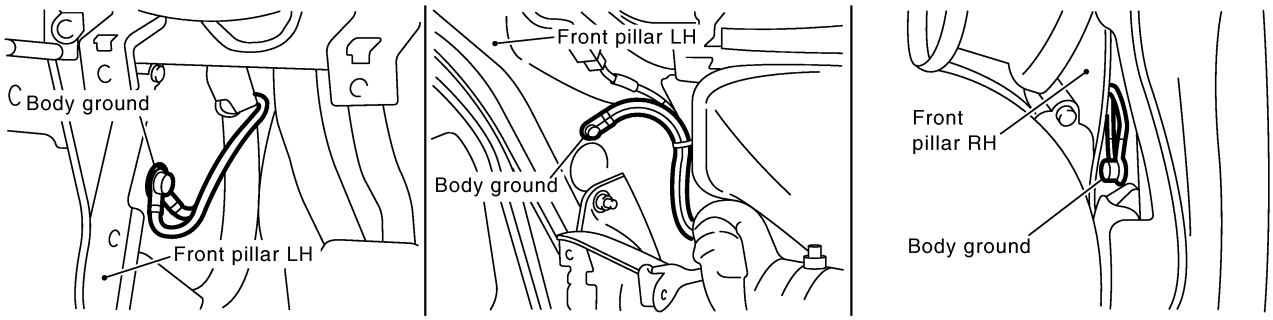

SEC997D

OK or NG

OK	▶	GO TO 2.
NG	▶	Repair or replace ground connections.

2	CHECK ACCELERATOR PEDAL POSITION SENSOR 1 POWER SUPPLY CIRCUIT

1. Disconnect accelerator pedal position (APP) sensor harness connector.
2. Turn ignition switch ON.

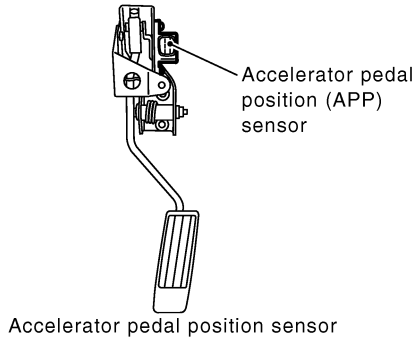

SEC550D

3. Check voltage between APP sensor terminal 12 and ground with CONSULT-II or tester.

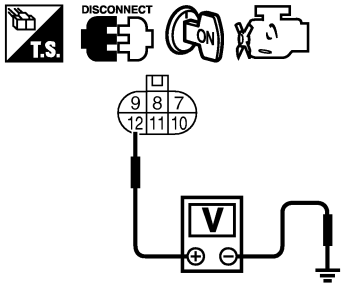

SEC551D

Voltage: Approximately 5V

OK or NG

OK	▶	GO TO 5.
NG	▶	GO TO 3.

3	CHECK SENSOR POWER SUPPLY CIRCUITS	
Check harness for short to power and short to ground, between the following terminals. ● ECM terminal 48 and EVAP control system pressure sensor terminal 3. Refer to "Wiring Diagram", EC-380. ● ECM terminal 68 and power steering pressure sensor terminal 1. Refer to "Wiring Diagram", EC-437. ● ECM terminal 49 and refrigerant pressure sensor terminal 3. Refer to "Wiring Diagram", EC-737. ● ECM terminal 90 and APP sensor terminal 12. Refer to "Wiring Diagram", EC-564.		
OK or NG		
OK	▶	GO TO 4.
NG	▶	Repair short to ground or short to power in harness or connectors.

4	CHECK COMPONENTS	
Check the following. ● Refrigerant pressure sensor (Refer to "COMPONENT INSPECTION", HA-103.) ● Power steering pressure sensor (Refer to "Component Inspection", EC-440.) ● EVAP control system pressure sensor (Refer to "Diagnostic Procedure", EC-381.)		
OK or NG		
OK	▶	GO TO 7.
NG	▶	Replace malfunctioning component.

5	CHECK APP SENSOR	
Refer to "Component Inspection", EC-689.		
OK or NG		
OK	▶	GO TO 7.
NG	▶	GO TO 6.

6	REPLACE ACCELERATOR PEDAL ASSEMBLY	
1. Replace accelerator pedal assembly. 2. Perform "Accelerator Pedal Released Position Learning", EC-73. 3. Perform "Throttle Valve Closed Position Learning", EC-73. 4. Perform "Idle Air Volume Learning", EC-73.		
	▶	**INSPECTION END**

7	REPLACE ACCELERATOR PEDAL ASSEMBLY	
Refer to "TROUBLE DIAGNOSIS FOR INTERMITTENT INCIDENT", EC-155.		
	▶	**INSPECTION END**

On Board Diagnosis Logic

NAEC1377

NOTE:
If DTC P0442 is displayed with P1448, perform trouble diagnosis for DTC P1448 first. (See EC-602.)

This diagnosis detects leaks in the EVAP purge line using the vapor pressure in the fuel tank.
The EVAP canister vent control valve is closed to shut the EVAP purge line. The vacuum cut valve bypass valve will then be opened to clear the line between the fuel tank and the EVAP canister purge volume control solenoid valve. The EVAP control system pressure sensor can now monitor the pressure inside the fuel tank.
If pressure increases, the ECM will check for leaks in the line between the vacuum cut valve and EVAP canister purge volume control solenoid valve.

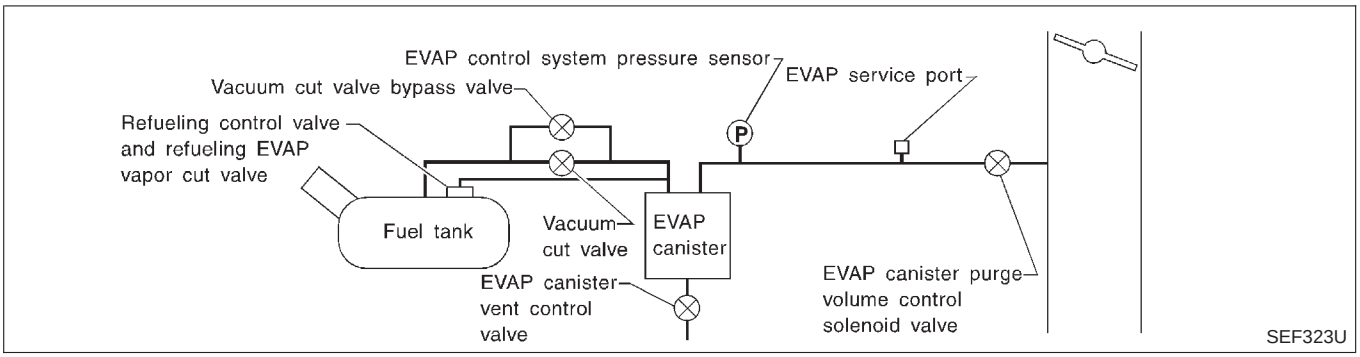

DTC No.	Trouble diagnosis name	DTC Detecting Condition	Possible Cause
P1442 1442	EVAP control system small leak detected (positive pressure)	EVAP control system has a leak, EVAP control system does not operate properly.	• Incorrect fuel tank vacuum relief valve • Incorrect fuel filler cap used • Fuel filler cap remains open or fails to close. • Foreign matter caught in fuel filler cap • Leak is in line between intake manifold and EVAP canister purge volume control solenoid valve. • Foreign matter caught in EVAP canister vent control valve • EVAP canister or fuel tank leaks • EVAP purge line (pipe and rubber tube) leaks • EVAP purge line rubber tube bent • Blocked or bent rubber tube to EVAP control system pressure sensor • Loose or disconnected rubber tube • EVAP canister vent control valve and the circuit • EVAP canister purge volume control solenoid valve and the circuit • Fuel tank temperature sensor • O-ring of EVAP canister vent control valve is missing or damaged. • Water separator • EVAP canister is saturated with water. • EVAP control system pressure sensor • Fuel level sensor and the circuit • Refueling control valve • ORVR system leaks

CAUTION:

- **Use only a genuine NISSAN fuel filler cap as a replacement. If an incorrect fuel filler cap is used, the MIL may come on.**
- **If the fuel filler cap is not tightened properly, the MIL may come on.**
- **Use only a genuine NISSAN rubber tube as a replacement.**

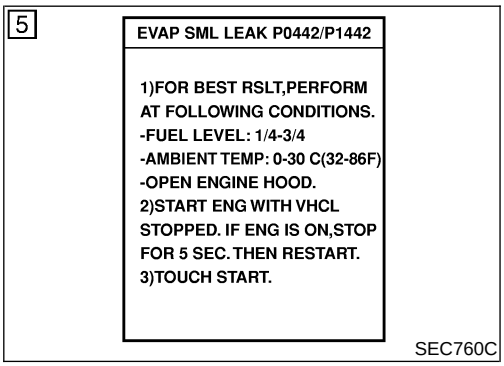

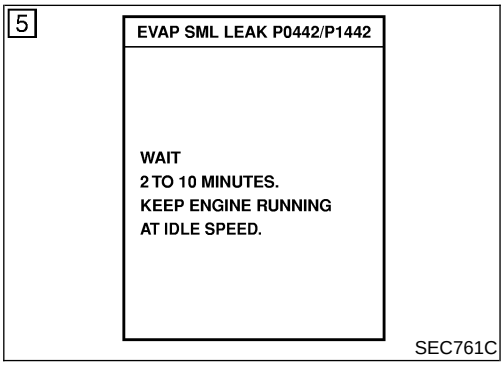

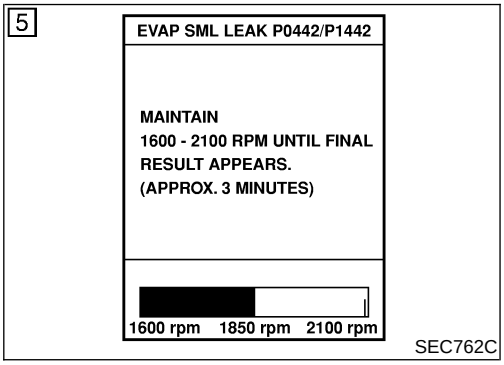

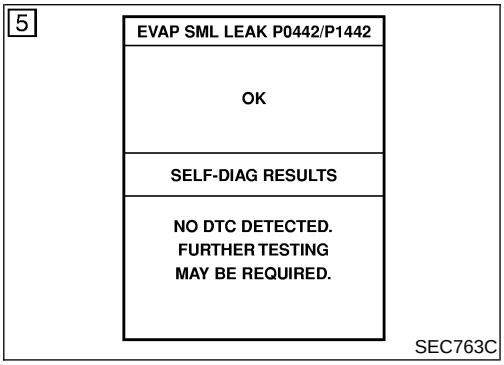

DTC Confirmation Procedure

NAEC1378

NOTE:

- **If DTC P1442 is displayed with P1448, first perform trouble diagnosis for DTC P1448 (See EC-602).**
- If DTC Confirmation Procedure has been previously conducted, always turn ignition switch OFF and wait at least 10 seconds before conducting the next test.

TESTING CONDITION:

- **Perform "DTC WORK SUPPORT" when the fuel level is between 1/4 to 3/4 full and vehicle is placed on flat level surface.**
- **Open engine hood before conducting the following procedure.**

WITH CONSULT-II

NAEC1378S01

1) Turn ignition switch ON.
2) Turn ignition switch OFF and wait at least 10 seconds.
3) Turn ignition switch ON and select "DATA MONITOR" mode with CONSULT-II.
4) Make sure that the following conditions are met.
   COOLAN TEMP/S: 0 - 70°C (32 - 158°F)
   INT/A TEMP SE: 0 - 30°C (32 - 86°F)
5) Select "EVP SML LEAK P0442/P1442" of "EVAPORATIVE SYSTEM" in "DTC WORK SUPPORT" mode with CONSULT-II.
   Follow the instruction displayed.

NOTE:
If the engine speed cannot be maintained within the range displayed on the CONSULT-II screen, go to "Basic Inspection", EC-123.

6) Make sure that "OK" is displayed.
   If "NG" is displayed, refer to "Diagnostic Procedure", EC-569.

NOTE:
Make sure that EVAP hoses are connected to EVAP canister purge volume control solenoid valve properly.

WITH GST

NAEC1378S02

NOTE:
Be sure to read the explanation of "Driving Pattern" on EC-84 before driving vehicle.

1) Start engine.
2) Drive vehicle according to "Driving Pattern", EC-84.
3) Stop vehicle.
4) Select "MODE 1" with GST.

- If SRT of EVAP system is not set yet, go to the following step.

- If SRT of EVAP system is set, the result will be OK.

5) Turn ignition switch OFF and wait at least 10 seconds.
6) Start engine.
   It is not necessary to cool engine down before driving.
7) Drive vehicle again according to the "Driving Pattern", EC-84.
8) Stop vehicle.
9) Select "MODE 3" with GST.

- If P1442 is displayed on the screen, go to "Diagnostic Procedure", EC-569.
- If P0442 is displayed on the screen, go to "Diagnostic Procedure", EC-351.
- If P0441 is displayed on the screen, go to "Diagnostic Procedure" for DTC P0441, EC-342.
- If P0441, P0442 and P1442 are not displayed on the screen, go to the following step.

10) Select "MODE 1" with GST.

- If SRT of EVAP system is set, the result will be OK.
- If SRT of EVAP system is not set, go to step 6.

Diagnostic Procedure

NAEC1379

1	CHECK FUEL FILLER CAP DESIGN	
1. Turn ignition switch OFF. 2. Check for genuine NISSAN fuel filler cap design. 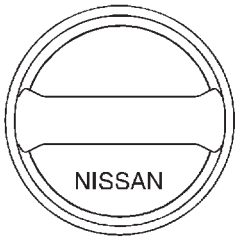 SEF915U		
OK or NG		
OK	▶	GO TO 2.
NG	▶	Replace with genuine NISSAN fuel filler cap.

2	CHECK FUEL FILLER CAP INSTALLATION	
Check that the cap is tightened properly by rotating the cap clockwise.		
OK or NG		
OK	▶	GO TO 3.
NG	▶	• Open fuel filler cap, then clean cap and fuel filler neck threads using air blower. • Retighten until ratcheting sound is heard.

3	CHECK FUEL FILLER CAP FUNCTION	
Check for air releasing sound while opening the fuel filler cap.		
	OK or NG	
OK	▶	GO TO 5.
NG	▶	GO TO 4.

4	CHECK FUEL TANK VACUUM RELIEF VALVE	

1. Wipe clean valve housing.
2. Check valve opening pressure and vacuum.

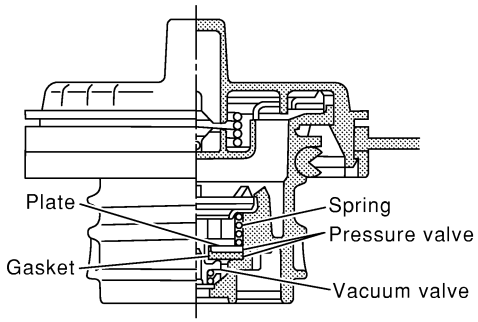

SEF445Y

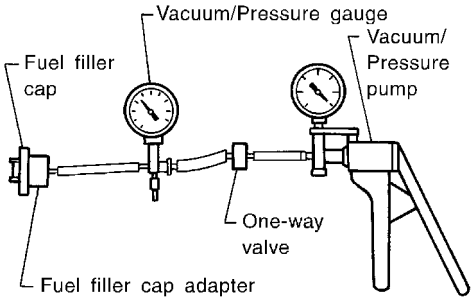

SEF943S

Pressure:
15.3 - 20.0 kPa (0.156 - 0.204 kg/cm^2, 2.22 - 2.90 psi)
Vacuum:
−6.0 to −3.3 kPa (−0.061 to −0.034 kg/cm^2, −0.87 to −0.48 psi)

CAUTION:
Use only a genuine fuel filler cap as a replacement. If an incorrect fuel filler cap is used, the MIL may come on.

	OK or NG	
OK	▶	GO TO 5.
NG	▶	Replace fuel filler cap with a genuine one.

5	INSTALL THE PRESSURE PUMP

To locate the EVAP leak, install EVAP service port adapter and pressure pump to EVAP service port securely.

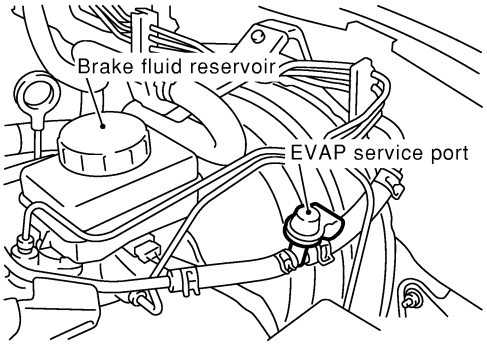

SEF983Y

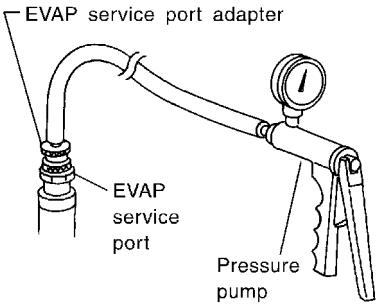

SEF916U

NOTE:
Improper installation of the EVAP service port adapter to the EVAP service port may cause leaking.

With CONSULT-II	▶	GO TO 6.
Without CONSULT-II	▶	GO TO 7.

6	CHECK FOR EVAP LEAK

With CONSULT-II

1. Turn ignition switch ON.
2. Select "EVAP SYSTEM CLOSE" of "WORK SUPPORT" mode with CONSULT-II.
3. Touch "START" and apply pressure into the EVAP line until the pressure indicator reaches the middle of the bar graph.
   NOTE:
   - **Never use compressed air or a high pressure pump.**
   - **Do not exceed 4.12 kPa (0.042 kg/cm^2, 0.6 psi) of pressure in the system.**

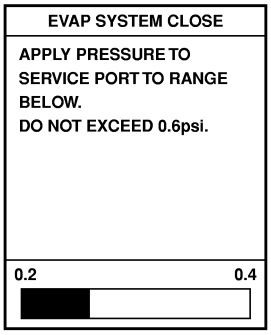

PEF917U

4. Using EVAP leak detector, locate the EVAP leak. For the leak detector, refer to the instruction manual for more details. Refer to "EVAPORATIVE EMISSION LINE DRAWING", EC-42.

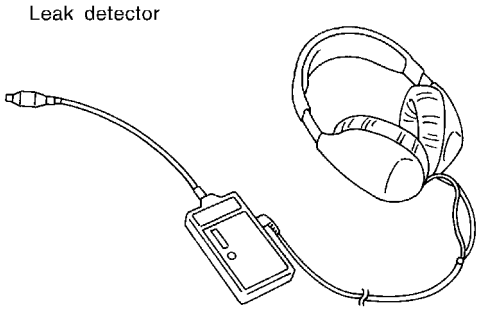

SEF200U

OK or NG

OK	▶	GO TO 8.
NG	▶	Repair or replace.

7	CHECK FOR EVAP LEAK

Without CONSULT-II

1. Turn ignition switch OFF.
2. Apply 12 volts DC to EVAP canister vent control valve. The valve will close. (Continue to apply 12 volts until the end of test.)

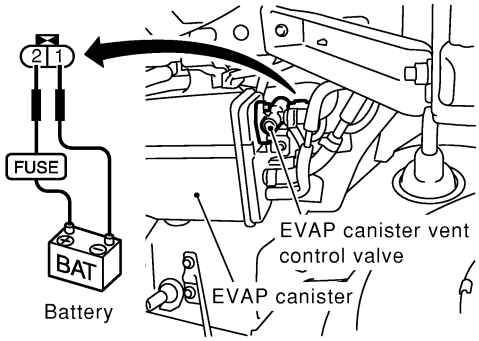

SEC930C

3. Apply 12 volts DC to vacuum cut valve bypass valve. The valve will open. (Continue to apply 12V until the end of test.)

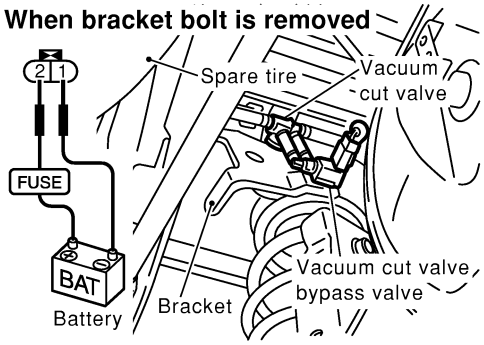

SEC932C

4. Pressurize the EVAP line using pressure pump with 1.3 to 2.7 kPa (10 to 20 mmHg, 0.39 to 0.79 inHg), then remove pump and EVAP service port adapter.
   NOTE:
   - **Never use compressed air or a high pressure pump.**
   - **Do not exceed 4.12 kPa (0.042 kg/cm^2, 0.6 psi) of pressure in the system.**
5. Using EVAP leak detector, locate the EVAP leak. For the leak detector, refer to the instruction manual for more details. Refer to "EVAPORATIVE EMISSION LINE DRAWING", EC-42.

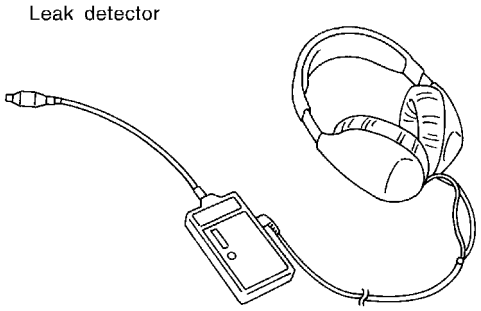

SEF200U

OK or NG

OK	▶	GO TO 8.
NG	▶	Repair or replace.

8	CHECK WATER SEPARATOR

1. Check visually for insect nests in the water separator air inlet.
2. Check visually for cracks or flaws in the appearance.
3. Check visually for cracks or flaws in the hose.
4. Check that **A** and **C** are not clogged by blowing air into **B** with **A**, and then **C** plugged.

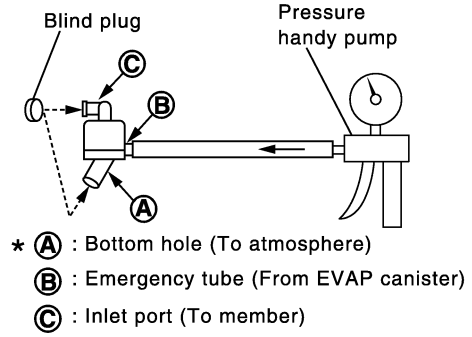

PBIB1032E

5. In case of NG in items 2 - 4, replace the parts.

NOTE:
- Do not disassemble water separator.

OK or NG

OK	▶	GO TO 9.
NG	▶	Replace water separator.

9	CHECK EVAP CANISTER VENT CONTROL VALVE, O-RING AND CIRCUIT

Refer to "DTC Confirmation Procedure", EC-372.

OK or NG

OK	▶	GO TO 10.
NG	▶	Repair or replace EVAP canister vent control valve and O-ring or harness/connector.

10	CHECK IF EVAP CANISTER SATURATED WITH WATER

1. Remove EVAP canister with EVAP canister vent control valve attached.
2. Does water drain from the EVAP canister?

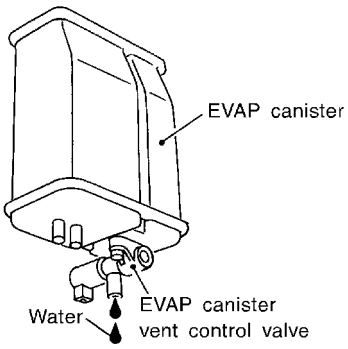

SEF596U

Yes or No

Yes	▶	GO TO 11.
No (With CONSULT-II)	▶	GO TO 13.
No (Without CONSULT-II)	▶	GO TO 14.

11	CHECK EVAP CANISTER
Weigh the EVAP canister with the EVAP canister vent control valve attached. **The weight should be less than 1.8 kg (4.0 lb).**	
OK or NG	
OK (With CONSULT-II) ▶	GO TO 13.
OK (Without CONSULT-II) ▶	GO TO 14.
NG ▶	GO TO 12.

12	DETECT MALFUNCTIONING PART
Check the following. ● EVAP canister for damage ● EVAP hose between EVAP canister and water separator for clogging or poor connection	
▶	Repair hose or replace EVAP canister.

13	CHECK EVAP CANISTER PURGE VOLUME CONTROL SOLENOID VALVE OPERATION

With CONSULT-II

1. Disconnect vacuum hose to EVAP canister purge volume control solenoid valve at EVAP service port.
2. Start engine.
3. Perform "PURG VOL CONT/V" in "ACTIVE TEST" mode.
4. Touch "Qu" on CONSULT-II screen to increase "PURG VOL CONT/V" opening to 100%.
5. Check vacuum hose for vacuum when revving engine up to 2,000 rpm.

ACTIVE TEST	
PURG VOL CONT/V	XXX %
MONITOR	
ENG SPEED	XXX rpm
A/F ALPHA-B1	XX %
A/F ALPHA-B2	XX %

PBIB1678E

Vacuum should exist.

OK or NG	
OK ▶	GO TO 16.
NG ▶	GO TO 15.

14	CHECK EVAP CANISTER PURGE VOLUME CONTROL SOLENOID VALVE OPERATION

Without CONSULT-II

1. Start engine and warm it up to normal operating temperature.
2. Stop engine.
3. Disconnect vacuum hose to EVAP canister purge volume control solenoid valve at EVAP service port.
4. Start engine and let it idle for at least 80 seconds.
5. Check vacuum hose for vacuum when revving engine up to 2,000 rpm.

Vacuum should exist.

OK or NG	
OK ▶	GO TO 17.
NG ▶	GO TO 15.

15	CHECK VACUUM HOSE
Check vacuum hoses for clogging or disconnection. Refer to "Vacuum Hose Drawing", EC-32.	
OK or NG	
OK (With CONSULT-II) ▶	GO TO 16.
OK (Without CONSULT-II) ▶	GO TO 17.
NG ▶	Repair or reconnect the hose.

16	CHECK EVAP CANISTER PURGE VOLUME CONTROL SOLENOID VALVE

With CONSULT-II

1. Start engine.
2. Perform "PURG VOL CONT/V" in "ACTIVE TEST" mode with CONSULT-II. Check that engine speed varies according to the valve opening.

ACTIVE TEST	
PURG VOL CONT/V	XXX %
MONITOR	
ENG SPEED	XXX rpm
A/F ALPHA-B1	XX %
A/F ALPHA-B2	XX %

PBIB1678E

OK or NG

OK ▶	GO TO 18.
NG ▶	GO TO 17.

17	CHECK EVAP CANISTER PURGE VOLUME CONTROL SOLENOID VALVE

With CONSULT-II

Check air passage continuity of EVAP canister purge volume control solenoid valve under the following conditions.

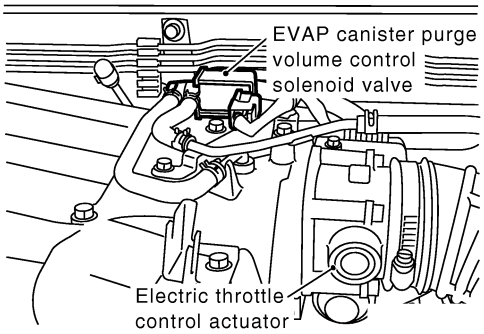

SEC524D

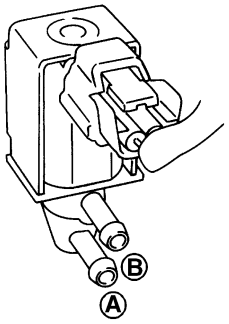

Condition PURG VOL CONT/V value	Air passage continuity between A and B
100%	Yes
0%	No

SEF334XA

Without CONSULT-II

Check air passage continuity of EVAP canister purge volume control solenoid valve under the following conditions.

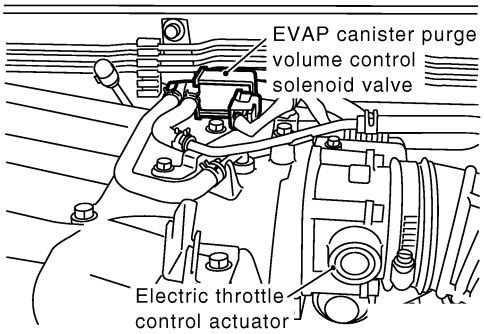

SEC524D

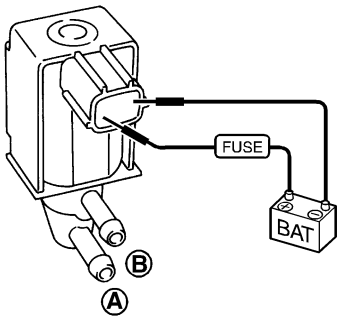

Condition	Air passage continuity between A and B
12V direct current supply between terminals 1 and 2	Yes
No supply	No

SEF335X

OK or NG

OK	▶	GO TO 18.
NG	▶	Replace EVAP canister purge volume control solenoid valve.

18	CHECK FUEL TANK TEMPERATURE SENSOR

1. Remove fuel level sensor unit.
2. Check resistance between fuel level sensor unit terminals 1 and 2 by heating with hot water or heat gun as shown in the figure.

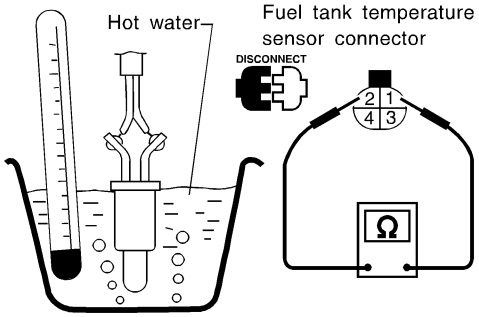

Temperature °C (°F)	Resistance kΩ
20 (68)	2.3 - 2.7
50 (122)	0.79 - 0.90

SEF974Y

OK or NG

OK	▶	GO TO 19.
NG	▶	Replace fuel level sensor unit.

19	CHECK EVAP CONTROL SYSTEM PRESSURE SENSOR

1. Remove EVAP control system pressure sensor with its harness connector connected.
   - **Never apply force to the air hole protector of the sensor if equipped.**

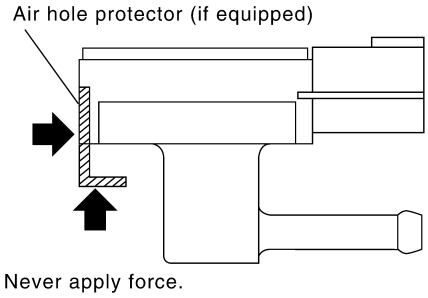

SEF799W

2. Remove EVAP control system pressure sensor from EVAP canister.
   Do not reuse the O-ring, replace it with a new one.
3. Install a vacuum pump to EVAP control system pressure sensor.
4. Turn ignition switch "ON" and check output voltage between ECM terminal 32 and ground under the following conditions.

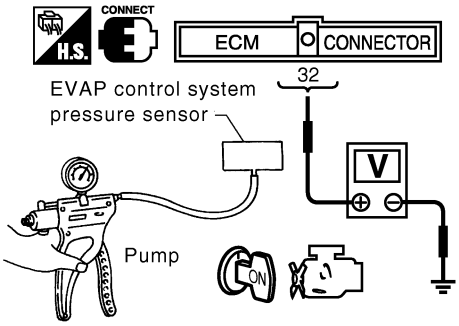

Applied vacuum kPa (mmHg, inHg)	Voltage V
Not applied	1.8 - 4.8
–26.7 (–200, –7.87)	2.1 to 2.5V lower than above value

SEC422D

CAUTION:
- **Always calibrate the vacuum pump gauge when using it.**
- **Do not apply below −93.3 kPa (−700 mmHg, −27.56 inHg) or pressure over 101.3 kPa (760 mmHg, 29.92 inHg).**
- **Discard and EVAP control system pressure sensor which has been dropped from a height of more than 0.5 m (19.7 in) onto a hard surface such as a concrete floor; use a new one.**

OK or NG

OK	▶	GO TO 20.
NG	▶	Replace EVAP control system pressure sensor.

20	CHECK EVAP PURGE LINE

Check EVAP purge line (pipe, rubber tube, fuel tank and EVAP canister) for cracks or improper connection.
Refer to "Evaporative Emission System", EC-38.

OK or NG

OK	▶	GO TO 21.
NG	▶	Repair or reconnect the hose.

21	CLEAN EVAP PURGE LINE

Clean EVAP purge line (pipe and rubber tube) using air blower.

	▶	GO TO 22.

22	CHECK REFUELING EVAP VAPOR LINE	
● Check refueling EVAP vapor line between EVAP canister and fuel tank for clogging, kink, looseness and improper connection. For location, refer to "EVAPORATIVE EMISSION LINE DRAWING", EC-42.		
OK or NG		
OK	▶	GO TO 23.
NG	▶	Repair or replace hoses and tubes.

23	CHECK SIGNAL LINE AND RECIRCULATION LINE	
● Check signal line and recirculation line between filler neck tube and fuel tank for clogging, kink, cracks, looseness and improper connection.		
OK or NG		
OK	▶	GO TO 24.
NG	▶	Repair or replace hoses, tubes or filler neck tube.

24 CHECK REFUELING CONTROL VALVE

1. Remove fuel filler cap.
2. Check air continuity between hose ends A and B.
   Blow air into hose end B. Air should flow freely into the fuel tank.
3. Blow air into hose end A and check that there is no leakage.
4. Apply pressure to both hose ends A and B [20 kPa (150 mmHg, 5.91 inHg)] using a pressure pump and a suitable 3-way connector. Check that there is no leakage.

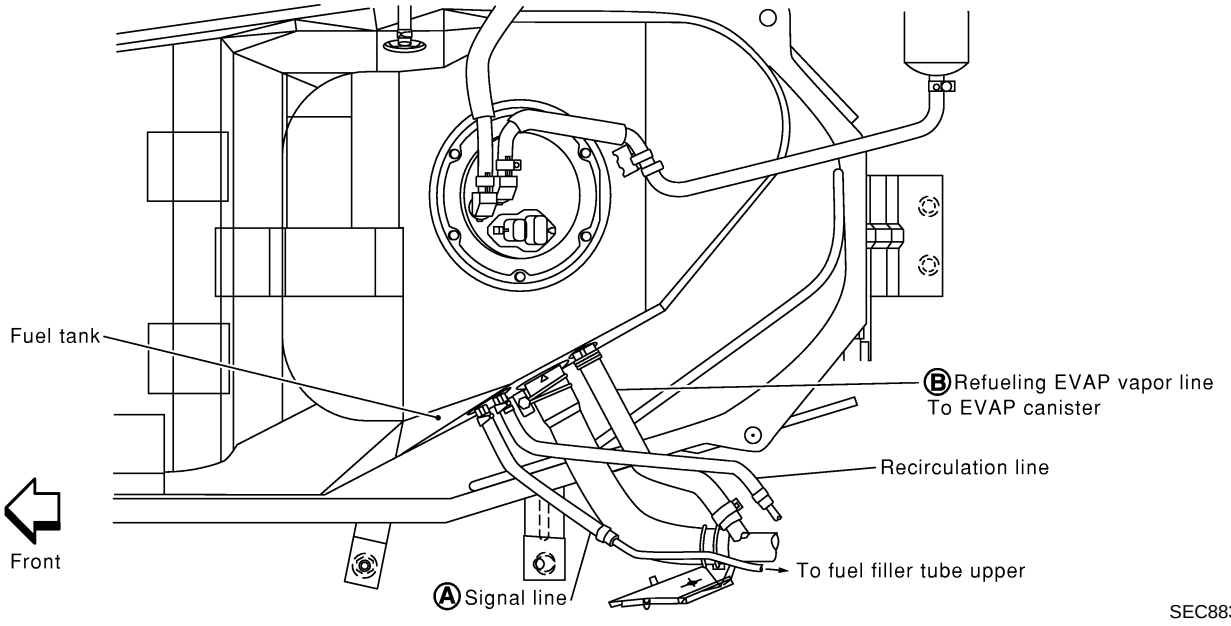

OK or NG		
OK	▶	GO TO 25.
NG	▶	Replace or refueling control valve with fuel tank.

25	CHECK FUEL LEVEL SENSOR	
Refer to EL-125, "Fuel Level Sensor Unit Check".		
OK or NG		
OK	▶	GO TO 26.
NG	▶	Replace fuel level sensor unit.

26	CHECK INTERMITTENT INCIDENT
Refer to "TROUBLE DIAGNOSIS FOR INTERMITTENT INCIDENT", EC-155.	
▶	INSPECTION END

Description

NAEC1089

SYSTEM DESCRIPTION

NAEC1089S01

Sensor	Input Signal to ECM	ECM function	Actuator
Crankshaft position sensor (POS) Camshaft position sensor (PHASE)	Engine speed*2 and piston position	EVAP canister purge flow control	EVAP canister purge volume control solenoid valve
Mass air flow sensor	Amount of intake air		
Engine coolant temperature sensor	Engine coolant temperature		
Throttle position sensor	Throttle position		
Accelerator pedal position sensor	Accelerator pedal position		
Heated oxygen sensor 1	Density of oxygen in exhaust gas (Mixture ratio feedback signal)		
Fuel tank temperature sensor	Fuel temperature in fuel tank		
Vehicle speed signal*1	Vehicle speed		
Battery	Battery voltage*2		

*1: This signal is sent to the ECM through CAN communication line.
*2: ECM determines the start signal status by the signals of engine speed and battery voltage.

This system controls flow rate of fuel vapor from the EVAP canister. The opening of the vapor by-pass passage in the EVAP canister purge volume control solenoid valve changes to control the flow rate. The EVAP canister purge volume control solenoid valve repeats ON/OFF operation according to the signal sent from the ECM. The opening of the valve varies for optimum engine control. The optimum value stored in the ECM is determined by considering various engine conditions. When the engine is operating, the flow rate of fuel vapor from the EVAP canister is regulated as the air flow changes.

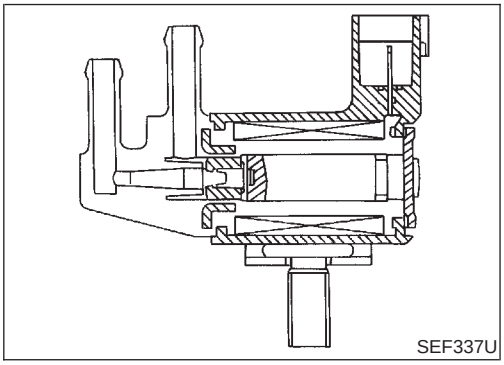

COMPONENT DESCRIPTION

NAEC1089S02

The EVAP canister purge volume control solenoid valve uses a ON/OFF duty to control the flow rate of fuel vapor from the EVAP canister. The EVAP canister purge volume control solenoid valve is moved by ON/OFF pulses from the ECM. The longer the ON pulse, the greater the amount of fuel vapor that will flow through the valve.

CONSULT-II Reference Value in Data Monitor Mode

NAEC1090

Specification data are reference values.

MONITOR ITEM	CONDITION		SPECIFICATION
PURG VOL C/V	• Engine: After warming up • Air conditioner switch OFF • Shift lever: N • No-load	Idle (Vehicle stopped)	0%
		2,000 rpm	—

ECM Terminals and Reference Value

NAEC1091

Specification data are reference values and are measured between each terminal and ground.
Pulse signal is measured by CONSULT-II.

CAUTION:
Do not use ECM ground terminals when measuring input/output voltage. Doing so may result in damage to the ECM's transistor. Use a ground other than ECM terminals, such as the ground.

TERMINAL NO.	WIRE COLOR	ITEM	CONDITION	DATA (DC Voltage)
45	L/Y	EVAP canister purge volume control solenoid valve	**[Engine is running]** ● Idle speed	BATTERY VOLTAGE (11 - 14V)★ 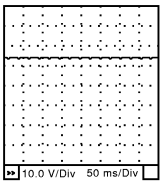 SEC990C
			[Engine is running] ● Engine speed is about 2,000 rpm (More than 100 seconds after starting engine).	BATTERY VOLTAGE (11 - 14V)★ 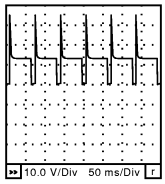 SEC991C

★: Average voltage for pulse signal (Actual pulse signal can be confirmed by oscilloscope.)

On Board Diagnosis Logic

NAEC1092

DTC No.	Trouble diagnosis name	DTC Detecting Condition	Possible Cause
P1444 1444	EVAP canister purge volume control solenoid valve	The canister purge flow is detected during the specified driving conditions, even when EVAP canister purge volume control solenoid valve is completely closed.	● EVAP control system pressure sensor ● EVAP canister purge volume control solenoid valve (The valve is stuck open.) ● EVAP canister vent control valve ● EVAP canister ● Hoses (Hoses are connected incorrectly or clogged.)

DTC Confirmation Procedure

NAEC1093

NOTE:
If DTC Confirmation Procedure has been previously conducted, always turn ignition switch OFF and wait at least 10 seconds before conducting the next test.

TESTING CONDITION:
Always perform test at a temperature of 0°C (32°F) or more.

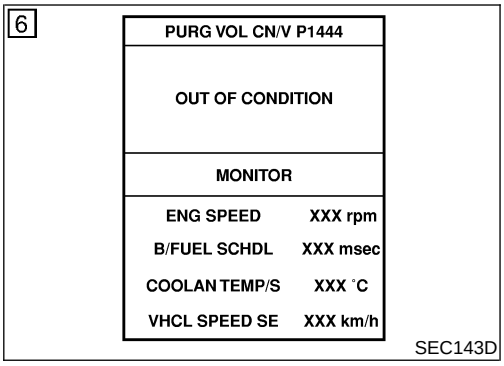

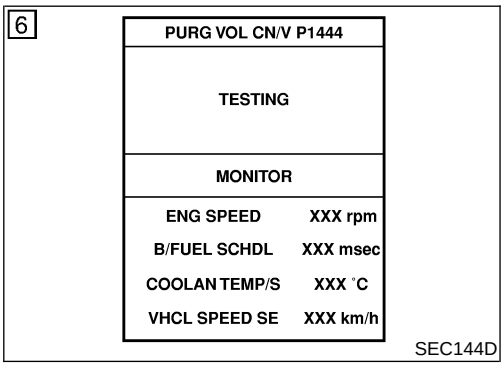

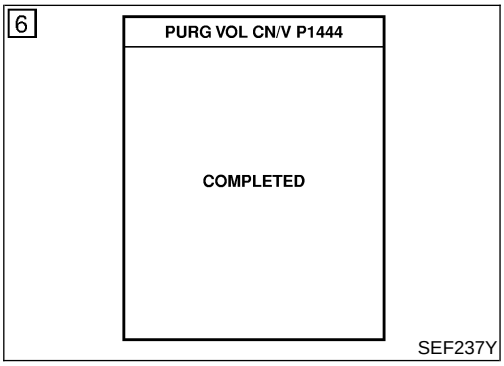

WITH CONSULT-II

NAEC1093S01

1) Start engine and warm it up to normal operating temperature.
2) Turn ignition switch OFF and wait at least 10 seconds.
3) Turn ignition switch ON.
4) Select "PURG VOL CN/V P1444" of "EVAPORATIVE SYSTEM" in "DTC WORK SUPPORT" mode with CONSULT-II.
5) Touch "START".
6) Start engine and let it idle until "TESTING" on CONSULT-II changes to "COMPLETED". (It will take for approximately 10 seconds.)
   If "TESTING" is not displayed after 5 minutes, retry from step 2.
7) Make sure that "OK" is displayed after touching "SELF-DIAG RESULTS". If "NG" is displayed, refer to "Diagnostic Procedure", EC-586.

WITH GST

NAEC1093S02

1) Start engine and warm it up to normal operating temperature.
2) Turn ignition switch OFF and wait at least 10 seconds.
3) Start engine and let it idle for at least 20 seconds.
4) Select "MODE 7" with GST.
5) If 1st trip DTC is detected, go to "Diagnostic Procedure", EC-586.

Wiring Diagram

NAEC1094

EC-PGC/V-01

: Detectable line for DTC
: Non-detectable line for DTC

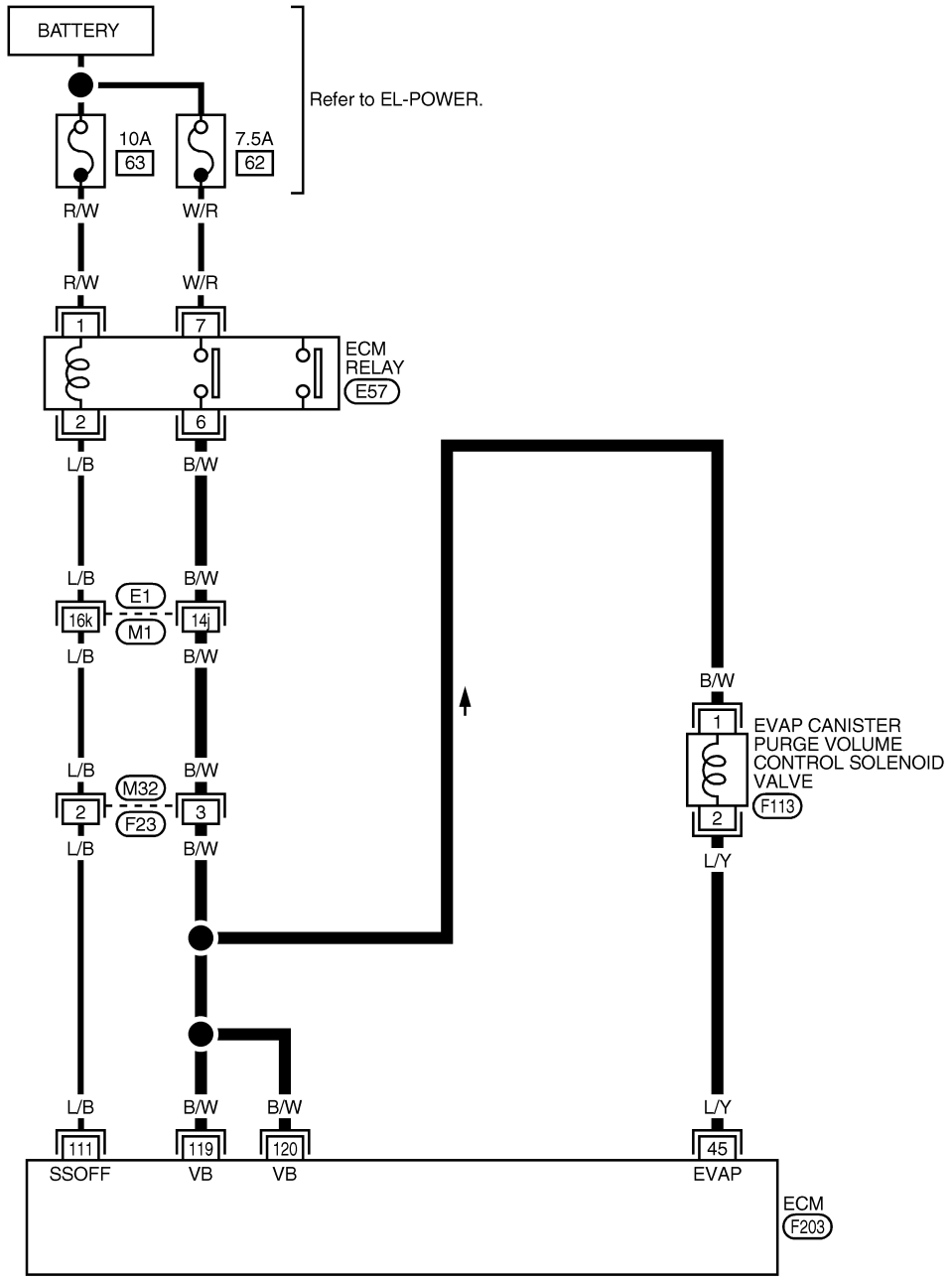

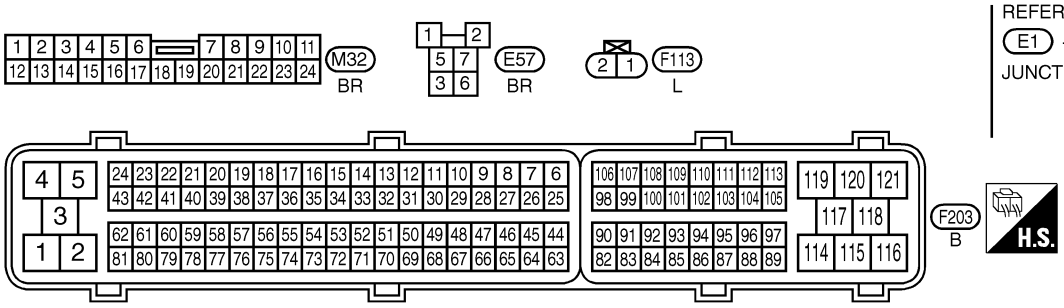

REFER TO THE FOLLOWING.
E1 -SUPER MULTIPLE JUNCTION (SMJ)

MEC096E

Diagnostic Procedure

NAEC1095

1	CHECK EVAP CANISTER PURGE VOLUME CONTROL SOLENOID VALVE POWER SUPPLY CIRCUIT

1. Turn ignition switch OFF.
2. Disconnect EVAP canister purge volume control solenoid valve harness connector.

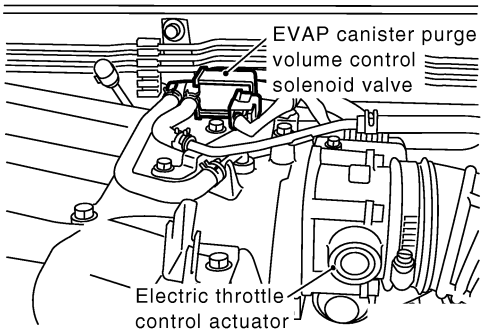

SEC524D

3. Turn ignition switch ON.
4. Check voltage between EVAP canister purge volume control solenoid valve terminal 1 and ground with CONSULT-II or tester.

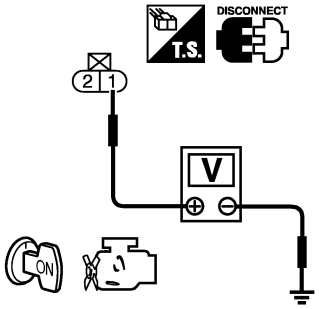

PBIB0080E

Voltage: Battery voltage

OK or NG

OK	▶	GO TO 3.
NG	▶	GO TO 2.

2	DETECT MALFUNCTIONING PART

Check the following.
- Harness connectors E1, M1
- Harness connectors M32, F23
- Harness for open or short between EVAP canister purge volume control solenoid valve and ECM
- Harness for open or short between EVAP canister purge volume control solenoid valve and ECM relay

	▶	Repair open circuit or short to ground or short to power in harness or connectors.

3	CHECK EVAP CANISTER PURGE VOLUME CONTROL SOLENOID VALVE OUTPUT SIGNAL CIRCUIT FOR OPEN AND SHORT

1. Turn ignition switch OFF.
2. Disconnect ECM harness connector.
3. Check harness continuity between ECM terminal 45 and EVAP canister purge volume control solenoid valve terminal 2. Refer to Wiring Diagram.
   Continuity should exist.
4. Also check harness for short to ground and short to power.

OK or NG

OK	▶	GO TO 4.
NG	▶	Repair open circuit or short to ground or short to power in harness or connectors.

4	CHECK EVAP CONTROL SYSTEM PRESSURE SENSOR HOSE

Check disconnection or improper connection of hose connected to EVAP control system pressure sensor.

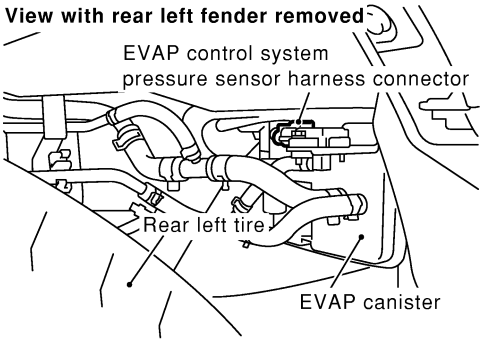

SEC931C

OK or NG

OK	▶	GO TO 5.
NG	▶	Repair it.

5	CHECK EVAP CONTROL SYSTEM PRESSURE SENSOR CONNECTOR

1. Disconnect EVAP control system pressure sensor harness connector.
2. Check connectors for water.
   Water should not exist.

OK or NG

OK	▶	GO TO 6.
NG	▶	Replace EVAP control system pressure sensor.

6	CHECK EVAP CONTROL SYSTEM PRESSURE SENSOR

1. Remove EVAP control system pressure sensor with its harness connector connected.
   - **Never apply force to the air hole protector of the sensor if equipped.**

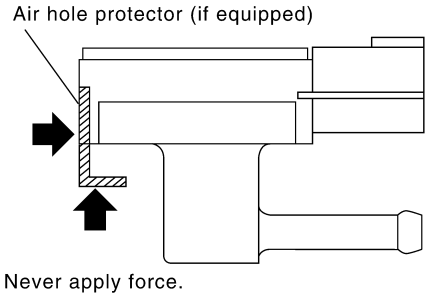

SEF799W

2. Remove EVAP control system pressure sensor from EVAP canister.
   Do not reuse the O-ring, replace it with a new one.
3. Install a vacuum pump to EVAP control system pressure sensor.
4. Turn ignition switch "ON" and check output voltage between ECM terminal 32 and ground under the following conditions.

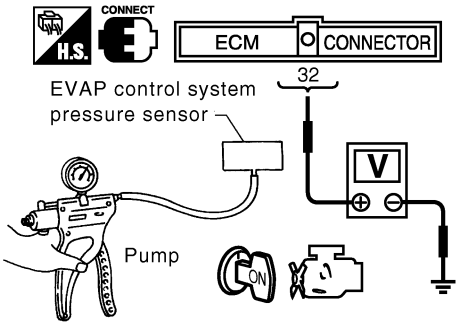

Applied vacuum kPa (mmHg, inHg)	Voltage V
Not applied	1.8 - 4.8
–26.7 (–200, –7.87)	2.1 to 2.5V lower than above value

SEC422D

CAUTION:
- **Always calibrate the vacuum pump gauge when using it.**
- **Do not apply below −93.3 kPa (−700 mmHg, −27.56 inHg) or pressure over 101.3 kPa (760 mmHg, 29.92 inHg).**
- **Discard and EVAP control system pressure sensor which has been dropped from a height of more than 0.5 m (19.7 in) onto a hard surface such as a concrete floor; use a new one.**

OK or NG

OK (With CONSULT-II)	▶	GO TO 7.
OK (Without CONSULT-II)	▶	GO TO 8.
NG	▶	Replace EVAP control system pressure sensor.

7	CHECK EVAP CANISTER PURGE VOLUME CONTROL SOLENOID VALVE

With CONSULT-II

1. Turn ignition switch OFF.
2. Reconnect harness connectors disconnected.
3. Start engine.
4. Perform "PURG VOL CONT/V" in "ACTIVE TEST" mode with CONSULT-II. Check that engine speed varies according to the valve opening.

ACTIVE TEST	
PURG VOL CONT/V	XXX %
MONITOR	
ENG SPEED	XXX rpm
A/F ALPHA-B1	XX %
A/F ALPHA-B2	XX %

PBIB1678E

OK or NG

OK	▶	GO TO 9.
NG	▶	GO TO 8.

8	CHECK EVAP CANISTER PURGE VOLUME CONTROL SOLENOID VALVE

With CONSULT-II

Check air passage continuity of EVAP canister purge volume control solenoid valve under the following conditions.

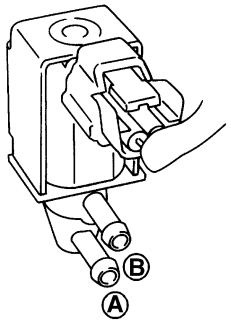

Condition PURG VOL CONT/V value	Air passage continuity between A and B
100%	Yes
0%	No

SEF334XA

Without CONSULT-II

Check air passage continuity of EVAP canister purge volume control solenoid valve under the following conditions.

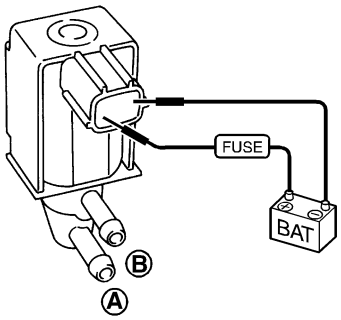

Condition	Air passage continuity between A and B
12V direct current supply between terminals 1 and 2	Yes
No supply	No

SEF335X

OK or NG

OK	▶	GO TO 9.
NG	▶	Replace EVAP canister purge volume control solenoid valve.

9	CHECK RUBBER TUBE FOR CLOGGING	
1. Disconnect rubber tube connected to EVAP canister vent control valve. 2. Check the rubber tube for clogging.		
OK or NG		
OK	▶	GO TO 10.
NG	▶	Clean the rubber tube using an air blower.

10	CHECK EVAP CANISTER VENT CONTROL VALVE-I	
1. Remove EVAP canister vent control valve from EVAP canister. 2. Check portion **B** of EVAP canister vent control valve for being rusted.		
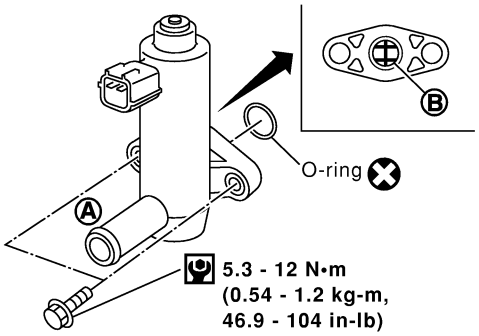 SEF376Z		
OK or NG		
OK	▶	GO TO 11.
NG	▶	Replace EVAP canister vent control valve.

11	CHECK EVAP CANISTER VENT CONTROL VALVE-II

With CONSULT-II

1. Reconnect harness connectors disconnected.
2. Turn ignition switch ON.
3. Perform "VENT CONTROL/V" in "ACTIVE TEST" mode.
4. Check air passage continuity and operation delay time.

ACTIVE TEST	
VENT CONTROL/V	OFF
MONITOR	
ENG SPEED	XXX rpm
A/F ALPHA-B1	XXX %
A/F ALPHA-B2	XXX %
HO2S1 MNTR (B1)	LEAN
HO2S1 MNTR (B2)	LEAN

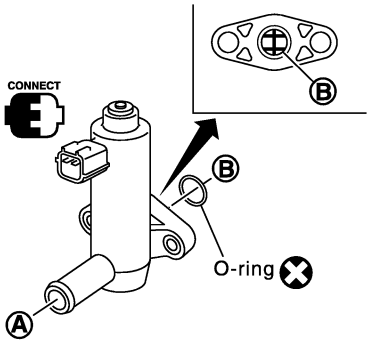

Condition VENT CONTROL/V	Air passage continuity between A and B
ON	No
OFF	Yes

Operation takes less than 1 second.

SEC158D

Without CONSULT-II

Check air passage continuity and operation delay time under the following conditions.

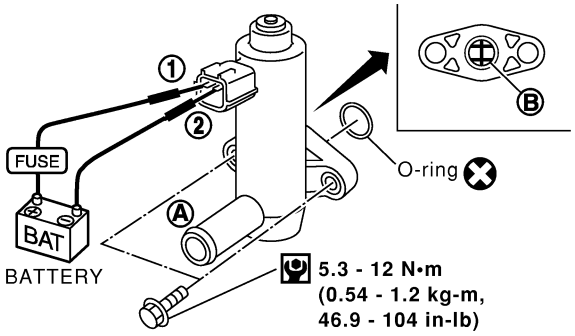

Condition	Air passage continuity between A and B
12V direct current supply between terminals 1 and 2	No
OFF	Yes

Operation takes less than 1 second.

SEF378Z

Make sure new O-ring is installed properly.

OK or NG

OK	▶	GO TO 13.
NG	▶	GO TO 12.

12	CHECK EVAP CANISTER VENT CONTROL VALVE-III

1. Clean the air passage (Portion **A** to **B**) of EVAP canister vent control valve using an air blower.
2. Perform procedure 9 again.

OK or NG

OK	▶	GO TO 13.
NG	▶	Replace EVAP canister vent control valve.

13	CHECK IF EVAP CANISTER SATURATED WITH WATER

1. Remove EVAP canister with EVAP canister vent control valve attached.
2. Check if water will drain from the EVAP canister.

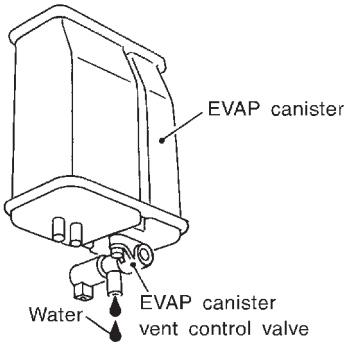

SEF596U

Yes or No

Yes	▶	GO TO 14.
No	▶	GO TO 17.

14	CHECK EVAP CANISTER

Weigh the EVAP canister with the EVAP canister vent control valve attached.
The weight should be less than 1.8 kg (4.0 lb).

OK or NG

OK	▶	GO TO 16.
NG	▶	GO TO 15.

15	DETECT MALFUNCTIONING PART

Check the following.
- EVAP canister for damage
- EVAP hose between EVAP canister and water separater for clogging or poor connection

	▶	Repair hose or replace EVAP canister.

16	CHECK WATER SEPARATOR

1. Check visually for insect nests in the water separator air inlet.
2. Check visually for cracks or flaws in the appearance.
3. Check visually for cracks or flaws in the hose.
4. Check that **A** and **C** are not clogged by blowing air into **B** with **A**, and then **C** plugged.

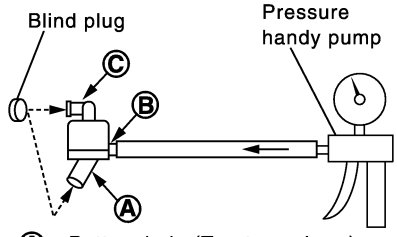

* A : Bottom hole (To atmosphere)
B : Emergency tube (From EVAP canister)
C : Inlet port (To member)

PBIB1032E

5. In case of NG in items 2 - 4, replace the parts.

NOTE:
- Do not disassemble water separator.

OK or NG

OK	▶	GO TO 17.
NG	▶	Clean or replace water separator.

17	CHECK INTERMITTENT INCIDENT
Refer to "TROUBLE DIAGNOSIS FOR INTERMITTENT INCIDENT", EC-155.	
▶	**INSPECTION END**

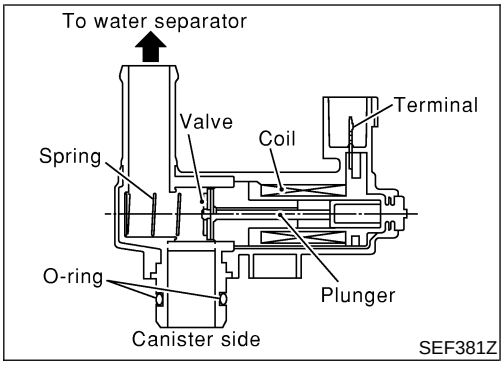

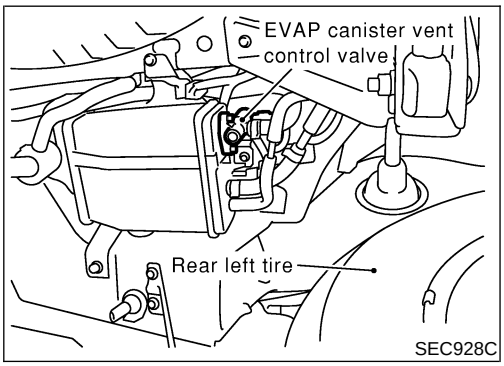

Component Description

NAEC1096

The EVAP canister vent control valve is located on the EVAP canister and is used to seal the canister vent.
This solenoid valve responds to signals from the ECM. When the ECM sends an ON signal, the coil in the solenoid valve is energized. A plunger will then move to seal the canister vent. The ability to seal the vent is necessary for the on board diagnosis of other evaporative emission control system components.
This solenoid valve is used only for diagnosis, and usually remains opened.
When the vent is closed, under normal purge conditions, the evaporative emission control system is depressurized and allows EVAP Control System (Small Leak) diagnosis.

CONSULT-II Reference Value in Data Monitor Mode

NAEC1097

Specification data are reference values.

MONITOR ITEM	CONDITION	SPECIFICATION
VENT CONT/V	● Ignition switch: ON	OFF

ECM Terminals and Reference Value

NAEC1098

Specification data are reference values and are measured between each terminal and ground.

CAUTION:
Do not use ECM ground terminals when measuring input/output voltage. Doing so may result in damage to the ECM's transistor. Use a ground other than ECM terminals, such as the ground.

TERMINAL NO.	WIRE COLOR	ITEM	CONDITION	DATA (DC Voltage)
117	G/R	EVAP canister vent control valve	**[Ignition switch ON]**	BATTERY VOLTAGE (11 - 14V)

On Board Diagnosis Logic

NAEC1099

DTC No.	Trouble diagnosis name	DTC Detecting Condition	Possible Cause
P1446 1446	EVAP canister vent control valve closed	EVAP canister vent control valve remains closed under specified driving conditions.	● EVAP canister vent control valve ● EVAP control system pressure sensor and the circuit ● Blocked rubber tube to EVAP canister vent control valve ● Water separator ● EVAP canister is saturated with water.

4

DATA MONITOR	
MONITOR	NO DTC
ENG SPEED	XXX rpm
COOLAN TEMP/S	XXX °C
VHCL SPEED SE	XXX km/h
B/FUEL SCHDL	XXX msec

PBIB0164E

DTC Confirmation Procedure

NAEC1100

CAUTION:
Always drive vehicle at a safe speed.

NOTE:
If DTC Confirmation Procedure has been previously conducted, always turn ignition switch OFF and wait at least 10 seconds before conducting the next test.

WITH CONSULT-II

NAEC1100S01

1) Turn ignition switch ON.
2) Select “DATA MONITOR” mode with CONSULT-II.
3) Start engine.
4) Drive vehicle at a speed of approximately 80 km/h (50 MPH) for a maximum of 15 minutes.

NOTE:
If a malfunction exists, NG result may be displayed quicker.

5) If 1st trip DTC is detected, go to “Diagnostic Procedure”, EC-597.

WITH GST

NAEC1100S02

Follow the procedure “WITH CONSULT-II” above.

Wiring Diagram

NAEC1101

EC-VENT/V-01

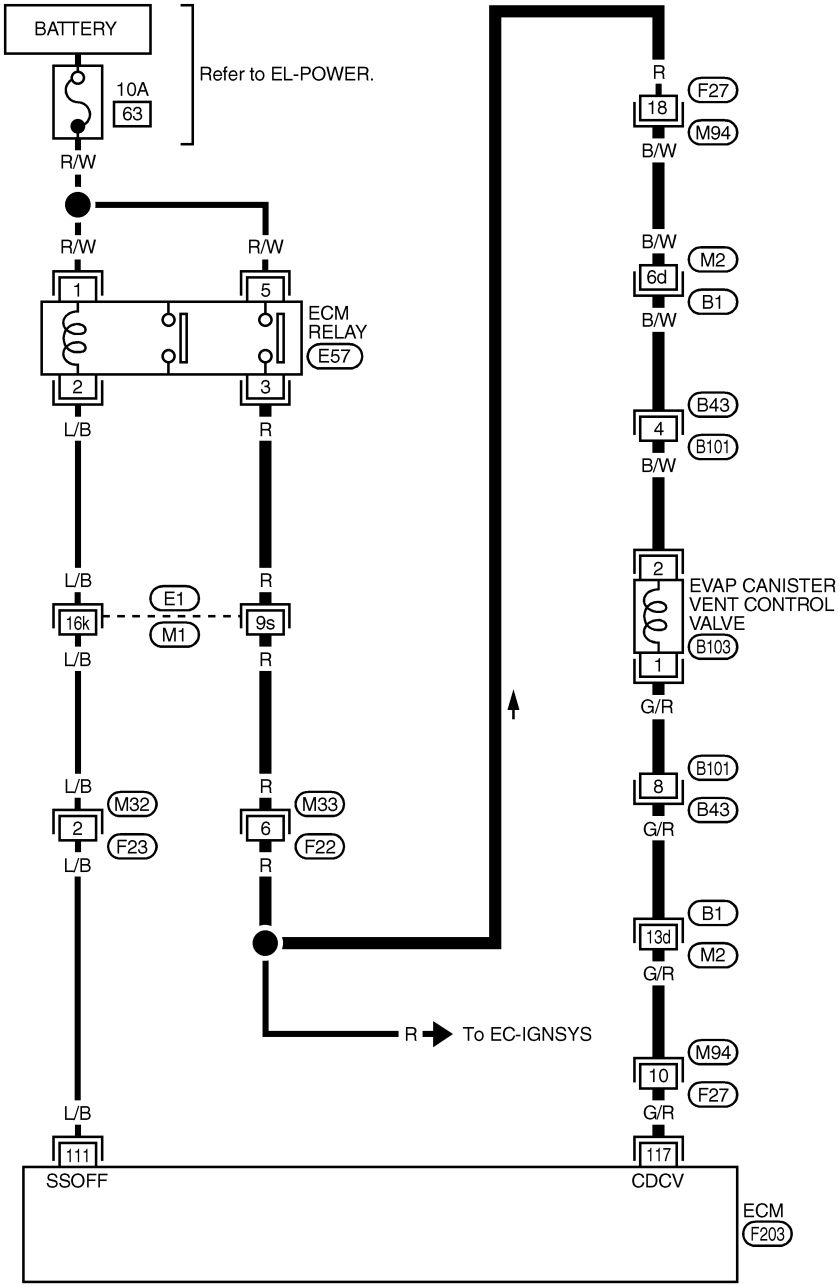

: Detectable line for DTC
: Non-detectable line for DTC

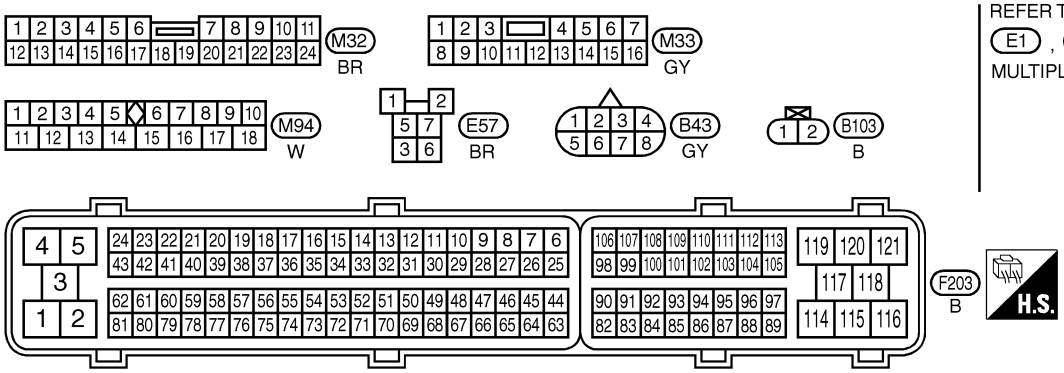

REFER TO THE FOLLOWING.
E1 , B1 -SUPER MULTIPLE JUNCTION (SMJ)

MEC097E

Diagnostic Procedure

NAEC1102

1	CHECK RUBBER TUBE

1. Turn ignition switch OFF.
2. Disconnect rubber tube connected to EVAP canister vent control valve.
3. Check the rubber tube for clogging.

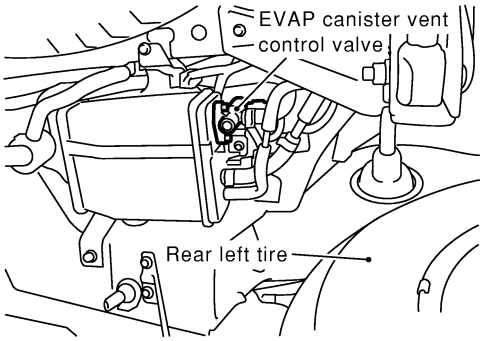

SEC928C

OK or NG

OK	▶	GO TO 2.
NG	▶	Clean rubber tube using an air blower.

2	CHECK WATER SEPARATOR

1. Check visually for insect nests in the water separator air inlet.
2. Check visually for cracks or flaws in the appearance.
3. Check visually for cracks or flaws in the hose.
4. Check that **A** and **C** are not clogged by blowing air into **B** with **A**, and then **C** plugged.

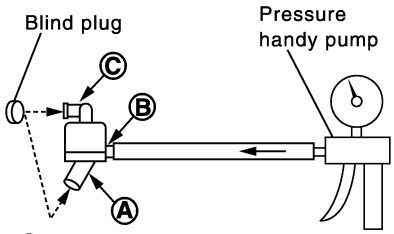

* Ⓐ : Bottom hole (To atmosphere)
Ⓑ : Emergency tube (From EVAP canister)
Ⓒ : Inlet port (To member)

PBIB1032E

5. In case of NG in items 2 - 4, replace the parts.

NOTE:
- Do not disassemble water separator.

OK or NG

OK	▶	GO TO 3.
NG	▶	Clean or replace water separator.

3	CHECK EVAP CANISTER VENT CONTROL VALVE-I

1. Remove EVAP canister vent control valve from EVAP canister.
2. Check portion **B** of EVAP canister vent control valve for being rusted.

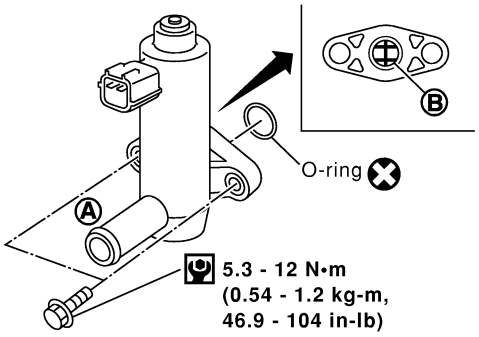

SEF376Z

OK or NG

OK	▶	GO TO 4.
NG	▶	Replace EVAP canister vent control valve.

4	CHECK EVAP CANISTER VENT CONTROL VALVE-II

With CONSULT-II

1. Turn ignition switch ON.
2. Perform "VENT CONTROL/V" in "ACTIVE TEST" mode.
3. Check air passage continuity and operation delay time.

ACTIVE TEST	
VENT CONTROL/V	OFF
MONITOR	
ENG SPEED	XXX rpm
A/F ALPHA-B1	XXX %
A/F ALPHA-B2	XXX %
HO2S1 MNTR (B1)	LEAN
HO2S1 MNTR (B2)	LEAN

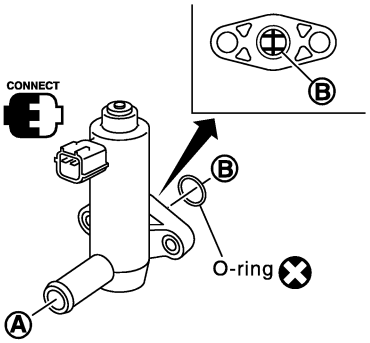

Condition VENT CONTROL/V	Air passage continuity between A and B
ON	No
OFF	Yes

Operation takes less than 1 second.

SEC158D

Without CONSULT-II

Check air passage continuity and operation delay time under the following conditions.

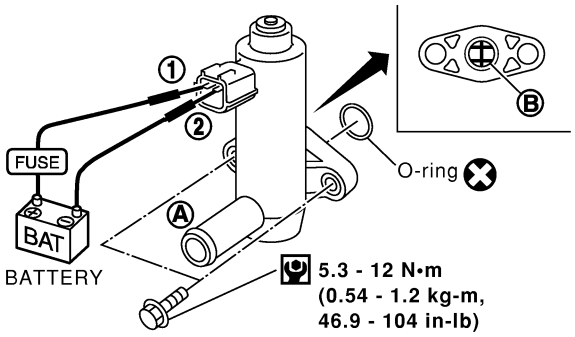

Condition	Air passage continuity between A and B
12V direct current supply between terminals 1 and 2	No
OFF	Yes

Operation takes less than 1 second.

SEF378Z

Make sure new O-ring is installed properly.

OK or NG

OK	▶	GO TO 6.
NG	▶	GO TO 5.

5	CHECK EVAP CANISTER VENT CONTROL VALVE-III	
1. Clean the air passage (Portion **A** to **B**) of EVAP canister vent control valve using an air blower. 2. Perform the procedure 4 again.		
OK or NG		
OK	▶	GO TO 6.
NG	▶	Replace EVAP canister vent control valve.

6	CHECK IF EVAP CANISTER SATURATED WITH WATER	
1. Remove EVAP canister with EVAP canister vent control valve attached. 2. Check if water will drain from the EVAP canister.		
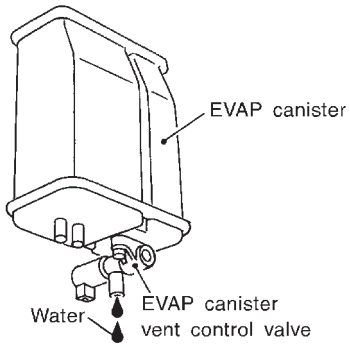 SEF596U		
Yes or No		
Yes	▶	GO TO 7.
No	▶	GO TO 9.

7	CHECK EVAP CANISTER	
Weigh the EVAP canister with the EVAP canister vent control valve attached. **The weight should be less than 1.8 kg (4.0 lb).**		
OK or NG		
OK	▶	GO TO 9.
NG	▶	GO TO 8.

8	DETECT MALFUNCTIONING PART	
Check the following. ● EVAP canister for damage ● EVAP hose between EVAP canister and water separator for clogging or poor connection		
	▶	Repair hose or replace EVAP canister.

9	CHECK EVAP CONTROL SYSTEM PRESSURE SENSOR HOSE	
Check disconnection or improper connection of hose connected to EVAP control system pressure sensor.		
OK or NG		
OK	▶	GO TO 10.
NG	▶	Repair it.

10	CHECK EVAP CONTROL SYSTEM PRESSURE SENSOR CONNECTOR

1. Disconnect EVAP control system pressure sensor harness connector.

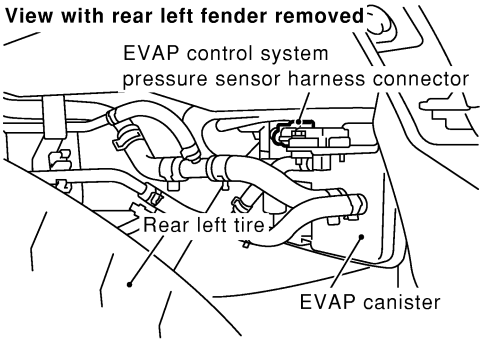

SEC931C

2. Check connectors for water.
   Water should not exist.

OK or NG

OK	▶	GO TO 11.
NG	▶	Replace EVAP control system pressure sensor.

11	CHECK EVAP CONTROL SYSTEM PRESSURE SENSOR

1. Remove EVAP control system pressure sensor with its harness connector connected.
   - **Never apply force to the air hole protector of the sensor if equipped.**

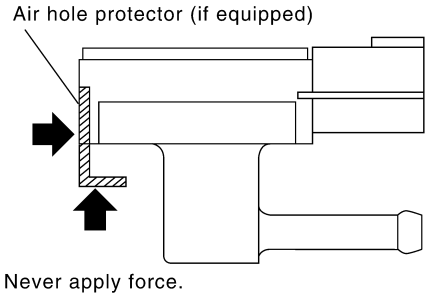

SEF799W

2. Remove EVAP control system pressure sensor from EVAP canister.
   Do not reuse the O-ring, replace it with a new one.
3. Install a vacuum pump to EVAP control system pressure sensor.
4. Turn ignition switch "ON" and check output voltage between ECM terminal 32 and ground under the following conditions.

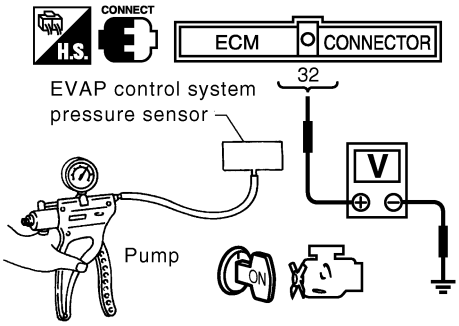

Applied vacuum kPa (mmHg, inHg)	Voltage V
Not applied	1.8 - 4.8
–26.7 (–200, –7.87)	2.1 to 2.5V lower than above value

SEC422D

CAUTION:
- **Always calibrate the vacuum pump gauge when using it.**
- **Do not apply below −93.3 kPa (−700 mmHg, −27.56 inHg) or pressure over 101.3 kPa (760 mmHg, 29.92 inHg).**
- **Discard and EVAP control system pressure sensor which has been dropped from a height of more than 0.5 m (19.7 in) onto a hard surface such as a concrete floor; use a new one.**

OK or NG

OK	▶	GO TO 12.
NG	▶	Replace EVAP control system pressure sensor.

12	CHECK INTERMITTENT INCIDENT
Refer to "TROUBLE DIAGNOSIS FOR INTERMITTENT INCIDENT", EC-155.	
▶	**INSPECTION END**

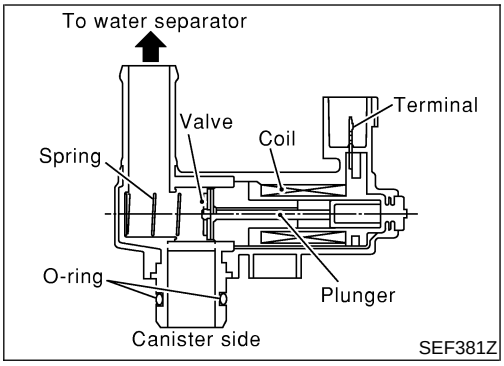

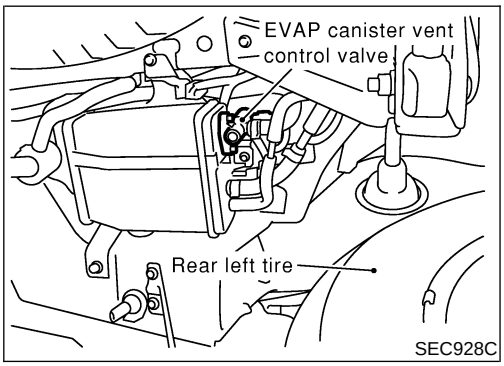

Component Description

NAEC1103

NOTE:
If DTC P1448 is displayed with P0442, perform trouble diagnosis for DTC P1448 first.

The EVAP canister vent control valve is located on the EVAP canister and is used to seal the canister vent.
This solenoid valve responds to signals from the ECM. When the ECM sends an ON signal, the coil in the solenoid valve is energized. A plunger will then move to seal the canister vent. The ability to seal the vent is necessary for the on board diagnosis of other evaporative emission control system components.
This solenoid valve is used only for diagnosis, and usually remains opened.
When the vent is closed, under normal purge conditions, the evaporative emission control system is depressurized and allows “EVAP Control System (Small Leak)” diagnosis.

CONSULT-II Reference Value in Data Monitor Mode

NAEC1104

Specification data are reference values.

MONITOR ITEM	CONDITION	SPECIFICATION
VENT CONT/V	● Ignition switch: ON	OFF

ECM Terminals and Reference Value

NAEC1105

Specification data are reference values and are measured between each terminal and ground.

CAUTION:
Do not use ECM ground terminals when measuring input/output voltage. Doing so may result in damage to the ECM’s transistor. Use a ground other than ECM terminals, such as the ground.

TERMINAL NO.	WIRE COLOR	ITEM	CONDITION	DATA (DC Voltage)
117	G/R	EVAP canister vent control valve	**[Ignition switch ON]**	BATTERY VOLTAGE (11 - 14V)

On Board Diagnosis Logic

NAEC1106

DTC No.	Trouble diagnosis name	DTC Detecting Condition	Possible Cause
P1448 1448	EVAP canister vent control valve open	EVAP canister vent control valve remains opened under specified driving conditions.	● EVAP canister vent control valve ● EVAP control system pressure sensor and circuit ● Blocked rubber tube to EVAP canister vent control valve ● Water separator ● EVAP canister is saturated with water. ● Vacuum cut valve

DTC Confirmation Procedure

NAEC1107

NOTE:

- **If DTC P1448 is displayed with P0442 or P1442, perform trouble diagnosis for DTC P1448 first.**
- If DTC Confirmation Procedure has been previously conducted, always turn ignition switch OFF and wait at least 10 seconds before conducting the next test.

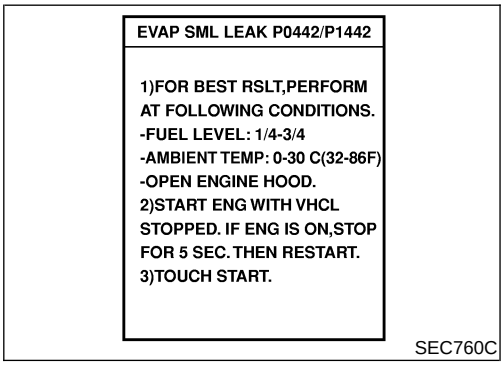

SEC760C

WITH CONSULT-II

NAEC1107S01

TESTING CONDITION:

- **Perform "DTC WORK SUPPORT" when the fuel level is between 1/4 to 3/4 full and vehicle is placed on flat level surface.**
- **Always perform test at a temperature of 0 to 30°C (32 to 86°F).**
- **Open engine hood before conducting the following procedure.**

1) Turn ignition switch ON.
2) Turn ignition switch OFF and wait at least 10 seconds.
3) Turn ignition switch ON and select "DATA MONITOR" mode with CONSULT-II.
4) Make sure that the following conditions are met.

COOLAN TEMP/S	0 - 70°C (32 - 158°F)
INT/A TEMP SE	0 - 30°C (32 - 86°F)

5) Select "EVP SML LEAK P0442/P1442" of "EVAPORATIVE SYSTEM" in "DTC WORK SUPPORT" mode with CONSULT-II.
   Follow the instruction displayed.

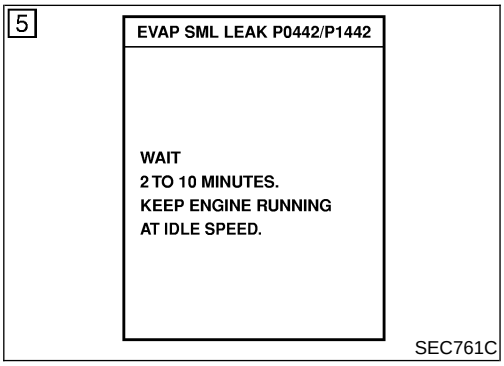

SEC761C

NOTE:
If the engine speed cannot be maintained within the range displayed on the CONSULT-II screen, go to "Basic Inspection", EC-123.

6) Make sure that "OK" is displayed.
   If "NG" is displayed, go to the following step.

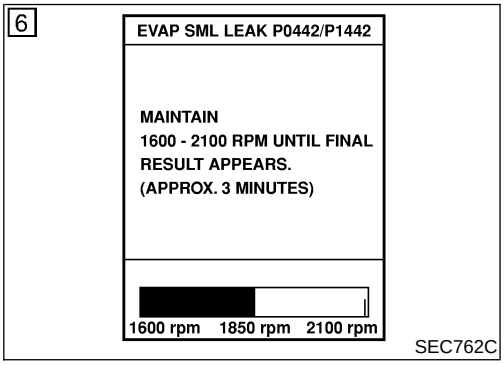

SEC762C

NOTE:
Make sure that EVAP hoses are connected to EVAP canister purge volume control solenoid valve properly.

7) Stop engine and wait at least 10 seconds, then turn "ON".
8) Disconnect hose from water separator.
9) Select "VENT CONTROL/V" of "ACTIVE TEST" mode with CONSULT-II.
10) Touch "ON" and "OFF" alternately.

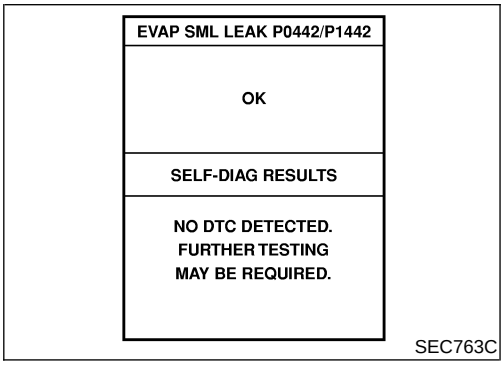

SEC763C

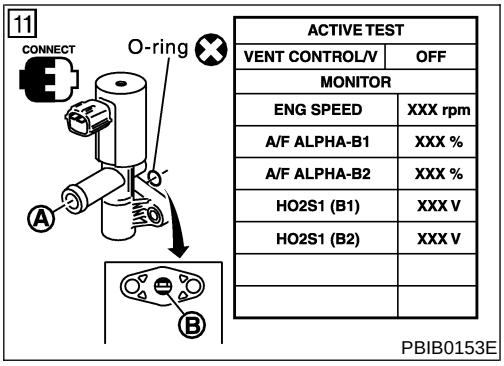

11) Make sure the following.

Condition VENT CONTROL/V	Air passage continuity between **A** and **B**
ON	No
OFF	Yes

If the result is NG, go to "Diagnostic Procedure", EC-606.
If the result is OK, go to "Diagnostic Procedure" for DTC P0442, EC-351.

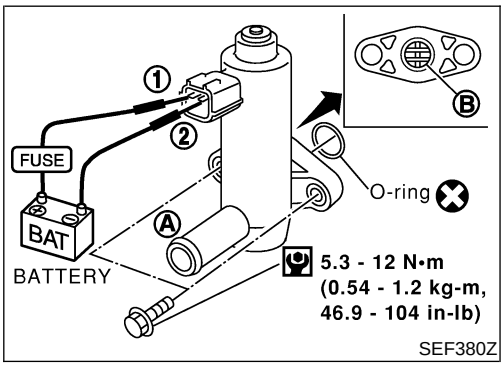

Overall Function Check

NAEC1108

Use this procedure to check the overall function of the EVAP canister vent control valve circuit. During this check, a 1st trip DTC might not be confirmed.

WITH GST

NAEC1108S01

1) Disconnect hose from water separator.
2) Disconnect EVAP canister vent control valve harness connector.
3) Verify the following.

Condition	Air passage continuity
12V direct current supply between terminals 1 and 2	No
No supply	Yes

If the result is NG, go to "Diagnostic Procedure", EC-606.
If the result is OK, go to "Diagnostic Procedure" for DTC P0442, EC-351.

Wiring Diagram

NAEC1109

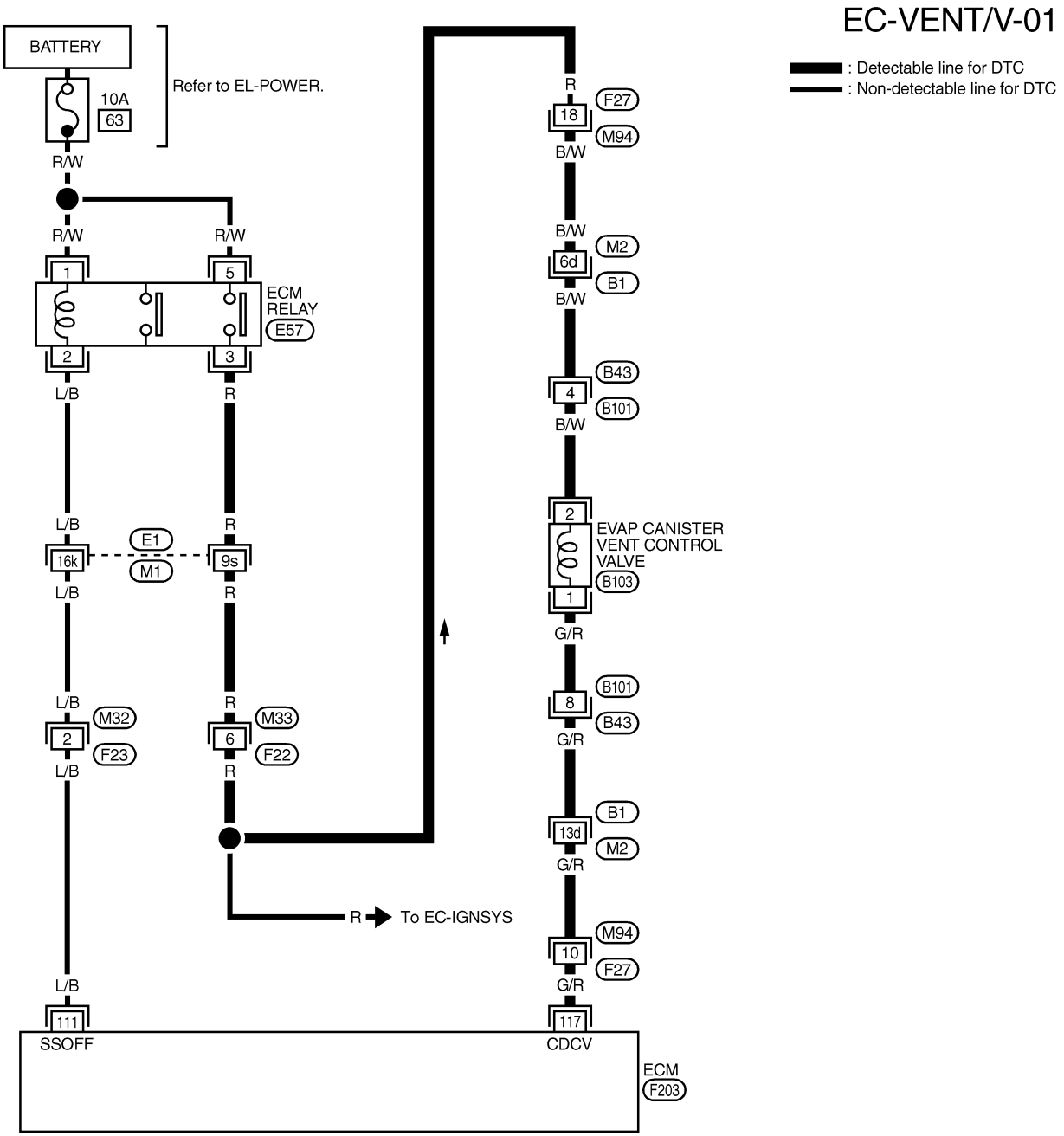

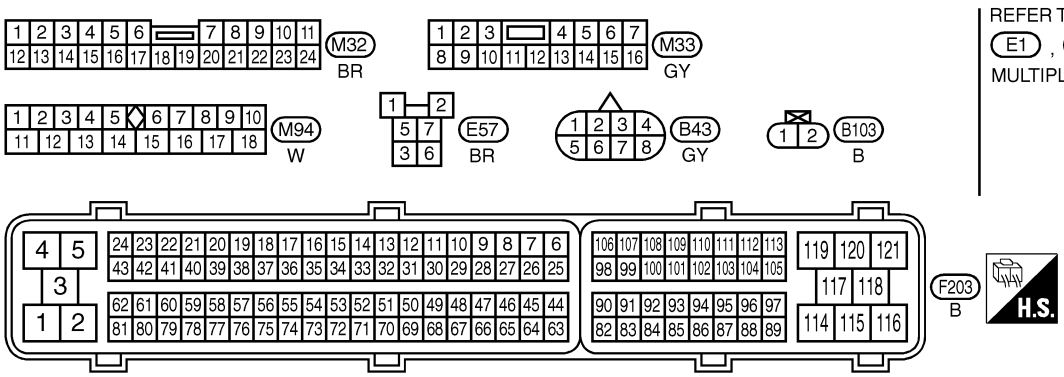

REFER TO THE FOLLOWING.
E1 , B1 -SUPER MULTIPLE JUNCTION (SMJ)

MEC097E

Diagnostic Procedure

NAEC1110

1	CHECK RUBBER TUBE	
1. Turn ignition switch OFF. 2. Disconnect rubber tube connected to EVAP canister vent control valve. 3. Check the rubber tube for clogging. 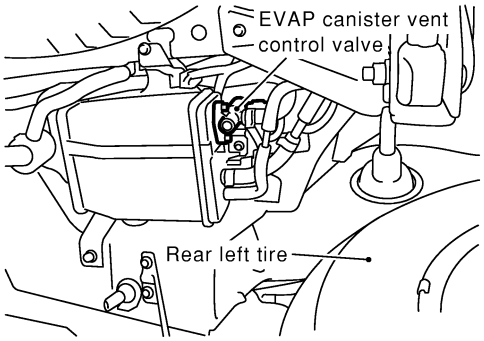 SEC928C		
OK or NG		
OK	▶	GO TO 2.
NG	▶	Clean rubber tube using an air blower.

2	CHECK EVAP CANISTER VENT CONTROL VALVE-I	
1. Remove EVAP canister vent control valve from EVAP canister. 2. Check portion **B** of EVAP canister vent control valve for being rusted. 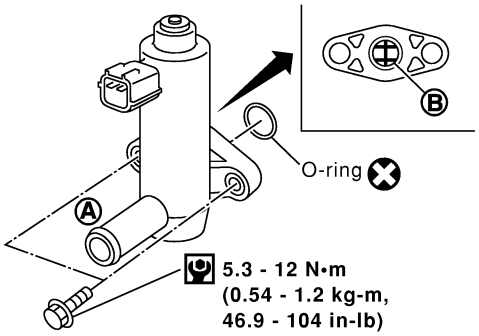 SEF376Z		
OK or NG		
OK	▶	GO TO 3.
NG	▶	Replace EVAP canister vent control valve.

3	CHECK EVAP CANISTER VENT CONTROL VALVE-II

With CONSULT-II

1. Turn ignition switch ON.
2. Perform "VENT CONTROL/V" in "ACTIVE TEST" mode.
3. Check air passage continuity and operation delay time.

ACTIVE TEST	
VENT CONTROL/V	OFF
MONITOR	
ENG SPEED	XXX rpm
A/F ALPHA-B1	XXX %
A/F ALPHA-B2	XXX %
HO2S1 MNTR (B1)	LEAN
HO2S1 MNTR (B2)	LEAN

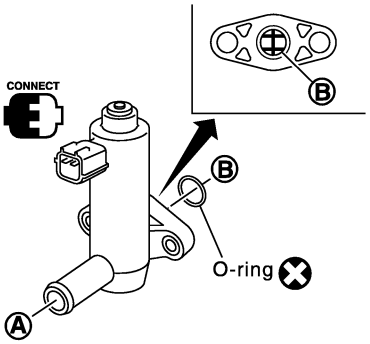

Condition VENT CONTROL/V	Air passage continuity between A and B
ON	No
OFF	Yes

Operation takes less than 1 second.

SEC158D

Without CONSULT-II

Check air passage continuity and operation delay time under the following conditions.

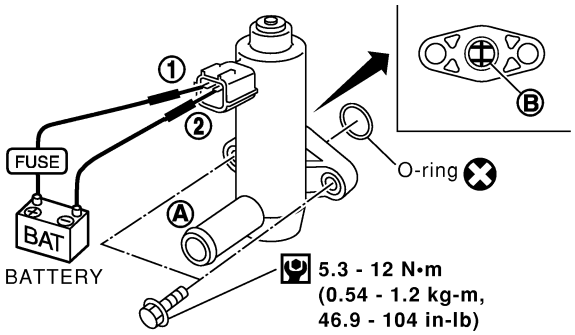

Condition	Air passage continuity between A and B
12V direct current supply between terminals 1 and 2	No
OFF	Yes

Operation takes less than 1 second.

SEF378Z

Make sure new O-ring is installed properly.

OK or NG

OK	▶	GO TO 5.
NG	▶	GO TO 4.

4	CHECK EVAP CANISTER VENT CONTROL VALVE-III

1. Clean the air passage (Portion **A** to **B**) of EVAP canister vent control valve using an air blower.
2. Perform Test No. 3 again.

OK or NG

OK	▶	GO TO 5.
NG	▶	Replace EVAP canister vent control valve.

5	CHECK VACUUM CUT VALVE

1. Turn ignition switch OFF.
2. Remove vacuum cut valve.
3. Check vacuum cut valve as follows:

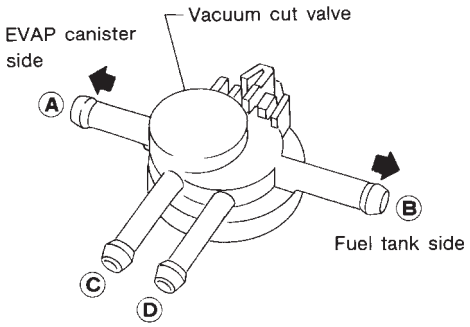

SEF379Q

a. Plug port **C** and **D** with fingers.
b. Apply vacuum to port **A** and check that there is no suction from port **B**.
c. Apply vacuum to port **B** and check that there is suction from port **A**.
d. Blow air in port **B** and check that there is a resistance to flow out of port **A**.
e. Open port **C** and **D**.
f. Blow air in port **A** check that air flows freely out of port **C**.
g. Blow air in port **B** check that air flows freely out of port **D**.

OK or NG

OK	▶	GO TO 6.
NG	▶	Replace vacuum cut valve.

6	CHECK IF EVAP CANISTER SATURATED WITH WATER

1. Remove EVAP canister with EVAP canister vent control valve attached.
2. Check if water will drain from the EVAP canister.

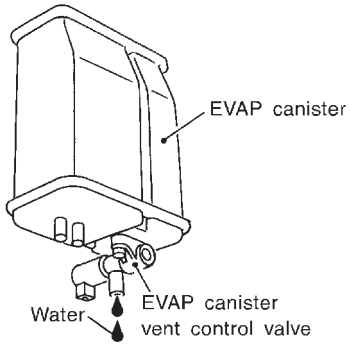

SEF596U

Yes or No

Yes	▶	GO TO 7.
No	▶	GO TO 9.

7	CHECK EVAP CANISTER

Weigh the EVAP canister with the EVAP canister vent control valve attached.
The weight should be less than 1.8 kg (4.0 lb).

OK or NG

OK	▶	GO TO 9.
NG	▶	GO TO 8.

8	DETECT MALFUNCTIONING PART
Check the following. ● EVAP canister for damage ● EVAP hose between EVAP canister and water separator for clogging or poor connection	
▶	Repair hose or replace EVAP canister.

9	CHECK EVAP CONTROL SYSTEM PRESSURE SENSOR HOSE
Check disconnection or improper connection of hose connected to EVAP control system pressure sensor.	
OK or NG	
OK ▶	GO TO 10.
NG ▶	Repair it.

10	CHECK EVAP CONTROL SYSTEM PRESSURE SENSOR CONNECTOR
1. Disconnect EVAP control system pressure sensor harness connector.	

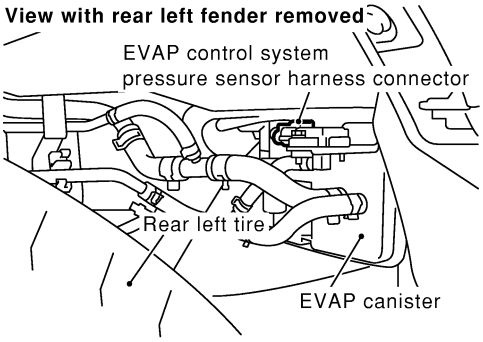

SEC931C

2. Check connectors for water.
   Water should not exist.

OK or NG	
OK ▶	GO TO 11.
NG ▶	Replace EVAP control system pressure sensor.

11	CHECK EVAP CONTROL SYSTEM PRESSURE SENSOR

1. Remove EVAP control system pressure sensor with its harness connector connected.
   - **Never apply force to the air hole protector of the sensor if equipped.**

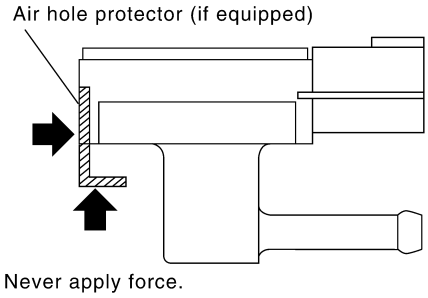

SEF799W

2. Remove EVAP control system pressure sensor from EVAP canister.
   Do not reuse the O-ring, replace it with a new one.
3. Install a vacuum pump to EVAP control system pressure sensor.
4. Turn ignition switch "ON" and check output voltage between ECM terminal 32 and ground under the following conditions.

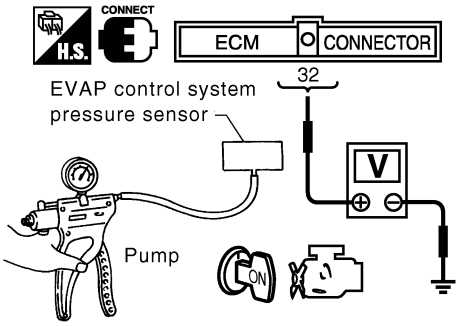

Applied vacuum kPa (mmHg, inHg)	Voltage V
Not applied	1.8 - 4.8
–26.7 (–200, –7.87)	2.1 to 2.5V lower than above value

SEC422D

CAUTION:
- **Always calibrate the vacuum pump gauge when using it.**
- **Do not apply below −93.3 kPa (−700 mmHg, −27.56 inHg) or pressure over 101.3 kPa (760 mmHg, 29.92 inHg).**
- **Discard and EVAP control system pressure sensor which has been dropped from a height of more than 0.5 m (19.7 in) onto a hard surface such as a concrete floor; use a new one.**

OK or NG

OK	▶	GO TO 12.
NG	▶	Replace EVAP control system pressure sensor.

12	CHECK INTERMITTENT INCIDENT
Refer to "TROUBLE DIAGNOSIS FOR INTERMITTENT INCIDENT", EC-155.	
▶	**INSPECTION END**

On Board Diagnosis Logic

NAEC1380

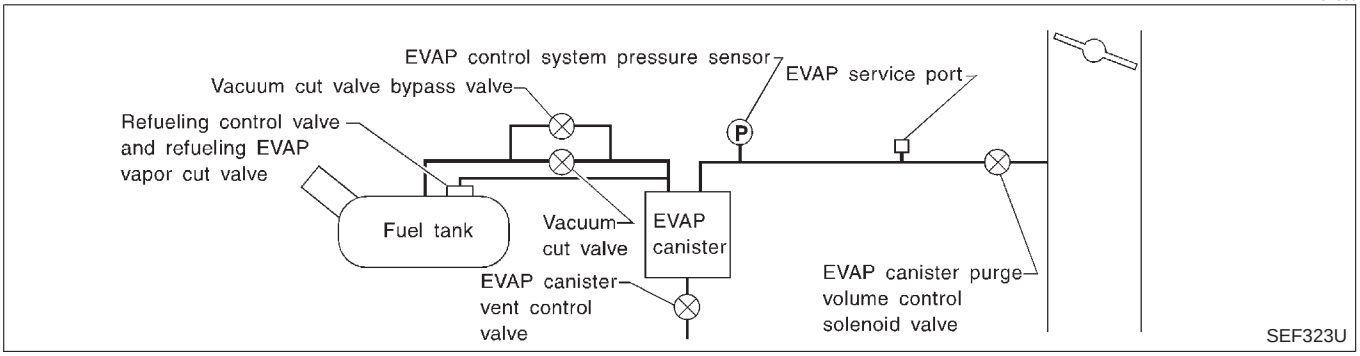

This diagnosis detects very small leaks in the EVAP line between fuel tank and EVAP canister purge volume control solenoid valve, using the vapor pressure in the fuel tank same as a conventional EVAP small leak diagnosis.

The EVAP canister vent control valve is closed to shut the EVAP purge line. The vacuum cut valve bypass valve will then be opened to clear the line between the fuel tank and the EVAP canister purge volume control solenoid valve. The EVAP control system pressure sensor can now monitor the pressure inside the fuel tank.

If pressure increases, the ECM will check for leaks in the line between the vacuum cut valve and EVAP canister purge volume control solenoid valve.

If ECM judges a leak which corresponds to a very small leak, the very small leak P1456 will be detected.

If ECM judges a leak equivalent to a small leak, EVAP small leak P1442 will be detected.

If ECM judges there are no leaks, the diagnosis will be OK.

DTC No.	Trouble diagnosis name	DTC Detecting Condition	Possible Cause
P1456 1456	Evaporative emission control system very small leak (positive pressure check)	• EVAP system has a very small leak. • EVAP system does not operate properly.	• Incorrect fuel tank vacuum relief valve • Incorrect fuel filler cap used • Fuel filler cap remains open or fails to close. • Foreign matter caught in fuel filler cap • Leak is in line between intake manifold and EVAP canister purge volume control solenoid valve. • Foreign matter caught in EVAP canister vent control valve • EVAP canister or fuel tank leaks • EVAP purge line (Pipe and rubber tube) leaks • EVAP purge line rubber tube bent • Blocked or bent rubber tube to EVAP control system pressure sensor • Loose or disconnected rubber tube • EVAP canister vent control valve and the circuit • EVAP canister purge volume control solenoid valve and the circuit • Fuel tank temperature sensor • O-ring of EVAP canister vent control valve is missing or damaged. • Water separator • EVAP canister saturated with water • EVAP control system pressure sensor • Refueling control valve • ORVR system leaks • Fuel level sensor and the circuit • Foreign matter caught in EVAP canister purge volume control solenoid valve

CAUTION:

- **Use only a genuine NISSAN fuel filler cap as a replacement. If an incorrect fuel filler cap is used, the MIL may come on.**
- **If the fuel filler cap is not tightened properly, the MIL may come on.**
- **Use only a genuine NISSAN rubber tube as a replacement.**

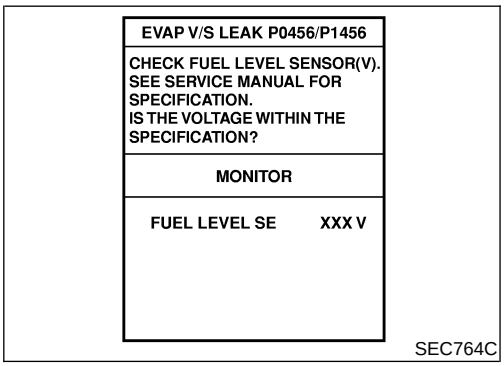

SEC764C

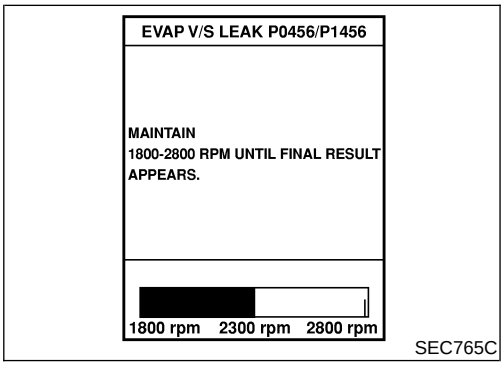

SEC765C

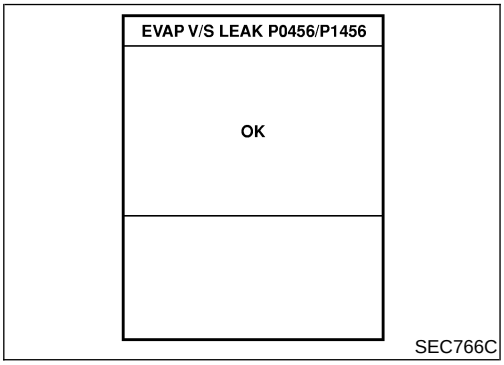

SEC766C

DTC Confirmation Procedure

NAEC1381

CAUTION:

Never remove fuel filler cap during the DTC confirmation procedure.

NOTE:

- **If DTC P1456 is displayed with P1442, perform TROUBLE DIAGNOSIS FOR DTC P1456 first.**
- If "DIAGNOSTIC TROUBLE CODE CONFIRMATION PROCEDURE" has been previously conducted, always turn ignition switch OFF and wait at least 10 seconds before conducting the next test.
- **After repair, make sure that the hoses and clips are installed properly.**

TESTING CONDITION:

- **Open engine hood before conducting following procedure.**
- **If any of following condition is met just before the DTC confirmation procedure, leave the vehicle for more than 1 hour.**

a) **Fuel filler cap is removed.**
b) **Refilled or drained the fuel.**
c) **EVAP component parts is/are removed.**

- **Before performing the following procedure, confirm that battery voltage is more than 11V at idle.**

With CONSULT-II

1) Turn ignition switch ON and select "DATA MONITOR" mode with CONSULT-II.
2) Make sure the following conditions are met.
   FUEL LEVEL SE: 1.08 - 0.2V
   COOLAN TEMP/S: 0 - 32°C (32 - 90°F)
   FUEL T/TMP SE: 0 - 35°C (32 - 95°F)
   INT A/TEMP SE: More than 0°C (32°F)
   If NG, turn ignition switch OFF and leave the vehicle in a cool place (soak the vehicle) or refilling/draining fuel until the output voltage condition of the "FUEL LEVEL SE" meets within the range above and leave the vehicle for more than 1 hour. Then start from step 1).
3) Turn ignition switch OFF and wait at least 5 seconds.
4) Turn ignition switch ON.
5) Select "EVP V/S LEAK P0456/P1456" of "EVAPORATIVE SYSTEM" in "DTC WORK SUPPORT" mode with CONSULT-II.
   Follow the instruction displayed.
6) Make sure that "OK" is displayed.
   If "NG" is displayed, refer to "Diagnostic Procedure", EC-614.

NOTE:
- **If the engine speed cannot be maintained within the range displayed on CONSULT-II screen, go to "Basic inspection", EC-123.**
- **Make sure that EVAP hoses are connected to EVAP canister purge volume control solenoid valve properly.**

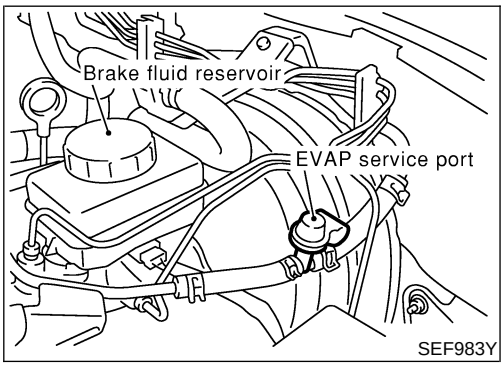

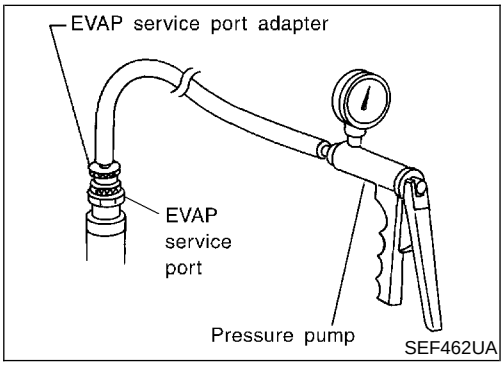

Overall Function Check

NAEC1382

WITH GST

NAEC1382S01

Use this procedure to check the overall function of the EVAP very small leak function. During this check, a 1st trip DTC might not be confirmed.

CAUTION:
- **Never use compressed air, doing so may damage the EVAP system.**
- **Do not start engine.**
- **Do not exceeded 4.12 kPa (0.042 kg/cm^2, 0.6 psi).**

1) Attach the EVAP service port adapter securely to the EVAP service port.
2) Set the pressure pump and a hose.
3) Also set a vacuum gauge via 3-way connector and a hose.
4) Turn ignition switch ON.
5) Connect GST and select MODE 8.
6) Using MODE 8 control the EVAP canister vent control valve (close) and vacuum cut valve bypass valve (open).
7) Apply pressure and make sure the following conditions are satisfied.
   Pressure to be applied: 2.7 kPa (20 mmHg, 0.79 inHg)
   Time to be waited after the pressure drawn in to the EVAP system and the pressure to be dropped: 60 seconds and the pressure should not be dropped more than 0.4 kPa (3 mmHg, 0.12 inHg)
   If NG, go to diagnostic procedure, EC-614.
   If OK, go to next step.
8) Disconnect GST.
9) Start engine and warm it up to normal operating temperature.
10) Turn ignition switch OFF and wait at least 10 seconds.
11) Restart engine and let it idle for 90 seconds.
12) Keep engine speed at 2,000 rpm for 30 seconds.
13) Turn ignition switch OFF.

NOTE:
For more information, refer to GST instruction manual.

Diagnostic Procedure

NAEC1383

1	CHECK FUEL FILLER CAP DESIGN

1. Turn ignition switch OFF.
2. Check for genuine NISSAN fuel filler cap design.

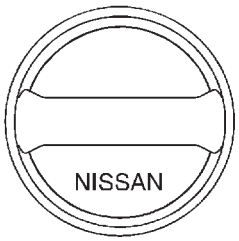

SEF915U

OK or NG

OK	▶	GO TO 2.
NG	▶	Replace with genuine NISSAN fuel filler cap.

2	CHECK FUEL FILLER CAP INSTALLATION

Check that the cap is tightened properly by rotating the cap clockwise.

OK or NG

OK	▶	GO TO 3.
NG	▶	● Open fuel filler cap, then clean cap and fuel filler neck threads using air blower. ● Retighten until ratcheting sound is heard.

3	CHECK FUEL FILLER CAP FUNCTION

Check for air releasing sound while opening the fuel filler cap.

OK or NG

OK	▶	GO TO 5.
NG	▶	GO TO 4.

4	CHECK FUEL TANK VACUUM RELIEF VALVE

1. Wipe clean valve housing.
2. Check valve opening pressure and vacuum.

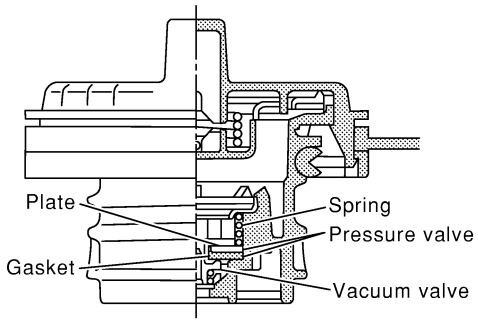

SEF445Y

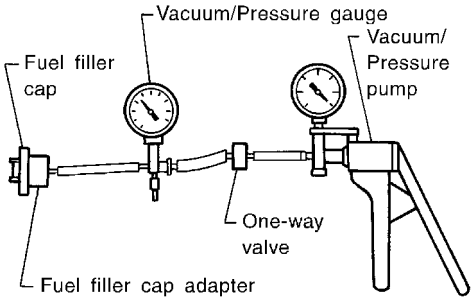

SEF943S

Pressure:
15.3 - 20.0 kPa (0.156 - 0.204 kg/cm^2, 2.22 - 2.90 psi)
Vacuum:
−6.0 to −3.3 kPa (−0.061 to −0.034 kg/cm^2, −0.87 to −0.48 psi)

CAUTION:
Use only a genuine fuel filler cap as a replacement. If an incorrect fuel filler cap is used, the MIL may come on.

OK or NG

OK	▶	GO TO 5.
NG	▶	Replace fuel filler cap with a genuine one.

5	INSTALL THE PRESSURE PUMP

To locate the EVAP leak, install EVAP service port adapter and pressure pump to EVAP service port securely.

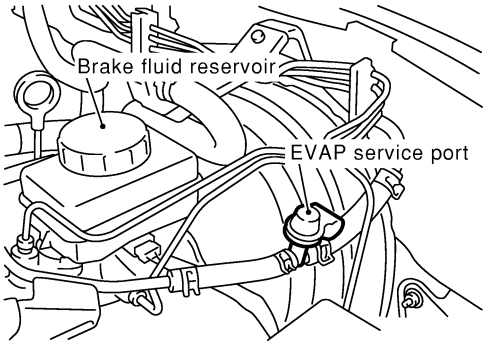

SEF983Y

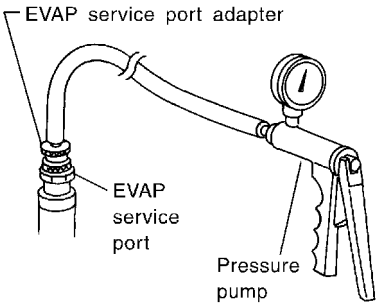

SEF916U

NOTE:
Improper installation of the EVAP service port adapter to the EVAP service port may cause leaking.

With CONSULT-II	▶	GO TO 6.
Without CONSULT-II	▶	GO TO 7.

6	CHECK FOR EVAP LEAK

With CONSULT-II

1. Turn ignition switch ON.
2. Select "EVAP SYSTEM CLOSE" of "WORK SUPPORT" mode with CONSULT-II.
3. Touch "START" and apply pressure into the EVAP line until the pressure indicator reaches the middle of the bar graph.
   NOTE:
   - **Never use compressed air or a high pressure pump.**
   - **Do not exceed 4.12 kPa (0.042 kg/cm^2, 0.6 psi) of pressure in the system.**

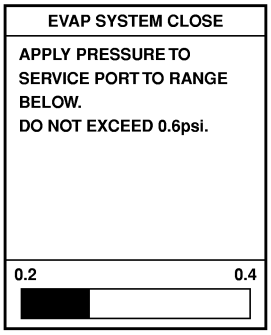

PEF917U

4. Using EVAP leak detector, locate the EVAP leak. For the leak detector, refer to the instruction manual for more details. Refer to "EVAPORATIVE EMISSION LINE DRAWING", EC-42.

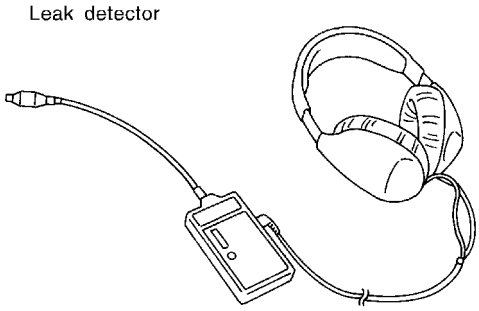

SEF200U

OK or NG

OK	▶	GO TO 8.
NG	▶	Repair or replace.

7	CHECK FOR EVAP LEAK

Without CONSULT-II

1. Turn ignition switch OFF.
2. Apply 12 volts DC to EVAP canister vent control valve. The valve will close. (Continue to apply 12 volts until the end of test.)

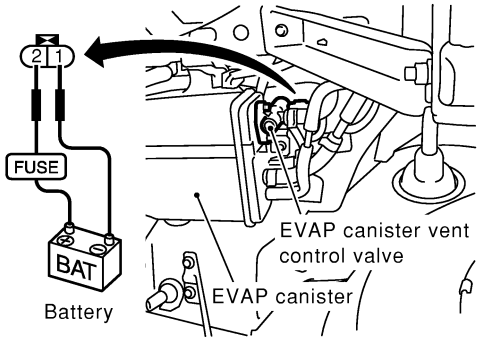

SEC930C

3. Apply 12 volts DC to vacuum cut valve bypass valve. The valve will open. (Continue to apply 12V until the end of test.)

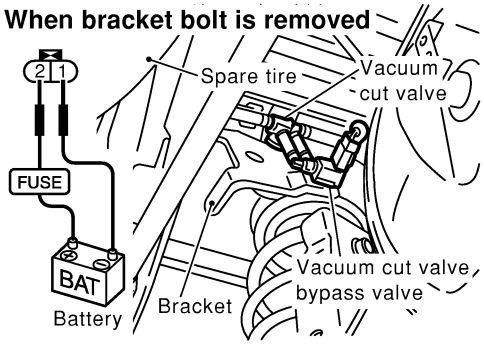

SEC932C

4. Pressurize the EVAP line using pressure pump with 1.3 to 2.7 kPa (10 to 20 mmHg, 0.39 to 0.79 inHg), then remove pump and EVAP service port adapter.
   NOTE:
   - **Never use compressed air or a high pressure pump.**
   - **Do not exceed 4.12 kPa (0.042 kg/cm^2, 0.6 psi) of pressure in the system.**
5. Using EVAP leak detector, locate the EVAP leak. For the leak detector, refer to the instruction manual for more details. Refer to "EVAPORATIVE EMISSION LINE DRAWING", EC-42.

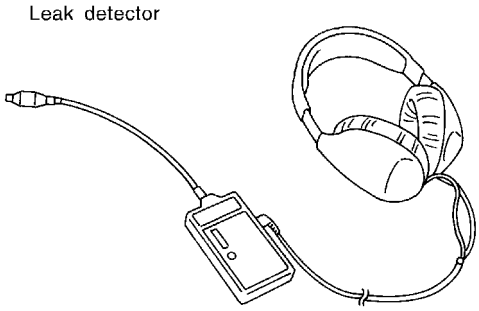

SEF200U

OK or NG

OK	▶	GO TO 8.
NG	▶	Repair or replace.

8	CHECK WATER SEPARATOR

1. Check visually for insect nests in the water separator air inlet.
2. Check visually for cracks or flaws in the appearance.
3. Check visually for cracks or flaws in the hose.
4. Check that **A** and **C** are not clogged by blowing air into **B** with **A**, and then **C** plugged.

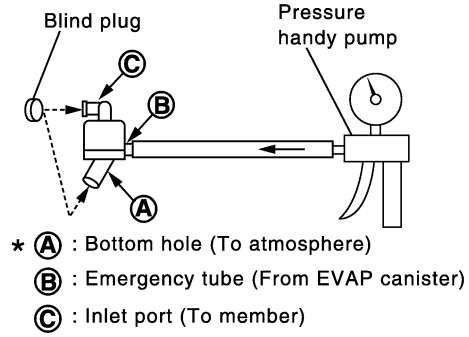

PBIB1032E

5. In case of NG in items 2 - 4, replace the parts.

NOTE:

- Do not disassemble water separator.

OK or NG

OK	▶	GO TO 9.
NG	▶	Replace water separator.

9	CHECK EVAP CANISTER VENT CONTROL VALVE, O-RING AND CIRCUIT

Refer to "DTC Confirmation Procedure", EC-372.

OK or NG

OK	▶	GO TO 10.
NG	▶	Repair or replace EVAP canister vent control valve and O-ring or harness/connector.

10	CHECK IF EVAP CANISTER SATURATED WITH WATER

1. Remove EVAP canister with EVAP canister vent control valve attached.
2. Does water drain from the EVAP canister?

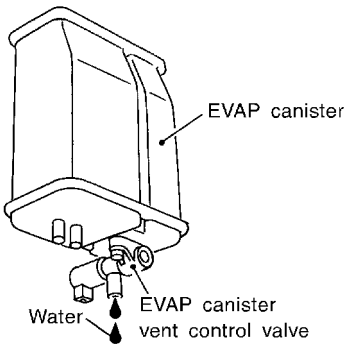

SEF596U

Yes or No

Yes	▶	GO TO 11.
No (With CONSULT-II)	▶	GO TO 13.
No (Without CONSULT-II)	▶	GO TO 14.

11	CHECK EVAP CANISTER
Weigh the EVAP canister with the EVAP canister vent control valve attached. **The weight should be less than 1.8 kg (4.0 lb).**	
OK or NG	
OK (With CONSULT-II) ▶	GO TO 13.
OK (Without CONSULT-II) ▶	GO TO 14.
NG ▶	GO TO 12.

12	DETECT MALFUNCTIONING PART
Check the following. ● EVAP canister for damage ● EVAP hose between EVAP canister and water separator for clogging or poor connection	
▶	Repair hose or replace EVAP canister.

13	CHECK EVAP CANISTER PURGE VOLUME CONTROL SOLENOID VALVE OPERATION

With CONSULT-II

1. Disconnect vacuum hose to EVAP canister purge volume control solenoid valve at EVAP service port.
2. Start engine.
3. Perform "PURG VOL CONT/V" in "ACTIVE TEST" mode.
4. Touch "Qu" on CONSULT-II screen to increase "PURG VOL CONT/V" opening to 100%.
5. Check vacuum hose for vacuum when revving engine up to 2,000 rpm.

ACTIVE TEST	
PURG VOL CONT/V	XXX %
MONITOR	
ENG SPEED	XXX rpm
A/F ALPHA-B1	XX %
A/F ALPHA-B2	XX %

PBIB1678E

Vacuum should exist.

OK or NG

OK ▶	GO TO 16.
NG ▶	GO TO 15.

14	CHECK EVAP CANISTER PURGE VOLUME CONTROL SOLENOID VALVE OPERATION

Without CONSULT-II

1. Start engine and warm it up to normal operating temperature.
2. Stop engine.
3. Disconnect vacuum hose to EVAP canister purge volume control solenoid valve at EVAP service port.
4. Start engine and let it idle for at least 80 seconds.
5. Check vacuum hose for vacuum when revving engine up to 2,000 rpm.

Vacuum should exist.

OK or NG

OK ▶	GO TO 17.
NG ▶	GO TO 15.

15	CHECK VACUUM HOSE
Check vacuum hoses for clogging or disconnection. Refer to "Vacuum Hose Drawing", EC-32.	
OK or NG	
OK (With CONSULT-II) ▶	GO TO 16.
OK (Without CONSULT-II) ▶	GO TO 17.
NG ▶	Repair or reconnect the hose.

16	CHECK EVAP CANISTER PURGE VOLUME CONTROL SOLENOID VALVE

With CONSULT-II

1. Start engine.
2. Perform "PURG VOL CONT/V" in "ACTIVE TEST" mode with CONSULT-II. Check that engine speed varies according to the valve opening.

ACTIVE TEST	
PURG VOL CONT/V	XXX %
MONITOR	
ENG SPEED	XXX rpm
A/F ALPHA-B1	XX %
A/F ALPHA-B2	XX %

PBIB1678E

OK or NG	
OK ▶	GO TO 18.
NG ▶	GO TO 17.

17	CHECK EVAP CANISTER PURGE VOLUME CONTROL SOLENOID VALVE

With CONSULT-II

Check air passage continuity of EVAP canister purge volume control solenoid valve under the following conditions.

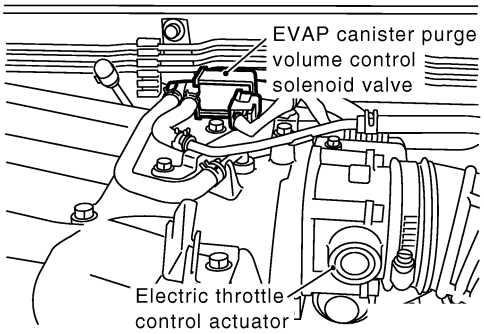

SEC524D

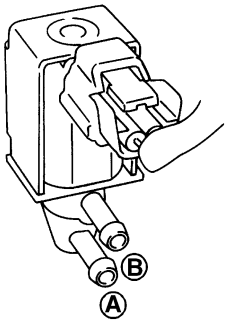

Condition PURG VOL CONT/V value	Air passage continuity between A and B
100%	Yes
0%	No

SEF334XA

Without CONSULT-II

Check air passage continuity of EVAP canister purge volume control solenoid valve under the following conditions.

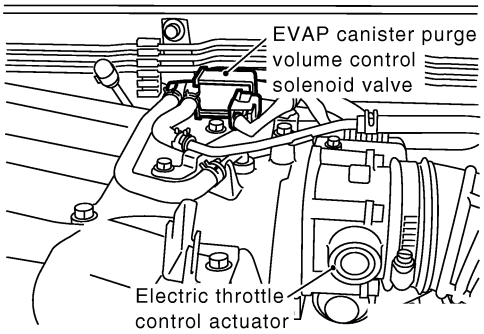

SEC524D

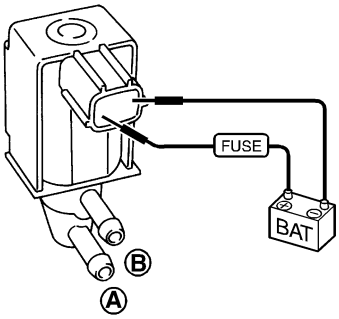

Condition	Air passage continuity between A and B
12V direct current supply between terminals 1 and 2	Yes
No supply	No

SEF335X

OK or NG

OK	▶	GO TO 18.
NG	▶	Replace EVAP canister purge volume control solenoid valve.

18	CHECK FUEL TANK TEMPERATURE SENSOR

1. Remove fuel level sensor unit.
2. Check resistance between fuel level sensor unit terminals 1 and 2 by heating with hot water or heat gun as shown in the figure.

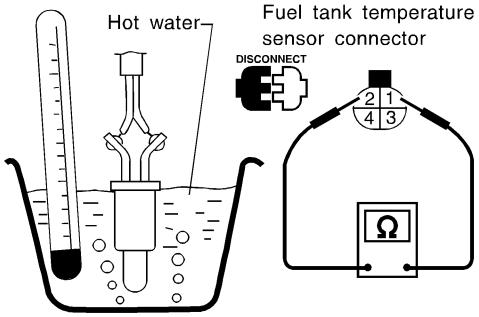

Temperature °C (°F)	Resistance kΩ
20 (68)	2.3 - 2.7
50 (122)	0.79 - 0.90

SEF974Y

OK or NG

OK	▶	GO TO 19.
NG	▶	Replace fuel level sensor unit.

19	CHECK EVAP CONTROL SYSTEM PRESSURE SENSOR

1. Remove EVAP control system pressure sensor with its harness connector connected.
   - **Never apply force to the air hole protector of the sensor if equipped.**

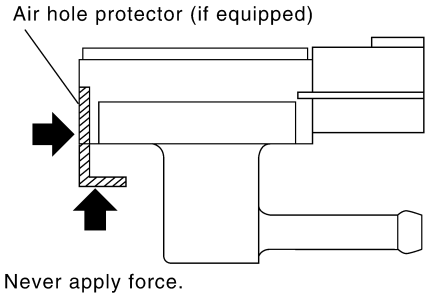

SEF799W

2. Remove EVAP control system pressure sensor from EVAP canister.
   Do not reuse the O-ring, replace it with a new one.
3. Install a vacuum pump to EVAP control system pressure sensor.
4. Turn ignition switch "ON" and check output voltage between ECM terminal 32 and ground under the following conditions.

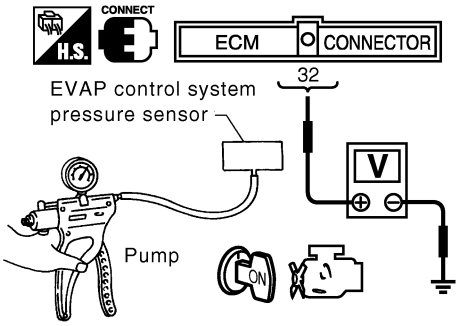

Applied vacuum kPa (mmHg, inHg)	Voltage V
Not applied	1.8 - 4.8
–26.7 (–200, –7.87)	2.1 to 2.5V lower than above value

SEC422D

CAUTION:
- **Always calibrate the vacuum pump gauge when using it.**
- **Do not apply below −93.3 kPa (−700 mmHg, −27.56 inHg) or pressure over 101.3 kPa (760 mmHg, 29.92 inHg).**
- **Discard and EVAP control system pressure sensor which has been dropped from a height of more than 0.5 m (19.7 in) onto a hard surface such as a concrete floor; use a new one.**

OK or NG

OK	▶	GO TO 20.
NG	▶	Replace EVAP control system pressure sensor.

20	CHECK EVAP PURGE LINE

Check EVAP purge line (pipe, rubber tube, fuel tank and EVAP canister) for cracks or improper connection.
Refer to "Evaporative Emission System", EC-38.

OK or NG

OK	▶	GO TO 21.
NG	▶	Repair or reconnect the hose.

21	CLEAN EVAP PURGE LINE

Clean EVAP purge line (pipe and rubber tube) using air blower.

	▶	GO TO 22.

22	CHECK REFUELING EVAP VAPOR LINE	
● Check refueling EVAP vapor line between EVAP canister and fuel tank for clogging, kink, looseness and improper connection. For location, refer to "EVAPORATIVE EMISSION LINE DRAWING", EC-42.		
OK or NG		
OK	▶	GO TO 23.
NG	▶	Repair or replace hoses and tubes.

23	CHECK SIGNAL LINE AND RECIRCULATION LINE	
● Check signal line and recirculation line between filler neck tube and fuel tank for clogging, kink, cracks, looseness and improper connection.		
OK or NG		
OK	▶	GO TO 24.
NG	▶	Repair or replace hoses, tubes or filler neck tube.

24 CHECK REFUELING CONTROL VALVE

1. Remove fuel filler cap.
2. Check air continuity between hose ends A and B.
   Blow air into hose end B. Air should flow freely into the fuel tank.
3. Blow air into hose end A and check that there is no leakage.
4. Apply pressure to both hose ends A and B [20 kPa (150 mmHg, 5.91 inHg)] using a pressure pump and a suitable 3-way connector. Check that there is no leakage.

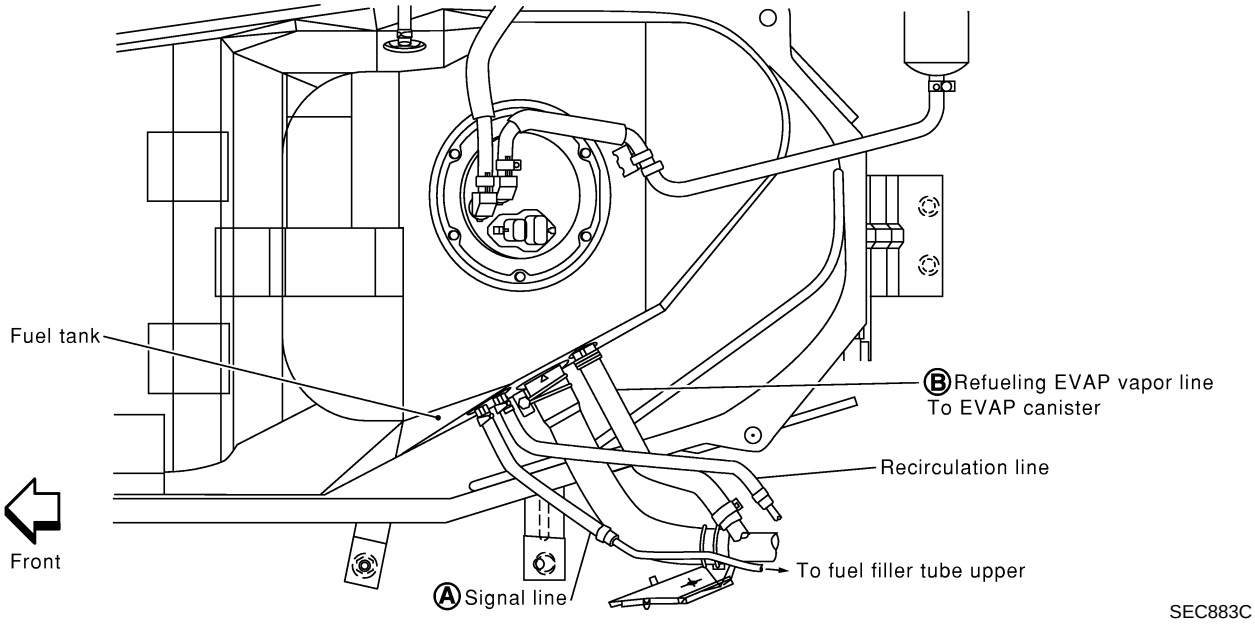

OK or NG		
OK	▶	GO TO 25.
NG	▶	Replace or refueling control valve with fuel tank.

25	CHECK FUEL LEVEL SENSOR	
Refer to EL-140, "Fuel Level Sensor Unit Check".		
OK or NG		
OK	▶	GO TO 26.
NG	▶	Replace fuel level sensor unit.

26	**CHECK INTERMITTENT INCIDENT**
Refer to "TROUBLE DIAGNOSIS FOR INTERMITTENT INCIDENT", EC-155.	
▶	**INSPECTION END**

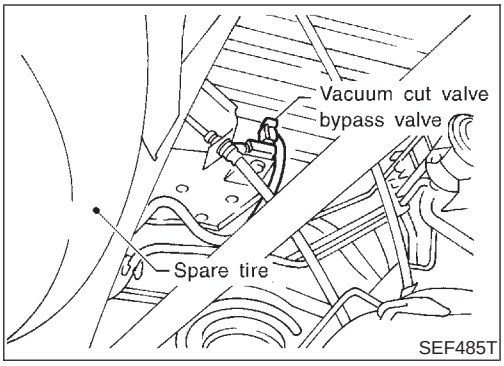

Description

=NAEC1116

COMPONENT DESCRIPTION

NAEC1116S01

The vacuum cut valve and vacuum cut valve bypass valve are installed in parallel on the EVAP purge line between the fuel tank and the EVAP canister.

The vacuum cut valve prevents the intake manifold vacuum from being applied to the fuel tank.

The vacuum cut valve bypass valve is a solenoid type valve and generally remains closed. It opens only for on board diagnosis.

The vacuum cut valve bypass valve responds to signals from the ECM. When the ECM sends an ON (ground) signal, the valve is opened. The vacuum cut valve is then bypassed to apply intake manifold vacuum to the fuel tank.

EVAPORATIVE EMISSION SYSTEM DIAGRAM

NAEC1116S02

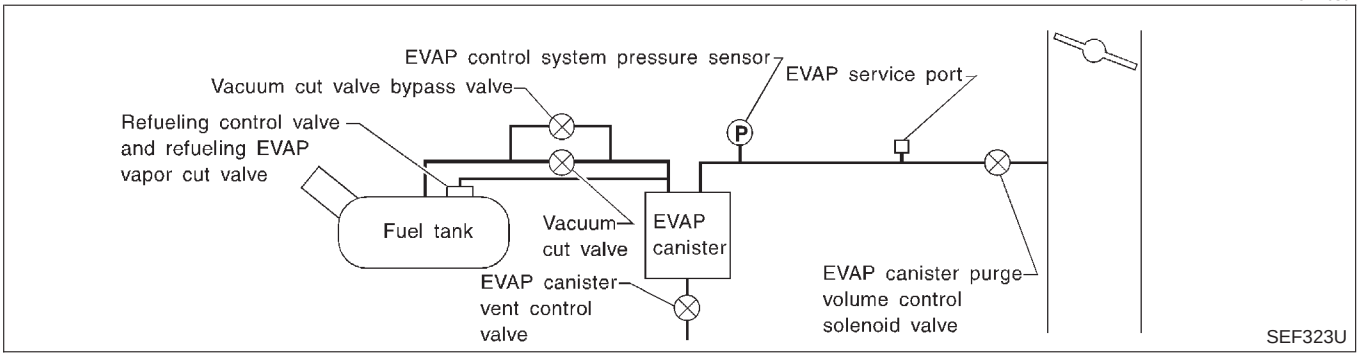

CONSULT-II Reference Value in Data Monitor Mode

NAEC1117

Specification data are reference values.

MONITOR ITEM	CONDITION	SPECIFICATION
VC/V BYPASS/V	● Ignition switch: ON	OFF

ECM Terminals and Reference Value

NAEC1118

Specification data are reference values and are measured between each terminal and ground.

CAUTION:

Do not use ECM ground terminals when measuring input/output voltage. Doing so may result in damage to the ECM's transistor. Use a ground other than ECM terminals, such as the ground.

TERMINAL NO.	WIRE COLOR	ITEM	CONDITION	DATA (DC Voltage)
112	G/W	Vacuum cut valve bypass valve	**[Ignition switch ON]**	BATTERY VOLTAGE (11 - 14V)

On Board Diagnosis Logic

NAEC1119

DTC No.	Trouble diagnosis name	DTC Detecting Condition	Possible Cause
P1490 1490	Vacuum cut valve bypass valve circuit	An improper voltage signal is sent to ECM through vacuum cut valve bypass valve.	● Harness or connectors (The vacuum cut valve bypass valve circuit is open or shorted.) ● Vacuum cut valve bypass valve

DTC Confirmation Procedure

NAEC1120

NOTE:
If DTC Confirmation Procedure has been previously conducted, always turn ignition switch OFF and wait at least 10 seconds before conducting the next test.

TESTING CONDITION:
Before performing the following procedure, confirm that battery voltage is more than 11V at idle speed.

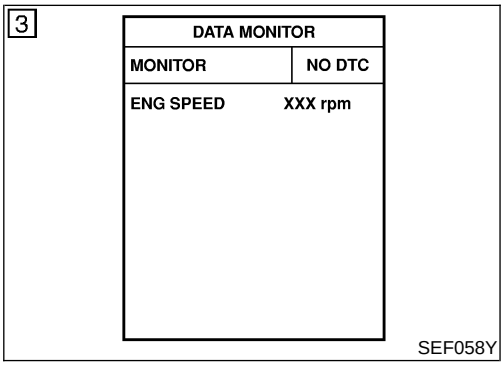

WITH CONSULT-II

NAEC1120S01

1) Turn ignition switch ON.
2) Select “DATA MONITOR” mode with CONSULT-II.
3) Start engine and wait at least 5 seconds.
4) If 1st trip DTC is detected, go to “Diagnostic Procedure”, EC-630.

WITH GST

NAEC1120S02

Follow the procedure “WITH CONSULT-II” above.

Wiring Diagram

NAEC1121

EC-BYPS/V-01

: Detectable line for DTC

: Non-detectable line for DTC

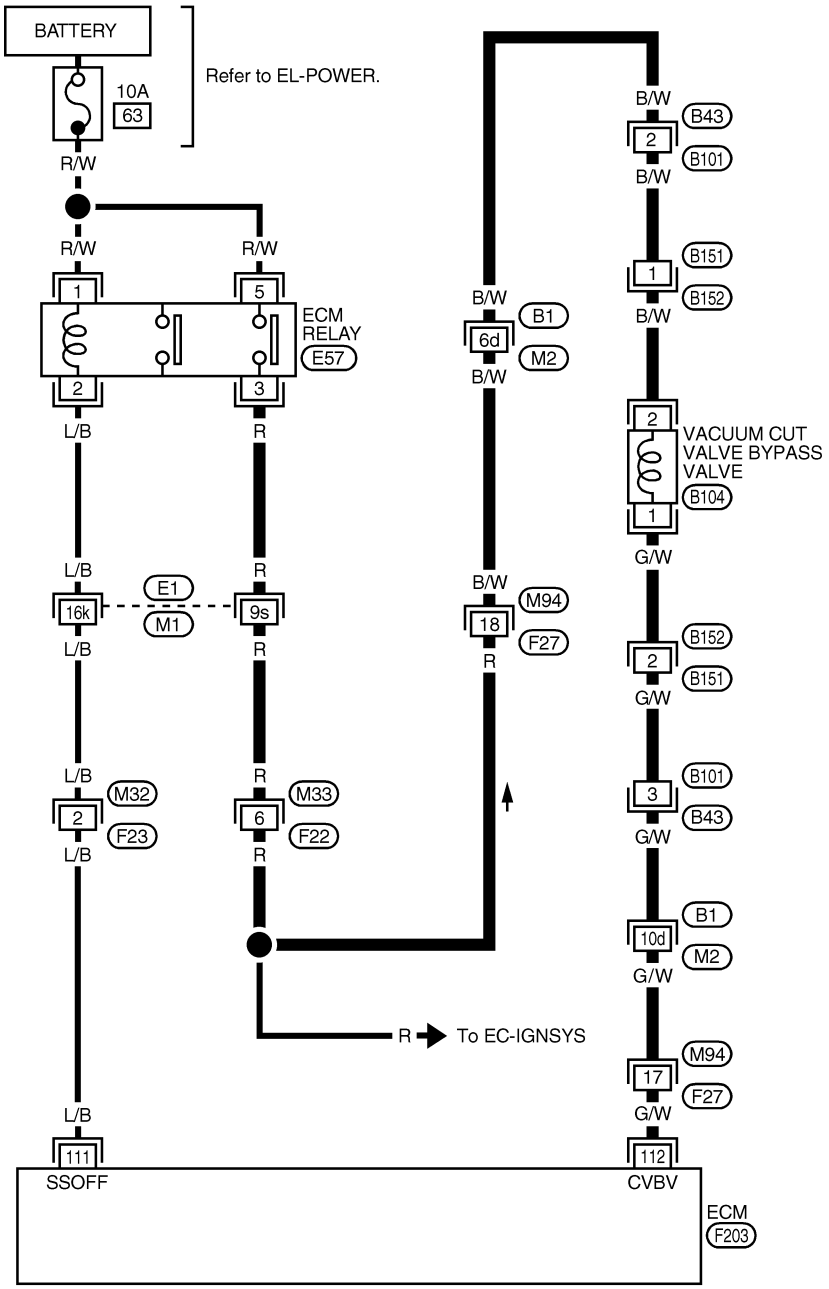

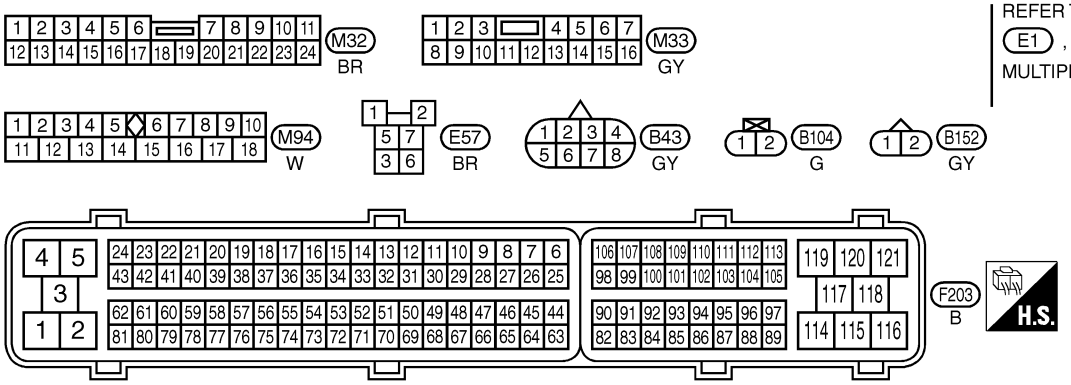

MEC105E

Diagnostic Procedure

NAEC1122

1	INSPECTION START	
Do you have CONSULT-II?		
	Yes or No	
Yes	▶	GO TO 2.
No	▶	GO TO 3.

2	CHECK VACUUM CUT VALVE BYPASS VALVE CIRCUIT	

With CONSULT-II

1. Turn ignition switch OFF and then ON.
2. Select “VC/V BYPASS/V” in “ACTIVE TEST” mode with CONSULT-II.
3. Touch “ON/OFF” on CONSULT-II screen.

ACTIVE TEST	
VC/V BYPASS/V	OFF
MONITOR	
ENG SPEED	XXX rpm
A/F ALPHA-B1	XXX %
A/F ALPHA-B2	XXX %
HO2S1 MNTR (B1)	LEAN
HO2S1 MNTR (B2)	LEAN

PBIB0157E

4. Make sure that clicking sound is heard from the vacuum cut valve bypass valve.

	OK or NG	
OK	▶	GO TO 7.
NG	▶	GO TO 3.

3	CHECK VACUUM CUT VALVE BYPASS VALUE POWER SUPPLY CIRCUIT

1. Turn ignition switch OFF.
2. Disconnect vacuum cut valve bypass valve harness connector.

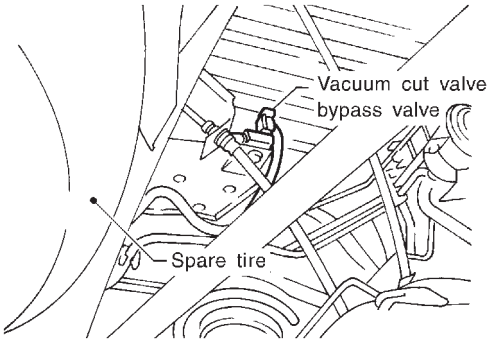

SEF485T

3. Turn ignition switch ON.
4. Check voltage between vacuum cut valve bypass valve terminal 2 and ground with CONSULT-II or tester.

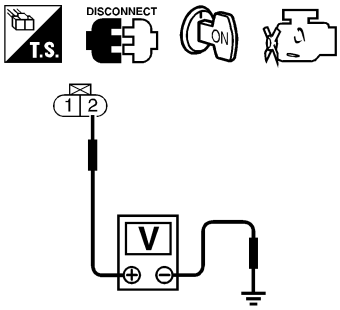

Voltage: Battery voltage

SEF015Z

OK or NG

OK	▶	GO TO 5.
NG	▶	GO TO 4.

4	DETECT MALFUNCTIONING PART

Check the following.
- Harness connectors E1, M1
- Harness connectors M33, F22
- Harness connectors M94, F27
- Harness connectors B1, M2
- Harness connectors B43, B101
- Harness connectors B151, B152
- Harness for open or short between vacuum cut valve bypass valve and ECM relay

	▶	Repair open circuit or short to ground or short to power in harness or connectors.

5	CHECK VACUUM CUT VALVE BYPASS VALVE OUTPUT SIGNAL CIRCUIT FOR OPEN AND SHORT

1. Turn ignition switch OFF.
2. Disconnect ECM harness connector.
3. Check harness continuity between ECM terminal 112 and vacuum cut valve bypass valve terminal 1. Refer to Wiring Diagram.
   Continuity should exist.
4. Also check harness for short to ground and short to power.

OK or NG

OK	▶	GO TO 7.
NG	▶	GO TO 6.

6	DETECT MALFUNCTIONING PART
Check the following. ● Harness connectors B152, B151 ● Harness connectors B101, B43 ● Harness connectors B1, M2 ● Harness connectors M94, F27 ● Harness for open or short between vacuum cut valve bypass valve and ECM	
▶	Repair open circuit or short to ground or short to power in harness or connectors.

7	CHECK VACUUM CUT VALVE BYPASS VALVE

With CONSULT-II

1. Reconnect harness disconnected connectors.
2. Turn ignition switch ON.
3. Perform "VC/V BYPASS/V" in "ACTIVE TEST" mode.
4. Check air passage continuity and operation delay time under the following conditions.

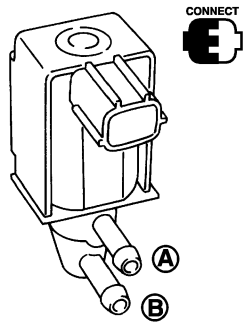

ACTIVE TEST	
VC/V BYPASS/V	OFF
MONITOR	
ENG SPEED	XXX rpm
A/F ALPHA-B1	XXX %
A/F ALPHA-B2	XXX %
HO2S1 MNTR (B1)	LEAN
HO2S1 MNTR (B2)	LEAN

Condition VC/V BYPASS/V	Air passage continuity between A and B
ON	Yes
OFF	No

Operation takes less than 1 second.

SEC156D

Without CONSULT-II

Check air passage continuity and operation delay time under the following conditions.

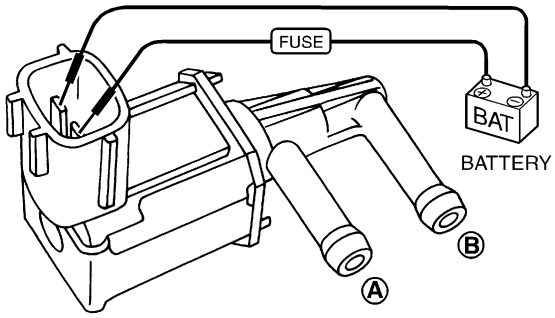

Condition	Air passage continuity between A and B
12V direct current supply between terminals 1 and 2	Yes
No supply	No

Operation takes less than 1 second.

SEF358X

OK or NG

OK	▶	GO TO 8.
NG	▶	Replace vacuum cut valve bypass valve.

8	CHECK INTERMITTENT INCIDENT
Refer to "TROUBLE DIAGNOSIS FOR INTERMITTENT INCIDENT", EC-155.	
▶	**INSPECTION END**

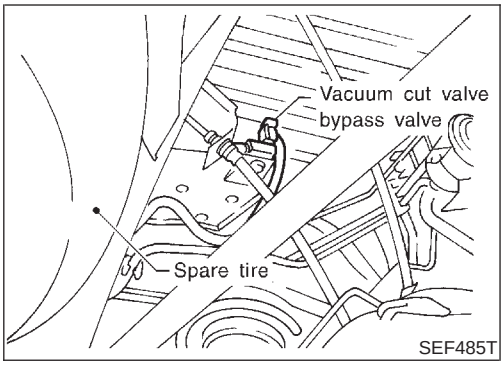

Description

NAEC1123

COMPONENT DESCRIPTION

NAEC1123S01

The vacuum cut valve and vacuum cut valve bypass valve are installed in parallel on the EVAP purge line between the fuel tank and the EVAP canister.

The vacuum cut valve prevents the intake manifold vacuum from being applied to the fuel tank.

The vacuum cut valve bypass valve is a solenoid type valve and generally remains closed. It opens only for on board diagnosis.

The vacuum cut valve bypass valve responds to signals from the ECM. When the ECM sends an ON (ground) signal, the valve is opened. The vacuum cut valve is then bypassed to apply intake manifold vacuum to the fuel tank.

EVAPORATIVE EMISSION SYSTEM DIAGRAM

NAEC1123S02

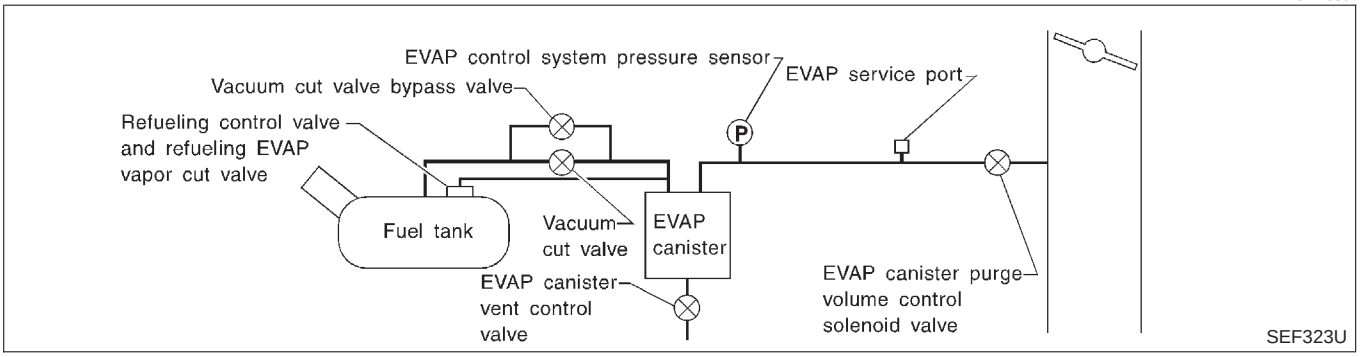

CONSULT-II Reference Value in Data Monitor Mode

NAEC1124

Specification data are reference values.

MONITOR ITEM	CONDITION	SPECIFICATION
VC/V BYPASS/V	● Ignition switch: ON	OFF

ECM Terminals and Reference Value

NAEC1125

Specification data are reference values and are measured between each terminal and ground.

CAUTION:

Do not use ECM ground terminals when measuring input/output voltage. Doing so may result in damage to the ECM's transistor. Use a ground other than ECM terminals, such as the ground.

TERMINAL NO.	WIRE COLOR	ITEM	CONDITION	DATA (DC Voltage)
112	G/W	Vacuum cut valve bypass valve	**[Ignition switch ON]**	BATTERY VOLTAGE (11 - 14V)

On Board Diagnosis Logic

NAEC1126

DTC No.	Trouble diagnosis name	DTC Detecting Condition	Possible Cause
P1491 1491	Vacuum cut valve bypass valve	Vacuum cut valve bypass valve does not operate properly.	• Vacuum cut valve bypass valve • Vacuum cut valve • Bypass hoses for clogging • EVAP control system pressure sensor and circuit • EVAP canister vent control valve • Hose between fuel tank and vacuum cut valve clogged • Hose between vacuum cut valve and EVAP canister clogged • EVAP canister • EVAP purge port of fuel tank for clogging

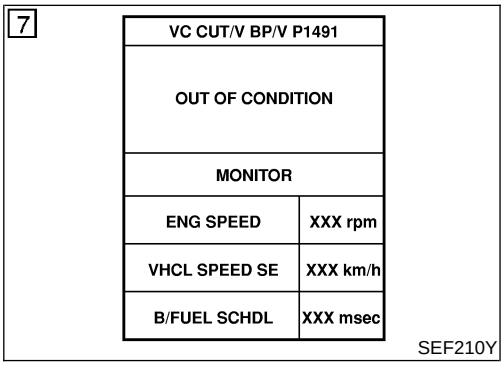

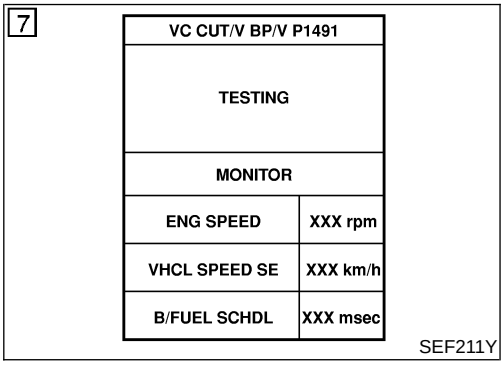

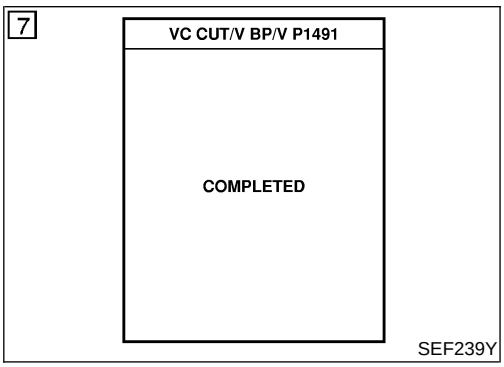

DTC Confirmation Procedure

NAEC1127

CAUTION:
Always drive vehicle at a safe speed.

NOTE:
If DTC Confirmation Procedure has been previously conducted, always turn ignition switch OFF and wait at least 10 seconds before conducting the next test.

TESTING CONDITION:
For best results, perform test at a temperature of 5 to 30°C (41 to 86°F).

WITH CONSULT-II

NAEC1127S01

1) Turn ignition switch ON.
2) Start engine and warm it up to normal operating temperature.
3) Turn ignition switch OFF and wait at least 10 seconds.
4) Start engine and let it idle for at least 70 seconds.
5) Select “VC CUT/V BP/V P1491” of “EVAPORATIVE SYSTEM” in “DTC WORK SUPPORT” mode with CONSULT-II.
6) Touch “START”.
7) When the following conditions are met, “TESTING” will be displayed on the CONSULT-II screen. Maintain the conditions continuously until “TESTING” changes to “COMPLETED”. (It will take at least 30 seconds.)

ENG SPEED	Idle speed or more
Selector lever	Suitable position
Vehicle speed	37 km/h (23 MPH) or more
B/FUEL SCHDL	1.3 - 10 msec

If “TESTING” is not displayed after 5 minutes, retry from step 3.

8) Make sure that “OK” is displayed after touching “SELF-DIAG RESULTS”. If “NG” is displayed, refer to “Diagnostic

Procedure", EC-637.

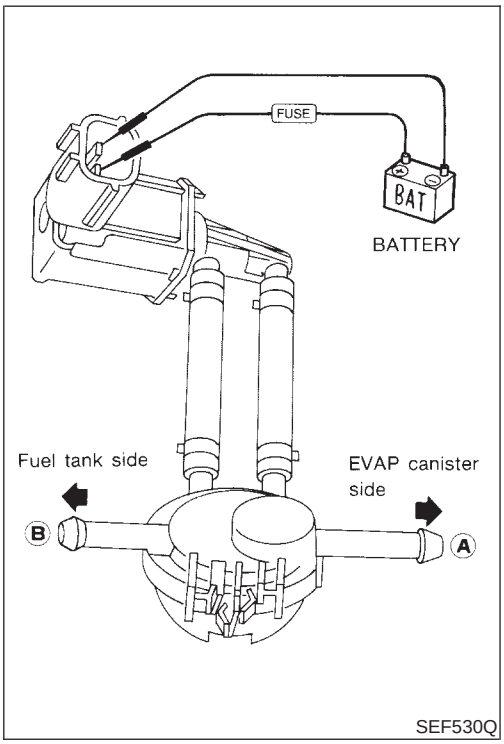

Overall Function Check

NAEC1128

Use this procedure to check the overall function of vacuum cut valve bypass valve. During this check, the 1st trip DTC might not be confirmed.

WITH GST

NAEC1128S01

1) Remove vacuum cut valve and vacuum cut valve bypass valve as an assembly.
2) Apply vacuum to port **A** and check that there is no suction from port **B**.
3) Apply vacuum to port **B** and check that there is suction from port **A**.
4) Blow air in port **B** and check that there is a resistance to flow out of port **A**.
5) Supply battery voltage to the terminal.
6) Blow air in port **A** and check that air flows freely out of port **B**.
7) Blow air in port **B** and check that air flows freely out of port **A**.
8) If NG, go to "Diagnostic Procedure", EC-637.

Wiring Diagram

NAEC1129

EC-BYPS/V-01

: Detectable line for DTC
: Non-detectable line for DTC

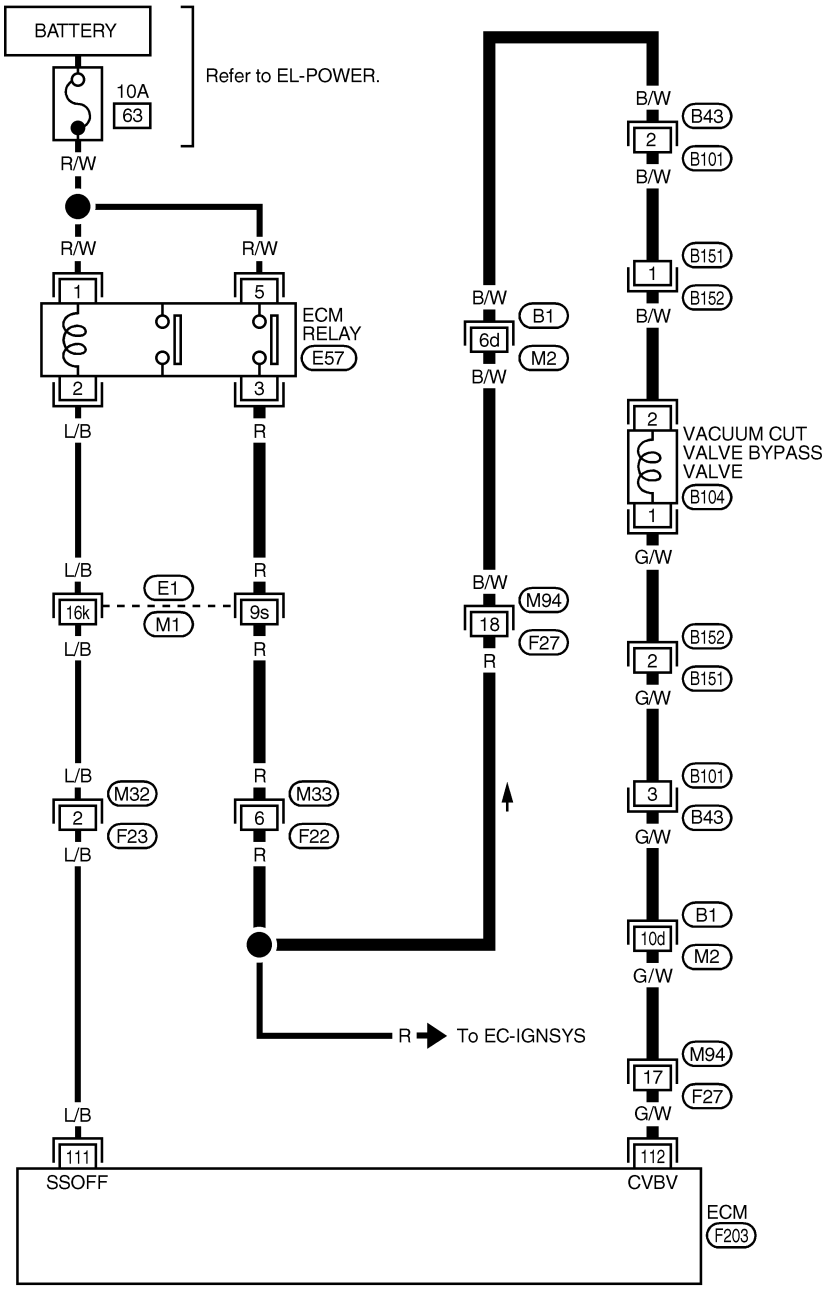

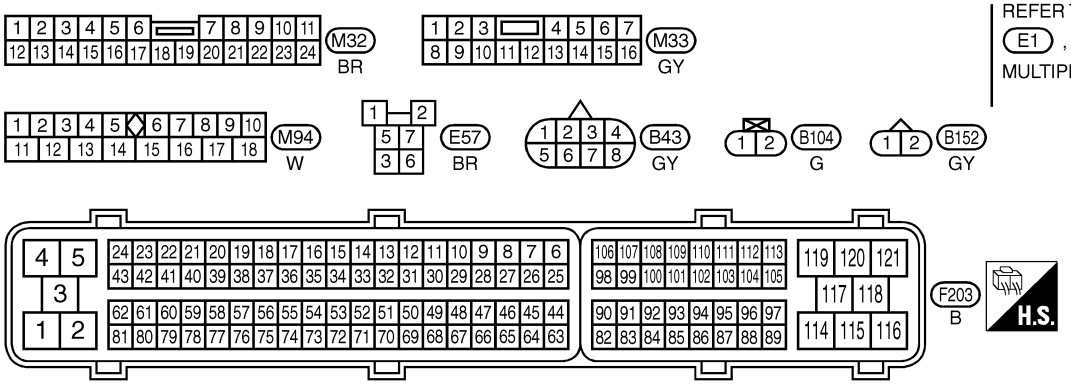

REFER TO THE FOLLOWING.
E1 , B1 -SUPER MULTIPLE JUNCTION (SMJ)

MEC105E

Diagnostic Procedure

NAEC1130

1	INSPECTION START	
Do you have CONSULT-II?		
	Yes or No	
Yes	▶	GO TO 2.
No	▶	GO TO 3.

2	CHECK VACUUM CUT VALVE BYPASS VALVE OPERATION	

With CONSULT-II

1. Turn ignition switch OFF.
2. Remove vacuum cut valve and vacuum cut valve bypass valve as an assembly.
3. Apply vacuum to port A and check that there is no suction from port B.
4. Apply vacuum to port B and check that there is suction from port A.
5. Blow air in port B and check that there is a resistance to flow out of port A.
6. Turn ignition switch ON.
7. Select “VC/V BYPASS/V” in “ACTIVE TEST” mode with CONSULT-II and touch “ON”.
8. Blow air in port A and check that air flows freely out of port B.
9. Blow air in port B and check that air flows freely out of port A.

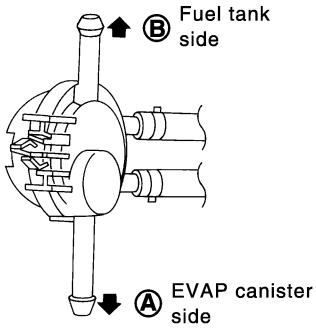

ACTIVE TEST	
VC/V BYPASS/V	OFF
MONITOR	
ENG SPEED	XXX rpm
A/F ALPHA-B1	XXX %
A/F ALPHA-B2	XXX %
HO2S1 MNTR (B1)	LEAN
HO2S1 MNTR (B2)	LEAN

SEC157D

	OK or NG	
OK	▶	GO TO 4.
NG	▶	GO TO 7.

3	CHECK VACUUM CUT VALVE BYPASS VALVE OPERATION

Without CONSULT-II

1. Turn ignition switch OFF.
2. Remove vacuum cut valve and vacuum cut valve bypass valve as an assembly.
3. Apply vacuum to port A and check that there is no suction from port B.
4. Apply vacuum to port B and check that there is suction from port A.
5. Blow air in port B and check that there is a resistance to flow out of port A.
6. Disconnect vacuum cut valve bypass valve harness connector.
7. Supply battery voltage to the terminal.
8. Blow air in port A and check that air flows freely out of port B.
9. Blow air in port B and check that air flows freely out of port A.

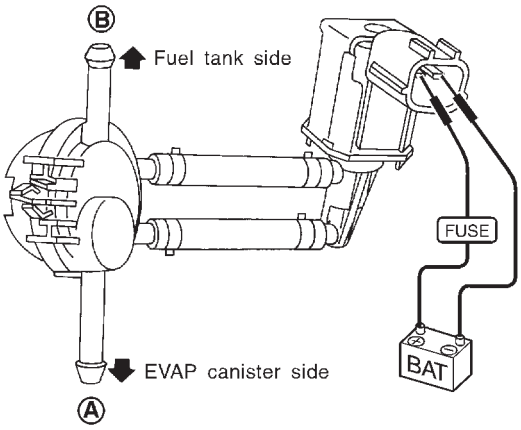

SEF914U

OK or NG

OK	▶	GO TO 4.
NG	▶	GO TO 7.

4	CHECK EVAP PURGE LINE

Check EVAP purge line between EVAP canister and fuel tank for clogging or disconnection.

OK or NG

OK	▶	GO TO 5.
NG	▶	Repair it.

5	CHECK EVAP PURGE PORT

Check EVAP purge port of fuel tank for clogging.

OK or NG

OK	▶	GO TO 6.
NG	▶	Clean EVAP purge port.

6	CHECK EVAP CANISTER

1. Pinch the fresh air hose.
2. Blow air into port **A** and check that it flows freely out of port **B**.

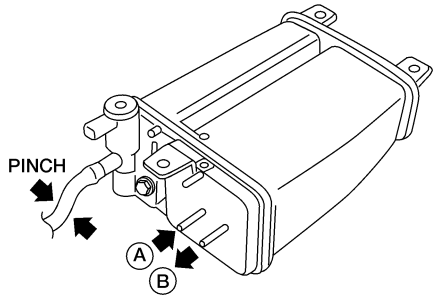

AEC630A

OK or NG

OK	▶	GO TO 12.
NG	▶	Replace EVAP canister.

7	CHECK BYPASS HOSE

Check bypass hoses for clogging.

OK or NG

OK	▶	GO TO 8.
NG	▶	Repair or replace hoses.

8	CHECK VACUUM CUT VALVE BYPASS VALVE

With CONSULT-II

1. Perform "VC/V BYPASS/V" in "ACTIVE TEST" mode.
2. Check air passage continuity and operation delay time under the following conditions.

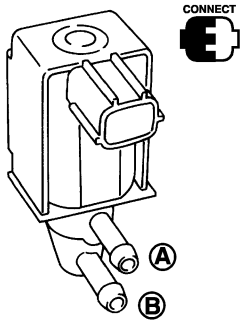

ACTIVE TEST	
VC/V BYPASS/V	OFF
MONITOR	
ENG SPEED	XXX rpm
A/F ALPHA-B1	XXX %
A/F ALPHA-B2	XXX %
HO2S1 MNTR (B1)	LEAN
HO2S1 MNTR (B2)	LEAN

Condition VC/V BYPASS/V	Air passage continuity between A and B
ON	Yes
OFF	No

Operation takes less than 1 second.

SEC156D

Without CONSULT-II

Check air passage continuity and operation delay time under the following conditions.

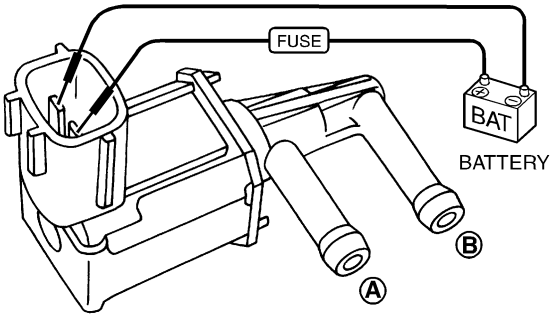

Condition	Air passage continuity between A and B
12V direct current supply between terminals 1 and 2	Yes
No supply	No

Operation takes less than 1 second.

SEF358X

OK or NG

OK	▶	GO TO 9.
NG	▶	Replace vacuum cut valve bypass valve.

9	CHECK VACUUM CUT VALVE

Check vacuum cut valve as follows:

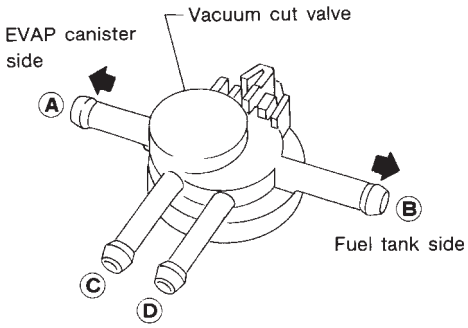

SEF379Q

a. Plug port **C** and **D** with fingers.
b. Apply vacuum to port **A** and check that there is no suction from port **B**.
c. Apply vacuum to port **B** and check that there is suction from port **A**.
d. Blow air in port **B** and check that there is a resistance to flow out of port **A**.
e. Open port **C** and **D**.
f. Blow air in port **A** check that air flows freely out of port **C**.
g. Blow air in port **B** check that air flows freely out of port **D**.

OK or NG

OK	▶	GO TO 10.
NG	▶	Replace vacuum cut valve.

10	CHECK EVAP CONTROL SYSTEM PRESSURE SENSOR HOSE

1. Turn ignition switch OFF.
2. Check disconnection or improper connection of hose connected to EVAP control system pressure sensor.

OK or NG

OK	▶	GO TO 11.
NG	▶	Repair or replace.

11	CHECK EVAP CONTROL SYSTEM PRESSURE SENSOR CONNECTOR

1. Disconnect EVAP control system pressure sensor harness connector.

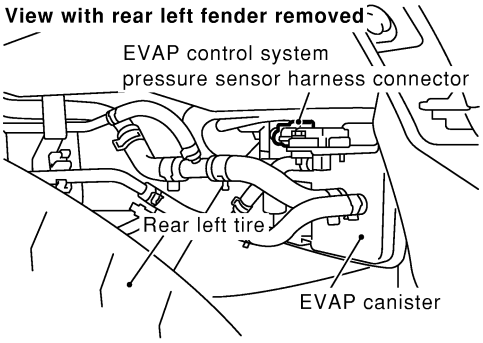

SEC931C

2. Check connectors for water.
   Water should not exist.

OK or NG

OK	▶	GO TO 12.
NG	▶	Replace EVAP control system pressure sensor.

12	CHECK EVAP CONTROL SYSTEM PRESSURE SENSOR

1. Remove EVAP control system pressure sensor with its harness connector connected.
   - **Never apply force to the air hole protector of the sensor if equipped.**

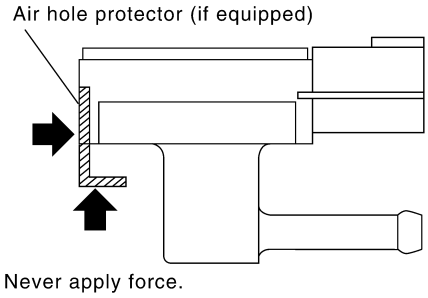

SEF799W

2. Remove EVAP control system pressure sensor from EVAP canister.
   Do not reuse the O-ring, replace it with a new one.
3. Install a vacuum pump to EVAP control system pressure sensor.
4. Turn ignition switch "ON" and check output voltage between ECM terminal 32 and ground under the following conditions.

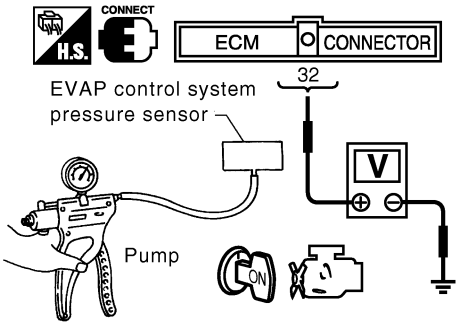

Applied vacuum kPa (mmHg, inHg)	Voltage V
Not applied	1.8 - 4.8
–26.7 (–200, –7.87)	2.1 to 2.5V lower than above value

SEC422D

CAUTION:
- **Always calibrate the vacuum pump gauge when using it.**
- **Do not apply below −93.3 kPa (−700 mmHg, −27.56 inHg) or pressure over 101.3 kPa (760 mmHg, 29.92 inHg).**
- **Discard and EVAP control system pressure sensor which has been dropped from a height of more than 0.5 m (19.7 in) onto a hard surface such as a concrete floor; use a new one.**

OK or NG

OK	▶	GO TO 13.
NG	▶	Replace EVAP control system pressure sensor.

13	CHECK RUBBER TUBE FOR CLOGGING

1. Disconnect rubber tube connected to EVAP canister vent control valve.
2. Check the rubber tube for clogging.

OK or NG

OK	▶	GO TO 14.
NG	▶	Clean the rubber tube using an air blower.

14	CHECK EVAP CANISTER VENT CONTROL VALVE-I

1. Remove EVAP canister vent control valve from EVAP canister.
2. Check portion **B** of EVAP canister vent control valve for being rusted.

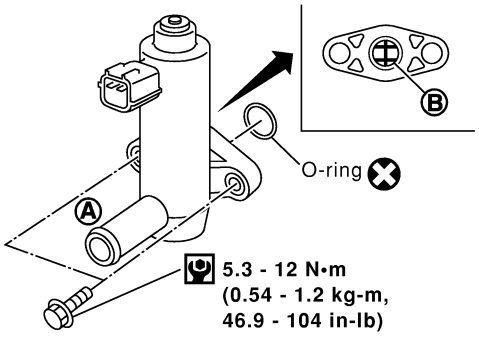

SEF376Z

OK or NG

OK	▶	GO TO 15.
NG	▶	Replace EVAP canister vent control valve.

15	CHECK EVAP CANISTER VENT CONTROL VALVE-II

With CONSULT-II

1. Reconnect harness disconnected connectors.
2. Turn ignition switch ON.
3. Perform "VENT CONTROL/V" in "ACTIVE TEST" mode.
4. Check air passage continuity and operation delay time.

ACTIVE TEST	
VENT CONTROL/V	OFF
MONITOR	
ENG SPEED	XXX rpm
A/F ALPHA-B1	XXX %
A/F ALPHA-B2	XXX %
HO2S1 MNTR (B1)	LEAN
HO2S1 MNTR (B2)	LEAN

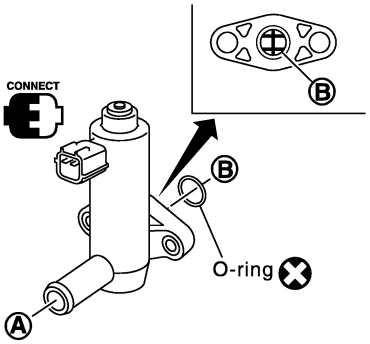

Condition VENT CONTROL/V	Air passage continuity between A and B
ON	No
OFF	Yes

Operation takes less than 1 second.

SEC158D

Without CONSULT-II

Check air passage continuity and operation delay time under the following conditions.

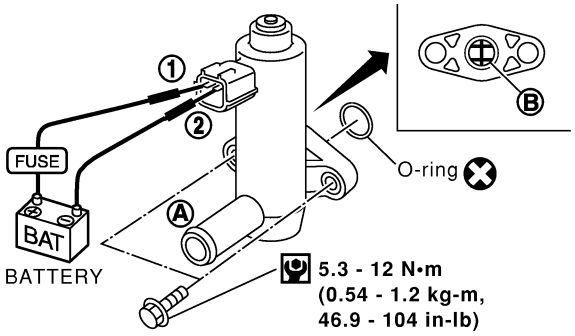

Condition	Air passage continuity between A and B
12V direct current supply between terminals 1 and 2	No
OFF	Yes

Operation takes less than 1 second.

SEF378Z

Make sure new O-ring is installed properly.

OK or NG

OK	▶	GO TO 17.
NG	▶	GO TO 16.

16	CHECK EVAP CANISTER VENT CONTROL VALVE-III
1. Clean the air passage (Portion **A** to **B**) of EVAP canister vent control valve using an air blower. 2. Perform the Test No. 15 again.	
OK or NG	
OK ▶	GO TO 17.
NG ▶	Replace EVAP canister vent control valve.

17	CHECK INTERMITTENT INCIDENT
Refer to "TROUBLE DIAGNOSIS FOR INTERMITTENT INCIDENT", EC-155.	
▶	**INSPECTION END**

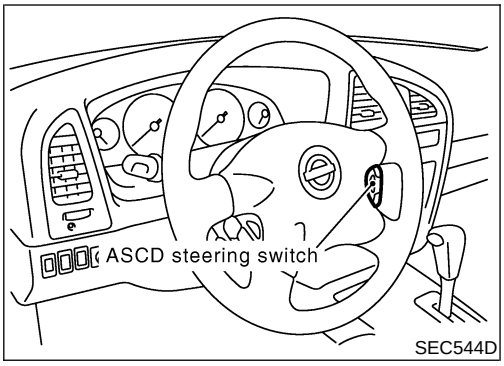

Component Description

NAEC1292

ASCD steering switch has variant values of electrical resistance for each button. ECM reads voltage variation of switch, and determines which button is operated.
Refer to EC-54 for the ASCD function.

CONSULT-II Reference Value in Data Monitor Mode

NAEC1293

Specification data are reference values.

MONITOR ITEM	CONDITION		SPECIFICATION
MAIN SW	• Ignition switch: ON	• MAIN switch: Pressed	ON
		• MAIN switch: Released	OFF
CANCEL SW	• Ignition switch: ON	• CANCEL switch: Pressed	ON
		• CANCEL switch: Released	OFF
RESUME/ACC SW	• Ignition switch: ON	• RESUME/ACCEL switch: Pressed	ON
		• RESUME/ACCEL switch: Released	OFF
SET SW	• Ignition switch: ON	• SET/COAST switch: Pressed	ON
		• SET/COAST switch: Released	OFF

ECM Terminals and Reference Value

NAEC1299

Specification data are reference values and are measured between each terminal and ground.

CAUTION:

Do not use ECM ground terminals when measuring input/output voltage. Doing so may result in damage to the ECM's transistor. Use a ground other than ECM terminals, such as the ground.

TERMINAL NO.	WIRE COLOR	ITEM	CONDITION	DATA (DC Voltage)
67	B/P	Sensor ground	**[Engine is running]** • **Warm-up condition** • Idle speed	Approximately 0V
99	L/Y	ASCD steering switch	**[Ignition switch ON]** • ASCD steering switch: OFF	Approximately 4V
			[Ignition switch ON] • MAIN switch: Pressed	Approximately 0V
			[Ignition switch ON] • CANCEL switch: Pressed	Approximately 1V
			[Ignition switch ON] • SET/COAST switch: Pressed	Approximately 2V
			[Ignition switch ON] • RESUME/ACCEL switch: Pressed	Approximately 3V

On Board Diagnosis Procedure

=NAEC1294

This self-diagnosis has the one trip detection logic. The MIL will not light up for this self-diagnosis.

NOTE:
If DTC P1564 is displayed with DTC P0605, first perform the trouble diagnosis for DTC P0605. Refer to EC-441.

DTC No.	Trouble diagnosis name	DTC Detecting Condition	Possible cause
P1564 1564	ASCD steering switch	• An excessively high voltage signal from the ASCD steering switch is sent to ECM. • ECM detects that input signal from the ASCD steering switch is out of the specified range. • ECM detects that the ASCD steering switch is stuck ON.	• Harness or connectors (The ASCD steering switch circuit is open or shorted.) • ASCD steering switch • ECM

DTC Confirmation Procedure

NAEC1295

NOTE:
If DTC Confirmation Procedure has been previously conducted, always turn ignition switch OFF and wait at least 10 seconds before conducting the next test.

With CONSULT-II

1. Turn ignition switch ON.
2. Select “DATA MONITOR” mode with CONSULT-II.
3. Wait at least 10 seconds.
4. Press “MAIN” switch for at least 10 seconds, then release it and wait at least 10 seconds.
5. Press “RESUME/ACCEL” switch for at least 10 seconds, then release it and wait at least 10 seconds.
6. Press “SET/COAST” switch for at least 10 seconds, then release it and wait at least 10 seconds.
7. Press “CANCEL” switch for at least 10 seconds, then release it and wait at least 10 seconds.
8. If DTC is detected, go to “Diagnostic Procedure”, EC-648.

With GST

Follow the procedure “With CONSULT-II” above.

Wiring Diagram

NAEC1296

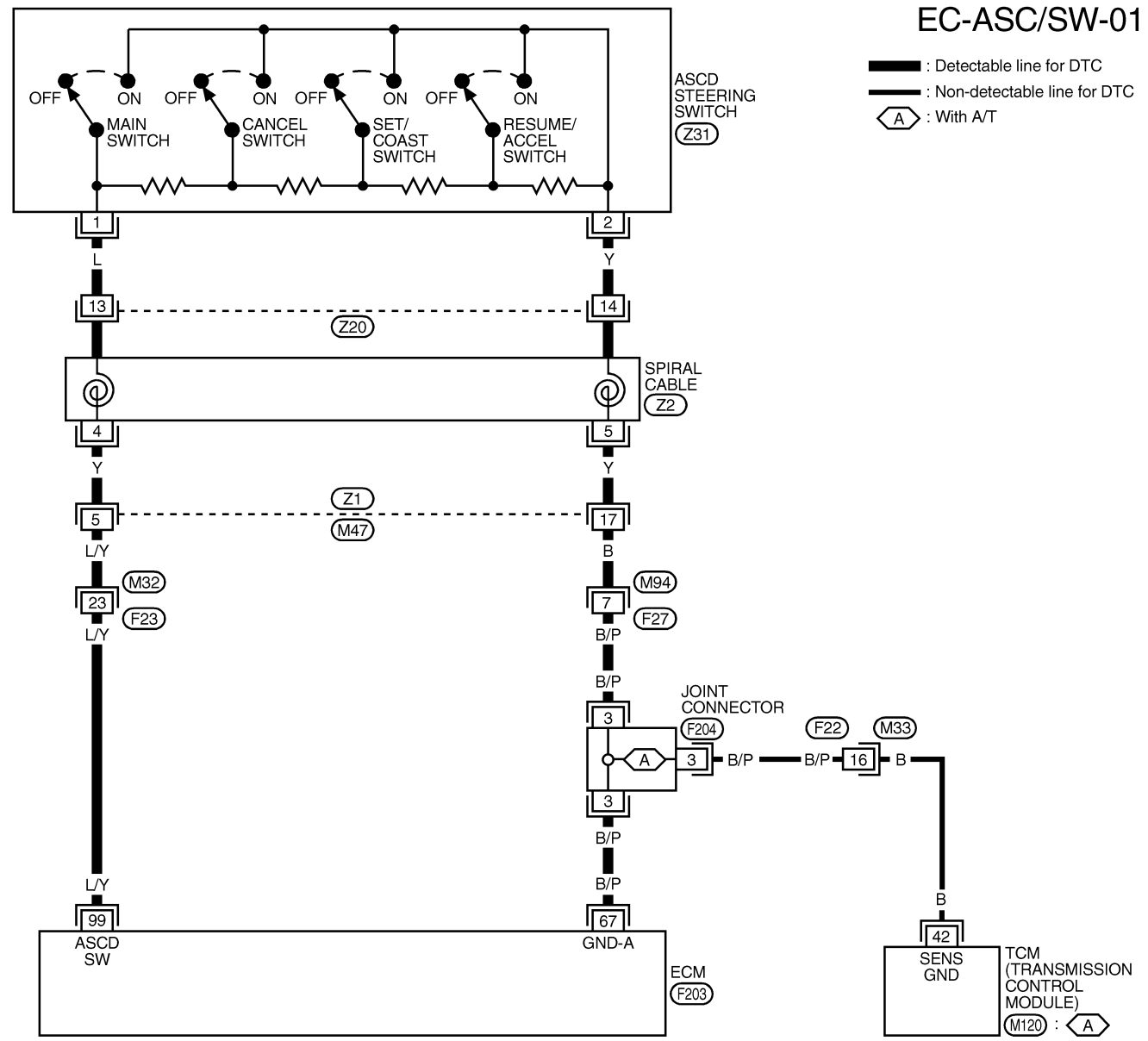

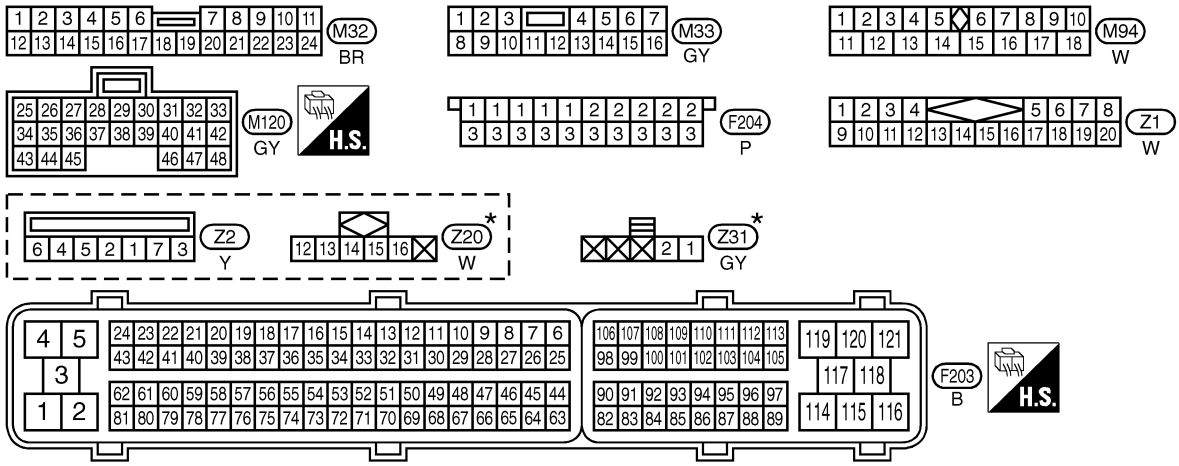

* : This connector is not shown in "HARNESS LAYOUT", EL section.

MEC117E

Diagnostic Procedure

NAEC1297

1	CHECK GROUND CONNECTIONS

1. Turn ignition switch OFF.
2. Loosen and retighten three ground screws on the body.
   Refer to “Ground Inspection”, EC-165.

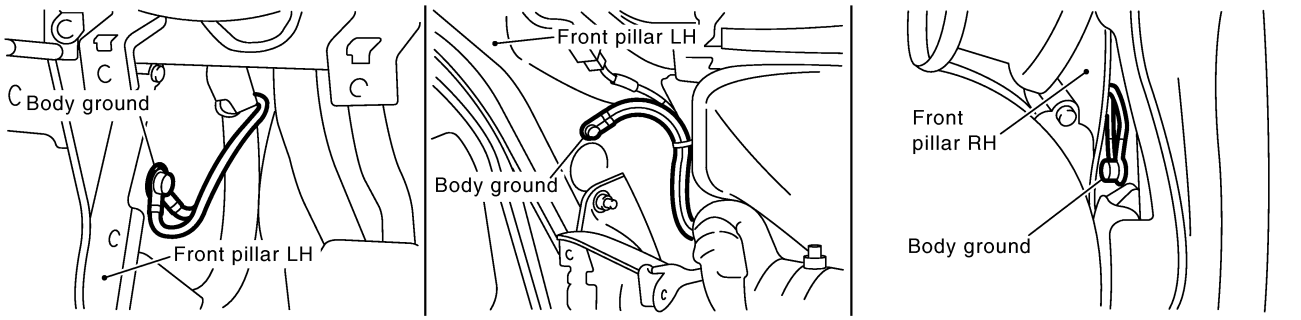

SEC997D

OK or NG

OK	▶	GO TO 2.
NG	▶	Repair or replace ground connections.

2	CHECK ASCD STEERING SWITCH CIRCUIT

With CONSULT-II

1. Turn ignition switch ON.
2. Select "MAIN SW", "RESUME/ACC SW", "SET SW" and "CANCEL SW" in "DATA MONITOR" mode with CONSULT-II.

DATA MONITOR	
MONITOR	NO DTC
MAIN SW	OFF
CANCEL SW	OFF
RESUME/ACC SW	OFF
SET SW	OFF

SEC006D

3. Check each item indication under the following conditions.

Switch	Monitor item	Condition	Indication
CRUISE	MAIN SW	Pressed	ON
		Released	OFF
COAST/SET	SET SW	Pressed	ON
		Released	OFF
ACCEL/RES	RESUME/ACC SW	Pressed	ON
		Released	OFF
CANCEL	CANCEL SW	Pressed	ON
		Released	OFF

MTBL1193

Without CONSULT-II

1. Turn ignition switch ON.
2. Check voltage between ECM terminal 99 and ground with pressing each button.

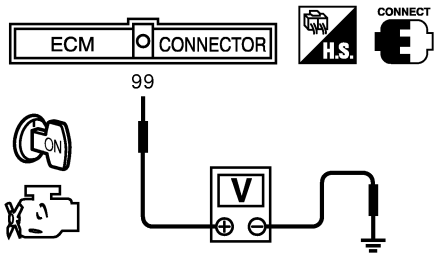

PBIB0311E

Switch	Condition	Voltage [V]
CRUISE SW	Pressed	Approx. 0
	Released	Approx. 4
COAST/SET SW	Pressed	Approx. 2
	Released	Approx. 4
ACCEL/RES SW	Pressed	Approx. 3
	Released	Approx. 4
CANCEL SW	Pressed	Approx. 1
	Released	Approx. 4

MTBL1400

OK or NG

OK	▶	GO TO 5.
NG	▶	GO TO 3.

3	CHECK ASCD STEERING SWITCH GROUND CIRCUIT FOR OPEN AND SHORT

1. Turn ignition switch OFF.
2. Disconnect ECM harness connector.
3. Disconnect ASCD steering switch harness connector.

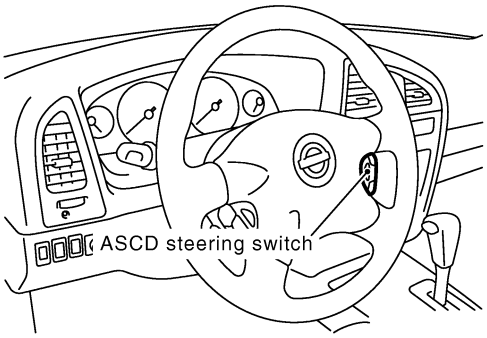

SEC544D

4. Check harness continuity between ASCD steering switch terminal 2 and ECM terminal 67, TCM terminal 42. Refer to Wiring Diagram.
   Continuity should exist.
5. Also check harness for short to ground and short to power.

OK or NG

OK	▶	GO TO 5.
NG	▶	GO TO 4.

4	DETECT MALFUNCTIONING PART

Check the following.
- Harness connector Z20
- Spiral cable Z2
- Harness connectors Z1, M47
- Harness connectors M94, F27
- Harness connectors F22, M33
- Joint connector F204
- Harness for open and short between ECM and ASCD steering switch
- Harness for open and short between TCM and ASCD steering switch

	▶	Repair open circuit or short to ground or short to power in harness or connectors.

5	CHECK ASCD STEERING SWITCH INPUT SIGNAL CIRCUIT FOR OPEN AND SHORT

1. Disconnect ECM harness connector.
2. Check harness continuity between ECM terminal 99 and ASCD steering switch terminal 1.
   Refer to Wiring Diagram.
   Continuity should exist.
3. Also check harness for short to ground and short to power.

OK or NG

OK	▶	GO TO 7.
NG	▶	GO TO 6.

6	DETECT MALFUNCTIONING PART

Check the following.
- Harness connector Z20
- Spiral cable Z2
- Harness connectors Z1, M47
- Harness connectors M32, F23
- Harness for open and short between ECM and ASCD steering switch

	▶	Repair open circuit or short to ground or short to power in harness or connectors.

7	CHECK ASCD STEERING SWITCH	
Refer to "Component Inspection", EC-651.		
	OK or NG	
OK	▶	GO TO 8.
NG	▶	Replace ASCD steering switch.

8	CHECK INTERMITTENT INCIDENT
Refer to "TROUBLE DIAGNOSIS FOR INTERMITTENT INCIDENT", EC-155.	
▶	**INSPECTION END**

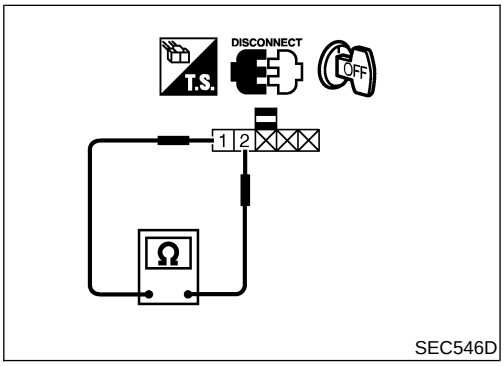

SEC546D

Component Inspection

NAEC1298

ASCD STEERING SWITCH

1. Disconnect ASCD steering switch.
2. Check continuity between terminals 1 and 2 by pushing each switch.

Switch	Condition	Resistance [kΩ]
MAIN SW	Pressed	Approx. 0
	Released	Approx. 4
SET/COAST SW	Pressed	Approx. 0.66
	Released	Approx. 4
RESUME/ACCEL SW	Pressed	Approx. 1.48
	Released	Approx. 4
CANCEL SW	Pressed	Approx. 0.25
	Released	Approx. 4

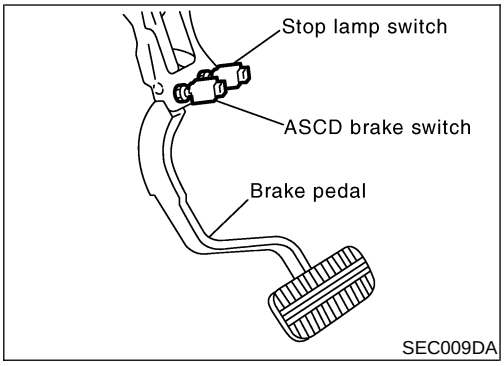

Component Description

NAEC1300

When the brake pedal is depressed, ASCD brake switch is turned OFF and stop lamp switch is turned ON.
ECM detects the state of the brake pedal by this input of two kinds (ON/OFF signal).
Refer to EC-54 for the ASCD function.

CONSULT-II Reference Value in Data Monitor Mode

NAEC1301

Specification data are reference values.

MONITOR ITEM	CONDITION		SPECIFICATION
BRAKE SW 1 (ASCD brake switch)	• Ignition switch: ON	• Brake pedal fully released • Clutch pedal is fully released (M/T models)	ON
		• Brake pedal depressed • Clutch pedal is depressed (M/T models)	OFF
BRAKE SW 2 (Stop lamp switch)	• Ignition switch: ON	• Brake pedal fully released	OFF
		• Brake pedal depressed	ON

ECM Terminals and Reference Value

NAEC1307

Specification data are reference values and are measured between each terminal and ground.

CAUTION:
Do not use ECM ground terminals when measuring input/output voltage. Doing so may result in damage to the ECM's transistor. Use a ground other than ECM terminals, such as the ground.

TERMINAL NO.	WIRE COLOR	ITEM	CONDITION	DATA (DC Voltage)
101	G/Y	Stop lamp switch	**[Ignition switch ON]** • Brake pedal is fully released	Approximately 0V
			[Ignition switch ON] • Brake pedal is depressed	BATTERY VOLTAGE (11 - 14V)
108	L/Y	ASCD brake switch	**[Ignition switch ON]** • Brake pedal is fully released • Clutch pedal is fully released (M/T models)	BATTERY VOLTAGE (11 - 14V)
			[Ignition switch ON] • Brake pedal is depressed • Clutch pedal is depressed (M/T models)	Approximately 0V

On Board Diagnosis Procedure

=NAEC1302

This self-diagnosis has the one trip detection logic.
The MIL will not light up for this self-diagnosis.

NOTE:

- **If DTC P1572 is displayed with DTC P0605, first perform the trouble diagnosis for DTC P0605. Refer to EC-441.**
- **If DTC P1572 is displayed with DTC P1805, first perform the trouble diagnosis for DTC P1805. Refer to EC-669.**

DTC	Trouble diagnosis name	DTC Detecting Condition	Possible cause
P1572 1572	ASCD brake switch	• When the vehicle speed is above 30 km/h (19 MPH), ON signal from the stop lamp switch and ASCD brake switch are sent to the ECM at the same time. • ASCD brake switch signal is not sent to ECM for an extremely long time while driving vehicle.	• Harness or connectors (The stop lamp switch circuit is open or shorted.) • Harness or connectors (The ASCD brake switch circuit is open or shorted.) • Harness or connectors (The ASCD clutch switch circuit is open or shorted.) • ASCD brake switch • Stop lamp switch • ASCD clutch switch • Incorrect stop lamp switch installation • Incorrect ASCD brake switch installation • Incorrect ASCD clutch switch installation • ECM

DTC Confirmation Procedure

NAEC1303

CAUTION:
Always drive vehicle at a safe speed.

NOTE:
If DTC Confirmation Procedure has been previously conducted, always turn ignition switch OFF and wait at least 10 seconds before conducting the next test.

TESTING CONDITION:
Steps 3 and 4 may be conducted with the drive wheels lifted in the shop or by driving the vehicle. If a road test is expected to be easier, it is unnecessary to lift the vehicle.

With CONSULT-II

1) Start engine (VDC switch OFF).
2) Select “DATA MONITOR” mode with CONSULT-II.
3) Drive the vehicle for at least 5 consecutive seconds under the following condition.

VHCL SPEED SE	More than 30 km/h (19 MPH)
Selector lever	Suitable position

If DTC is detected, go to “Diagnostic Procedure”, EC-656.
If DTC is not detected, go to the following step.

DATA MONITOR	
MONITOR	NO DTC
ENG SPEED	XXX rpm
VHCL SPEED SE	XXX km/h

SEC010D

4) Drive the vehicle for at least 5 consecutive seconds under the following condition.

VHCL SPEED SE	More than 30 km/h (19 MPH)
Selector lever	Suitable position
Driving location	Depress the brake pedal for more than five seconds so as not to come off from the above-mentioned condition.

5) If DTC is detected, go to "Diagnostic Procedure", EC-656.

With GST

Follow the procedure "With CONSULT-II" above.

Wiring Diagram

NAEC1304

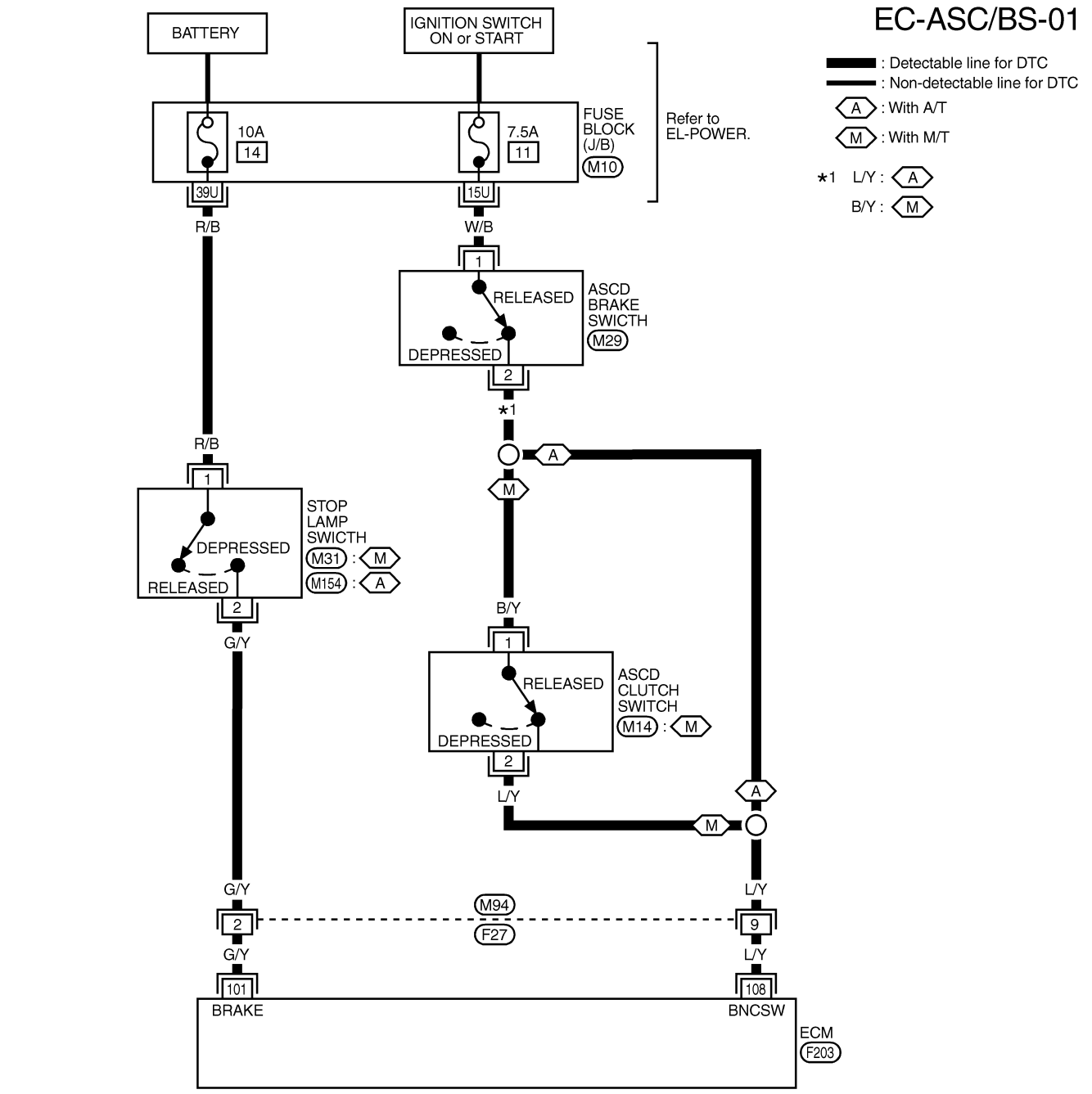

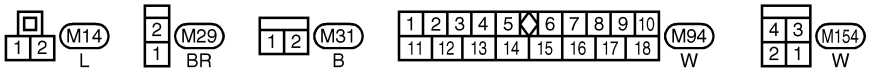

REFER TO THE FOLLOWING.
M10 -FUSE BLOCK-JUNCTION BOX (J/B)

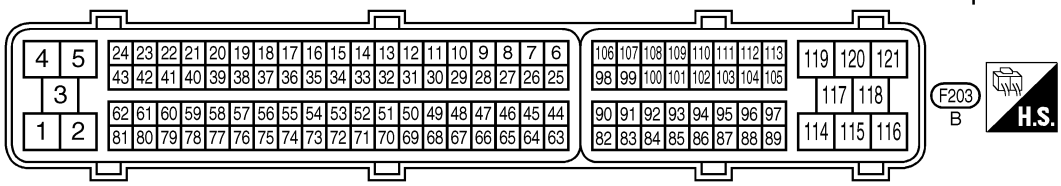

MEC118E

Diagnostic Procedure

NAEC1305

1	CHECK OVERALL FUNCTION-I

With CONSULT-II

1. Turn ignition switch ON.
2. Select “BRAKE SW1” in “DATA MONITOR” mode with CONSULT-II.
3. Check the indication of “BRAKE SW1” under the following conditions.

DATA MONITOR	
MONITOR	NO DTC
BRAKE SW1	OFF

SEC011D

A/T models

CONDITION	INDICATION
When brake pedal is depressed.	OFF
When brake pedal is released.	ON

M/T models

CONDITION	INDICATION
When clutch pedal or brake pedal is depressed.	OFF
When clutch pedal and brake pedal are released.	ON

MTBL1334

Without CONSULT-II

1. Turn ignition switch ON.
2. Check voltage between ECM terminal 108 and ground under the following conditions.

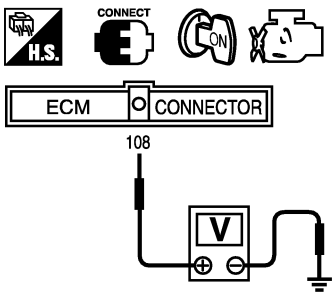

MBIB0061E

A/T models

CONDITION	VOLTAGE
When brake pedal is depressed.	Approximately 0V
When brake pedal is released.	Battery voltage

M/T models

CONDITION	VOLTAGE
When clutch pedal or brake pedal is depressed.	Approximately 0V
When clutch pedal and brake pedal are released.	Battery voltage

MTBL1335

OK or NG

OK	▶	GO TO 2.
NG	▶	GO TO 3.

2	CHECK OVERALL FUNCTION-II

With CONSULT-II

See "BRAKE SW2" indication in "DATA MONITOR" mode.

DATA MONITOR	
MONITOR	NO DTC
BRAKE SW2	OFF

SEC013D

CONDITION	INDICATION
When brake pedal is depressed.	ON
When brake pedal is released.	OFF

MTBL1336

Without CONSULT-II

Check voltage between ECM terminal 101 and ground under the following conditions.

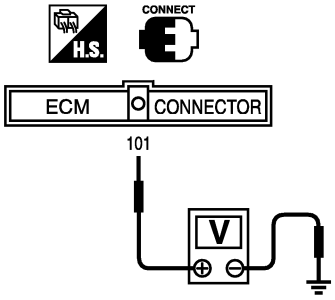

MBIB0060E

CONDITION	VOLTAGE
When brake pedal is depressed.	Battery voltage
When brake pedal is released.	Approximately 0V

MTBL1337

OK or NG

OK	▶	GO TO 16.
NG	▶	GO TO 11.

3	CHECK ASCD BRAKE SWITCH POWER SUPPLY CIRCUIT

1. Turn ignition switch OFF.
2. Disconnect ASCD brake switch harness connector.
3. Turn ignition switch ON.
4. Check voltage between ASCD brake switch terminal 1 and ground with CONSULT-II or tester.

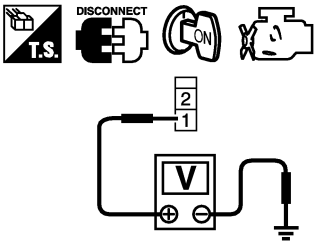

PBIB0857E

Voltage: Battery voltage

OK or NG

OK (A/T models)	▶	GO TO 5.
OK (M/T models)	▶	GO TO 7.
NG	▶	GO TO 4.

4	DETECT MALFUNCTIONING PART

Check the following.
- Fuse block (J/B) connector M10
- 7.5A fuse
- Harness for open or short between ASCD brake switch and fuse

	▶	Repair open circuit or short to ground or short to power in harness or connectors.

5	CHECK ASCD BRAKE SWITCH INPUT SIGNAL CIRCUIT FOR OPEN AND SHORT

1. Turn ignition switch OFF.
2. Disconnect ECM harness connector.
3. Check harness continuity between ECM terminal 108 and ASCD brake switch terminal 2.
   Refer to Wiring Diagram.
   Continuity should exist.
4. Also check harness for open to ground and short to power.

OK or NG

OK	▶	GO TO 10.
NG	▶	GO TO 6.

6	DETECT MALFUNCTIONING PART

Check the following.
- Harness connectors M94, F27
- Harness for open and short between ECM and ASCD brake switch

	▶	Repair open circuit or short to ground or short to power in harness or connectors.

7	CHECK ASCD CLUTCH SWITCH INPUT SIGNAL CIRCUIT FOR OPEN AND SHORT

1. Turn ignition switch OFF.
2. Disconnect ASCD clutch switch harness connector.
3. Disconnect ECM harness connector.
4. Check harness continuity between ASCD brake switch terminal 2 and ASCD clutch switch terminal 1, ASCD clutch switch terminal 2 and ECM terminal 108.
   Refer to Wiring Diagram.
   Continuity should exist.
5. Also check harness for open to ground and short to power.

OK or NG

OK	▶	GO TO 9.
NG	▶	GO TO 8.

8	DETECT MALFUNCTIONING PART

Check the following.
- Harness connectors M94, F27
- Harness for open and short between ASCD brake switch and ASCD clutch switch
- Harness for open and short between ASCD clutch switch and ECM

	▶	Repair open circuit or short to ground or short to power in harness or connectors.

9	CHECK ASCD CLUTCH SWITCH

Refer to "Component Inspection", EC-661.

OK or NG

OK	▶	GO TO 10.
NG	▶	Replace ASCD clutch switch.

10	CHECK ASCD BRAKE SWITCH

Refer to "Component Inspection", EC-661.

OK or NG

OK	▶	GO TO 16.
NG	▶	Replace ASCD brake switch.

11	CHECK STOP LAMP SWITCH POWER SUPPLY CIRCUIT

1. Turn ignition switch OFF.
2. Disconnect stop lamp switch harness connector.
3. Check voltage between stop lamp switch terminal 1 and ground with CONSULT-II or tester.

A/T models

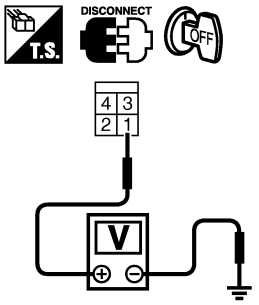

SEC547D

M/T models

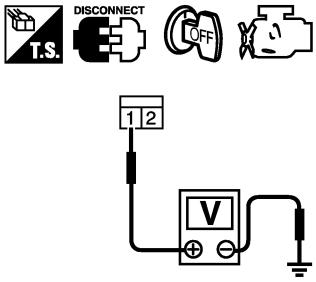

PBIB0117E

Voltage: Battery voltage

OK or NG

OK	▶	GO TO 13.
NG	▶	GO TO 12.

12	DETECT MALFUNCTIONING PART

Check the following.
- Fuse block (J/B) connector M10
- 10A fuse
- Harness for open or short between stop lamp switch and fuse

	▶	Repair open circuit or short to ground in harness or connectors.

13	CHECK STOP LAMP SWITCH INPUT SIGNAL CIRCUIT FOR OPEN AND SHORT

1. Disconnect ECM harness connector.
2. Check harness continuity between stop lamp switch terminal 2 and ECM terminal 101. Refer to wiring diagram.
   Continuity should exist
3. Also check harness for short to ground and short to power.

OK or NG

OK	▶	GO TO 15.
NG	▶	GO TO 14.

14	DETECT MALFUNCTIONING PART
Check the following. ● Harness connectors M94, F27 ● Harness for open or short between stop lamp switch and ECM	
▶	Repair open circuit or short to ground or short to power in harness or connectors.

15	CHECK STOP LAMP SWITCH
Refer to "Component Inspection", EC-661.	
OK or NG	
OK ▶	GO TO 16.
NG ▶	Replace stop lamp switch.

16	CHECK INTERMITTENT INCIDENT
Refer to "TROUBLE DIAGNOSIS FOR INTERMITTENT INCIDENT", EC-155.	
▶	**INSPECTION END**

ASCD brake switch

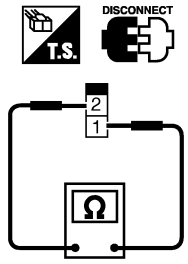

SEC023DA

Stop lamp switch (A/T models)

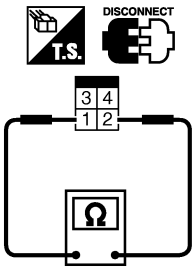

SEC548D

Stop lamp switch (M/T models)

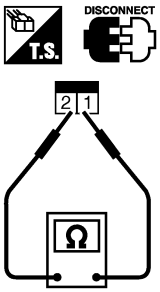

SEC155DA

Component Inspection

NAEC1306

ASCD BRAKE SWITCH AND STOP LAMP SWITCH

Condition	Continuity	
	ASCD brake switch	Stop lamp switch
When brake pedal is depressed	No	Yes
When brake pedal is released	Yes	No

Check each switch after adjusting brake pedal — refer to BR section.

Component Inspection (Cont'd)

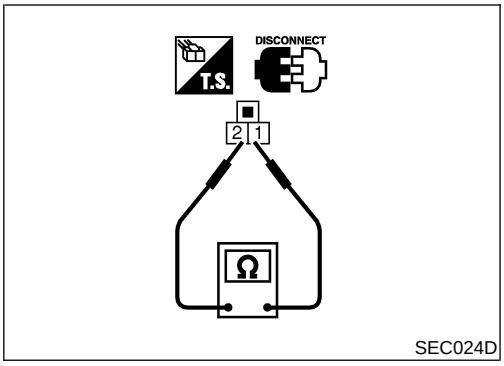

ASCD CLUTCH SWITCH (FOR M/T MODELS)

Condition	Continuity
When clutch pedal is depressed	No
When clutch pedal is released	Yes

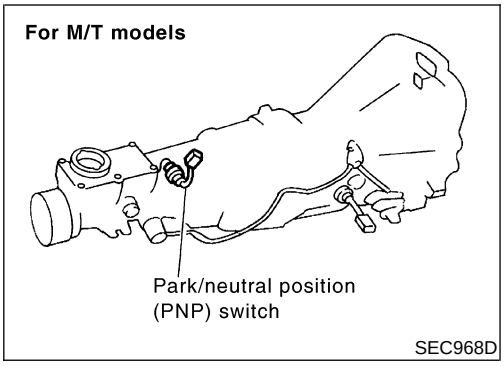

Component Description

NAEC1134

When the gear position is P (A/T models only) or N, park/neutral position (PNP) switch is ON.
ECM detects the position because the continuity of the line (the "ON" signal) exists.
For A/T models, the park/neutral position (PNP) switch assembly also includes a transmission range switch to detect selector lever position.

CONSULT-II Reference Value in Data Monitor Mode

NAEC1135

Specification data are reference values.

MONITOR ITEM	CONDITION		SPECIFICATION
P/N POSI SW	● Ignition switch: ON	Shift lever: P or N	ON
		Except above	OFF

ECM Terminals and Reference Value

NAEC1136

Specification data are reference values and are measured between each terminal and ground.

CAUTION:
Do not use ECM ground terminals when measuring input/output voltage. Doing so may result in damage to the ECM's transistor. Use a ground other than ECM terminals, such as the ground.

TERMINAL NO.	WIRE COLOR	ITEM	CONDITION	DATA (DC Voltage)
102	L	PNP switch	**[Ignition switch ON]** ● Gear position is P (A/T models) or N (Neutral position).	Approximately 0V
			[Ignition switch ON] ● Except the above gear position	BATTERY VOLTAGE (11 - 14V)

On Board Diagnosis Logic

NAEC1137

DTC No.	Trouble diagnosis name	DTC Detecting Condition	Possible Cause
P1706 1706	Park/Neutral position switch	The signal of the park/neutral position (PNP) switch is not changed in the process of engine starting and driving.	● Harness or connectors [The park/neutral position (PNP) switch circuit is open or shorted.] ● Park/neutral position (PNP) switch

DTC Confirmation Procedure

NAEC1138

CAUTION:
Always drive vehicle at a safe speed.

NOTE:
If DTC Confirmation Procedure has been previously conducted, always turn ignition switch OFF and wait at least 10 seconds before conducting the next test.

2

DATA MONITOR	
MONITOR	NO DTC
P/N POSI SW	ON

SEF212Y

5

DATA MONITOR	
MONITOR	NO DTC
ENG SPEED	XXX rpm
COOLAN TEMP/S	XXX °C
VHCL SPEED SE	XXX km/h
P/N POSI SW	OFF
B/FUEL SCHDL	XXX msec

SEF213Y

WITH CONSULT-II

NAEC1138S01

1) Turn ignition switch ON.
2) Select "P/N POSI SW" in "DATA MONITOR" mode with CONSULT-II. Then check the "P/N POSI SW" signal under the following conditions.

Position (Selector lever)	Known-good signal
N or P position (A/T) Neutral position (M/T)	ON
Except the above position	OFF

If NG, go to "Diagnostic Procedure", EC-666.
If OK, go to following step.

3) Select "DATA MONITOR" mode with CONSULT-II.
4) Start engine and warm it up to normal operating temperature.
5) Maintain the following conditions for at least 60 consecutive seconds.

ENG SPEED	More than 1,500 rpm (A/T) More than 1,800 rpm (M/T)
COOLAN TEMP/S	More than 70°C (158°F)
B/FUEL SCHDL	More than 3.7 msec
VHCL SPEED SE	More than 64 km/h (40 MPH)
Selector lever	Suitable position (A/T) 5th position (M/T)

6) If 1st trip DTC is detected, go to "Diagnostic Procedure", EC-666.

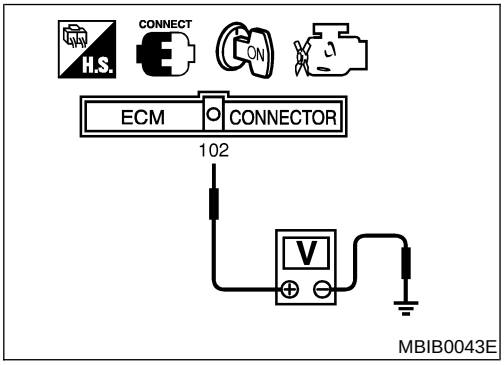

MBIB0043E

Overall Function Check

NAEC1139

Use this procedure to check the overall function of the park/neutral position (PNP) switch circuit. During this check, a 1st trip DTC might not be confirmed.

WITH GST

NAEC1139S01

1) Turn ignition switch ON.
2) Check voltage between ECM terminal 102 and ground under the following conditions.

Condition (Gear position)	Voltage V (Known-good data)
P or N position (A/T) Neutral position (M/T)	Approx. 0
Except the above position	Battery voltage

3) If NG, go to "Diagnostic Procedure", EC-666.

Wiring Diagram

NAEC1140

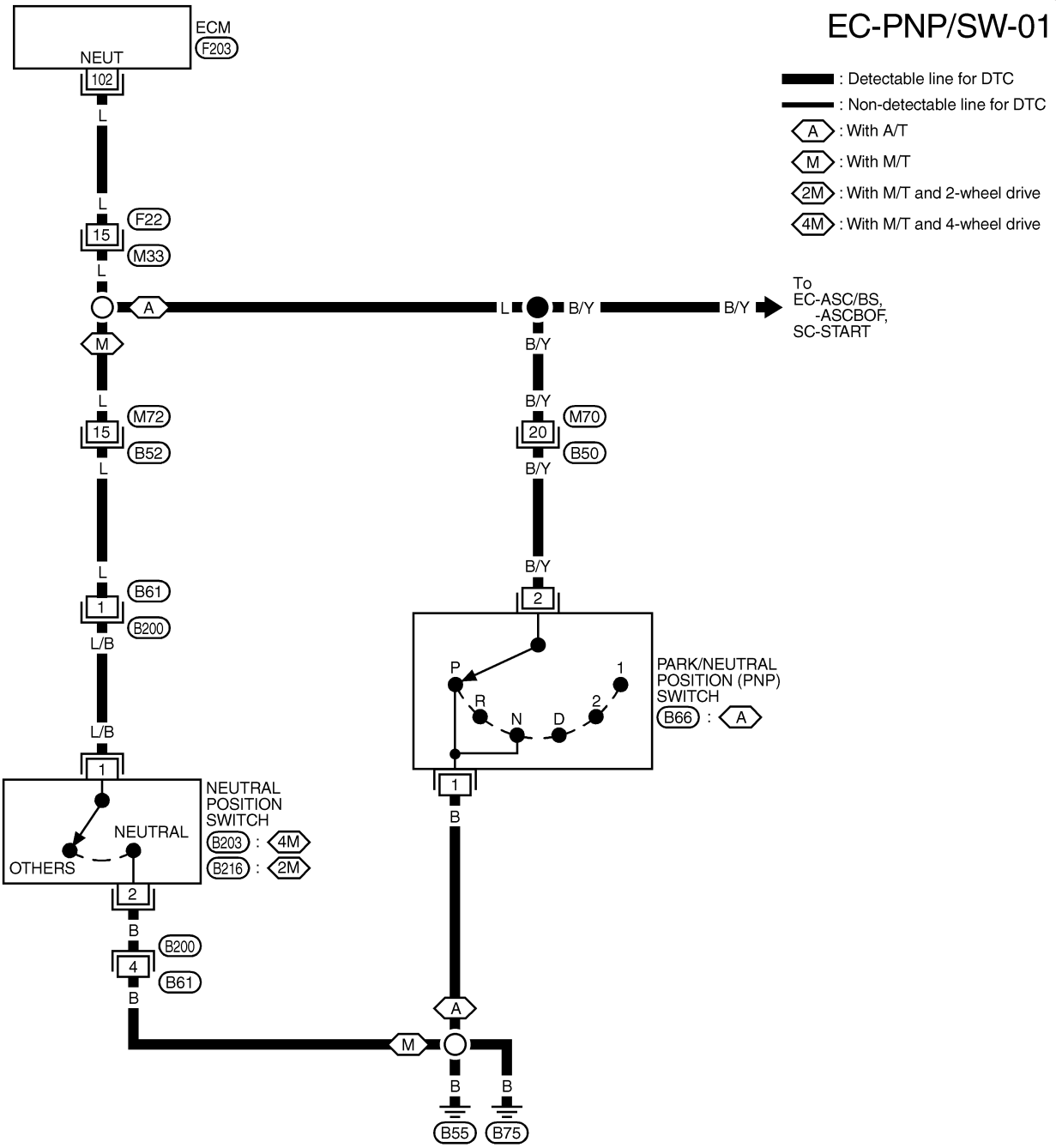

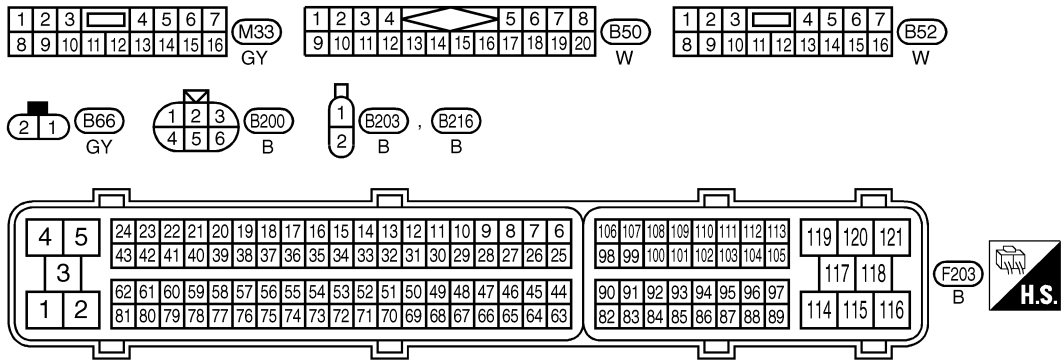

MEC106E

Diagnostic Procedure

NAEC1141

FOR M/T MODELS

NAEC1141S01

1	CHECK PNP SWITCH GROUND CIRCUIT FOR OPEN AND SHORT

1. Turn ignition switch OFF.
2. Disconnect park/neutral position (PNP) switch harness connector.

For M/T models

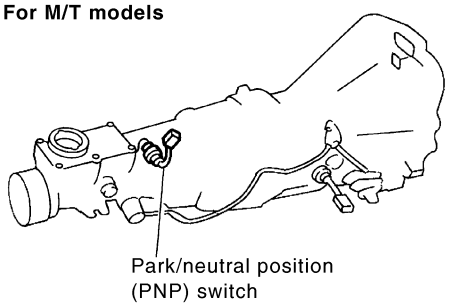

SEC968D

3. Check harness continuity between PNP switch terminal 2 and ground. Refer to Wiring Diagram.
   Continuity should exist.
4. Also check harness for short to power.

OK or NG

OK	▶	GO TO 3.
NG	▶	GO TO 2.

2	DETECT MALFUNCTIONING PART

Check the following.
- Harness connectors B200, B61
- Harness for open or short between park/neutral position (PNP) switch and ground

	▶	Repair open circuit or short to power in harness or connectors.

3	CHECK PNP SWITCH INPUT SIGNAL CIRCUIT FOR OPEN AND SHORT

1. Disconnect ECM harness connector.
2. Check harness continuity between ECM terminal 102 and PNP switch terminal 1. Refer to Wiring Diagram.
   Continuity should exist.
3. Also check harness for short to ground and short to power.

OK or NG

OK	▶	GO TO 5.
NG	▶	GO TO 4.

4	DETECT MALFUNCTIONING PART

Check the following.
- Harness connectors F22, M33
- Harness connectors M72, B52
- Harness connectors B61, B200
- Harness for open or short between park/neutral position (PNP) switch and ECM

	▶	Repair open circuit or short to ground or short to power in harness or connectors.

5	CHECK PARK/NEUTRAL POSITION (PNP) SWITCH	
Refer to MT-5 "Position Switch Check".		
	OK or NG	
OK	▶	GO TO 6.
NG	▶	Replace park/neutral position (PNP) switch.

6	CHECK INTERMITTENT INCIDENT	
Refer to "TROUBLE DIAGNOSIS FOR INTERMITTENT INCIDENT", EC-155.		
	▶	**INSPECTION END**

FOR A/T MODELS

=NAEC1141S02

1	CHECK PNP SWITCH GROUND CIRCUIT FOR OPEN AND SHORT

1. Turn ignition switch OFF.
2. Disconnect park/neutral position (PNP) switch harness connector.

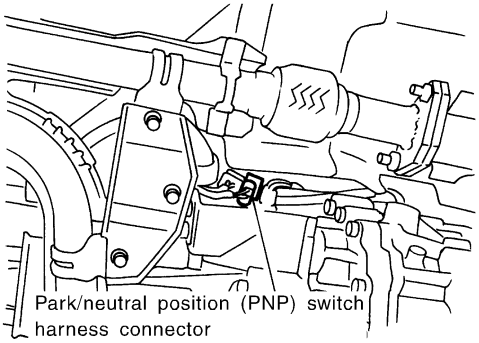

SEF011SA

3. Check harness continuity between PNP switch terminal 1 and ground. Refer to Wiring Diagram.
   Continuity should exist.
4. Also check harness for short to power.

OK or NG

OK	▶	GO TO 2.
NG	▶	Repair open circuit or short to power in harness or connectors.

2	CHECK PNP SWITCH INPUT SIGNAL CIRCUIT FOR OPEN AND SHORT

1. Disconnect ECM harness connector.
2. Check harness continuity between ECM terminal 102 and PNP switch terminal 2. Refer to Wiring Diagram.
   Continuity should exist.
3. Also check harness for short to ground and short to power.

OK or NG

OK	▶	GO TO 4.
NG	▶	GO TO 3.

3	DETECT MALFUNCTIONING PART

Check the following.
- Harness connectors F22, M33
- Harness connectors M70, B50
- Harness for open or short between ECM and park/neutral position (PNP) switch

	▶	Repair open circuit or short to ground or short to power in harness or connectors.

4	CHECK PARK/NEUTRAL POSITION (PNP) SWITCH

Refer to AT-105, "Diagnostic Procedure".

OK or NG

OK	▶	GO TO 5.
NG	▶	Replace park/neutral position (PNP) switch.

5	CHECK INTERMITTENT INCIDENT

Refer to "TROUBLE DIGNOSIS FOR INTERMITTENT INCIDENT", EC-155.

	▶	**INSPECTION END**

Description

NAEC1308

Brake switch signal is applied to the ECM through the stop lamp switch when the brake pedal is depressed. This signal is used mainly to decrease the engine speed when the vehicle is driving.

CONSULT-II Reference Value in Data Monitor Mode

NAEC1309

Specification data are reference values.

MONITOR ITEM	CONDITION		SPECIFICATION
BRAKE SW	• Ignition switch: ON	Brake pedal: Fully released	OFF
		Brake pedal: Slightly depressed	ON

ECM Terminals and Reference Value

NAEC1315

Specification data are reference values and are measured between each terminal and body ground.

CAUTION:

Do not use ECM ground terminals when measuring input/output voltage. Doing so may result in damage to the ECM's transistor. Use a ground other than ECM terminals, such as the ground.

TERMINAL NO.	WIRE COLOR	ITEM	CONDITION	DATA (DC Voltage)
101	G/Y	Stop lamp switch	**[Engine is running]** • Brake pedal fully released	Approximately 0V
			[Engine is running] • Brake pedal depressed	BATTERY VOLTAGE (11 - 14V)

On Board Diagnosis Logic

NAEC1310

The MIL will not light up for this self-diagnosis.

DTC No.	Trouble diagnosis name	DTC detecting condition	Possible cause
P1805 1805	Brake switch	A brake switch signal is not sent to ECM for an extremely long time while the vehicle is driving.	• Harness or connectors (Stop lamp switch circuit is open or shorted.) • Stop lamp switch

FAIL-SAFE MODE

NAEC1310S01

When the malfunction is detected, the ECM enters fail-safe mode.

Engine operating condition in fail-safe mode	
ECM controls the electric throttle control actuator by regulating the throttle opening to small range. Therefore, acceleration will be poor.	
Condition	Driving condition
When engine is idling	Normal
When accelerating	Poor acceleration

DATA MONITOR	
MONITOR	NO DTC
ENG SPEED	XXX rpm

SEF058Y

DTC Confirmation Procedure

=NAEC1311

WITH CONSULT-II

1. Turn ignition switch ON.
2. Fully depress the brake pedal for at least 5 seconds.
3. Erase the DTC with CONSULT-II.
4. Select “DATA MONITOR” mode with CONSULT-II.
5. If 1st trip DTC is detected, go to “Diagnostic Procedure”, EC-672.

WITH GST

Follow the procedure “WITH CONSULT-II” above.

Wiring Diagram

NAEC1312

EC-BRK/SW-01

: Detectable line for DTC

: Non-detectable line for DTC

M : With M/T

A : With A/T

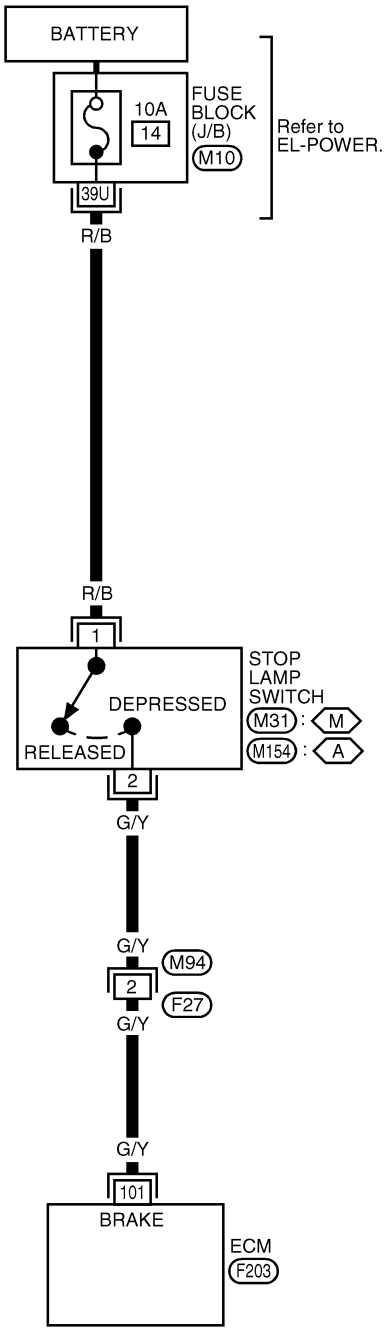

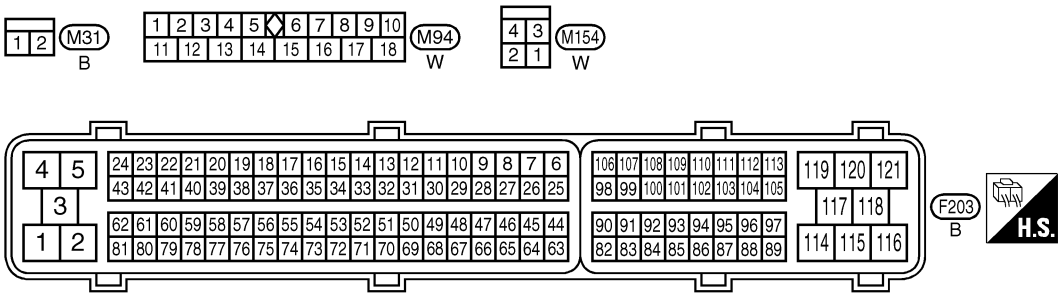

REFER TO THE FOLLOWING.

M10

-FUSE BLOCK-JUNCTION BOX (J/B)

MEC120E

Diagnostic Procedure

NAEC1313

1 CHECK STOP LAMP SWITCH CIRCUIT

1. Turn ignition switch OFF.
2. Check the stop lamp when depressing and releasing the brake pedal.

Brake pedal	Stop lamp
Fully released	Not illuminated
Depressed	Illuminated

MTBL1138

OK or NG

OK	▶	GO TO 4.
NG	▶	GO TO 2.

2 CHECK STOP LAMP SWITCH POWER SUPPLY CIRCUIT

1. Disconnect stop lamp switch harness connector.

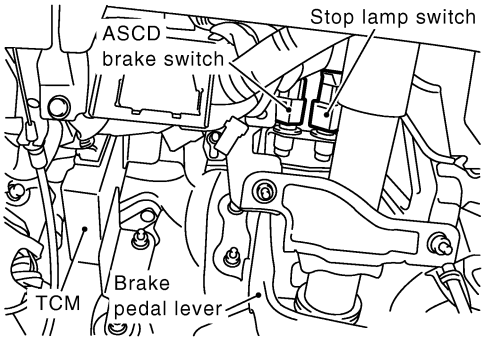

SEC549D

2. Check voltage between stop lamp switch terminal 1 and ground with CONSULT-II or tester.

M/T models

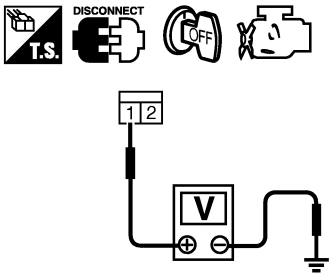

A/T models

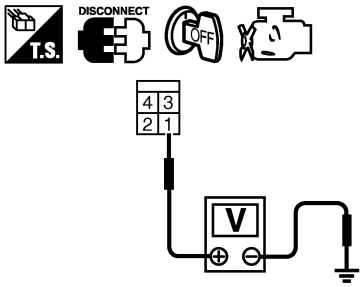

PBIB2284E

Voltage: Battery voltage

OK or NG

OK	▶	GO TO 4.
NG	▶	GO TO 3.

3 DETECT MALFUNCTIONING PART

Check the following.
- 10A fuse
- Fuse block (J/B) connector M10
- Harness for open and short between stop lamp switch and battery

	▶	Repair open circuit or short to ground or short to power in harness or connectors.

4	CHECK STOP LAMP SWITCH INPUT SIGNAL CIRCUIT FOR OPEN AND SHORT

1. Disconnect ECM harness connector.
2. Disconnect stop lamp switch harness connector.

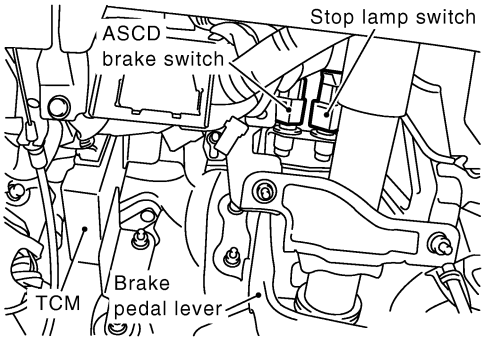

SEC549D

3. Check harness continuity between ECM terminal 101 and stop lamp switch terminal 2.
   Refer to Wiring Diagram.
   Continuity should exist.
4. Also check harness for short to ground and short to power.

OK or NG

OK	▶	GO TO 6.
NG	▶	GO TO 5.

5	DETECT MALFUNCTIONING PART

Check the following.
- Harness connector M94, F27
- Harness for open and short between ECM and stop lamp switch

	▶	Repair open circuit or short to ground or short to power in harness or connectors.

6	CHECK STOP LAMP SWITCH

Refer to "Component Inspection", EC-674.

OK or NG

OK	▶	GO TO 7.
NG	▶	Replace stop lamp switch.

7	CHECK INTERMITTENT INCIDENT

Refer to "TROUBLE DIAGNOSIS FOR INTERMITTENT INCIDENT", EC-155.

	▶	**INSPECTION END**

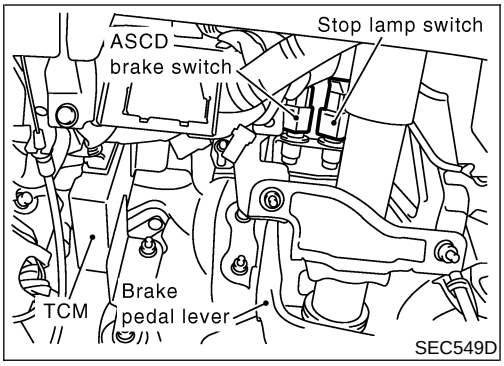

SEC549D

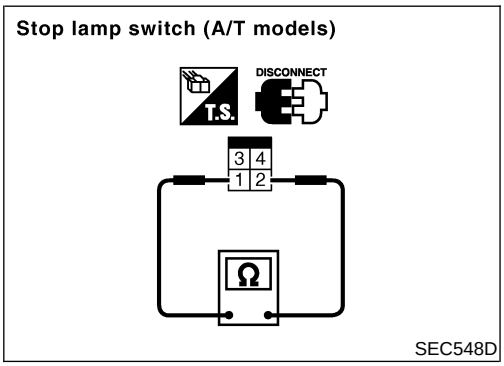

SEC548D

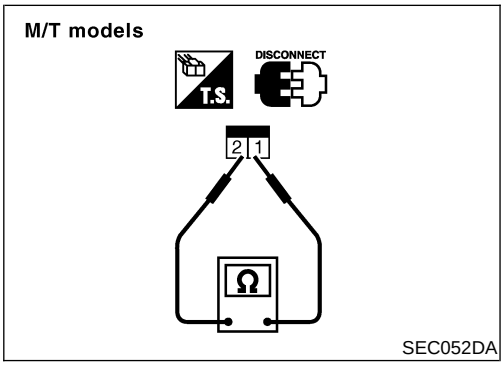

SEC052DA

Component Inspection

=NAEC1314

STOP LAMP SWITCH

1. Disconnect stop lamp switch harness connector.

2. Check continuity between stop lamp switch terminals 1 and 2 under the following conditions.

Conditions	Continuity
Brake pedal fully released	Should not exist.
Brake pedal depressed	Should exist.

3. If NG, replace stop lamp switch.

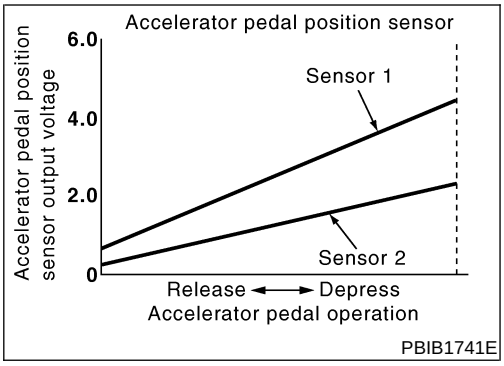

Component Description

NAEC1316

The accelerator pedal position sensor is installed on the upper end of the accelerator pedal assembly. The sensor detects the accelerator position and sends a signal to the ECM.

Accelerator pedal position sensor has two sensors. These sensors are a kind of potentiometers which transform the accelerator pedal position into output voltage, and emit the voltage signal to the ECM. In addition, these sensors detect the opening and closing speed of the accelerator pedal and feed the voltage signals to the ECM. The ECM judges the current opening angle of the accelerator pedal from these signals and controls the throttle control motor based on these signals.

Idle position of the accelerator pedal is determined by the ECM receiving the signal from the accelerator pedal position sensor. The ECM uses this signal for the engine operation such as fuel cut.

CONSULT-II Reference Value in Data Monitor Mode

NAEC1317

Specification data are reference values.

MONITOR ITEM	CONDITION		SPECIFICATION
ACCEL SEN1	• Ignition switch: ON (engine stopped) • Shift lever: D (A/T models) “1st” (M/T models)	Accelerator pedal: Fully released	0.5 - 1.0V
		Accelerator pedal: Fully depressed	4.0 - 4.7V
ACCEL SEN2*	• Ignition switch: ON (engine stopped) • Shift lever: D (A/T models) 1st (M/T models)	Accelerator pedal: Fully released	0.3 - 1.2V
		Accelerator pedal: Fully depressed	3.9 - 4.8V
CLSD THL POS	• Ignition switch: ON (engine stopped) • Shift lever: D (A/T models) 1st (M/T models)	Accelerator pedal: Fully released	ON
		Accelerator pedal: Slightly depressed	OFF

*: Accelerator pedal position sensor 2 signal is converted by ECM internally. Thus, it differs from ECM terminal voltage signal.

ECM Terminals and Reference Value

NAEC1323

Specification data are reference values and are measured between each terminal and ground.

CAUTION:

Do not use ECM ground terminals when measuring input/output voltage. Doing so may result in damage to the ECM’s transistor. Use a ground other than ECM terminals, such as the ground.

TERMINAL NO.	WIRE COLOR	ITEM	CONDITION	DATA (DC Voltage)
82	B/R	Sensor ground (APP sensor 1)	**[Engine is running]** • **Warm-up condition** • Idle speed	Approximately 0V
83	L	Sensor ground (APP sensor 2)	**[Ignition switch ON]**	Approximately 0V

ECM Terminals and Reference Value (Cont'd)

TERMINAL NO.	WIRE COLOR	ITEM	CONDITION	DATA (DC Voltage)
90	L	Sensor power supply (APP sensor 1)	**[Ignition switch ON]**	Approximately 5V
91	W/R	Sensor power supply (APP sensor 2)	**[Ignition switch ON]**	Approximately 5V
98	R	Accelerator pedal position sensor 2	**[Ignition switch ON]** ● Engine stopped ● Shift lever: D (A/T models) ● Shift lever position is 1st (M/T models) ● Accelerator pedal fully released	0.15 - 0.6V
			[Ignition switch ON] ● Engine stopped ● Shift lever: D (A/T models) ● Shift lever position is 1st (M/T models) ● Accelerator pedal fully depressed	1.95 - 2.4V
106	L	Accelerator pedal position sensor 1	**[Ignition switch ON]** ● Engine stopped ● Shift lever: D (A/T models) ● Shift lever position is 1st (M/T models) ● Accelerator pedal fully released	0.5 - 1.0V
			[Ignition switch ON] ● Engine stopped ● Shift lever: D (A/T models) ● Shift lever position is 1st (M/T models) ● Accelerator pedal fully depressed	3.9 - 4.7V

On Board Diagnosis Logic

NAEC1318

These self-diagnoses have the one trip detection logic.

NOTE:
If DTC P2122 or P2123 is displayed with DTC P1229, first perform the trouble diagnosis for DTC P1229. Refer to EC-562.

DTC No.	Trouble diagnosis name	DTC Detecting Condition	Possible Cause
P2122 2122	Accelerator pedal position sensor 1 circuit low input	An excessively low voltage from the APP sensor 1 is sent to ECM.	● Harness or connectors (The APP sensor 1 circuit is open or shorted.) ● Accelerator pedal position sensor (Accelerator pedal position sensor 1)
P2123 2123	Accelerator pedal position sensor 1 circuit high input	An excessively high voltage from the APP sensor 1 is sent to ECM.	

FAIL-SAFE MODE

NAEC1318S01

When the malfunction is detected, ECM enters in fail-safe mode and the MIL lights up.

Engine operation condition in fail-safe mode
The ECM controls the electric throttle control actuator in regulating the throttle opening in order for the idle position to be within +10 degrees. The ECM regulates the opening speed of the throttle valve to be slower than the normal condition. So, the acceleration will be poor.

DTC Confirmation Procedure

NAEC1319

NOTE:
If DTC Confirmation Procedure has been previously conducted, always turn ignition switch OFF and wait at least 10 seconds before conducting the next test.

TESTING CONDITION:
Before performing the following procedure, confirm that battery voltage is more than 8V at idle.

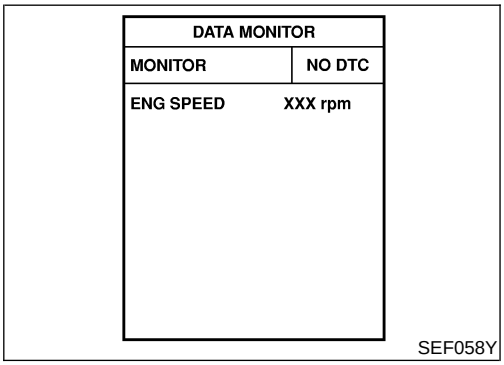

With CONSULT-II

1. Turn ignition switch ON.
2. Select “DATA MONITOR” mode with CONSULT-II.
3. Start engine and let it idle for 1 second.
4. If DTC is detected, go to “Diagnostic Procedure”, EC-679.

With GST

Follow the procedure “WITH CONSULT-II” above.

Wiring Diagram

NAEC1320

EC-APPS1-01

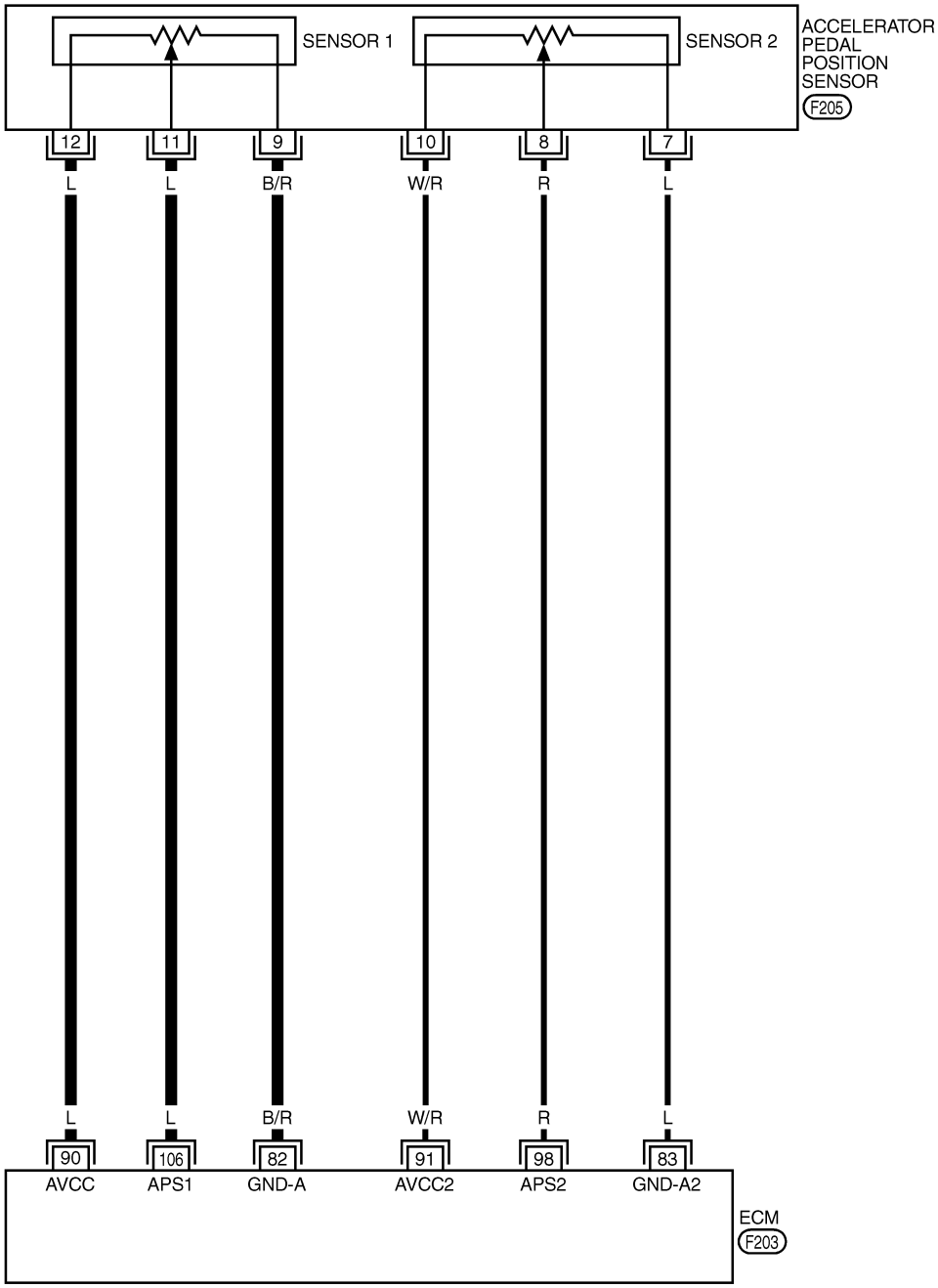

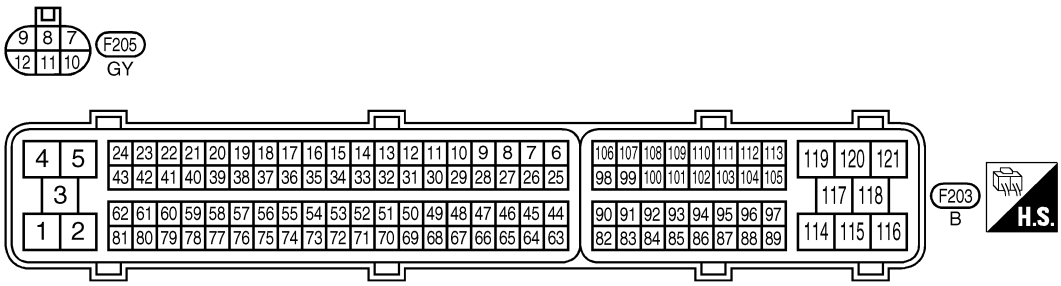

MEC184E

Diagnostic Procedure

NAEC1321

1	CHECK GROUND CONNECTIONS

1. Turn ignition switch OFF.
2. Loosen and retighten three ground screws on the body.
   Refer to “Ground Inspection”, EC-165.

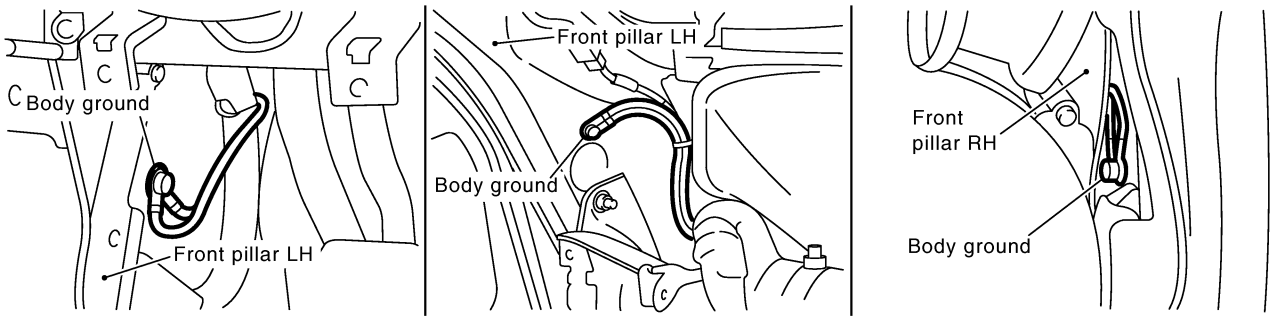

SEC997D

OK or NG

OK	▶	GO TO 2.
NG	▶	Repair or replace ground connections.

2	CHECK APP SENSOR 1 POWER SUPPLY CIRCUIT

1. Disconnect accelerator pedal position (APP) sensor harness connector.
2. Turn ignition switch ON.

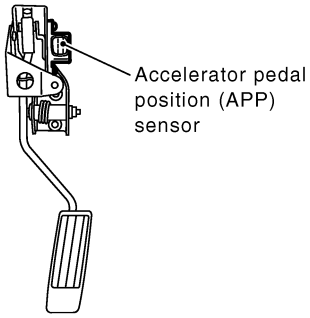

SEC550D

3. Check voltage between APP sensor terminal 12 and ground with CONSULT-II or tester.

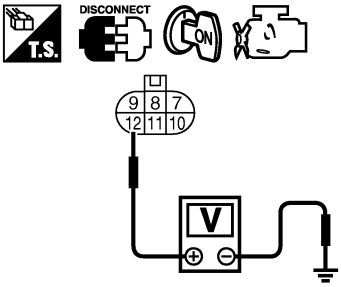

SEC551D

Voltage: Approximately 5V

OK or NG

OK	▶	GO TO 3.
NG	▶	Repair open circuit or short to ground or short to power in harness or connectors.

3	CHECK APP SENSOR 1 GROUND CIRCUIT FOR OPEN AND SHORT
1. Turn ignition switch OFF. 2. Disconnect ECM harness connector. 3. Check harness continuity between APP sensor terminal 9 and ECM terminal 82. Refer to Wiring Diagram. **Continuity should exist.** 4. Also check harness for short to ground and short to power.	
OK or NG	
OK ▶	GO TO 4.
NG ▶	Repair open circuit or short to ground or short to power in harness or connectors.

4	CHECK APP SENSOR 1 INPUT SIGNAL CIRCUIT FOR OPEN AND SHORT
1. Check harness continuity between ECM terminal 106 and APP sensor terminal 11. Refer to Wiring Diagram **Continuity should exist.** 2. Also check harness for short to ground and short to power.	
OK or NG	
OK ▶	GO TO 5.
NG ▶	Repair open circuit or short to ground or short to power in harness or connectors.

5	CHECK APP SENSOR
Refer to "Component Inspection", EC-681.	
OK or NG	
OK ▶	GO TO 7.
NG ▶	GO TO 6.

6	REPLACE ACCELERATOR PEDAL ASSEMBLY
1. Replace accelerator pedal assembly. 2. Perform "Accelerator Pedal Released Position Learning", EC-73. 3. Perform "Throttle Valve Closed Position Learning", EC-73. 4. Perform "Idle Air Volume Learning", EC-73.	
▶	**INSPECTION END**

7	CHECK INTERMITTENT INCIDENT
Refer to "TROUBLE DIAGNOSIS FOR INTERMITTENT INCIDENT", EC-155.	
▶	**INSPECTION END**

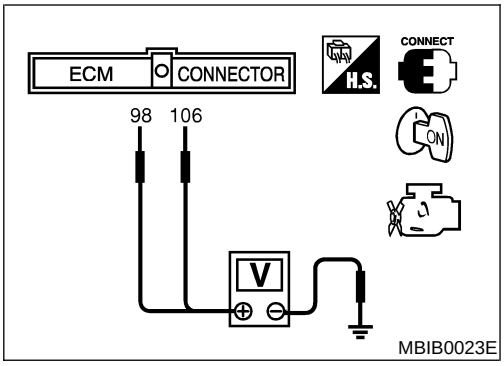

Component Inspection

=NAEC1322

ACCELERATOR PEDAL POSITION SENSOR

1. Reconnect all harness connectors disconnected.
2. Turn ignition switch ON.
3. Check voltage between ECM terminals 106 (APP sensor 1 signal), 98 (APP sensor 2 signal) and ground under the following conditions.

Terminal	Accelerator pedal	Voltage
106 (Accelerator pedal position sensor 1)	Fully released	0.5 - 1.0V
	Fully depressed	3.9 - 4.7V
98 (Accelerator pedal position sensor 2)	Fully released	0.15 - 0.6V
	Fully depressed	1.95 - 2.4V

4. If NG, replace accelerator pedal assembly.
5. Perform “Accelerator Pedal Released Position Learning”, EC-73.
6. Perform “Throttle Valve Closed Position Learning”, EC-73.
7. Perform “Idle Air Volume Learning”, EC-73.

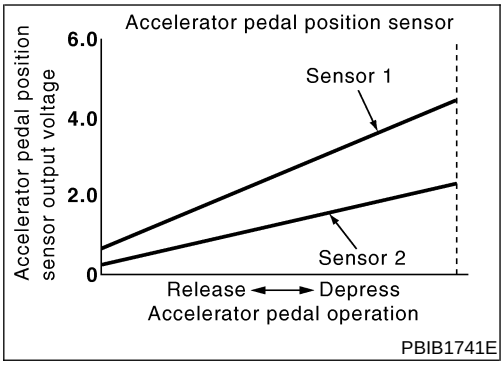

Component Description

NAEC1324

The accelerator pedal position sensor is installed on the upper end of the accelerator pedal assembly. The sensor detects the accelerator position and sends a signal to the ECM.

Accelerator pedal position sensor has two sensors. These sensors are a kind of potentiometers which transform the accelerator pedal position into output voltage, and emit the voltage signal to the ECM. In addition, these sensors detect the opening and closing speed of the accelerator pedal and feed the voltage signals to the ECM. The ECM judges the current opening angle of the accelerator pedal from these signals and controls the throttle control motor based on these signals.

Idle position of the accelerator pedal is determined by the ECM receiving the signal from the accelerator pedal position sensor. The ECM uses this signal for the engine operation such as fuel cut.

CONSULT-II Reference Value in Data Monitor Mode

NAEC1325

Specification data are reference values.

MONITOR ITEM	CONDITION		SPECIFICATION
ACCEL SEN1	• Ignition switch: ON (engine stopped) • Shift lever: D (A/T models) 1st (M/T models)	Accelerator pedal: Fully released	0.5 - 1.0V
		Accelerator pedal: Fully depressed	4.0 - 4.7V
ACCEL SEN2*	• Ignition switch: ON (engine stopped) • Shift lever: D (A/T models) 1st (M/T models)	Accelerator pedal: Fully released	0.3 - 1.2V
		Accelerator pedal: Fully depressed	3.9 - 4.8V
CLSD THL POS	• Ignition switch: ON (engine stopped) • Shift lever: D (A/T models) 1st (M/T models)	Accelerator pedal: Fully released	ON
		Accelerator pedal: Slightly depressed	OFF

*: Accelerator pedal position sensor 2 signal is converted by ECM internally. Thus, it differs from ECM terminal voltage signal.

ECM Terminals and Reference Value

NAEC1331

Specification data are reference values and are measured between each terminal and ground.

CAUTION:

Do not use ECM ground terminals when measuring input/output voltage. Doing so may result in damage to the ECM's transistor. Use a ground other than ECM terminals, such as the ground.

TERMINAL NO.	WIRE COLOR	ITEM	CONDITION	DATA (DC Voltage)
47	L	Sensor power supply (Throttle position sensor)	**[Ignition switch ON]**	Approximately 5V
82	B/R	Sensor ground (APP sensor 1)	**[Engine is running]** • **Warm-up condition** • Idle speed	Approximately 0V

TERMINAL NO.	WIRE COLOR	ITEM	CONDITION	DATA (DC Voltage)
83	L	Sensor ground (APP sensor 2)	**[Ignition switch ON]**	Approximately 0V
90	L	Sensor power supply (APP sensor 1)	**[Ignition switch ON]**	Approximately 5V
91	W/R	Sensor power supply (APP sensor 2)	**[Ignition switch ON]**	Approximately 5V
98	R	Accelerator pedal position sensor 2	**[Ignition switch ON]** ● Engine stopped ● Shift lever: D (A/T models) ● Shift lever position is 1st (M/T models) ● Accelerator pedal fully released	0.15 - 0.6V
			[Ignition switch ON] ● Engine stopped ● Shift lever: D (A/T models) ● Shift lever position is 1st (M/T models) ● Accelerator pedal fully depressed	1.95 - 2.4V
106	L	Accelerator pedal position sensor 1	**[Ignition switch ON]** ● Engine stopped ● Shift lever: D (A/T models) ● Shift lever position is 1st (M/T models) ● Accelerator pedal fully released	0.5 - 1.0V
			[Ignition switch ON] ● Engine stopped ● Shift lever: D (A/T models) ● Shift lever position is 1st (M/T models) ● Accelerator pedal fully depressed	3.9 - 4.7V

On Board Diagnosis Logic

NAEC1326

These self-diagnoses have the one trip detection logic.

DTC No.	Trouble diagnosis name	DTC Detecting Condition	Possible Cause
P2127 2127	Accelerator pedal position sensor 2 circuit low input	An excessively low voltage from the APP sensor 2 is sent to ECM.	● Harness or connectors (The APP sensor 2 circuit is open or shorted.) (TP sensor circuit is shorted.) ● Accelerator pedal position sensor (Accelerator pedal position sensor 2) ● Electric throttle control actuator (TP sensors 1 and 2)
P2128 2128	Accelerator pedal position sensor 2 circuit high input	An excessively high voltage from the APP sensor 2 is sent to ECM.	

FAIL-SAFE MODE

NAEC1326S01

When the malfunction is detected, ECM enters fail-safe mode and the MIL lights up.

Engine operating condition in fail-safe mode
The ECM controls the electric throttle control actuator in regulating the throttle opening in order for the idle position to be within +10 degrees. The ECM regulates the opening speed of the throttle valve to be slower than the normal condition. So, the acceleration will be poor.

DTC Confirmation Procedure

NAEC1327

NOTE:
If DTC Confirmation Procedure has been previously conducted, always turn ignition switch OFF and wait at least 10 seconds before conducting the next test.

TESTING CONDITION:
Before performing the following procedure, confirm that battery voltage is more than 8V at idle.

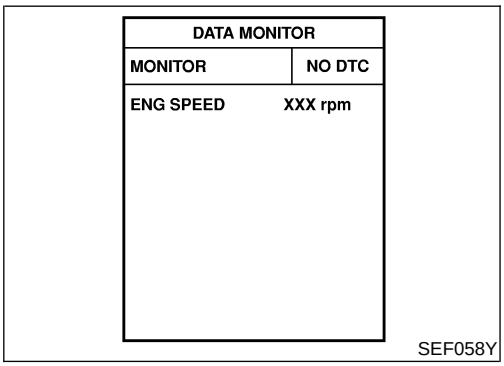

With CONSULT-II

1) Turn ignition switch ON.
2) Select “DATA MONITOR” mode with CONSULT-II.
3) Start engine and let it idle for 1 second.
4) If DTC is detected, go to “Diagnostic Procedure”, EC-686.

With GST

Follow the procedure “With CONSULT-II” above.

Wiring Diagram

NAEC1328

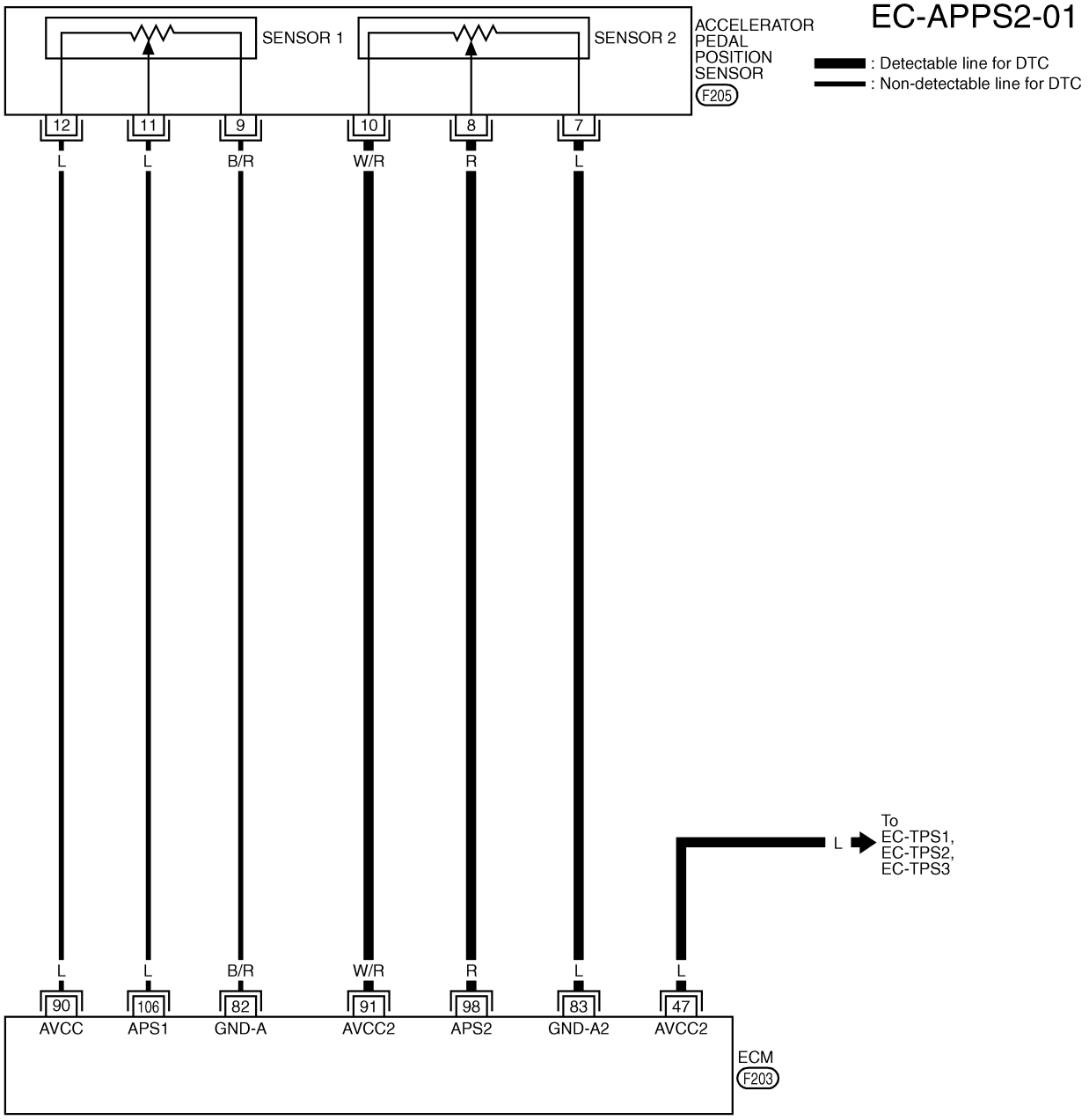

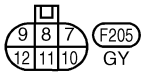

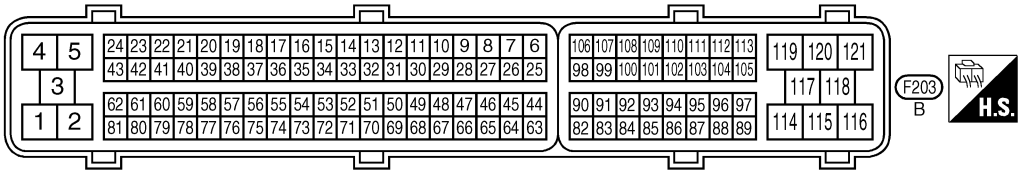

MEC747E

Diagnostic Procedure

NAEC1329

1	CHECK GROUND CONNECTIONS

1. Turn ignition switch OFF.
2. Loosen and retighten three ground screws on the body.
   Refer to “Ground Inspection”, EC-165.

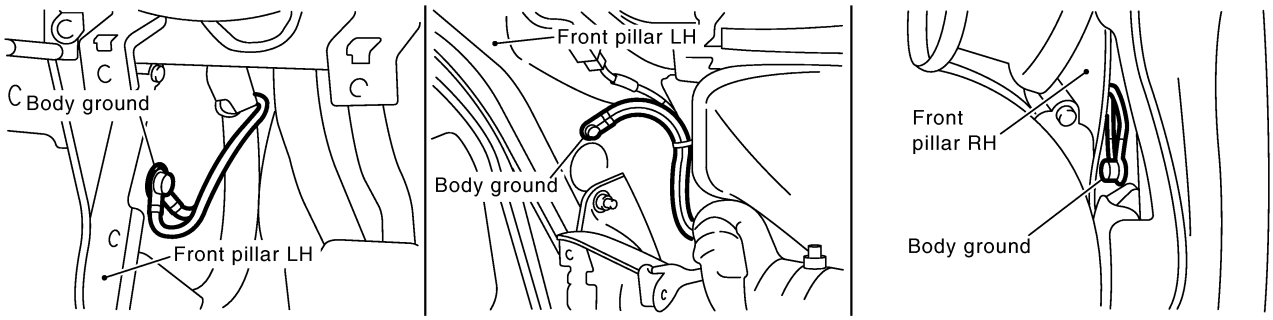

SEC997D

OK or NG

OK	▶	GO TO 2.
NG	▶	Repair or replace ground connections.

2	CHECK APP SENSOR 2 POWER SUPPLY CIRCUIT-I

1. Disconnect accelerator pedal position (APP) sensor harness connector.
2. Turn ignition switch ON.

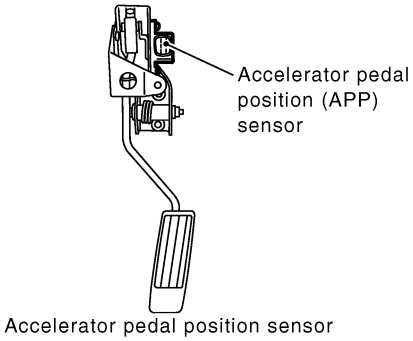

SEC550D

3. Check voltage between APP sensor terminal 10 and ground with CONSULT-II or tester.

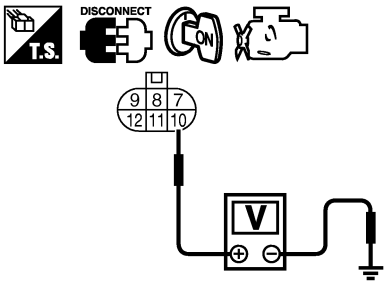

SEC552D

Voltage: Approximately 5V

OK or NG

OK	▶	GO TO 7.
NG	▶	GO TO 3.

3	CHECK APP SENSOR 2 POWER SUPPLY CIRCUIT-II

1. Turn ignition switch OFF.
2. Disconnect ECM harness connector.
3. Check harness continuity between APP sensor terminal 10 and ECM terminal 91.
   Refer to Wiring Diagram.
   Continuity should exist.

OK or NG

OK	▶	GO TO 4.
NG	▶	Repair or replace open circuit.

4	CHECK APP SENSOR 2 POWER SUPPLY CIRCUIT-III

Check harness for short to power and short to ground, between the following terminals.
- ECM terminal 47 and electric throttle control actuator terminal 1. Refer to "Wiring Diagram", EC-693.
- ECM terminal 91 and APP sensor terminal 10. Refer to "Wiring Diagram", EC-685.

OK or NG

OK	▶	GO TO 5.
NG	▶	Repair short to ground or short to power in harness or connectors.

5	CHECK THROTTLE POSITION SENSOR

Refer to "Component Inspection", EC-696.

OK or NG

OK	▶	GO TO 11.
NG	▶	GO TO 6.

6	REPLACE ELECTRIC THROTTLE CONTROL ACTUATOR

1. Replace the electric throttle control actuator.
2. Perform "Throttle Valve Closed Position Learning", EC-73.
3. Perform "Idle Air Volume Learning", EC-73.

	▶	**INSPECTION END**

7	CHECK APP SENSOR 2 GROUND CIRCUIT FOR OPEN AND SHORT

1. Turn ignition switch OFF.
2. Disconnect ECM harness connector.
3. Check harness continuity between APP sensor terminal 7 and ECM terminal 83.
   Refer to Wiring Diagram.
   Continuity should exist.
4. Also check harness for short to ground and short to power.

OK or NG

OK	▶	GO TO 8.
NG	▶	Repair open circuit or short to ground or short to power in harness or connectors.

8	CHECK APP SENSOR 2 INPUT SIGNAL CIRCUIT FOR OPEN AND SHORT	
1. Check harness continuity between ECM terminal 98 and APP sensor terminal 8. Refer to Wiring Diagram. **Continuity should exist.** 2. Also check harness for short to ground and short to power.		
OK or NG		
OK	▶	GO TO 9.
NG	▶	Repair open circuit or short to ground or short to power in harness or connectors.

9	CHECK APP SENSOR	
Refer to "Component Inspection", EC-689.		
OK or NG		
OK	▶	GO TO 11.
NG	▶	GO TO 10.

10	REPLACE ACCELERATOR PEDAL ASSEMBLY	
1. Replace accelerator pedal assembly. 2. Perform "Accelerator Pedal Released Position Learning", EC-73. 3. Perform "Throttle Valve Closed Position Learning", EC-73. 4. Perform "Idle Air Volume Learning", EC-73.		
	▶	**INSPECTION END**

11	CHECK INTERMITTENT INCIDENT	
Refer to "TROUBLE DIAGNOSIS FOR INTERMITTENT INCIDENT", EC-155.		
	▶	**INSPECTION END**

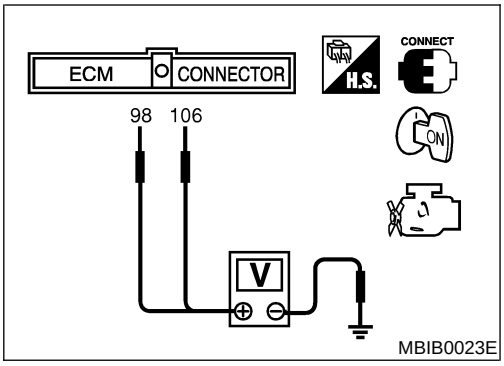

Component Inspection

=NAEC1330

ACCELERATOR PEDAL POSITION SENSOR

1. Reconnect all harness connectors disconnected.
2. Turn ignition switch ON.
3. Check voltage between ECM terminals 106 (APP sensor 1 signal), 98 (APP sensor 2 signal) and ground under the following conditions.

Terminal	Accelerator pedal	Voltage
106 (Accelerator pedal position sensor 1)	Fully released	0.5 - 1.0V
	Fully depressed	3.9 - 4.7V
98 (Accelerator pedal position sensor 2)	Fully released	0.15 - 0.6V
	Fully depressed	1.95 - 2.4V

4. If NG, replace accelerator pedal assembly.
5. Perform “Accelerator Pedal Released Position Learning”, EC-73.
6. Perform “Throttle Valve Closed Position Learning”, EC-73.
7. Perform “Idle Air Volume Learning”, EC-73.

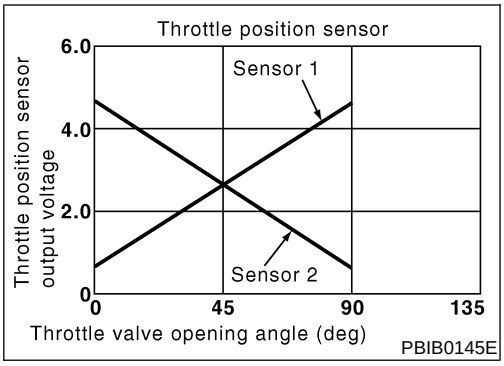

Component Description

NAEC1332

Electric throttle control actuator Consists of throttle control motor, throttle position sensor, etc. The throttle position sensor responds to the throttle vale movement.

The throttle position sensor has the two sensors. These sensors are a kind of potentiometers which transform the throttle valve position into output voltage, and emit the voltage signal to the ECM. In addition, these sensors detect the opening and closing speed of the throttle valve and feed the voltage signals to the ECM. The ECM judges the current opening angle of the throttle valve form these signal and the ECM controls the throttle control motor to make the throttle valve opening angle properly in response to driving condition.

CONSULT-II Reference Value in Data Monitor Mode

NAEC1333

Specification data are reference values.

MONITOR ITEM	CONDITION		SPECIFICATION
THRTL SEN1 THRTL SEN2*	• Ignition switch: ON (Engine stopped) • Shift lever: D (A/T model) 1st (M/T model)	Accelerator pedal: Fully released	More than 0.36V
		Accelerator pedal: Fully depressed	Less than 4.75V

*: Throttle position sensor 2 signal is converted by ECM internally. Thus, it differs from ECM terminal voltage signal.

ECM Terminals and Reference Value

NAEC1339

Specification data are reference values and are measured between each terminal and ground.

CAUTION:

Do not use ECM ground terminals when measuring input/output voltage. Doing so may result in damage to the ECM's transistor. Use a ground other than ECM terminals, such as the ground.

TERMINAL NO.	WIRE COLOR	ITEM	CONDITION	DATA (DC Voltage)
47	L	Sensor power supply	**[Ignition switch ON]**	Approximately 5V
50	BR	Throttle position sensor 1	**[Ignition switch ON]** • Engine stopped • Shift lever position is D (A/T models) • Shift lever position is 1st (M/T models) • Accelerator pedal fully released	More than 0.36V
			[Ignition switch ON] • Engine stopped • Shift lever position is D (A/T models) • Shift lever position is 1st (M/T models) • Accelerator pedal fully depressed	Less than 4.75V

ECM Terminals and Reference Value (Cont'd)

TERMINAL NO.	WIRE COLOR	ITEM	CONDITION	DATA (DC Voltage)
66	BR/Y	Sensor ground	**[Engine is running]** ● **Warm-up condition** ● Idle speed	Approximately 0V
69	BR/W	Throttle position sensor 2	**[Ignition switch ON]** ● Engine stopped ● Shift lever position is D (A/T models) ● Shift lever position is 1st (M/T models) ● Accelerator pedal fully released	Less than 4.75V
			[Ignition switch ON] ● Engine stopped ● Shift lever position is D (A/T models) ● Shift lever position is 1st (M/T models) ● Accelerator pedal fully depressed	More than 0.36V
91	W/R	Sensor power supply (APP sensor 2)	**[Ignition switch ON]**	Approximately 5V

On Board Diagnosis Logic

NAEC1334

This self-diagnosis has the one trip detection logic.

DTC No.	Trouble diagnosis name	DTC Detecting Condition	Possible Cause
P2135 2135	Throttle position sensor circuit range/ performance problem	Rationally incorrect voltage is sent to ECM compared with the signals from TP sensor 1 and TP sensor 2.	● Harness or connector (The TP sensor 1 and 2 circuit is open or shorted.) (APP sensor 2 circuit is shorted.) ● Electric throttle control actuator (TP sensor 1 and 2) ● Accelerator pedal position sensor

FAIL-SAFE MODE

NAEC1334S01

When the malfunction is detected, the ECM enters fail-safe mode and the MIL lights up.

Engine operation condition in fail-safe mode
The ECM controls the electric throttle control actuator in regulating the throttle opening in order for the idle position to be within +10 degrees. The ECM regulates the opening speed of the throttle valve to be slower than the normal condition. So, the acceleration will be poor.

DTC Confirmation Procedure

NAEC1335

NOTE:

If DTC Confirmation Procedure has been previously conducted, always turn ignition switch OFF and wait at least 10 seconds before conducting the next test.

TESTING CONDITION:

Before performing the following procedure, confirm that battery voltage is more than 8V at idle.

DTC Confirmation Procedure (Cont'd)

DATA MONITOR	
MONITOR	NO DTC
ENG SPEED	XXX rpm

SEF058Y

With CONSULT-II

1. Turn ignition switch ON.
2. Select "DATA MONITOR" mode with CONSULT-II.
3. Start engine and let it idle for 1 second.
4. If DTC is detected, go to "Diagnostic Procedure", EC-694.

With GST

Follow the procedure "WITH CONSULT-II" above.

Wiring Diagram

NAEC1336

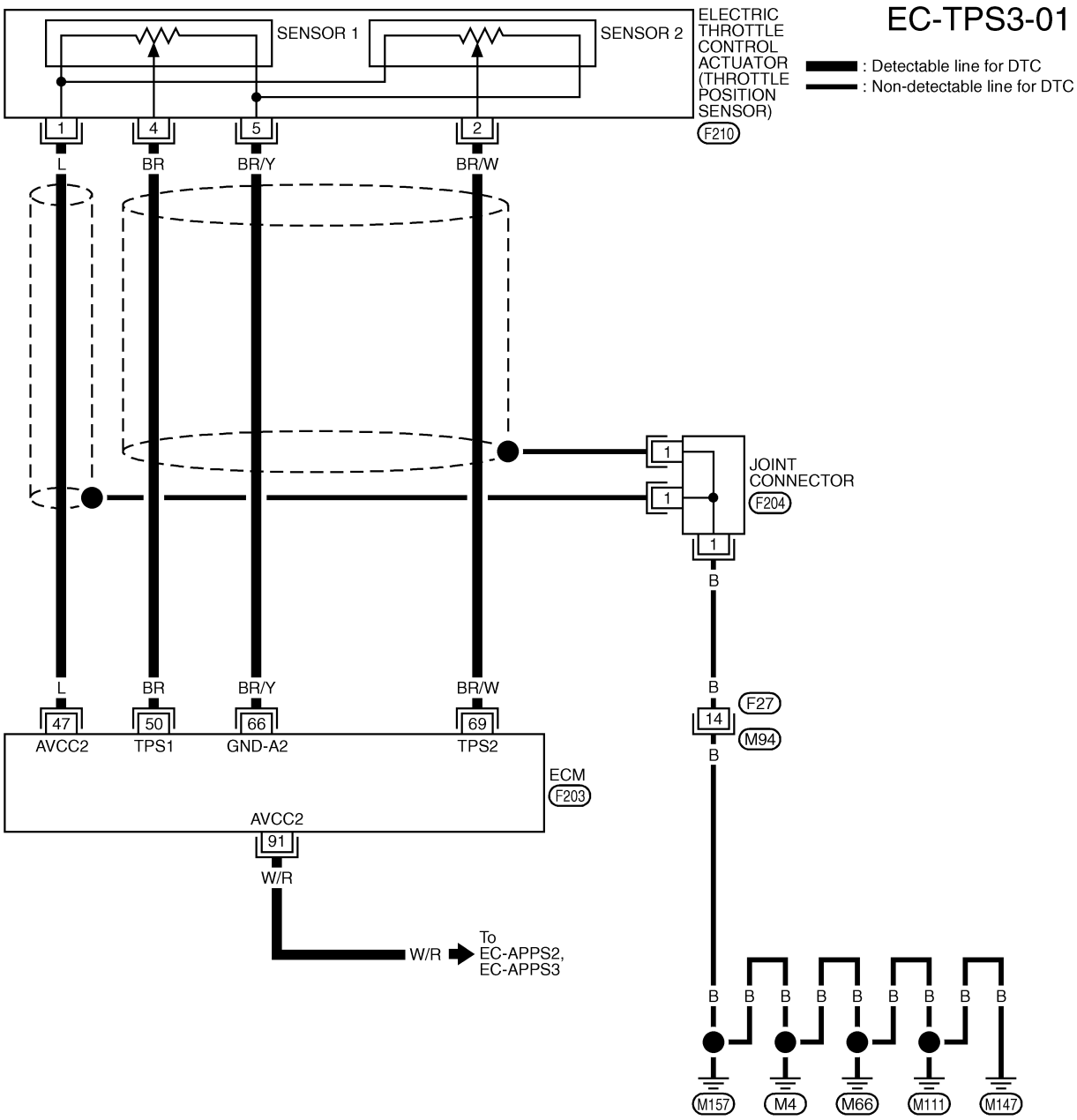

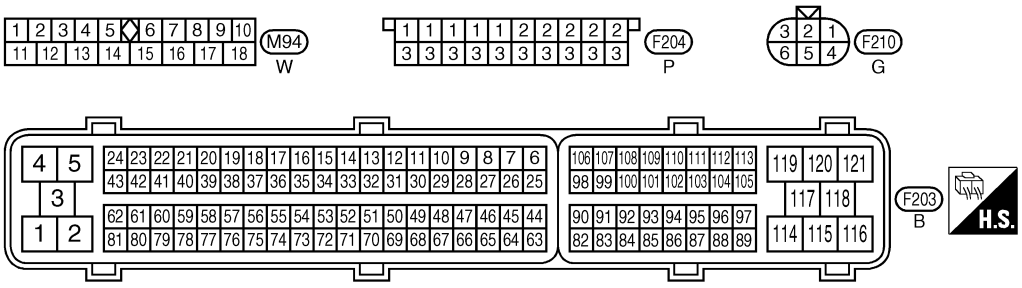

MEC748E

Diagnostic Procedure

NAEC1337

1	CHECK GROUND CONNECTIONS

1. Turn ignition switch OFF.
2. Loosen and retighten three ground screws on the body.
   Refer to “Ground Inspection”, EC-165.

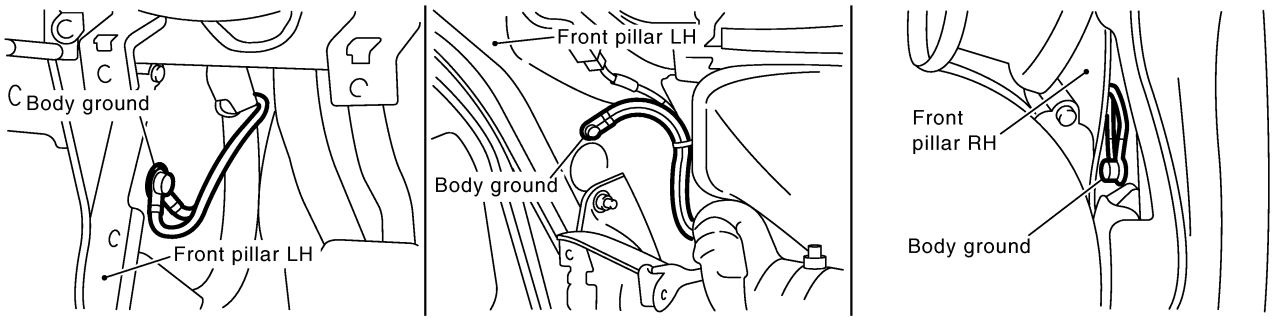

SEC997D

OK or NG

OK	▶	GO TO 2.
NG	▶	Repair or replace ground connections.

2	CHECK THROTTLE POSITION SENSOR POWER SUPPLY CIRCUIT-I

1. Disconnect electric throttle control actuator harness connector.
2. Turn ignition switch ON.

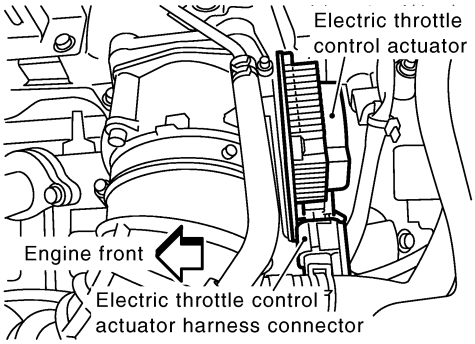

SEC433D

3. Check voltage between electric throttle control actuator terminal 1 and ground with CONSULT-II or tester.

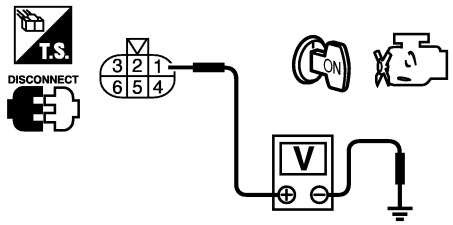

PBIB0082E

Voltage: Approximately 5V

OK or NG

OK	▶	GO TO 3.
NG	▶	Repair open circuit or short to ground or short to power in harness or connectors.

3	CHECK THROTTLE POSITION SENSOR 2 POWER SUPPLY CIRCUIT-II
1. Turn ignition switch OFF. 2. Disconnect ECM harness connector. 3. Check harness continuity between electric throttle control actuator terminal 1 and ECM terminal 47. Refer to Wiring Diagram. **Continuity should exist.**	
OK or NG	
OK ▶	GO TO 4.
NG ▶	Repair or replace open circuit.

4	CHECK THROTTLE POSITION SENSOR 2 POWER SUPPLY CIRCUIT-III
Check harness for short to power and short to ground, between the following terminals. ● ECM terminal 47 and electric throttle control actuator terminal 1. Refer to "Wiring Diagram", EC-693. ● ECM terminal 91 and APP sensor terminal 10. Refer to "Wiring Diagram", EC-685.	
OK or NG	
OK ▶	GO TO 5.
NG ▶	Repair short to ground or short to power in harness or connectors.

5	CHECK APP SENSOR
Refer to "Component Inspection", EC-689.	
OK or NG	
OK ▶	GO TO 11.
NG ▶	GO TO 6.

6	REPLACE ACCELERATOR PEDAL ASSEMBLY
1. Replace accelerator pedal assembly. 2. Perform "Accelerator Pedal Released Position Learning", EC-73. 3. Perform "Throttle Valve Closed Position Learning", EC-73. 4. Perform "Idle Air Volume Learning", EC-73.	
▶	**INSPECTION END**

7	CHECK THROTTLE POSITION SENSOR GROUND CIRCUIT FOR OPEN AND SHORT
1. Turn ignition switch OFF. 2. Disconnect ECM harness connector. 3. Check harness continuity between electric throttle control actuator terminal 5 and ECM terminal 66. Refer to Wiring Diagram. **Continuity should exist.** 4. Also check harness for short to ground and short to power.	
OK or NG	
OK ▶	GO TO 8.
NG ▶	Repair open circuit or short to ground or short to power in harness or connectors.

8	CHECK THROTTLE POSITION SENSOR INPUT SIGNAL CIRCUIT FOR OPEN AND SHORT	
1. Check harness continuity between ECM terminal 50 and electric throttle control actuator terminal 4, ECM terminal 69 and electric throttle control actuator terminal 2. Refer to Wiring Diagram. **Continuity should exist.** 2. Also check harness for short to ground and short to power.		
OK or NG		
OK	▶	GO TO 9.
NG	▶	Repair open circuit or short to ground or short to power in harness or connectors.

9	CHECK THROTTLE POSITION SENSOR	
Refer to "Component Inspection", EC-696.		
OK or NG		
OK	▶	GO TO 11.
NG	▶	GO TO 10.

10	REPLACE ELECTRIC THROTTLE CONTROL ACTUATOR	
1. Replace the electric throttle control actuator. 2. Perform "Throttle Valve Closed Position Learning", EC-73. 3. Perform "Idle Air Volume Learning", EC-73.		
	▶	**INSPECTION END**

11	CHECK INTERMITTENT INCIDENT	
Refer to "TROUBLE DIAGNOSIS FOR INTERMITTENT INCIDENT", EC-155.		
	▶	**INSPECTION END**

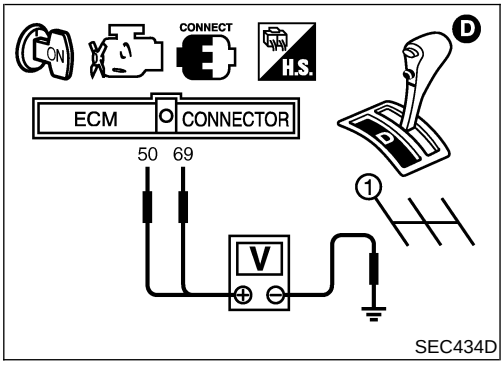

Component Inspection

NAEC1338

THROTTLE POSITION SENSOR

1. Reconnect all harness connectors disconnected.
2. Perform "Throttle Valve Closed Position Learning", EC-73.
3. Turn ignition switch ON.
4. Set selector lever to D position (A/T models) or 1st position (M/T models).
5. Check voltage between ECM terminals 50 (TP sensor 1), 69 (TP sensor 2) and ground under the following conditions.

Terminal	Accelerator pedal	Voltage
50 (Throttle position sensor 1)	Fully released	More than 0.36V
	Fully depressed	Less than 4.75V
69 (Throttle position sensor 2)	Fully released	Less than 4.75V
	Fully depressed	More than 0.36V

6. If NG, replace electric throttle control actuator and go to the next step.
7. Perform "Throttle Valve Closed Position Learning", EC-73.
8. Perform "Idle Air Volume Learning", EC-73.

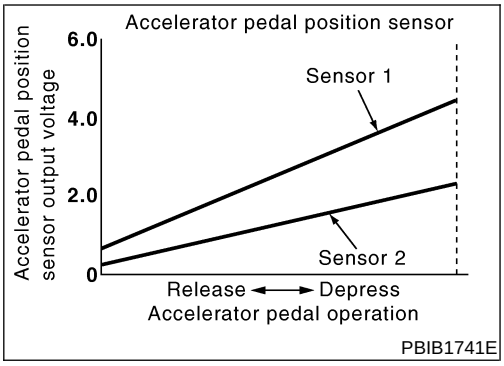

Component Description

NAEC1340

The accelerator pedal position sensor is installed on the upper end of the accelerator pedal assembly. The sensor detects the accelerator position and sends a signal to the ECM.

Accelerator pedal position sensor has two sensors. These sensors are a kind of potentiometers which transform the accelerator pedal position into output voltage, and emit the voltage signal to the ECM. In addition, these sensors detect the opening and closing speed of the accelerator pedal and feed the voltage signals to the ECM. The ECM judges the current opening angle of the accelerator pedal from these signals and controls the throttle control motor based on these signals.

Idle position of the accelerator pedal is determined by the ECM receiving the signal from the accelerator pedal position sensor. The ECM uses this signal for the engine operation such as fuel cut.

CONSULT-II Reference Value in Data Monitor Mode

NAEC1341

Specification data are reference values.

MONITOR ITEM	CONDITION		SPECIFICATION
ACCEL SEN1	• Ignition switch: ON (engine stopped) • Shift lever: D (A/T models) 1st (M/T models)	Accelerator pedal: Fully released	0.5 - 1.0V
		Accelerator pedal: Fully depressed	4.0 - 4.7V
ACCEL SEN2*	• Ignition switch: ON (engine stopped) • Shift lever: D (A/T models) 1st (M/T models)	Accelerator pedal: Fully released	0.3 - 1.2V
		Accelerator pedal: Fully depressed	3.9 - 4.8V
CLSD THL POS	• Ignition switch: ON (engine stopped) • Shift lever: D (A/T models) 1st (M/T models)	Accelerator pedal: Fully released	ON
		Accelerator pedal: Slightly depressed	OFF

*: Accelerator pedal position sensor 2 signal is converted by ECM internally. Thus, it differs from ECM terminal voltage signal.

ECM Terminals and Reference Value

NAEC1347

Specification data are reference values and are measured between each terminal and ground.

CAUTION:

Do not use ECM ground terminals when measuring input/output voltage. Doing so may result in damage to the ECM's transistor. Use a ground other than ECM terminals, such as the ground.

TERMINAL NO.	WIRE COLOR	ITEM	CONDITION	DATA (DC Voltage)
47	L	Sensor power supply (Throttle position sensor)	**[Ignition switch ON]**	Approximately 5V
82	B/R	Sensor ground (APP sensor 1)	**[Engine is running]** • **Warm-up condition** • Idle speed	Approximately 0V

ECM Terminals and Reference Value (Cont'd)

TERMINAL NO.	WIRE COLOR	ITEM	CONDITION	DATA (DC Voltage)
83	L	Sensor ground (APP sensor 2)	**[Ignition switch ON]**	Approximately 0V
90	L	Sensor power supply (APP sensor 1)	**[Ignition switch ON]**	Approximately 5V
91	W/R	Sensor power supply (APP sensor 2)	**[Ignition switch ON]**	Approximately 5V
98	R	Accelerator pedal position sensor 2	**[Ignition switch ON]** ● Engine stopped ● Accelerator pedal fully released	0.15 - 0.6V
			[Ignition switch ON] ● Engine stopped ● Accelerator pedal fully depressed	1.95 - 2.4V
106	L	Accelerator pedal position sensor 1	**[Ignition switch ON]** ● Engine stopped ● Accelerator pedal fully released	0.5 - 1.0V
			[Ignition switch ON] ● Engine stopped ● Accelerator pedal fully depressed	3.9 - 4.7V

On Board Diagnosis Logic

NAEC1342

This self-diagnosis has the one trip detection logic.

NOTE:
If DTC P2138 is displayed with DTC P1229, first perform the trouble diagnosis for DTC P1229. Refer to EC-562.

DTC No.	Trouble diagnosis name	DTC Detecting Condition	Possible Cause
P2138 2138	Accelerator pedal position sensor circuit range/performance problem	Rationally incorrect voltage is sent to ECM compared with the signals from APP sensor 1 and APP sensor 2.	● Harness or connector (The APP sensor 1 and 2 circuit is open or shorted.) (TP sensor circuit is shorted.) ● Accelerator pedal position sensor 1 and 2 ● Electric throttle control actuator (TP sensors 1 and 2)

FAIL-SAFE MODE

NAEC1342S01

When the malfunction is detected, ECM enters fail-safe mode and the MIL lights up.

Engine operation condition in fail-safe mode
The ECM controls the electric throttle control actuator in regulating the throttle opening in order for the idle position to be within +10 degrees. The ECM regulates the opening speed of the throttle valve to be slower than the normal condition. So, the acceleration will be poor.

DTC Confirmation Procedure

NAEC1343

NOTE:
If DTC Confirmation Procedure has been previously conducted, always turn ignition switch OFF and wait at least 10 seconds before conducting the next test.

TESTING CONDITION:
Before performing the following procedure, confirm that battery voltage is more than 8V at idle.

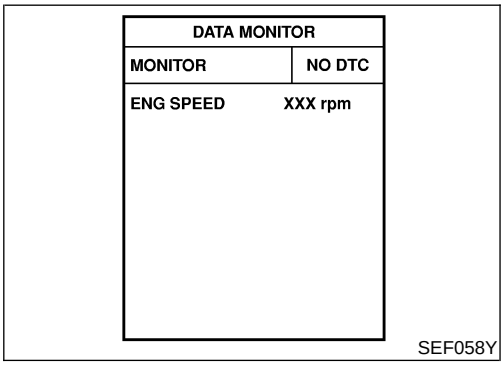

With CONSULT-II

1. Turn ignition switch ON.
2. Select “DATA MONITOR” mode with CONSULT-II.
3. Start engine and let it idle for 1 second.
4. If DTC is detected, go to “Diagnostic Procedure”, EC-701.

With GST

Follow the procedure “WITH CONSULT-II” above.

Wiring Diagram

NAEC1344

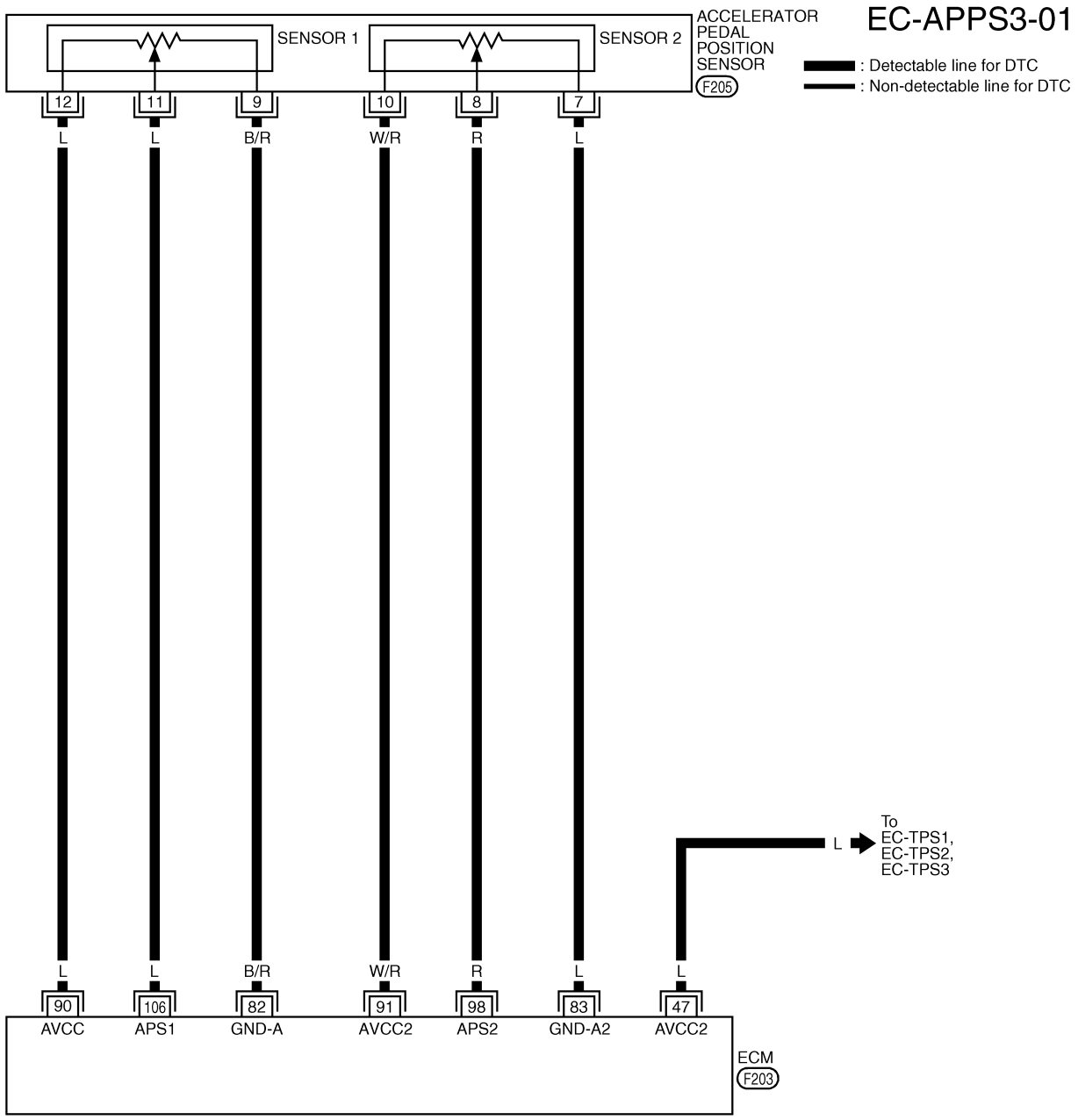

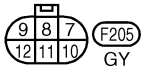

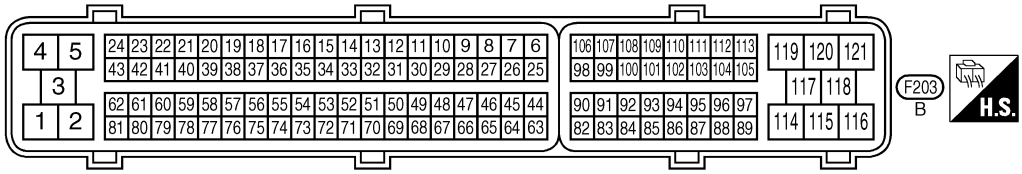

MEC749E

Diagnostic Procedure

NAEC1345

1	CHECK GROUND CONNECTIONS

1. Turn ignition switch OFF.
2. Loosen and retighten three ground screws on the body.
   Refer to “Ground Inspection”, EC-165.

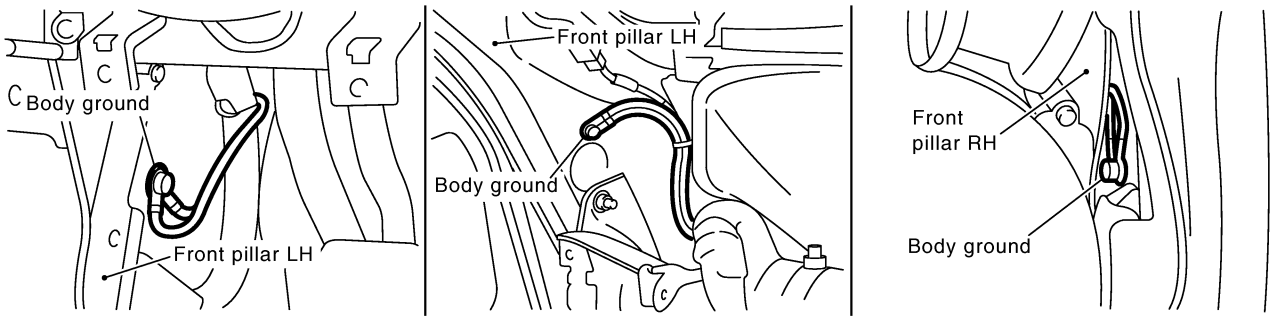

SEC997D

OK or NG

OK	▶	GO TO 2.
NG	▶	Repair or replace ground connections.

2	CHECK APP SENSOR 1 POWER SUPPLY CIRCUIT

1. Disconnect accelerator pedal position (APP) sensor harness connector.
2. Turn ignition switch ON.

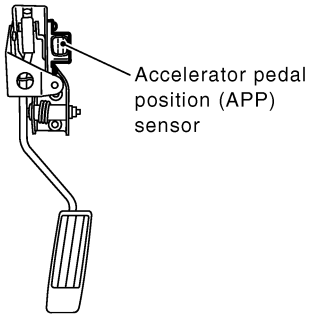

SEC550D

3. Check voltage between APP sensor terminal 12 and ground with CONSULT-II or tester.

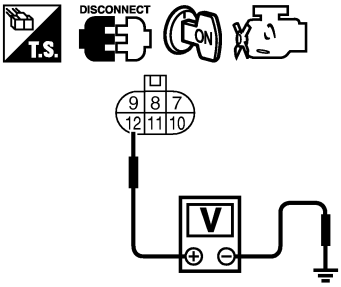

SEC551D

Voltage: Approximately 5V

OK or NG

OK	▶	GO TO 3.
NG	▶	Repair open circuit or short to ground or short to power in harness or connectors.

3	CHECK APP SENSOR 2 POWER SUPPLY CIRCUIT-I

Check voltage between APP sensor terminal 10 and ground with CONSULT-II or tester.

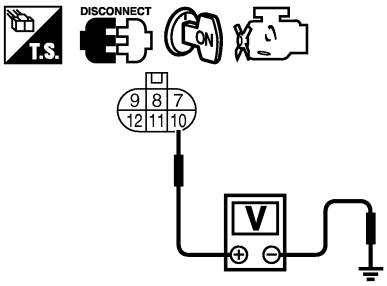

SEC552D

Voltage: Approximately 5V

OK or NG

OK	▶	GO TO 8.
NG	▶	GO TO 4.

4	CHECK APP SENSOR 2 POWER SUPPLY CIRCUIT-II

1. Turn ignition switch OFF.
2. Disconnect ECM harness connector.
3. Check harness continuity between APP sensor terminal 10 and ECM terminal 91.
   Refer to Wiring Diagram.
   Continuity should exist.

OK or NG

OK	▶	GO TO 5.
NG	▶	Repair or replace open circuit.

5	CHECK APP SENSOR 2 POWER SUPPLY CIRCUIT-III

Check harness for short to power and short to ground, between the following terminals.
- ECM terminal 47 and electric throttle control actuator terminal 1. Refer to "Wiring Diagram", EC-693.
- ECM terminal 91 and APP sensor terminal 10. Refer to "Wiring Diagram", EC-685.

OK or NG

OK	▶	GO TO 6.
NG	▶	Repair short to ground or short to power in harness or connectors.

6	CHECK THROTTLE POSITION SENSOR

Refer to "Component Inspection", EC-696.

OK or NG

OK	▶	GO TO 12.
NG	▶	GO TO 7.

7	REPLACE ELECTRIC THROTTLE CONTROL ACTUATOR

1. Replace the electric throttle control actuator.
2. Perform "Throttle Valve Closed Position Learning", EC-73.
3. Perform "Idle Air Volume Learning", EC-73.

	▶	**INSPECTION END**

8	CHECK APP SENSOR GROUND CIRCUIT FOR OPEN AND SHORT

1. Turn ignition switch OFF.
2. Disconnect ECM harness connector.
3. Check harness continuity between ECM terminal 82 and APP sensor terminal 9, ECM terminal 83 and APP sensor terminal 7.
   Refer to Wiring Diagram.
   Continuity should exist.
4. Also check harness for short to ground and short to power.

OK or NG

OK	▶	GO TO 9.
NG	▶	Repair open circuit or short to ground or short to power in harness or connectors.

9	CHECK APP SENSOR INPUT SIGNAL CIRCUIT FOR OPEN AND SHORT

1. Check harness continuity between ECM terminal 106 and APP sensor terminal 11, ECM terminal 98 and APP sensor terminal 8.
   Refer to Wiring Diagram
   Continuity should exist.
2. Also check harness for short to ground and short to power.

OK or NG

OK	▶	GO TO 10.
NG	▶	Repair open circuit or short to ground or short to power in harness or connectors.

10	CHECK APP SENSOR

Refer to "Component Inspection", EC-704.

OK or NG

OK	▶	GO TO 12.
NG	▶	Replace accelerator pedal assembly.

11	REPLACE ACCELERATOR PEDAL ASSEMBLY

1. Replace accelerator pedal assembly.
2. Perform "Accelerator Pedal Released Position Learning", EC-73.
3. Perform "Throttle Valve Closed Position Learning", EC-73.
4. Perform "Idle Air Volume Learning", EC-73.

	▶	**INSPECTION END**

12	CHECK INTERMITTENT INCIDENT

Refer to "TROUBLE DIAGNOSIS FOR INTERMITTENT INCIDENT", EC-155.

	▶	**INSPECTION END**

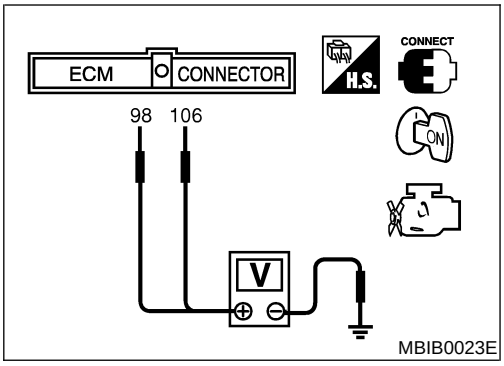

Component Inspection

=NAEC1346

ACCELERATOR PEDAL POSITION SENSOR

1. Reconnect all harness connectors disconnected.
2. Turn ignition switch ON.
3. Check voltage between ECM terminals 106 (APP sensor 1 signal), 98 (APP sensor 2 signal) and ground under the following conditions.

Terminal	Accelerator pedal	Voltage
106 (Accelerator pedal position sensor 1)	Fully released	0.5 - 1.0V
	Fully depressed	3.9 - 4.7V
98 (Accelerator pedal position sensor 2)	Fully released	0.15 - 0.6V
	Fully depressed	1.95 - 2.4V

4. If NG, replace accelerator pedal assembly.
5. Perform “Accelerator Pedal Released Position Learning”, EC-73.
6. Perform “Throttle Valve Closed Position Learning”, EC-73.
7. Perform “Idle Air Volume Learning”, EC-73.

Description

NAEC0596

SYSTEM DESCRIPTION

NAEC0596S01

Sensor	Input Signal to ECM	ECM function	Actuator
Mass air flow sensor	Amount of intake air	VIAS control	VIAS control solenoid valve
Throttle position sensor	Throttle position		
Accelerator pedal position sensor	Accelerator pedal position		
Crankshaft position sensor (POS) Camshaft position sensor (PHASE)	Engine speed* and piston position		
Engine coolant temperature sensor	Engine coolant temperature		
Battery	Battery voltage*		

*: ECM determines the start signal status by the signals of engine speed and battery voltage.

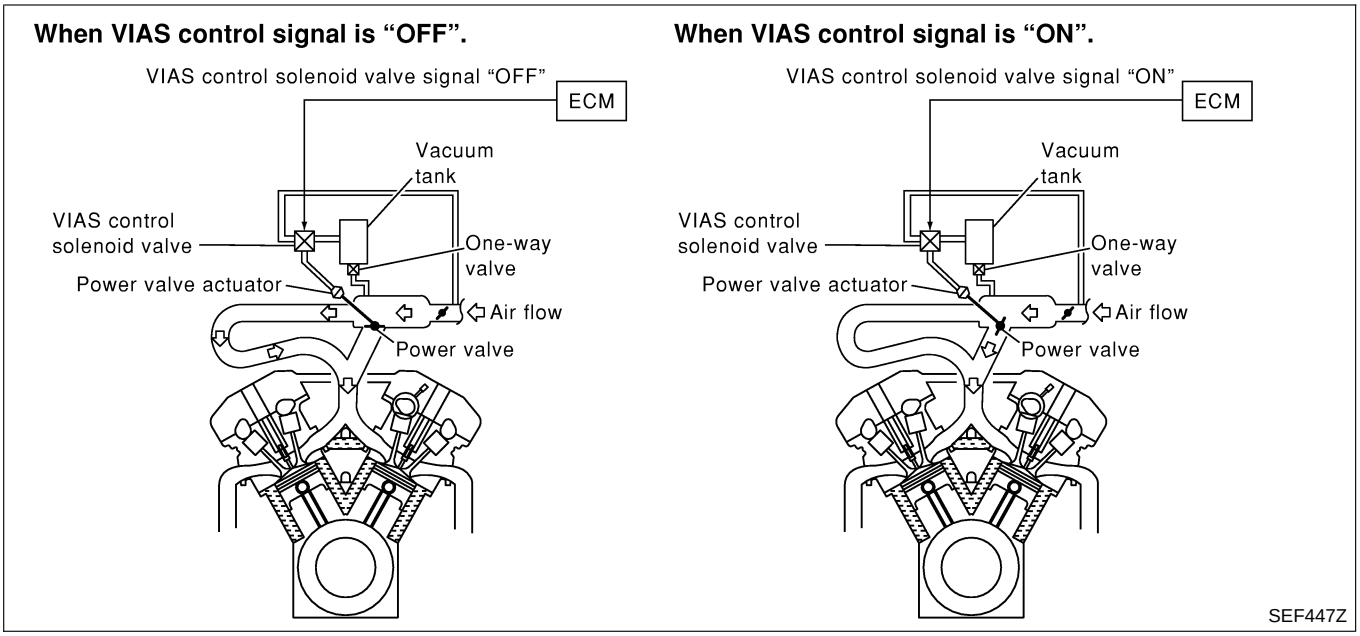

When the engine is running at low or medium speed, the power valve is fully closed. Under this condition, the effective suction port length is equivalent to the total length of the intake manifold collector’s suction port including the intake valve. This long suction port provides increased air intake which results in improved suction efficiency and higher torque generation.

The surge tank and one-way valve are provided. When engine is running at high speed, the ECM sends the signal to the VIAS control solenoid valve. This signal introduces the intake manifold vacuum into the power valve actuator and therefore opens the power valve to two suction passages together in the collector.

Under this condition, the effective port length is equivalent to the length of the suction port provided independently for each cylinder. This shortened port length results in enhanced engine output with reduced suction resistance under high speeds.

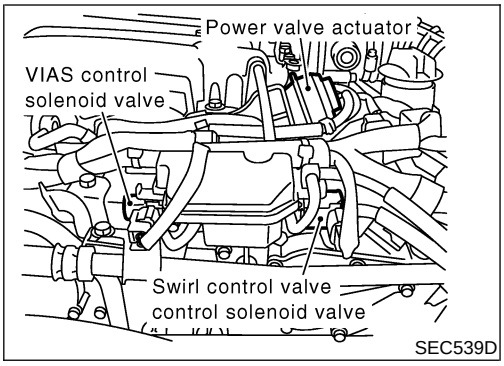

COMPONENT DESCRIPTION

NAEC0596S02

Power Valve

NAEC0596S0201

The power valve is installed in intake manifold collector and used to control the suction passage of the variable induction air control system. It is set in the fully closed or fully opened position by the power valve actuator operated by the vacuum stored in the surge tank. The vacuum in the surge tank is controlled by the VIAS control solenoid valve.

VIAS Control Solenoid Valve

NAEC0596S0202

The VIAS control solenoid valve cuts the intake manifold vacuum signal for power valve control. It responds to ON/OFF signals from the ECM. When the solenoid is off, the vacuum signal from the intake manifold is cut. When the ECM sends an ON signal the coil pulls the plunger downward and feeds the vacuum signal to the power valve actuator.

ECM Terminals and Reference Value

NAEC0684

Specification data are reference values and are measured between each terminal and ground.

CAUTION:

Do not use ECM ground terminals when measuring input/output voltage. Doing so may result in damage to the ECM's transistor. Use a ground other than ECM terminals, such as the ground.

TERMINAL NO.	WIRE COLOR	ITEM	CONDITION	DATA (DC Voltage)
29	Y/G	VIAS control solenoid valve	**[Engine is running]** ● Idle speed	BATTERY VOLTAGE (11 - 14V)
			[Engine is running] ● Engine speed is above 5,000 rpm.	0 - 1.0V

Wiring Diagram

NAEC0597

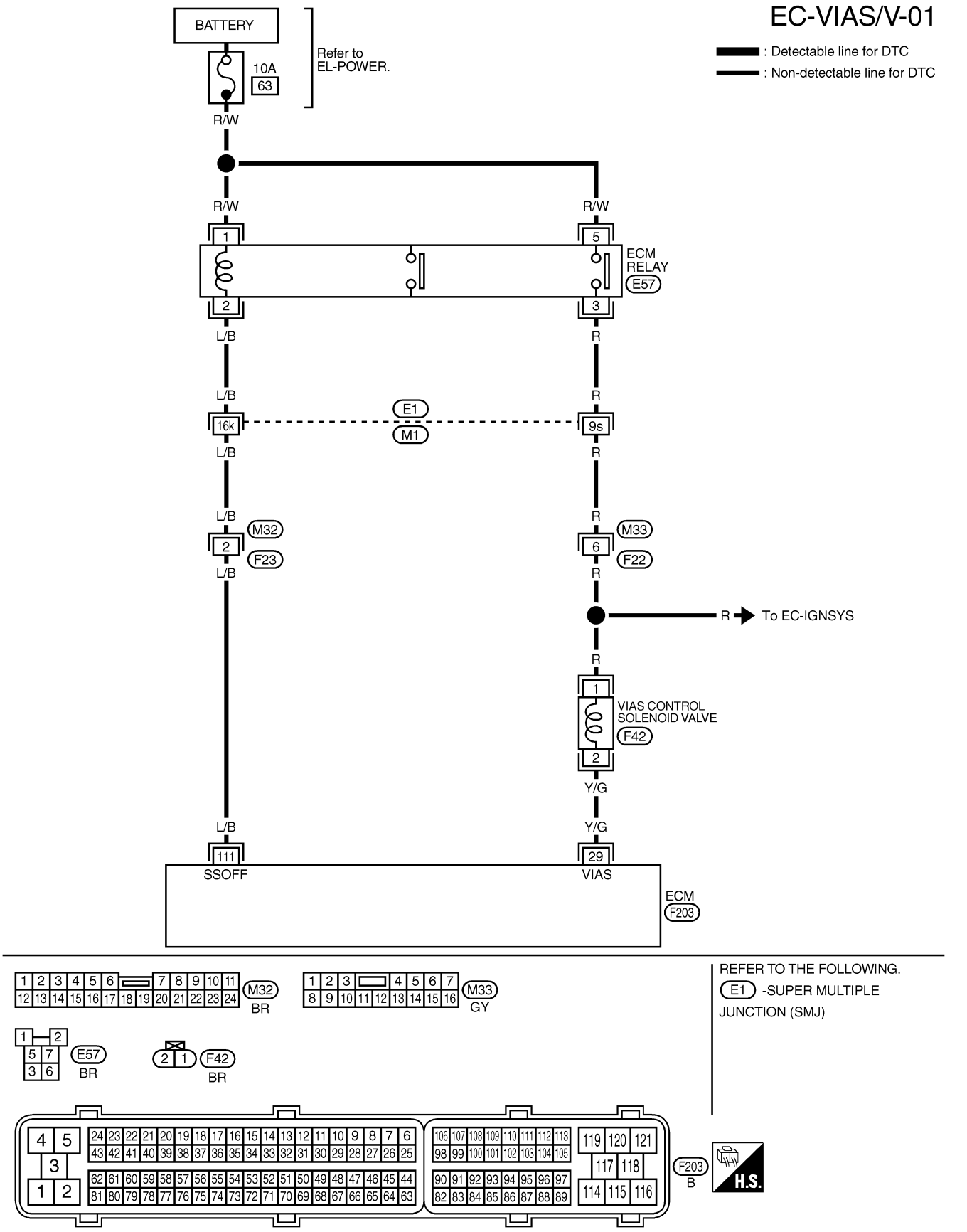

Diagnostic Procedure

NAEC0598

1	CHECK OVERALL FUNCTION

With CONSULT-II

1. Start engine and warm it up to normal operating temperature.
2. Perform “VIAS SOL VALVE” in “ACTIVE TEST” mode with CONSULT-II.
3. Turn VIAS control solenoid valve “ON” and “OFF”, and make sure that power valve actuator rod moves.

ACTIVE TEST	
VIAS SOL VALVE	OFF
MONITOR	
ENG SPEED	XXX rpm

PBIB0844E

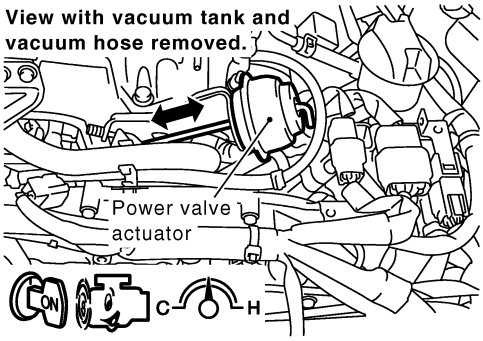

SEC558D

Without CONSULT-II

1. Start engine and warm it up to normal operating temperature.
2. Rev engine quickly up to above 5,000 rpm and make sure that power valve actuator rod moves.

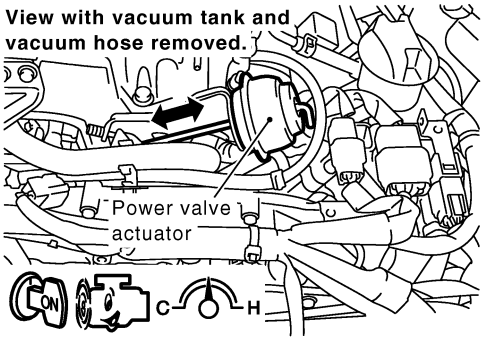

SEC558D

OK or NG

OK	▶	**INSPECTION END**
NG (With CONSULT-II)	▶	GO TO 2.
NG (Without CONSULT-II)	▶	GO TO 3.

2	CHECK VACUUM EXISTENCE

With CONSULT-II

1. Stop engine and disconnect vacuum hose connected to power valve actuator.
2. Start engine and let it idle.
3. Perform "VIAS SOL VALVE" in "ACTIVE TEST" mode with CONSULT-II.
4. Turn VIAS control solenoid valve "ON" and "OFF", and check for the existence of vacuum under the following conditions.

ACTIVE TEST	
VIAS SOL VALVE	OFF
MONITOR	
ENG SPEED	XXX rpm

PBIB0844E

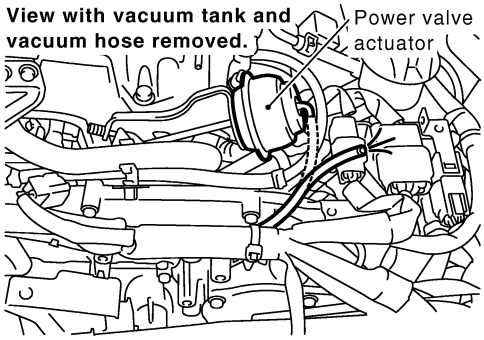

SEC559D

VIAS SOL VALVE	Vacuum
ON	Should exist.
OFF	Should not exist.

MTBL1174

OK or NG

OK	▶	Repair or replace power valve actuator.
NG	▶	GO TO 4.

3	CHECK VACUUM EXISTENCE

Without CONSULT-II

1. Stop engine and disconnect vacuum hose connected to power valve actuator.
2. Disconnect VIAS control solenoid valve harness connector.
3. Start engine and let it idle.
4. Apply 12V of direct current between VIAS control solenoid valve terminals 1 and 2.
5. Check for the existence of vacuum under the following conditions.

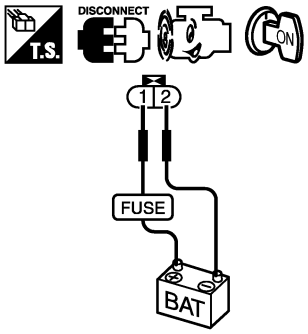

PBIB0845E

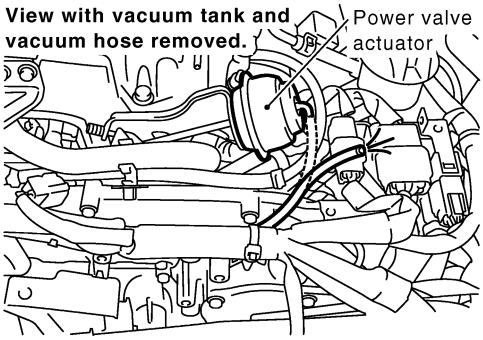

SEC559D

Condition	Vacuum
12V direct current supply	Should exist.
No supply	Should not exist.

MTBL1175

OK or NG

OK	▶	Repair or replace power valve actuator.
NG	▶	GO TO 4.

4	CHECK VACUUM HOSE

1. Stop engine.
2. Check hoses and tubes between intake manifold and power valve actuator for crack, clogging, disconnection or improper connection.

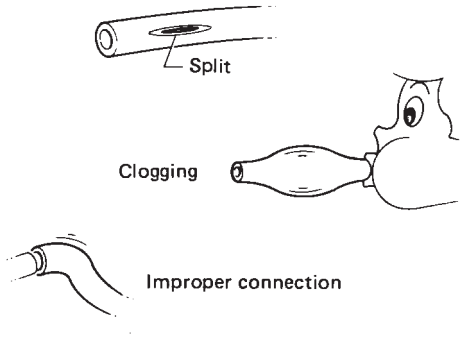

SEF109L

OK or NG

OK	▶	GO TO 5.
NG	▶	Replace vacuum hose.

5	CHECK VACUUM TANK

1. Disconnect vacuum hose connected to vacuum tank.
2. Connect a vacuum pump to port A of vacuum tank.
3. Apply vacuum and make sure that vacuum exists at the port B.

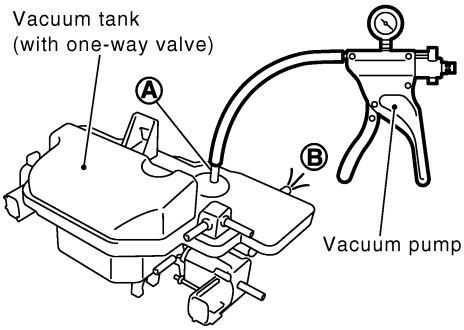

SEC560D

OK or NG

OK	▶	GO TO 6.
NG	▶	Replace vacuum tank.

6	CHECK VIAS CONTROL SOLENOID VALVE POWER SUPPLY CIRCUIT

1. Stop engine.
2. Disconnect VIAS control solenoid valve harness connector.

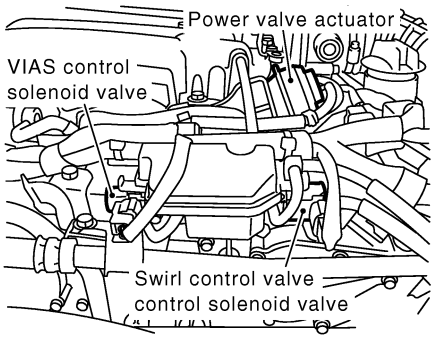

SEC539D

3. Turn ignition switch ON.
4. Check voltage between terminal 1 and ground with CONSULT-II or tester.

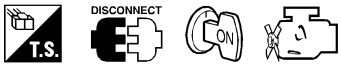

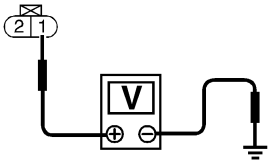

Voltage: Battery voltage

SEF603X

OK or NG

OK	▶	GO TO 8.
NG	▶	GO TO 7.

7	DETECT MALFUNCTIONING PART

Check the following.
- Harness connectors E1, M1
- Harness connectors M33, F22
- Harness continuity between VIAS control solenoid valve and ECM relay

	▶	Repair harness or connectors.

8	CHECK VIAS CONTROL SOLENOID VALVE OUTPUT SIGNAL CIRCUIT FOR OPEN AND SHORT

1. Turn ignition switch OFF.
2. Disconnect ECM harness connector.
3. Check harness continuity between ECM terminal 29 and terminal 2. Refer to Wiring Diagram.
   Continuity should exist.
4. Also check harness for short to ground and short to power.

OK or NG

OK	▶	GO TO 9.
NG	▶	Repair open circuit or short to ground or short to power in harness or connectors.

9	CHECK VIAS CONTROL SOLENOID VALVE

With CONSULT-II

1. Reconnect disconnected harness connector.
2. Turn ignition switch ON.
3. Perform "VIAS SOL VALVE" in "ACTIVE TEST" mode.
4. Check air passage continuity and operation delay time under the following conditions.

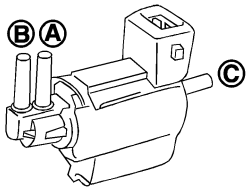

ACTIVE TEST	
VIAS SOL VALVE	ON
MONITOR	
ENG SPEED	XXX rpm

PBIB0177E

Condition VIAS SOL VALVE	Air passage continuity between A and B	Air passage continuity between A and C
ON	Yes	No
OFF	No	Yes

MTBL1171

Without CONSULT-II

Check air passage continuity and operation delay time under the following conditions.

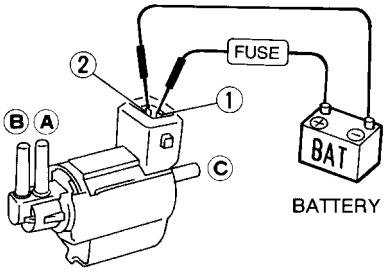

MEC488B

Condition VIAS SOL VALVE	Air passage continuity between A and B	Air passage continuity between A and C
12V direct current supply between terminals 1 and 2	Yes	No
No supply	No	Yes

MTBL1172

OK or NG

OK	▶	GO TO 10.
NG	▶	Replace VIAS control solenoid valve.

10	CHECK INTERMITTENT INCIDENT
Refer to "TROUBLE DIAGNOSIS FOR INTERMITTENT INCIDENT", EC-155.	
▶	**INSPECTION END**

Component Description

NAEC0817

IGNITION COIL & POWER TRANSISTOR

NAEC0817S01

The ignition signal from the ECM is sent to and amplified by the power transistor. The power transistor turns on and off the ignition coil primary circuit. This ON/OFF operation induces the proper high voltage in the coil secondary circuit.

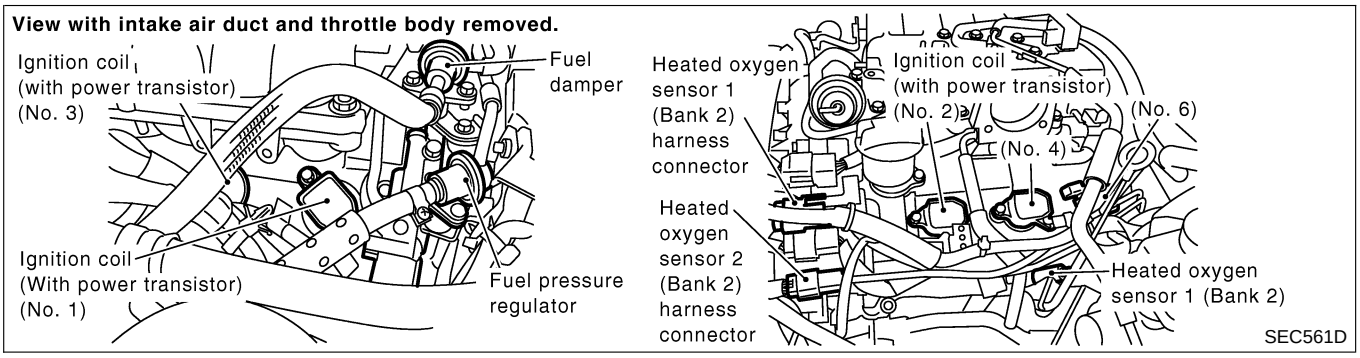

ECM Terminals and Reference Value

NAEC0818

Specification data are reference values and are measured between each terminal and ground.
Pulse signal is measured by CONSULT-II.

CAUTION:

Do not use ECM ground terminals when measuring input/output voltage. Doing so may result in damage to the ECM's transistor. Use a ground other than ECM terminals, such as the ground.

TERMINAL NO.	WIRE COLOR	ITEM	CONDITION	DATA (DC Voltage)
60 61 62 79 80 81	PU/W L/R Y/R GY/R GY G/R	Ignition signal No. 5 Ignition signal No. 3 Ignition signal No. 1 Ignition signal No. 6 Ignition signal No. 4 Ignition signal No. 2	**[Engine is running]** ● **Warm-up condition** ● Idle speed **NOTE:** The pulse cycle changes depending on rpm at idle.	0 - 0.2V★ 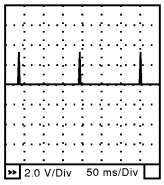 SEC986C
			[Engine is running] ● **Warm-up condition** ● Engine speed is 2,500 rpm.	0.1 - 0.3V★ 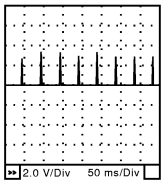 SEC987C

★: Average voltage for pulse signal (Actual pulse signal can be confirmed by oscilloscope.)

Wiring Diagram

NAEC0819

EC-IGNSYS-01

: Detectable line for DTC

: Non-detectable line for DTC

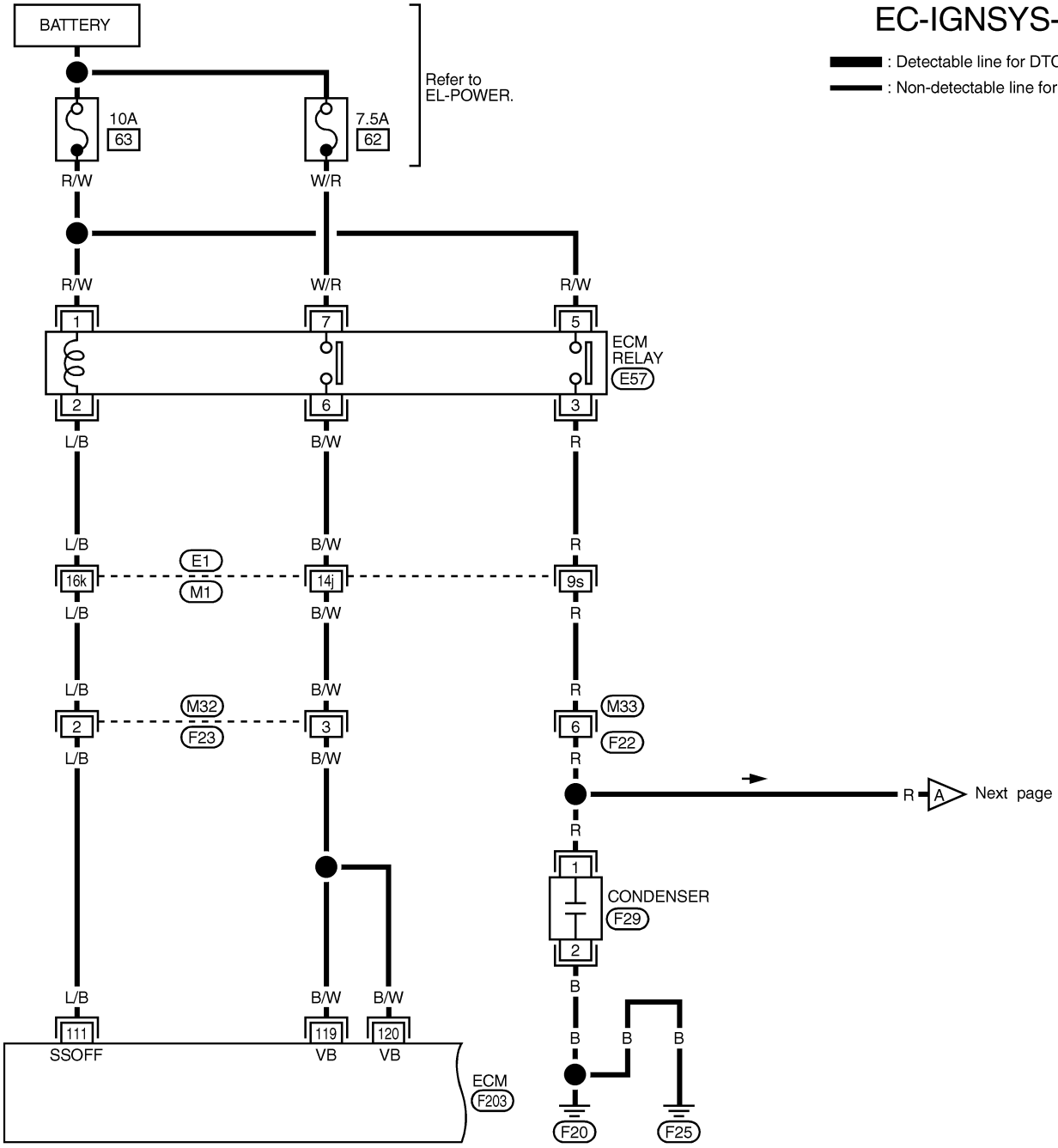

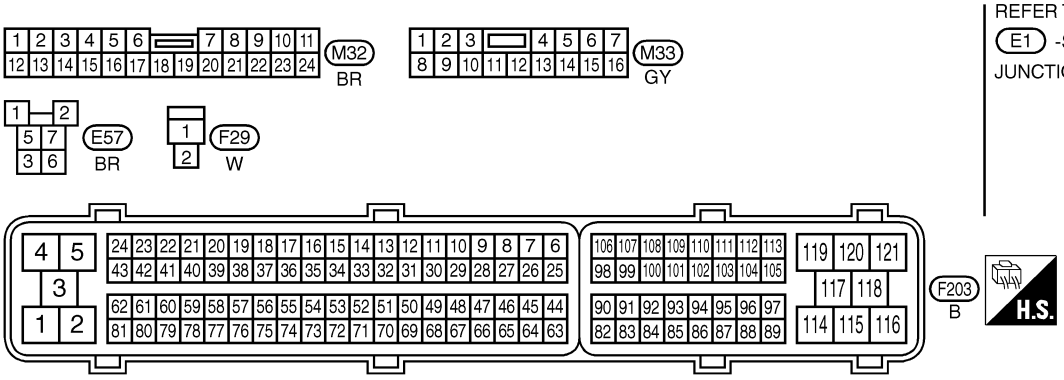

REFER TO THE FOLLOWING.

E1 -SUPER MULTIPLE JUNCTION (SMJ)

MEC108E

Wiring Diagram (Cont'd)

EC-IGNSYS-02

: Detectable line for DTC

: Non-detectable line for DTC

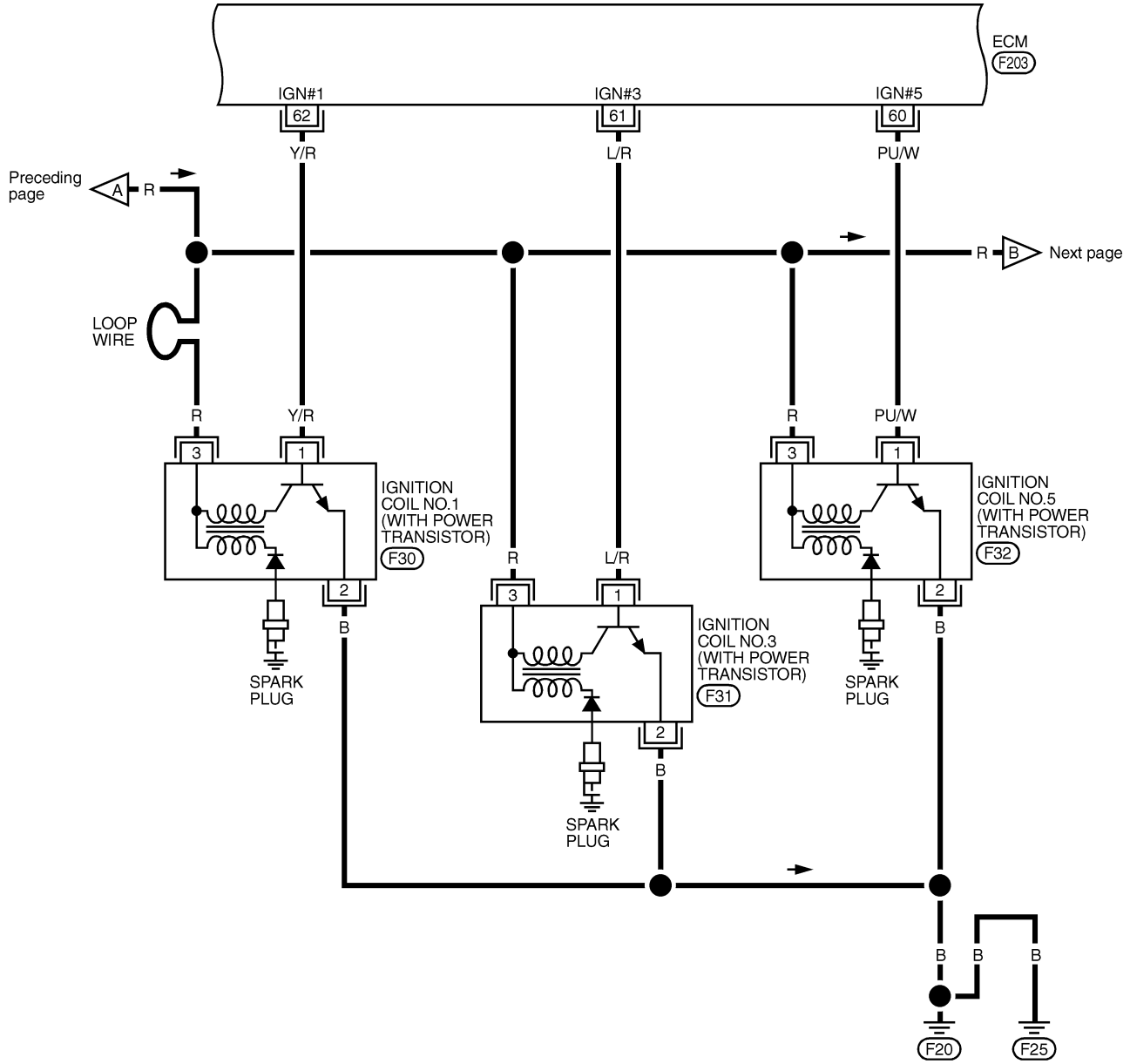

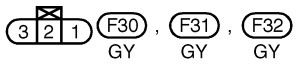

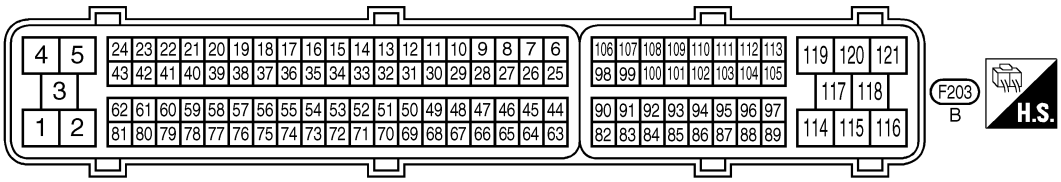

MEC109E

EC-IGNSYS-03

: Detectable line for DTC

: Non-detectable line for DTC

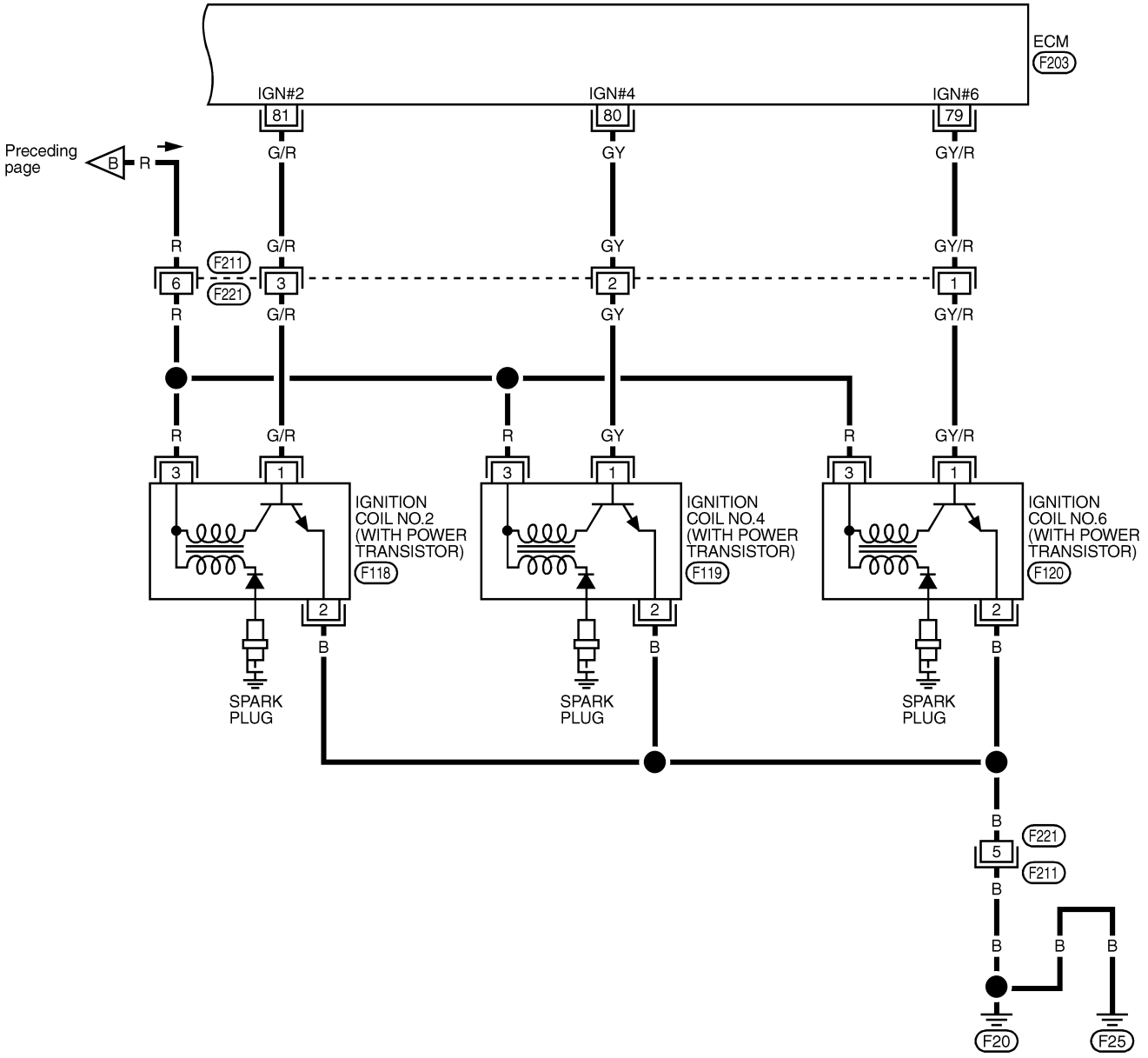

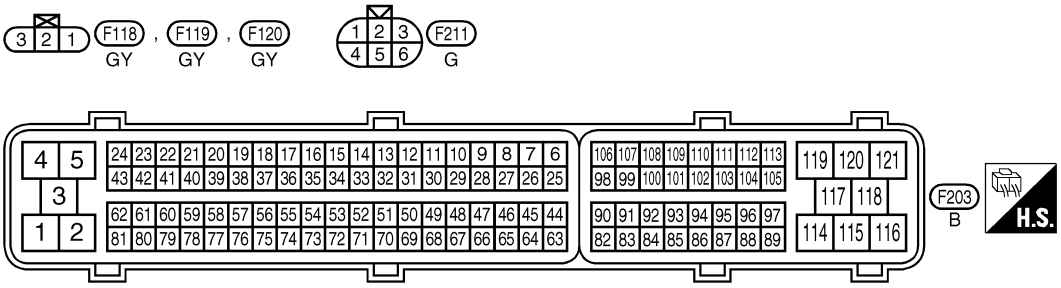

MEC110E

Diagnostic Procedure

NAEC0820

1	CHECK ENGINE START
Turn ignition switch OFF, and restart engine. **Is engine running?**	
Yes or No	
Yes (With CONSULT-II) ▶	GO TO 2.
Yes (Without CONSULT-II) ▶	GO TO 3.
No ▶	GO TO 4.

2	SEARCH FOR MALFUNCTIONING CIRCUIT

With CONSULT-II

1. Perform “POWER BALANCE” in “ACTIVE TEST” mode with CONSULT-II.
2. Search for circuit which does not produce a momentary engine speed drop.

ACTIVE TEST	
POWER BALANCE	
MONITOR	
ENG SPEED	XXX rpm
MAS A/F SE-B1	XXX V

PBIB0133E

OK or NG	
OK ▶	**INSPECTION END**
NG ▶	GO TO 13.

3	CHECK OVERALL FUNCTION

Without CONSULT-II

1. Let engine idle.
2. Read the voltage signal between ECM terminals 60, 61, 62, 79, 80, 81 and ground with oscilloscope.
3. Verify that the oscilloscope screen shows the signal wave as shown below.
   NOTE:
   The pulse cycle changes depending on rpm at idle.

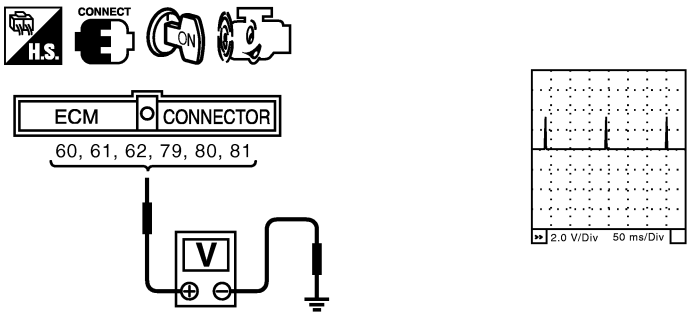

SEC579D

OK or NG	
OK ▶	**INSPECTION END**
NG ▶	GO TO 14.

4	CHECK IGNITION COIL POWER SUPPLY CIRCUIT-I

1. Turn ignition switch OFF, wait at least 10 seconds and then turn ON.
2. Check voltage between ECM terminals 119, 120 and ground with CONSULT-II or tester.

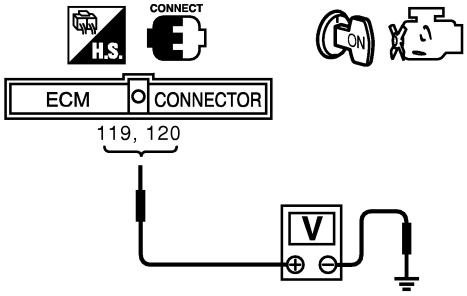

MBIB0034E

Voltage: Battery voltage

OK or NG

OK	▶	GO TO 5.
NG	▶	Go to TROUBLE DIAGNOSIS FOR POWER SUPPLY, EC-157.

5	CHECK IGNITION COIL POWER SUPPLY CIRCUIT-II

1. Turn ignition switch OFF.
2. Disconnect condenser harness connector.

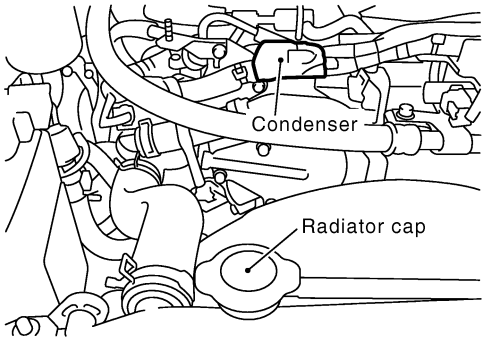

SEC562D

3. Turn ignition switch ON.
4. Check voltage between condenser terminal 1 and ground with CONSULT-II or tester.

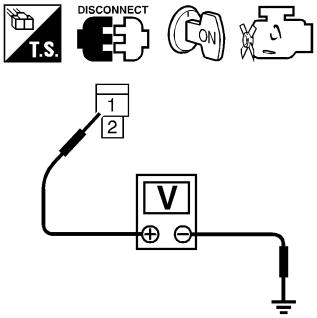

Voltage: Battery voltage

SEF367X

OK or NG

OK	▶	GO TO 11.
NG	▶	GO TO 6.

6	CHECK IGNITION COIL POWER SUPPLY CIRCUIT-III

1. Turn ignition switch OFF.
2. Disconnect ECM relay.

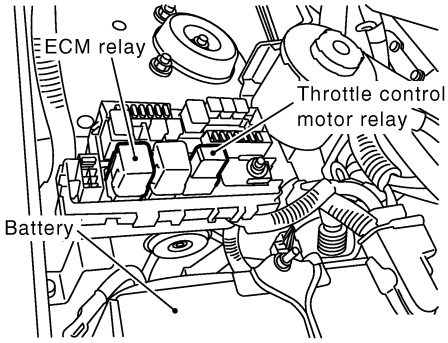

SEC425D

3. Check harness continuity between ECM relay terminal 3 and condenser terminal 1. Refer to Wiring Diagram.
   Continuity should exist.
4. Also check harness for short to ground and short to power.

OK or NG

OK	▶	GO TO 8.
NG	▶	GO TO 7.

7	DETECT MALFUNCTIONING PART

Check the following.
- Harness connectors E1, M1
- Harness connectors M33, F22
- Harness for open or short between ECM relay and condenser

▶	Repair open circuit or short to ground or short to power in harness or connectors.

8	CHECK IGNITION COIL POWER SUPPLY CIRCUIT-IV

Check voltage between ECM relay terminal 5 and ground with CONSULT-II or tester.

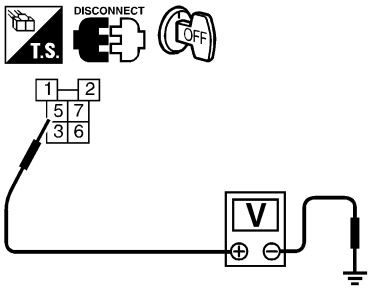

Voltage: Battery voltage

SEF010Z

OK or NG

OK	▶	GO TO 10.
NG	▶	GO TO 9.

9	DETECT MALFUNCTIONING PART

Check the following.
- 10A fuse
- Harness for open and short between ECM relay and fuse

▶	Repair or replace harness or connectors.

10	CHECK ECM RELAY

1. Apply 12V direct current between ECM relay terminals 1 and 2.
2. Check continuity between ECM relay terminals 3 and 5, 6 and 7.

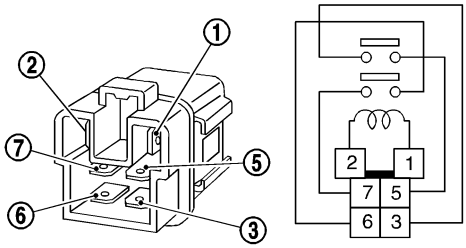

Condition	Continuity
12V direct current supply between terminals 1 and 2	Yes
OFF	No

SEF296X

OK or NG

OK	▶	GO TO 20.
NG	▶	Replace ECM relay.

11	CHECK CONDENSER GROUND CIRCUIT FOR OPEN AND SHORT

1. Turn ignition switch OFF.
2. Check harness continuity between condenser terminal 2 and ground. Refer to Wiring Diagram.
   Continuity should exist.
3. Also check harness for short to power.

OK or NG

OK	▶	GO TO 12.
NG	▶	Repair open circuit or short to power in harness or connectors.

12	CHECK CONDENSER

Check resistance between condenser terminals 1 and 2.

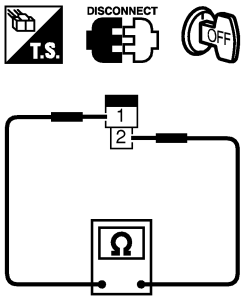

MBIB0031E

Resistance: Above 1 MΩ at 25°C (77°F)

OK or NG

OK	▶	GO TO 13.
NG	▶	Replace condenser.

13	CHECK IGNITION COIL POWER SUPPLY CIRCUIT-V

1. Turn ignition switch OFF.
2. Reconnect harness connectors disconnected.
3. Disconnect ignition coil harness connector.

View with intake air duct and throttle body removed.

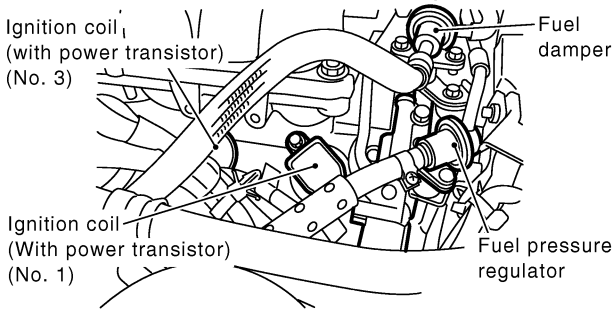

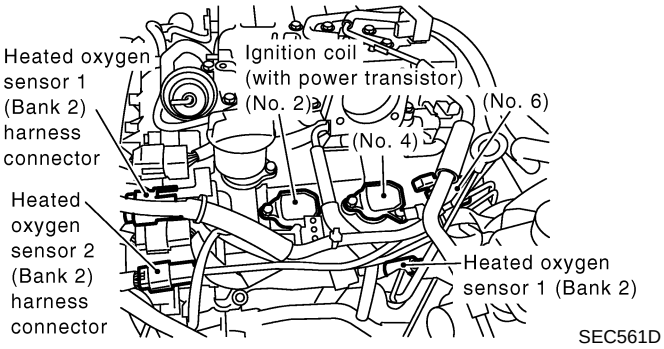

4. Turn ignition switch ON.
5. Check voltage between ignition coil terminal 3 and ground with CONSULT-II or tester.

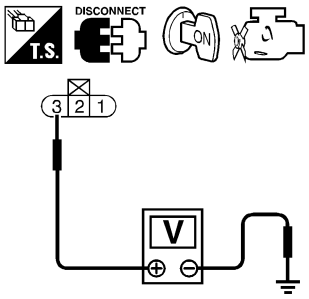

Voltage: Battery voltage

SEF370X

OK or NG

OK	▶	GO TO 15.
NG	▶	GO TO 14.

14	DETECT MALFUNCTIONING PART

Check the following.
- Harness connector F211, F221 (Ignition coil No. 2, No. 4, No. 6)
- Harness for open or short between ignition coil and harness connector F22

	▶	Repair or replace harness or connectors.

15	CHECK IGNITION COIL GROUND CIRCUIT FOR OPEN AND SHORT

1. Turn ignition switch OFF.
2. Check harness continuity between ignition coil terminal 2 and ground. Refer to Wiring Diagram.
   Continuity should exist.
3. Also check harness for short to power.

OK or NG

OK	▶	GO TO 17.
NG	▶	GO TO 16.

16	DETECT MALFUNCTIONING PART

Check the following.
- Harness connectors F221, F211 (Ignition coil No. 2, No. 4, No. 6)
- Check the harness for open between ignition coil and ground.

	▶	Repair or replace harness or connectors.

17	CHECK IGNITION COIL OUTPUT SIGNAL CIRCUIT FOR OPEN AND SHORT

1. Disconnect ECM harness connector.
2. Check harness continuity between ECM terminals 62, 81, 61, 80, 60, 79 and ignition coil terminal 1. Refer to Wiring Diagram.
   Continuity should exist.
3. Also check harness for short to ground and short to power.

OK or NG

OK	▶	GO TO 19.
NG	▶	GO TO 18.

18	DETECT MALFUNCTIONING PART

Check the following.
- Harness connectors F211, F221 (Ignition coil No. 2, No. 4, No. 6)
- Check the harness for open or short between ignition coil and ECM.

	▶	Repair open circuit or short to ground or short to power in harness or connectors.

19	CHECK IGNITION COIL WITH POWER TRANSISTOR

Check resistance between ignition coil terminals 2 and 3.

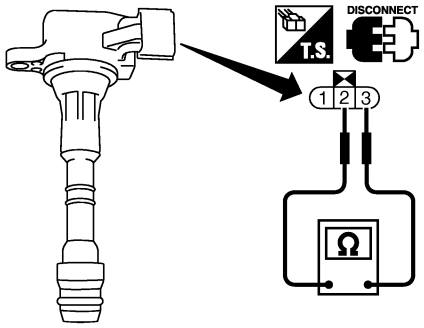

Terminals	Resistance	Result
2 and 3	Not 0 Ω	OK
	0 Ω	NG

SEC563D

OK or NG

OK	▶	GO TO 20.
NG	▶	Replace ignition coil with power transistor.

20	CHECK INTERMITTENT INCIDENT

Refer to "TROUBLE DIAGNOSIS FOR INTERMITTENT INCIDENT", EC-155.

	▶	**INSPECTION END**

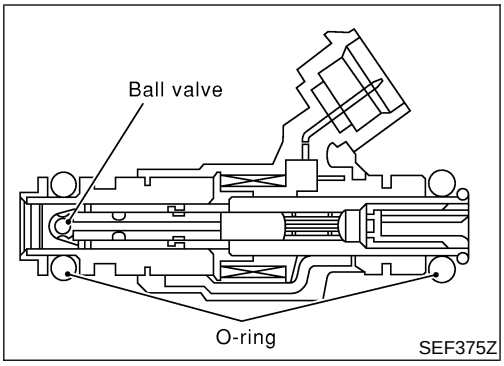

Component Description

NAEC0383

The fuel injector is a small, precise solenoid valve. When the ECM supplies a ground to the injector circuit, the coil in the injector is energized. The energized coil pulls the ball valve back and allows fuel to flow through the injector into the intake manifold. The amount of fuel injected depends upon the injection pulse duration. Pulse duration is the length of time the injector remains open. The ECM controls the injection pulse duration based on engine fuel needs.

CONSULT-II Reference Value in Data Monitor Mode

NAEC0384

Specification data are reference values.

MONITOR ITEM	CONDITION		SPECIFICATION
INJ PULSE-B2 INJ PULSE-B1	• Engine: After warming up • Air conditioner switch: OFF • Shift lever: N • No-load	Idle	2.4 - 3.2 msec
		2,000 rpm	1.9 - 2.8 msec
B/FUEL SCHDL	ditto	Idle	2.0 - 3.2 msec
		2,000 rpm	1.4 - 2.6 msec

ECM Terminals and Reference Value

NAEC0685

Specification data are reference values and are measured between each terminal and ground.
Pulse signal is measured by CONSULT-II.

CAUTION:

Do not use ECM ground terminals when measuring input/output voltage. Doing so may result in damage to the ECM's transistor. Use a ground other than ECM terminals, such as the ground.

TERMINAL NO.	WIRE COLOR	ITEM	CONDITION	DATA (DC Voltage)
21 22 23 40 41 42	L/W R/Y R/B PU/R R/L R/W	Injector No. 5 Injector No. 3 Injector No. 1 Injector No. 6 Injector No. 4 Injector No. 2	**[Engine is running]** • **Warm-up condition** • Idle speed **NOTE:** The pulse cycle changes depending on rpm at idle.	BATTERY VOLTAGE (11 - 14V)★ 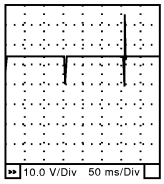 SEC984C
			[Engine is running] • **Warm-up condition** • Engine speed is 2,000 rpm	BATTERY VOLTAGE (11 - 14V)★ 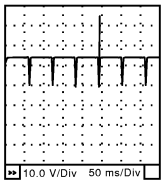 SEC985C

★: Average voltage for pulse signal (Actual pulse signal can be confirmed by oscilloscope.)

Wiring Diagram

NAEC0386

EC-INJECT-01

: Detectable line for DTC

: Non-detectable line for DTC

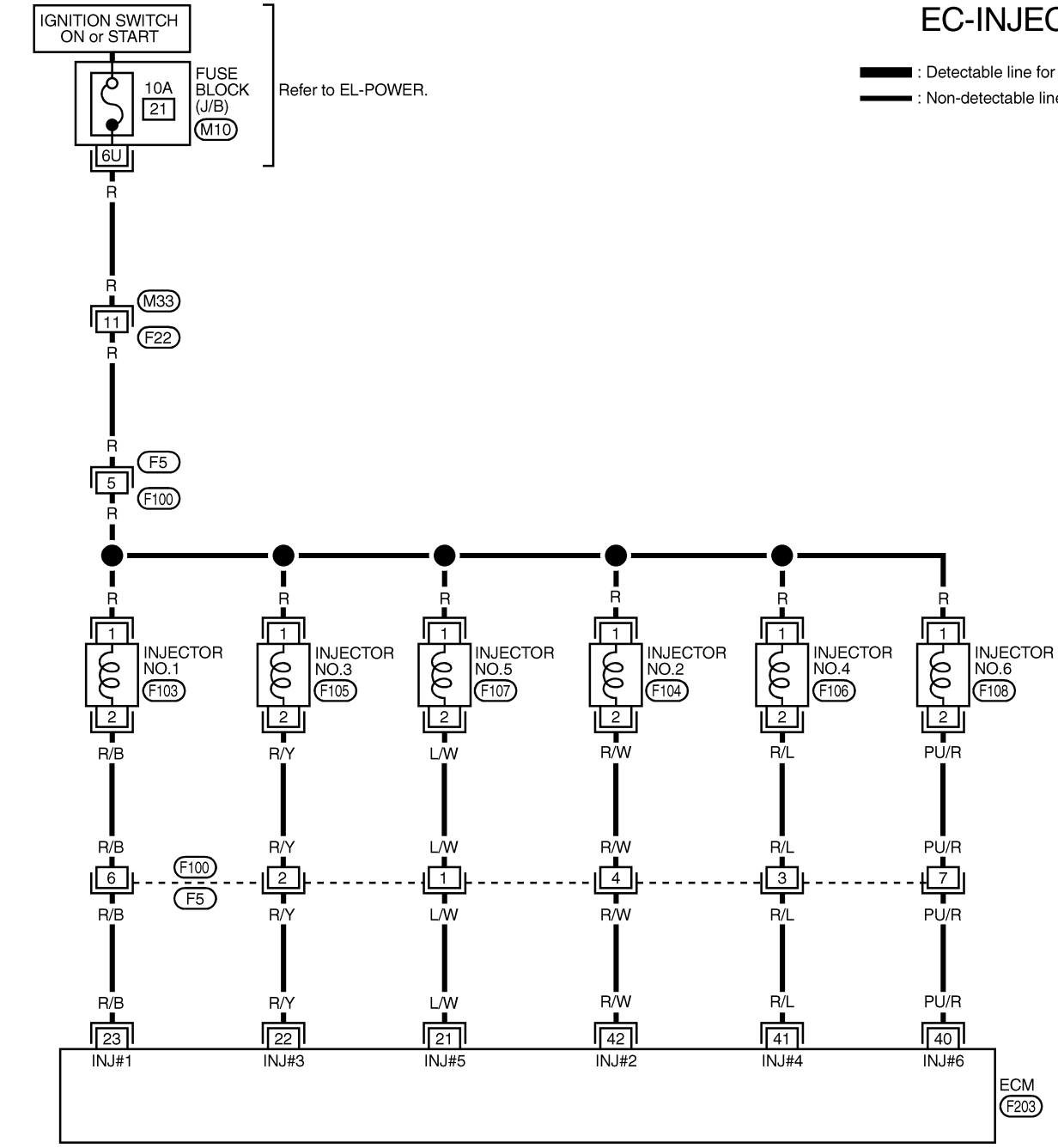

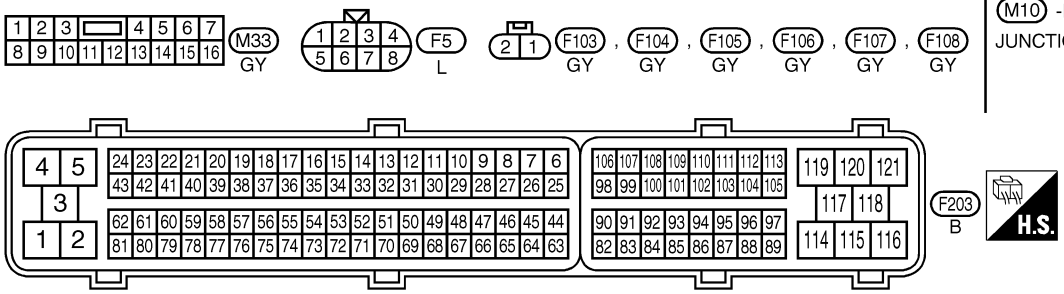

REFER TO THE FOLLOWING.
M10 -FUSE BLOCK-JUNCTION BOX (J/B)

MEC111E

Diagnostic Procedure

NAEC0387

1	INSPECTION START	
Turn ignition switch to “START”. **Is any cylinder ignited?**		
	Yes or No	
Yes	▶	GO TO 2.
No	▶	GO TO 3.

2	CHECK OVERALL FUNCTION	

With CONSULT-II

1. Start engine.
2. Perform “POWER BALANCE” in “ACTIVE TEST” mode with CONSULT-II.

ACTIVE TEST	
POWER BALANCE	
MONITOR	
ENG SPEED	XXX rpm
MAS A/F SE-B1	XXX V

PBIB0133E

3. Make sure that each circuit produces a momentary engine speed drop.

Without CONSULT-II

1. Start engine.
2. Listen to each injector operating sound.

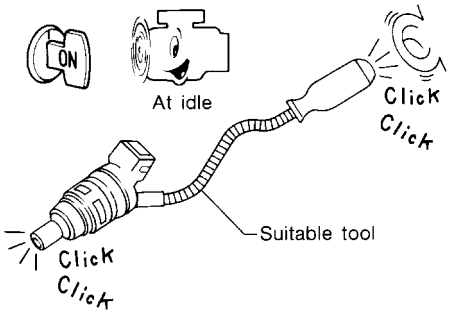

MEC703B

Clicking noise should be heard.

OK or NG

OK	▶	**INSPECTION END**
NG	▶	GO TO 3.

3	CHECK INJECTOR POWER SUPPLY CIRCUIT

1. Turn ignition switch OFF.
2. Disconnect injector harness connector.

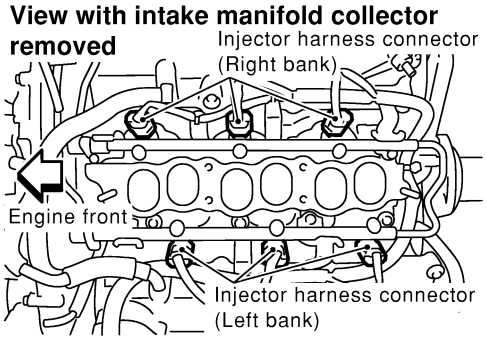

SEF023Z

3. Turn ignition switch ON.
4. Check voltage between injector terminal 1 and ground with CONSULT-II or tester.

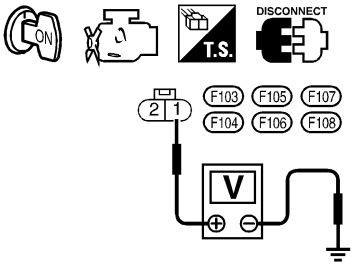

Voltage: Battery voltage

SEF364Z

OK or NG

OK	▶	GO TO 5.
NG	▶	GO TO 4.

4	DETECT MALFUNCTIONING PART

Check the following.
- Harness connectors M33, F22
- Harness connectors F5, F100
- Fuse block (J/B) connector M10
- 10A fuse
- Harness for open or short between injector and fuse

	▶	Repair harness or connectors.

5	CHECK INJECTOR OUTPUT SIGNAL CIRCUIT FOR OPEN AND SHORT

1. Turn ignition switch OFF.
2. Disconnect ECM harness connector.
3. Check harness continuity between injector terminal 2 and ECM terminals 23, 22, 21, 42, 41, 40. Refer to Wiring Diagram.
   Continuity should exist.
4. Also check harness for short to ground and short to power.

OK or NG

OK	▶	GO TO 7.
NG	▶	GO TO 6.

6	DETECT MALFUNCTIONING PART
Check the following. ● Harness connectors F100, F5 ● Harness for open or short between injector and ECM	
▶	Repair open circuit or short to ground or short to power in harness or connectors.

7	CHECK INJECTOR
1. Disconnect injector harness connector. 2. Check resistance between terminals as shown in the figure.	

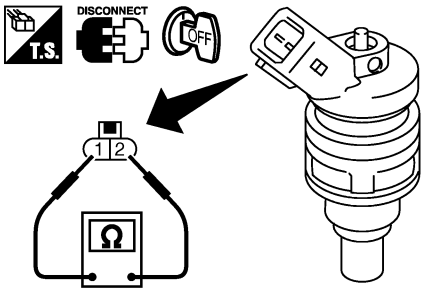

Resistance: 13.5 - 17.3Ω [at 10 - 60˚C (50 - 140˚F)]

SEF964XF

OK or NG

OK	▶	GO TO 8.
NG	▶	Replace injector.

8	CHECK INTERMITTENT INCIDENT
Refer to "TROUBLE DIAGNOSIS FOR INTERMITTENT INCIDENT", EC-155.	
▶	**INSPECTION END**

System Description

NAEC0392

Sensor	Input Signal to ECM	ECM function	Actuator
Crankshaft position sensor (POS) Camshaft position sensor (PHASE)	Engine speed* and piston position	Fuel pump control	Fuel pump relay
Battery	Battery voltage*		

*: ECM determines the start signal status by the signals of engine speed and battery voltage.

The ECM activates the fuel pump for several seconds after the ignition switch is turned ON to improve engine startability. If the ECM receives a 120° signal from the camshaft position sensor (PHASE), it knows that the engine is rotating, and causes the pump to operate. If the 120° signal is not received when the ignition switch is on, the engine stalls. The ECM stops pump operation and prevents battery discharging, thereby improving safety. The ECM does not directly drive the fuel pump. It controls the ON/OFF fuel pump relay, which in turn controls the fuel pump.

Condition	Fuel pump operation
Ignition switch is turned to ON.	Operates for 1 second.
Engine running and cranking	Operates.
When engine is stopped	Stops in 1.5 seconds.
Except as shown above	Stops.

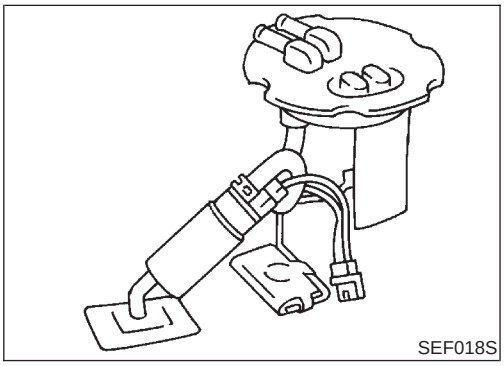

Component Description

NAEC0393

The fuel pump with a fuel damper is an in-tank type (the pump and damper are located in the fuel tank).

CONSULT-II Reference Value in Data Monitor Mode

NAEC0394

Specification data are reference values.

MONITOR ITEM	CONDITION	SPECIFICATION
FUEL PUMP RLY	● Ignition switch is turned to ON. (Operates for 1 second.) ● Engine running and cranking	ON
	Except as shown above	OFF

ECM Terminals and Reference Value

=NAEC0686

Specification data are reference values and are measured between each terminal and ground.

CAUTION:

Do not use ECM ground terminals when measuring input/output voltage. Doing so may result in damage to the ECM's transistor. Use a ground other than ECM terminals, such as the ground.

TERMINAL NO.	WIRE COLOR	ITEM	CONDITION	DATA (DC Voltage)
113	R/L	Fuel pump relay	**[Ignition switch ON]** ● For 1 second after turning ignition switch ON **[Engine is running]**	0 - 1.5V
			[Ignition switch ON] ● 1 second passed after turning ignition switch ON.	BATTERY VOLTAGE (11 - 14V)

Wiring Diagram

NAEC0396

EC-F/PUMP-01

: Detectable line for DTC

: Non-detectable line for DTC

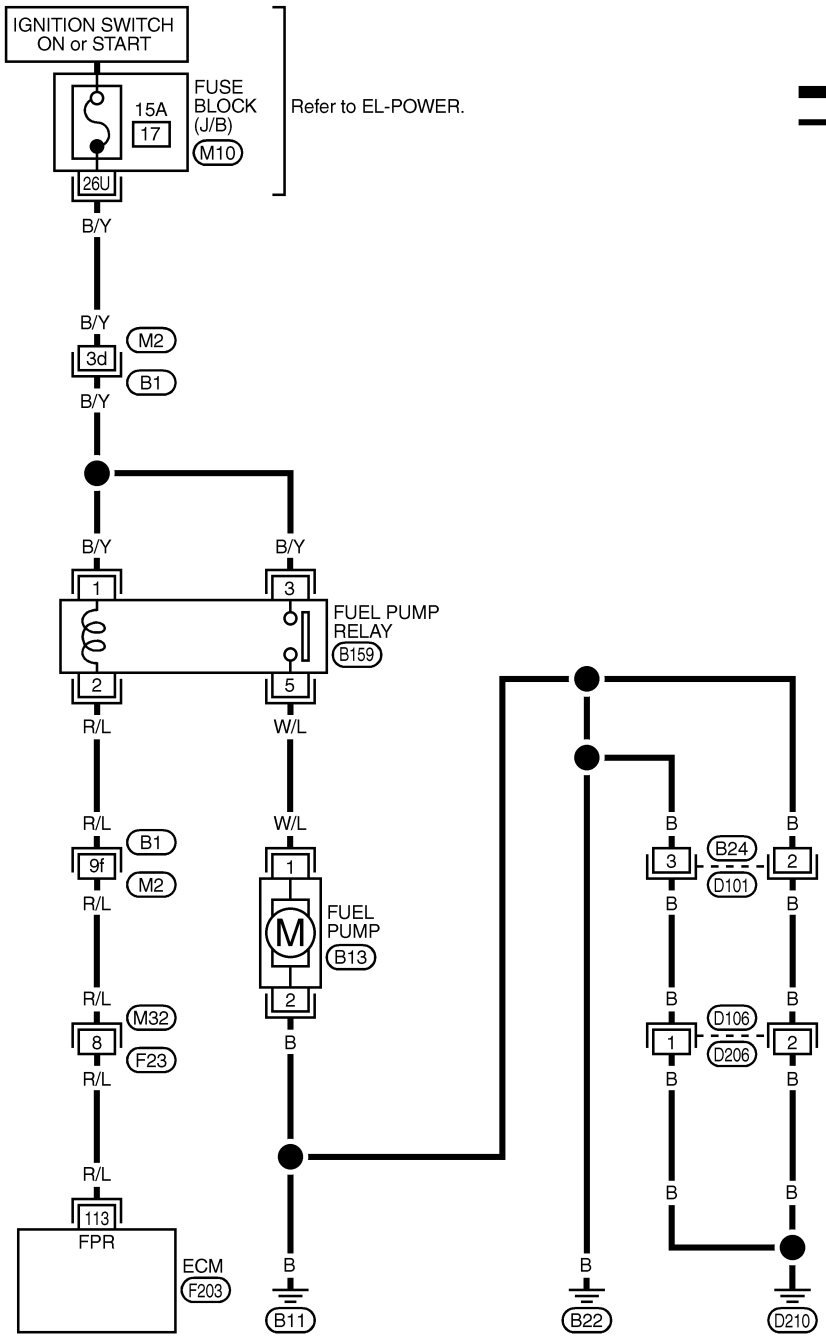

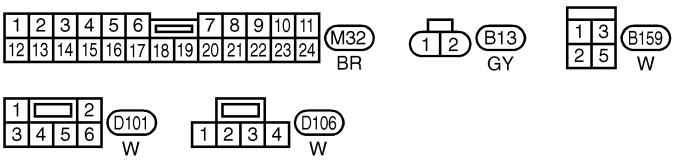

REFER TO THE FOLLOWING.

B1 -SUPER MULTIPLE JUNCTION (SMJ)

M10 -FUSE BLOCK-JUNCTION BOX (J/B)

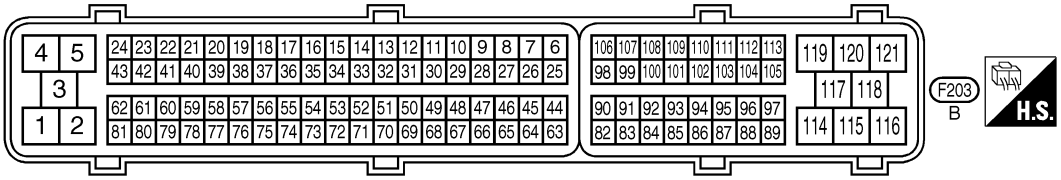

MEC112E

Diagnostic Procedure

NAEC0397

1	CHECK OVERALL FUNCTION

1. Turn ignition switch ON.
2. Pinch fuel feed hose with two fingers.

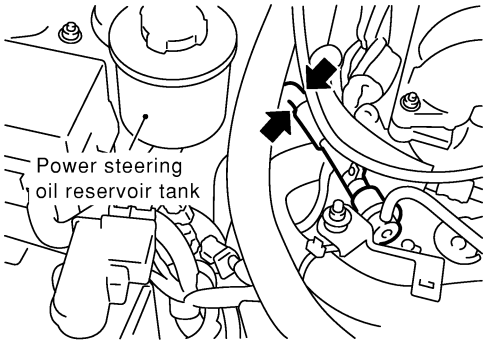

SEF025Z

Fuel pressure pulsation should be felt on the fuel feed hose for 1 second after ignition switch is turned ON.

OK or NG

OK	▶	**INSPECTION END**
NG	▶	GO TO 2.

2	CHECK FUEL PUMP RELAY POWER SUPPLY CIRCUIT-I

1. Turn ignition switch OFF.
2. Disconnect fuel pump relay.

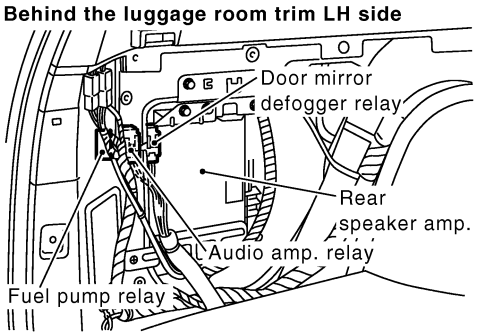

SEC564D

3. Turn ignition switch ON.
4. Check voltage between terminals 1, 3 and ground with CONSULT-II or tester.

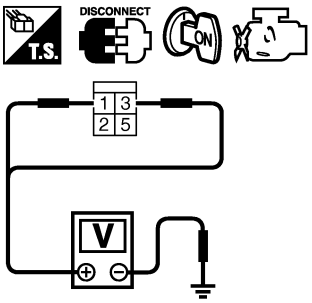

SEC565D

Voltage: Battery voltage

OK or NG

OK	▶	GO TO 4.
NG	▶	GO TO 3.

3	DETECT MALFUNCTIONING PART
Check the following. ● Fuse block (J/B) connector M10 ● 15A fuse in fuse block (J/B) ● Harness connectors M2, B1 ● Harness for open or short between fuse and fuel pump relay and fuse	
▶	Repair harness or connectors.

4	CHECK FUEL PUMP POWER SUPPLY AND GROUND CIRCUIT FOR OPEN AND SHORT

1. Turn ignition switch OFF.
2. Disconnect fuel pump harness connector.

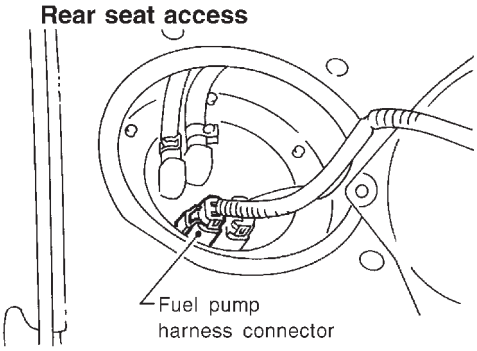

SEF021S

3. Check harness continuity between fuel pump terminal 2 and ground, fuel pump terminal 1 and fuel pump relay terminal 5. Refer to Wiring Diagram.
   Continuity should exist.
4. Also check harness for short to ground and short to power.

OK or NG

OK	▶	GO TO 6.
NG	▶	GO TO 5.

5	DETECT MALFUNCTIONING PART
Check the following. ● Harness connectors B24, D101 ● Harness connectors D106, D206 ● Harness for open or short between fuel pump relay and fuel pump ● Harness for open between fuel pump and ground	
▶	Repair open circuit or short to ground or short to power in harness or connectors.

6	CHECK FUEL PUMP RELAY OUTPUT SIGNAL CIRCUIT FOR OPEN AND SHORT

1. Disconnect ECM harness connector.
2. Check harness continuity between ECM terminal 113 and fuel pump relay terminal 2. Refer to Wiring Diagram.
   Continuity should exist.
3. Also check harness for short to ground and short to power.

OK or NG

OK	▶	GO TO 8.
NG	▶	GO TO 7.

7	DETECT MALFUNCTIONING PART
Check the following. ● Harness connectors B1, M2 ● Harness connectors M32, F23 ● Harness for open or short between ECM and fuel pump relay	
▶	Repair open circuit or short to ground or short to power in harness or connectors.

8	CHECK FUEL PUMP RELAY

With CONSULT-II

1. Reconnect fuel pump relay, fuel pump harness connector and ECM harness connector.
2. Turn ignition switch ON.
3. Turn fuel pump relay "ON" and "OFF" in "ACTIVE TEST" mode with CONSULT-II and check operating sound.

ACTIVE TEST	
FUEL PUMP RELAY	ON
MONITOR	
ENG SPEED	XXX rpm

SEF073Y

Without CONSULT-II

Check continuity between terminals 3 and 5 under the following conditions.

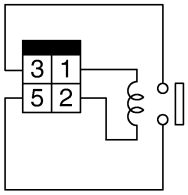

SEC566D

Conditions	Continuity
12V direct current supply between terminals 1 and 2	Yes
No current supply	No

MTBL1373

OK or NG

OK	▶	GO TO 9.
NG	▶	Replace fuel pump relay.

9	CHECK FUEL PUMP

1. Turn ignition switch OFF.
2. Disconnect fuel pump harness connector.
3. Check resistance between fuel pump terminals 1 and 2.

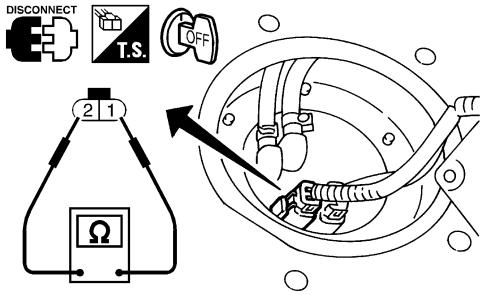

Resistance: 0.2 - 5.0 Ω [at 25°C (77°F)]

SEF027Z

OK or NG

OK	▶	GO TO 10.
NG	▶	Replace fuel pump.

10	CHECK INTERMITTENT INCIDENT
Refer to "TROUBLE DIAGNOSIS FOR INTERMITTENT INCIDENT", EC-155.	
▶	**INSPECTION END**

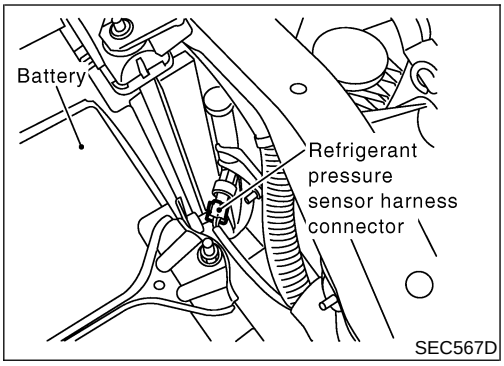

Description

NAEC0636

The refrigerant pressure sensor is installed at the condenser of the air conditioner system. The sensor uses an electrostatic volume pressure transducer to convert refrigerant pressure to voltage. The voltage signal is sent to ECM.

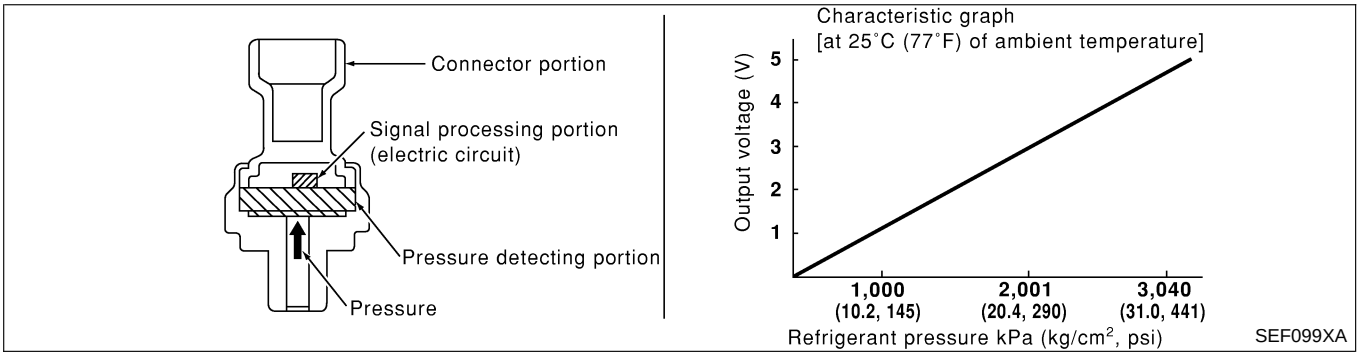

ECM Terminals and Reference Value

NAEC0689

Specification data are reference values and are measured between each terminal and ground.

CAUTION:

Do not use ECM ground terminals when measuring input/output voltage. Doing so may result in damage to the ECM's transistor. Use a ground other than ECM terminals, such as the ground.

TERMINAL NO.	WIRE COLOR	ITEM	CONDITION	DATA (DC Voltage)
49	P/B	Sensor power supply	**[Ignition switch ON]**	Approximately 5V
67	B/P	Sensor ground	**[Engine is running]** ● **Warm-up condition** ● Idle speed	Approximately 0V
70	W/PU	Refrigerant pressure sensor	**[Engine is running]** ● **Warm-up condition** ● Both A/C switch and blower switch are ON. (Compressor operates.)	1.0 - 4.0V

Wiring Diagram

NAEC0637

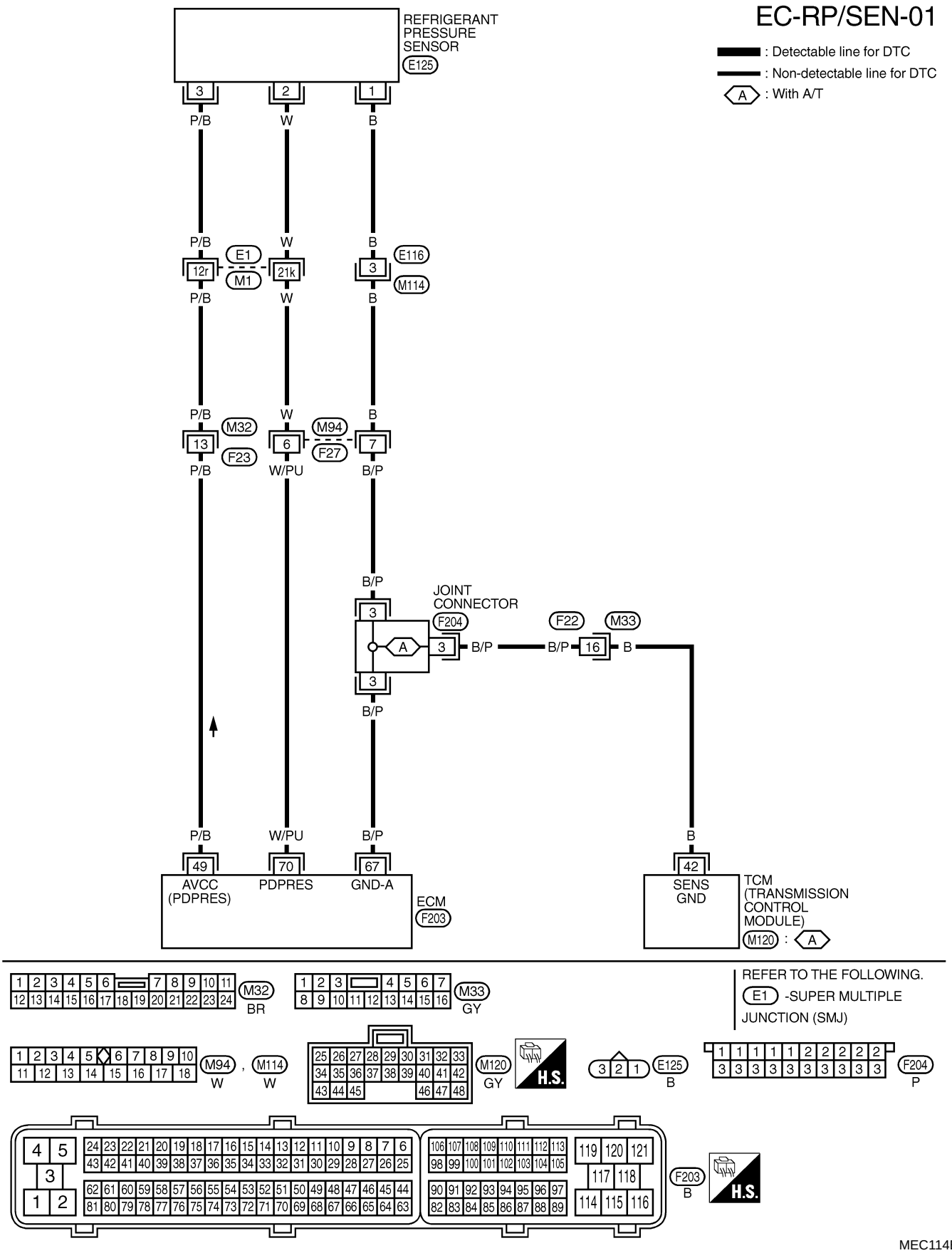

Diagnostic Procedure

NAEC0638

1	CHECK REFRIGERANT PRESSURE SENSOR OVERALL FUNCTION

1. Start engine and warm it up to normal operating temperature.
2. Turn A/C switch and blower switch ON.
3. Check voltage between ECM terminal 70 and ground with CONSULT-II or tester.

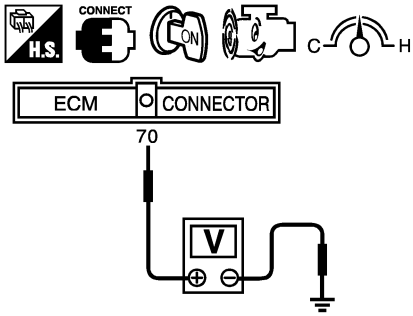

PBIB0832E

Voltage: 1 - 4V

OK or NG

OK	▶	**INSPECTION END**
NG	▶	GO TO 2.

2	CHECK REFRIGERANT PRESSURE SENSOR POWER SUPPLY CIRCUIT

1. Turn A/C switch and blower switch OFF.
2. Stop engine.
3. Disconnect refrigerant pressure sensor harness connector.

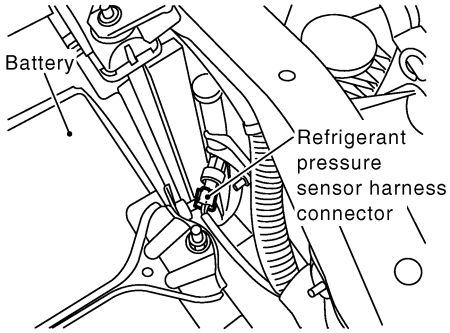

SEC567D

4. Turn ignition switch ON.
5. Check voltage between refrigerant pressure sensor terminal 3 and ground with CONSULT-II or tester.

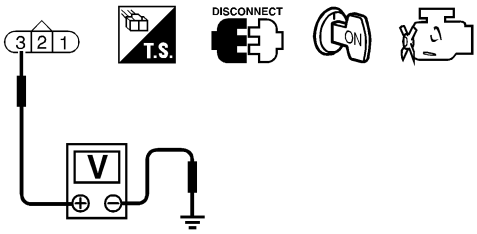

Voltage: Approximately 5V

SEF030Z

OK or NG

OK	▶	GO TO 4.
NG	▶	GO TO 3.

3	DETECT MALFUNCTIONING PART
Check the following. ● Harness connectors E1, M1 ● Harness connectors M32, F23 ● Harness for open or short between ECM and refrigerant pressure sensor	
▶	Repair harness or connectors.

4	CHECK REFRIGERANT PRESSURE SENSOR GROUND CIRCUIT FOR OPEN AND SHORT
1. Turn ignition switch OFF. 2. Disconnect ECM harness connector. 3. Disconnect TCM harness connector. 4. Check harness continuity between refrigerant pressure sensor terminal 1 and ECM terminal 67, TCM terminal 42. Refer to Wiring Diagram. **Continuity should exist.** 5. Also check harness for short to ground and short to power.	
OK or NG	
OK ▶	GO TO 6.
NG ▶	GO TO 5.

5	DETECT MALFUNCTIONING PART
Check the following. ● Harness connectors E116, M114 ● Harness connectors M94, F27 ● Joint connector F204 ● Harness for open between ECM and refrigerant pressure sensor ● Harness connectors F22, M33 (A/T models) ● Harness for open between TCM and refrigerant pressure sensor (A/T models)	
▶	Repair open circuit or short to ground or short to power in harness or connectors.

6	CHECK REFRIGERANT PRESSURE SENSOR INPUT SIGNAL CIRCUIT FOR OPEN AND SHORT
1. Check harness continuity between ECM terminal 70 and refrigerant pressure sensor terminal 2. Refer to Wiring Diagram. **Continuity should exist.** 2. Also check harness for short to ground and short to power.	
OK or NG	
OK ▶	GO TO 8.
NG ▶	GO TO 7.

7	DETECT MALFUNCTIONING PART
Check the following. ● Harness connectors E1, M1 ● Harness connectors M94, F27 ● Harness for open or short between ECM and refrigerant pressure sensor	
▶	Repair open circuit or short to ground or short to power in harness or connectors.

8	CHECK REFRIGERANT PRESSURE SENSOR
Refer to HA-15, "Refrigerant pressure sensor".	
OK or NG	
OK ▶	GO TO 9.
NG ▶	Replace refrigerant pressure sensor.

9	**CHECK INTERMITTENT INCIDENT**
Refer to "TROUBLE DIAGNOSIS FOR INTERMITTENT INCIDENT", EC-155.	
▶	**INSPECTION END**

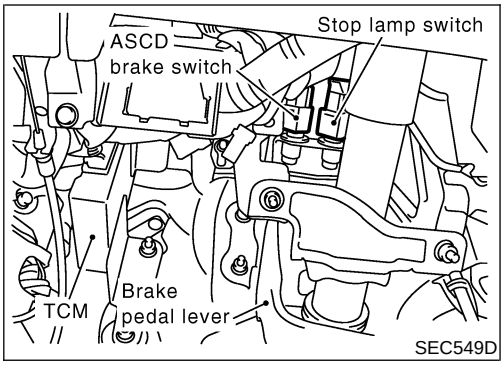

Component Description

NAEC1348

When depressing the brake pedal, ASCD brake switch is turned OFF and stop lamp switch is turned ON.
ECM detects the state of the brake pedal by this two kinds of input (ON/OFF signal).
Refer to EC-54 for the ASCD function.

CONSULT-II Reference Value in Data Monitor Mode

NAEC1349

CONSULT-II Reference Value in Data Monitor Mode Specification data are reference values.

MONITOR ITEM	CONDITION		SPECIFICATION
BRAKE SW 1 (ASCD brake switch)	• Ignition switch: ON	• Brake pedal fully released • Clutch pedal is fully released (M/T models)	ON
		• Brake pedal depressed • Clutch pedal is depressed (M/T models)	OFF
BRAKE SW 2 (Stop lamp switch)	• Ignition switch: ON	• Brake pedal fully released	OFF
		• Brake pedal depressed	ON

ECM Terminals and Reference Value

NAEC1356

Specification data are reference values and are measured between each terminal and ground.

CAUTION:
Do not use ECM ground terminals when measuring input/output voltage. Doing so may result in damage to the ECM's transistor. Use a ground other than ECM terminals, such as the ground.

TERMINAL NO.	WIRE COLOR	ITEM	CONDITION	DATA (DC Voltage)
101	G/Y	Stop lamp switch	**[Ignition switch ON]** • Brake pedal is fully released	Approximately 0V
			[Ignition switch ON] • Brake pedal is depressed	BATTERY VOLTAGE (11 - 14V)
108	L/Y	ASCD brake switch	**[Ignition switch ON]** • Brake pedal is fully released • Clutch pedal is fully released (M/T models)	BATTERY VOLTAGE (11 - 14V)
			[Ignition switch ON] • Brake pedal is depressed • Clutch pedal is depressed (M/T models)	Approximately 0V

Wiring Diagram

NAEC1350

EC-ASCBOF-01

: Detectable line for DTC
: Non-detectable line for DTC
(A) : With A/T
(M) : With M/T
*1 L/Y : (A)
B/Y : (M)

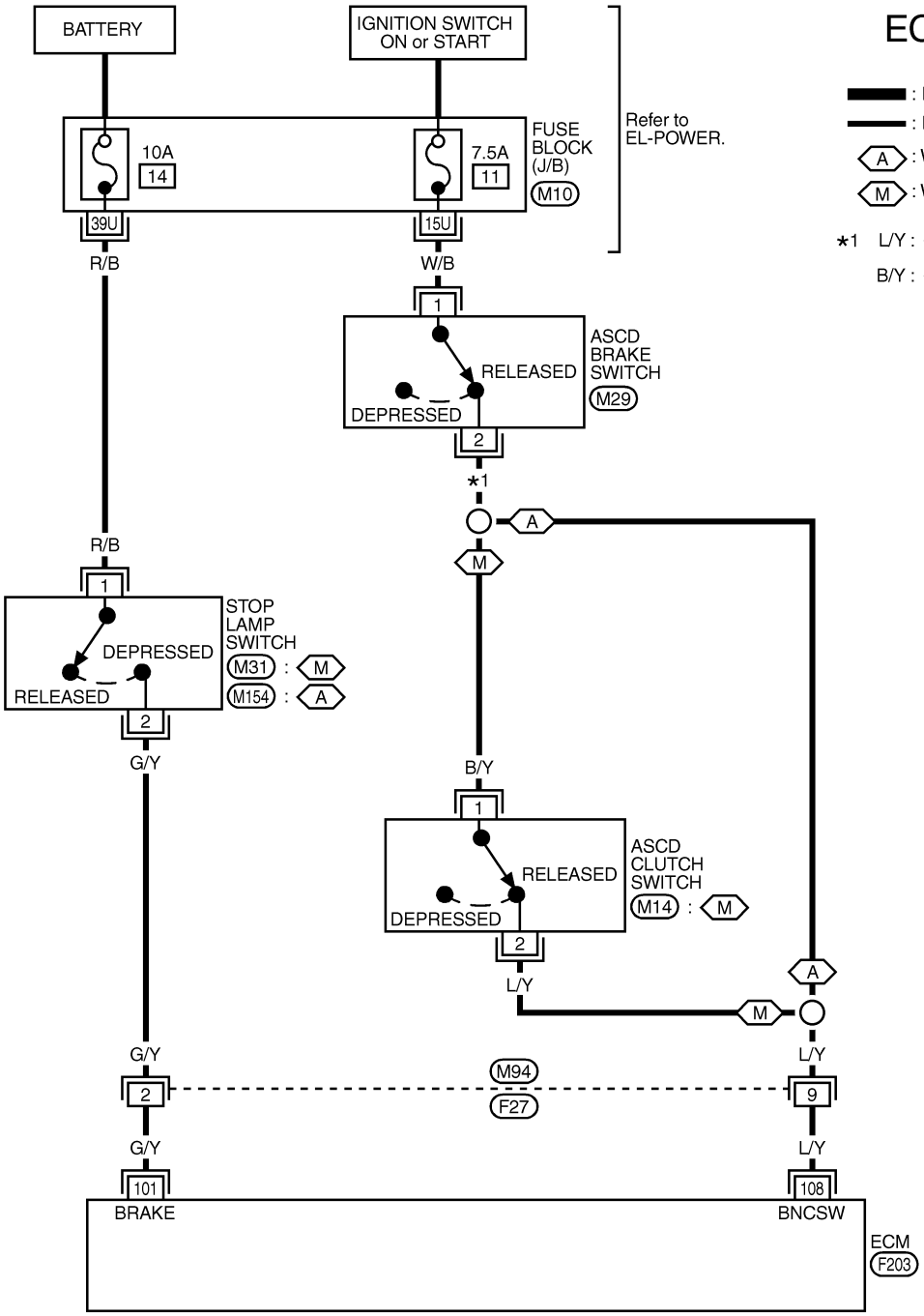

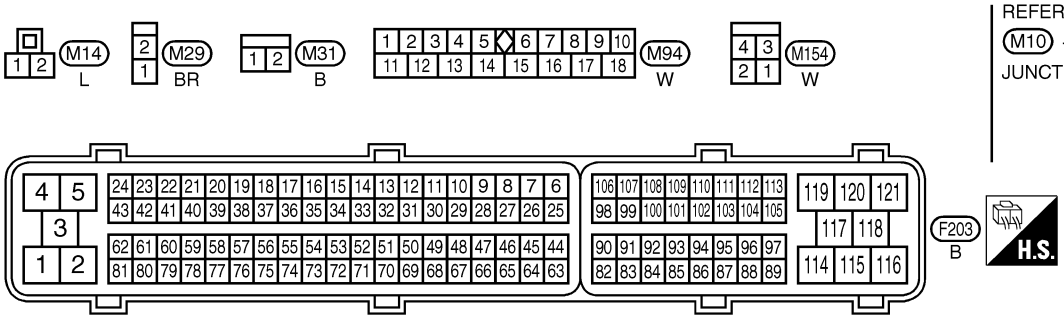

REFER TO THE FOLLOWING.
(M10) -FUSE BLOCK-JUNCTION BOX (J/B)

MEC119E

Diagnostic Procedure

NAEC1351

1	CHECK OVERALL FUNCTION-I

With CONSULT-II

1. Turn ignition switch ON.
2. Select “BRAKE SW1” in “DATA MONITOR” mode with CONSULT-II.
3. Check the indication of “BRAKE SW1” under the following conditions.

DATA MONITOR	
MONITOR	NO DTC
BRAKE SW1	OFF

SEC011D

A/T models

CONDITION	INDICATION
When brake pedal is depressed.	OFF
When brake pedal is released.	ON

M/T models

CONDITION	INDICATION
When clutch pedal or brake pedal is depressed.	OFF
When clutch pedal and brake pedal are released.	ON

MTBL1334

Without CONSULT-II

1. Turn ignition switch ON.
2. Check voltage between ECM terminal 108 and ground under the following conditions.

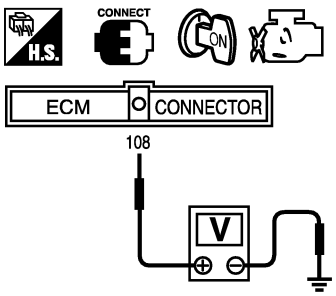

MBIB0061E

A/T models

CONDITION	VOLTAGE
When brake pedal is depressed.	Approximately 0V
When brake pedal is released.	Battery voltage

M/T models

CONDITION	VOLTAGE
When clutch pedal or brake pedal is depressed.	Approximately 0V
When clutch pedal and brake pedal are released.	Battery voltage

MTBL1335

OK or NG

OK	▶	GO TO 2.
NG	▶	GO TO 3.

2	CHECK OVERALL FUNCTION-II

With CONSULT-II

See "BRAKE SW2" indication in "DATA MONITOR" mode.

DATA MONITOR	
MONITOR	NO DTC
BRAKE SW2	OFF

SEC013D

CONDITION	INDICATION
When brake pedal is depressed.	ON
When brake pedal is released.	OFF

MTBL1336

Without CONSULT-II

Check voltage between ECM terminal 101 and ground under the following conditions.

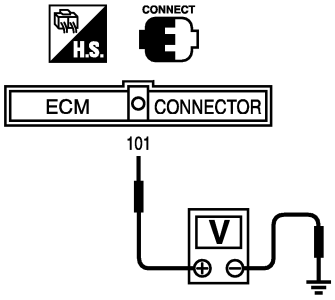

MBIB0060E

CONDITION	VOLTAGE
When brake pedal is depressed.	Battery voltage
When brake pedal is released.	Approximately 0V

MTBL1337

OK or NG

OK	▶	**INSPECTION END**
NG	▶	GO TO 11.

3	CHECK ASCD BRAKE SWITCH POWER SUPPLY CIRCUIT

1. Turn ignition switch OFF.
2. Disconnect ASCD brake switch harness connector.
3. Turn ignition switch ON.
4. Check voltage between ASCD brake switch terminal 1 and ground with CONSULT-II or tester.

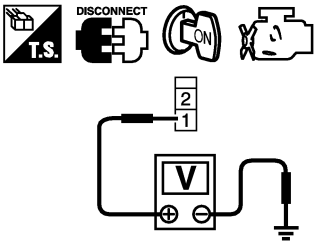

PBIB0857E

Voltage: Battery voltage

OK or NG

OK (A/T models)	▶	GO TO 5.
OK (M/T models)	▶	GO TO 7.
NG	▶	GO TO 4.

4	DETECT MALFUNCTIONING PART

Check the following.
- Fuse block (J/B) connector M10
- 7.5A fuse
- Harness for open or short between ASCD brake switch and fuse

	▶	Repair open circuit or short to ground or short to power in harness or connectors.

5	CHECK ASCD BRAKE SWITCH INPUT SIGNAL CIRCUIT FOR OPEN AND SHORT

1. Turn ignition switch OFF.
2. Disconnect ECM harness connector.
3. Check harness continuity between ECM terminal 108 and ASCD brake switch terminal 2.
   Refer to Wiring Diagram.
   Continuity should exist.
4. Also check harness for open to ground and short to power.

OK or NG

OK	▶	GO TO 10.
NG	▶	GO TO 6.

6	DETECT MALFUNCTIONING PART

Check the following.
- Harness connectors M94, F27
- Harness for open and short between ECM and ASCD brake switch

	▶	Repair open circuit or short to ground or short to power in harness or connectors.

7	CHECK ASCD CLUTCH SWITCH INPUT SIGNAL CIRCUIT FOR OPEN AND SHORT	
1. Turn ignition switch OFF. 2. Disconnect ASCD clutch switch harness connector. 3. Disconnect ECM harness connector. 4. Check harness continuity between ASCD brake switch terminal 2 and ASCD clutch switch terminal 1, ASCD clutch switch terminal 2 and ECM terminal 108. Refer to Wiring Diagram. **Continuity should exist.** 5. Also check harness for open to ground and short to power.		
OK or NG		
OK	▶	GO TO 9.
NG	▶	GO TO 8.

8	DETECT MALFUNCTIONING PART	
Check the following. ● Harness connectors M94, F27 ● Harness for open and short between ASCD brake switch and ASCD clutch switch ● Harness for open and short between ASCD clutch switch and ECM		
	▶	Repair open circuit or short to ground or short to power in harness or connectors.

9	CHECK ASCD CLUTCH SWITCH	
Refer to "Component Inspection", EC-661.		
OK or NG		
OK	▶	GO TO 10.
NG	▶	Replace ASCD clutch switch.

10	CHECK ASCD BRAKE SWITCH	
Refer to "Component Inspection", EC-661.		
OK or NG		
OK	▶	GO TO 16.
NG	▶	Replace ASCD brake switch.

11	CHECK STOP LAMP SWITCH POWER SUPPLY CIRCUIT

1. Turn ignition switch OFF.
2. Disconnect stop lamp switch harness connector.
3. Check voltage between stop lamp switch terminal 1 and ground with CONSULT-II or tester.

A/T models

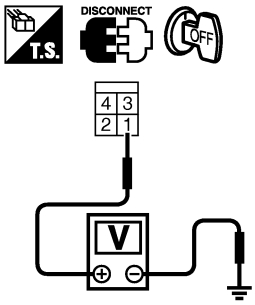

SEC547D

M/T models

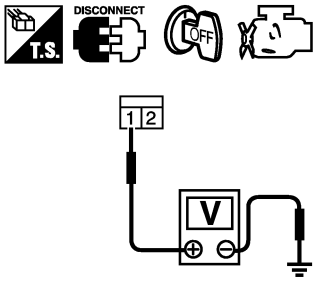

PBIB0117E

Voltage: Battery voltage

OK or NG

OK	▶	GO TO 13.
NG	▶	GO TO 12.

12	DETECT MALFUNCTIONING PART

Check the following.
- Fuse block (J/B) connector M10
- 10A fuse
- Harness for open or short between stop lamp switch and fuse

	▶	Repair open circuit or short to ground in harness or connectors.

13	CHECK STOP LAMP SWITCH INPUT SIGNAL CIRCUIT FOR OPEN AND SHORT

1. Disconnect ECM harness connector.
2. Check harness continuity between stop lamp switch terminal 2 and ECM terminal 101. Refer to wiring diagram.
   Continuity should exist
3. Also check harness for short to ground and short to power.

OK or NG

OK	▶	GO TO 15.
NG	▶	GO TO 14.

14	DETECT MALFUNCTIONING PART
Check the following. ● Harness connectors M94, F27 ● Harness for open or short between stop lamp switch and ECM	
▶	Repair open circuit or short to ground or short to power in harness or connectors.

15	CHECK STOP LAMP SWITCH
Refer to "Component Inspection", EC-661.	
OK or NG	
OK ▶	GO TO 16.
NG ▶	Replace stop lamp switch.

16	CHECK INTERMITTENT INCIDENT
Refer to "TROUBLE DIAGNOSIS FOR INTERMITTENT INCIDENT", EC-155.	
▶	**INSPECTION END**

Component Description

NAEC1352

ASCD indicator lamp illuminates to indicate ASCD operation status. Lamp has two indicators, CRUISE and SET, and is integrated in combination meter.

CRUISE indicator illuminates when MAIN switch on steering switch is turned ON to indicate that ASCD system is ready for operation.

SET indicator illuminates when following conditions are met. CRUISE indicator illuminates, and SET/COAST switch on steering switch is turned ON while vehicle speed is within range of ASCD setting.

SET indicator remains lit during ASCD control. Refer to EC-54 for ASCD functions.

CONSULT-II Reference Value in Data Monitor Mode

NAEC1353

Specification data are reference values.

MONITOR ITEM	CONDITION		SPECIFICATION
CRUISE LAMP	● Ignition switch: ON	● MAIN switch: Pressed at first time → second time	ON → OFF
SET LAMP	● When vehicle speed is between 40 km/h (25 MPH) to 144 km/h (89 MPH), and MAIN switch is ON.	● SET/COAST switch: Pressed	ON
		● SET/COAST switch: Released	OFF

Wiring Diagram

NAEC1354

EC-ASCIND-01

: Detectable line for DTC
: Non-detectable line for DTC
: DATA LINE
FM : With fine vision meter
NM : With normal meter

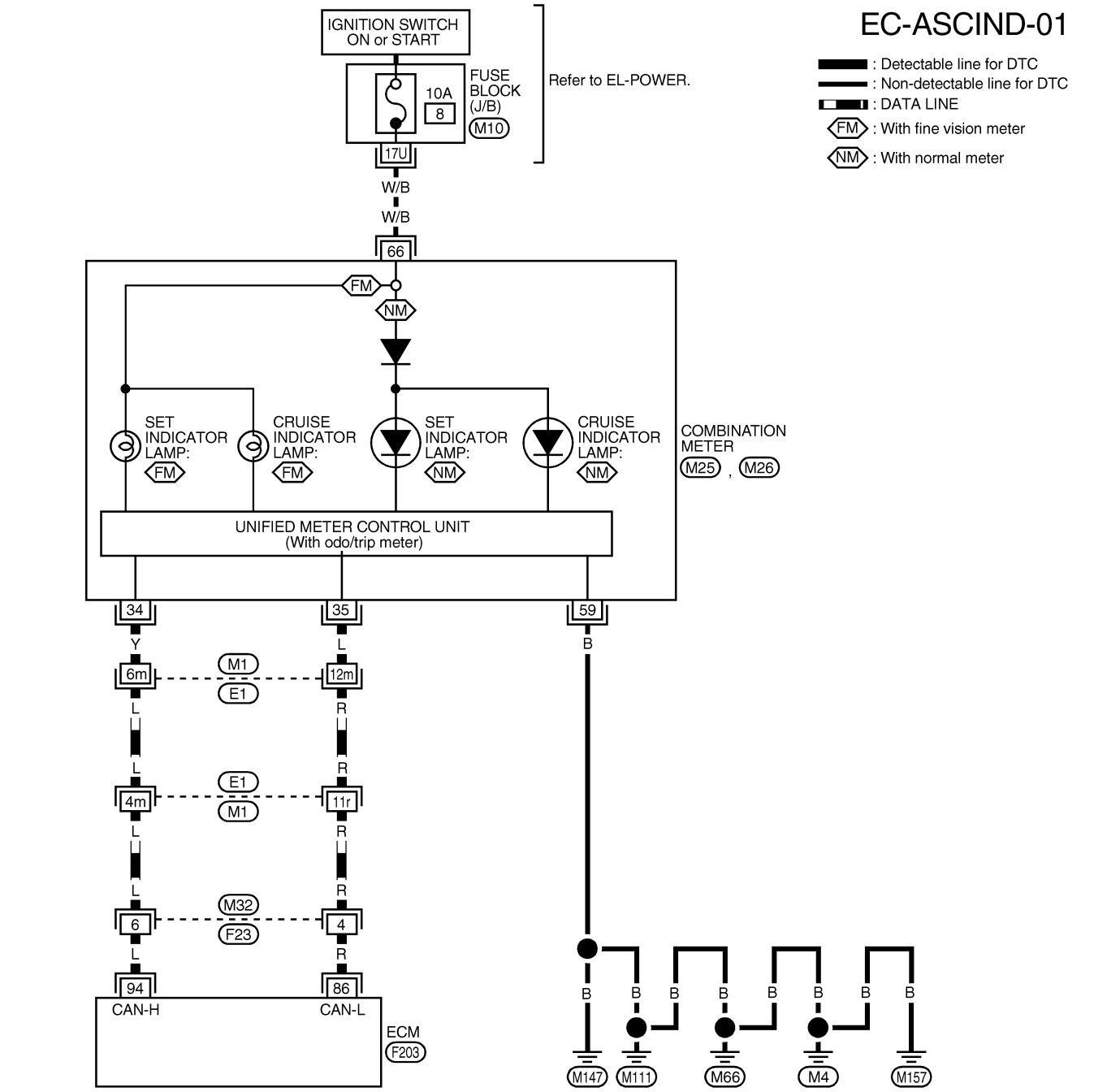

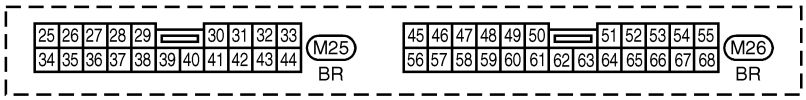

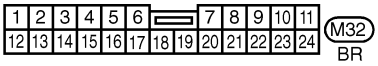

REFER TO THE FOLLOWING.
M10 -FUSE BLOCK-JUNCTION BOX (J/B)
E1 -SUPER MULTIPLE JUNCTION (SMJ)

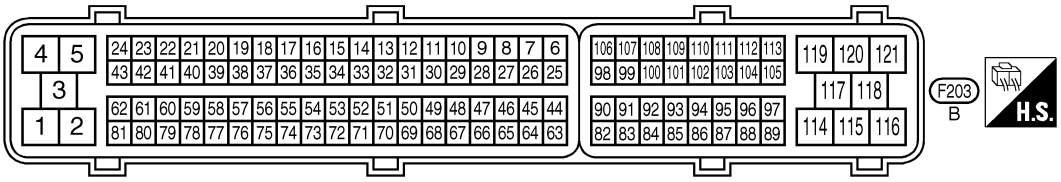

MEC668E

Diagnostic Procedure

NAEC1355

1	CHECK OVERALL FUNCTION

Check ASCD indicator under the following conditions.

MONITOR ITEM	CONDITION		SPECIFICATION
CRUISE LAMP	Ignition switch : ON	CRUISE switch pressed	ON
		CRUISE switch released	OFF
SET LAMP	When vehicle speed is between 40 km/h (25 MPH) to 144 km/h (89 MPH), and CRUISE switch is ON.	COAST/SET switch pressed	ON
		COAST/SET switch released	OFF

MTBL1260

OK or NG

OK	▶	**INSPECTION END**
NG	▶	GO TO 2.

2	CHECK DTC

Make sure that DTC U1000 or U1001 is not displayed.

OK or NG

OK	▶	GO TO 3.
NG	▶	Perform “Diagnostic Procedure” for DTC U1000 or U1001, EC-168.

3	CHECK COMBINATION METER OPERATION

Check that combination meter operates normally.

OK or NG

OK	▶	GO TO 4.
NG	▶	Check combination meter circuit. Refer to EL-124.

4	CHECK INTERMITTENT INCIDENT

Refer to “TROUBLE DIAGNOSIS FOR INTERMITTENT INCIDENT”, EC-155.

	▶	**INSPECTION END**

ECM Terminals and Reference Value

NAEC0690

Specification data are reference values and are measured between each terminal and ground.

CAUTION:

Do not use ECM ground terminals when measuring input/output voltage. Doing so may result in damage to the ECM's transistor. Use a ground other than ECM terminals, such as the ground.

TERMINAL NO.	WIRE COLOR	ITEM	CONDITION	DATA (DC Voltage)
84	OR	Headlamp signal	**[Engine is running]** ● Headlamp: ON	BATTERY VOLTAGE (11 - 14V)
			[Engine is running] ● Headlamp: OFF	0V
93	B/L	Rear window defogger signal	**[Engine is running]** ● Rear window defogger: ON	BATTERY VOLTAGE (11 - 14V)
			[Engine is running] ● Rear window defogger: OFF	0V

Wiring Diagram

NAEC0604

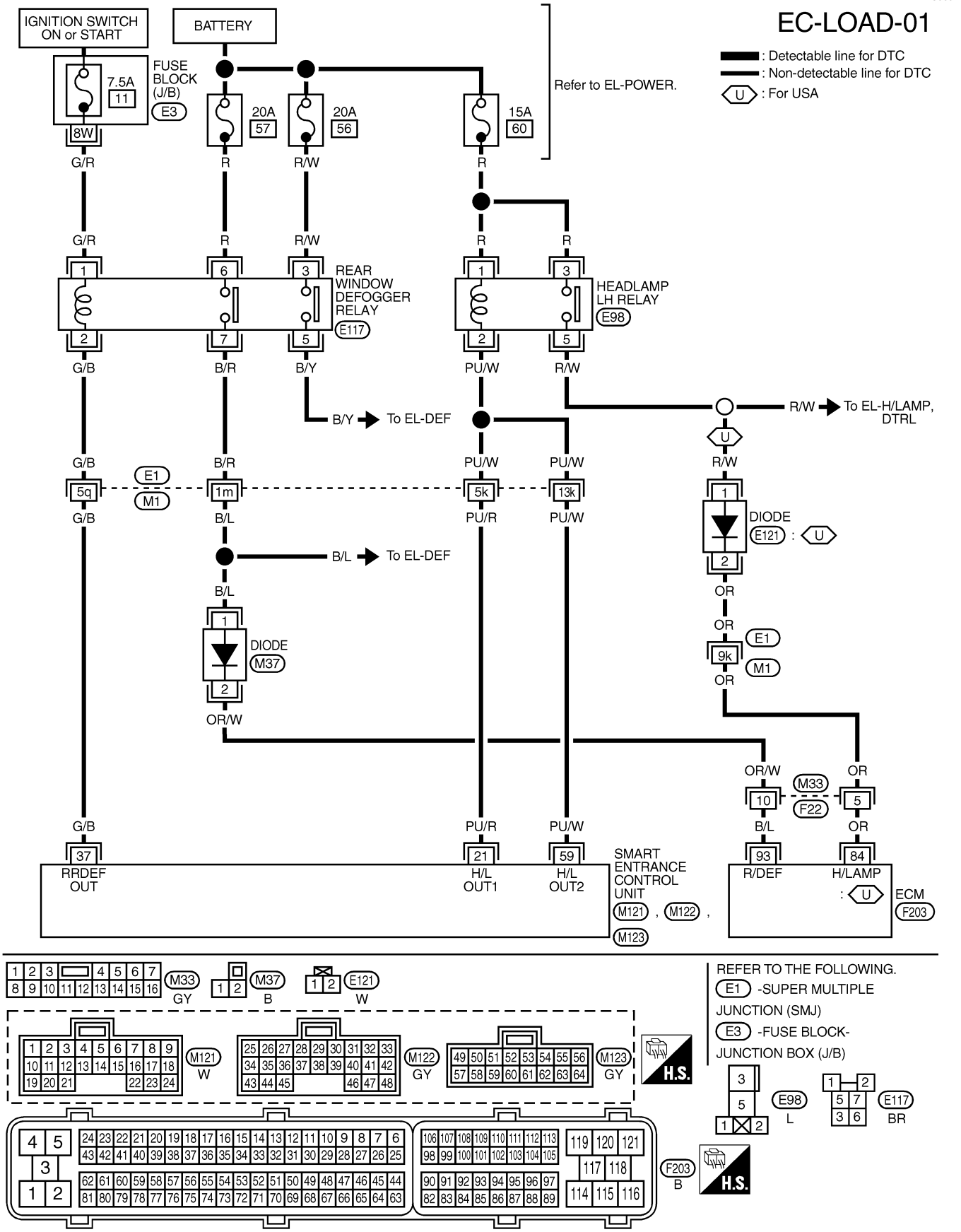

Diagnostic Procedure

NAEC0605

1	CHECK LOAD SIGNAL CIRCUIT OVERALL FUNCTION-I

1. Turn ignition switch ON.
2. Check voltage between ECM terminal 93 and ground under the following conditions.

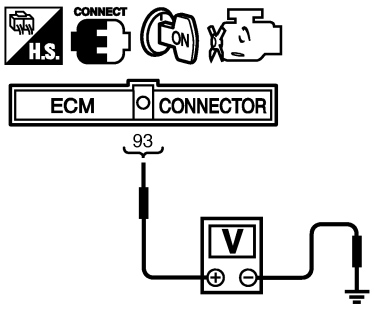

SEC568D

Condition	Voltage
Rear window defogger switch “ON”	BATTERY VOLTAGE
Rear window defogger switch “OFF”	0V

MTBL1374

OK or NG

OK	▶	GO TO 2.
NG	▶	GO TO 3.

2	CHECK LOAD SIGNAL CIRCUIT OVERALL FUNCTION-II

Check voltage between ECM terminal 84 and ground under the following conditions.

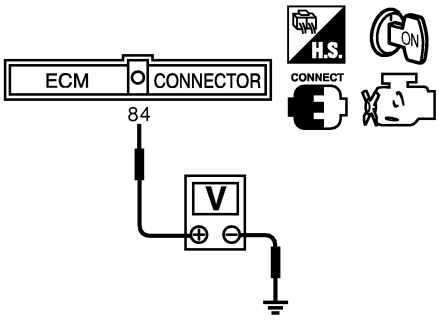

MBIB0158E

Condition	Voltage
Lighting switch “ON” at 1st position	BATTERY VOLTAGE
Lighting switch “OFF”	0V

MTBL1375

OK or NG

OK	▶	**INSPECTION END**
NG	▶	GO TO 7.

3	CHECK REAR WINDOW DEFOGGER FUNCTION	
1. Start engine. 2. Turn ON the rear window defogger switch. 3. Check the rear windshield. Is the rear windshield heated up?		
Yes or No		
Yes	▶	GO TO 4.
No	▶	Refer to EL-192, "Rear Window Defogger".

4	CHECK REAR WINDOW DEFOGGER INPUT SIGNAL CIRCUIT FOR OPEN OR SHORT	

1. Stop engine.
2. Disconnect ECM harness connector.
3. Disconnect rear window defogger relay.
4. Check harness continuity between ECM terminal 93 and rear window defogger relay terminal 7.

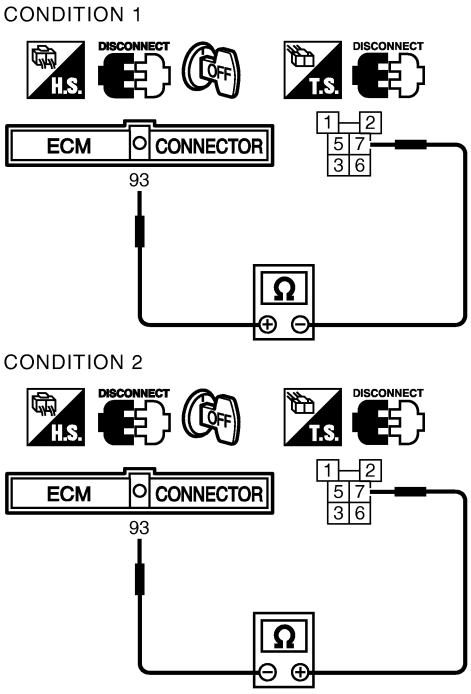

SEC569D

CONDITION	CONTINUITY
1	Should exist.
2	Should not exist.

MTBL1376

5. Also check harness for short to ground and short to power.

OK or NG		
OK	▶	GO TO 6.
NG	▶	GO TO 5.

5	DETECT MALFUNCTIONING PART	
Check the following. ● Harness connectors E1, M1 ● Harness connectors M33, F22 ● Diode M37 ● Harness for open and short between ECM and rear window defigger relay		
	▶	Repair open circuit or short to ground or short to power in harness or connectors.

6	CHECK INTERMITTENT INCIDENT
Perform "TROUBLE DIAGNOSIS FOR INTERMITTENT INCIDENT", EC-155.	
▶	**INSPECTION END**

7	CHECK HEADLAMP FUNCTION
1. Start engine. 2. Turn the lighting switch ON at 1st position with high beam. 3. Check that headlamps are illuminated.	
OK or NG	
OK ▶	GO TO 8.
NG ▶	Refer to EL-35, "HEADLAMP (FOR USA)".

8	CHECK HEADLAMP INPUT SIGNAL CIRCUIT FOR OPEN OR SHORT
1. Stop engine. 2. Disconnect ECM harness connector. 3. Disconnect headlamp LH relay. 4. Check harness continuity between ECM terminal 84 and headlamp LH relay terminal 5 under the following conditions.	

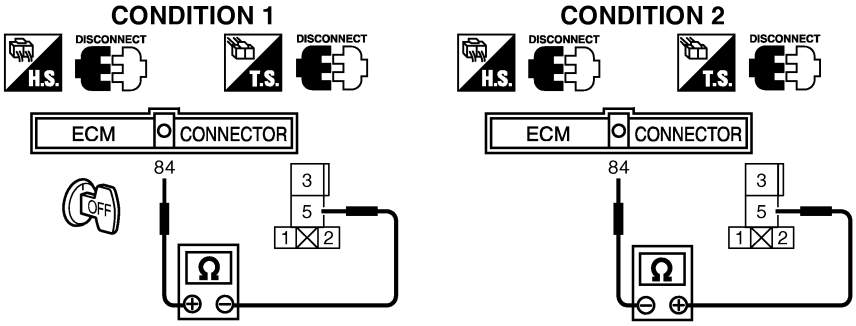

CONDITION	CONTINUITY
1	Should exist.
2	Should not exist.

SEC570D

5. Also check harness for short to ground and short to power.

OK or NG	
OK ▶	GO TO 10.
NG ▶	GO TO 9.

9	DETECT MALFUNCTIONING PART
Check the following. ● Harness connectors E1, M1 ● Harness connectors M33, F22 ● Diode E121 ● Harness for open and short between ECM and headlamp LH relay	
▶	Repair open circuit or short to ground or short to power in harness or connectors.

10	CHECK INTERMITTENT INCIDENT
Perform "TROUBLE DIAGNOSIS FOR INTERMITTENT INCIDENT", EC-155.	
▶	**INSPECTION END**

Wiring Diagram

NAEC0407

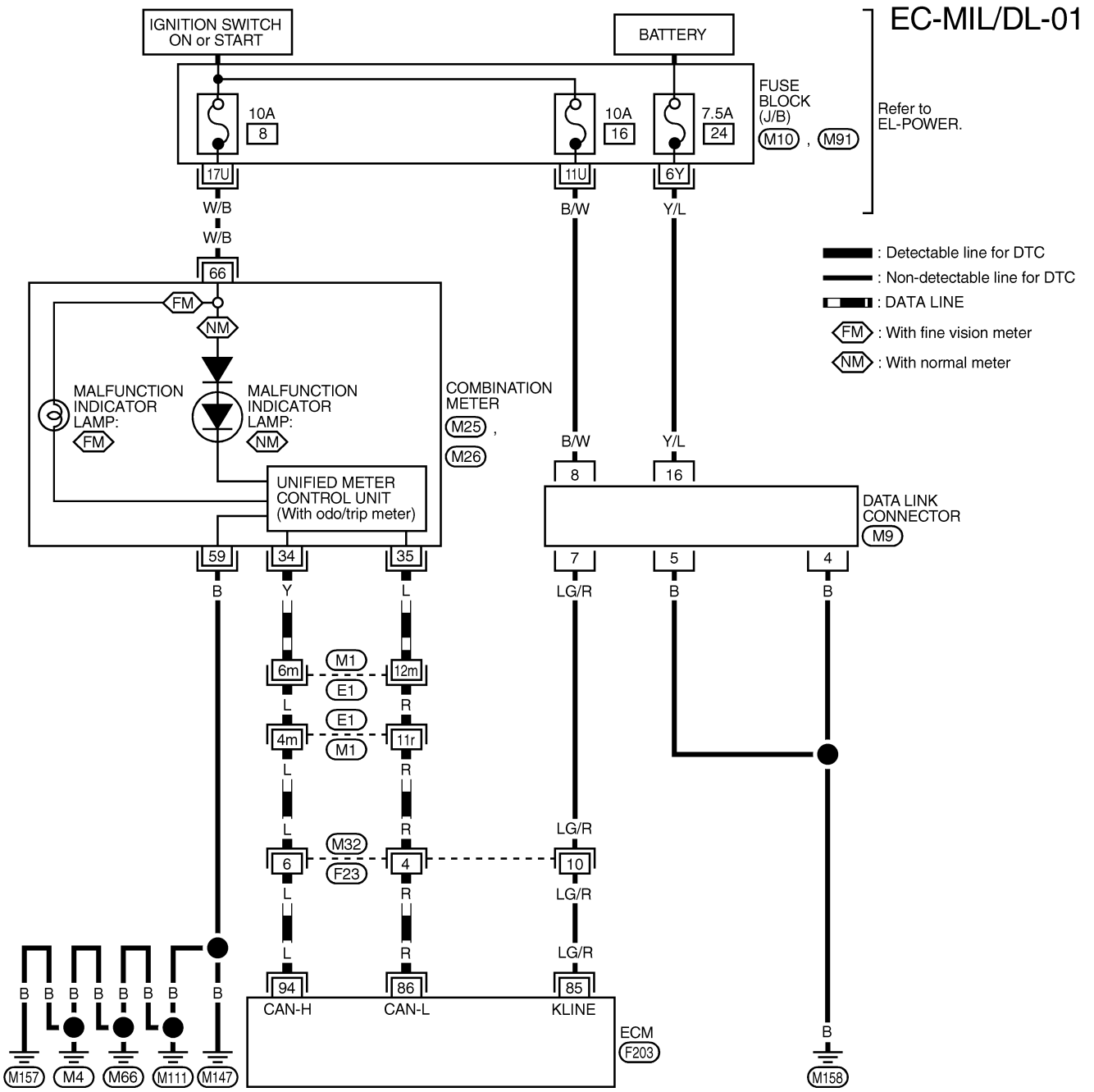

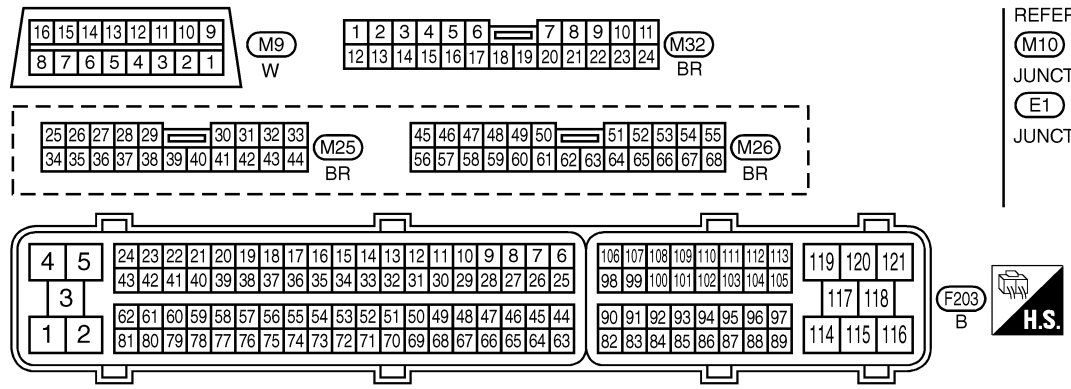

REFER TO THE FOLLOWING.
M10 , M91 -FUSE BLOCK-JUNCTION BOX (J/B)
E1 -SUPER MULTIPLE JUNCTION (SMJ)

MEC669E

Fuel Pressure Regulator

NAEC0408

Condition	Fuel pressure at idling kPa (kg/cm^2, psi)
Vacuum hose is connected.	Approximately 235 (2.4, 34)
Vacuum hose is disconnected.	Approximately 294 (3.0, 43)

Idle Speed and Ignition Timing

NAEC0409

Target idle speed	No-load*1 (in P or N position)	M/T: 750±50 rpm A/T: 750±50 rpm
Air conditioner: ON	In P or N position	825 rpm or more
Ignition timing	In P or N position	15°±5° BTDC

*1: Under the following conditions:

- Air conditioner switch: OFF
- Electric load: OFF (Lights, heater fan & rear window defogger)
- Steering wheel: Kept in straight-ahead position

Mass Air Flow Sensor

NAEC1412

Supply voltage	Battery voltage (11 - 14V)
Output voltage at idle	1.0 - 1.3V*
Mass air flow (Using CONSULT-II or GST)	2.0 - 6.0 g·m/sec at idle* 7.0 - 20.0 g·m/sec at 2,500 rpm*

*: Engine is warmed up to normal operating temperature and running under no-load.

Engine Coolant Temperature Sensor

NAEC0412

Temperature °C (°F)	Resistance kΩ
20 (68)	2.1 - 2.9
50 (122)	0.68 - 1.00
90 (194)	0.236 - 0.260

Heated Oxygen Sensor 1 Heater

NAEC0414

Resistance [at 25°C (77°F)]	3.3 - 4.0Ω

Heated Oxygen Sensor 2 Heater

NAEC0422

Resistance [at 23°C (73°F)]	Approximately 11Ω

Fuel Pump

NAEC0415

Resistance [at 25°C (77°F)]	0.2 - 5.0Ω

Injector

NAEC0417

Resistance [at 10 - 60°C (50 - 140°F)]	13.5 - 17.3Ω

Calculated Load Value

NAEC0420

	Calculated load value % (Using CONSULT-II or GST)
At idle	14.0 - 33.0
At 2,500 rpm	12.0 - 25.0

Intake Air Temperature Sensor

NAEC0421

Temperature °C (°F)	Resistance kΩ
25 (77)	1.9 - 2.1

Fuel Tank Temperature Sensor

NAEC0424

Temperature °C (°F)	Resistance kΩ
20 (68)	2.3 - 2.7
50 (122)	0.79 - 0.90

Crankshaft Position Sensor (POS)

NAEC1357

Refer to “Component Inspection”, EC-319.

Camshaft Position Sensor (PHASE)

NAEC1358

Refer to “Component Inspection”, EC-326.

NOTES

ELECTRICAL SYSTEM

SECTION EL

CONTENTS

PRECAUTIONS 5
Supplemental Restraint System (SRS) "AIR BAG" and "SEAT BELT PRE-TENSIONER".....5
Precautions for SRS "AIR BAG" and "SEAT BELT PRE-TENSIONER" Service.....5
Precautions for Trouble Diagnosis 5
Precautions for Harness Repair 6
Wiring Diagrams and Trouble Diagnosis.....6
HARNESS CONNECTOR.....7
Description.....7
STANDARDIZED RELAY.....9
Description.....9
POWER SUPPLY ROUTING.....11
Schematic 11
Wiring Diagram - POWER - 12
Inspection.....18
GROUND.....19
Ground Distribution.....19
COMBINATION SWITCH 32
Check.....32
Replacement.....33
STEERING SWITCH.....34
Check.....34
HEADLAMP (FOR USA) 35
Component Parts and Harness Connector Location 35
System Description.....35
Schematic 38
Wiring Diagram - H/LAMP -.....39
CONSULT-II Inspection Procedure.....43
CONSULT-II Application Items 44
Trouble Diagnoses.....44
Bulb Replacement 47
Aiming Adjustment.....47
HEADLAMP (FOR CANADA) - DAYTIME LIGHT SYSTEM - 50
Component Parts and Harness Connector Location 50
System Description.....50
Schematic 54
Wiring Diagram - DTRL -.....55
CONSULT-II Inspection Procedure.....60
CONSULT-II Application Items 60
Trouble Diagnoses.....60
Bulb Replacement 65
Aiming Adjustment.....65
PARKING, LICENSE AND TAIL LAMPS 66
System Description.....66
Schematic 68
Wiring Diagram - TAIL/L -.....69
CONSULT-II Inspection Procedure.....73
CONSULT-II Application Items 74
Trouble Diagnoses.....74
STOP LAMP 76
Wiring Diagram - STOP/L - 76
BACK-UP LAMP.....78
Wiring Diagram - BACK/L - 78
FRONT FOG LAMP.....79
System Description.....79
Wiring Diagram - F/FOG -.....80
Aiming Adjustment.....82
TURN SIGNAL AND HAZARD WARNING LAMPS 83
System Description.....83
Wiring Diagram - TURN -.....85
Trouble Diagnoses.....87
Electrical Components Inspection 87
ILLUMINATION.....88
System Description.....88
Schematic 90
Wiring Diagram - ILL - 91
INTERIOR, SPOT, VANITY MIRROR AND LUGGAGE ROOM LAMPS 98
System Description.....98
Schematic 100
Wiring Diagram - INT/L - 101
CONSULT-II Inspection Procedure.....106
CONSULT-II Application Items 107
Trouble Diagnoses for Interior Lamp Timer.....109

CONTENTS (Cont'd)

METERS AND GAUGES 124
Component Parts and Harness Connector Location 124
System Description 124
Combination Meter/With Normal Meter 126
Combination Meter/With Fine Vision Meter 128
Schematic/With Normal Meter 130
Schematic/With Fine Vision Meter 131
Wiring Diagram - METER - 132
Meter/Gauge Operation and Odo/Trip Meter Segment Check in Diagnosis Mode 133
Trouble Diagnoses 134
Electrical Components Inspection 140
COMPASS AND THERMOMETER 141
System Description 141
Wiring Diagram - COMPAS - 142
Trouble Diagnoses 143
Calibration Procedure for Compass 144
WARNING LAMPS 145
Schematic/With Normal Meter 145
Wiring Diagram - WARN -/With Normal Meter 146
Schematic/With Fine Vision Meter 154
Wiring Diagram - WARN -/With Fine Vision Meter 155
Fuel Warning Lamp Sensor Check 163
Electrical Components Inspection 163
WARNING CHIME 164
Component Parts and Harness Connector Location 164
System Description 164
Wiring Diagram - CHIME - 166
CONSULT-II Inspection Procedure 168
CONSULT-II Application Items 169
Trouble Diagnoses 170
FRONT WIPER AND WASHER 178
System Description 178
Wiring Diagram - WIPER - 180
Removal and Installation 181
Washer Nozzle Adjustment 182
Washer Tube Layout 182
REAR WIPER AND WASHER 183
System Description 183
Wiring Diagram - WIP/R - 185
Trouble Diagnoses 187
Removal and Installation 187
Washer Nozzle Adjustment 188
Washer Tube Layout 188
Check Valve 188
HORN 189
Wiring Diagram - HORN - 189
CIGARETTE LIGHTER 190
Wiring Diagram - CIGAR - 190
CLOCK 191
Wiring Diagram - CLOCK - 191
REAR WINDOW DEFOGGER 192
Component Parts and Harness Connector Location 192
System Description 192
Wiring Diagram - DEF - 194
CONSULT-II Inspection Procedure 198
CONSULT-II Application Items 199
Trouble Diagnoses 200
Electrical Components Inspection 203
Filament Check 204
Filament Repair 205
AUDIO 206
System Description 206
Wiring Diagram - AUDIO -/Base System 207
Schematic/BOSE System 209
Wiring Diagram - AUDIO -/BOSE System 210
Trouble Diagnoses 215
Inspection 216
Audio Unit Removal and Installation 216
Wiring Diagram - REMOTE - 217
AUDIO ANTENNA 218
System Description 218
Wiring Diagram - P/ANT - 219
Trouble Diagnoses 220
Location of Antenna 220
Antenna Rod Replacement 220
POWER SUNROOF 222
System Description 222
Wiring Diagram - SROOF - 223
CONSULT-II Inspection Procedure 225
CONSULT-II Application Items 226
Trouble Diagnoses 226
DOOR MIRROR 228
Wiring Diagram - MIRROR - 228
GLASS HATCH OPENER 229
Wiring Diagram - T&FLID - 229
POWER SEAT 230
Wiring Diagram - SEAT - 230
HEATED SEAT 232
Wiring Diagram - HSEAT - 232
Seatback Heating Unit 235
AUTOMATIC DRIVE POSITIONER 236
Component Parts and Harness Connector Location 236
System Description 237
Schematic 240
Wiring Diagram - AUT/DP - 241
On Board Diagnosis 246
Trouble Diagnoses 248
AUTOMATIC SPEED CONTROL DEVICE (ASCD) 271
System Description 271

CONTENTS (Cont'd)

POWER WINDOW 272
System Description 272
Schematic 275
Wiring Diagram - WINDOW - 276
CONSULT-II Inspection Procedure 281
CONSULT-II Application Items 282
Trouble Diagnoses 282
POWER DOOR LOCK 291
Component Parts and Harness Connector Location 291
System Description 291
Schematic 292
Wiring Diagram - D/LOCK - 293
CONSULT-II Inspection Procedure 299
CONSULT-II Application Items 300
Trouble Diagnoses 301
REMOTE KEYLESS ENTRY SYSTEM 314
Component Parts and Harness Connector Location 314
System Description 314
Schematic 318
Wiring Diagram - KEYLESS - 319
CONSULT-II Inspection Procedure 323
CONSULT-II Application Items 324
Trouble Diagnoses 325
ID Code Entry Procedure 338
Keyfob Battery Replacement 342
VEHICLE SECURITY (THEFT WARNING) SYSTEM 343
Component Parts and Harness Connector Location 343
System Description 344
Schematic 348
Wiring Diagram - VEHSEC - 350
CONSULT-II Inspection Procedure 356
CONSULT-II Application Item 357
Trouble Diagnoses 358
SMART ENTRANCE CONTROL UNIT 376
Description 376
CONSULT-II 378
Schematic 380
Smart Entrance Control Unit Inspection Table 382
HOMELINK UNIVERSAL TRANSCEIVER 385
Wiring Diagram - TRNSCV - 385
Trouble Diagnoses 386
NVIS (NISSAN VEHICLE IMMOBILIZER SYSTEM - NATS) 389
Component Parts and Harness Connetor Location 389
System Description 390
System Composition 390
Wiring Diagram - NATS - 391
CONSULT-II 392
Trouble Diagnoses 395
How to Replace NVIS (NATS) IMMU 408
CAN COMMUNICATION 409
System Description 409
CAN Communication Unit 409
CAN SYSTEM (TYPE 1) 414
Component Parts and Harness Connector Location 414
System Description 414
Wiring Diagram - CAN - 415
Trouble Diagnoses 417
Component Inspection 437
CAN SYSTEM (TYPE 2) 438
Component Parts and Harness Connector Location 438
System Description 438
Wiring Diagram - CAN - 439
Trouble Diagnoses 441
Component Inspection 459
CAN SYSTEM (TYPE 3) 460
Component Parts and Harness Connector Location 460
System Description 460
Wiring Diagram - CAN - 461
Trouble Diagnoses 462
Component Inspection 472
CAN SYSTEM (TYPE 4) 473
Component Parts and Harness Connector Location 473
System Description 473
Wiring Diagram - CAN - 474
Trouble Diagnoses 475
Component Inspection 478
ELECTRICAL UNITS LOCATION 479
Engine Compartment 479
Passenger Compartment 480
HARNESS LAYOUT 482
How to Read Harness Layout 482
Outline 483
Main Harness 484
Engine Room Harness 486
Engine Control Harness 488
Body Harness LH 490
Body Harness RH 491
Back Door Harness 492
Engine and Transmission Harness 493
Room Lamp Harness 494
Air Bag Harness 495
Front Door Harness 496
Rear Door Harness 497
BULB SPECIFICATIONS 498

CONTENTS (Cont'd)

Headlamp.....498
Exterior Lamp 498
Interior Lamp.....498
WIRING DIAGRAM CODES (CELL CODES).....499

Supplemental Restraint System (SRS) "AIR BAG" and "SEAT BELT PRE-TENSIONER"

NAEL0001

The Supplemental Restraint System such as "AIR BAG" and "SEAT BELT PRE-TENSIONER" used along with a seat belt, helps to reduce the risk or severity of injury to the driver and front passenger for certain types of collision. The SRS composition which is available to NISSAN MODEL R50 is as follows:

- For a frontal collision
  The Supplemental Restraint System consists of driver air bag module (located in the center of the steering wheel), front passenger air bag module (located on the instrument panel on passenger side), seat belt pre-tensioners, a diagnosis sensor unit, warning lamp, wiring harness and spiral cable.
- For a side collision
  The Supplemental Restraint System consists of side air bag module (located in the outer side of front seat), side curtain air bag module (locating in the headliner side of front and rear seat), satellite sensor, diagnosis sensor unit (one of components of air bags for a frontal collision), wiring harness, warning lamp (one of components of air bags for a frontal collision).

WARNING:

- **To avoid rendering the SRS inoperative, which could increase the risk of personal injury or death in the event of a collision which would result in air bag inflation, all maintenance must be performed by an authorized NISSAN dealer.**
- **Improper maintenance, including incorrect removal and installation of the SRS, can lead to personal injury caused by unintentional activation of the system.**
- **Do not use electrical test equipment on any circuit related to the SRS unless instructed to in this Service Manual. SRS wiring harnesses can be identified by yellow and/or orange harness connector (and by yellow harness protector or yellow insulation tape before the harness connectors).**

Precautions for SRS "AIR BAG" and "SEAT BELT PRE-TENSIONER" Service

NAEL0485

- Do not use electrical test equipment to check SRS circuits unless instructed to in this Service Manual.
- Before servicing the SRS, turn ignition switch "OFF", disconnect battery ground cable and wait at least 3 minutes.
  For approximately 3 minutes after the cables are removed, it is still possible for the air bag and seat belt pre-tensioner to deploy. Therefore, do not work on any SRS connectors or wires until at least 3 minutes have passed.
- Diagnosis sensor unit must always be installed with their arrow marks "⇐" pointing towards the front of the vehicle for proper operation. Also check diagnosis sensor unit for cracks, deformities or rust before installation and replace as required.
- The spiral cable must be aligned with the neutral position since its rotations are limited. Do not attempt to turn steering wheel or column after removal of steering gear.
- Handle air bag module carefully. Always place driver and passenger air bag modules with the pad side facing upward and side air bag module standing with the stud bolt side setting bottom.
- Conduct self-diagnosis to check entire SRS for proper function after replacing any components.
- After air bag inflates, the front instrument panel assembly should be replaced if damaged.

Precautions for Trouble Diagnosis

NAEL0458

CAN SYSTEM

NAEL0458S01

- Do not apply voltage of 7.0V or higher to the measurement terminals.
- Use the tester with its open terminal voltage being 7.0V or less.

Precautions for Harness Repair

NAEL0459

CAN SYSTEM

NAEL0459S01

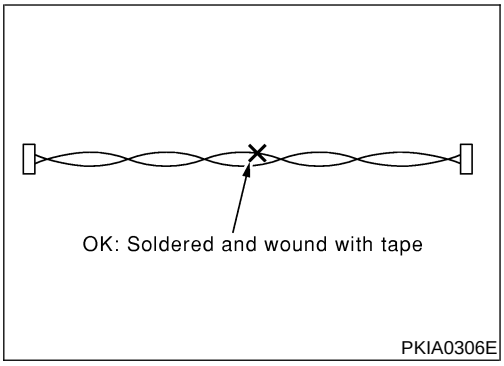

- Solder the repaired parts, and wrap with tape. [Frays of twisted line must be within 110 mm (4.33 in)]

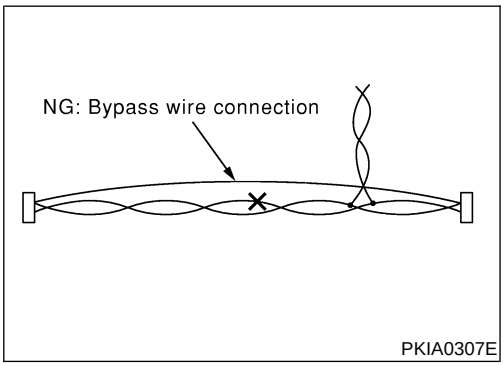

- Do not perform bypass wire connections for the repair parts. (The spliced wire will become separated and the characteristics of twisted line will be lost.)

Wiring Diagrams and Trouble Diagnosis

NAEL0002

When you read wiring diagrams, refer to the following:

- GI-11, “HOW TO READ WIRING DIAGRAMS”
- EL-11, “POWER SUPPLY ROUTING” for power distribution circuit

When you perform trouble diagnosis, refer to the following:

- GI-35, “HOW TO FOLLOW TEST GROUPS IN TROUBLE DIAGNOSES”
- GI-24, “HOW TO PERFORM EFFICIENT DIAGNOSIS FOR AN ELECTRICAL INCIDENT”

Check for any Service bulletins before servicing the vehicle.

Description

NAEL0003

HARNESS CONNECTOR (TAB-LOCKING TYPE)

NAEL0003S01

- The tab-locking type connectors help prevent accidental looseness or disconnection.
- The tab-locking type connectors are disconnected by pushing or lifting the locking tab(s). Refer to the illustration below.

Refer to the next page for description of the slide-locking type connector.

CAUTION:

Do not pull the harness when disconnecting the connector.

[Example]

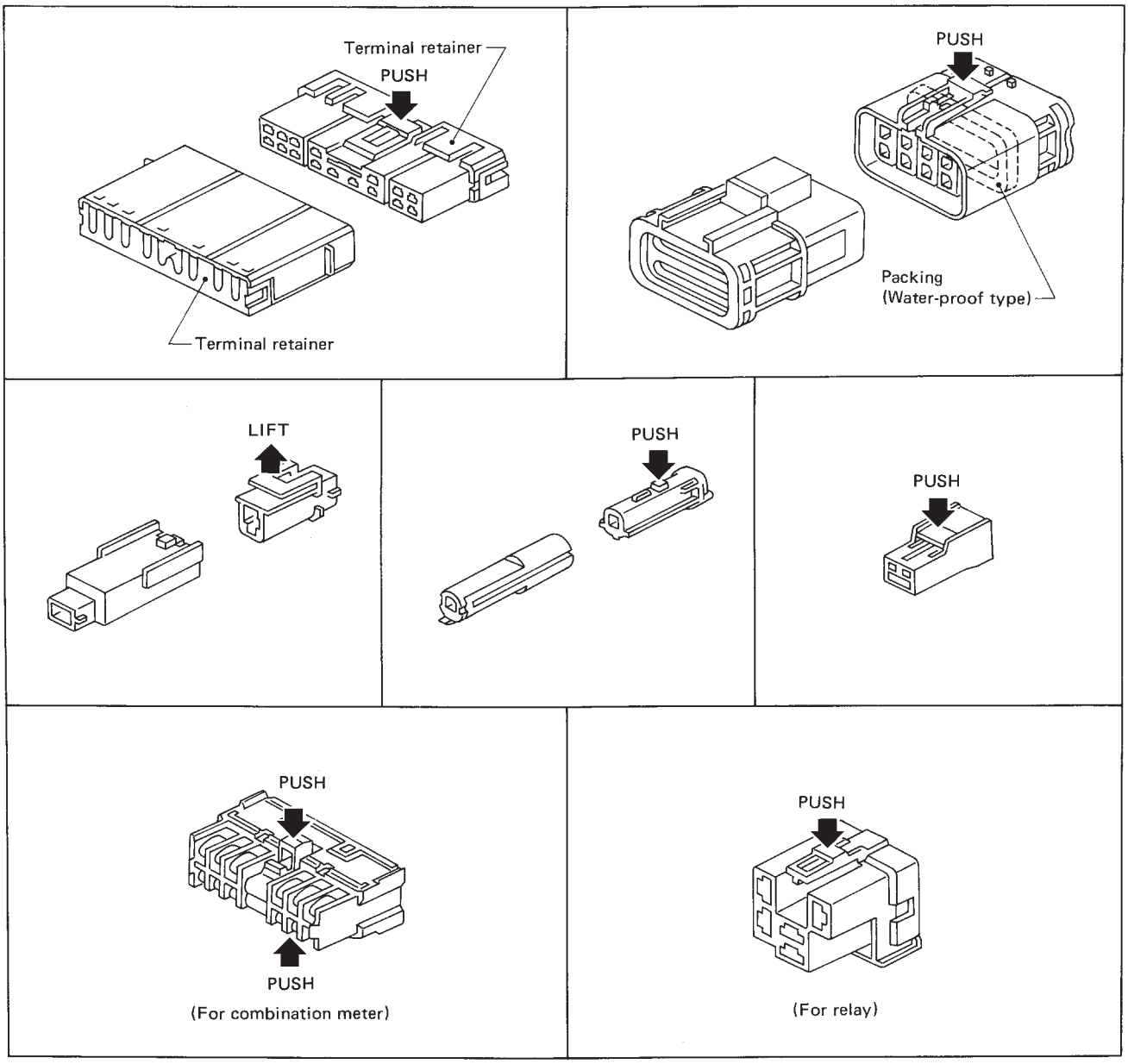

SEL769D

HARNESS CONNECTOR (SLIDE-LOCKING TYPE)

=NAEL0003S02

- A new style slide-locking type connector is used on certain systems and components, especially those related to OBD.
- The slide-locking type connectors help prevent incomplete locking and accidental looseness or disconnection.
- The slide-locking type connectors are disconnected by pushing or pulling the slider. Refer to the illustration below.

CAUTION:

- **Do not pull the harness or wires when disconnecting the connector.**
- **Be careful not to damage the connector support bracket when disconnecting the connector.**

[Example]

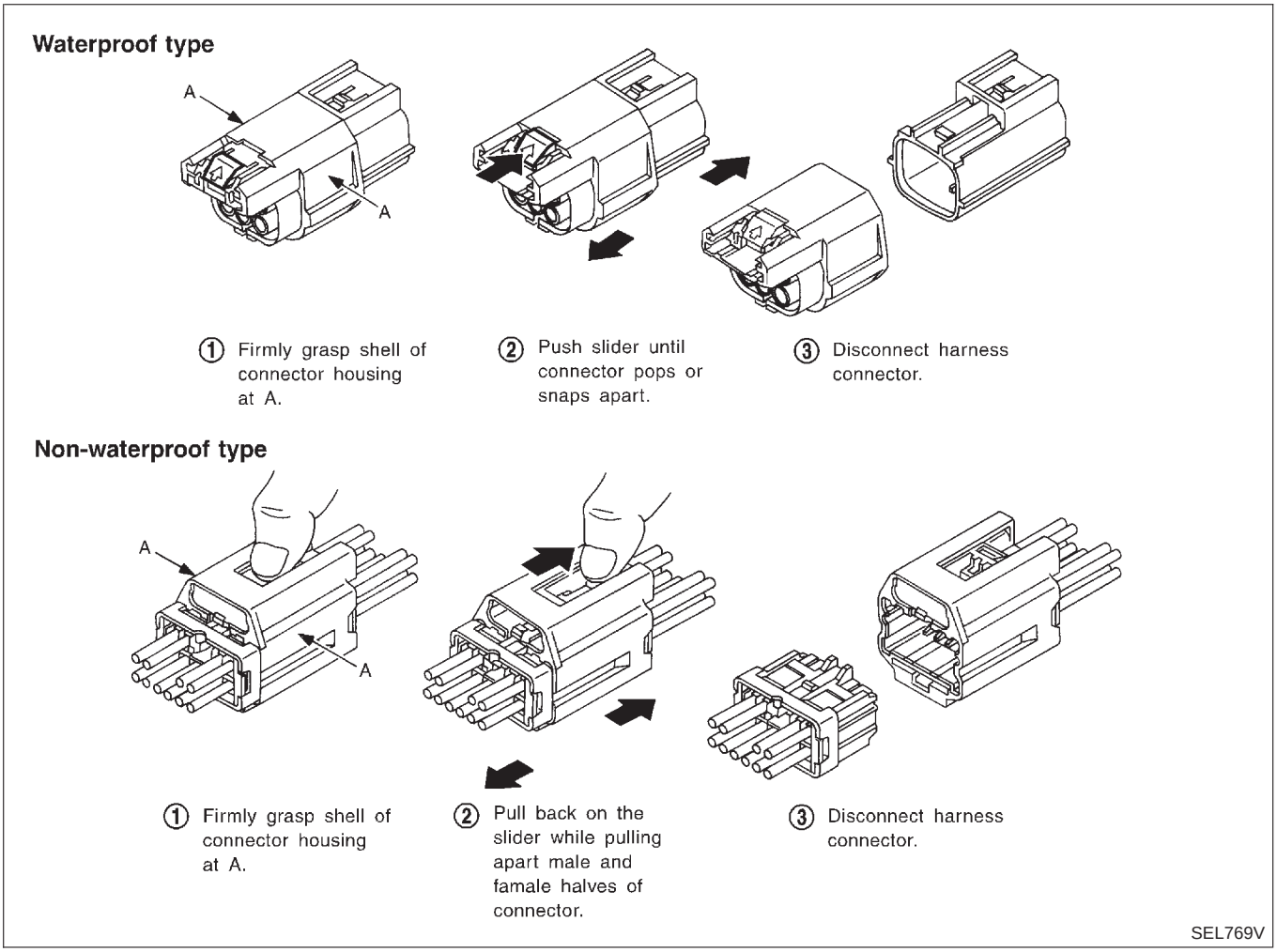

Description

NAEL0004

NORMAL OPEN, NORMAL CLOSED AND MIXED TYPE RELAYS

NAEL0004S01

Relays can mainly be divided into three types: normal open, normal closed and mixed type relays.

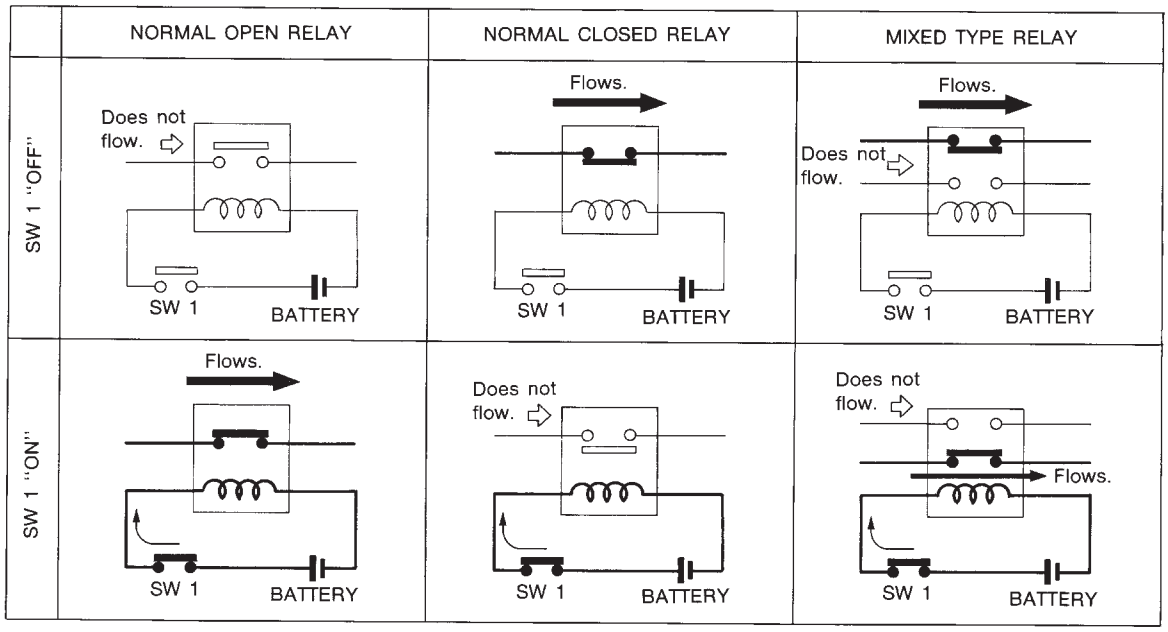

SEL881H

TYPE OF STANDARDIZED RELAYS

NAEL0004S02

1M	1 Make	2M	2 Make
1T	1 Transfer	1M·1B	1 Make 1 Break

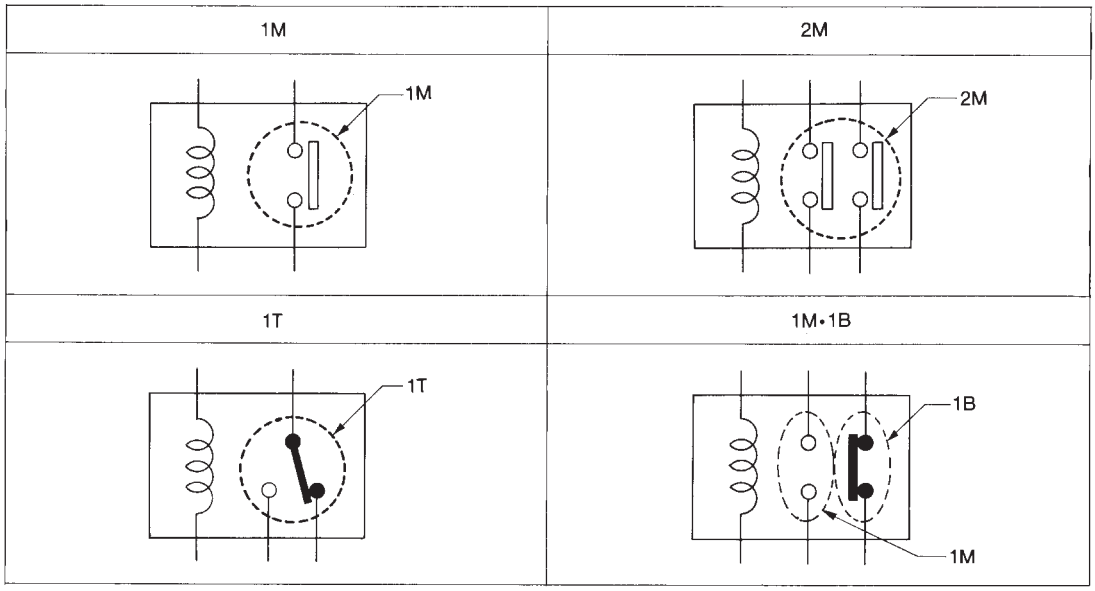

SEL882H

Type	Outer view	Circuit	Connector symbol and connector	Case color
1T	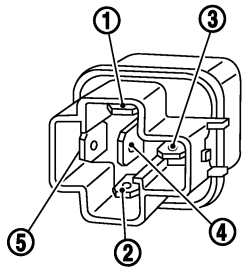	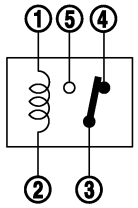	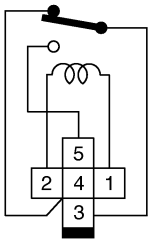	BLACK
	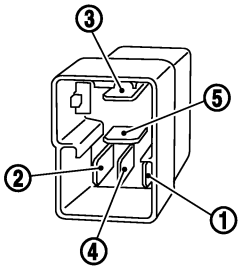		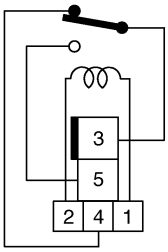	
2M	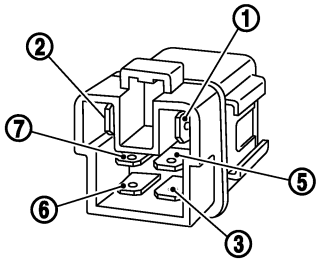	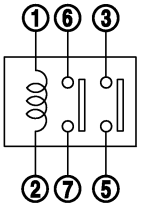	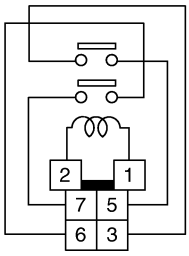	BROWN
1M•1B	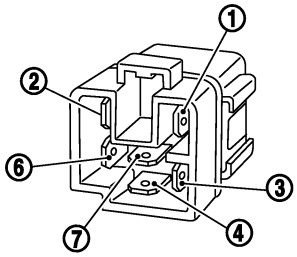	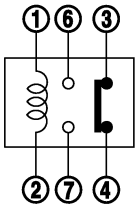	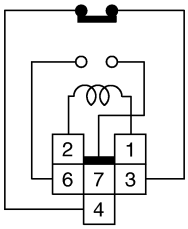	GRAY
1M	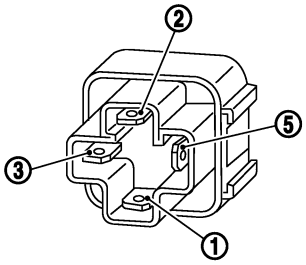	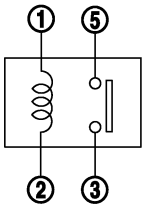	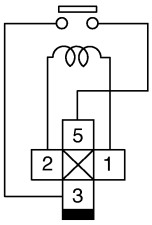	BLUE
	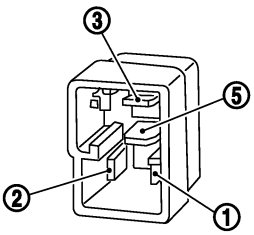		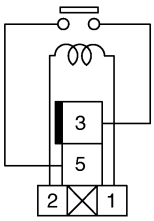	

The arrangement of terminal numbers on the actual relays may differ from those shown above.

GEL264

Schematic

NAEL0247

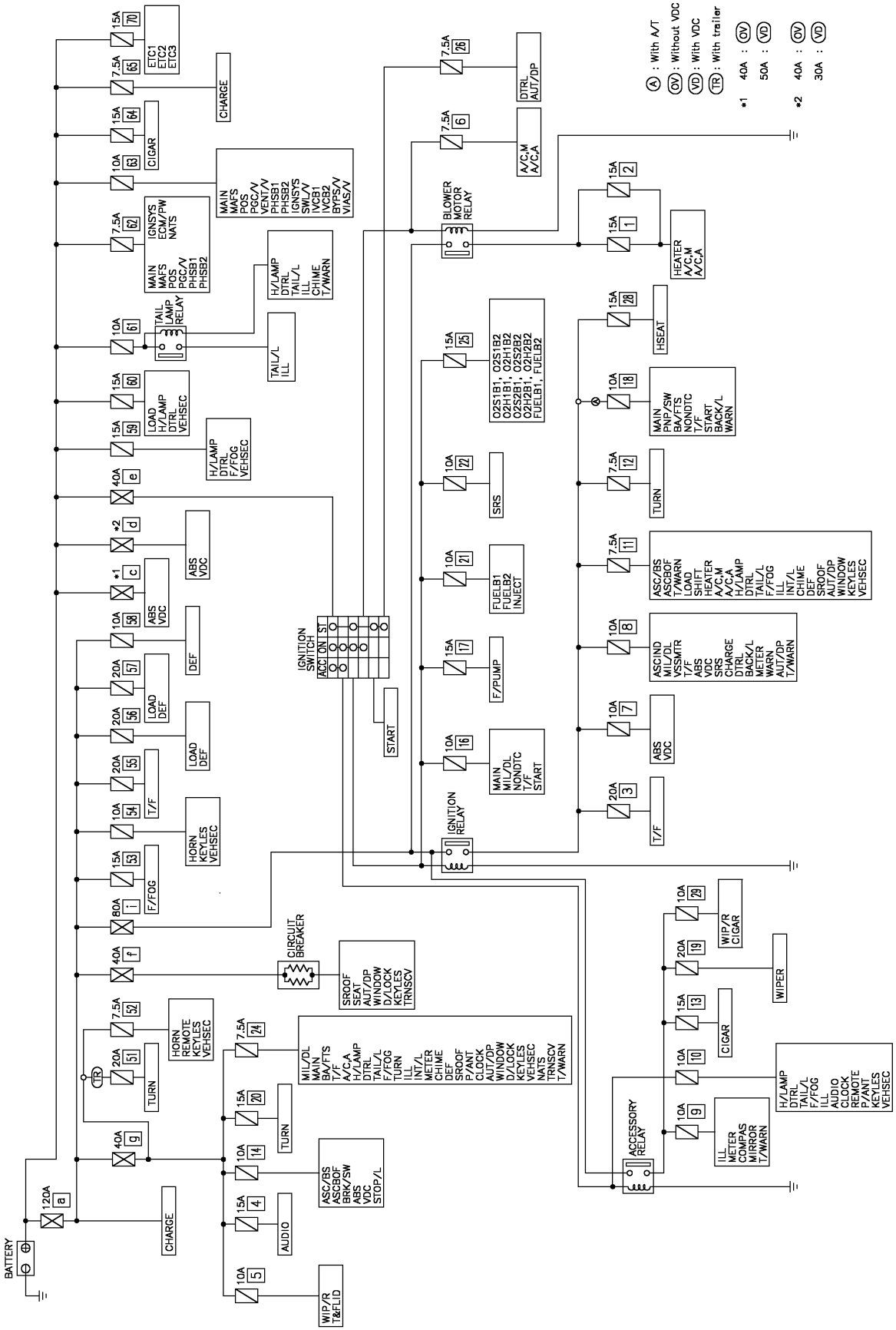

MEL085S

Wiring Diagram — POWER —

NAEL0248

BATTERY POWER SUPPLY — IGNITION SW. IN ANY POSITION

NAEL0248S01

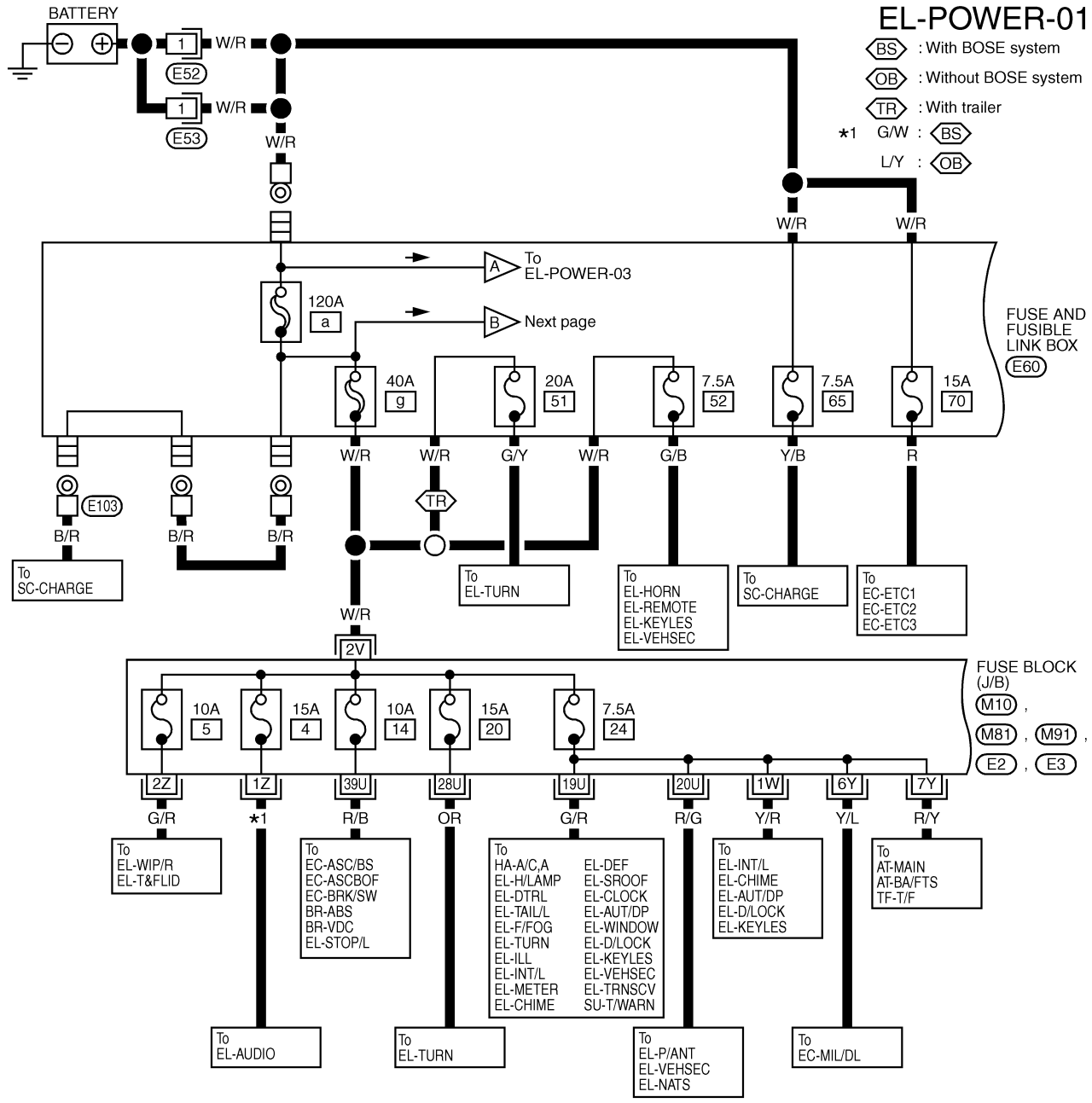

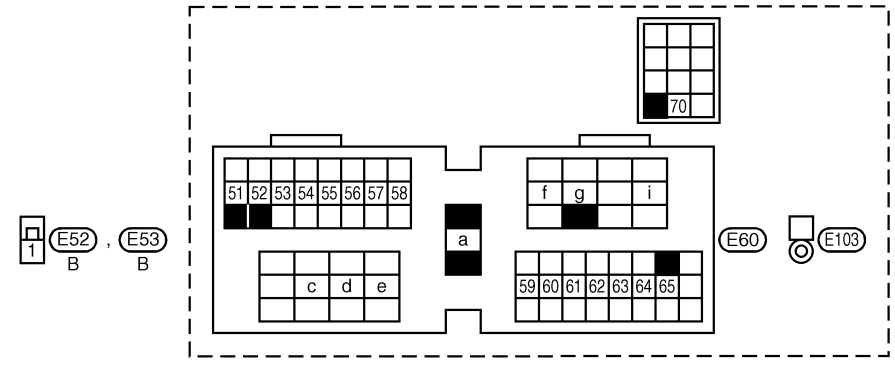

REFER TO THE FOLLOWING.

M10 , M81 , M91 , E2 , E3

-FUSE BLOCK-
JUNCTION BOX (J/B)

1	2	3	4	5
6	7	8	9	10
11	12	13	14	
16	17	18	19	20
21	22			
24	25	26		
	28	29		

MEL086S

EL-POWER-02

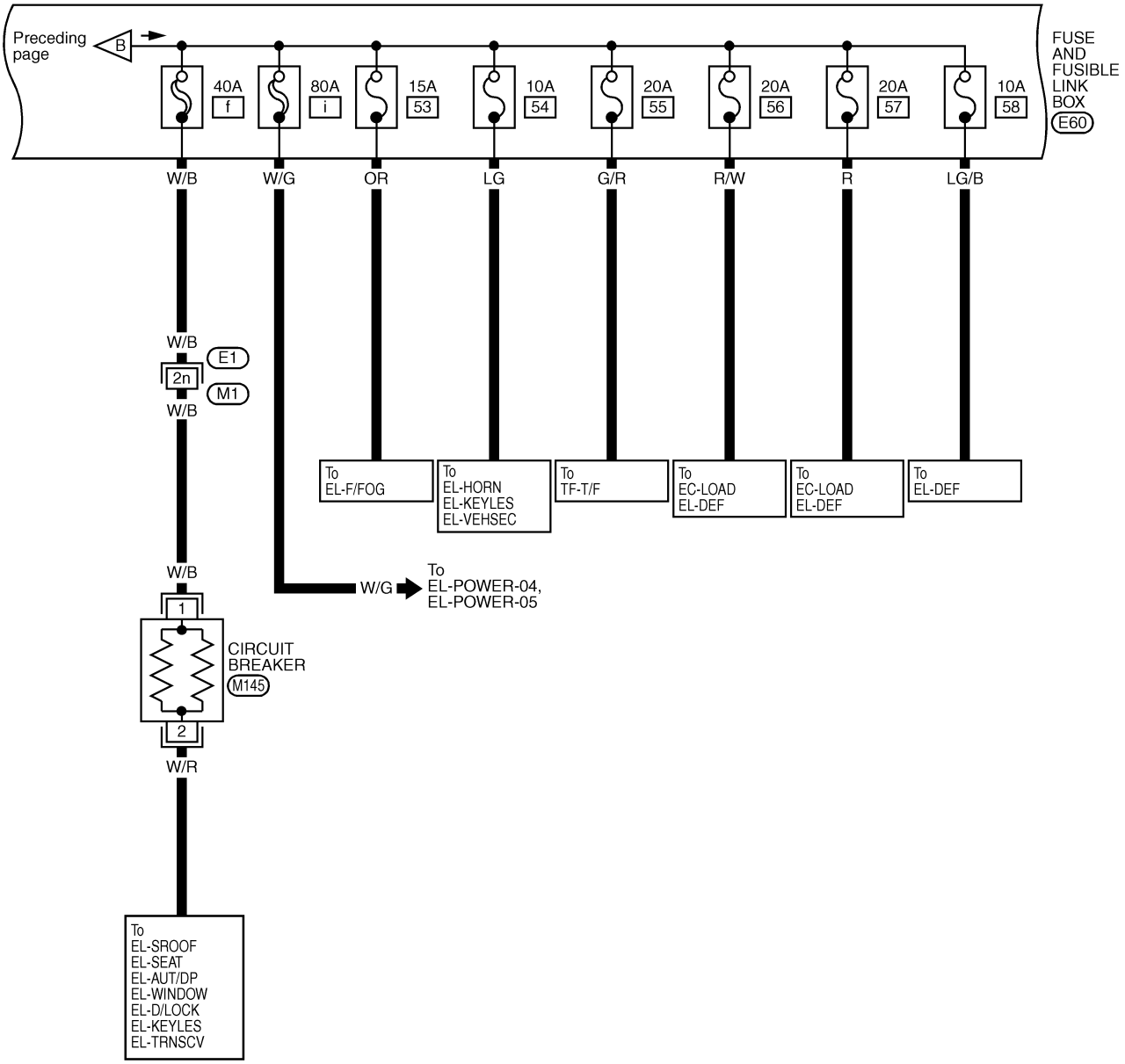

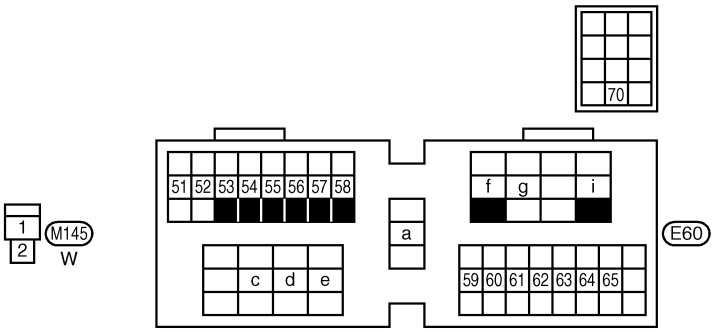

REFER TO THE FOLLOWING.
E1 -SUPER MULTIPLE JUNCTION (SMJ)

MEL128S

EL-POWER-03

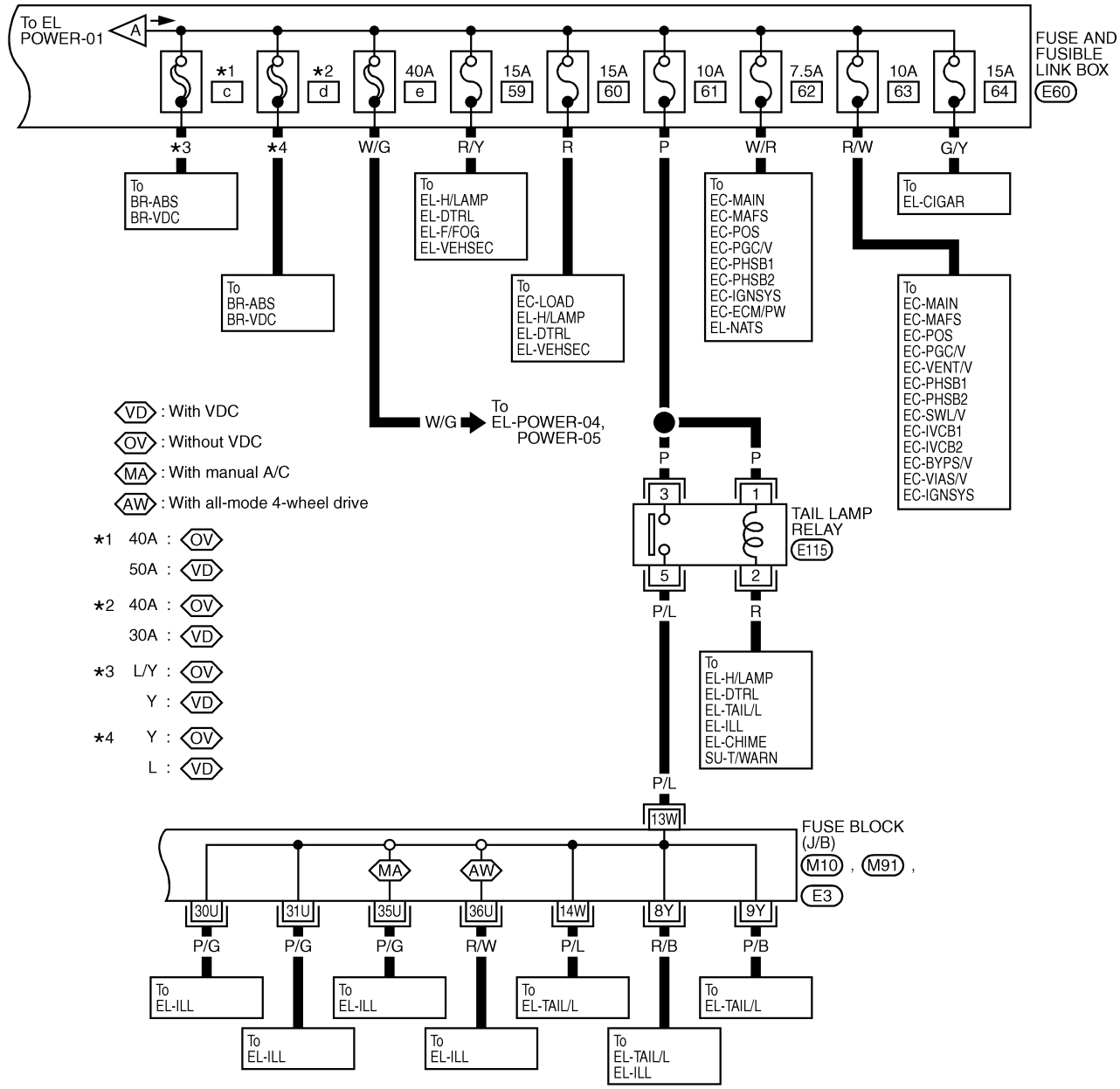

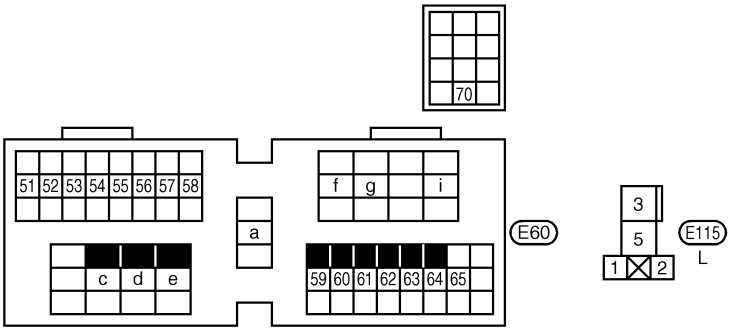

REFER TO THE FOLLOWING.

M10 , M91 , E3

-FUSE BLOCK-
JUNCTION BOX (J/B)

1	2	3	4	5
6	7	8	9	10
11	12	13	14	
16	17	18	19	20
21	22			
24	25	26		
	28	29		

MEL087S

ACCESSORY POWER SUPPLY — IGNITION SW. IN "ACC" OR "ON"

NAEL0248S02

EL-POWER-04

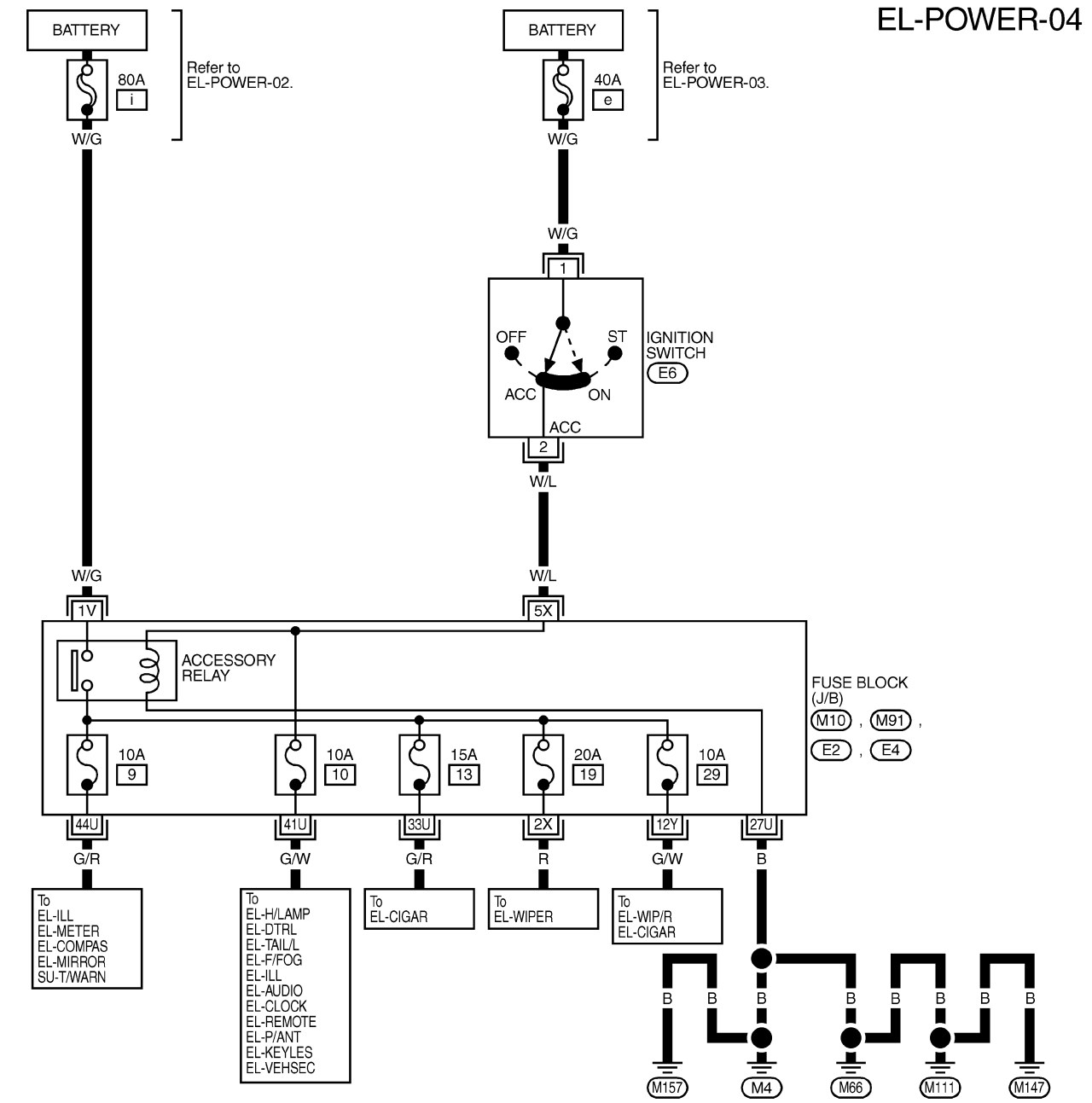

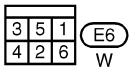

REFER TO THE FOLLOWING.

M10 , M91 , E2 , E4

- FUSE BLOCK -
JUNCTION BOX (J/B)

1	2	3	4	5
6	7	8	9	10
11	12	13	14	
16	17	18	19	20
21	22			
24	25	26		
	28	29		

MEL088S

IGNITION POWER SUPPLY — IGNITION SW. IN "ON" AND/OR "START"

NAEL0248S03

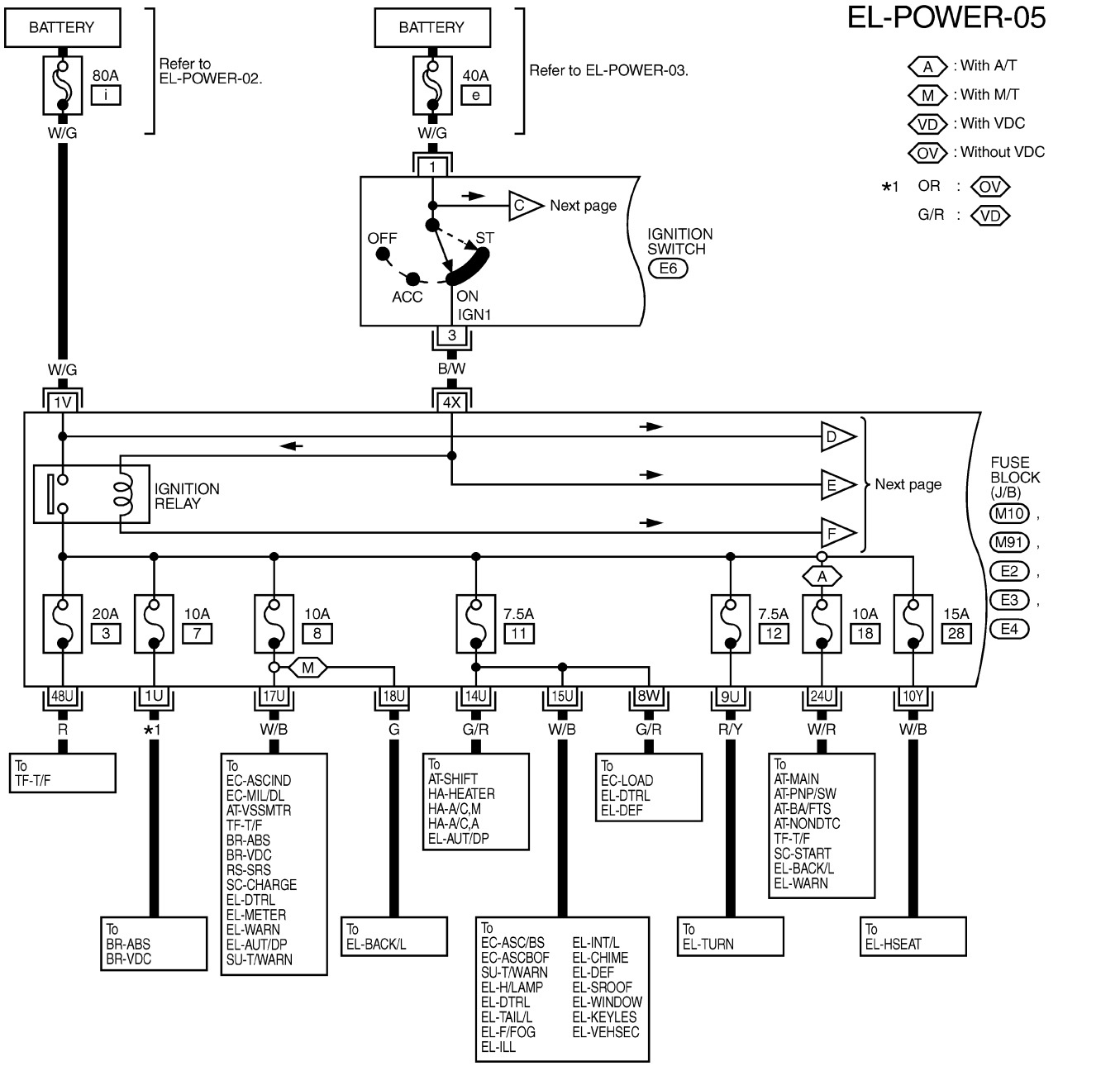

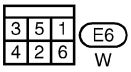

REFER TO THE FOLLOWING.

M10 , M91 , E2 , E3 , E4

-FUSE BLOCK-
JUNCTION BOX (J/B)

1	2	3	4	5
6	7	8	9	10
11	12	13	14	
16	17	18	19	20
21	22			
24	25	26		
	28	29		

MEL089S

EL-POWER-06

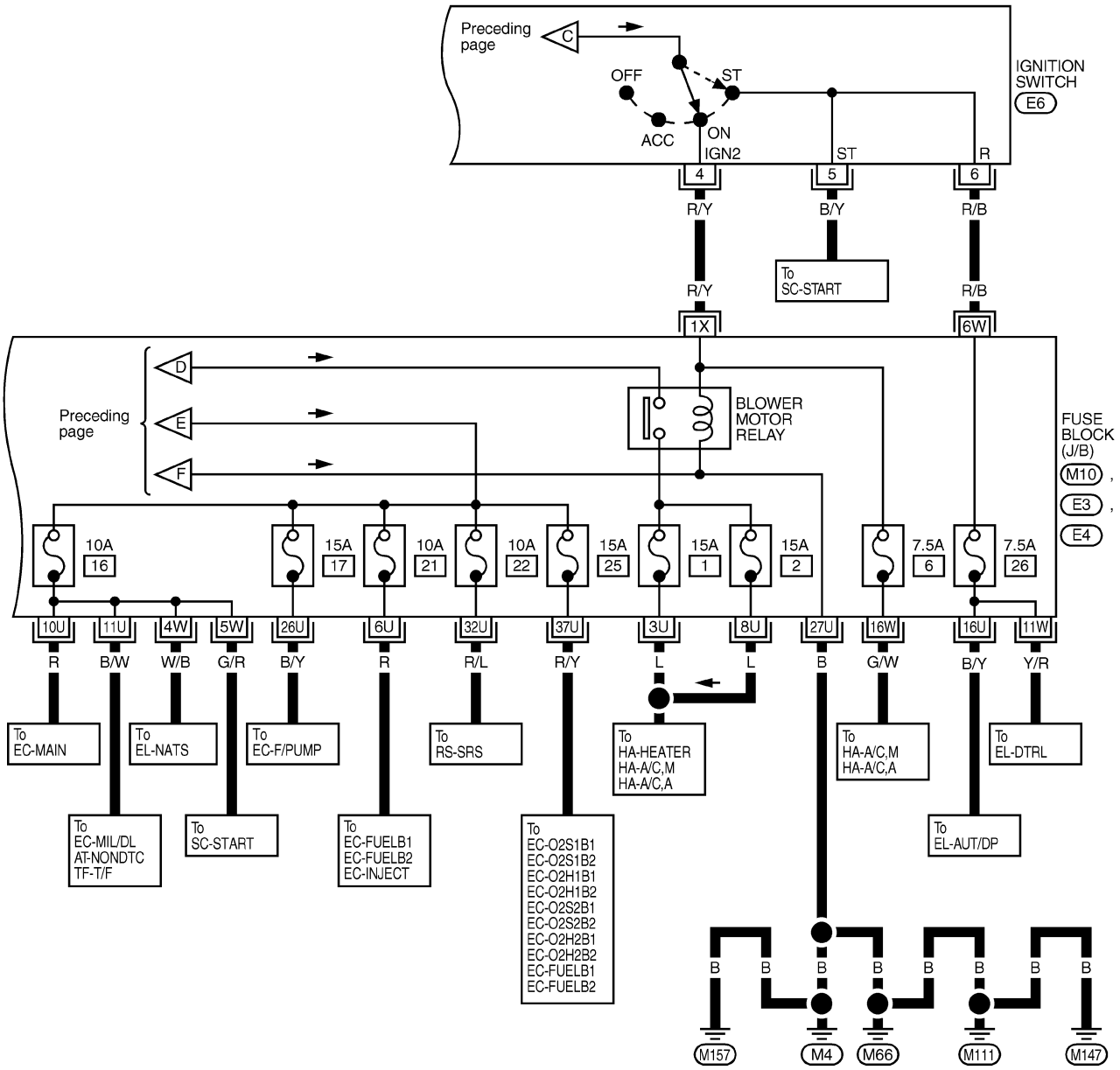

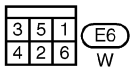

REFER TO THE FOLLOWING.

M10 , E3 , E4

-FUSE BLOCK-
JUNCTION BOX (J/B)

1	2	3	4	5
6	7	8	9	10
11	12	13	14	
16	17	18	19	20
21	22			
24	25	26		
	28	29		

MEL090S

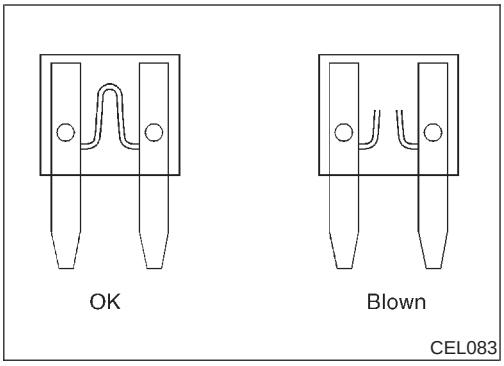

Inspection

NAEL0249

FUSE

NAEL0249S01

- **If fuse is blown, be sure to eliminate cause of problem before installing new fuse.**
- **Use fuse of specified rating. Never use fuse of more than specified rating.**
- **Do not partially install fuse; always insert it into fuse holder properly.**
- **Remove fuse for “ELECTRICAL PARTS (BAT)” if vehicle is not used for a long period of time.**

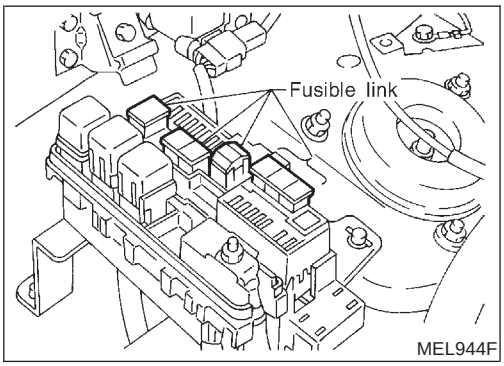

FUSIBLE LINK

NAEL0249S02

A melted fusible link can be detected either by visual inspection or by feeling with finger tip. If its condition is questionable, use circuit tester or test lamp.

CAUTION:

- **If fusible link should melt, it is possible that critical circuit (power supply or large current carrying circuit) is shorted. In such a case, carefully check and eliminate cause of problem.**
- **Never wrap outside of fusible link with vinyl tape. Important: Never let fusible link touch any other wiring harness, vinyl or rubber parts.**

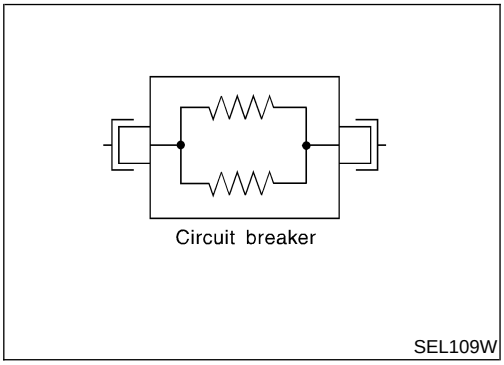

CIRCUIT BREAKER (PTC THERMISTOR TYPE)

NAEL0249S03

The PTC thermister generates heat in response to current flow. The temperature (and resistance) of the thermister element varies with current flow. Excessive current flow will cause the element’s temperature to rise. When the temperature reaches a specified level, the electrical resistance will rise sharply to control the circuit current.

Reduced current flow will cause the element to cool. Resistance falls accordingly and normal circuit current flow is allowed to resume.

Ground Distribution

NAEL0250

MAIN HARNESS

NAEL0250S01

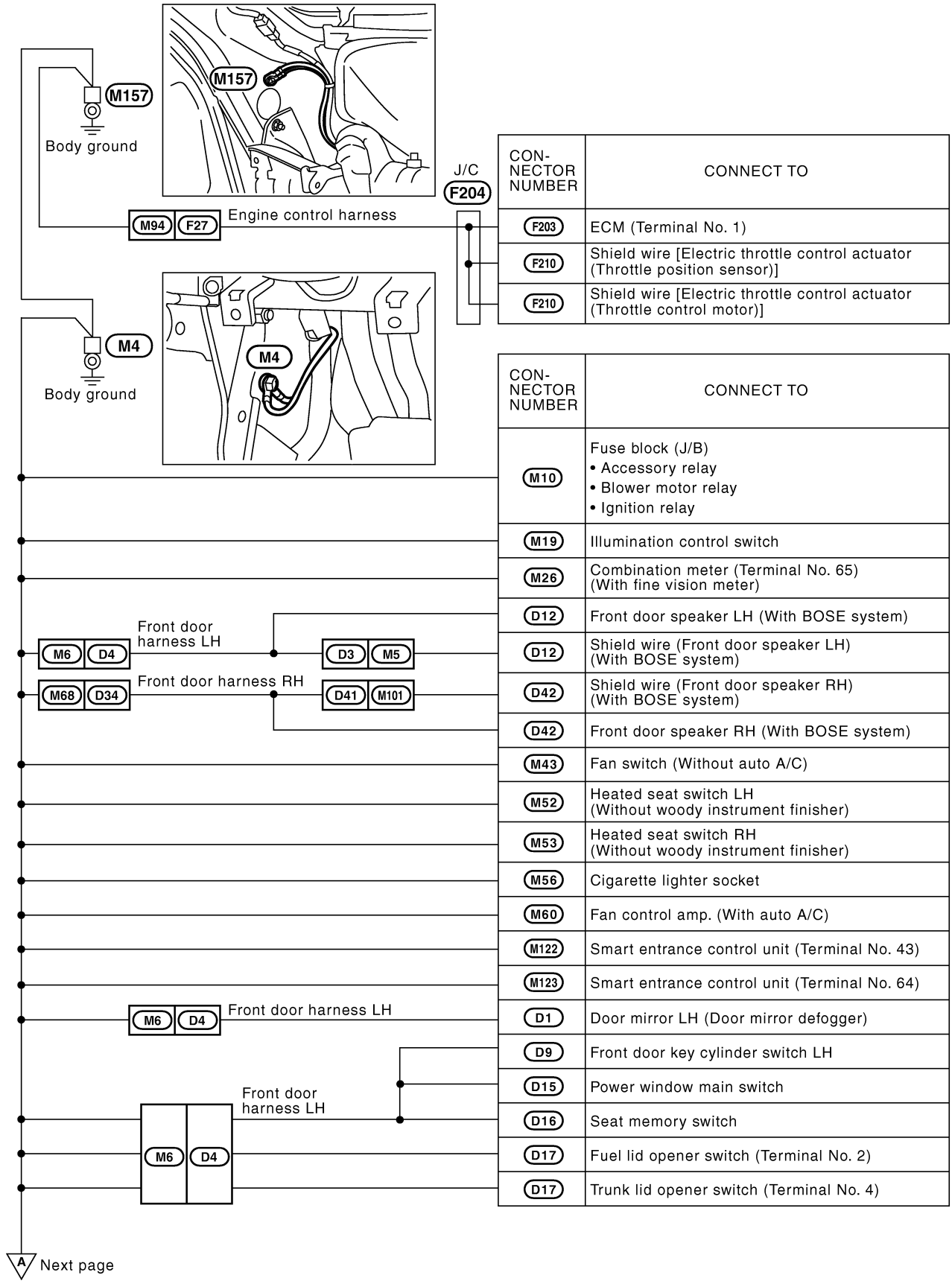

CON-NECTOR NUMBER	CONNECT TO
F203	ECM (Terminal No. 1)
F210	Shield wire [Electric throttle control actuator (Throttle position sensor)]
F210	Shield wire [Electric throttle control actuator (Throttle control motor)]

CON-NECTOR NUMBER	CONNECT TO
M10	Fuse block (J/B) • Accessory relay • Blower motor relay • Ignition relay
M19	Illumination control switch
M26	Combination meter (Terminal No. 65) (With fine vision meter)
D12	Front door speaker LH (With BOSE system)
D12	Shield wire (Front door speaker LH) (With BOSE system)
D42	Shield wire (Front door speaker RH) (With BOSE system)
D42	Front door speaker RH (With BOSE system)
M43	Fan switch (Without auto A/C)
M52	Heated seat switch LH (Without woody instrument finisher)
M53	Heated seat switch RH (Without woody instrument finisher)
M56	Cigarette lighter socket
M60	Fan control amp. (With auto A/C)
M122	Smart entrance control unit (Terminal No. 43)
M123	Smart entrance control unit (Terminal No. 64)
D1	Door mirror LH (Door mirror defogger)
D9	Front door key cylinder switch LH
D15	Power window main switch
D16	Seat memory switch
D17	Fuel lid opener switch (Terminal No. 2)
D17	Trunk lid opener switch (Terminal No. 4)

MEL091S

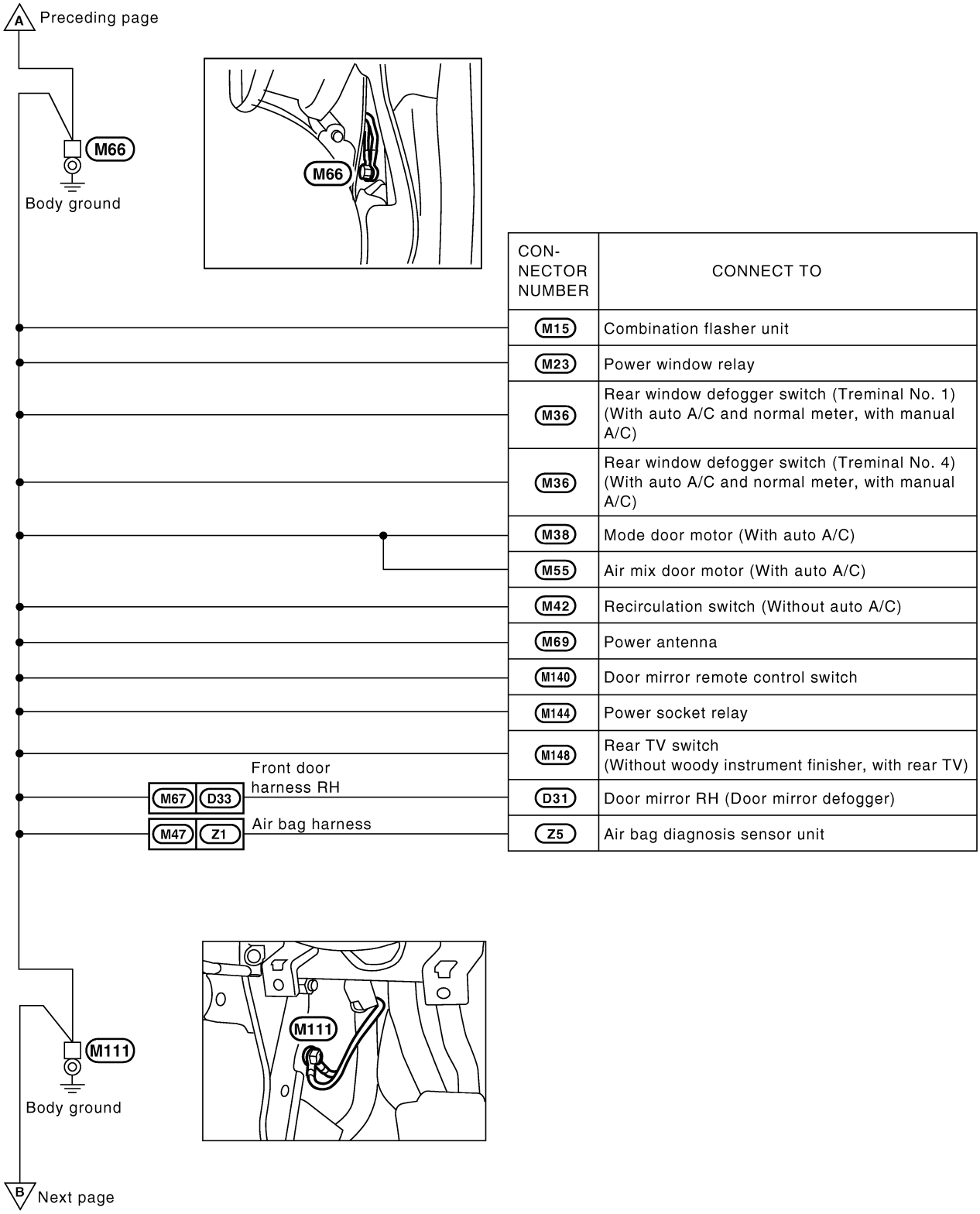

CON-NECTOR NUMBER	CONNECT TO
M15	Combination flasher unit
M23	Power window relay
M36	Rear window defogger switch (Treminal No. 1) (With auto A/C and normal meter, with manual A/C)
M36	Rear window defogger switch (Treminal No. 4) (With auto A/C and normal meter, with manual A/C)
M38	Mode door motor (With auto A/C)
M55	Air mix door motor (With auto A/C)
M42	Recirculation switch (Without auto A/C)
M69	Power antenna
M140	Door mirror remote control switch
M144	Power socket relay
M148	Rear TV switch (Without woody instrument finisher, with rear TV)
D31	Door mirror RH (Door mirror defogger)
Z5	Air bag diagnosis sensor unit

MEL092S

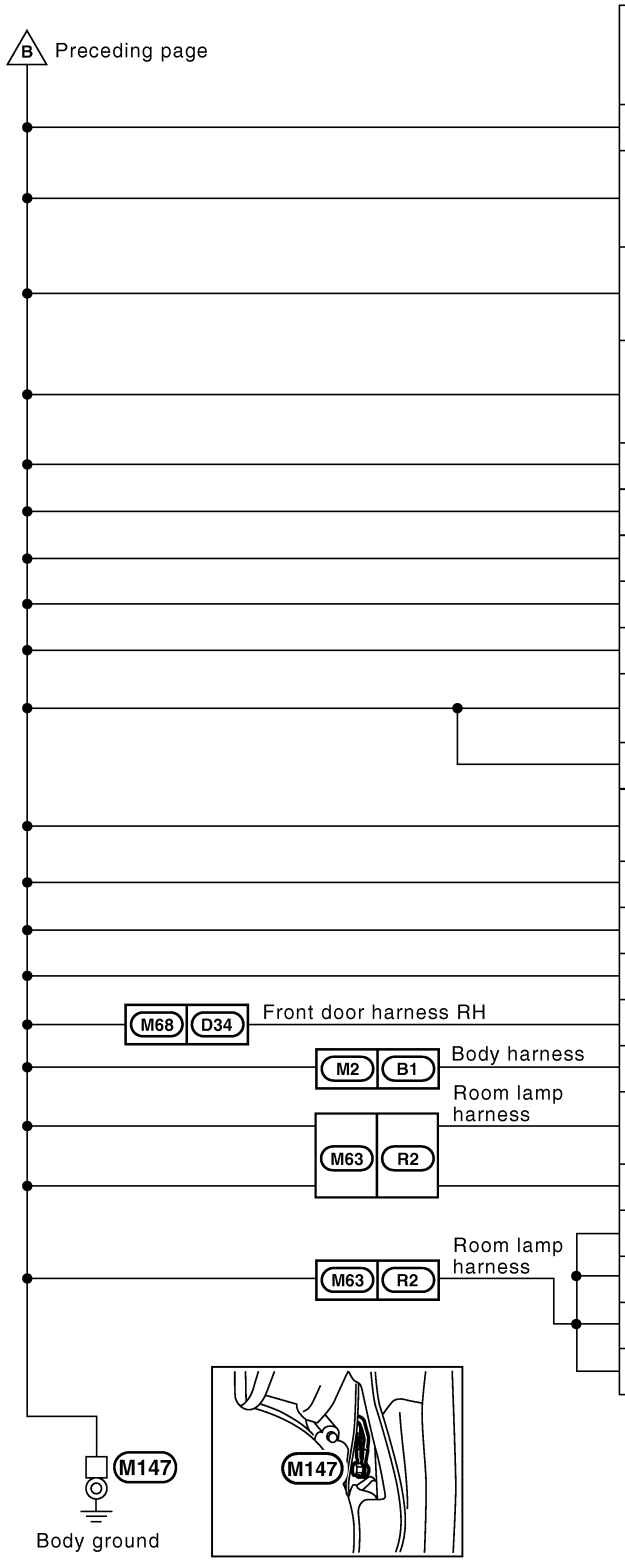

CON-NECTOR NUMBER	CONNECT TO
M17	Memory seat cancel switch
M25	Combination meter (Terminal No. 30) • Turn signal RH • Turn signal LH
M26	Combination meter (Terminal No. 54) • 4WD warning lamp (With part-time 4-wheel drive)
M26	Combination meter (Terminal No. 59) • Air bag warning lamp • Unified meter control unit
M28	Clutch interlock switch (With M/T)
M30	Glove box lamp
M40	Clock
M41	Steering wheel receiver control switch
M59	Intake door motor (With auto A/C)
M102	A/C auto amp. (With auto A/C) (With auto A/C and fine vision meter)
M103	A/C auto amp. (For Canada) (With auto A/C)
M142	Transfer control unit (Terminal No. 3) (With all-mode 4-wheel drive)
M151	VDC off switch (With VDC)
M155	Ashtray illumination (With woody instrument finisher)
M156	Tire pressure warning control unit
D44	Front power window switch RH
B47	Audio amp. relay (With BOSE system)
R4	Compass and thermometer (With compass and themometer)
R5	Home link universal transceiver
R3	Vanity mirror RH illumination
R5	Vanity mirror LH illumination
R6	Spot lamp
R11	Sunroof motor

MEL093S

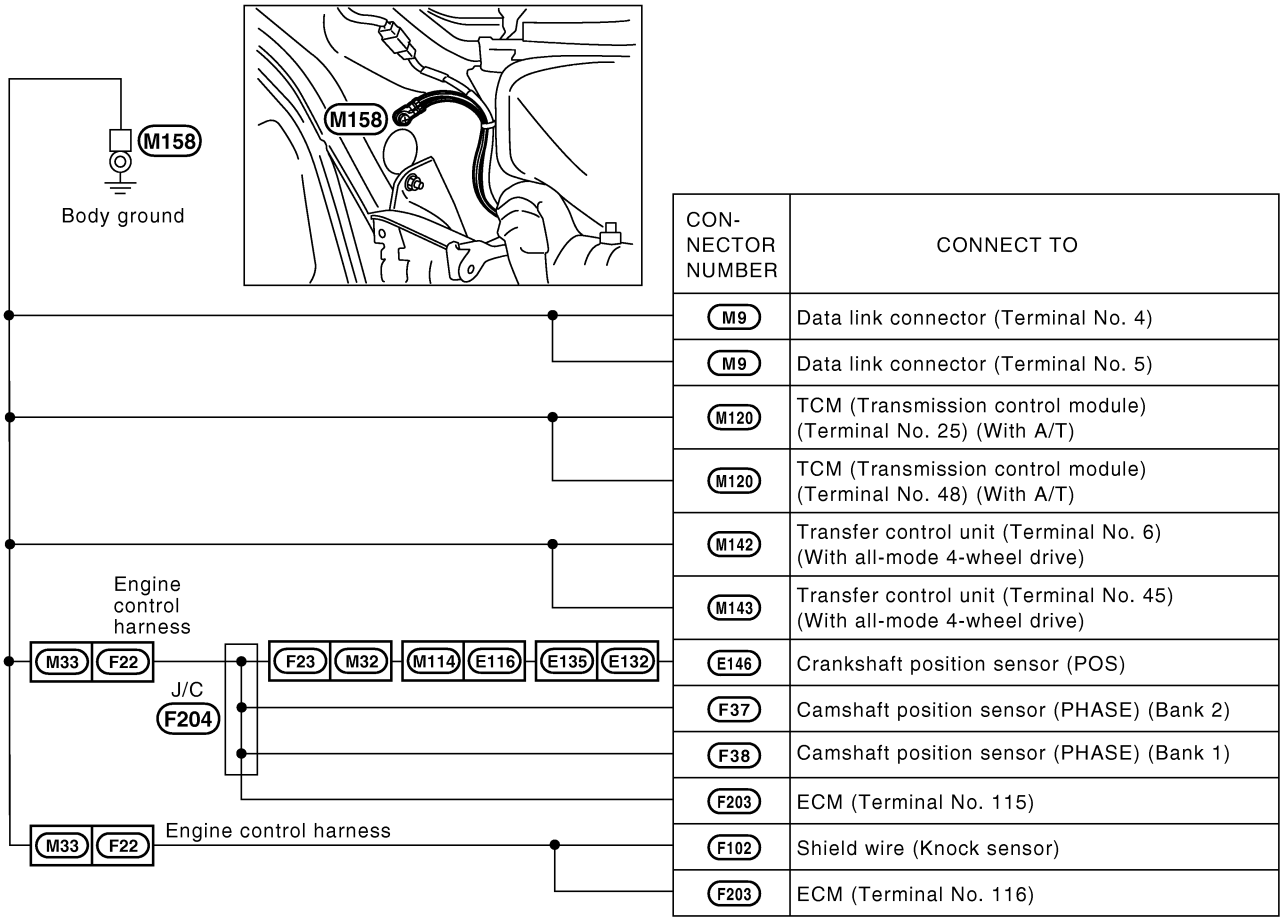
M158
Body ground
M158
Engine control harness
M33
F22
J/C
F204
F23
M32
M114
E116
E135
E132
M33
F22
Engine control harness
CON-NECTOR NUMBER
CONNECT TO
M9
Data link connector (Terminal No. 4)
M9
Data link connector (Terminal No. 5)
M120
TCM (Transmission control module) (Terminal No. 25) (With A/T)
M120
TCM (Transmission control module) (Terminal No. 48) (With A/T)
M142
Transfer control unit (Terminal No. 6) (With all-mode 4-wheel drive)
M143
Transfer control unit (Terminal No. 45) (With all-mode 4-wheel drive)
E146
Crankshaft position sensor (POS)
F37
Camshaft position sensor (PHASE) (Bank 2)
F38
Camshaft position sensor (PHASE) (Bank 1)
F203
ECM (Terminal No. 115)
F102
Shield wire (Knock sensor)
F203
ECM (Terminal No. 116)

MEL094S

ENGINE ROOM HARNESS

NAEL0250S02

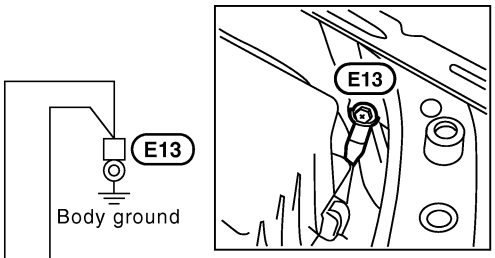

CON-NECTOR NUMBER	CONNECT TO
E7	Combination switch (Lighting switch)
E8	Combination switch (Lighting switch)
E9	Combination switch (front wiper switch)
E12	Parking lamp LH, Front turn signal lamp LH
E24	ATP relay (With A/T and part-time 4-wheel drive)
E28	Brake fluid level switch
E45	Daytime light control unit
E62	Front fog lamp RH
E114	Combination switch (rear wiper switch)

E40	Parking lamp RH, Front turn signal lamp RH
E42	Washer level switch (For Canada)
E61	Front fog lamp LH
E95	Transfer shift Hi relay (With all-mode 4-wheel drive)
E99	Transfer shift Low relay (With all-mode 4-wheel drive)
E140	Front wiper motor

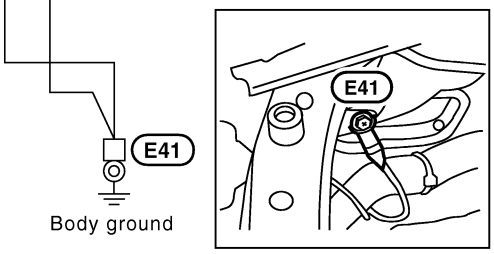

MEL129S

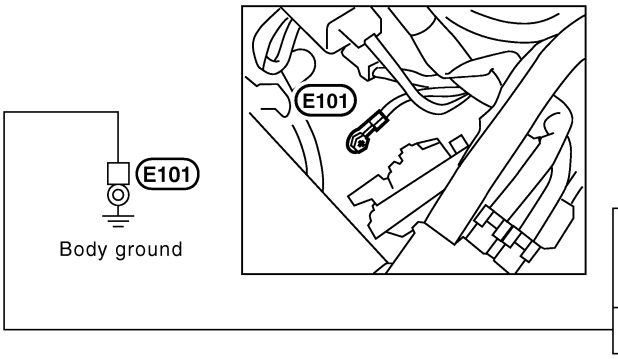

CON-NECTOR NUMBER	CONNECT TO
E105	Alternator

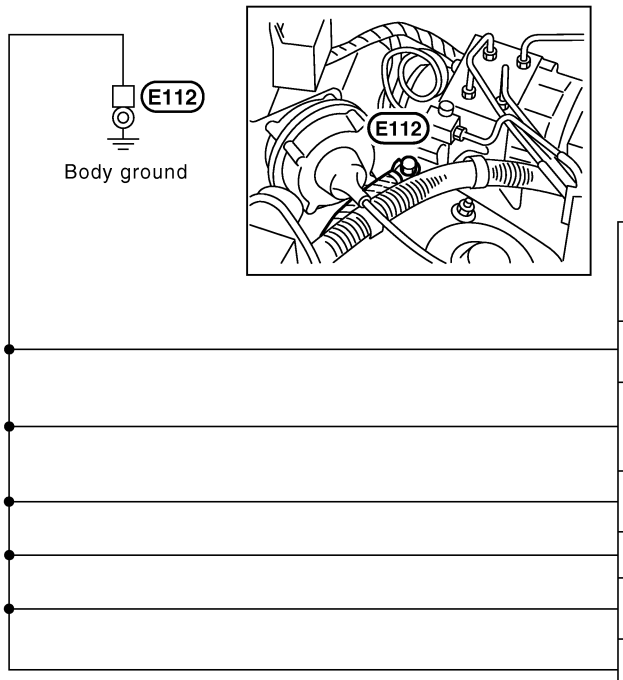

CON-NECTOR NUMBER	CONNECT TO
E111	ABS actuator and electric control unit (Terminal No. 16) (Without VDC)
E111	ABS actuator and electric control unit (Terminal No. 20) (With 4-wheel drive) (Without VDC)
E111	ABS actuator and electric control unit (Terminal No. 30) (Without VDC)
E136	Steering angle sensor
E142	ABS actuator and electric unit (Terminal No. 16) (With VDC)
E142	ABS actuator and electric unit (Terminal No. 47) (With VDC)

MEL095S

ENGINE CONTROL HARNESS

NAEL0250S03

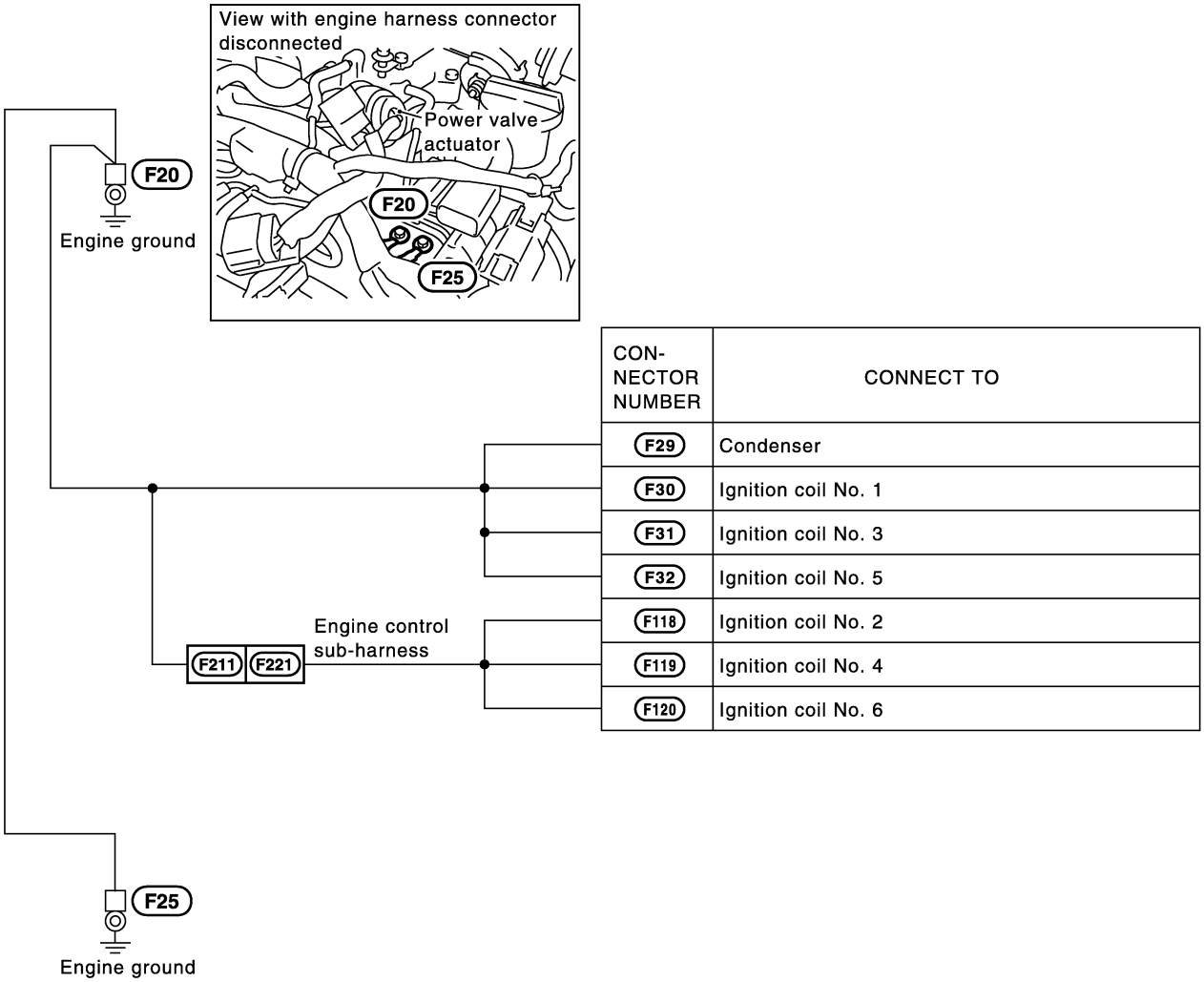

CON-NECTOR NUMBER	CONNECT TO
F29	Condenser
F30	Ignition coil No. 1
F31	Ignition coil No. 3
F32	Ignition coil No. 5
F118	Ignition coil No. 2
F119	Ignition coil No. 4
F120	Ignition coil No. 6

MEL080Q

BODY HARNESS RH

NAEL0250S04

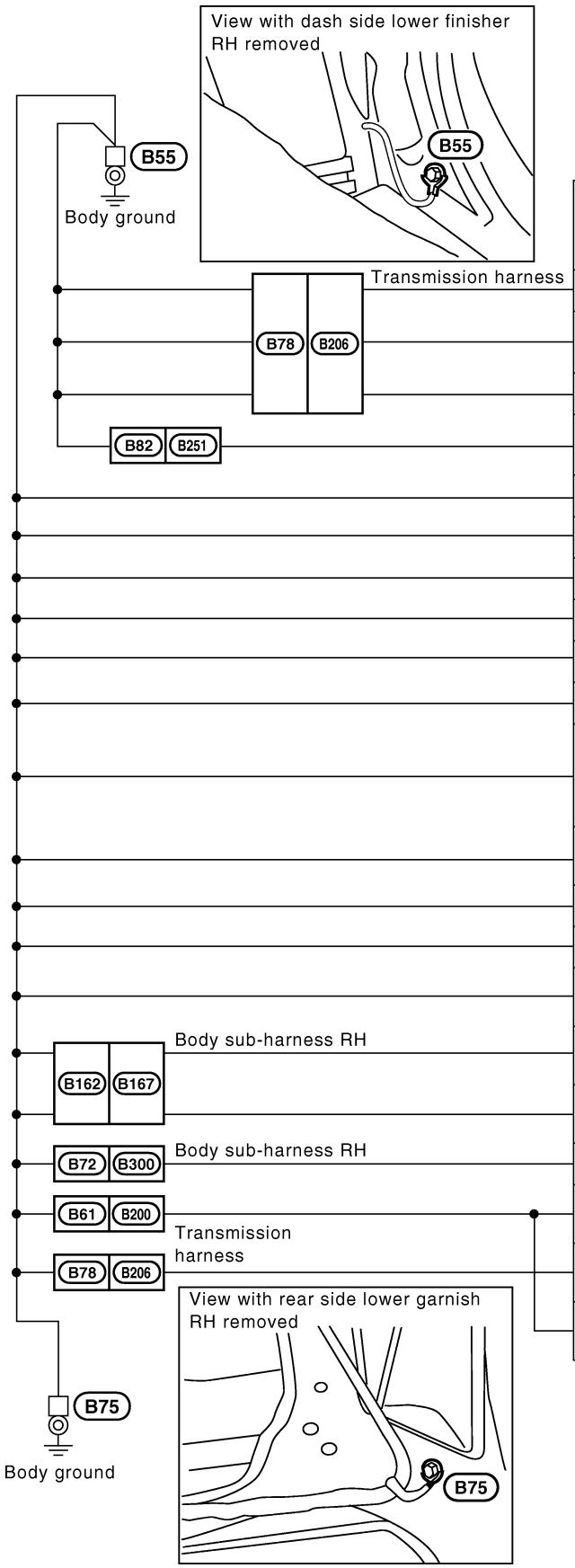

CON-NECTOR NUMBER	CONNECT TO
B210	ATP switch (With all-mode 4-wheel drive)
B213	Neutral-4LO switch (With all-mode 4-wheel drive)
B212	Transfer motor (With all-mode 4-wheel drive)
B252	Transfer control device (With all-mode 4-wheel drive)
B56	Heated seat RH
B57	Power seat RH
B59	A/T device (Terminal No. 6) (With A/T)
B59	A/T device (Terminal No. 2) (With A/T)
B66	Park/neutral position switch (With A/T)
B68	Front door switch RH
B74	Rear combination lamp RH • Turn signal lamp • Tail/Stop lamp • Back-up lamp
B76	Ashtray illumination (Without woody instrument finisher)
B89	Diode (With all-mode 4-wheel drive)
B131	Rear power socket
B161	Rear TV switch (With woody instrument finisher, with rear TV)
B168	Heated seat switch RH (With woody instrument finisher)
B169	Heated seat switch LH (With woody instrument finisher)
B301	Tire carrier switch (With spare tire carrier)
B203	Neutral position switch (With M/T and 4-wheel drive)
B211	Wait detection switch (With all-mode 4-wheel drive)
B216	Neutral position switch (With M/T and 2-wheel drive)

MEL096S

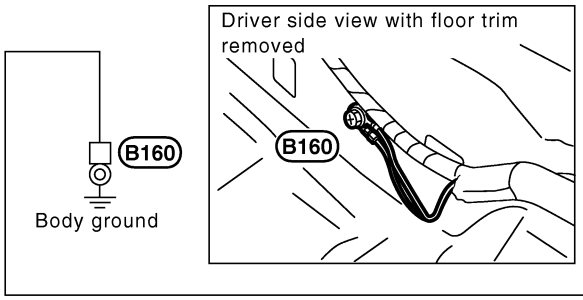

CON-NECTOR NUMBER	CONNECT TO
B128	Shield wire (Satellite sensor RH) (With side air bag)

MEL097S

BODY HARNESS LH

NAEL0250S05

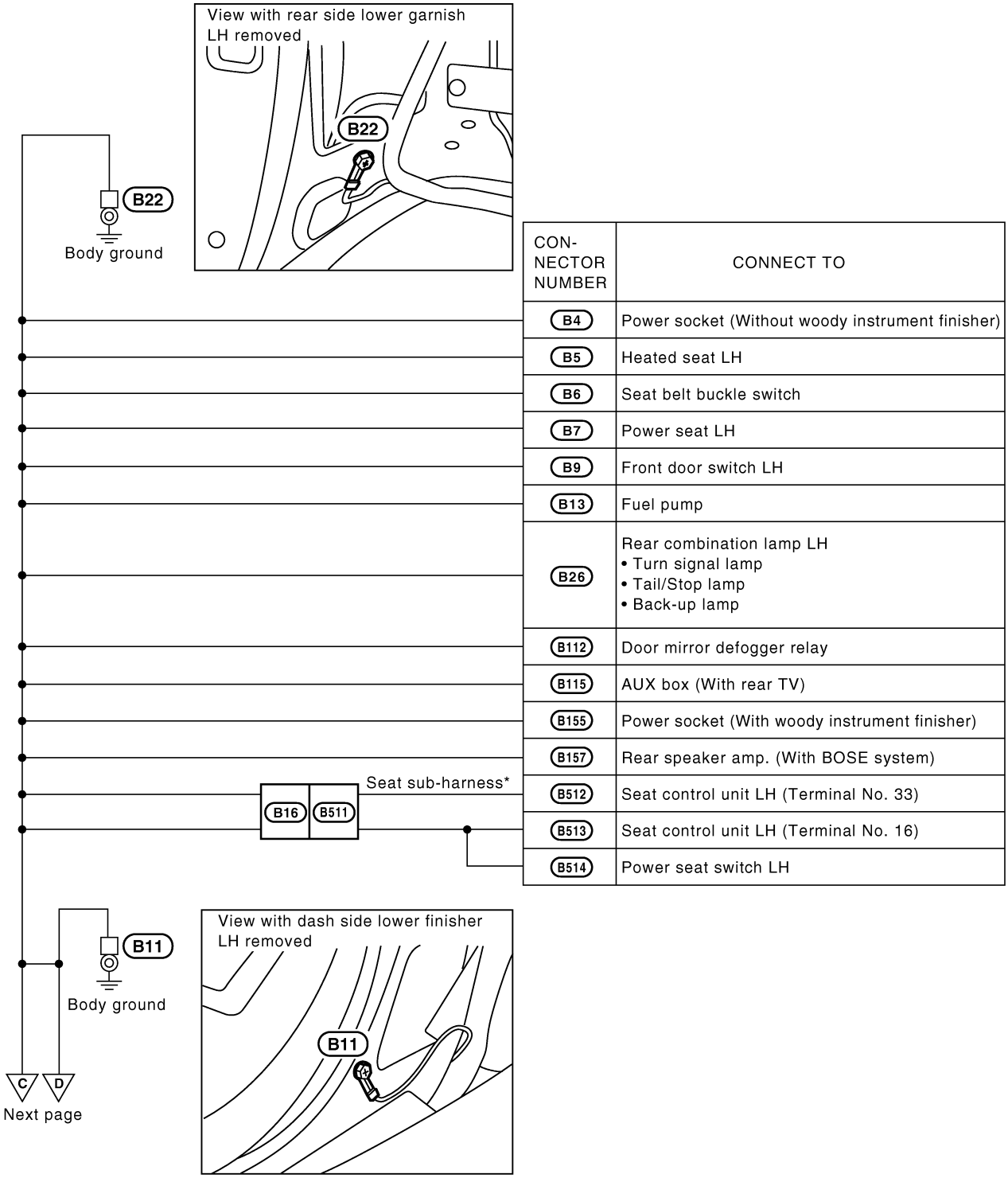

CON-NECTOR NUMBER	CONNECT TO
B4	Power socket (Without woody instrument finisher)
B5	Heated seat LH
B6	Seat belt buckle switch
B7	Power seat LH
B9	Front door switch LH
B13	Fuel pump
B26	Rear combination lamp LH • Turn signal lamp • Tail/Stop lamp • Back-up lamp
B112	Door mirror defogger relay
B115	AUX box (With rear TV)
B155	Power socket (With woody instrument finisher)
B157	Rear speaker amp. (With BOSE system)
B512	Seat control unit LH (Terminal No. 33)
B513	Seat control unit LH (Terminal No. 16)
B514	Power seat switch LH

* : This sub-harness is not shown in "Harness Layout", EL section.

MEL098S

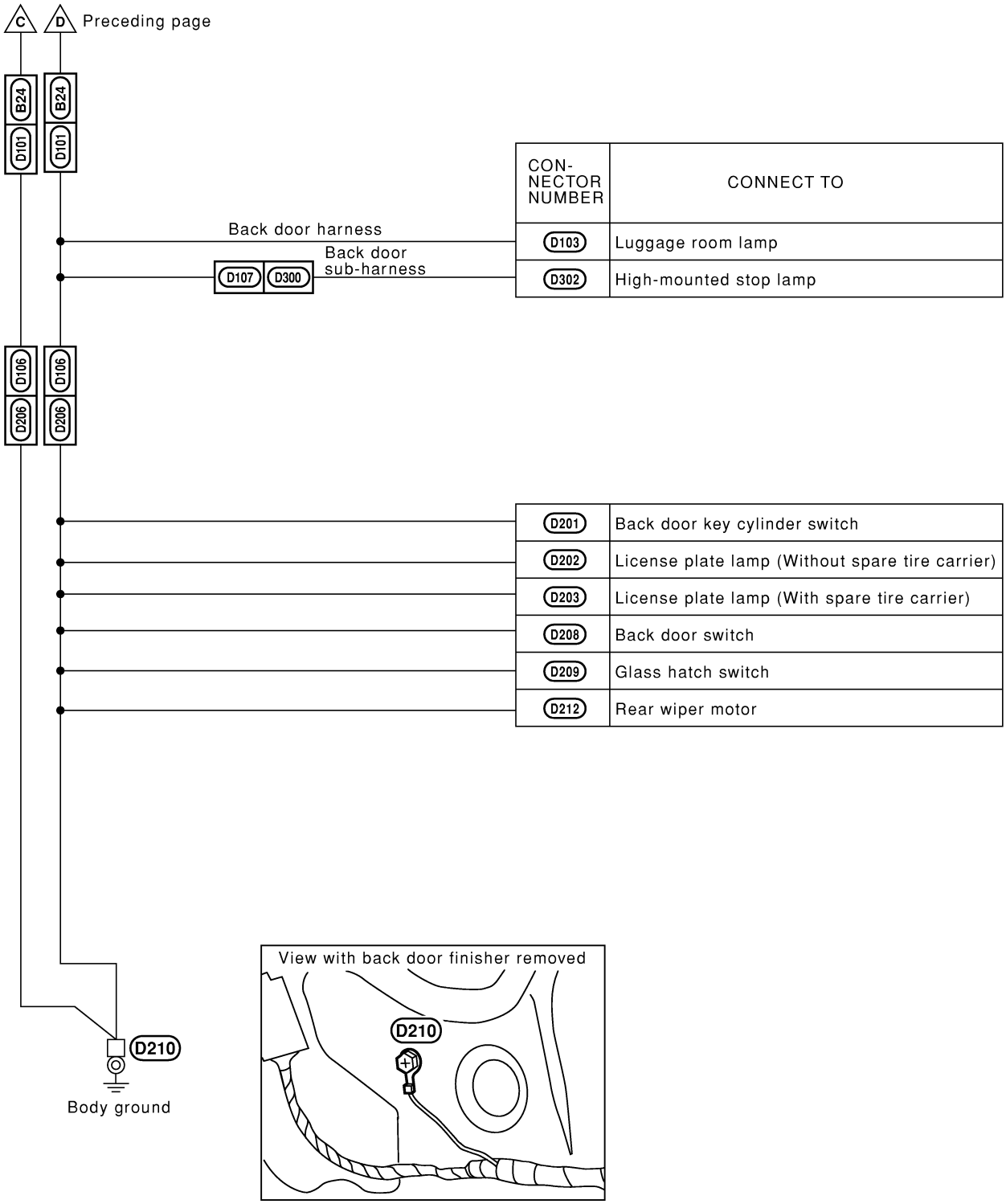

CON-NECTOR NUMBER	CONNECT TO
D103	Luggage room lamp
D302	High-mounted stop lamp
D201	Back door key cylinder switch
D202	License plate lamp (Without spare tire carrier)
D203	License plate lamp (With spare tire carrier)
D208	Back door switch
D209	Glass hatch switch
D212	Rear wiper motor

MEL911N

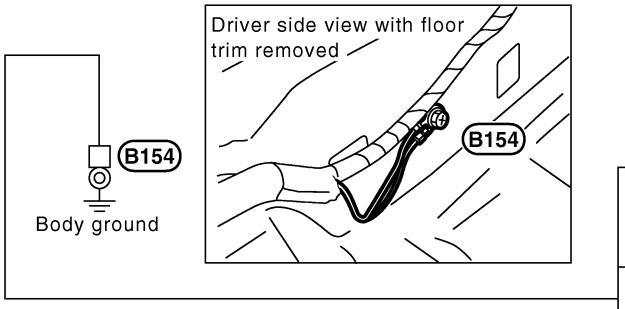

CON-NECTOR NUMBER	CONNECT TO
B107	Shield wire (Satellite sensor LH) (With side air bag)

MEL099S

BODY HARNESS

=NAEL0250S06

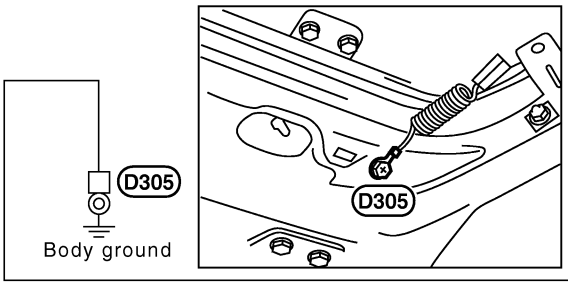

CON-NECTOR NUMBER	CONNECT TO
D304	Rear window defogger

MEL152M

Check

NAEL0251

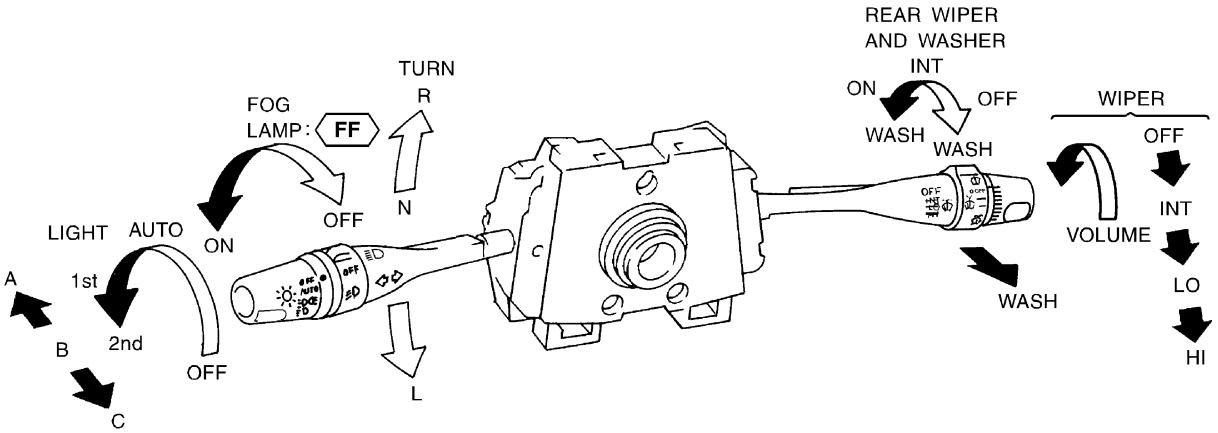

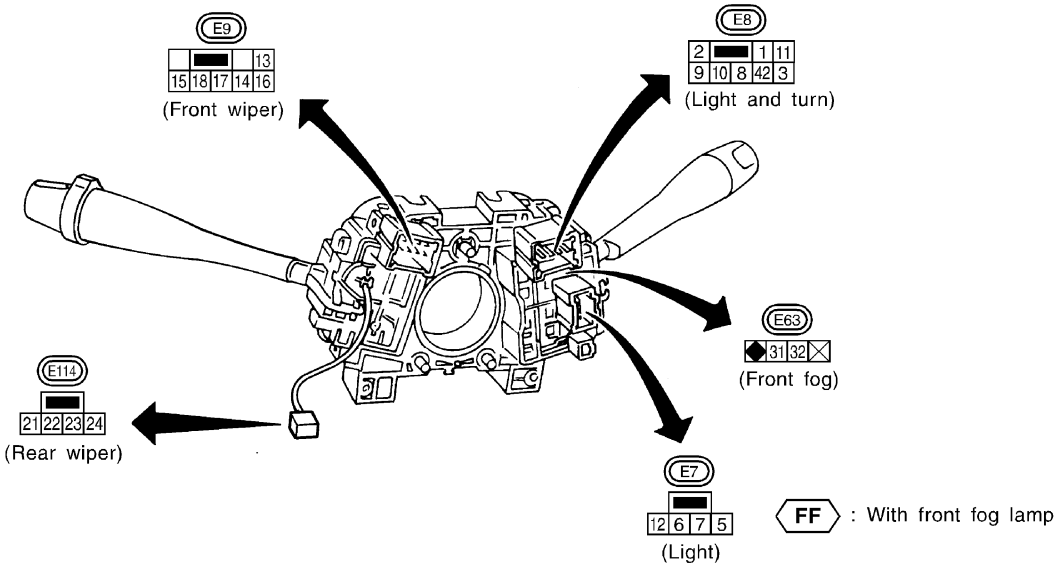

LIGHTING SWITCH

	OFF	AUTO	1ST	2ND
5			○	○
11			○	○
8				○
12				○
42		○		
(8)		○		

	A	B	C
(5)	○	○	○
7		○	
6	○		○
(8)	○	○	○
10		○	
9	○		○
(12)			○

FRONT WIPER AND WASHER SWITCH

	LO	AUTO STOP	AMP	WASH	HI	EARTH
OFF	○	○				
INT	○	○	○			○
LO	○					○
HI					○	○
WASH				○		○

WIPER AMP.

⑭ ⑮ ⑬ ⑯ ⑰ ⑱

VARIABLE INTERMITTENT WIPER VOLUME

REAR WIPER AND WASHER SWITCH

	WASH	OFF	INT	ON	WASH
21			○		
22				○	○
23	○				○
24	○		○	○	○

FOG LAMP SWITCH

	OFF	ON
31		○
32		○

TURN SIGNAL LAMP SWITCH

	L	N	R
1	○		○
2			○
3	○		

MEL070Q

Replacement

NAEL0252

For removal and installation of spiral cable, refer to RS-20, “Installation — Air Bag Module and Spiral Cable”.

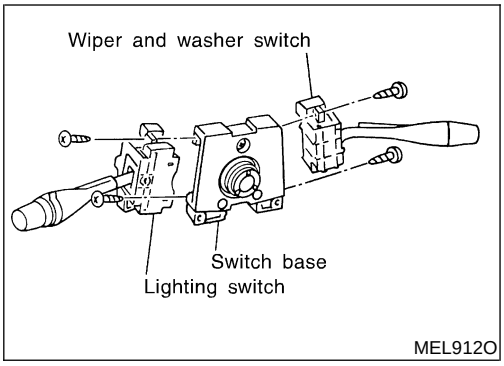

MEL912O

- Each switch can be replaced without removing combination switch base.

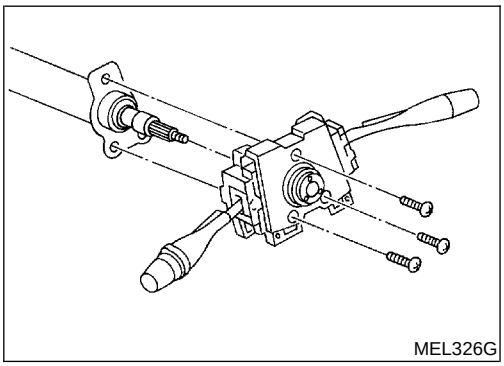

MEL326G

- To remove combination switch base, remove base attaching screw.

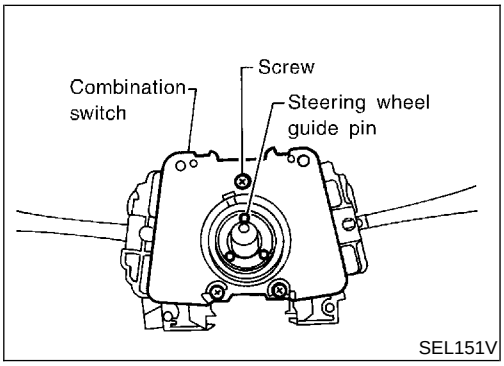

SEL151V

- Before installing the steering wheel, align the steering wheel guide pins with the screws which secure the combination switch as shown in the left figure.

Check

NAEL0253

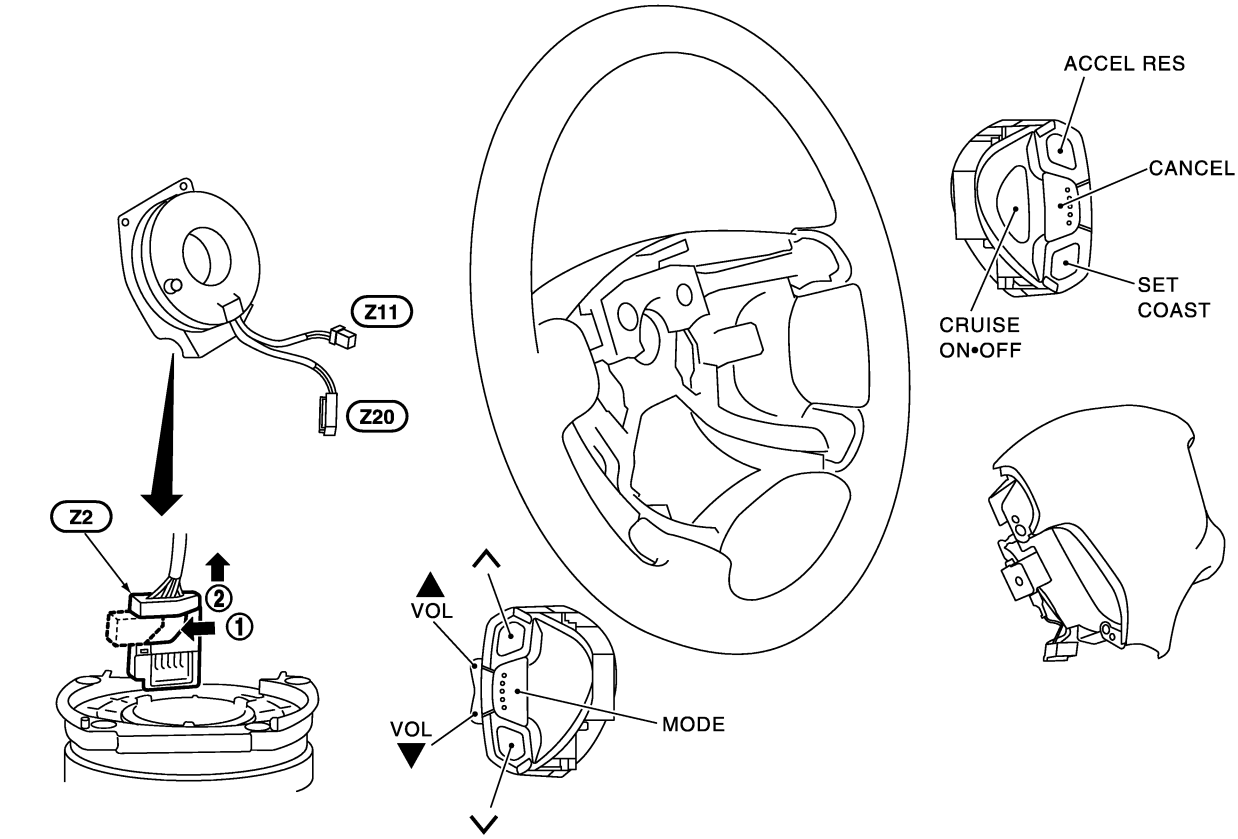

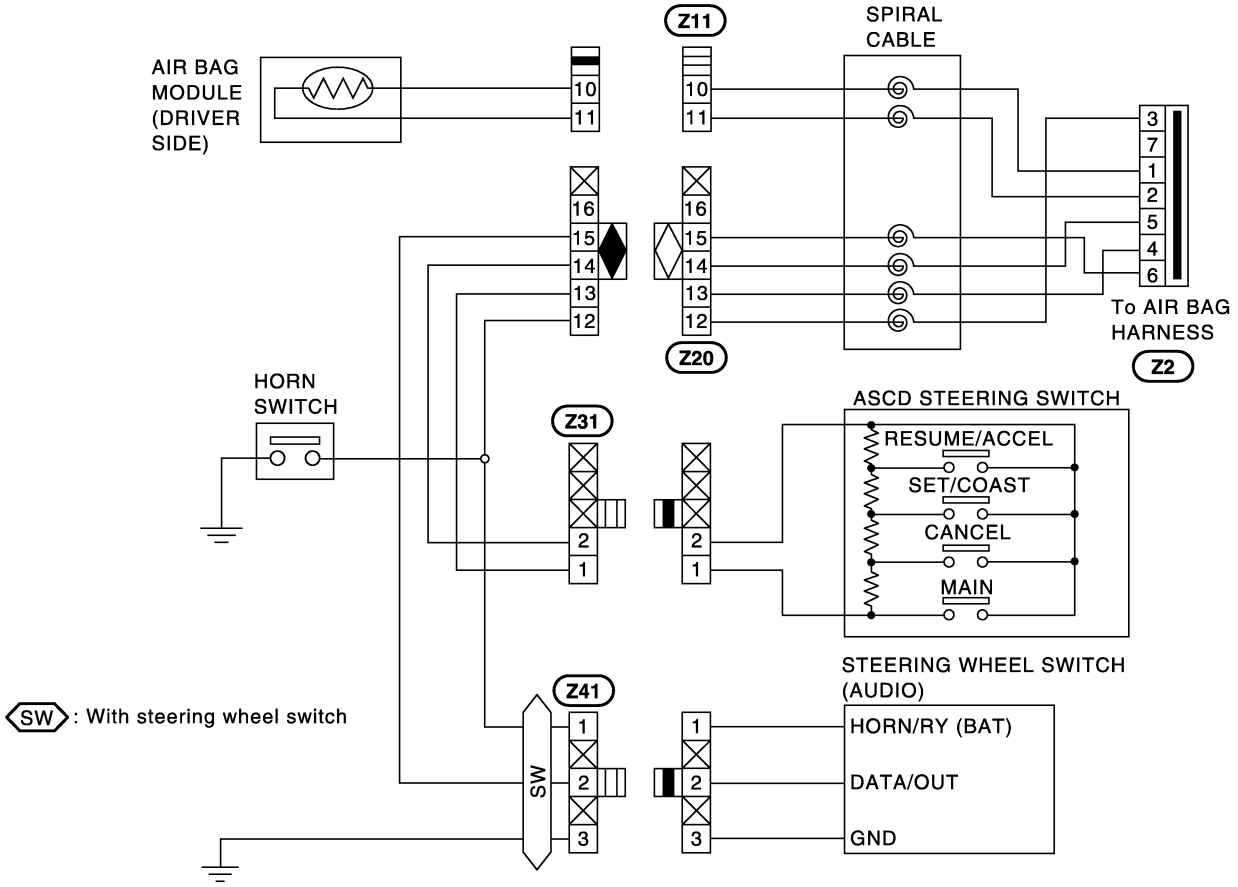

MEL071Q

Component Parts and Harness Connector Location

NAEL0254

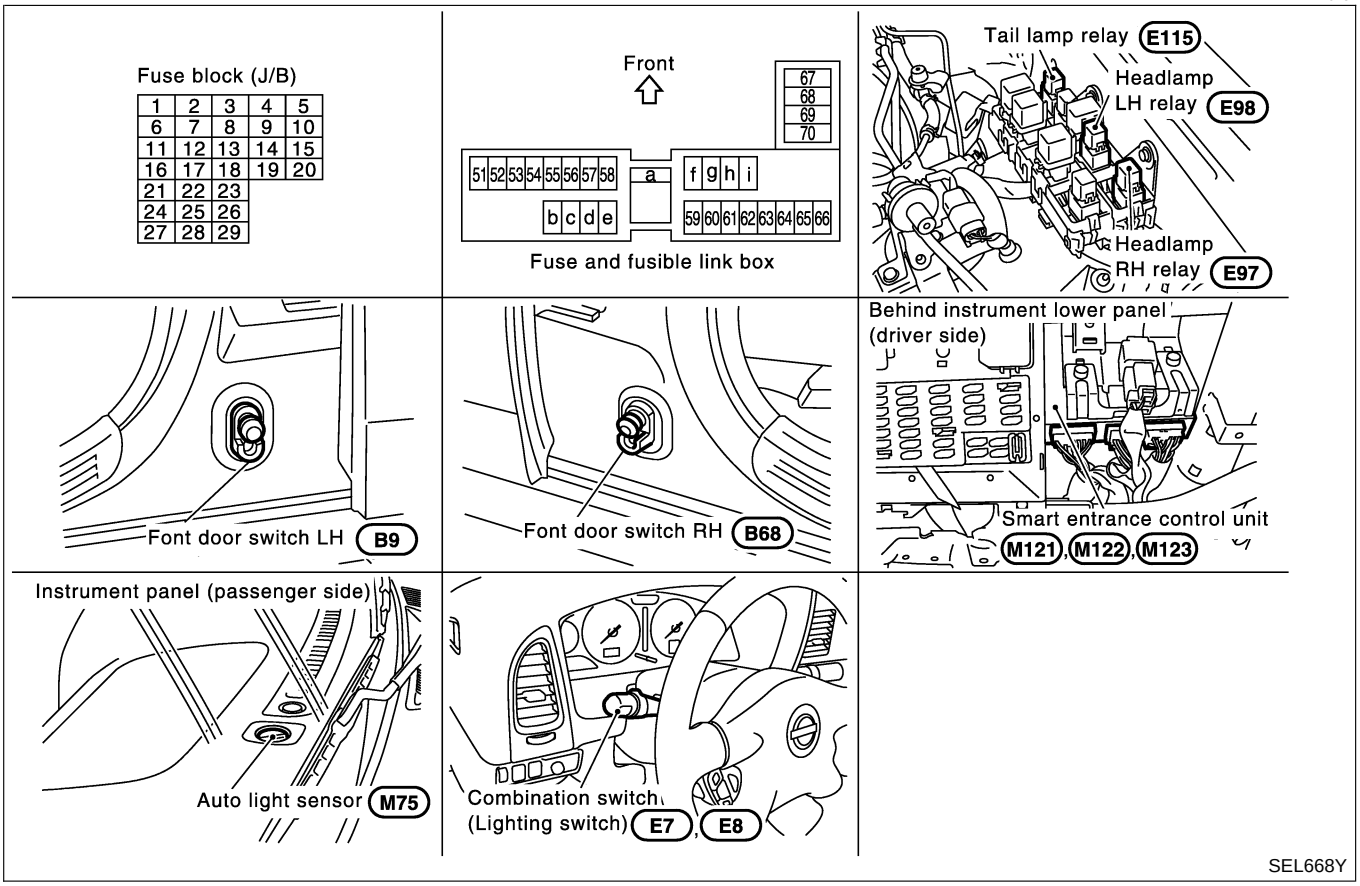

System Description

NAEL0255

The headlamp operation is controlled by the lighting switch which is built into the combination switch and smart entrance control unit. And the headlamp battery saver system is controlled by the smart entrance control unit.

OUTLINE

NAEL0255S01

Power is supplied at all times

- to headlamp LH relay terminals 1 and 3
- through 15A fuse (No. 60, located in the fuse and fusible link box), and
- to headlamp RH relay terminals 1 and 3
- through 15A fuse (No. 59, located in the fuse and fusible link box), and
- to smart entrance control unit terminal 49
- through 7.5A fuse [No. 24, located in the fuse block (J/B)].

When the ignition switch is in the ON or START position, power is supplied

- to smart entrance control unit terminal 27
- through 7.5A fuse [No. 11, located in the fuse block (J/B)].

When the ignition switch is in the ACC or ON position, power is supplied

- to smart entrance control unit terminal 26
- through 10A fuse [No. 10, located in the fuse block (J/B)]

Ground is supplied

- to smart entrance control unit terminals 43 and 64
- through body grounds M4, M66, M111, M147 and M157.

POWER SUPPLY TO LOW BEAM AND HIGH BEAM

NAEL0255S02

When lighting switch is in 2ND or PASS position, ground is supplied

- to headlamp relay (LH and RH) terminal 2 from smart entrance control unit terminals 21 and 59

- through smart entrance control unit terminals 22 and 60,
- from lighting switch terminal 12

Headlamp relays (LH and RH) are energized and then power is supplied to headlamps (LH and RH).

LOW BEAM OPERATION

NAEL0255S03

When the lighting switch is turned to the 2ND position and placed in LOW ("B") position, power is supplied

- from terminal 5 of each headlamp relay
- to terminal 3 of each headlamp

Ground is supplied

- to headlamp LH terminal 2
- through lighting switch terminals 7 and 5
- through body grounds E13 and E41, and
- to headlamp RH terminal 2
- through lighting switch terminal 10 and 8
- through body grounds E13 and E41.

With power and ground supplied, the headlamp(s) will illuminate.

HIGH BEAM OPERATION/FLASH-TO-PASS OPERATION

NAEL0255S04

When the lighting switch is turned to the 2ND position and placed in HIGH ("A") position or PASS ("C") position, power is supplied

- from terminal 5 of each headlamp relay
- to terminal 3 of each headlamp, and
- to combination meter terminal 26 for the HIGH BEAM indicator.

Ground is supplied

- to headlamp LH terminal 1, and
- to combination meter terminal 27 for the HIGH BEAM indicator
- through lighting switch terminals 6 and 5
- through body grounds E13 and E41, and
- to headlamp RH terminal 1
- through lighting switch terminals 9 and 8
- through body grounds E13 and E41.

With power and ground supplied, the high beams and the high beam indicator illuminate.

EXTERIOR LAMP BATTERY SAVER CONTROL

NAEL0255S05

Except for Auto Light Control Operation

NAEL0255S0501

Headlamps will remain on for a short while after the ignition switch is turned from ON (or ACC) to OFF.
Continuity between terminals 21 and 22, and between terminals 59 and 60 of smart entrance control unit will be disturbed after 5 minutes, then the headlamps will be turned off.
When the lighting switch is turned from OFF to 2ND after headlamps are turned to off by the exterior lamp battery saver control, ground is supplied

- to smart entrance control unit terminals 20 and 58 from lighting switch terminal 11, and then,
- to headlamp LH and RH relays terminal 2 from smart entrance control unit terminals 21 and 59,
- through smart entrance control unit terminals 22 and 60 and
- through lighting switch terminal 12.

Then headlamps illuminate again.

Auto light control operation

NAEL0255S0502

While the headlamps are turned ON by "AUTO" operation, the exterior lamp battery saver is activated for 5 minutes when the ignition switch is turned from ON (or ACC) to OFF, and either LH or RH front door switch is opened.
The smart entrance control unit controls exterior lamp battery saver activation as follows:

- When the door switch signal changes from ON to OFF while the exterior lamp battery saver is activated, the operation is discontinued, and restarts and lasts for 45 seconds, then the headlamps will be turned off.
- When the door switch signal changes from OFF to ON while the exterior lamp battery saver is activated, the operation discontinued, restarts and lasts for 45 seconds, then the headlamps will be turned off.

- When the one of four door switch signals changes from OFF to ON while the exterior lamp battery saver is activated, the operation is discontinued, restarts and lasts for 5 minutes, then the headlamps will be turned off.
- When all the door switch ON signals are input while the exterior lamp battery saver is activated, the saver is discontinued and restarts and lasts for 45 seconds, then the headlamps will be turned off.

Exterior lamp battery saver control time can be changed using "WORK SUPPORT" mode in "HEADLAMP".

When the lighting switch is turned from OFF to 2ND after headlamps are turned to off by the exterior lamp battery saver control, ground is supplied

- to smart entrance control unit terminals 20 and 58 from lighting switch terminal 11, and then,
- to headlamp LH and RH relays terminal 2 from smart entrance control unit terminals 21 and 59,
- through smart entrance control unit terminals 22 and 60 and
- through lighting switch terminal 12.

Then headlamps illuminate again.

AUTO LIGHT OPERATION

NAEL0255S06

The auto light control system has an auto light sensor inside instrument mask that detects outside brightness.

- to smart entrance control unit terminal 23
- from lighting switch terminal 42.

When ignition switch is turned to ″ON″ or "START" position and

- Outside brightness is darker than prescribed level.

After 3 seconds delay, outside brightness becomes darker than prescribed level.
Ground is supplied

- to headlamp relay LH and RH terminals 2
- through smart entrance control unit terminals 21, 59 and 43, 64.

Then both headlamp relays and tail lamp relay are energized, headlamps (low or high) and tail lamps are illuminated according to switch position.
Auto light operation allows headlamps and tail lamps to go off when

- Outside brightness is brighter than prescribed level, or
- After 5 seconds delay, outside brightness is brighter than prescribed level.
- Ignition switch is turned to "OFF" position. (Headlamp will be turned OFF by exterior lamp battery saver control system. Refer to EL-36.)

NOTE:
The delay time changes (maximum of 20 seconds) as the outside brightness changes.

For parking license and tail lamp auto operation, refer to "PARKING, LICENSE AND TAIL LAMPS" (EL-66).

VEHICLE SECURITY SYSTEM

NAEL0255S07

The vehicle security system will flash the high beams if the system is triggered. Refer to "VEHICLE SECURITY (THEFT WARNING) SYSTEM" (EL-346).

Schematic

NAEL0256

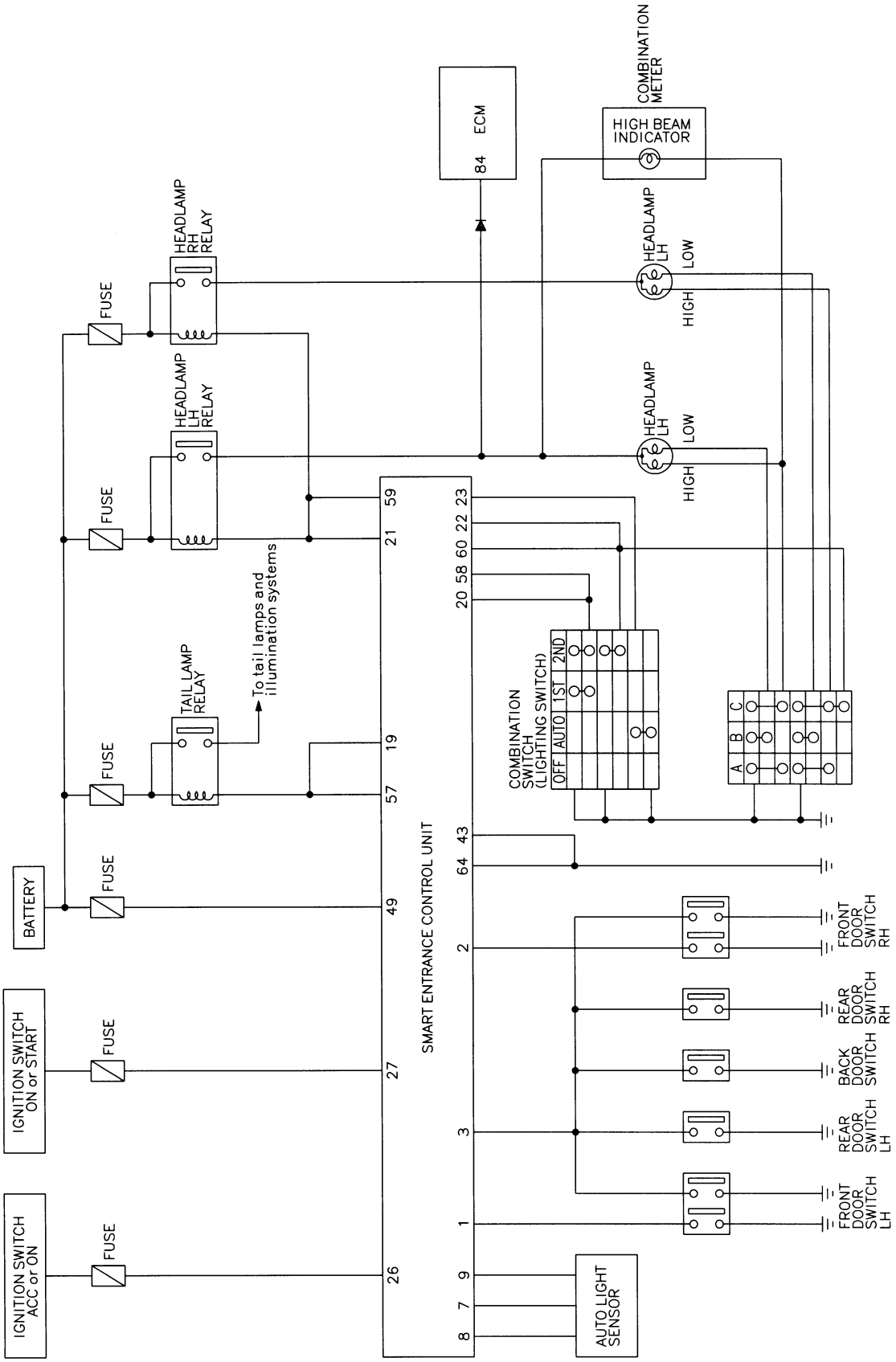

MEL946P

Wiring Diagram — H/LAMP —

NAEL0257

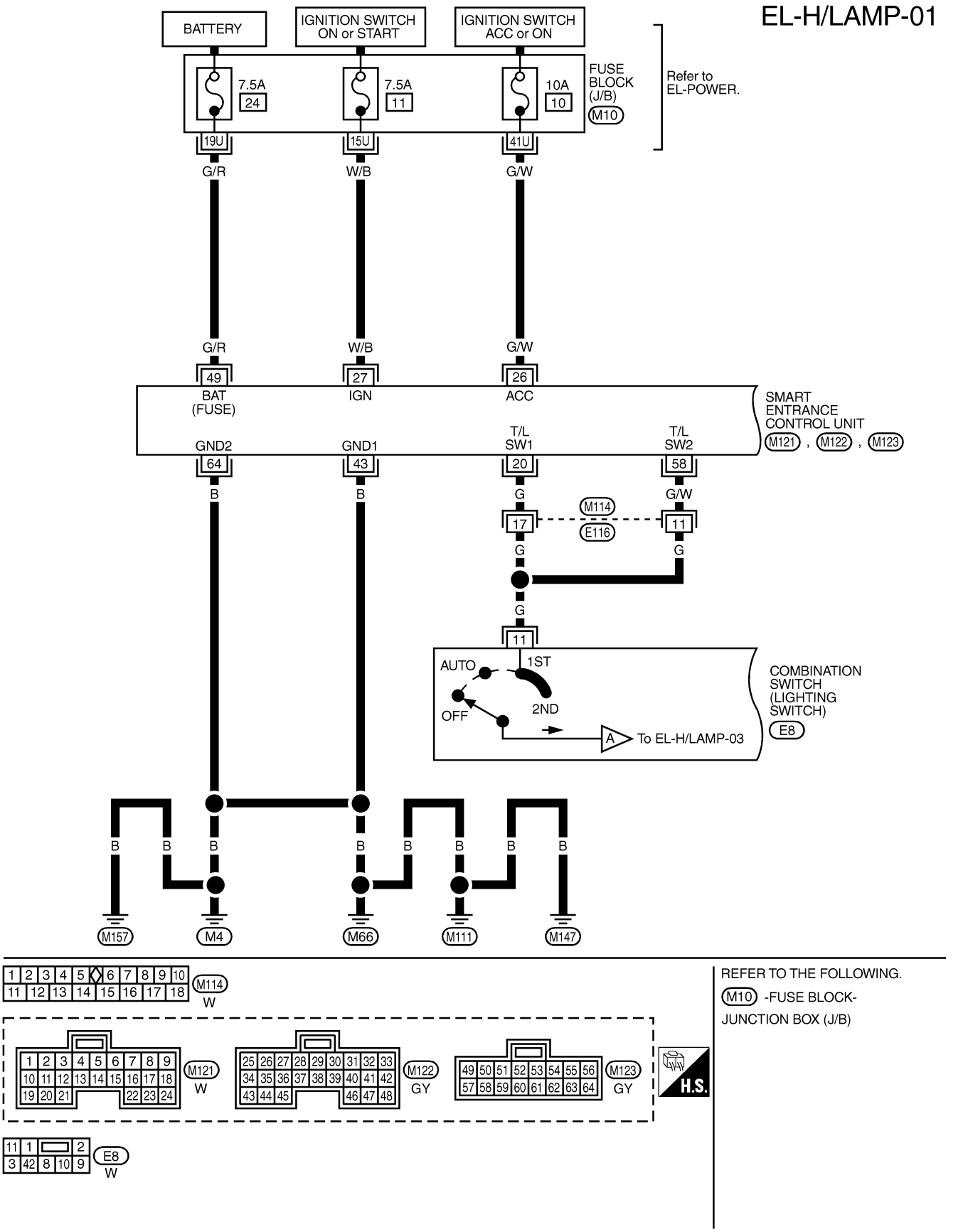

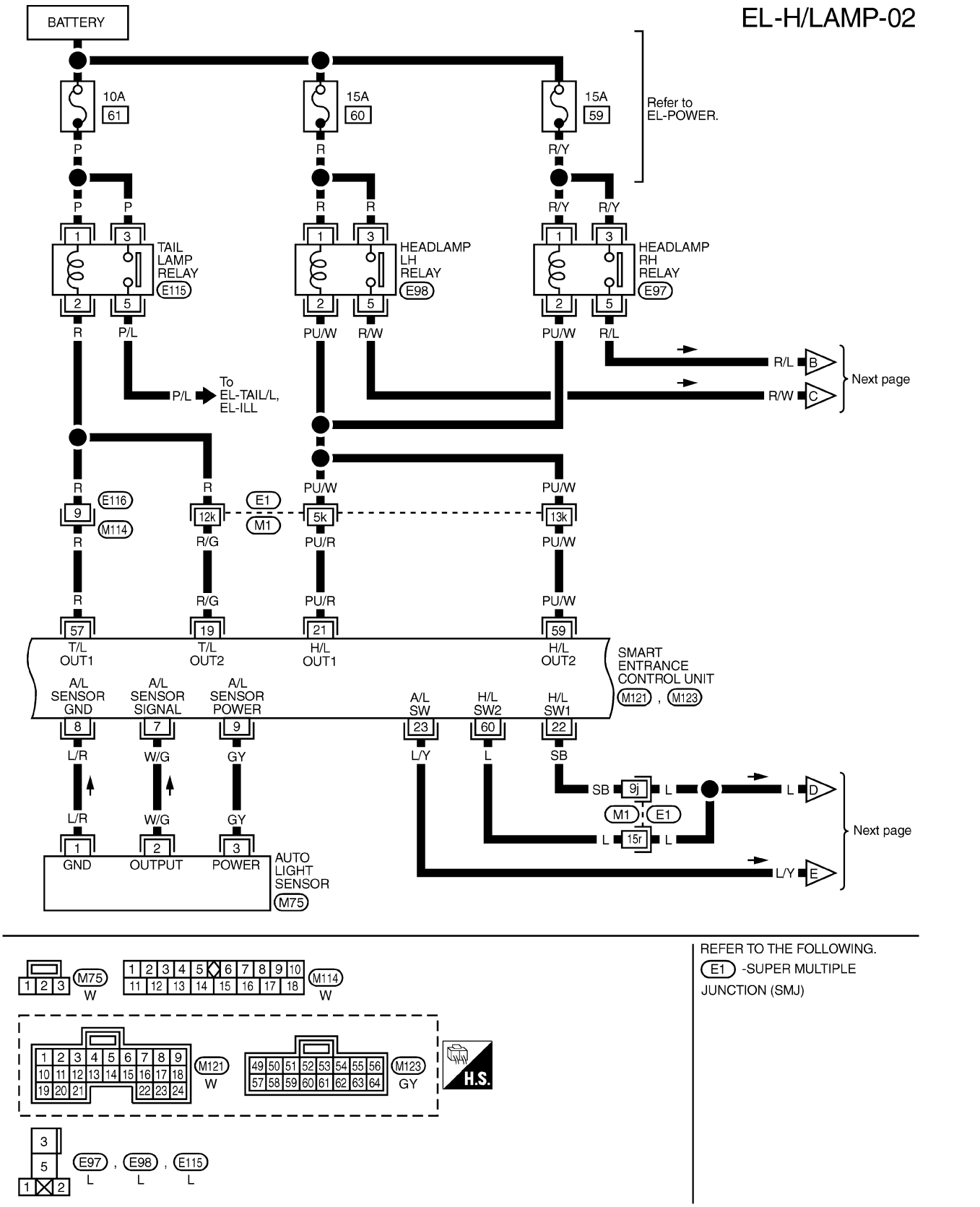

REFER TO THE FOLLOWING.
E1 -SUPER MULTIPLE JUNCTION (SMJ)

MEL930R

EL-H/LAMP-03

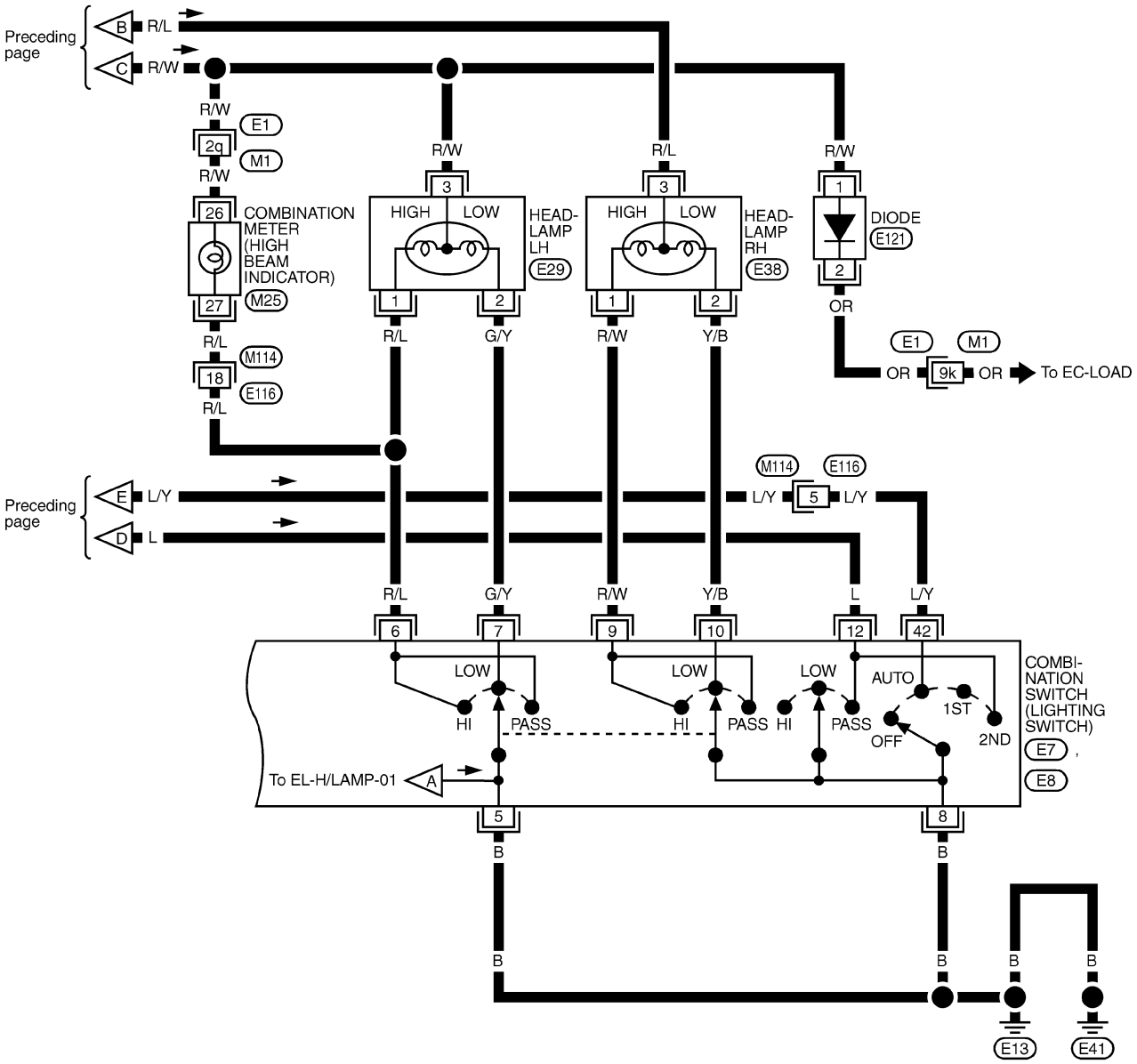

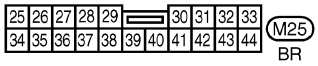

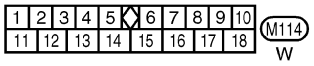

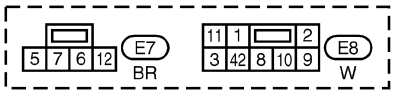

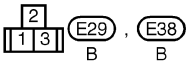

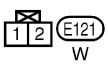

REFER TO THE FOLLOWING.
E1 -SUPER MULTIPLE JUNCTION (SMJ)

MEL931R

EL-H/LAMP-04

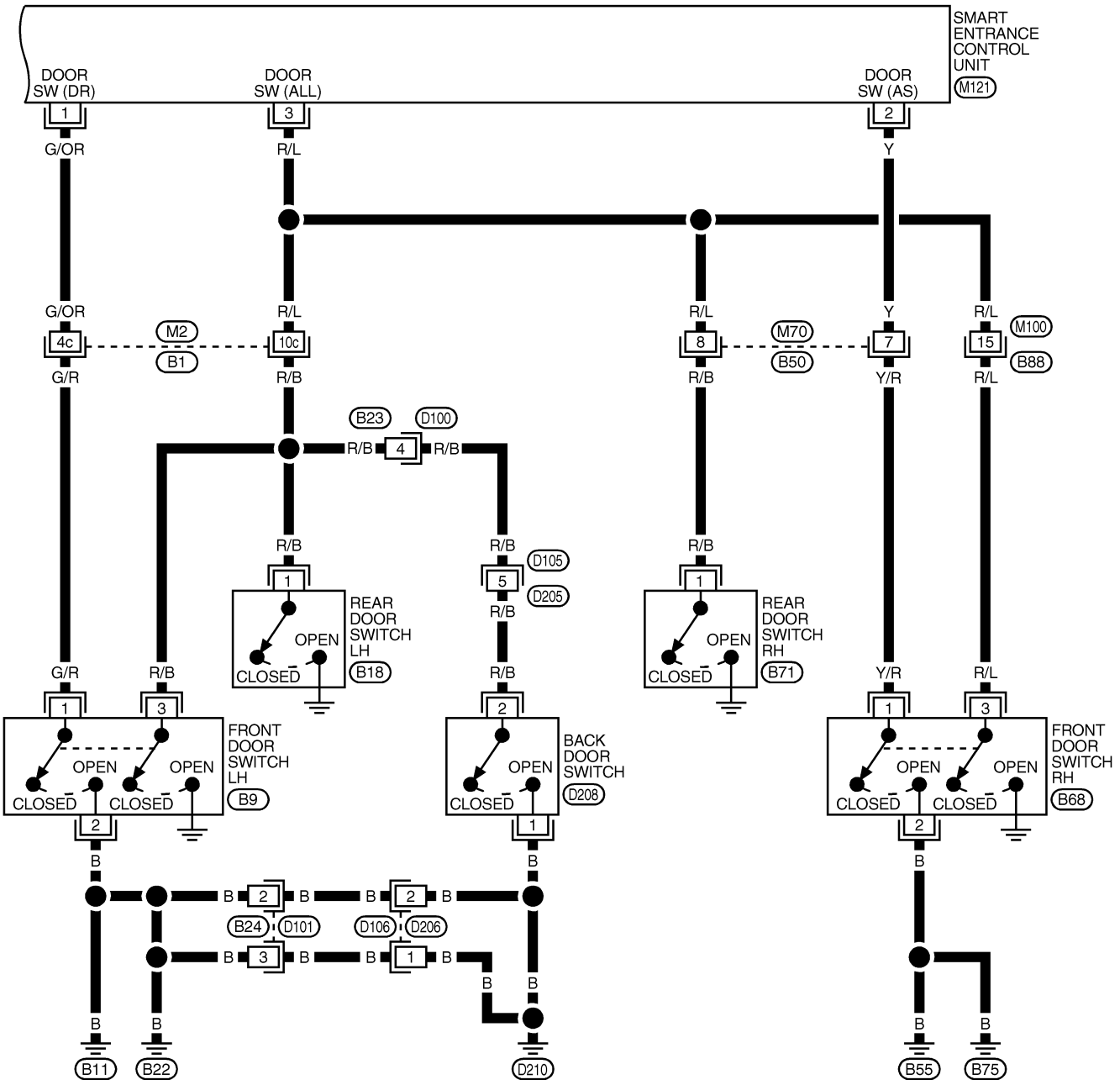

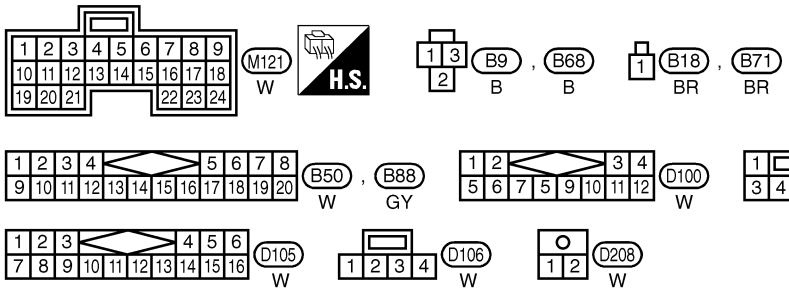

REFER TO THE FOLLOWING.
B1 -SUPER MULTIPLE JUNCTION (SMJ)

MEL950P

CONSULT-II Inspection Procedure

NAEL0258

"HEADLAMP"

NAEL0258S01

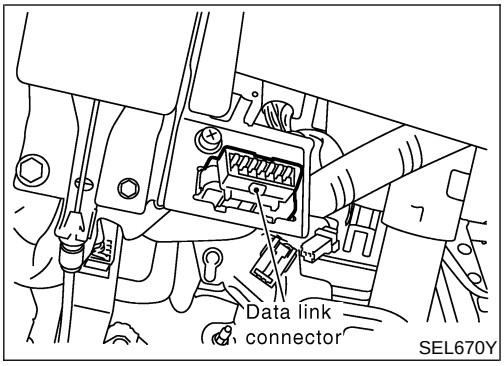

SEL670Y

1. Turn ignition switch "OFF".
2. Connect "CONSULT-II" and "CONSULT-II CONVERTER" to the data link connector.

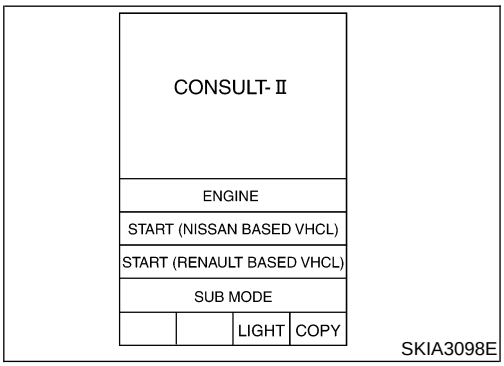

SKIA3098E

3. Turn ignition switch "ON".
4. Touch "START (NISSAN BASED VHCL)".

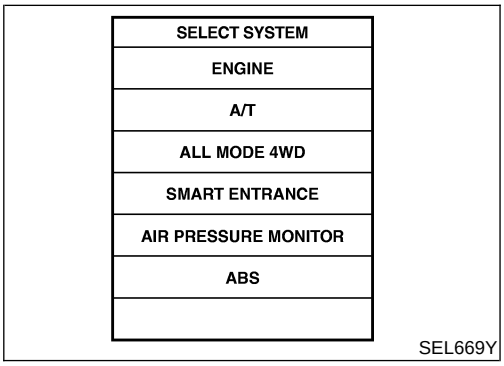

SEL669Y

5. Touch "SMART ENTRANCE".
   If "SMART ENTRANCE" is not indicated, go to GI-41, "CONSULT-II Data Link Connector (DLC) Circuit".

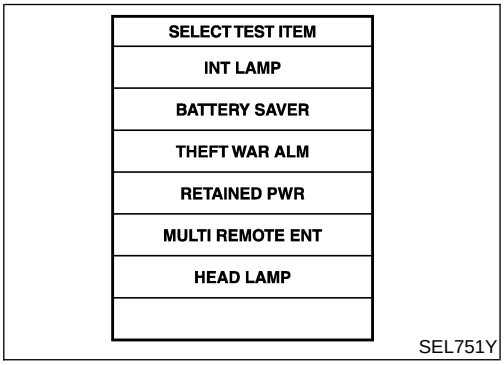

SEL751Y

6. Touch "HEADLAMP".

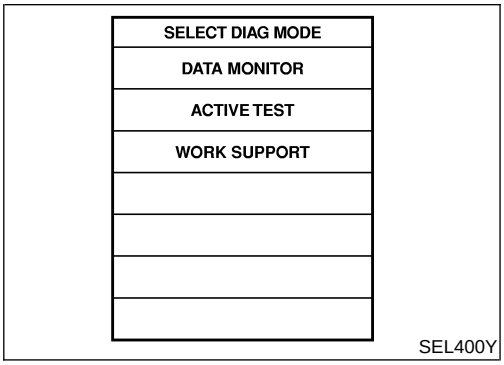

SEL400Y

7. Select diagnosis mode.
   "DATA MONITOR", "ACTIVE TEST" and "WORK SUPPORT" are available.

CONSULT-II Application Items

NAEL0453

"HEAD LAMP"

NAEL0453S01

Data Monitor

NAEL0453S0101

Monitored Item	Description
IGN ON SW	Indicates [ON/OFF] condition of ignition switch in ON position.
ACC ON SW	Indicates [ON/OFF] condition of ignition switch in ACC position.
AUTO LIGT SW	Displays status of the lighting switch as judged from the lighting switch signal. (AUTO position: ON/Other than AUTO position: OFF)
AUTO LIGT SENS	Displays "Illumination outside of the vehicle (close to 5V when light/close to 0V when dark)" as judged from the auto light sensor signal.
LIGHT SW 1ST	Displays status of the lighting switch as judged from the lighting switch signal. (1ST or 2ND position: ON/Other than 1ST and 2ND position: OFF)
LIGHT SW 2ND	Displays status of the lighting switch as judged from the lighting switch signal. (2ND position: ON/Other than 2ND position: OFF)
DOOR SW-DR	Indicates [ON/OFF] condition of front door switch LH.
DOOR SW-AS	Indicates [ON/OFF] condition of door switch RH.
DOOR SW-RR	Indicates [ON/OFF] condition of rear door switch.

Active Test

NAEL0453S0102

Test Item	Description
TAIL LAMP	Tail lamp relay can be operated by on-off operation of the tail lamp.
HEAD LAMP	Headlamp relay can be operated by on-off operation of the headlamp.
AUTO LIGHT	Night time dimming signal can be operated by on-off operation.

Work Support

NAEL0453S0103

Work Item	Description
AUTO LIGHT SET	Auto light sensitivity can be changed in this mode. Sensitivity can be adjusted in four modes. ● NORMAL/MODE 2 (Sensitive)/MODE 3 (Desensitized)/MODE 4 (Insensitive)
BATTERY SAVER SET	Exterior lamp battery saver control mode can be changed in this mode. Selects exterior lamp battery saver control mode between two modes. ● MODE 1 (ON)/MODE 2 (OFF)
ILL DELAY SET	Exterior lamp battery saver control time can be changed in this mode. Selects exterior lamp battery saver control time among eight modes. ● MODE 1 (45 sec.)/MODE 2 (OFF)/MODE 3 (30 sec.)/MODE 4 (60 sec.)/ MODE 5 (90 sec.)/ MODE 6 (120 sec.)/MODE 7 (150 sec.)/MODE 8 (180 sec.)

Trouble Diagnoses

NAEL0260

Symptom	Possible cause	Repair order
Neither headlamp operates.	1. 7.5A fuse 2. Headlamp relay circuit 3. Lighting switch 4. Smart entrance control unit	1. Check 7.5A fuse [No. 24, located in fuse block (J/B)]. Verify battery positive voltage is present at terminal 49 of smart entrance control unit. 2. Check between smart entrance control unit and headlamp relays (LH and RH). 3. Check Lighting switch. 4. Check smart entrance control unit. (EL-382)

Symptom	Possible cause	Repair order
Headlamp LH (low and high beam) does not operate, but headlamp RH (low and high beam) does operate.	1. 15A fuse 2. Headlamp LH relay 3. Headlamp LH relay circuit 4. Lighting switch ground circuit	1. Check 15A fuse (No. 60, located in fusible link and fuse box). Verify battery positive voltage is present at terminals 1 and 3 of headlamp LH relay. 2. Check headlamp LH relay. 3. Check the following. ● Harness between headlamp LH relay and headlamp LH ● Harness between headlamp LH relay and smart entrance control unit 4. Check harness between lighting switch and ground.
Headlamp RH (low and high beam) does not operate, but headlamp LH (low and high beam) does operate.	1. 15A fuse 2. Headlamp RH relay 3. Headlamp RH relay circuit	1. Check 15A fuse (No. 59, located in fusible link and fuse box). Verify battery positive voltage is present at terminals 1 and 3 of headlamp RH relay. 2. Check headlamp RH relay. 3. Check the following. ● Harness between headlamp RH relay and headlamp RH ● Harness between headlamp RH relay and smart entrance control unit 4. Check harness between lighting switch and ground.
LH high beam does not operate, but LH low beam operates.	1. Bulb 2. Open in the LH high beam circuit 3. Lighting switch	1. Check bulb. 2. Check harness between headlamp LH and lighting switch for open circuit. 3. Check lighting switch.
LH low beam does not operate, but LH high beam operates.	1. Bulb 2. Open in LH low beam circuit 3. Lighting switch	1. Check bulb. 2. Check harness between headlamp LH and lighting switch for open circuit. 3. Check lighting switch.
RH high beam does not operate, but RH low beam operates.	1. Bulb 2. Open in the RH high beam circuit 3. Lighting switch	1. Check bulb. 2. Check harness between headlamp RH and lighting switch for open circuit. 3. Check lighting switch.
RH low beam does not operate, but RH high beam operates.	1. Bulb 2. Open in RH low beam circuit 3. Lighting switch	1. Check bulb. 2. Check harness between headlamp RH and lighting switch for open circuit. 3. Check lighting switch.
High beam indicator does not work.	1. Bulb 2. Open in high beam circuit	1. Check bulb in combination meter. 2. Check the following. a. Harness between headlamp LH relay and combination meter for an open circuit b. Harness between high beam indicator and lighting switch
Battery saver control does not operate properly.	1. Door switch LH or RH circuit 2. Lighting switch circuit 3. Smart entrance control unit	1. Check the following. a. Harness between smart entrance control unit and LH or RH door switch for open or short circuit. b. LH or RH door switch ground circuit. c. LH or RH door switch. 2. Check the following. a. Harness between smart entrance control unit terminals 20 or 58 and lighting switch terminal 11 for open or short circuit b. Harness between lighting switch terminal 5 and ground c. Lighting switch 3. Check smart entrance control unit. (EL-382)

Symptom	Possible cause	Repair order
When outside is dark, neither tail lamp nor headlamp turn on by auto light operation.	1. 7.5A fuse 2. Lighting switch "AUTO" check 3. Lighting switch circuit check 4. Lighting switch ground circuit check 5. Auto light sensor check 6. Auto light sensor circuit check	1. Check 7.5A fuse [NO. 11 located in fuse block (J/B)]. Verify battery positive voltage is present at terminal 27 of smart entrance control unit. 2. Check lighting switch (AUTO) input signal with "CONSULT-II" in "DATA MONITOR" mode. When lighting switch is in AUTO: **AUTO LIGHT SWITCH ON** When lighting switch is in OFF: **AUTO LIGHT SWITCH OFF** 3. Check harness for open or short between smart entrance control unit and lighting switch. 4. Check harness for lighting switch and ground. 5. Check auto light sensor input signal. (With CONSULT-II) See "AUTO LIGHT SENSOR" in DATA MONITOR mode. When auto light sensor in stuck by light: **More than 3V** When auto light sensor is not stuck by light: **Approx. 0.5V** (Without CONSULT-II) Check voltage between smart entrance control unit terminal 7 and ground. Refer to smart entrance control unit. (EL-382) 6. Check the following. a. Harness for open or short between smart entrance control unit terminal 8 and auto light sensor terminal 1 b. Harness for open or short between smart entrance control unit terminal 7 and auto light sensor terminal 2 c. Harness for open or short between smart entrance control unit terminal 9 and auto light sensor terminal 3
When outside is dark, tail lamp turns on but headlamp does not turn on by auto light operation.	Auto light output check	Check auto light output. (With CONSULT-II) See "HEADLAMP" and "TAIL LAMP" in ACTIVE TEST mode, and headlamp switch to AUTO position. **Headlamp and tail lamp should turn on.** (Without CONSULT-II) Check voltage between smart entrance control unit terminals 19, 21, 57, 59 and ground. Refer to smart entrance control unit. (EL-382)
When outside is dark, headlamp turns on but tail lamp does not turn on by auto light operation.	Auto light output check	Check auto light output. (With CONSULT-II) See "HEADLAMP" and "TAIL LAMP" in ACTIVE TEST mode, and headlamp switch to AUTO position. **Headlamp and tail lamp should turn on.** (Without CONSULT-II) Check voltage between smart entrance control unit terminals 19, 21, 57, 59 and ground. Refer to smart entrance control unit. (EL-382)
Light does not turn off when ignition key switch is turned to "OFF" (exterior lamp battery saver control is canceled).	1. 7.5A fuse 2. IGN switch circuit	1. Check 7.5A fuse [NO. 11 located in fuse block (J/B)]. Verify battery positive voltage is present at terminal 27 of smart entrance control unit. 2. Check harness for open or short between smart entrance control unit and fuse.

Symptom	Possible cause	Repair order
When outside is bright, neither tail lamps nor headlamps turn off by auto light operation.	Auto light sensor check	Check auto light sensor input signal. (With CONSULT-II) See "AUTO LIGHT SENSOR" in DATA MONITOR mode. When auto light sensor in stuck by light: **More than 3V** When auto light sensor is not stuck by light: **Approx. 0.5V** (Without CONSULT-II) Check voltage between smart entrance control unit terminal 7 (W/G) and ground. Refer to smart entrance control unit. (EL-382)

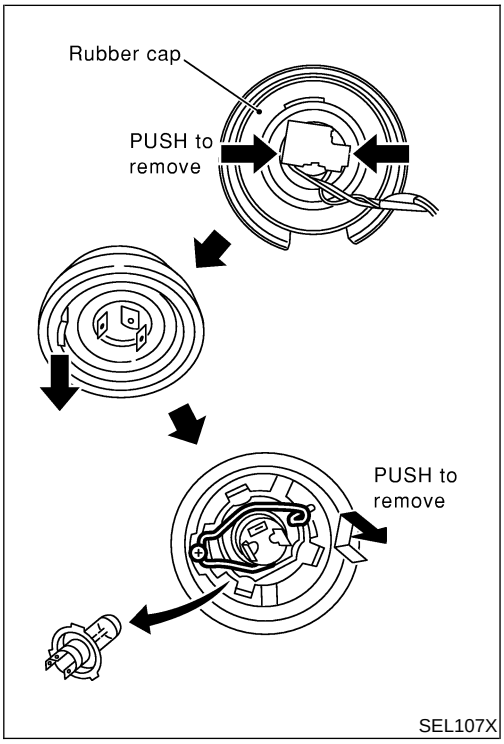

Bulb Replacement

NAEL0261

The headlamp is a semi-sealed beam type which uses a replaceable halogen bulb. The bulb can be replaced from the engine compartment side without removing the headlamp body.

- **Grasp only the plastic base when handling the bulb. Never touch the glass envelope.**

1. Disconnect the battery cable.
2. Disconnect the harness connector from the back side of the bulb.
3. Pull off the rubber cap.
4. Remove the headlamp bulb carefully. Do not shake or rotate the bulb when removing it.
5. Install in the reverse order of removal.

CAUTION:

Do not leave headlamp reflector without bulb for a long period of time. Dust, moisture, smoke, etc. entering headlamp body may affect the performance of the headlamp. Remove headlamp bulb from the headlamp reflector just before a replacement bulb is installed.

Aiming Adjustment

NAEL0262

Before performing aiming adjustment, check the following.

For details, refer to the regulations in your own country.

1) Keep all tires inflated to correct pressures.
2) Place vehicle flat surface.
3) See that there is no-load in vehicle (coolant, engine oil filled up to correct level and full fuel tank) other than the driver (or equivalent weight placed in driver's position).

LOW BEAM

NAEL0262S01

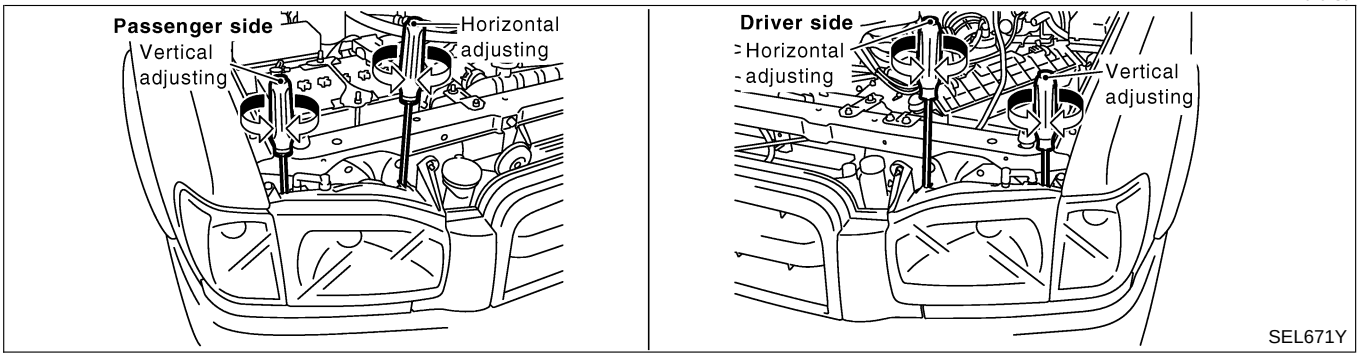

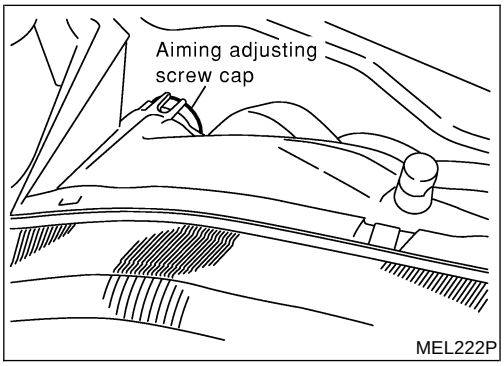

1. Remove aiming adjusting screw cap.
2. Turn headlamp low beam on.
3. Use adjusting screws to perform aiming adjustment.

- **First tighten the adjusting screw all the way and then make adjustment by loosening the screw.**

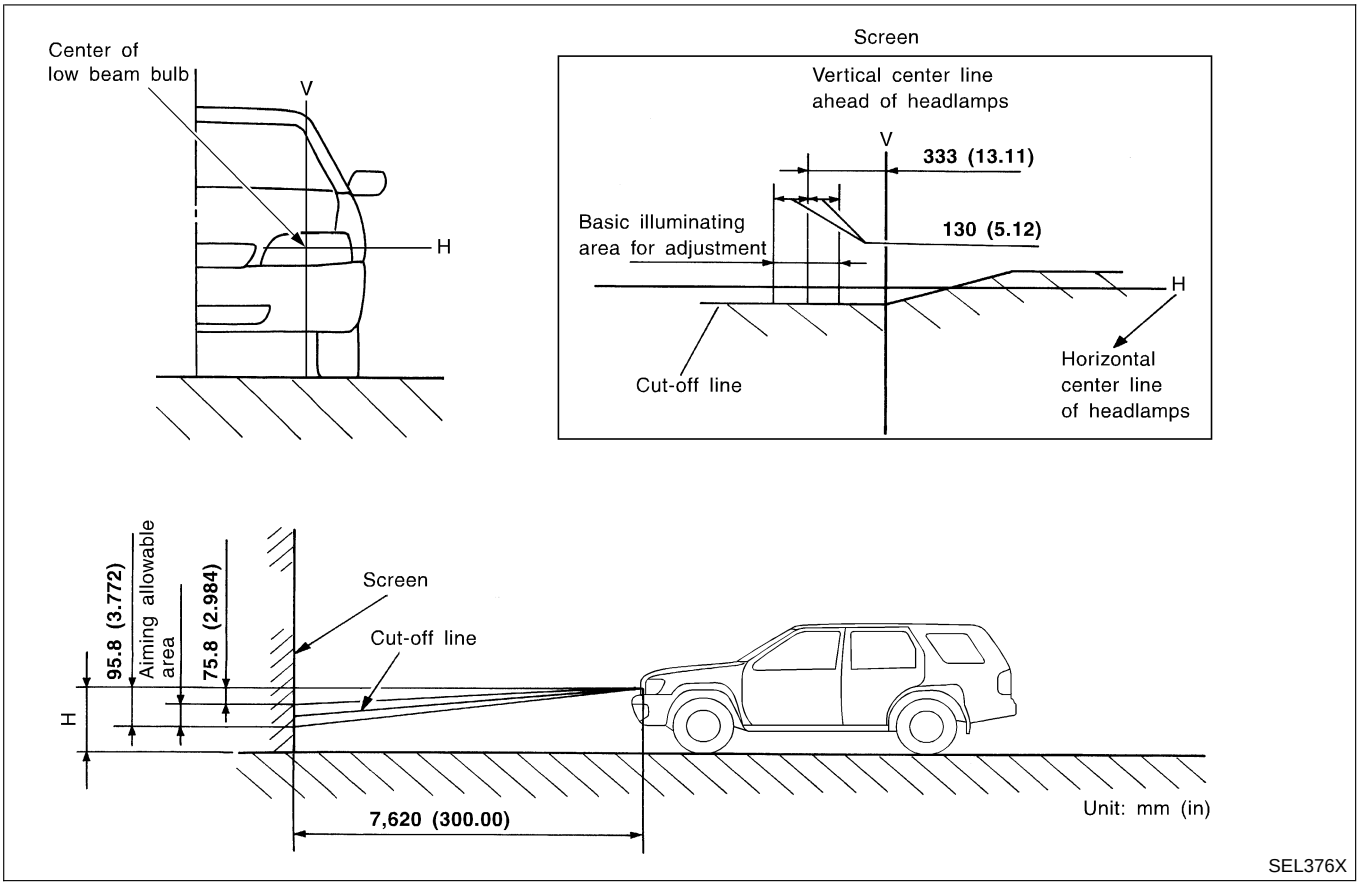

If the vehicle front body has been repaired and/or the headlamp assembly has been replaced, check aiming. Use the aiming chart shown in the figure.

- **Basic illuminating area for adjustment should be within the range shown on the aiming chart. Adjust headlamps accordingly.**

Component Parts and Harness Connector Location

NAEL0263

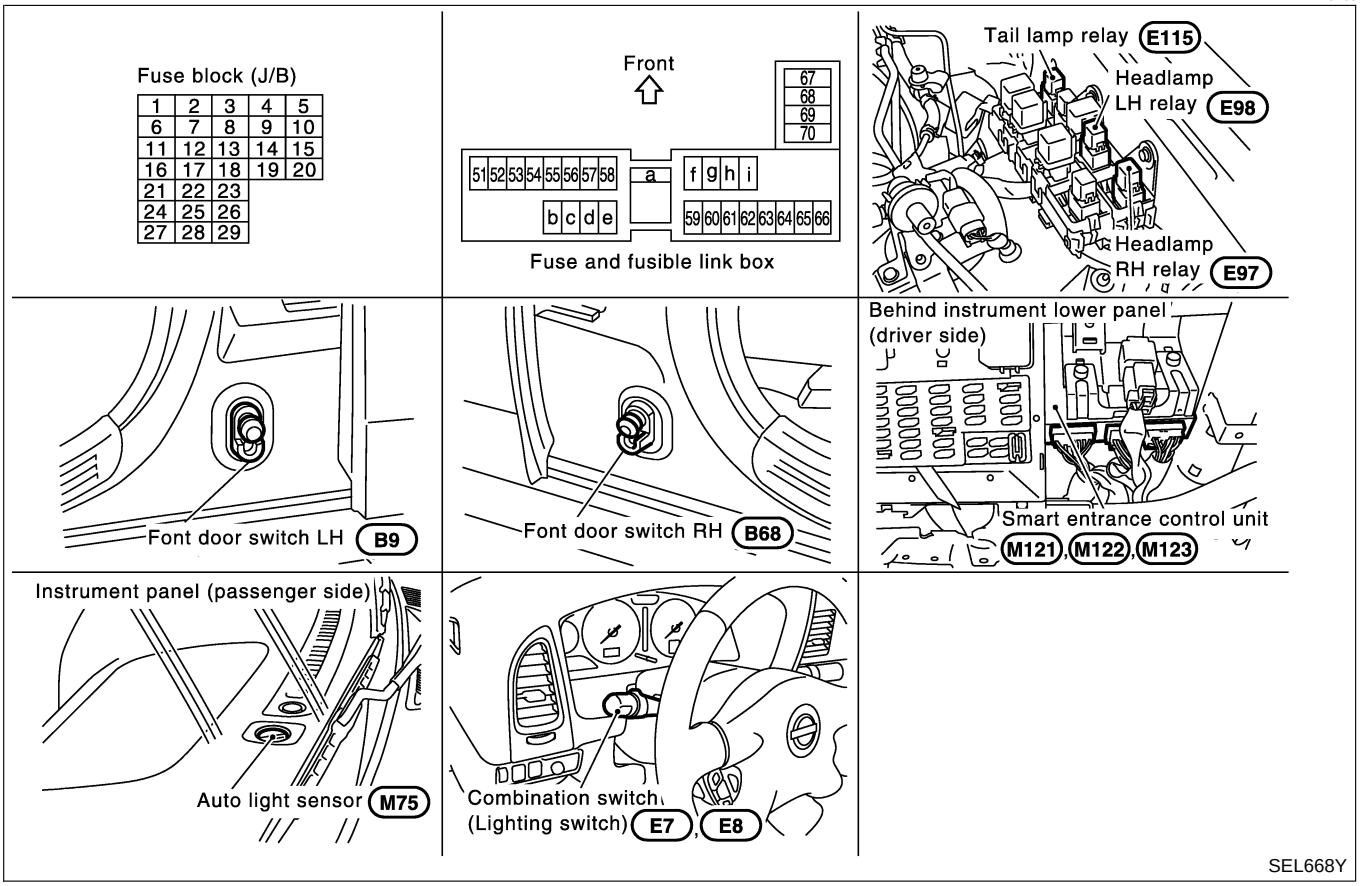

System Description

NAEL0264

The headlamp system for Canada vehicles contains a daytime light control unit that activates the high beam headlamps at approximately half illumination whenever the engine is running. If the parking brake is applied before the engine is started the daytime lights will not be illuminated. The daytime lights will illuminate once the parking brake is released. Thereafter, the daytime lights will continue to operate when the parking brake is applied.

And battery saver system is controlled by the smart entrance control unit.

Power is supplied at all times

- to headlamp LH relay terminals 1 and 3
- through 15A fuse (No. 60, located in the fuse and fusible link box), and
- to headlamp RH relay terminals 1 and 3
- through 15A fuse (No. 59, located in the fuse and fusible link box), and
- to smart entrance control unit terminal 49
- through 7.5A fuse [No. 24, located in the fuse block (J/B)].

Ground is supplied

- to daytime light control unit terminal 16
- through body grounds E13 and E41
- to smart entrance control unit terminals 43 and 64
- through body grounds M4, M66, M111, M147 and M157.

When the ignition switch is in the ON or START position, power is also supplied

- to daytime light control unit terminal 3, and
- to smart entrance control unit terminal 27
- through 7.5A fuse [No. 11, located in the fuse block (J/B)].

When the ignition switch is in the ACC or ON position, power is supplied

- to smart entrance control unit terminal 26

- through 10A fuse [No. 10, located in the fuse block (J/B)].

When the ignition switch is in the START position, power is supplied

- to daytime light control unit terminal 2
- through 7.5A fuse [No. 26, located in the fuse block (J/B)].

HEADLAMP OPERATION

NAEL0264S01

Power Supply to Low Beam and High Beam

NAEL0264S0101

When lighting switch is in 2ND or PASS position, ground is supplied

- to headlamp relay (LH and RH) terminal 2 from smart entrance control unit terminals 21 and 59
- through smart entrance control unit terminals 22 and 60
- from lighting switch terminal 12.

Headlamp relays (LH and RH) are energized and then power is supplied to headlamps (LH and RH).

Low Beam Operation

NAEL0264S0102

When the lighting switch is turned to 2ND and LOW ("B") positions, ground is supplied

- to terminal 2 of the headlamp LH
- through daytime light control unit terminals 11 and 15
- through lighting switch terminals 7 and 5
- through body grounds E13 and E41.

Ground is also supplied

- to terminal 2 of the headlamp RH
- through daytime light control unit terminals 8 and 12
- through lighting switch terminals 10 and 8
- through body grounds E13 and E41.

With power and ground supplied, the low beam headlamps illuminate.

High Beam Operation/Flash-to-pass Operation

NAEL0264S0103

When the lighting switch is turned to 2ND and HIGH ("A") or PASS ("C") positions, ground is supplied

- to terminal 1 of headlamp LH
- through daytime light control unit terminals 10 and 13, and
- to combination meter terminal 27 for the HIGH BEAM indicator
- through lighting switch terminals 6 and 5
- through body grounds E13 and E41.

Ground is also supplied

- to terminal 1 of headlamp RH
- through daytime light control unit terminals 9 and 14
- through lighting switch terminals 9 and 8
- through body grounds E13 and E41.

With power and ground supplied, the high beam headlamps and HIGH BEAM indicator illuminate.

EXTERIOR LAMP BATTERY SAVER CONTROL

NAEL0264S02

Except for Auto Light Control Operation

NAEL0264S0201

Headlamps will remain on for a short while after the ignition switch is turned from ON (or ACC) to OFF.
Continuity between terminals 21 and 22, and between terminals 59 and 60 of smart entrance control unit will be disturbed after 5 minutes, then the headlamps will be turned off.
When the lighting switch is turned from OFF to 2ND after headlamps are turned to off by the exterior lamp battery saver control, ground is supplied

- to smart entrance control unit terminals 20 and 58 from lighting switch terminal 11, and then,
- to headlamp LH and RH relays terminal 2 from smart entrance control unit terminals 21 and 59,
- through smart entrance control unit terminals 22 and 60 and
- through lighting switch terminal 12.

Then headlamps illuminate again.

Auto light control operation

NAEL0264S0202

While the headlamps are turned ON by "AUTO" operation, the exterior lamp battery saver is activated for 5 minutes when the ignition switch is turned from ON (or ACC) to OFF, and either LH or RH front door switch is opened.

The smart entrance control unit controls exterior lamp battery saver activation as follows:

- When the door switch signal changes from ON to OFF while the exterior lamp battery saver is activated, the operation is discontinued, restarts and lasts for 45 seconds, then the headlamps will be turned off.
- When the door switch signal changes from OFF to ON while the exterior lamp battery saver is activated, the operation is discontinued, restarts and lasts for 45 seconds, then the headlamps will be turned off.
- When the one of four door switch signals changes from OFF to ON while the exterior lamp battery saver is activated, the operation is discontinued, restarts and lasts for 5 minutes, then the headlamps will be turned off.
- When all the door switch ON signals are input while the exterior lamp battery saver is activated, the saver is discontinued and restarts and lasts for 45 seconds, then the headlamps will be turned off.

Exterior lamp battery saver control time can be changed using "WORK SUPPORT" mode in "HEADLAMP".

When the lighting switch is turned from OFF to 2ND after headlamps are turned to off by the exterior lamp battery saver control, ground is supplied

- to smart entrance control unit terminals 20 and 58 from lighting switch terminal 11, and then,
- to headlamp LH and RH relays terminal 2 from smart entrance control unit terminals 21 and 59,
- through smart entrance control unit terminals 22 and 60 and
- through lighting switch terminal 12.

Then headlamps illuminate again.

AUTO LIGHT OPERATION

NAEL0264S03

For auto light operation, refer to "HEADLAMP" (EL-37).

DAYTIME LIGHT OPERATION

NAEL0264S04

With the engine running, the lighting switch in the OFF or 1ST position and parking brake released, power is supplied

- through daytime light control unit terminal 7
- to terminal 3 of headlamp RH
- through terminal 1 of headlamp RH
- to daytime light control unit terminal 9
- through daytime light control unit terminal 6
- to terminal 3 of headlamp LH.

Ground is supplied to terminal 1 of headlamp LH.

- through daytime light control unit terminals 10 and 16
- through body grounds E13 and E41.

Because the high beam headlamps are now wired in series, they operate at half illumination.

OPERATION

NAEL0264S05

After starting the engine with the lighting switch in the "OFF" or "1ST" position, the headlamp high beam automatically turns on. Lighting switch operations other than the above are the same as conventional light systems.

Engine		With engine stopped									With engine running								
Lighting switch		OFF			1ST			2ND			OFF			1ST			2ND		
		A	B	C	A	B	C	A	B	C	A	B	C	A	B	C	A	B	C
Headlamp	High beam	X	X	O	X	X	O	O	X	O	△*	△*	O	△*	△*	O	O	X	O
	Low beam	X	X	X	X	X	X	X	O	X	X	X	X	X	X	X	X	O	X
Clearance and tail lamp		X	X	X	O	O	O	O	O	O	X	X	X	O	O	O	O	O	O
License and instrument illumination lamp		X	X	X	O	O	O	O	O	O	X	X	X	O	O	O	O	O	O

A: "HIGH BEAM" position
B: "LOW BEAM" position
C: "FLASH TO PASS" position
O : Lamp "ON"
X : Lamp "OFF"
△ : Lamp dims. (Added functions)
*: When starting the engine with the parking brake released, the daytime light will come ON.
When starting the engine with the parking brake pulled, the daytime light won't come ON.

Schematic

NAEL0265

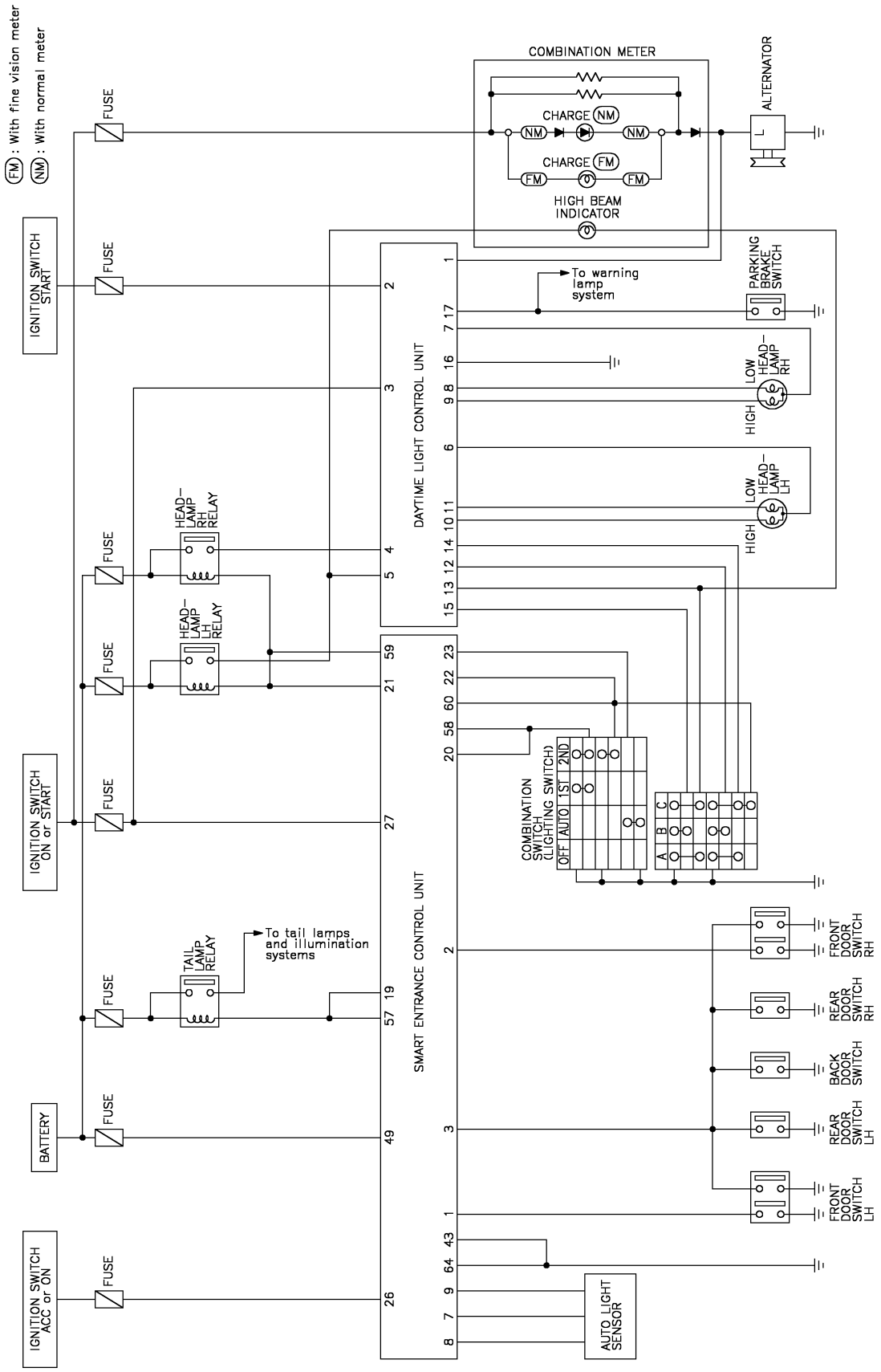

MEL960R

Wiring Diagram — DTRL —

NAEL0266

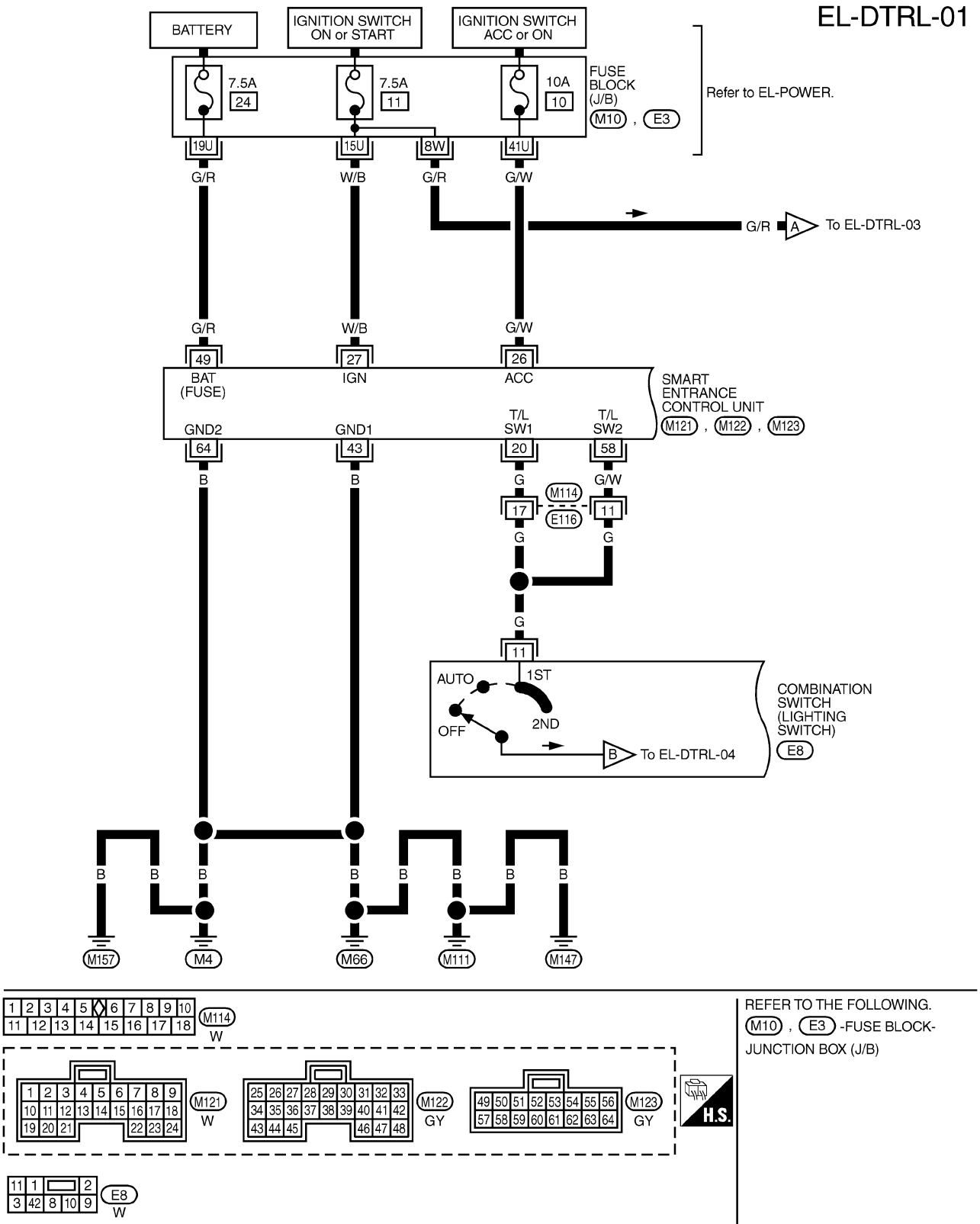

MEL932R

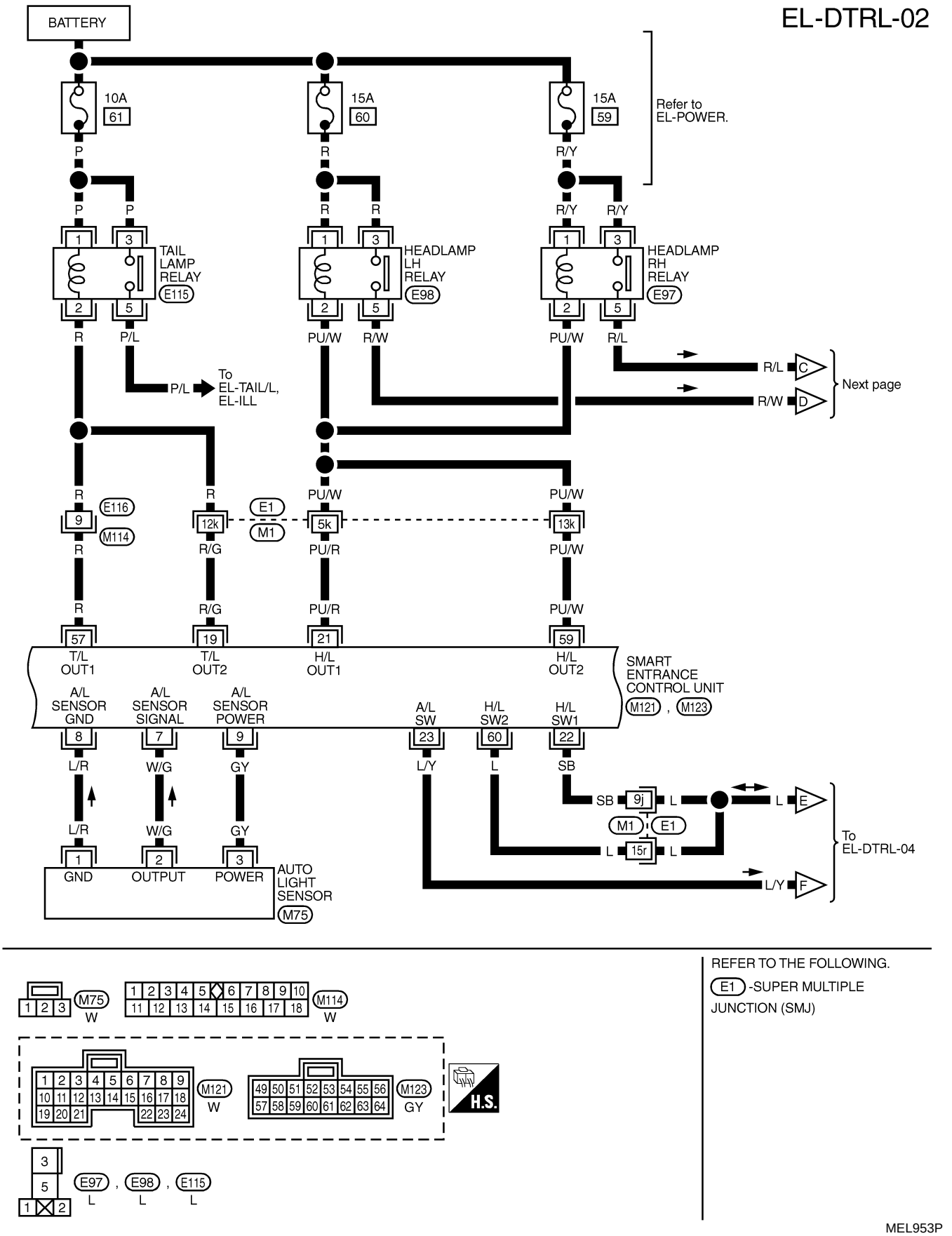

REFER TO THE FOLLOWING.
E1 -SUPER MULTIPLE JUNCTION (SMJ)

MEL953P

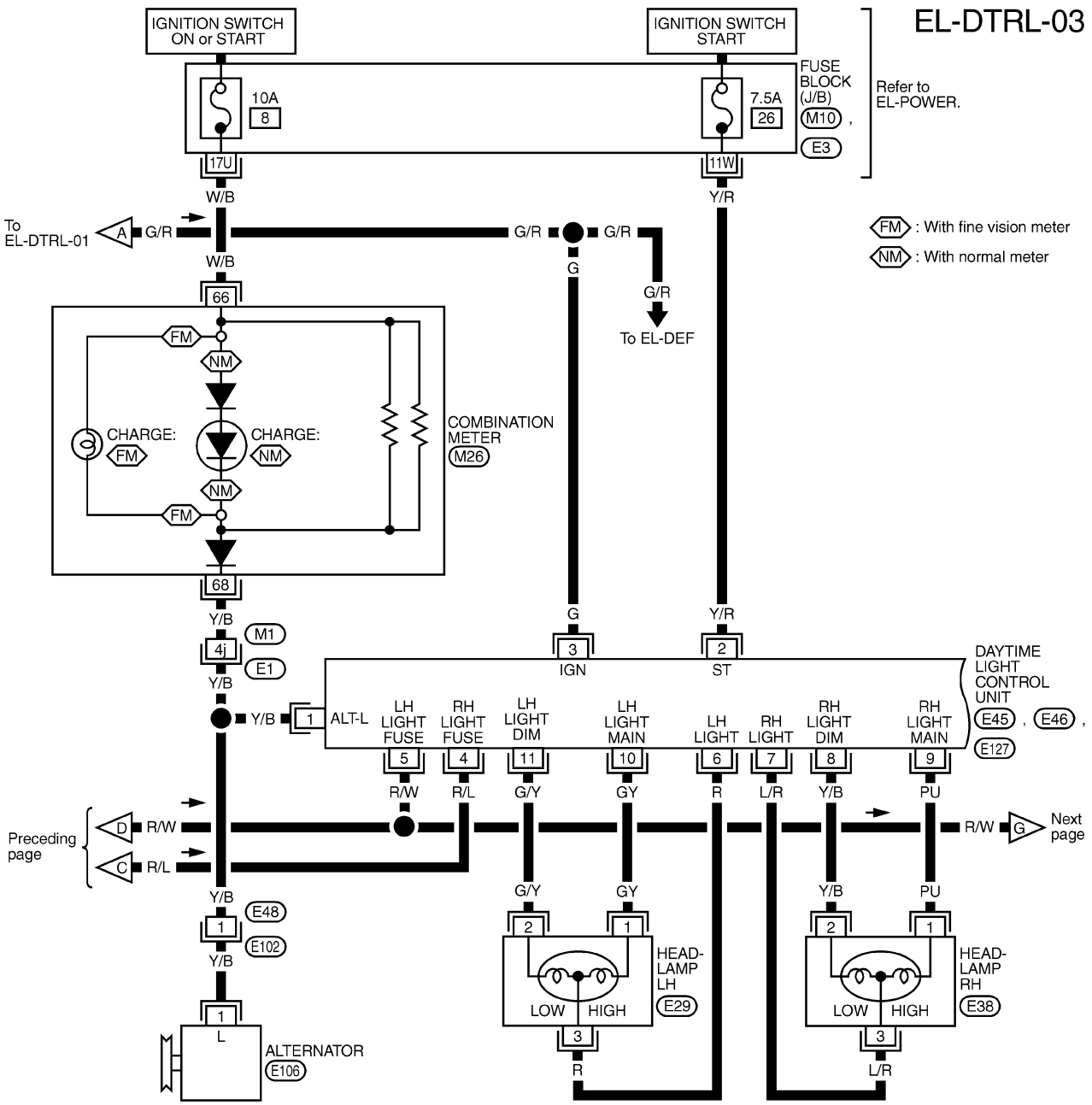
EL-DTRL-03
IGNITION SWITCH ON or START
IGNITION SWITCH START
FUSE BLOCK (J/B) M10 , E3
Refer to EL-POWER.
10A 8
7.5A 26
17U
11W
W/B
Y/R
To EL-DTRL-01
A
G/R
G
To EL-DEF
FM : With fine vision meter
NM : With normal meter
66
68
COMBINATION METER M26
CHARGE:
Y/B
M1
4j
E1
3 IGN
2 ST
DAYTIME LIGHT CONTROL UNIT
E45 , E46 , E127
1 ALT-L
LH LIGHT FUSE
RH LIGHT FUSE
LH LIGHT DIM
LH LIGHT MAIN
LH LIGHT
RH LIGHT
RH LIGHT DIM
RH LIGHT MAIN
5 4 11 10 6 7 8 9
R/W R/L G/Y GY R L/R Y/B PU
Preceding page
D R/W
C R/L
Next page
G
E48
E102
HEAD-LAMP LH E29
HEAD-LAMP RH E38
LOW HIGH
ALTERNATOR E106
L
REFER TO THE FOLLOWING.
E1 -SUPER MULTIPLE JUNCTION (SMJ)
M10 , E3 -FUSE BLOCK-JUNCTION (J/B)
M26 BR
E29 , E38 B
E45 GY
E46 GY
E127 GY
E106 GY
E102 GY

MEL961R

EL-DTRL-04

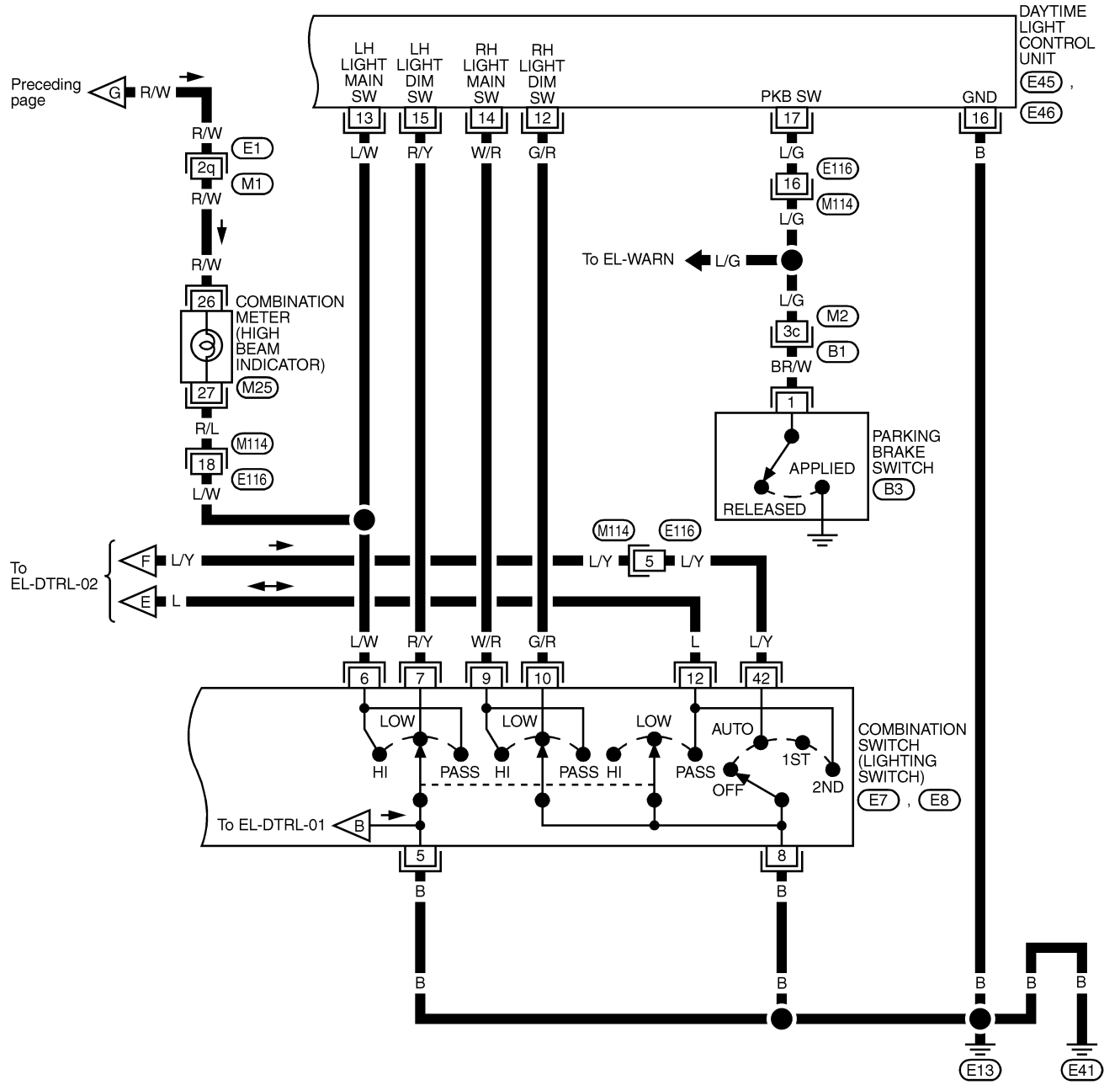
DAYTIME LIGHT CONTROL UNIT
E45 , E46
LH LIGHT MAIN SW
LH LIGHT DIM SW
RH LIGHT MAIN SW
RH LIGHT DIM SW
PKB SW
GND
Preceding page
G R/W
R/W
E1
2q
M1
R/W
R/W
26
COMBINATION METER (HIGH BEAM INDICATOR)
27
M25
R/L
M114
18
E116
L/W
13
15
14
12
17
16
L/W
R/Y
W/R
G/R
L/G
E116
16
M114
L/G
To EL-WARN
L/G
L/G
M2
3c
B1
BR/W
1
PARKING BRAKE SWITCH
APPLIED
RELEASED
B3
B
M114
E116
5
L/Y
L/Y
L/Y
To EL-DTRL-02
F L/Y
E L
L/W
R/Y
W/R
G/R
L
L/Y
6
7
9
10
12
42
LOW
HI
PASS
LOW
HI
PASS
LOW
HI
PASS
AUTO
OFF
1ST
2ND
COMBINATION SWITCH (LIGHTING SWITCH)
E7 , E8
To EL-DTRL-01
B
5
8
B
B
B
B
B
B
B
E13
E41
M25
BR
M114
W
E7
BR
E8
W
E45
GY
E46
GY
B3
B
REFER TO THE FOLLOWING.
E1 , B1 -SUPER MULTIPLE JUNCTION (SMJ)
MEL955P

EL-DTRL-05

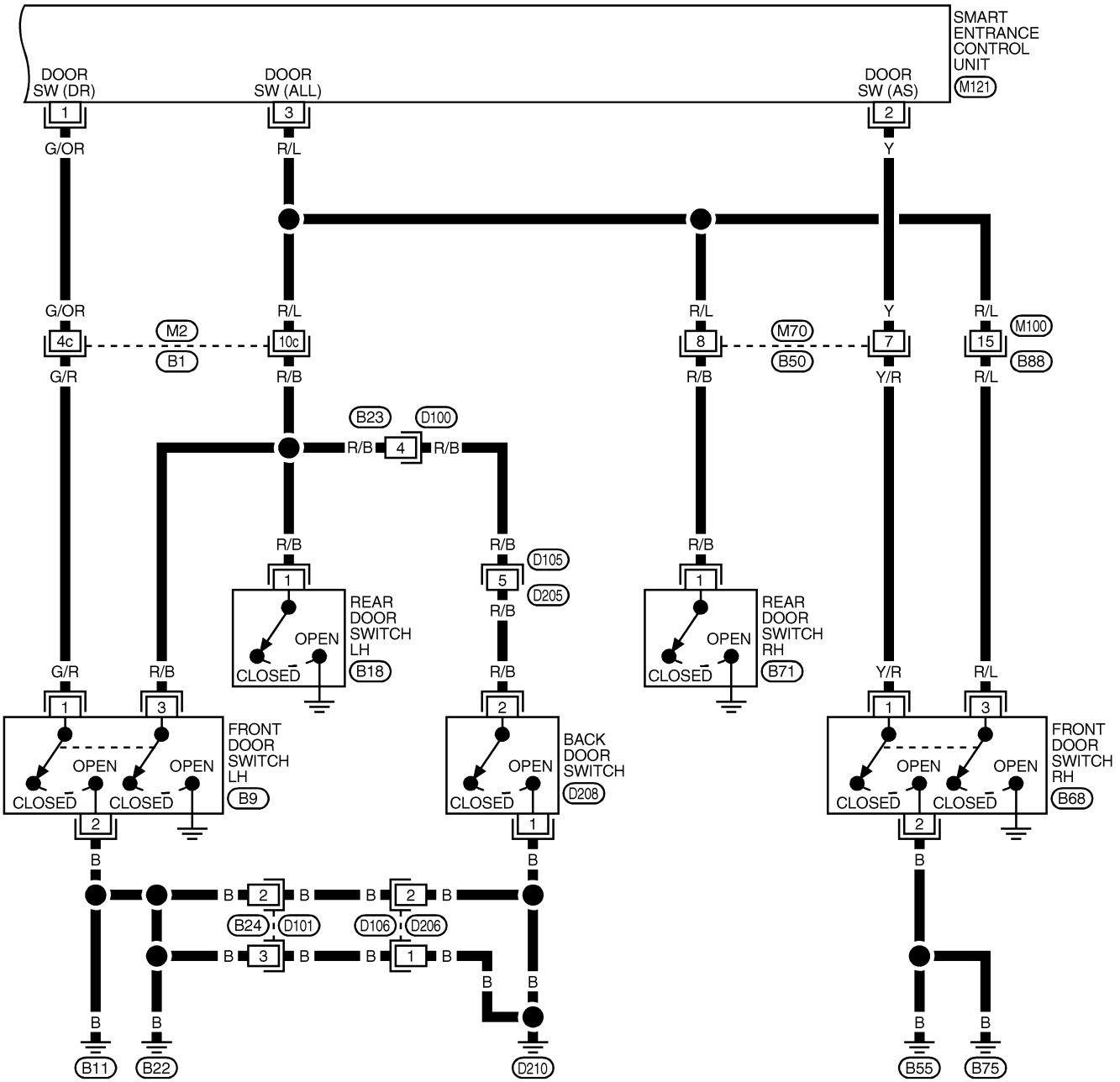

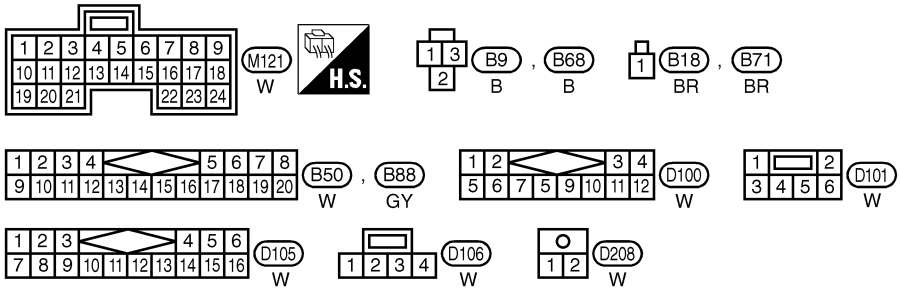

REFER TO THE FOLLOWING.
B1 -SUPER MULTIPLE JUNCTION (SMJ)

MEL956P

CONSULT-II Inspection Procedure

NAEL0267

"HEADLAMP"

NAEL0267S01

Refer to "HEADLAMP (FOR USA)" (EL-43).

CONSULT-II Application Items

NAEL0268

"HEADLAMP"

NAEL0268S01

Refer to "HEADLAMP (FOR USA)" (EL-44).

Trouble Diagnoses

NAEL0269

Symptom	Possible cause	Repair order
Neither headlamp operates.	1. 7.5A fuse 2. Lighting switch 3. Daytime light control unit 4. Smart entrance control unit	1. Check the following. a. 7.5A fuse [No. 24, located in fuse block (J/B)] Verify battery positive voltage is present at terminal 49 of smart entrance control unit. b. 7.5A fuse [No. 11, located in fuse block (J/B)] Verify battery positive voltage is present at terminal 3 of daytime light control unit. 2. Check lighting switch. 3. Check daytime light control unit (EL-63). 4. Check smart entrance control unit. (EL-382)
LH headlamp (low and high beam) does not operate, but RH headlamp (low and high beam) does operate.	1. 15A fuse 2. Headlamp LH relay 3. Headlamp LH relay circuit 4. Headlamp LH ground circuit 5. Lighting switch circuit 6. Daytime light control unit 7. Smart entrance control unit	1. Check 15A fuse (No. 60, located in fusible link and fuse box). Verify battery positive voltage is present at terminal 1 and 3 of headlamp LH relay. 2. Check headlamp LH relay. 3. Check the following. a. Harness between headlamp LH relay and daytime light control unit b. Harness between headlamp LH relay and smart entrance control unit 4. Check harness between headlamp LH and daytime light control unit. 5. Check harness between smart entrance control unit and lighting switch. 6. Check daytime light control unit. (EL-63) 7. Check smart entrance control unit. (EL-382)

Symptom	Possible cause	Repair order
RH headlamp (low and high beam) does not operate, but LH headlamp (low and high beam) does operate.	1. 15A fuse 2. Headlamp RH relay 3. Headlamp RH relay circuit 4. Headlamp RH ground circuit 5. Lighting switch circuit 6. Daytime light control unit 7. Smart entrance control unit	1. Check 15A fuse (No. 59, located in fusible link and fuse box). Verify battery positive voltage is present at terminals 1 and 3 of headlamp RH relay. 2. Check headlamp RH relay. 3. Check the following. a. Harness between headlamp RH relay and daytime light control unit b. Harness between headlamp RH relay and smart entrance control unit 4. Check harness between headlamp RH and daytime light control unit. 5. Check harness between smart entrance control unit and lighting switch. 6. Check daytime light control unit. (EL-63) 7. Check smart entrance control unit. (EL-382)
LH high beam does not operate, but LH low beam operates.	1. Bulb 2. Headlamp LH high beams circuit 3. Lighting switch 4. Lighting switch circuit 5. Daytime light control unit	1. Check bulb. 2. Check harness between LH headlamp and daytime light control unit. 3. Check lighting switch. 4. Check harness between daytime light control unit and lighting switch. 5. Check daytime light control unit. (EL-63)
LH low beam does not operate, but LH high beam operates.	1. Bulb 2. Headlamp LH high beams circuit 3. Lighting switch 4. Lighting switch circuit 5. Daytime light control unit	1. Check bulb. 2. Check harness between LH headlamp and daytime light control unit. 3. Check lighting switch. 4. Check harness between daytime light control unit and lighting switch. 5. Check daytime light control unit. (EL-63)
RH high beam does not operate, but RH low beam operates.	1. Bulb 2. Open in the RH high beams circuit 3. Lighting switch 4. Lighting switch circuit 5. Daytime light control unit	1. Check bulb. 2. Check harness between RH headlamp and daytime light control unit. 3. Check lighting switch. 4. Check harness between daytime light control unit and lighting switch. 5. Check daytime light control unit. (EL-63)
RH low beam does not operate, but RH high beam operates.	1. Bulb 2. Open in the RH high beams circuit 3. Lighting switch 4. Lighting switch circuit 5. Daytime light control unit	1. Check bulb. 2. Check harness between RH headlamp and daytime light control unit. 3. Check lighting switch. 4. Check harness between daytime light control unit and lighting switch. 5. Check daytime light control unit. (EL-63)
High beam indicator does not work.	1. Bulb 2. Open in high beam circuit	1. Check bulb in combination meter. 2. Check the following. a. Harness between headlamp LH relay and combination meter for an open circuit b. Harness between high beam indicator and lighting switch
Battery saver control does not operate properly.	1. Door switch LH or RH circuit 2. Smart entrance control unit	1. Check the following. a. Harness between smart entrance control unit and LH or RH door switch for open or short circuit b. LH or RH door switch ground circuit c. LH or RH door switch 2. Check smart entrance control unit. (EL-382)

Symptom	Possible cause	Repair order
Daytime light control does not operate properly.	1. Fuse check 2. Parking brake switch 3. Parking brake switch circuit 4. Alternator circuit 5. Daytime light control unit	1. Check the following. a. 7.5A fuse [No. 11, located in fuse block (J/B)] Verify battery positive voltage is present at terminal 3 of daytime light control unit. b. 7.5A fuse [No. 26, located in fuse block (J/B)] Verify battery positive voltage is present at terminal 2 of daytime light control unit. 2. Check parking brake switch. 3. Check harness between parking brake switch and daytime light control unit. 4. Check harness between alternator and daytime light control unit. 5. Check daytime light control unit. (EL-63)
When outside is dark, neither tail lamp nor headlamp turn on by auto light operation.	1. 7.5A fuse 2. Lighting switch "AUTO" check 3. Lighting switch circuit check 4. Lighting switch ground circuit check 5. Auto light sensor check 6. Auto light sensor circuit check	1. Check 7.5A fuse [NO. 11 located in fuse block (J/B)]. Verify battery positive voltage is present at terminal 27 of smart entrance control unit. 2. Check lighting switch (AUTO) input signal with "CONSULT-II" in "DATA MONITOR" mode. When lighting switch is in AUTO: **AUTO LIGHT SWITCH ON** When lighting switch is in OFF: **AUTO LIGHT SWITCH OFF** 3. Check harness for open or short between smart entrance control unit and lighting switch. 4. Check harness for lighting switch and ground. 5. Check auto light sensor input signal. (With CONSULT-II) See "AUTO LIGHT SENSOR" in DATA MONITOR mode. When auto light sensor in stuck by light: **More than 3V** When auto light sensor is not stuck by light: **Approx. 0.5V** (Without CONSULT-II) Check voltage between smart entrance control unit terminal 7 and ground. Refer to smart entrance control unit. (EL-382) 6. Check the following. a. Harness for open or short between smart entrance control unit terminal 8 and auto light sensor terminal 1 b. Harness for open or short between smart entrance control unit terminal 7 and auto light sensor terminal 2 c. Harness for open or short between smart entrance control unit terminal 9 and auto light sensor terminal 3
When outside is dark, tail lamp turns on but headlamp does not turn on by auto light operation.	Auto light output check	Check auto light output. (With CONSULT-II) See "HEADLAMP" and "TAIL LAMP" in ACTIVE TEST mode, and headlamp switch to AUTO position. **Headlamp and tail lamp should turn on.** (Without CONSULT-II) Check voltage between smart entrance control unit terminals 19, 21, 57, 59 and ground. Refer to smart entrance control unit. (EL-382)
When outside is dark, headlamp turns on but tail lamp does not turn on by auto light operation.	Auto light output check	Check auto light output. (With CONSULT-II) See "HEADLAMP" and "TAIL LAMP" in ACTIVE TEST mode, and headlamp switch to AUTO position. **Headlamp and tail lamp should turn on.** (Without CONSULT-II) Check voltage between smart entrance control unit terminals 19, 57 and ground. Refer to smart entrance control unit. (EL-382)

Symptom	Possible cause	Repair order
Light does not turn off when ignition key switch is turned to "OFF" (exterior lamp battery saver control is canceled).	1. 7.5A fuse 2. IGN switch circuit	1. Check 7.5A fuse [NO. 11 located in fuse block (J/B)]. Verify battery positive voltage is present at terminal 27 of smart entrance control unit. 2. Check harness for open or short between smart entrance control unit and fuse.
When outside is bright, neither tail lamps nor headlamps turn off by auto light operation.	Auto light sensor check	Check auto light sensor input signal. (With CONSULT-II) See "AUTO LIGHT SENSOR" in DATA MONITOR mode. When auto light sensor in stuck by light: **More than 3V** When auto light sensor is not stuck by light: **Approx. 0.5V** (Without CONSULT-II) Check voltage between smart entrance control unit terminal 7 (W/G) and ground. Refer to smart entrance control unit. (EL-382)

DAYTIME LIGHT CONTROL UNIT INSPECTION TABLE

NAEL0269S01

Terminal No.	Wire color	Item	Condition		Voltage (Approximate values)
1	Y/B	Alternator		When turning ignition switch to "ON"	Less than 1V
				When engine is running	12V
				When turning ignition switch to "OFF"	Less than 1V
2	Y/R	Start signal		When turning ignition switch to "ST"	Battery voltage
				When turning ignition switch to "ON" from "ST"	Less than 1V
				When turning ignition switch to "OFF"	Less than 1V
3	G	Power source		When turning ignition switch to "ON"	Battery voltage
				When turning ignition switch to "ST"	Battery voltage
				When turning ignition switch to "OFF"	Less than 1V
4	R/L	Power source		When turning ignition switch to "ON"	Battery voltage
				When turning ignition switch to "OFF"	Battery voltage

Terminal No.	Wire color	Item	Condition		Voltage (Approximate values)
5	R/W	Power source		When turning ignition switch to "ON"	Battery voltage
				When turning ignition switch to "OFF"	Battery voltage
6	R	LH hi beam		When lighting switch is turned to the 2ND position with "HI BEAM" position	12V
			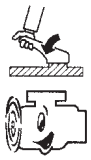	When releasing parking brake with engine running and turning lighting switch to "OFF" (daytime light operation) **CAUTION:** **Block wheels and ensure selector lever is in N or P position.**	Approx. 6V
7	L/R	RH hi beam		When lighting switch is turned to the 2ND position with "HI BEAM" position	12V
			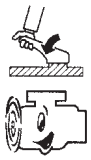	When releasing parking brake with engine running and turning lighting switch to "OFF" (daytime light operation) **CAUTION:** **Block wheels and ensure selector lever is in N or P position.**	Battery voltage
9	PU	RH hi beam (ground)		When lighting switch is turned to the 2ND position with "HI BEAM" position	Less than 1V
			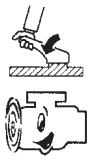	When releasing parking brake with engine running and turning lighting switch to "OFF" (daytime light operation) **CAUTION:** **Block wheels and ensure selector lever is in N or P position.**	Approx. 6V
10	GY	LH hi beam (ground)		When lighting switch is turned to the 2ND position with "HI BEAM" position	Less than 1V
				When releasing parking brake with engine running and turning lighting switch to "OFF" (daytime light operation) **CAUTION:** **Block wheels and ensure selector lever is in N or P position.**	Less than 1V
13 14	L/W W/R	Lighting switch (Hi beam)		When turning lighting switch to "HI BEAM"	Less than 1V
				When turning lighting switch to "FLASH TO PASS"	Less than 1V
16	B	Ground		—	—
17	L/G	Parking brake switch		When parking brake is released	12V
				When parking brake is set	Less than 1.5V

Bulb Replacement

NAEL0270

Refer to “HEADLAMP (FOR USA)” (EL-47).

Aiming Adjustment

NAEL0271

Refer to “HEADLAMP (FOR USA)” (EL-47).

System Description

NAEL0272

The parking, license and tail lamp operation is controlled by the lighting switch which is built into the combination switch and smart entrance control unit. The battery saver system is controlled by the smart entrance control unit.

Power is supplied at all times

- to tail lamp relay terminals 1 and 3
- through 10A fuse (No. 61, located in the fuse and fusible link box), and
- to smart entrance control unit terminal 49
- through 7.5A fuse [No. 24, located in the fuse block (J/B)].

When ignition switch is in ON or START position, power is supplied

- to smart entrance control unit terminal 27
- through 7.5A fuse [No. 11, located in the fuse block (J/B)].

When the ignition switch is in the ACC or ON position, power is supplied

- to smart entrance control unit terminal 26
- through 10A fuse [No. 10, located in the fuse block (J/B)].

Ground is supplied

- to smart entrance control unit terminals 43 and 64
- through body grounds M4, M66, M111, M147 and M157.

LIGHTING OPERATION BY LIGHTING SWITCH

NAEL0272S01

When lighting switch is in 1ST (or 2ND) position, ground is supplied

- to tail lamp relay terminal 2 from smart entrance control unit terminals 19 and 57
- through smart entrance control unit terminals 20 and 58, and
- through lighting switch and body grounds E13 and E41.

Tail lamp relay is then energized and the parking, license and tail lamps illuminate.

LIGHTING OPERATION BY AUTO LIGHT CONTROL SYSTEM

NAEL0272S02

When lighting switch is in AUTO position, ground is supplied

- to tail lamp relay terminal 2 from smart entrance control unit terminals 19 and 57
- through smart entrance control unit terminals 43 and 64, and
- to body grounds M4, M66, M111, M147 and M157.

Tail lamp relay is then energized and the parking, license and tail lamps illuminate.

EXTERIOR LAMP BATTERY SAVER CONTROL

NAEL0272S03

Except for Auto Light Control Operation

NAEL0272S0301

Parking, license and tail lamps will remain on for a short while after the ignition switch is turned from ON (or ACC) to OFF.

Continuity between terminals 19 and 20, and between terminals 57 and 58 of smart entrance control unit will be disturbed after 5 minutes, then the parking, license and tail lamps will be turned off.

When the lighting switch is turned from OFF to 2ND after parking, license and tail lamps are turned to off by the exterior lamp battery saver control, ground is supplied

- to smart entrance control unit terminals 20 and 58 from lighting switch terminal 11, and then,
- to tail lamp relay terminal 2 from smart entrance control unit terminals 19 and 57.

Then parking, license and tail lamps illuminate again.

Auto light control operation

NAEL0272S0302

While the parking, license and tail lamps are turned ON by “AUTO” operation, the exterior lamp battery saver is activated for 5 minutes when the ignition switch is turned from ON (or ACC) to OFF, and either LH or RH front door switch is opened.

The smart entrance control unit controls exterior lamp battery saver activation as follows:

- When the door switch signal changes from ON to OFF while the exterior lamp battery saver is activated, the operation is discontinued, restarts and lasts for 45 seconds, then the parking, license and tail lamps will be turned off.
- When the door switch signal changes from OFF to ON while the exterior lamp battery saver is activated, the operation is discontinued, restarts and lasts for 45 seconds, then the parking, license and tail lamps will be turned off.

- When the one of four door switch signals changes from OFF to ON while the exterior lamp battery saver is activated, the operation is discontinued, restarts and lasts for 5 minutes seconds, then the parking, license and tail lamps will be turned off.
- When all the door switch ON signals are input while the exterior lamp battery saver is activated, the operation is discontinued, restarts and lasts for 45 seconds, then the parking, license and tail lamps will be turned off.

Exterior lamp battery saver control time can be changed using "WORK SUPPORT" mode in "HEADLAMP".

When the lighting switch is turned from OFF to 2ND after parking, license and tail lamps are turned to off by the exterior lamp battery saver control, ground is supplied

- to smart entrance control unit terminals 20 and 58 from lighting switch terminal 11, and then,
- to tail lamp relays terminal 2 from smart entrance control unit terminals 19 and 57.

Then parking, license and tail lamps illuminate again.

Schematic

NAEL0273

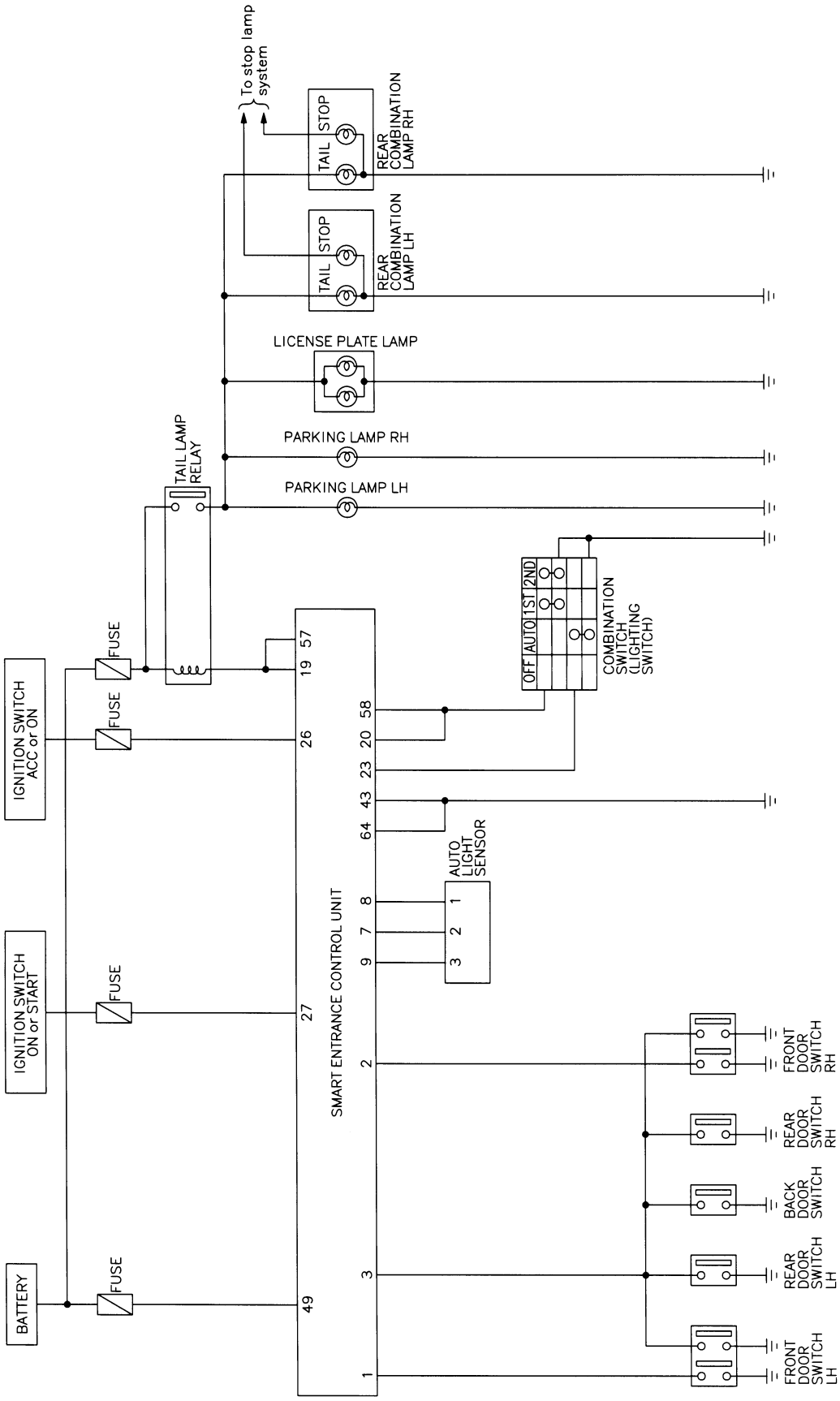

MEL515P

Wiring Diagram — TAIL/L —

NAEL0274

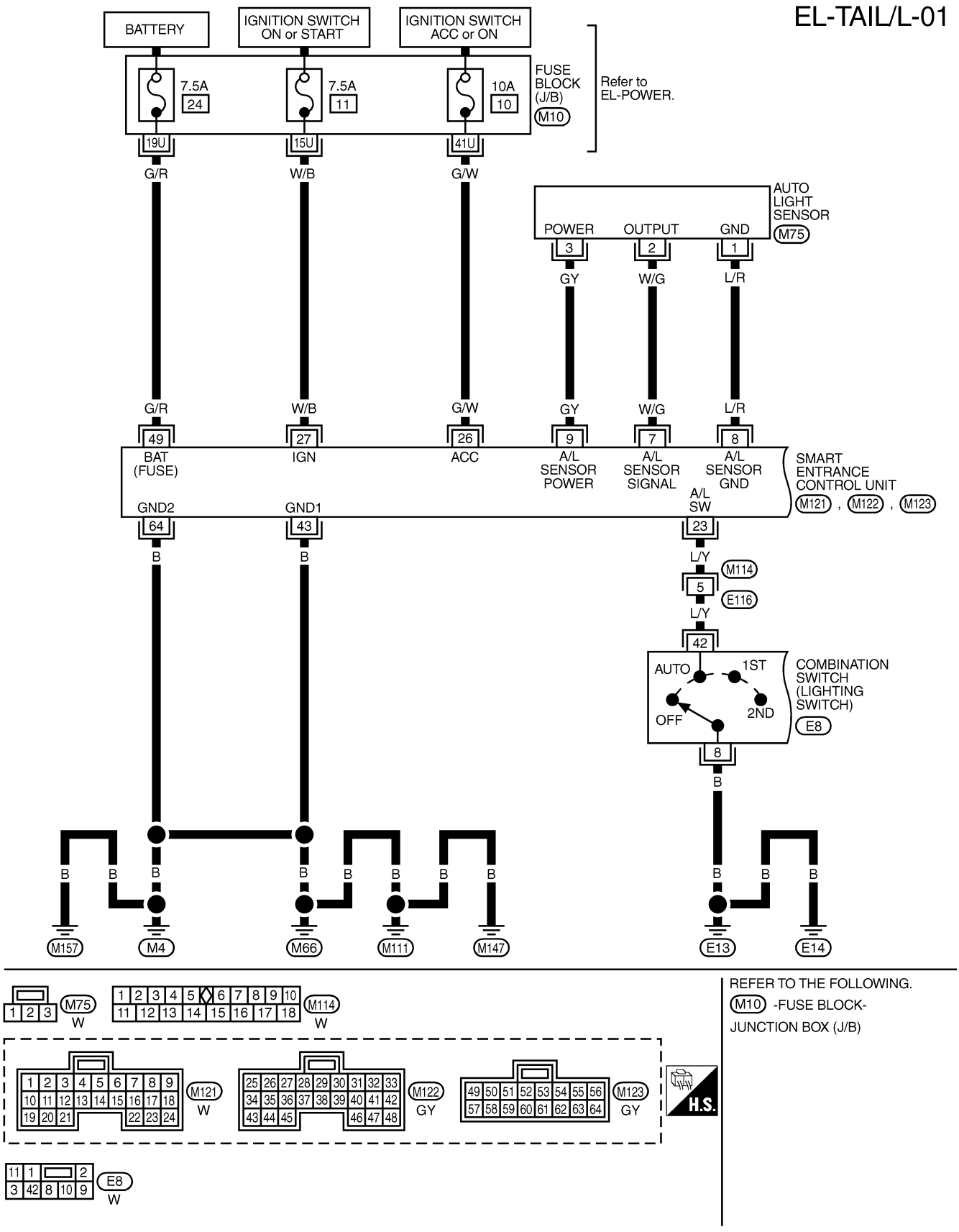

MEL957P

EL-TAIL/L-02

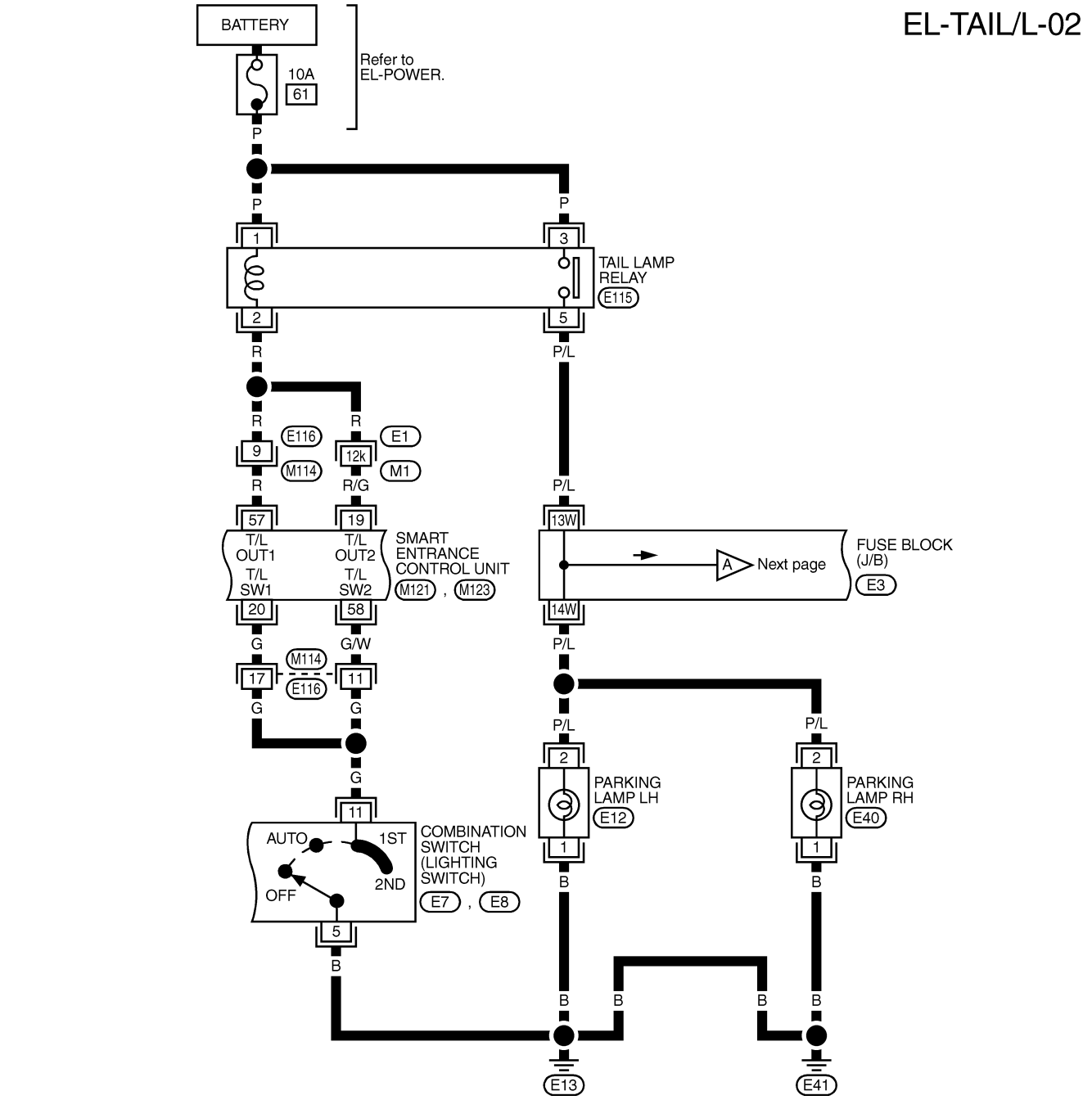

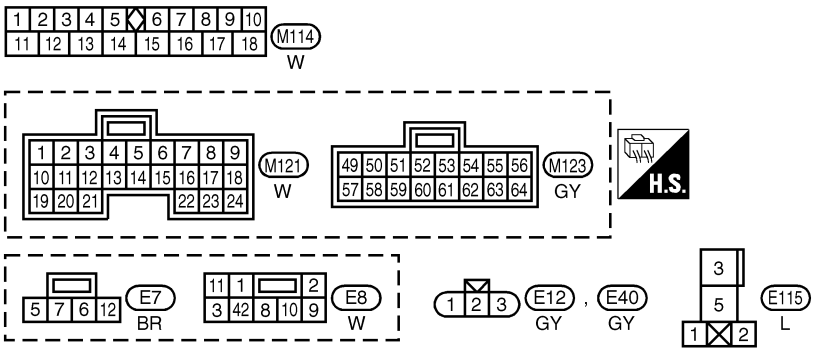

REFER TO THE FOLLOWING.
E1 -SUPER MULTIPLE JUNCTION (SMJ)
E3 -FUSE BLOCK-JUNCTION BOX (J/B)

MEL958P

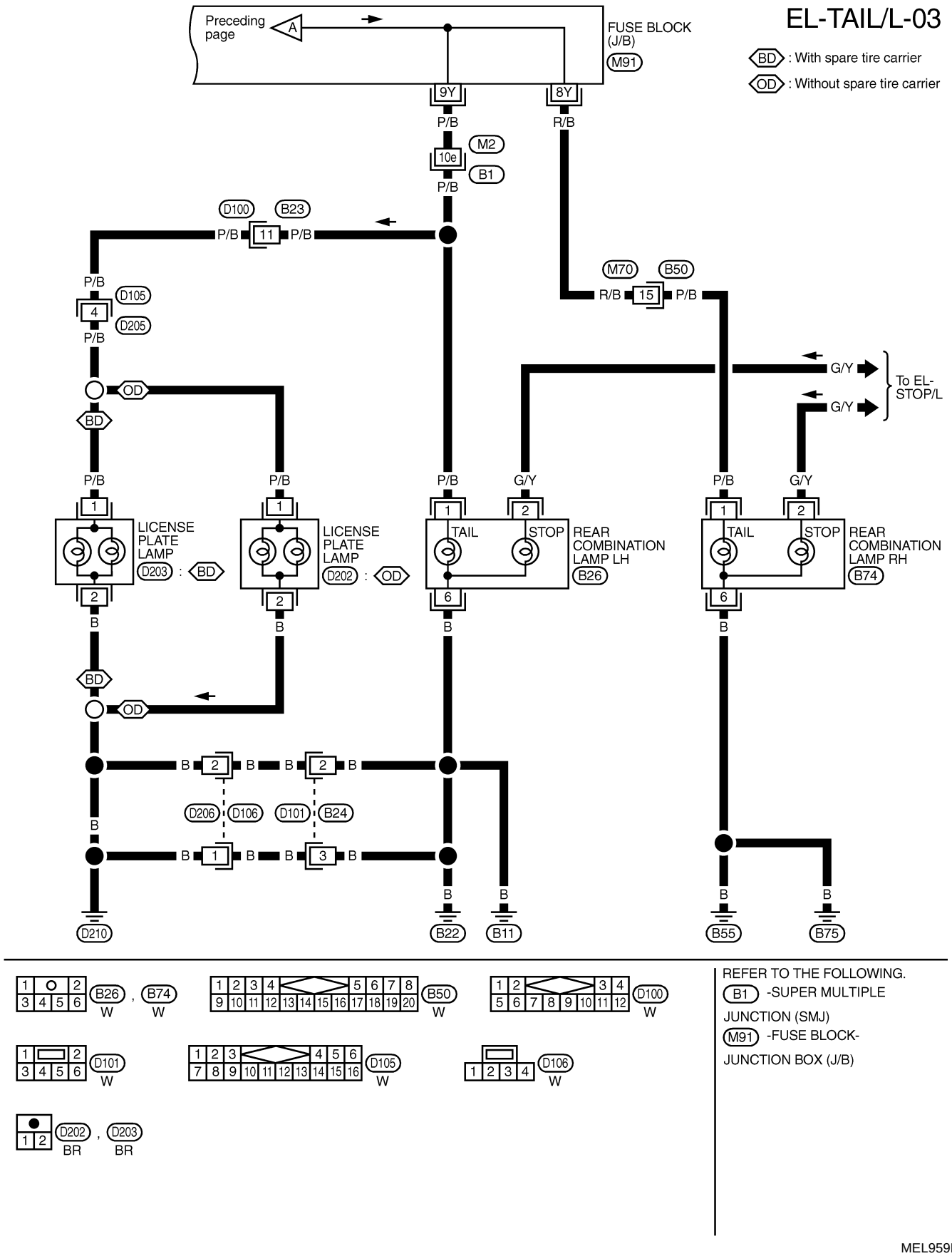
EL-TAIL/L-03
Preceding page
A
FUSE BLOCK (J/B)
M91
BD : With spare tire carrier
OD : Without spare tire carrier
9Y
8Y
P/B
R/B
M2
10e
B1
D100
B23
11
M70
B50
15
D105
4
D205
G/Y
To EL-STOP/L
1
2
LICENSE PLATE LAMP
D203
D202
TAIL
STOP
REAR COMBINATION LAMP LH
B26
REAR COMBINATION LAMP RH
B74
6
B
D206
D106
D101
B24
3
D210
B22
B11
B55
B75
B26
B74
W
B50
D100
D101
D105
D106
D202
D203
BR
REFER TO THE FOLLOWING.
B1 -SUPER MULTIPLE JUNCTION (SMJ)
M91 -FUSE BLOCK-JUNCTION BOX (J/B)
MEL959P

EL-TAIL/L-04

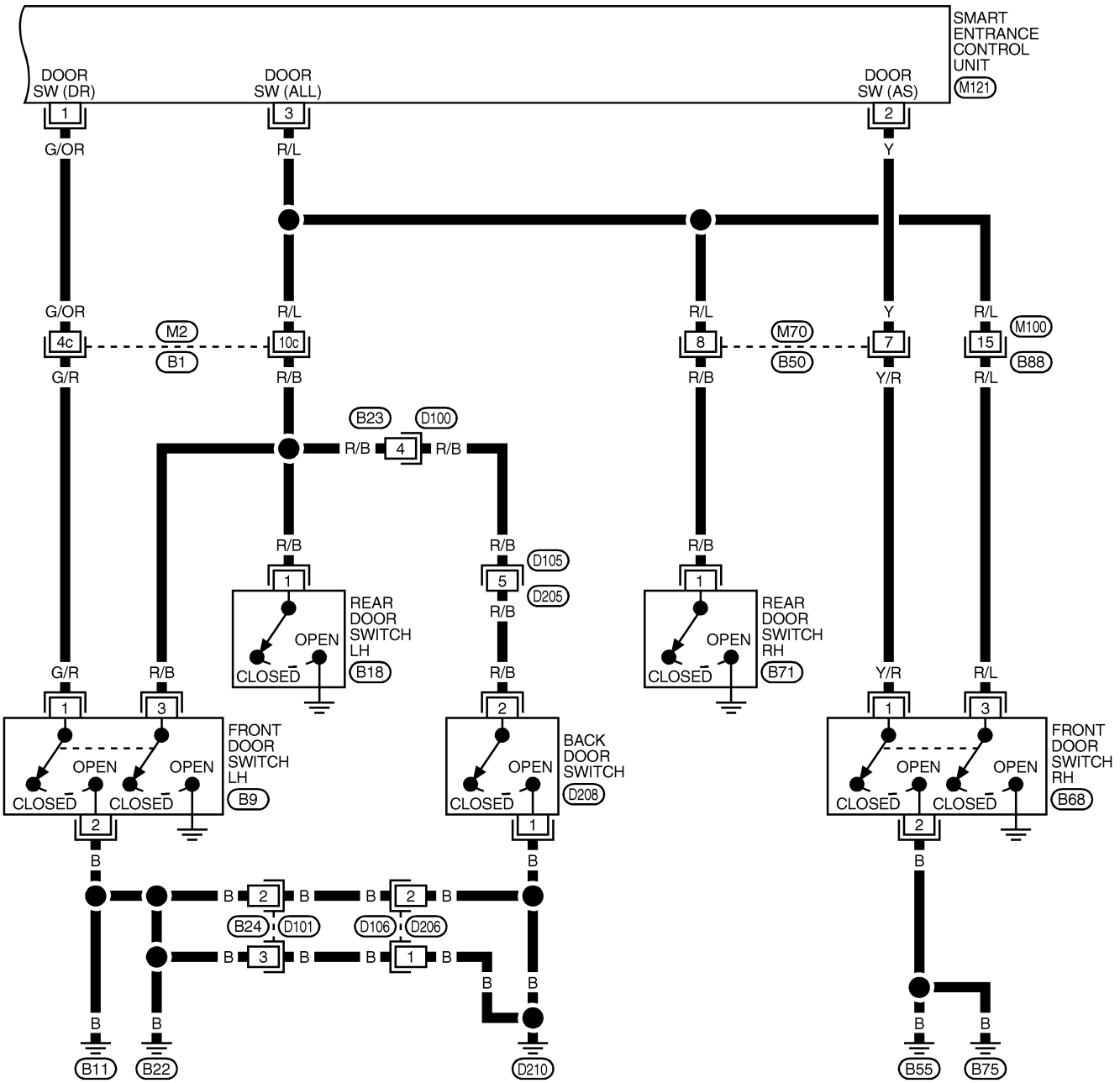

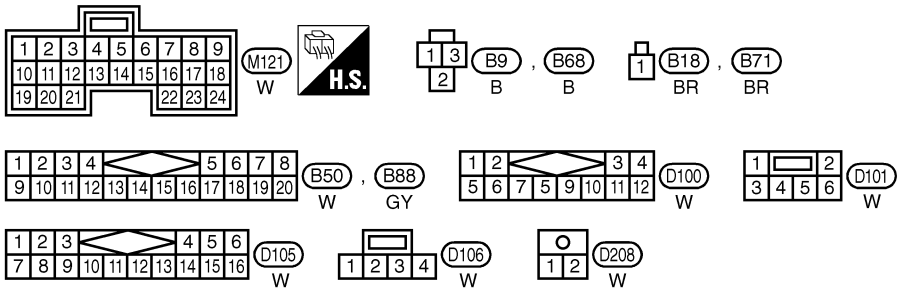

REFER TO THE FOLLOWING.
B1 -SUPER MULTIPLE JUNCTION (SMJ)

MEL960P

CONSULT-II Inspection Procedure

NAEL0275

"HEADLAMP"

NAEL0275S01

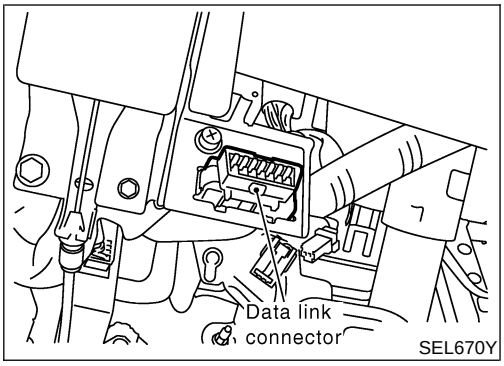

SEL670Y

1. Turn ignition switch "OFF".
2. Connect "CONSULT-II" and "CONSULT-II CONVERTER" to the data link connector.

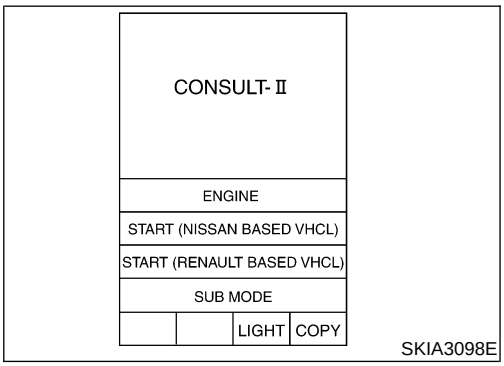

SKIA3098E

3. Turn ignition switch "ON".
4. Touch "START (NISSAN BASED VHCL)".

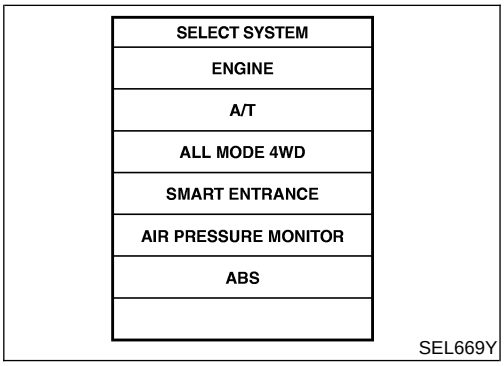

SEL669Y

5. Touch "SMART ENTRANCE".
   If "SMART ENTRANCE" is not indicated, go to GI-41, "CONSULT-II Data Link Connector (DLC) Circuit".

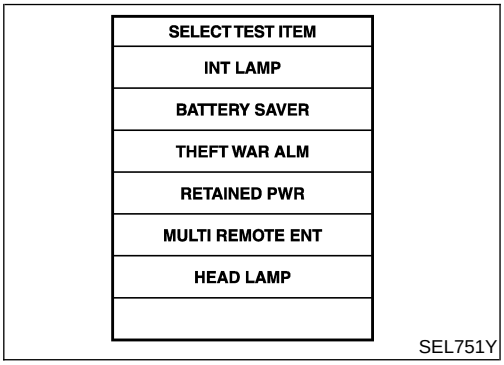

SEL751Y

6. Touch "HEADLAMP".

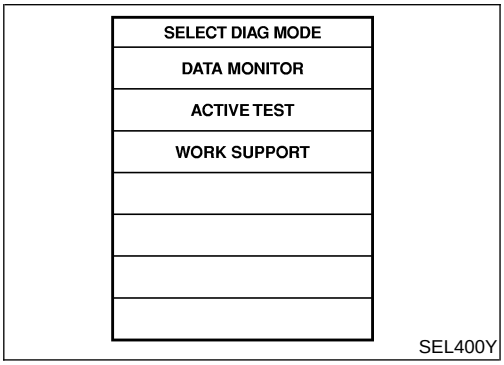

SEL400Y

7. Select diagnosis mode.
   "DATA MONITOR", "ACTIVE TEST" and "WORK SUPPORT" are available.

CONSULT-II Application Items

NAEL0454

"HEAD LAMP"

NAEL0454S01

Data Monitor

NAEL0454S0101

Monitored Item	Description
IGN ON SW	Indicates [ON/OFF] condition of ignition switch in ON position.
ACC ON SW	Indicates [ON/OFF] condition of ignition switch in ACC position.
AUTO LIGT SW	Displays status of the lighting switch as judged from the lighting switch signal. (AUTO position: ON/Other than AUTO position: OFF)
AUTO LIGT SENS	Displays "Illumination outside of the vehicle (close to 5V when light/close to 0V when dark)" as judged from the optical sensor signal.
LIGHT SW 1ST	Displays status of the lighting switch as judged from the lighting switch signal. (1ST or 2ND position: ON/Other than 1ST and 2ND position: OFF)
LIGHT SW 2ND	Displays status of the lighting switch as judged from the lighting switch signal. (2ND position: ON/Other than 2ND position: OFF)
DOOR SW-DR	Indicates [ON/OFF] condition of front door switch LH.
DOOR SW-AS	Indicates [ON/OFF] condition of door switch RH.
DOOR SW-RR	Indicates [ON/OFF] condition of rear door switch.

Active Test

NAEL0454S0102

Test Item	Description
TAIL LAMP	Tail lamp relay can be operated by on-off operation of the tail lamp.
HEAD LAMP	Headlamp relay can be operated by on-off operation of the headlamp.
AUTO LIGHT	Night time dimming signal can be operated by on-off operation.

Work Support

NAEL0454S0103

Work Item	Description
AUTO LIGHT SET	Auto light sensitivity can be changed in this mode. Sensitivity can be adjusted in four modes. ● NORMAL/MODE 2 (Sensitive)/MODE 3 (Desensitized)/MODE 4 (Insensitive)
BATTERY SAVER SET	Exterior lamp battery saver control mode can be changed in this mode. Selects exterior lamp battery saver control mode between two modes. ● MODE 1 (ON)/MODE 2 (OFF)
ILL DELAY SET	Auto light delay off timer period can be changed in this mode. Selects auto light delay off timer period among eight modes. ● MODE 1 (45 sec.)/MODE 2 (OFF)/MODE 3 (30 sec.)/MODE 4 (60 sec.)/ MODE 5 (90 sec.)/ MODE 6 (120 sec.)/MODE 7 (150 sec.)/MODE 8 (180 sec.)

Trouble Diagnoses

NAEL0277

Symptom	Possible cause	Repair order
No lamps operate (including head-lamps).	1. 7.5A fuse 2. Lighting switch 3. Smart entrance control unit	1. Check 7.5A fuse [No. 24, lacated in fuse block (J/B)]. Verify battery positive voltage is present at terminal 49 of smart entrance control unit. 2. Check lighting switch. 3. Check smart entrance control unit. (EL-382)

Symptom	Possible cause	Repair order
No parking, license and tail lamps operate, but headlamps do operate.	1. 10A fuse 2. Tail lamp relay 3. Tail lamp relay circuit 4. Lighting switch 5. Lighting switch circuit 6. Smart entrance control unit	1. Check 10A fuse (No. 61, located in fusible and fuse block). Verify battery positive voltage is present at terminals 1 and 3 of tail lamp relay. 2. Check tail lamp relay. 3. Check the following. a. Harness between smart entrance control unit terminals 19 and 57 and tail lamp relay terminal 2 b. Harness between tail lamp relay terminal 5 and fuse block 4. Check lighting switch. 5. Check the following. a. Harness between lighting switch terminal 11 and smart entrance control unit terminals 20 and 58 b. Harness between lighting switch terminal 5 and ground 6. Check smart entrance control unit. (EL-382)
Exterior lamp battery saver control does not operate properly.	1. Driver, passenger or rear door switch circuit 2. Smart entrance control unit	1. Check the following. a. Harness between smart entrance control unit and driver, passenger or rear door switch for open or short circuit b. Driver passenger or rear door switch ground circuit c. Driver, passenger or rear door switch 2. Check smart entrance control unit. (EL-382)
Auto light malfunctioning	—	Refer to trouble diagnosis in "HEADLAMP". (EL-44)

Wiring Diagram — STOP/L —

NAEL0278

EL-STOP/L-01

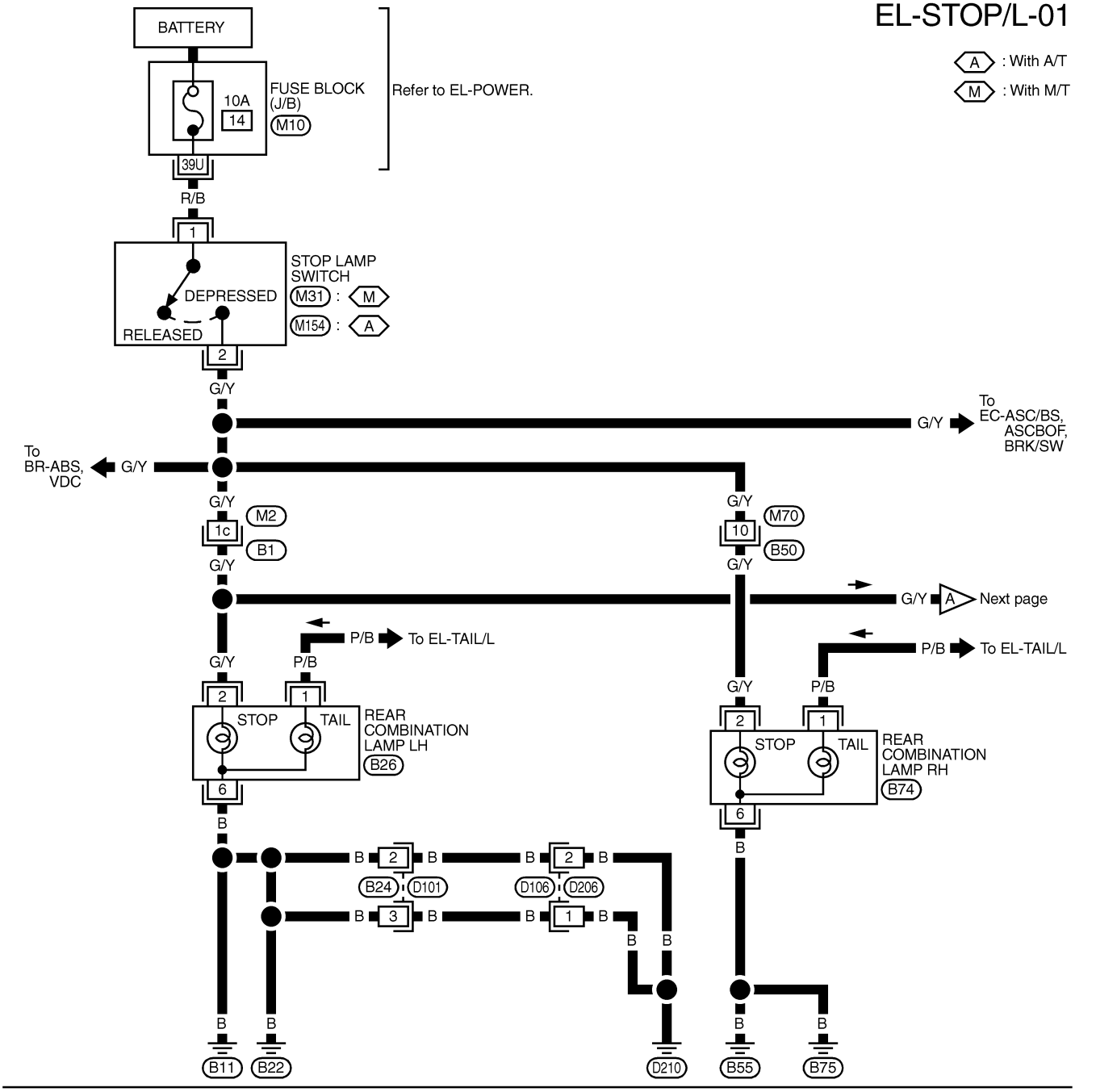

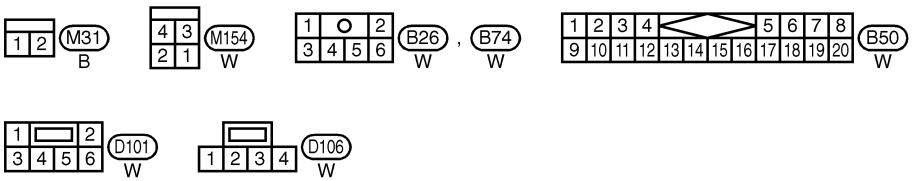

REFER TO THE FOLLOWING.

B1 -SUPER MULTIPLE JUNCTION (SMJ)

M10 -FUSE BLOCK-JUNCTION BOX (J/B)

MEL961P

EL-STOP/L-02

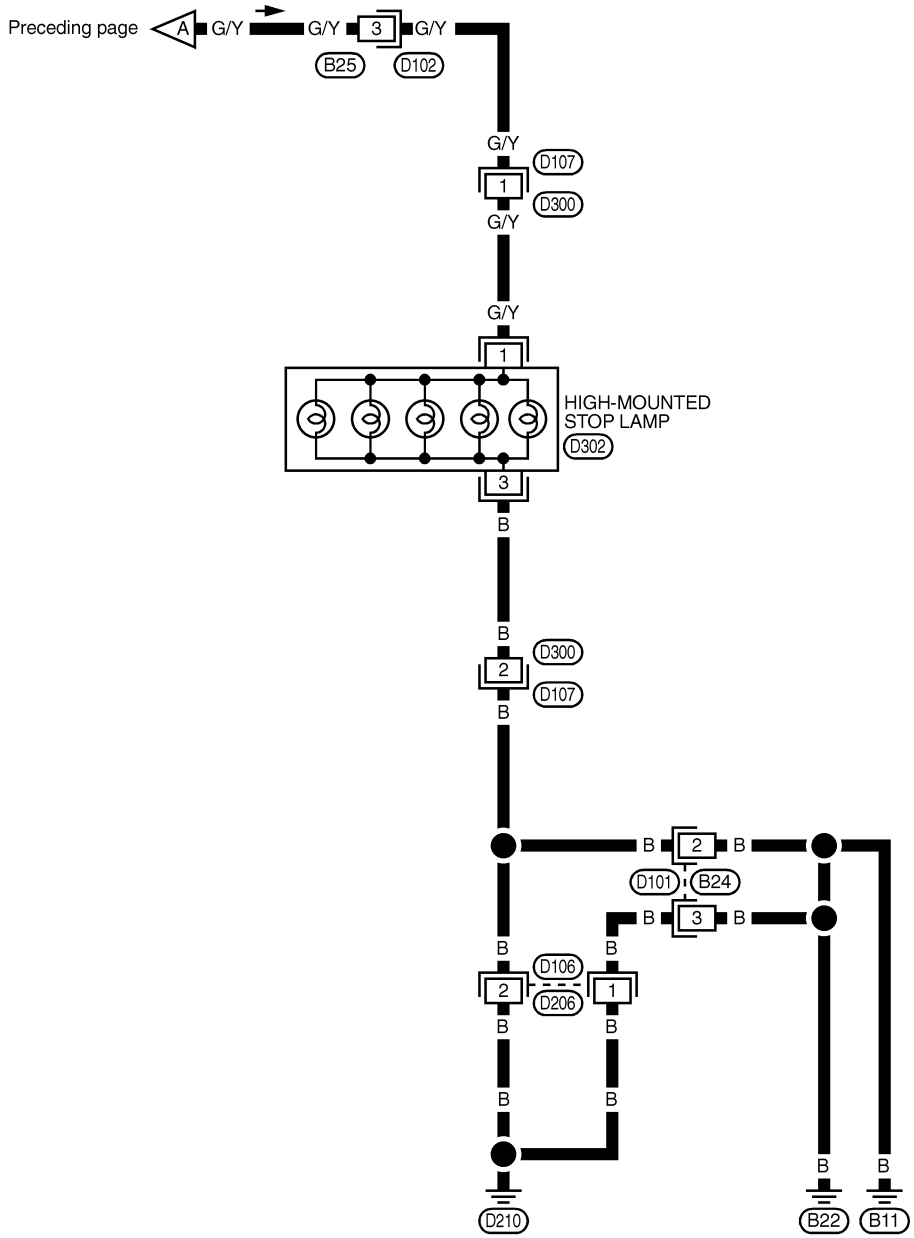

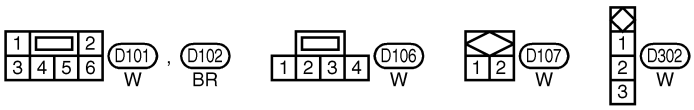

MEL262M

Wiring Diagram — BACK/L —

NAEL0279

EL-BACK/L-01

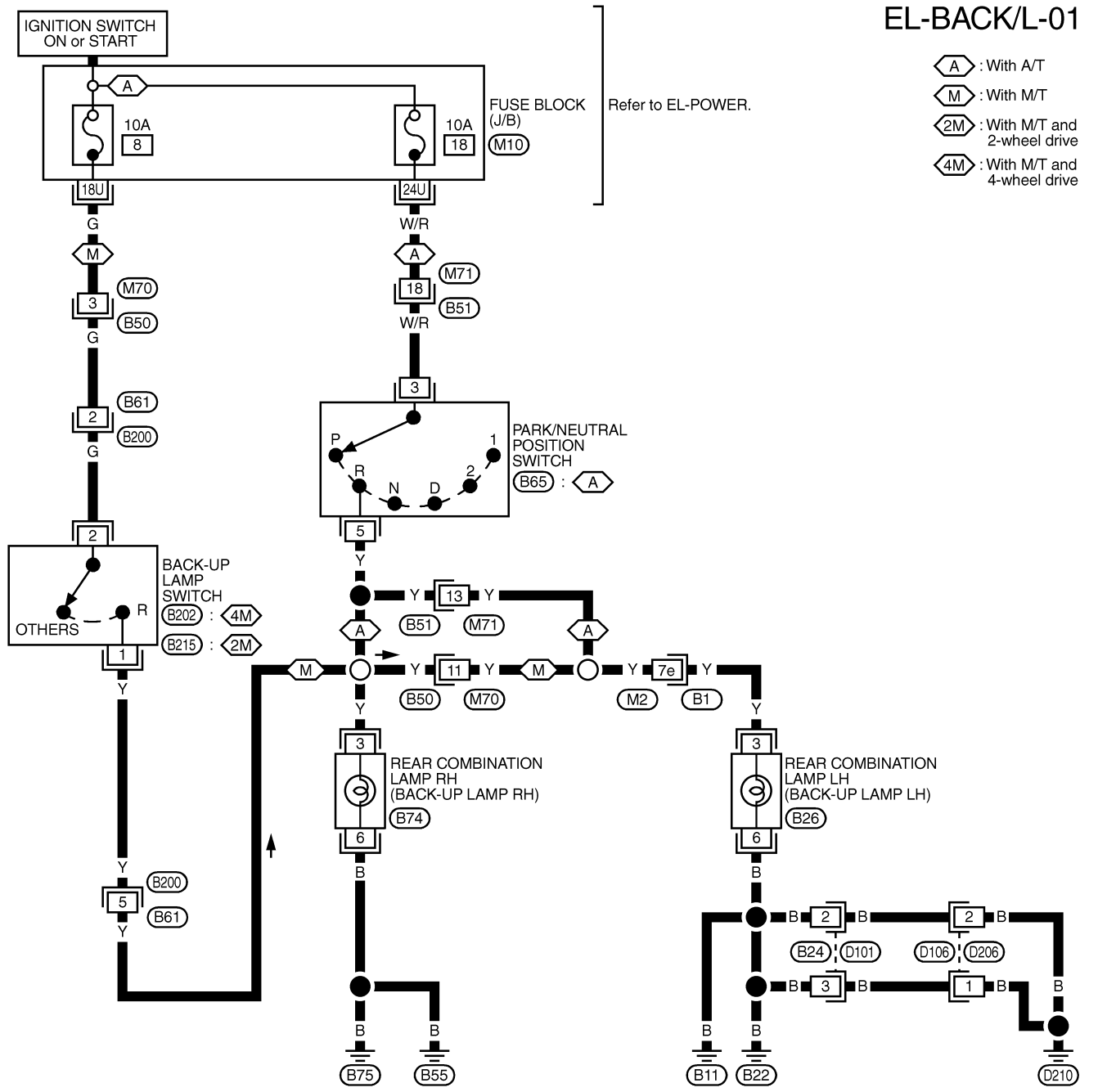

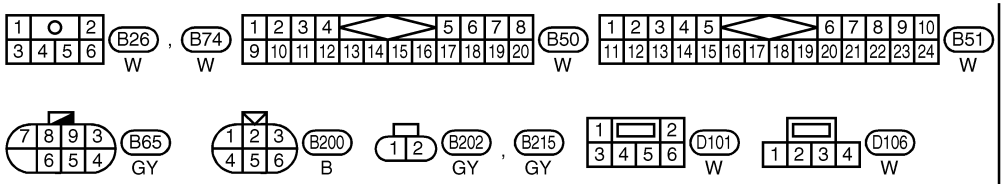

REFER TO THE FOLLOWING.
B1 -SUPER MULTIPLE JUNCTION (SMJ)
M10 -FUSE BLOCK-JUNCTION BOX (J/B)

MEL085Q

System Description

NAEL0280

OUTLINE

NAEL0280S01

Power is supplied at all times
- to headlamp RH relay terminals 1 and 3
- through 15A fuse (No. 59, located in the fuse and fusible link box), and
- to smart entrance control unit terminal 49
- through 7.5A fuse [No. 24, located in the fuse block (J/B)], and
- to front fog lamp relay terminal 3
- through 15A fuse (No. 53, located in the fuse and fusible link box).

When ignition switch is in ON or START position, power is supplied
- to smart entrance control unit terminal 27
- through 7.5A fuse [No. 11, located in the fuse block (J/B)].

When the ignition switch is in the ACC or ON position, power is supplied
- to smart entrance control unit terminal 26
- through 10A fuse [No. 10, located in the fuse block (J/B)].

Ground is supplied
- to smart entrance control unit terminals 43 and 64
- through body grounds M4, M66, M111, M147 and M157.

When lighting switch is in 2ND position, ground is supplied
- to headlamp RH relay terminal 2 from smart entrance control unit terminals 21 and 59.
- through smart entrance control unit terminals 22 and 60,
- through lighting switch terminal 12, and
- through body grounds E13 and E41.

Headlamp RH relay is then energized.

FOG LAMP OPERATION

NAEL0280S02

The front fog lamp switch is built into the combination switch. The lighting switch must be in the 2ND position and LOW (“B”) position for front fog lamp operation.
With the front fog lamp switch in the ON position, ground is supplied
- to front fog lamp relay terminal 1
- through the front fog lamp switch, lighting switch and body grounds E13 and E41.

The front fog lamp relay is energized and power is supplied
- from front fog lamp relay terminal 5
- to terminal 1 of each front fog lamp.

Ground is supplied to terminal 2 of each front fog lamp through body grounds E13 and E41.
With power and ground supplied, the front fog lamps illuminate.

EXTERIOR LAMP BATTERY SAVER CONTROL

NAEL0280S03

Front fog lamps will remain on for a short while after the ignition switch is turned from ON (or ACC) to OFF.
Continuity between terminals 21 and 22, and between terminals 59 and 60 of smart entrance control unit will be disturbed after 5 minutes, then the front fog lamps will be turned off.
When the lighting switch is turned from OFF to 2ND after front fog lamps are turned off by the battery saver control, ground is supplied
- to smart entrance control unit terminals 20 and 58 from lighting switch terminal 11, and then
- to headlamp RH relay terminal 2 from smart entrance control unit terminal 21 and 59
- through smart entrance control unit terminal 22 and 60 from lighting switch terminal 12.

Then the front fog lamps illuminate again.

NOTE:
For Trouble Diagnoses for battery saver control, refer to “HEADLAMP (FOR USA)”, EL-44.

Wiring Diagram — F/FOG —

NAEL0281

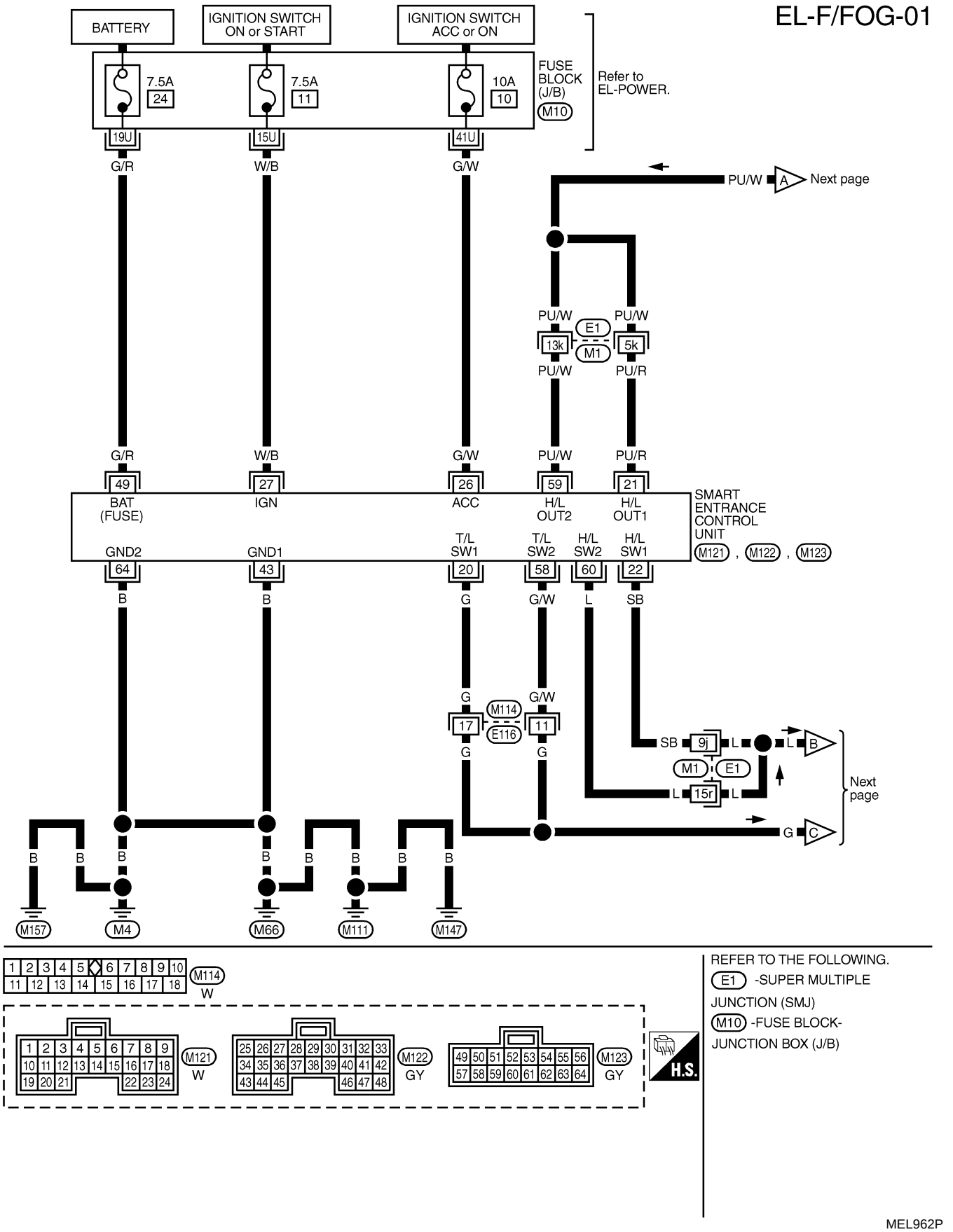

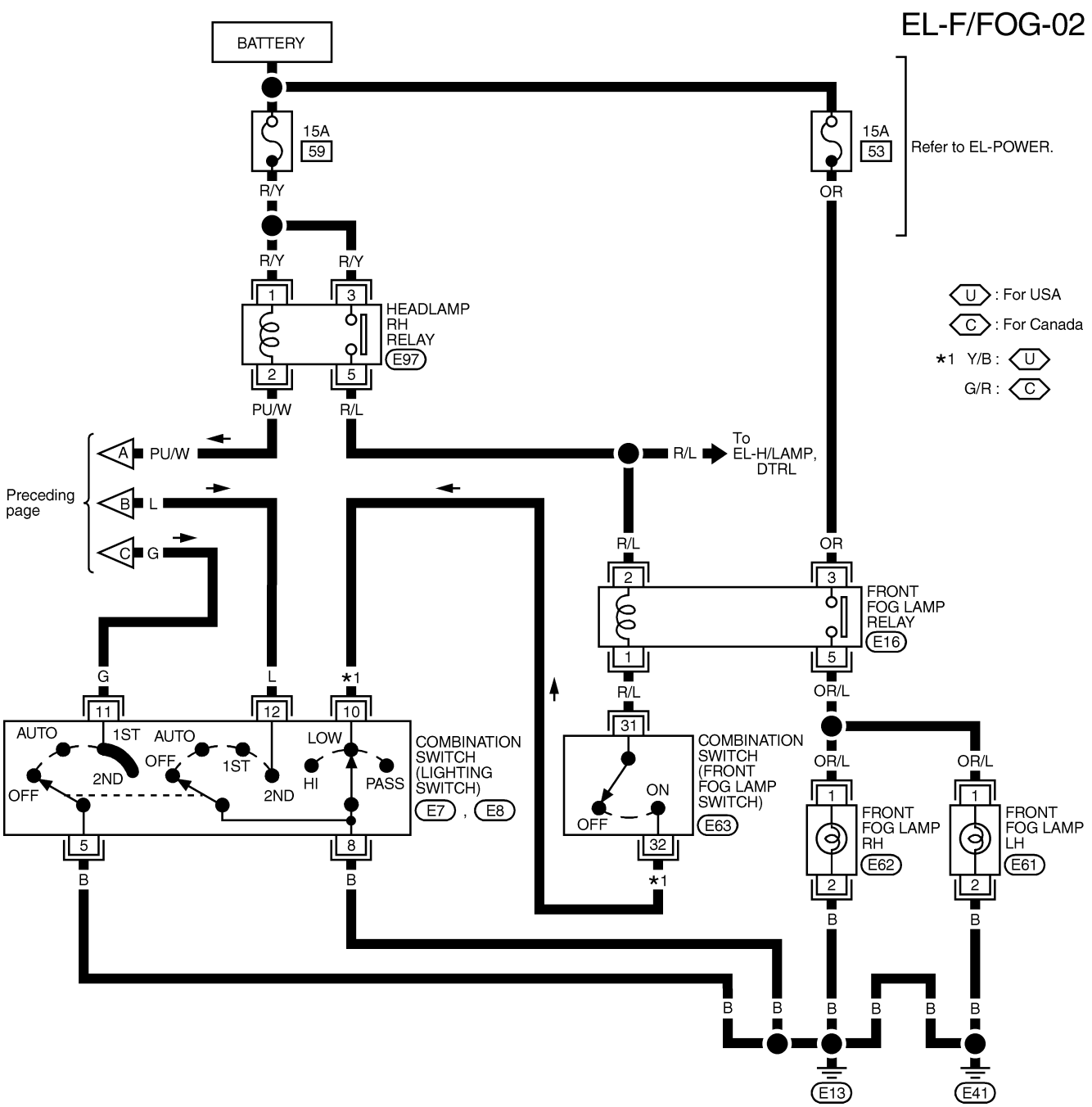
EL-F/FOG-02
BATTERY
15A
59
R/Y
15A
53
OR
Refer to EL-POWER.
R/Y
R/Y
HEADLAMP
RH
RELAY
E97
PU/W
R/L
U : For USA
C : For Canada
*1 Y/B : U
G/R : C
A PU/W
B L
C G
Preceding page
R/L
To EL-H/LAMP, DTRL
R/L
OR
FRONT
FOG LAMP
RELAY
E16
G
L
*1
R/L
OR/L
AUTO
1ST
2ND
OFF
AUTO
OFF
1ST
2ND
LOW
HI
PASS
COMBINATION SWITCH (LIGHTING SWITCH)
E7 , E8
COMBINATION SWITCH (FRONT FOG LAMP SWITCH)
E63
OFF
ON
OR/L
OR/L
FRONT FOG LAMP RH
E62
FRONT FOG LAMP LH
E61
B
B
*1
B
B
B
B
B
B
E13
E41

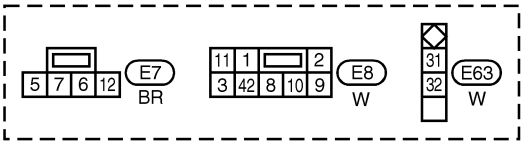
E7
BR
E8
W
E63
W

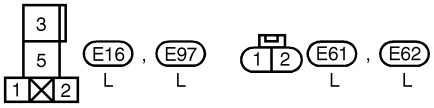
E16 , E97
L L
E61 , E62
L L

MEL963P

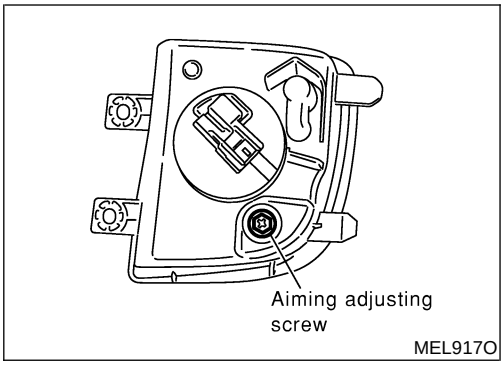

Aiming Adjustment

NAEL0282

Before performing aiming adjustment, make sure of the following.

1) Keep all tires inflated to correct pressure.
2) Place vehicle on level ground.
3) See that vehicle is unloaded (except for full levels of coolant, engine oil and fuel, and spare tire, jack, and tools). Have the driver or equivalent weight placed in driver's seat.

Adjust aiming in the vertical direction by turning the adjusting screw.

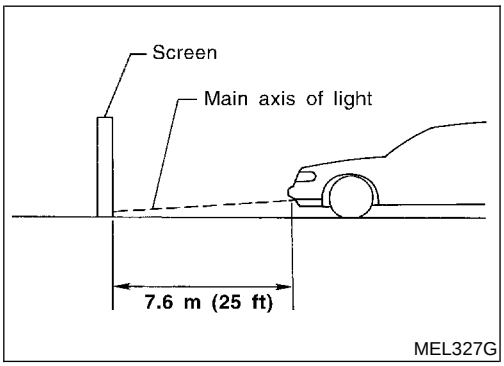

1. Set the distance between the screen and the center of the fog lamp lens as shown at left.
2. Turn front fog lamps ON.

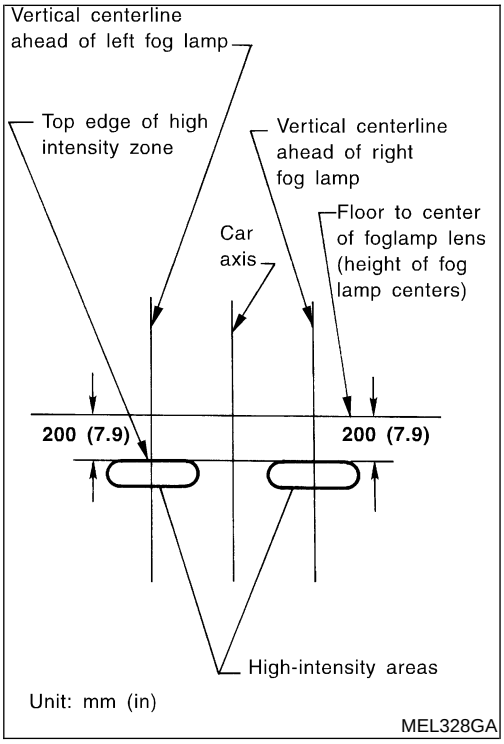

3. Adjust front fog lamps so that the top edge of the high intensity zone is 200 mm (7.9 in) below the height of the fog lamp centers as shown at left.

- When performing adjustment, if necessary, cover the headlamps and opposite fog lamp.

System Description

NAEL0283

TURN SIGNAL OPERATION

NAEL0283S01

With the hazard switch in the OFF position and the ignition switch in the ON or START position, power is supplied

- through 7.5A fuse [No. 12, located in the fuse block (J/B)]
- to hazard switch terminal 2
- through terminal 1 of the hazard switch
- to combination flasher unit terminal 1
- through terminal 3 of the combination flasher unit
- to turn signal switch terminal 1.

Ground is supplied to combination flasher unit terminal 2 through body grounds M4, M66, M111, M147 and M157.

LH Turn

NAEL0283S0101

When the turn signal switch is moved to the LH position, power is supplied from turn signal switch terminal 3 to

- front turn signal lamp LH terminal 3
- combination meter terminal 25
- rear combination lamp LH terminal 5.

Ground is supplied to the front turn signal lamp LH terminal 1 through body grounds E13 and E41.
Ground is supplied to the rear combination lamp LH terminal 6 through body grounds B11, B22 and D210.
Ground is supplied to combination meter terminal 30 through body grounds M4, M66, M111, M147 and M157.
With power and ground supplied, the combination flasher unit controls the flashing of the LH turn signal lamps.

RH Turn

NAEL0283S0102

When the turn signal switch is moved to the RH position, power is supplied from turn signal switch terminal 2 to

- front turn signal lamp RH terminal 3
- combination meter terminal 29
- rear combination lamp RH terminal 5.

Ground is supplied to the front turn signal lamp RH terminal 1 through body grounds E13 and E41.
Ground is supplied to the rear combination lamp RH terminal 6 through body grounds B55 and B75.
Ground is supplied to combination meter terminal 30 through body grounds M4, M66, M111, M147 and M157.
With power and ground supplied, the combination flasher unit controls the flashing of the RH turn signal lamps.

HAZARD LAMP OPERATION

NAEL0283S02

Power is supplied at all times to hazard switch terminal 3 through:

- 15A fuse [No. 20, located in the fuse block (J/B)].

With the hazard switch in the ON position, power is supplied

- through terminal 1 of the hazard switch
- to combination flasher unit terminal 1
- through terminal 3 of the combination flasher unit
- to hazard switch terminal 4.

Ground is supplied to combination flasher unit terminal 2 through body grounds M4, M66, M111, M147 and M157.
Power is supplied through terminal 5 of the hazard switch to

- front turn signal lamp LH terminal 3
- combination meter terminal 25
- rear combination lamp LH terminal 5.

Power is supplied through terminal 6 of the hazard switch to

- front turn signal lamp RH terminal 3
- combination meter terminal 29
- rear combination lamp RH terminal 5.

Ground is supplied to terminal 1 of each front turn signal lamp through body grounds E13 and E41.
Ground is supplied to terminal 6 of the rear combination lamp LH through body grounds B11, B22 and D210.
Ground is supplied to terminal 6 of the rear combination lamp RH through body grounds B55 and B75.
Ground is supplied to combination meter terminal 30 through body grounds M4, M66, M111, M147 and M157.
With power and ground supplied, the combination flasher unit controls the flashing of the hazard warning lamps.

REMOTE KEYLESS ENTRY SYSTEM OPERATION

NAEL0283S03

Power is supplied at all times

- to smart entrance control unit terminal 49
- through 7.5A fuse [No. 24, located in the fuse block (J/B)].

Ground is supplied

- to smart entrance control unit terminal 43 and 64
- through body ground M4, M66, M111, M147 and M157.

Refer to "REMOTE KEYLESS ENTRY SYSTEM", EL-314.
When smart entrance control unit receives LOCK or UNLOCK signal from keyfob with all doors closed, power is supplied

- through terminal 47 of smart entrance control unit
- to front turn signal lamp LH terminal 3
- to combination meter terminal 25
- to rear combination lamp LH terminal 5, and
- through terminal 48 of smart entrance control unit
- to front turn signal lamp RH terminal 3
- to combination meter terminal 29
- to rear combination lamp RH terminal 5.

Ground is supplied to terminal 1 of each front turn signal lamp through body grounds E13 and E41.
Ground is supplied to terminal 6 of the rear combination lamp LH through body grounds B11, B22 and D210.
Ground is supplied to terminal 6 of the rear combination lamp RH through body grounds B55 and B75.
Ground is supplied to combination meter terminal 30 through body grounds M4, M66, M111, M147 and M157.
With power and ground supplied, the smart entrance control unit controls the flashing of the hazard warning lamps.

Wiring Diagram — TURN —

NAEL0284

EL-TURN-01

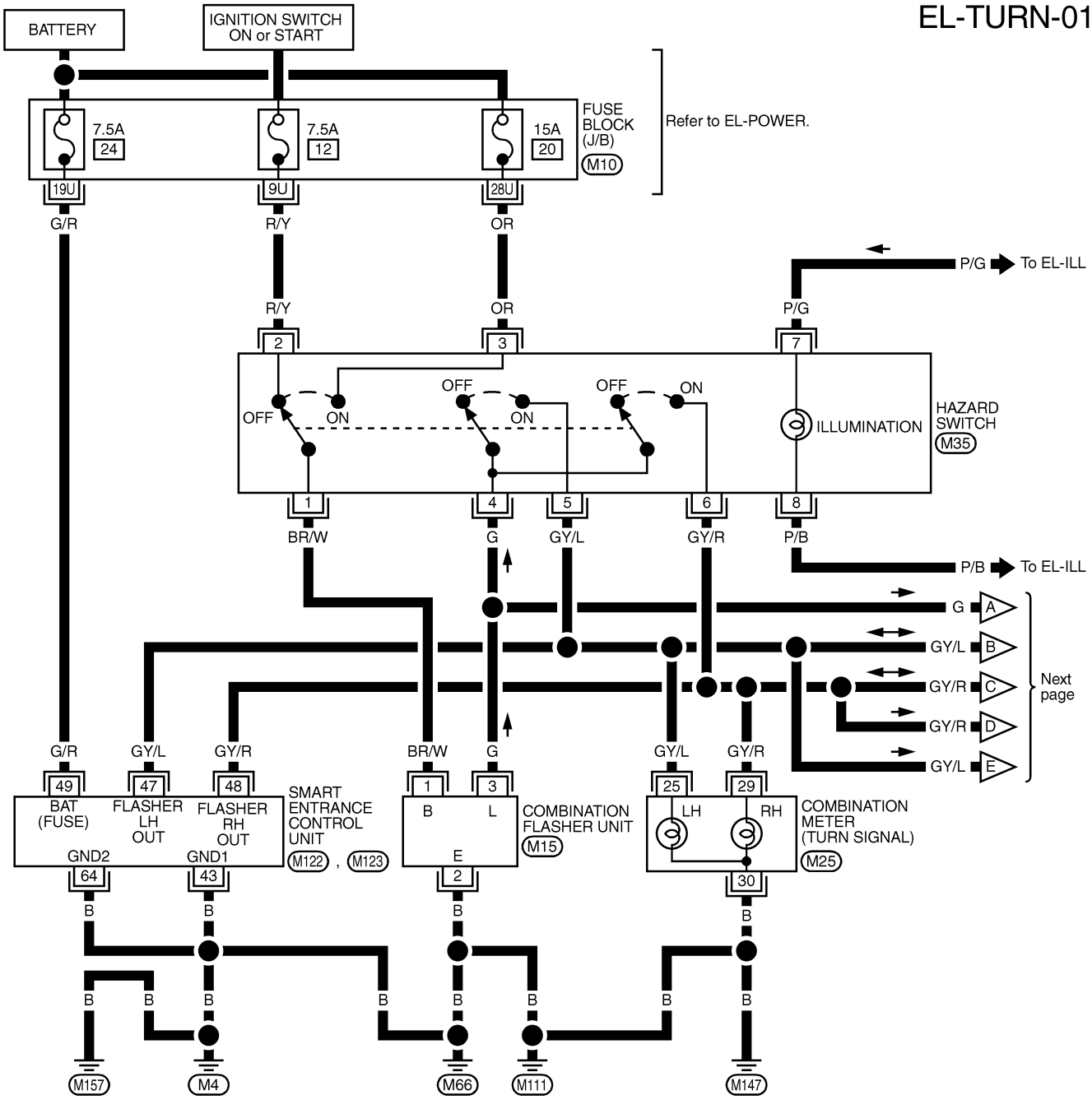

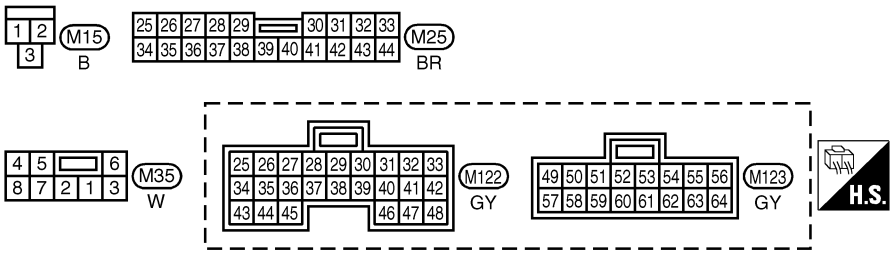

REFER TO THE FOLLOWING.
M10 -FUSE BLOCK-JUNCTION BOX (J/B)

MEL964P

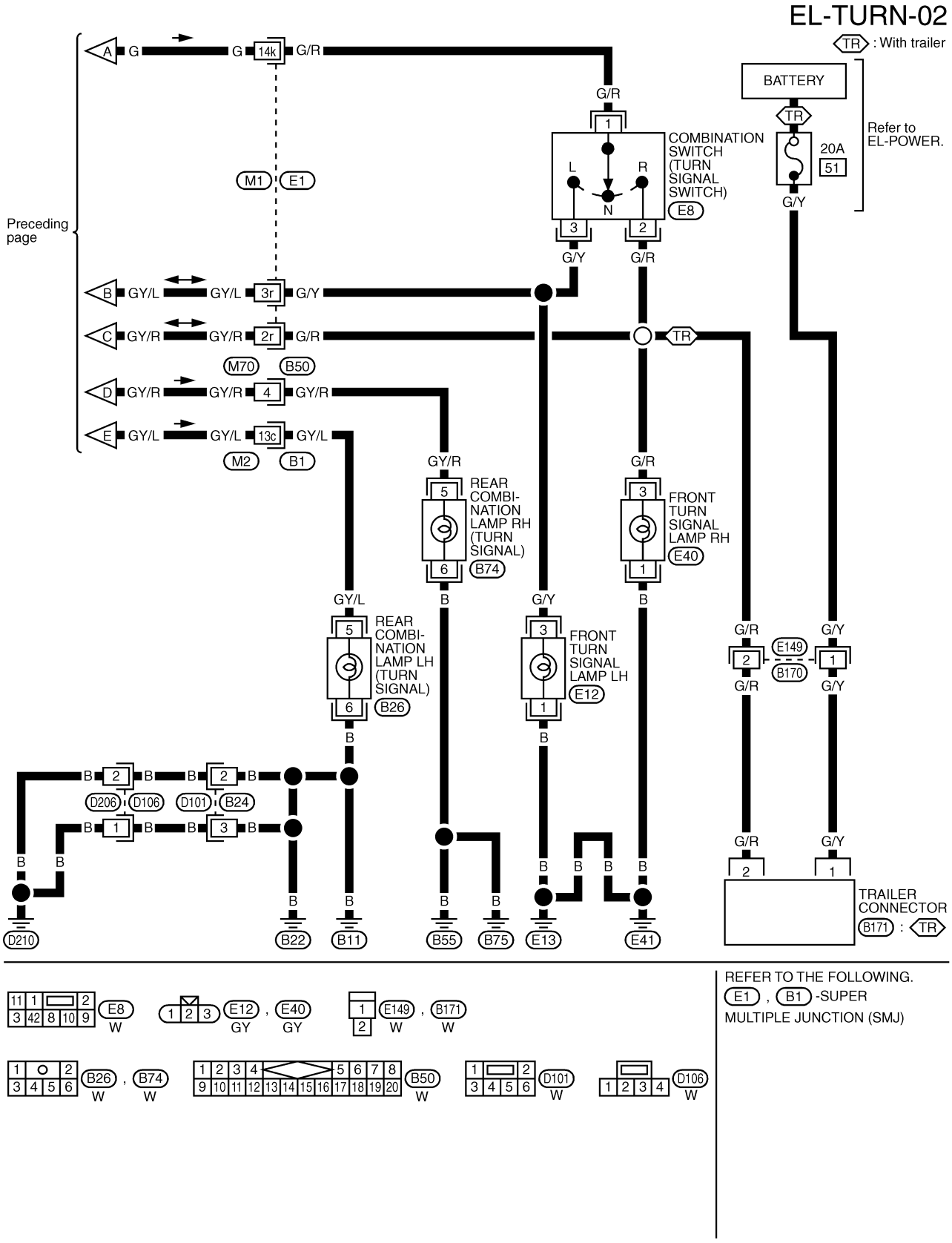
EL-TURN-02
TR : With trailer
BATTERY
Refer to EL-POWER.
20A
51
COMBINATION SWITCH (TURN SIGNAL SWITCH)
E8
Preceding page
M1
E1
M70
B50
M2
B1
REAR COMBI-NATION LAMP RH (TURN SIGNAL)
B74
FRONT TURN SIGNAL LAMP RH
E40
REAR COMBI-NATION LAMP LH (TURN SIGNAL)
B26
FRONT TURN SIGNAL LAMP LH
E12
E149
B170
D206
D106
D101
B24
TRAILER CONNECTOR
B171
D210
B22
B11
B55
B75
E13
E41
E8
E12
E40
E149
B171
B26
B74
B50
D101
D106
REFER TO THE FOLLOWING.
E1 , B1 -SUPER MULTIPLE JUNCTION (SMJ)
MEL125S

Trouble Diagnoses

NAEL0285

Symptom	Possible cause	Repair order
Turn signal and hazard warning lamps do not operate.	1. Hazard switch 2. Combination flasher unit 3. Open in combination flasher unit circuit	1. Check hazard switch. 2. Refer to combination flasher unit check. 3. Check wiring to combination flasher unit for open circuit.
Turn signal lamps do not operate but hazard warning lamps operate.	1. 7.5A fuse 2. Hazard switch 3. Combination switch (turn signal) 4. Open in combination switch (turn signal) circuit	1. Check 7.5A fuse [No. 12, located in fuse block (J/B)]. Turn ignition switch ON and verify battery positive voltage is present at terminal 2 of hazard switch. 2. Check hazard switch. 3. Check combination switch (turn signal). 4. Check the wire between combination flasher unit terminal 3 and combination switch (turn signal) terminal 1 for open circuit.
Hazard warning lamps do not operate but turn signal lamps operate.	1. 15A fuse 2. Hazard switch 3. Open in hazard switch circuit	1. Check 15A fuse [No. 20, located in fuse block (J/B)]. Verify battery positive voltage is present at terminal 3 of hazard switch. 2. Check hazard switch. 3. Check the wire between combination flasher unit terminal 3 and hazard switch terminal 4 for open circuit.
Front turn signal lamp LH or RH does not operate.	1. Bulb 2. Grounds E13 and E41 3. Open in front turn signal lamp circuit	1. Check bulb. 2. Check grounds E13 and E41. 3. Check harness between front turn signal lamp and combination switch.
Rear combination lamp LH does not operate.	1. Bulb 2. Grounds B11, B22 and D210 3. Open in rear combination lamp LH circuit	1. Check bulb. 2. Check grounds B11, B22 and D210. 3. Check harness between rear combination lamp LH and hazard switch.
Rear combination lamp RH does not operate.	1. Bulb 2. Grounds B55 and B75 3. Open in rear combination lamp RH circuit	1. Check bulb. 2. Check grounds B55 and B75. 3. Check harness between rear combination lamp RH and hazard switch.
LH and RH turn indicators do not operate.	Grounds M4, M66, M111, M147 and M157	Check grounds M4, M66, M111, M147 and M157.
LH or RH turn indicator does not operate.	1. Bulb 2. Open in turn indicator circuit	1. Check bulb in combination meter. 2. Check harness between combination meter and hazard switch.

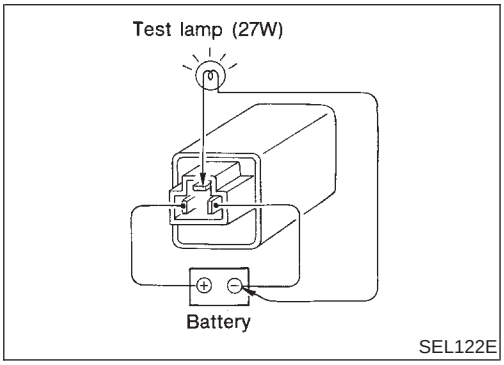

Electrical Components Inspection

NAEL0286

COMBINATION FLASHER UNIT CHECK

NAEL0286S01

- Before checking, ensure that bulbs meet specifications.
- Connect a battery and test lamp to the combination flasher unit, as shown. Combination flasher unit is properly functioning if it blinks when power is supplied to the circuit.

System Description

NAEL0287

The illumination lamp operation is controlled by the lighting switch which is built into the combination switch and smart entrance control unit. The battery saver system is controlled by smart entrance control unit.
Power is supplied at all times

- to tail lamp relay terminals 1 and 3
- through 10A fuse (No. 61, located in the fuse and fusible link box), and
- to smart entrance control unit terminal 49
- through 7.5A fuse [No. 24, located in the fuse block (J/B)].

When ignition switch is in ON or START position, power is supplied

- to smart entrance control unit terminal 27
- through 7.5A fuse [No. 11, located in the fuse block (J/B)].

When the ignition switch is in ACC or ON position, power is supplied

- to smart entrance control unit terminal 26
- through 10A fuse [No. 10, located in the fuse block (J/B)].

Ground is supplied

- to smart entrance control unit terminals 43 and 64
- through body grounds M4, M66, M111, M147 and M157.

LIGHTING OPERATION BY LIGHTING SWITCH

NAEL0287S01

When lighting switch is 1ST (or 2ND) position, ground is supplied

- to tail lamp relay terminal 2 from smart entrance control unit terminals 19 and 57
- through smart entrance control unit terminals 20 and 58, and
- through lighting switch and body grounds E13 and E41.

Tail lamp relay is then energized and illumination lamps illuminate.
The lighting switch must be in the 1ST or 2ND position for illumination.
The illumination control switch that controls the amount of current to the illumination system. As the amount of current increases, the illumination becomes brighter.
The ground for all of the components except for grove box lamp, ashtray and compass and thermometer are controlled through terminals 2 and 3 of the illumination control switch and body grounds M4, M66, M111, M145 and M157.

LIGHTING OPERATION BY AUTO LIGHT CONTROL SYSTEM

NAEL0287S02

When auto light operation is operated, ground is supplied

- to tail lamp relay terminal 2 from smart entrance control unit terminals 19 and 57
- through smart entrance control unit terminals 43 and 64, and
- to body grounds M4, M66, M111, M147 and M157.

Tail lamp relay is then energized and the illumination lamps illuminate.
The illumination control switch that controls the amount of current to the illumination system. As the amount of current increases, the illumination becomes brighter.
The following chart shows the power and ground connector terminals for the components included in the illumination system.

Component	Connector No.	Power terminal	Ground terminal
Illumination control switch	M19	1	3
4WD shift switch	M141	7	8
Ashtray (without woody instrument finisher)	B76	1	2
Ashtray (with woody instrument finisher)	M155		
A/T device	B59	3	4
Cigarette lighter	M57	3	4
Audio unit	M48	8	7
Compass and thermometer	R4	5	2
Hazard switch	M35	7	8

Component	Connector No.	Power terminal	Ground terminal
Rear window defogger switch	M36	5	6
CD player	M92, M93	3	5
A/C switch illumination	M45	2	1
A/C auto amp.	M102	24	25
Clock	M40	3	4
Globe box lamp	M30	1	2
Combination meter (with normal meter)	M26	64	65
Combination meter (with fine vision meter)	M26	64	49
VDC off switch	M151	4	5

The ground for all of the components except for compass and thermometer, glove box lamp and ashtray are controlled through terminals 2 and 3 of the illumination control switch and body grounds M4, M66, M111, M147 and M157.

EXTERIOR LAMP BATTERY SAVER CONTROL

NAEL0287S03

Except for Auto Light Control Operation

NAEL0287S0301

Illumination lamps will remain on for a short while after the ignition switch is turned from ON (or ACC) to OFF. Continuity between terminals 19 and 20, and between terminals 57 and 58 of smart entrance control unit will be disturbed after 5 minutes, then the illumination lamp will be turned off.
When the lighting switch is turned from OFF to 1ST (or 2ND) after illumination lamps are turned off by the battery saver control, ground is supplied

- to smart entrance control unit terminals 20 and 58 from lighting switch terminal 11, and
- to tail lamp relay terminal 2 from smart entrance control unit terminals 19 and 57.

Then illumination lamps illuminate again.

Auto light control operation

NAEL0287S0302

While the illumination lamps are turned ON by "AUTO" operation, the exterior lamp battery saver is activated for 5 minutes when the ignition switch is turned from ON (or ACC) to OFF, and either LH or RH front door switch is opened.
The smart entrance control unit controls exterior lamp battery saver activation as follows:

- When the door switch signal changes from ON to OFF while the exterior lamp battery saver is activated, the operation is discontinued, restarts and lasts for 45 seconds, then the illumination lamps will be turned off.
- When the door switch signal changes from OFF to ON while the exterior lamp battery saver is activated, the operation is discontinued, restarts and lasts for 45 seconds, then the illumination lamps will be turned off.
- When the one of four door switch signals changes from OFF to ON while the exterior lamp battery saver is activated, the operation is discontinued, restarts and lasts for 5 minutes seconds, then the illumination lamps will be turned off.
- When all the door switch ON signals are input while the exterior lamp battery saver is activated, the operation is discontinued, restarts and lasts for 45 seconds, then the illumination lamps will be turned off.

Exterior lamp battery saver control time can be changed using "WORK SUPPORT" mode in "HEADLAMP".
When the lighting switch is turned from OFF to 2ND after illumination lamps are turned to off by the exterior lamp battery saver control, ground is supplied

- to smart entrance control unit terminals 20 and 58 from lighting switch terminal 11, and then,
- to tail lamp relays terminal 2 from smart entrance control unit terminals 19 and 57.

Then illumination lamps illuminate again.

NOTE:
For Trouble Diagnoses for battery saver control, refer to "PARKING, LICENSE AND TAIL LAMPS" (EL-74).

Schematic

NAEL0288

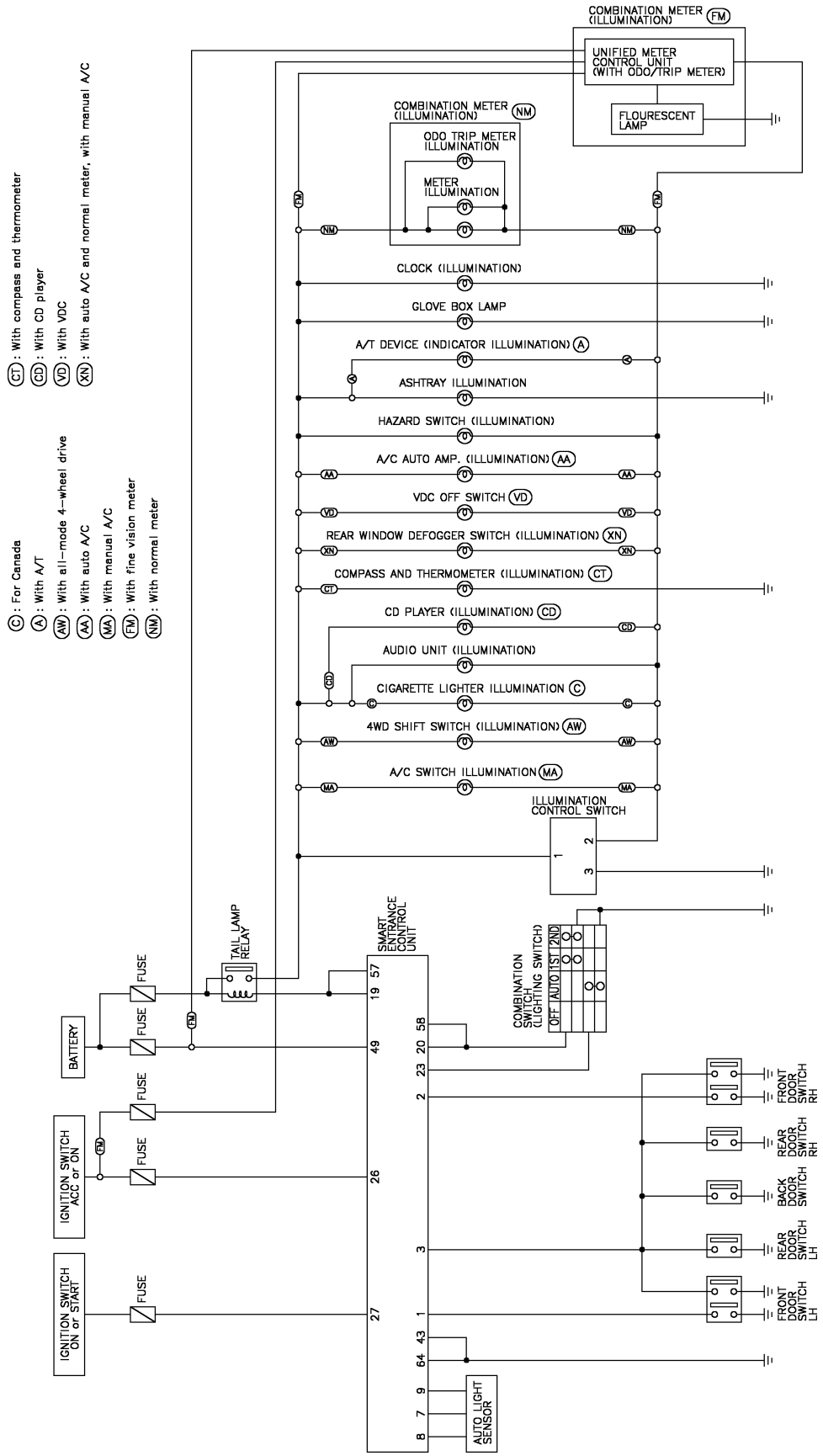

MEL933R

Wiring Diagram — ILL —

NAEL0289

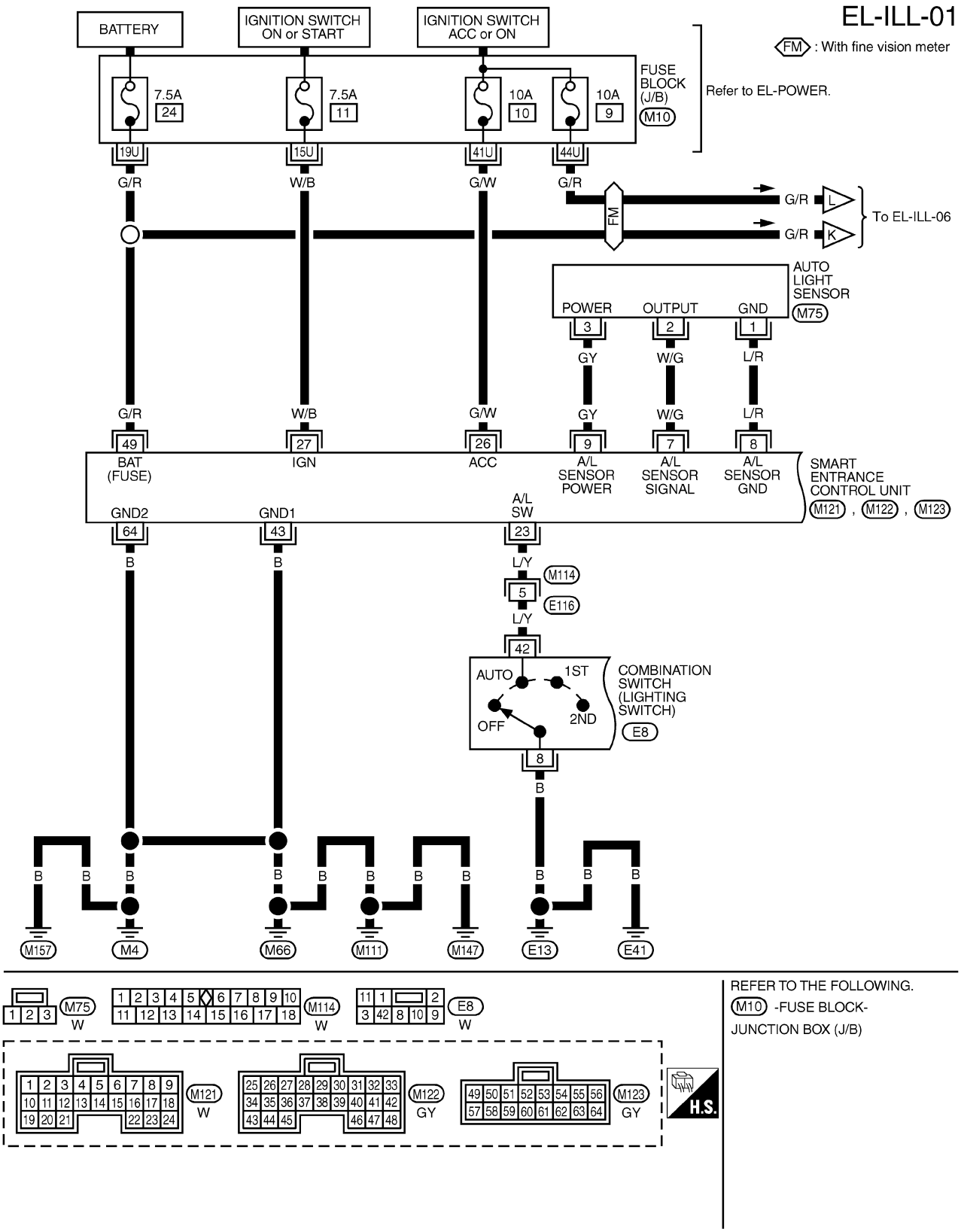

MEL934R

EL-ILL-02

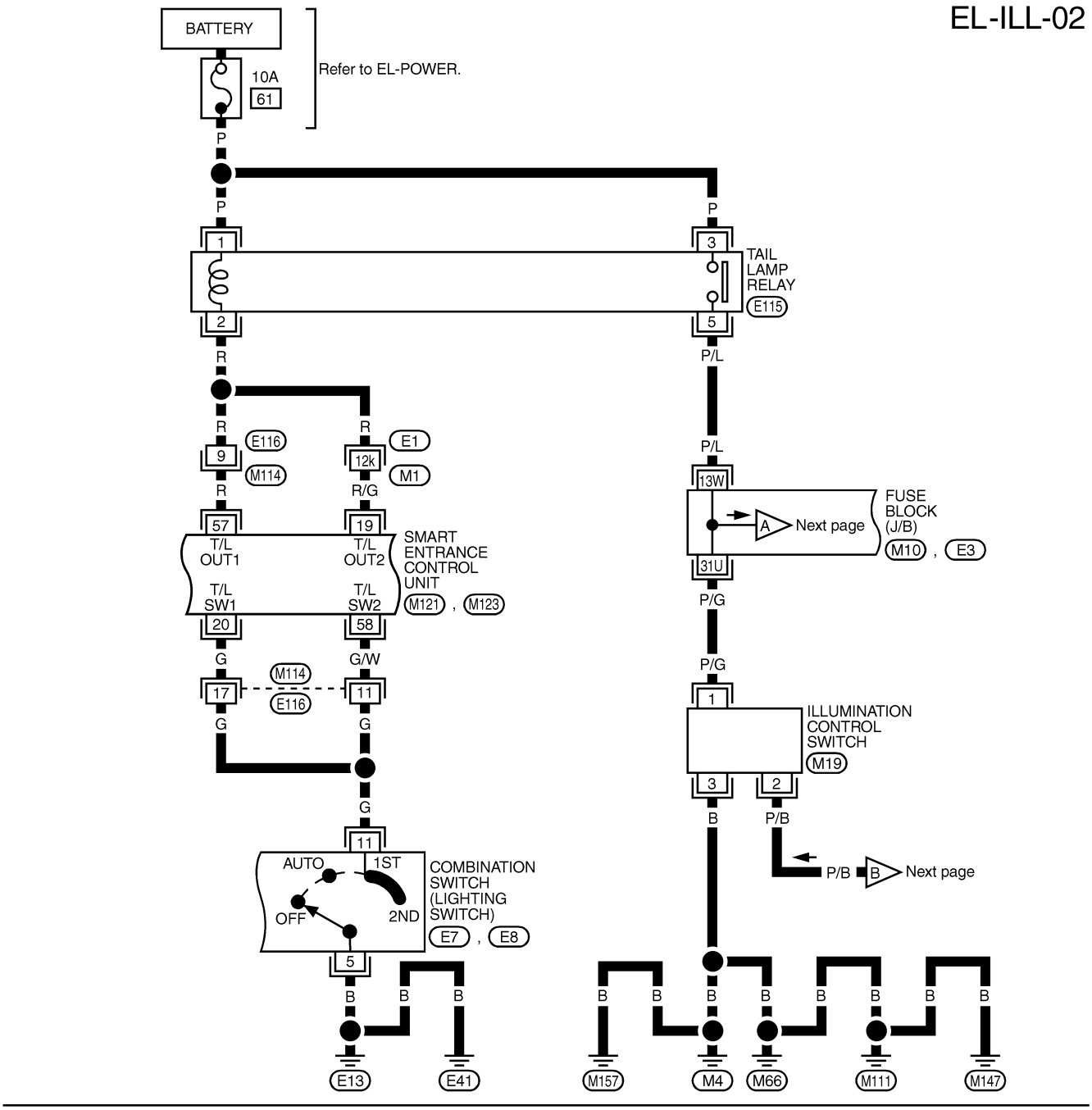

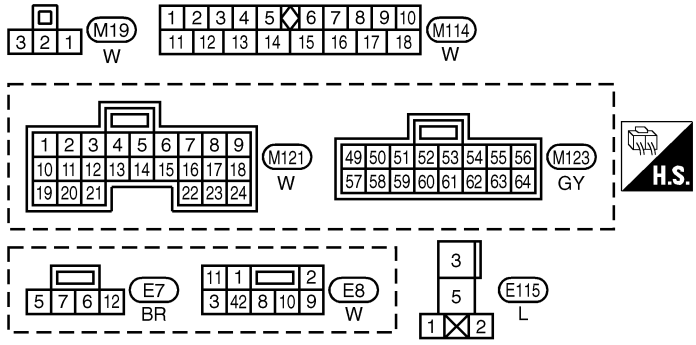

REFER TO THE FOLLOWING.
E1 -SUPER MULTIPLE JUNCTION (SMJ)
M10 , E3 -FUSE BLOCK-JUNCTION BOX (J/B)

MEL968P

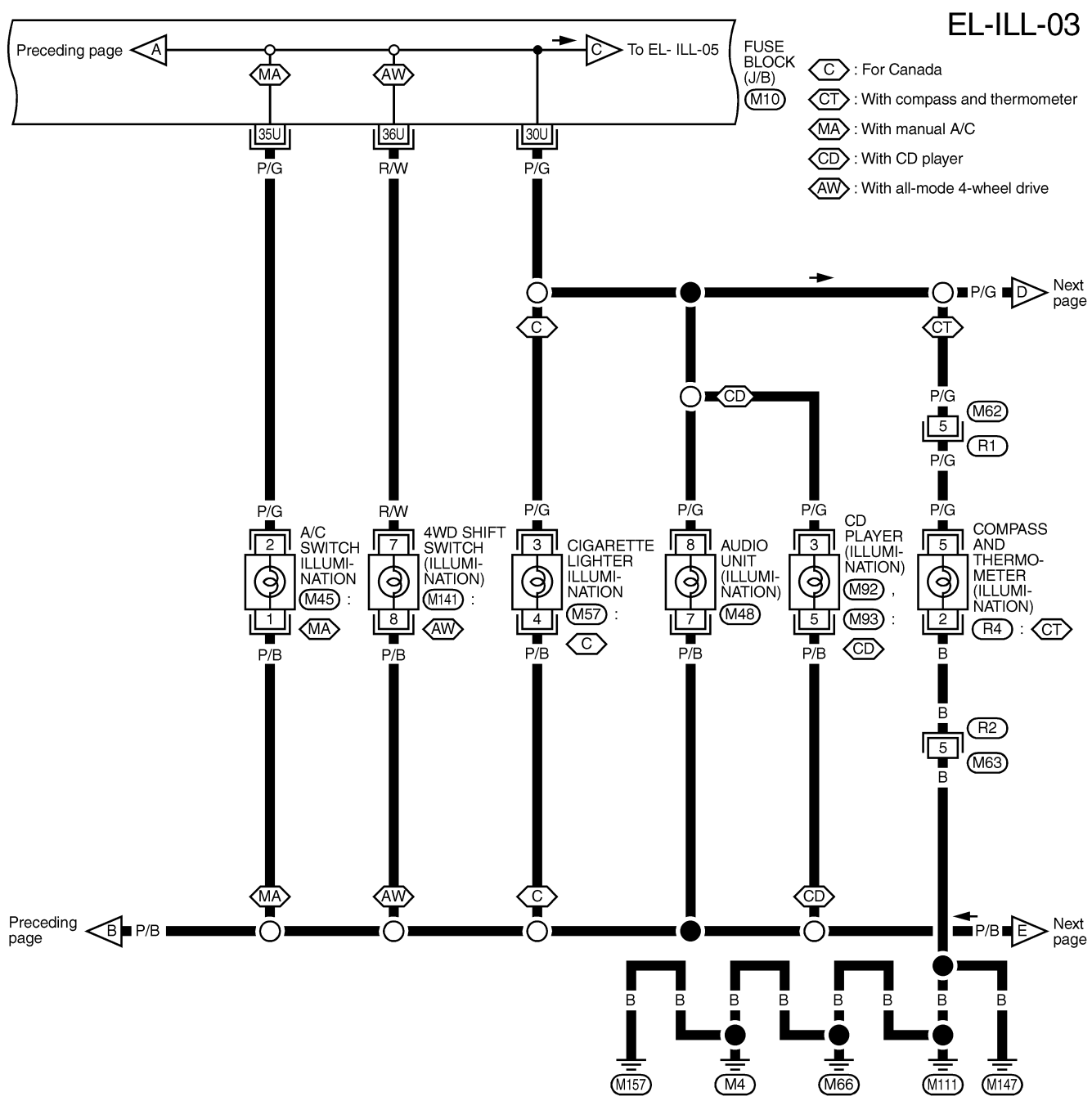
EL-ILL-03
Preceding page
A
MA
AW
C
To EL- ILL-05
FUSE BLOCK (J/B)
M10
C : For Canada
CT : With compass and thermometer
MA : With manual A/C
CD : With CD player
AW : With all-mode 4-wheel drive
35U
36U
30U
P/G
R/W
P/G
P/G
D
Next page
CT
CD
P/G
M62
5
R1
P/G
P/G
R/W
P/G
P/G
P/G
P/G
A/C SWITCH ILLUMI-NATION
M45 :
MA
4WD SHIFT SWITCH (ILLUMI-NATION)
M141 :
AW
CIGARETTE LIGHTER ILLUMI-NATION
M57 :
C
AUDIO UNIT (ILLUMI-NATION)
M48
CD PLAYER (ILLUMI-NATION)
M92 ,
M93 :
CD
COMPASS AND THERMO-METER (ILLUMI-NATION)
R4 : CT
P/B
P/B
P/B
P/B
P/B
B
B
R2
5
M63
B
MA
AW
C
CD
Preceding page
B
P/B
P/B
E
Next page
B
M157
M4
M66
M111
M147
M45
W
M48
W
M57
W
M92
B
M93
W
R1
W
R2
W
R4
W
M141
W
REFER TO THE FOLLOWING.
M10 -FUSE BLOCK-JUNCTION BOX (J/B)
MEL969P

EL-ILL-04

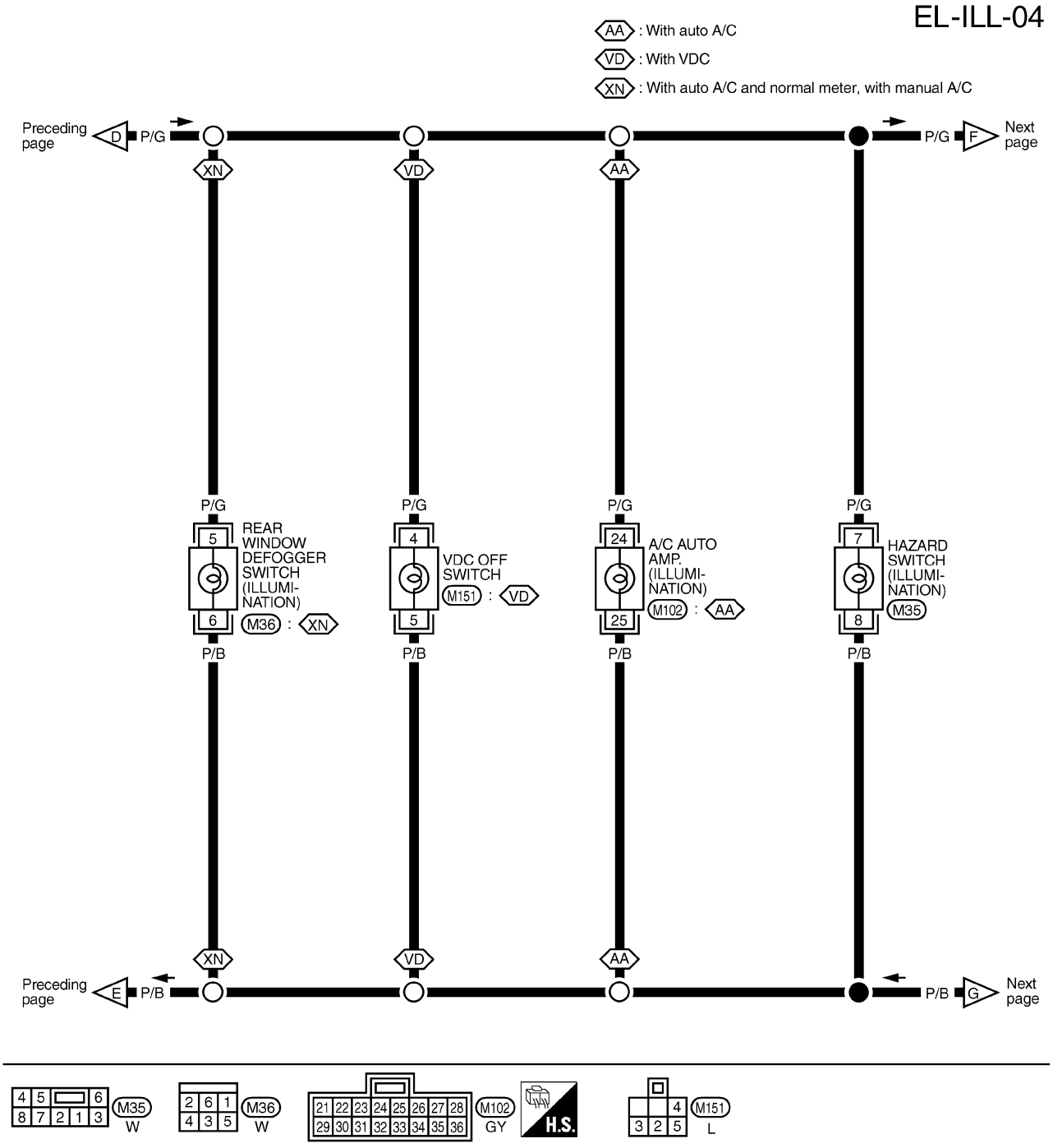

MEL935R

EL-ILL-05

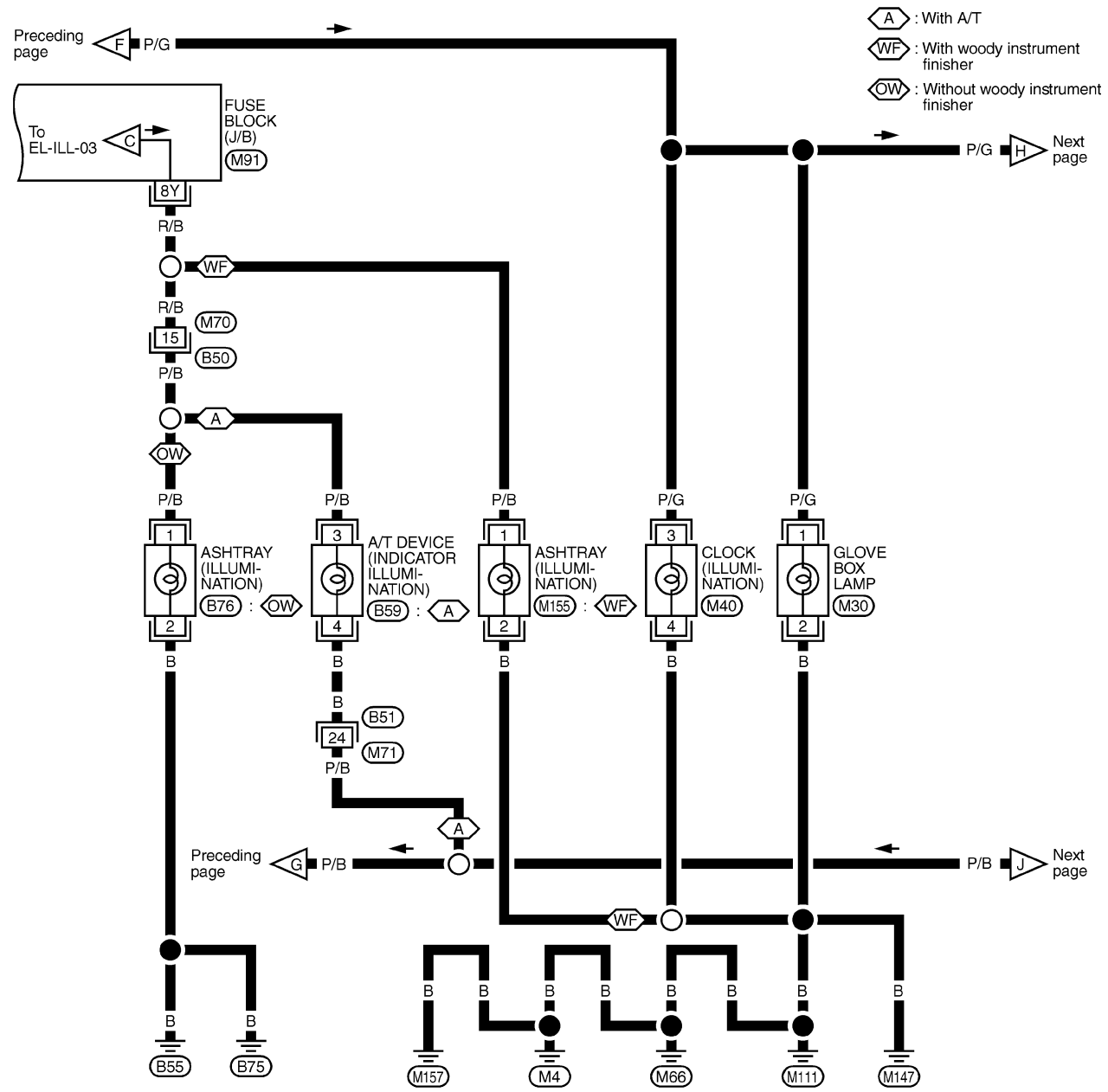

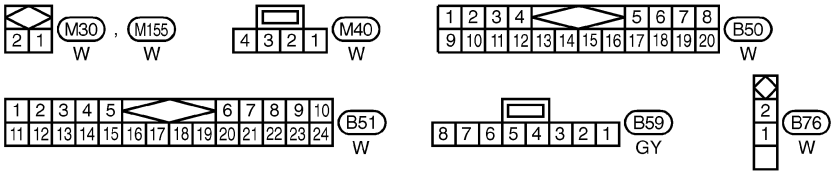

REFER TO THE FOLLOWING.
M91 -FUSE BLOCK-JUNCTION BOX (J/B)

MEL936R

EL-ILL-06

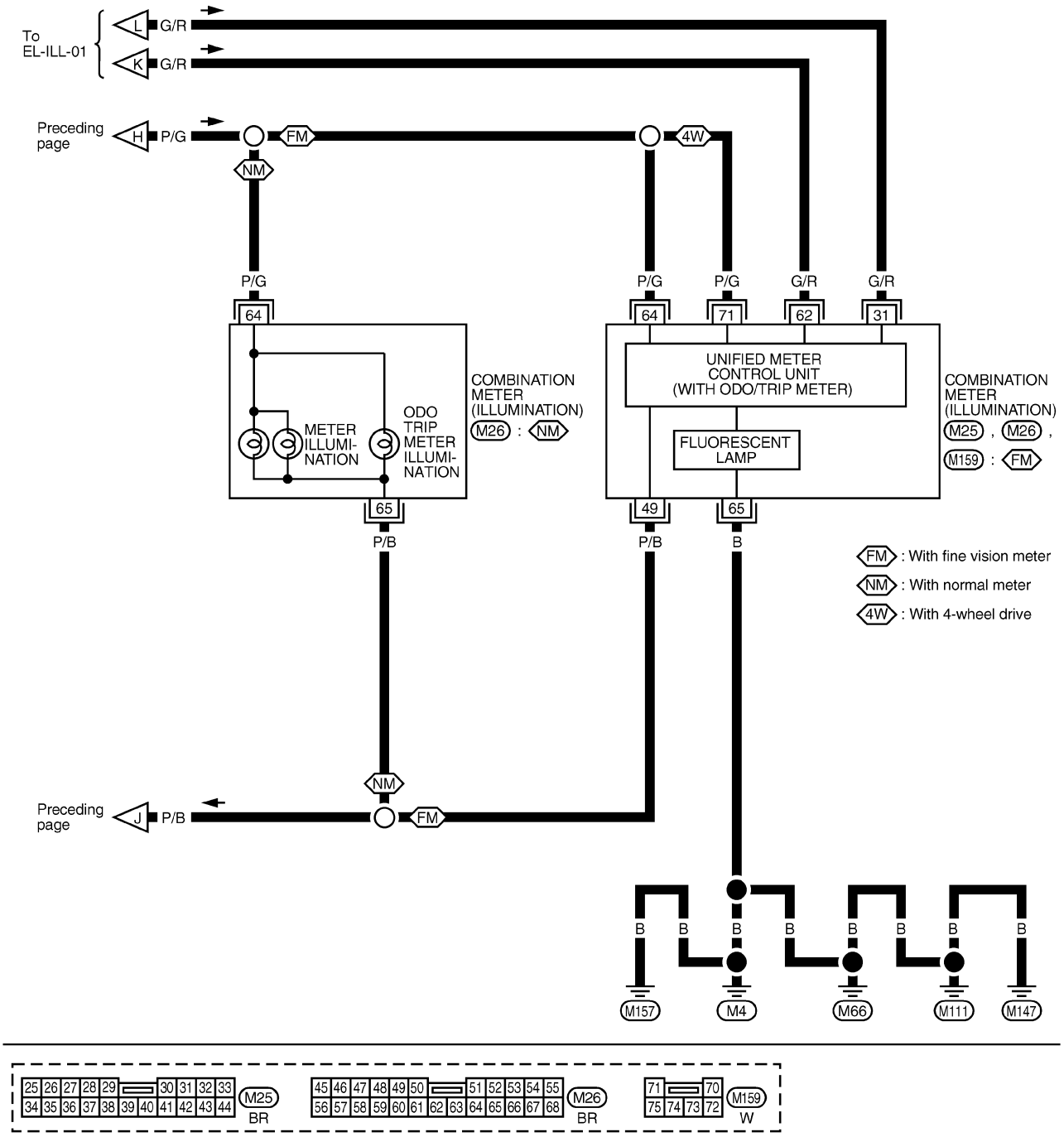

MEL937R

EL-ILL-07

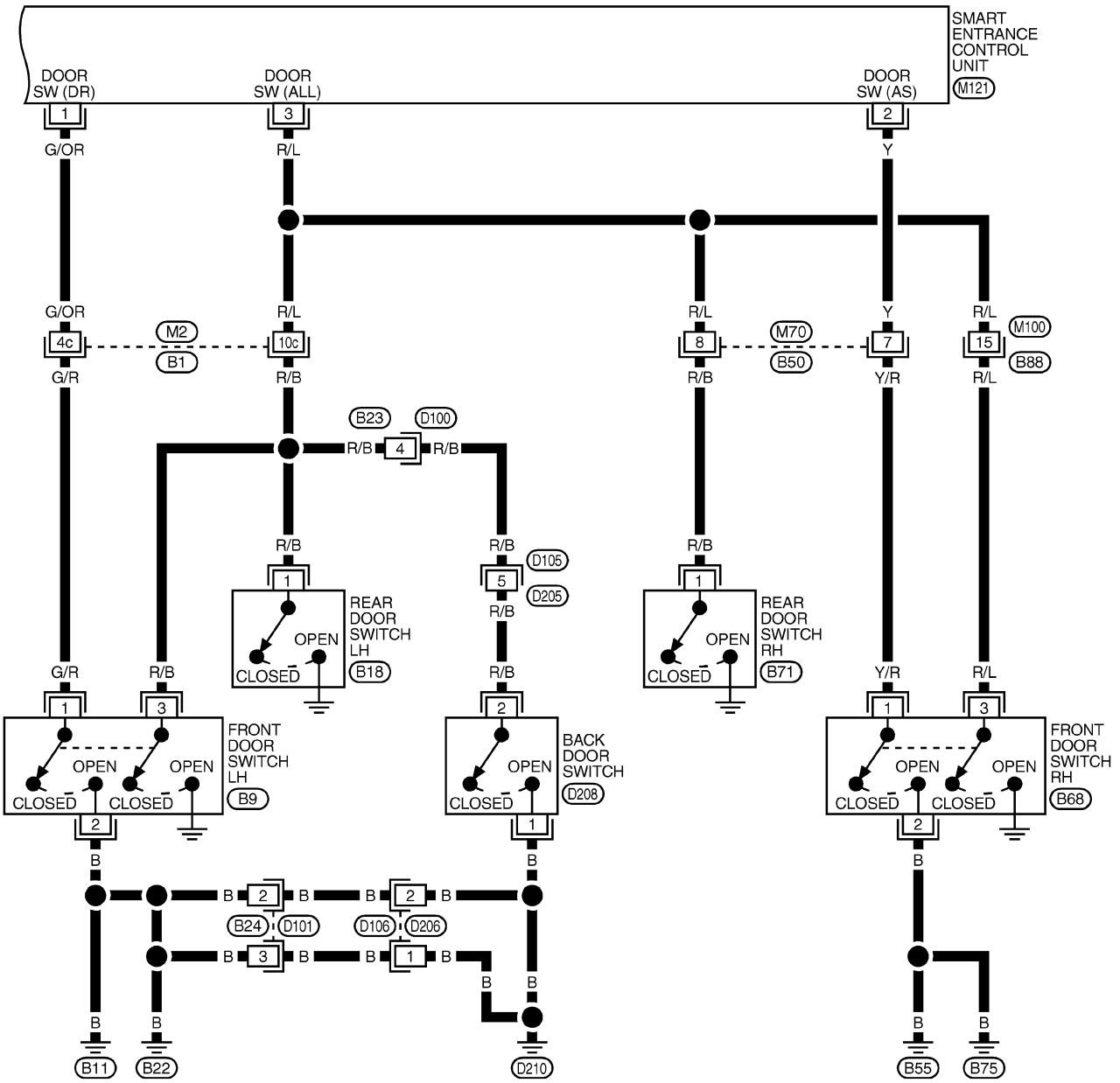

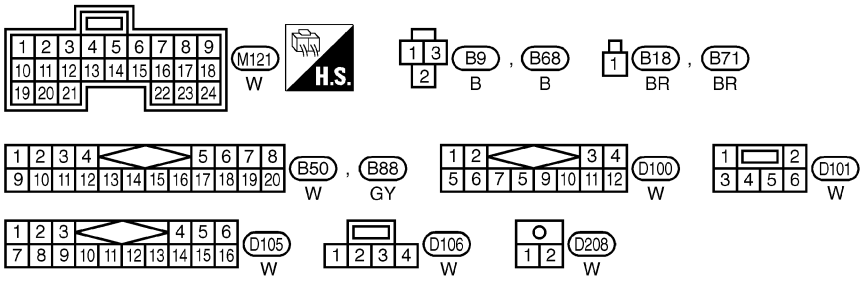

REFER TO THE FOLLOWING.
B1 -SUPER MULTIPLE JUNCTION (SMJ)

MEL938R

System Description

NAEL0290

POWER SUPPLY AND GROUND

NAEL0290S01

Power is supplied at all times:

- through 7.5A fuse [No. 24, located in the fuse block (J/B)]
- to key switch terminal 2 and
- to smart entrance control unit terminal 49.

When the key is removed from ignition key cylinder, power is interrupted:

- through key switch terminal 1
- to smart entrance control unit terminal 25.

With the ignition key switch in the ON or START position, power is supplied:

- through 7.5A fuse [No. 11, located in the fuse block (J/B)]
- to smart entrance control unit terminal 27.

Ground is supplied:

- to smart entrance control unit terminals 43 and 64
- through body grounds M4, M66, M111, M147 and M157.

When the front driver side door is opened, ground is supplied:

- through body grounds B11, B22 and D210
- to front door switch (LH) terminal 2
- from front door switch (LH) terminal 1
- to smart entrance control unit terminal 1.

When the front passenger side door is opened, ground is supplied:

- through body grounds terminals B55 and B75
- to front door switch (RH) terminal 2
- from front door switch (RH) terminal 1
- to smart entrance control unit terminal 2.

When any other door (except front door) is opened, ground is supplied to smart entrance control unit terminal 3 in the same manner as the front door switch.
When the front LH door is unlocked by front door key cylinder switch, ground is supplied

- through body grounds M4, M66, M111, M147 and M157
- to front door key cylinder switch terminal 2
- through front key cylinder switch terminal 1
- to power window main switch terminal 6.

Power window main switch terminal 14 send unlock signal to smart entrance control unit terminal 33 with serial link communication line.
When back door is unlocked by back door key cylinder switch, ground is supplied

- through body grounds B11, B22 and D210
- to back door key cylinder switch terminal 4
- from back door key cylinder terminal 2
- to smart entrance control unit terminal 10.

When a signal, or combination of signals is received by the smart entrance control unit, ground is supplied:

- through smart entrance control unit terminal 31
- to interior lamp terminal 2.

With power and ground supplied, the interior lamp illuminates.

SWITCH OPERATION

NAEL0290S02

When interior lamp switch is ON, ground is supplied:

- through case grounds of interior lamp
- to interior lamp.

And power is supplied:

- to interior lamp terminal 1
- from smart entrance control unit terminal 50.

When spot lamp (LH and/or RH) is ON, ground is supplied:

- through body grounds M4, M66, M111, M147 and M157
- to spot lamp terminal 2.

And power is supplied:

- to spot lamp terminal 1
- from smart entrance control unit terminal 50.

When vanity mirror illumination (LH and/or RH) is ON, ground is supplied:

- through body grounds M4, M66, M111 and M147
- to vanity mirror illuminations (LH and RH) terminals 2.

And power is supplied:

- to vanity mirror illuminations (LH and RH) terminals 1
- from smart entrance control unit terminal 50.

With power and ground supplied, interior lamps turn ON.

INTERIOR LAMP TIMER OPERATION

NAEL0290S03

When interior lamp switch is in the "DOOR" position, the smart entrance control unit keeps the interior lamp illuminated for about 30 seconds when:

- unlock signal is supplied from door lock and unlock switch while all doors are closed and key is out of ignition key cylinder
- unlock signal is supplied from keyfob or door key cylinder while driver's door is locked and all doors are closed
- key is removed from ignition key cylinder while all doors are closed
- driver's door is opened and then closed while key is out of the iginition key cylinder. (However, if the driver's door is closed with the key inserted in the ignition key cylinder after the driver's door is opened with the key removed, the timer is operated.)

The timer is canceled when:

- driver's door is locked,
- driver's door is opened, or
- ignition switch is turned ON.

When driver's door is locked, interior room lamp timer is canceled as described before.

ON-OFF CONTROL

NAEL0290S04

When the driver side door, front passenger door, rear LH or RH door is opened, the interior room lamp turns on while the interior room lamp switch is in the "DOOR" position.

INTERIOR LAMP BATTERY SAVER

NAEL0290S05

The lamp turns off automatically when interior lamp, luggage room lamp, spot lamp and/or vanity mirror illumination is illuminated with the ignition key is in OFF position, if the lamp remains lit by the door switch open signal or if the lamp switch is in ON position for more than 30 minutes.
After lamps turn OFF by the battery saver system, the lamps illuminate again when:

- driver's door is locked or unlocked,
- door is opened or closed,
- key is removed from ignition key cylinder or inserted in ignition key cylinder.

Schematic

NAEL0291

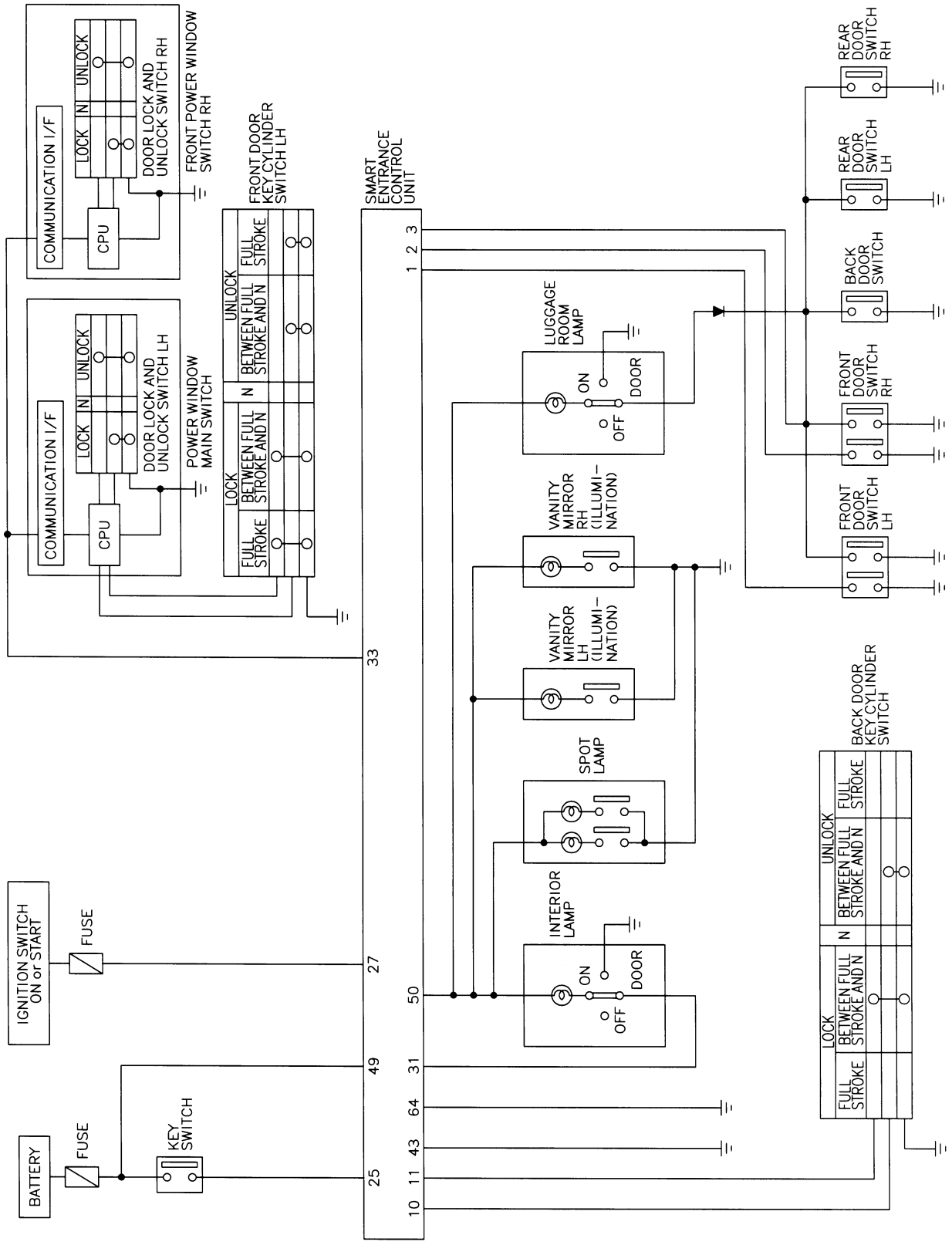

MEL407P

Wiring Diagram — INT/L —

NAEL0292

EL-INT/L-01

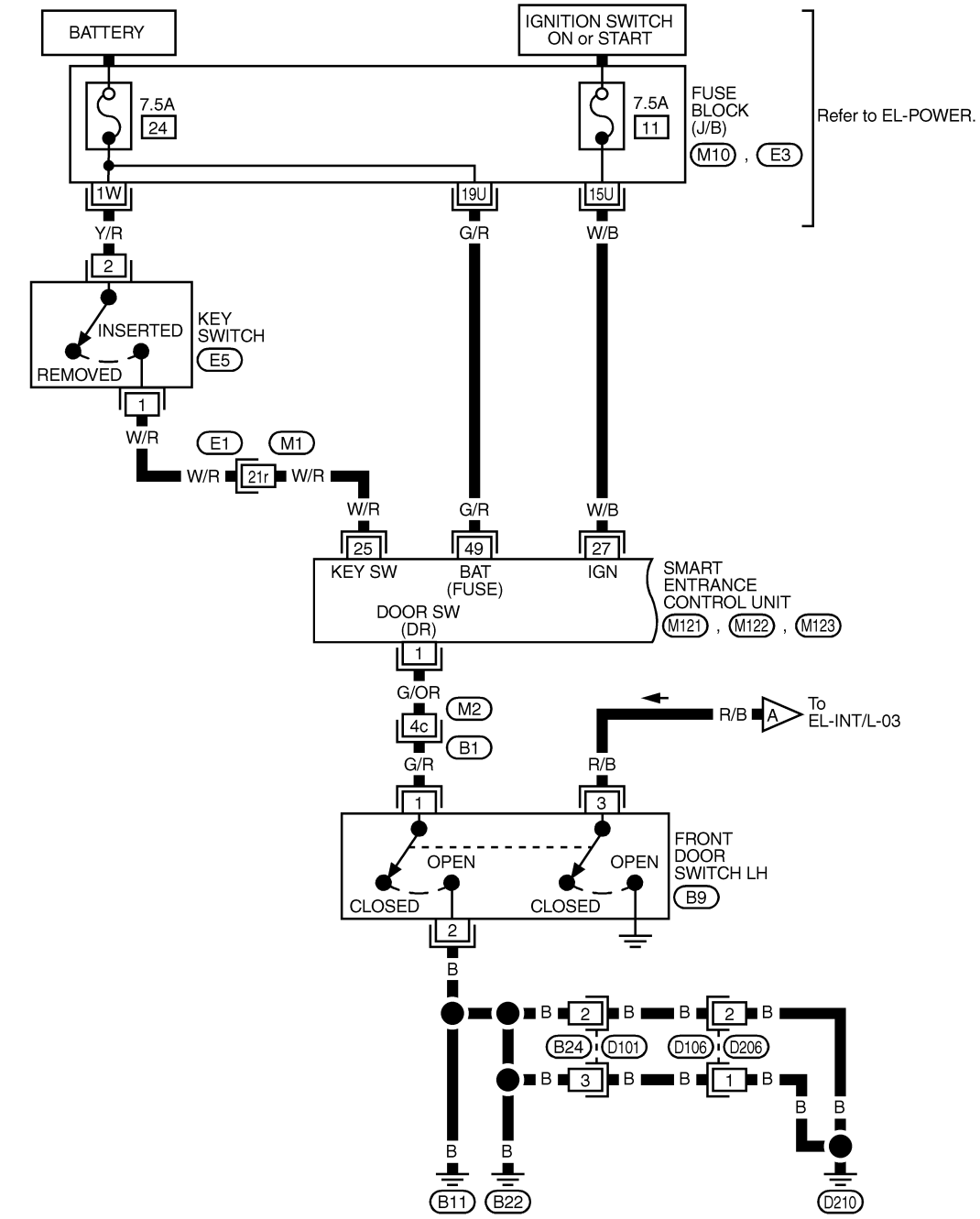

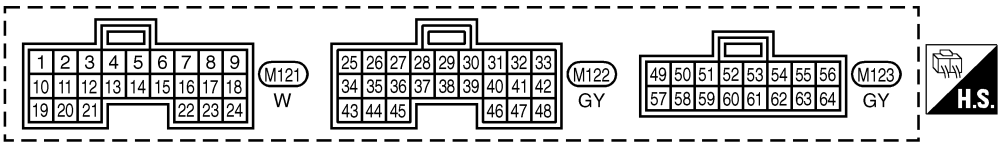

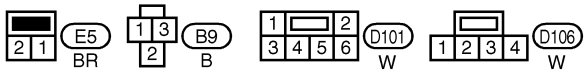

REFER TO THE FOLLOWING.
E1 , B1 -SUPER MULTIPLE JUNCTION (SMJ)
M10 , E3 -FUSE BLOCK-JUNCTION BOX (J/B)

MEL973P

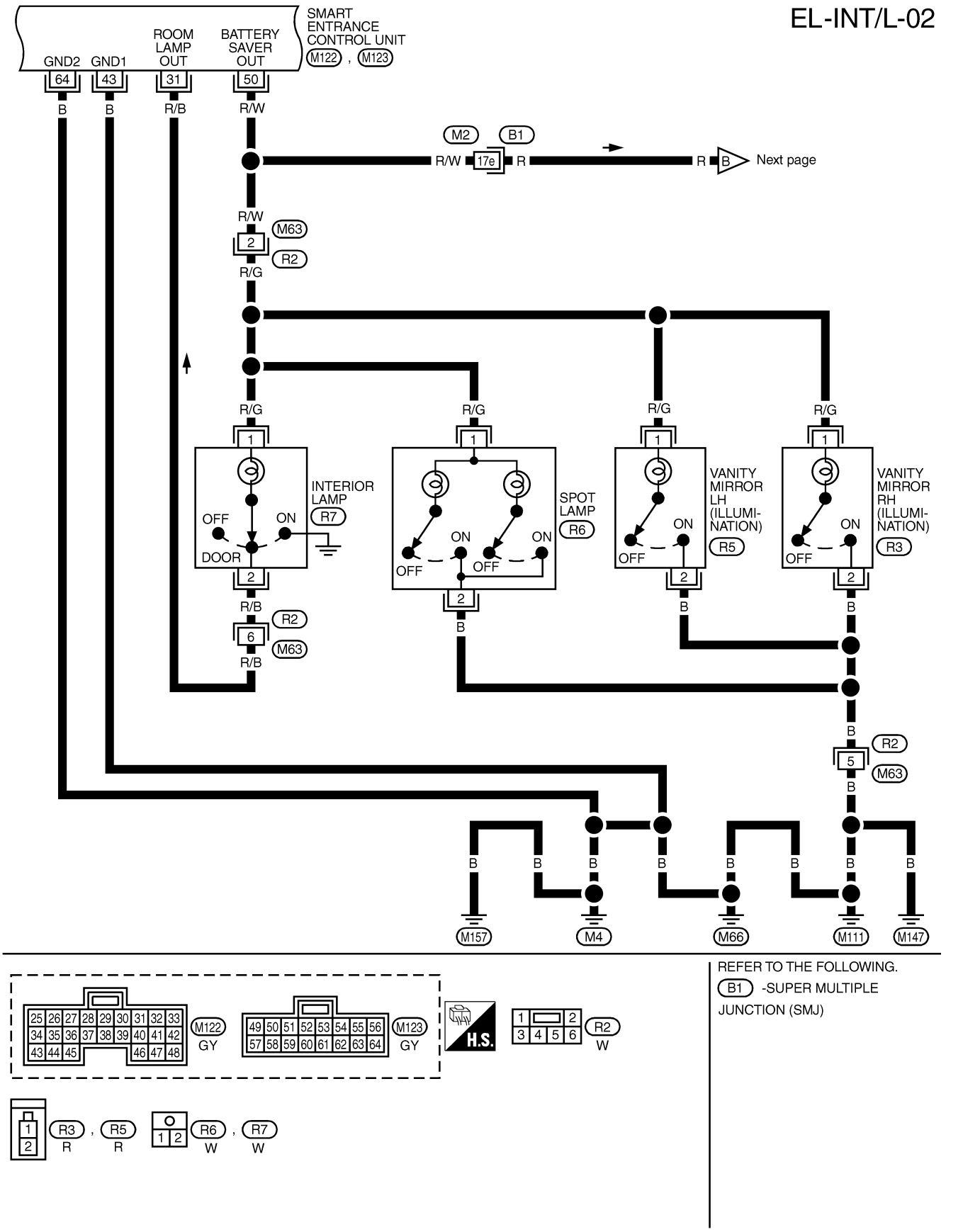
EL-INT/L-02
SMART ENTRANCE CONTROL UNIT
M122 , M123
GND2
GND1
ROOM LAMP OUT
BATTERY SAVER OUT
64
43
31
50
B
B
R/B
R/W
M2
B1
R/W
17e
R
R
B
Next page
R/W
M63
2
R2
R/G
R/G
R/G
R/G
R/G
1
INTERIOR LAMP
R7
OFF
ON
DOOR
2
R/B
R2
6
M63
R/B
SPOT LAMP
R6
ON
ON
OFF
OFF
2
B
VANITY MIRROR LH (ILLUMI-NATION)
R5
ON
OFF
2
B
VANITY MIRROR RH (ILLUMI-NATION)
R3
ON
OFF
2
B
B
R2
5
M63
B
B
B
B
B
B
B
B
M157
M4
M66
M111
M147
M122
GY
M123
GY
H.S.
R2
W
R3 , R5
R
R
R6 , R7
W
W
REFER TO THE FOLLOWING.
B1 -SUPER MULTIPLE JUNCTION (SMJ)
MEL974P

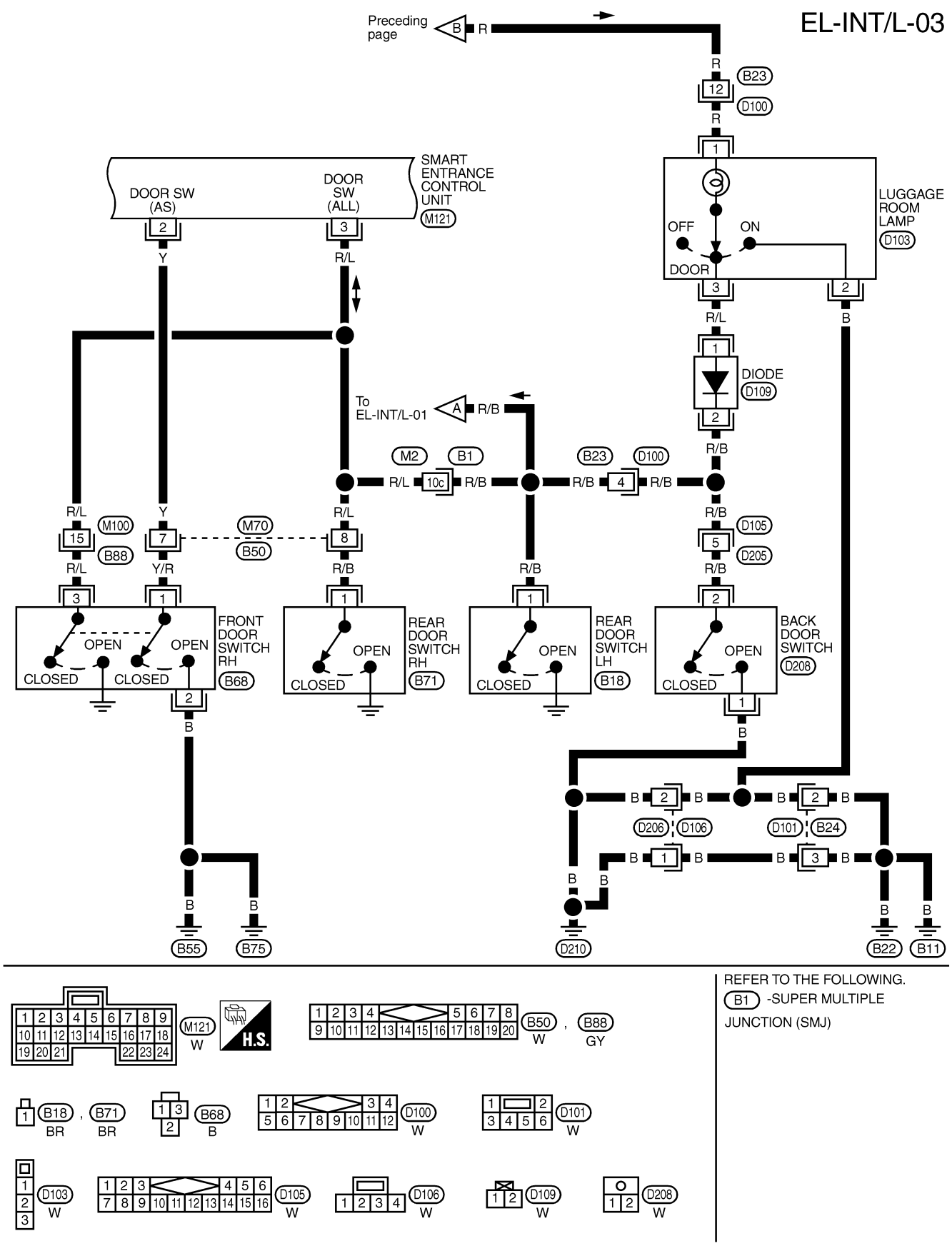
EL-INT/L-03
Preceding page
B
R
B23
12
D100
SMART ENTRANCE CONTROL UNIT
M121
DOOR SW (AS)
DOOR SW (ALL)
LUGGAGE ROOM LAMP
D103
OFF
ON
DOOR
DIODE
D109
To EL-INT/L-01
A
R/B
M2
B1
10c
B23
D100
4
M100
B88
M70
B50
D105
D205
FRONT DOOR SWITCH RH
B68
REAR DOOR SWITCH RH
B71
REAR DOOR SWITCH LH
B18
BACK DOOR SWITCH
D208
OPEN
CLOSED
D206
D106
D101
B24
B55
B75
D210
B22
B11
M121
W
H.S.
B50
W
B88
GY
B18
BR
B71
BR
B68
B
D100
W
D101
W
D103
W
D105
W
D106
W
D109
W
D208
W
REFER TO THE FOLLOWING.
B1 -SUPER MULTIPLE JUNCTION (SMJ)
MEL975P

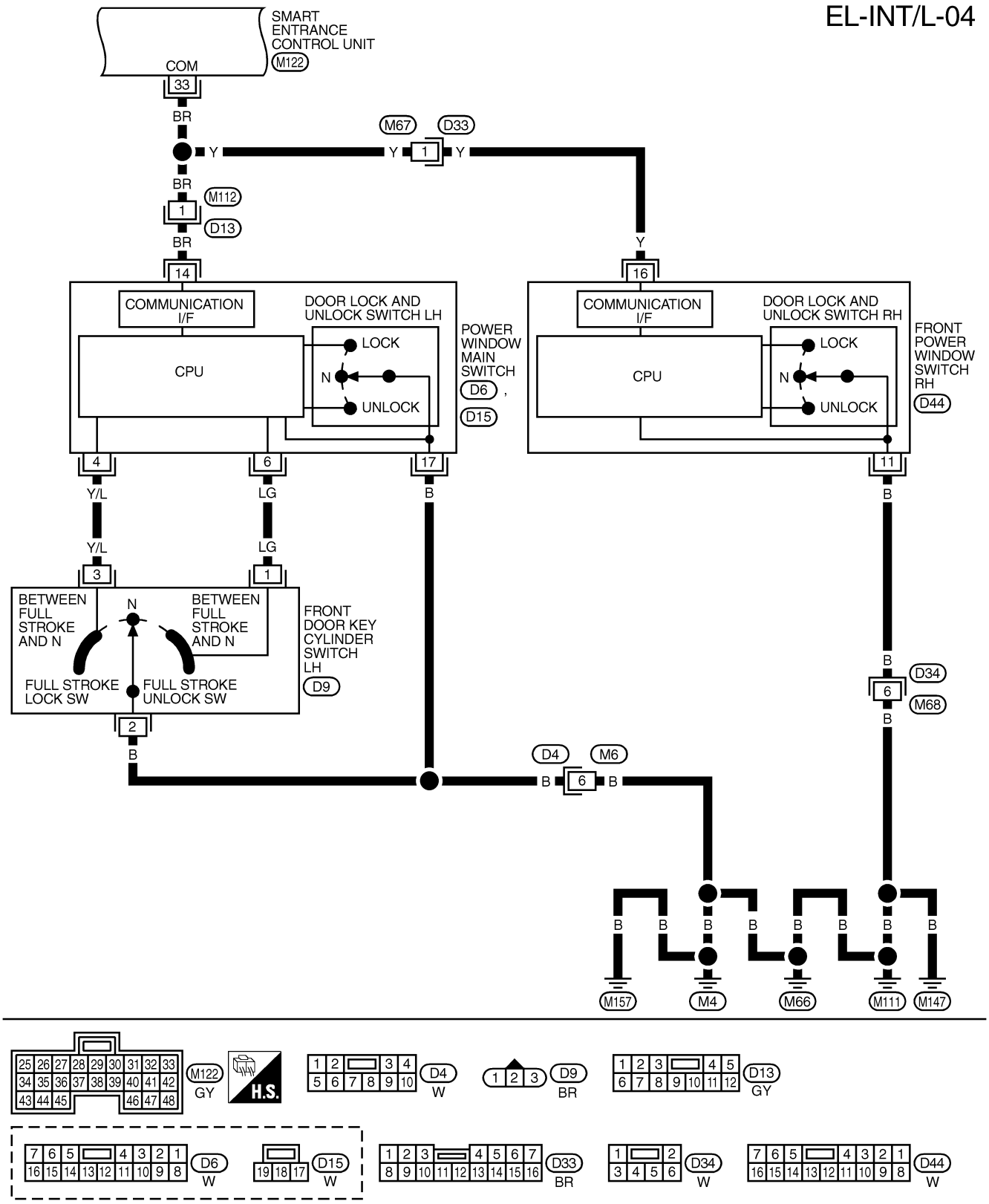
EL-INT/L-04
SMART ENTRANCE CONTROL UNIT
M122
COM
33
BR
Y
M67
D33
1
M112
D13
14
16
COMMUNICATION I/F
CPU
DOOR LOCK AND UNLOCK SWITCH LH
LOCK
N
UNLOCK
POWER WINDOW MAIN SWITCH
D6
D15
DOOR LOCK AND UNLOCK SWITCH RH
FRONT POWER WINDOW SWITCH RH
D44
4
6
17
11
Y/L
LG
B
3
BETWEEN FULL STROKE AND N
FULL STROKE LOCK SW
FULL STROKE UNLOCK SW
FRONT DOOR KEY CYLINDER SWITCH LH
D9
2
D34
M68
D4
M6
M157
M4
M66
M111
M147
M122
GY
H.S.
D4
W
D9
BR
D13
GY
D6
W
D15
W
D33
BR
D34
W
D44
W

MEL976P

EL-INT/L-05

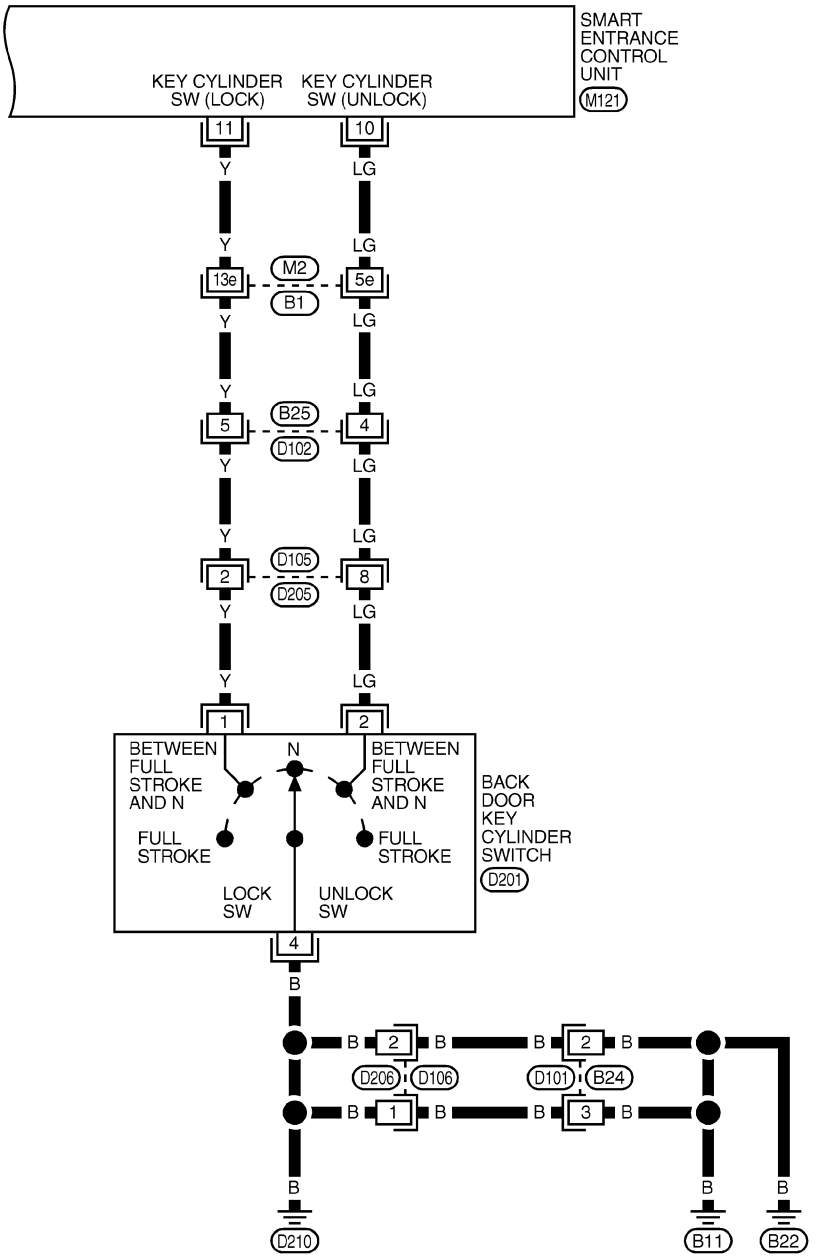

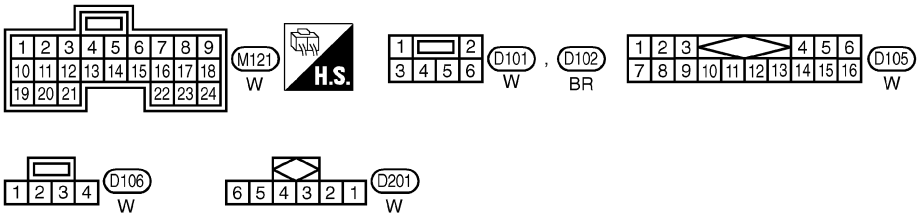

REFER TO THE FOLLOWING.
B1 - SUPER MULTIPLE JUNCTION (SMJ)

MEL939R

CONSULT-II Inspection Procedure

=NAEL0293

"INT LAMP"/"BATTERY SAVER"

NAEL0293S01

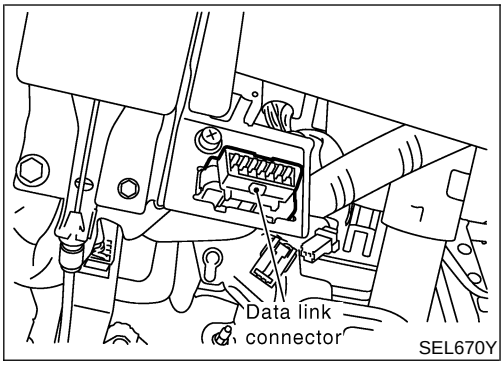

SEL670Y

1. Turn ignition switch "OFF".
2. Connect "CONSULT-II" and "CONSULT-II CONVERTER" to the data link connector.

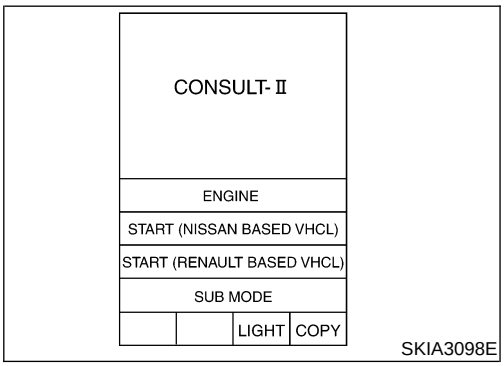

SKIA3098E

3. Turn ignition switch "ON".
4. Touch "START (NISSAN BASED VHCL)".

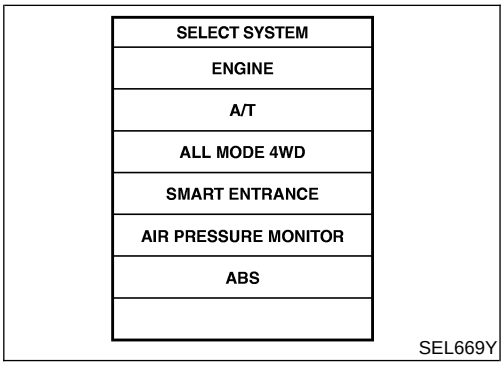

SEL669Y

5. Touch "SMART ENTRANCE".
   If "SMART ENTRANCE" is not indicated, go to GI-41, "CONSULT-II Data Link Connector (DLC) Circuit".

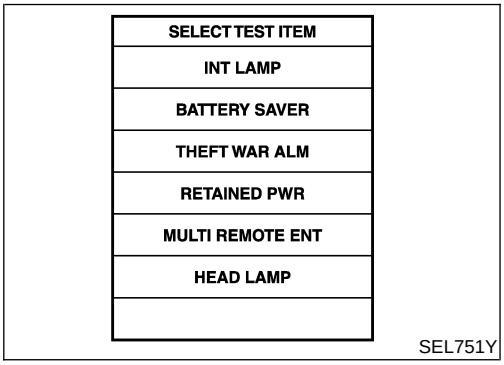

SEL751Y

6. Touch "INT LAMP" or "BATTERY SAVER".

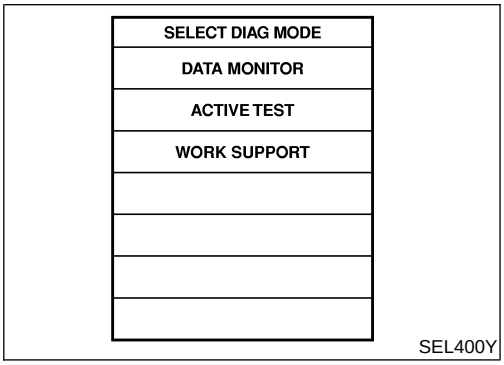

SEL400Y

7. Select diagnosis mode.
   "DATA MONITOR", "ACTIVE TEST" and "WORK SUPPORT" are available for "INT LAMP" and "BATTERY SAVER".

CONSULT-II Application Items

NAEL0294

"INT LAMP"

NAEL0294S01

Data Monitor

NAEL0294S0101

Monitored Item	Description
IGN ON SW	Indicates [ON/OFF] condition of ignition switch.
DOOR SW-RR	Indicates [ON/OFF] condition of ignition switch.
KEY ON SW	Indicates [ON/OFF] condition of key switch.
DOOR SW-DR	Indicates [ON/OFF] condition of front door switch LH.
DOOR SW-AS	Indicates [ON/OFF] condition of front door switch RH.
LOCK SW DR/AS	Indicates [ON/OFF] condition of front door lock switch.
UNLK SW DR/AS	Indicates [ON/OFF] condition of front door lock switch.
KEY CYL LK-SW	Indicates [ON/OFF] condition of front door key cylinder switch.
KEY CYL UN-SW	Indicates [ON/OFF] condition of front door key cylinder switch.
LK BUTTON/SIG	Indicates [ON/OFF] condition of unlock signal from keyfob.
UN BUTTON/SIG	Indicates [ON/OFF] condition of unlock signal from keyfob.

Active Test

NAEL0294S0102

Test Item	Description
INT LAMP	This test enables to check interior lamp operation. When "ON" on CONSULT-II screen is touched: ● Interior lamp turns on when the switch is at DOOR. (Smart entrance control unit supplies power and ground to interior lamp.)
IGN ILLUM	This test enables to check ignition key hole illumination operation. The illumination turns on when "ON" on CONSULT-II screen is touched.
STEP LAMP	This test enables to check step lamp operation. The illumination turns on when "ON" on CONSULT-II screen is touched.

NOTE:
Even though ignition key hole illumination and step lamp are actually displayed on the CONSULT-II screen, those are not equipped, therefore, they cannot be activated.

Work Support

NAEL0294S0103

Work Item	Description
ROOM LAMP TIMER SET	Interior lamp timer mode can be changed by mode setting. Selects ON-OFF of the room lamp illumination at the time the driver door is unlocked. ● MODE 1 (ON)/MODE 2 (OFF) **NOTE:** Even though ignition keyhole illumination and step lamp are actually displayed on the CONSULT-II screen, those are not equipped, therefore, they cannot be activated.

"BATTERY SAVER"

NAEL0294S02

Data Monitor

NAEL0294S0201

Monitored Item	Description
IGN ON SW	Indicates [ON/OFF] condition of ignition switch.
DOOR SW-RR	Indicates [ON/OFF] condition of ignition switch.
KEY ON SW	Indicates [ON/OFF] condition of key switch.
DOOR SW-DR	Indicates [ON/OFF] condition of front door switch LH.

CONSULT-II Application Items (Cont'd)

Monitored Item	Description
DOOR SW-AS	Indicates [ON/OFF] condition of front door switch RH.
LOCK SW DR/AS	Indicates [ON/OFF] condition of front door lock switch.
UNLK SW DR/AS	Indicates [ON/OFF] condition of front door lock switch.
KEY CYL LK-SW	Indicates [ON/OFF] condition of front door key cylinder switch.
KEY CYL UN-SW	Indicates [ON/OFF] condition of front door key cylinder switch.
LK BUTTON/SIG	Indicates [ON/OFF] condition of unlock signal from keyfob.
UN BUTTON/SIG	Indicates [ON/OFF] condition of unlock signal from keyfob.

Active Test

NAEL0294S0202

Test Item	Description
BATTERY SAVER	This test enables to check interior lamp and spot lamp and vanity mirror illuminations operations. When touch "ON" on CONSULT-II screen. ● Interior lamp turns on when the switch is in ON. (Smart entrance control unit supplies power to interior lamp.) ● Spot lamp and vanity mirror illuminations turn on when the switch is in ON. (Smart entrance control unit supplies power to spot lamp, and vanity mirror illuminations.)

Work Support

NAEL0294S0203

Work Item	Description
ROOM LAMP BAT SAV SET	Interior lamp battery saver control period can be changed by mode setting. Selects interior lamp battery saver control period between two modes. ● MODE 1 (30 minutes)/MODE 2 (60 minutes)

Trouble Diagnoses for Interior Lamp Timer

=NAEL0295

DIAGNOSTIC PROCEDURE 1

NAEL0295S01

SYMPTOM: Interior lamp timer does not operate.

1 CHECK IGNITION ON SIGNAL

With CONSULT-II

Check ignition switch ON signal ("IGN ON SW") in "DATA MONITOR" mode with CONSULT-II.

DATA MONITOR	
MONITOR	
IGN ON SW	ON

When ignition switch is ON:
IGN ON SW ON

When ignition switch is OFF:
IGN ON SW OFF

SEL318W

Without CONSULT-II

Check voltage between smart entrance control unit harness connector M122 terminal 27 (W/B) and ground.

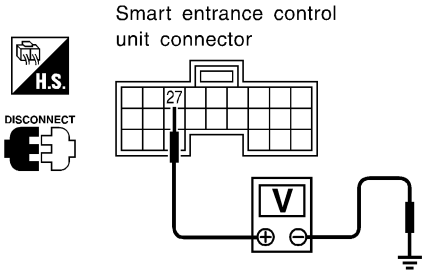

Terminals		Ignition switch position		
(+)	(–)	OFF	ACC	ON
27	Ground	0V	0V	Battery voltage

SEL003Y

OK or NG

OK	▶	GO TO 2.
NG	▶	**Check the following.** ● 7.5A fuse [No. 11, located in fuse block (J/B)] ● Harness for open or short between smart entrance control unit and fuse

2 CHECK FRONT DOOR SWITCH LH INPUT SIGNAL

With CONSULT-II

Check front door switch LH signal ("DOOR SW-DR") in "DATA MONITOR" mode with CONSULT-II.

DATA MONITOR	
MONITOR	
DOOR SW-DR	OFF

When front door LH is open:
DOOR SW-DR ON

When front door LH is closed:
DOOR SW-DR OFF

SEL319WB

Without CONSULT-II

Check voltage between smart entrance control unit harness connector M121 terminal 1 (G/OR) and ground.

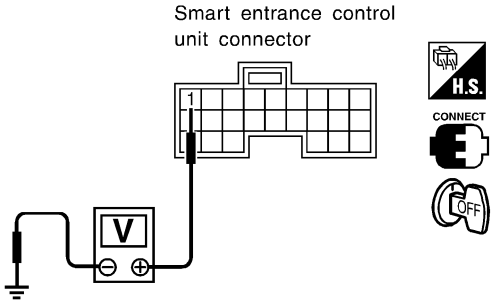

Voltage [V]:
Condition of front door LH: CLOSED
Approx. 5
Condition of front door LH: OPENED
0

SEL004YD

OK or NG

OK	▶	GO TO 4.
NG	▶	GO TO 3.

3 CHECK FRONT DOOR SWITCH LH

Check the following.
- Continuity between front door switch LH connector B9 terminals 1 and 2
- Continuity between front door switch LH connector B9 terminal 3 and ground

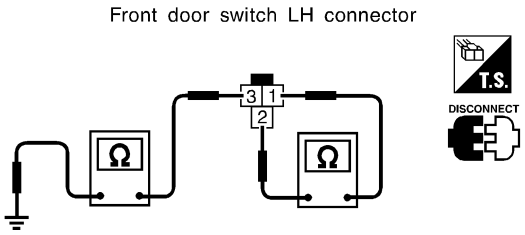

Continuity:
Door switch is pushed.
No
Door switch is released.
Yes

SEL277YA

OK or NG

OK	▶	**Check the following.** • Front door switch LH ground circuit and condition • Harness for open or short between smart entrance control unit and front door switch LH
NG	▶	Replace front door switch LH.

4	CHECK FRONT DOOR SWITCH RH INPUT SIGNAL

With CONSULT-II
Check front door switch RH signal ("DOOR SW-AS") in "DATA MONITOR" mode with CONSULT-II.

DATA MONITOR	
MONITOR	
DOOR SW-AS	OFF

When front door RH is open:
DOOR SW-AS ON

When front door RH is closed:
DOOR SW-AS OFF

SEL153YA

Without CONSULT-II
Check voltage between smart entrance control unit harness connector M121 terminal 2 (Y) and ground.

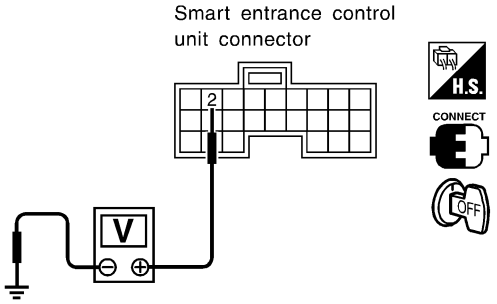

Voltage [V]:
Condition of front door RH: CLOSED
Approx. 5
Condition of front door RH: OPENED
0

SEL152YB

OK or NG

OK	▶	GO TO 6.
NG	▶	GO TO 5.

5	CHECK FRONT DOOR SWITCH RH

Check the following.
- Continuity between front door switch RH connector B68 terminals 1 and 2
- Continuity between front door switch RH connector B68 terminal 3 and ground

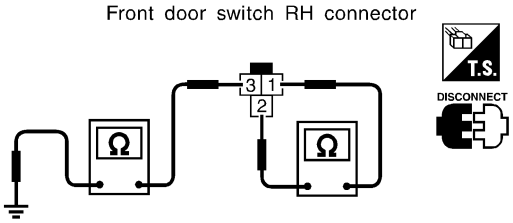

Continuity:
Door switch is pushed.
No
Door switch is released.
Yes

SEL278YA

OK or NG

OK	▶	**Check the following.** • Front door switch RH ground circuit and condition • Harness for open or short between smart entrance control unit and front door switch RH
NG	▶	Replace front door switch RH.

6 CHECK REAR AND BACK DOOR SWITCHES INPUT SIGNAL

With CONSULT-II

Check door switches ("DOOR SW-RR") in "DATA MONITOR" mode with CONSULT-II.

DATA MONITOR	
MONITOR	
DOOR SW-RR	OFF

When rear door LH, RH and/or back door is open:

DOOR SW-RR ON

When rear door LH, RH and/or back door is closed:

DOOR SW-RR OFF

SEL154YB

Without CONSULT-II

Check voltage between smart entrance control unit harness connector M121 terminal 3 (R/L) and ground.

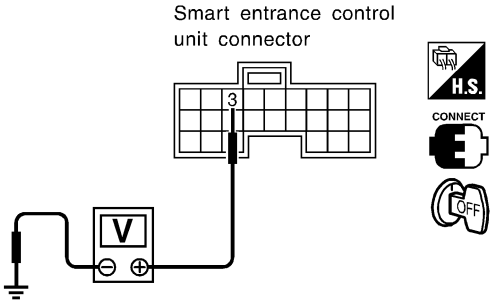

Voltage [V]:

Condition of rear door LH, RH and/or back door: CLOSED

Approx. 5

Condition of rear door LH, RH and/or back door: OPENED

0

SEL155YB

OK or NG

OK	▶	GO TO 8.
NG	▶	GO TO 7.

7 CHECK REAR AND BACK DOOR SWITCHES

1. Disconnect door switch harness connector.
2. Check the following.

- Continuity between rear door switches connector B18 and B71 terminal 1 and ground
- Continuity between back door switch connector D208 terminals 1 and 2

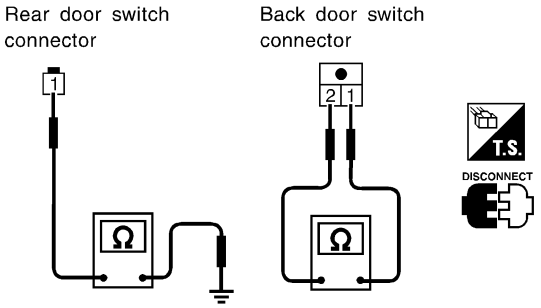

Continuity:

Door switch is pushed.

No

Door switch is released.

Yes

SEL279Y

OK or NG

OK	▶	**Check the following.** • Rear LH, RH and/or back door switch ground circuit or door switch ground condition • Harness for open or short between smart entrance control unit and rear LH, RH and/or back door switch
NG	▶	Replace rear LH, RH and/or back door switch.

8	CHECK KEY SWITCH INPUT SIGNAL

With CONSULT-II
Check key switch ("KEY ON SW") in "DATA MONITOR" mode with CONSULT-II.

DATA MONITOR	
MONITOR	
KEY ON SW	ON

When key is inserted to ignition key cylinder:
KEY ON SW ON
When key is removed from ignition key cylinder:
KEY ON SW OFF

SEL315W

Without CONSULT-II
Check voltage between smart entrance control unit harness connector M122 terminal 25 (W/R) and ground.

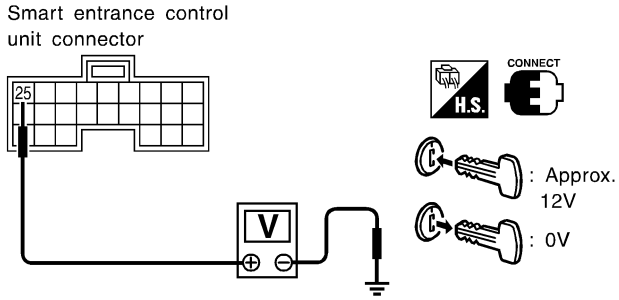

Voltage [V]:
Condition of key switch: Key is inserted.
Approx. 12
Condition of key switch: Key is removed.
0

SEL011Y

OK or NG

OK	▶	GO TO 10.
NG	▶	GO TO 9.

9	CHECK KEY SWITCH (INSERT)

Check continuity between key switch connector terminals 1 and 2.

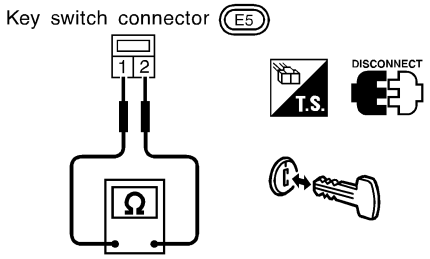

Continuity:
Condition of key switch: Key is inserted.
Yes
Condition of key switch: Key is removed.
No

SEL308X

OK or NG

OK	▶	**Check the following.** ● 7.5A fuse [No. 24, located in fuse block (J/B)] ● Harness for open or short between key switch and fuse ● Harness for open or short between smart entrance control unit and key switch
NG	▶	Replace key switch.

10	CHECK DOOR LOCK/UNLOCK SWITCH INPUT SIGNAL

With CONSULT-II

Check door lock/unlock switch ("LOCK SW DR/AS"/"UNLK SW DR/AS") in "DATA MONITOR" mode with CONSULT-II.

DATA MONITOR	
MONITOR	
LOCK SW DR/AS	OFF
UNLK SW DR/AS	OFF

When lock/unlock switch is turned to LOCK:
LOCK SW DR/AS ON

When lock/unlock switch is turned to UNLOCK:
UNLK SW DR/AS ON

SEL341W

Without CONSULT-II

1. Remove key from ignition key cylinder.
2. Check the signal between smart entrance control unit harness connector M122 terminal 33 (BR) and ground with oscilloscope when door lock/unlock switch is turned "LOCK" or "UNLOCK".
3. Make sure signals which are shown in the figure below can be detected during 10 sec. just after door lock/unlock switch is turned "LOCK" or "UNLOCK".

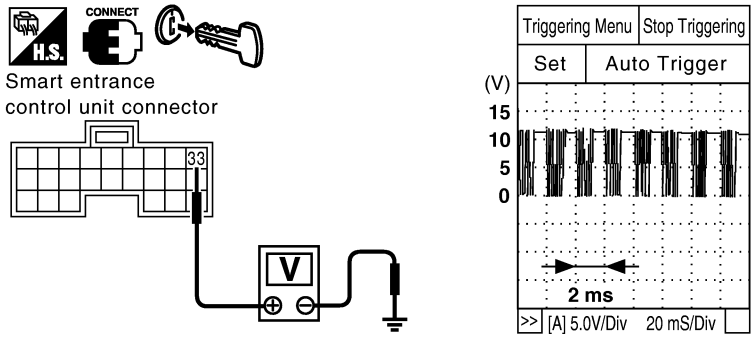

Voltage:
12V → 9V (10 sec.) measurement by analog circuit tester.

SEL699YA

OK or NG

OK	▶	Door lock/unlock switch is OK.
NG	▶	**Check the following.** ● Ground circuit for each front power window switch ● Harness for open or short between each front power window switch and smart entrance control unit connector If above systems are normal, replace the power window main switch.

11	CHECK DOOR KEY CYLINDER SWITCH INPUT SIGNAL (LOCK/UNLOCK SIGNAL)

With CONSULT-II

Check front door key cylinder switch ("KEY CYL LK-SW"/"KEY CYL UN-SW") in "DATA MONITOR" mode with CONSULT-II.

DATA MONITOR	
MONITOR	
KEY CYL LK-SW	OFF
KEY CYL UN-SW	OFF

When key inserted in front key cylinder is turned to LOCK:
KEY CYL LK-SW ON

When key inserted in front key cylinder is turned to UNLOCK:
KEY CYL UN-SW ON

SEL342W

Without CONSULT-II

1. Check the signal between smart entrance control unit harness connector M122 terminal 33 (BR) and ground with oscilloscope when key inserted in front key cylinder is turned "LOCK" or "UNLOCK".
2. Make sure signals which are shown in the figure below can be detected during 10 sec. just after key is turned "LOCK" or "UNLOCK".

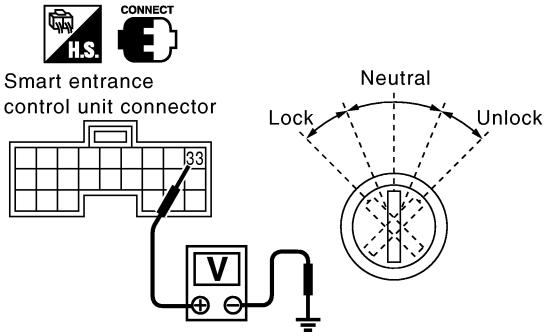

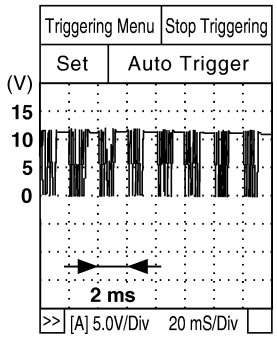

Voltage:
12V→9V (10 sec.)
measurement by analog circuit tester.

SEL700YA

OK or NG

OK	▶	Door key cylinder switch LH is OK.
NG	▶	GO TO 12.

12	CHECK FRONT DOOR KEY CYLINDER SWITCH INPUT SIGNAL (LOCK/UNLOCK SIGNAL)

Check voltage between power window main switch harness connector D6 terminals 4 (Y/L) or 6 (LG) and ground.

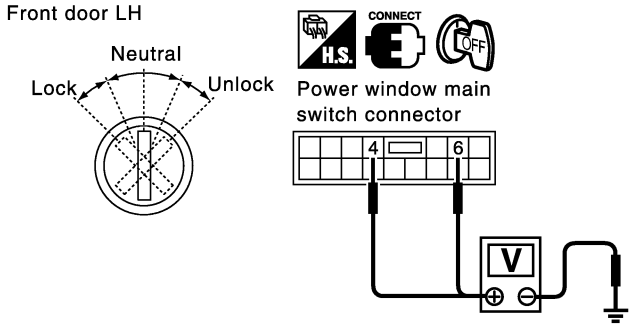

Door	Terminals (+)	Terminals (−)	Key position	Voltage V
Front door LH	4	Ground	Neutral/Unlock	Approx. 5
			Lock	0
	6	Ground	Neutral/Lock	Approx. 5
			Unlock	0

SEL792Y

OK or NG

OK	▶	Replace smart entrance control unit.
NG	▶	GO TO 13.

13	CHECK BACK DOOR KEY CYLINDER SWITCH INPUT SIGNAL (LOCK/UNLOCK SIGNAL)

With CONSULT-II

Check back door key cylinder switch ("KEY CYL LK-SW"/"KEY CYL UN-SW") in "DATA MONITOR" mode with CONSULT-II.

DATA MONITOR	
MONITOR	
KEY CYL LK-SW	OFF
KEY CYL UN-SW	OFF

When key inserted in back key cylinder is turned to LOCK:

KEY CYL LK-SW ON

When key inserted in back key cylinder is turned to UNLOCK:

KEY CYL UN-SW ON

SEL342WB

Without CONSULT-II

Check voltage between smart entrance control unit harness connector M121 terminals 10 (LG), 11 (Y) and ground.

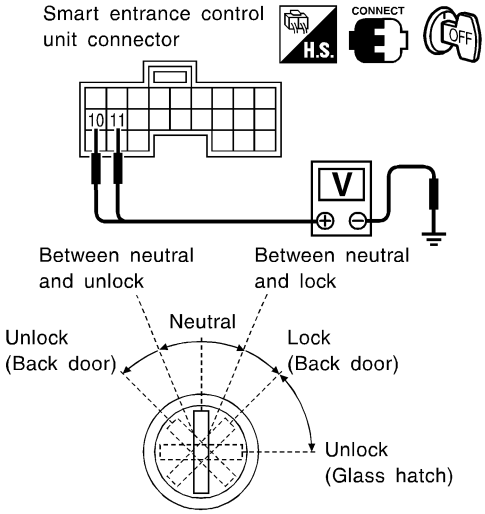

	Terminals (+)	Terminals (−)	Key position	Voltage [V]
Back door	11	Ground	Between neutral and lock	0
			Other positions	Approx. 5
	10	Ground	Between neutral and unlock	0
			Other positions	Approx. 5

SEL680Y

OK or NG

OK	▶	Replace smart entrance control unit.
NG	▶	GO TO 14.

14	CHECK DOOR KEY CYLINDER SWITCH

1. Disconnect door key cylinder switch harness connector.
2. Check continuity between each key cylinder switch connector terminals.

- Front door key cylinder switch LH harness connector D9

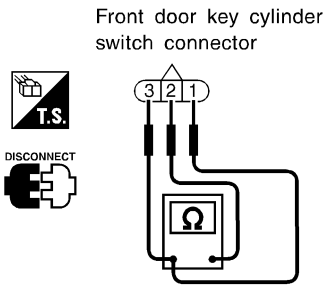

① : Door unlock switch terminal
② : Ground terminal
③ : Door lock switch terminal

Terminals	Key position	Continuity
③ - ②	Neutral/Unlock	No
	Lock	Yes
① - ②	Neutral/Lock	No
	Unlock	Yes

SEL793Y

- Back door key cylinder switch harness connector D201

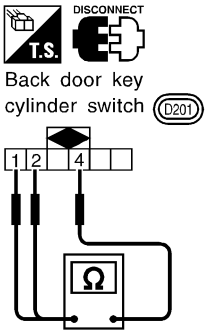

Key position	Terminals		
	1	2	4
Between neutral and lock (Back door)	○		○
Between neutral and unlock (Back door)		○	○

SEL315X

OK or NG

OK ▶	**Check the following.** • Front or back door key cylinder switch ground circuit • Harness for open or short between back door key cylinder switch and smart entrance control unit connector • Harness for open or short between front door key cylinder switch LH and power window main switch
NG ▶	Replace front or back door key cylinder switch.

DIAGNOSTIC PROCEDURE 2

=NAEL0295S02

SYMPTOM: Interior lamp timer does not cancel properly.

1 CHECK IGNITION ON SIGNAL

With CONSULT-II

Check ignition switch ON signal ("IGN ON SW") in "DATA MONITOR" mode with CONSULT-II.

DATA MONITOR	
MONITOR	
IGN ON SW	ON

When ignition switch is ON:
IGN ON SW ON

When ignition switch is OFF:
IGN ON SW OFF

SEL318W

Without CONSULT-II

Check voltage between smart entrance control unit harness connector M122 terminal 27 (W/B) and ground.

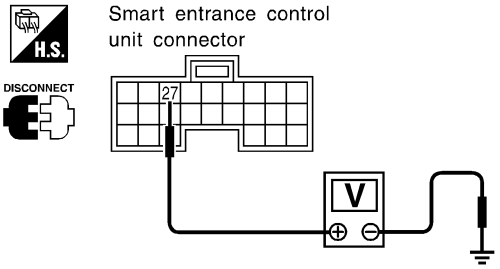

Terminals		Ignition switch position		
(+)	(–)	OFF	ACC	ON
27	Ground	0V	0V	Battery voltage

SEL995X

OK or NG

OK	▶	GO TO 2.
NG	▶	**Check the following.** ● 7.5A fuse [No. 11, located in fuse block (J/B)] ● Harness for open or short between smart entrance control unit and fuse

2	CHECK FRONT LH DOOR SWITCH INPUT SIGNAL

With CONSULT-II
Check driver door switch signal ("DOOR SW-DR") in "DATA MONITOR" mode with CONSULT-II.

DATA MONITOR	
MONITOR	
DOOR SW-DR	OFF

When front door LH is open:
DOOR SW-DR ON

When front door LH is closed:
DOOR SW-DR OFF

SEL319WB

Without CONSULT-II
Check voltage between smart entrance control unit harness connector M121 terminal 1 (G/OR) and ground.

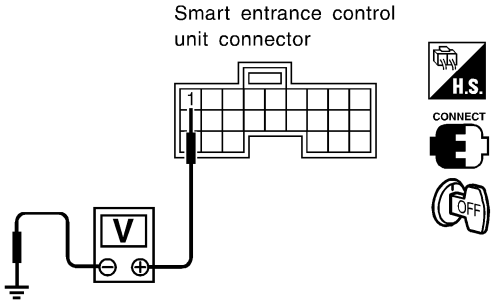

Voltage [V]:
Condition of front door LH: CLOSED
Approx. 5
Condition of front door LH: OPENED
0

SEL004YD

OK or NG

OK	▶	GO TO 4.
NG	▶	GO TO 3.

3	CHECK FRONT DOOR SWITCH LH

Check the following.
- Continuity between front door switch LH connector B9 terminals 1 and 2
- Continuity between front door switch LH connector B9 terminal 3 and ground

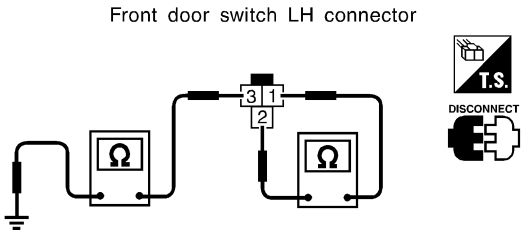

Continuity:
Door switch is pushed.
No
Door switch is released.
Yes

SEL277YA

OK or NG

OK	▶	**Check the following.** • Front door switch LH ground circuit and condition • Harness for open or short between smart entrance control unit and front door switch LH
NG	▶	Replace front door switch LH.

4	CHECK DOOR LOCK/UNLOCK SWITCH INPUT SIGNAL

With CONSULT-II

Check door lock/unlock switch ("LOCK SW DR/AS"/"UNLK SW DR/AS") in "DATA MONITOR" mode with CONSULT-II.

DATA MONITOR	
MONITOR	
LOCK SW DR/AS	OFF
UNLK SW DR/AS	OFF

When lock/unlock switch is turned to LOCK:
LOCK SW DR/AS ON

When lock/unlock switch is turned to UNLOCK:
UNLK SW DR/AS ON

SEL341W

Without CONSULT-II

1. Remove key from ignition key cylinder.
2. Check the signal between smart entrance control unit harness connector M122 terminal 33 (BR) and ground with oscilloscope when door lock/unlock switch is turned "LOCK" or "UNLOCK".
3. Make sure signals which are shown in the figure below can be detected during 10 sec. just after door lock/unlock switch is turned "LOCK" or "UNLOCK".

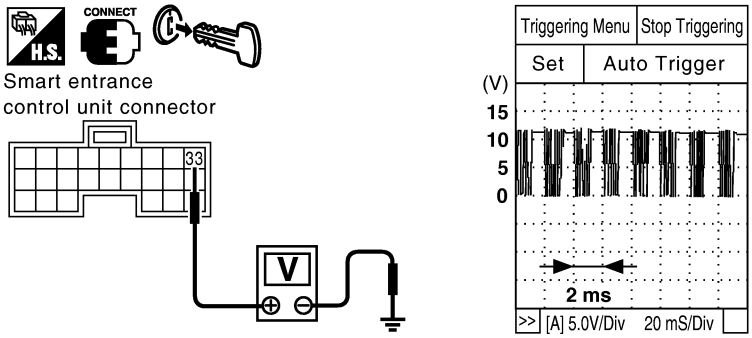

Voltage:
12V → 9V (10 sec.) measurement by analog circuit tester.

SEL699YA

OK or NG

OK	▶	Door lock/unlock switch is OK.
NG	▶	**Check the following.** ● Ground circuit for each front power window switch ● Harness for open or short between each front power window switch and smart entrance control unit connector If above systems are normal, replace the front power window switch.

5	CHECK DOOR KEY CYLINDER SWITCH INPUT SIGNAL (LOCK/UNLOCK SIGNAL)

With CONSULT-II

Check front door key cylinder switch ("KEY CYL LK-SW"/"KEY CYL UN-SW") in "DATA MONITOR" mode with CONSULT-II.

DATA MONITOR	
MONITOR	
KEY CYL LK-SW	OFF
KEY CYL UN-SW	OFF

When key inserted in front key cylinder is turned to LOCK:
KEY CYL LK-SW ON

When key inserted in front key cylinder is turned to UNLOCK:
KEY CYL UN-SW ON

SEL342W

Without CONSULT-II

1. Check the signal between smart entrance control unit harness connector M122 terminal 33 (BR) and ground with oscilloscope when key inserted in front key cylinder is turned "LOCK" or "UNLOCK".
2. Make sure signals which are shown in the figure below can be detected during 10 sec. just after key is turned "LOCK" or "UNLOCK".

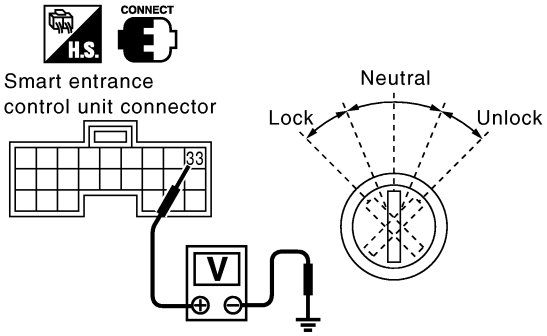

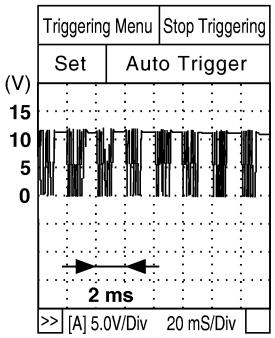

Voltage:
12V→9V (10 sec.)
measurement by analog circuit tester.

SEL700YA

OK or NG

OK	▶	Door key cylinder switch LH is OK.
NG	▶	GO TO 6.

6	CHECK FRONT DOOR KEY CYLINDER SWITCH INPUT SIGNAL (LOCK/UNLOCK SIGNAL)

Check voltage between power window main switch harness connector D6 terminals 4 (Y/L) or 6 (LG) and ground.

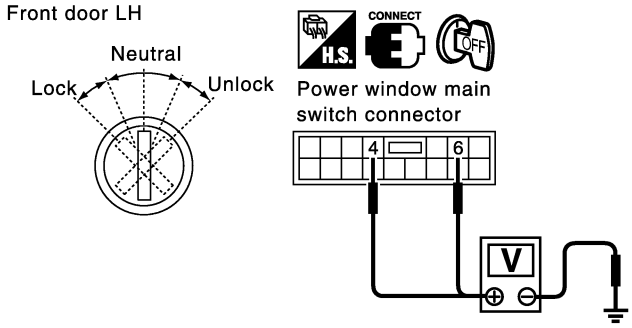

Door	Terminals (+)	Terminals (−)	Key position	Voltage V
Front door LH	4	Ground	Neutral/Unlock	Approx. 5
			Lock	0
	6	Ground	Neutral/Lock	Approx. 5
			Unlock	0

SEL792Y

OK or NG

OK	▶	Replace smart entrance control unit.
NG	▶	GO TO 7.

7	CHECK BACK DOOR KEY CYLINDER SWITCH INPUT SIGNAL (LOCK/UNLOCK SIGNAL)

With CONSULT-II

Check back door key cylinder switch ("KEY CYL LK-SW"/"KEY CYL UN-SW") in "DATA MONITOR" mode with CONSULT-II.

DATA MONITOR	
MONITOR	
KEY CYL LK-SW	OFF
KEY CYL UN-SW	OFF

When key inserted in back key cylinder is turned to LOCK:

KEY CYL LK-SW ON

When key inserted in back key cylinder is turned to UNLOCK:

KEY CYL UN-SW ON

SEL342WB

Without CONSULT-II

Check voltage between smart entrance control unit harness connector M121 terminals 10 (LG), 11 (Y) and ground.

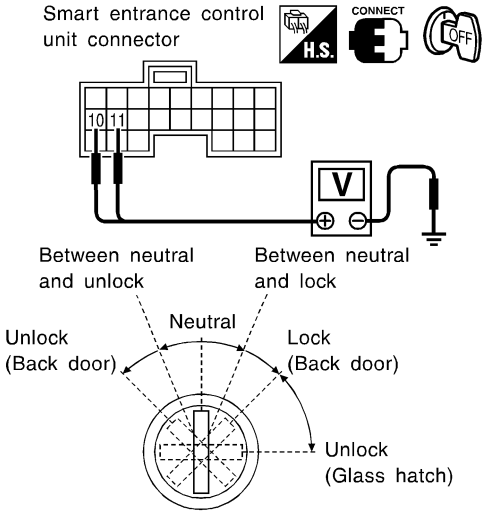

	Terminals (+)	Terminals (−)	Key position	Voltage [V]
Back door	11	Ground	Between neutral and lock	0
			Other positions	Approx. 5
	10	Ground	Between neutral and unlock	0
			Other positions	Approx. 5

SEL680Y

OK or NG

OK	▶	Replace smart entrance control unit.
NG	▶	GO TO 8.

8	CHECK DOOR KEY CYLINDER SWITCH

1. Disconnect door key cylinder switch harness connector.
2. Check continuity between each key cylinder switch connector terminals.

- Front door key cylinder switch harness connector D9

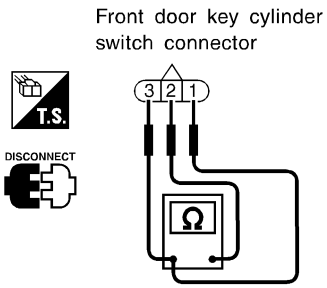

① : Door unlock switch terminal
② : Ground terminal
③ : Door lock switch terminal

Terminals	Key position	Continuity
③ - ②	Neutral/Unlock	No
	Lock	Yes
① - ②	Neutral/Lock	No
	Unlock	Yes

SEL793Y

- Back door key cylinder switch harness connector D201

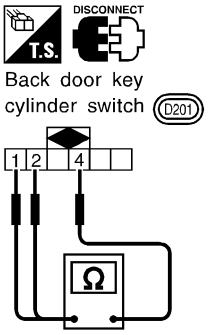

Key position	Terminals		
	1	2	4
Between neutral and lock (Back door)	○		○
Between neutral and unlock (Back door)		○	○

SEL315X

OK or NG

OK	▶	**Check the following.** • Front or back door key cylinder switch ground circuit • Harness for open or short between back door key cylinder switch and smart entrance control unit connector • Harness for open or short between front door key cylinder switch and power window main switch
NG	▶	Replace front or back door key cylinder switch.

Component Parts and Harness Connector Location

NAEL0296

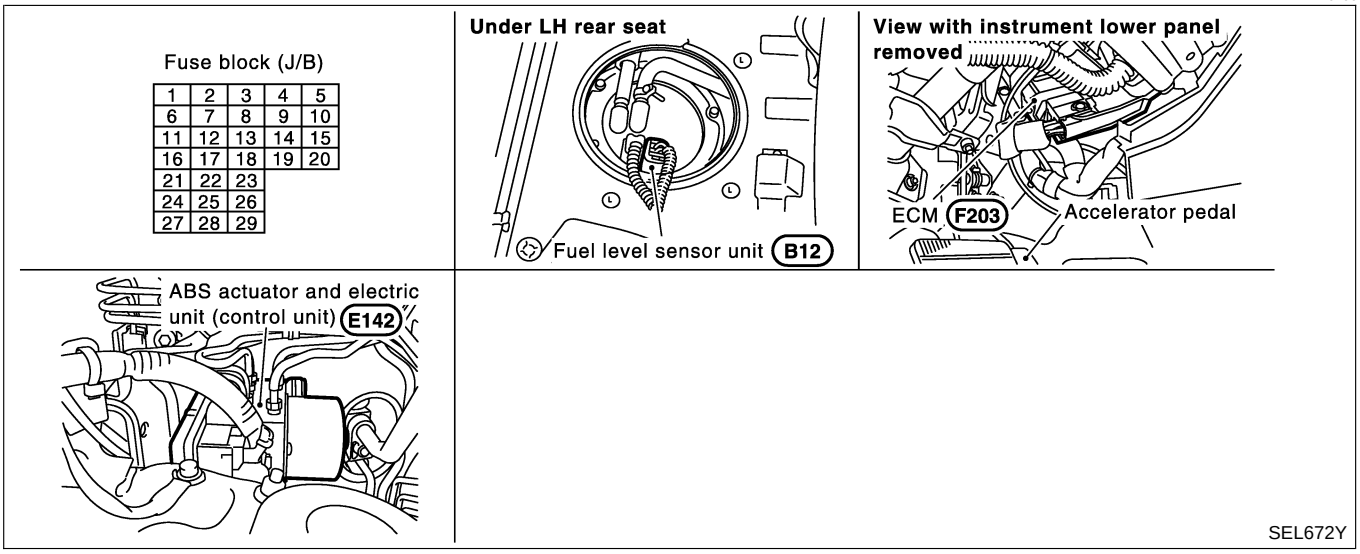

System Description

NAEL0297

UNIFIED CONTROL METER

NAEL0297S01

- Speedometer, odo/trip meter, tachometer, fuel gauge and water temperature gauge are controlled totally by control unit.
- Digital meter is adopted for odo/trip meter.*
  *The record of the odo meter is kept even if the battery cable is disconnected. The record of the trip meter is erased when the battery cable is disconnected.
- Odo/trip meter segment can be checked in diagnosis mode.
- Meter/gauge can be checked in diagnosis mode.

HOW TO CHANGE THE DISPLAY FOR ODO/TRIP METER

NAEL0297S02

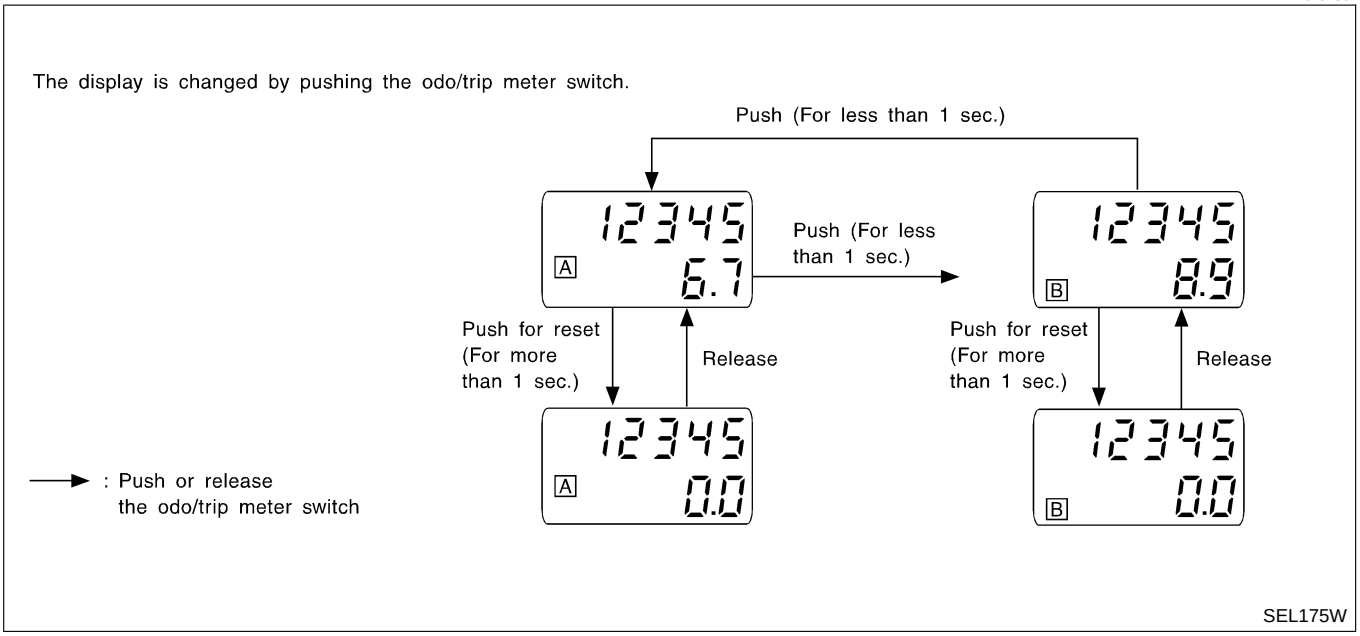

NOTE:
Turn ignition switch to the “ON” position to operate odo/trip meter.

POWER SUPPLY AND GROUND CIRCUIT

NAEL0297S03

Power is supplied at all times

- through 7.5A fuse [No. 24, located in the fuse block (J/B)]
- to combination meter terminal 62.

With the ignition switch in the ON or START position, power is supplied

- through 10A fuse [No. 8, located in the fuse block (J/B)]
- to combination meter terminal 66.

Ground is supplied

- to combination meter terminal 59
- through body grounds M4, M66, M111, M147 and M157.

WATER TEMPERATURE GAUGE

NAEL0297S04

The water temperature gauge indicates the engine coolant temperature. ECM provides an engine coolant temperature signal to the combination meter for the water temperature gauge with CAN communication line. The needle on the gauge moves from "C" to "H".

TACHOMETER

NAEL0297S05

The tachometer indicates engine speed in revolutions per minute (rpm).
ECM provides an engine speed signal to the combination meter for the tachometer with CAN communication line.

FUEL GAUGE

NAEL0297S06

The fuel gauge indicates the approximate fuel level in the fuel tank.
The fuel gauge is regulated by a variable ground signal supplied

- to combination meter terminal 17 for the fuel gauge
- from terminal 3 of the fuel level sensor unit
- through terminal 2 of the fuel level sensor unit and
- through combination meter terminal 23.

SPEEDOMETER

NAEL0297S07

Without VDC

NAEL0297S0701

The ABS actuator and electric unit (control unit) provides a voltage signal to the combination meter for the speedometer.
The voltage is supplied

- from combination meter terminal 15 for the speedometer
- to terminal 19 of the ABS actuator and electric unit (control unit).

The speedometer converts the voltage into the vehicle speed displayed.

With VDC

NAEL0297S0702

The ABS actuator and electric unit (control unit) provides a vehicle speed signal to the combination meter for the speedometer with CAN communication line.

CAN COMMUNICATION SYSTEM

NAEL0297S09

Combination meter recieves vehicle speed signal and engine coolant temperature signal etc. from some control units with can communication line. Refer to "CAN COMMUNICATION" (EL-409).

Combination Meter/With Normal Meter

NAEL0298

CHECK

NAEL0298S01

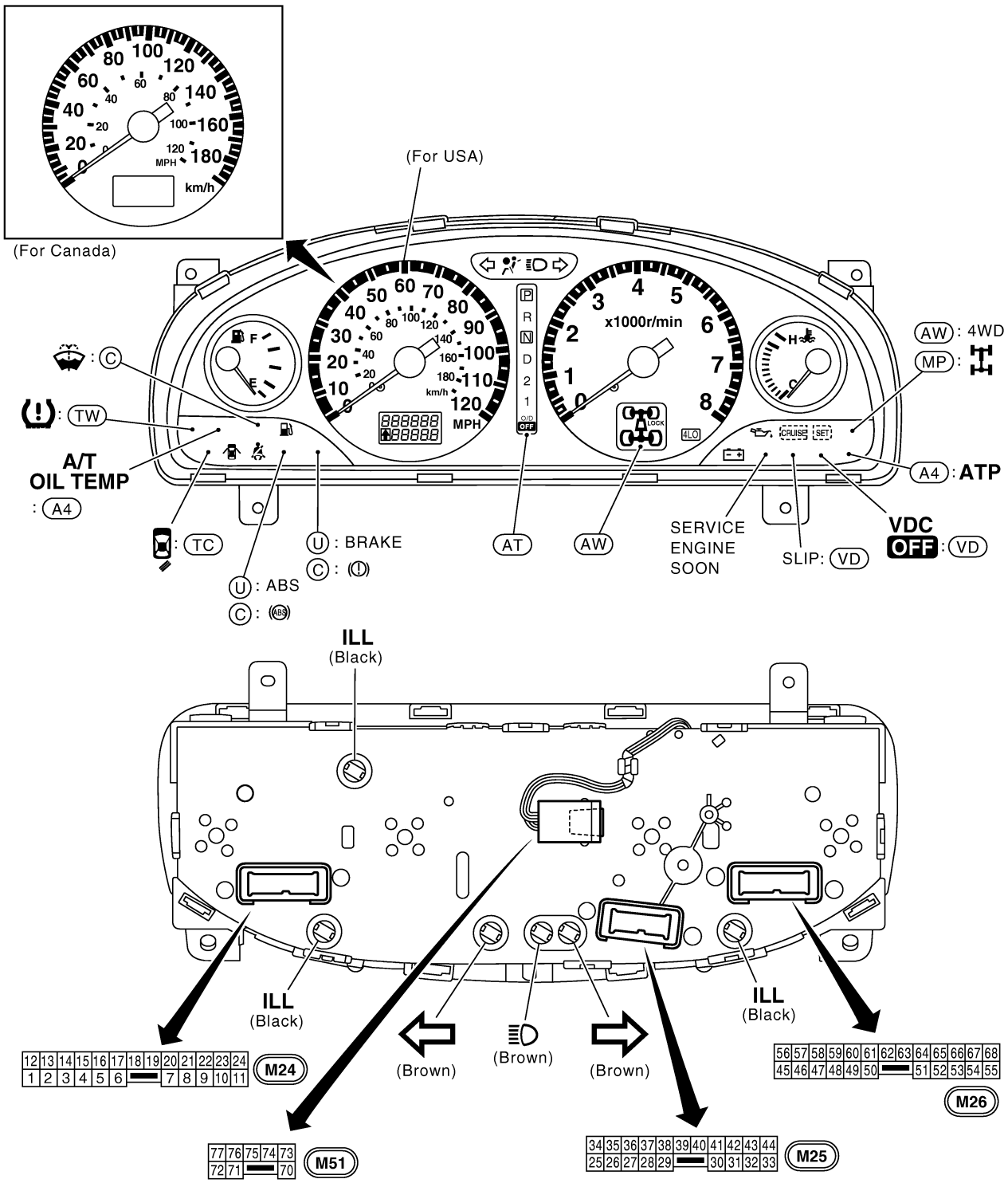

Bulb socket color	Bulb wattage
Brown	1.4W
Black	3.0W

( ): Bulb socket color

U : For USA
C : For Canada
AW : With all-mode 4-wheel drive
MP : With M/T and part-time 4-wheel drive

A4 : With A/T and 4-wheel drive
TC : With spare tire carrier
TW : With low tire pressure warning system
AT : With A/T
VD : With VDC

MEL970R

CONSTRUCTION

NAEL0298S02

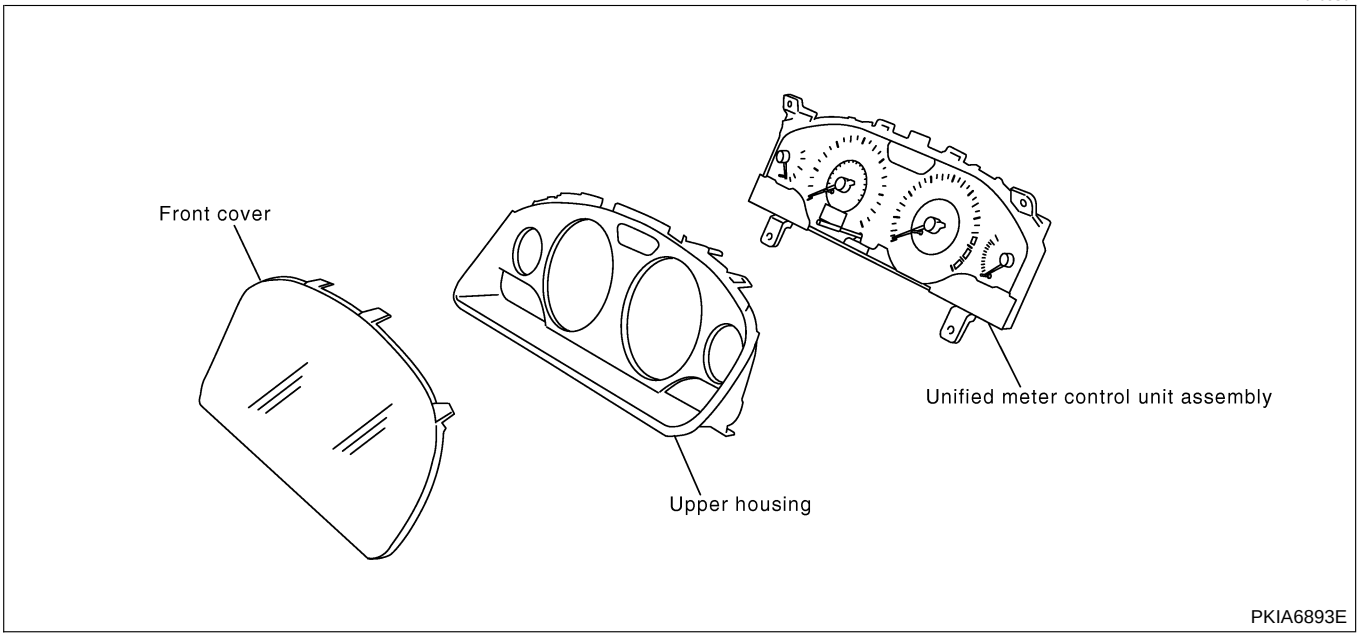

Combination Meter/With Fine Vision Meter

NAEL0486

CHECK

NAEL0486S01

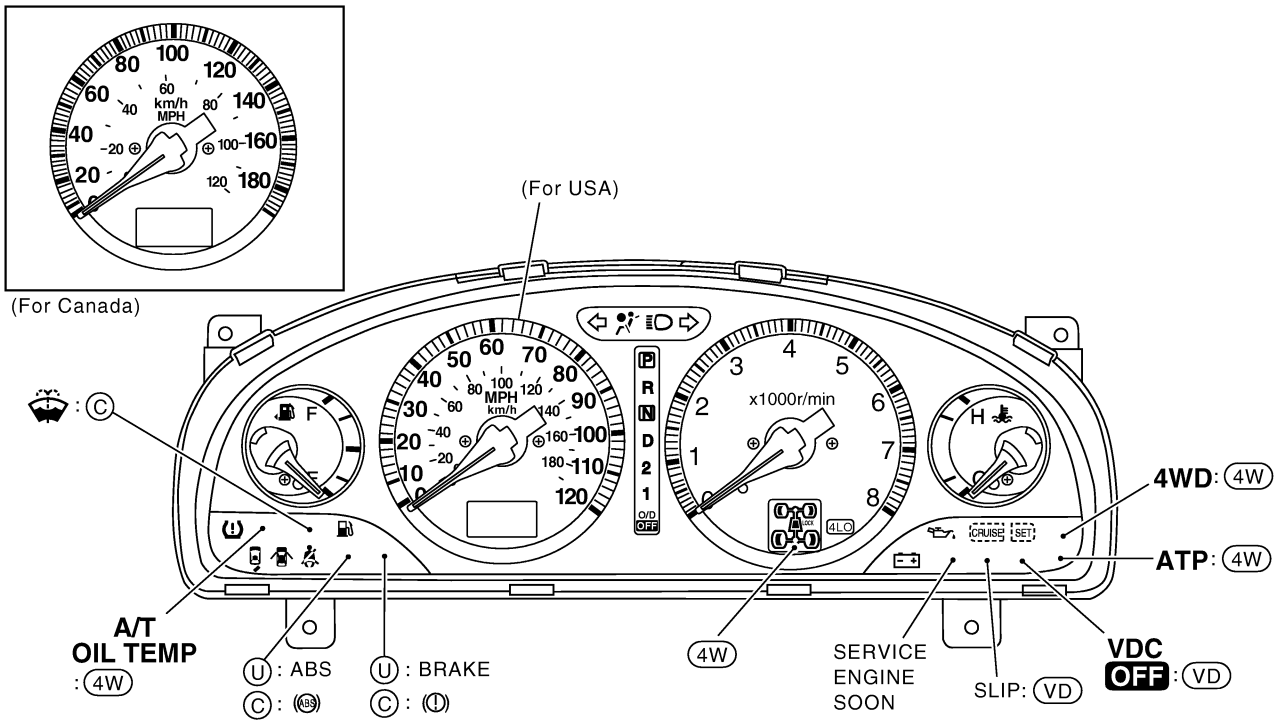

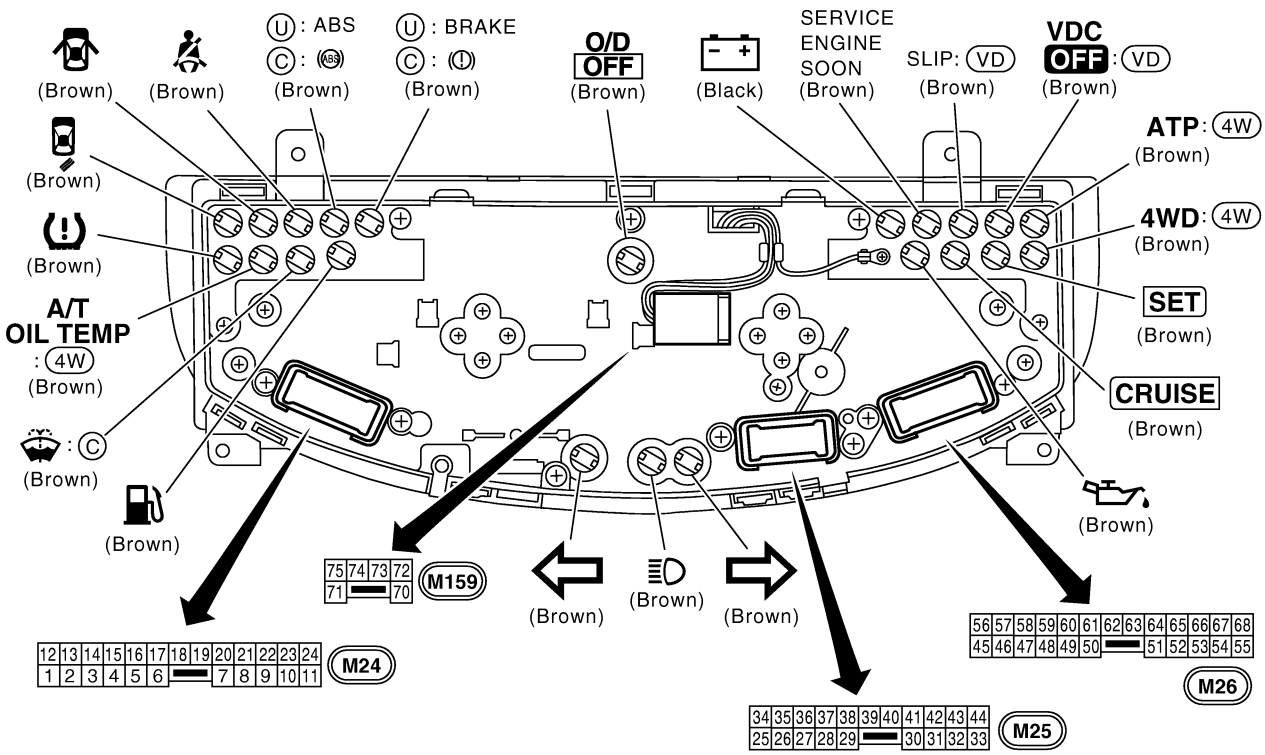

Bulb socket color	Bulb wattage
Brown	1.4W
Black	3.0W

( ) : Bulb socket color

U : For USA
C : For Canada
4W : With 4-wheel drive
VD : With VDC

MEL971R

CONSTRUCTION

NAEL0486S02

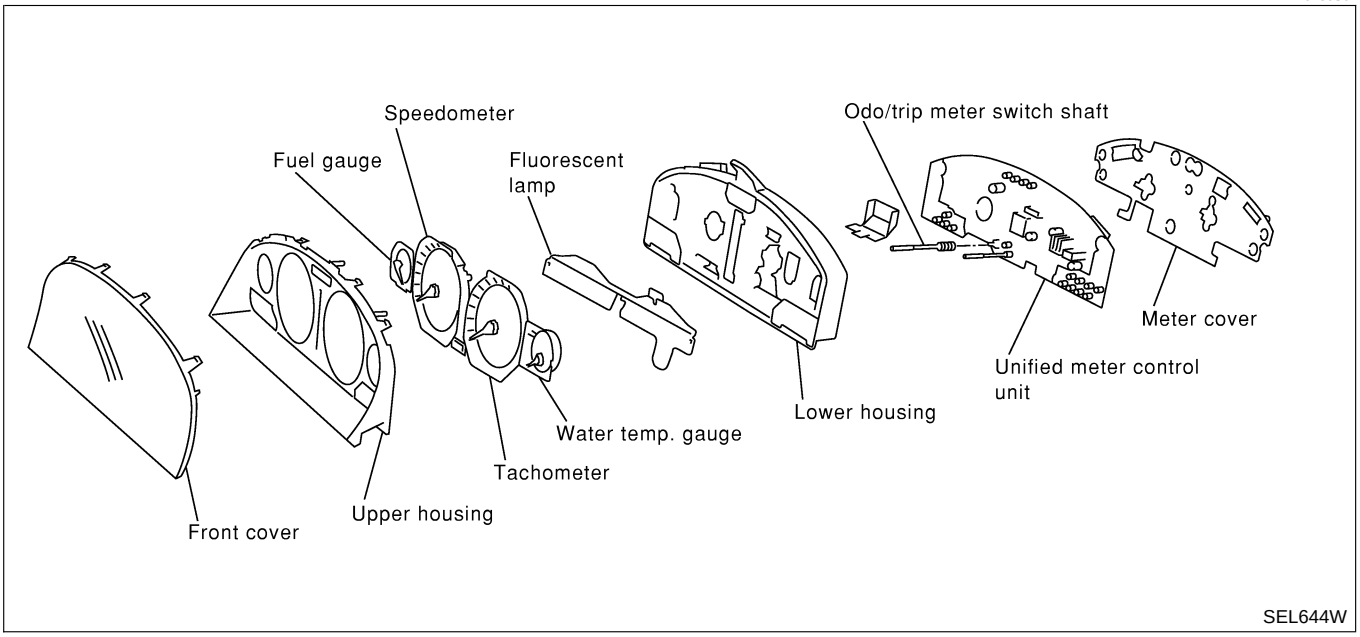

Schematic/With Normal Meter

NAEL0299

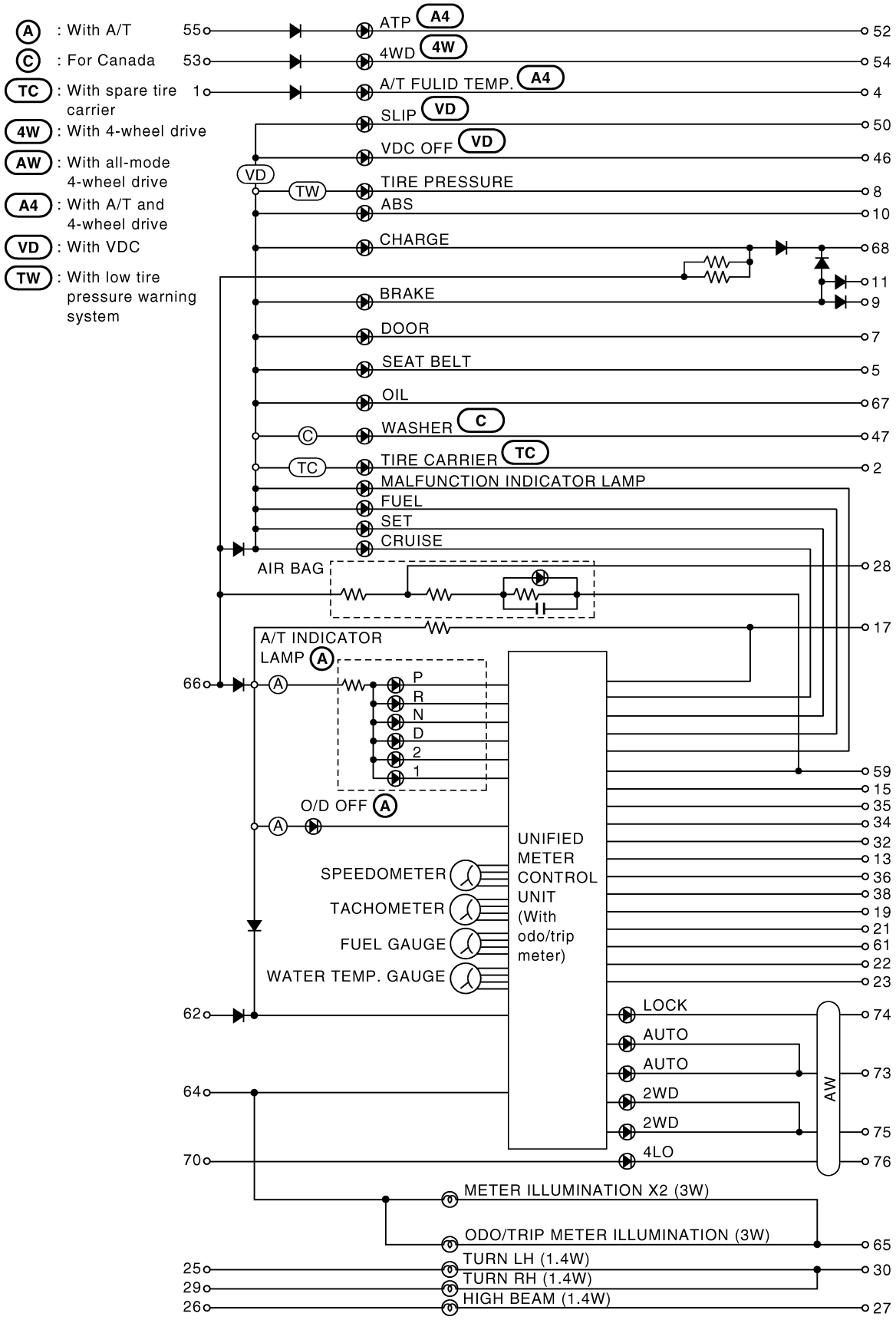

MEL972R

Schematic/With Fine Vision Meter

NAEL0487

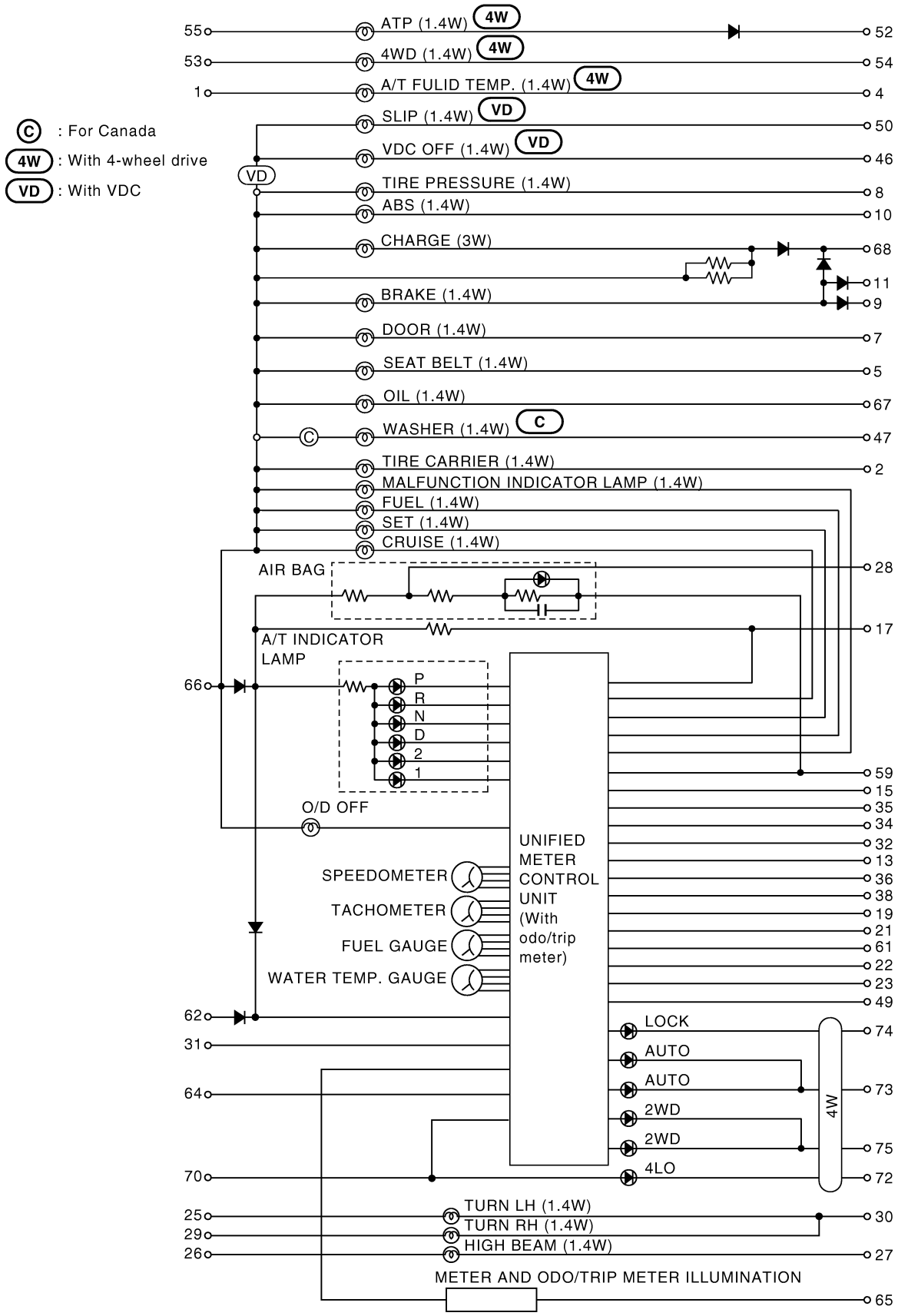

MEL973R

Wiring Diagram — METER —

NAEL0300

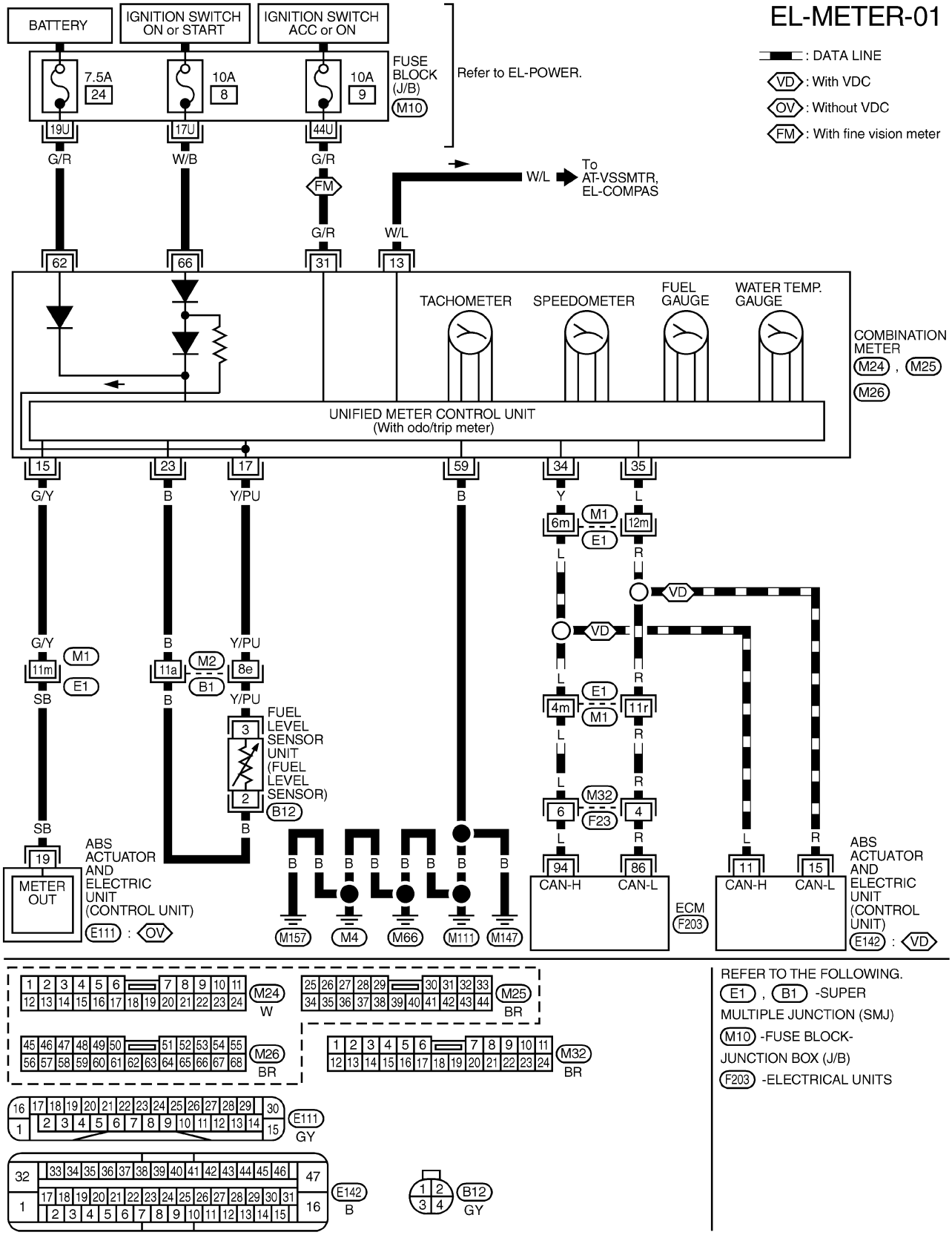

MEL940R

Meter/Gauge Operation and Odo/Trip Meter Segment Check in Diagnosis Mode

NAEL0301

DIAGNOSIS FUNCTION

NAEL0301S01

- Odo/trip meter segment can be checked in diagnosis mode.
- Meters/gauges can be checked in diagnosis mode.

HOW TO ALTERNATE DIAGNOSIS MODE

NAEL0301S02

1. Turn ignition switch to ON and change odo/trip meter to “TRIP A” or “TRIP B”.
2. Turn ignition switch to OFF.
3. Turn ignition switch to ON when pushing odo/trip meter switch.
4. Push odo/trip meter switch 1 second.
5. Release odo/trip meter switch.
6. Push odo/trip meter switch more than three times. (Within 7 seconds after the ignition switch is turned ON.)

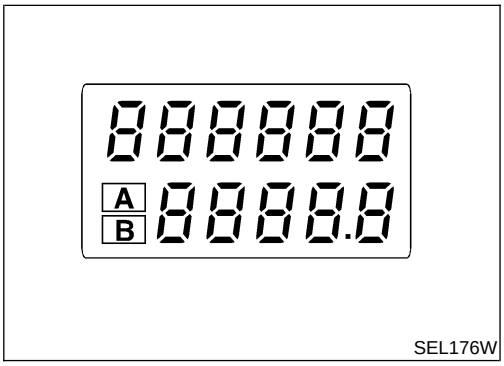

SEL176W

7. All odo/trip meter segments should be turned on.

NOTE:
If some segments are not turned on, unified meter control unit with odo/trip meter should be replaced.

At this point, the unified control meter is turned to diagnosis mode.

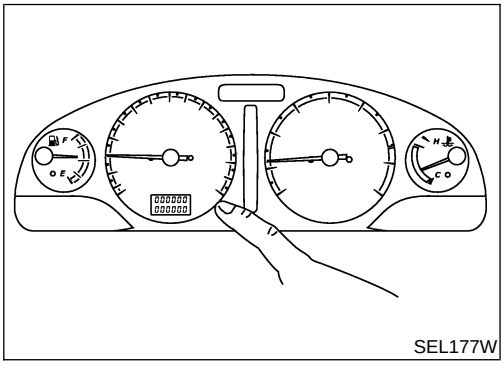
SEL177W

8. Push odo/trip meter switch. Indication of each meter/gauge should be as shown left during pushing odo/trip meter switch if it is no malfunctioning.

NOTE:
It takes about a few seconds for indication of fuel gauge and water temperature gauge to become stable.

Trouble Diagnoses

NAEL0302

PRELIMINARY CHECK FOR NORMAL METER

NAEL0302S01

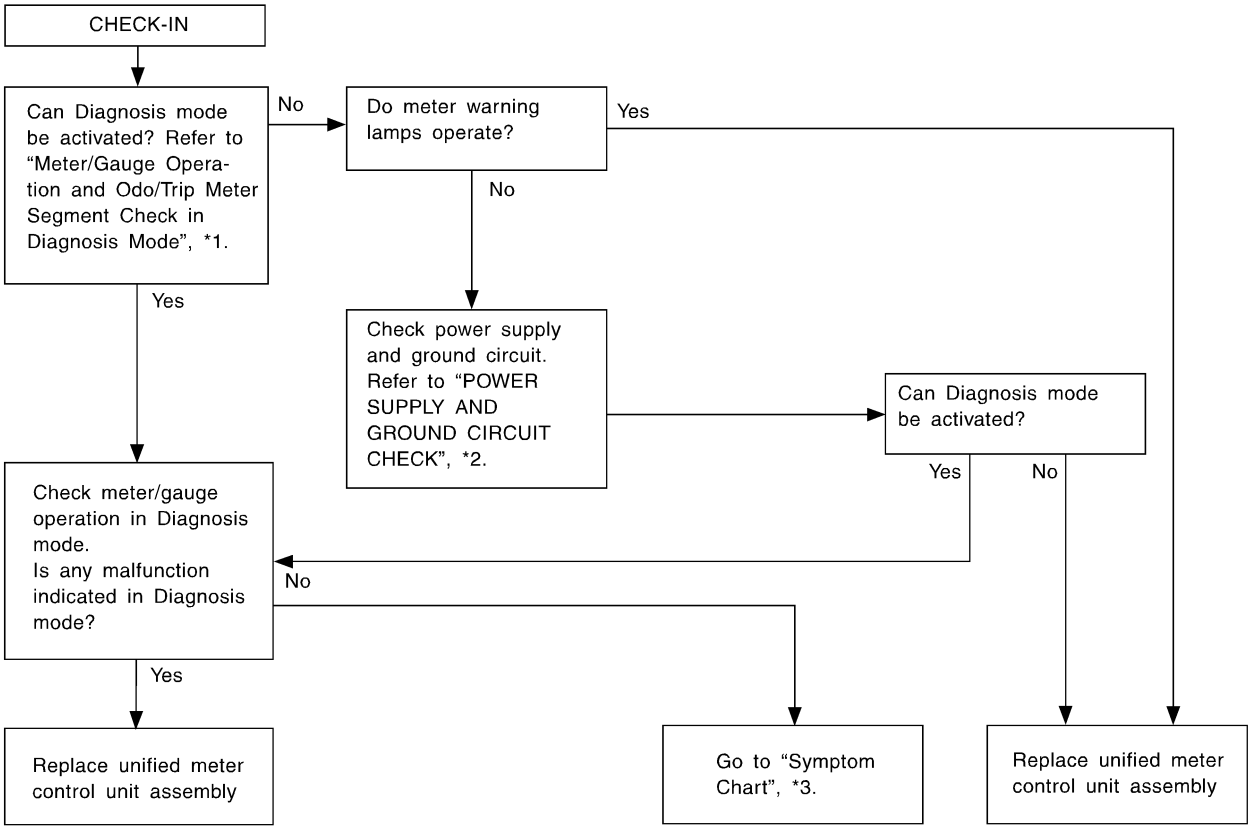

SEL494Y

*1: Meter/Gauge Operation and Odo/Trip Meter Segment Check in Diagnosis Mode (EL-133)

*2: POWER SUPPLY AND GROUND CIRCUIT CHECK (EL-137)

*3: Symptom Chart (EL-134)

SYMPTOM CHART FOR NORMAL METER

NAEL0302S02

Symptom	Possible causes	Repair order
One of speedometer/tachometer/fuel gauge/water temp. gauge is malfunctioning.	1. Sensor signal - Vehicle speed signal - Engine speed signal - Fuel gauge - Water temp. gauge 2. Unified meter control unit	1. Check the sensor for malfunctioning meter/gauge. INSPECTION/VEHICLE SPEED SIGNAL WITH VDC (Refer to EL-137.) INSPECTION/VEHICLE SPEED SIGNAL WITHOUT VDC (Refer to EL-138.) INSPECTION/ENGINE SPEED SIGNAL (Refer to EL-138.) INSPECTION/FUEL LEVEL SENSOR UNIT (Refer to EL-139.) INSPECTION/WATER TEMPERATURE SIGNAL (Refer to EL-140.) 2. Replace unified meter control unit assembly.
Multiple meter/gauge are malfunctioning. (except odo/trip meter)		

Before starting trouble diagnoses below, perform PRELIMINARY CHECK FOR NORMAL METER, EL-134.

PRELIMINARY CHECK FOR FINE VISION METER

NAEL0302S12

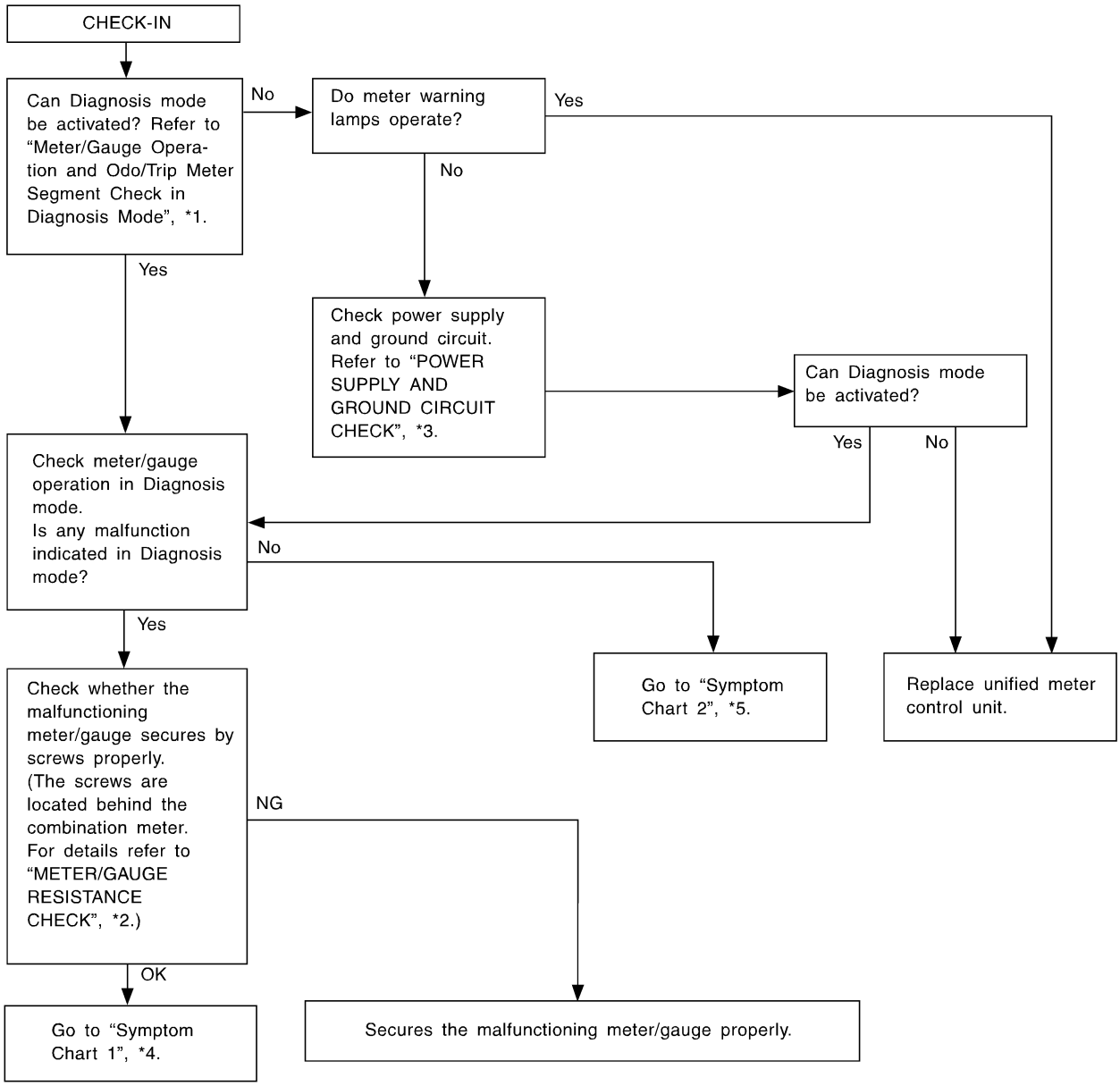

SEL361W

*1: Meter/Gauge Operation and Odo/Trip Meter Segment Check in Diagnosis Mode (EL-133)

*2: METER/GAUGE RESISTANCE CHECK FOR FINE VISION METER (EL-140)

*3: POWER SUPPLY AND GROUND CIRCUIT CHECK (EL-137)

*4: Symptom Chart 1 (EL-136)

*5: Symptom Chart 2 (EL-136)

SYMPTOM CHART FOR FINE VISION METER

NAEL0302S13

Symptom Chart 1 (Malfunction is Indicated in Diagnosis Mode)

NAEL0302S1301

Symptom	Possible causes	Repair order
Odo/trip meter indicate(s) malfunction in Diagnosis mode.	Unified meter control unit	Replace unified meter control unit.
Multiple meter/gauge indicate malfunction in Diagnosis mode.		
One of speedometer/ tachometer/fuel gauge/ water temp. gauge indicates malfunction in Diagnosis mode.	1. Meter/Gauge 2. Unified meter control unit	1. Check resistance of meter/gauge indicating malfunction. If the resistance is NG, replace the meter/ gauge. Refer to "METER/GAUGE RESISTANCE CHECK FOR FINE VISION METER", EL-140. 2. If the resistance of meter/gauge is OK, replace unified meter control unit.

Symptom Chart 2 (No Malfunction is Indicated in Diagnosis Mode)

NAEL0302S1302

Symptom	Possible causes	Repair order
One of speedometer/ tachometer/fuel gauge/ water temp. gauge is malfunctioning.	1. Sensor signal - Vehicle speed signal - Engine revolution signal - Fuel gauge - Water temp. gauge 2. Unified meter control unit	1. Check the sensor for malfunctioning meter/gauge. INSPECTION/VEHICLE SPEED SIGNAL WITH VDC (Refer to EL-137.) INSPECTION/VEHICLE SPEED SIGNAL WITHOUT VDC (Refer to EL-138.) INSPECTION/ENGINE SPEED SIGNAL (Refer to EL-138.) INSPECTION/FUEL LEVEL SENSOR UNIT (Refer to EL-139.) INSPECTION/WATER TEMPERATURE SIGNAL (Refer to EL-140.) 2. Replace unified meter control unit assembly.
Multiple meter/gauge are malfunctioning. (except odo/trip meter)		

Before starting trouble diagnoses below, perform PRELIMINARY CHECK FOR FINE VISION METER, EL-135.

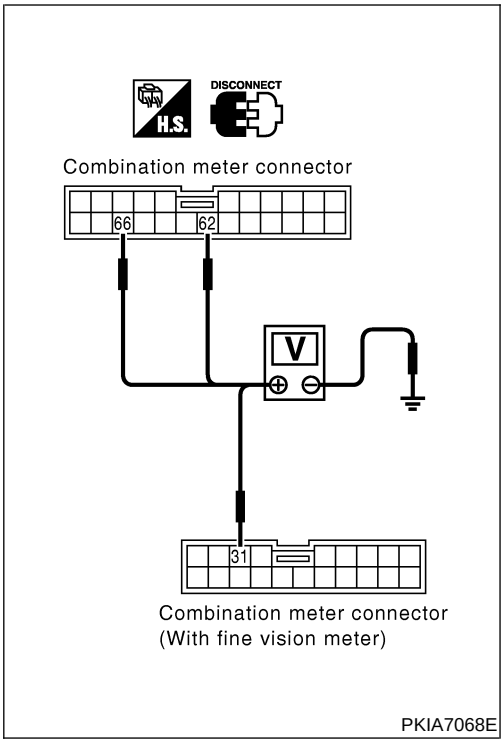

POWER SUPPLY AND GROUND CIRCUIT CHECK

=NAEL0302S03

Power Supply Circuit Check

NAEL0302S0301

Terminals			Ignition switch position		
(+)		(−)	OFF	ACC	ON
Connector	Terminal (wire color)				
M25*	31 (G/R)	Ground	0V	Battery voltage	Battery voltage
M26	62 (G/R)	Ground	Battery voltage	Battery voltage	Battery voltage
	66 (W/B)	Ground	0V	0V	Battery voltage

*: With fine vision meter

If NG, check the following.

- 7.5A fuse [No. 24, located in fuse block (J/B)]
- 10A fuse [No. 8, located in fuse block (J/B)]
- 10A fuse [No. 9, located in fuse block (J/B)]
- Harness for open or short between fuse and combination meter

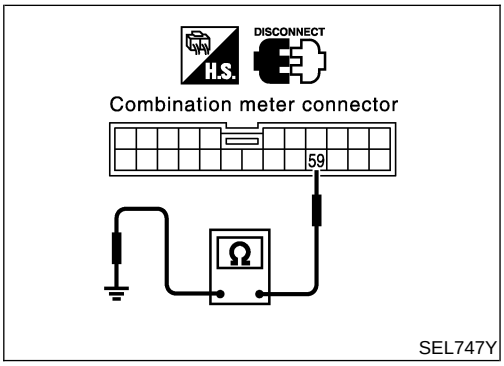

Ground Circuit Check

NAEL0302S0302

Terminals			Continuity
(+)		(−)	
Connector	Terminal (wire color)		
M26	59 (B)	Ground	Yes

INSPECTION/VEHICLE SPEED SIGNAL WITH VDC

NAEL0302S11

1	CHECK ABS ACTUATOR AND ELECTRIC UNIT (CONTROL UNIT) OUTPUT	
Perform ABS actuator and electric unit (control unit) self-diagnosis. Refer to BR-103, "CONSULT-II Functions".		
OK or NG		
OK	▶	Replace combination meter.
NG	▶	Check ABS actuator and electric unit (control unit). Refer to BR-91, "Trouble Diagnosis".

INSPECTION/VEHICLE SPEED SIGNAL WITHOUT VDC

=NAEL0302S04

1	CHECK ABS ACTUATOR AND ELECTRIC UNIT (CONTROL UNIT) OUTPUT SIGNAL

With CONSULT-II

1. Lift up drive wheels.
2. Start engine and drive vehicle at more than 20 km/h (12 MPH).
3. Check signal between combination meter harness connector M24 terminal 15 (G/Y) and ground when rotating wheels with engine at idle. (Use "SIMPLE OSCILLOSCOPE" in "SUB MODE" with CONSULT-II.)

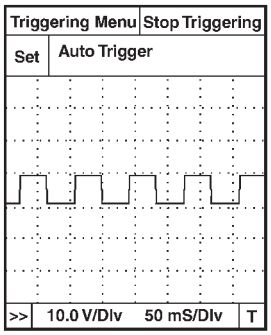

SEL938W

Without CONSULT-II

1. Lift up drive wheels.
2. Start engine and drive vehicle at more than 20 km/h (12 MPH).
3. Check voltage between combination meter harness connector M24 terminal 15 (G/Y) and ground when rotating wheels with engine at idle.

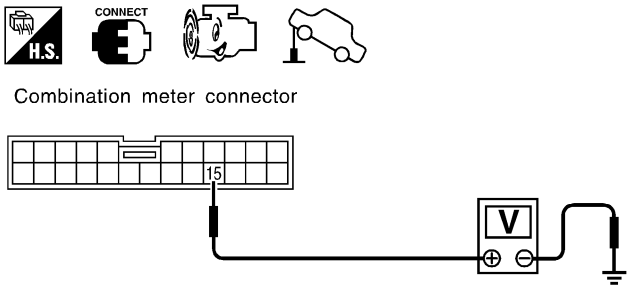

Voltage: Approx. 0 - 5V

SEL939WB

OK or NG

OK	▶	ABS actuator and electric unit (control unit) is OK.
NG	▶	**Check the following.** ● Harness for open or short between ABS actuator and electric unit (control unit) and combination meter. ● ABS actuator and electric unit (control unit). Refer to BR-56, "Wheel Sensor or Rotor".

INSPECTION/ENGINE SPEED SIGNAL

NAEL0302S05

1	CHECK ECM SELF-DIAGNOSIS

Perform ECM self-diagnosis. Refer to EC-78, "Emission-related Diagnostic Information".

OK or NG

OK	▶	Replace combination meter.
NG	▶	Perform "Diagnostic Procedure" for displayed DTC.

INSPECTION/FUEL LEVEL SENSOR UNIT

=NAEL0302S06

1	CHECK GROUND CIRCUIT FOR FUEL LEVEL SENSOR UNIT

1. Turn ignition switch to OFF position.
2. Disconnect combination meter connector and fuel level sensor connector.
3. Check continuity between combination meter harness connector M24 terminal 23 (B) and fuel level sensor unit harness connector B12 terminal 2 (B).
4. Check continuity between combination meter harness connector M24 terminal 23 (B) and ground.

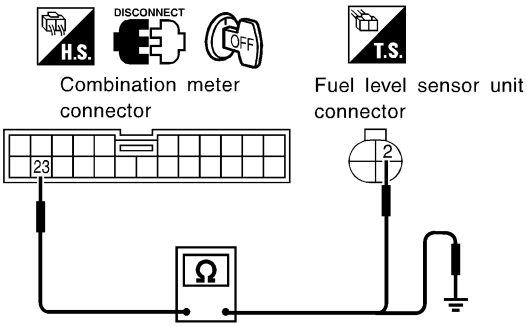

Continuity:
Combination meter terminal 23 and fuel level sensor unit terminal 2
Yes
Combination meter terminal 23 and ground
No

SEL794Y

OK or NG

OK	▶	GO TO 2.
NG	▶	Repair harness or connector.

2	CHECK FUEL LEVEL SENSOR UNIT

Refer to "FUEL LEVEL SENSOR UNIT CHECK" (EL-140).

OK or NG

OK	▶	GO TO 3.
NG	▶	Replace fuel level sensor unit.

3	CHECK HARNESS FOR OPEN OR SHORT

1. Disconnect combination meter connector and fuel level sensor unit connector.
2. Check continuity between combination meter harness connector terminal 17 and fuel level sensor unit harness connector terminal 3.
3. Check continuity between combination meter harness connector terminal 17 and ground.

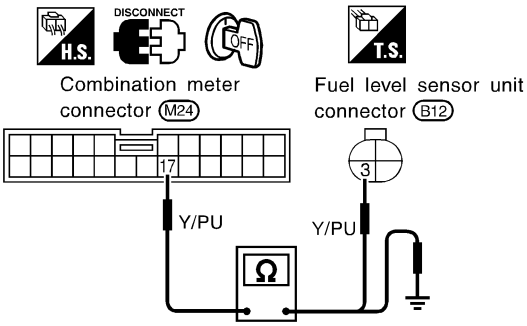

Continuity:
Combination meter terminal 17 and fuel level sensor unit terminal 3
Yes
Combination meter terminal 17 and ground
No

SEL300X

OK or NG

OK	▶	Fuel level sensor unit is OK.
NG	▶	Repair harness or connector.

INSPECTION/WATER TEMPERATURE SIGNAL

NAEL0302S07

1	CHECK ECM SELF-DIAGNOSIS	
Perform ECM self-diagnosis. Refer to EC-78, "Emission-related Diagnostic Information".		
OK or NG		
OK	▶	Replace combination meter.
NG	▶	Perform "Diagnostic Procedure" for display DTC.

Electrical Components Inspection

NAEL0303

METER/GAUGE RESISTANCE CHECK FOR FINE VISION METER

NAEL0303S05

Check resistance between installation screws of meter/gauge.

Screws		Resistance value Ω
Tacho/Speedometer	Fuel/Temp. gauge	
A - C	A - C	Approx. 190 - 260
B - D	B - C	Approx. 230 - 310

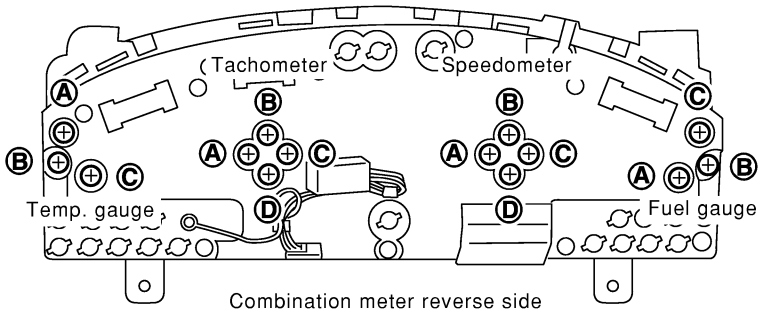

SEL352X

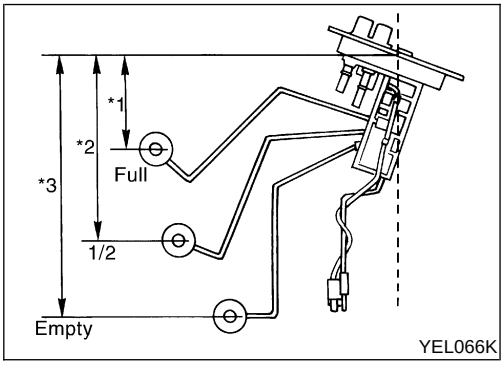

YEL066K

FUEL LEVEL SENSOR UNIT CHECK

NAEL0303S02

- For removal, refer to FE-4, "FUEL SYSTEM".

Check the resistance between terminals 3 and 2.

Ohmmeter		Float position mm (in)			Resistance value Ω
(+)	(−)				
3	2	*1	Full	95 (3.74)	Approx. 4 - 6
		*2	1/2	184 (7.24)	Approx. 31 - 34
		*3	Empty	265 (10.43)	Approx. 80 - 83

*1 and *3: When float rod is in contact with stopper.

System Description

NAEL0304

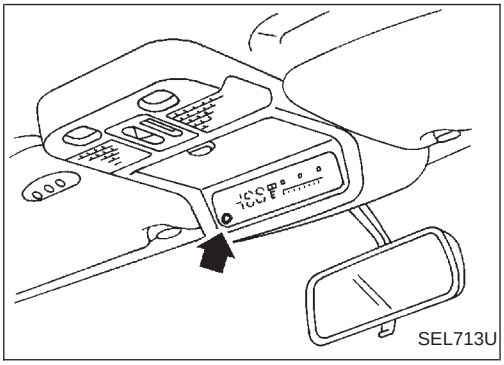

This unit displays following items:

- Earth magnetism and heading direction of vehicle.
- Outside air temperature.
- Caution for frozen road surfaces.

OUTSIDE TEMPERATURE DISPLAY

NAEL0304S01

Push the switch when the ignition key is in the “ACC” or “ON” position. The outside temperature will be displayed in “°F”.

- Selecting the indication range
  Push the switch to change from “°F” to “°C”.
- When the outside temperature drops below freezing point, ICE is displayed on the unit.
- When the outside temperature is between 55°C (130°F) and 70°C (158°F), the display shows 55°C (130°F).
- When the outside temperature is lower than −30°C (−20°F) or higher than 70°C (158°F), the display shows only “---” though it is operating. This is not a problem.
- The indicated temperature on the thermometer is not readily affected by engine heat. It changes only when one of the following conditions is present.

a) The temperature detected by the ambient air temperature sensor is lower than the indicated temperature on the thermometer.

b) The difference in temperature detected during a period of 40 seconds is less than 1°C (1.8°F) when vehicle speed has been greater than 24 km/h (15 MPH) for more than 100 seconds.
(This is to prevent the indicated temperature from being affected by engine heat or cooling fan operation during low-speed driving.)

c) The ignition key has been turned to the “OFF” position for more than 4 hours. (The engine is cold.)

DIRECTION DISPLAY

NAEL0304S02

Push the switch when the ignition key is in the “ACC” or “ON” position. The direction will be displayed.

Wiring Diagram — COMPAS —

NAEL0305

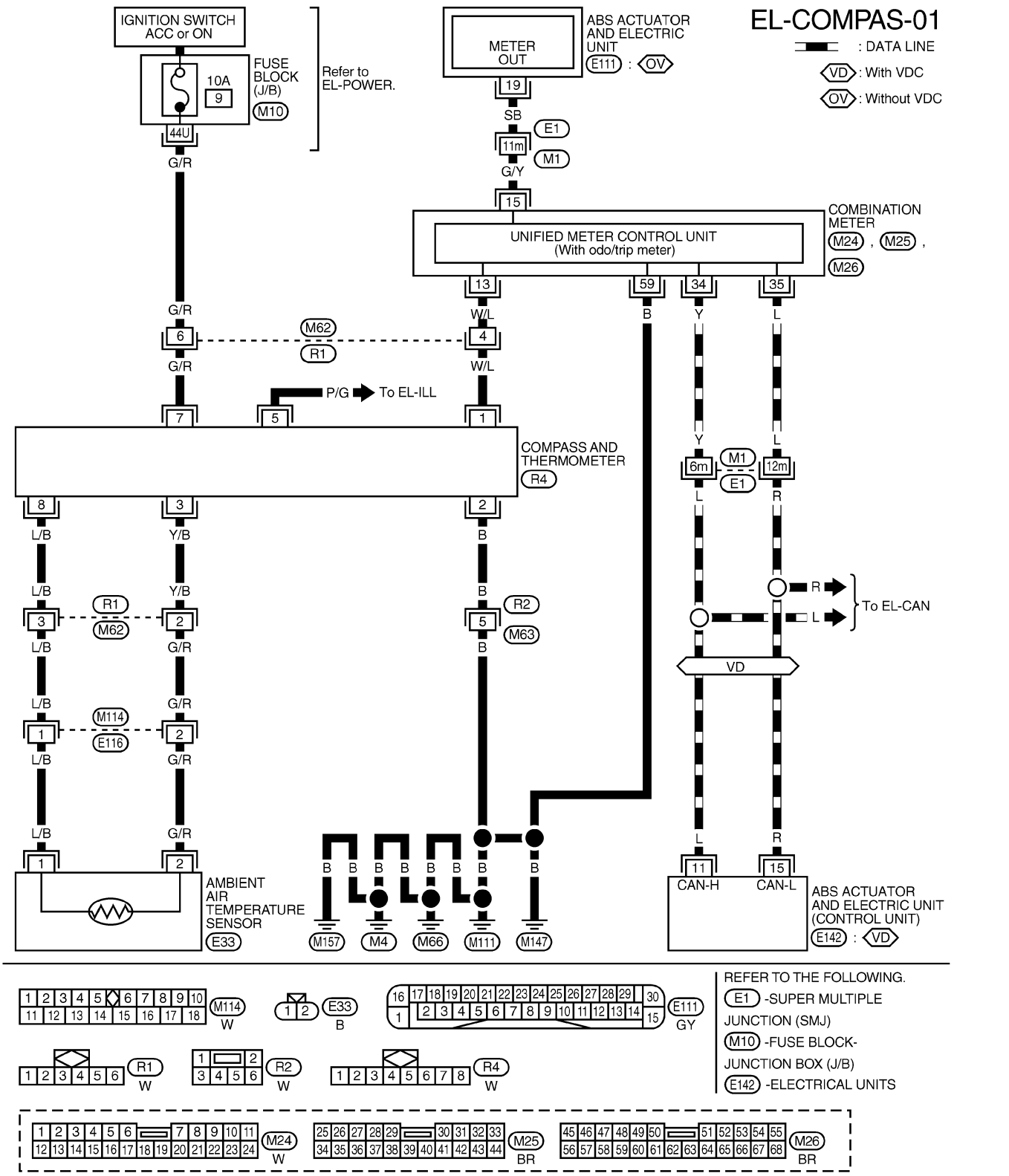

MEL941R

Trouble Diagnoses

NAEL0306

PRELIMINARY CHECK FOR THERMOMETER

NAEL0306S01

1	COOL DOWN CHECK	
1. Turn the ignition key switch to the “ACC” position. 2. Cool down the ambient air temperature sensor with water or ice, so that the indicated temperature falls. **Does the indicated temperature fall?**		
Yes	▶	GO TO 2.
No	▶	The system is malfunctioning. Check the system following “INSPECTION/COMPASS AND THERMOMETER”.

2	WARM UP CHECK	
1. Leave the vehicle for 10 minutes, so that the indicated temperature rises. 2. With the ignition key in the “ACC” position, disconnect and reconnect the ambient air temperature sensor connector. **Does the indicated temperature rise?**		
Yes	▶	The system is OK.
No	▶	The system is malfunctioning. Check the system following “INSPECTION/COMPASS AND THERMOMETER”.

NOTE:

- When the outside temperature is between 55°C (130°F) and 70°C (158°F), the display shows 55°C (130°F). When the outside temperature is lower than −30°C (−20°F) or higher than 70°C (158°F), the display shows only “---”.
- The indicated temperature on the thermometer is not readily affected by engine heat. It changes only when one of the following conditions is present.

a) The temperature detected by the ambient air temperature sensor is lower than the indicated temperature on the thermometer.

b) The difference in temperature detected during a period of 40 seconds is less than 1°C (1.8°F) when vehicle speed has been greater than 24 km/h (15 MPH) for more than 100 seconds.
(This is to prevent the indicated temperature from being affected by engine heat or cooling fan operation during low-speed driving.)

c) The ignition key has been turned to the “OFF” position for more than 4 hours. (The engine is cold.)

INSPECTION/COMPASS AND THERMOMETER

NAEL0306S02

Symptom	Possible causes	Repair order
No display at all	1. 10A fuse 2. Ground circuit 3. Compass and thermometer	1. Check 10A fuse [No. 9, located in fuse block (J/B)]. Turn the ignition switch ON and verify that battery positive voltage is at terminal 7 of compass and thermometer. 2. Check ground circuit for compass and thermometer. 3. Replace compass and thermometer.
Forward direction indication slips off the mark or incorrect.	1. In manual correction mode (Bar and display vanish.) 2. Zone variation change is not done.	1. Drive the vehicle and turn at an angle of 90°. 2. Perform the zone variation change.
Compass reading remains unchanged.	1. Vehicle speed signal is not entered. 2. Compass and thermometer	1. Check harness for open or short between combination meter terminal 13 and compass and thermometer terminal 1. 2. Replace compass and thermometer.
Displays wrong temperature when ambient temperature is between −30°C (−20°F) and 55°C (130°F). (See NOTE above.)	1. Check operation 2. Ambient air temperature sensor circuit 3. Vehicle speed signal is not entered. 4. Ambient air temperature sensor 5. Compass and thermometer	1. Perform preliminary check shown above. 2. Check harness for open or short between ambient air temperature sensor and compass and thermometer. 3. Check harness for open or short between combination meter terminal 13 and compass and thermometer terminal 1. 4. Replace ambient air temperature sensor. 5. Replace compass and thermometer.

Calibration Procedure for Compass

=NAEL0307

The difference between magnetic North and geographical North can sometimes be great enough to cause false compass readings. In order for the compass to operate accurately in a particular zone, it must be calibrated using the following procedure.

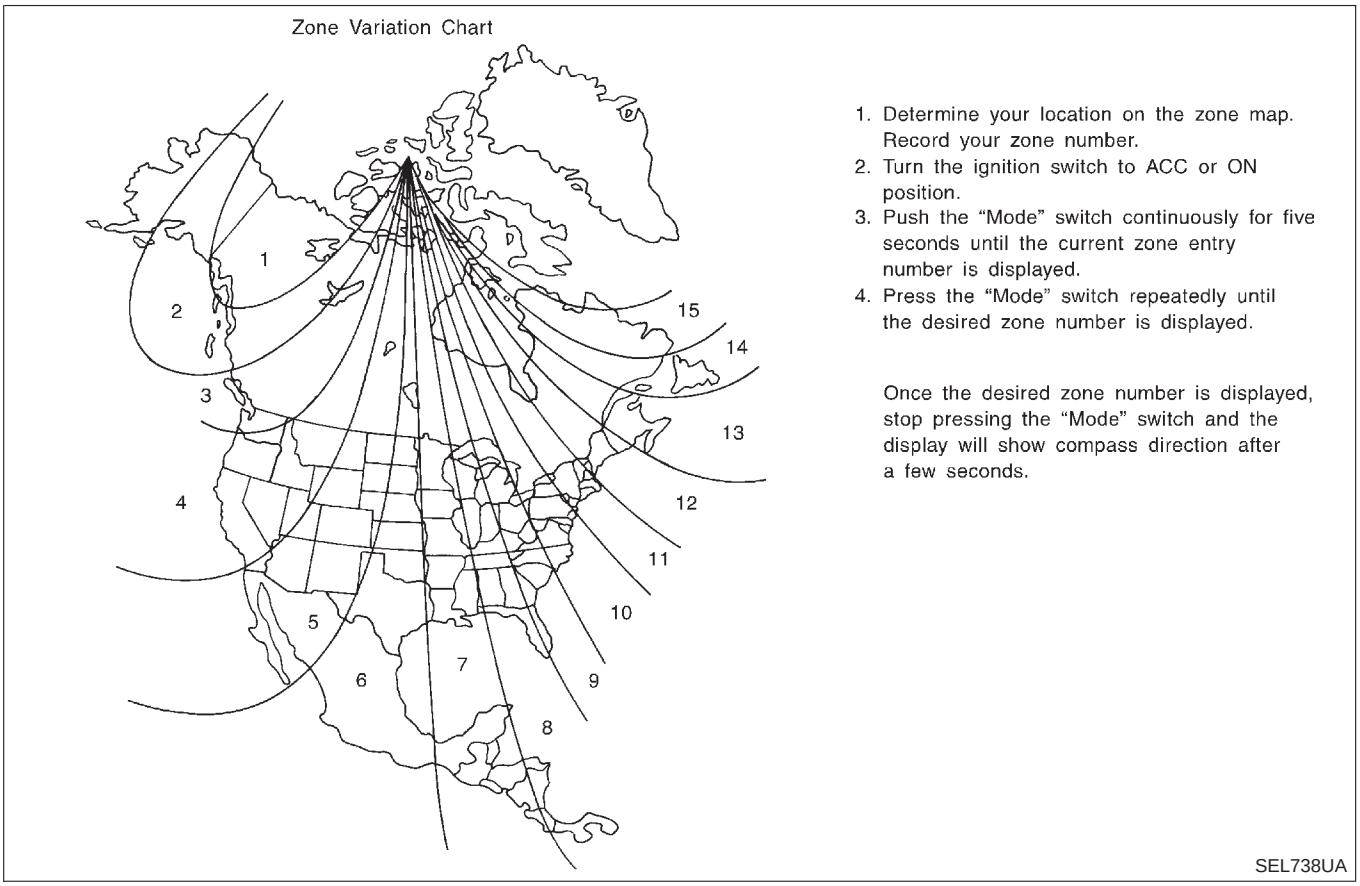

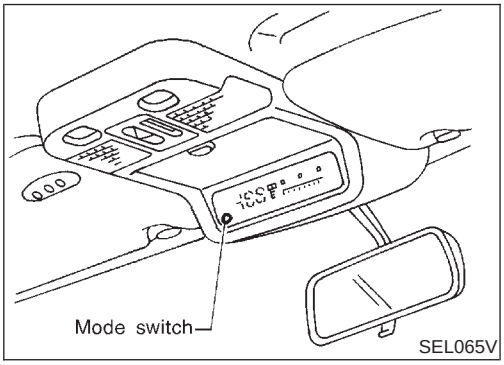

CORRECTION FUNCTIONS OF COMPASS

NAEL0307S01

The direction display is equipped with automatic correction function. If the direction is not shown correctly, carry out initial correction.

INITIAL CORRECTION PROCEDURE FOR COMPASS

NAEL0307S02

1. Pushing the "Mode" switch for about 10 seconds will enter the initial correction mode. The direction bar starts blinking.
2. Turn the vehicle slowly in an open, safe place. The initial correction is completed in one or two turns.

NOTE:

In places where the terrestrial magnetism is extremely disturbed, the initial correction may start automatically.

Schematic/With Normal Meter

NAEL0308

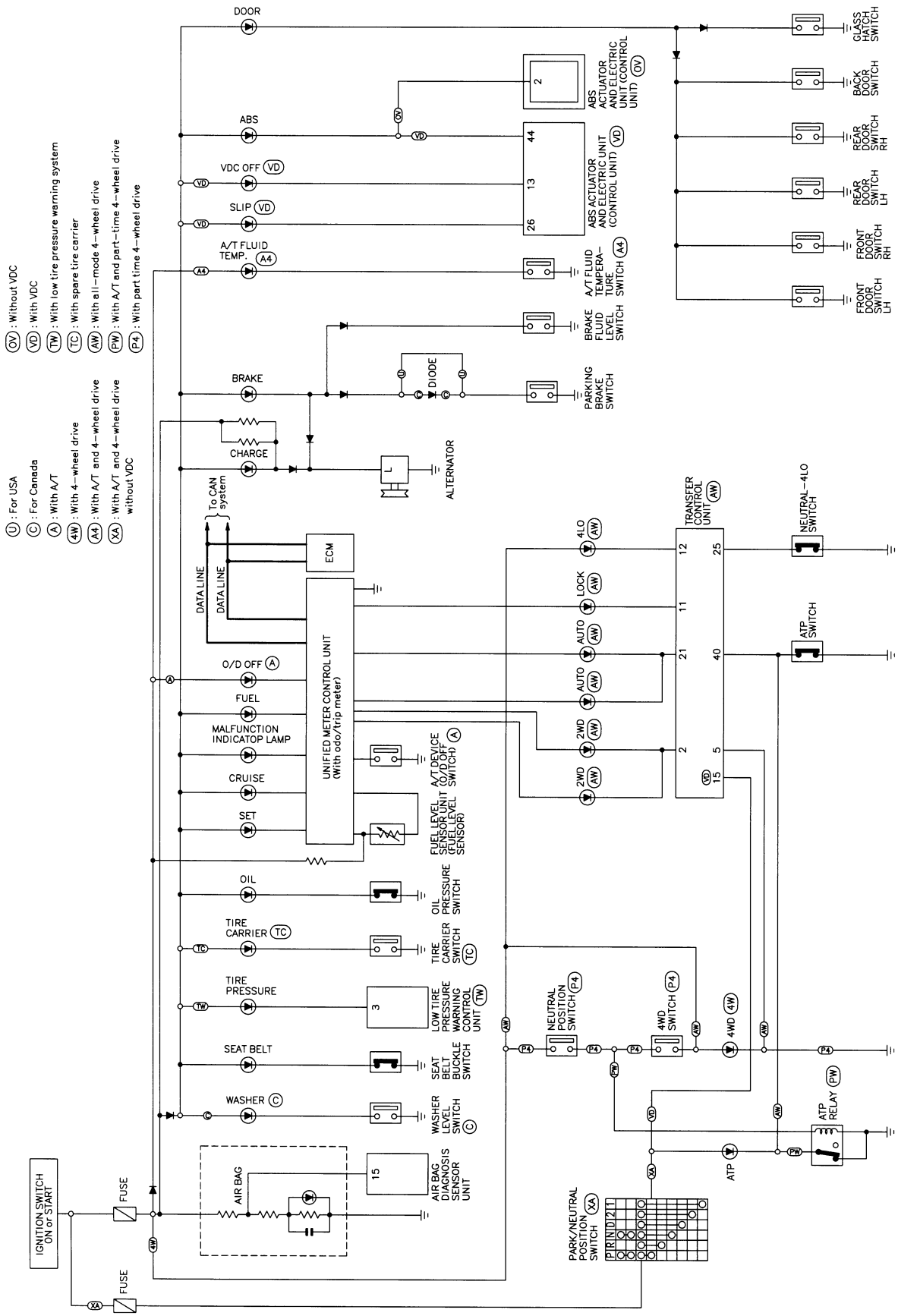

MEL980P

Wiring Diagram — WARN —/With Normal Meter

NAEL0309

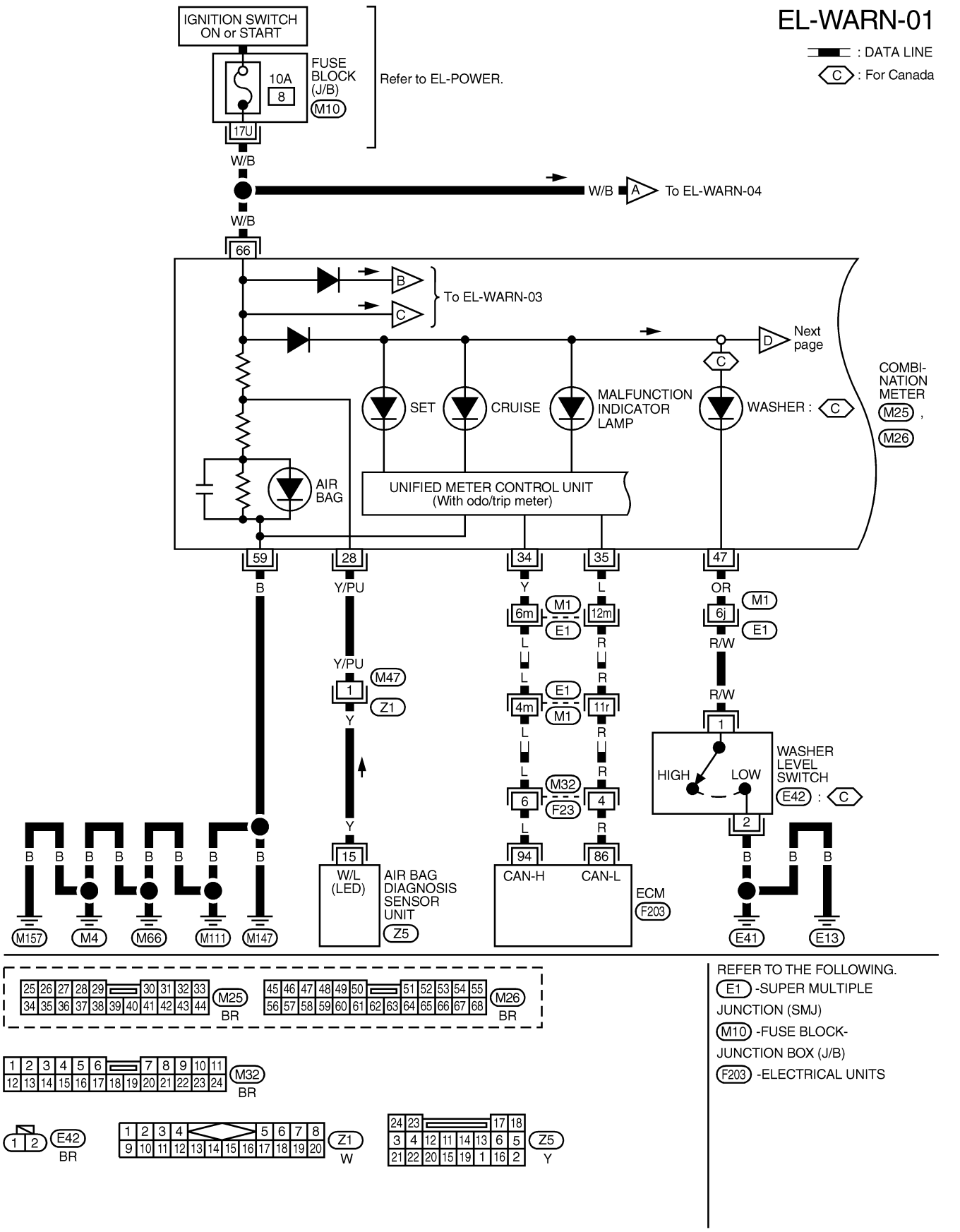

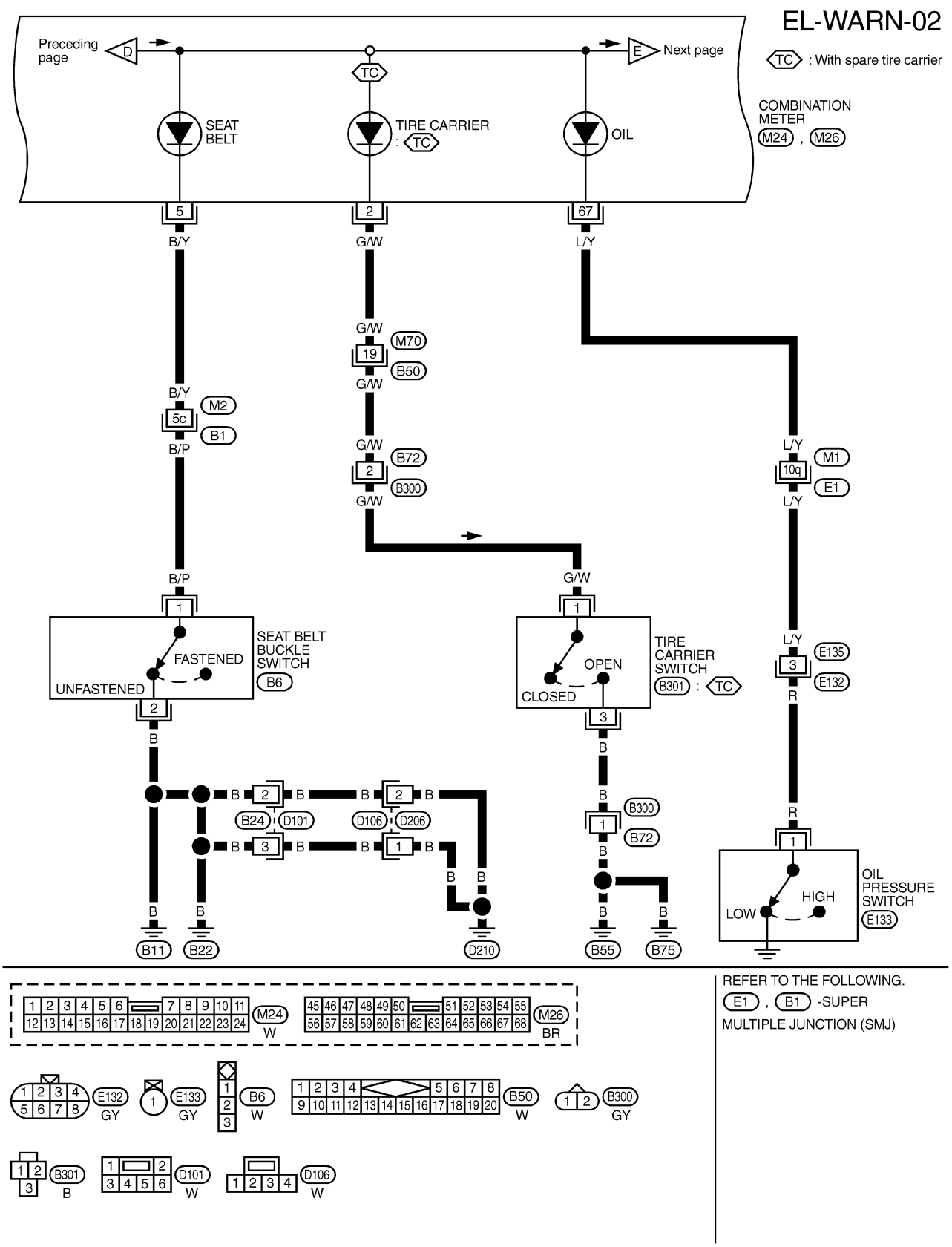
EL-WARN-02
Preceding page
D
E
Next page
TC : With spare tire carrier
COMBINATION METER
M24 , M26
SEAT BELT
TIRE CARRIER : TC
OIL
5
2
67
B/Y
G/W
L/Y
G/W
19
M70
B50
G/W
B/Y
5c
M2
B1
B/P
G/W
2
B72
B300
G/W
L/Y
10q
M1
E1
L/Y
B/P
1
SEAT BELT BUCKLE SWITCH
B6
FASTENED
UNFASTENED
2
B
G/W
1
TIRE CARRIER SWITCH
B301 : TC
OPEN
CLOSED
3
B
L/Y
3
E135
E132
R
B
B24
D101
D106
D206
B300
1
B72
R
1
OIL PRESSURE SWITCH
E133
HIGH
LOW
B11
B22
D210
B55
B75
M24
W
M26
BR
E132
GY
E133
GY
B6
W
B50
W
B300
GY
B301
B
D101
W
D106
W
REFER TO THE FOLLOWING.
E1 , B1 -SUPER MULTIPLE JUNCTION (SMJ)

MEL942R

Wiring Diagram — WARN —/With Normal Meter (Cont'd)

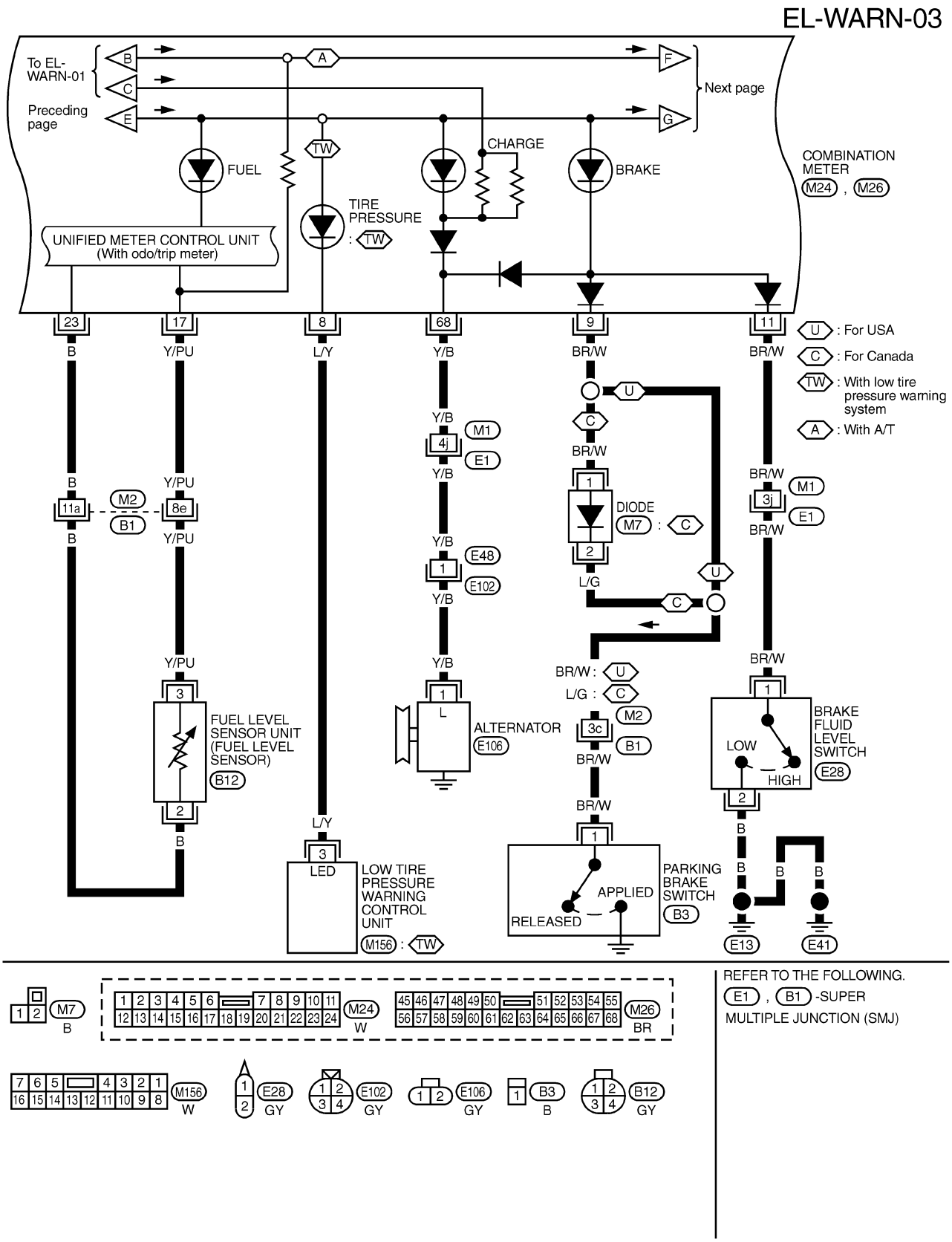

MEL943R

EL-WARN-04

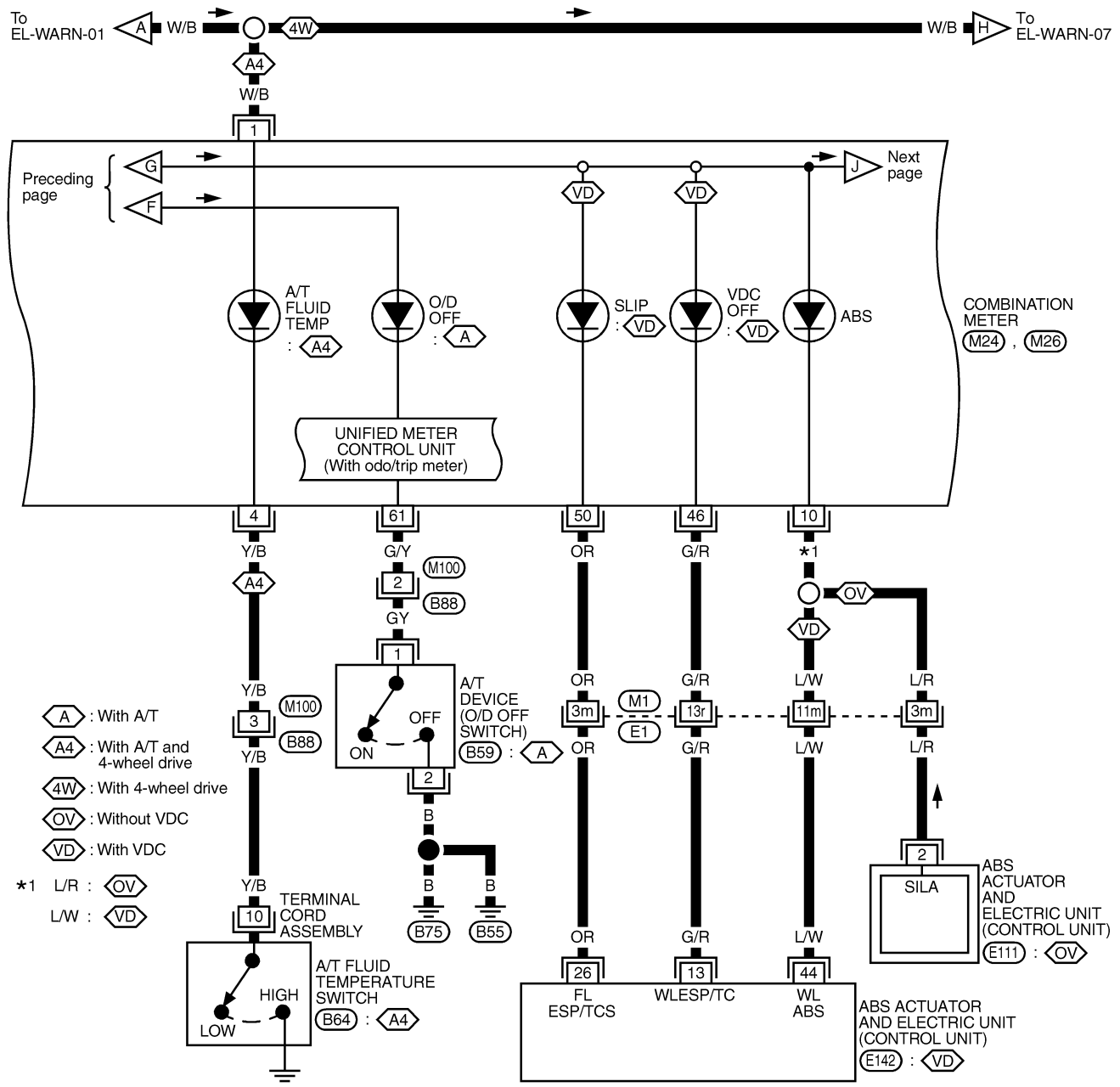

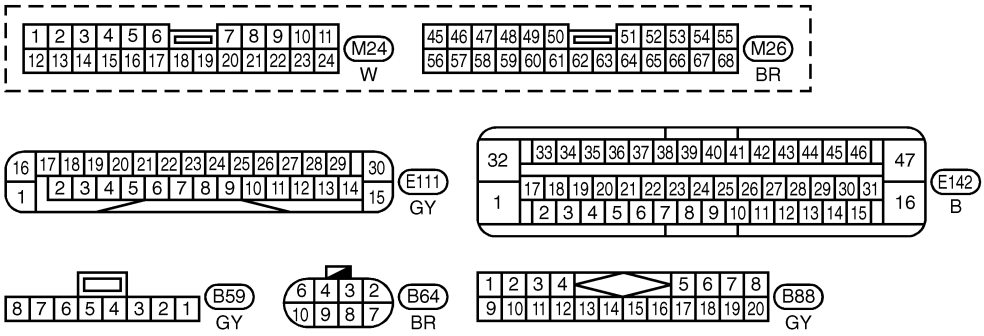

REFER TO THE FOLLOWING.
E1 -SUPER MULTIPLE JUNCTION (SMJ)

MEL984P

EL-WARN-05

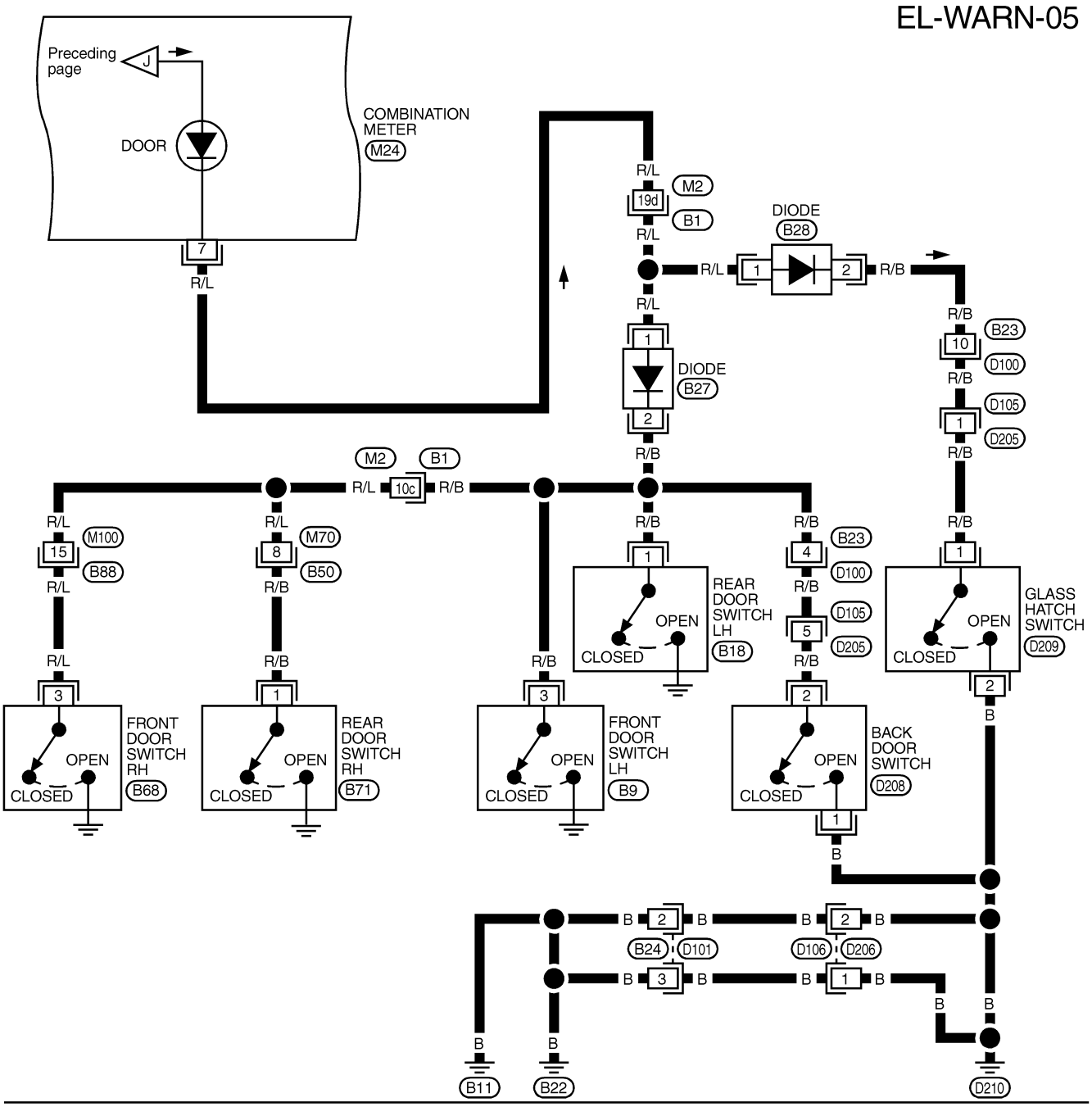

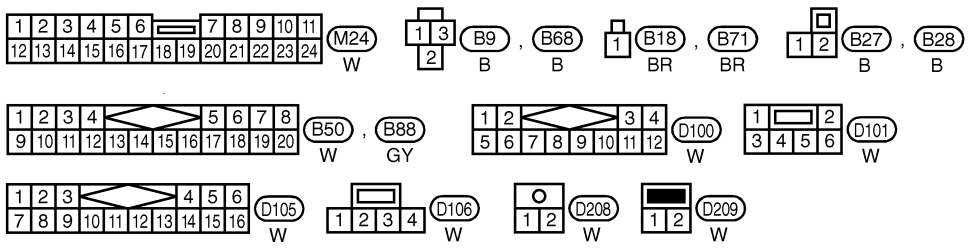

REFER TO THE FOLLOWING.
B1 -SUPER MULTIPLE JUNCTION (SMJ)

MEL985P

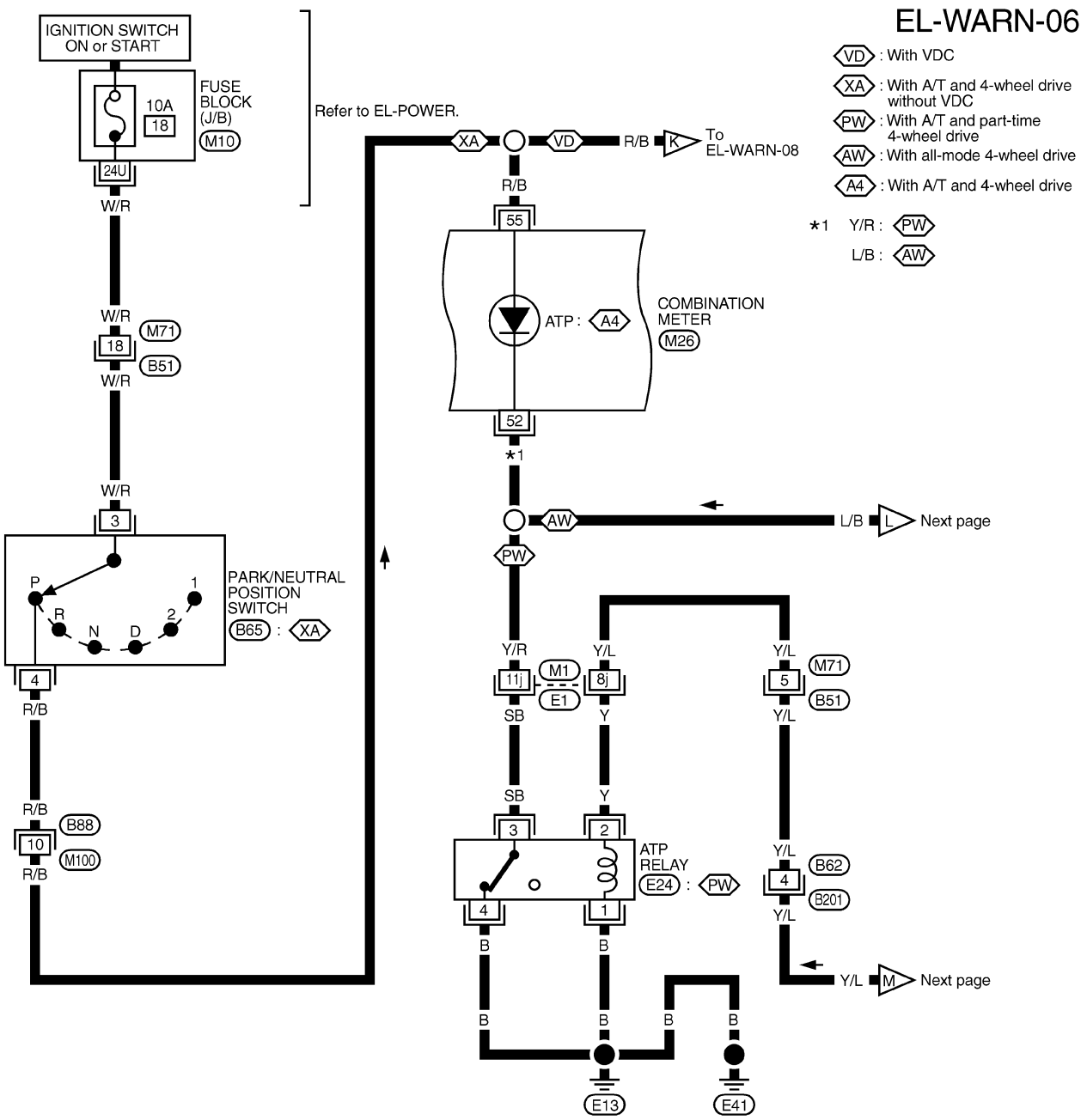

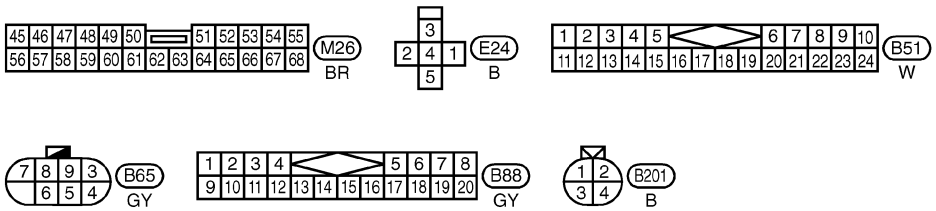

REFER TO THE FOLLOWING.
E1 -SUPER MULTIPLE JUNCTION (SMJ)
M10 -FUSE BLOCK-JUNCTION BOX (J/B)

MEL944R

Wiring Diagram — WARN —/With Normal Meter (Cont'd)

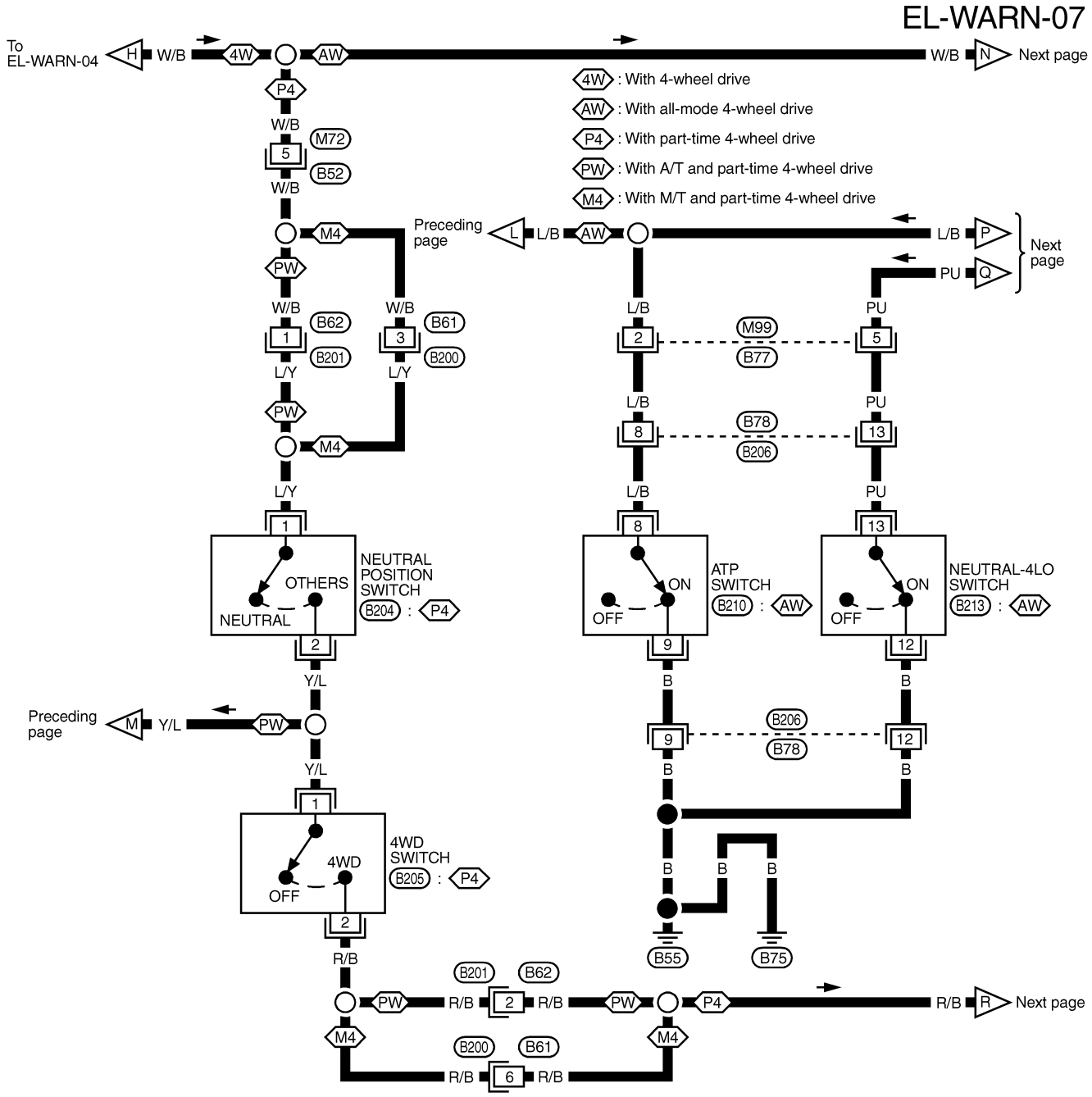

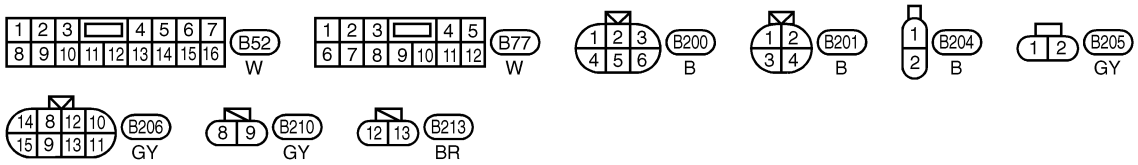

MEL987P

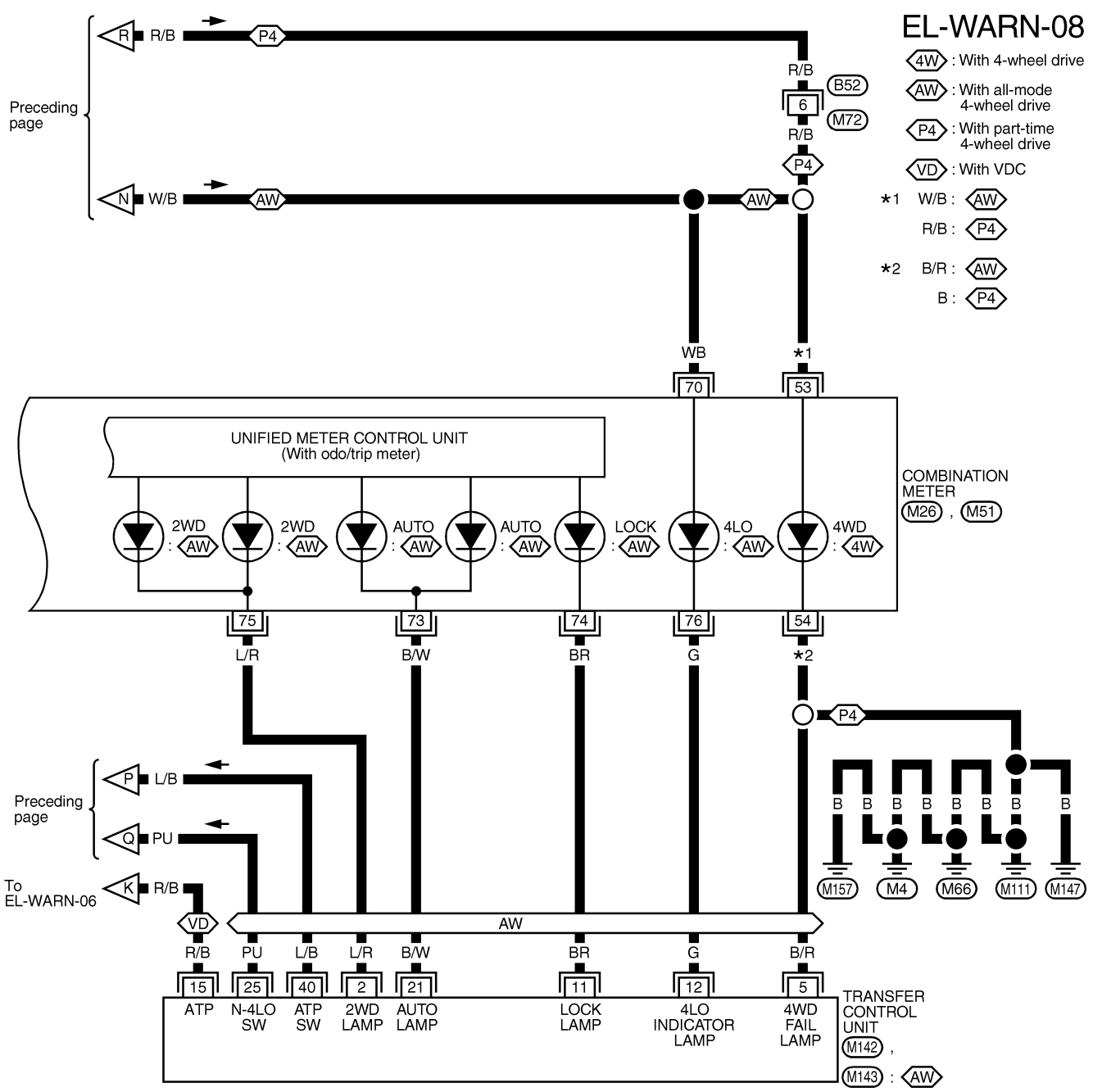
EL-WARN-08
4W : With 4-wheel drive
AW : With all-mode 4-wheel drive
P4 : With part-time 4-wheel drive
VD : With VDC
*1 W/B : AW
R/B : P4
*2 B/R : AW
B : P4
Preceding page
R R/B P4
N W/B AW
R/B B52 6 M72 R/B P4
WB *1
70 53
UNIFIED METER CONTROL UNIT
(With odo/trip meter)
2WD : AW
2WD : AW
AUTO : AW
AUTO : AW
LOCK : AW
4LO : AW
4WD : 4W
COMBINATION METER
M26 , M51
75 73 74 76 54
L/R B/W BR G *2
P4
P L/B
Q PU
Preceding page
To EL-WARN-06
K R/B
VD
AW
B B B B B B B B
M157 M4 M66 M111 M147
R/B PU L/B L/R B/W BR G B/R
15 25 40 2 21 11 12 5
ATP
N-4LO SW
ATP SW
2WD LAMP
AUTO LAMP
LOCK LAMP
4LO INDICATOR LAMP
4WD FAIL LAMP
TRANSFER CONTROL UNIT
M142 ,
M143 : AW
M26 BR
M51 W
M142 L
M143 G
H.S.
B52 W

MEL988P

Schematic/With Fine Vision Meter

NAEL0488

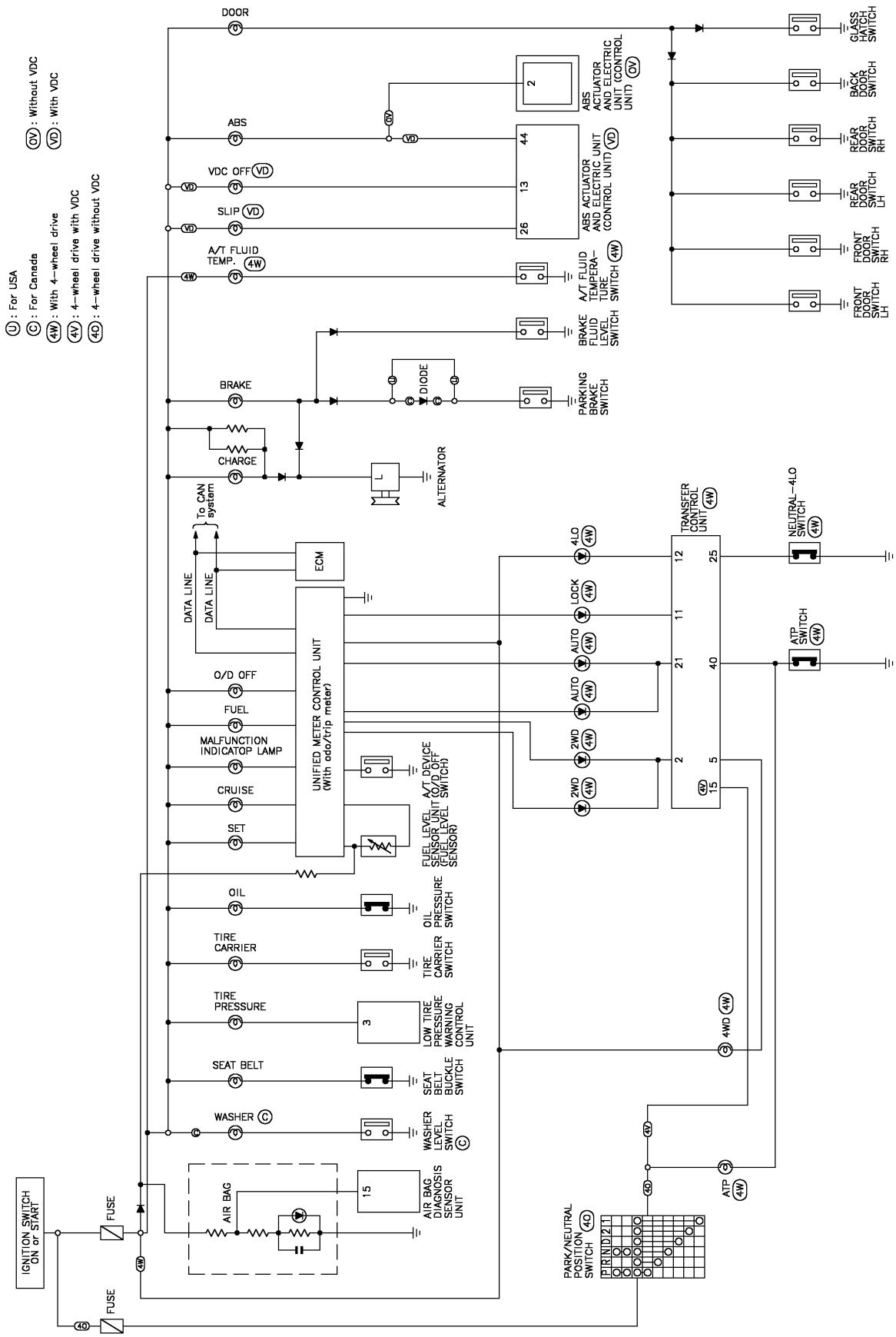

MEL962R

Wiring Diagram — WARN —/With Fine Vision Meter

NAEL0489

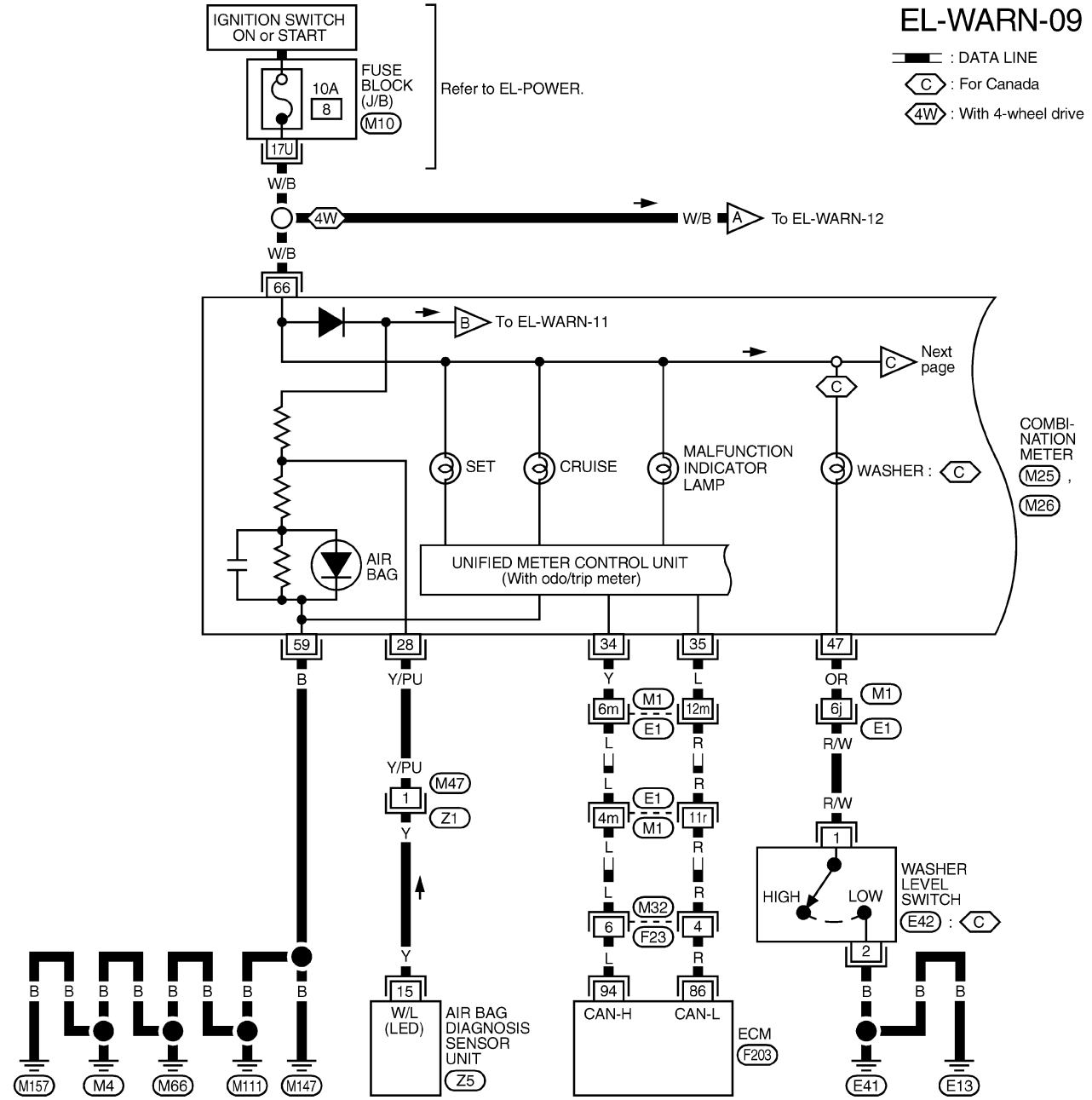

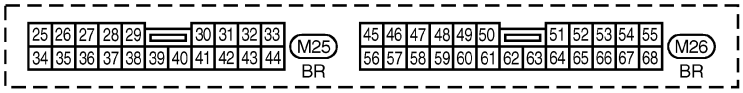

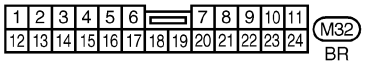

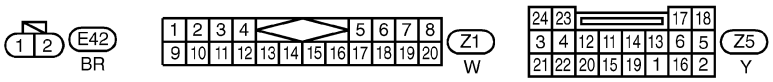

REFER TO THE FOLLOWING.
E1 -SUPER MULTIPLE JUNCTION (SMJ)
M10 -FUSE BLOCK-JUNCTION BOX (J/B)
F203 -ELECTRICAL UNITS

MEL963R

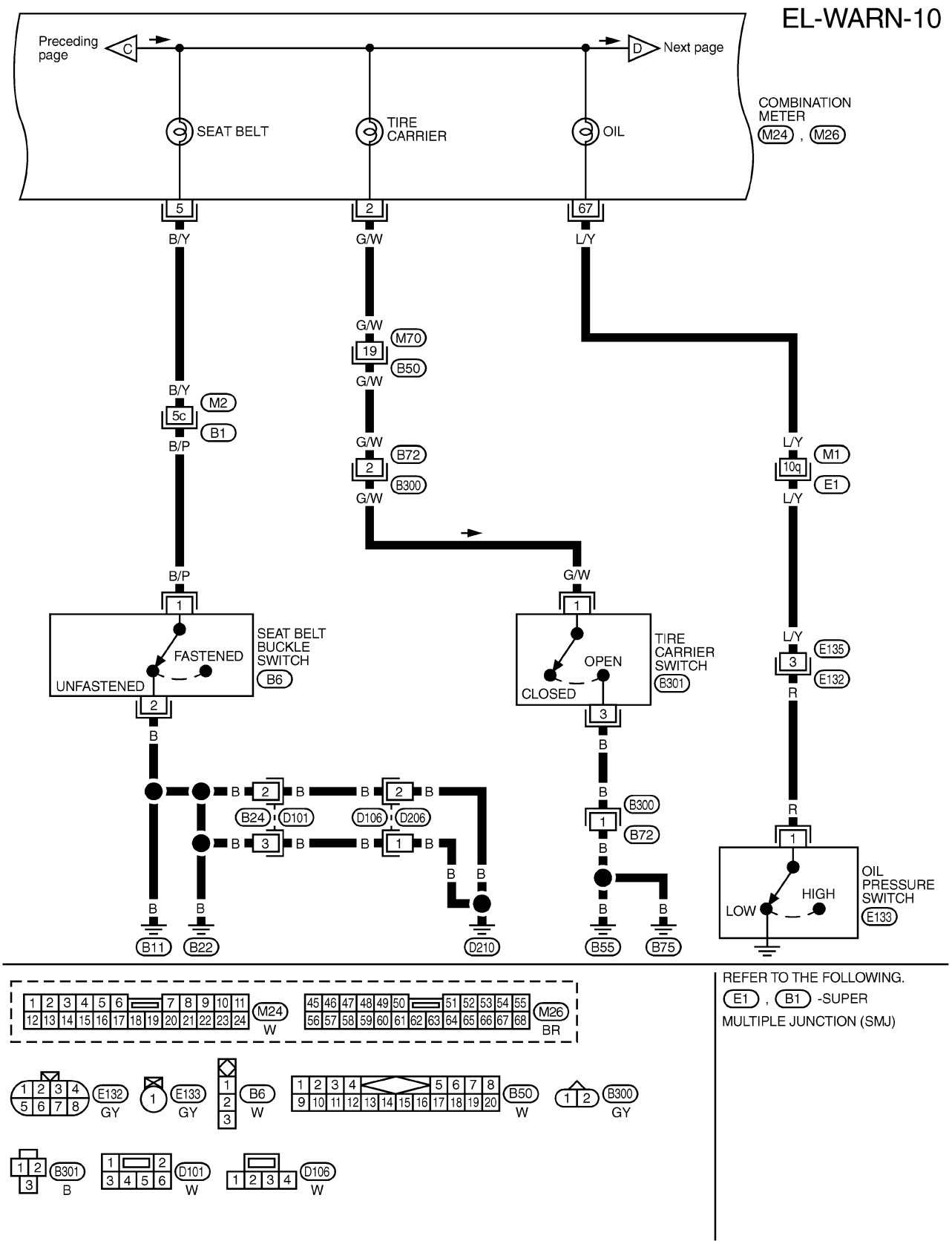
EL-WARN-10
Preceding page
C
D
Next page
COMBINATION METER
M24 , M26
SEAT BELT
TIRE CARRIER
OIL
5
2
67
B/Y
G/W
L/Y
G/W
M70
19
B50
G/W
B/Y
M2
5c
B1
B/P
G/W
B72
2
B300
G/W
L/Y
M1
10q
E1
L/Y
B/P
1
SEAT BELT BUCKLE SWITCH
FASTENED
UNFASTENED
B6
2
B
G/W
1
TIRE CARRIER SWITCH
OPEN
CLOSED
B301
3
B
L/Y
E135
3
E132
R
B
2
B
B24
D101
B
3
B
B
2
B
D106
D206
B
1
B
B
B
B300
1
B72
B
R
1
OIL PRESSURE SWITCH
HIGH
LOW
E133
B11
B22
D210
B55
B75
M24
W
M26
BR
E132
GY
E133
GY
B6
W
B50
W
B300
GY
B301
B
D101
W
D106
W
REFER TO THE FOLLOWING.
E1 , B1 -SUPER MULTIPLE JUNCTION (SMJ)

MEL964R

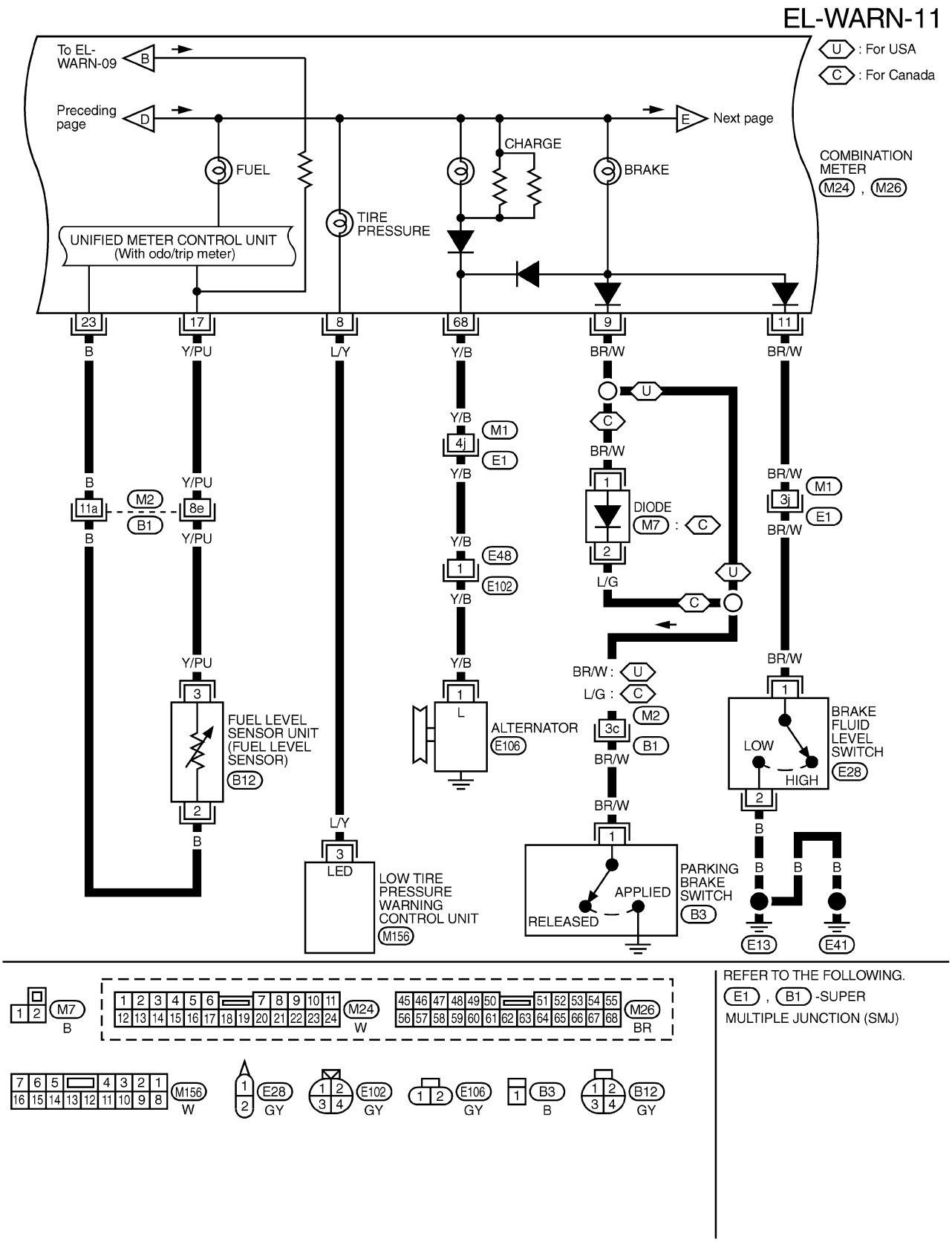
EL-WARN-11
To EL-WARN-09
B
Preceding page
D
E
Next page
U : For USA
C : For Canada
FUEL
CHARGE
BRAKE
TIRE PRESSURE
COMBINATION METER
M24 , M26
UNIFIED METER CONTROL UNIT
(With odo/trip meter)
23
17
8
68
9
11
B
Y/PU
L/Y
Y/B
BR/W
BR/W
M1
4j
E1
M2
11a
8e
B1
3j
DIODE
M7 : C
E48
1
E102
L/G
3
FUEL LEVEL SENSOR UNIT (FUEL LEVEL SENSOR)
B12
L
ALTERNATOR
E106
BR/W : U
L/G : C
3c
BRAKE FLUID LEVEL SWITCH
LOW
HIGH
E28
LED
LOW TIRE PRESSURE WARNING CONTROL UNIT
M156
PARKING BRAKE SWITCH
APPLIED
RELEASED
B3
E13
E41
M7
M24
M26
W
BR
M156
E28
GY
E102
E106
B3
B12
REFER TO THE FOLLOWING.
E1 , B1 -SUPER MULTIPLE JUNCTION (SMJ)

MEL965R

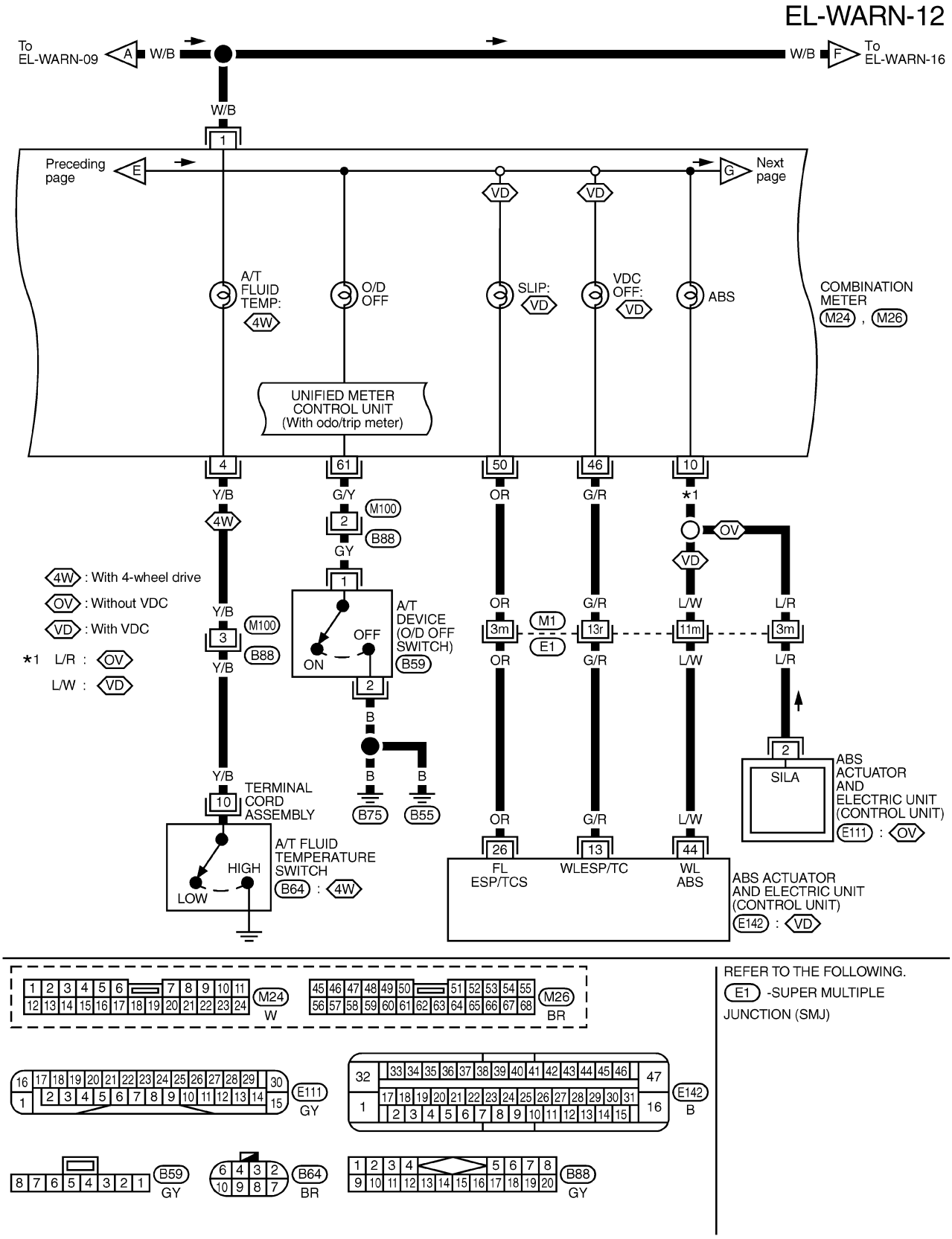

REFER TO THE FOLLOWING.
E1 -SUPER MULTIPLE JUNCTION (SMJ)

MEL966R

EL-WARN-13

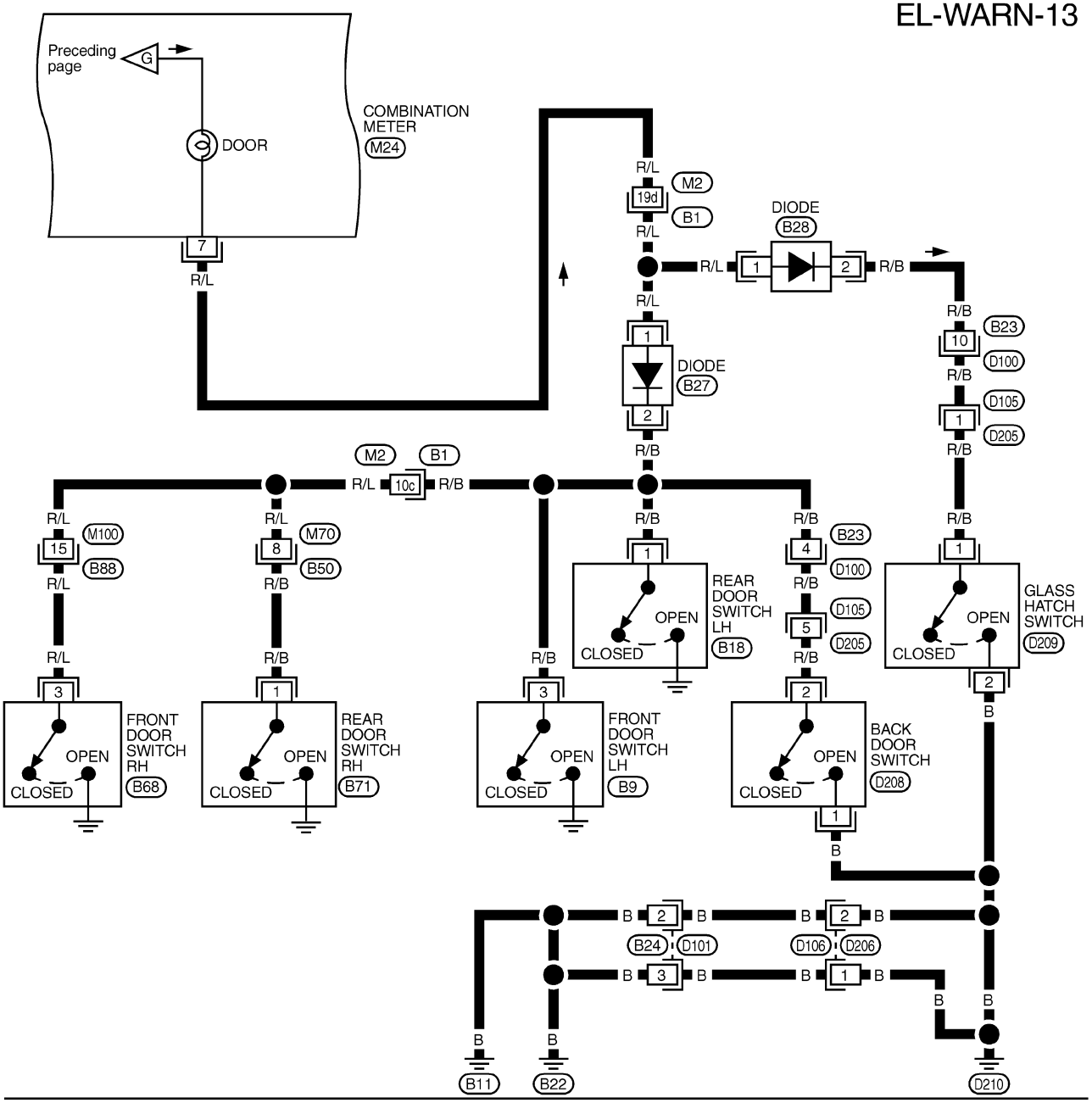

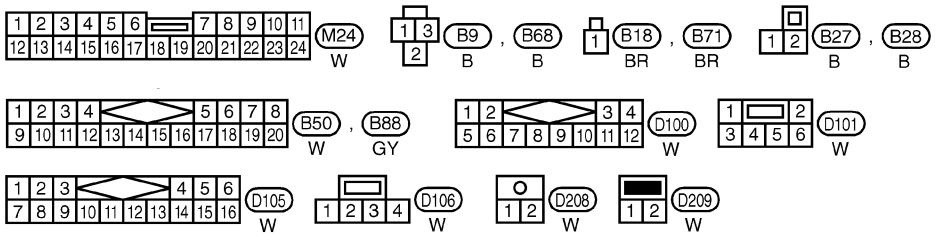

REFER TO THE FOLLOWING.
B1 -SUPER MULTIPLE JUNCTION (SMJ)

MEL967R

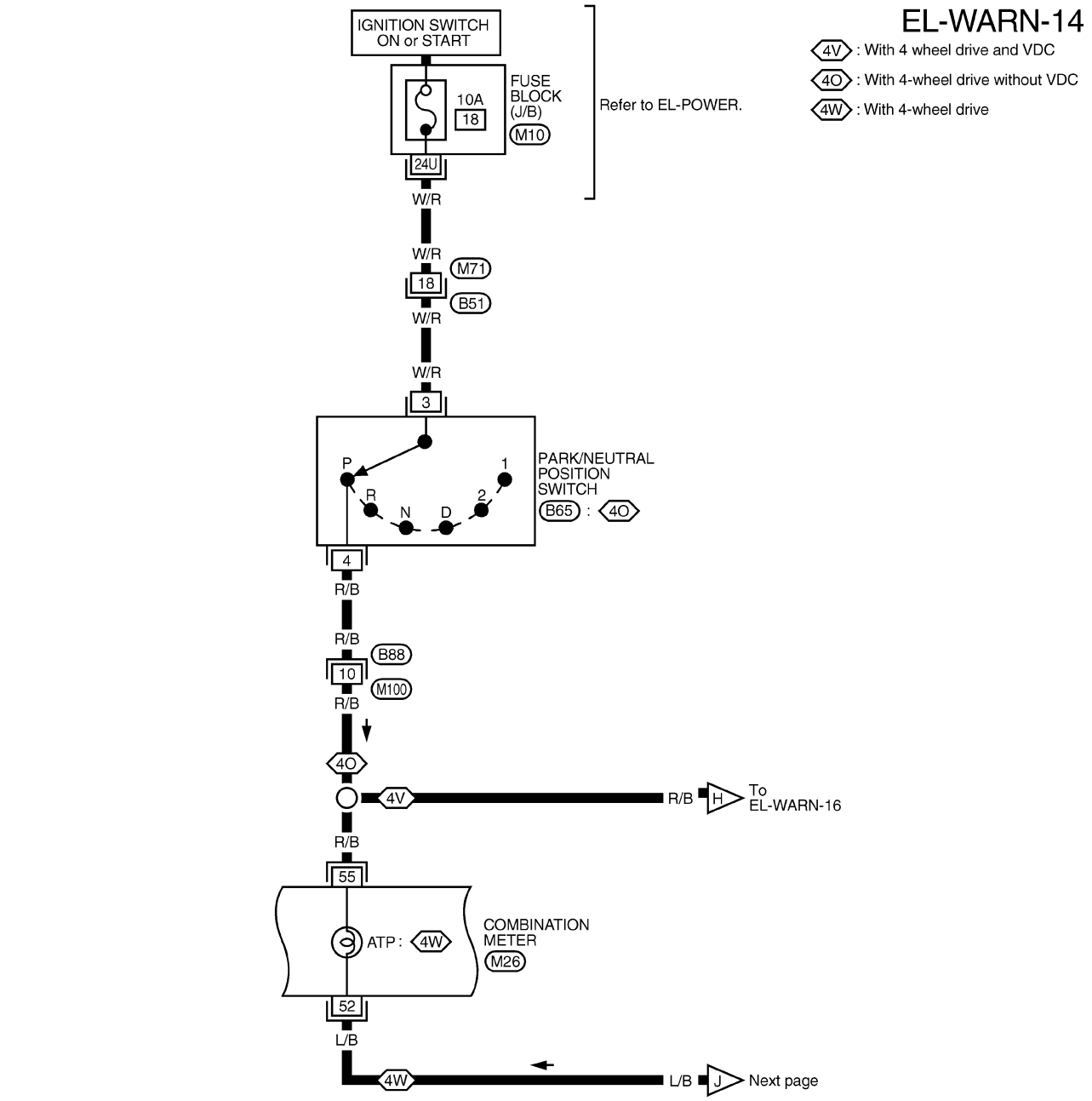

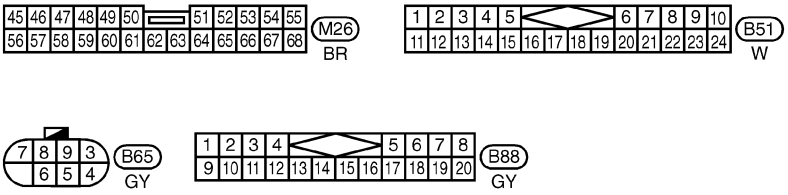

REFER TO THE FOLLOWING.
M10 -FUSE BLOCK-JUNCTION BOX (J/B)

MEL968R

EL-WARN-15

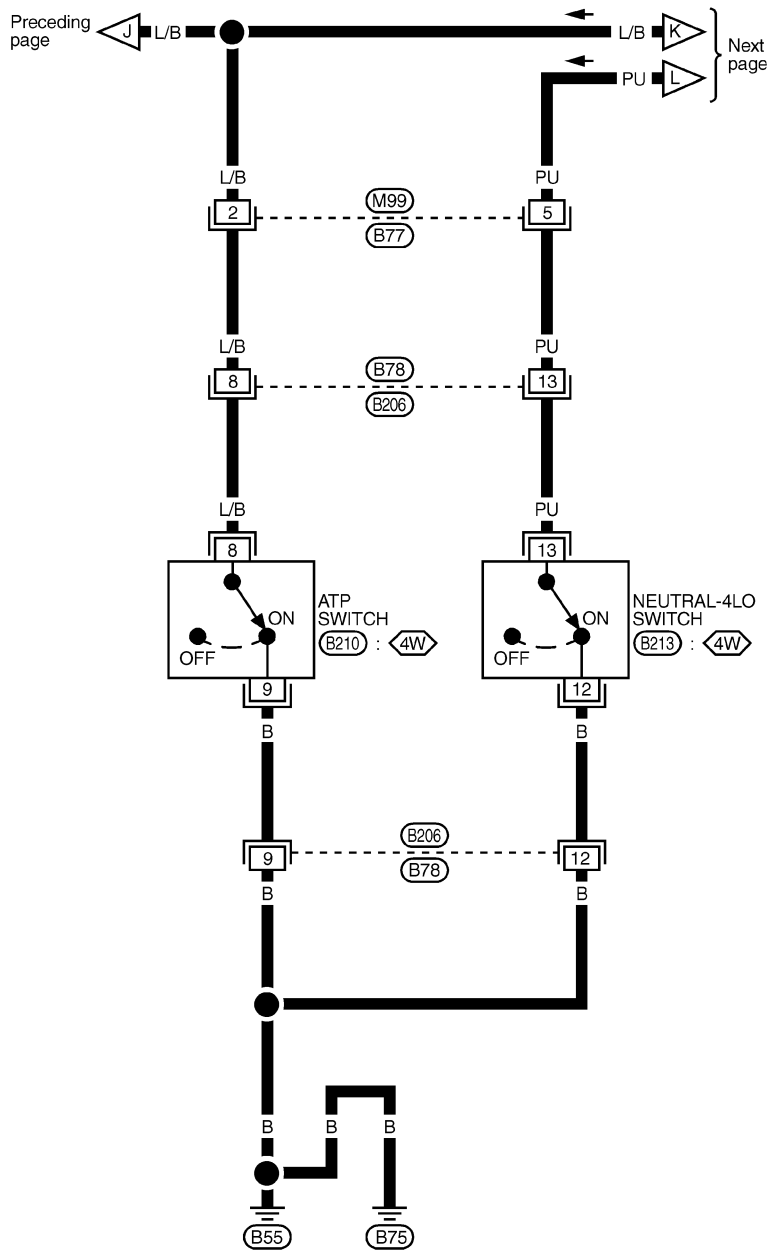

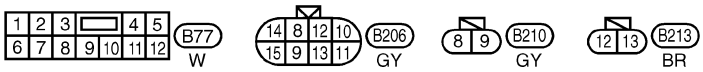

MEL969R

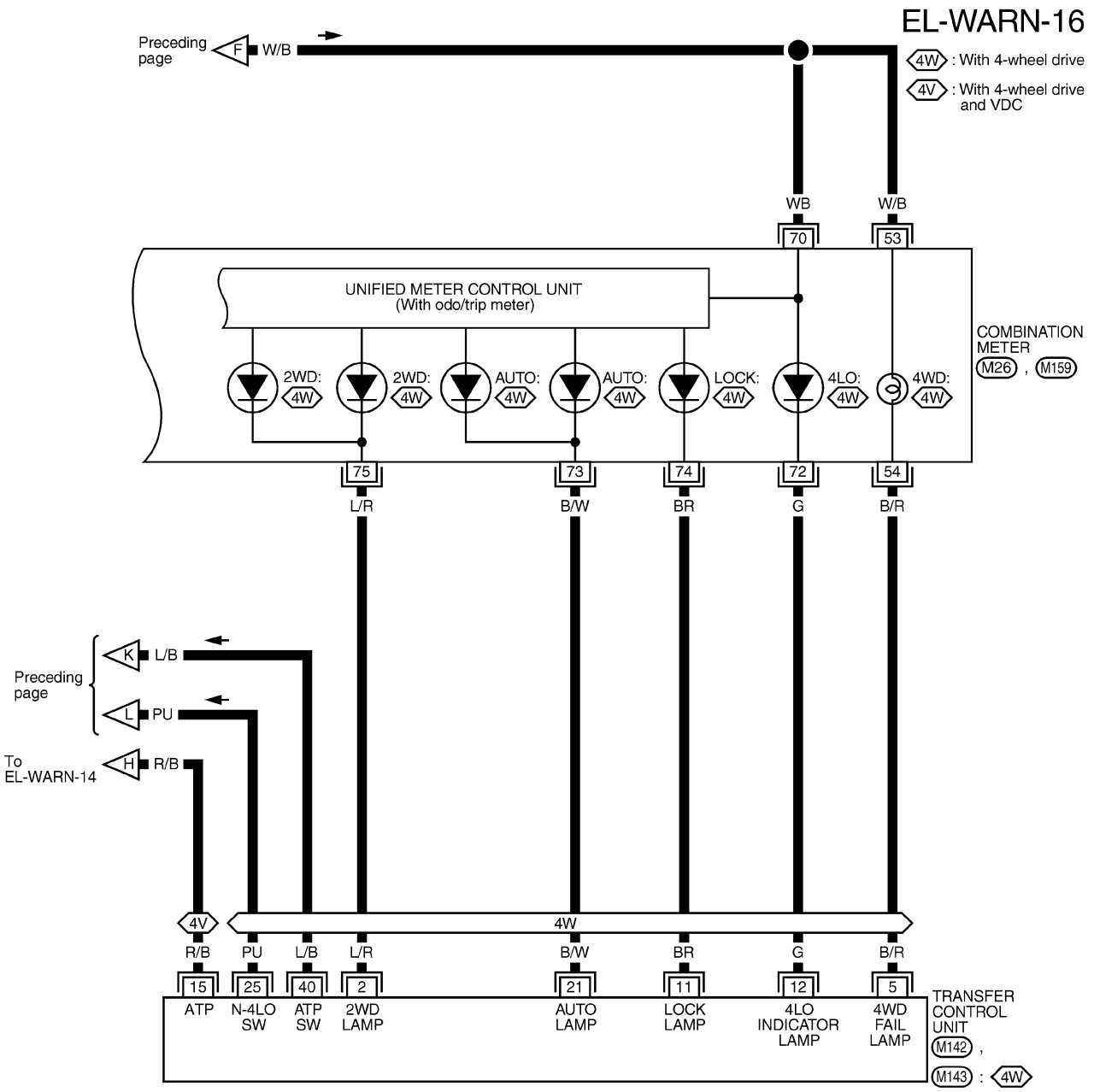
EL-WARN-16
Preceding page
F
W/B
4W : With 4-wheel drive
4V : With 4-wheel drive and VDC
WB
W/B
70
53
UNIFIED METER CONTROL UNIT
(With odo/trip meter)
COMBINATION METER
M26 , M159
2WD: 4W
2WD: 4W
AUTO: 4W
AUTO: 4W
LOCK: 4W
4LO: 4W
4WD: 4W
75
73
74
72
54
L/R
B/W
BR
G
B/R
Preceding page
K
L/B
L
PU
To EL-WARN-14
H
R/B
4V
4W
R/B
PU
L/B
L/R
B/W
BR
G
B/R
15
25
40
2
21
11
12
5
ATP
N-4LO SW
ATP SW
2WD LAMP
AUTO LAMP
LOCK LAMP
4LO INDICATOR LAMP
4WD FAIL LAMP
TRANSFER CONTROL UNIT
M142 ,
M143 : 4W

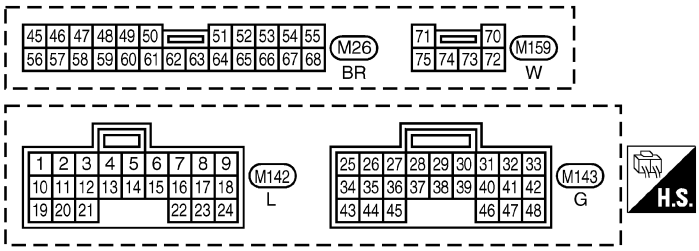
45 46 47 48 49 50 51 52 53 54 55
56 57 58 59 60 61 62 63 64 65 66 67 68
M26
BR
71 70
75 74 73 72
M159
W
1 2 3 4 5 6 7 8 9
10 11 12 13 14 15 16 17 18
19 20 21 22 23 24
M142
L
25 26 27 28 29 30 31 32 33
34 35 36 37 38 39 40 41 42
43 44 45 46 47 48
M143
G
H.S.

MEL945R

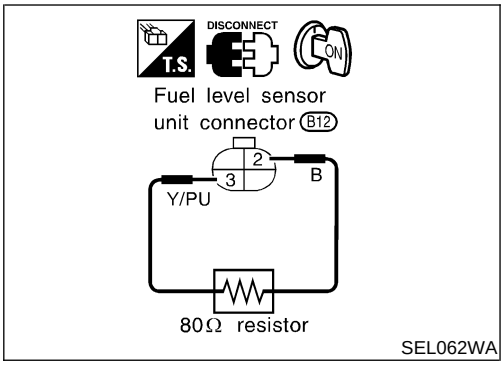

SEL062WA

Fuel Warning Lamp Sensor Check

NAEL0310

1. Turn ignition switch “OFF”.
2. Disconnect fuel level sensor unit harness connector B12.
3. Connect a resistor (80Ω) between fuel tank gauge unit harness connector terminals 2 and 3.
4. Turn ignition switch “ON”.

The fuel warning lamp should come on.

NOTE:
ECM might store the 1st trip DTC P0180 during this inspection.
If the DTC is stored in ECM memory, erase the DTC after reconnecting fuel tank gauge unit harness connector.
Refer to EC-78, “HOW TO ERASE EMISSION-RELATED DIAGNOSTIC INFORMATION”.

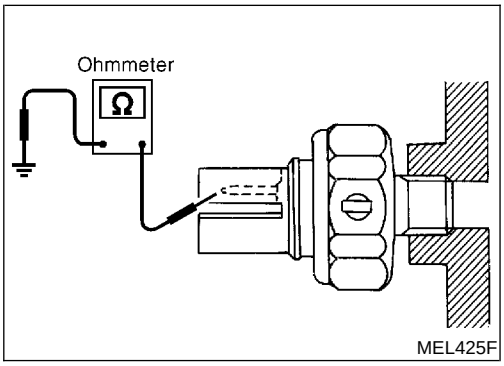

MEL425F

Electrical Components Inspection

NAEL0311

OIL PRESSURE SWITCH CHECK

NAEL0311S01

Condition	Oil pressure kPa (kg/cm^2, psi)	Continuity
Engine running	More than 10 - 20 (0.1 - 0.2, 1 - 3)	No
Engine stopped	Less than 10 - 20 (0.1 - 0.2, 1 - 3)	Yes

Check the continuity between the terminals of oil pressure switch and body ground.

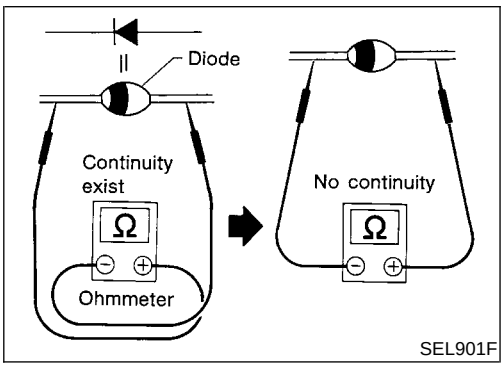

SEL901F

DIODE CHECK

NAEL0311S02

- Check continuity using an ohmmeter.
- Diode is functioning properly if test results are as shown in the figure at left.
- Check diodes at the combination meter harness connector instead of checking them on the combination meter assembly. Refer to EL-146, “WARNING LAMP” wiring diagrams.

NOTE:
Specification may vary depending on the type of tester. Before performing this inspection, be sure to refer to the instruction manual for the tester to be used.

Component Parts and Harness Connector Location

NAEL0312

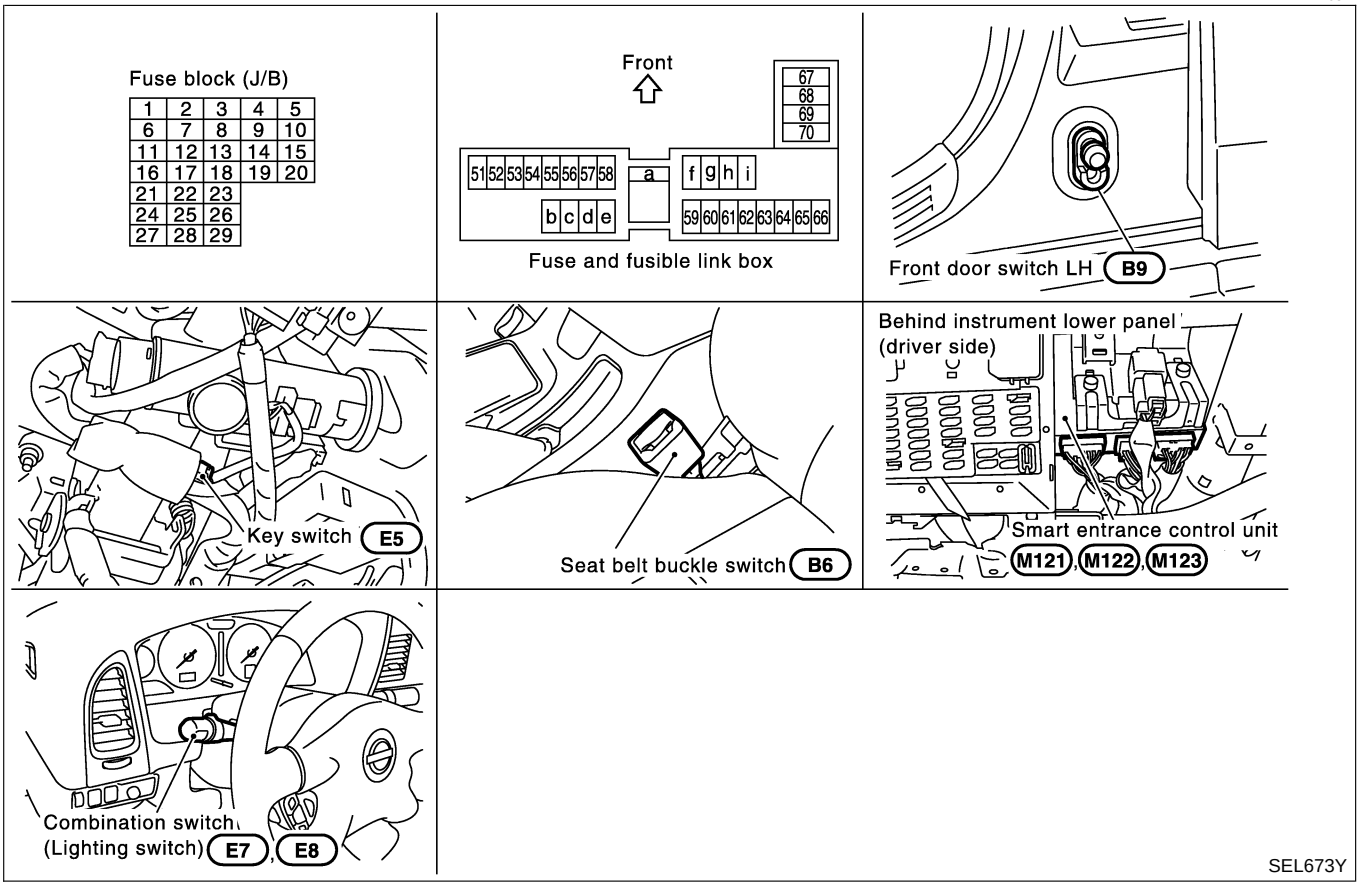

System Description

NAEL0313

The warning chime is controlled by the smart entrance control unit.
The warning chime is located in the smart entrance control unit.
Power is supplied at all times

- through 7.5A fuse [No. 24, located in fuse block (J/B)]
- to smart entrance control unit terminal 49 and
- to key switch terminal 2,
- through 10A fuse (No. 61, located in the fuse and fusible link box
- to tail lamp relay terminals 1 and 3.

When the ignition switch in the ON or START position, power is supplied

- through 7.5A fuse [No. 11, located in the fuse block (J/B)]
- to smart entrance control unit terminal 27.

Ground is supplied

- to smart entrance control unit terminals 43 and 64
- through body grounds M4, M66, M111, M147 and M157.

When a signal, or combination of signals, is received by the smart entrance control unit, the warning chime will sound.

IGNITION KEY WARNING CHIME

NAEL0313S01

When the key in the ignition switch in the OFF position, and the driver's door open, the warning chime will sound. Power is supplied

- from key switch terminal 1
- to smart entrance control unit terminal 25.

Ground is supplied

- from front door switch LH terminal 1
- to smart entrance control unit terminal 1.

Front door switch LH terminal 2 is grounded through body grounds B11, B22 and D210.

LIGHT WARNING CHIME

NAEL0313S02

When ignition switch OFF, driver's door open, and lighting switch in 1ST or 2ND position, warning chime will sound. Power is supplied.

- from tail lamp relay terminal 2
- to smart entrance control unit terminal 19 and 57.

Ground is supplied

- from front door switch LH terminal 1
- to smart entrance control unit terminal 1.

Front door switch LH terminal 2 is grounded through body grounds B11, B22 and D210.

SEAT BELT WARNING CHIME

NAEL0313S03

With ignition switch turned ON and seat belt unfastened (seat belt buckle switch ON), warning chime will sound for approximately 6 seconds.
Ground is supplied

- from seat belt buckle switch terminal 1
- to smart entrance control unit terminal 28.

Seat belt switch terminal 2 is grounded through body grounds B11, B22 and D210.

Wiring Diagram — CHIME —

NAEL0314

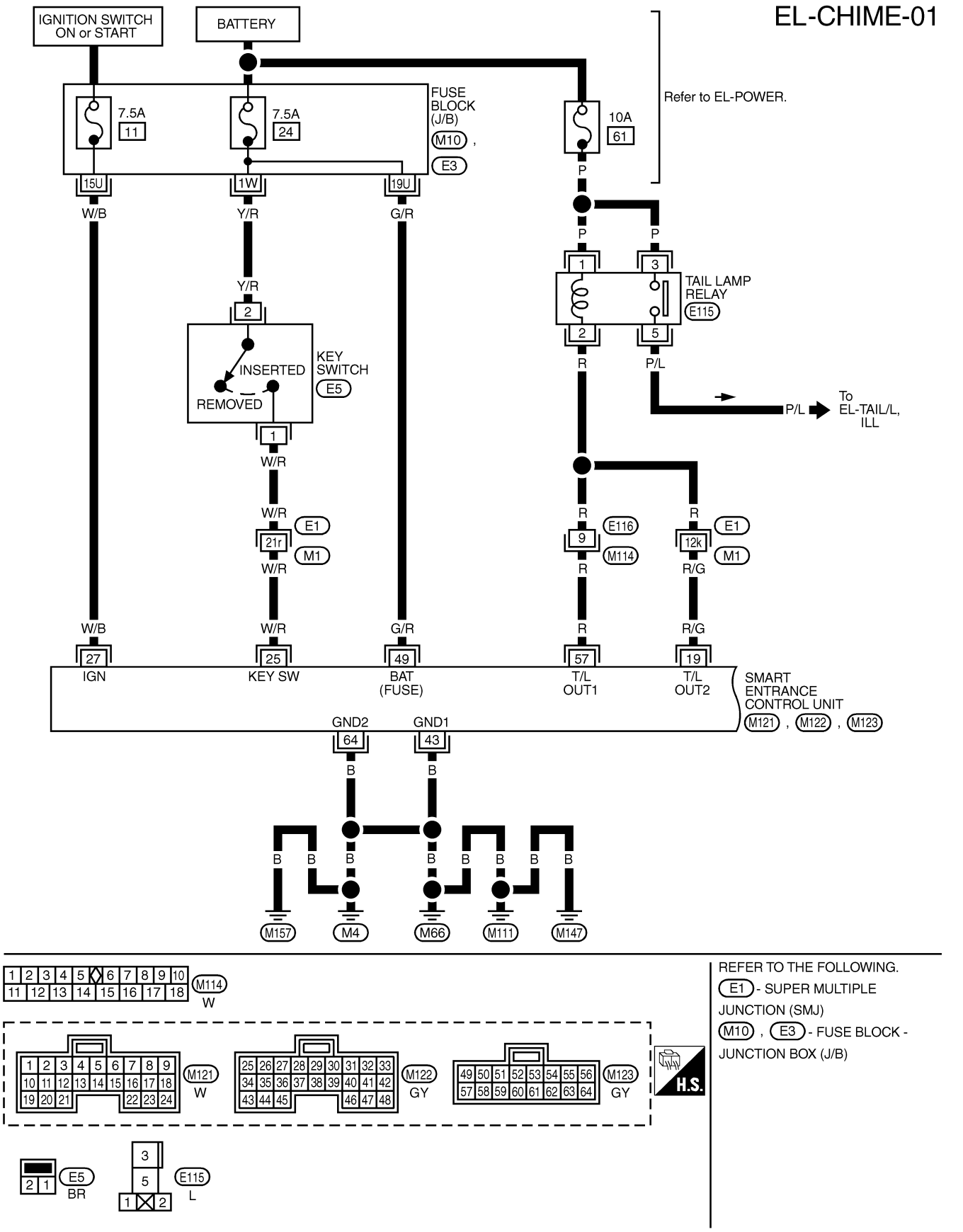

REFER TO THE FOLLOWING.
E1 - SUPER MULTIPLE JUNCTION (SMJ)
M10 , E3 - FUSE BLOCK - JUNCTION BOX (J/B)

MEL989P

EL-CHIME-02

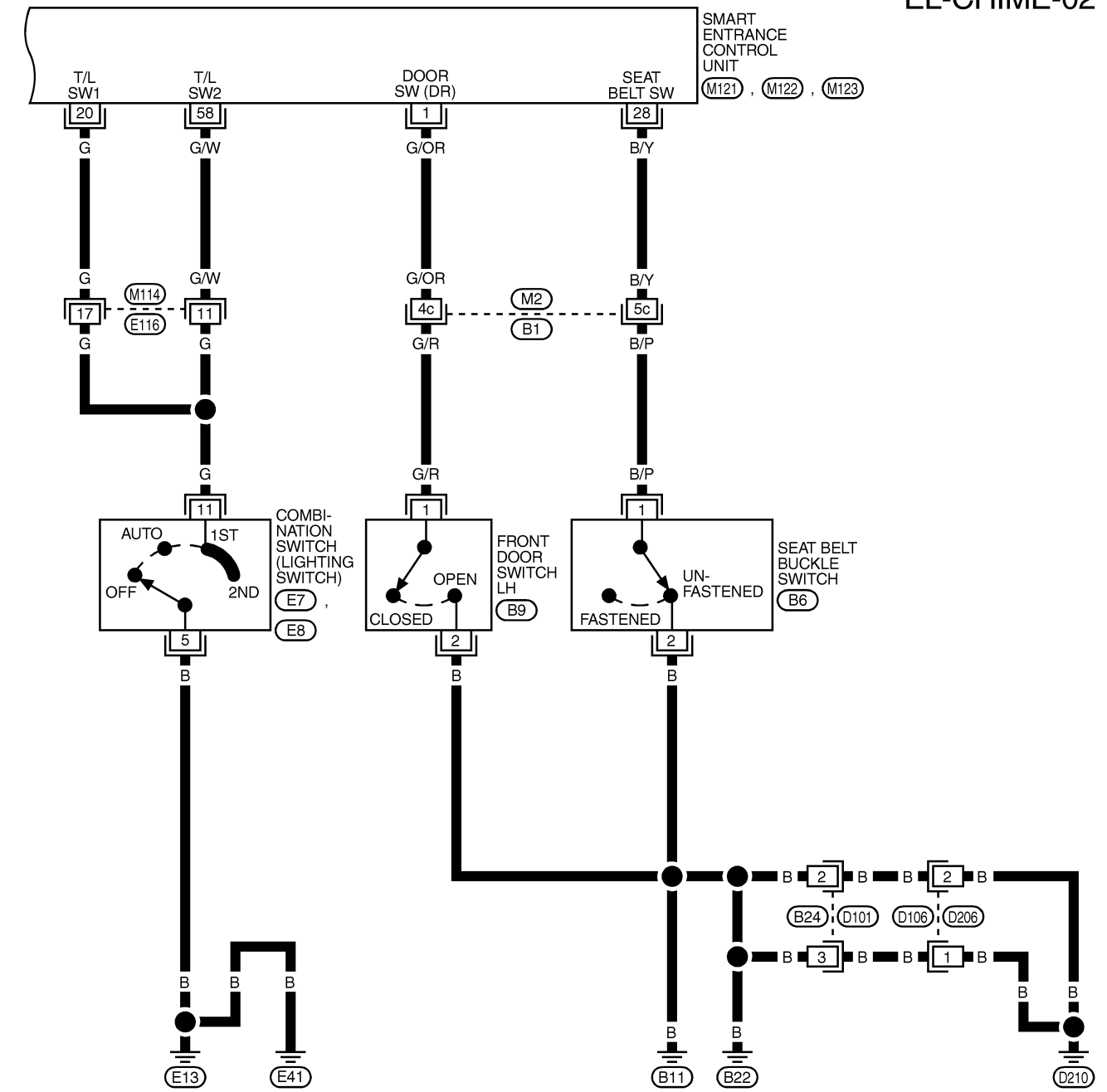

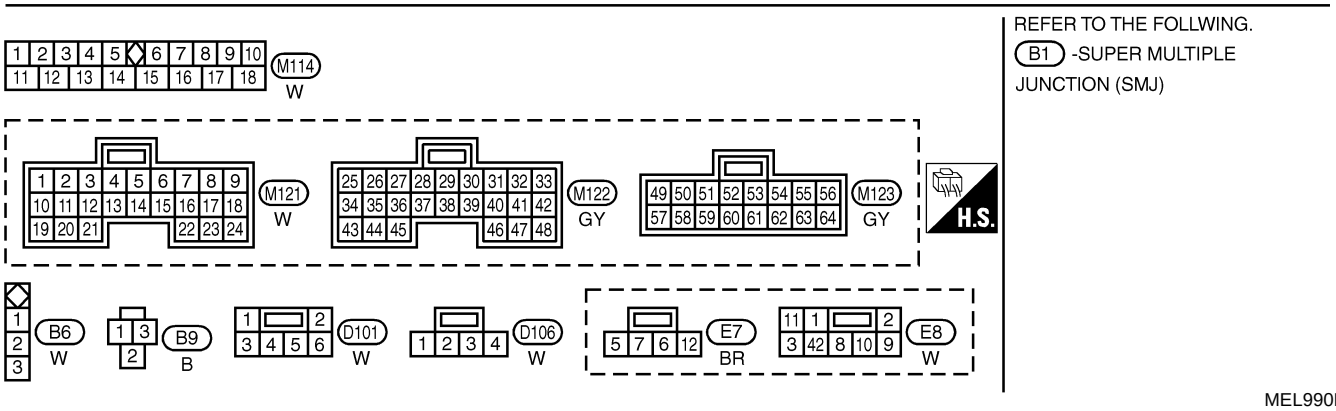

REFER TO THE FOLLWING.
B1 -SUPER MULTIPLE JUNCTION (SMJ)

MEL990P

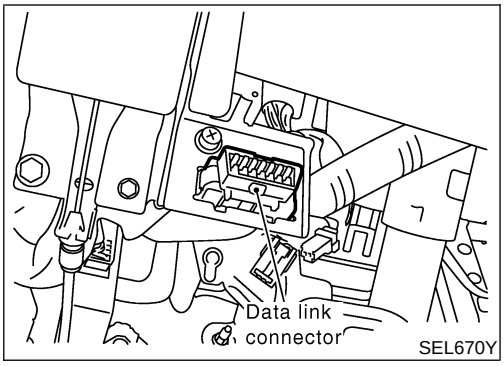

SEL670Y

CONSULT-II Inspection Procedure

=NAEL0315

"KEY WARN ALM"/"LIGHT WARN ALM"/"SEAT BELT ALM"

NAEL0315S01

1. Turn ignition switch "OFF".
2. Connect "CONSULT-II" and "CONSULT-II CONVERTER" to the data link connector.

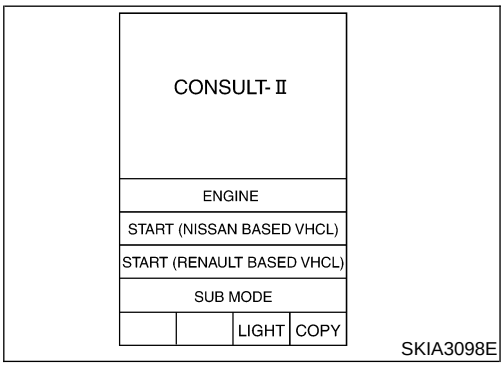

SKIA3098E

3. Turn ignition switch "ON".
4. Touch "START (NISSAN BASED VHCL)".

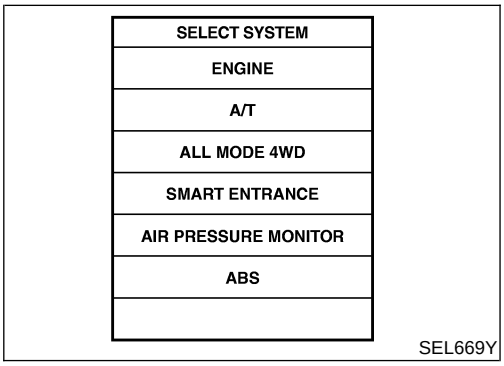

SEL669Y

5. Touch "SMART ENTRANCE".
   If "SMART ENTRANCE" is not indicated, go to GI-41, "CONSULT-II Data Link Connector (DLC) Circuit".

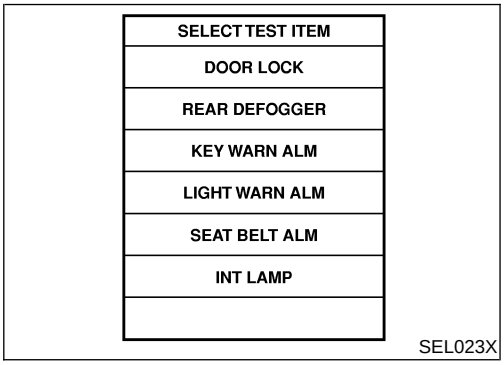

SEL023X

6. Touch "KEY WARN ALM", "LIGHT WARN ALM" or "SEAT BELT ALM".

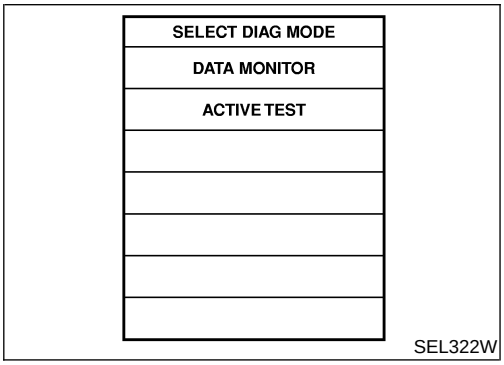

SEL322W

7. Select diagnosis mode.
   "DATA MONITOR" and "ACTIVE TEST" are available for the warning chime.

CONSULT-II Application Items

NAEL0316

"KEY WARNING ALARM"

NAEL0316S01

Data Monitor

NAEL0316S0101

Monitored Item	Description
IGN ON SW	Indicates [ON/OFF] condition of ignition switch.
KEY ON SW	Indicates [ON/OFF] condition of key switch.
DOOR SW DR	Indicates [ON/OFF] condition of front door switch LH.

Active Test

NAEL0316S0102

Test Item	Description
CHIME	This test is able to check key warning chime operation. Key warning chime sounds for 2 seconds after touching "ON" on CONSULT-II screen.

"LIGHT WARN ALM"

NAEL0316S02

Data Monitor

NAEL0316S0201

Monitored Item	Description
LIGHT SW 1ST	Indicates [ON/OFF] condition of lighting switch.
IGN ON SW	Indicates [ON/OFF] condition of ignition switch.
DOOR SW-DR	Indicates [ON/OFF] condition of front door switch LH.

Active Test

NAEL0316S0202

Test Item	Description
CHIME	This test is able to check light warning chime operation. Light warning chime sounds for 2 seconds after touching "ON" on CONSULT-II screen.

"SEAT BELT WARM ALM"

NAEL0316S03

Data Monitor

NAEL0316S0301

Monitored Item	Description
IGN ON SW	Indicates [ON/OFF] condition of ignition switch.
SEAT BELT SW	Indicates [ON/OFF] condition of seat belt switch.

Active Test

NAEL0316S0302

Test Item	Description
CHIME	This test is able to check seat belt warning chime operation. Seat belt warning chime sounds for 2 seconds after touching "ON" on CONSULT-II screen.

Trouble Diagnoses

SYMPTOM CHART

NAEL0317

NAEL0317S01

REFERENCE PAGE (EL-)	170	172	173	174	175
SYMPTOM	POWER SUPPLY AND GROUND CIRCUIT CHECK	DIAGNOSTIC PROCEDURE 1 (LIGHTING SWITCH INPUT SIGNAL CHECK)	DIAGNOSTIC PROCEDURE 2 (KEY SWITCH INSERT SIGNAL CHECK)	DIAGNOSTIC PROCEDURE 3 (SEAT BELT BUCKLE SWITCH CHECK)	DIAGNOSTIC PROCEDURE 4
Light warning chime does not activate.	X	X			X
Ignition key warning chime does not activate.	X		X		X
Seat belt warning chime does not activate.	X			X	X
All warning chimes do not activate.	X				X

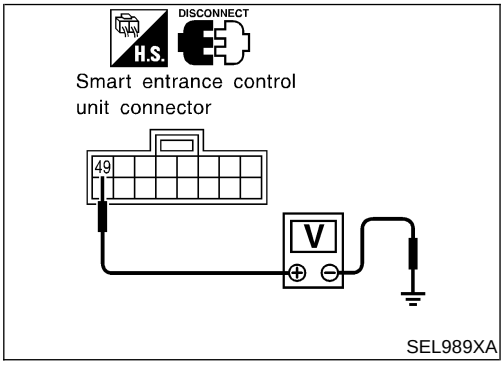

POWER SUPPLY AND GROUND CIRCUIT CHECK

NAEL0317S02

Power Supply Circuit Check

NAEL0317S0201

Terminals			Voltage
(+)		(–)	
Connector	Terminal (Wire color)		
M123	49 (G/R)	Ground	Battery voltage

If NG, check the following.

- 7.5A fuse [No. 24, located in fuse block (J/B)]
- Harness for open or short between smart entrance control unit and fuse

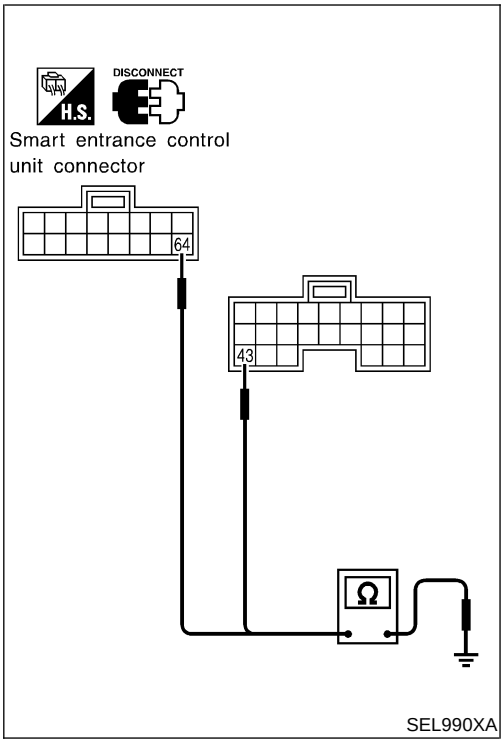

Ground Circuit Check

NAEL0317S0202

Terminals			Continuity
(+)		(–)	
Connector	Terminal (Wire color)		
M122	43 (B)	Ground	Yes
M123	64 (B)		

DIAGNOSTIC PROCEDURE 1 (LIGHTING SWITCH INPUT SIGNAL CHECK)

=NAEL0317S03

1	CHECK LIGHTING SWITCH INPUT SIGNAL

With CONSULT-II

Check lighting switch ("LIGHT SW 1ST") in "DATA MONITOR" mode with CONSULT-II.

DATA MONITOR	
MONITOR	
LIGHT SW 1ST	OFF

When lighting switch is in 1st or 2nd position:
LIGHT SW 1ST ON

When lighting switch is in OFF position:
LIGHT SW 1ST OFF

SEL991X

Without CONSULT-II

Check voltage between smart entrance control unit harness connector M121 terminal 19 (R/G), connector M123 terminal 57 (R) and ground.

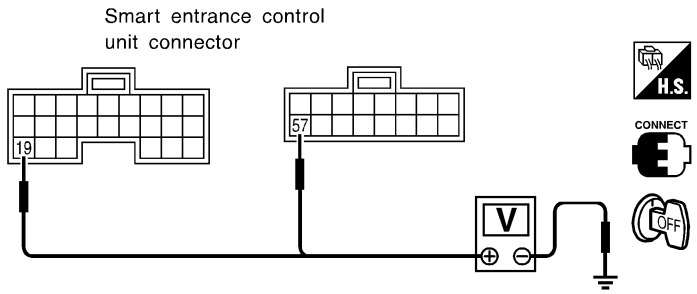

Voltage [V]:

Condition of lighting switch: 1ST or 2ND
0

Condition of lighting switch: OFF
Approx. 12

SEL992XA

OK or NG

OK	▶	Replace smart entrance control unit.
NG	▶	**Check the following.** ● 10A fuse (No. 61, located in the fuse and fusible link box) ● Harness for open or short between smart entrance control unit and tail lamp relay

DIAGNOSTIC PROCEDURE 2 (KEY SWITCH INSERT SIGNAL CHECK)

=NAEL0317S04

1 CHECK KEY SWITCH INPUT SIGNAL

With CONSULT-II

Check key switch ("KEY ON SW") in "DATA MONITOR" mode with CONSULT-II.

DATA MONITOR	
MONITOR	
KEY ON SW	ON

When key is inserted to ignition key cylinder:

KEY ON SW ON

When key is removed from ignition key cylinder:

KEY ON SW OFF

SEL315W

Without CONSULT-II

Check voltage between smart entrance control unit harness connector M122 terminal 25 (W/R) and ground.

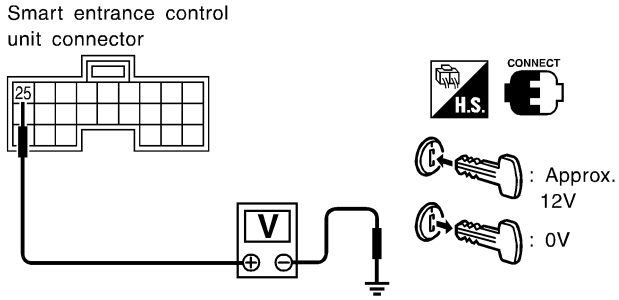

Voltage [V]:

Condition of key switch: Key is inserted.

Approx. 12

Condition of key switch: Key is removed.

0

SEL011Y

OK or NG

OK	▶	Replace smart entrance control unit.
NG	▶	GO TO 2.

2 CHECK KEY SWITCH (INSERT)

Check continuity between key switch connector terminals 1 and 2.

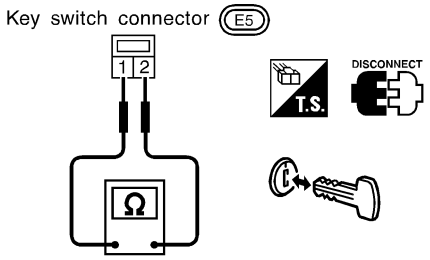

Continuity:

Condition of key switch: Key is inserted.

Yes

Condition of key switch: Key is removed.

No

SEL308X

OK or NG

OK	▶	**Check the following.** ● 7.5A fuse [No. 24, located in fuse block (J/B)] ● Harness for open or short between key switch and fuse ● Harness for open or short between smart entrance control unit and key switch
NG	▶	Replace key switch.

DIAGNOSTIC PROCEDURE 3 (SEAT BELT BUCKLE SWITCH CHECK)

=NAEL0317S05

1 CHECK SEAT BELT BUCKLE SWITCH INPUT SIGNAL

With CONSULT-II

Check seat belt buckle switch ("SEAT BELT SW") in "DATA MONITOR" mode with CONSULT-II.

DATA MONITOR	
MONITOR	
SEAT BELT SW	ON

When seat belt is fastened:
SEAT BELT SW ON

When seat belt is released:
SEAT BELT SW OFF

SEL317W

Without CONSULT-II

1. Turn ignition switch "ON".
2. Check voltage between smart entrance control unit harness connector M122 terminal 28 (B/Y) and ground.

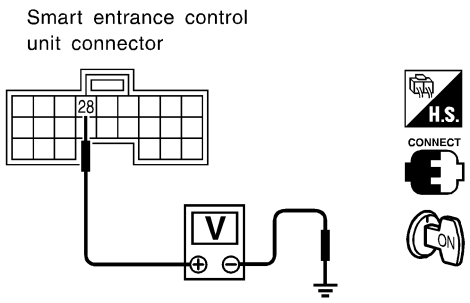

Voltage [V]:
Condition of seat belt buckle switch: Fastened
Approx. 5
Condition of seat belt buckle switch: Unfastened
0

SEL994X

OK or NG

OK	▶	Replace smart entrance control unit.
NG	▶	GO TO 2.

2 CHECK SEAT BELT BUCKLE SWITCH

Check continuity between seat belt buckle switch connector terminals 1 and 2 when seat belt is fastened and unfastened.

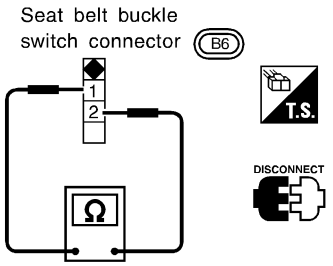

Continuity:
Seat belt is fastened.
No
Seat belt is unfastened.
Yes

SEL381X

OK or NG

OK	▶	**Check the following.** ● Seat belt buckle switch ground circuit ● Harness for open or short between smart entrance control unit and seat belt buckle switch
NG	▶	Replace seat belt buckle switch.

DIAGNOSTIC PROCEDURE 4

NAEL0317S06

1	CHECK IGNITION ON SIGNAL

With CONSULT-II

Check ignition switch ON signal ("IGN ON SW") in "DATA MONITOR" mode with CONSULT-II.

DATA MONITOR	
MONITOR	
IGN ON SW	ON

When ignition switch is ON:
IGN ON SW ON

When ignition switch is OFF:
IGN ON SW OFF

SEL318W

Without CONSULT-II

Check voltage between smart entrance control unit harness connector M122 terminal 27 (W/B) and ground.

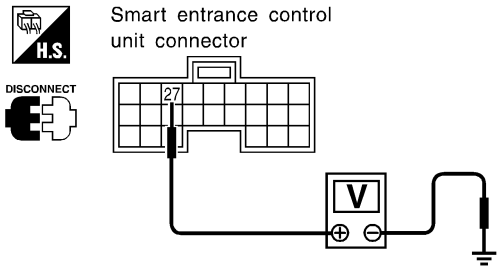

Terminals		Ignition switch position		
(+)	(–)	OFF	ACC	ON
27	Ground	0V	0V	Battery voltage

SEL995X

OK or NG

OK	▶	GO TO 2.
NG	▶	**Check the following.** ● 7.5A fuse [No. 11, located in fuse block (J/B)] ● Harness for open or short between smart entrance control unit and fuse

2	CHECK DOOR SWITCH INPUT SIGNAL

With CONSULT-II

Check driver door switch signal ("DOOR SW-DR") in "DATA MONITOR" mode with CONSULT-II.

DATA MONITOR	
MONITOR	
DOOR SW-DR	OFF

When driver's door is open:

DOOR SW-DR ON

When driver's door is closed:

DOOR SW-DR OFF

SEL319W

Without CONSULT-II

Check voltage between smart entrance control unit harness connector M121 terminal 1 (G/OR) and ground.

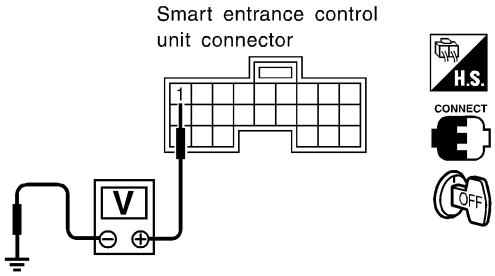

Voltage [V]:

Condition of driver's door: CLOSED

Approx. 5

Condition of driver's door: OPENED

0

SEL996X

OK or NG

OK	▶	GO TO 4.
NG	▶	GO TO 3.

3	CHECK DRIVER SIDE DOOR SWITCH

Check continuity between front door switch LH connector terminals 1 and 2.

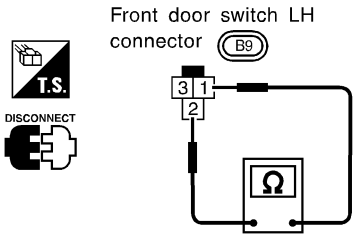

Continuity:

Door switch is pushed.

No

Door switch is released.

Yes

SEL383X

OK or NG

OK	▶	**Check the following.** ● Driver side door switch ground circuit and condition ● Harness for open or short between smart entrance control unit and front door switch LH
NG	▶	Replace front door switch LH.

4	CHECK WARNING CHIME

With CONSULT-II

Perform "CHIME" in "ACTIVE TEST" mode with CONSULT-II.

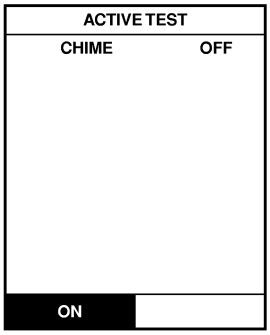

Warning chime should operate.

SEL320W

OK or NG

OK	▶	System is OK.
NG	▶	Replace smart entrance control unit.

System Description

NAEL0318

WIPER OPERATION

NAEL0318S01

The front wiper switch is controlled by a lever built into the combination switch.
There are three wiper switch positions:

- LO speed
- HI speed
- INT (Intermittent)

With the ignition switch in the ACC or ON position, power is supplied

- through 20A fuse [No. 19, located in the fuse block (J/B)]
- to front wiper motor terminal 1, and
- to front wiper switch terminal 15.

Low and High Speed Wiper Operation

NAEL0318S0101

Ground is supplied to front wiper switch terminal 17 through body grounds E13 and E41.
When the wiper switch is placed in the LO position, ground is supplied

- through terminal 14 of the front wiper switch
- to front wiper motor terminal 5.

With power and ground supplied, the front wiper motor operates at low speed.
When the front wiper switch is placed in the HI position, ground is supplied

- through terminal 16 of the front wiper switch
- to front wiper motor terminal 3.

With power and ground supplied, the front wiper motor operates at high speed.

Auto Stop Operation

NAEL0318S0102

With front wiper switch turned OFF, front wiper motor will continue to operate until wiper arms reach windshield base.
When wiper arms are not located at base of windshield with front wiper switch OFF, ground is provided

- from terminal 14 of the front wiper switch
- to front wiper motor terminal 5, in order to continue front wiper motor operation at low speed.

Ground is also supplied

- to terminal 13 of the front wiper switch
- through front wiper motor terminal 4
- through terminal 6 of the front wiper motor, and
- through body grounds E13 and E41.

When wiper arms reach base of windshield, front wiper motor terminals 1 and 4 are connected instead of terminals 4 and 6. Wiper motor will then stop wiper arms at the PARK position.

Intermittent Operation

NAEL0318S0103

The front wiper motor operates the wiper arms one time at low speed at a set interval of approximately 2 to 13 seconds. This feature is controlled by the wiper amplifier built in the front wiper switch.
When the front wiper switch is placed in the INT position, ground is supplied

- to wiper amplifier (INT SW)
- from front wiper switch terminal 17
- through body grounds E13 and E41,
- to front wiper motor terminal 5
- through the front wiper switch terminal 14 and
- through wiper amplifier (OUTPUT).

WASHER OPERATION

NAEL0318S02

With the ignition switch in the ACC or ON position, power is supplied

- through 20A fuse [No. 19, located in the fuse block (J/B)]
- to front washer motor terminal 1.

When the lever is pulled to the WASH position, ground is supplied

- to front washer motor terminal 2
- through terminal 18 of the front wiper switch

- through terminal 17 of the front wiper switch, and
- through body grounds E13 and E41.

With power and ground supplied, the front washer motor operates.
When the lever is pulled to the WASH position for one second or more, the front wiper motor operates at low speed for approximately 3 seconds to clean windshield. This feature is controlled by the wiper amplifier in the same manner as the intermittent operation.

Wiring Diagram — WIPER —

NAEL0319

EL-WIPER-01

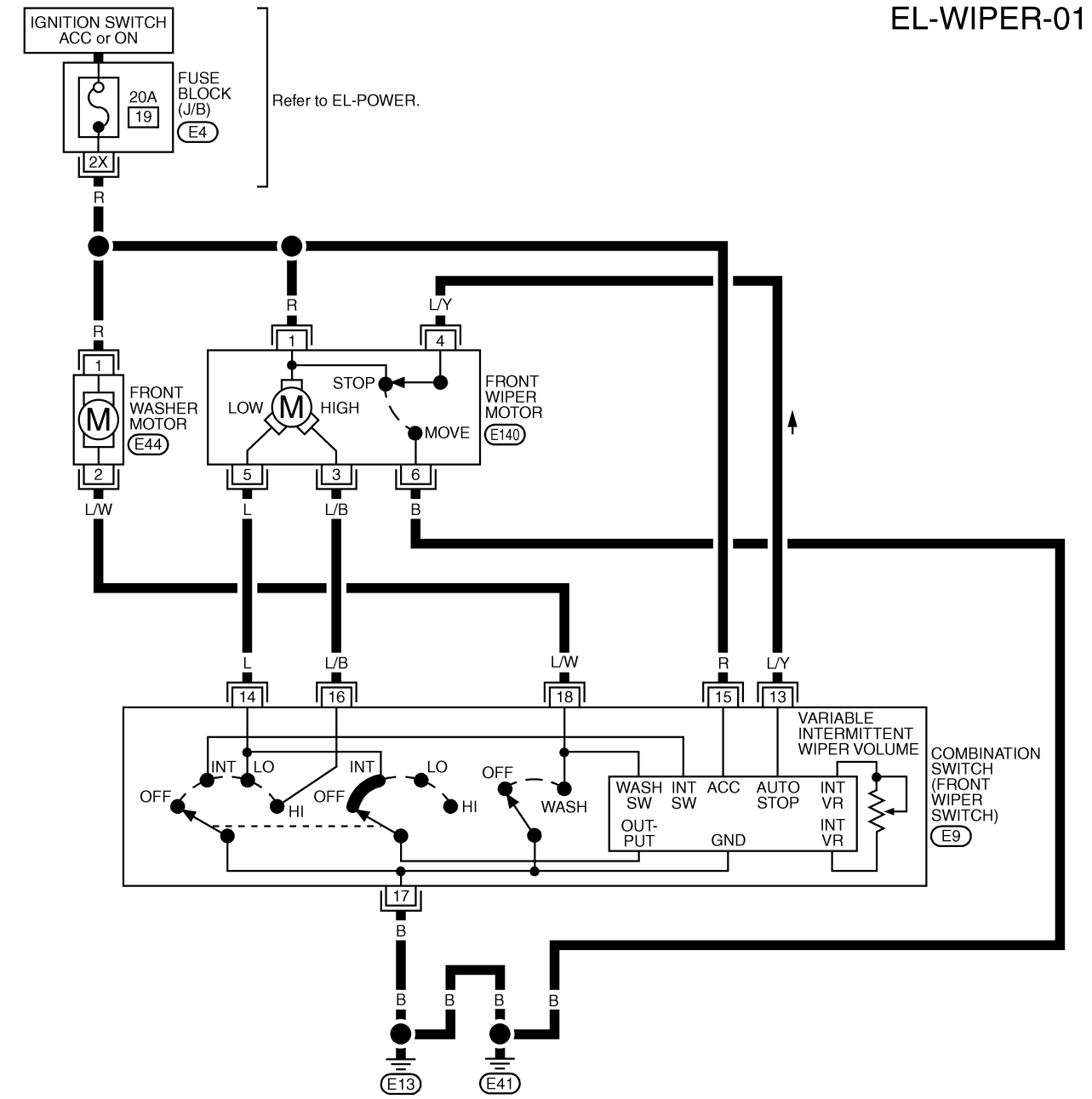

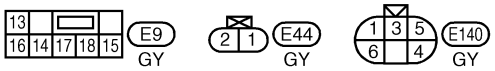

REFER TO THE FOLLOWING.
E4 -FUSE BLOCK-
JUNCTION BOX (J/B)

MEL121S

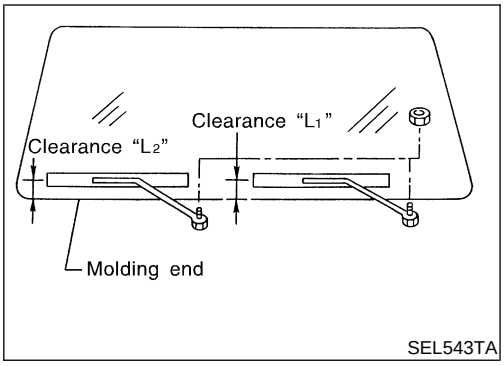

Removal and Installation

NAEL0320

WIPER ARMS

NAEL0320S01

1. Prior to wiper arm installation, turn on wiper switch to operate wiper motor and then turn it "OFF" (Auto Stop).
2. Lift the blade up and then set it down onto glass surface to set the blade center to clearance "L_1" & "L_2" immediately before tightening nut.
3. Eject washer fluid. Turn on wiper switch to operate wiper motor and then turn it "OFF".
4. Ensure that wiper blades stop within clearance "L_1" & "L_2".
   Clearance "L_1": 29 - 39 mm (1.14 - 1.54 in)
   Clearance "L_2": 32 - 42 mm (1.26 - 1.65 in)

- Tighten wiper arm nuts to specified torque.
  Front wiper: 21 - 26 N·m (2.1 - 2.7 kg-m, 15 - 20 ft-lb)

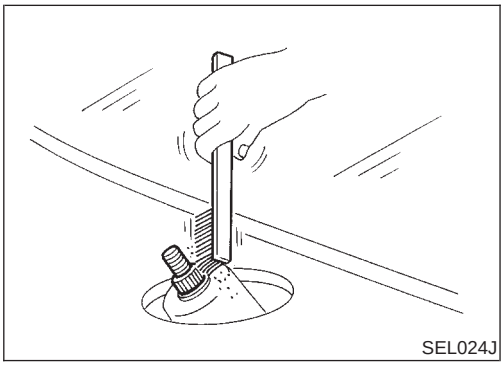

- **Before reinstalling wiper arm, clean up the pivot area as illustrated. This will reduce possibility of wiper arm looseness.**

WIPER LINKAGE

NAEL0320S02

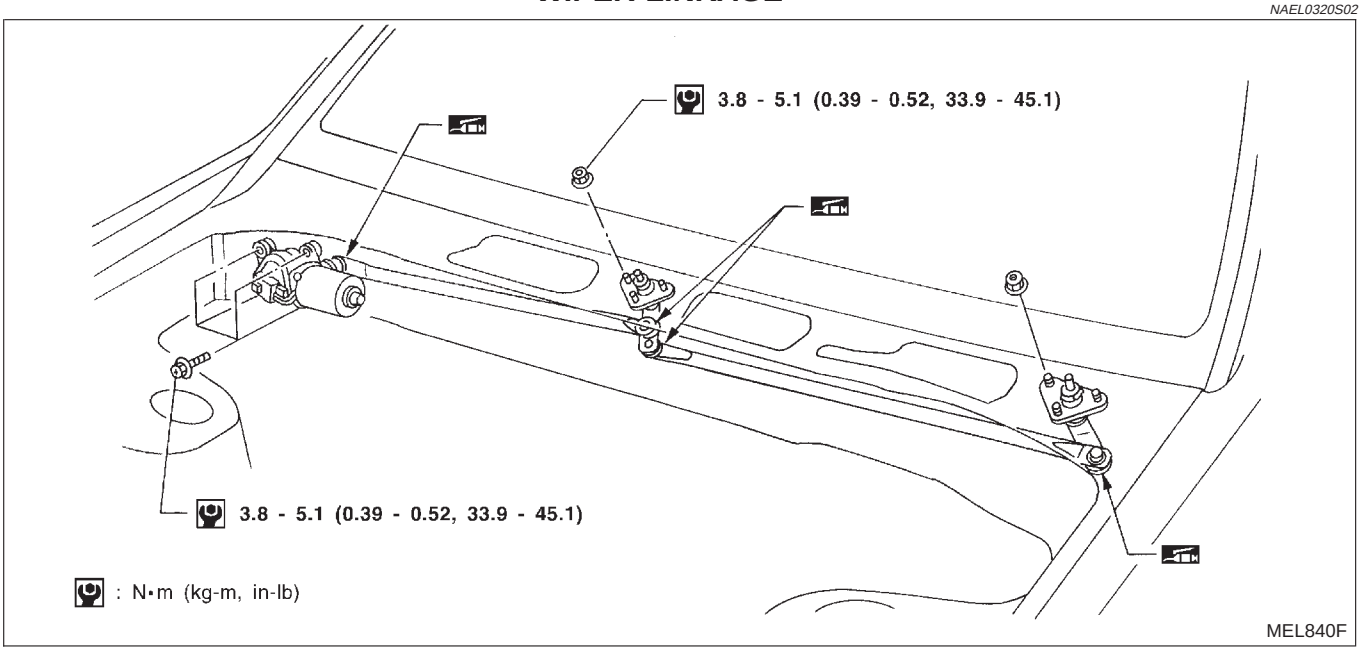

Removal

NAEL0320S0201

1. Remove 4 bolts that secure wiper motor.
2. Detach wiper motor from wiper linkage at ball joint.
3. Remove wiper linkage.

Be careful not to break ball joint rubber boot.

Installation

NAEL0320S0202

- Grease ball joint portion before installation.

Installation is the reverse order of removal.

Washer Nozzle Adjustment

NAEL0321

- Adjust washer nozzle with suitable tool as shown in the figure at left.

Adjustable range: ±10°

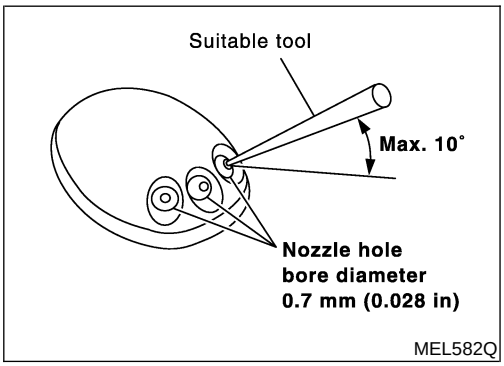

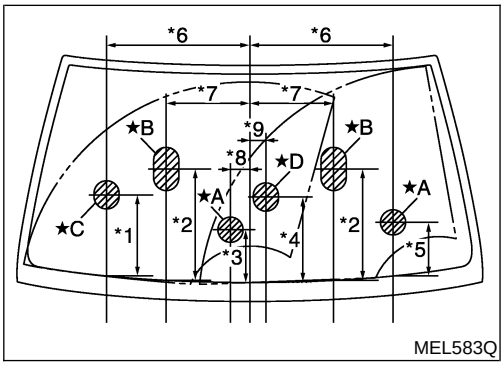

Unit: mm (in)

*1	251 (9.88)	*6	459 (18.07)
*2	351 (13.82)	*7	256 (10.08)
*3	165 (6.50)	*8	67 (2.64)
*4	269 (10.59)	*9	42 (1.65)
*5	167 (6.57)		

*A: The diameters of these circles are less than 80 mm (3.15 in).
*B: The diameters of these circles are less than 138 × 80 mm (5.43 × 3.15 in).
*C: The diameters of these circles are less than 96 × 80 mm (3.78 × 3.15 in).
*D: The diameters of these circles are less than 90 × 80 mm (3.54 × 3.15 in).

Washer Tube Layout

NAEL0322

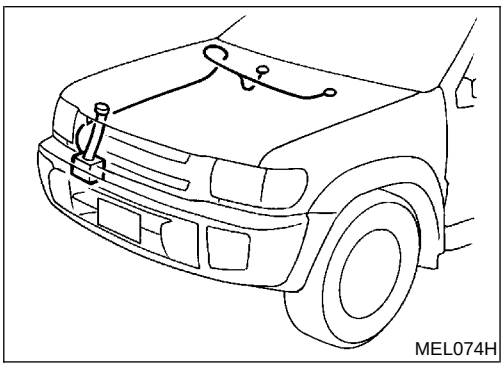

System Description

NAEL0323

WIPER OPERATION

NAEL0323S01

Power Supply and Ground

NAEL0323S0101

Power is supplied at all times
- through 10A fuse [No. 5, located in fuse block (J/B)]
- to rear wiper motor terminal 1.

With ignition switch in the ACC or ON position, power is supplied
- through 10A fuse [No. 29, located in the fuse block (J/B)]
- to rear wiper motor terminal 4.

When the glass hatch switch is OPEN, ground is supplied
- to rear wiper motor terminal 6
- through glass hatch switch terminals 1 and 2
- through body grounds B11, B22 and D210.

Ground is supplied
- to rear wiper motor terminal 8
- through body grounds B11, B22 and D210.

Wiper Operation

NAEL0323S0102

When the rear wiper switch is turned ON, ground is supplied
- to rear wiper motor terminal 2
- through combination switch terminals 22 and 24
- through body grounds E13 and E41.

Then, power is supplied
- to rear wiper motor terminal 4.

Ground is supplied
- to rear wiper motor terminal 8
- through body grounds B11, B22 and D210.

With power and ground supplied, the wiper motor operates.

Auto Stop Operation

NAEL0323S0103

With rear wiper switch turned OFF, rear wiper motor will continue to operate until wiper arm reaches rear wiper stopper.
Then wiper motor turns the other way and wiper arm moves once until wiper arm reaches stopper.

Intermittent Operation

NAEL0323S0104

The rear wiper motor operates the wiper arms at low speed approximately every 7 seconds.
When the wiper switch is placed in the INT position, ground is supplied
- to rear wiper motor terminal 3
- through rear wiper switch terminals 21 and 24
- through body grounds E13 and E41.

Then, power is supplied
- to rear wiper motor terminal 4.

Ground is supplied
- to rear wiper motor terminal 8
- through body grounds B11, B22 and D210.

With power and ground supplied, rear wiper operates at intermittent.

WIPER OPERATION PROHIBIT CONTROL

NAEL0323S02

When glass hatch is open with back door key cylinder while rear wiper is operated, wiper operation is stopped. (Wiper operation prohibit control)
When glass hatch is closed and rear wiper switch turns from OFF and then rear wiper switch is turned to ON, wiper operation prohibit control is canceled.

WASHER OPERATION

NAEL0323S03

When the rear wiper switch is turned to WASH position, ground is supplied

- to rear wiper motor terminal 5
- through terminals 23 and 24
- through body grounds E13 and E41.

Then, power is supplied

- to rear washer motor terminal 2
- through 10 A fuse [No. 29, located in the fuse block (J/B)].

Ground is supplied

- to rear washer motor terminal 1
- through rear wiper switch terminals 23 and 24
- through body grounds E13 and E41.

With power and ground supplied, the rear washer motor operates.
When the rear wiper switch is turned to WASH position for 0.4 seconds or more, the rear wiper motor operates approximately 3 times after the rear wiper switch is released.

Wiring Diagram — WIP/R —

NAEL0324

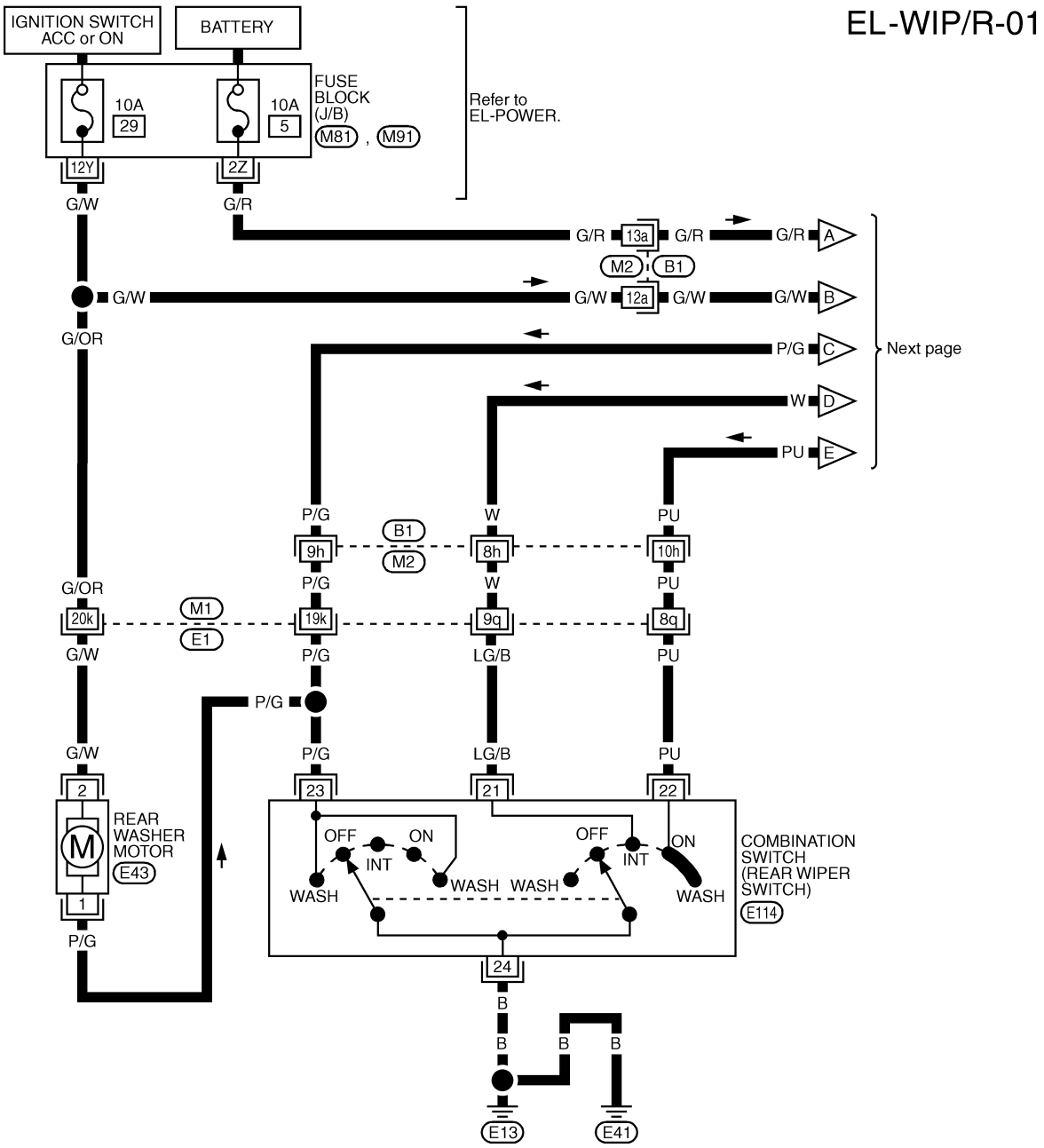

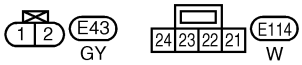

REFER TO THE FOLLOWING.
E1 , B1 -SUPER MULTIPLE JUNCTION (SMJ)
M81 , M91 -FUSE BLOCK-JUNCTION BOX (J/B)

MEL122S

EL-WIP/R-02

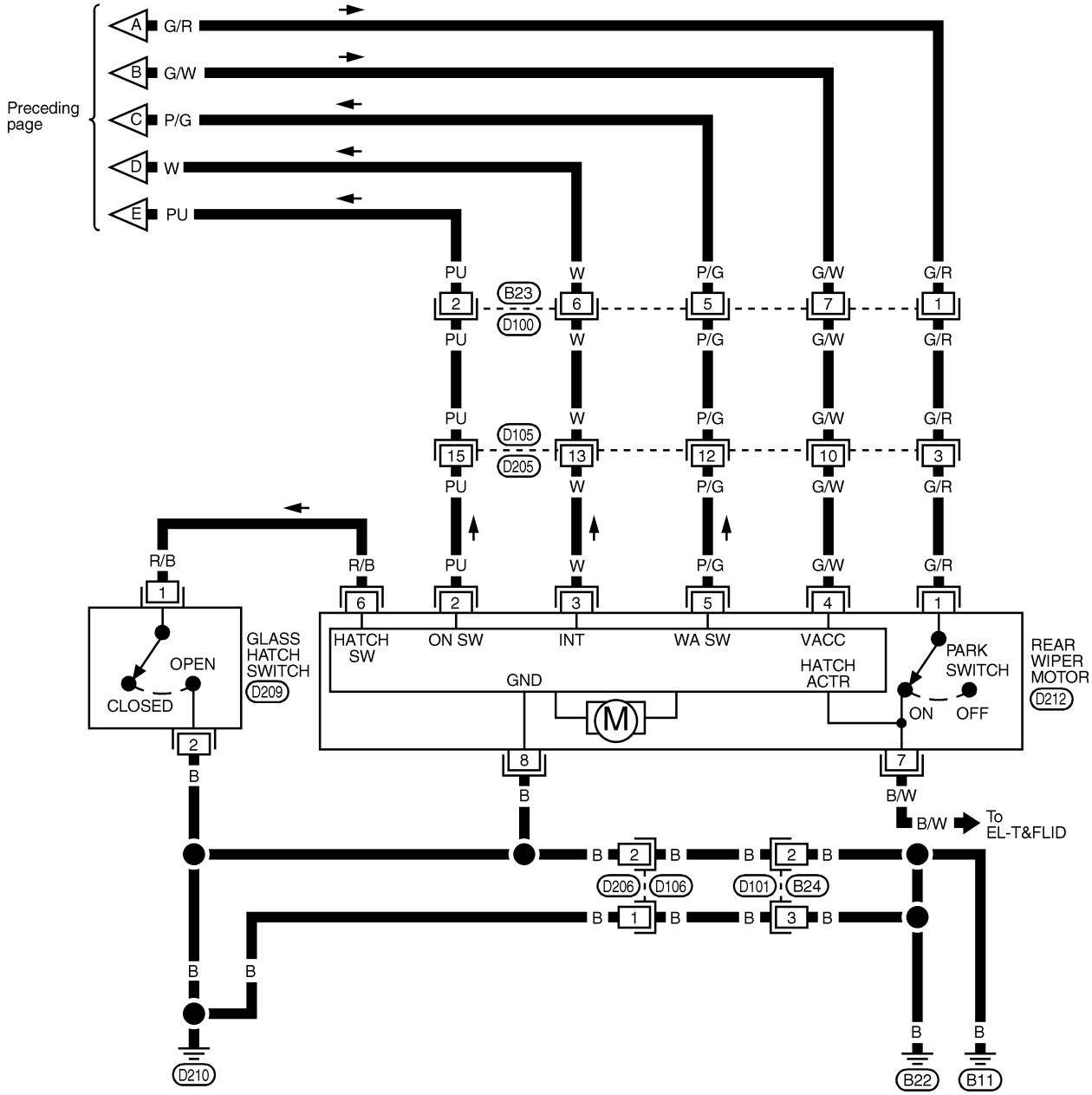

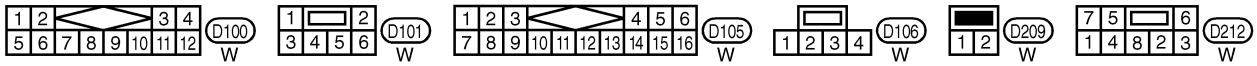

MEL993P

Trouble Diagnoses

NAEL0325

REAR WIPER MOTOR INSPECTION TABLE

NAEL0325S01

(Data are reference values.)

Terminal No.	Item	Condition			Voltage (Approximate value)
1	Power supply (BAT)	OFF	—		Battery voltage
2	ON switch	ACC	Rear wiper switch	ON	Less than 1V
				OFF or INT	12V
3	Intermittent switch	ACC	Rear wiper switch	INT	Less than 1V
				OFF, ON or WASH	12V
4	Power supply (ACC)	ACC	—		Battery voltage
5	Washer switch	ACC	Rear wiper switch	WASH	Less than 1V
				OFF, ON or INT	12V
6	Glass hatch switch	ACC	Glass hatch	Open	Less than 1V
				Closed	5V
7	Park switch	OFF	Trunk lid opener switch	ON	11.5V
				OFF	Battery voltage
8	Ground	—			—

NOTE:
Power to the rear wiper motor will be interrupted when the rear glass hatch is opened. In that case, conduct the inspection of the rear wiper motor with the rear glass hatch closed, unless otherwise indicated.

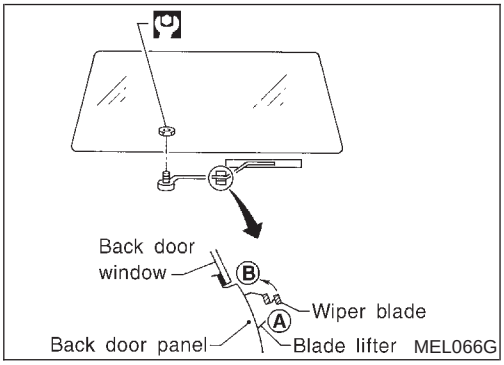

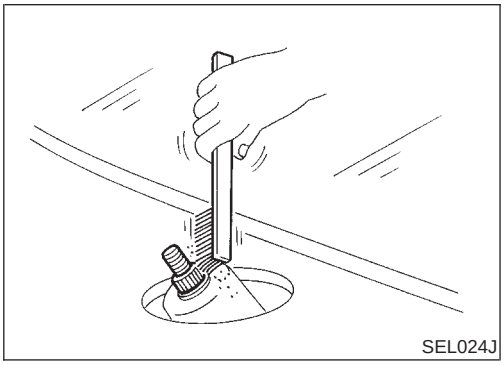

Removal and Installation

NAEL0326

WIPER ARMS

NAEL0326S01

1. Prior to wiper arm installation, turn on wiper switch to operate wiper motor and then turn it “OFF” (Auto Stop).
2. Install wiper arm to portion A as in figure below and tighten wiper arm nut to specification.
3. Then, set wiper arm to portion B.

   : 13 - 18 N·m (1.3 - 1.8 kg-m, 9 - 13 ft-lb)

- **Before reinstalling wiper arm, clean up the pivot area as illustrated. This will reduce possibility of wiper arm looseness.**

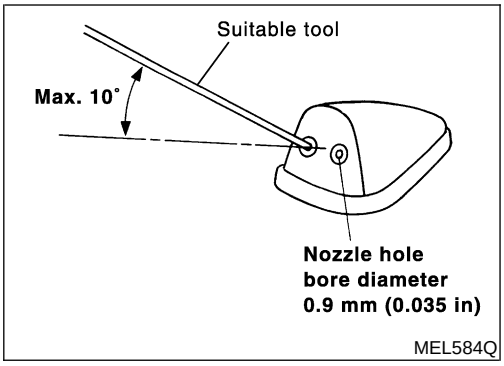

Washer Nozzle Adjustment

NAEL0327

- Adjust washer nozzle with suitable tool as shown in the figure at left.

  Adjustable range: ±10° (In any direction)

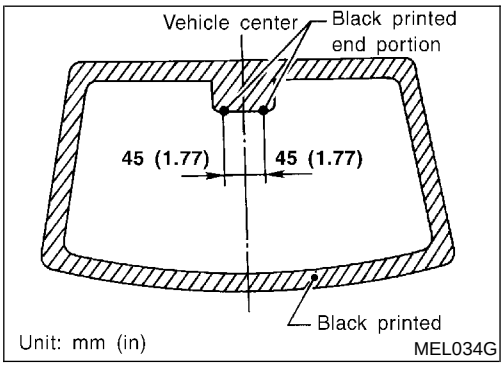

Washer Tube Layout

NAEL0328

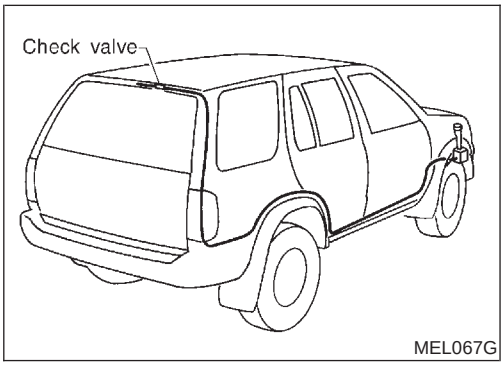

Check Valve

NAEL0329

- A check valve is provided in the washer fluid line. Be careful not to connect check valve to washer tube in the wrong direction.

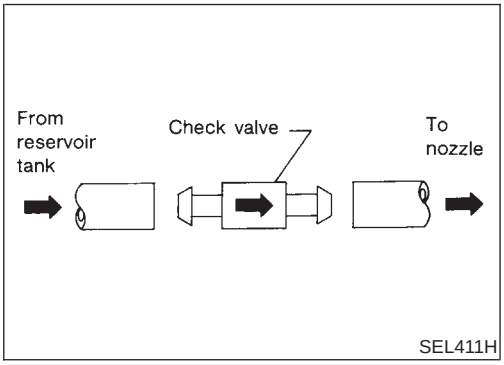

Wiring Diagram — HORN —

NAEL0330

EL-HORN-01

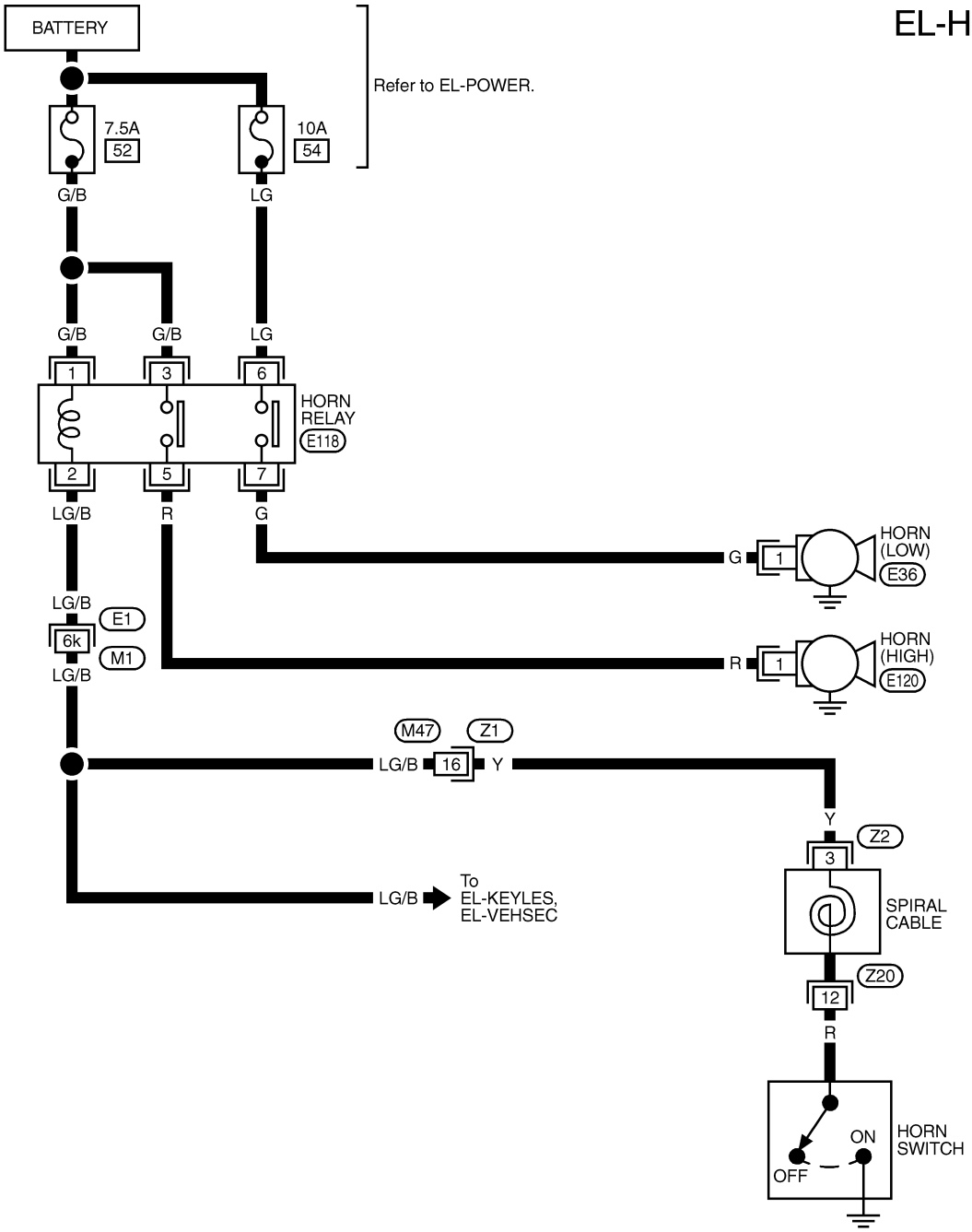

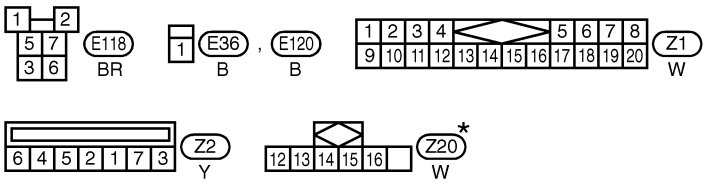

*: This connector is not shown in "HARNESS LAYOUT", EL section.

REFER TO THE FOLLOWING.
E1 -SUPER MULTIPLE JUNCTION (SMJ)

MEL994P

Wiring Diagram — CIGAR —

NAEL0331

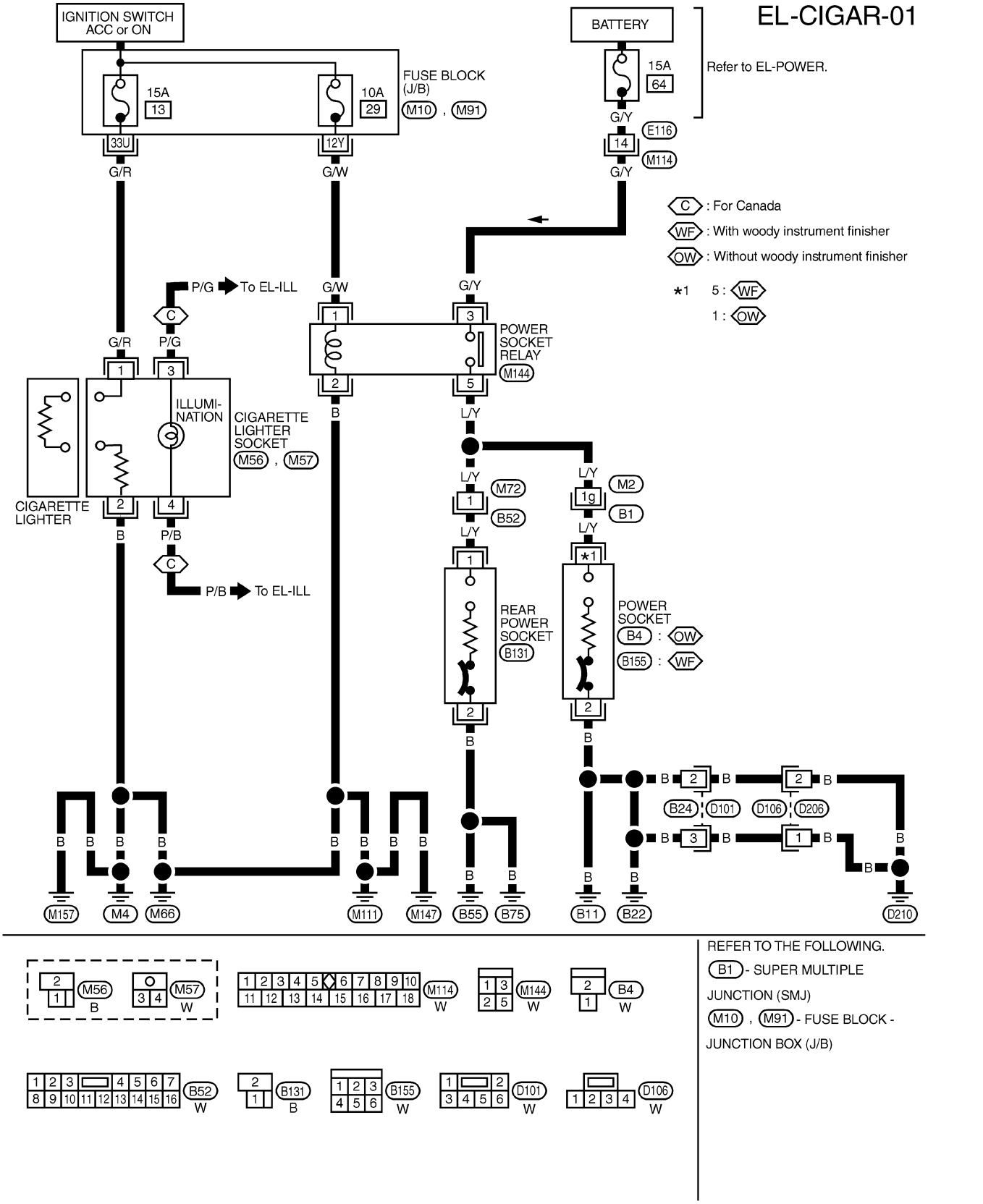

REFER TO THE FOLLOWING.
B1 - SUPER MULTIPLE JUNCTION (SMJ)
M10 , M91 - FUSE BLOCK - JUNCTION BOX (J/B)

MEL946R

Wiring Diagram — CLOCK —

NAEL0332

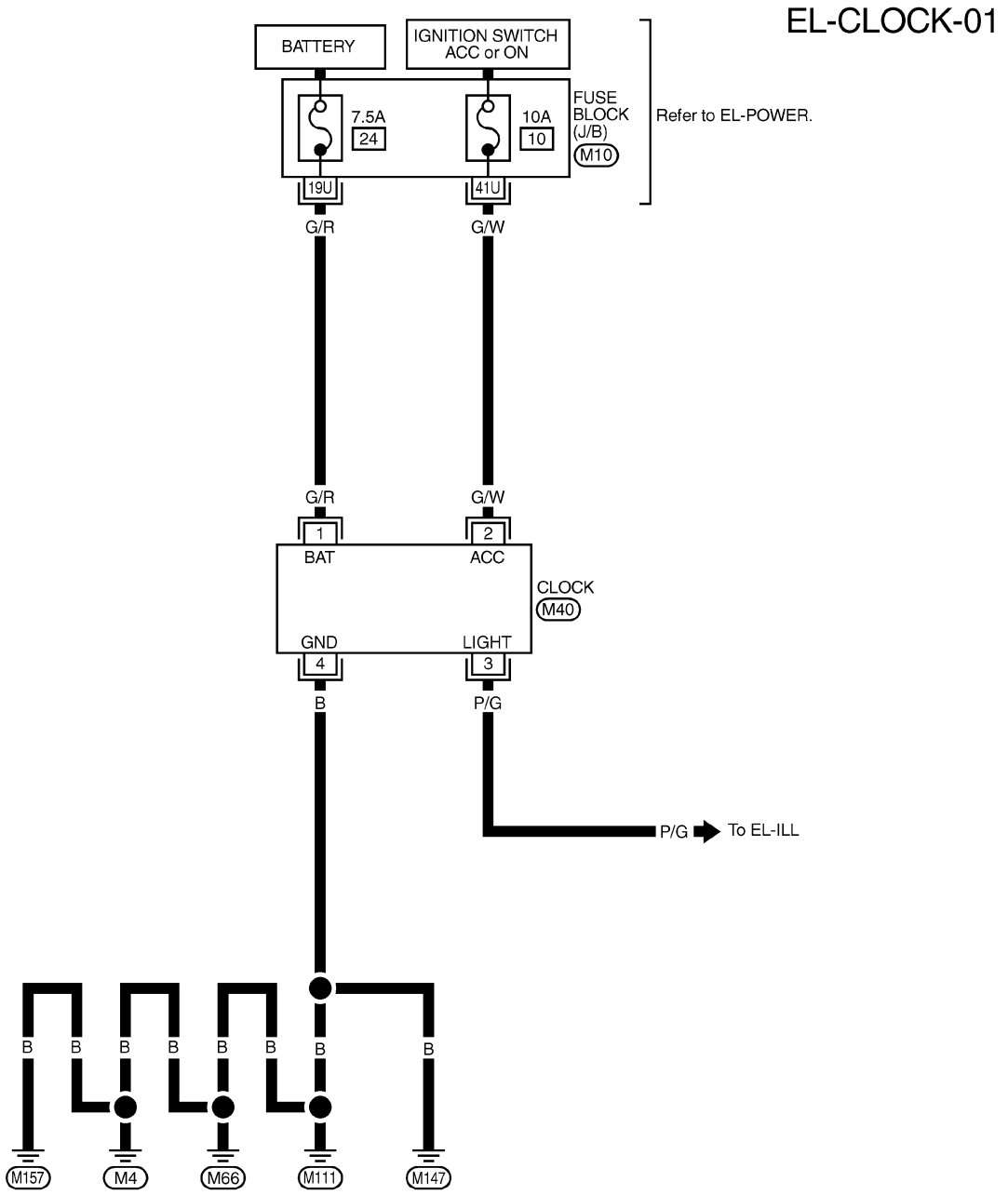

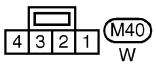

REFER TO THE FOLLOWING.
M10 -FUSE BLOCK-JUNCTION BOX (J/B)

MEL947R

Component Parts and Harness Connector Location

NAEL0333

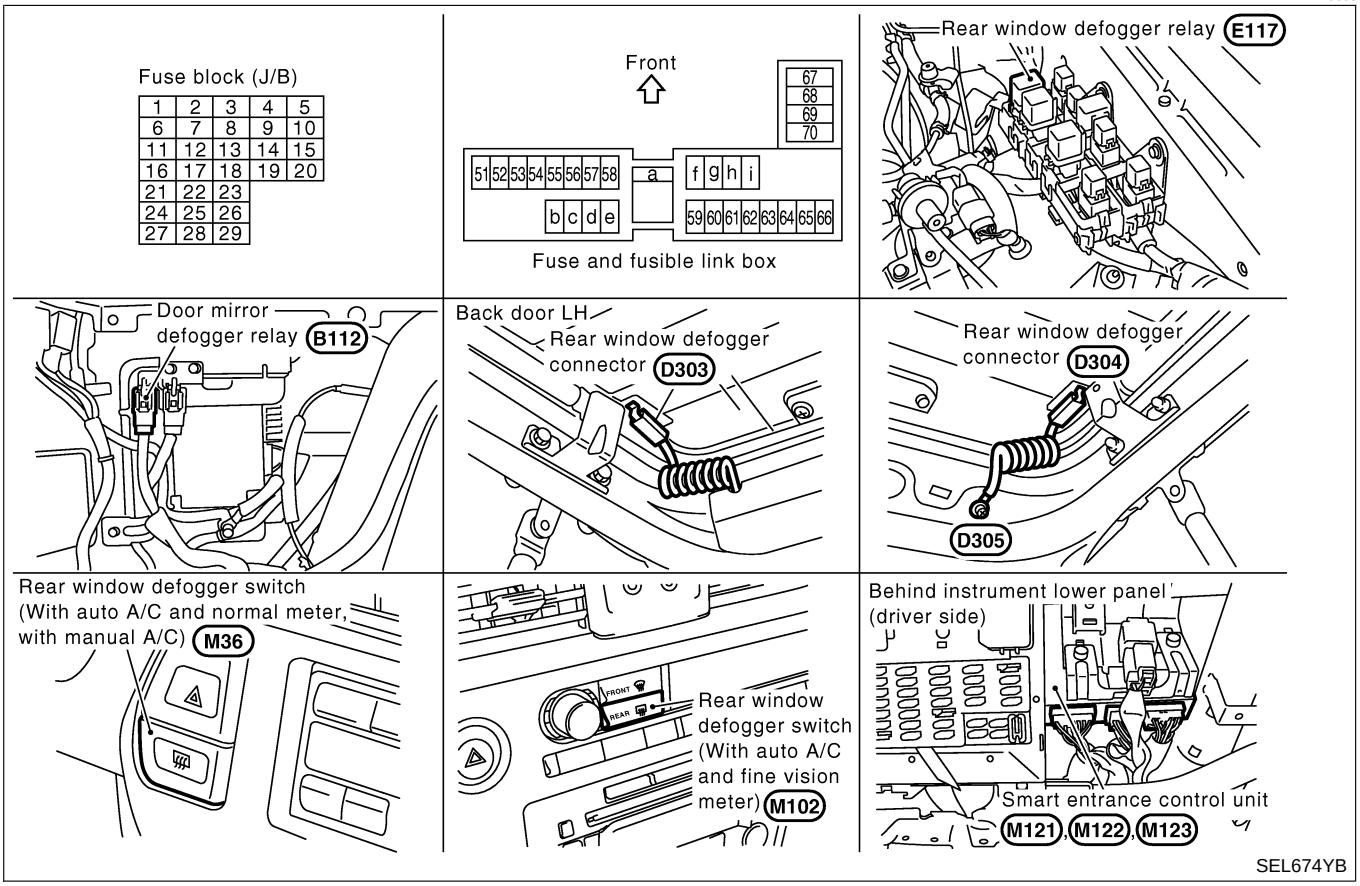

System Description

NAEL0334

The rear window defogger system is controlled by the smart entrance control unit. The rear window defogger operates only for approximately 15 minutes.

Power is supplied at all times

- to rear window defogger relay terminal 3
- through 20A fuse (No. 56, located in the fuse and fusible link box) and
- to rear window defogger relay terminal 6
- through 20A fuse (No. 57, located in the fuse and fusible link box)
- to smart entrance control unit terminal 49
- through 7.5A [No. 24, located in fuse block (J/B)].

With the ignition switch in the ON or START position, power is supplied

- through 7.5A fuse [No. 11, located in the fuse block (J/B)]
- to the rear window defogger relay terminal 1, and
- to smart entrance control unit terminal 27.

Ground is supplied

- to terminal 1 of the rear window defogger switch (with auto A/C and normal meter, with manual A/C) or
- to terminal 32 of A/C auto amp. (with auto A/C and fine vision meter) and
- to smart entrance control unit terminals 43 and 64
- through body grounds M4, M66, M111, M147 and M157.

When the rear window defogger switch is turned ON, ground is supplied

- through terminal 2 of the rear window defogger switch (with auto A/C and normal meter, with manual A/C) or
- through terminal 31 of A/C auto amp. (with auto A/C and fine vision meter)
- to smart entrance control unit terminal 14.

Terminal 37 of the smart entrance control unit then supplies ground to the rear window defogger relay terminal 2.
With power and ground supplied, the rear window defogger relay is energized.
Power is supplied

- through terminals 5 and 7 of the rear window defogger relay
- to the rear window defogger.

The rear window defogger has an independent ground.
With power and ground supplied, the rear window defogger filaments heat and defog the rear window.
When the system is activated, the rear window defogger indicator illuminates in the rear window defogger switch.
Power is supplied

- to terminal 3 of the rear window defogger switch (with auto A/C and normal meter, with manual A/C) or
- to terminal 30 of A/C auto amp. (with auto A/C and fine vision meter)
- from terminal 7 of the rear window defogger relay.

Terminal 4 of the rear window defogger switch (with auto A/C and normal meter, with manual A/C) or terminal 32 of A/C auto amp. (with auto A/C and fine vision meter) is grounded through body grounds M4, M66, M111, M147 and M157.

Wiring Diagram — DEF —

NAEL0335

WITH AUTO A/C AND NORMAL METER, WITH MANUAL A/C

NAEL0335S01

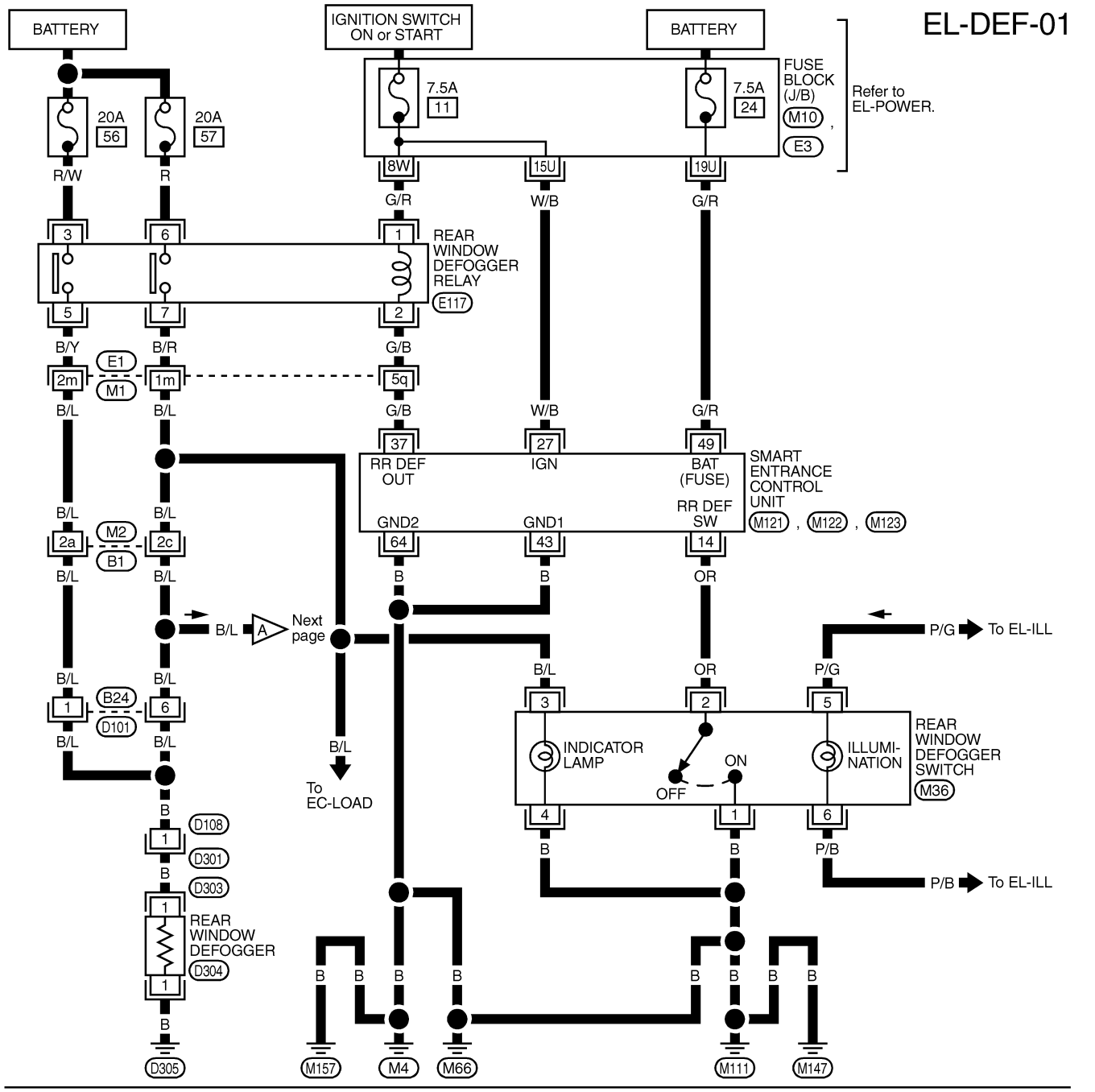

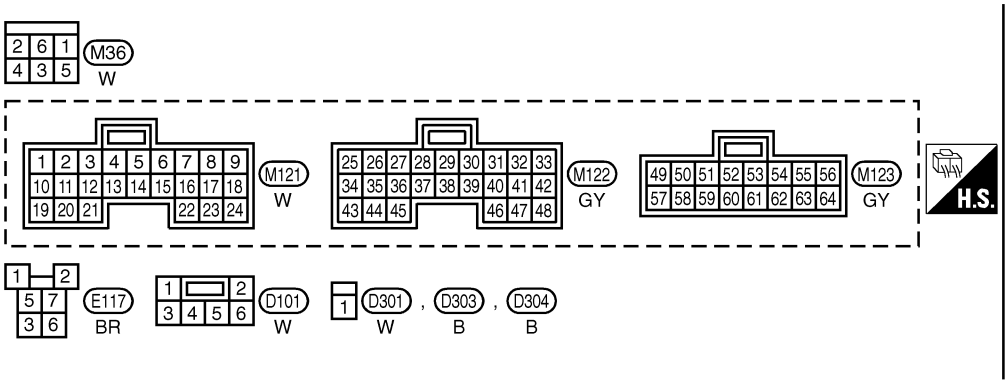

REFER TO THE FOLLOWING.
E1 , B1 -SUPER MULTIPLE JUNCTION (SMJ)
M10 , E3 -FUSE BLOCK-JUNCTION BOX (J/B)

MEL997P

EL-DEF-02

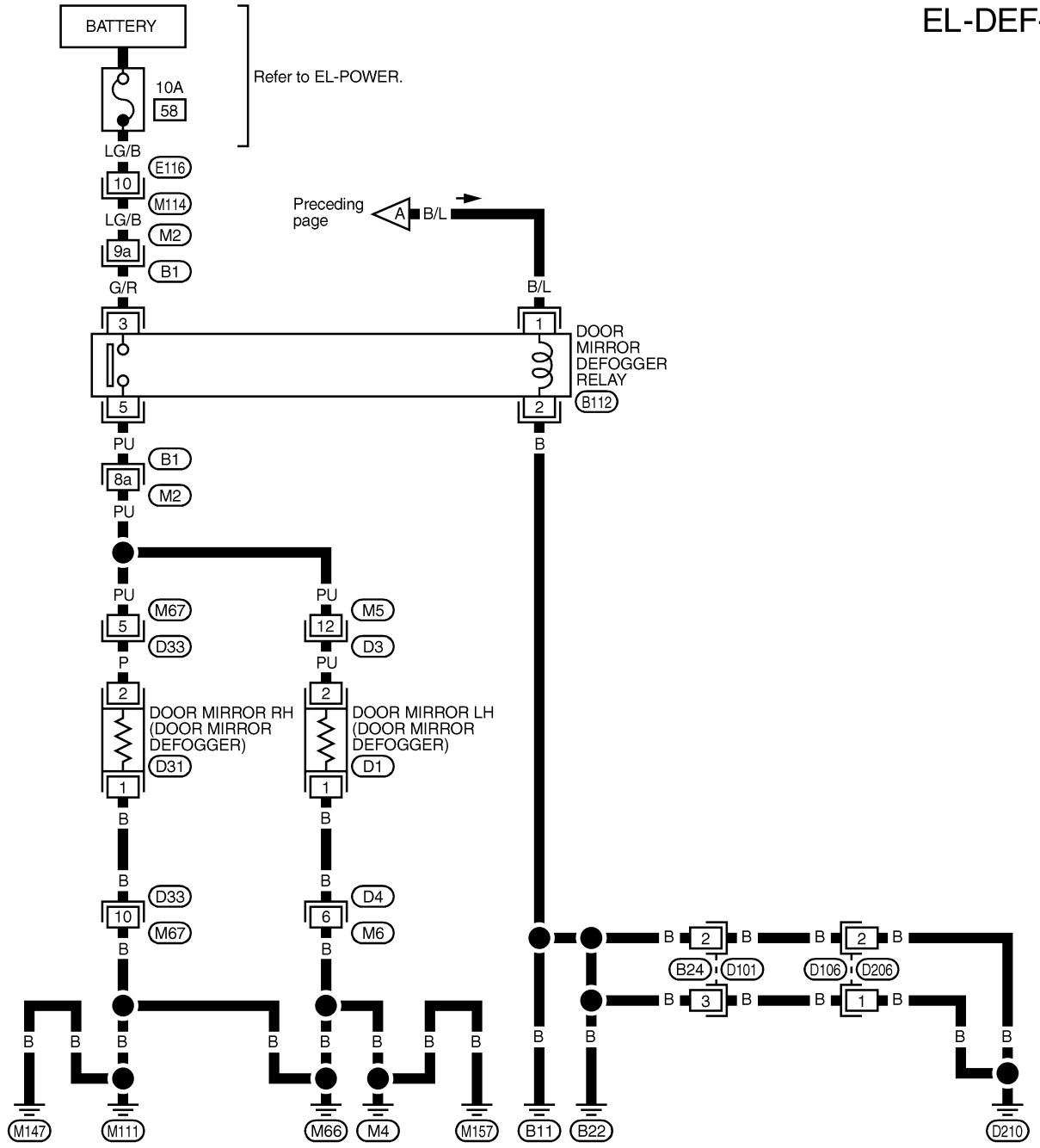

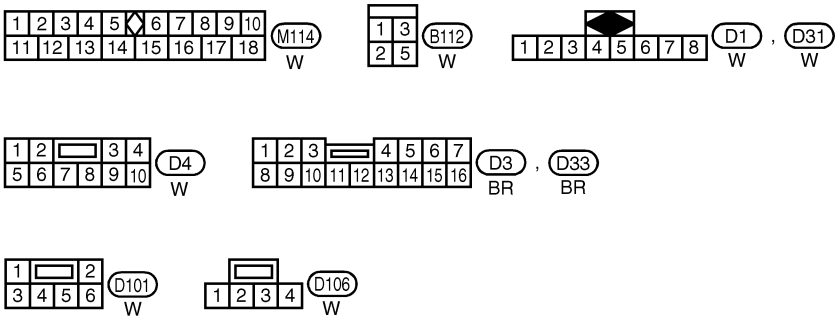

REFER TO THE FOLLOWING.

B1 - SUPER MULTIPLE JUNCTION (SMJ)

MEL998P

Wiring Diagram — DEF — (Cont'd)

WITH AUTO A/C AND FINE VISION METER

NAEL0335S02

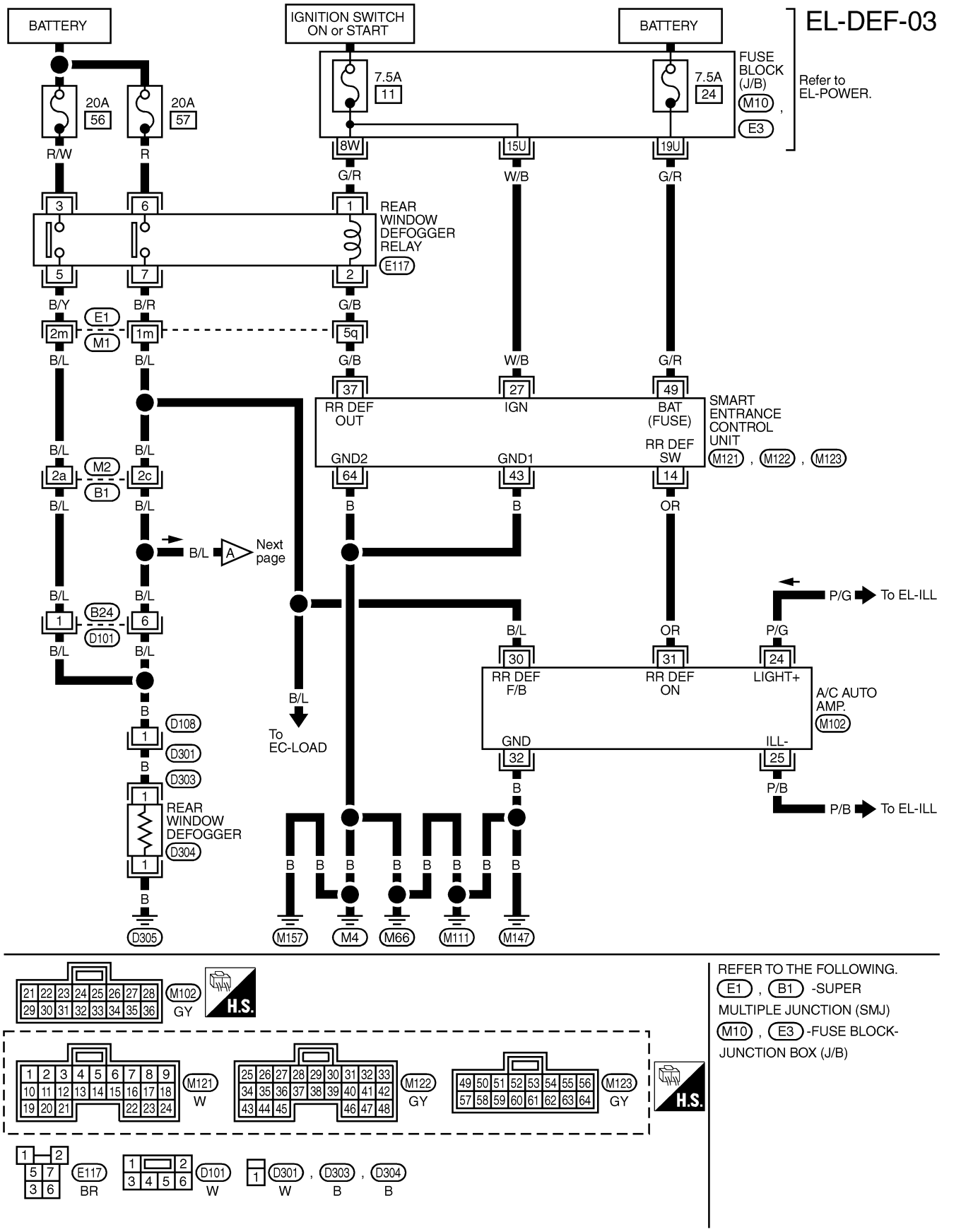

EL-DEF-04

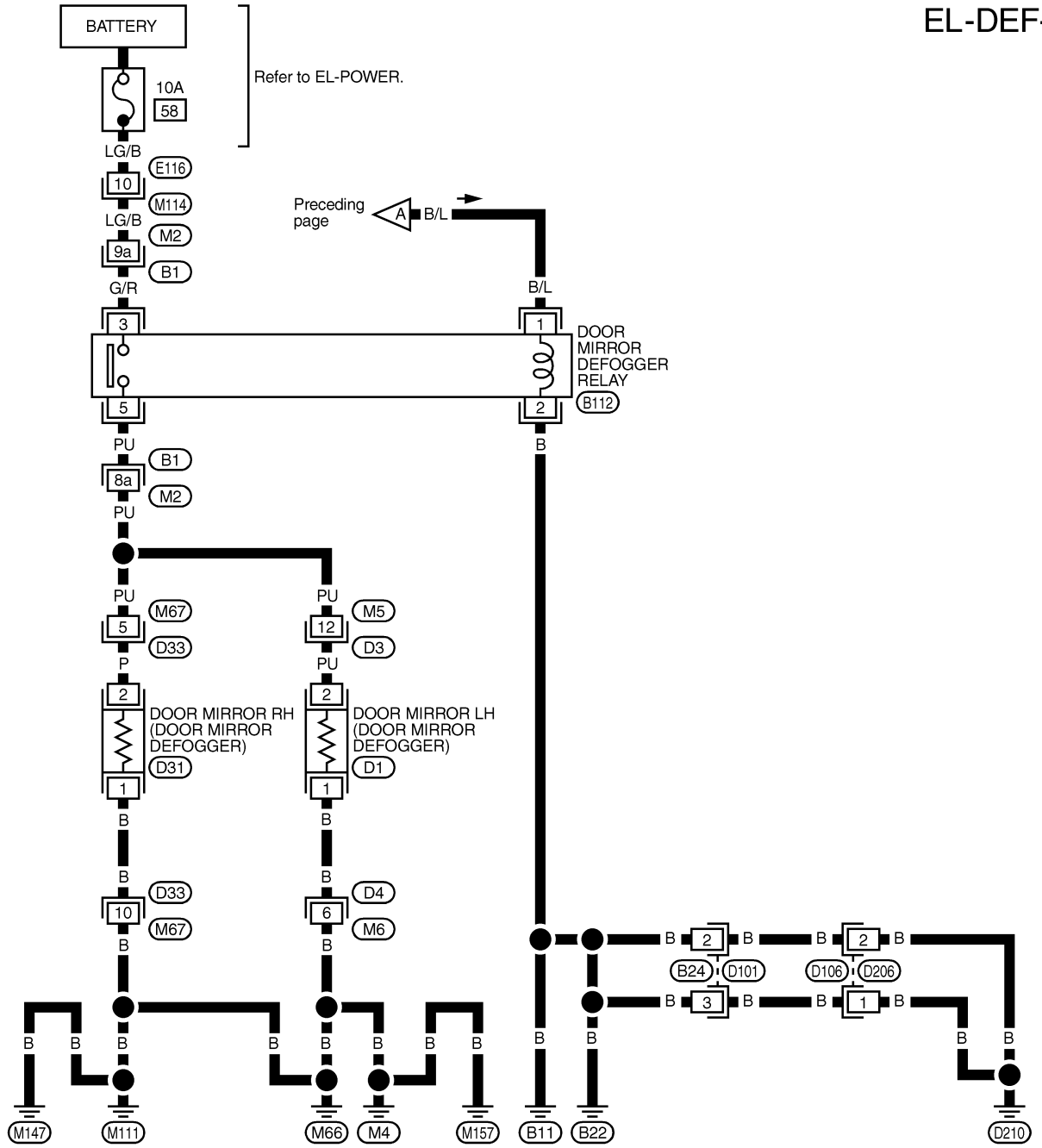

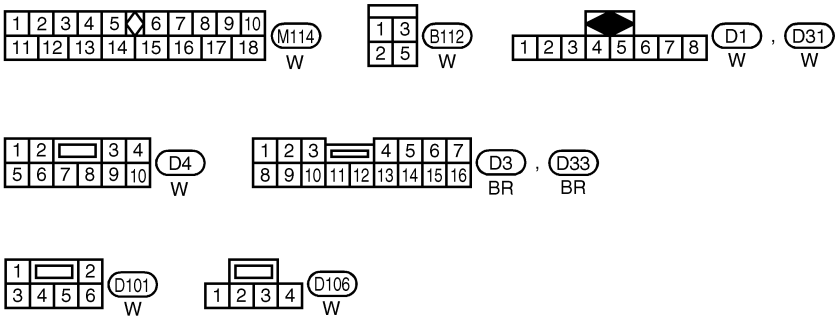

REFER TO THE FOLLOWING.

B1 - SUPER MULTIPLE JUNCTION (SMJ)

MEL001Q

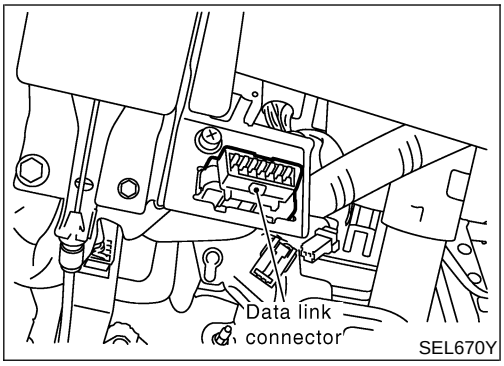

SEL670Y

CONSULT-II Inspection Procedure

NAEL0336

"REAR DEFOGGER"

NAEL0336S01

1. Turn ignition switch "OFF".
2. Connect "CONSULT-II" and "CONSULT-II CONVERTER" to the data link connector.

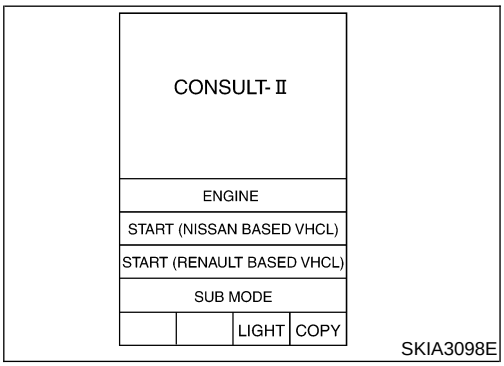

SKIA3098E

3. Turn ignition switch "ON".
4. Touch "START (NISSAN BASED VHCL)".

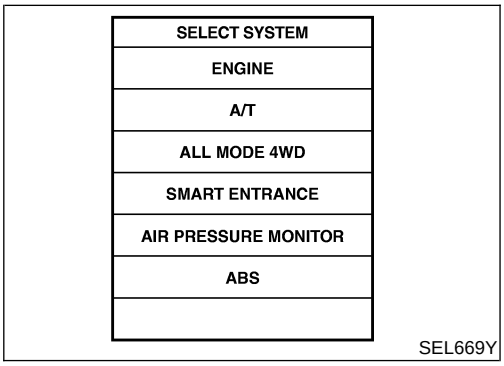

SEL669Y

5. Touch "SMART ENTRANCE".
   If "SMART ENTRANCE" is not indicated, go to GI-41, "CONSULT-II Data Link Connector (DLC) Circuit".

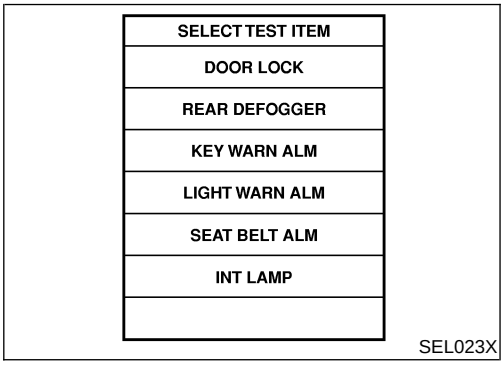

SEL023X

6. Touch "REAR DEFOGGER".

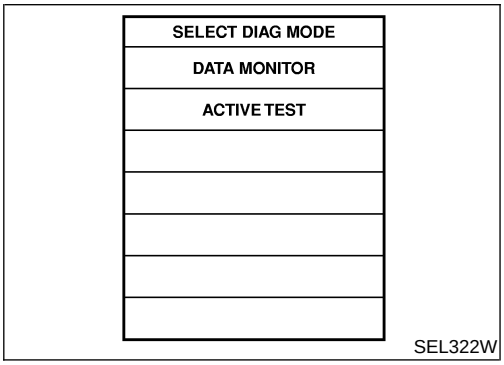

SEL322W

7. Select diagnosis mode.
   "DATA MONITOR" and "ACTIVE TEST" are available.

CONSULT-II Application Items

NAEL0337

"REAR DEFOGGER"

NAEL0337S01

Data Monitor

NAEL0337S0101

Monitored Item	Description
IGN ON SW	Indicates [ON/OFF] condition of ignition switch.
REAR DEF SW	Indicates [ON/OFF] condition of rear window defogger switch.

Active Test

NAEL0337S0102

Test Item	Description
REAR DEFOGGER	This test is able to check rear window defogger operation. Rear window defogger activates when "ON" on CONSULT-II screen is touched.

Trouble Diagnoses

NAEL0338

DIAGNOSTIC PROCEDURE

NAEL0338S01

SYMPTOM: Rear window defogger does not activate, or does not go off after activating.

1	CHECK REAR WINDOW DEFOGGER OUTPUT SIGNAL

With CONSULT-II

Select “ACTIVE TEST” in “REAR DEFOGGER” with CONSULT-II.

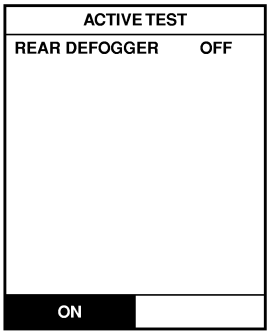

Rear window defogger and rear window defogger switch indicator should operate when the “ON” button on the CONSULT-II screen is touched.

SEL353W

Without CONSULT-II

1. Turn ignition switch to ON position.
2. Check voltage between smart entrance control unit harness connector M122 terminal 37 (G/B) and ground.

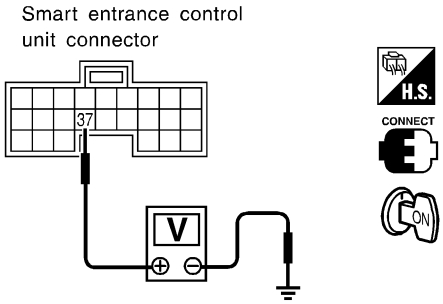

Voltage [V]:

Rear window defogger switch is “OFF”.

Approx. 12

Rear window defogger switch is “ON”.

0

SEL997X

OK or NG

OK	▶	**Check the following.** ● Rear window defogger relay (Refer to EL-203.) ● Rear window defogger circuit ● Rear window defogger filament (Refer to EL-204.)
NG	▶	GO TO 2.

2	CHECK DEFOGGER RELAY COIL SIDE CIRCUIT

1. Disconnect smart entrance control unit connector.
2. Turn ignition switch to ON position.
3. Check voltage between smart entrance control unit harness connector M122 terminal 37 (G/B) and ground.

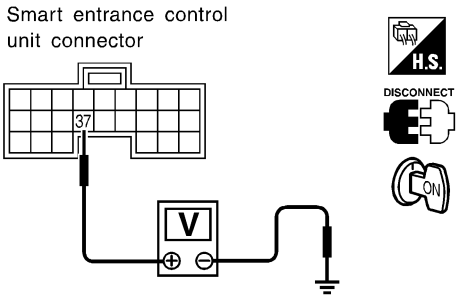

Battery voltage should exist.

SEL998X

OK or NG

OK	▶	GO TO 3.
NG	▶	**Check the following.** ● 7.5A fuse [No. 11, located in the fuse block (J/B)] ● Rear window defogger relay ● Harness for open or short between fuse and rear window defogger relay ● Harness for open or short between rear window defogger relay and smart entrance control unit

3 CHECK REAR WINDOW DEFOGGER SWITCH INPUT SIGNAL

With CONSULT-II

Select "REAR DEF SW" in "DATA MONITOR" mode with CONSULT-II.

DATA MONITOR	
MONITOR	
REAR DEF SW	ON

When rear window defogger switch is pushed:
REAR DEF SW should be ON.

SEL352W

Without CONSULT-II

Check voltage between smart entrance control unit harness connector M121 terminal 14 (OR) and ground.

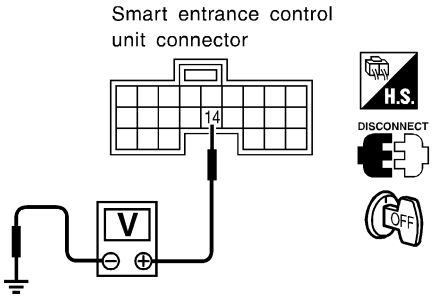

Voltage [V]:
Rear window defogger switch is pushed.
Approx. 5
Rear window defogger switch is released.
0

SEL685Y

OK or NG

OK	▶	GO TO 4.
NG	▶	**Check the following.** ● Rear window defogger switch (Refer to EL-203.) ● Harness for open or short between smart entrance control unit and rear window defogger switch ● Rear window defogger switch ground circuit

4 CHECK POWER SUPPLY AND IGNITION INPUT SIGNAL

Check voltage between smart entrance control unit harness connector M122 terminal 27 (W/B), M123 terminal 49 (G/R) and ground.

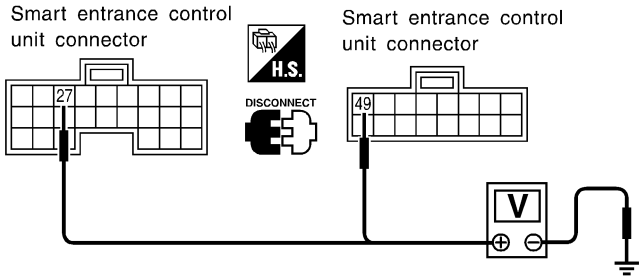

Terminals		Ignition switch position		
(+)	(–)	OFF	ACC	ON
49	Ground	Battery voltage	Battery voltage	Battery voltage
27	Ground	0V	0V	Battery voltage

SEL001Y

OK or NG

OK	▶	GO TO 5.
NG	▶	**Check the following.** ● 7.5A fuse [No. 11 or No. 24, located in the fuse block (J/B)] ● Harness for open or short between smart entrance control unit and fuse

5	CHECK CONTROL UNIT GROUND CIRCUIT

Check continuity between smart entrance control unit harness connector M122 terminal 43 (B), M123 terminal 64 (B) and ground.

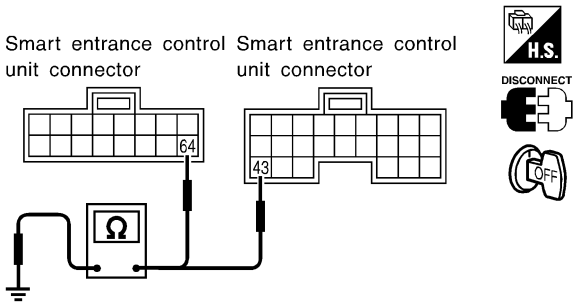

Continuity should exist.

SEL002Y

Yes	▶	Replace smart entrance control unit.
No	▶	Repair harness or connectors.

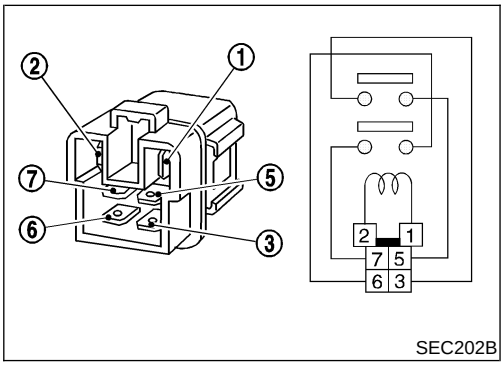

SEC202B

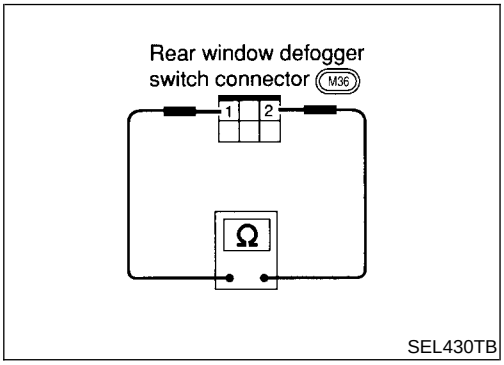

SEL430TB

Electrical Components Inspection

NAEL0339

REAR WINDOW DEFOGGER RELAY

NAEL0339S01

Check continuity between terminals 3 and 5, 6 and 7.

Condition	Continuity
12V direct current supply between terminals 1 and 2	Yes
No current supply	No

REAR WINDOW DEFOGGER SWITCH

NAEL0339S02

With Auto A/C and Normal Meter, and With Manual A/C

NAEL0339S0201

Check continuity between terminals when rear window defogger switch is pushed and released.

Terminals	Condition	Continuity
1 - 2	Rear window defogger switch is pushed	Yes
	Rear window defogger switch is released	No

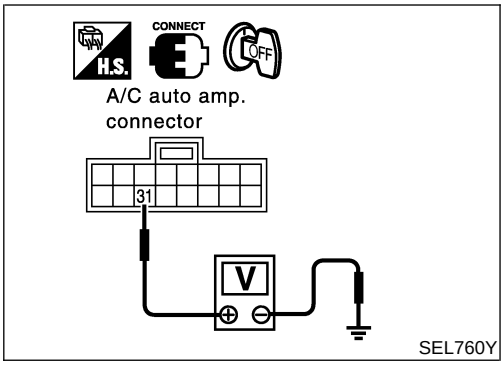

With Auto A/C and Fine Vision Meter

=NAEL0339S0202

Check voltage between A/C auto amp. and ground, when rear window switch is pushed and released.

Terminals			Condition	Voltage (V)
(+)		(−)		
Connector	Terminal (Wire color)			
M102	31 (OR)	Ground	Rear window defogger switch is pushed	0
			Rear window defogger switch is released	12

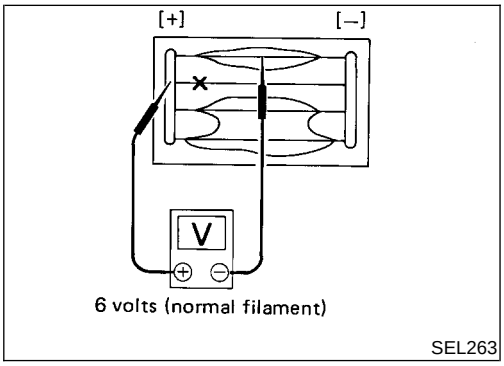

Filament Check

NAEL0340

1. Attach probe circuit tester (in volt range) to middle portion of each filament.

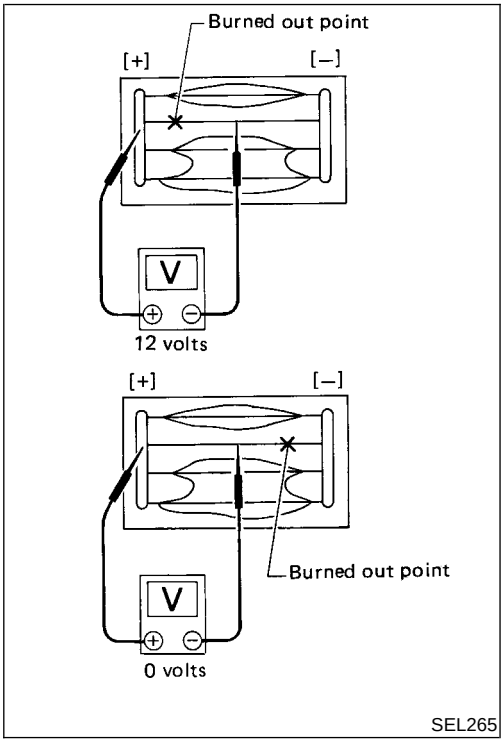

2. If a filament is burned out, circuit tester registers 0 or 12 volts.
3. To locate burned out point, move probe to left and right along filament. Test needle will swing abruptly when probe passes the point.

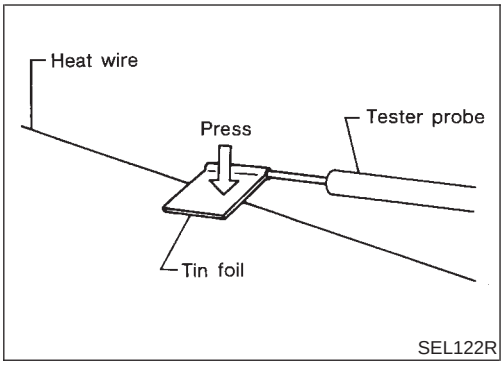

- **When measuring voltage, wrap tin foil around the top of the negative probe. Then press the foil against the wire with your finger.**

Filament Repair

NAEL0341

REPAIR EQUIPMENT

NAEL0341S01

1) Conductive silver composition (Dupont No. 4817 or equivalent)
2) Ruler 30 cm (11.8 in) long
3) Drawing pen
4) Heat gun
5) Alcohol
6) Cloth

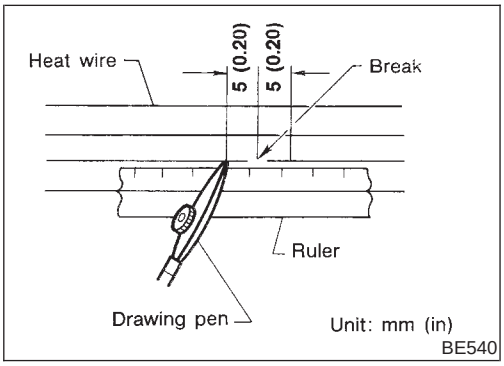

REPAIRING PROCEDURE

NAEL0341S02

1. Wipe broken heat wire and its surrounding area clean with a cloth dampened in alcohol.
2. Apply a small amount of conductive silver composition to tip of drawing pen.

Shake silver composition container before use.

3. Place ruler on glass along broken line. Deposit conductive silver composition on break with drawing pen. Slightly overlap existing heat wire on both sides [preferably 5 mm (0.20 in)] of the break.

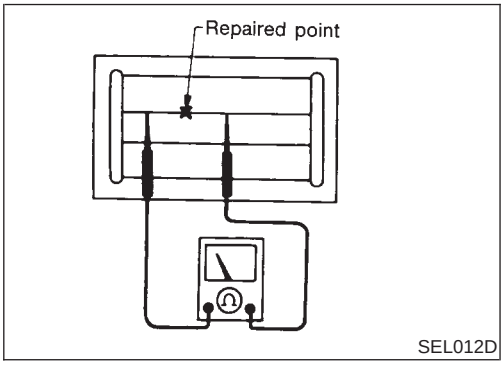

4. After repair has been completed, check repaired wire for continuity. This check should be conducted 10 minutes after silver composition is deposited.

Do not touch repaired area while test is being conducted.

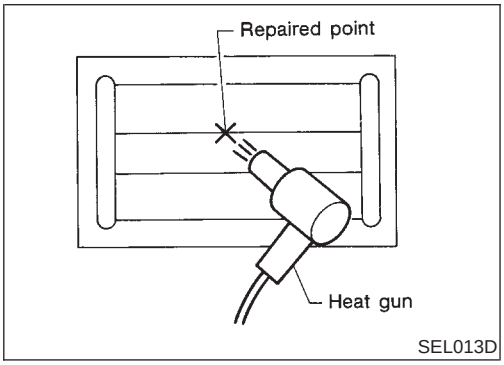

5. Apply a constant stream of hot air directly to the repaired area for approximately 20 minutes with a heat gun. A minimum distance of 3 cm (1.2 in) should be kept between repaired area and hot air outlet. If a heat gun is not available, let the repaired area dry for 24 hours.

System Description

NAEL0342

Refer to Owner's Manual for audio system operating instructions.

BASE SYSTEM

NAEL0342S01

Power is supplied at all times

- through 15A fuse [No. 4, located in the fuse block (J/B)]
- to audio unit terminal 6, and
- to CD player terminal 4 (with CD player).

With the ignition switch in the ACC or ON position, power is supplied

- through 10A fuse [No. 10, located in the fuse block (J/B)]
- to audio unit terminal 10, and
- to CD player terminal 1 (with CD player).

Ground is supplied through the case of the audio unit.
When the audio unit power knob is pushed to the ON position, audio signals are supplied

- through audio unit terminals 1, 2, 3, 4, 13, 14, 15 and 16
- to the front and rear speakers.

BOSE SYSTEM

NAEL0342S02

Power is supplied at all times

- through 15A fuse [No. 4, located in the fuse block (J/B)]
- to audio unit terminal 6,
- to audio amp. relay terminal 3,
- to rear speaker amp. terminal 11 and
- to AUX box terminal 7 (with rear TV).

With the ignition switch in the ACC or ON position, power is supplied

- through 10A fuse [No. 10, located in the fuse block (J/B)]
- to audio unit terminal 10,
- to AUX box terminal 6 (with rear TV).

Ground is supplied through the case of the audio unit.
Ground is supplied

- to audio amp. relay terminal 2,
- to front door speaker LH terminal 5 and
- to front door speaker RH terminal 5
- through body grounds M4, M66, M111, M147 and M157
- to rear speaker amp. terminal 24 and
- to AUX box terminal 8 (with rear TV)
- through body grounds B11, B22 and D210
- to rear TV switch terminal 3
- through body grounds M4, M66, M111, M147 and M157.

When the audio unit POWER button is pressed, power is supplied to rear speaker amp. terminal 9 and audio amp. relay terminal 1 from audio unit terminal 12. Then audio amp. relay is energized and power is supplied

- to front door speaker LH terminal 4 and
- to front door speaker RH terminal 4.

Audio signals are supplied

- through audio unit terminals 1, 2, 3, 4, 13, 14, 15 and 16
- to terminals 2 and 6 of the LH and RH front speakers and terminals 5, 7, 18 and 20 of the rear speaker amp.
- to LH and RH tweeters through terminals 1 and 3 of the front door speakers
- to rear LH and RH speakers through terminals 1, 2, 25 and 26 of the rear speaker amp.

Wiring Diagram — AUDIO —/Base System

NAEL0343

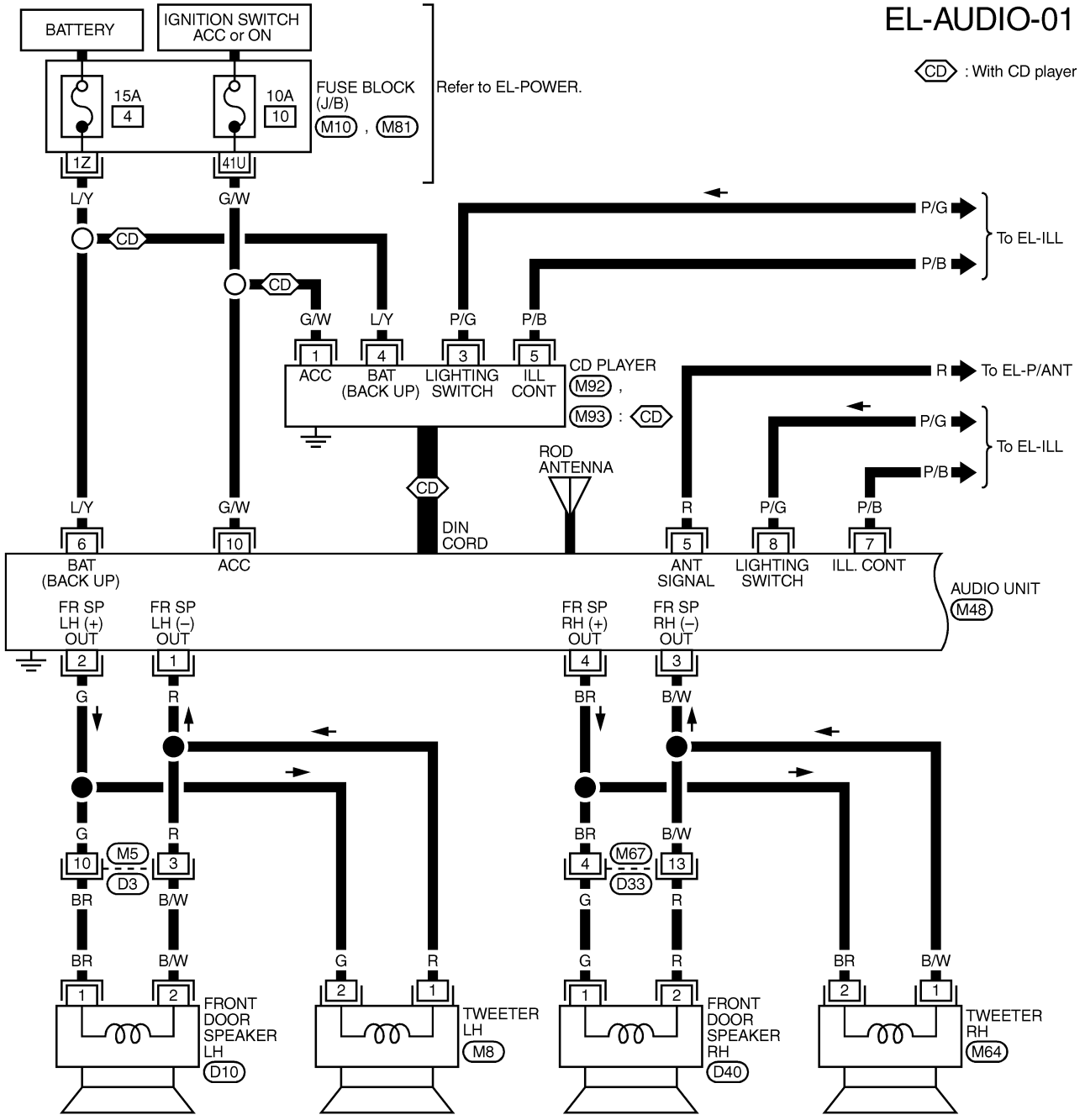

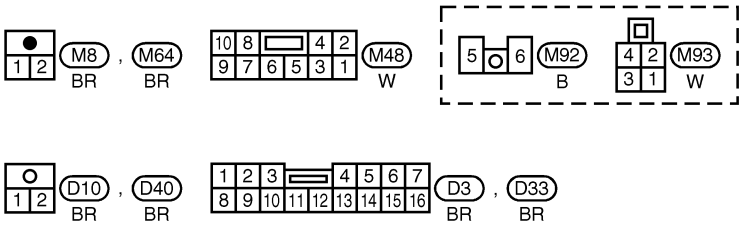

REFER TO THE FOLLOWING.
M10 , M81 -FUSE BLOCK-JUNCTION BOX (J/B)

MEL355N

EL-AUDIO-02

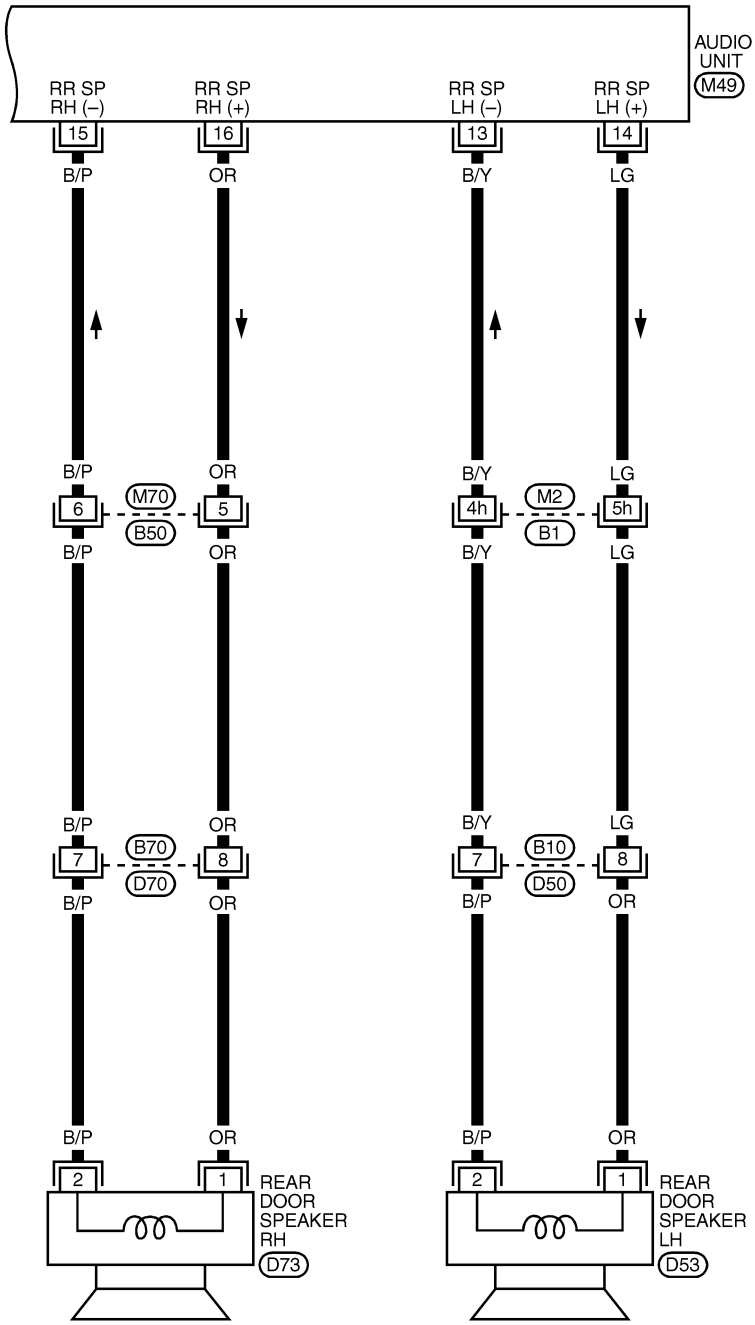

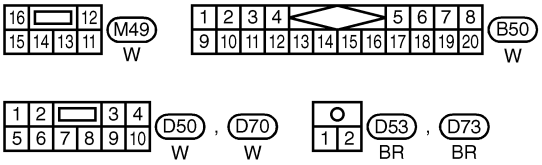

REFER TO THE FOLLOWING.
(B1) -SUPER MULTIPLE JUNCTION (SMJ)

MEL038M

Schematic/BOSE System

NAEL0344

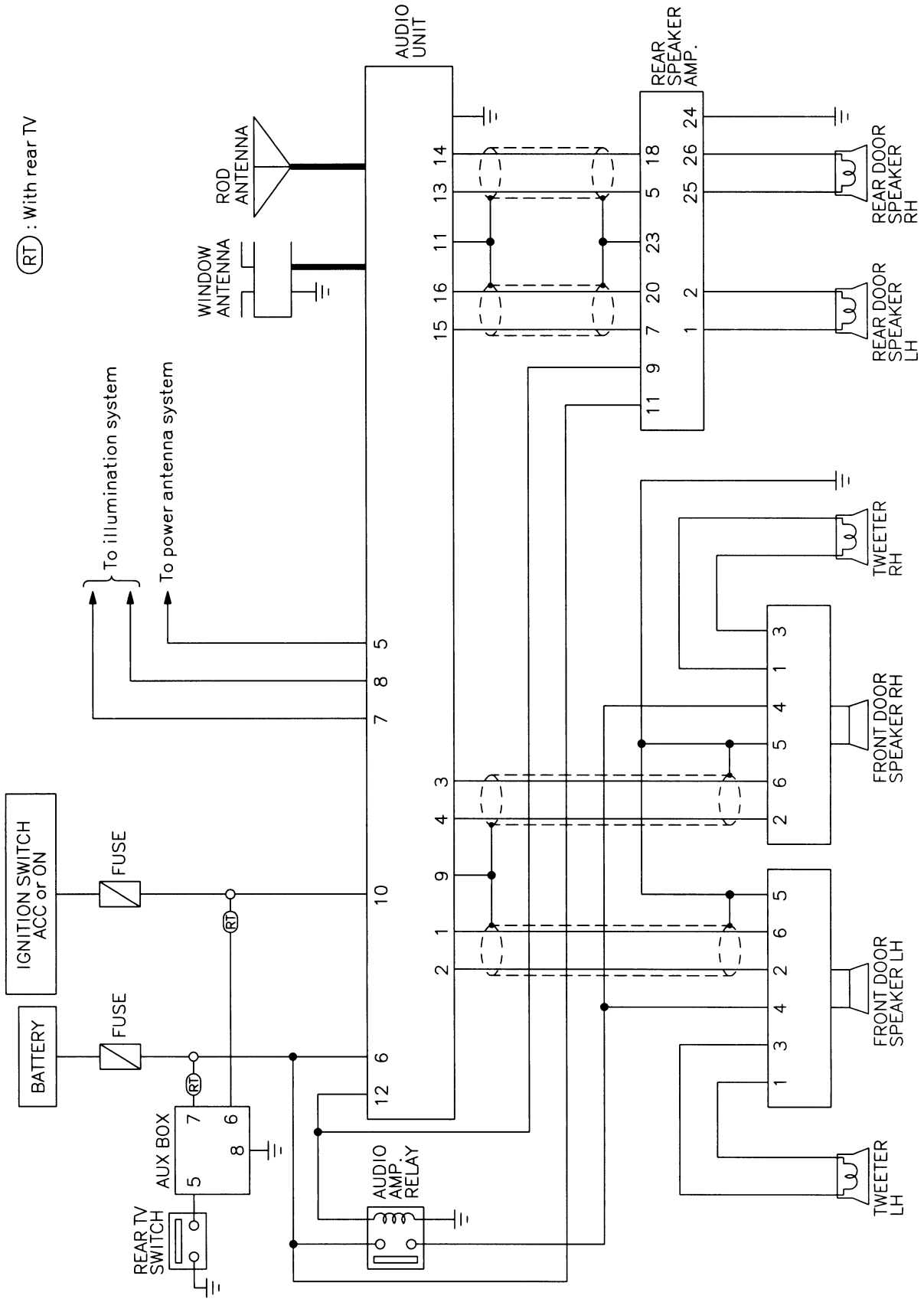

MEL002Q

Wiring Diagram — AUDIO —/BOSE System

NAEL0345

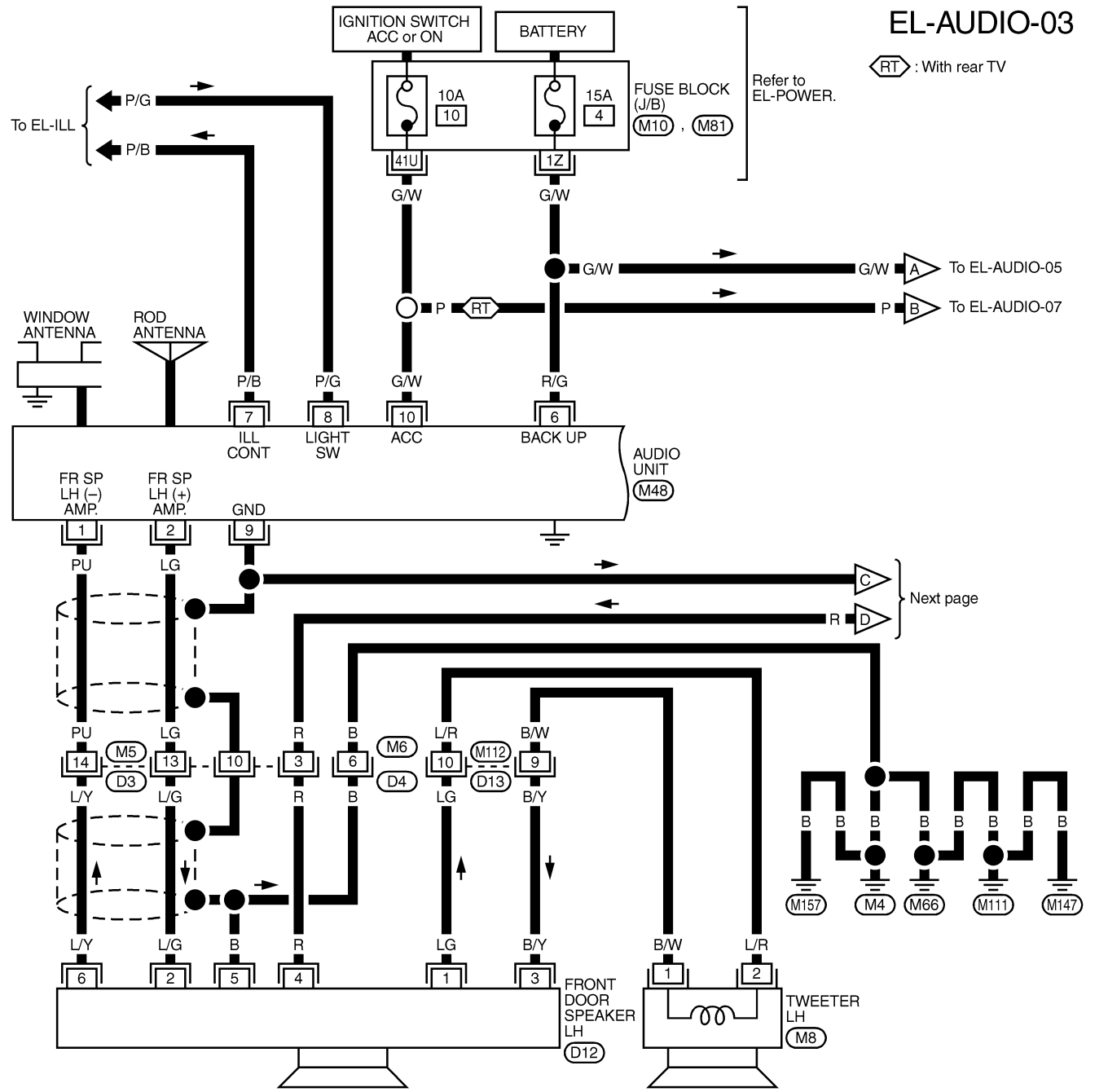

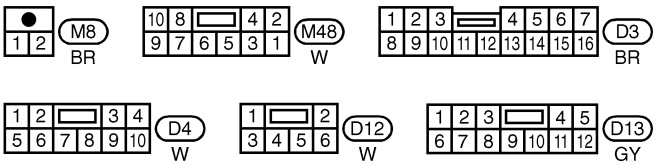

REFER TO THE FOLLOWING.
M10 , M81 -FUSE BLOCK-JUNCTION BOX (J/B)

MEL003Q

EL-AUDIO-04

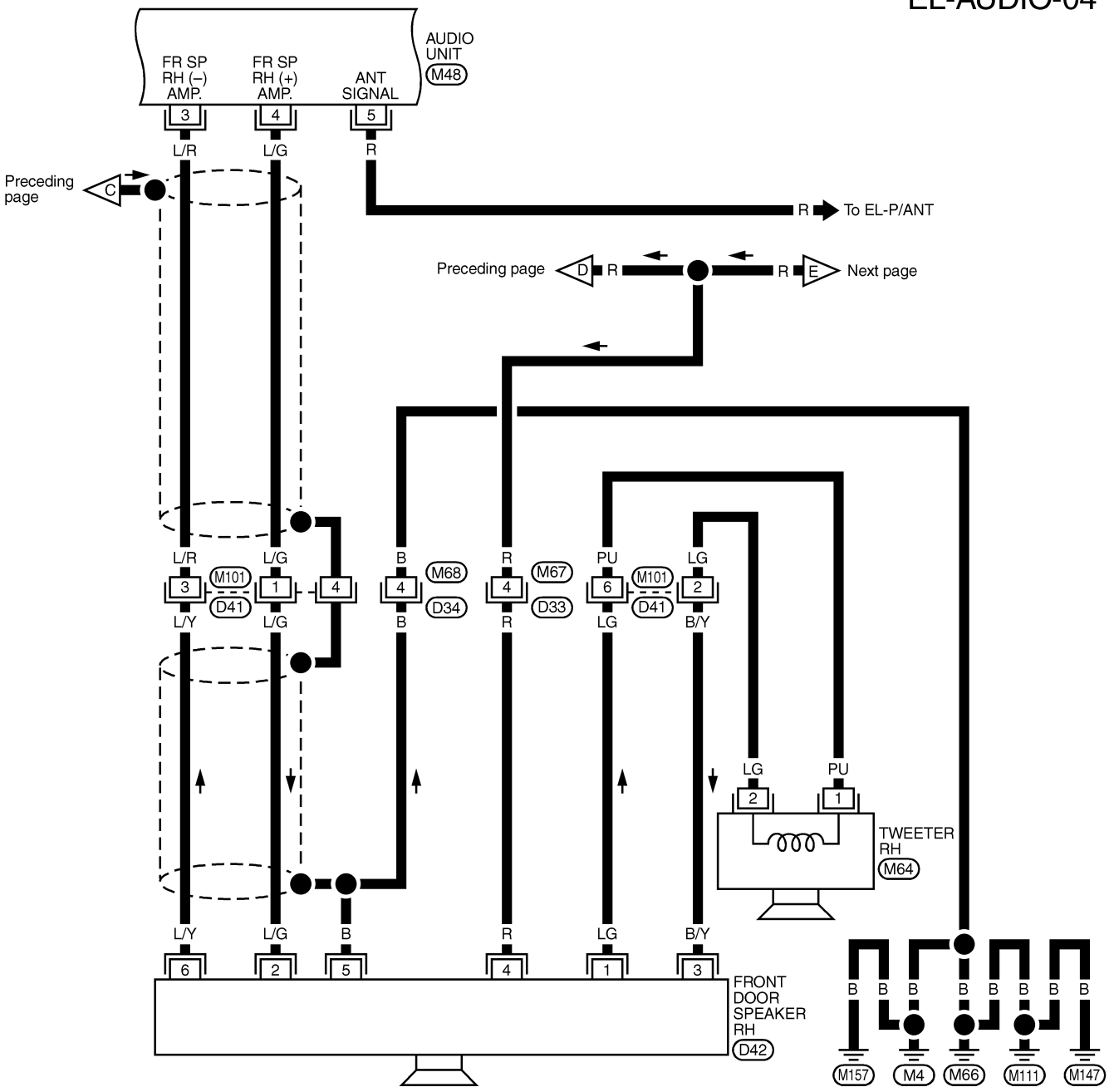

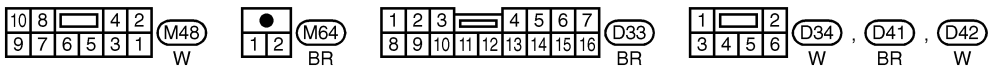

MEL004Q

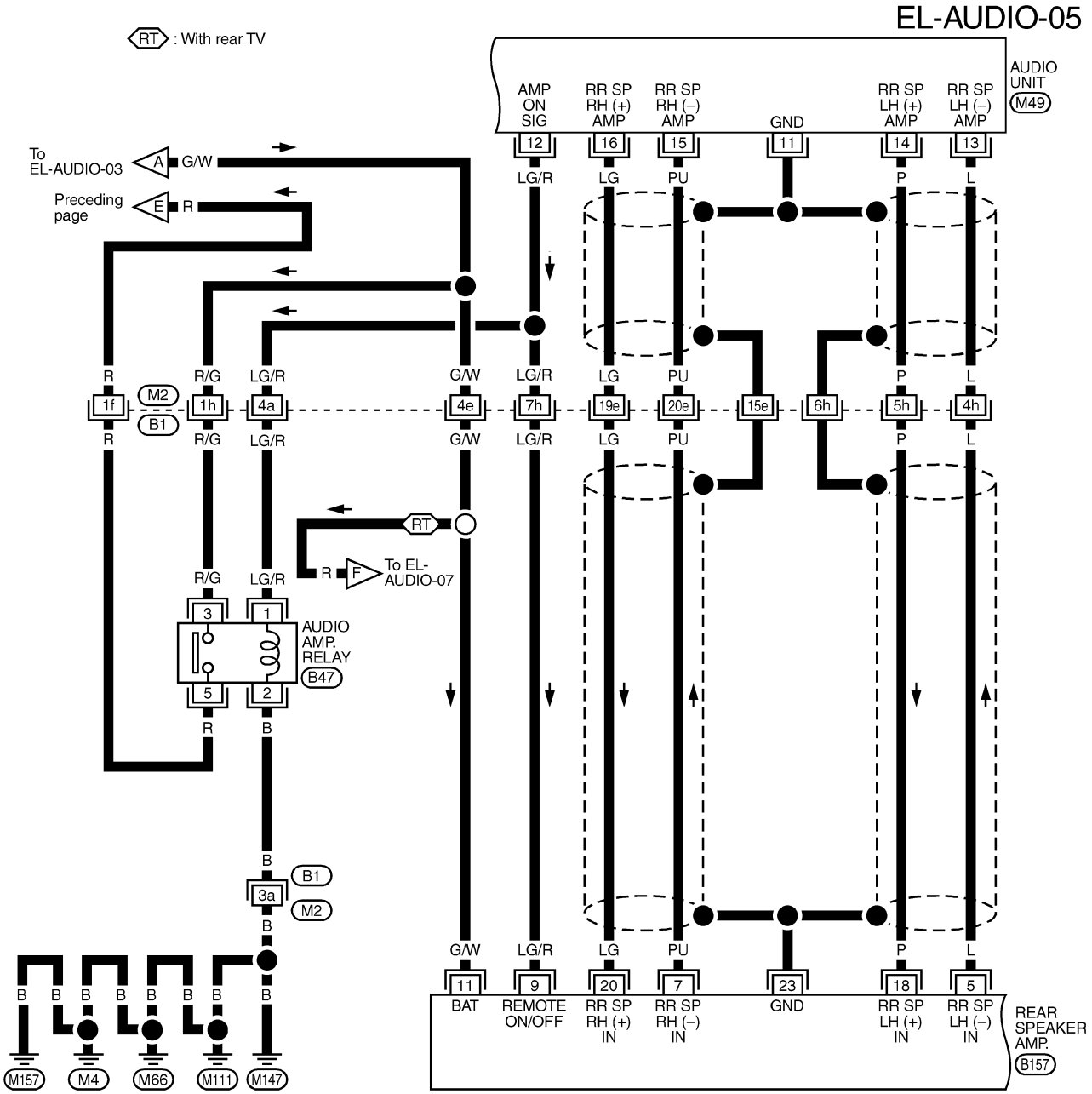

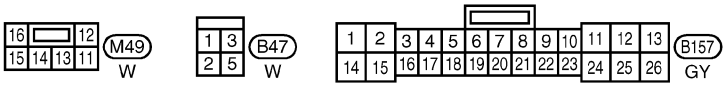

REFER TO THE FOLLOWING.
B1 - SUPER MULTIPLE JUNCTION (SMJ)

MEL948R

EL-AUDIO-06

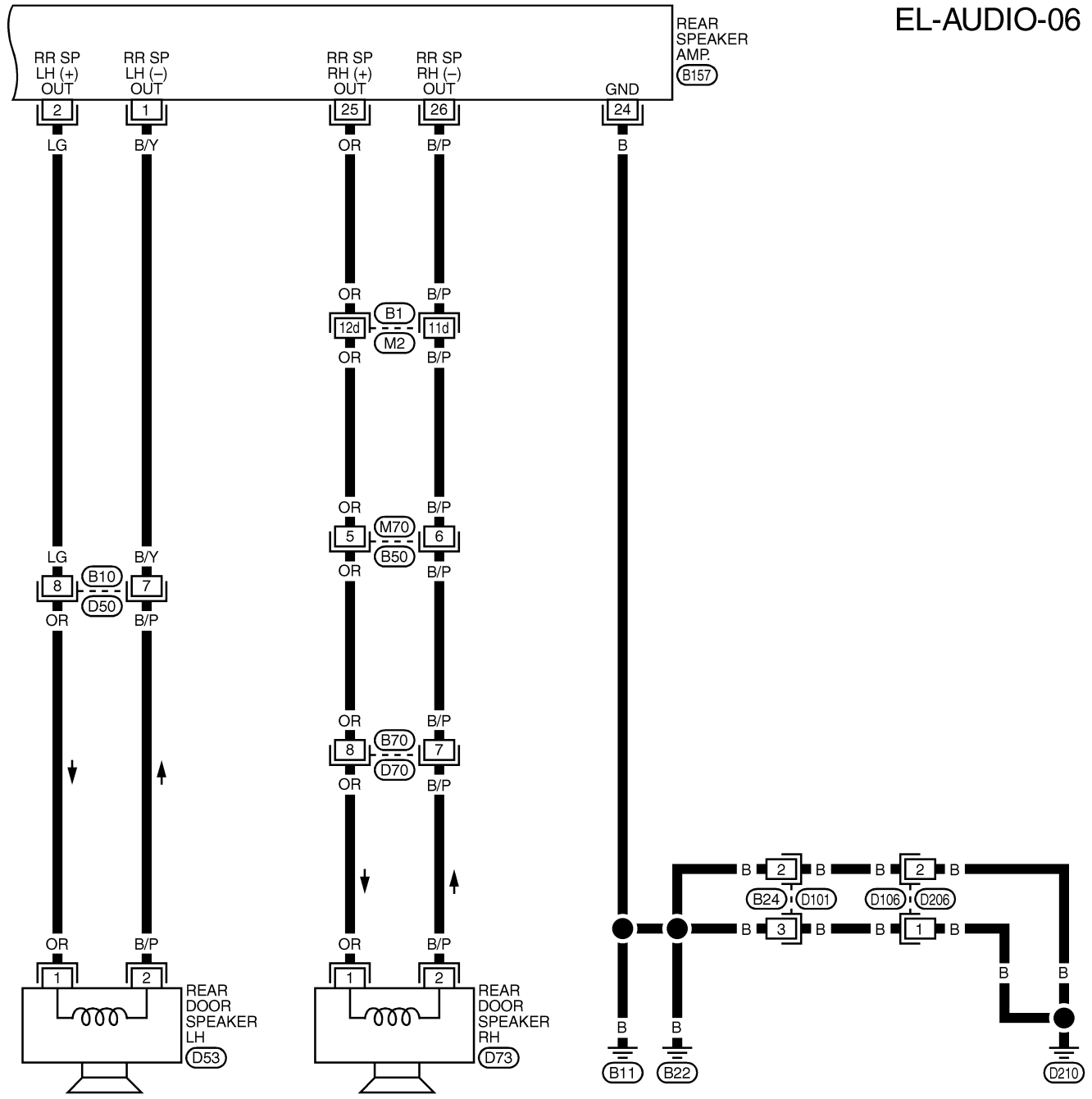

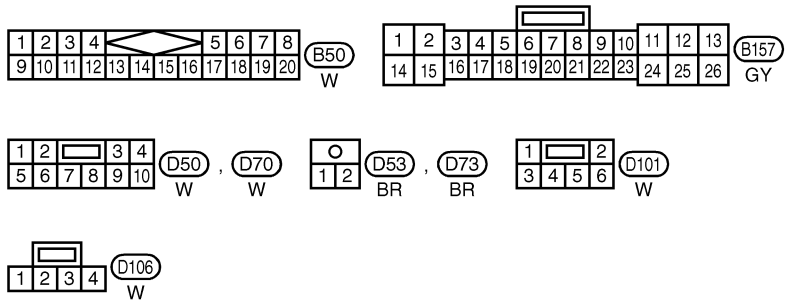

REFER TO THE FOLLOWING.

B1 - SUPER MULTIPLE JUNCTION (SMJ)

MEL006Q

Wiring Diagram — AUDIO —/BOSE System (Cont'd)

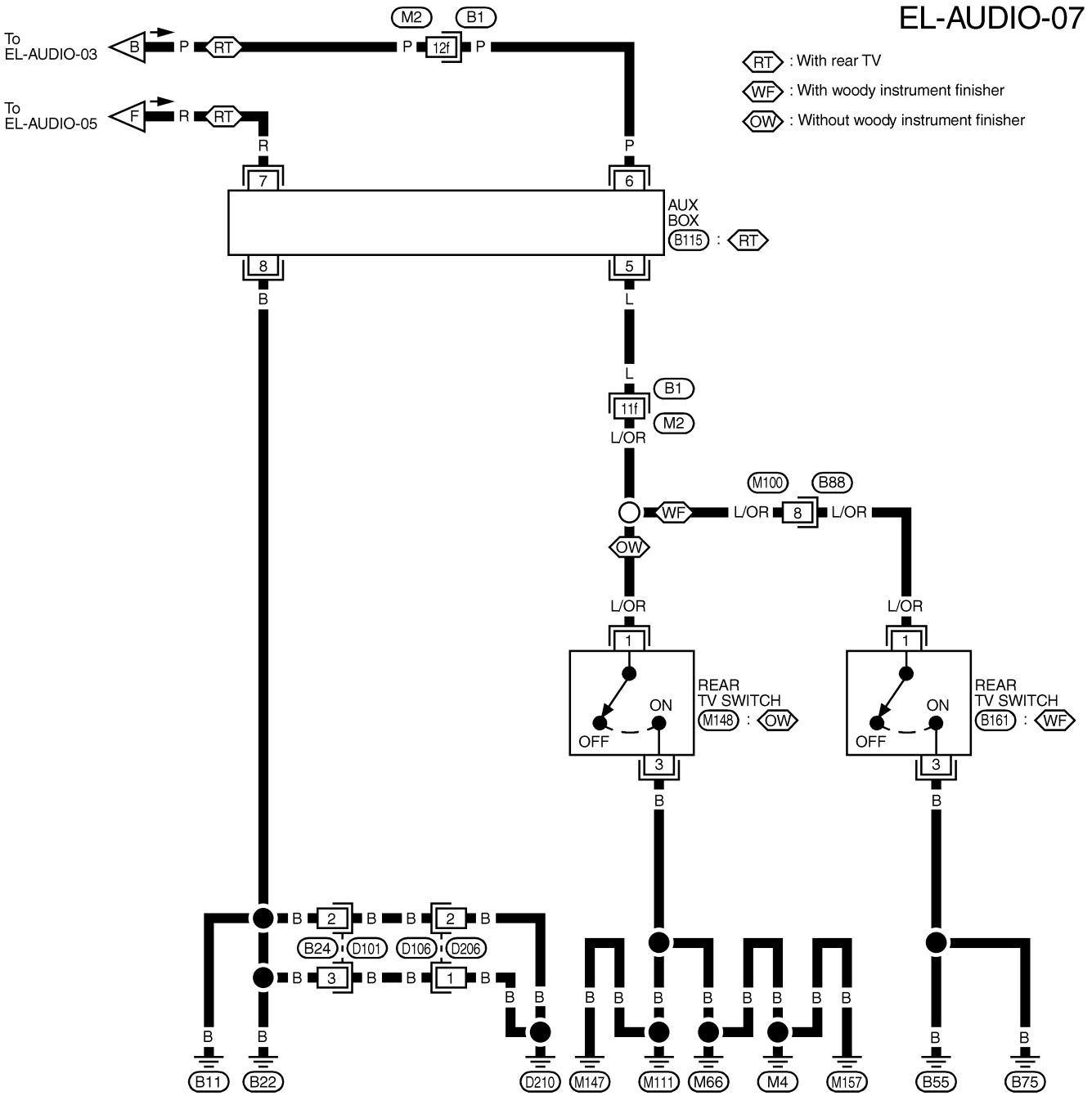

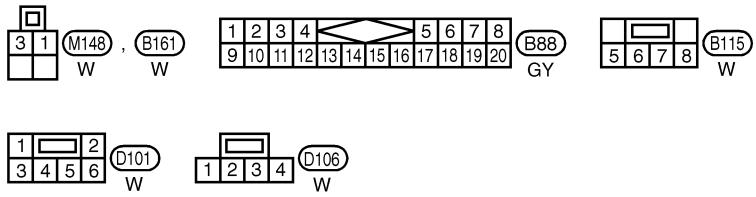

REFER TO THE FOLLOWING.
B1 -SUPER MULTIPLE JUNCTION (SMJ)

MEL007Q

Trouble Diagnoses

NAEL0346

AUDIO UNIT

NAEL0346S01

Symptom	Possible causes	Repair order
Audio unit inoperative (no digital display and no sound from speakers).	1. 10A fuse 2. Poor audio unit case ground 3. Audio unit	1. Check 10A fuse [No. 10, located in fuse block (J/B)]. Turn ignition switch ON and verify that battery positive voltage is present at terminal 10 of audio unit. 2. Check audio unit case ground. 3. Remove audio unit for repair.
Audio unit presets are lost when ignition switch is turned OFF.	1. 15A fuse 2. Audio unit	1. Check 15A fuse [No. 4, located in fuse block (J/B)] and verify that battery positive voltage is present at terminal 6 of audio unit. 2. Remove audio unit for repair.
AM stations are weak or noisy (FM stations OK).	1. Antenna 2. Poor audio unit ground 3. Audio unit	1. Check antenna. 2. Check audio unit ground. 3. Remove audio unit for repair.
FM stations are weak or noisy (AM stations OK).	1. Window antenna 2. Audio unit	1. Check window antenna. 2. Remove audio unit for repair.
Audio unit generates noise in AM and FM modes with engine running.	1. Poor audio unit ground 2. Loose or missing ground bonding straps 3. Ignition condenser or rear window defogger noise suppressor condenser 4. Alternator 5. Ignition coil or secondary wiring 6. Audio unit	1. Check audio unit ground. 2. Check ground bonding straps. 3. Replace ignition condenser or rear window defogger noise suppressor condenser. 4. Check alternator. 5. Check ignition coil and secondary wiring. 6. Remove audio unit for repair.
Audio unit generates noise in AM and FM modes with accessories on (switch pops and motor noise).	1. Poor audio unit ground 2. Antenna 3. Accessory ground 4. Faulty accessory	1. Check audio unit ground. 2. Check antenna. 3. Check accessory ground. 4. Replace accessory.

BASE SYSTEM

NAEL0346S02

Symptom	Possible causes	Repair order
Individual speaker is noisy or inoperative.	1. Speaker 2. Audio unit output 3. Speaker circuit 4. Audio unit	1. Check speaker. 2. Check audio unit output voltages. 3. Check wires for open or short between audio unit and speaker. 4. Remove audio unit for repair.

BOSE SYSTEM

NAEL0346S03

Symptom	Possible causes	Repair order
Audio unit controls are operational, but no sound is heard from any speaker.	1. 15A fuse 2. Audio unit output 3. Audio unit	1. Check 15A fuse [No. 4, located in fuse block (J/B)]. Verify battery positive voltage is present at terminal 3 of audio amp. relay. 2. Check audio unit output voltage (Terminal 12). 3. Remove audio unit for repair.
All front speakers are inoperative.	1. Audio amp. relay 2. Audio amp. relay ground 3. Amp. ON signal	1. Check audio amp. relay. 2. Check audio amp. relay ground (Terminal 2). 3. Turn ignition switch ACC and audio unit ON. Verify battery positive voltage is present at terminal 1 of audio amp. relay.
Individual front speaker is noisy or inoperative.	1. Speaker ground 2. Power supply 3. Audio unit output 4. Speaker	1. Check speaker ground (Terminal 5). 2. Check power supply for speaker (Terminal 4). 3. Check audio unit output voltage for speaker. 4. Replace speaker.

Trouble Diagnoses (Cont'd)

Symptom	Possible causes	Repair order
Both rear speakers are inoperative.	1. Poor rear speaker amp. ground 2. Power supply 3. Amp. ON signal 4. Rear speaker amp.	1. Check rear speaker amp. ground circuit. 2. Check power supply for rear speaker amp. (Terminal 11). 3. Turn ignition switch ACC and audio unit ON. Verify battery positive voltage is present at terminal 9 of rear speaker amp. 4. Remove rear speaker amp. for repair.
Individual rear speaker is noisy or inoperative.	1. Speaker 2. Audio unit/amp. output 3. Speaker circuit 4. Audio unit	1. Check speaker. 2. Check audio unit/amp. output. 3. Check wires for open or short between audio unit/amp. and speakers. 4. Remove audio unit for repair.

Inspection

NAEL0347

AUDIO UNIT AND AMP.

NAEL0347S01

All voltage inspections are made with:

- Ignition switch ON or ACC
- Audio unit ON
- Audio unit and amps. connected (If audio unit or amp. is removed for inspection, supply a ground to the case using a jumper wire.)

ANTENNA

NAEL0347S02

Using a jumper wire, clip an auxiliary ground between antenna and body.

- If reception improves, check antenna ground (at body surface).
- If reception does not improve, check main feeder cable for short circuit or open circuit.

Audio Unit Removal and Installation

NAEL0348

1. Lock the CD changer unit mechanism (if so equipped) prior to removing a malfunctioning CD changer unit. Refer to "LOCKING CD CHANGER UNIT MECHANISM", EL-216.
2. Remove CD changer unit. Refer to BT-24, "INSTRUMENT PANEL ASSEMBLY".

LOCKING CD CHANGER UNIT MECHANISM

NAEL0348S01

CAUTION:

- **Prior to removing a malfunctioning CD changer unit that will be shipped for repair, the changer mechanism MUST BE LOCKED to prevent the mechanism from being damaged during shipping.**
- **If a CD is jammed or unable to be removed from the unit, do NOT lock the changer mechanism. If the unit is to be shipped for repair, carefully package the unit to prevent vibration and shock.**

1. Eject and remove any CDs from the CD changer unit.
2. Turn ignition switch OFF. Wait until CD changer unit display is off and mechanism stops moving (mechanism sound stops).
3. Press any one of the disc selection buttons once. When a display shows on the CD changer unit, press the same disc selection button again within 5 seconds.
   - The changer mechanism will lock itself within 10 seconds.
4. After mechanism stops moving (mechanism sound stops), disconnect the CD changer unit connectors.

NOTE:

After installing a new or remanufactured CD changer unit, switching the CD changer unit ON will automatically unlock the mechanism. A special unlocking procedure is not required.

Wiring Diagram — REMOTE —

NAEL0349

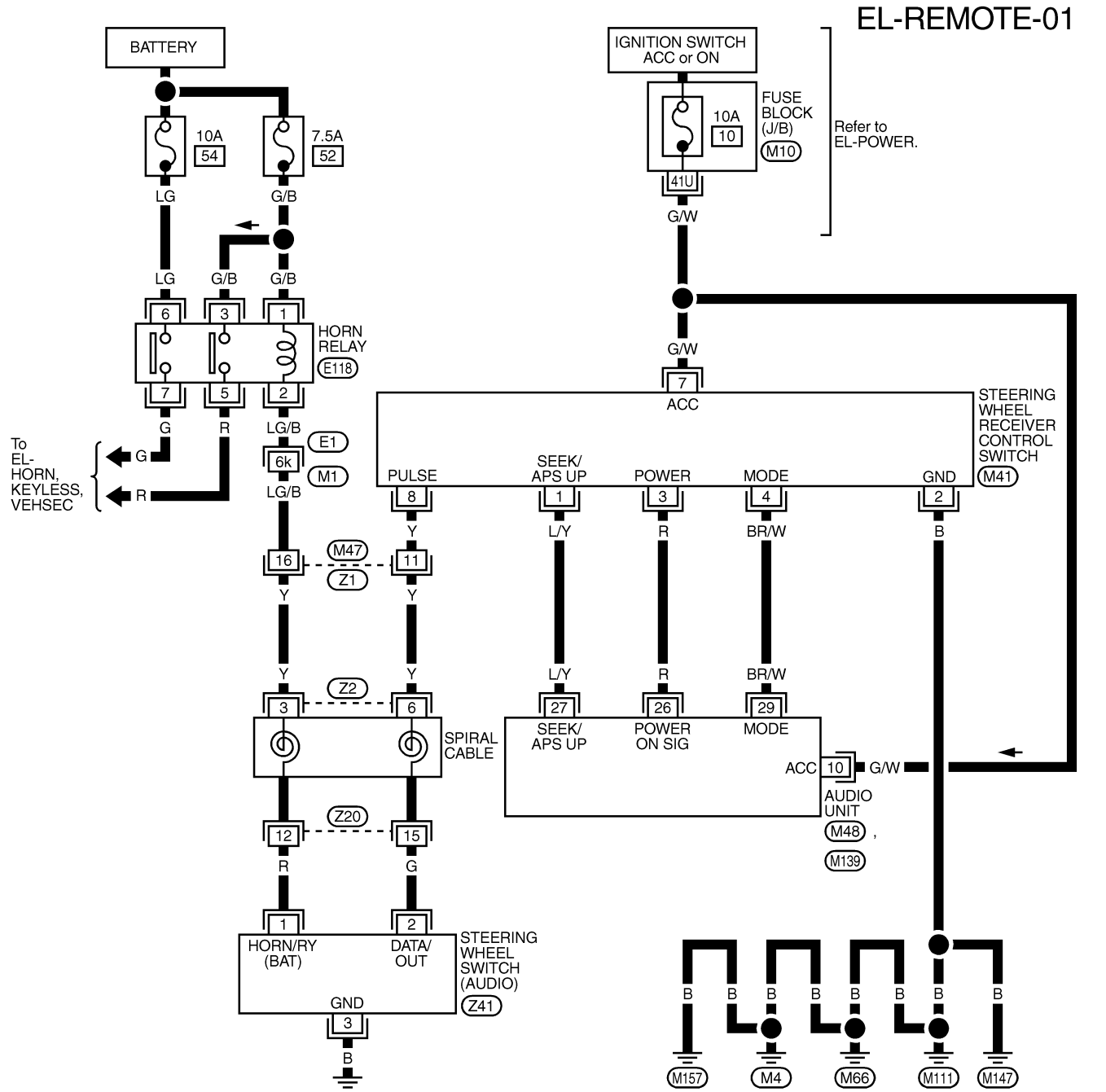

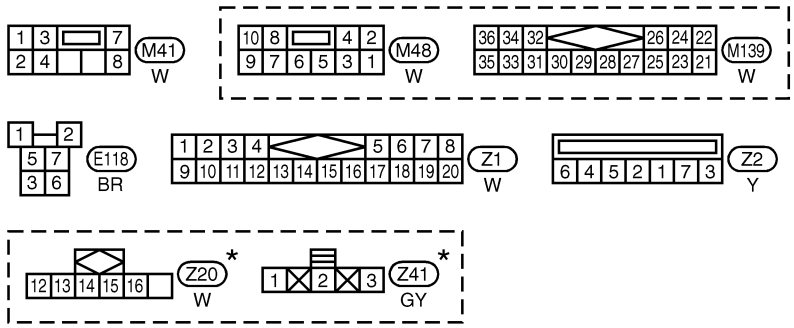

REFER TO THE FOLLOWING.
E1 -SUPER MULTIPLE JUNCTION (SMJ)
M10 -FUSE BLOCK-JUNCTION BOX (J/B)

* : This connector is not shown in "HARNESS LAYOUT", EL section.

MEL008Q

System Description

NAEL0350

Power is supplied at all times

- through 7.5A fuse [No. 24, located in the fuse block (J/B)]
- to power antenna terminal 6.

Ground is supplied to the power antenna terminal 2 through body grounds M4, M66, M111, M147 and M157.
When the audio unit is turned to the ON position, battery positive voltage is supplied

- through audio unit terminal 5
- to power antenna terminal 4.

The antenna raises and is held in the extended position.
When the audio unit is turned to the OFF position, battery positive voltage is interrupted

- from audio unit terminal 5
- to power antenna terminal 4.

The antenna retracts.

Wiring Diagram — P/ANT —

NAEL0351

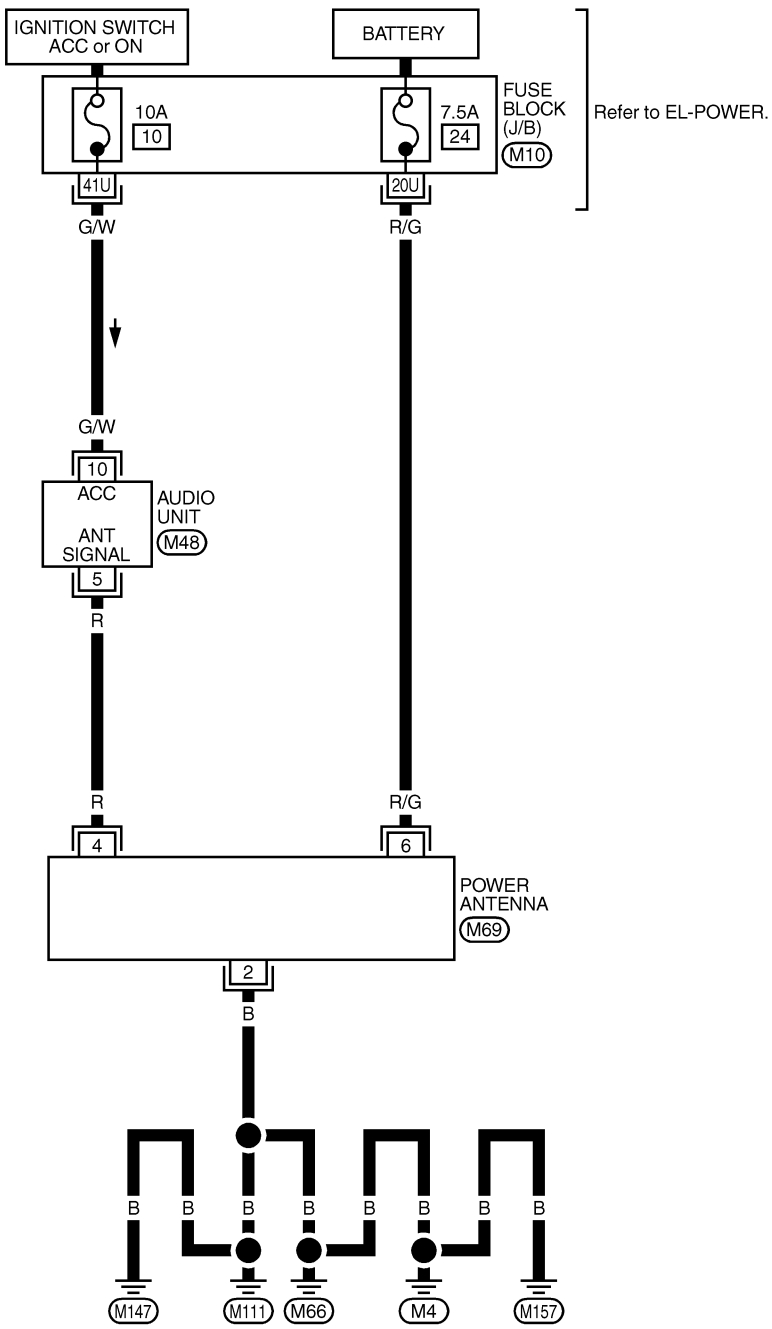

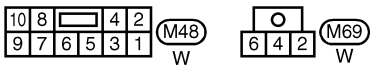

REFER TO THE FOLLOWING.
M10 - FUSE BLOCK - JUNCTION BOX (J/B)

MEL009Q

Trouble Diagnoses

NAEL0352

POWER ANTENNA

NAEL0352S01

Symptom	Possible causes	Repair order
Power antenna does not operate.	1. 7.5A fuse 2. Audio unit signal 3. Grounds M4, M66, M111, M147 and M157	1. Check 7.5A fuse [No. 24, located in fuse block (J/B)]. Verify that battery positive voltage is present at terminal 6 of power antenna. 2. Turn ignition switch and audio unit ON. Verify that battery positive voltage is present at terminal 4 of power antenna. 3. Check grounds M4, M66, M111, M147 and M157.

Location of Antenna

NAEL0353

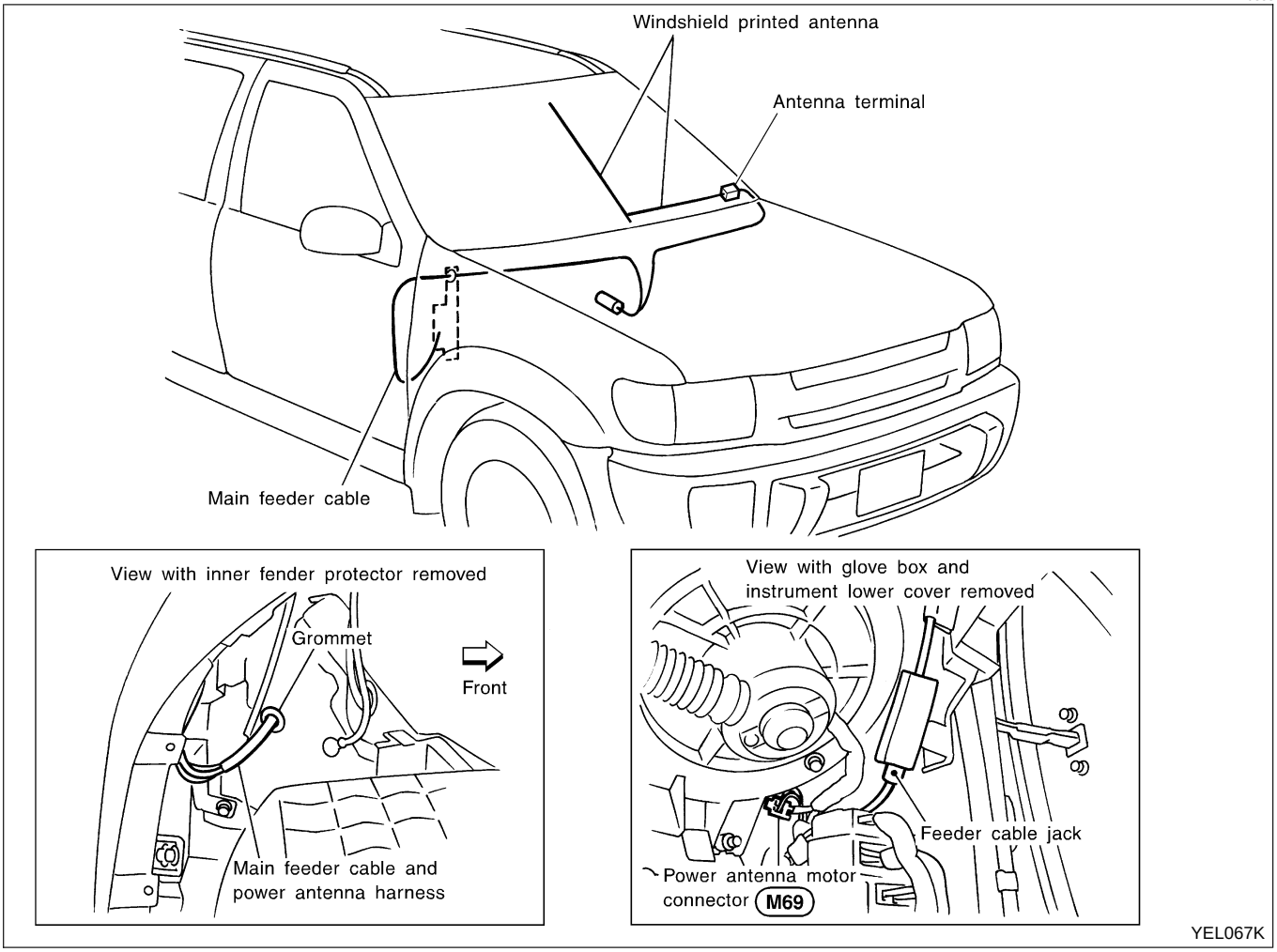

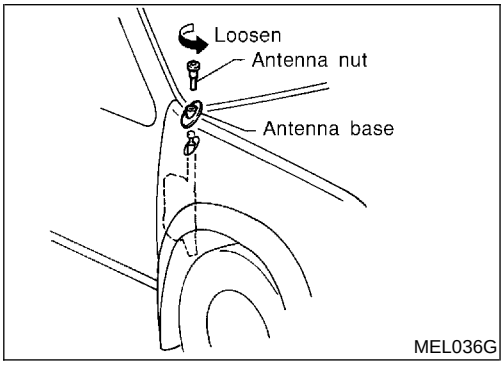

Antenna Rod Replacement

NAEL0354

REMOVAL

NAEL0354S01

1. Remove antenna nut and antenna base.

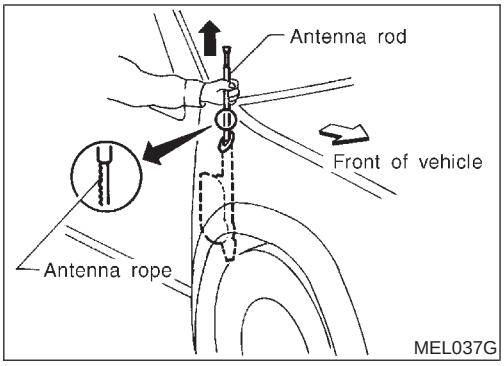

2. Withdraw antenna rod while raising it by operating antenna motor.

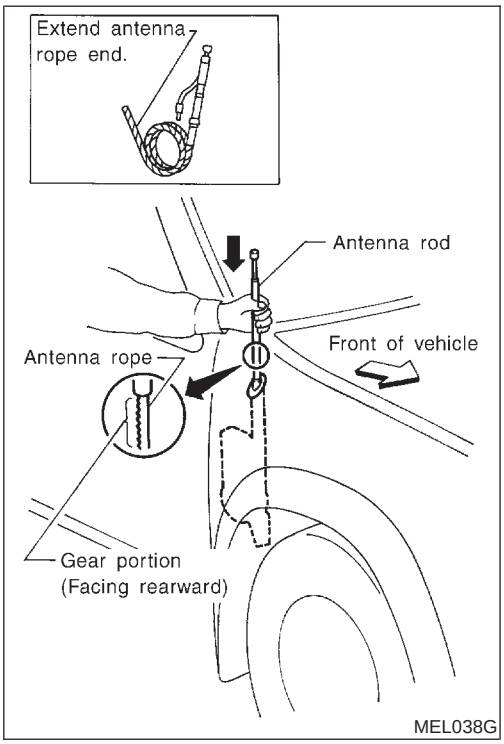

INSTALLATION

NAEL0354S02

1. Lower antenna rod by operating antenna motor.
2. Insert gear section of antenna rope into place with it facing toward antenna motor.
3. As soon as antenna rope is wound on antenna motor, stop antenna motor. Insert antenna rod lower end into antenna motor pipe.
4. Retract antenna rod completely by operating antenna motor.
5. Install antenna nut and base.

System Description

NAEL0355

OUTLINE

NAEL0355S01

Electric sunroof system consists of

- Sunroof switch
- Sunroof motor
- Smart entrance control unit

Smart entrance control unit controls retained power operation.

OPERATION

NAEL0355S02

The sunroof can be tilted up or down with the tilt switch.
The sunroof can be opened or closed automatically with the sunroof switch.

RETAINED POWER OPERATION

NAEL0355S04

When the ignition switch is turned to OFF position from ON or START position, power is supplied for 45 seconds

- to power window relay terminal 2
- from smart entrance control unit terminal 46.

Ground is always supplied

- to power window relay terminal 1
- through body grounds M4, M66, M111, M147 and M157.

When power and ground are supplied, power window relay continues to be energized, and the electrical sunroof can be operated.
When power is supplied, the electrical sunroof can be operated.
The retained power operation is canceled when the driver or passenger side door is opened.
RAP signal period can be changed by CONSULT-II. (EL-226)

INTERRUPTION DETECTION FUNCTION

NAEL0355S05

The CPU of sunroof motor monitors the sunroof motor operation and the sunroof position (full closed or other) for sunroof by the signals from encoder and limit switch in sunroof motor.
When sunroof motor detects interruption during the following close operation,

- automatic close operation when ignition switch is in the “ON” position
- automatic close operation during retained power operation

sunroof switch controls the motor for open and the sunroof will operate about 150 mm (5.91 in).

Wiring Diagram — SROOF —

NAEL0356

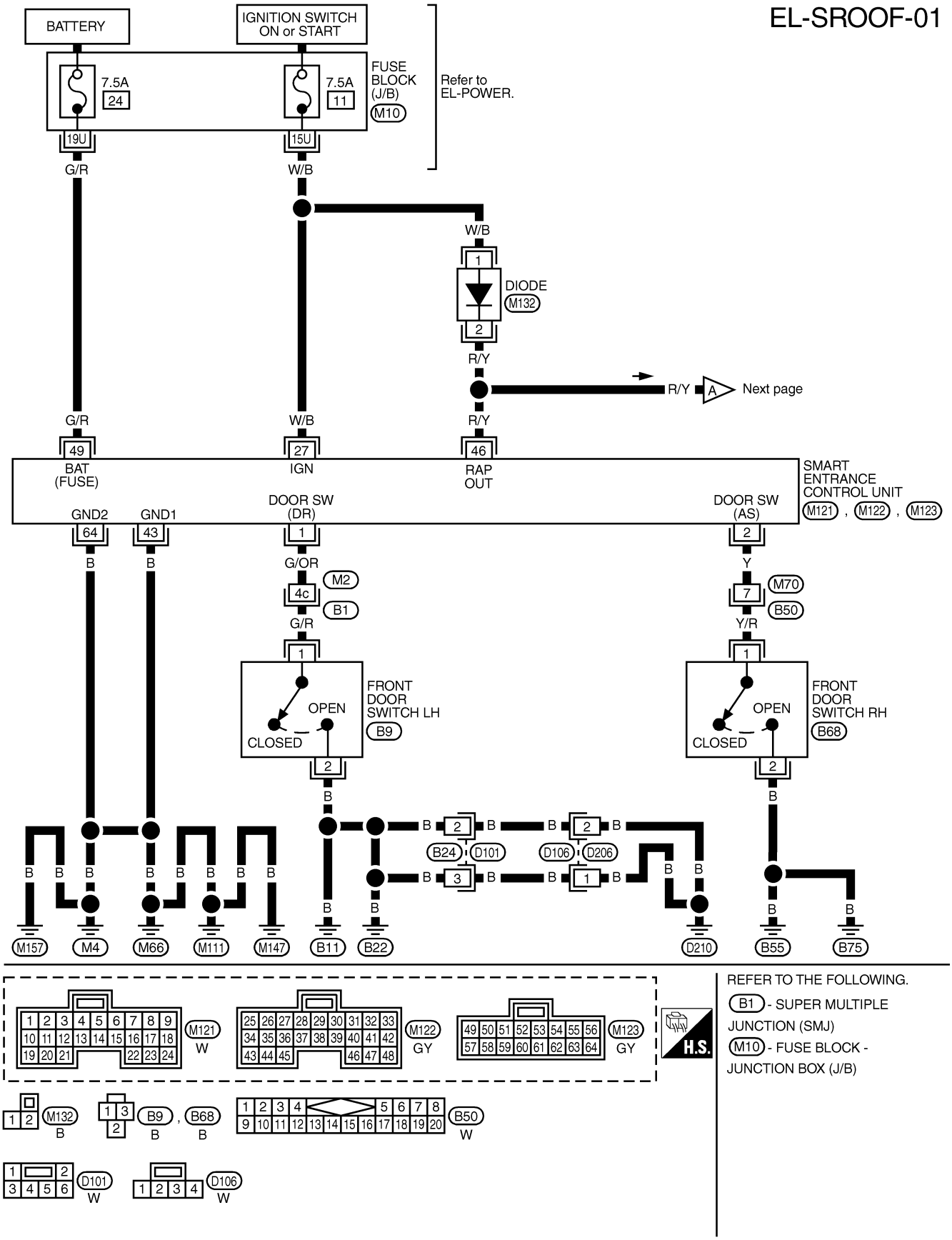

MEL010Q

Wiring Diagram — SROOF — (Cont'd)

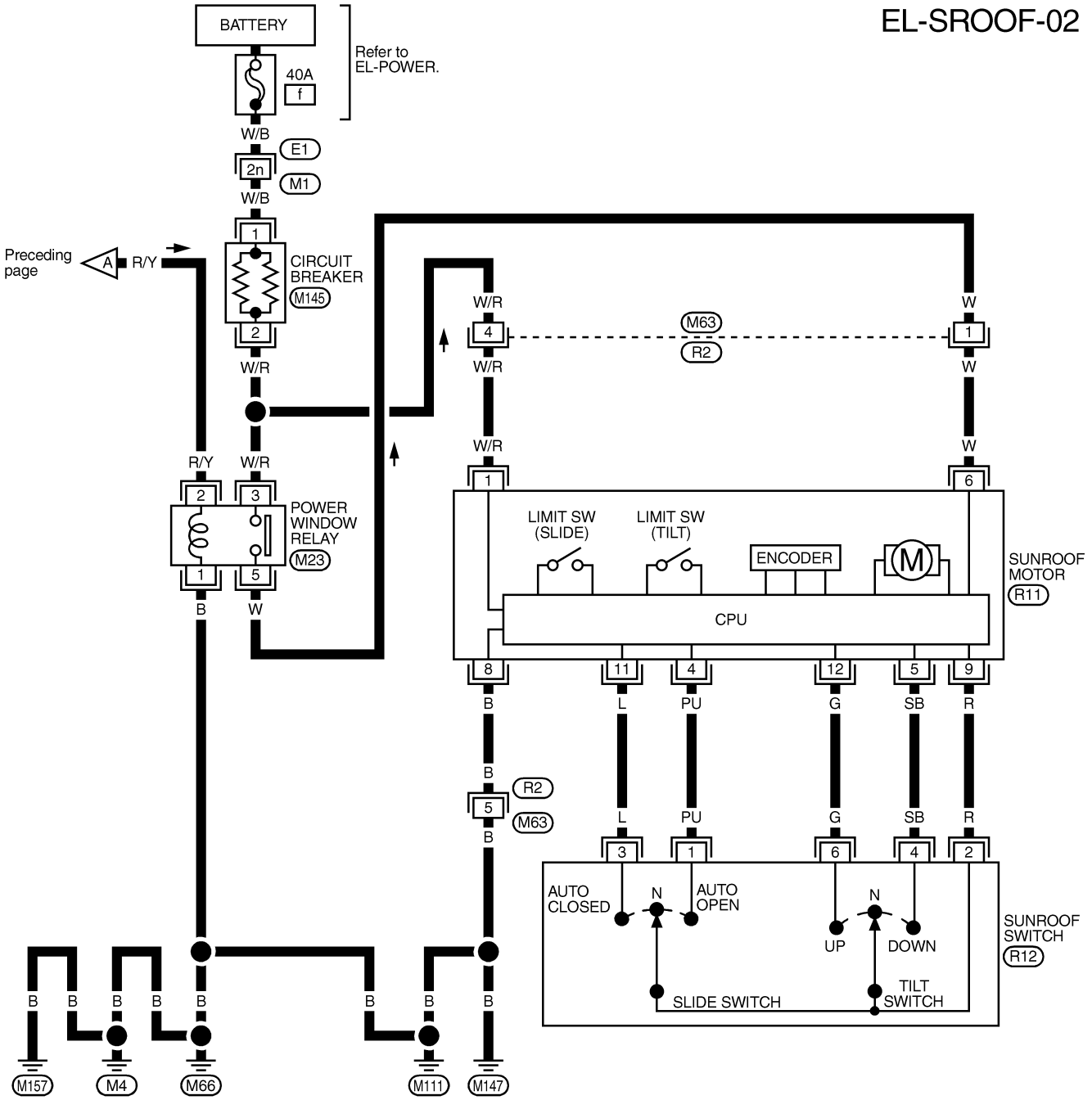

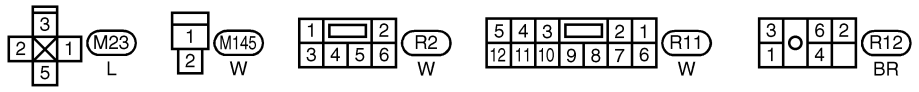

REFER TO THE FOLLOWING.
E1 -SUPER MULTIPLE JUNCTION (SMJ)

MEL011Q

CONSULT-II Inspection Procedure

=NAEL0357

"RETAINED PWR"

NAEL0357S01

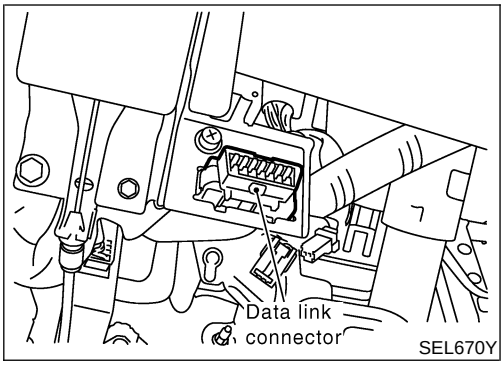

SEL670Y

1. Turn ignition switch "OFF".
2. Connect "CONSULT-II" and "CONSULT-II CONVERTER" to the data link connector.

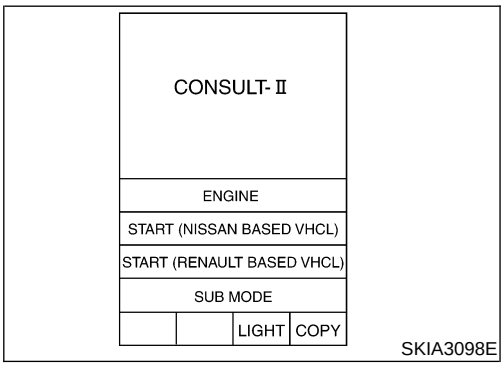

SKIA3098E

3. Turn ignition switch "ON".
4. Touch "START (NISSAN BASED VHCL)".

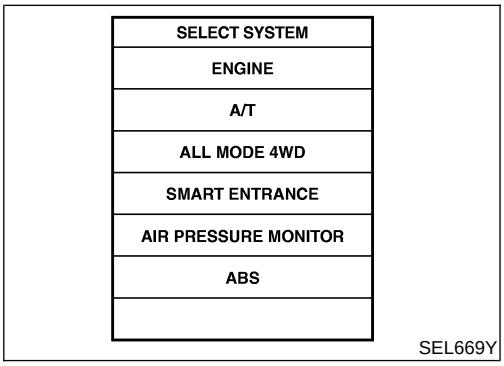

SEL669Y

5. Touch "SMART ENTRANCE".
   If "SMART ENTRANCE" is not indicated, go to GI-41, "CONSULT-II Data Link Connector (DLC) Circuit".

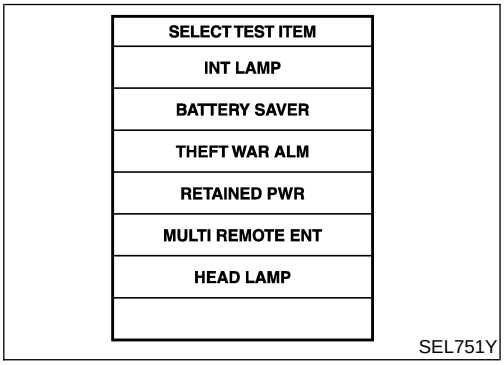

SEL751Y

6. Touch "RETAINED PWR".

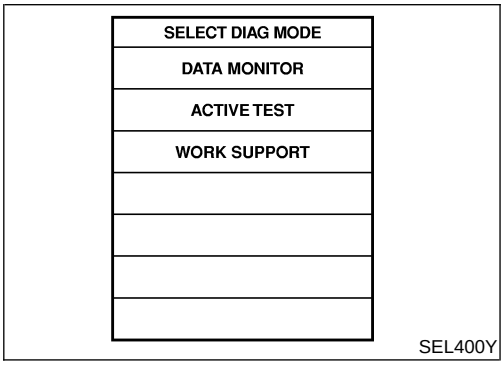

SEL400Y

7. Select diagnosis mode.
   "DATA MONITOR", "ACTIVE TEST" and "WORK SUPPORT" are available.

CONSULT-II Application Items

NAEL0455

"RETAINED PWR"

NAEL0455S01

Data Monitor

NAEL0455S0101

Monitored Item	Description
IGN ON SW	Indicates [ON/OFF] condition of ignition switch.
DOOR SW-DR	Indicates [ON/OFF] condition of front door switch LH.
DOOR SW-AS	Indicates [ON/OFF] condition of front door switch RH.

Active Test

NAEL0455S0102

Test Item	Description
RETAINED PWR	This test is able to supply RAP signal (power) from smart entrance control unit to power window system, power sunroof system. Those systems can be operated when turning on "RETAINED PWR" on CONSULT-II screen even if the ignition switch is tuned OFF. **NOTE:** **During this test, CONSULT-II can be operated with ignition switch "OFF" position. "RETAINED PWR" should be turned "ON" or "OFF" on CONSULT-II screen when ignition switch is ON. Then turn ignition switch OFF for checking retained power operation. CONSULT-II might be stuck if "RETAINED PWR" is turned "ON" or "OFF" on CONSULT-II screen when ignition switch is OFF.**

Work Support

NAEL0455S0103

Work Item	Description
RETAINED PWR SET	RAP signal's power supply period can be changed by mode setting. Selects RAP signal's power supply period between three steps. ● MODE 1 (45 sec.)/MODE 2 (OFF)/MODE 3 (2 min.)

Trouble Diagnoses

NAEL0456

Symptom	Possible cause	Repair order
Power sunroof cannot be operated using any switch.	1. 7.5A fuse, 40A fusible link and M145 circuit breaker 2. Power window relay ground circuit 3. Sunroof motor ground circuit 4. Power window relay 5. Sunroof motor circuit 6. Sunroof switch 7. Sunroof switch circuit 8. Sunroof motor	1. Check 7.5A fuse [No. 11, located in fuse block (J/B)], 40A fusible link (letter **f**, located in fuse and fusible link box) and M145 circuit breaker. Turn ignition switch "ON" and verify battery positive voltage is present at terminals 2 and 3 of power window relay and terminal 1 of sunroof motor. 2. Check power window relay ground circuit. 3. Check sunroof motor ground circuit. 4. Check power window relay. 5. Check the wire between power window relay and sunroof motor. 6. Check sunroof switch. 7. Check harness between sunroof switch and sunroof motor. 8. Check sunroof motor.
Power sunroof cannot be operated using one of the sunroof switches.	1. Sunroof switch 2. Sunroof switch circuit	1. Check sunroof switch. 2. Check the harness between sunroof motor and sunroof switch.

Symptom	Possible cause	Repair order
Power sunroof cannot be opened or closed fully.	1. Full closed position not initialized 2. Sunroof slide mechanism 3. Sunroof switch 4. Sunroof switch circuit 5. Sunroof motor	1. Initialize full closed position. 2. Check the following. a. Check obstacles in sunroof, etc. b. Check worn or deformed sunroof. c. Check sunroof sash tilted too far inward or outward. 3. Check sunroof switch. 4. Check harness between sunroof motor and sunroof switch. 5. Replace sunroof motor.
Retained power operation does not operate properly.	1. RAP signal circuit 2. Driver or passenger side door switch circuit 3. Smart entrance control unit	1. Check RAP signal. a. (With CONSULT-II) Check RAP signal with CONSULT-II. Use "ACTIVE TEST" mode, "RETAINED PWR" in "SMART ENTRANCE". (Refer to EL-226.) If NG, go to the step b. below. b. Verify 12 positive voltage from smart entrance control unit is present at terminal 2 of power window relay: ● Within 45 seconds after ignition switch turns off. ● When front door LH and RH is closed. 2. Check harness between smart entrance control unit and driver or passenger side door switch. Check driver or passenger side door switch. Check driver or passenger side door switch. 3. Check smart entrance control unit. (EL-382)

Wiring Diagram — MIRROR —

NAEL0360

EL-MIRROR-01

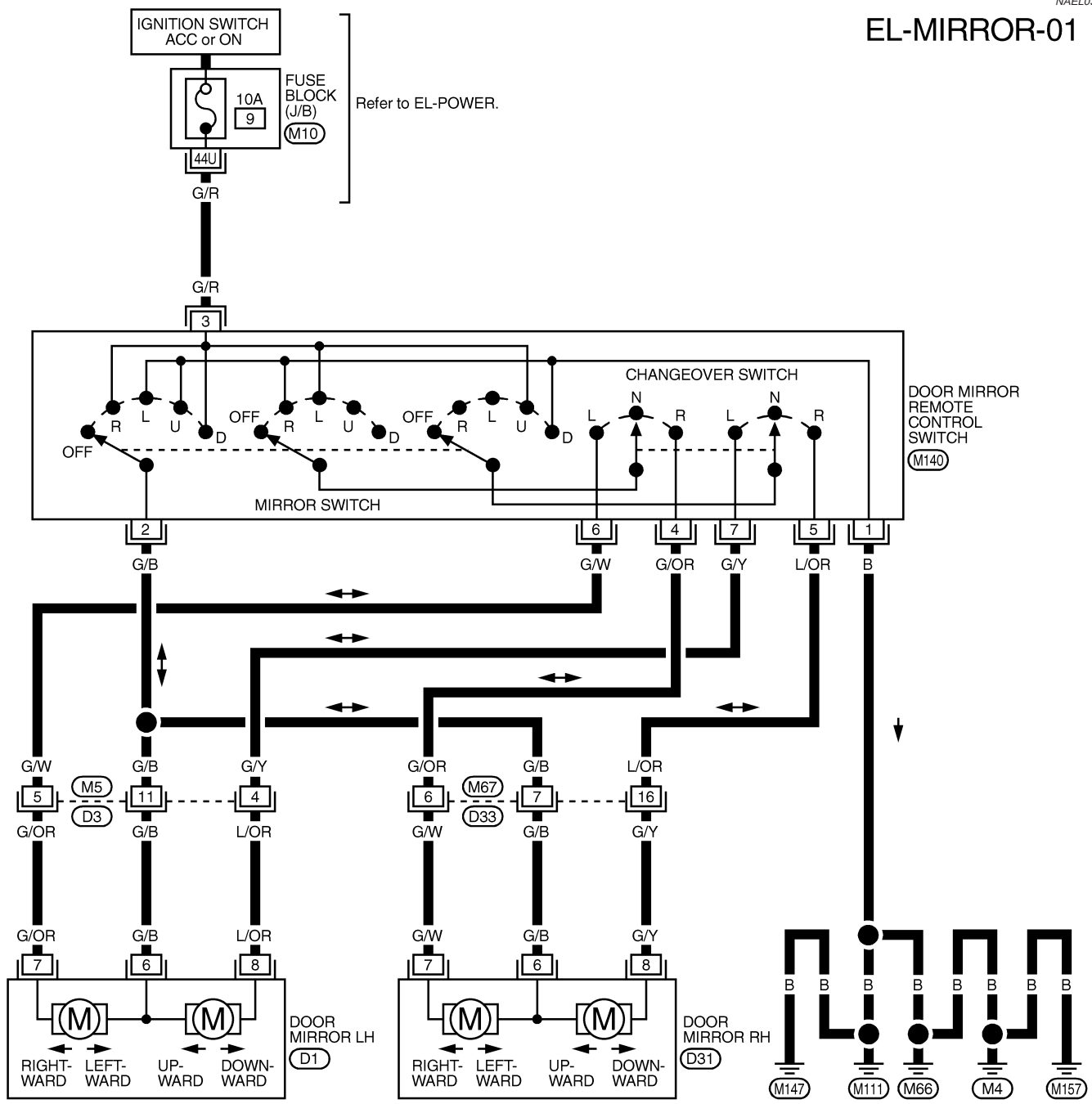

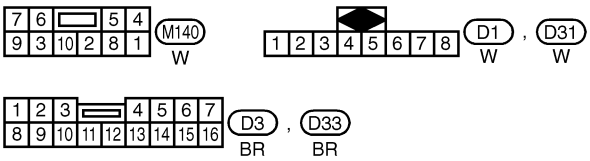

REFER TO THE FOLLOWING.
M10 -FUSE BLOCK-JUNCTION BOX (J/B)

MEL012Q

Wiring Diagram — T&FLID —

NAEL0460

EL-T&FLID-01

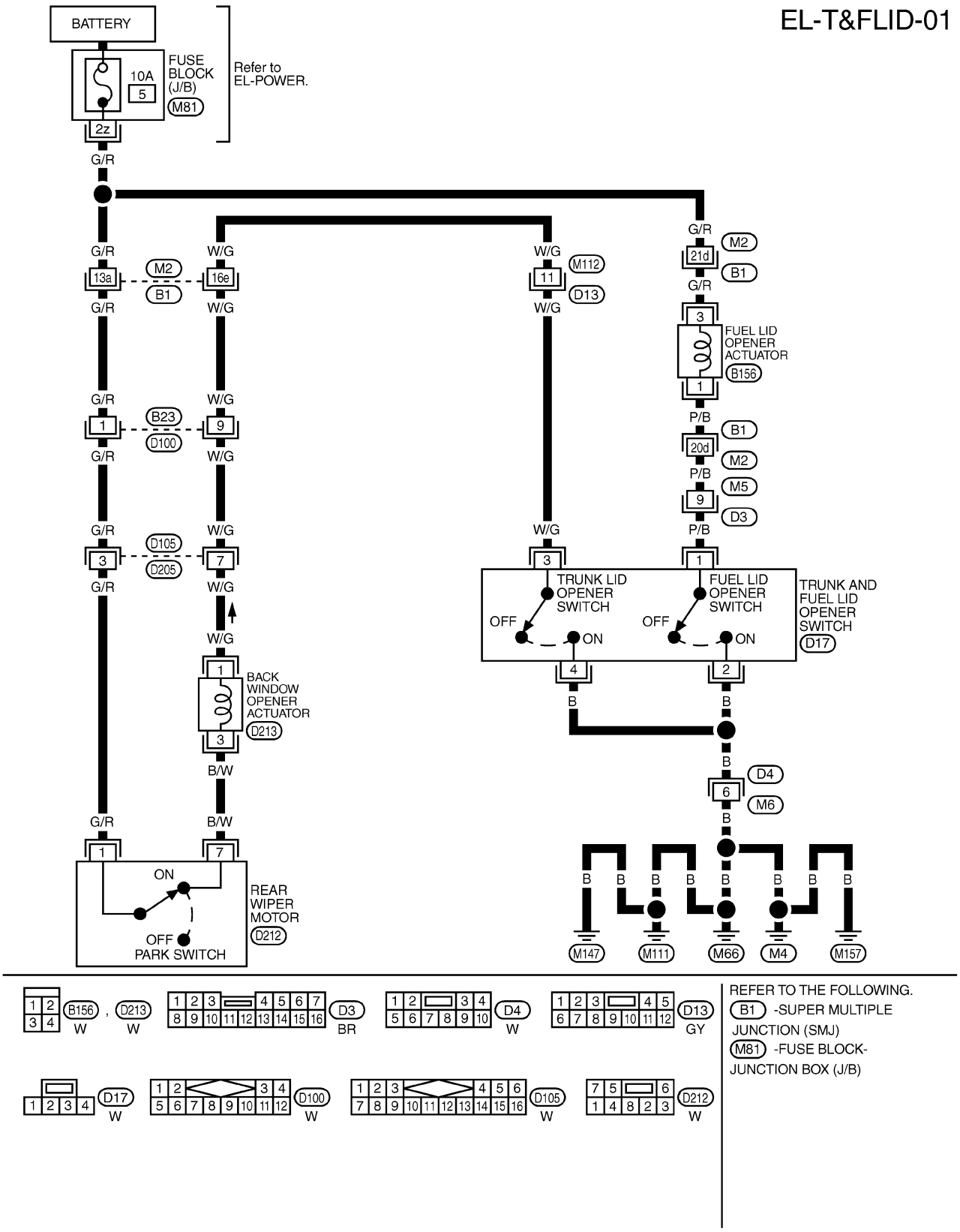

REFER TO THE FOLLOWING.
B1 -SUPER MULTIPLE JUNCTION (SMJ)
M81 -FUSE BLOCK-JUNCTION BOX (J/B)

MEL949R

Wiring Diagram — SEAT —

NAEL0361

EL-SEAT-01

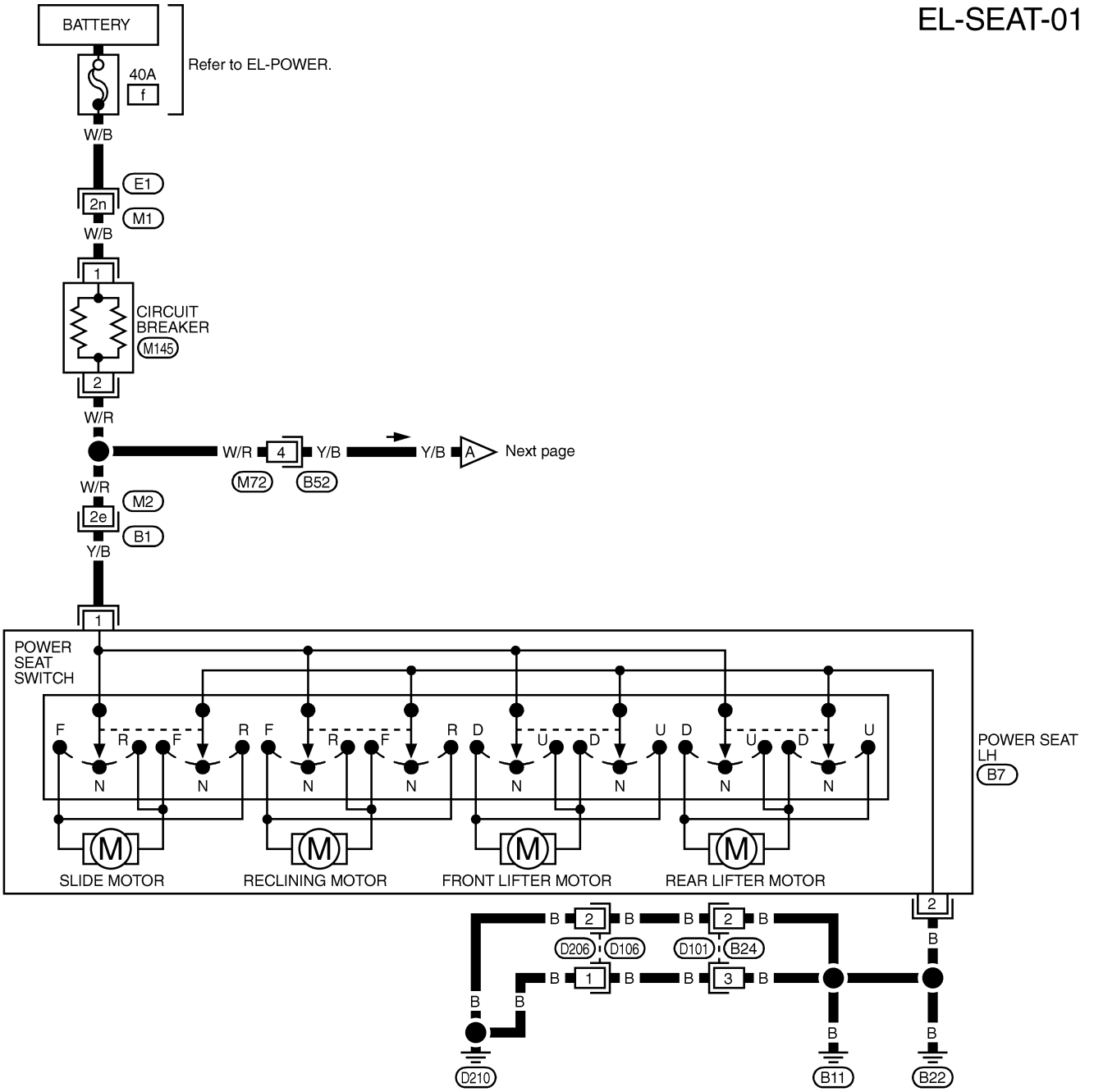

REFER TO THE FOLLOWING.
E1 , B1 - SUPER MULTIPLE JUNCTION (SMJ)

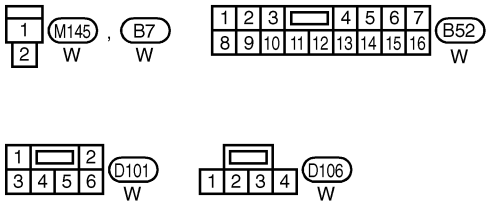

MEL830L

EL-SEAT-02

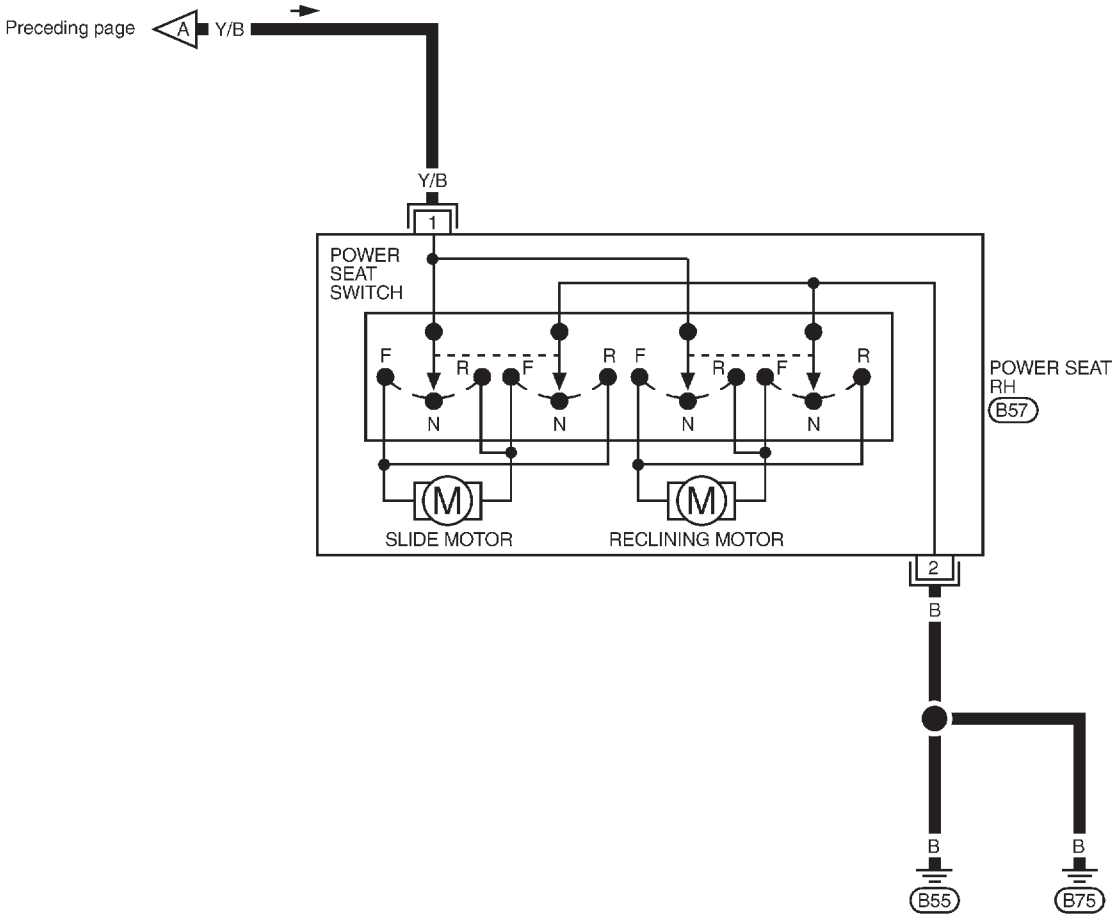

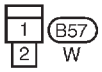

MEL601F

Wiring Diagram — HSEAT —

NAEL0362

EL-HSEAT-01

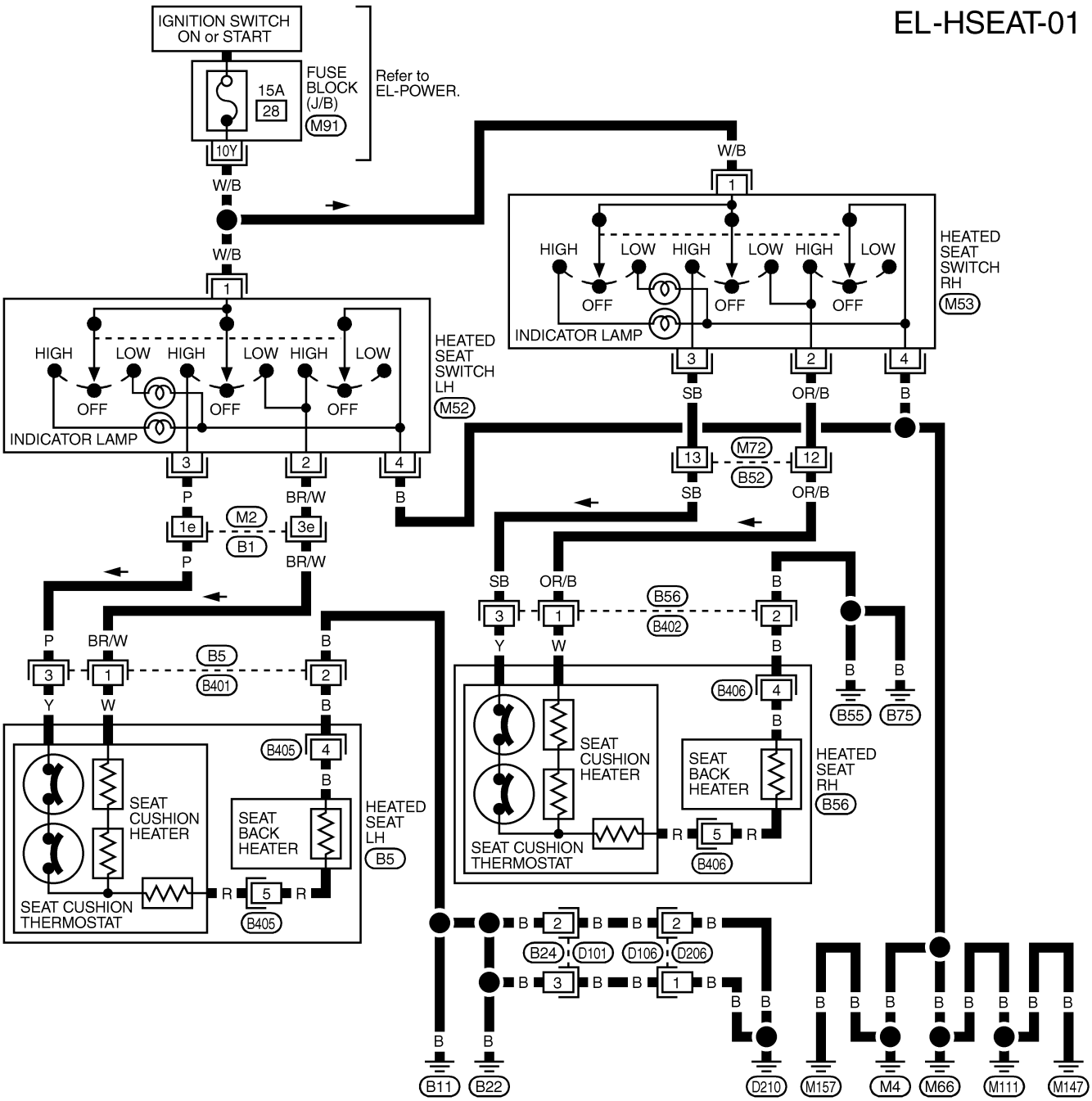

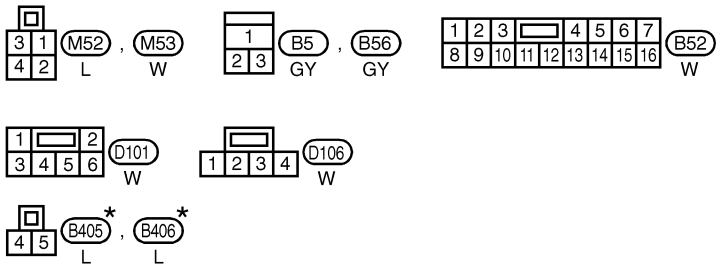

* : This connector is not shown in "HARNESS LAYOUT", EL section.

REFER TO THE FOLLOWING.
B1 -SUPER MULTIPLE JUNCTION (SMJ)
M91 -FUSE BLOCK-JUNCTION BOX (J/B)

MEL013Q

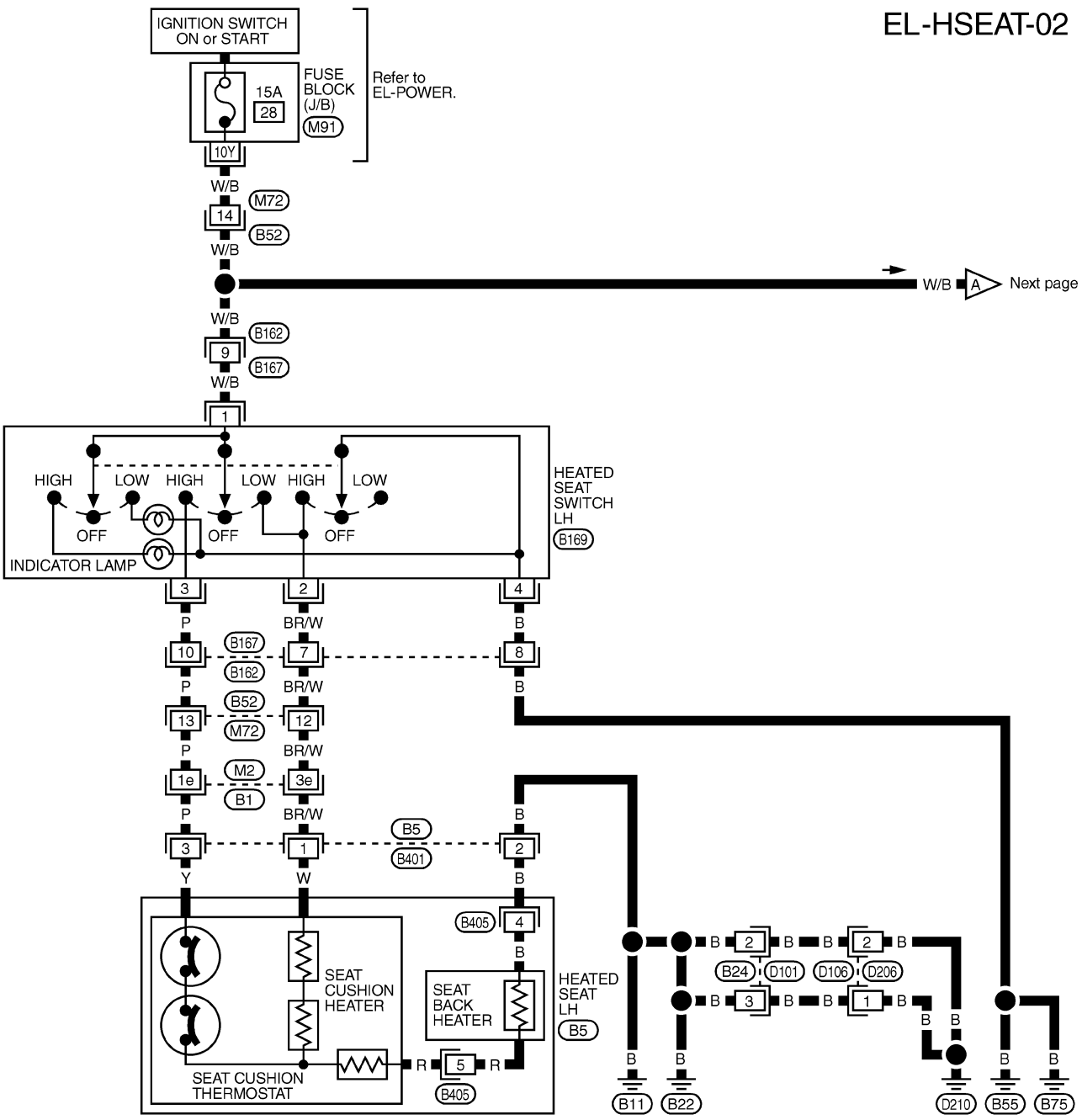

REFER TO THE FOLLOWING.
B1 -SUPER MULTIPLE JUNCTION (SMJ)
M91 -FUSE BLOCK-JUNCTION BOX (J/B)

* : This connector is not shown in "HARNESS LAYOUT", EL section.

MEL950R

Wiring Diagram — HSEAT — (Cont'd)

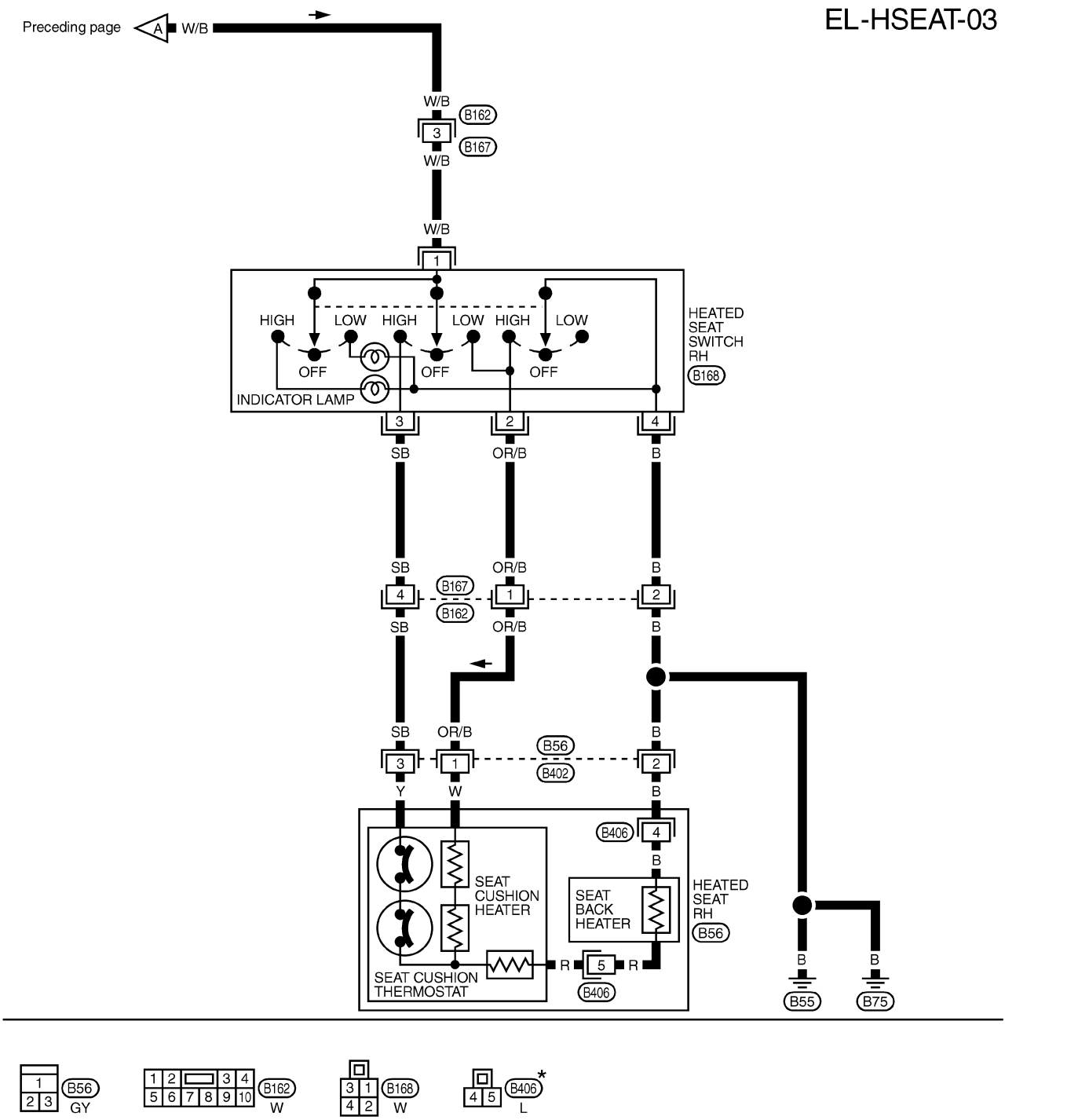

* : This connector is not shown in "HARNESS LAYOUT", EL section.

MEL951R

Seatback Heating Unit

NAEL0363

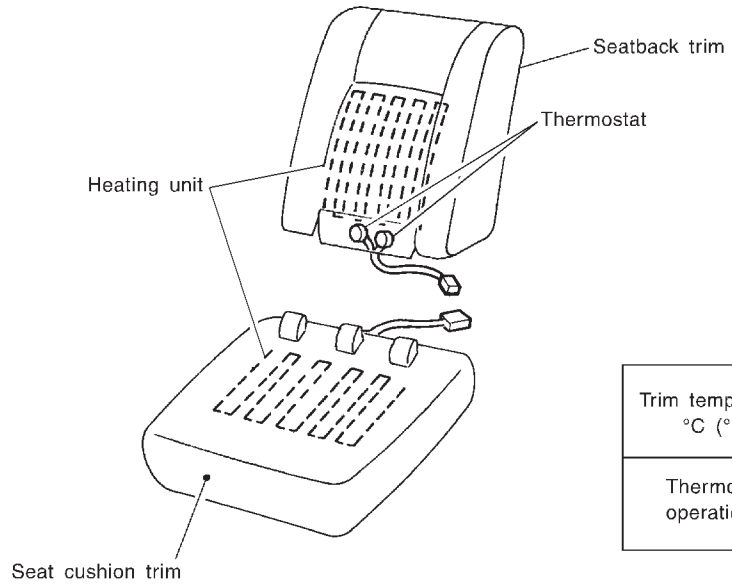

Trim temperature °C (°F)	Increasing to 35 - 45 (95 - 113)	Decreasing to 25 - 35 (77 - 95)
Thermostat operation	OFF	ON

SBT314

Component Parts and Harness Connector Location

NAEL0364

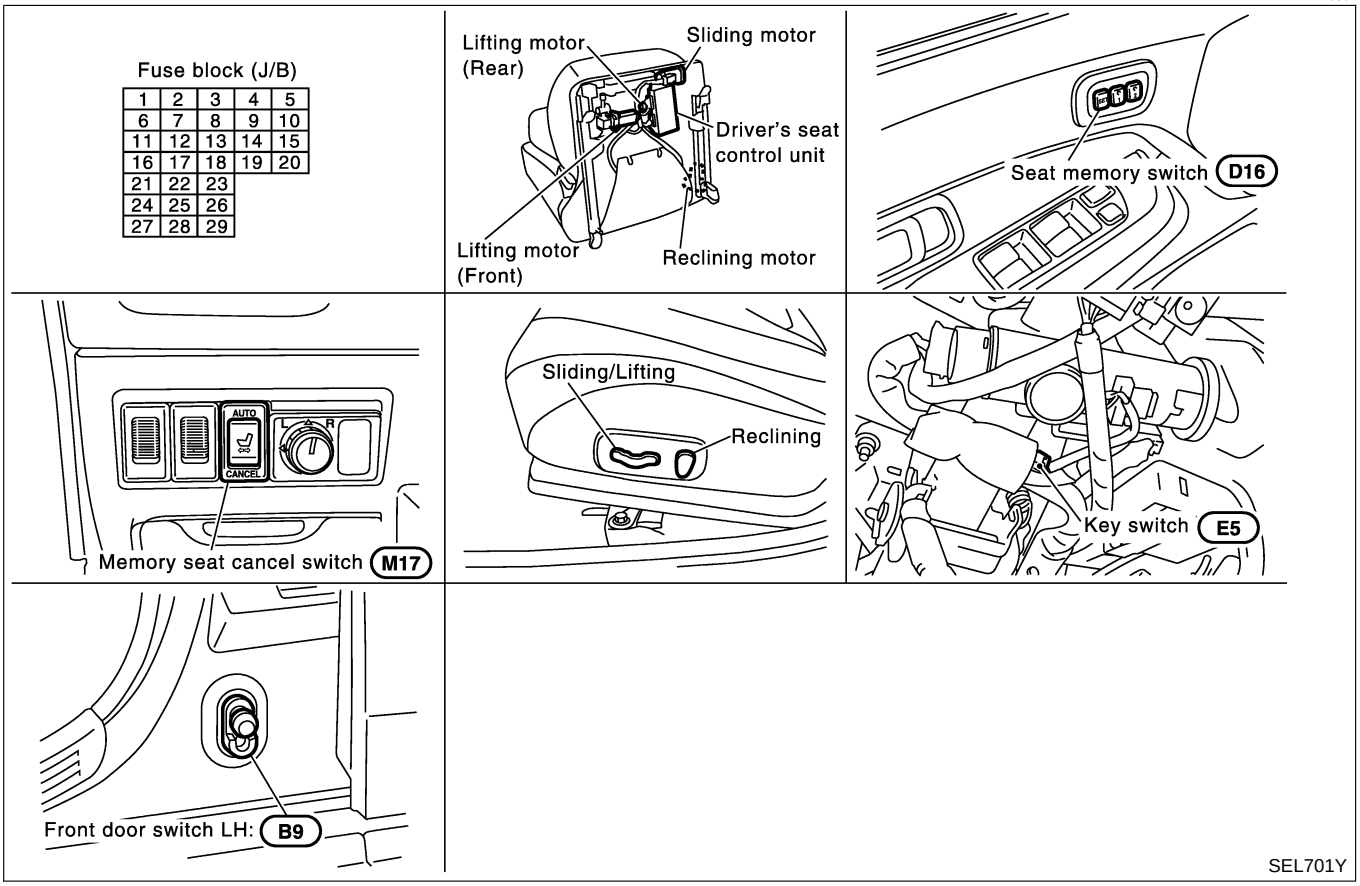

System Description

=NAEL0365

OPERATIVE CONDITION

NAEL0365S01

The drive position can be set in 2 ways, manually and automatically.

Manual Operation

NAEL0365S0101

The driver's seat can be adjusted for sliding, reclining, front cushion height and rear cushion height with the LH power seat switches. The manual operation can be adjusted with the IGN key in any position.

Automatic Operation

NAEL0365S0102

The driver's seat is adjusted to the proper positions for the driver automatically, in 3 different ways: MEMORY AUTOMATIC SET, AUTOMATIC EXITING SETTING and AUTOMATIC SET RETURN. (Automatic Drive Positioner = ADP)

CONDITIONS INHIBITING AUTOMATIC OPERATION

NAEL0365S02

Automatic memory setting procedures are suspended under any of the following conditions:

1) When vehicle speed is more than 7 km/h (4 MPH).
2) When driver's side power seat switch is turned on.
3) When any two of the switches (set switch and memory switches 1 and 2) are turned ON.
4) When cancel switch is turned on.
5) When selector lever is in any position other than "P".
6) When ignition switch is turned to "START" position.
   (Operation resumes when ignition switch is returned to "ON".)
7) When detention switch malfunction is detected:

- Detention switch failure is sensed when detention switch remains off for at least 2 seconds at a vehicle speed of greater than 7 km/h (4 MPH).

FAIL-SAFE SYSTEM

NAEL0365S03

Output Failure

NAEL0365S0301

When the ignition switch is in the ON position, if any of the parts (indicated in the following chart) move more than the specified amount within a period "T2" when no "ON" input is sent from any of the switches (indicated in the following chart), or an output from the automatic drive positioner is not produced, an output failure is sensed. Motor operation will be suspended automatically, and all automatic operations will be ineffective. (In this case, the motor will not operate manually.)

OPERATED PORTION	T2	Allowable measurement
Seat sliding	Approx. 2.5 sec.	Within 6 mm (0.24 in)
Seat reclining	Same as above	Change angle within 1°

Absolving

NAEL0365S0302

When moving selector lever back to "P" position after having moved it to any position except "P", fail-safe operation will be canceled.

INITIALIZATION

NAEL0365S04

After reconnecting battery cable, perform initialization procedure A or B. If initialization has not been performed, automatic drive positioner will not operate.

PROCEDURE A

1) Insert key in the ignition key cylinder. (Ignition switch is in "OFF" position.)
2) Open → close → open driver side door. (Do not perform with the door switch operation.)
3) End

PROCEDURE B

1) Drive the vehicle at more than 25 km/h (16 MPH).
2) End

MEMORY AUTOMATIC SET

=NAEL0365S05

Two drive positions can be retained in the memory. Press memory switch to set driver's seat to preset position.

PROCEDURE FOR STORING MEMORY

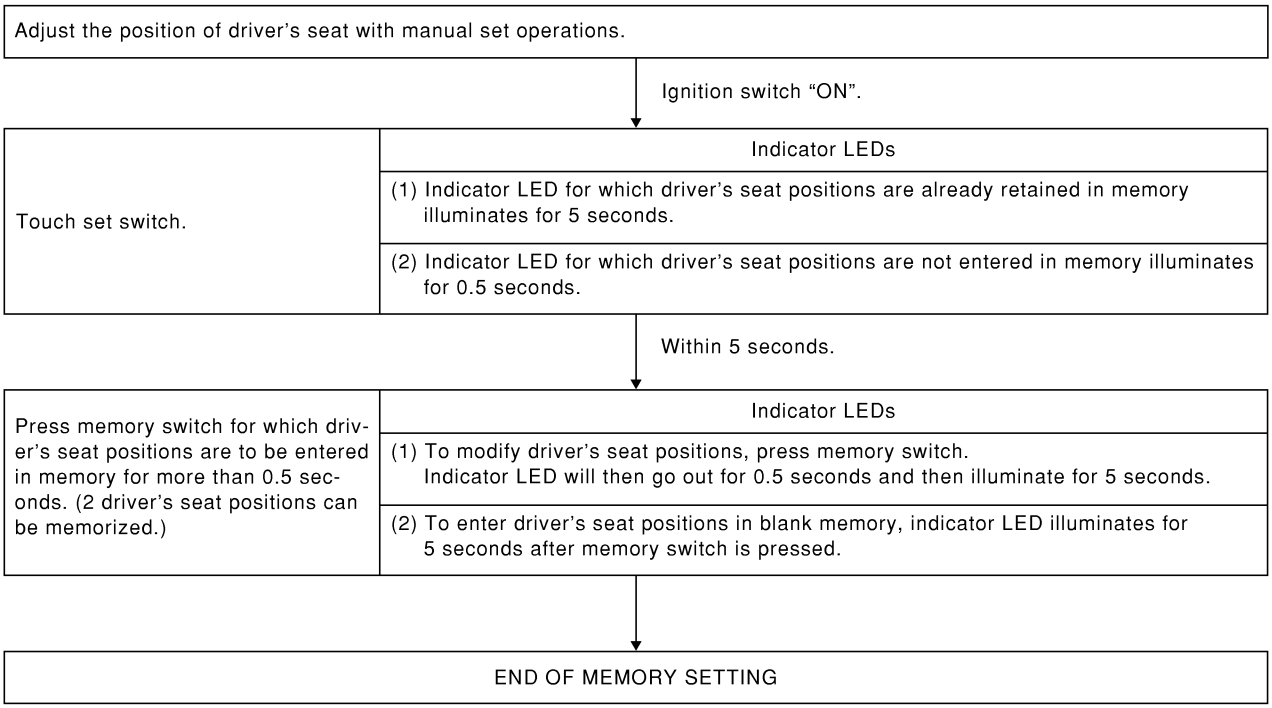

SEL592W

NOTE:

- When memory switch for which driver's seat positions are already retained in memory is pressed, new seat positions will be retained in memory in place of the previously set positions.
- Drive position is erased from the memory when battery cable is disconnected more than 30 seconds. After connecting battery cable, perform initialization procedures.

SELECTING THE MEMORIZED POSITION

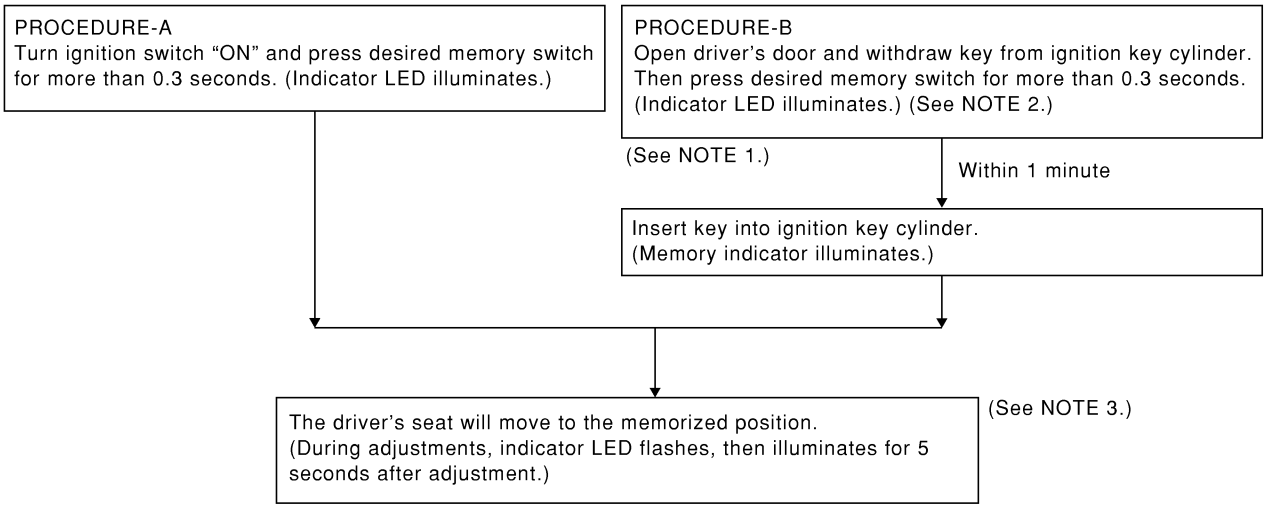

SEL593W

NOTE:

1) Do not keep cancel switch pressed as it will not operate.
2) Automatic exiting setting will be performed.
3) The driver's seat position (see the following Table) operates in the order of priority.

The order of priority	Operated portion
1	Seat sliding
2	Seat reclining
3	Seat front lifting
4	Seat rear lifting

AUTOMATIC EXITING SETTING

NAEL0365S06

"Exiting" positions:

Driver's seat ... Slides about 40 mm (1.57 in) rear from normal sitting position.

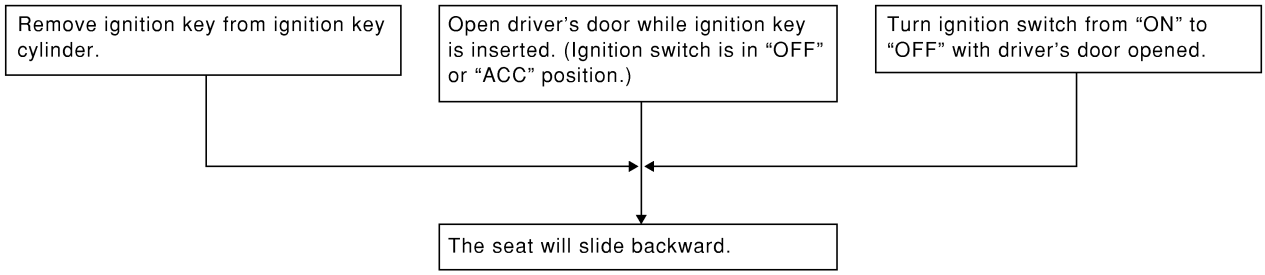

SEL594W

AUTOMATIC SET RETURN

NAEL0365S07

With driver's seat set to the "exiting" position, operating one of the following procedures moves it to the position previously retained in memory.

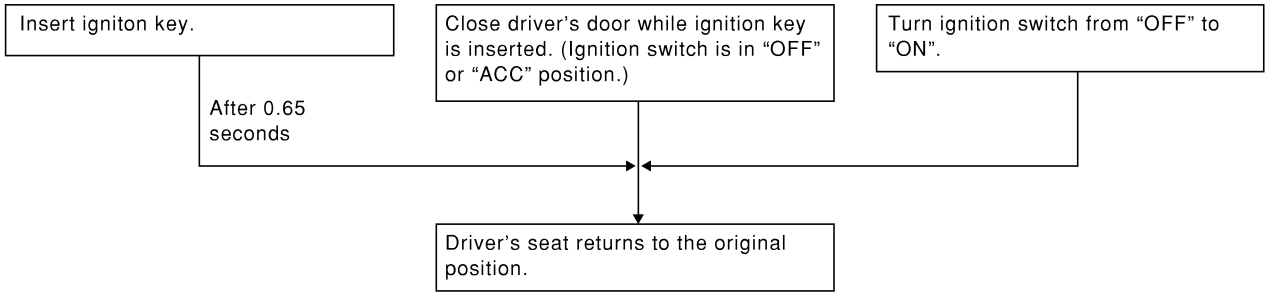

SEL595W

Schematic

NAEL0366

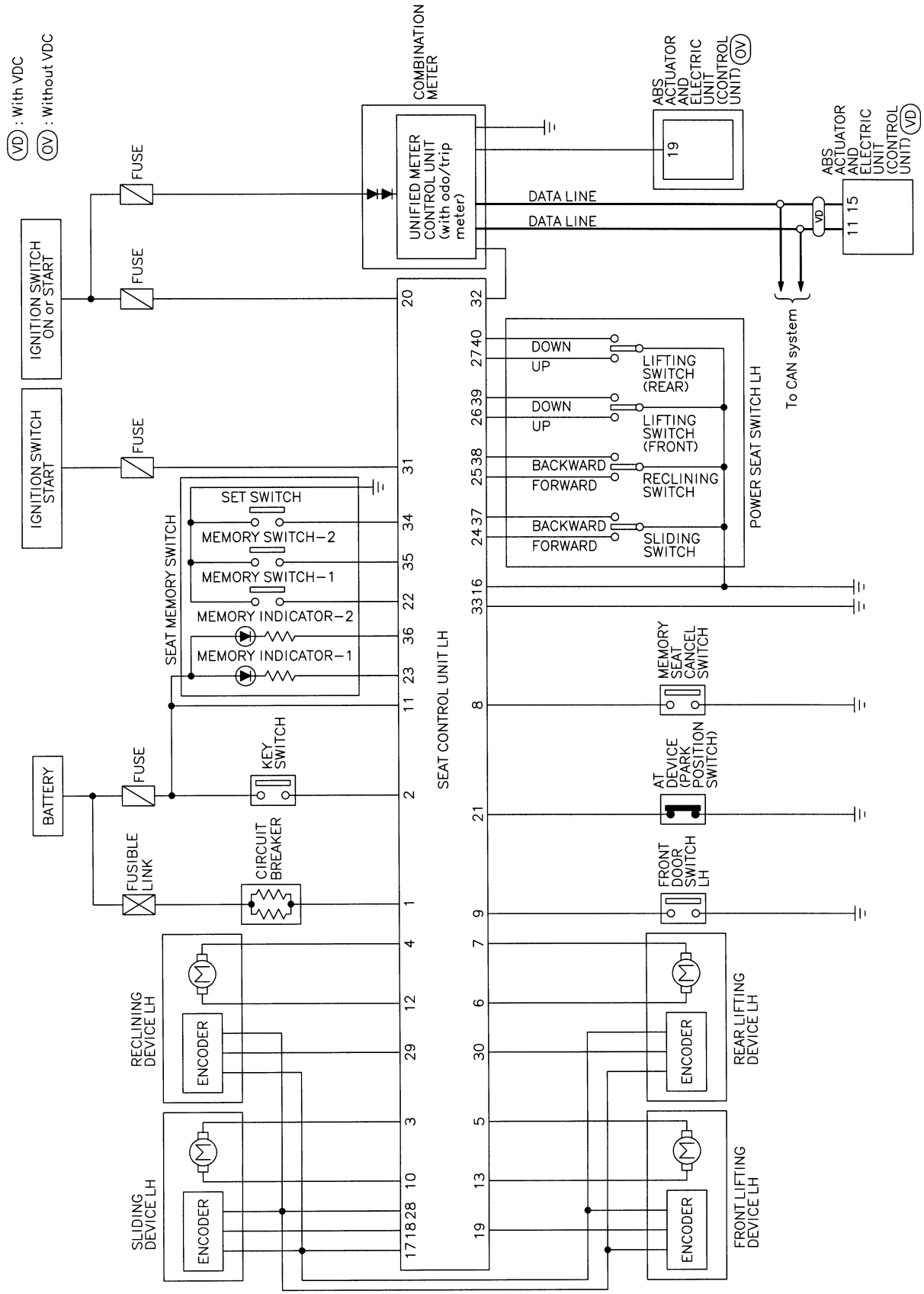

MEL016Q

Wiring Diagram — AUT/DP —

NAEL0367

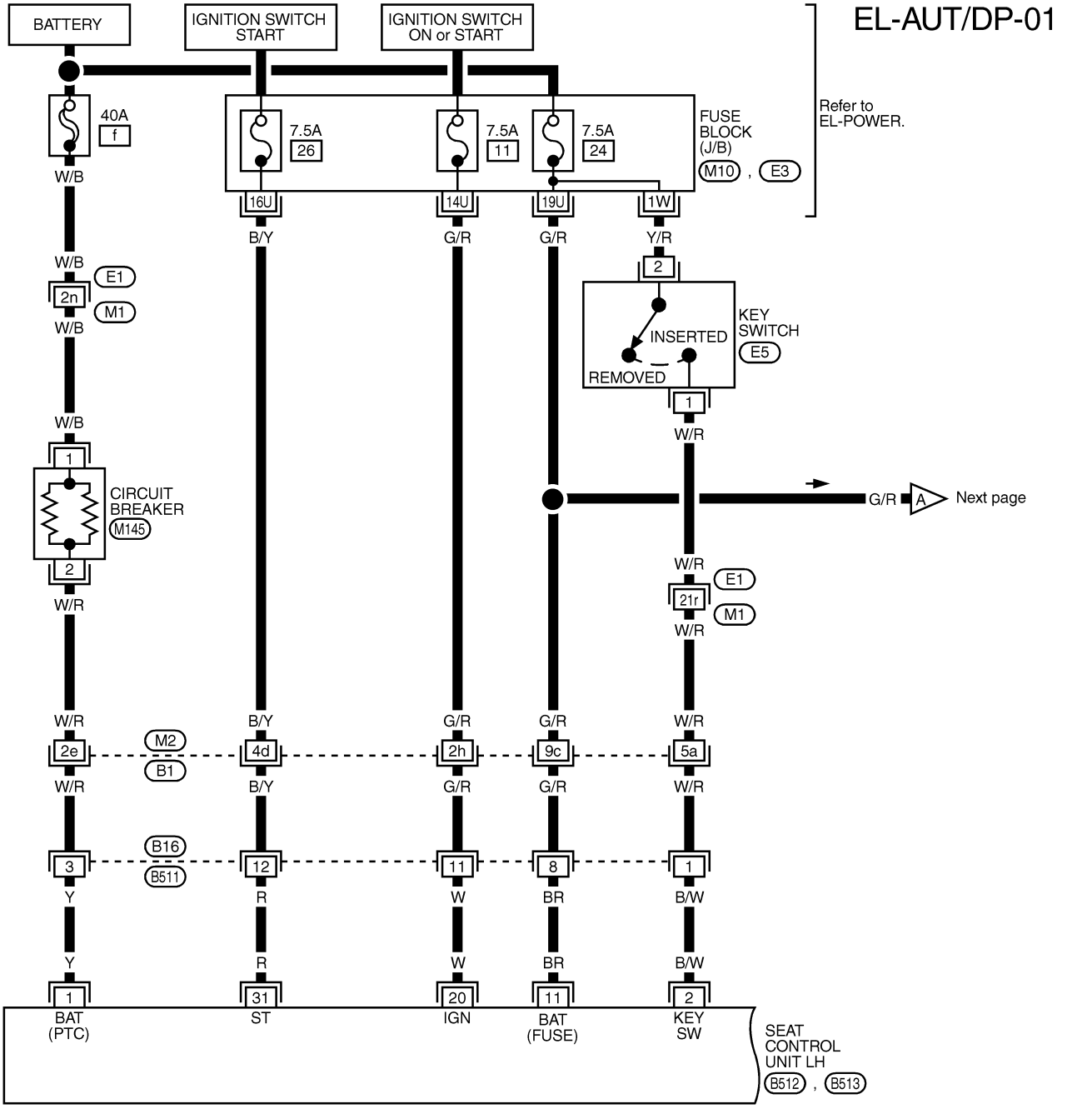

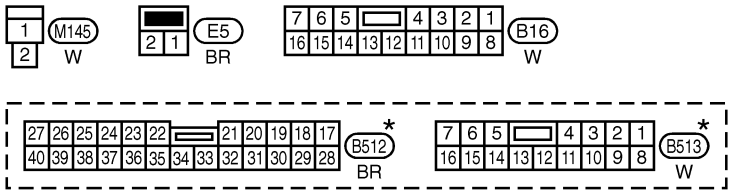

REFER TO THE FOLLOWING.
E1 , B1 -SUPER MULTIPLE JUNCTION (SMJ)
M10 , E3 -FUSE BLOCK-JUNCTION BOX (J/B)

★ : This connector is not shown in "HARNESS LAYOUT", EL section.

MEL017Q

EL-AUT/DP-02

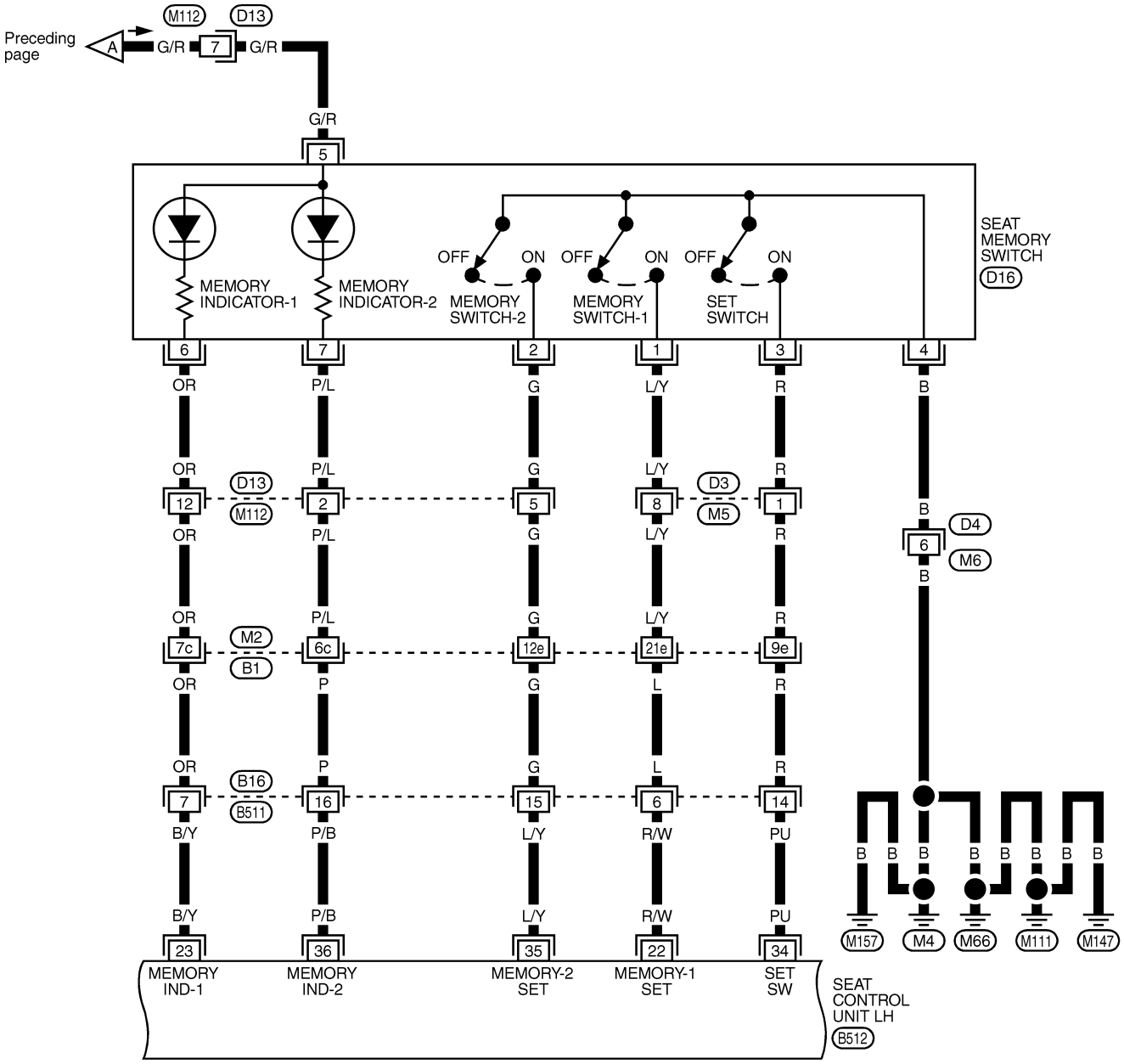

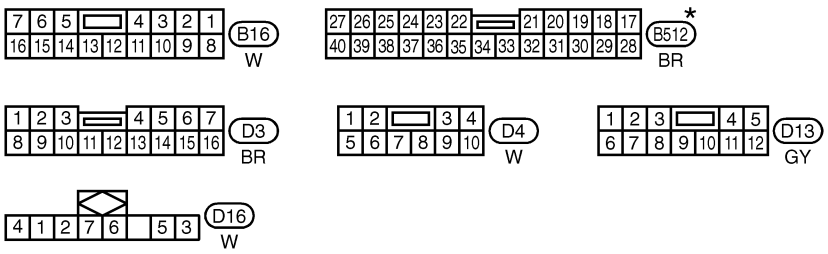

★ : This connector is not shown in "HARNESS LAYOUT", EL section.

REFER TO THE FOLLOWING.
B1 -SUPER MULTIPLE JUNCTION (SMJ)

MEL018Q

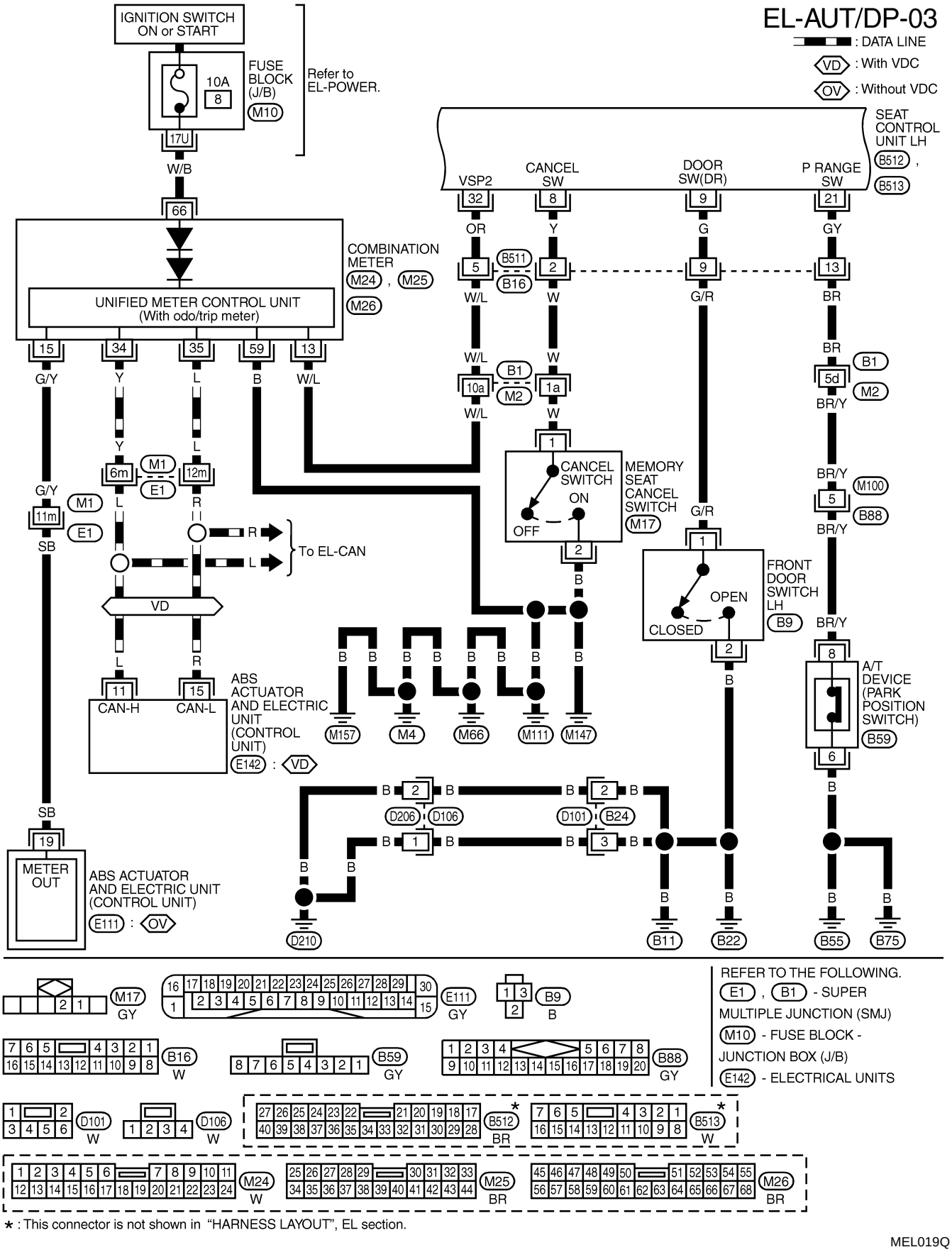

★ : This connector is not shown in "HARNESS LAYOUT", EL section.

MEL019Q

EL-AUT/DP-04

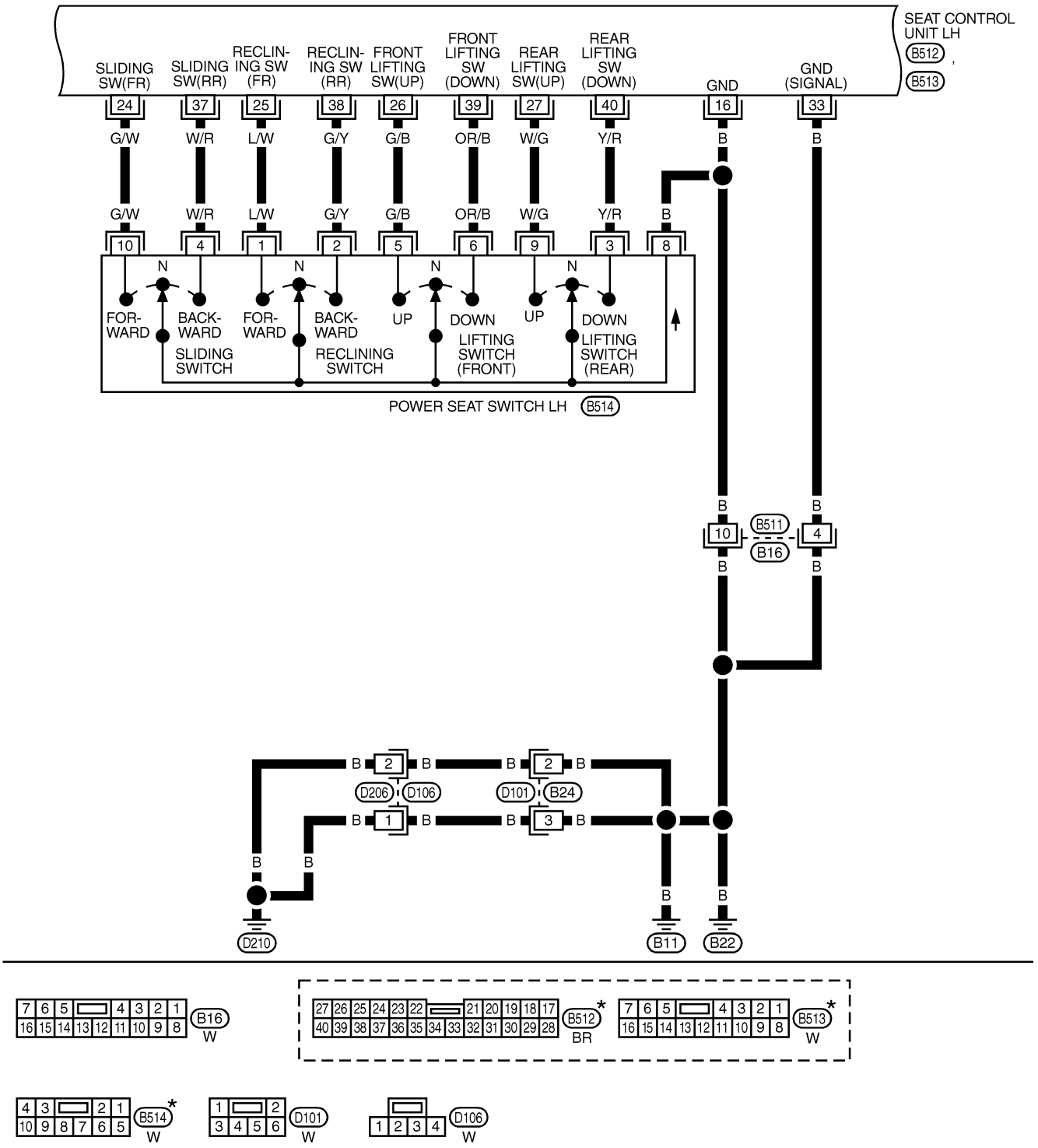

★ : This connector is not shown in "HARNESS LAYOUT", EL section.

MEL186M

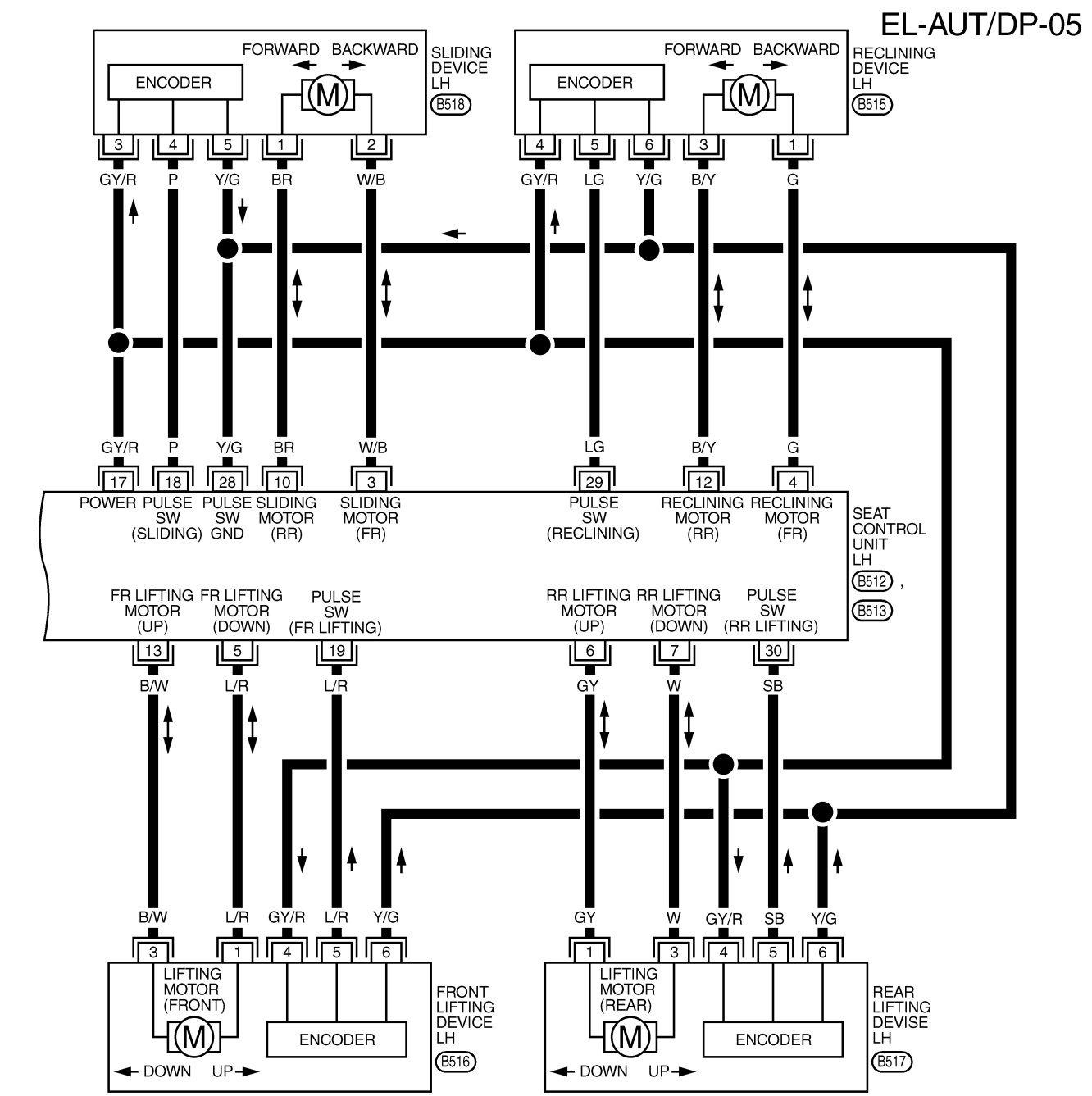
EL-AUT/DP-05
FORWARD BACKWARD
ENCODER
SLIDING DEVICE LH
B518
RECLINING DEVICE LH
B515
GY/R P Y/G BR W/B
GY/R LG Y/G B/Y G
POWER PULSE SW (SLIDING)
PULSE SW GND
SLIDING MOTOR (RR)
SLIDING MOTOR (FR)
PULSE SW (RECLINING)
RECLINING MOTOR (RR)
RECLINING MOTOR (FR)
SEAT CONTROL UNIT LH
B512 , B513
FR LIFTING MOTOR (UP)
FR LIFTING MOTOR (DOWN)
PULSE SW (FR LIFTING)
RR LIFTING MOTOR (UP)
RR LIFTING MOTOR (DOWN)
PULSE SW (RR LIFTING)
B/W L/R L/R GY W SB
B/W L/R GY/R L/R Y/G
GY W GY/R SB Y/G
LIFTING MOTOR (FRONT)
FRONT LIFTING DEVICE LH
B516
LIFTING MOTOR (REAR)
REAR LIFTING DEVISE LH
B517
DOWN UP
B512 BR
B513 W
B515 W , B516 W , B517 W
B518 B
* : This connector is not shown in "HARNESS LAYOUT", EL section.

MEL187M

On Board Diagnosis

NAEL0368

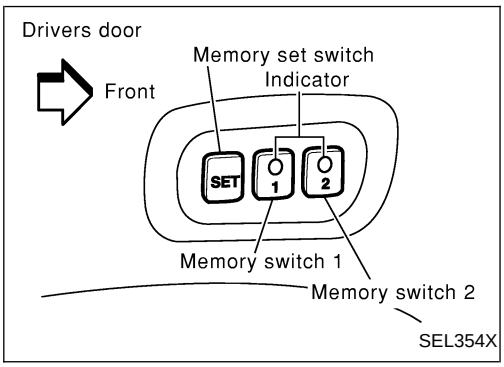

HOW TO PERFORM SELF-DIAGNOSIS

NAEL0368S01

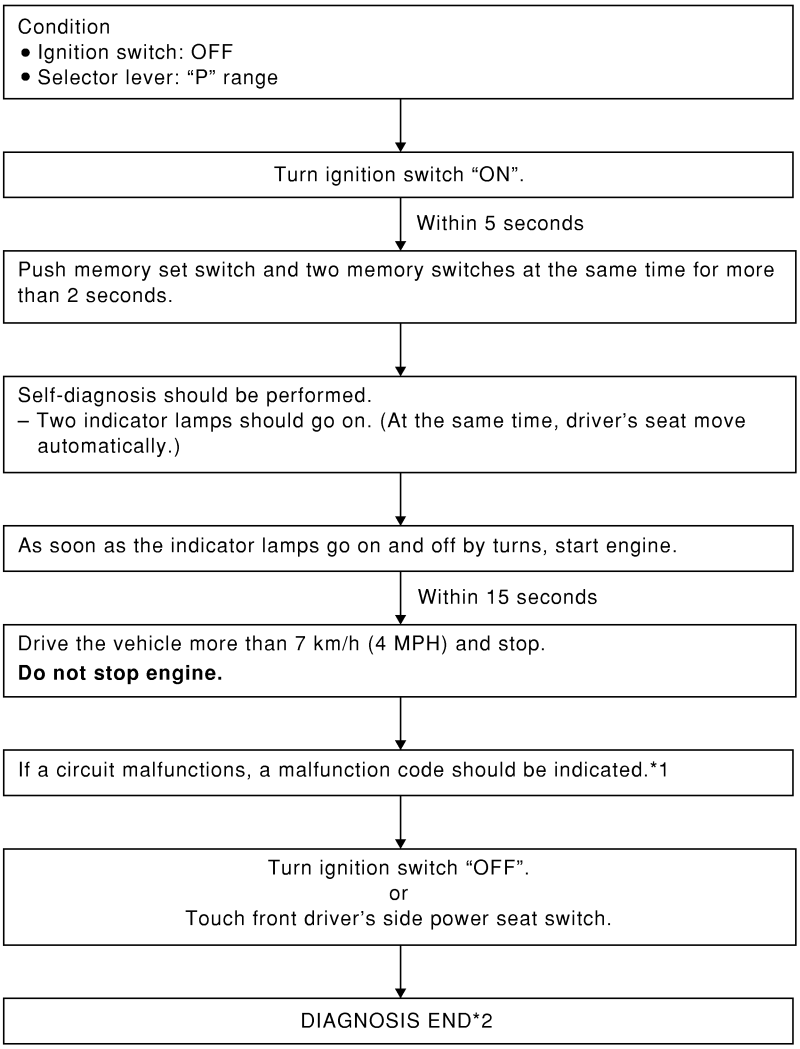

SEL596W

*1: If no malfunction is indicated, self-diagnosis will end after the vehicle speed sensor diagnosis is performed.
*2: Diagnosis ends after self-diagnostic results have been indicated for 10 minutes if left unattended.

MALFUNCTION CODE TABLE

=NAEL0368S02

In this mode, a malfunction code is indicated by the number of flashes from the automatic drive positioner indicator lamps (indicator lamp 1, indicator lamp 2) as shown below.

Code No.	Detected items	Indication of seat memory switches 1 and 2	Explanation
1	Seat sliding	IND1, IND2	While the seat motors are moving for 2.5 seconds, if the number of seat sliding/reclining/lifting encoder pulses changes 2 times or less, the seat device is determined to be malfunctioning.
2	Seat reclining	IND1, IND2	
3	Seat lifting front	IND1, IND2	
4	Seat lifting rear	IND1, IND2	
9	Vehicle speed signal circuit	IND1, IND2 T T 12 sec. (T: 0.5 sec.)	If the vehicle speed signal output of less than 7 km/h (4 MPH) is detected, the ABS actuator and electric unit is determined to be malfunctioning.
–	No malfunction in the above items	SW1 IND SW2 IND 0.5 sec. 0.5 sec. 5 sec.	—

SEL597WA

Code No.	Detected items	Diagnostic procedure	Reference page	Code No.	Detected items	Diagnostic procedure	Reference page
1	Seat sliding	PROCEDURE 2 (Sliding encoder check) PROCEDURE 6 (Sliding motor check)	EL-253 EL-261	4	Seat lifting rear	PROCEDURE 5 [Lifting encoder (rear) check] PROCEDURE 9 [Lifting motor (rear) check]	EL-259 EL-264
2	Seat reclining	PROCEDURE 3 (Reclining encoder check) PROCEDURE 7 (Reclining motor check)	EL-255 EL-262	9	Vehicle speed sensor	PROCEDURE 12 (Vehicle speed sensor check)	EL-267
3	Seat lifting front	PROCEDURE 4 [Lifting encoder (front) check] PROCEDURE 8 [Lifting motor (front) check]	EL-257 EL-263				

Trouble Diagnoses

WORK FLOW

NAEL0369

NAEL0369S01

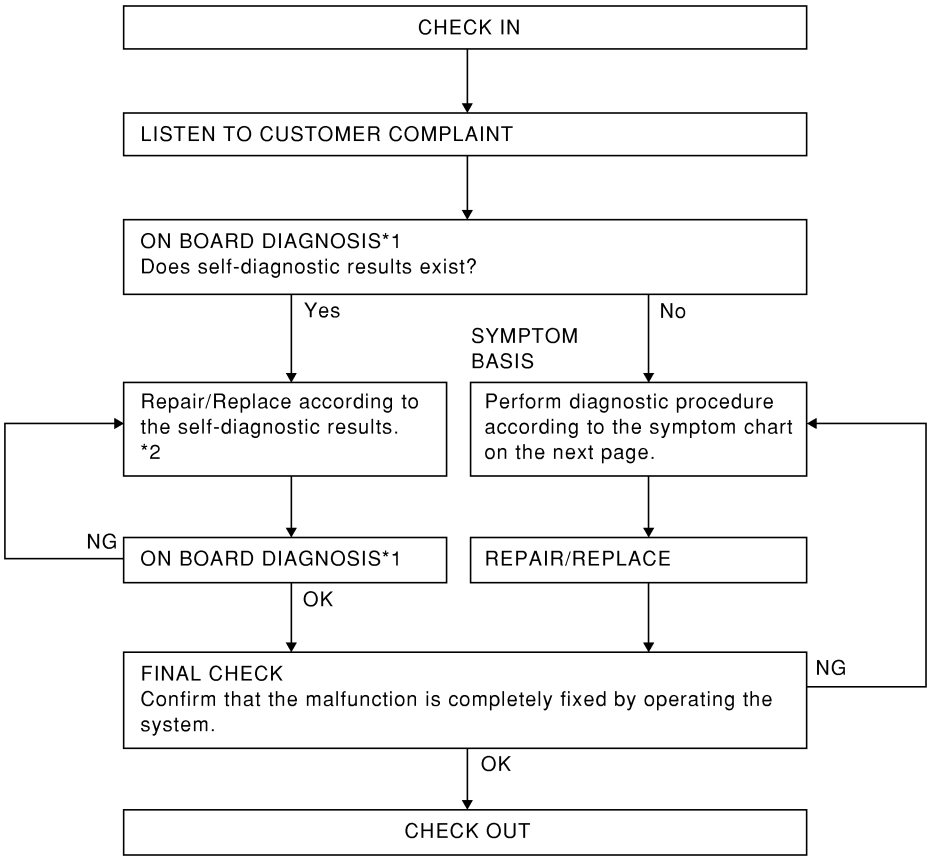

SEL599W

*1 EL-246 *2 EL-247

PRELIMINARY CHECK

NAEL0369S02

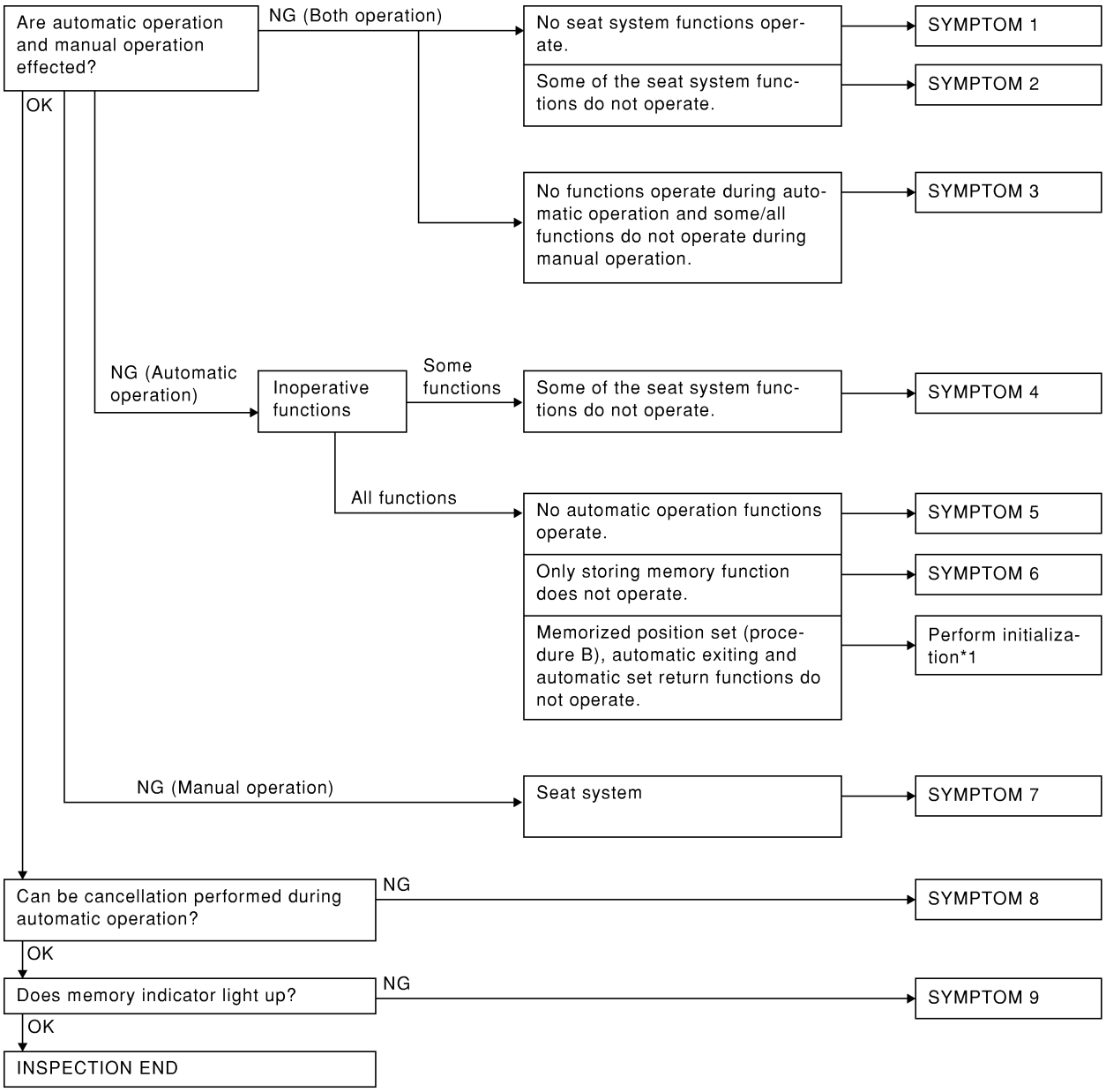

SEL600W

*1: After reconnecting battery cable, perform initialization procedure A or B.
If initialization has not been performed, automatic drive positioner will not operate.

PROCEDURE A

1) Insert key in the ignition key cylinder. (Ignition switch is in "OFF" position.)
2) Open → close → open driver side door. (Do not perform with the door switch operation.)
3) End

PROCEDURE B

1) Drive the vehicle at more than 30 km/h (19 MPH).

2) End

After performing preliminary check, go to symptom chart below.

Before starting trouble diagnoses below, perform preliminary check, EL-249. Symptom numbers in the symptom chart correspond with those of preliminary check.

SYMPTOM CHART

NAEL0369S03

PROCEDURE			Diagnostic procedure						
REFERENCE PAGE (EL-)			252	253	255	257	259	261	262
SYMPTOM			DIAGNOSTIC PROCEDURE 1 (Power supply and ground circuit for Driver's seat control unit)	DIAGNOSTIC PROCEDURE 2 (Sliding encoder check)	DIAGNOSTIC PROCEDURE 3 (Reclining encoder check)	DIAGNOSTIC PROCEDURE 4 [Lifting encoder (front) check]	DIAGNOSTIC PROCEDURE 5 [Lifting encoder (rear) check]	DIAGNOSTIC PROCEDURE 6 (Sliding motor check)	DIAGNOSTIC PROCEDURE 7 (Reclining motor check)
1	No seat system functions operate.		X						
2	Some of the seat system functions do not operate during automatic/manual operation.	Sliding						X	
		Reclining							X
		Lifting (Front)							
		Lifting (Rear)							
3	No functions operate during automatic operation, and some/all functions do not during manual operation.								
4	Some of the seat system functions do not operate during automatic operation.	Sliding		X					
		Reclining			X				
		Lifting (Front)				X			
		Lifting (Rear)					X		
5	No automatic operation functions operate.								
6	Drive position cannot be retained in the memory.								
7	Does not operate during manual operation. (Operates during automatic operation.)	Sliding							
		Reclining							
		Lifting (Front)							
		Lifting (Rear)							
8	Automatic operation cannot be canceled.								
9	Memory indicator does not light up.								

X : Applicable

PROCEDURE			Diagnostic procedure						
REFERENCE PAGE (EL-)			263	264	265	266	267	270	270
SYMPTOM			DIAGNOSTIC PROCEDURE 8 [Lifting motor (front) check]	DIAGNOSTIC PROCEDURE 9 [Lifting motor (rear) check]	DIAGNOSTIC PROCEDURE 10 (Power seat switch check)	DIAGNOSTIC PROCEDURE 11 (Cancel switch check)	DIAGNOSTIC PROCEDURE 12 (Key, park position, door switch and vehicle speed sensor check)	DIAGNOSTIC PROCEDURE 13 (Seat memory switch check)	DIAGNOSTIC PROCEDURE 14 (Memory indicator check)
1	No seat system functions operate.								
2	Some of the seat system functions do not operate during automatic/ manual operation.	Sliding							
		Reclining							
		Lifting (Front)	X						
		Lifting (Rear)		X					
3	No functions operate during automatic operation, and some/all functions do not during manual operation.				X		X (ACC, ON START signal)		
4	Some of the seat system functions do not operate during automatic operation.	Sliding							
		Reclining							
		Lifting (Front)							
		Lifting (Rear)							
5	No automatic operation functions operate.					X	X		
6	Drive position cannot be retained in the memory.						X (IGN ON signal)	X	
7	Does not operate during manual operation. (Operates during automatic operation.)	Sliding			X				
		Reclining			X				
		Lifting (Front)			X				
		Lifting (Rear)			X				
8	Automatic operation cannot be canceled.					X			
9	Memory indicator does not light up.								X

X : Applicable

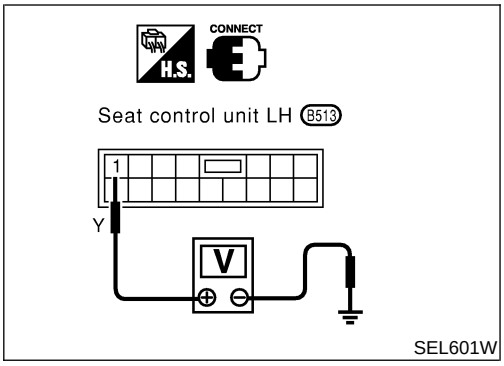

DIAGNOSTIC PROCEDURE 1

=NAEL0369S04

(Power supply and ground circuit for driver's seat control unit)

Power Supply Circuit Check

NAEL0369S0401

Check voltage between seat control unit LH terminal 1 and ground.

Terminals	Ignition switch position			
	OFF	ACC	ON	START
1 - Ground	Battery voltage			

If NG, check the following.

- 40A fusible link (letter **f**, located in the fuse and fusible link box)
- Circuit breaker
- Harness for open or short between circuit breaker and seat control unit LH

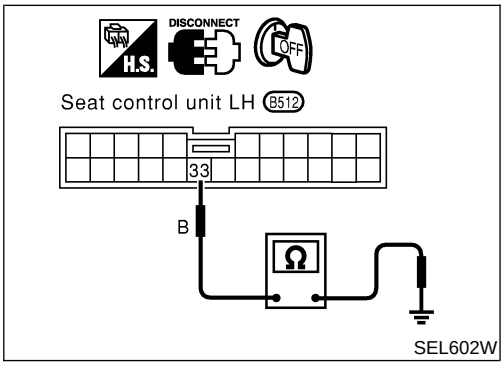

Ground Circuit Check

NAEL0369S0402

Check continuity between seat control unit LH terminal 33 and ground.

Terminals	Continuity
33 - Ground	Yes

DIAGNOSTIC PROCEDURE 2
(Sliding encoder check)

=NAEL0369S05

1	CHECK SLIDING ENCODER OUTPUT SIGNAL

Measure voltage between seat control unit LH terminal 18 and ground with CONSULT-II or oscilloscope when power seat slide is operated.

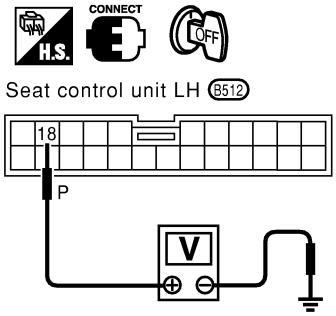

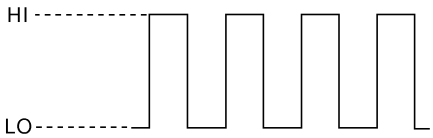

HI: Approx. 5V
LO: Approx. 0V

SEL603W

OK or NG

OK	▶	Sliding encoder is OK.
NG	▶	GO TO 2.

2	CHECK SLIDING ENCODER INPUT SIGNAL

Check voltage between seat control unit LH terminal 17 and ground.

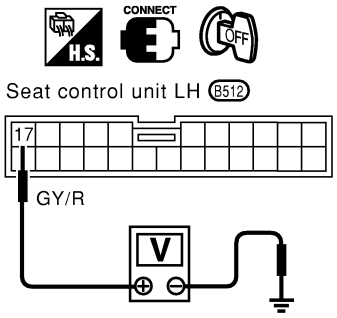

Battery voltage should exist.

SEL604W

OK or NG

OK	▶	GO TO 3.
NG	▶	Replace seat control unit LH.

3	CHECK SLIDING ENCODER OPEN CIRCUIT

1. Disconnect seat control unit LH connector and sliding device LH connector.
2. Check harness continuity between seat control unit LH connector and sliding device LH connector.

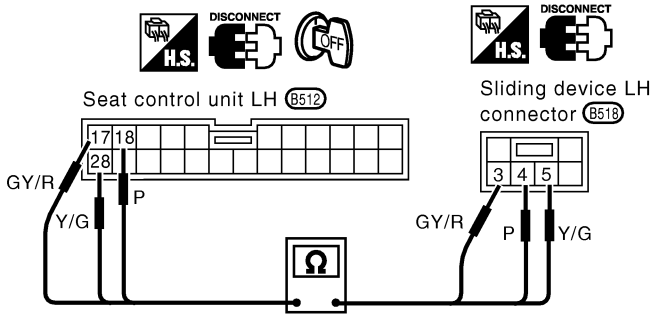

Terminals		Continuity
Seat control unit LH	Sliding device LH (Sliding encoder)	
17	3	Yes
18	4	
28	5	

SEL605WA

OK or NG

OK	▶	GO TO 4.
NG	▶	Repair harness.

4	CHECK SLIDING ENCODER SHORT CIRCUIT

Check harness continuity between seat control unit LH connector and ground.

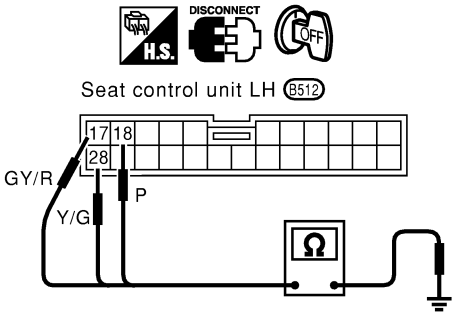

Terminals	Continuity
17 - Ground	No
18 - Ground	
28 - Ground	

SEL606W

OK or NG

OK	▶	Replace sliding encoder.
NG	▶	Repair harness.

DIAGNOSTIC PROCEDURE 3
(Reclining encoder check)

=NAEL0369S06

1	CHECK RECLINING ENCODER OUTPUT SIGNAL	
Measure voltage between seat control unit LH terminal 29 and ground with CONSULT-II or oscilloscope when power seat reclining is operated.		
OK or NG		
OK	▶	Reclining encoder is OK.
NG	▶	GO TO 2.

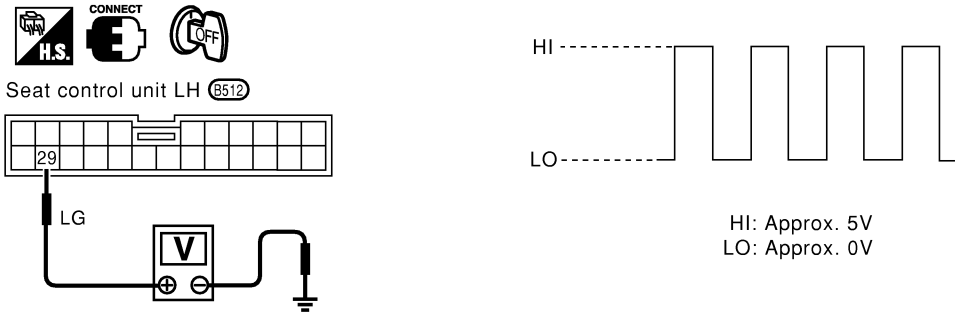

SEL607W

2	CHECK RECLINING ENCODER INPUT SIGNAL	
Check voltage between seat control unit LH terminal 17 and ground.		
OK or NG		
OK	▶	GO TO 3.
NG	▶	Replace seat control unit LH.

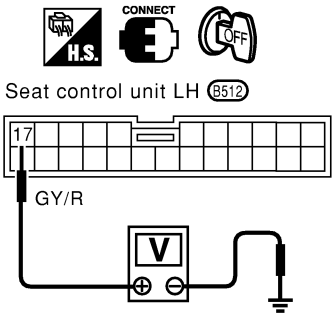

Battery voltage should exist.

SEL608W

3	CHECK RECLINING ENCODER OPEN CIRCUIT

1. Disconnect seat control unit LH connector and reclining device LH connector.
2. Check harness continuity between seat control unit LH connector and reclining LH connector.

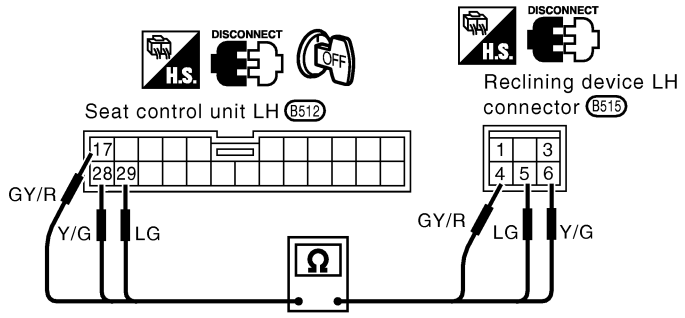

Terminals		Continuity
Seat control unit LH	Reclining device LH (Reclining encoder)	
17	4	Yes
28	6	
29	5	

SEL609WA

OK or NG

OK	▶	GO TO 4.
NG	▶	Repair harness.

4	CHECK RECLINING ENCODER SHORT CIRCUIT

Check harness continuity between seat control unit LH connector and ground.

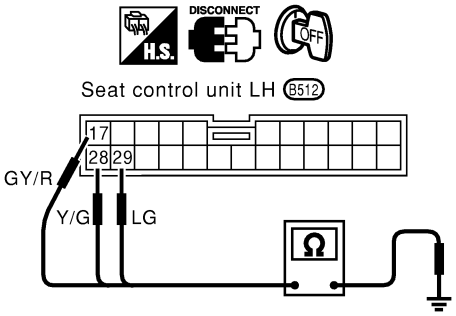

Terminals	Continuity
17 - Ground	No
28 - Ground	
29 - Ground	

SEL610W

OK or NG

OK	▶	Replace reclining encoder.
NG	▶	Repair harness.

DIAGNOSTIC PROCEDURE 4
[Lifting encoder (front) check]

=NAEL0369S07

1	CHECK LIFTING ENCODER (FRONT) OUTPUT SIGNAL	
Measure voltage between seat control unit LH terminal 19 and ground with CONSULT-II or oscilloscope when power seat lifting (front) is operated.		
OK or NG		
OK	▶	Lifting encoder (front) is OK.
NG	▶	GO TO 2.

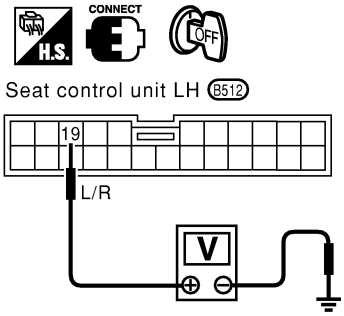

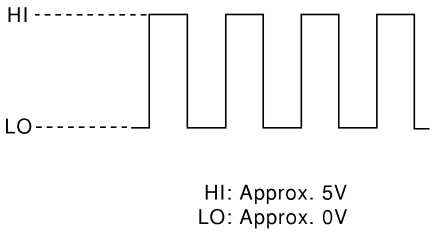

SEL611W

2	CHECK LIFTING ENCODER (FRONT) INPUT SIGNAL	
Check voltage between seat control unit LH terminal 17 and ground.		
OK or NG		
OK	▶	GO TO 3.
NG	▶	Replace seat control unit LH.

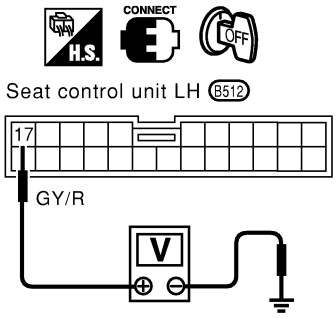

Battery voltage should exist.

SEL612W

3	CHECK LIFTING ENCODER (FRONT) OPEN CIRCUIT

1. Disconnect seat control unit LH connector and front lifting device LH connector.
2. Check harness continuity between seat control unit LH connector and front lifting device LH connector.

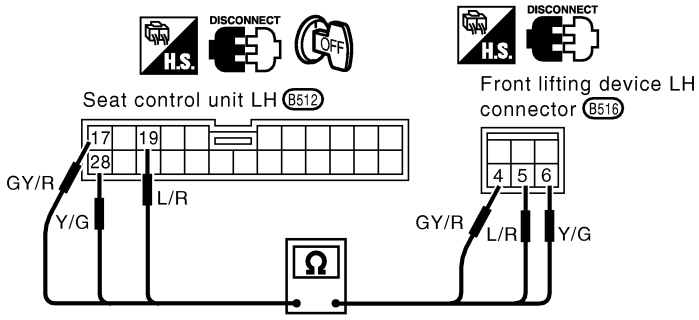

Terminals		Continuity
Seat control unit LH	Front lifting device LH Lifing encoder (front)	
17	4	Yes
19	5	
28	6	

SEL613WA

OK or NG

OK	▶	GO TO 4.
NG	▶	Repair harness.

4	CHECK LIFTING ENCODER (FRONT) SHORT CIRCUIT

Check harness continuity between seat control unit LH connector and ground.

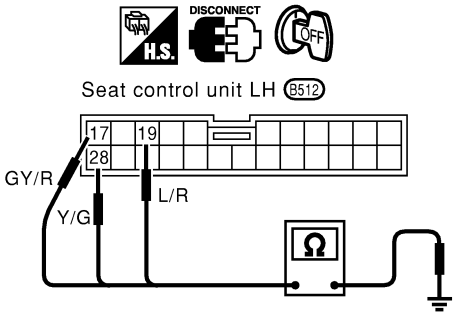

Terminals	Continuity
17 - Ground	No
19 - Ground	
28 - Ground	

SEL614W

OK or NG

OK	▶	Replace lifting encoder (front).
NG	▶	Repair harness.

DIAGNOSTIC PROCEDURE 5
[Lifting encoder (rear) check]

=NAEL0369S08

1	CHECK LIFTING ENCODER (REAR) OUTPUT SIGNAL

Measure voltage between seat control unit LH terminal 30 and ground with CONSULT-II or oscilloscope when power seat lifting (rear) is operated.

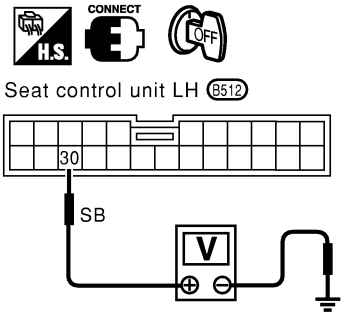

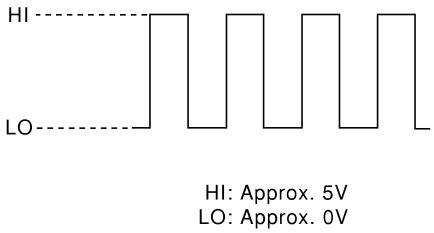

SEL615W

OK or NG

OK	▶	Lifting encoder (rear) is OK.
NG	▶	GO TO 2.

2	CHECK LIFTING ENCODER (REAR) INPUT SIGNAL

Check voltage between seat control unit LH terminal 17 and ground.

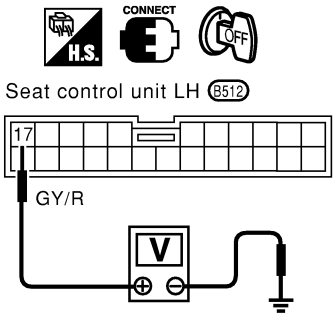

Battery voltage should exist.

SEL616W

OK or NG

OK	▶	GO TO 3.
NG	▶	Replace seat control unit LH.

3	CHECK LIFTING ENCODER (REAR) OPEN CIRCUIT

1. Disconnect seat control unit LH connector and rear lifting device LH connector.
2. Check harness continuity between seat control unit LH connector and rear lifting device LH connector.

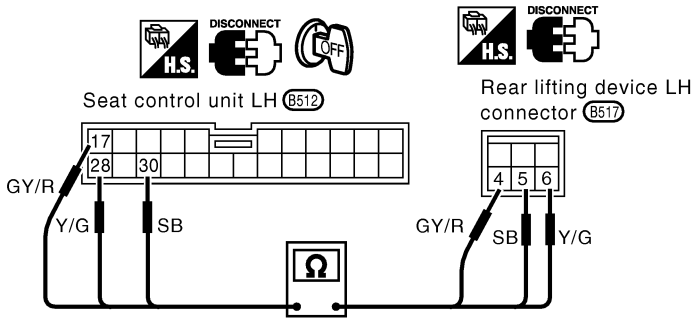

Terminals		Continuity
Seat control unit LH	Rear lifting device LH Lifing encoder (rear)	
17	4	Yes
28	6	
30	5	

SEL617WA

OK or NG

OK	▶	GO TO 4.
NG	▶	Repair harness.

4	CHECK LIFTING ENCODER (REAR) SHORT CIRCUIT

Check harness continuity between seat control unit LH connector and ground.

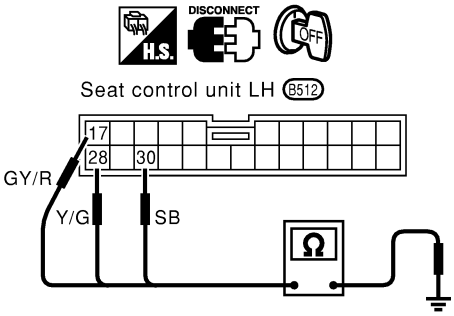

Terminals	Continuity
17 - Ground	No
28 - Ground	
30 - Ground	

SEL618W

OK or NG

OK	▶	Replace lifting encoder (rear).
NG	▶	Repair harness.

DIAGNOSTIC PROCEDURE 6
(Sliding motor check)

=NAEL0369S09

1 CHECK OUTPUT SIGNAL TO SLIDING MOTOR

Check voltage between seat control unit LH terminals 3 or 10 and ground.

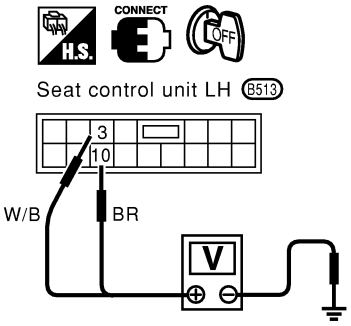

Condition of sliding switch	Terminals +	Terminals −	Voltage [V]
Forward	3	Ground	Approx. 12
Backward	10	Ground	Approx. 12

SEL619W

OK or NG

OK	▶	GO TO 2.
NG	▶	Replace seat control unit LH.

2 CHECK SLIDING MOTOR

1. Disconnect sliding device LH connector.
2. Apply 12V DC direct current to motor and check operation.

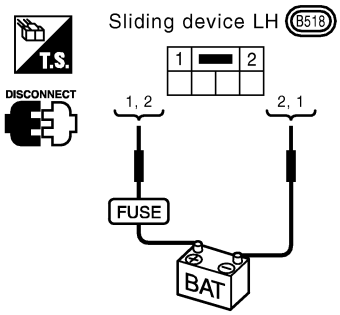

Terminals +	Terminals −	Operation
2	1	Forward
1	2	Backward

SEL620WA

OK or NG

OK	▶	Check harness for operation between seat control unit LH and sliding motor.
NG	▶	Replace sliding motor.

DIAGNOSTIC PROCEDURE 7
(Reclining motor check)

=NAEL0369S10

1 CHECK OUTPUT SIGNAL TO RECLINING MOTOR

Check voltage between seat control unit LH terminals 4 or 12 and ground.

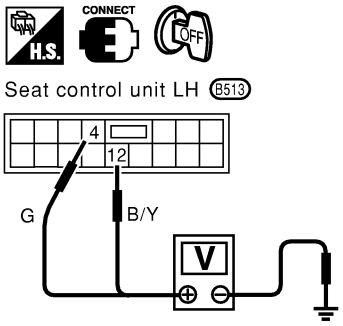

Condition of reclining switch	Terminals +	Terminals −	Voltage [V]
Forward	4	Ground	Approx. 12
Backward	12	Ground	Approx. 12

SEL621W

OK or NG

OK	▶	GO TO 2.
NG	▶	Replace seat control unit LH.

2 CHECK RECLINING MOTOR

1. Disconnect reclining device LH connector.
2. Apply 12V DC direct current to motor and check operation.

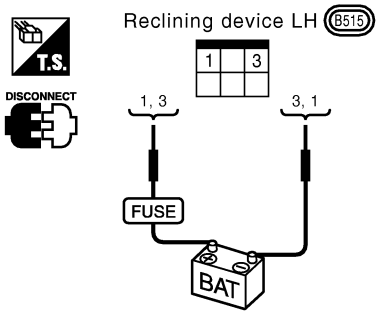

Terminals +	Terminals −	Operation
1	3	Forward
3	1	Backward

SEL622WA

OK or NG

OK	▶	Check harness for operation between seat control unit LH and reclining motor.
NG	▶	Replace reclining motor.

DIAGNOSTIC PROCEDURE 8
[Lifting motor (front) check]

=NAEL0369S11

1	CHECK OUTPUT SIGNAL TO LIFTING MOTOR (FRONT)

Check voltage between seat control unit LH terminals 5 or 13 and ground.

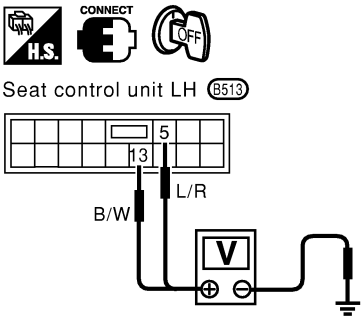

Condition of lifting switch (front)	Terminals		Voltage [V]
	+	–	
Up	13	Ground	Approx. 12
Down	5	Ground	Approx. 12

SEL623W

OK or NG

OK	▶	GO TO 2.
NG	▶	Replace seat control unit LH.

2	CHECK LIFTING MOTOR (FRONT)

1. Disconnect front lifting device LH connector.
2. Apply 12V DC direct current to motor and check operation.

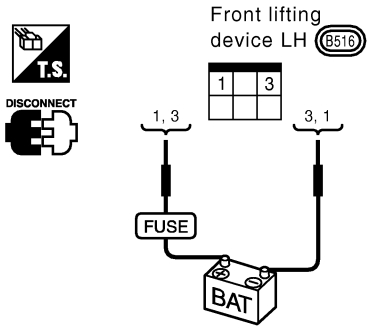

Terminals		Operation
+	–	
3	1	Up
1	3	Down

SEL624WA

OK or NG

OK	▶	Check harness for operation between seat control unit LH and lifting motor (front).
NG	▶	Replace lifting motor (front).

DIAGNOSTIC PROCEDURE 9
[Lifting motor (rear) check]

=NAEL0369S12

1 CHECK OUTPUT SIGNAL TO LIFTING MOTOR (REAR)

Check voltage between seat control unit LH terminals 6 or 7 and ground.

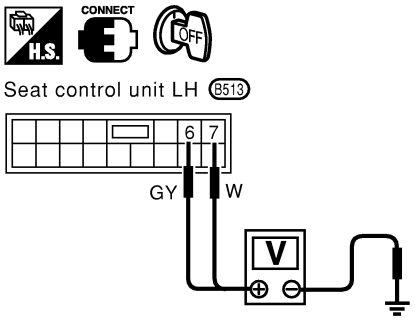

Condition of lifting switch (rear)	Terminals		Voltage [V]
	+	–	
Up	6	Ground	Approx. 12
Down	7	Ground	Approx. 12

SEL625W

OK or NG

OK	▶	GO TO 2.
NG	▶	Replace seat control unit LH.

2 CHECK LIFTING MOTOR (REAR)

1. Disconnect rear lifting device LH connector.
2. Apply 12V DC direct current to motor and check operation.

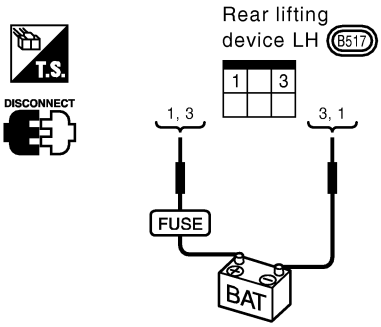

Terminals		Operation
+	–	
1	3	Up
3	1	Down

SEL626WA

OK or NG

OK	▶	Check harness for operation between seat control unit LH and lifting motor (rear).
NG	▶	Replace lifting motor (rear).

DIAGNOSTIC PROCEDURE 10
(Power seat switch check)

=NAEL0369S13

1	CHECK POWER SEAT SWITCH

1. Disconnect power seat switch LH connector.
2. Check continuity between power seat switch terminals.

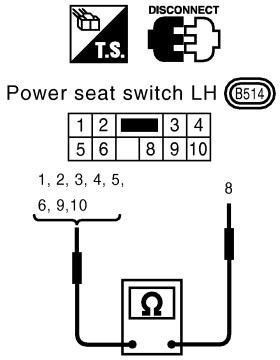

Switch	Condition	Terminals								
		8	1	2	3	4	5	6	9	10
Sliding	Forward	○								○
	Backward	○				○				
Reclining	Forward	○	○							
	Backward	○		○						
Lifting (Front)	Up	○					○			
	Down	○						○		
Lifting (Rear)	Up	○							○	
	Down	○			○					

SEL569X

OK or NG

OK	▶	**Check the following.** ● Ground circuit for power seat switch ● Harness for open or short between seat control unit LH and power seat switch
NG	▶	Replace power seat switch.

DIAGNOSTIC PROCEDURE 11
(Cancel switch check)

=NAEL0369S14

1	CHECK CANCEL SWITCH

1. Disconnect cancel switch connector.
2. Check continuity between cancel switch terminals.

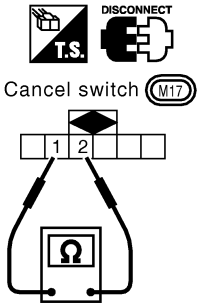

Terminals	Cancel switch condition	Continuity
1-2	ON	Yes
	OFF	No

SEL628WA

OK or NG

OK	▶	**Check the following.** ● Ground circuit for cancel switch ● Harness for open or short between seat control unit LH and cancel switch
NG	▶	Replace cancel switch.

DIAGNOSTIC PROCEDURE 12

=NAEL0369S15

(Key, detention, door switch and vehicle speed signal check)

1	CHECK KEY SWITCH INPUT SIGNAL

Check voltage between seat control unit LH terminal 2 and ground.

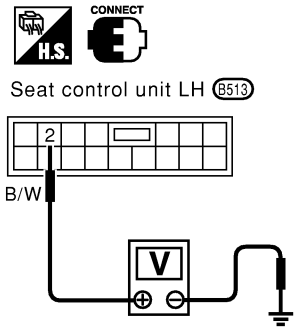

Condition	Voltage [V]
Key is inserted	Approx. 12
Key is removed	0

SEL629W

OK or NG

OK	▶	GO TO 2.
NG	▶	**Check the following.** ● 7.5A fuse [No. 24, located in fuse block (J/B)] ● Key switch ● Harness for open or short between key switch and fuse ● Harness for open or short between seat control unit LH and key switch

2	CHECK IGNITION SWITCH INPUT SIGNAL (ON AND START)

Check voltage between seat control unit LH terminals and ground.

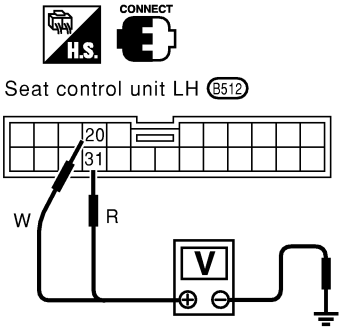

Terminals		Ignition switch position		
+	–	OFF	ON	START
20	Ground	Approx. 0V	Battery voltage	
31	Ground	Approx. 0V		Battrery voltage

SEL630W

OK or NG

OK	▶	GO TO 3.
NG	▶	**Check the following.** ● 7.5A fuse [No. 11, located in fuse block (J/B)] ● 7.5A fuse [No. 26, located in fuse block (J/B)] ● Harness for open or short between seat control unit LH and fuse

3	CHECK PARK POSITION SWITCH INPUT SIGNAL

Check voltage between seat control unit LH terminal 21 and ground.

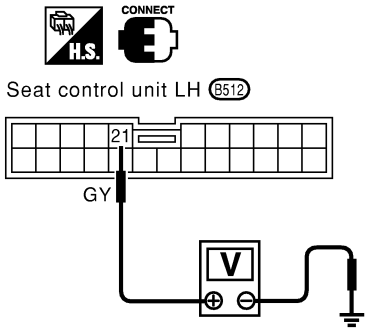

Condition	Voltage [V]
Selector lever is in "P" position	0
Except above	Approx. 12

SEL631W

OK or NG

OK	▶	GO TO 4.
NG	▶	**Check the following.** ● Park position switch ● Park position switch ground circuit ● Harness for open or short between seat control unit LH and park position switch

4	CHECK DRIVER DOOR SWITCH INPUT SIGNAL

Check voltage between seat control unit LH terminal 9 and ground.

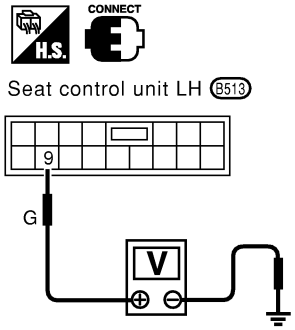

Condition	Voltage [V]
Driver's door is open	0
Driver's door is closed	Approx. 12

SEL632W

OK or NG

OK	▶	GO TO 5.
NG	▶	**Check the following.** ● Driver door switch ● Driver door switch ground circuit ● Harness for open or short between seat control unit LH and driver door switch

5	CHECK VEHICLE SPEED SIGNAL

Does speedometer operate normally?

Yes or No

OK	▶	GO TO 6.
NG	▶	Check speedometer and ABS actuator and electric unit circuit. Refer to EL-138.

6	CHECK VEHICLE SPEED SIGNAL PULL UP VOLTAGE

1. Turn ignition switch "ON".
2. Check voltage between seat control unit LH terminal 32 and ground.

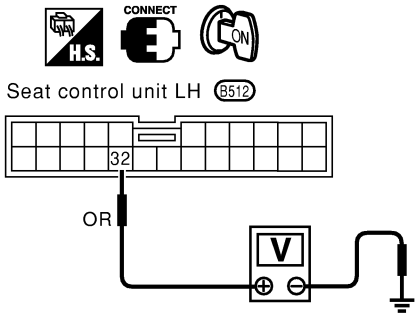

Approx. 5V should exist.

SEL633W

OK or NG

OK	▶	Harness for open or short between seat control unit LH and combination meter.
NG	▶	Repair harness.

DIAGNOSTIC PROCEDURE 13
(Seat memory switch check)

=NAEL0369S16

1 CHECK SEAT MEMORY SWITCH

1. Disconnect seat memory switch connector.
2. Check continuity between seat memory switch terminals.

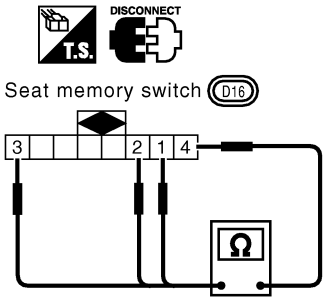

Switch	Condition	Terminals			
		1	2	3	4
Memory-1	ON	○			○
Memory-2	ON		○		○
Set	ON			○	○

SEL634WA

OK or NG

OK	▶	**Check the following.** ● Ground circuit for seat memory switch ● Harness for open or short between seat control unit LH and seat memory switch
NG	▶	Replace seat memory switch.

DIAGNOSTIC PROCEDURE 14
(Memory indicator check)

NAEL0369S17

1 CHECK INDICATOR LAMP

Check indicator lamp illumination.

OK or NG

OK	▶	GO TO 2.
NG	▶	Replace seat memory switch (indicator lamp).

2 CHECK POWER SUPPLY CIRCUIT FOR INDICATOR LAMP

1. Disconnect seat memory switch connector.
2. Check voltage between seat memory switch terminal and ground.

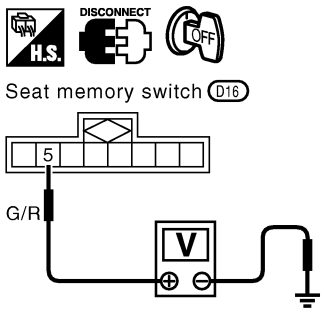

Battery voltage should exist.

SEL635WA

OK or NG

OK	▶	Check harness for open or short between seat control unit LH and seat memory switch
NG	▶	**Check the following.** ● 7.5A fuse [No. 24 located in the fuse block (J/B)] ● Harness for open or short between fuse and indicator lamp

System Description

NAEL0461

Refer to EC-73, “Automatic Speed Control Device (ASCD) System” in “ENGINE AND EMISSION BASIC DESCRIPTION CONTROL SYSTEM”.

System Description

NAEL0378

Power is supplied at all times
- from 40A fusible link (letter **f**, located in the fuse and fusible link box)
- to circuit breaker terminal 1
- through circuit breaker terminal 2
- to power window relay terminal 3,
- to power window main switch terminal 19, and
- to front power window switch RH terminal 10.

With ignition switch in ON or START position, power is supplied
- through 7.5A fuse [No. 11, located in the fuse block (J/B)]
- to smart entrance control unit terminal 27
- to smart entrance control unit terminal 46 and
- to power window relay terminal 2.

Ground is supplied to power window relay terminal 1
- through body grounds M4, M66, M111, M147 and M157.

The power window relay is energized and power is supplied
- through power window relay terminal 5
- to power window main switch terminal 10,
- to front power window switch RH terminal 14 and
- to rear power window switch LH and RH terminals 4.

MANUAL OPERATION

NAEL0378S01

Front Door LH

NAEL0378S0101

Ground is supplied
- to power window main switch terminal 17
- through body grounds M4, M66, M111, M147 and M157.

WINDOW UP
When the front LH switch in the power window main switch is pressed in the up position, power is supplied
- to front power window motor LH terminal 1
- through power window main switch terminal 8.

Ground is supplied
- to front power window motor LH terminal 3
- through power window main switch terminal 11.

Then, the motor raises the window until the switch is released.
WINDOW DOWN
When the LH switch in the power window main switch is pressed in the down position, power is supplied
- to front power window motor LH terminal 3
- through power window main switch terminal 11.

Ground is supplied
- to front power window motor LH terminal 1
- through power window main switch terminal 8.

Then, the motor lowers the window until the switch is released.

Front Door RH

NAEL0378S0102

Ground is supplied
- to power window main switch terminal 17
- through body grounds M4, M66, M111, M147 and M157.

NOTE:
Numbers in parentheses are terminal numbers, when power window switch is pressed in the UP and DOWN positions respectively.

POWER WINDOW MAIN SWITCH OPERATION
When front RH switch in the power window main switch is pressed UP or DOWN, power window main switch sends window up or down signal to front power window switch RH with power window serial link communication line. Refer to "POWER WINDOW SERIAL LINK" (EL-274). Signals are supplied

- through power window main switch terminal 14
- to front power window switch RH terminal 16.

The subsequent operation is the same as the front power window switch RH operation.
FRONT POWER WINDOW SWITCH RH OPERATION
Power is supplied

- through front power window switch RH (8, 9)
- to front power window motor RH (1, 3).

Ground is supplied

- to front power window motor RH (3, 1)
- through front power window switch RH (9, 8)
- to front power window RH terminal 11
- through body grounds M4, M66, M111, M147 and M157.

Then, the motor raises or lowers the window until the switch is released.

Rear Door LH

NAEL0378S0103

Ground is supplied

- to power window main switch terminal 17
- through body grounds the M4, M66, M111, M147 and M157.

NOTE:
Numbers in parentheses are terminal numbers, when the power window switch is pressed in the UP and DOWN positions.

POWER WINDOW MAIN SWITCH OPERATION
Power is supplied

- through power window main switch terminal (1, 3)
- to rear power window switch LH terminal (5, 2)

The subsequent operation is the same as the rear power window switch LH operation.
REAR POWER WINDOW SWITCH LH
Power is supplied

- through rear power window switch LH (1, 3)
- to rear power window motor LH (1, 2)

Ground is supplied

- to rear power window motor LH (2, 1)
- through rear power window switch LH (3, 1)
- to rear power window switch LH terminal (2, 5)
- through power window main switch terminal (3, 1)

Then, the motor raises or lowers the window until the switch is released.

Rear Door RH

NAEL0378S0104

Rear door RH windows will rise and lower in the same manner as the rear door LH window.

AUTO OPERATION

NAEL0378S02

The power window AUTO feature enables the driver or front passenger to open or close the driver's and front passenger's window without holding the window switch in the up or down position.
The AUTO feature only operates on the driver's and front passenger's window upward and downward movement.

POWER WINDOW LOCK

NAEL0378S03

The power window lock is designed to lock operation of all windows except for driver's door window.
When the lock switch is pressed to lock position, the ground of the front and rear power window switches, in the power window main switch, is disconnected. This prevents the power window motors from operating.

RETAINED POWER OPERATION

NAEL0378S04

When the ignition switch is turned to OFF position from ON or START position, power is supplied for 45 seconds

- to power window relay terminal 2
- from smart entrance control unit terminal 46.

Ground is always supplied

- to power window relay terminal 1
- through body grounds M4, M66, M111, M147 and M157.

When power and ground are supplied, the power window relay continues to be energized, and the power window can be operated.
The retained power operation is canceled when the driver or passenger side door is opened.
RAP signal's period can be changed by CONSULT-II. (EL-282)

INTERRUPTION DETECTION FUNCTION

NAEL0378S05

Power window main switch and front power window switch RH monitor the power window motor operation and the power window position (full closed or other) for driver's and passenger's power window by the signals from encoder and limit switch in front power window motor LH or RH.
When power window main switch or front power window switch RH detects interruption during the following close operation in the driver's or front passenger's side door,

- automatic close operation when ignition switch is in the "ON" position
- automatic close operation during retained power operation

Power window main switch or front power window switch RH controls driver's or front passenger's power window motor for open and the power window will be lowered about 150 mm (5.91 in).

POWER WINDOW OPENED/CLOSED OPERATION WITH KEY CYLINDER

NAEL0378S06

When ignition key switch is OFF, front power window can be opened or closed by turning the front door key cylinder LH to UNLOCK/LOCK position.

- Power window can be opened as the door key cylinder is kept fully turning to the UNLOCK position.
- Power window can be closed as the door key cylinder is kept fully turning to the LOCK position.

The power window opening stops when the following operations are carried out:

- While performing open/close the window, power window is stopped at the position as the door key cylinder is placed on Neutral.
- When the ignition switch is turned ON while the power window opening is operated.

POWER WINDOW SERIAL LINK

NAEL0378S07

Power window main switch, front power window switch RH and smart entrance control unit transmit and receive the signal by power window serial link.
The under-mentioned signal is transmitted from smart entrance control unit to power window main switch or front power window switch RH.

- Door lock or unlock signal (remote keyless entry system)
- Power window down signal (remote keyless entry system)

The under-mentioned signal is transmitted from power window main switch to front power window switch RH.

- Door lock or unlock signal (remote keyless entry system)
- Power window open/closed operation signal by key cylinder
- Power window lock signal

Schematic

NAEL0379

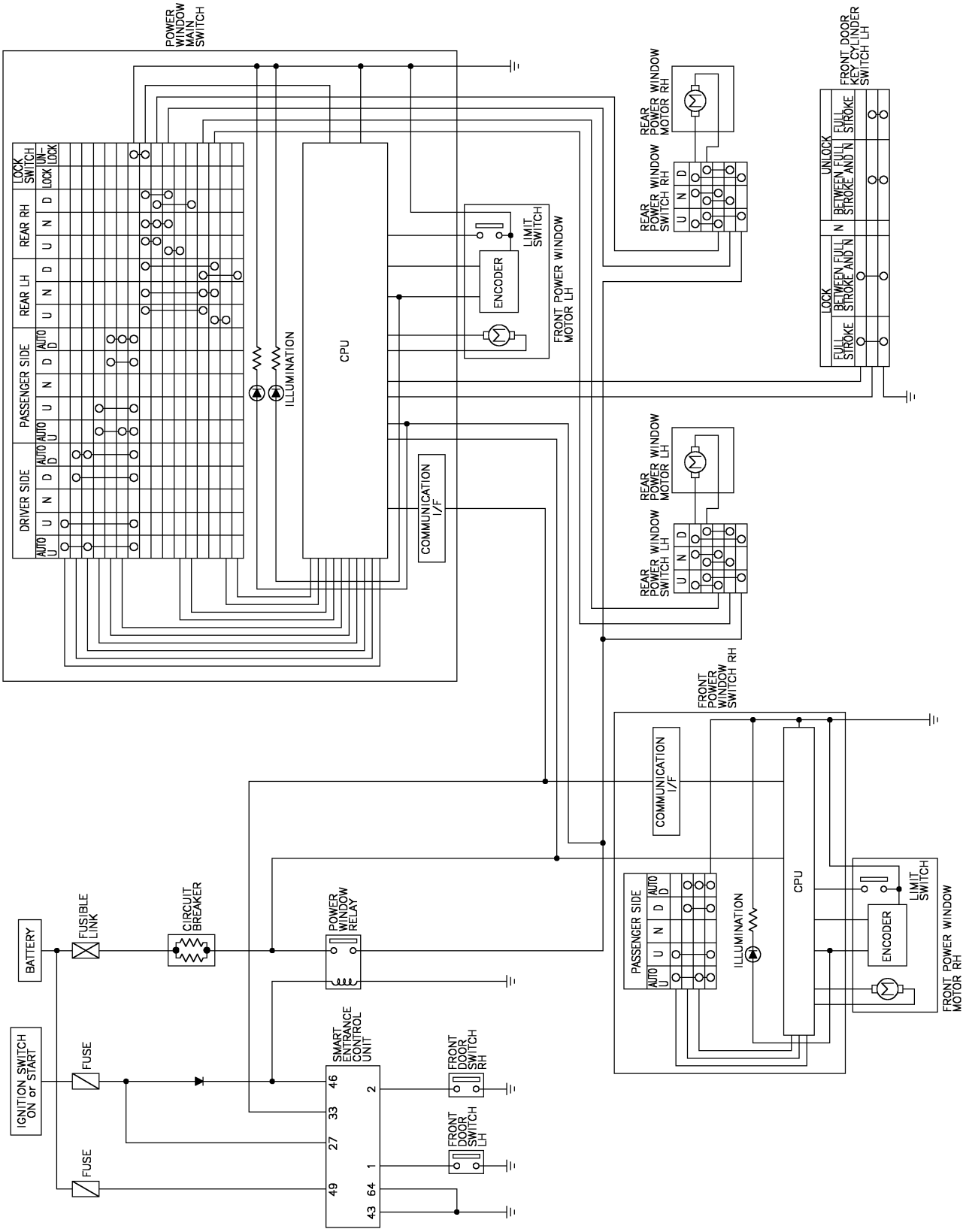

MEL952R

Wiring Diagram — WINDOW —

NAEL0380

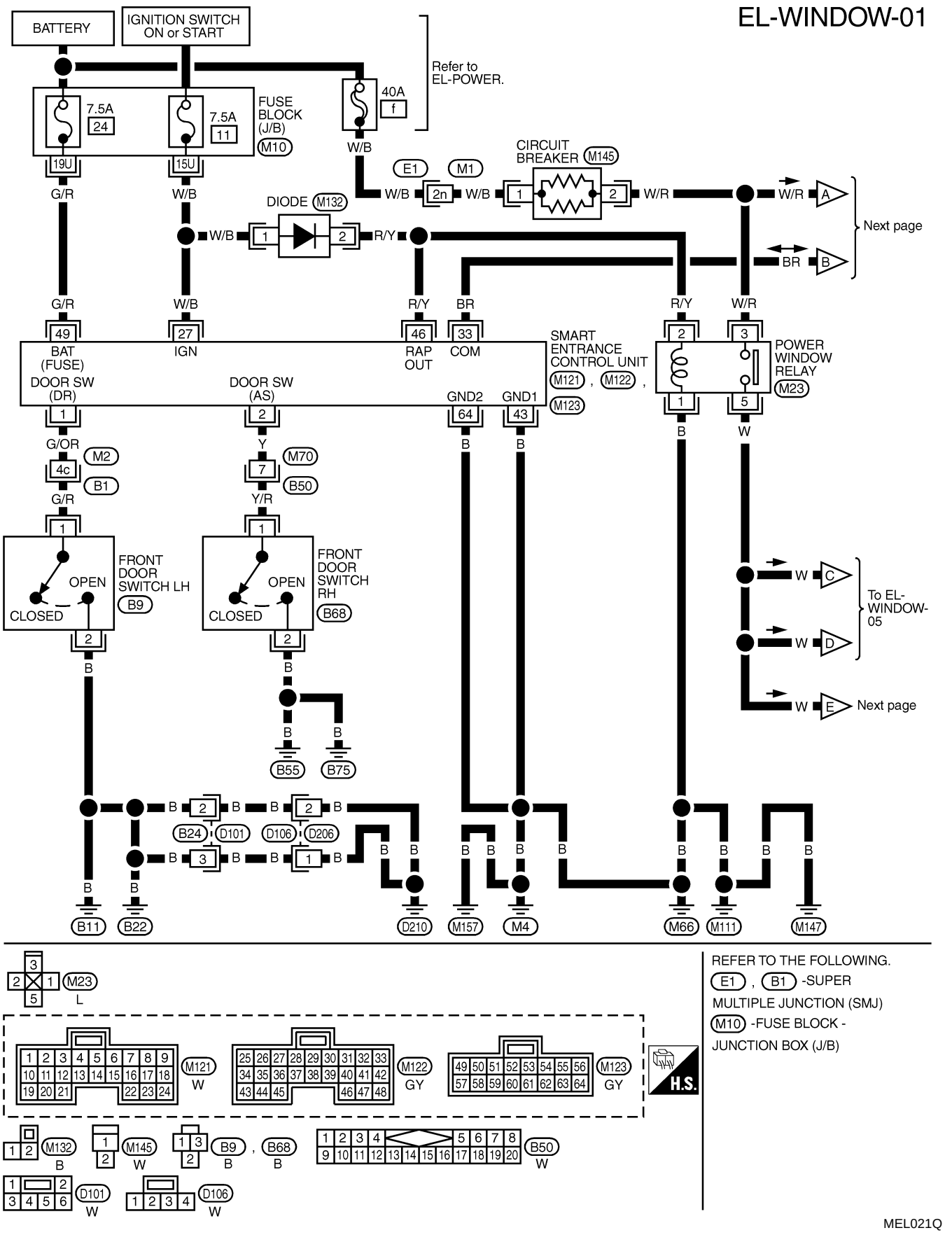

EL-WINDOW-02

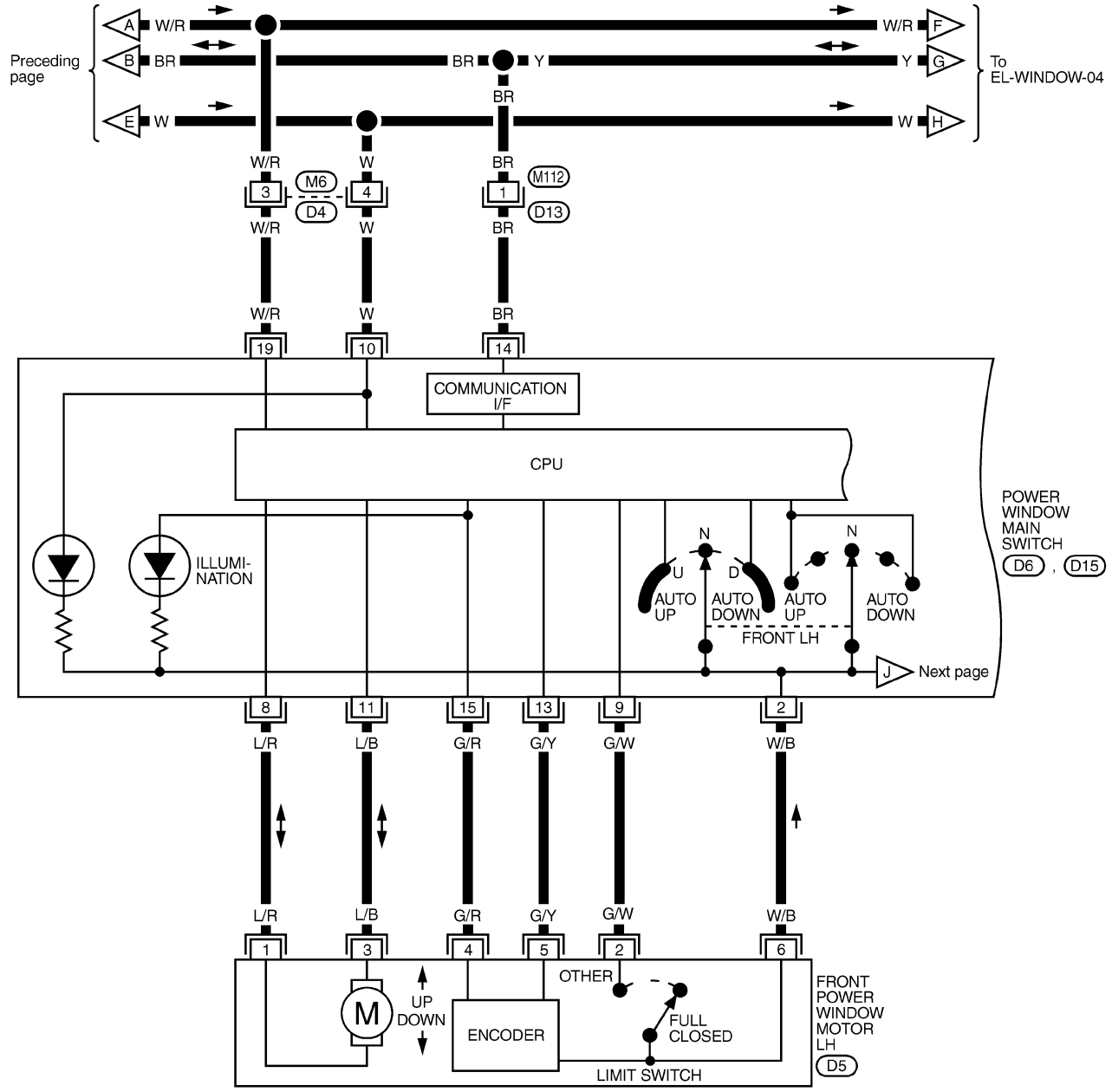

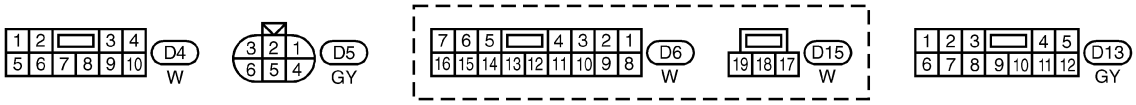

MEL953R

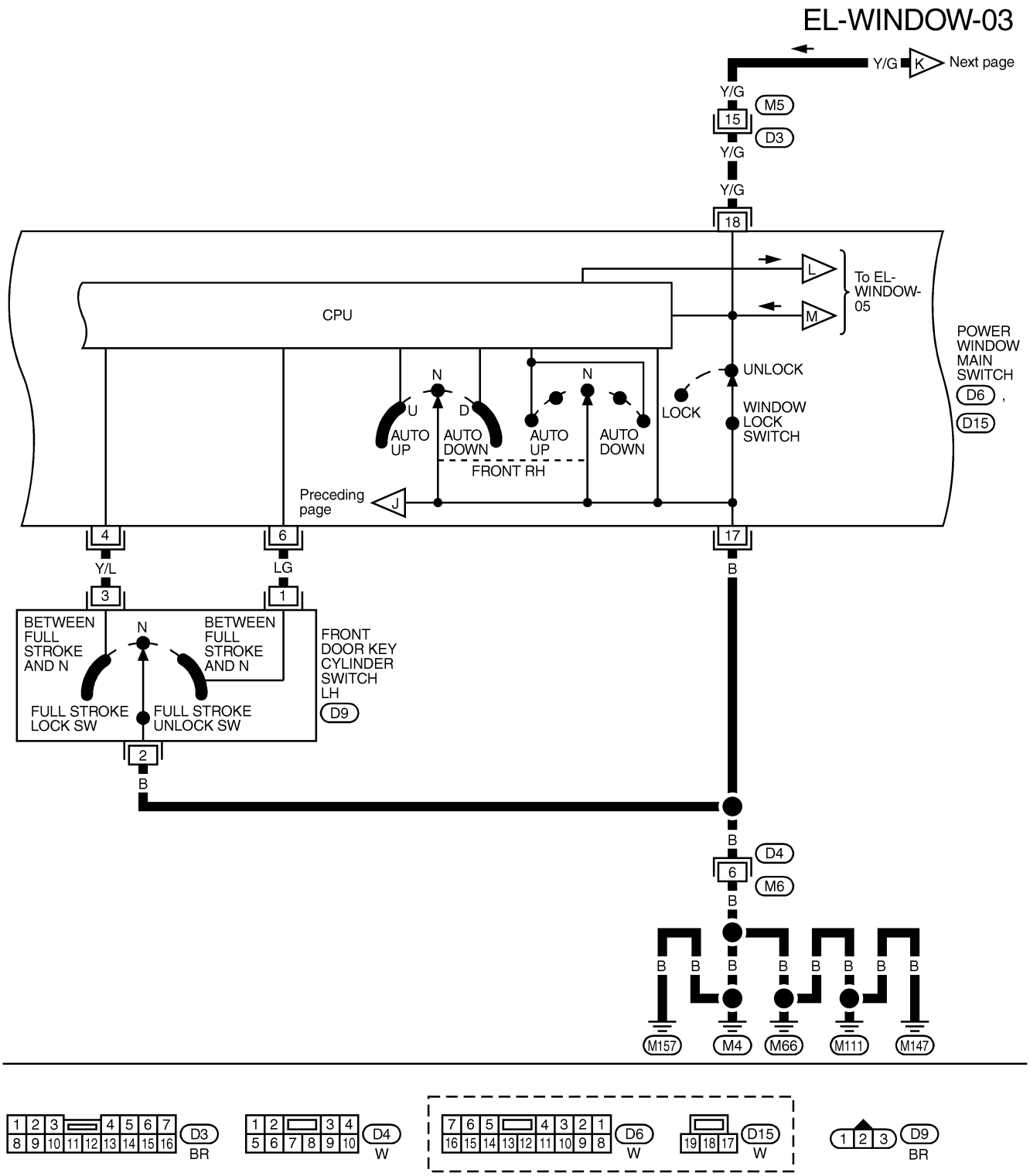
EL-WINDOW-03
Y/G
K
Next page
M5
15
D3
18
CPU
L
M
To EL-WINDOW-05
POWER WINDOW MAIN SWITCH
D6
D15
N
U
D
AUTO UP
AUTO DOWN
AUTO UP
AUTO DOWN
FRONT RH
LOCK
UNLOCK
WINDOW LOCK SWITCH
Preceding page
J
4
6
17
Y/L
LG
B
3
1
BETWEEN FULL STROKE AND N
BETWEEN FULL STROKE AND N
FULL STROKE LOCK SW
FULL STROKE UNLOCK SW
FRONT DOOR KEY CYLINDER SWITCH LH
D9
2
D4
M6
M157
M4
M66
M111
M147
D3
BR
D4
W
D6
W
D15
W
D9
BR

MEL023Q

EL-WINDOW-04

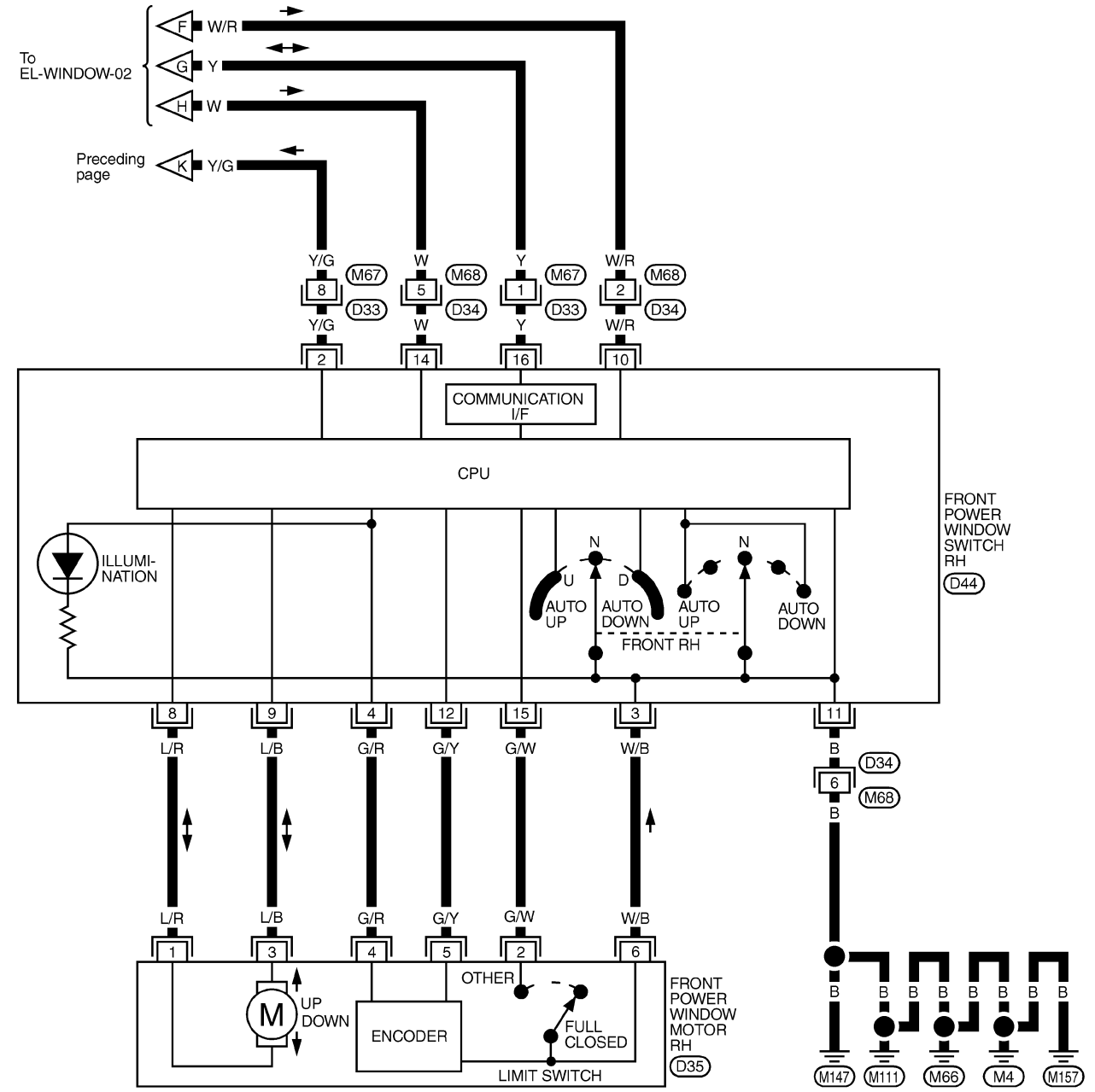

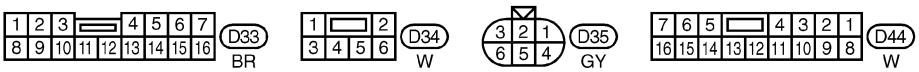

MEL954R

EL-WINDOW-05

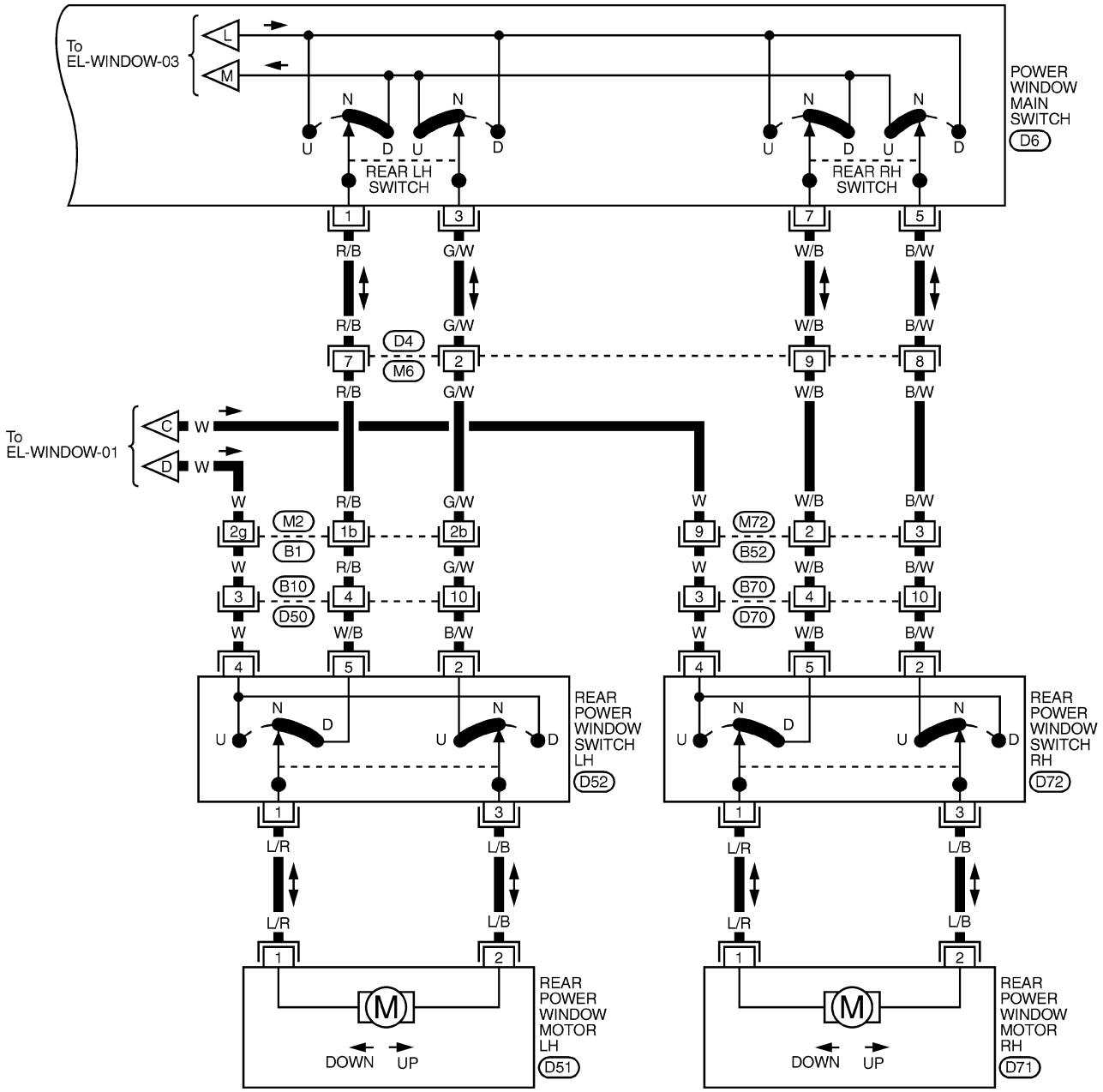

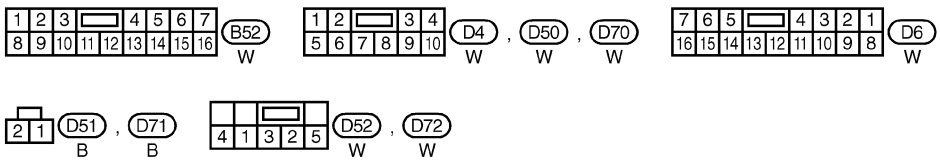

REFER TO THE FOLLOWING.
B1 -SUPER MULTIPLE JUNCTION (SMJ)

MEL955R

CONSULT-II Inspection Procedure

NAEL0381

"RETAINED PWR"

NAEL0381S01

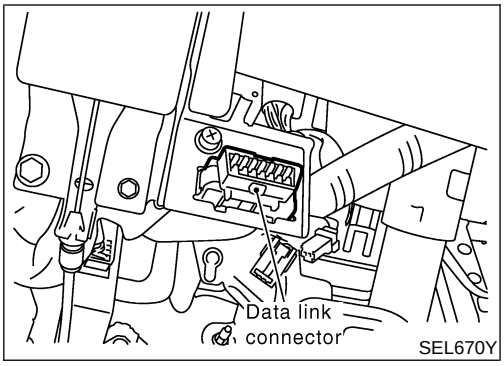

SEL670Y

1. Turn ignition switch "OFF".
2. Connect "CONSULT-II" and "CONSULT-II CONVERTER" to the data link connector.

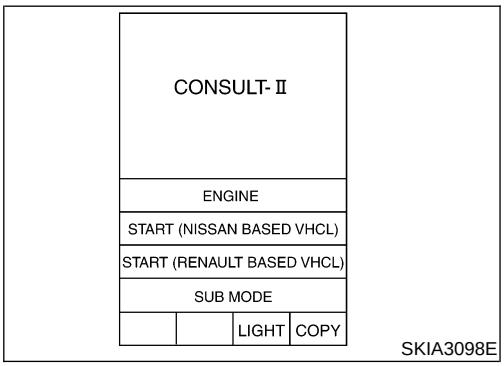

SKIA3098E

3. Turn ignition switch "ON".
4. Touch "START (NISSAN BASED VHCL)".

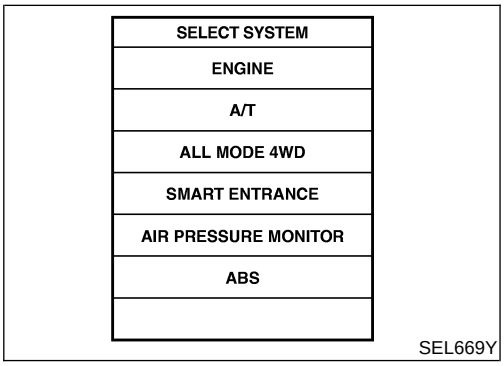

SEL669Y

5. Touch "SMART ENTRANCE".
   If "SMART ENTRANCE" is not indicated, go to GI-41, "CONSULT-II Data Link Connector (DLC) Circuit".

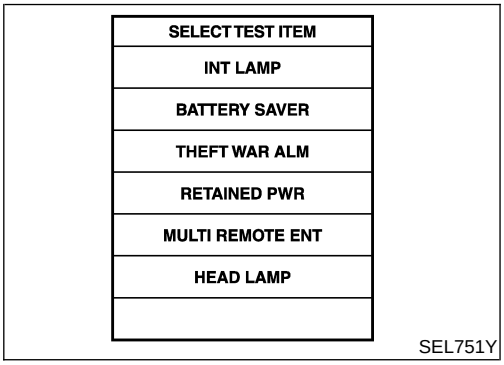

SEL751Y

6. Touch "RETAINED PWR".

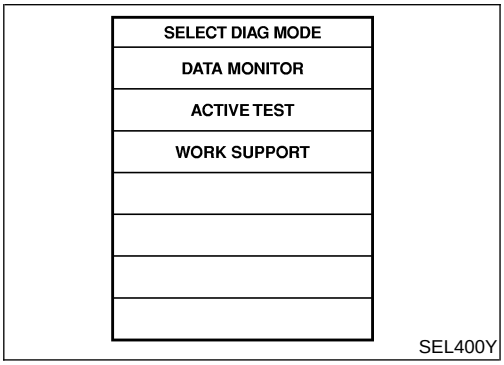

SEL400Y

7. Select diagnosis mode.
   "DATA MONITOR", "ACTIVE TEST" and "WORK SUPPORT" are available.

CONSULT-II Application Items

NAEL0382

"RETAINED PWR"

NAEL0382S01

Data Monitor

NAEL0382S0101

Monitored Item	Description
IGN ON SW	Indicates [ON/OFF] condition of ignition switch.
DOOR SW-DR	Indicates [ON/OFF] condition of front door switch LH.
DOOR SW-AS	Indicates [ON/OFF] condition of front door switch RH.

Active Test

NAEL0382S0102

Test Item	Description
RETAINED PWR	This test is able to supply RAP signal (power) from smart entrance control unit to power window system, power sunroof system and headlamp battery saver control unit. Those systems can be operated when turning on "RETAINED PWR" on CONSULT-II screen even if the ignition switch is tuned OFF. **NOTE:** **During this test, CONSULT-II can be operated with ignition switch in "OFF" position. "RETAINED PWR" should be turned "ON" or "OFF" on CONSULT-II screen when ignition switch is ON. Then turn ignition switch OFF to check retained power operation. CONSULT-II might be stuck if "RETAINED PWR" is turned "ON" or "OFF" on CONSULT-II screen when ignition switch is OFF.**

Work Support

NAEL0382S0103

Work Item	Description
RETAINED PWR SET	Rap signal's power supply period can be changed by mode setting. Selects rap signal's power supply period between three steps. ● MODE 1 (45 sec.)/MODE 2 (OFF)/MODE 3 (2 min.)

Trouble Diagnoses

NAEL0383

Symptom	Possible cause	Repair order
None of the power windows can be operated using any switch.	1. 7.5A fuse, 40A fusible link 2. M145 circuit breaker 3. Power window relay 4. M145 circuit breaker circuit 5. Power window relay circuit 6. Ground circuit 7. Power window main switch	1. Check 7.5A fuse [No. 11, located in fuse block (J/B)], 40A fusible link (letter **f**, located in fuse and fusible link box). 2. Check M145 circuit breaker. 3. Check power window relay. 4. Check the following. a. Harness between M145 circuit breaker and 40A fusible link b. Harness between M145 circuit breaker and power window main switch 5. Check the following. a. Harness between 7.5A fuse and power window relay b. Harness between M145 circuit breaker and power window relay 6. Check the following. a. Ground circuit of power window main switch terminal 17 b. Power window relay ground circuit 7. Check power window main switch.

Symptom	Possible cause	Repair order
Driver side power window cannot be operated but other windows can be operated.	1. Front power window motor LH circuit 2. Front power window motor LH 3. Power window main switch	1. Check harness between power window main switch and front power window motor LH for open or short circuit. 2. Check front power window motor LH. 3. Check power window main switch.
Passenger side power window cannot be operated but other window can be operated.	1. Power supply for front power window switch RH 2. Front power window switch RH ground circuit 3. Front power window switch RH circuit 4. Front power window motor RH circuit 5. Front power window motor RH 6. Power window main switch 7. Front power window switch RH	1. Check power supply for front power window switch RH terminals 10 and 14. 2. Check front power window switch RH ground circuit. 3. Check harness between front power window switch RH and power window main switch. 4. Check harness between front power window switch RH and front power window motor RH for open or short circuit. 5. Check front power window motor RH. 6. Check power window main switch. 7. Check front power window switch RH.
One or more rear power windows except front window cannot be operated.	1. Rear power window switches 2. Rear power window motors 3. Power window main switch 4. Rear power window circuit	1. Check rear power window switches. 2. Check rear power window motor. 3. Check power window main switch. 4. Check the following. a. Harness between the rear power window switches (LH and RH) terminal 5 and power window relay terminal 4 b. Harnesses between power window main switch and rear power window switches for open/short circuit c. Harnesses between rear power window switches and rear power window motor for open/short circuit
Power windows except driver's side window cannot be operated using power window main switch but can be operated by power window switches.	Power window main switch	Check power window main switch.
Driver side power window automatic operation does not function properly.	1. Power window main switch 2. Encoder and limit switch	1. Check power window main switch. 2. Check encoder and limit switch. (EL-285)
Front passenger side power window automatic operation does not function properly.	1. Front power window switch RH 2. Encoder and limit switch	1. Check front power window switch RH. 2. Check encoder and limit switch. (EL-285)
Retained power operation does not operate properly.	1. RAP signal circuit 2. Driver or passenger side door switch circuit 3. Smart entrance control unit	1. Check RAP signal. a. (With CONSULT-II) ● Check RAP signal with CONSULT-II. Use "WORK SUPPORT" mode, "RETAINED PWR" in "SMART ENTRANCE". (Refer to EL-282.) ● Check RAP signal with CONSULT-II. Use "ACTIVE TEST" mode, "RETAINED PWR" in "SMART ENTRANCE". (Refer to EL-281.) If NG, go to the step b. below. b. Verify 12 positive voltage from smart entrance control unit terminal 46 is present at terminal 2 of power window relay: ● Within 45 seconds after ignition switch turns off.*1 ● When front door LH and RH is closed. 2. Check the following. a. Harness between smart entrance control unit and driver or passenger side door switch for short circuit b. Driver or passenger side door switch ground circuit c. Driver or passenger side door switch 3. Check smart entrance control unit. (EL-382)

Trouble Diagnoses (Cont'd)

Symptom	Possible cause	Repair order
Passenger side power window cannot be operated using power window main switch but can be operated by passenger side power window switch.	1. Power window main switch 2. Power window main switch circuit	1. Check power window main switch. (EL-287) 2. Check harness for open or short circuit between power window main switch terminal 14 and front power window switch RH terminal 16.
Rear LH power window cannot be operated using power window main switch but can be operated by rear LH power window switch.	Power window main switch	Check power window main switch. (EL-287)
Rear RH power window cannot be operated using power window main switch but can be operated by rear RH power window switch.	Power window main switch	Check power window main switch. (EL-287)
Power window open/close operation with key cylinder does not operate properly.	1. Front door key cylinder switch LH 2. Front door key cylinder switch LH circuit 3. Power window main switch	1. Check front door key cylinder switch LH. 2. Check harness for open or short circuit between front door key cylinder switch LH and power window main switch. 3. Check power window main switch.

*1: RAP signal's period can be changed by CONSULT-II. (EL-282)

ENCODER AND LIMIT SWITCH CHECK

=NAEL0383S01

1	CHECK DOOR WINDOW SLIDE MECHANISM

Check the following.
- Obstacles in window, glass molding, etc.
- Worn or deformed glass molding
- Door sash tilted too far inward or outward
- Door window motor

OK or NG

OK	▶	GO TO 2.
NG	▶	Remove obstacles or repair door window slide mechanism.

2	CHECK POWER SUPPLY TO LIMIT SWITCH

1. Disconnect front power window motor LH or RH harness connector.
2. Check voltage between power window main switch harness connector D6 terminal 9 (G/W) or front power window switch RH harness connector D44 terminal 15 (G/W) and ground.

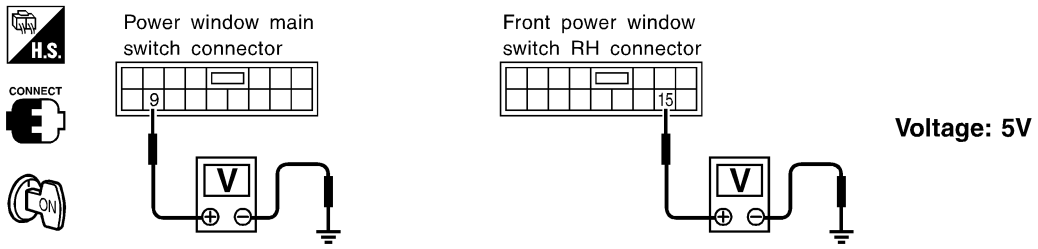

NOTE: Check voltage when front power window motor LH or RH harness connector is disconnected.

SEL686YA

OK or NG

OK	▶	GO TO 3.
NG	▶	Replace power window main switch or front power window switch RH.

3	CHECK LIMIT SWITCH OPERATION

1. Connect front power window motor LH or RH harness connector.
2. Check voltage between power window main switch harness connector D6 terminal 9 (G/W) or front power window switch RH harness connector D44 terminal 15 (G/W) and ground during power window closing operation.

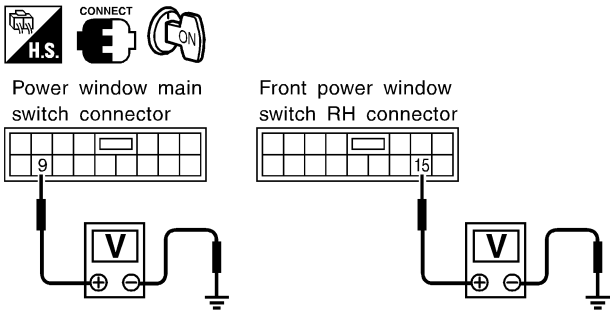

Terminal No.	Condition	Voltage (DCV)
Power window main switch: 9 Front power window switch RH: 15	Approx.15 mm (0.59 in) below the full closed position to full closed position	Approx. 5
	Other positions	Approx. 0

SEL687Y

OK or NG

OK	▶	GO TO 5.
NG	▶	GO TO 4.

4	RESET LIMIT SWITCH

Reset limit switch. Refer to BT-22, "Front Door Glass Limit Switch Reset". Then check voltage between power window main switch harness connector D6 terminal 9 (G/W) or front power window switch RH harness connector D44 terminal 15 (G/W) and ground during power window closing operation at least ten times.

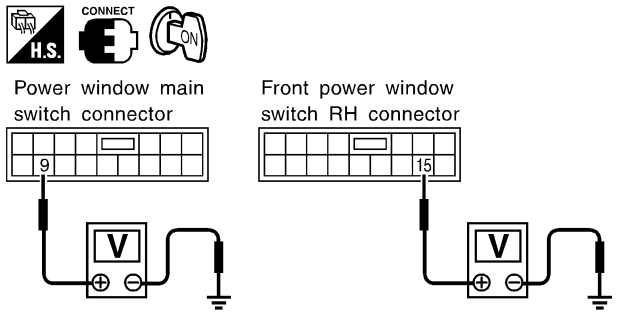

Terminal No.	Condition	Voltage (DCV)
Power window main switch: 9 Front power window switch RH: 15	Approx.15 mm (0.59 in) below the full closed position to full closed position	Approx. 5
	Other positions	Approx. 0

SEL687Y

OK or NG

OK	▶	GO TO 5.
NG	▶	Replace front power window motor.

5	CHECK ENCODER

Measure voltage between power window main switch harness connector D6 terminal 13 (G/Y) or front power window switch RH harness connector D44 terminal 12 (G/Y) and ground with oscilloscope when power window is in automatic closing operation.

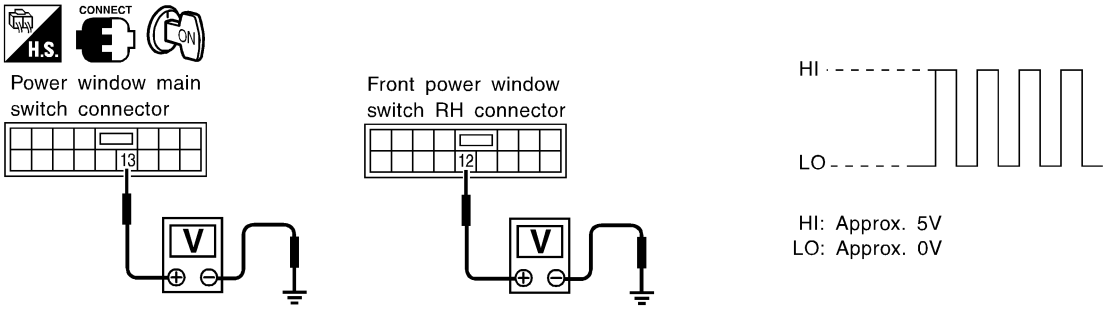

SEL688Y

OK or NG

OK	▶	Replace power window main switch.
NG	▶	Replace front power window motor.

MAIN SWITCH OPERATION CHECK
Passenger Side Operation

=NAEL0383S02

NAEL0383S0201

1	CHECK POWER WINDOW MAIN SWITCH OUTPUT SIGNAL

With CONSULT-II

1. Turn ignition switch to ON position.
2. Turn power window main switch to ON (UP or DOWN).
3. Check signal between power window main switch harness connector D6 terminal 14 (BR) and ground when power window is in open or close operation. (Use "SIMPLE OSCILLOSCOPE" in "SUB MODE" with CONSULT-II.)

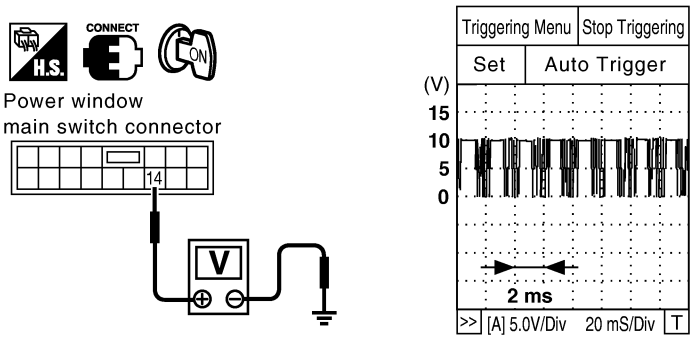

Voltage:
12V → 9V (10 sec.) measurement by analog circuit tester.

SEL689YB

Without CONSULT-II

1. Turn ignition switch to ON position.
2. Turn power window main switch to ON (UP or DOWN).
3. Check signal between power window main switch harness connector D6 terminal 14 (BR) and ground when power window is in open or close operation.

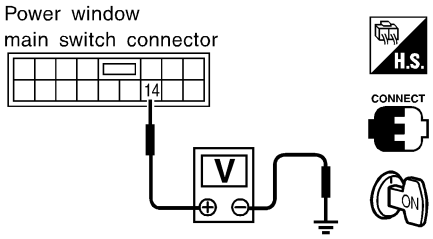

Voltage:
12V → 9V (10 sec.) measurement by analog circuit tester.

SEL690YB

OK or NG

OK	▶	GO TO 2.
NG	▶	Replace power window main switch.

2	CHECK SIGNAL CIRCUIT

1. Check continuity between power window switch harness connector D6 terminal 14 (BR) and front power window switch RH harness connector D44 terminal 16 (Y).

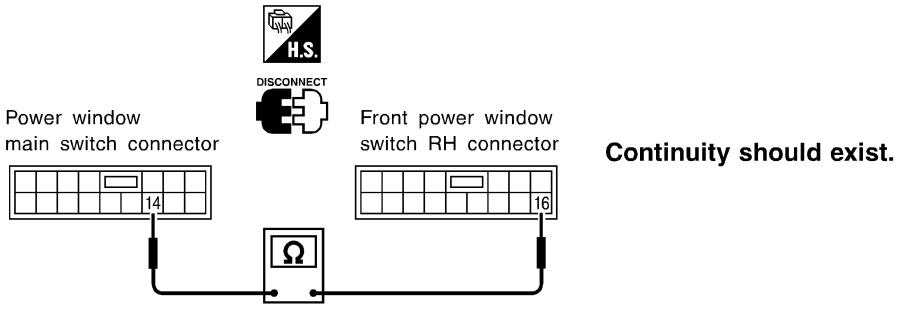

SEL691YB

Yes or No

Yes	▶	INSPECTION END
No	▶	Repair harness or connectors.

Rear LH Side Window Operation

=NAEL0383S0202

1	CHECK POWER WINDOW MAIN SWITCH OUTPUT SIGNAL

1. Turn ignition switch to ON position.
2. Check voltage between power window main switch harness connector D6 terminal 1 (R/B) or 3 (G/W) and ground when rear power window LH side is in open or close operation.

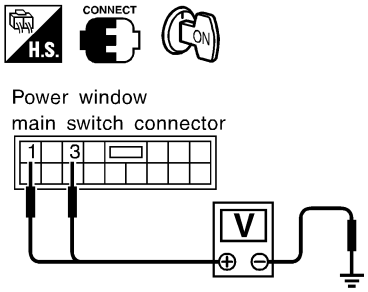

Terminals		Main switch condition	
(+)	(–)	Open	Close
1	Ground	0V	12V
3	Ground	0V	12V

SEL692YA

OK or NG

OK	▶	GO TO 2.
NG	▶	Replace power window main switch.

2	CHECK SIGNAL CIRCUIT

1. Turn ignition switch to OFF position.
2. Disconnect power window main switch connector and rear power window switch LH connector.
3. Check continuity between power window main switch harness connector D6 terminal 3 (G/W) and rear power window switch LH harness connector D52 terminal 2 (B/W).
4. Check continuity between power window main switch harness connector D6 terminal 1 (R/B) and rear power window switch LH harness connector D52 terminal 5 (W/B).

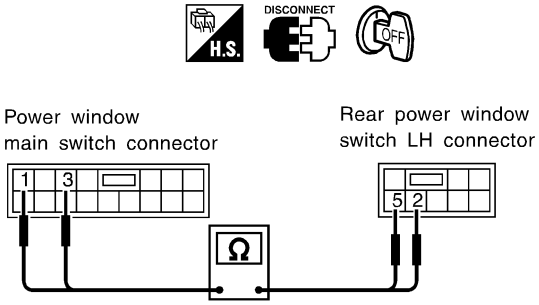

Continuity should exist.

SEL796YA

Yes or No

Yes	▶	INSPECTION END
No	▶	Repair harness or connectors.

Rear RH Side Window Operation

=NAEL0383S0203

1	CHECK POWER WINDOW MAIN SWITCH OUTPUT

1. Turn ignition switch to ON position.
2. Check voltage between power window main switch harness connector D6 terminal 5 (B/W) or 7 (W/B) and ground when rear power window RH side is in open or close operation.

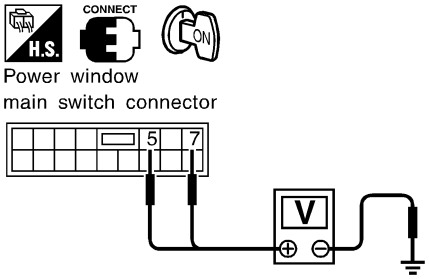

Terminals		Main switch condition	
(+)	(–)	Open	Close
5	Ground	0V	12V
7	Ground	0V	12V

SEL694YA

OK or NG

OK	▶	GO TO 2.
NG	▶	Replace power window main switch.

2	CHECK SIGNAL CIRCUIT

1. Turn ignition switch to OFF position.
2. Disconnect power window main switch connector and rear power window switch RH connector.
3. Check continuity between power window main switch harness connector D6 terminal 7 (W/B) and rear power window switch RH harness connector D72 terminal 5 (W/B).
4. Check continuity between power window main switch harness connector D6 terminal 5 (B/W) and rear power window switch RH harness connector D72 terminal 2 (B/W).

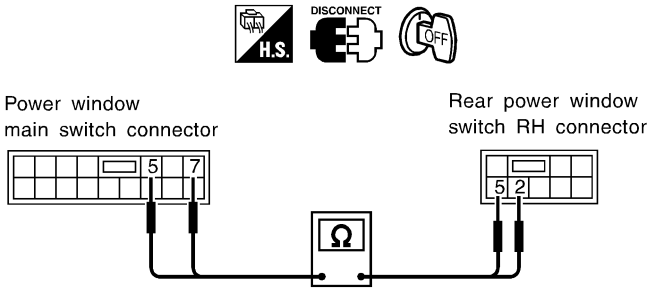

Continuity should exist.

SEL795YA

Yes or No

Yes	▶	INSPECTION END
No	▶	Repair harness or connectors.

Component Parts and Harness Connector Location

NAEL0384

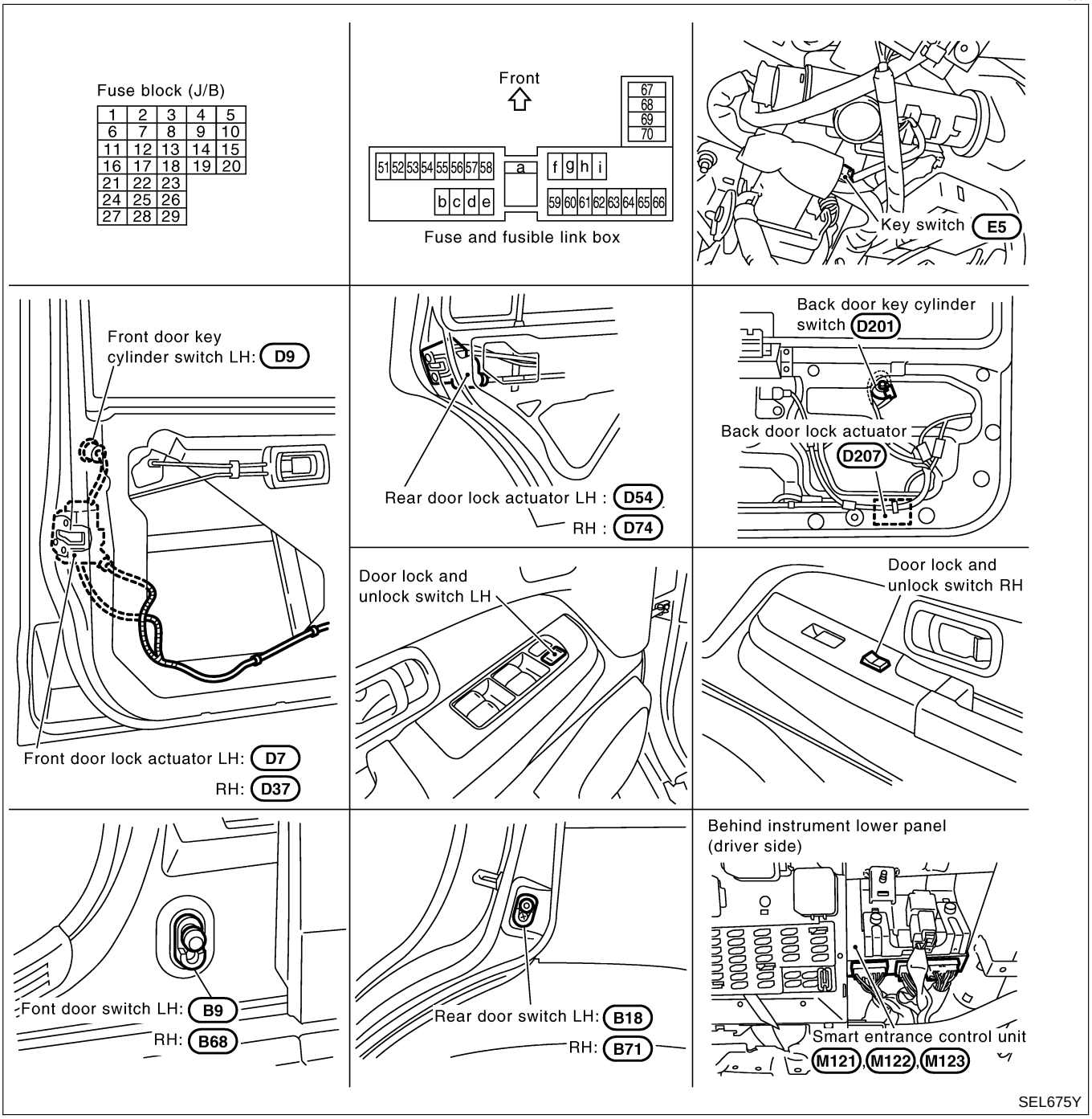

System Description

NAEL0385

OPERATION

NAEL0385S01

- The lock/unlock switch (LH and RH) on door trim can lock and unlock all doors.
- With the door key inserted in the key cylinder on front LH or back door, turning it to “LOCK”, will lock all doors; turning it to “UNLOCK” once unlocks the corresponding door; turning it to “UNLOCK” again within 5 seconds after the first unlock operation unlocks all of the other doors. (Signals from door key cylinder switch)
- If the ignition key is in the ignition key cylinder and one or more of doors are open, setting the lock/unlock switch to “LOCK” locks the doors once but then immediately unlock them. (Combination signals from key switch and door switches) - (KEY REMINDER DOOR SYSTEM)

Schematic

NAEL0386

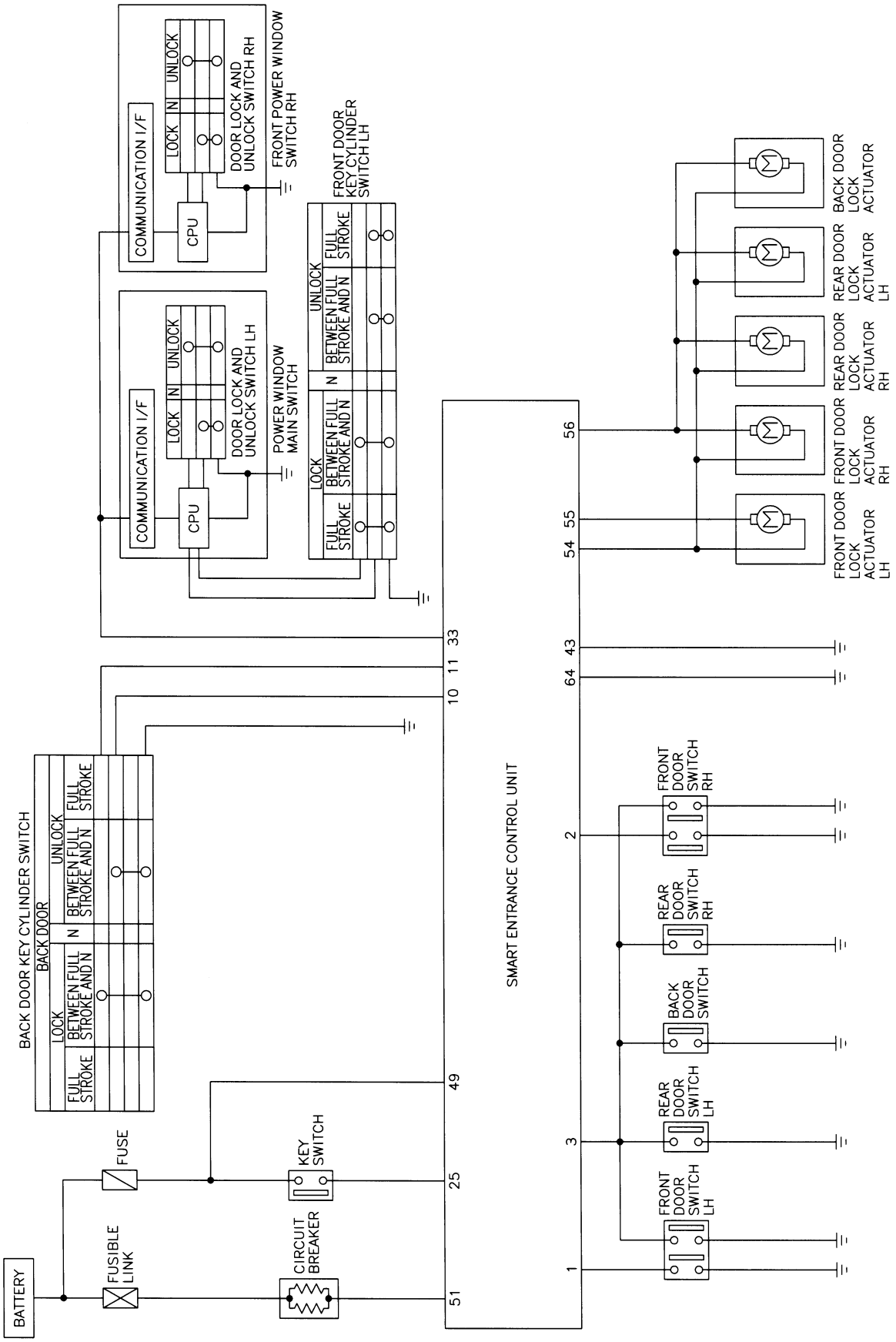

MEL431P

Wiring Diagram — D/LOCK —

NAEL0387

FIG. 1

NAEL0387S01

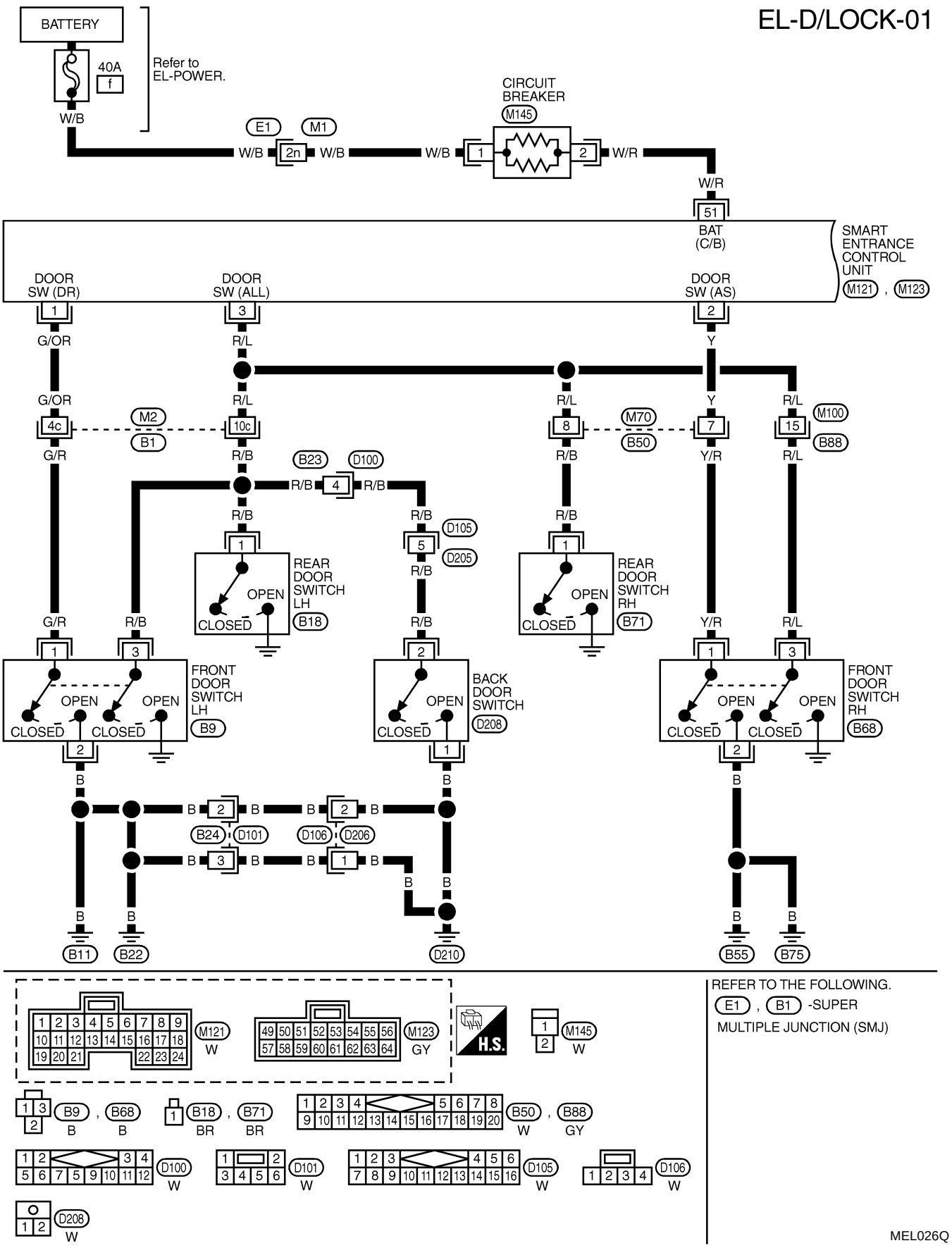

Wiring Diagram — D/LOCK — (Cont'd)

FIG. 2

NAEL0387S02

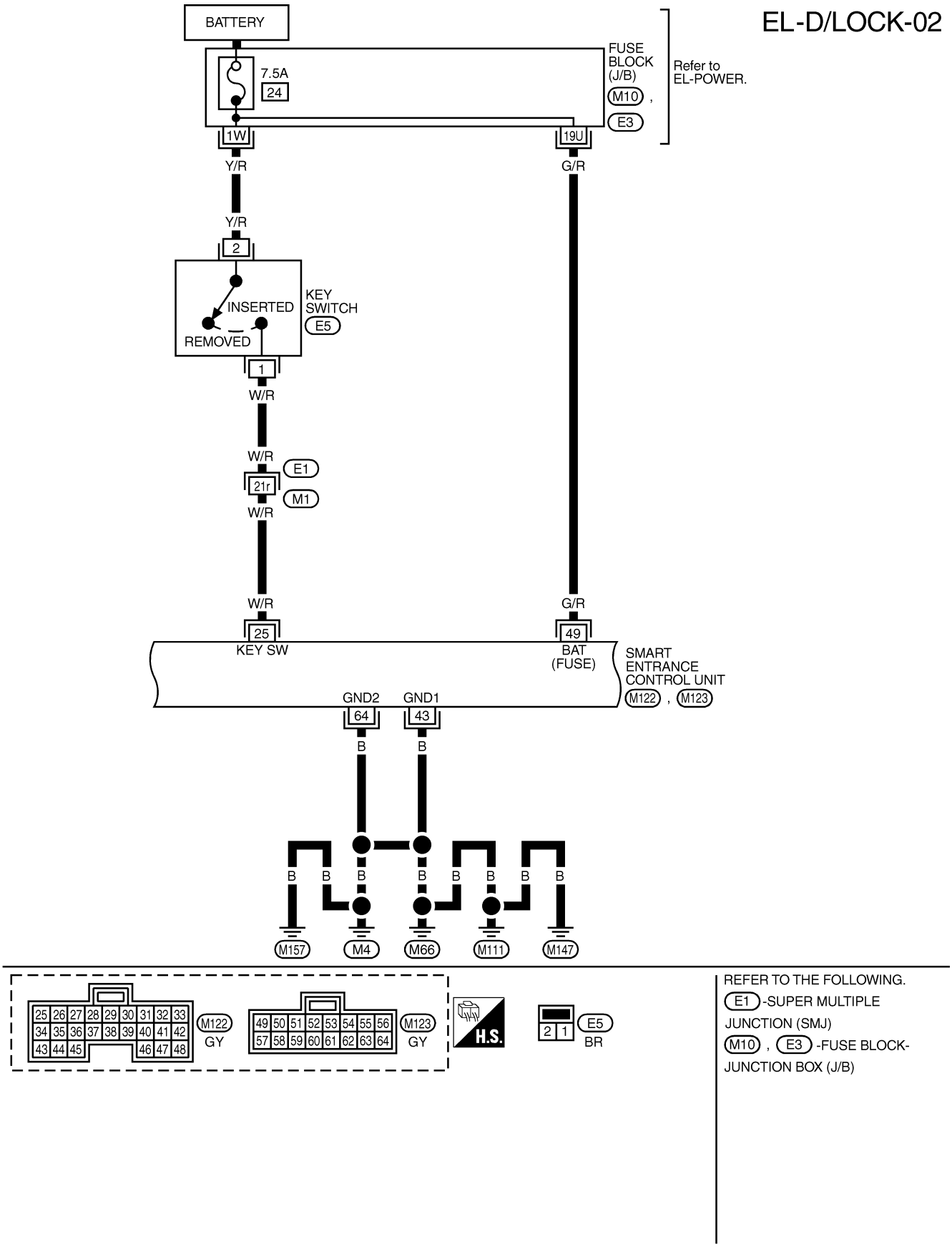

FIG. 3

NAEL0387S03

EL-D/LOCK-03

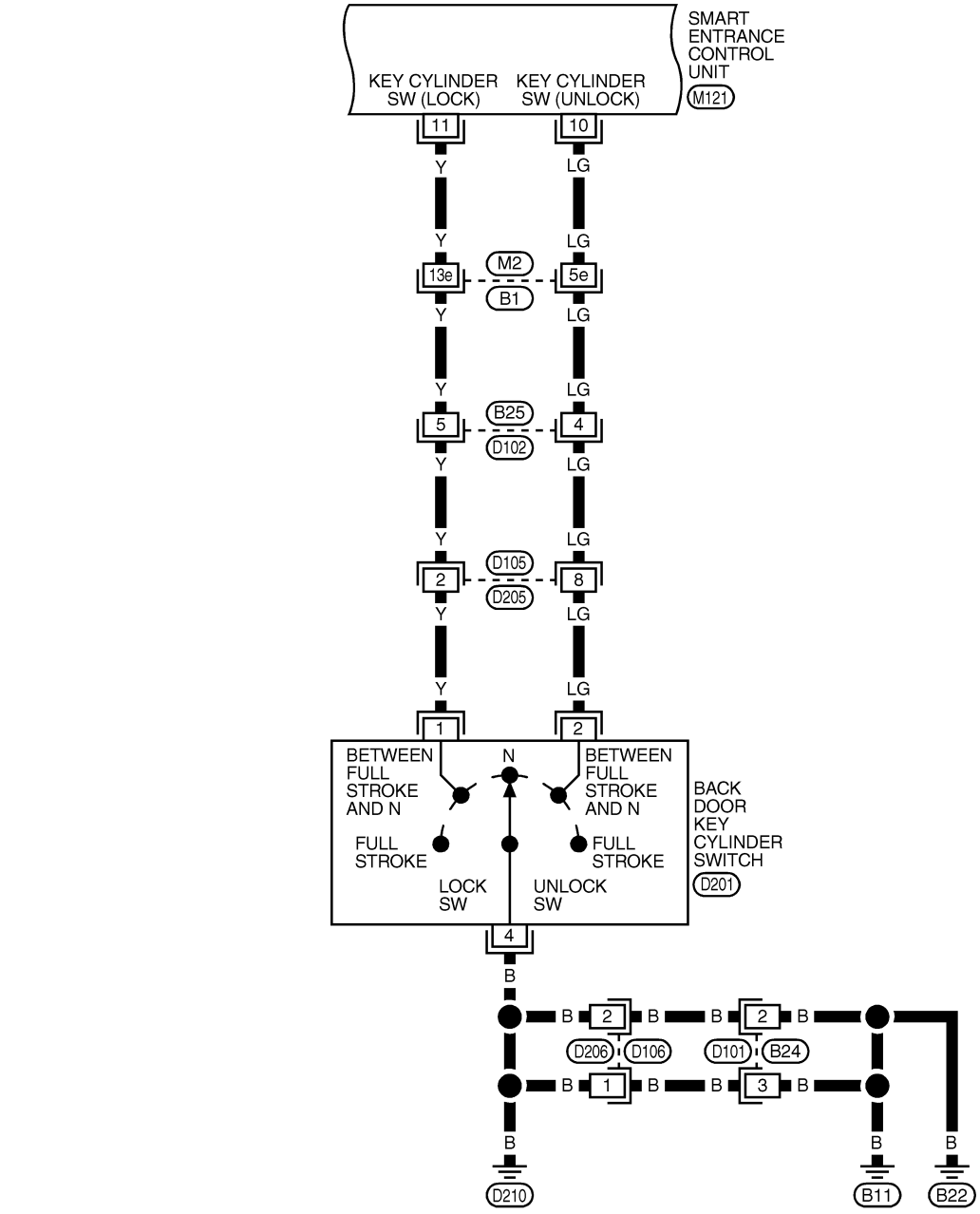

REFER TO THE FOLLOWING.
B1 - SUPER MULTIPLE JUNCTION (SMJ)

MEL028Q

Wiring Diagram — D/LOCK — (Cont'd)

FIG. 4

NAEL0387S04

EL-D/LOCK-04

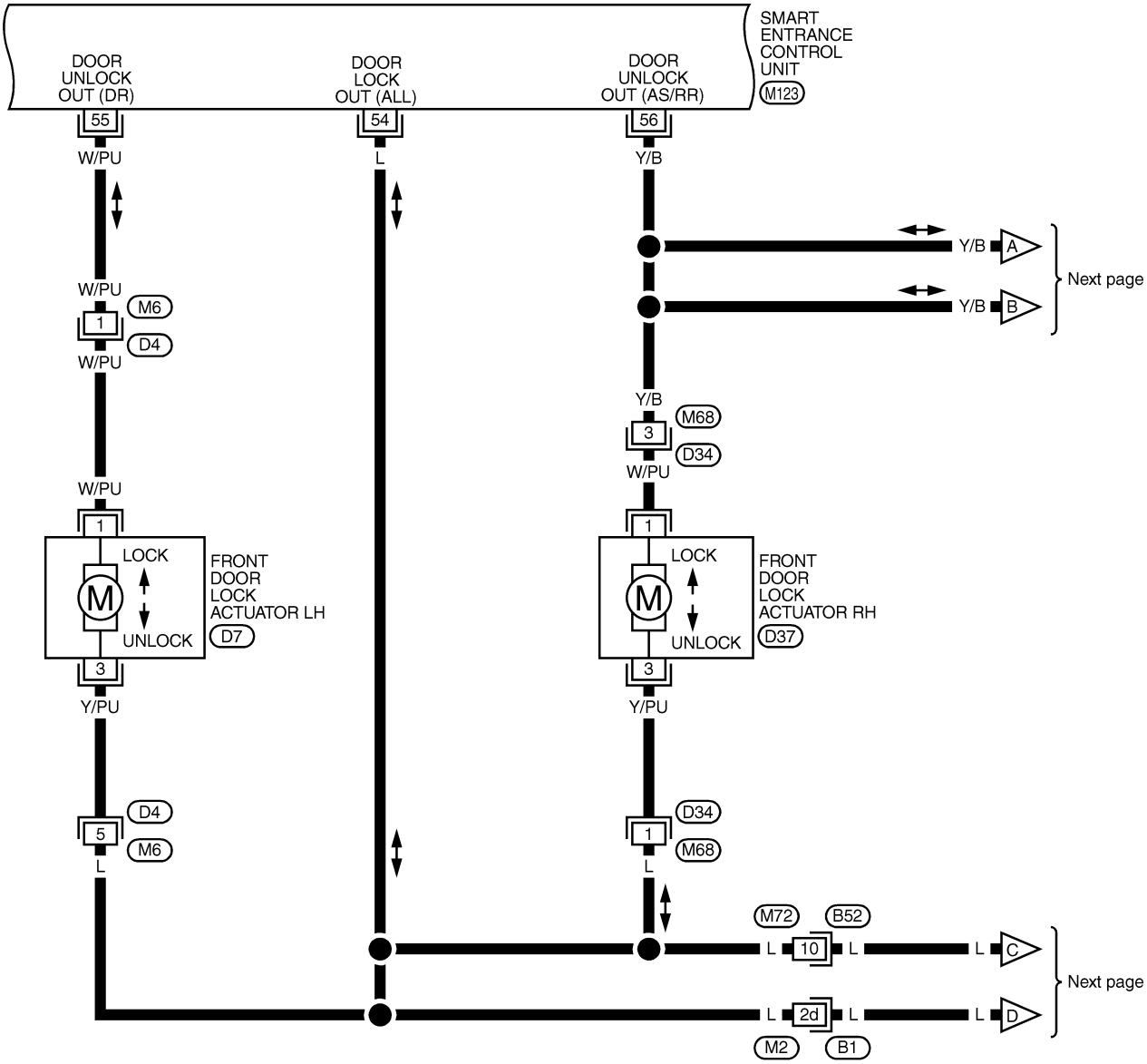

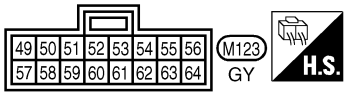

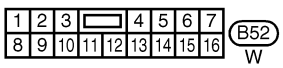

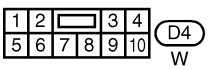

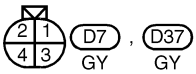

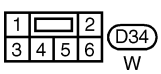

REFER TO THE FOLLOWING.
B1 - SUPER MULTIPLE JUNCTION (SMJ)

MEL434P

FIG. 5

NAEL0387S05

EL-D/LOCK-05

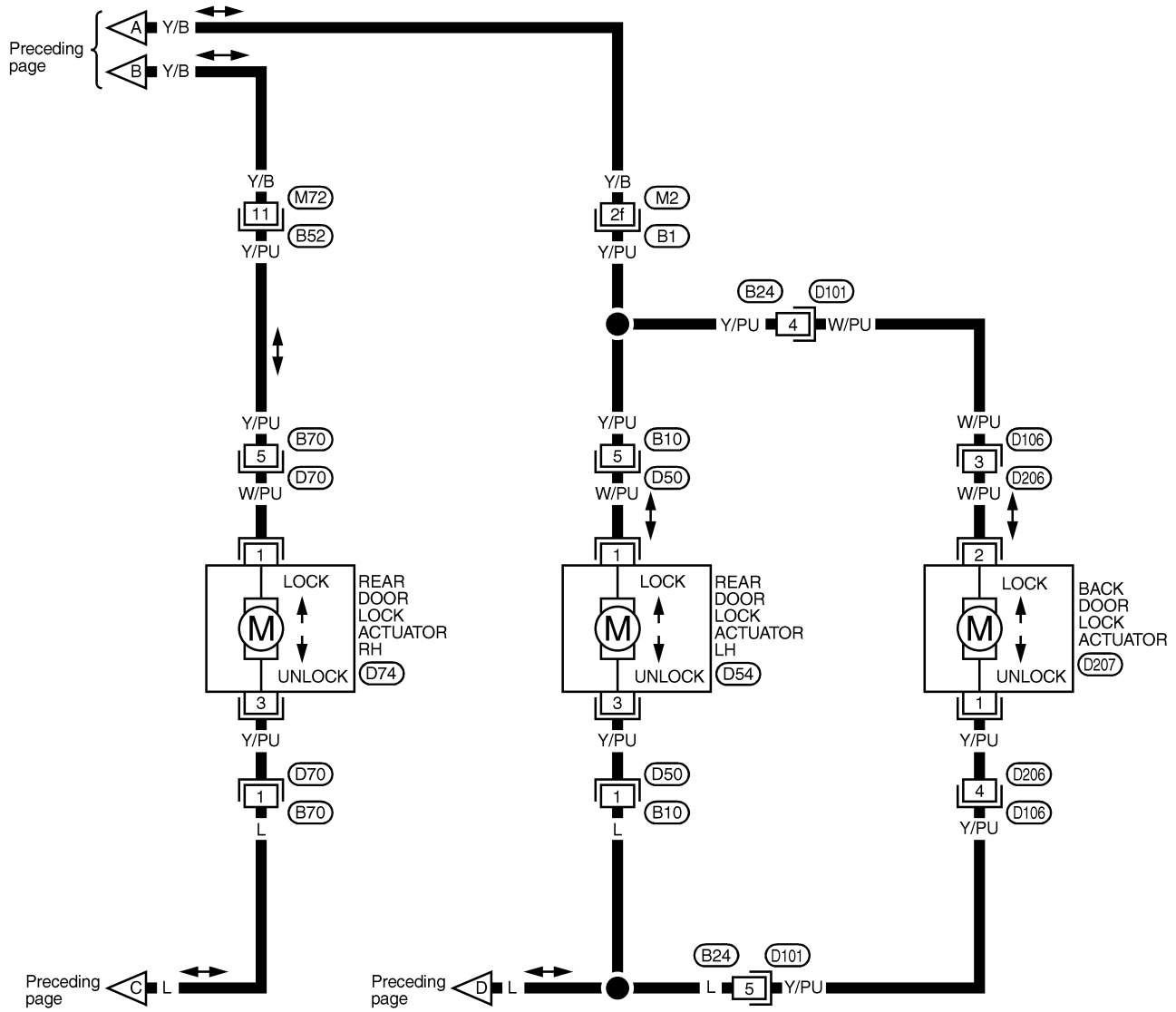

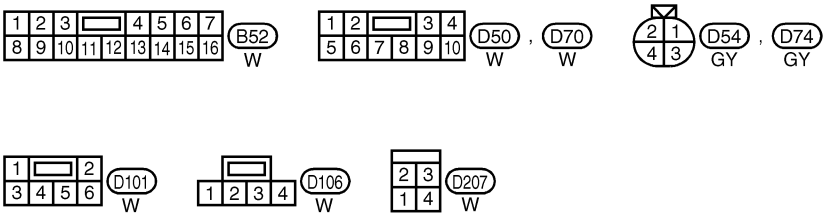

REFER TO THE FOLLOWING.
B1 - SUPER MULTIPLE JUNCTION (SMJ)

MEL852L

Wiring Diagram — D/LOCK — (Cont'd)

FIG. 6

NAEL0387S06

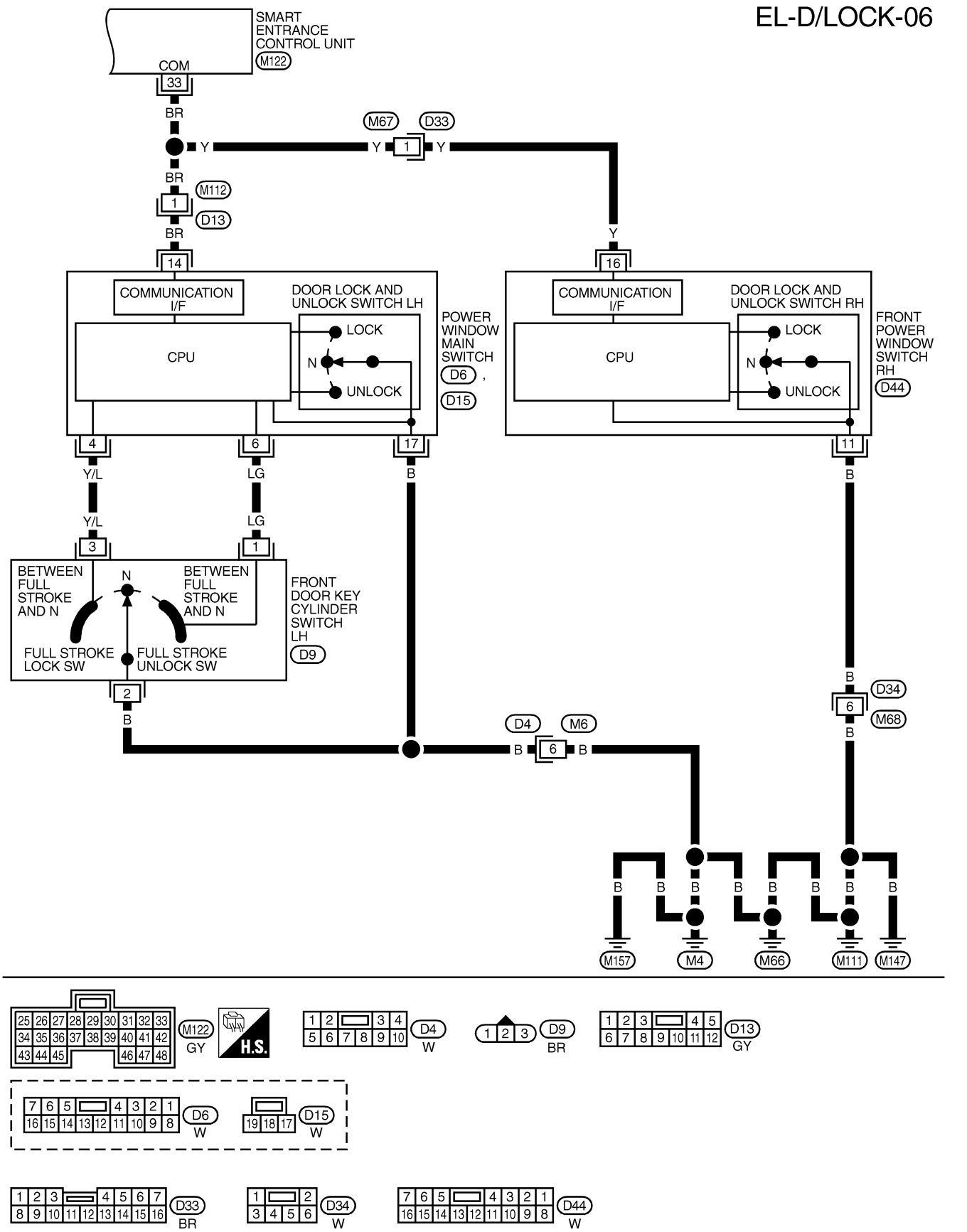

MEL029Q

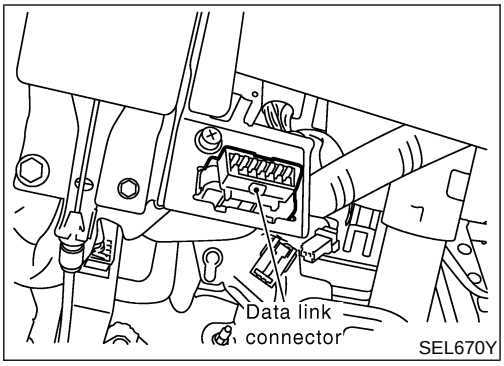

SEL670Y

CONSULT-II Inspection Procedure

=NAEL0388

"DOOR LOCK"

NAEL0388S01

1. Turn ignition switch "OFF".
2. Connect "CONSULT-II" and "CONSULT-II CONVERTER" to the data link connector.

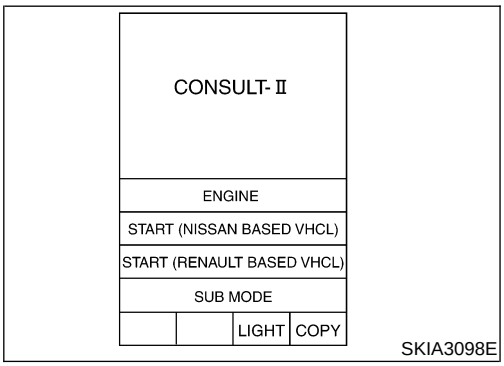

SKIA3098E

3. Turn ignition switch "ON".
4. Turn "START (NISSAN BASED VHCL)".

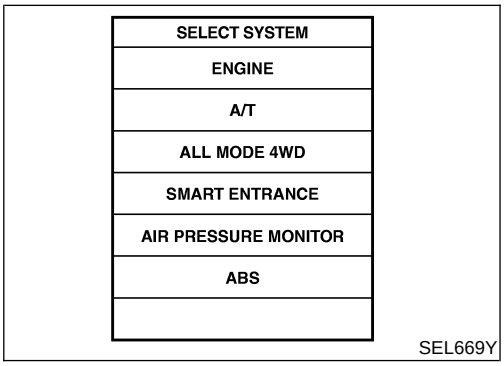

SEL669Y

5. Touch "SMART ENTRANCE".
   If "SMART ENTRANCE" is not indicated, go to GI-41, "CONSULT-II Data Link Connector (DLC) Circuit".

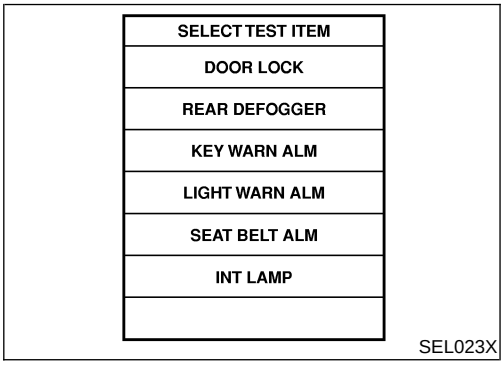

SEL023X

6. Touch "DOOR LOCK".

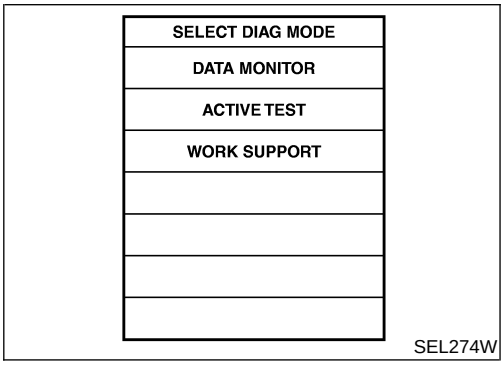

SEL274W

7. Select diagnosis mode.
   "DATA MONITOR", "ACTIVE TEST" and "WORK SUPPORT" are available.

CONSULT-II Application Items

NAEL0389

"DOOR LOCK"

NAEL0389S01

Data Monitor

NAEL0389S0101

Monitored Item	Description
KEY ON SW	Indicates [ON/OFF] condition of key switch.
LOCK SW DR/AS	Indicates [ON/OFF] condition of lock signal from lock/unlock switch LH and RH.
DOOR SW-RR	Indicates [ON/OFF] condition of door switch (Rear).
UNLK SW DR/AS	Indicates [ON/OFF] condition of unlock signal from lock/unlock switch LH and RH.
KEY CYL LK-SW	Indicates [ON/OFF] condition of lock signal from key cylinder.
KEY CYL UN-SW	Indicates [ON/OFF] condition of unlock signal from key cylinder.
LK BUTTON/SIG	Indicates [ON/OFF] condition of lock signal from keyfob.
UN BUTTON/SIG	Indicates [ON/OFF] condition of unlock signal from keyfob.
IGN ON SW	Indicates [ON/OFF] condition of ignition switch.
DOOR SW-DR	Indicates [ON/OFF] condition of front door switch LH.
DOOR SW-AS	Indicates [ON/OFF] condition of front door switch RH.

Active Test

NAEL0389S0102

Test Item	Description
ALL D/LK MTR	This test is able to check all door lock actuators lock operation. These actuators lock when "ON" on CONSULT-II screen is touched.
DR D/UN MTR	This test is able to check front door lock actuator LH unlock operation. The actuator unlocks when "ON" on CONSULT-II screen is touched.
NON DR D/UN	This test is able to check door lock actuators (except front door lock actuator LH) unlock operation. These actuators unlock when "ON" on CONSULT-II screen is touched.

Work Support

NAEL0389S0103

Work Item	Description
DOOR LOCK-UNLOCK SET	Select unlock mode can be changed in this mode. Selects ON-OFF of select unlock mode. ● MODE 1 (ON)/MODE 2 (OFF)
ANTI-LOCK OUT SET	Key reminder door mode can be changed in this mode. Selects ON-OFF of key reminder door mode. ● MODE 1 (ON)/MODE 2 (OFF)

Trouble Diagnoses

SYMPTOM CHART

NAEL0390

NAEL0390S01

REFERENCE PAGE (EL-)	302	303	305	306	307	309	311
SYMPTOM	MAIN POWER SUPPLY AND GROUND CIRCUIT CHECK	DOOR SWITCH CHECK	KEY SWITCH (INSERT) CHECK	DOOR LOCK/UNLOCK SWITCH CHECK	FRONT DOOR KEY CYLINDER SWITCH CHECK	BACK DOOR KEY CYLINDER SWITCH CHECK	DOOR LOCK ACTUATOR CHECK
Key reminder door system does not operate properly.	X	X	X				X
Specific door lock actuator does not operate.	X						X
Power door lock does not operate with door lock and unlock switch (LH and RH) on door trim.	X			X			
Power door lock does not operate with front door key cylinder operation.	X				X		
Power door lock does not operate with back door key cylinder operation.	X					X	

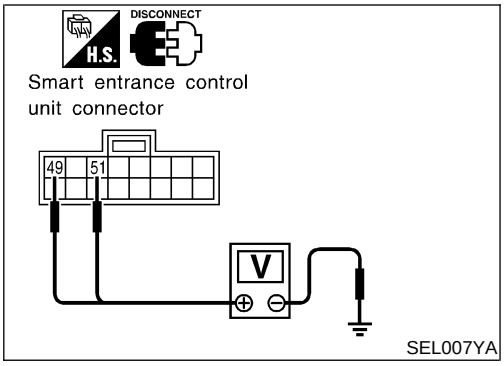

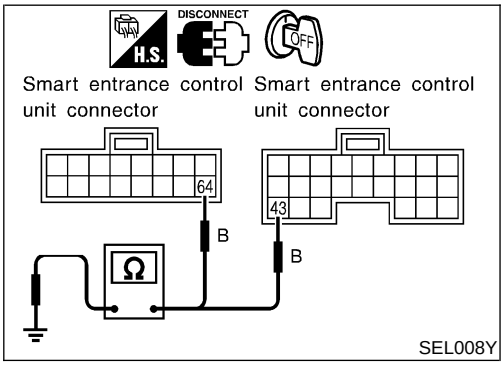

MAIN POWER SUPPLY AND GROUND CIRCUIT CHECK

=NAEL0390S02

Main Power Supply Circuit Check

NAEL0390S0201

Terminals			Ignition switch		
(+)		(–)	OFF	ACC	ON
Connector	Terminal (Wire color)				
M123	49 (G/R)	Ground	Battery voltage	Battery voltage	Battery voltage
	51 (W/R)				

Ground Circuit Check

NAEL0390S0202

Terminals			Continuity
(+)		(–)	
Connector	Terminal (Wire color)		
M122	43 (B)	Ground	Yes
M123	64 (B)		

DOOR SWITCH CHECK

=NAEL0390S03

1	CHECK DOOR SWITCH INPUT SIGNAL

With CONSULT-II

Check door switches ("DOOR SW-DR", "DOOR SW-AS", "DOOR SW-RR") in "DATA MONITOR" mode with CONSULT-II.

DATA MONITOR	
MONITOR	
DOOR SW-RR	OFF
DOOR SW-DR	OFF
DOOR SW-AS	OFF

When any doors are open:

DOOR SW-DR ON
DOOR SW-AS ON
DOOR SW-RR ON

When any doors are closed:

DOOR SW-DR OFF
DOOR SW-AS OFF
DOOR SW-RR OFF

SEL009Y

Without CONSULT-II

Check voltage between smart entrance control unit harness connector M121 terminals 1 (G/OR), 2 (Y) or 3 (R/L) and ground.

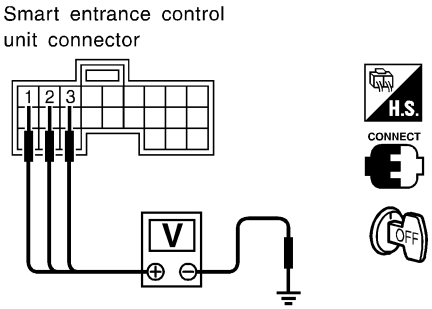

	Terminals (+)	Terminals (–)	Condition	Voltage [V]
Front LH door switch	1	Ground	Open	0
			Closed	Approx. 5
Front RH door switch	2	Ground	Open	0
			Closed	Approx. 5
Rear door switches	3	Ground	Open	0
			Closed	Approx. 5

SEL010Y

Refer to wiring diagram in EL-293.

OK or NG

OK	▶	Door switch is OK.
NG	▶	GO TO 2.

2	CHECK DOOR SWITCH

1. Disconnect door switch connector.
2. Check the following.

- Continuity between front door switch connector B9 (LH) or B68 (RH) terminals 1 and 2
- Continuity between front door switch connector B9 (LH) or B68 (RH) terminal 3 and ground
- Continuity between back door switch connector D208 terminals 1 and 2
- Continuity between rear door switch connector B18 (LH) or B71 (RH) terminal 1 and ground

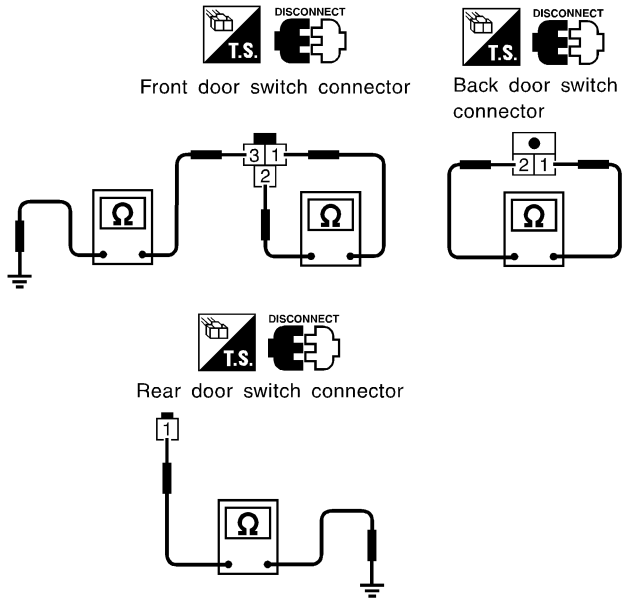

	Terminals	Condition	Continuity
Front door switches	1 - 2	Closed	No
	3 - Ground	Open	Yes
Back door switch	1 - 2	Closed	No
		Open	Yes
Rear door switches	1 - Ground	Closed	No
		Open	Yes

SEL287YA

OK or NG

OK	▶	**Check the following.** ● Door switches ground circuit (Front or back door) or rear door switches ground condition ● Harness for open or short between smart entrance control unit and door switch
NG	▶	Replace door switch.

KEY SWITCH (INSERT) CHECK

=NAEL0390S04

1	CHECK KEY SWITCH INPUT SIGNAL

With CONSULT-II

Check key switch ("KEY ON SW") in "DATA MONITOR" mode with CONSULT-II.

DATA MONITOR	
MONITOR	
KEY ON SW	ON

When key is inserted to ignition key cylinder:

KEY ON SW ON

When key is removed from ignition key cylinder:

KEY ON SW OFF

SEL315W

Without CONSULT-II

Check voltage between smart entrance control unit harness connector M122 terminal 25 (W/R) and ground.

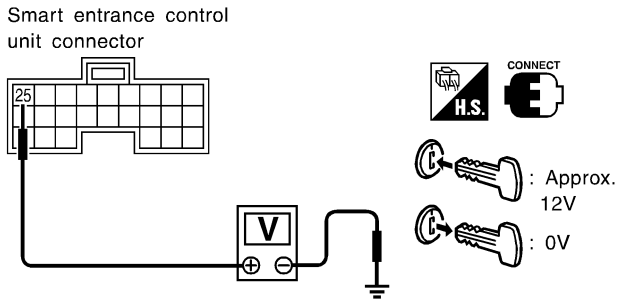

Voltage [V]:

Condition of key switch: Key is inserted.

Approx. 12

Condition of key switch: Key is removed.

0

SEL011Y

Refer to wiring diagram in EL-294.

OK or NG

OK	▶	Key switch is OK.
NG	▶	GO TO 2.

2	CHECK KEY SWITCH (INSERT)

Check continuity between key switch connector terminals 1 and 2.

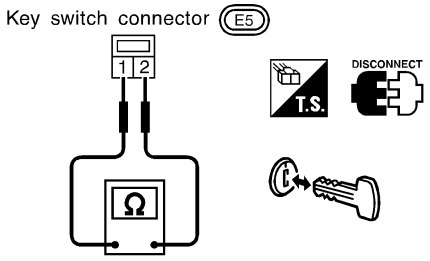

Continuity:

Condition of key switch: Key is inserted.

Yes

Condition of key switch: Key is removed.

No

SEL308X

OK or NG

OK	▶	**Check the following.** ● 7.5A fuse [No. 24, located in fuse block (J/B)] ● Harness for open or short between key switch and fuse ● Harness for open or short between smart entrance control unit and key switch
NG	▶	Replace key switch.

DOOR LOCK/UNLOCK SWITCH CHECK

=NAEL0390S05

1	CHECK DOOR LOCK/UNLOCK SWITCH INPUT SIGNAL

With CONSULT-II

Check door lock/unlock switch ("LOCK SW DR/AS"/"UNLK SW DR/AS") in "DATA MONITOR" mode with CONSULT-II.

DATA MONITOR	
MONITOR	
LOCK SW DR/AS	OFF
UNLK SW DR/AS	OFF

When lock/unlock switch is turned to LOCK:
LOCK SW DR/AS ON

When lock/unlock switch is turned to UNLOCK:
UNLK SW DR/AS ON

SEL341W

Without CONSULT-II

1. Remove key from ignition key cylinder.
2. Check the signal between smart entrance control unit harness connector M122 terminal 33 (BR) and ground with oscilloscope when door lock/unlock switch is turned "LOCK" or "UNLOCK".
3. Make sure signals which are shown in the figure below can be detected during 10 sec. just after door lock/unlock switch is turned "LOCK" or "UNLOCK".

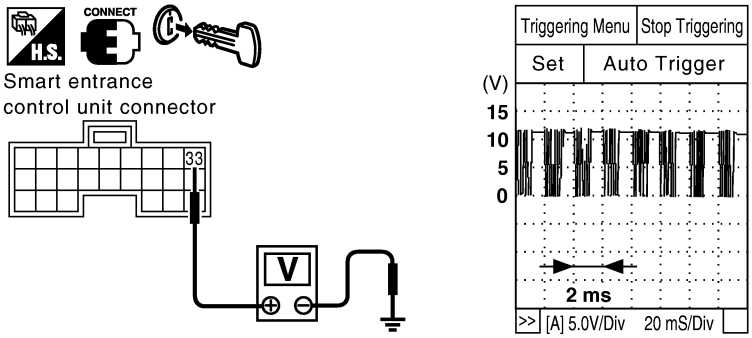

Voltage:
12V → 9V (10 sec.) measurement by analog circuit tester.

SEL699YA

Refer to wiring diagram in EL-298.

OK or NG

OK	▶	Door lock/unlock switch is OK.
NG	▶	**Check the following.** ● Ground circuit for each front power window switch ● Harness for open or short between each front power window switch and smart entrance control unit connector If above systems are normal, replace the front power window switch.

FRONT DOOR KEY CYLINDER SWITCH CHECK

=NAEL0390S06

1	CHECK FRONT DOOR KEY CYLINDER SWITCH INPUT SIGNAL (LOCK/UNLOCK SIGNAL)

With CONSULT-II

Check front door key cylinder switch ("KEY CYL LK-SW"/"KEY CYL UN-SW") in "DATA MONITOR" mode with CONSULT-II.

DATA MONITOR	
MONITOR	
KEY CYL LK-SW	OFF
KEY CYL UN-SW	OFF

When key inserted in front door key cylinder is turned to LOCK:

KEY CYL LK-SW ON

When key inserted in front door key cylinder is turned to UNLOCK:

KEY CYL UN-SW ON

SEL342WF

Without CONSULT-II

1. Check the signal between smart entrance control unit harness connector M122 terminal 33 (BR) and ground with oscilloscope when key inserted in front door key cylinder is turned "LOCK" or "UNLOCK".
2. Make sure signals which are shown in the figure below can be detected during 10 sec. just after key is turned "LOCK" or "UNLOCK".

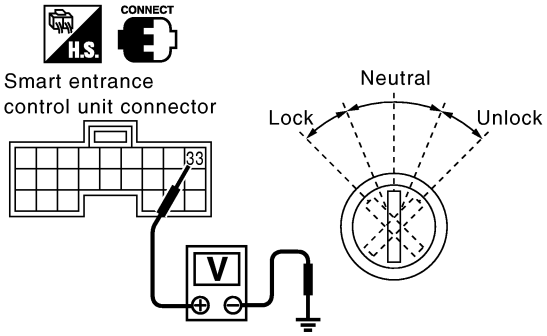

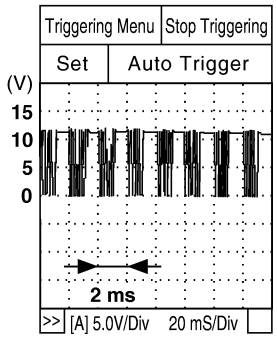

Voltage:
12V→9V (10 sec.)
measurement by analog circuit tester.

SEL700YA

Refer to wiring diagram in EL-298.

OK or NG

OK	▶	Front door key cylinder switch LH is OK.
NG	▶	GO TO 2.

2	CHECK FRONT DOOR KEY CYLINDER SWITCH

1. Disconnect front door key cylinder switch connector.
2. Check continuity between front door key cylinder switch LH connector terminals.

Front door key cylinder switch LH connector D9

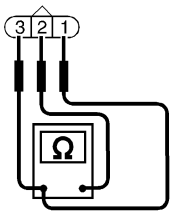

① : Door unlock switch terminal
② : Ground terminal
③ : Door lock switch terminal

Terminals	Key position	Continuity
LH: 3 - 2	Neutral/Unlock	No
	Lock	Yes
LH: 1 - 2	Neutral/Lock	No
	Unlock	Yes

SEL313XB

OK or NG

OK	▶	**Check the following.** ● Front door key cylinder switch LH ground circuit ● Harness for open or short between smart entrance control unit and power window main switch ● Harness for open or short between power window main switch and front door key cylinder switch LH
NG	▶	Replace front door key cylinder switch LH.

BACK DOOR KEY CYLINDER SWITCH CHECK

=NAEL0390S07

1	CHECK BACK DOOR KEY CYLINDER SWITCH INPUT SIGNAL (LOCK/UNLOCK SIGNAL)

With CONSULT-II

Check back door key cylinder switch ("KEY CYL LK-SW"/"KEY CYL UN-SW") in "DATA MONITOR" mode with CONSULT-II.

DATA MONITOR	
MONITOR	
KEY CYL LK-SW	OFF
KEY CYL UN-SW	OFF

When key inserted in back door key cylinder is turned to LOCK:

KEY CYL LK-SW ON

When key inserted in back door key cylinder is turned to UNLOCK:

KEY CYL UN-SW ON

SEL342WG

Without CONSULT-II

Check voltage between smart entrance control unit harness connector M121 terminals 10 (LG) or 11 (Y) and ground.

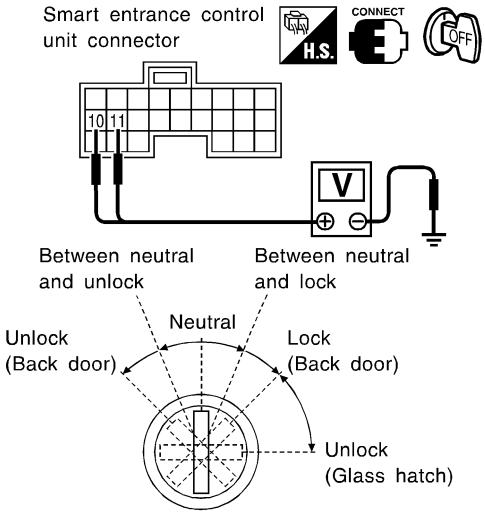

	Terminals (+)	Terminals (−)	Key position	Voltage [V]
Back door	11	Ground	Between neutral and lock	0
			Other positions	Approx. 5
	10	Ground	Between neutral and unlock	0
			Other positions	Approx. 5

SEL286Y

Refer to wiring diagram in EL-295.

OK or NG

OK	▶	Back door key cylinder switch is OK.
NG	▶	GO TO 2.

2	CHECK BACK DOOR KEY CYLINDER SWITCH

1. Disconnect back door key cylinder switch connector.
2. Check continuity between back door key cylinder switch terminals.

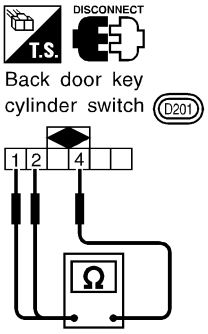

Key position	Terminals		
	1	2	4
Between neutral and lock (Back door)	○		○
Between neutral and unlock (Back door)		○	○

SEL315X

OK or NG

OK	▶	**Check the following.** ● Back door key cylinder switch ground circuit ● Harness for open or short between smart entrance control unit and back door key cylinder switch
NG	▶	Replace back door key cylinder switch.

DOOR LOCK ACTUATOR CHECK

=NAEL0390S08

1	CHECK DOOR LOCK ACTUATOR OPERATION

With CONSULT-II

1. Select "ACTIVE TEST" in "DOOR LOCK" with CONSULT-II.
2. Select "ALL D/LK MTR" and touch "ON".
3. Then, select "DR D/UN MTR" and touch "ON".
4. Select "NON DR D/UN" and touch "ON".

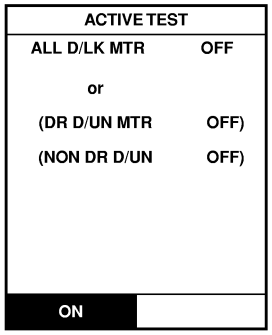

Door lock motor should operate.

SEL343W

NOTE:
If CONSULT-II is not available, skip this procedure and go to the next step.

OK or NG

OK	▶	Door lock actuator is OK.
NG	▶	GO TO 2.

2	CHECK DOOR LOCK ACTUATOR CIRCUIT

- Door lock actuator front LH
  Check voltage between smart entrance control unit harness connector M123 terminal 54 (L), 55 (W/PU) and ground.

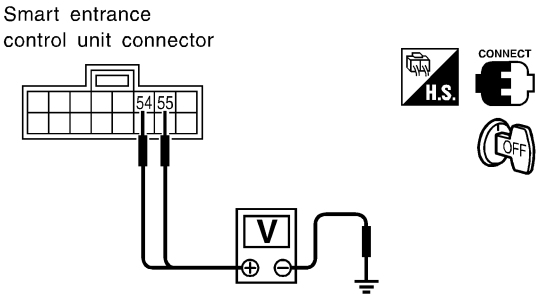

Door lock/unlock switch condition	Terminal No.		Voltage V
	(+)	(–)	
Lock	54	Ground	Approx. 12
Unlock	55	Ground	

SEL014Y

- Door lock actuator front RH and rear
  Chcek voltage between smart entrance control unit harness connector M123 terminal 54 (L), 56 (Y/B) and ground.

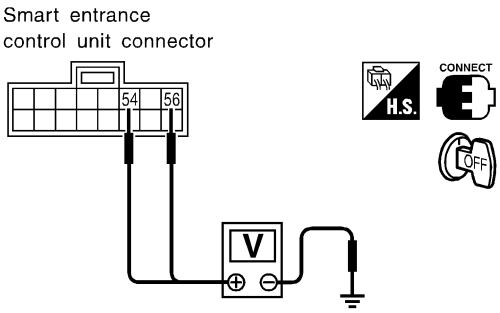

Door lock/unlock switch condition	Terminal No.		Voltage V
	(+)	(–)	
Lock	54	Ground	Approx. 12
Unlock	56	Ground	

SEL015Y

Refer to wiring diagram in EL-296.

OK or NG

OK	▶	GO TO 2.
NG	▶	Replace smart entrance control unit. (Before replacing smart entrance control unit, perform "DOOR LOCK/UNLOCK SWITCH CHECK".)

3	CHECK DOOR LOCK ACTUATOR

1. Disconnect door lock actuator connector.
2. Apply 12V direct current to door lock actuator and check operation.

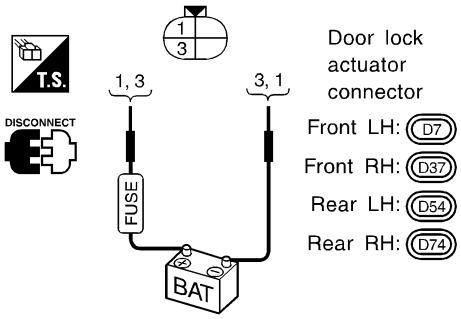

- **Door lock actuator operation:**
  Terminals between (+): 3 and (–): 1
  Unlocked → Locked
  Terminals between (+): 1 and (–): 3
  Locked → Unlocked

SEL318X

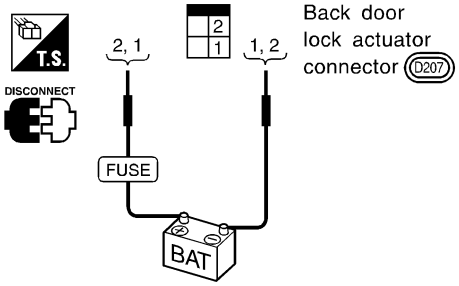

- **Back door lock actuator operation:**
  Terminals between (+): 1 and (–): 2
  Unlocked → Locked
  Terminals between (+): 2 and (–): 1
  Locked → Unlocked

SEL319X

OK or NG

OK	▶	Check harness for open or short between smart entrance control unit connector and door lock actuator.
NG	▶	Replace door lock actuator.

Component Parts and Harness Connector Location

NAEL0391

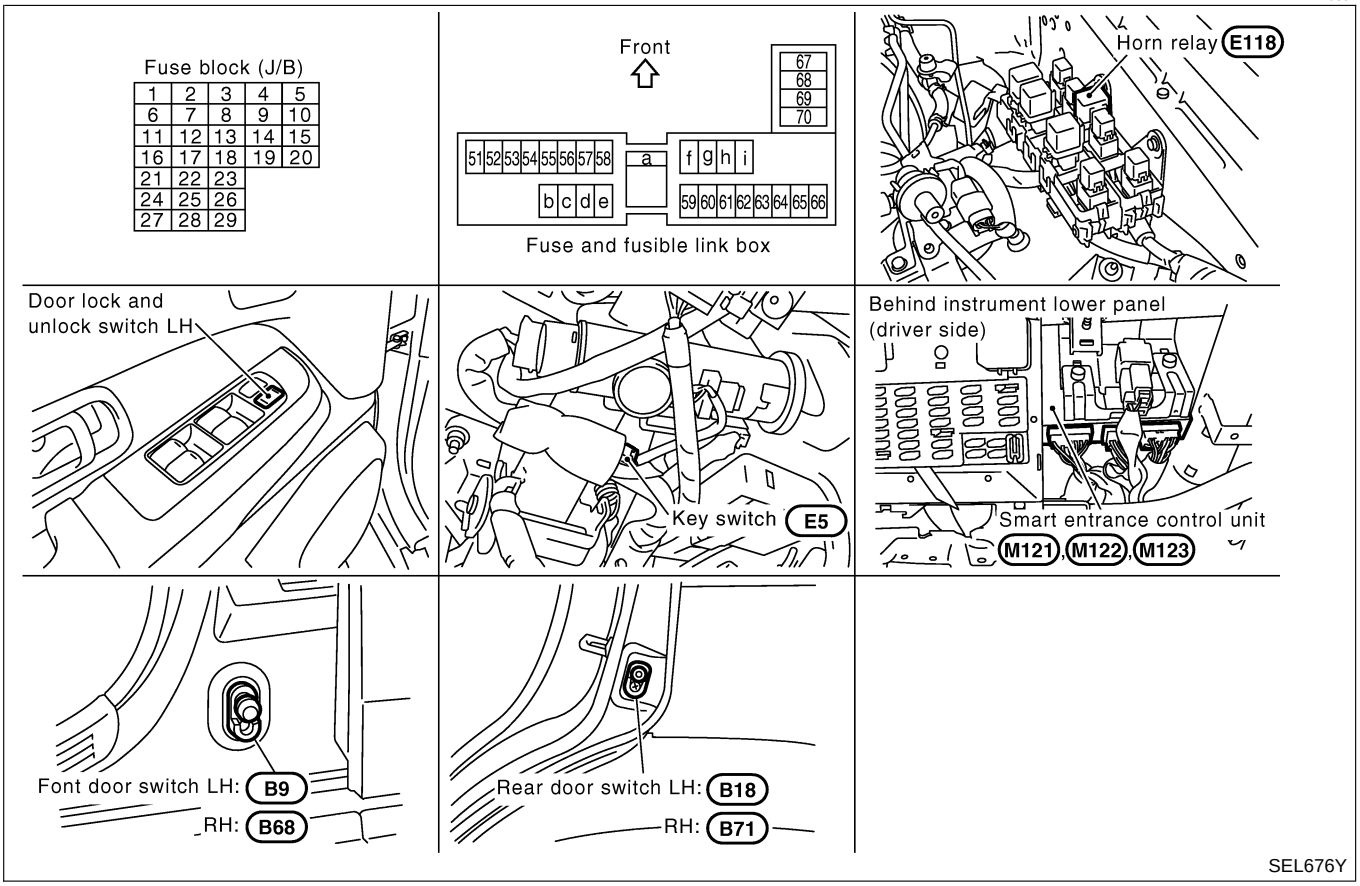

System Description

NAEL0392

INPUTS

NAEL0392S01

Power is supplied at all times

- to smart entrance control unit terminal 49 and
- to key switch terminal 2
- through 7.5A fuse [No. 24, located in the fuse block (J/B)], and
- to smart entrance control unit terminal 51
- through circuit breaker terminals 2 and 1 and
- through 40A fusible link (letter **f**, located in fuse and fusible link box).

When the key switch is ON (ignition key is inserted in key cylinder), power is supplied

- through key switch terminal 1
- to smart entrance control unit terminal 25.

When the front door switch LH is ON (door is OPEN), ground is supplied

- to smart entrance control unit terminal 1
- through front door switch LH terminal 1
- to front door switch LH terminal 2
- through body grounds B11, B22 and D210.

When the front door switch RH is ON (door is OPEN), ground is supplied

- to smart entrance control unit terminal 2
- through front door switch RH terminal 1

- to front door switch RH terminal 2
- through body grounds B55 and B75.

When the all doors switches are ON (door is OPEN), ground is supplied
- to smart entrance control unit terminal 3
- through front door switches terminal 3
- to front door switches case grounds, and
- through rear door switches terminal 1
- to rear door switches case grounds, and
- through back door switch terminal 2
- to back door switch terminal 1
- through body grounds B11, B22 and D210.

When lock/unlock switch LH is LOCK/UNLOCK, ground is supplied
- to power window main switch terminal 17
- through body grounds M4, M66, M111, M147 and M157.

Door lock or unlock operation signal is supplied
- through power window main switch terminal 14
- to smart entrance control unit terminal 33.

When lock/unlock switch RH is LOCK/UNLOCK, ground is supplied
- to front power window switch RH terminal 11
- through body grounds M4, M66, M111, M147 and M157.

Door lock or unlock operation signal is supplied
- through power window main switch terminal 14
- to smart entrance control unit terminal 33.

Remote controller signal is inputted to smart entrance control unit (The antenna of the system is combined with smart entrance control unit).
Smart entrance control unit is connected to power window main switch (door lock and unlock switch) and front power window switch RH (door lock and unlock switch) as serial link communication line. Refer to "POWER WINDOW SERIAL LINK" (EL-274).

OPERATION

NAEL0392S02

The remote keyless entry system controls operation of the
- power door lock
- auto door lock
- interior lamp
- panic alarm
- hazard and horn reminder
- power window opener

OPERATED PROCEDURE

NAEL0392S03

Power Door Lock Operation

NAEL0392S0301

Smart entrance control unit receives a LOCK signal from keyfob. Smart entrance control unit locks all doors with input of LOCK signal from keyfob.
When an UNLOCK signal is sent from keyfob once, driver's door will be unlocked.
Then, if an UNLOCK signal is sent from keyfob again within 5 seconds, all other door will be unlocked.
Select unlock mode can be changed by CONSULT-II (EL-324).

Auto Door Lock Operation

NAEL0392S0308

Auto lock function signal is sent for operation when any of the following signals are not sent within 5 minutes after the unlock signal is sent from the keyfob:
- when door switch is turned ON for open.
- when the ignition switch is turned ON.
- when the lock signal is sent from the keyfob.

Auto door lock mode can be changed by CONSULT-II (EL-324).

Hazard and Horn Reminder

NAEL0392S0302

Power is supplied at all times

- to horn relay terminals 1 and 3
- through 7.5A fuse (No. 52, located in the fusible link and fuse box), and
- to horn relay terminal 6
- through 10A fuse (No. 54, located in the fusible link and fuse box)

When smart entrance control unit receives LOCK or UNLOCK signal from keyfob with all doors closed, ground is supplied

- to horn relay terminal 2
- through smart entrance control unit terminal 42, and
- to smart entrance control unit terminals 47 and 48 from hazard warning lamp system.

Horn relay are now energized, and hazard warning lamp flashes and horn sounds as a reminder.
The hazard and horn reminder has C mode (horn chirp mode) and S mode (non-horn chirp mode).

Operating function of hazard and horn reminder

	Lock		Unlock	
	Hazard warning lamp flash	Horn sound	Hazard warning lamp flash	Horn sound
C MODE	Twice	Once	Once	—
S MODE	Twice	—	—	—
MODE 3	—	—	—	—
MODE 4	Twice	—	Once	—
MODE 5	Twice	Once	—	—
MODE 6	—	Once	Once	—

How to change hazard and horn reminder mode

With CONSULT-II
Hazard and horn reminder can be changed by CONSULT-II (EL-324).
Without CONSULT-II
When LOCK and UNLOCK signals are sent from the keyfob for more than 2 seconds at the same time, the hazard and horn reminder mode is changed and hazard warning lamp flashes and horn sounds as follows:

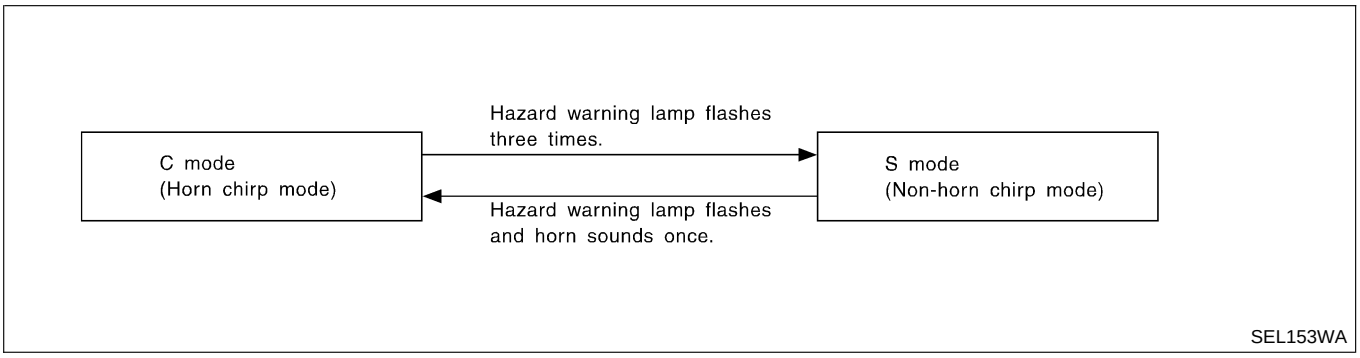

NOTE:
Reminder mode setting cannot be changed without CONSULT-II for MODES 3, 4, 5, and 6. However, C and S MODES can be changed without CONSULT-II.

Interior Lamp Operation

NAEL0392S0303

When the following input signals are both supplied:

- door switch CLOSED (when all the doors are closed);
- driver's door LOCKED;

remote keyless entry system turns on interior lamp and (for 30 seconds) with input of UNLOCK signal from keyfob.
For detailed description, refer to "INTERIOR, STEP, SPOT, VANITY MIRROR AND TRUNK ROOM LAMPS" (EL-98).

Panic Alarm Operation

NAEL0392S0304

When key switch is OFF (when ignition key is not inserted in key cylinder), remote keyless entry system turns horn and headlamp on and off intermittently with input of PANIC ALARM signal from keyfob.
The alarm automatically turns off after 25 seconds or when smart entrance control unit receives any signal from keyfob.
For detailed description, refer to "VEHICLE SECURITY SYSTEM" (EL-347).
The panic alarm button's pressing time on keyfob can be changed with CONSULT-II (EL-324).

Power Window Opener Operation

NAEL0392S0307

The front power windows open when the unlock button on keyfob is activated and kept pressed for more than 3 seconds with the ignition key OFF. The windows keep opening if the unlock button is continuously pressed. The power window opening stops when the following operations are carried out:

- When the unlock button is kept pressed more than 15 seconds.
- When the ignition switch is turned ON while the power window opening is operated.
- When the unlock button is released.

The unlock button's pressing time can be changed with CONSULT-II (EL-324).
Door Lock/Unlock and front power window down signal is sent from smart entrance control unit to power window main switch with power window serial link communication link. Refer to "POWER WINDOW SERIAL LINK" (EL-274). Signals are supplied

- through smart entrance control unit terminal 33
- to power window main switch terminal 14 and
- to front power window switch RH terminal 16.

Schematic

NAEL0393

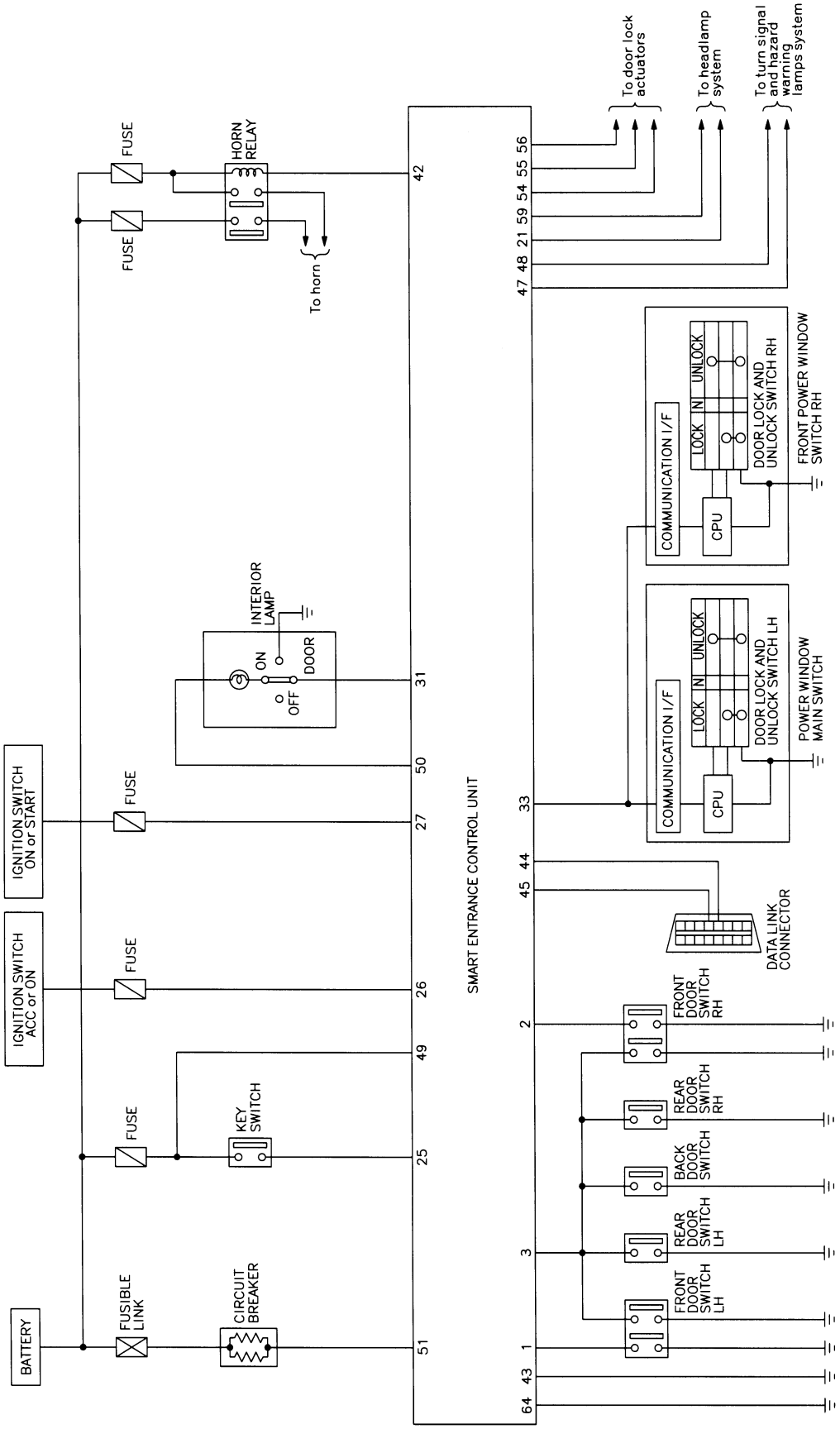

MEL433O

Wiring Diagram — KEYLESS —

NAEL0394

FIG. 1

NAEL0394S01

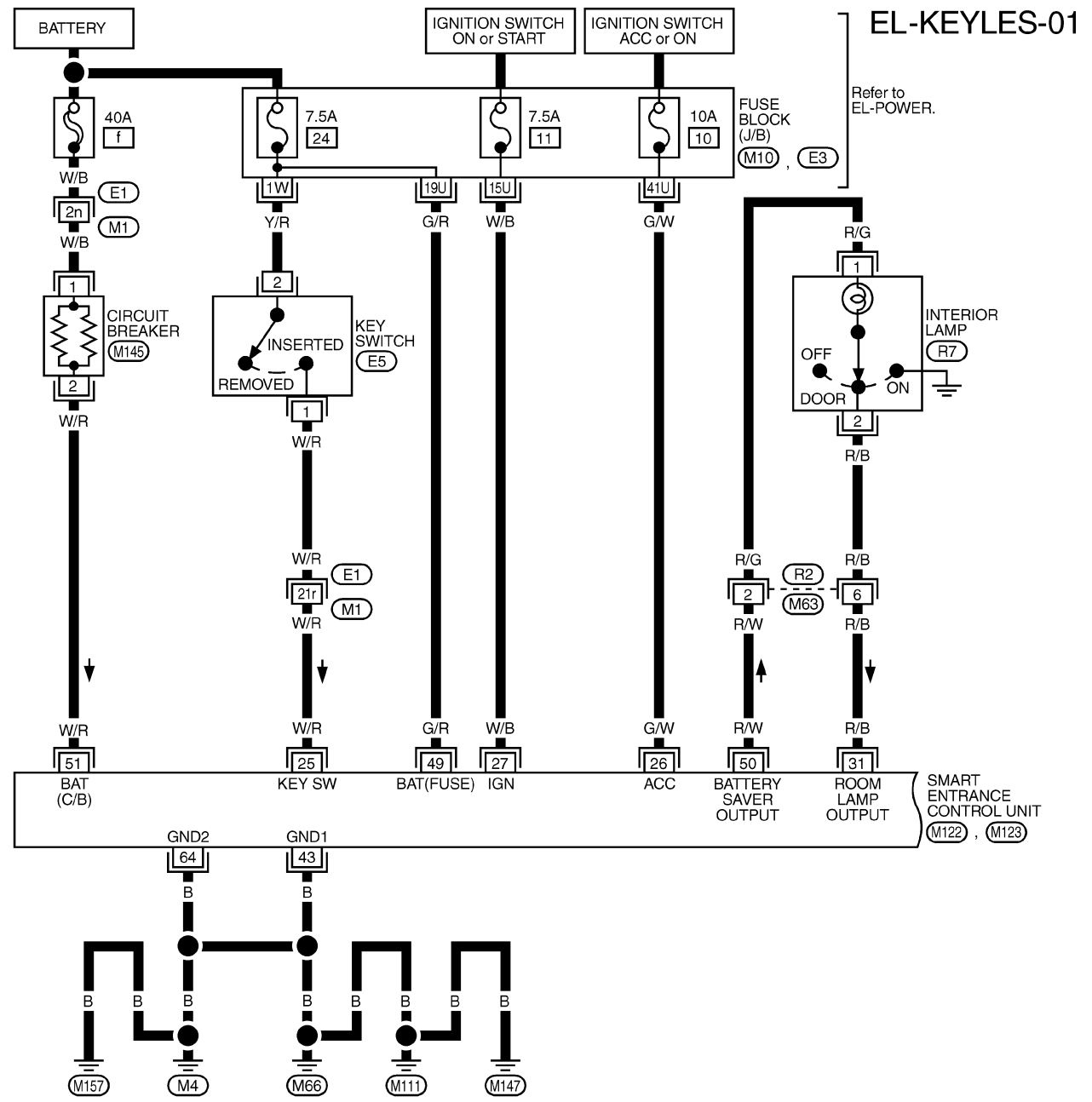

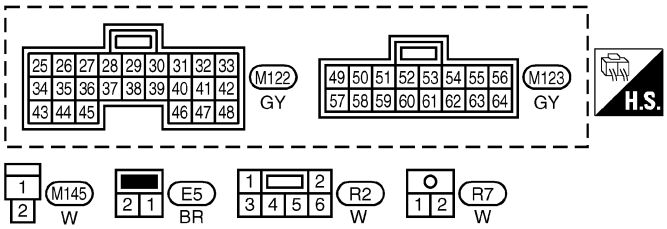

REFER TO THE FOLLOWING.
E1 - SUPER MULTIPLE JUNCTION (SMJ)
M10 , E3 - FUSE BLOCK - JUNCTION BOX (J/B)

MEL956R

FIG. 2

NAEL0394S02

EL-KEYLES-02

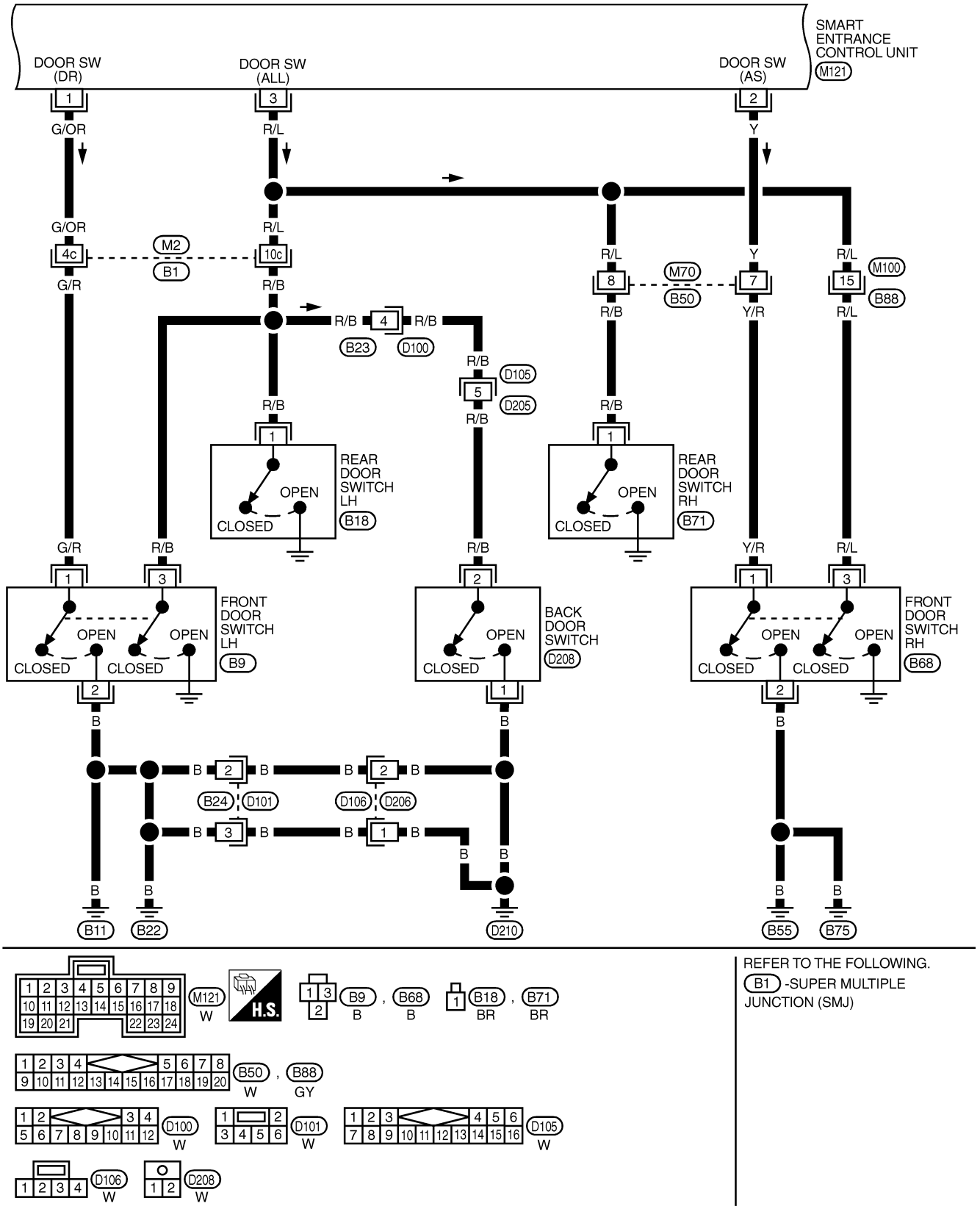

MEL031Q

FIG. 3

NAEL0394S03

EL-KEYLES-03

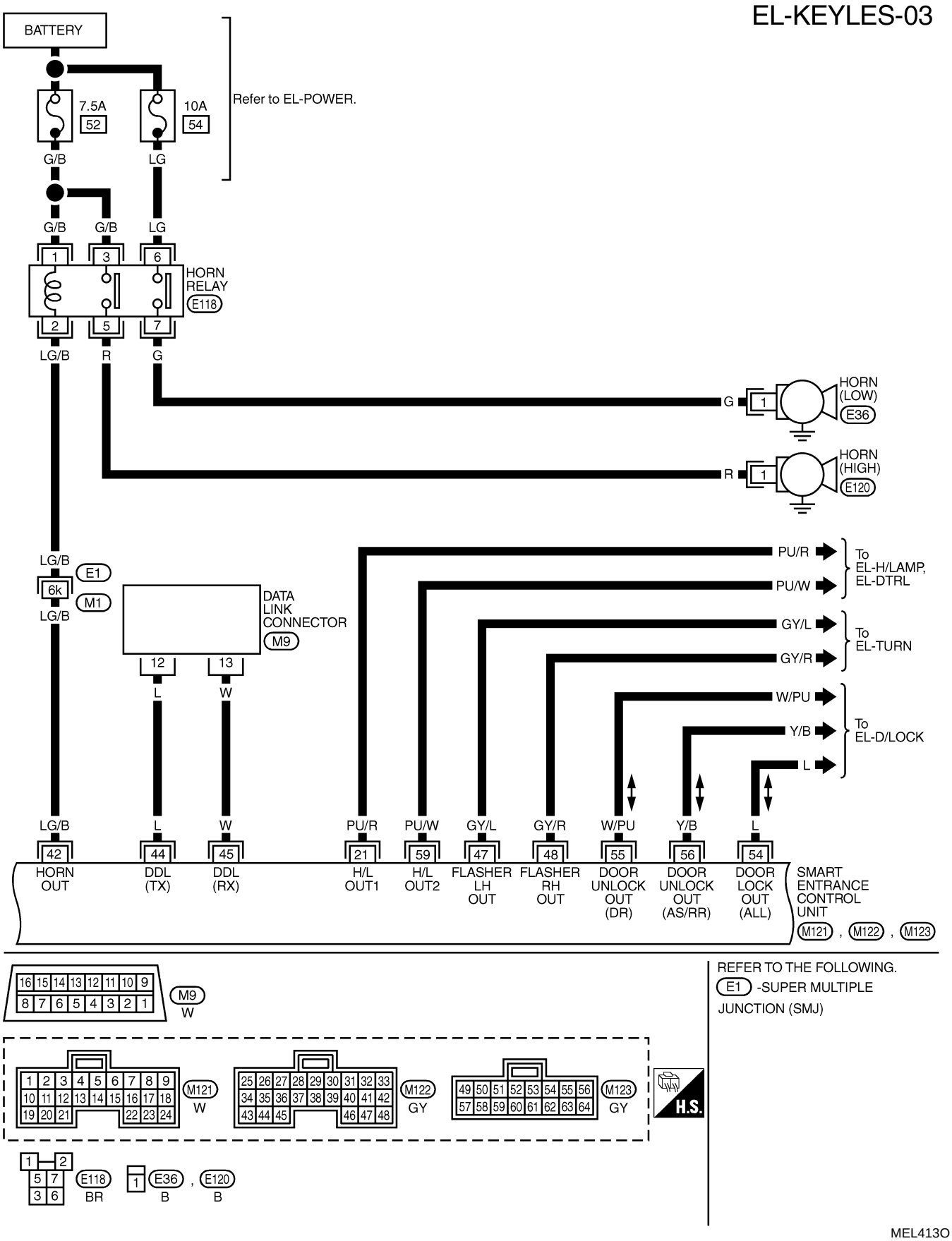

FIG. 4

NAEL0394S05

EL-KEYLES-04

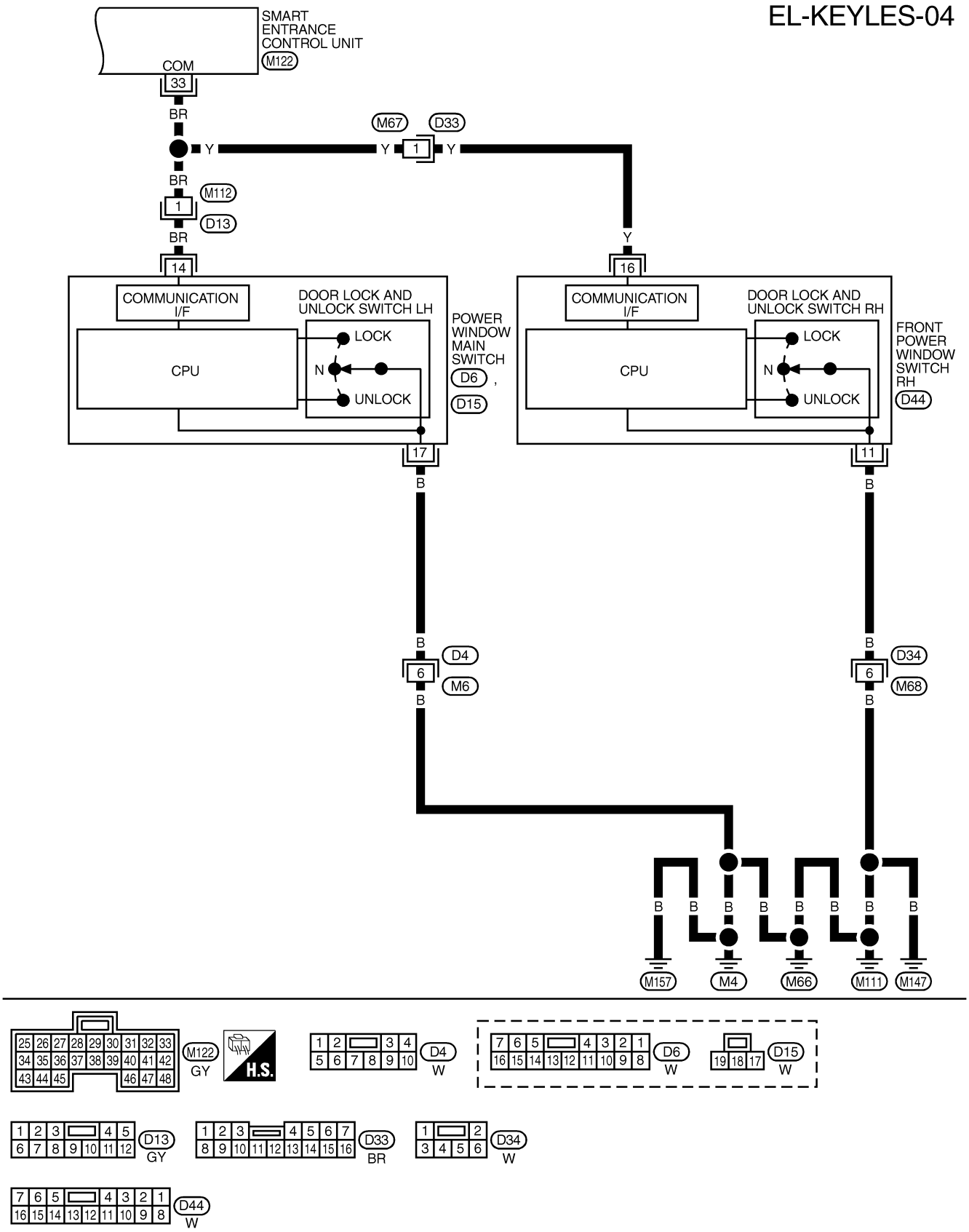

MEL032Q

CONSULT-II Inspection Procedure

NAEL0395

"MULTI REMOTE ENT"

NAEL0395S01

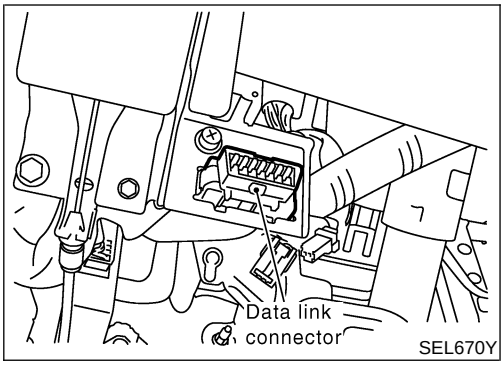

SEL670Y

1. Turn ignition switch "OFF".
2. Connect "CONSULT-II" and "CONSULT-II CONVERTER" to the data link connector.

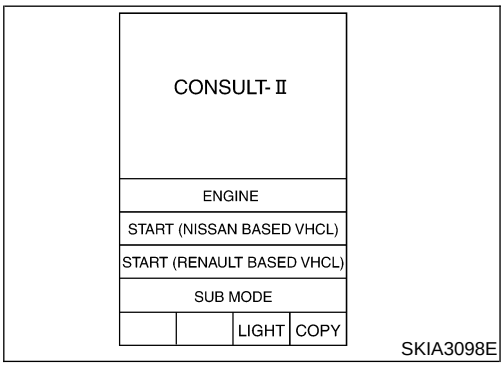

SKIA3098E

3. Turn ignition switch "ON".
4. Touch "START (NISSAN BASED VHCL)".

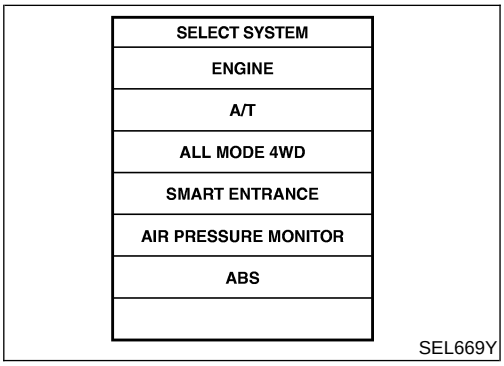

SEL669Y

5. Touch "SMART ENTRANCE".
   If "SMART ENTRANCE" is not indicated, go to GI-41, "CONSULT-II Data Link Connector (DLC) Circuit".

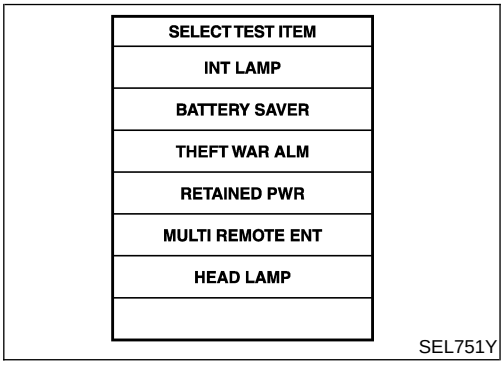

SEL751Y

6. Touch "MULTI REMOTE ENT".

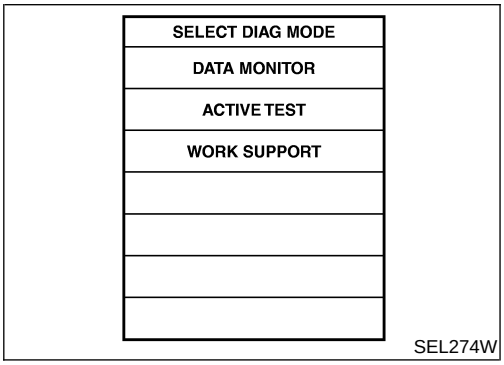

SEL274W

7. Select diagnosis mode.
   "DATA MONITOR", "ACTIVE TEST" and "WORK SUPPORT" are available.

CONSULT-II Application Items

NAEL0457

"MULTI REMOTE ENT"

NAEL0457S01

Data Monitor

NAEL0457S0101

Monitored Item	Description
IGN ON SW	Indicates [ON/OFF] condition of ignition switch in ON position.
ACC ON SW	Indicates [ON/OFF] condition of ignition switch in ACC position.
DOOR SW-RR	Indicates [ON/OFF] condition of rear door switch.
KEY ON SW	Indicates [ON/OFF] condition of key switch.
DOOR SW-DR	Indicates [ON/OFF] condition of front door switch LH.
DOOR SW-AS	Indicates [ON/OFF] condition of door switch RH.
LOCK SW DR/AS	Indicates [ON/OFF] condition of lock signal from lock/unlock switch LH and RH.
UNLK SW DR/AS	Indicates [ON/OFF] condition of unlock signal from lock/unlock switch LH and RH.
KEY CYL LK-SW	Indicates [ON/OFF] condition of lock signal from key cylinder switch.
LK BUTTON/SIG	Indicates [ON/OFF] condition of lock signal from keyfob.
UN BUTTON/SIG	Indicates [ON/OFF] condition of unlock signal from keyfob.
TRUNK BTN/SIG	Indicates [ON/OFF] condition of trunk open signal from keyfob.
PANIC BTN	Indicates [ON/OFF] condition of panic signal from keyfob.
UN BUTTON ON	Indicates [ON/OFF] condition of unlock switch form keyfob.
LK/UN BTN ON	Indicates [ON/OFF] condition of lock/unlock signal at the same time from keyfob.

NOTE:
Even though TRUNK BTN/SIG is actually displayed on the CONSULT-II screen, it is not equipped, therefore, they cannot be activated.

Active Test

NAEL0457S0102

Test Item	Description
INT/IGN ILLUM	This test is able to check interior lamp and ignition key hole illumination operation. The interior lamp and ignition key hole illumination are turned on when "ON" on CONSULT-II screen is touched.
HAZARD	This test is able to check hazard reminder operation. The hazard lamp turns on when "ON" on CONSULT-II screen is touched.
TRUNK OUTPUT	This test is able to check trunk lid opener actuator operation. The trunk is unlocked when "ON" on CONSULT-II screen is touched.
HORN	This test is able to check panic alarm and horn reminder operations. The alarm activate for 0.5 seconds after "ON" on CONSULT-II screen is touched.
HEAD LAMP	This test is able to check headlamps panic alarm operation. The headlamp illuminates for 0.5 seconds after "ON" on CONSULT-II screen is touched.
PW REMOTE DOWN SET	This test is able to check power window open operation. The front power windows activate for 10 seconds after "ON" on CONSULT-II screen is touched.

NOTE:
Even though TRUNK OUTPUT is actually displayed on the CONSULT-II screen, it is not equipped, therefore, they cannot be activated.

Work Support

NAEL0457S0103

Test Item	Description
REMO CONT ID CONFIR	It can be checked whether keyfob ID code is registered or not in this mode.
REMO CONT ID REGIST	Keyfob ID code can be registered.
REMO CONT ID ERASUR	Keyfob ID code can be erased.

Test Item	Description
MULTI ANSWER BACK SET	Hazard and horn reminder mode can be changed with this mode. Selects hazard and horn reminder mode among six steps (EL-316).
AUTO LOCK SET	Auto door lock mode can be selected among the following periods: ● MODE 1 (5 min.)/MODE 2 (OFF-Mode)/MODE 3 (1 min.)
PANIC ALARM SET	The panic alarm button's pressing time on keyfob can be selected among the following periods: ● MODE 1 (0.5 sec.)/MODE 2 (OFF-Mode)/MODE 3 (1.5 sec.)
TRUNK OPENER	The trunk lid opener button's pressing time on keyfob can be selected among the following periods: ● MODE 1 (0.5 sec.)/MODE 2 (OFF-Mode)/MODE 3 (1.5 sec.)
PW DOWN SET	The unlock button's pressing time on keyfob can be selected among the following periods: ● MODE 1 (3 sec.)/MODE 2 (OFF-Mode)/MODE 3 (5 sec.)

NOTE:
Even though TRUNK OPENER is actually displayed on the CONSULT-II screen, it is not equipped, therefore, they cannot be activated.

Trouble Diagnoses

NAEL0397

SYMPTOM CHART

NAEL0397S01

NOTE:

- Always check keyfob battery before replacing keyfob.
- The panic alarm operation of remote keyless entry system does not activate with the ignition key inserted in the ignition key cylinder.

Symptom	Diagnoses/service procedure	Reference page (EL-)
All functions of remote keyless entry system do not operate.	1. Keyfob battery and function check	327
	2. Power supply and ground circuit for smart entrance control unit check	328
	3. Replace keyfob. Refer to ID Code Entry Procedure. NOTE: If the result of keyfob function check with CONSULT-II is OK, keyfob is not malfunctioning.	340
The new ID of keyfob cannot be entered.	1. Keyfob battery and function check	327
	2. Key switch (insert) check	332
	3. Door switch check	330
	4. Door lock/unlock switch LH check	333
	5. Power supply and ground circuit for smart entrance control unit check	328
	6. Replace keyfob. Refer to ID Code Entry Procedure. NOTE: If the result of keyfob function check with CONSULT-II is OK, keyfob is not malfunctioning.	340
Door lock or unlock does not function. (If the power door lock system does not operate manually, check power door lock system. Refer to EL-301)	1. Keyfob battery and function check	327
	2. Replace keyfob. Refer to ID Code Entry Procedure. NOTE: If the result of keyfob function check with CONSULT-II is OK, keyfob is not malfunctioning.	340

Symptom	Diagnoses/service procedure	Reference page (EL-)
Hazard and horn reminder does not activate properly when pressing lock or unlock button of keyfob.	1. Keyfob battery and function check	327
	2. Hazard reminder check	334
	3. Horn reminder check* *: Horn chirp can be activated or deactivated. First check the horn chirp setting. Refer to "System Description", EL-316.	335
	4. Door switch check	330
	5. Replace keyfob. Refer to ID Code Entry Procedure. NOTE: If the result of keyfob function check with CONSULT-II is OK, keyfob is not malfunctioning.	340
Interior room lamp operation do not activate properly.	1. Interior room lamp operation check	337
	2. Door switch check	330
Panic alarm (horn and headlamp) does not activate when panic alarm button is continuously pressed.	1. Keyfob battery and function check	327
	2. Theft warning operation check. Refer to "PRELIMINARY CHECK" in "VEHICLE SECURITY SYSTEM".	358
	3. Key switch (insert) check	332
	4. Replace keyfob. Refer to ID Code Entry Procedure. NOTE: If the result of keyfob function check with CONSULT-II is OK, keyfob is not malfunctioning.	340

REMOTE CONTROLLER BATTERY AND FUNCTION CHECK

=NAEL0397S02

1	CHECK REMOTE CONTROLLER BATTERY

Remove battery (refer to EL-342) and measure voltage across battery positive and negative terminals, (+) and (−).

Voltage [V]:
2.5 - 3.0

NOTE:
Keyfob does not function if battery is not set correctly.

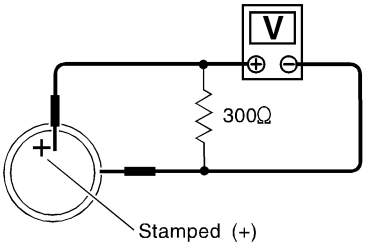

SEL237W

OK or NG

OK	▶	GO TO 2.
NG	▶	Replace battery.

2	CHECK REMOTE CONTROLLER FUNCTION

With CONSULT-II

Check keyfob function ("LK BUTTON/SIG", "UN BUTTON/SIG", "PANIC BTN", "UN BUTTON ON" and "LK/UN BTN ON") in "DATA MONITOR" mode with CONSULT-II.

DATA MONITOR	
MONITOR	
LK BUTTON/SIG	ON
UN BUTTON/SIG	ON
TRUNK BTN/SIG	ON
PANIC BTN	ON
UN BUTTON ON	ON
LK/UN BTN ON	ON

When pushing each button of keyfob, the corresponding monitor item should be turned as follows.

Condition	Monitor item	
Pushing LOCK	LK BUTTON/SIG	ON
Pushing UNLOCK	UN BUTTON/SIG	ON
Pushing TRUNK	TRUNK BTN/SIG	ON
Pushing PANIC	PANIC BTN/SIG	ON
Pushing UNLOCK	UN BUTTON ON	ON
Pushing LOCK and UNLOCK at the same time	LK/UN BTN ON	ON

SEL423Y

NOTE:
Even though TRUNK BTN/SIG is actually displayed on the CONSULT-II screen, it is not equipped, therefore, they cannot be activated.

OK or NG

OK	▶	Keyfob is OK. Further inspection is necessary. Refer to "SYMPTOM CHART", EL-325.
NG	▶	Replace keyfob. Refer to ID Code Entry Procedure.

POWER SUPPLY AND GROUND CIRCUIT CHECK

=NAEL0397S03

1	CHECK MAIN POWER SUPPLY CIRCUIT FOR SMART ENTRANCE CONTROL UNIT

1. Disconnect smart entrance control unit harness connector.
2. Check voltage between smart entrance control unit harness connector M123 terminal 49 (G/R) or 51 (W/R) and ground.

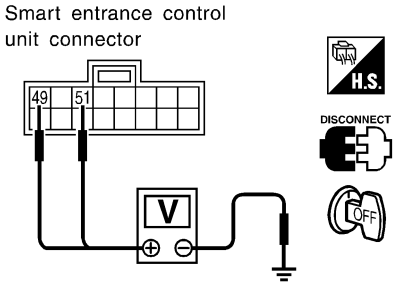

Battery voltage should exist.

SEL018Y

Refer to wiring diagram in EL-319.

OK or NG

OK	▶	GO TO 2.
NG	▶	**Check the following.** ● 40A fusible link (letter **f**, located in fuse and fusible link box) ● 7.5A fuse [No. 24, located in fuse block (J/B)] ● M145 circuit breaker ● Harness for open or short between smart entrance control unit and fuse

2	CHECK IGNITION SWITCH "ACC" CIRCUIT

1. Disconnect smart entrance control unit harness connector.
2. Check voltage between smart entrance control unit harness connector M122 terminal 26 (G/W) and ground while ignition switch is "ACC".

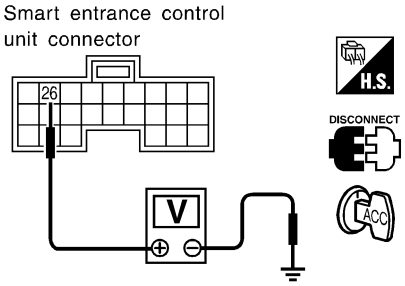

Battery voltage should exist.

SEL019Y

Refer to wiring diagram in EL-319.

OK or NG

OK	▶	GO TO 3.
NG	▶	**Check the following.** ● 10A fuse [No. 10, located in fuse block (J/B)] ● Harness for open or short between smart entrance control unit and fuse

3	CHECK GROUND CIRCUIT FOR SMART ENTRANCE CONTROL UNIT

Check continuity between smart entrance control unit harness connector M122 terminal 43 (B) or M123 terminal 64 (B) and ground.

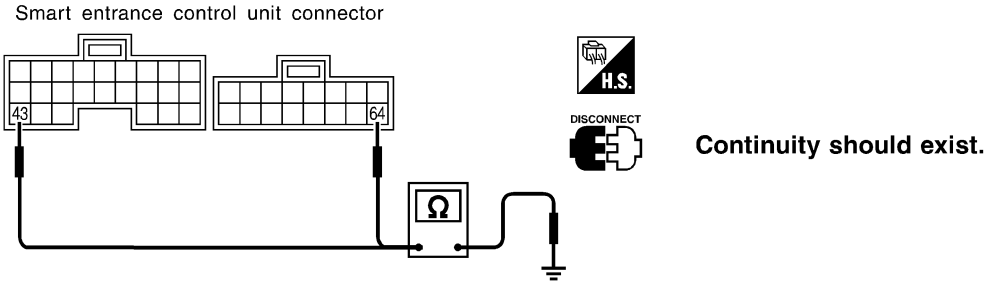

SEL020Y

Refer to wiring diagram in EL-319.

OK or NG

OK	▶	Power supply and ground circuits are OK.
NG	▶	Check ground harness.

DOOR SWITCH CHECK

=NAEL0397S04

1 CHECK DOOR SWITCH INPUT SIGNAL

With CONSULT-II

Check door switches ("DOOR SW-RR", "DOOR SW-DR" and "DOOR SW-AS") in "DATA MONITOR" mode with CONSULT-II.

DATA MONITOR	
MONITOR	
DOOR SW-RR	OFF
DOOR SW-DR	OFF
DOOR SW-AS	OFF

	Monitor item	Condition	Condition
DOOR SW-RR	Rear doors switch	Open	ON
		Closed	OFF
DOOR SW-DR	Door switch LH	Open	ON
		Closed	OFF
DOOR SW-AS	Door switch RH	Open	ON
		Closed	OFF

SEL024Y

Without CONSULT-II

Check voltage between smart entrance control unit harness connector M121 terminals 1 (G/OR), 2 (Y) or 3 (R/L) and ground.

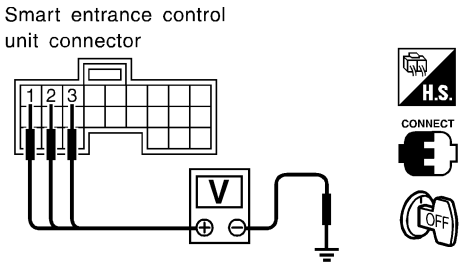

	Terminals (+)	Terminals (–)	Condition	Voltage [V]
Front door switch LH	1	Ground	Open	0
			Closed	Approx. 12
Front door switch RH	2	Ground	Open	0
			Closed	Approx. 5
Rear and back door switches	3	Ground	Open	0
			Closed	Approx. 5

SEL021YD

Refer to wiring diagram in EL-320.

OK or NG

OK	▶	Door switch is OK.
NG	▶	GO TO 2.

2	CHECK DOOR SWITCH

1. Disconnect door switch harness connector.
2. Check the following.

- Continuity between front door switch connector B9 (LH) or B68 (RH) terminals 1 and 2
- Continuity between front door switch connector B9 (LH) or B68 (RH) terminal 3 and ground
- Continuity between back door switch connector D208 terminals 1 and 2
- Continuity between rear door switch connector B18 (LH) or B71 (RH) terminal 1 and ground

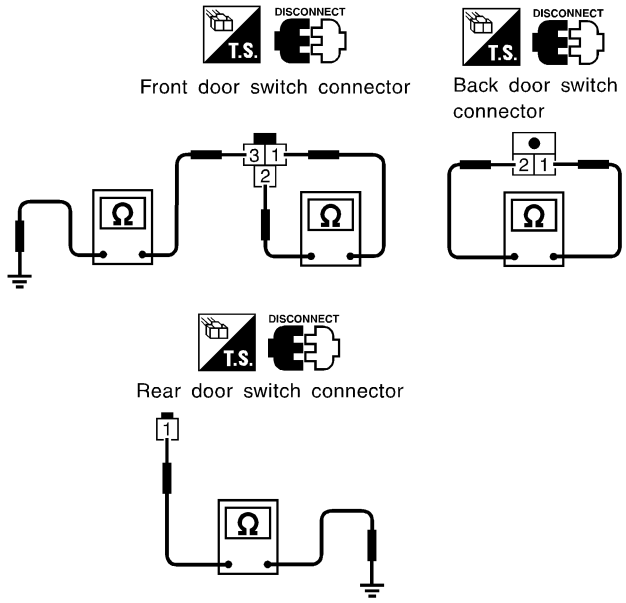

	Terminals	Condition	Continuity
Front door switches	1 - 2	Closed	No
	3 - Ground	Open	Yes
Back door switch	1 - 2	Closed	No
		Open	Yes
Rear door switches	1 - Ground	Closed	No
		Open	Yes

SEL287YA

OK or NG

OK	▶	**Check the following.** ● Door switch ground circuit (Front or back door) or door switch ground condition (Rear door) ● Harness for open or short between smart entrance control unit and door switch
NG	▶	Replace door switch.

KEY SWITCH (INSERT) CHECK

=NAEL0397S05

1	CHECK KEY SWITCH INPUT SIGNAL

With CONSULT-II

Check key switch ("KEY ON SW") in "DATA MONITOR" mode with CONSULT-II.

DATA MONITOR	
MONITOR	
KEY ON SW	ON

When key is inserted to ignition key cylinder:

KEY ON SW ON

When key is removed from ignition key cylinder:

KEY ON SW OFF

SEL315W

Without CONSULT-II

Check voltage between control unit harness connector M122 terminal 25 (W/R) and ground.

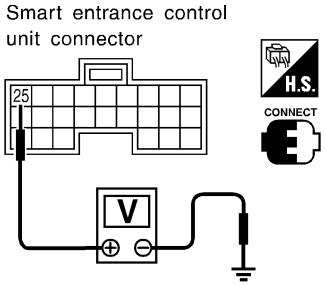

Voltage [V]:

Condition of key switch : Key is inserted.

Approx. 12

Condition of key switch : Key is removed.

0

SEL022Y

Refer to wiring diagram in EL-319.

OK or NG

OK	▶	Key switch is OK.
NG	▶	GO TO 2.

2	CHECK KEY SWITCH (INSERT)

Check continuity between key switch connector terminals 1 and 2.

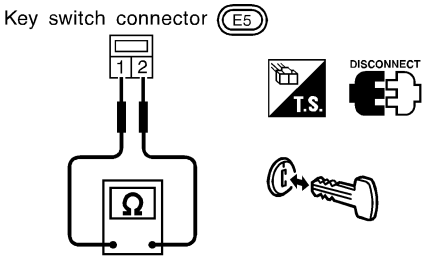

Continuity:

Condition of key switch: Key is inserted.

Yes

Condition of key switch: Key is removed.

No

SEL308X

OK or NG

OK	▶	**Check the following.** ● 7.5A fuse [No. 24, located in fuse block (J/B)] ● Harness for open or short between key switch and fuse ● Harness for open or short between smart entrance control unit and key switch
NG	▶	Replace key switch.

DOOR LOCK/UNLOCK SWITCH LH CHECK

=NAEL0397S06

1	CHECK DOOR LOCK/UNLOCK SWITCH INPUT SIGNAL

With CONSULT-II

Check door lock/unlock switch ("LOCK SW DR/AS"/"UNLK SW DR/AS") in "DATA MONITOR" mode with CONSULT-II.

DATA MONITOR	
MONITOR	
LOCK SW DR/AS	OFF
UNLK SW DR/AS	OFF

When lock/unlock switch is turned to LOCK:
LOCK SW DR/AS ON

When lock/unlock switch is turned to UNLOCK:
UNLK SW DR/AS ON

SEL341W

Without CONSULT-II

1. Remove key from ignition key cylinder.
2. Check the signal between smart entrance control unit harness connector M122 terminal 33 (BR) and ground with an oscilloscope when door lock/unlock switch is turned "LOCK" or "UNLOCK".
3. Make sure signals shown in the figure below can be detected during the first 10 sec. just after door lock/unlock switch is turned to "LOCK" or "UNLOCK".

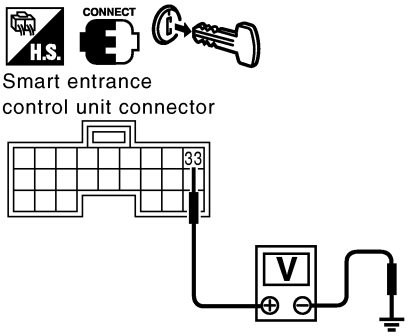

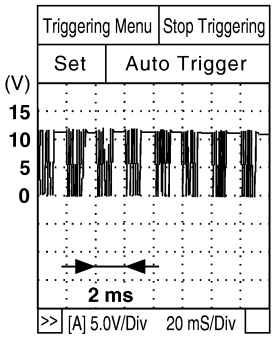

Voltage:
12V→9V (10 sec.) measurement by analog circuit tester.

SEL699YA

Refer to wiring diagram in EL-319.

OK or NG

OK	▶	Door lock/unlock switch is OK.
NG	▶	**Check the following.** ● Ground circuit for each front power window switch ● Harness for open or short between each front power window switch and smart entrance control unit connector If above systems are normal, replace the front power window switch.

HAZARD REMINDER CHECK

=NAEL0397S07

1	CHECK HAZARD INDICATOR	
Check if hazard indicator flashes with hazard switch.		
Does hazard indicator operate?		
Yes	▶	GO TO 2.
No	▶	Check "hazard indicator" circuit.

2	CHECK HAZARD REMINDER OPERATION WITH CONSULT-II	

With CONSULT-II

1. Select "ACTIVE TEST" in "MULTI REMOTE ENT" with CONSULT-II.
2. Select "HAZARD" and touch "ON".

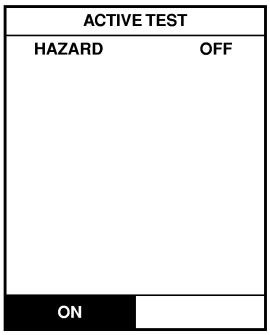

Hazard indicator should illuminate.

SEL347W

NOTE: If CONSULT-II is not available, skip this procedure and go to the next step.

OK or NG

OK	▶	Hazard reminder operation is OK.
NG	▶	Replace smart entrance control unit.

3	CHECK HAZARD REMINDER OPERATION WITHOUT CONSULT-II	

Without CONSULT-II

Apply ground to smart entrance control unit harness connector M122 terminal 47 (GY/L) and 48 (GY/R).

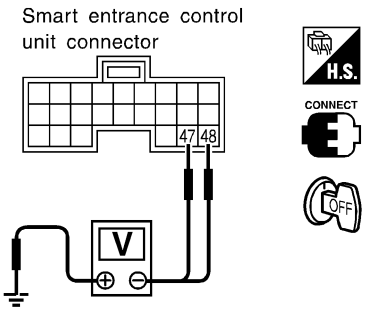

Condition of lock or unlock button	Voltage (V)
Push.	Approx. more than 0 - 12
Do not push.	0

SEL027Y

Refer to wiring diagram in EL-321.

OK or NG

OK	▶	System is OK.
NG	▶	Replace smart entrance control unit.

HORN REMINDER CHECK

=NAEL0397S08

1	CHECK HORN	
Check if horn sounds with horn switch.		
Does horn operate?		
Yes	▶	GO TO 2.
No	▶	Check horn circuit.

2	CHECK HORN REMINDER OPERATION WITH CONSULT-II	

With CONSULT-II

1. Select "ACTIVE TEST" in "MULTI REMOTE ENT" with CONSULT-II.
2. Select "HORN" and touch "ON".

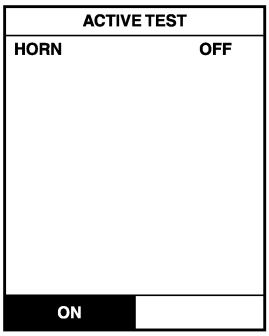

Horn should sound.

SEL451Y

NOTE: If CONSULT-II is not available, skip this procedure and go to the next step.

OK or NG		
OK	▶	Horn reminder operation is OK.
NG	▶	GO TO 4.

3	CHECK HORN REMINDER OPERATION WITHOUT CONSULT-II	

Without CONSULT-II

1. Disconnect smart entrance control unit harness connector.
2. Apply ground to smart entrance control unit harness connector M122 terminal 42 (LG/B).

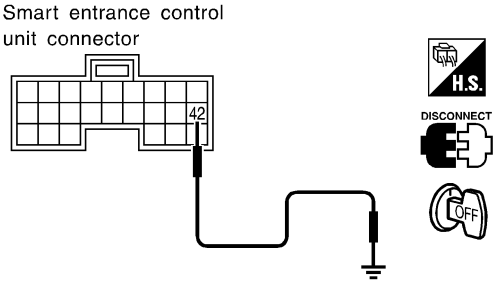

SEL028Y

Refer to wiring diagram in EL-321.

Does horn sound?		
Yes	▶	Replace smart entrance control unit.
No	▶	GO TO 4.

4	CHECK HORN RELAY	
Check horn relay.		
	OK or NG	
OK	▶	GO TO 5.
NG	▶	Replace horn relay.

5	CHECK POWER SUPPLY FOR HORN RELAY	
1. Disconnect horn relay harness connector. 2. Check voltage between horn relay harness connector E118 terminal 1 (G/B) and ground.		
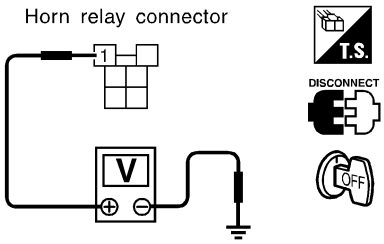	**Battery voltage should exist.**	
SEL326XB		
	OK or NG	
OK	▶	GO TO 6.
NG	▶	**Check the following.** ● 7.5A fuse [No. 52, located in fuse block (J/B)] ● Harness for open or short between horn relay and fuse

6	CHECK HORN RELAY CIRCUIT	
1. Disconnect horn relay harness connector. 2. Check voltage between horn relay harness connector E118 terminals 3 (G/B) and 5 (R). 3. Check voltage between horn relay harness connector E118 terminals 6 (LG) and 7 (G).		
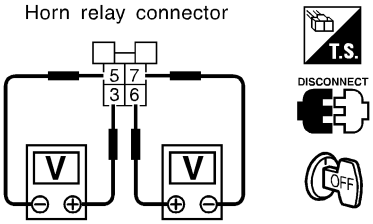	**Battery voltage should exist.**	
SEL327XB		
	OK or NG	
OK	▶	Check harness for open or short between smart entrance control unit and horn relay.
NG	▶	**Check the following.** ● Harness for open or short between horn relay and fuse ● 7.5A fuse (No. 52, located in the fuse and fusible link box) ● 10A fuse (No. 54, located in the fuse and fusible link box)

INTERIOR ROOM LAMP OPERATION CHECK

=NAEL0397S09

1	CHECK ROOM INTERIOR LAMP	
Check if the interior room lamp switch is in the "ON" position and the lamp illuminates. **Does interior room lamp illuminate?**		
Yes	▶	GO TO 2.
No	▶	**Check the following.** ● Harness for open or short between smart entrance control unit and interior room lamp ● Interior room lamp

2	CHECK INTERIOR ROOM LAMP OPERATION

With CONSULT-II

1. Select "ACTIVE TEST" in "MULTI REMOTE ENT" with CONSULT-II.
2. Select "INT/IGN ILLUM" and touch "ON".

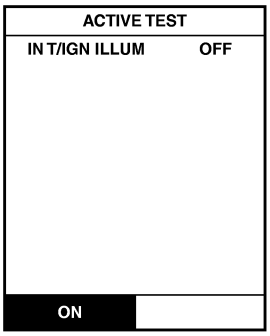

Interior room lamp should illuminate.

SEL312Y

Without CONSULT-II

Push unlock button of keyfob with all doors closed and driver's door locked, and check voltage between smart entrance control unit harness connector M122 terminal 31 (R/B) and ground.

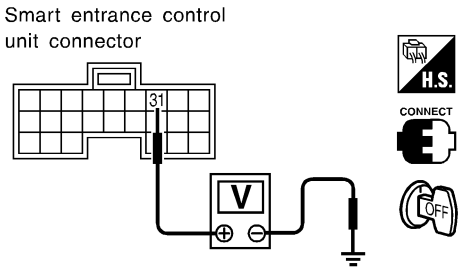

Voltage [V]:
Unlock button is pushed.
0 (For approx. 30 seconds.)
Unlock button is not pushed.
Battery voltage

SEL029Y

Refer to wiring diagram in EL-319.

OK or NG

OK	▶	System is OK.
NG	▶	Check harness for open or short between smart entrance control unit and interior room lamp.

ID Code Entry Procedure

=NAEL0398

KEYFOB ID SET UP WITH CONSULT-II

NAEL0398S01

NOTE:

If a keyfob is lost, the ID code of the lost keyfob must be erased to prevent unauthorized use. When the ID code of a lost keyfob is not known, all keyfob ID codes should be erased. After all ID codes are erased, the ID codes of all remaining and/or new keyfob must be re-registered.

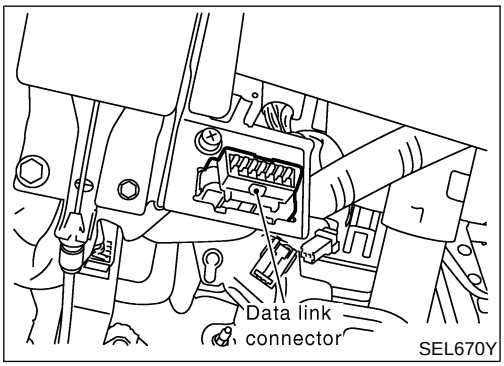

SEL670Y

1. Turn ignition switch “OFF”.
2. Connect “CONSULT-II” and “CONSULT-II CONVERTER” to the data link connector.

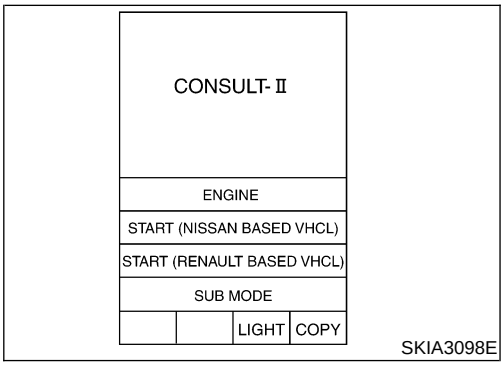

SKIA3098E

3. Turn ignition switch “ON”.
4. Touch “START (NISSAN BASED VHCL)”.

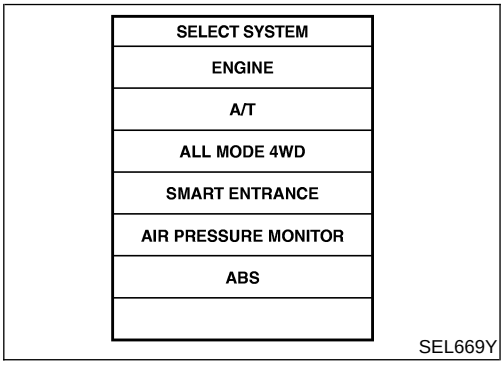

SEL669Y

5. Touch “SMART ENTRANCE”.
   If “SMART ENTRANCE” is not indicated, go to GI-41, “CONSULT-II Data Link Connector (DLC) Circuit”.

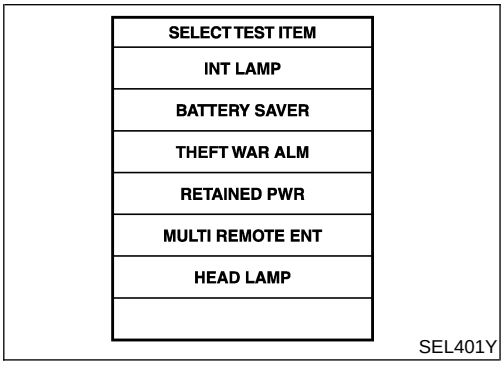

SEL401Y

6. Touch “MULTI REMOTE ENT”.

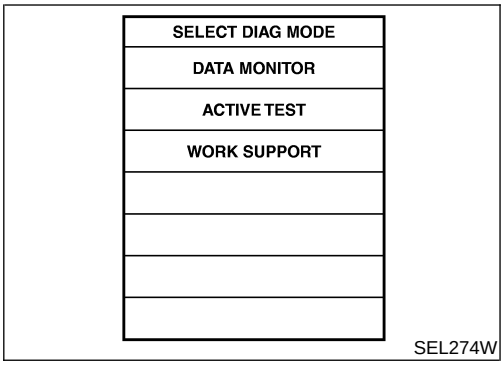

7. Touch "WORK SUPPORT".

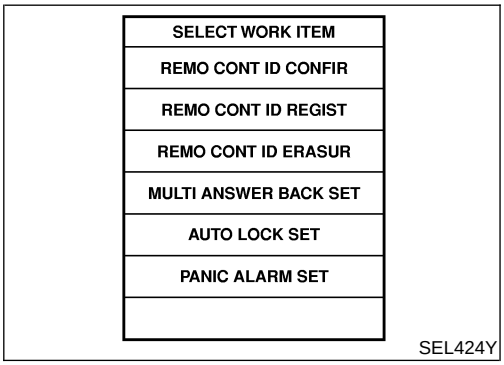

8. The items are shown on the figure at left can be set up.

- "REMO CONT ID CONFIR"
  Use this mode to confirm if a keyfob ID code is registered or not.
- "REMO CONT ID REGIST"
  Use this mode to register a keyfob ID code.

NOTE:
Register the ID code when keyfob or smart entrance control unit is replaced, or when additional keyfob is required.

- "REMO CONT ID ERASUR"
  Use this mode to erase a keyfob ID code.

Refer to the EL-324, "WORK SUPPORT" in "CONSULT-II Application Items" for the following items.

- "MULTI ANSWER BACK SET"
- "AUTO LOCK SET"
- "PANIC ALARM SET"
- "TRUNK OPENER"
- "PW DOWN SET"

NOTE:
Even though TRUNK OPENER is actually displayed on the CONSULT-II screen, it is not equipped, therefore, they cannot be activated.

KEYFOB ID SET UP WITHOUT CONSULT-II

NAEL0398S02

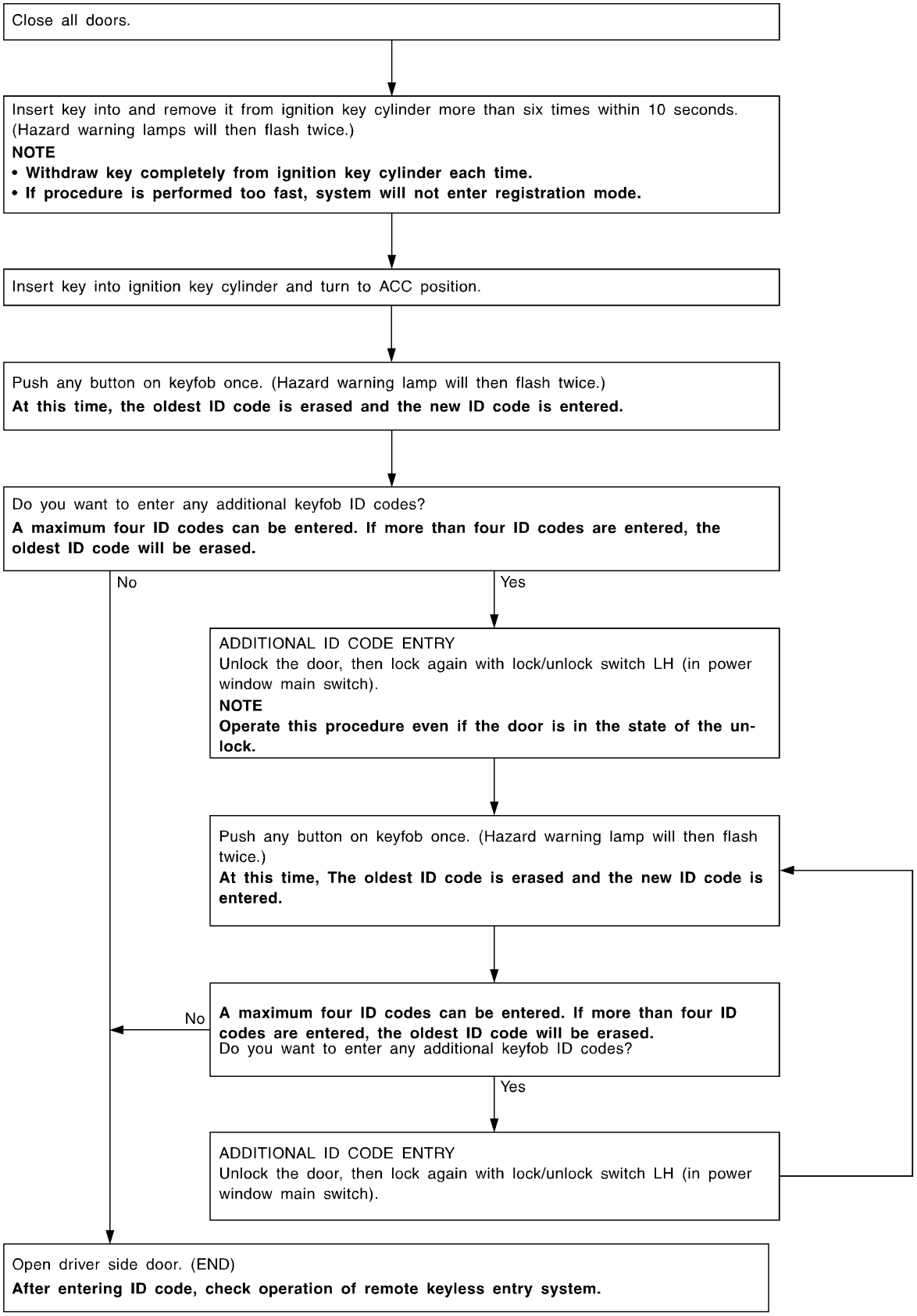

SEL170YA

NOTE:

- If a keyfob is lost, the ID code of the lost keyfob must be erased to prevent unauthorized use. A specific ID code can be erased with CONSULT-II. However, when the ID code of a lost keyfob is not known, all keyfob ID codes should be erased. After all ID codes are erased, the ID codes of all remaining and/or new keyfob must be re-registered.
  To erase all ID codes in memory, register one ID code (keyfob) four times. After all ID codes are erased, the ID codes of all remaining and/or new keyfob must be re-registered.
- When registering an additional keyfob, the existing ID codes in memory may or may not be erased. If four ID codes are stored in memory, when an additional code is registered, only the oldest code is erased. If less than four ID codes are stored in memory, when an additional ID code is registered, the new ID code is added and no ID codes are erased.
- If you need to activate more than two additional new keyfob, repeat the procedure "Additional ID code entry" for each new keyfob.
- Entry of maximum four ID codes is allowed. When more than four ID codes are entered, the oldest ID code will be erased.
- Even if the same ID code that is already in the memory is input, the same ID code can be entered. The code is counted as an additional code.

Keyfob Battery Replacement

NAEL0399

NOTE:
- Be careful not to touch the circuit board or battery terminal.
- The keyfob is water-resistant. However, if it does get wet, immediately wipe it dry.

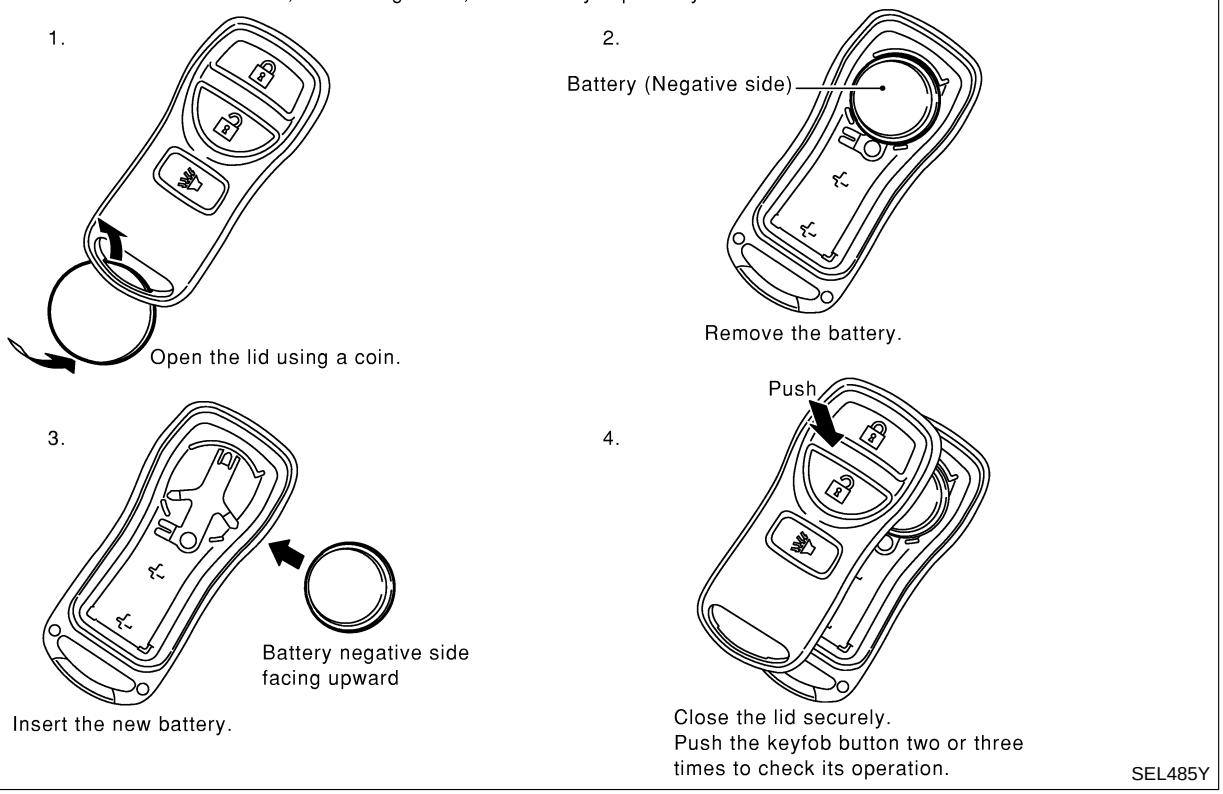

Component Parts and Harness Connector Location

NAEL0400

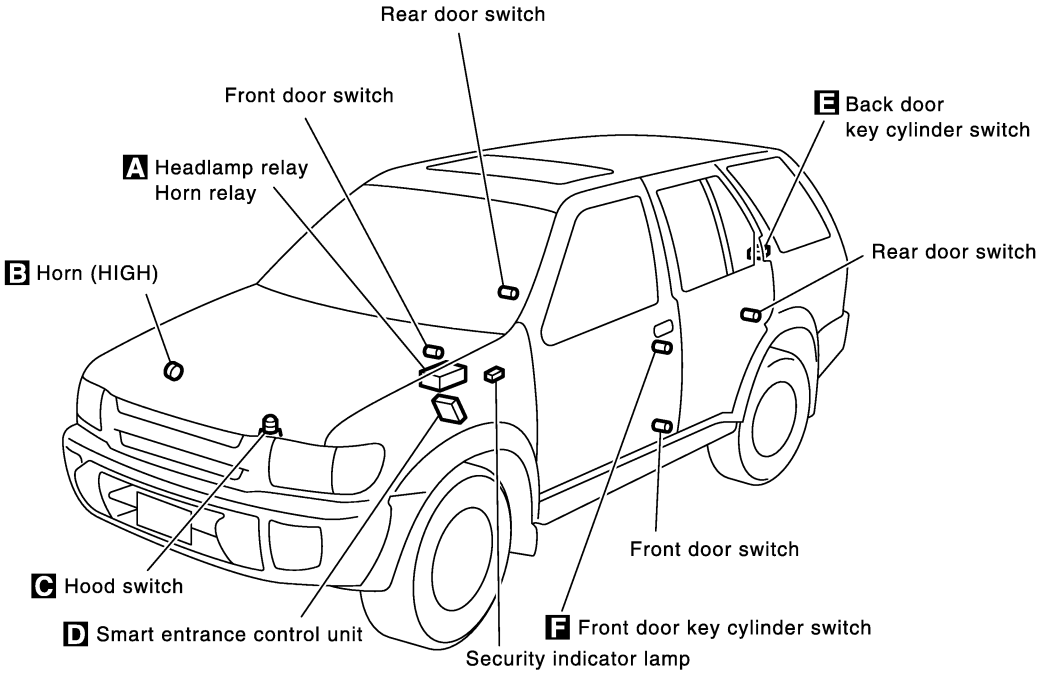

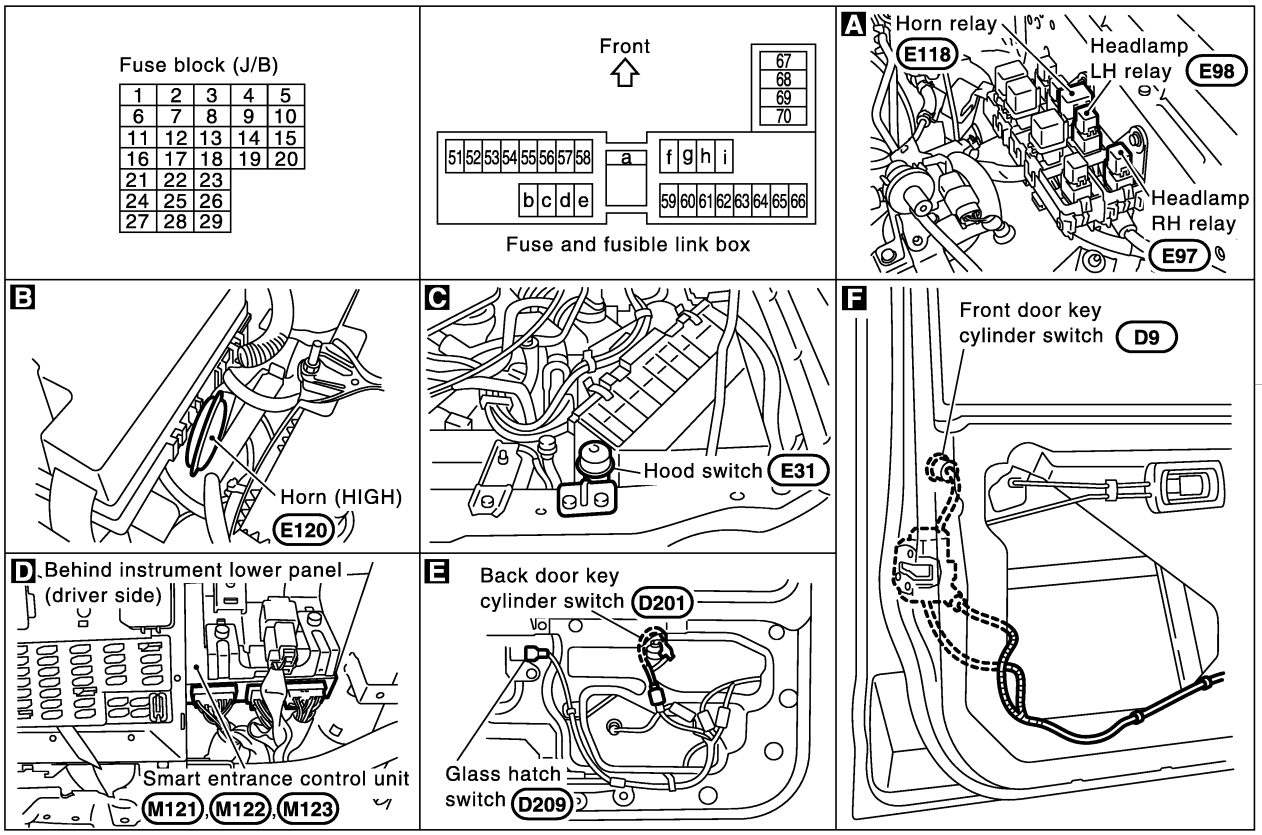

SEL677Y

System Description

NAEL0401

DESCRIPTION

NAEL0401S01

1. Operation Flow

NAEL0401S0101

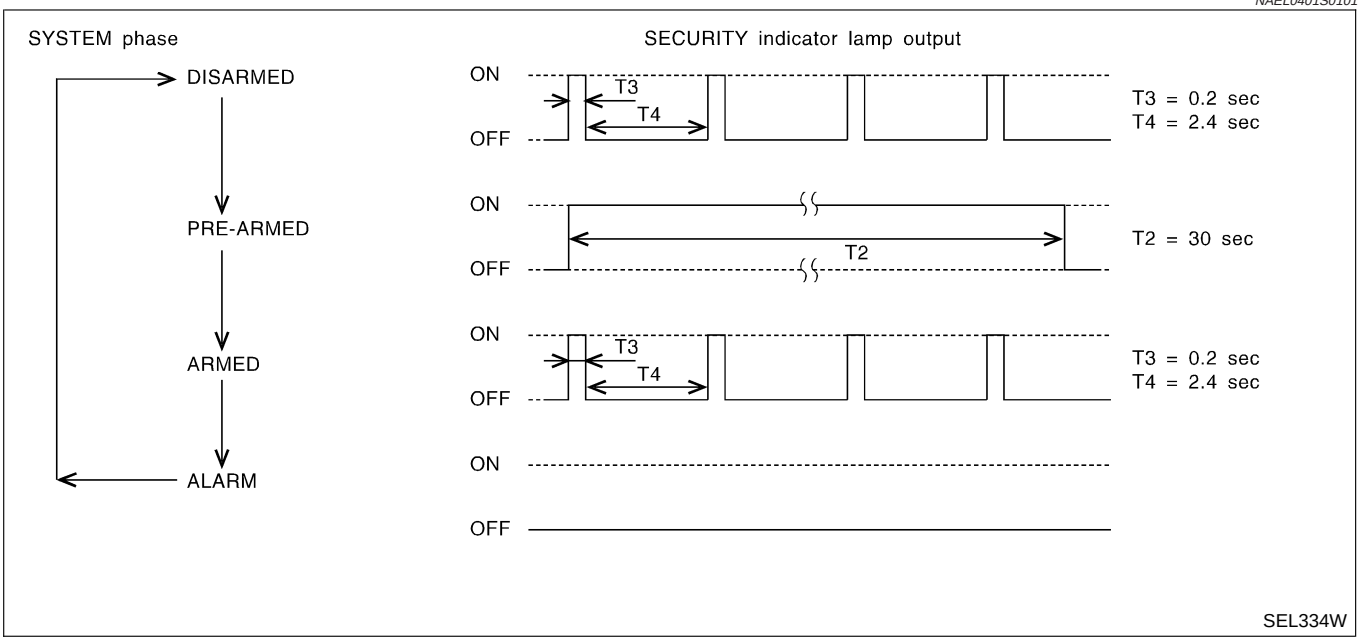

2. Setting The Vehicle Security System

NAEL0401S0102

Initial condition

1) Ignition switch is in OFF position.

Disarmed phase

When the vehicle security system is in the disarmed phase, the security indicator lamp blinks every 2.6 seconds.

Pre-armed phase and armed phase

When the following operation 1) or 2) is performed, the vehicle security system turns into the “pre-armed” phase. (The security indicator lamp illuminates.)

1) Smart entrance control unit receives LOCK signal from key cylinder switch or keyfob after hood, glass hatch and all doors are closed.
2) Hood, glass hatch and all doors are closed after front doors are locked by key, lock/unlock switch or multi-remote controller.

After about 30 seconds, the system automatically shifts into the “armed” phase (the system is set). (The security indicator lamp blinks every 2.6 seconds.)

3. Canceling The Set Vehicle Security System

NAEL0401S0103

When the following 1) or 2) operation is performed, the armed phase is canceled.

1) Unlock the doors with the key or keyfob.
2) Open the glass hatch with the key or keyfob.

4. Activating The Alarm Operation of The Vehicle Security System

NAEL0401S0104

Make sure the system is in the armed phase. (The security indicator lamp blinks every 2.6 seconds.)
When the following operation 1) or 2) is performed, the system sounds the horns and flashes the headlamps for about 50 seconds.

1) Engine hood, glass hatch or any door is opened during armed phase.
2) Disconnecting and connecting the battery connector before canceling armed phase.

POWER SUPPLY AND GROUND

NAEL0401S02

Power is supplied at all times

- through 7.5A fuse [No. 24, located in the fuse block (J/B)]
- to security indicator lamp terminal 1, and
- to smart entrance control unit terminal 49.

With the ignition switch in the ON or START position, power is supplied
- through 7.5A fuse [No. 11, located in the fuse block (J/B)]
- to smart entrance control unit terminal 27.

With the ignition switch in the ACC or ON position, power is supplied
- through 10A fuse [No. 10, located in the fuse block (J/B)]
- to smart entrance control unit terminal 26.

Ground is supplied
- to smart entrance control unit terminals 43 and 64
- through body grounds M4, M66, M111, M147 and M157.

INITIAL CONDITION TO ACTIVATE THE SYSTEM

NAEL0401S03

The operation of the vehicle security system is controlled by the doors, hood and glass hatch.

Pattern A

NAEL0401S0301

To activate the vehicle security system, the smart entrance control unit must receive signals indicating the doors, hood and glass hatch are closed.
When a door is open, smart entrance control unit terminal 1, 2 or 3 receives a ground signal from each door switch.
When the hood is open, smart entrance control unit terminal 6 receives a ground signal
- from terminal 1 of the hood switch
- through body grounds E13 and E41.

When the glass hatch is open, smart entrance control unit terminal 13 receives a ground signal
- from terminal 1 of the glass hatch switch
- through body grounds B11, B22 and D210.

When smart entrance control unit receives LOCK signal from key cylinder switch or keyfob and none of the described conditions exist, the vehicle security system will automatically shift to armed mode.

Pattern B

NAEL0401S0302

To activate the vehicle security system, the smart entrance control unit must receive signal indicating any door (including hood and glass hatch) is opened.
When the front doors are locked with key, lock/unlock switch or keyfob and then all doors are closed, the vehicle security system will automatically shift to armed mode.

VEHICLE SECURITY SYSTEM ACTIVATION

NAEL0401S04

Pattern A

NAEL0401S0401

With all doors (including hood and glass hatch) closed, if the key is used to lock doors, smart entrance control unit terminal 33 receives a signal from power window main switch terminal 14.
When key cylinder switch is in LOCK position, ground is supplied
- to power window main switch terminal 6
- from terminal 3 of the front door key cylinder switch LH
- through terminal 2 of front door key cylinder switch LH
- through body grounds M4, M66, M111, M147 and M157 or

smart entrance control unit terminal 11 receives a ground signal
- from terminal 1 of the back door key cylinder switch
- through body grounds B11, B22 and D210.

If this signal, or lock signal from keyfob is received by the smart entrance control unit, the vehicle security system will activate automatically.

NOTE:
Vehicle security system can be set even though all doors are not locked.

Pattern B

NAEL0401S0402

With any door (including hood and glass hatch) open, if lock/unlock switch is used to lock doors, smart entrance control unit terminal 33 receives a LOCK signal
- from terminal 14 of lock/unlock switch LH or
- from terminal 16 of lock/unlock switch RH, or

With any door (including hood and glass hatch) open if the key is used to lock doors, smart entrance control unit terminal 33 receives a LOCK signal from power window main front switch terminal 14. Refer to power window serial link (EL-274).
When key cylinder switch LOCK signal ground is supplied

- to power window main switch terminal 4
- from terminal 3 of the front door key cylinder switch LH
- through terminal 2 of front door key cylinder switch LH
- through body grounds M4, M66, M111, M147 and M157, or

smart entrance control unit terminal 11 receives a ground signal

- from terminal 1 of the back door key cylinder switch
- through body grounds B11, B22 and D210.

If these signals and lock signal from keyfob are received by the smart entrance control unit, ground signals of terminals 1, 2 and 3 are interrupted and all doors are closed, the vehicle security system will activate automatically.

NOTE:
Vehicle security system can be set even though the rear door is not locked.

Once the vehicle security system has been activated, smart entrance control unit terminal 38 supplies ground to terminal 2 of the security indicator lamp.
The security lamp will illuminate for approximately 30 seconds and then blinks every 2.6 seconds.
Now the vehicle security system is in armed phase.

VEHICLE SECURITY SYSTEM ALARM OPERATION

NAEL0401S05

The vehicle security system is triggered by

- opening a door
- opening the hood or the glass hatch
- detection of battery disconnect and connect.

Once the vehicle security system is in armed phase, if the smart entrance control unit receives a ground signal at terminal 1, 2, 3 (door switch), 13 (glass hatch switch) or 6 (hood switch), the vehicle security system will be triggered. The headlamps flash and the horn sounds intermittently.
Power is supplied at all times

- through 7.5A fuse (No. 52, located in fuse and fusible link box)
- to horn relay terminals 1 and 3.
- through 10A fuse (No. 54, located in fuse and fusible link box)
- to horn relay terminal 6.
- through 15A fuse (No. 60, located in fuse and fusible link box)
- to headlamp LH relay terminals 1 and 3,
- through 15A fuse (No. 59, located in fuse and fusible link box)
- to headlamp RH relay terminals 1 and 3.

When the vehicle security system is triggered, ground is supplied intermittently

- to headlamp (LH and RH) relay terminal 2 from smart entrance control unit terminals 21 and 59
- through smart entrance control unit terminals 43 and 64.

When headlamp relays (LH and RH) are energized and then power is supplied to headlamps (LH and RH).
The headlamps flash intermittently.
When the vehicle security system is triggered, ground is supplied intermittently

- from smart entrance control unit terminal 42
- to horn relay terminal 2.

When horn relay are energized, then power is supplied to horn.
The horn sounds intermittently.
The alarm automatically turns off after 50 seconds but will reactivate if the vehicle is tampered with again.

VEHICLE SECURITY SYSTEM DEACTIVATION

NAEL0401S06

To deactivate the vehicle security system, a door or glass hatch must be unlocked with the key or keyfob.
When the key is used to unlock the door, smart entrance control unit terminal 33 receives an UNLOCK signal from power window main switch terminal 14. Refer to "POWER WINDOW SERIAL LINK" (EL-274).
When key cylinder switch is in UNLOCK position, the ground is supplied

- to power window main switch terminal 6
- from the front door key cylinder switch LH terminal 1
- through front door key cylinder switch terminal 2,
- through body grounds M4, M66, M111, M147 and M157.

When the key is used to open the glass hatch, smart entrance control unit terminal 12 receives a ground signal from terminal 3 of the back door key cylinder switch.
When the smart entrance control unit receives either one of these signals or unlock signal from keyfob, the vehicle security system is deactivated. (Disarmed phase)

PANIC ALARM OPERATION

NAEL0401S07

Remote keyless entry system may or may not operate vehicle security system (horn and headlamps) as required.
When the remote keyless entry system (panic alarm) is triggered, ground is supplied intermittently

- from smart entrance control unit terminals 21 and 59
- to headlamp (LH and RH) relay terminal 2, and
- from smart entrance control unit terminal 42
- to horn relay terminal 2.

The headlamp flashes and the horn sounds intermittently.
The alarm automatically turns off after 25 seconds or when smart entrance control unit receives any signal from keyfob.

Schematic

NAEL0402

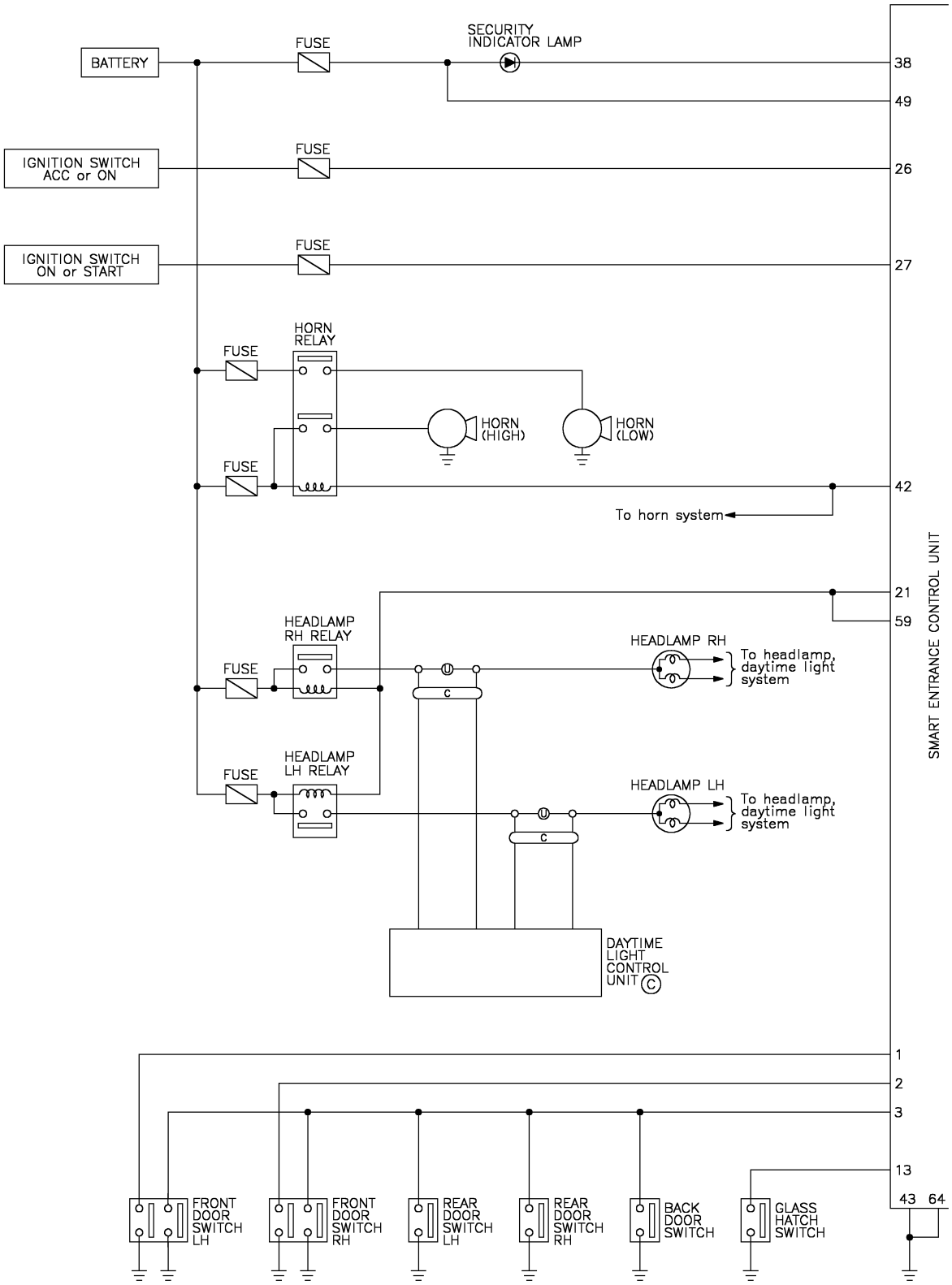

MEL126S

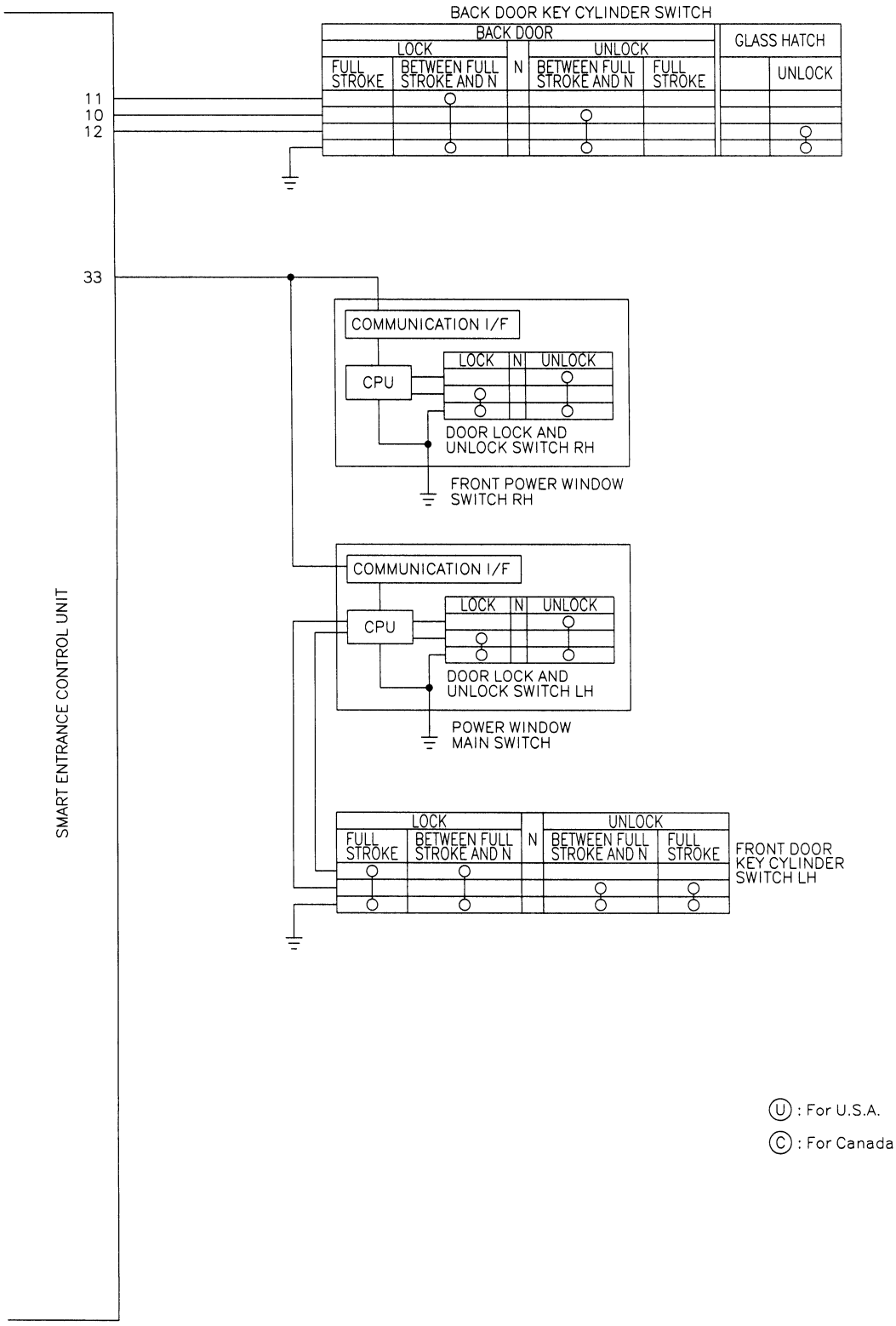

Ⓤ : For U.S.A.

Ⓒ : For Canada

MEL437P

Wiring Diagram — VEHSEC —

NAEL0403

FIG. 1

NAEL0403S01

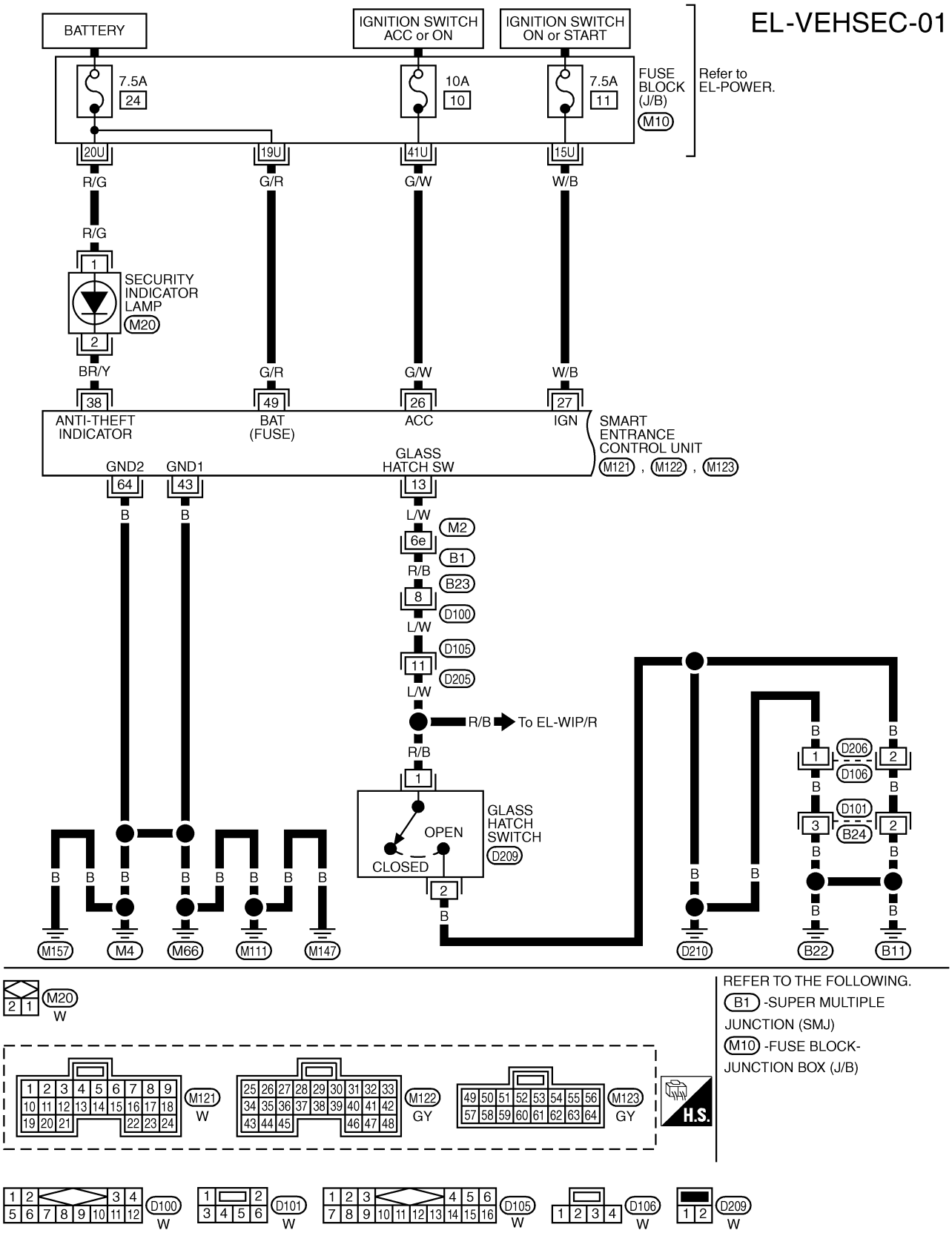

REFER TO THE FOLLOWING.
B1 -SUPER MULTIPLE JUNCTION (SMJ)
M10 -FUSE BLOCK-JUNCTION BOX (J/B)

MEL127S

FIG. 2

NAEL0403S02

EL-VEHSEC-02

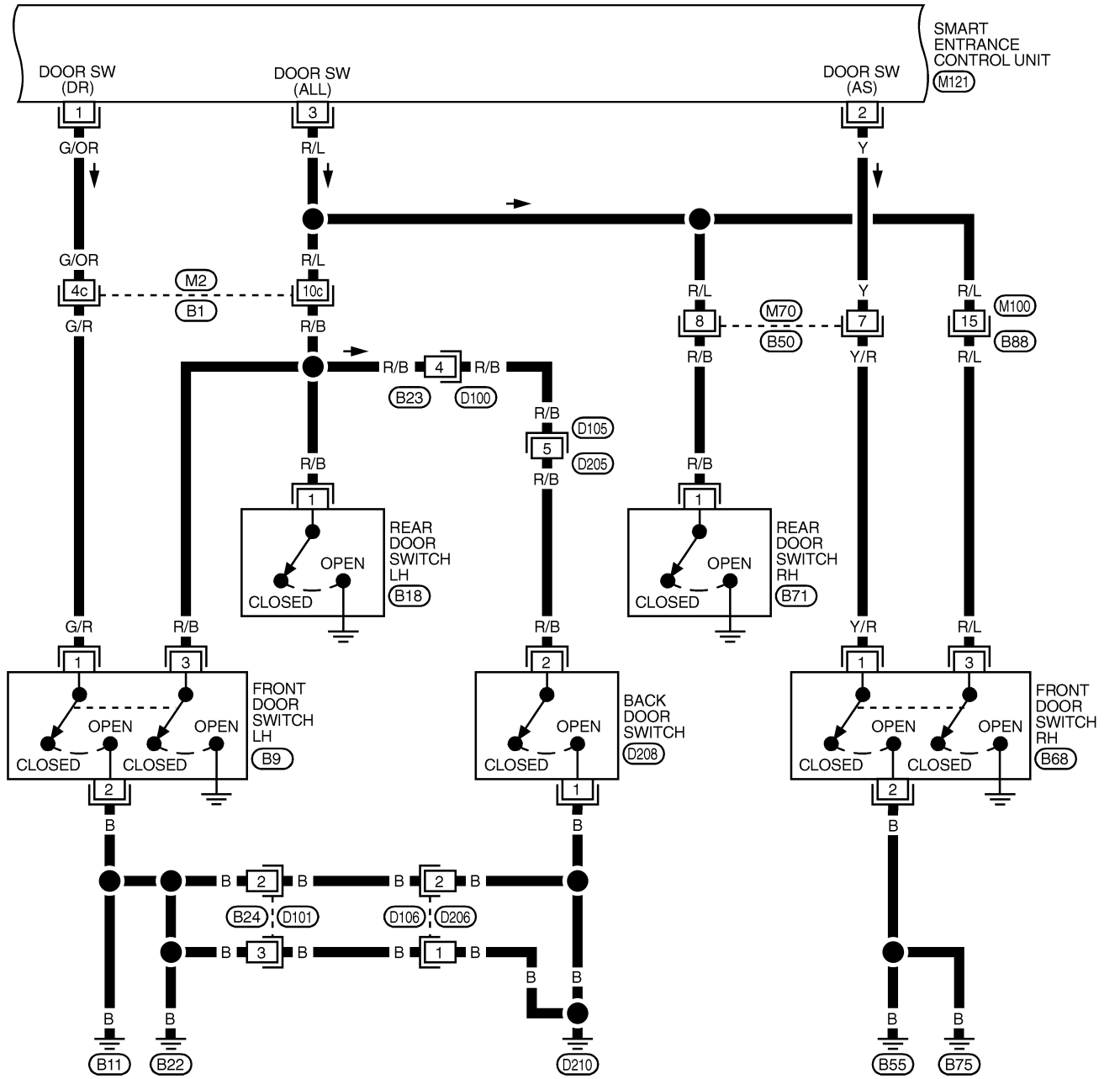

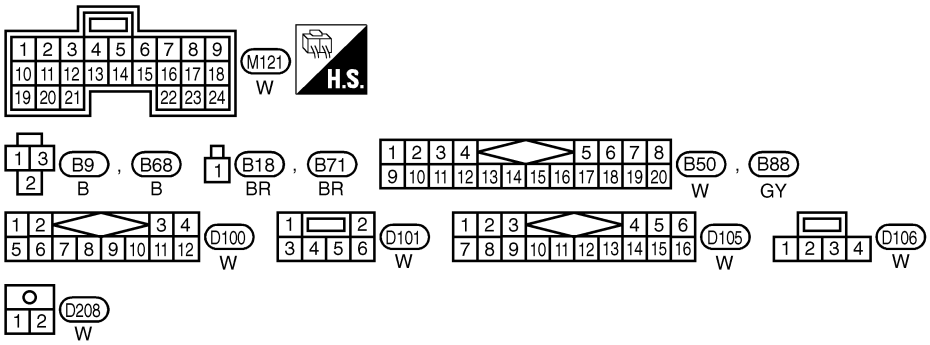

REFER TO THE FOLLOWING.
B1 -SUPER MULTIPLE JUNCTION (SMJ)

MEL034Q

FIG. 3

NAEL0403S03

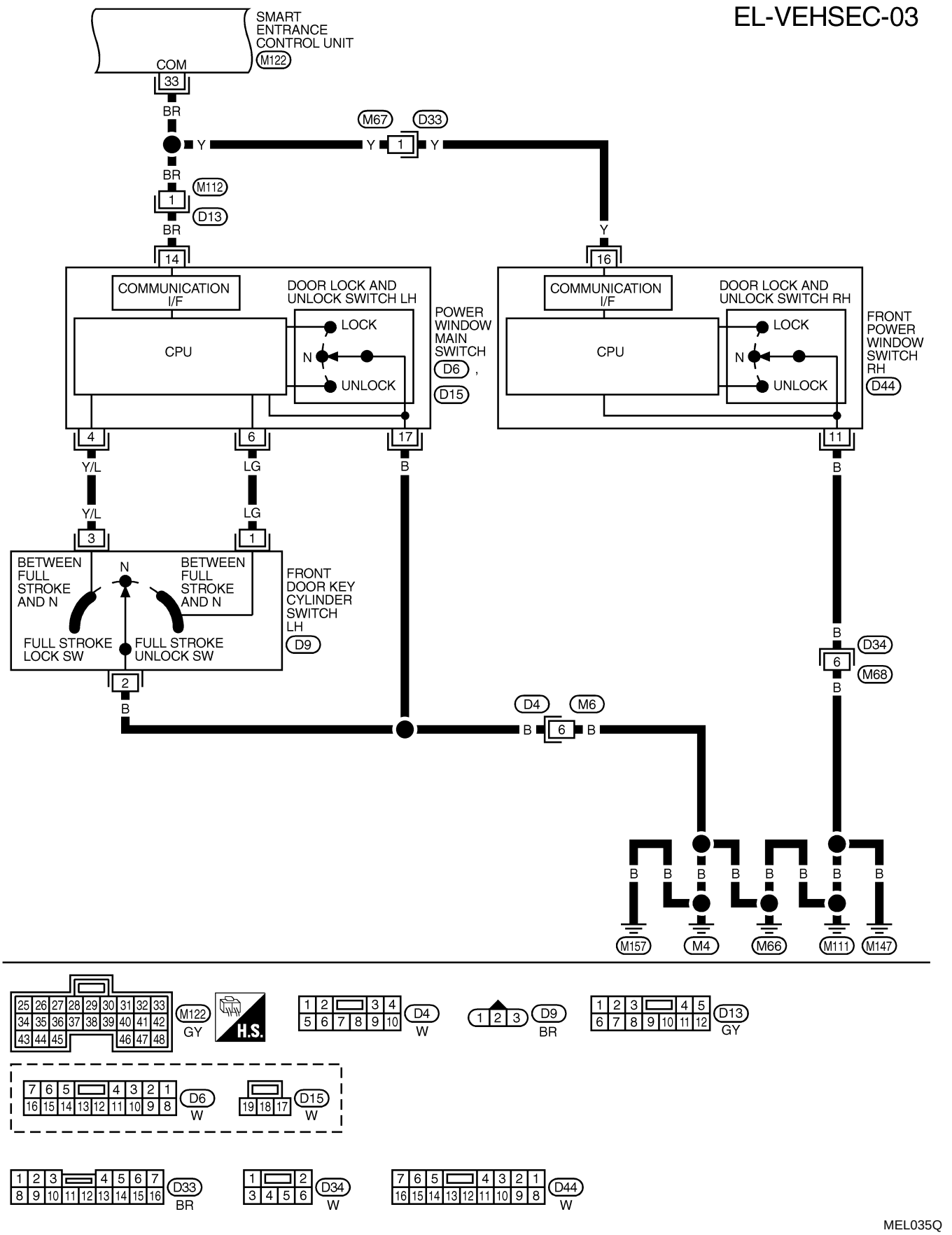

FIG. 4

NAEL0403S04

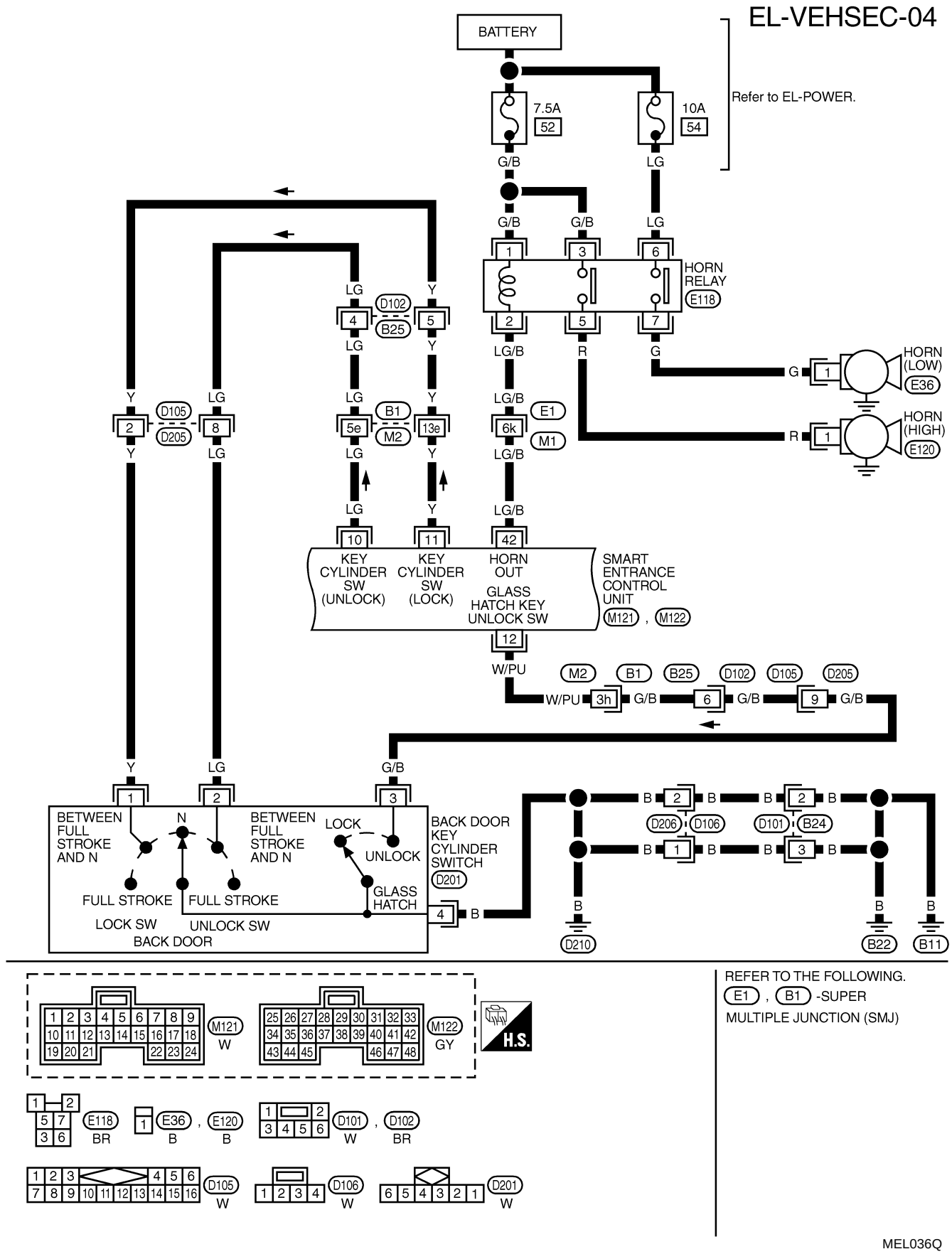

FIG. 5

NAEL0403S05

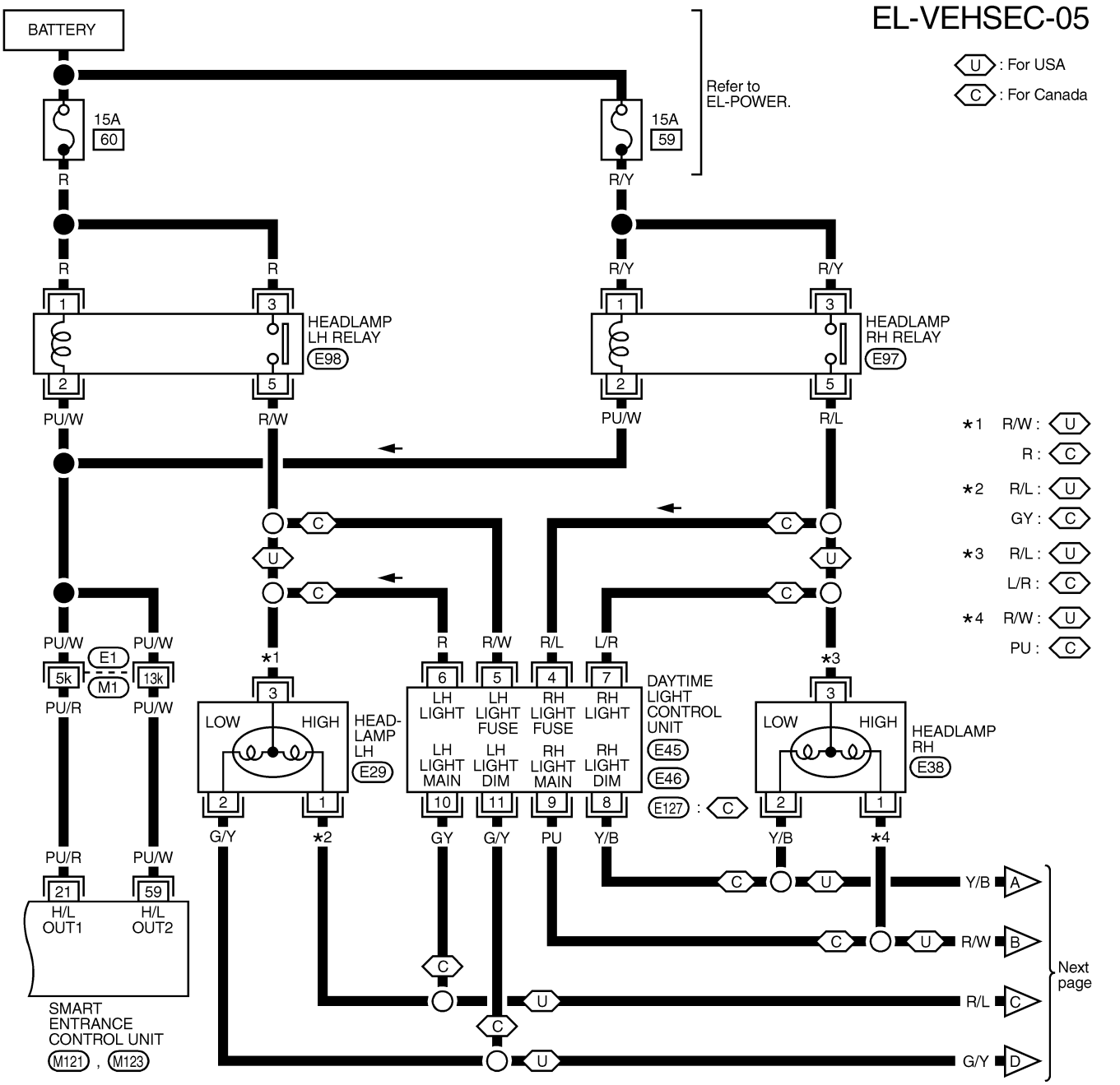

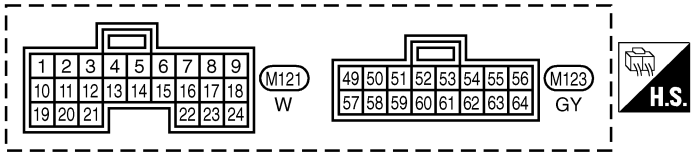

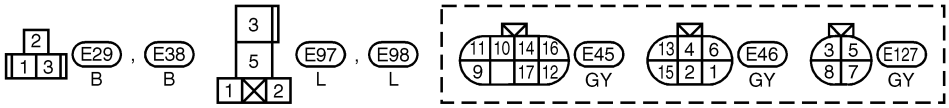

REFER TO THE FOLLOWING.
E1 - SUPER MULTIPLE JUNCTION (SMJ)

MEL037Q

FIG. 6

NAEL0403S06

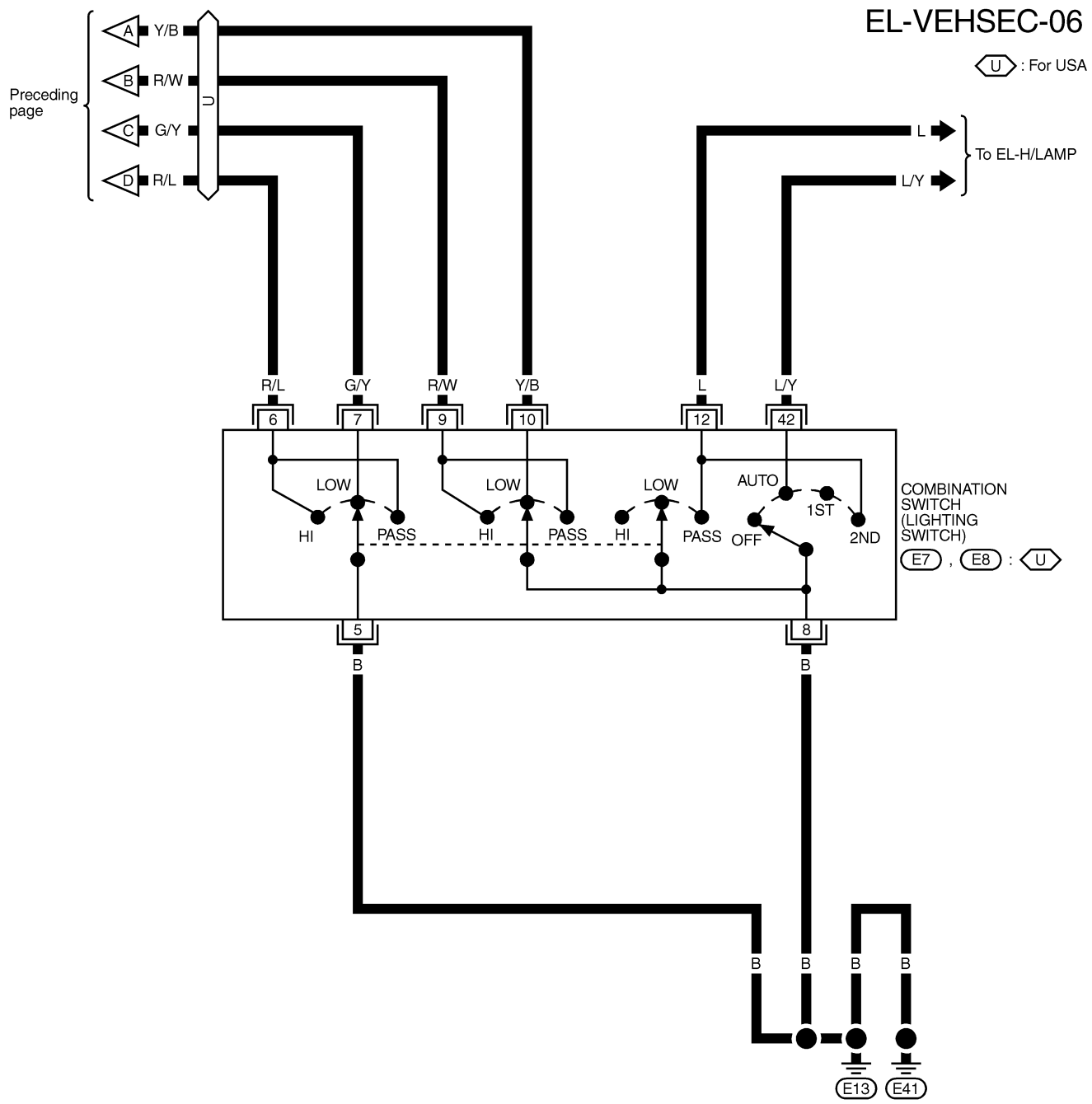

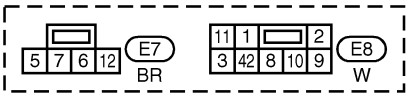

MEL038Q

CONSULT-II Inspection Procedure

=NAEL0404

"THEFT WAR ALM"

NAEL0404S01

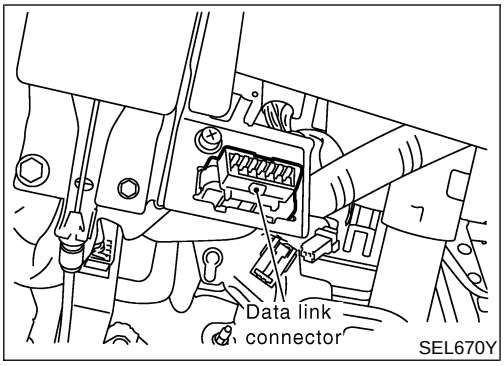

SEL670Y

1. Turn ignition switch "OFF".
2. Connect "CONSULT-II" and "CONSULT-II CONVERTER" to the data link connector.

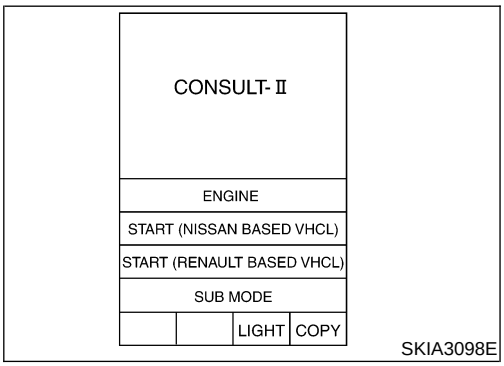

SKIA3098E

3. Turn ignition switch "ON".
4. Touch "START (NISSAN BASED VHCL)".

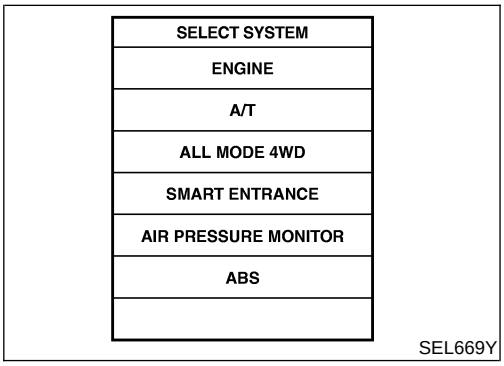

SEL669Y

5. Touch "SMART ENTRANCE".
   If "SMART ENTRANCE" is not indicated, go to GI-41, "CONSULT-II Data Link Connector (DLC) Circuit".

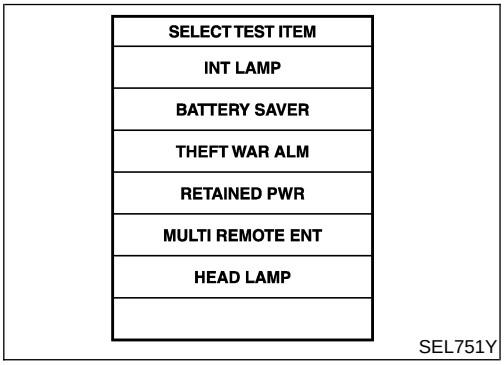

SEL751Y

6. Touch "THEFT WAR ALM".

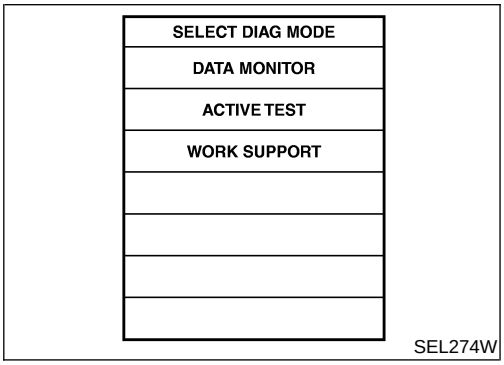

SEL274W

7. Select diagnosis mode.
   "DATA MONITOR", "ACTIVE TEST" and "WORK SUPPORT" are available.

CONSULT-II Application Item

NAEL0405

"THEFT WAR ALM"

NAEL0405S01

Data Monitor

NAEL0405S0101

Monitored Item	Description
IGN ON SW	Indicates [ON/OFF] condition of ignition switch.
ACC ON SW	Indicates [ON/OFF] condition of ignition switch in ACC position.
DOOR SW-RR	Indicates [ON/OFF] condition of rear door switch.
TRNK OPNR SW	Indicates [ON/OFF] condition of back door switch.
KEY CYL LK SW	Indicates [ON/OFF] condition of lock signal from key cylinder switch.
KEY CYL UN SW	Indicates [ON/OFF] condition of unlock signal from key cylinder switch.
DOOR SW-DR	Indicates [ON/OFF] condition of front door switch LH.
DOOR SW-AS	Indicates [ON/OFF] condition of front door switch RH.
TRNK OPN MNTR	Indicates [ON/OFF] condition of back door switch.
TRUNK KEY SW	Indicates [ON/OFF] condition of back door key cylinder switch.
HOOD SWITCH	Indicates [ON/OFF] condition of hood switch.
LOCK SW DR/AS	Indicates [ON/OFF] condition of lock signal from door lock/unlock switch LH and RH.
UNLK SW DR/AS	Indicates [ON/OFF] condition of unlock signal from door lock/unlock LH and RH.
LK BUTTON/SIG	Indicates [ON/OFF] condition of lock signal from keyfob.
UN BUTTON/SIG	Indicates [ON/OFF] condition of unlock signal from keyfob.
TRUNK BTN/SIG	Indicates [ON/OFF] condition of trunk open signal from keyfob.

NOTE:
Even though TRUNK BTN/SIG is actually displayed on the CONSULT-II screen, it is not equipped, therefore, they cannot be activated.

Active Test

NAEL0405S0102

Test Item	Description
THEFT IND	This test is able to check security indicator lamp operation. The lamp will be turned on when "ON" on CONSULT-II screen is touched.
HORN	This test is able to check vehicle security alarm operation. The alarm will be activated for 0.5 seconds after "ON" on CONSULT-II screen is touched.
HEAD LAMP	This test is able to check vehicle security alarm headlamp operation. The headlamp illuminates for 0.5 seconds after "ON" on CONSULT-II screen is touched.

Work Support

NAEL0405S0103

Test Item	Description
THEFT ALM TRG	The switch which triggered theft warning alarm is recorded. This mode is able to confirm and erase the record of theft waning alarm. The trigger data can be erased by touching "CLEAR" on CONSULT-II screen.
SECURITY ALARM SET	Theft warning alarm mode can be changed in this mode. Selects ON-OFF of theft warning alarm mode. ● MODE 1 (ON)/MODE 2 (OFF)

Trouble Diagnoses

=NAEL0406

PRELIMINARY CHECK

NAEL0406S01

The system operation is canceled by turning ignition switch to "ACC" at any step between START and ARMED in the following flow chart.

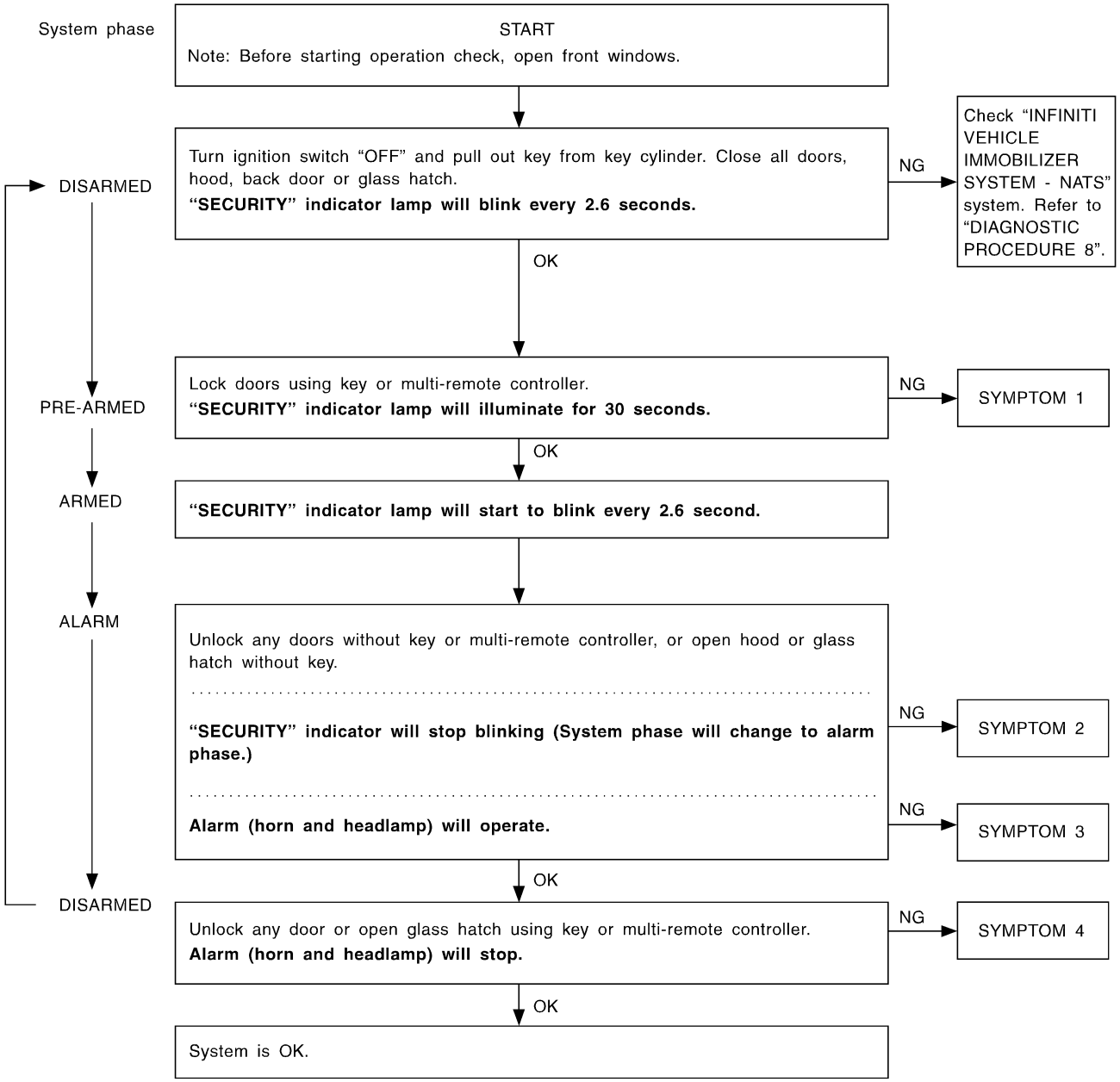

SEL733W

After performing preliminary check, go to symptom chart below.

SYMPTOM CHART

NAEL0406S02

REFERENCE PAGE (EL-)			358	360	361	366	368	370	373	375	325
SYMPTOM			PRELIMINARY CHECK	POWER SUPPLY AND GROUND CIRCUIT CHECK	DOOR, HOOD AND GLASS HATCH SWITCH CHECK	SECURITY INDICATOR LAMP CHECK	DOOR KEY CYLINDER SWITCH CHECK	BACK DOOR KEY CYLINDER SWITCH CHECK	VEHICLE SECURITY HORN ALARM CHECK	VEHICLE SECURITY HEADLAMP ALARM CHECK	Check "MULTI-REMOTE CONTROL" system.
1	Vehicle security indicator does not illuminate for 30 seconds.		X	X	X	X					
	Vehicle security system cannot be set by	All items	X	X	X						
		Door outside key	X				X				
		Back door key	X					X			
		Multi-remote control	X								X
2	*1 Vehicle security system does not alarm when ...	Any door is opened.	X		X						
		Any door is unlocked without using key or multi-remote controller	X								
3	Vehicle security alarm does not activate.	All function	X		X						
		Horn alarm	X						X		
		Headlamp alarm	X							X	
4	Vehicle security system cannot be canceled by	Door outside key	X				X				
		Back door key	X					X			
		Multi-remote control	X								X

X : Applicable

*1: Make sure the system is in the armed phase.

Before starting trouble diagnoses above, perform preliminary check, EL-358.

Symptom numbers in the symptom chart correspond with those of preliminary check.

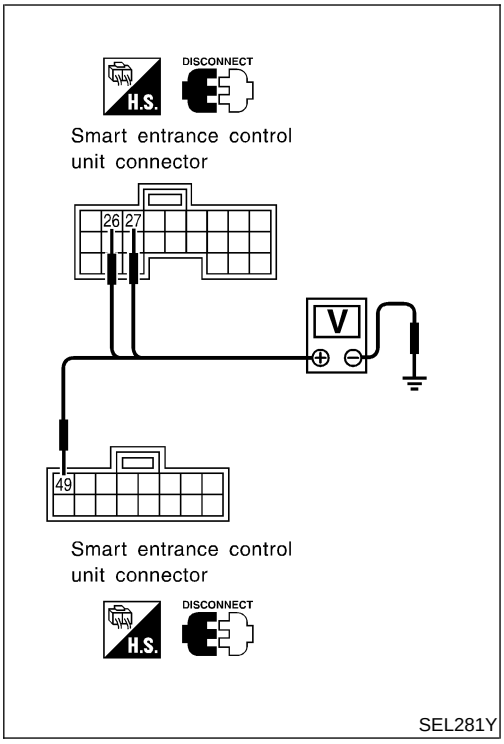

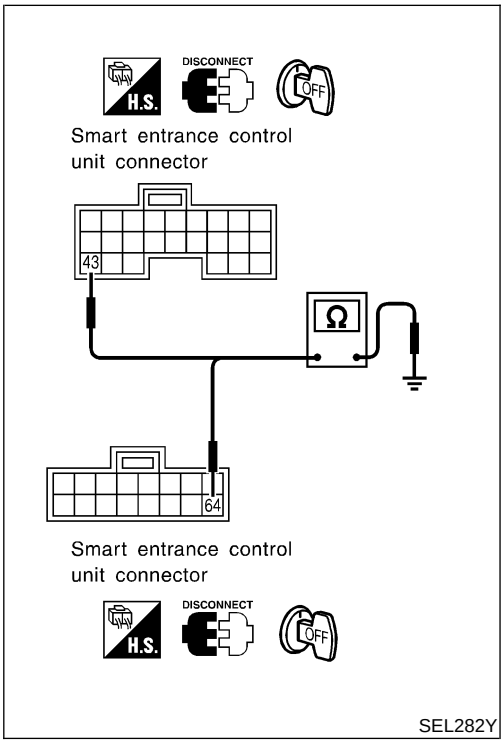

POWER SUPPLY AND GROUND CIRCUIT CHECK

NAEL0406S03

Power Supply Circuit Check

NAEL0406S0301

Terminals			Ignition switch position		
(+)		(−)	OFF	ACC	ON
Connector	Terminal (Wire color)				
M123	49 (G/R)	Ground	Battery voltage	Battery voltage	Battery voltage
M122	26 (G/W)	Ground	0V	Battery voltage	Battery voltage
M122	27 (W/B)	Ground	0V	0V	Battery voltage

If NG, check the following.

- 7.5A fuse [No. 24, located in fuse block (J/B)]
- 7.5A fuse [No. 11, located in fuse block (J/B)]
- 10A fuse [No. 10, located in fuse block (J/B)]
- Harness for open or short between smart entrance control unit and fuse.

Ground Circuit Check

NAEL0406S0302

Terminals			Continuity
(+)		(−)	
Connector	Terminal (Wire color)		
M122	43 (B)	Ground	Yes
M123	64 (B)		

DOOR, HOOD AND GLASS HATCH SWITCH CHECK

=NAEL0406S04

Door Switch Check

NAEL0406S0401

1	PRELIMINARY CHECK

1. Turn ignition switch OFF and remove key from ignition key cylinder.
   "SECURITY" indicator lamp should blink every 2.6 seconds.
2. Close all doors, hood and glass hatch.
3. Lock doors with multi-remote controller from inside the vehicle.
   "SECURITY" indicator lamp should turn on for 30 seconds.
4. Unlock any door with the door lock knob and open the door within 30 seconds after door is locked.
   "SECURITY" indicator lamp should turn off.

OK or NG

OK	▶	Door switch is OK, and go to hood switch check.
NG	▶	GO TO 2.

2	CHECK DOOR SWITCH INPUT SIGNAL

With CONSULT-II

Check door switches ("DOOR SW-RR", "DOOR SW-DR" and "DOOR SW-AS") in "DATA MONITOR" mode with CONSULT-II.

DATA MONITOR	
MONITOR	
DOOR SW-RR	OFF
DOOR SW-DR	OFF
DOOR SW-AS	OFF

	Monitor item	Condition	Condition
DOOR SW-RR	Rear doors switch	Open	ON
		Closed	OFF
DOOR SW-DR	Door switch LH	Open	ON
		Closed	OFF
DOOR SW-AS	Door switch RH	Open	ON
		Closed	OFF

SEL024Y

Without CONSULT-II

Check voltage between smart entrance control unit harness connector M121 terminals 1 (G/OR), 2 (Y) or 3 (R/L) and ground.

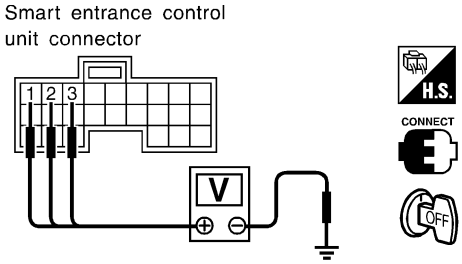

	Terminals (+)	Terminals (–)	Condition	Voltage [V]
Front door switch LH	1	Ground	Open	0
			Closed	Approx. 5
Front door switch RH	2	Ground	Open	0
			Closed	Approx. 5
Rear and back door switches	3	Ground	Open	0
			Closed	Approx. 5

SEL021YA

Refer to wiring diagram in EL-351.

OK or NG

OK	▶	Door switch is OK, and go to hood switch check.
NG	▶	GO TO 3.

3	CHECK DOOR SWITCH

1. Disconnect door switch connector.
2. Check the following.

- Continuity between front door switch connector B9 (LH) or B68 (RH) terminals 1 and 2
- Continuity between front door switch connector B9 (LH) or B68 (RH) terminals 3 and ground
- Continuity between back door switch connector D208 terminals 1 and 2
- Continuity between rear door switch connector B18 (LH) or B71 (RH) terminal 1 and ground

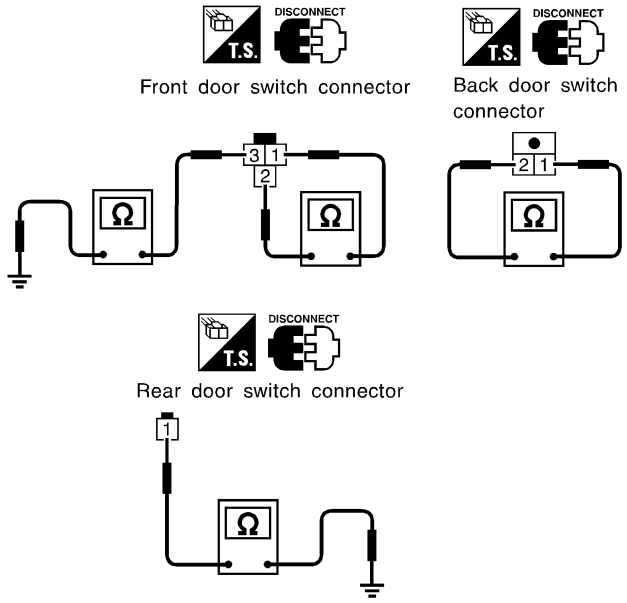

	Terminals	Condition	Continuity
Front door switches	1 - 2	Closed	No
	3 - Ground	Open	Yes
Back door switch	1 - 2	Closed	No
		Open	Yes
Rear door switches	1 - Ground	Closed	No
		Open	Yes

SEL287YA

OK or NG

OK	▶	**Check the following.** ● Door switch ground circuit (Front or back) or door switch ground condition ● Harness for open or short between smart entrance control unit and door switch
NG	▶	Replace door switch.

Hood Switch Check

=NAEL0406S0402

1	PRELIMINARY CHECK

1. Turn ignition switch OFF and remove key from ignition key cylinder.
   "SECURITY" indicator lamp should blink every 2.6 seconds.
2. Close all doors, hood and trunk lid.
3. Lock doors with multi-remote controller from inside the vehicle.
   "SECURITY" indicator lamp should turn on for 30 seconds.
4. Unlock hood with hood opener within 30 seconds after door is locked.
   "SECURITY" indicator lamp should turn off.

OK or NG

OK	▶	Hood switch is OK, and go to trunk room lamp switch check.
NG	▶	GO TO 2.

2	CHECK HOOD SWITCH FITTING CONDITION

OK or NG

OK	▶	GO TO 3.
NG	▶	Adjust installation of hood switch or hood.

3	CHECK HOOD SWITCH INPUT SIGNAL

With CONSULT-II

Check hood switch ("HOOD SWITCH") in "DATA MONITOR" mode with CONSULT-II.

DATA MONITOR	
MONITOR	
HOOD SWITCH	OFF

When hood is open:
HOOD SWITCH ON

When hood is closed:
HOOD SWITCH OFF

SEL354W

Without CONSULT-II

Check voltage between smart entrance control unit harness connector M121 terminal 6 (Y/B) and ground.

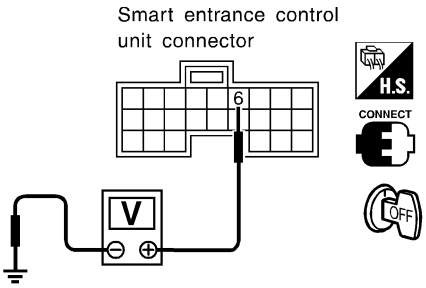

Voltage [V]:
Engine hood is open.
0
Engine hood is closed.
Approx. 5

SEL035Y

Refer to wiring diagram in EL-350.

OK or NG

OK	▶	Hood switch is OK, and go to glass hatch switch check.
NG	▶	GO TO 4.

4	CHECK HOOD SWITCH

1. Disconnect hood switch connector.
2. Check continuity between hood switch connector terminals 1 and 2.

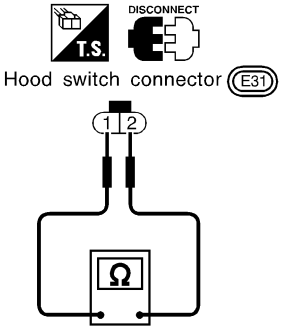

Continuity:
Condition: Pushed
No
Condition: Released
Yes

SEL338X

OK or NG

OK	▶	**Check the following.** ● Hood switch ground circuit ● Harness for open or short between smart entrance control unit and hood switch
NG	▶	Replace hood switch.

Glass Hatch Switch Check

=NAEL0406S0403

1	CHECK GLASS HATCH SWITCH INPUT SIGNAL

Check voltage between smart entrance control unit harness connector M121 terminal 13 (L/W) and ground.

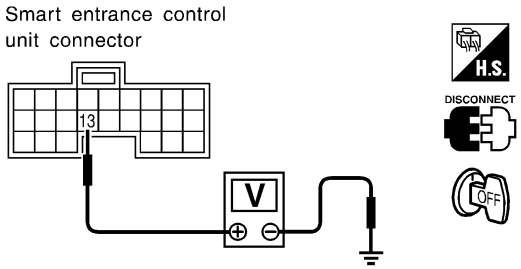

Voltage [V]:
Glass hatch is open.
Approx. 5
Glass hatch is closed.
Approx. 0

SEL326YA

Refer to wiring diagram in EL-350.

OK or NG

OK	▶	Glass hatch switch is OK.
NG	▶	GO TO 2.

2	CHECK GLASS HATCH SWITCH

1. Disconnect glass hatch switch connector.
2. Check continuity between glass hatch switch connector terminals 1 and 2.

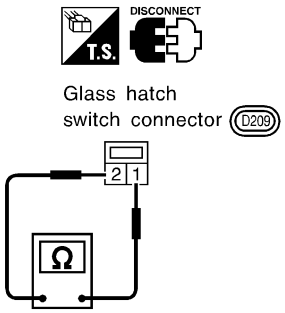

Continuity:
Condition: Closed
No
Condition: Open
Yes

SEL340X

OK or NG

OK	▶	**Check the following.** ● Glass hatch switch ground circuit ● Harness for open or short between smart entrance control unit and glass hatch switch
NG	▶	Replace glass hatch switch.

SECURITY INDICATOR LAMP CHECK

=NAEL0406S05

1	CHECK INDICATOR LAMP OPERATION

With CONSULT-II

1. Select "ACTIVE TEST" in "THEFT WAR ALM" with CONSULT-II.
2. Select "THEFT IND" and touch "ON".

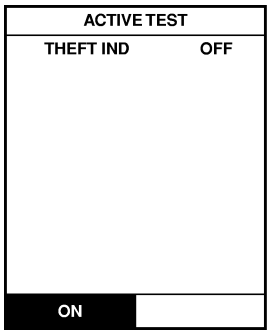

Security indicator lamp should illuminate.

SEL356W

Without CONSULT-II

1. Disconnect smart entrance control unit harness connector.
2. Check voltage between smart entrance control unit harness connector M122 terminal 38 (BR/Y) and ground.

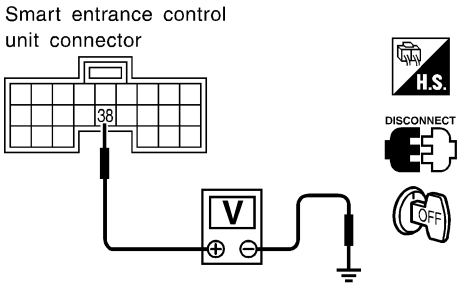

Battery voltage should exist.

SEL037Y

Refer to wiring diagram in EL-350.

OK or NG

OK	▶	Security indicator lamp is OK.
NG	▶	GO TO 2.

2	CHECK SECURITY INDICATOR LAMP

1. Disconnect security indicator lamp connector.
2. Apply 12V direct current to security indicator lamp harness connector M20 terminals 1 and 2.

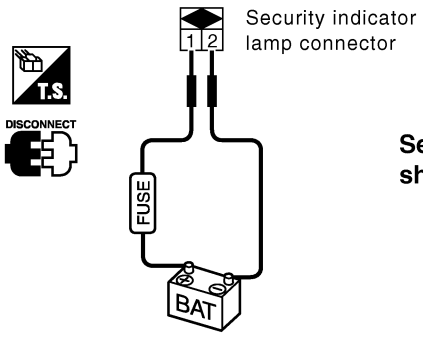

Security indicator lamp should illuminate.

SEL696Y

OK or NG

OK	▶	GO TO 3.
NG	▶	Replace security indicator lamp.

3	CHECK POWER SUPPLY CIRCUIT FOR SECURITY INDICATOR LAMP

1. Disconnect security indicator lamp connector.
2. Check voltage between security indicator lamp harness connector M20 terminal 1 (R/G) and ground.

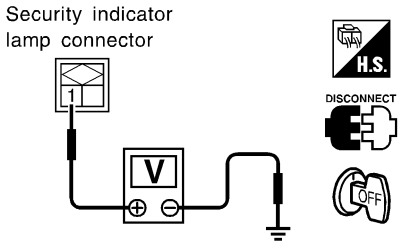

Battery voltage should exist.

SEL697Y

OK or NG

OK	▶	Check harness for open or short between security indicator lamp and smart entrance control unit.
NG	▶	**Check the following.** ● 7.5A fuse [No. 24, located in fuse block (J/B)] ● Harness for open or short between security indicator lamp and fuse

FRONT DOOR KEY CYLINDER SWITCH CHECK

=NAEL0406S06

1	CHECK FRONT DOOR KEY CYLINDER SWITCH INPUT SIGNAL (LOCK/UNLOCK SIGNAL)

With CONSULT-II

Check front door key cylinder switch ("KEY CYL LK-SW"/"KEY CYL UN-SW") in "DATA MONITOR" mode with CONSULT-II.

DATA MONITOR	
MONITOR	
KEY CYL LK-SW	OFF
KEY CYL UN-SW	OFF

When key inserted in front door key cylinder is turned to LOCK:

KEY CYL LK-SW ON

When key inserted in front door key cylinder is turned to UNLOCK:

KEY CYL UN-SW ON

SEL342WF

Without CONSULT-II

1. Check the signal between smart entrance control unit harness connector M122 terminal 33 (BR) and ground with oscilloscope when key inserted in front key cylinder is turned "LOCK" or "UNLOCK".
2. Make sure signals which are shown in the figure below can be detected during 10 sec. just after key is turned "LOCK" or "UNLOCK".

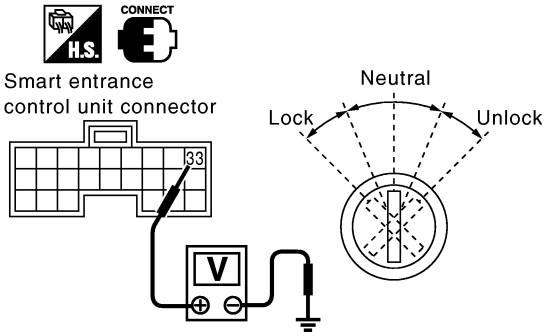

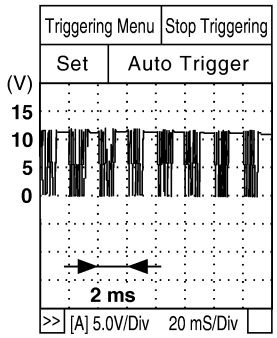

Voltage:
12V→9V (10 sec.)
measurement by analog circuit tester.

SEL700YA

Refer to wiring diagram in EL-352.

OK or NG

OK	▶	Front door key cylinder switch LH is OK.
NG	▶	GO TO 2.

2	CHECK FRONT DOOR KEY CYLINDER SWITCH

1. Disconnect front door key cylinder switch LH connector.
2. Check continuity between front door key cylinder switch LH connector terminals.

Front door key cylinder switch LH connector D9

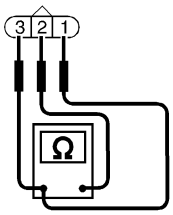

① : Door unlock switch terminal
② : Ground terminal
③ : Door lock switch terminal

Terminals	Key position	Continuity
LH: 3 - 2	Neutral/Unlock	No
	Lock	Yes
LH: 1 - 2	Neutral/Lock	No
	Unlock	Yes

SEL313XB

OK or NG

OK	▶	**Check the following.** ● Front door key cylinder switch LH ground circuit ● Harness for open or short between power window main switch and front door key cylinder switch LH
NG	▶	Replace front door key cylinder switch LH.

BACK DOOR KEY CYLINDER SWITCH CHECK

=NAEL0406S07

1	CHECK BACK DOOR KEY CYLINDER SWITCH INPUT SIGNAL (LOCK/UNLOCK SIGNAL)

With CONSULT-II

Check back door key cylinder switch ("KEY CYL LK-SW"/"KEY CYL UN-SW") in "DATA MONITOR" mode with CONSULT-II.

DATA MONITOR	
MONITOR	
KEY CYL LK-SW	OFF
KEY CYL UN-SW	OFF

When key inserted in back door key cylinder is turned to LOCK:

KEY CYL LK-SW ON

When key inserted in back door key cylinder is turned to UNLOCK:

KEY CYL UN-SW ON

SEL342WG

Without CONSULT-II

Check voltage between smart entrance control unit terminals 10 (LG), 11 (Y) or 12 (W/PU) and ground.

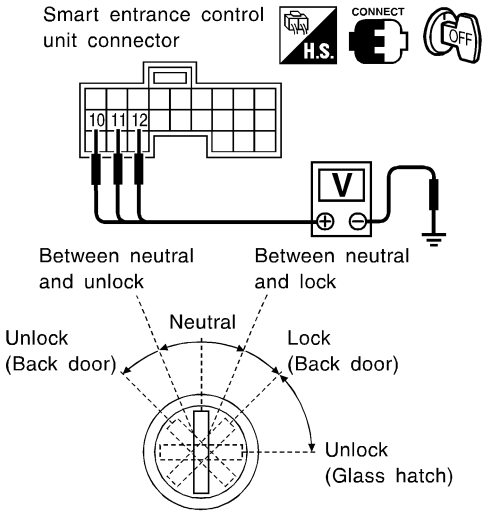

	Terminals (+)	Terminals (−)	Key position	Voltage [V]
Back door	11	Ground	Between neutral and lock	0
			Other positions	Approx. 5
	10	Ground	Between neutral and unlock	0
			Other positions	Approx. 5
Glass hatch	12	Ground	Unlock	0
			Other positions	Approx. 5

SEL698Y

Refer to wiring diagram in EL-353.

OK or NG

OK	▶	Back door key cylinder switch is OK.
NG	▶	GO TO 2.

2	CHECK BACK DOOR KEY CYLINDER SWITCH

1. Disconnect back door key cylinder switch connector.
2. Check continuity between back door key cylinder switch terminals.

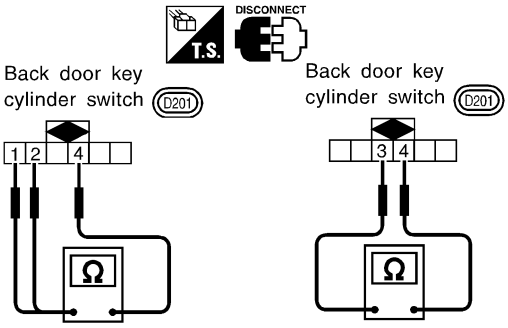

Key position	Terminals			
	1	2	3	4
Between neutral and lock (Back door)	○			○
Between neutral and unlock (Back door)		○		○
Between lock (Back door) and unlock (glass hatch)			○	○

SEL345X

OK or NG

OK	▶	**Check the following.** ● Back door key cylinder switch ground circuit ● Harness for open or short between smart entrance control unit and back door key cylinder switch
NG	▶	Replace back door key cylinder switch.

DOOR LOCK/UNLOCK SWITCH CHECK

=NAEL0406S08

1	CHECK DOOR LOCK/UNLOCK SWITCH INPUT SIGNAL

With CONSULT-II

Check door lock/unlock switch ("LOCK SW DR/AS"/"UNLK SW DR/AS") in "DATA MONITOR" mode with CONSULT-II.

DATA MONITOR	
MONITOR	
LOCK SW DR/AS	OFF
UNLK SW DR/AS	OFF

When lock/unlock switch is turned to LOCK:
LOCK SW DR/AS ON

When lock/unlock switch is turned to UNLOCK:
UNLK SW DR/AS ON

SEL341W

Without CONSULT-II

1. Remove key from ignition key cylinder.
2. Check the signal between smart entrance control unit harness connector M122 terminal 33 (BR) and ground with oscilloscope when door lock/unlock switch is turned "LOCK" or "UNLOCK".
3. Make sure signals which are shown in the figure below can be detected during 10 sec. just after door lock/unlock switch is turned "LOCK" or "UNLOCK".

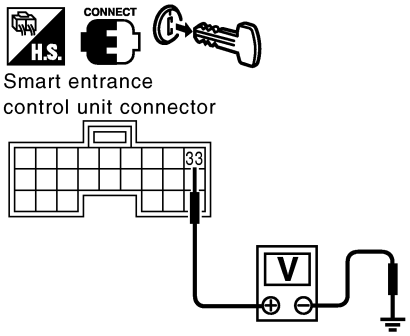

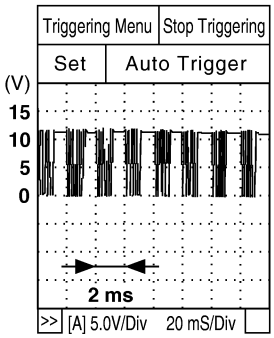

Voltage:
12V → 9V (10 sec.) measurement by analog circuit tester.

SEL699YA

Refer to wiring diagram in EL-352.

OK or NG

OK	▶	Door lock/unlock switch is OK.
NG	▶	**Check the following.** ● Ground circuit for each front power window switch ● Harness for open or short between each front power window switch and smart entrance control unit connector If above systems are normal, replace the front power window switch.

VEHICLE SECURITY HORN ALARM CHECK

=NAEL0406S09

1	CHECK VEHICLE SECURITY HORN

With CONSULT-II

1. Select "ACTIVE TEST" in "THEFT WAR ALM" with CONSULT-II.
2. Select "HORN" and touch "ON".

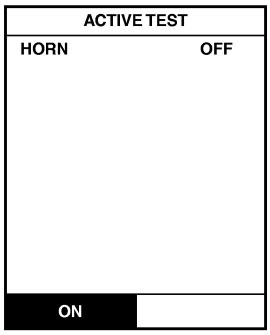

Vehicle security horn alarm should operate.

SEL041Y

Without CONSULT-II

1. Disconnect smart entrance control unit harness connector.
2. Apply ground to smart entrance control unit harness connector M122 terminal 42 (LG/B).

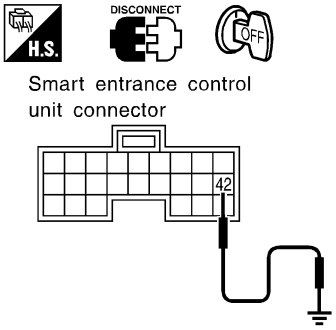

Vehicle security horn alarm should operate.

SEL043YC

Refer to wiring diagram in EL-353.

OK or NG

OK	▶	Horn alarm is OK.
NG	▶	GO TO 2.

2	CHECK HORN RELAY

Check horn relay.

OK or NG

OK	▶	GO TO 3.
NG	▶	Replace horn relay.

3	CHECK POWER SUPPLY FOR HORN RELAY

1. Disconnect horn relay connector.
2. Check voltage between horn relay harness connector E118 terminal 1 (G/B) and ground.

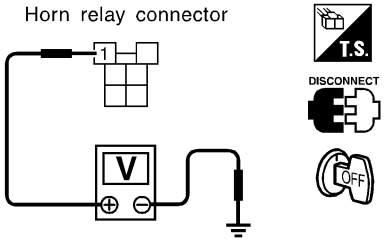

Battery voltage should exist.

SEL326XB

OK or NG

OK	▶	GO TO 4.
NG	▶	**Check the following.** ● 7.5A fuse (No. 52, located in the fuse and fusible link box) ● Harness for open or short between horn relay and fuse

4	CHECK HORN RELAY CIRCUIT

1. Disconnect horn relay connector.
2. Check voltage between horn relay harness connector E118 terminals 3 (G/B) and 5 (R).
3. Check voltage between horn relay harness connector E118 terminals 6 (LG) and 7 (G).

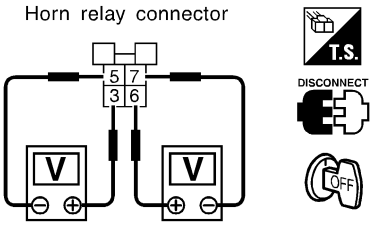

Battery voltage should exist.

SEL327XB

OK or NG

OK	▶	Check harness for open or short between horn relay and smart entrance control unit.
NG	▶	**Check the following.** ● Harness for open or short between horn relay and fuse ● 7.5A fuse (No. 52, located in the fuse and fusible link box) ● 10A fuse (No. 54, located in the fuse and fusible link box)

VEHICLE SECURITY HEADLAMP ALARM CHECK

=NAEL0406S10

1	CHECK VEHICLE SECURITY HEADLAMP ALARM OPERATION

With CONSULT-II

1. Select "ACTIVE TEST" in "THEFT WAR ALM" with CONSULT-II.
2. Select "HEADLAMP" and touch "ON".

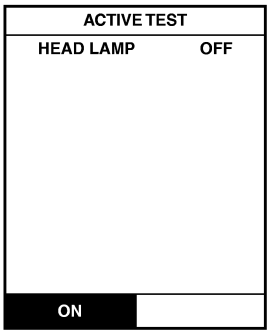

Vehicle security headlamp alarm should operate.

SEL042Y

Without CONSULT-II

1. Disconnect smart entrance control unit connector.
2. Apply ground to smart entrance control unit harness connector M121, M123 terminals 21 (PU/R) and 59 (PU/W).

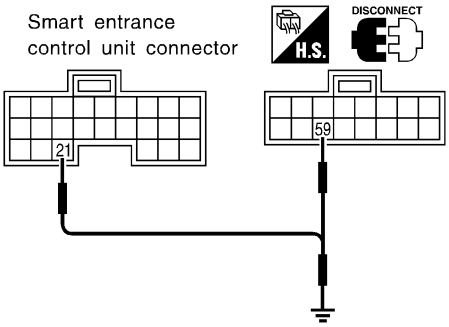

Vehicle security headlamp alarm should operate.

SEL198Y

Refer to wiring diagram in EL-354.

OK or NG

OK	▶	Headlamp is OK.
NG	▶	GO TO 2.

2	CHECK HEADLAMP OPERATION

Does headlamp come on when turning lighting switch "ON"?

Yes	▶	Check harness for open or short between headlamp relay and smart entrance control unit.
No	▶	Check headlamp system. Refer to "HEADLAMP".

Description

NAEL0407

OUTLINE

NAEL0407S01

The smart entrance control unit totally controls the following body electrical system operations.

- Headlamp auto light control system
- Warning chime
- Rear defogger and door mirror defogger timer
- Power door lock
- Remote keyless entry system
- Vehicle security system
- Interior lamp

In addition, the following timer operations are controlled by the smart entrance control unit.

- Battery saver control
- Retained power control

BATTERY SAVER CONTROL

NAEL0407S02

Headlamps/Parking Lamps/License Lamps/Tail Lamps/Fog Lamps/Illumination Lamps

NAEL0407S0201

While the headlamps (including parking, license, tail, fog and illumination lamps) are turned ON by “1ST” or “2ND” of lighting switch, the exterior lamp battery saver control is activated when the ignition switch signal changes from ON (or ACC) to OFF, and either one of LH or RH front door switch ON signal is received. The headlamps (including parking, license, tail, fog and illumination lamps) are turned off after 5 minutes.
While the headlamps are turned ON by “AUTO” operation, the exterior lamp battery saver control is activated when the ignition switch is turned from ON (or ACC) to OFF, and either LH or RH front door switch ON signal is input.
The smart entrance control unit controls timer activation as follows:

- When the door switch signal changes from ON to OFF while the exterior lamp battery saver is activated, the operation is discontinued, restarts and lasts for 45 seconds, then the headlamps (including parking, license, tail, fog and illumination lamps) will be turned off.
- When the door switch signal changes from OFF to ON while the exterior lamp battery saver is activated, the operation is discontinued, restarts and lasts for 45 seconds, then the headlamps will be turned off.
- When the one of four door switch signals changes from OFF to ON while the exterior lamp battery saver is activated, the operation is discontinued, restarts and lasts for 5 minutes, then the headlamps (including parking, license, tail, fog and illumination lamps) will be turned off.
- When all the door switch ON signals are input while the exterior lamp battery saver is activated, the operation is discontinued, restarts and lasts for 45 seconds, then the headlamps (including parking, license, tail, fog and illumination lamps) will be turned off.

The “45” second timer’s duration can be changed with the function setting mode of CONSULT-II.

Interior Lamp/Luggage Room Lamp/Spot Lamp/Vanity Mirror Illumination

NAEL0407S0202

The lamps turn off automatically when the interior lamp, spot lamp or/and vanity mirror illumination are illuminated with the ignition key in the OFF position, if the lamp remains lit by the door switch open signal or if the lamp switch is in the ON position for more than 30 minutes.
After lamps are turned off by the battery saver system, the lamps illuminate again when:

- Door is locked or unlocked with keyfob or door lock/unlock switch or door key cylinder.
- Ignition switch ON.
- Door is opened or closed,
- Key is inserted or removed into ignition key cylinder.

Rear Window Defogger/Door Mirror Defogger

NAEL0407S0203

Rear window defogger and door mirror defogger are turned off in approximately 15 minutes after the rear window defogger switch is turned on.

RETAINED POWER CONTROL

NAEL0407S03

When the ignition switch is turned to OFF (or ACC) position from ON or START position, the following systems can be operated for 45 seconds by the RAP signal from the smart entrance control unit terminal 46.

- Electric sunroof
- Power window

The retained power operation is canceled when the driver or passenger side door is opened.

INPUT/OUTPUT

NAEL0407S04

System	Input	Output
Power door lock	Door lock and unlock switch LH and RH Key switch (Insert) Door switches Door key cylinder switches	Door lock actuator
Remote keyless entry	Key switch (Insert) Ignition switch (ACC) Door switches Keyfob signal Door lock/unlock switch LH	Horn relay Headlamp relay (LH and RH) Hazard warning lamp Interior lamp Power window main switch Door lock actuator Opener actuator
Warning chime	Key switch (Insert) Ignition switch (ON) Lighting switch (1st) Seat belt switch (driver's seat) Front door switch LH	Warning chime (located in smart entrance control unit)
Rear window defogger and door mirror defogger	Ignition switch (ON) Rear window defogger switch	Rear window defogger relay
Vehicle security	Ignition switch (ACC, ON) Door switches Hood switch Back door switch Glass hatch switch Door lock/unlock switches Door key cylinder switches (lock/unlock)	Horn relay Headlamp relay Security indicator
Interior lamp	Door switches Keyfob signal (lock/unlock) Door lock/unlock switches (lock/unlock) Door key cylinder switch (lock/unlock) Ignition switch (ON) Key switch (Insert)	Interior lamp Step lamp Door indicator
Battery saver control for headlamps/parking lamps/licence lamps/tail lamps/fog lamps/illumination lamps	Ignition switch (ON) Lighting switches	Headlamps Parking lamps Licence lamps Tail lamps Fog lamps Illumination lamps
Battery saver control for interior lamp/spot lamp/vanity mirror illumination	Ignition switch (ON) Front door switches Lamp switches	Interior lamp Step lamp Spot lamp Vanity mirror illumination
Battery saver control for rear window defogger and door mirror defogger	Ignition switch (ON) Rear window defogger switch	Rear window defogger relay
Retained power control for electric sunroof	Ignition switch (ON) Front door switches	Sunroof motor
Retained power control for power window	Ignition switch (ON) Front door switches	Power window relay
Headlamp auto light control	Auto light sensor Lighting switches	Headlamp relay Tail lamp relay

CONSULT-II

NAEL0408

DIAGNOSTIC ITEMS APPLICATION

NAEL0408S01

Item (CONSULT-II screen terms)	Diagnosed system	DATA MONITOR	ACTIVE TEST	WORK SUPPORT
DOOR LOCK	Power door lock	X	X	X
REAR DEFOGGER	Rear window defogger	X	X	
KEY WARN ALM	Warning chime	X	X	
LIGHT WARN ALM	Warning chime	X	X	
SEAT BELT ALM	Warning chime	X	X	
INT LAMP	Interior lamps	X	X	X
BATTERY SAVER	Battery saver control for interior lamp	X	X	X
THEFT WAR ALM	Vehicle security system	X	X	X
RETAINED PWR	Retained power control	X	X	X
MULTI REMOTE ENT	Remote keyless entry system	X	X	X
HEAD LAMP	Headlamp	X	X	X

X: Applicable
For diagnostic item in each control system, refer to the relevant pages for each system.

DIAGNOSTIC ITEM DESCRIPTION

NAEL0408S02

MODE	Description
DATA MONITOR	Input/output data in the smart entrance control unit can be read.
ACTIVE TEST	Diagnostic Test Mode in which CONSULT-II drives some systems apart from the smart entrance control unit.
WORK SUPPORT for DOOR LOCK	● Select unlock mode ON-OFF setting can be changed. ● Key reminder door mode ON-OFF setting can be changed.
WORK SUPPORT for INT LAMP	Interior lamp timer mode ON-OFF setting can be changed.
WORK SUPPORT for BATTERY SAVER	Interior lamp battery saver period can be changed.
WORK SUPPORT for THEFT WAR ALM	● The recorded trigger signal when vehicle security system was activated can be checked. ● Security alarm ON-OFF setting can be changed.
WORK SUPPORT for RETAINED PWR SET	RAP signal's power supply period can be changed.
WORK SUPPORT for MULTI REMOTE ENT	● ID code of keyfob can be registered and erased. ● Keyless answer back mode can be changed. ● Pressing time of panic alarm, trunk lid opener and door unlock (for power window down operation) buttons on keyfob can be changed. ● Auto lock operation starting time can be changed.
WORK SUPPORT for HEADLAMP	● Auto light sensitivity can be changed. ● Exterior lamp battery saver control ON-OFF setting can be changed. ● Auto light delay off time can be changed.

CONSULT-II INSPECTION PROCEDURE

NAEL0408S03

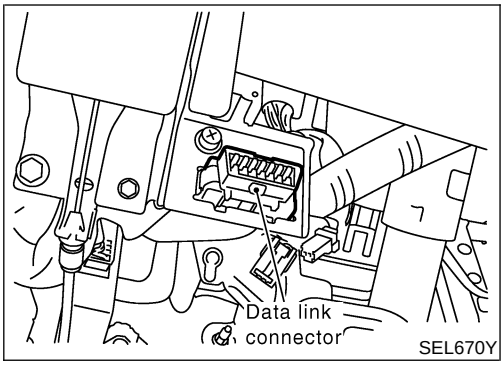

SEL670Y

1. Turn the ignition switch "OFF".
2. Connect "CONSULT-II" and "CONSULT-II CONVERTER" to the data link connector.

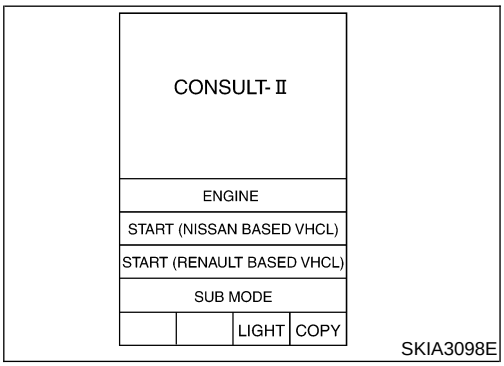

SKIA3098E

3. Turn ignition switch "ON".
4. Touch "START (NISSAN BASED VHCL)".

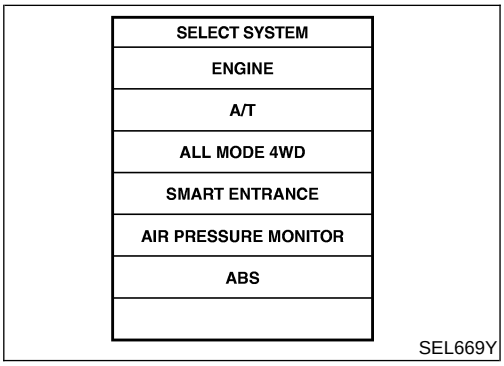

SEL669Y

5. Touch "SMART ENTRANCE".
   If "SMART ENTRANCE" is not indicated, go to GI-41, "CONSULT-II Data Link Connector (DLC) Circuit".

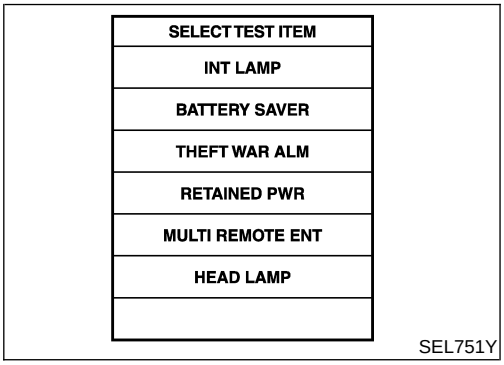

SEL751Y

6. Perform each diagnostic item according to "DIAGNOSTIC ITEMS APPLICATION". Refer to EL-378.

Schematic

NAEL0409

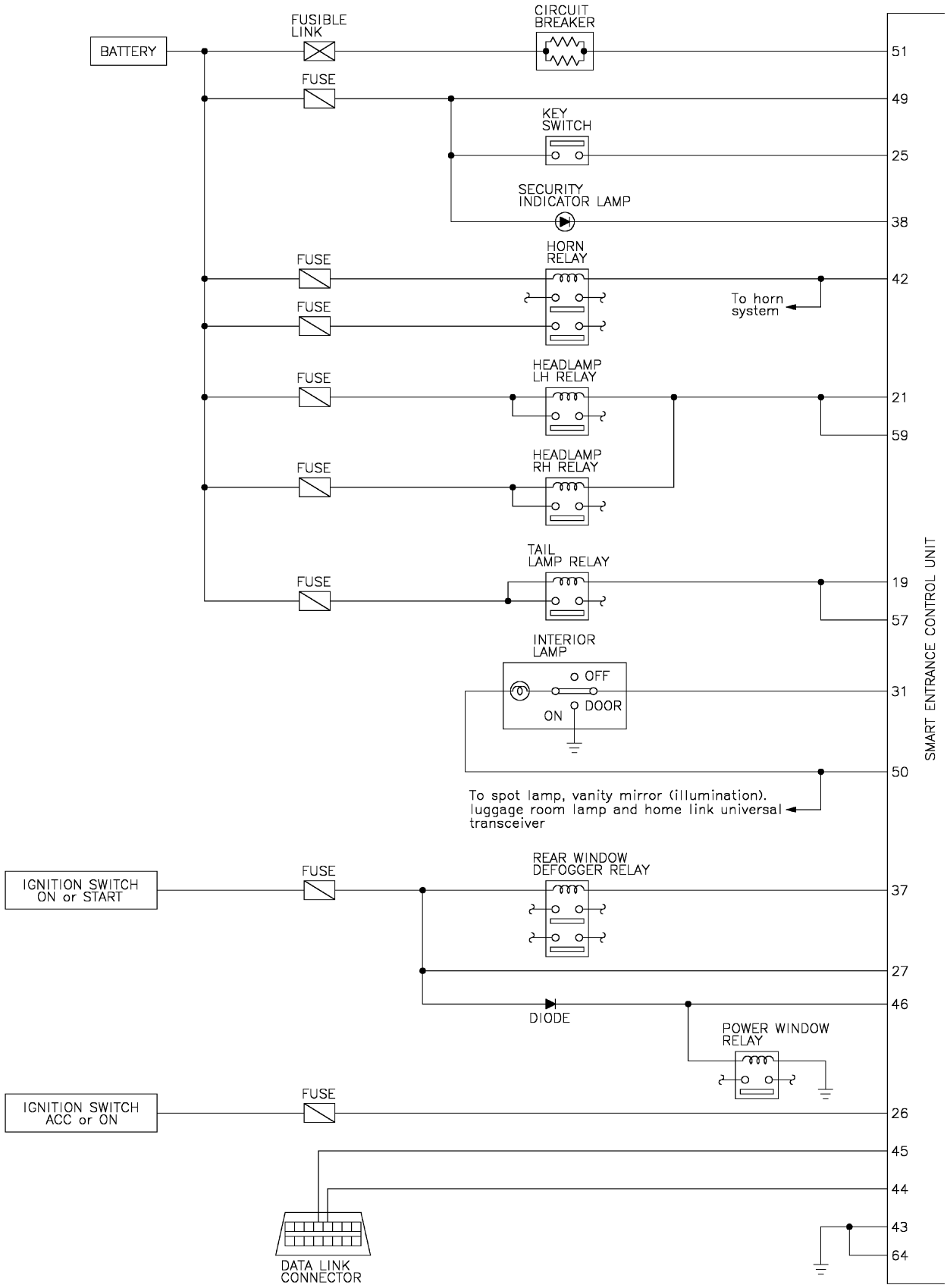

MEL957R

Schematic (Cont'd)

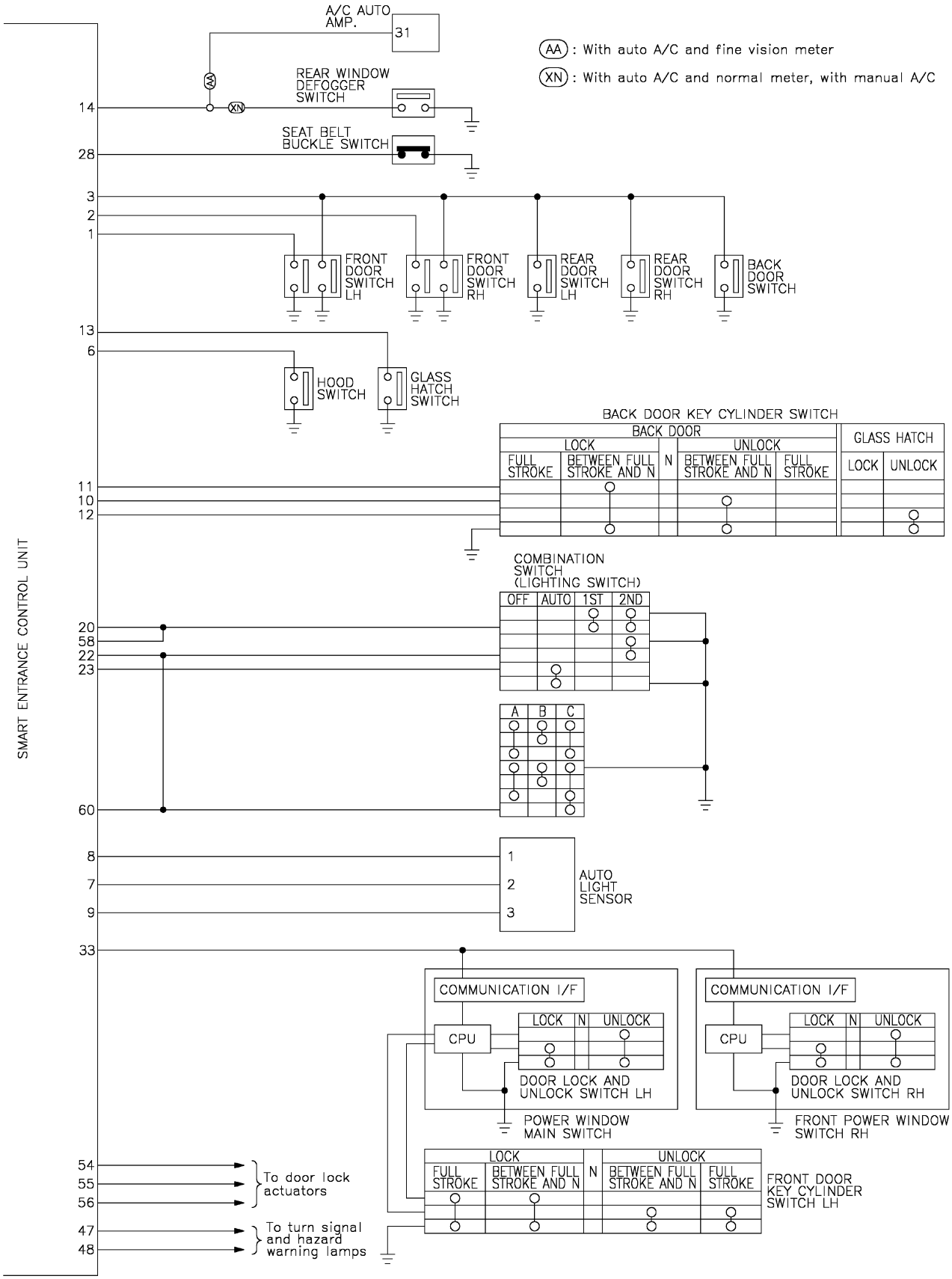

MEL958R

Smart Entrance Control Unit Inspection Table

NAEL0410

Terminal No.	Wire color	Connections	Operated condition			Voltage (Approximate values)
1	G/OR	Driver door switch	OFF (Closed) → ON (Open)			12V → 0V
2	Y	Passenger door switch	OFF (Closed) → ON (Open)			5V → 0V
3	R/L	Rear door switch	OFF (Closed) → ON (Open)			5V → 0V
6	Y/B	Hood switch	ON (Open) → OFF (Closed)			0V → 12V
7	W/G	Auto light sensor (Signal)	Ignition switch ON position	Light is applied to auto light sensor.		1 to 5V
				Light is not applied to auto light sensor.		Less than 1V
8	L/R	Auto light sensor (GND)	Ignition switch ON position			0V
9	GY	Auto light sensor (Power)	Ignition switch (OFF → ON)			0V → 5V
10	LG	Back door key cylinder unlock switch	OFF (Neutral) → ON (Unlocked)			5V → 0V
11	Y	Back door key cylinder lock switch	OFF (Neutral) → ON (Locked)			5V → 0V
12	W/PU	Back door key cylinder switch	OFF (Neutral) → ON (Unlock)			5V → 0V
13	L/W	Glass hatch switch	ON (Open) → OFF (Closed)			5V → 0V
14	OR	Rear window defogger switch	OFF → ON (Only when pushed)			5V → 0V
19	R/G	Tail lamp relay (Output)	Ignition switch (with lighting switch 1ST or 2ND)	ON or START → OFF position	More than 5 minutes after ignition switch is turned to OFF position	12V
					Within 5 minutes after ignition switch is turned to OFF position	0V
				ON or START position		0V
			Headlamps illuminate by auto light control. (Operate → Not operate)			Less than 1V → 12V
20	G	Tail lamp switch	Light switch (OFF or AUTO → 1ST or 2ND position)			12V → 0V
21	PU/R	Headlamp LH relay	Ignition switch (with lighting switch 2ND)	ON or START → OFF position	More than 5 minutes after ignition switch is turned to OFF position	12V
					Within 5 minutes after ignition switch is turned to OFF position	0V
				ON or START position		0V
			Headlamps illuminate by auto light control. (Operate → Not operate)			Less than 1V → 12V

Terminal No.	Wire color	Connections	Operated condition		Voltage (Approximate values)
22	SB	Headlamp switch	Lighting switch	Except PASS or 2ND position	12V
				PASS or 2ND position	0V
			Headlamps illuminate by auto light control. (Operate → Not operate)		10V → 12V
23	L/Y	Headlamp switch	Ignition switch "ON" position	Lighting switch (Except AUTO → AUTO position)	12V → 0V
25	W/R	Ignition key switch (Insert)	Key inserted → Key removed from IGN key cylinder		12V → 0V
26	G/W	Ignition switch (ACC)	"ACC" position		Battery voltage
27	W/B	Ignition switch (ON)	Ignition key is in "ON" position		Battery voltage
28	B/Y	Seat belt buckle switch	Unfastened → Fastened (Ignition key is in "ON" position)		0V → 12V
31	R/B	Interior lamp	When doors are locked using keyfob (Lamp switch in "DOOR" position)		0V → 12V
33	BR	Communication interface	Door lock and unlock switches (Neutral → Lock/unlock)		Refer to EL-384.
			Front door key cylinder switch LH (Neutral → Lock/unlock)		
37	G/B	Rear window defogger relay	OFF → ON (Ignition key is in "ON" position)		12V → 0V
38	BR/Y	Security indicator	Goes off → Illuminates		12V → 0V
42	LG/B	Horn relay	When panic alarm is operated using keyfob (ON → OFF)		12V → 0V
43	B	Ground	Ignition switch ON position		0V
46	R/Y	Power window relay	Retained power operation is operated (ON → OFF)		12V → 0V
47	GY/L	LH turn signal lamp	When door lock or unlock is operated using keyfob (ON → OFF)		12V → 0V
48	GY/R	RH turn signal lamp	When door lock or unlock is operated using keyfob (ON → OFF)		12V → 0V
49	G/R	Power source (Fuse)	—		Battery voltage
50	R/W	Battery saver (Interior lamp)	Battery saver operates → Does not operate (ON → OFF)		12V → 0V
51	W/R	Power source (PTC)	—		Battery voltage
54	L	Door lock actuators	Door lock & unlock switch (Free → Lock)		0V → 12V
55	W/PU	Driver door lock actuator	Door lock & unlock switch (Free → Unlock)		0V → 12V
56	Y/B	Passenger, rear and back doors lock actuator	Door lock & unlock switch (Free → Unlock)		0V → 12V

Smart Entrance Control Unit Inspection Table (Cont'd)

Terminal No.	Wire color	Connections	Operated condition			Voltage (Approximate values)
57	R	Tail lamp relay	Ignition switch (with lighting switch 1ST or 2ND)	ON or START → OFF position	More than 5 minutes after ignition switch is turned to OFF position	12V
					Within 5 minutes after ignition switch is turned to OFF position	0V
				ON or START position		0V
			Headlamps illuminate by auto light control. (Operate → Not operate)			Less than 1V → 12V
58	G/W	Tail lamp switch	Lighting switch OFF or AUTO → 1ST or 2ND			12V → 0V
59	PU/W	Headlamp RH relay	Ignition switch (with lighting switch OFF or 1ST)	ON or START → OFF position	More than 5 minutes after ignition switch is turned to OFF position	12V
					Within 5 minutes after ignition switch is turned to OFF position	0V
				ON or START position		0V
			Headlamps illuminate by auto light control. (Operate → Not operate)			Less than 1V → 12V
60	L	Headlamp switch	Lighting switch	Except PASS or 2ND position		12V
				PASS or 2ND position		0V
			Headlamps illuminate by auto light control. (Operate → Not operate)			10V → 12V
64	B	Ground	Ignition switch ON position			0V

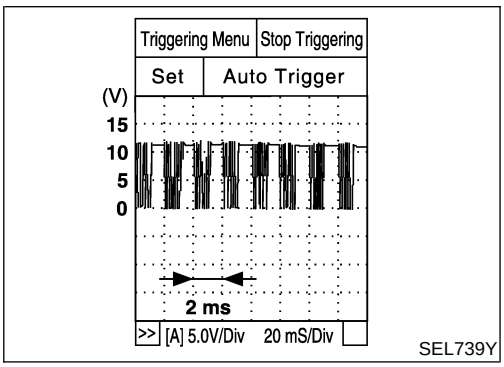

COMMUNICATION INTERFACE SIGNAL

NAEL0410S02

Voltage:

12 V → 9V (10 sec.) measurement by analog circuit tester.

Wiring Diagram — TRNSCV —

NAEL0411

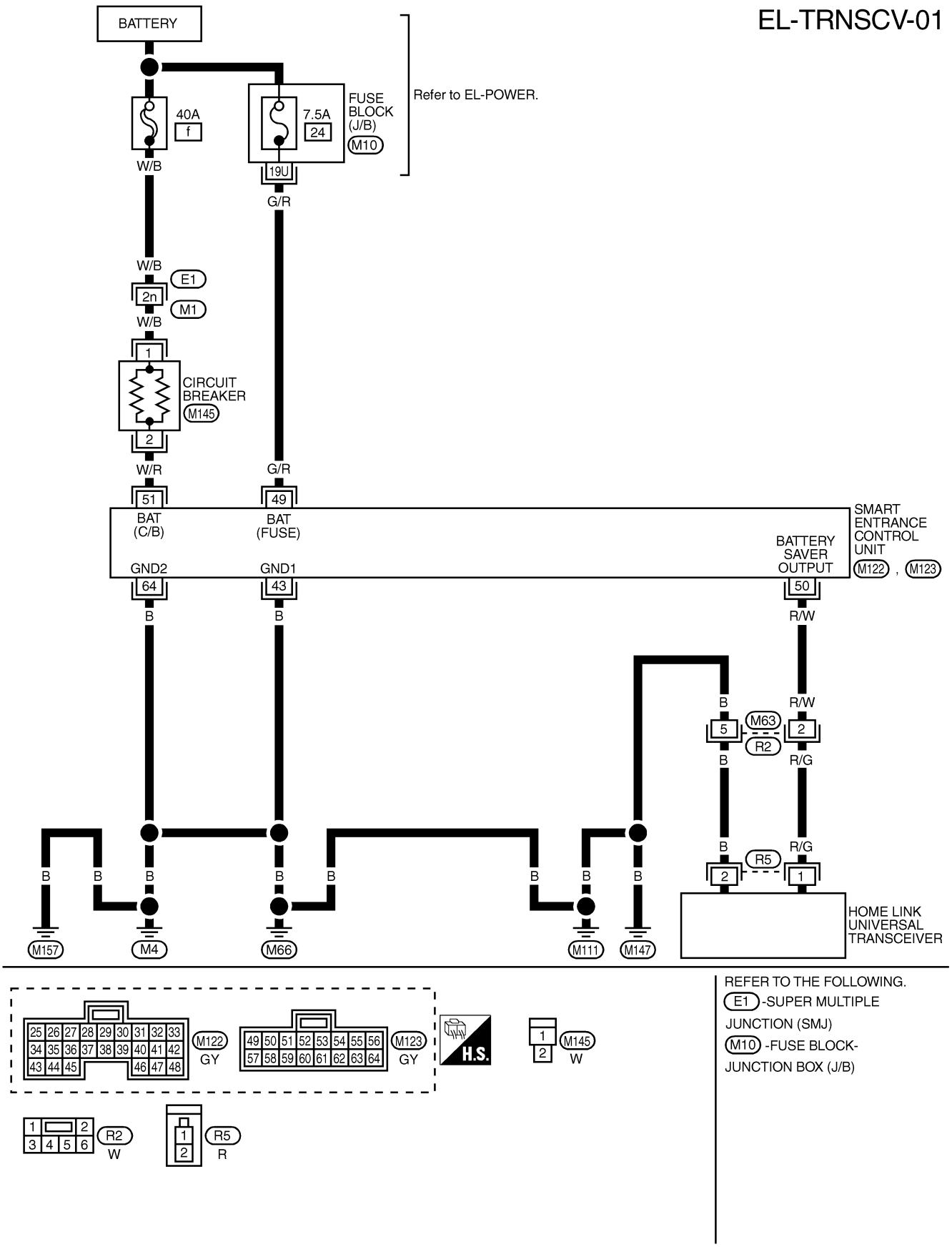

MEL040Q

Trouble Diagnoses

NAEL0412

DIAGNOSTIC PROCEDURE

NAEL0412S01

SYMPTOM: Homelink universal transceiver does not activate receiver.

Before conducting the procedure given below, make sure that system receiver (garage door opener, etc.) operates with original, hand-held transmitter. If NG, receiver or hand-held transmitter is malfunctioning. Condition is not vehicle related.

1	PRELIMINARY CHECK

1. Turn ignition switch “OFF”.
2. Does red light (LED) of homelink universal transceiver illuminate when any button is pressed?

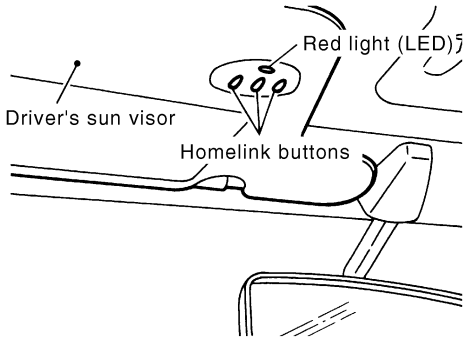

SEL442UA

Yes or No

Yes	▶	GO TO 2.
No	▶	GO TO 3.

2	CHECK HOMELINK UNIVERSAL TRANSCEIVER FUNCTION

Check homelink universal transceiver with Tool.
For details, refer to Technical Service Bulletin.

OK or NG

OK	▶	Receiver or hand-held transmitter is malfunctioning. Condition is not vehicle related.
NG	▶	Replace homelink universal transceiver with sun visor assembly.

3	CHECK POWER SUPPLY

1. Disconnect homelink universal transceiver connector.
2. Turn ignition switch “OFF”.
3. Check voltage between homelink universal transceiver harness connector R5 terminal 1 (R/G) and ground.

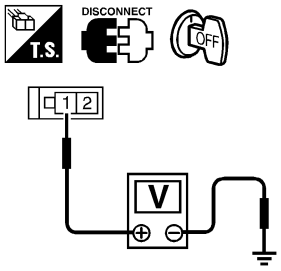

Battery voltage should exist.

SEL358X

OK or NG

OK	▶	GO TO 4.
NG	▶	GO TO 5.

4	CHECK GROUND CIRCUIT

Check continuity between homelink universal transceiver harness connector R5 terminal 2 (B) and ground.

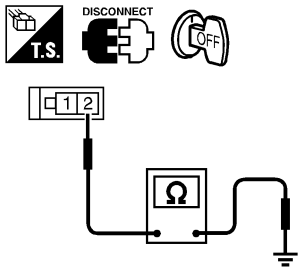

Continuity should exist.

SEL359X

OK or NG

OK	▶	Replace homelink universal transceiver with sun visor assembly.
NG	▶	Repair harness.

5	CHECK MAIN POWER SUPPLY FOR SMART ENTRANCE CONTROL UNIT

1. Disconnect smart entrance control unit.
2. Check voltage between smart entrance control unit harness connector M123 terminal 49 (G/R) and ground.

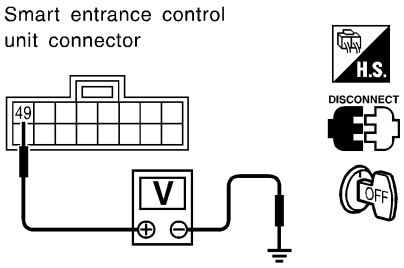

Battery voltage should exist.

SEL284Y

OK or NG

OK	▶	GO TO 6.
NG	▶	**Check the following.** ● 7.5A fuse No. 24, located in fuse block (J/B)

6	CHECK GROUND CIRCUIT FOR SMART ENTRANCE CONTROL UNIT

Check continuity between smart entrance control unit harness connector M122 terminal 43 (B) or M123 terminal 64 (B) and ground.

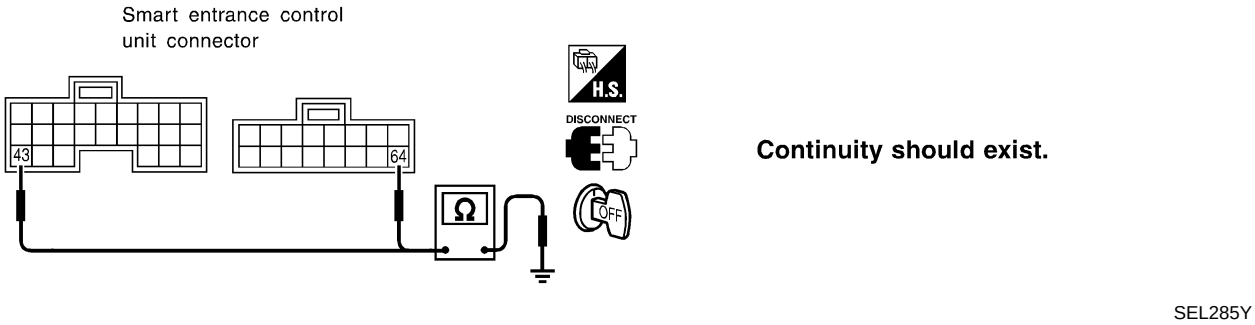

OK or NG

OK	▶	Power supply and ground circuits are OK.
NG	▶	Check ground harness.

Component Parts and Harness Connetor Location

NAEL0413

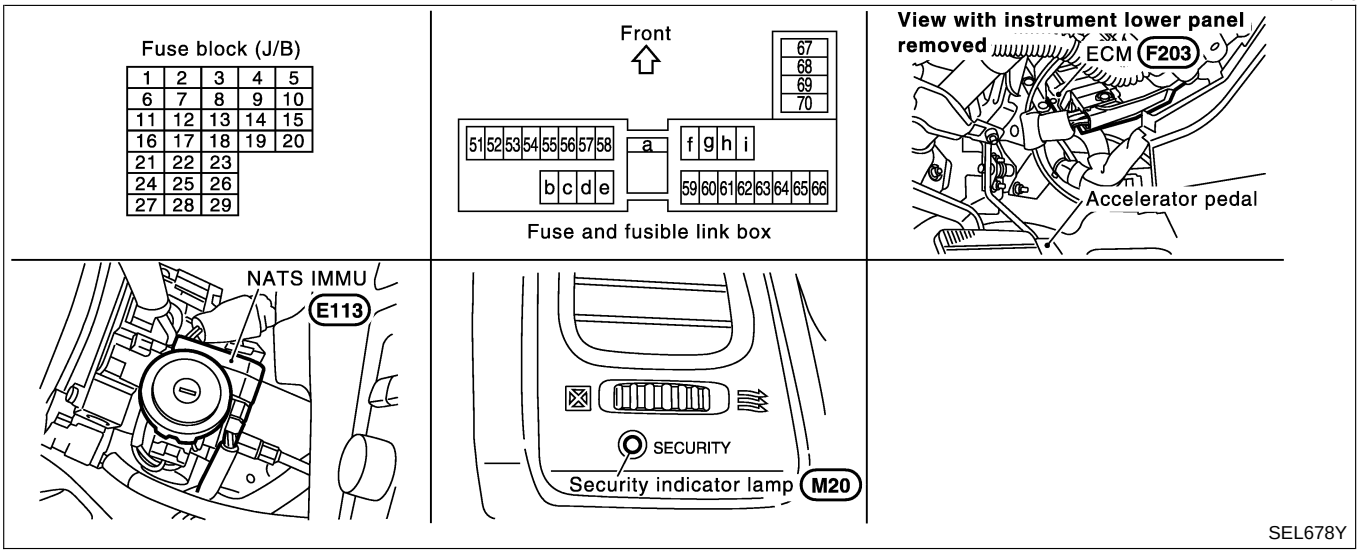

NOTE:
If customer reports a "No Start" condition, request ALL KEYS to be brought to the Dealer in case of an NVIS (NATS) malfunction.

System Description

=NAEL0414

NATS (Nissan Anti-Theft System) has the following immobilizer functions:

- Since only NVIS (NATS) ignition keys, whose ID nos. have been registered into the ECM and IMMU of NVIS (NATS), allow the engine to run, operation of a stolen vehicle without an NVIS (NATS) registered key is prevented by NVIS (NATS).
  That is to say, NVIS (NATS) will immobilise the engine if someone tries to start it without the registered key of NVIS (NATS).
- All of the originally supplied ignition key IDs (except for card plate key) have been NVIS (NATS) registered.
  If requested by the vehicle owner, a maximum of five key IDs can be registered into the NVIS (NATS) components.
- The security indicator blinks when the ignition switch is in “OFF” or “ACC” position. Therefore, NVIS (NATS) warns outsiders that the vehicle is equipped with the anti-theft system.
- When NVIS (NATS) detects trouble, the security indicator lamp lights up while ignition key is in the “ON” position.
- NVIS (NATS) trouble diagnoses, system initialization and additional registration of other NVIS (NATS) ignition key IDs must be carried out using CONSULT-II hardware and CONSULT-II NVIS (NATS) software. When NVIS (NATS) initialization has been completed, the ID of the inserted ignition key is automatically NVIS (NATS) registered. Then, if necessary, additional registration of other NVIS (NATS) ignition key IDs can be carried out.
  Regarding the procedures of NVIS (NATS) initialization and NVIS (NATS) ignition key ID registration, refer to CONSULT-II operation manual, IVIS/NVIS.
- **When servicing a malfunction of the NVIS (NATS) (indicated by lighting up of Security Indicator Lamp) or registering another NVIS (NATS) ignition key ID no., it is necessary to re-register original key identification. Therefore, be sure to receive ALL KEYS from vehicle owner.**

System Composition

NAEL0415

The immobiliser function of the NVIS (NATS) consists of the following:

- NVIS (NATS) ignition key
- NVIS (NATS) immobilizer control unit (IMMU) located in the ignition key cylinder
- Engine control module (ECM)
- Security indicator

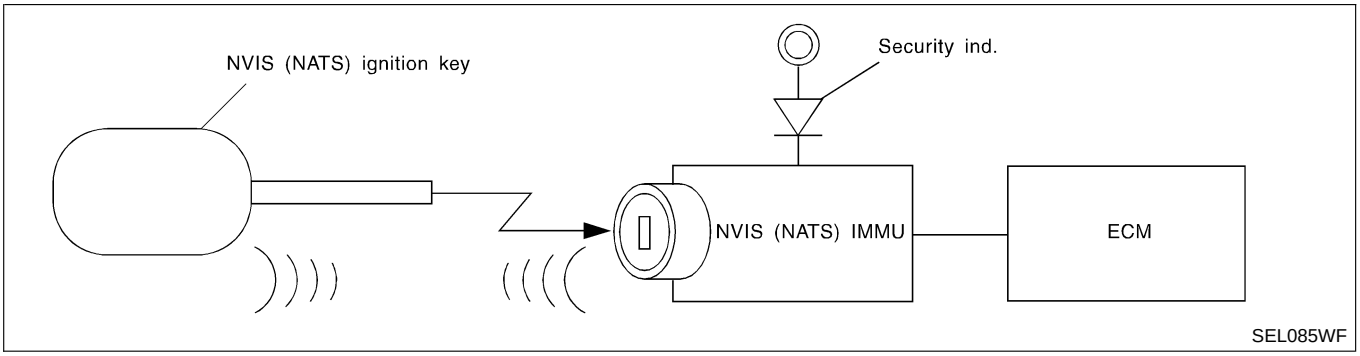

Wiring Diagram — NATS —

NAEL0416

EL-NATS-01

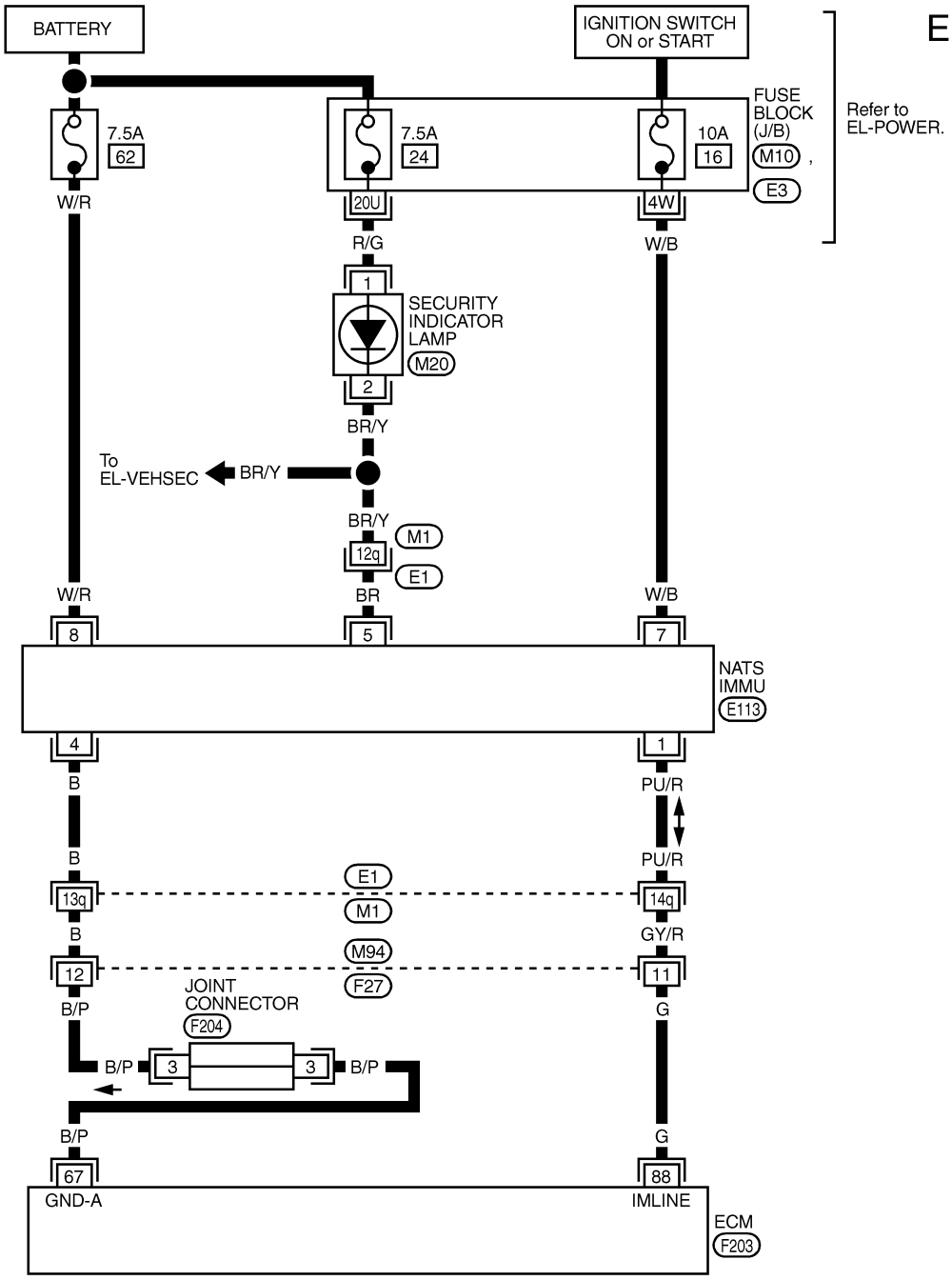

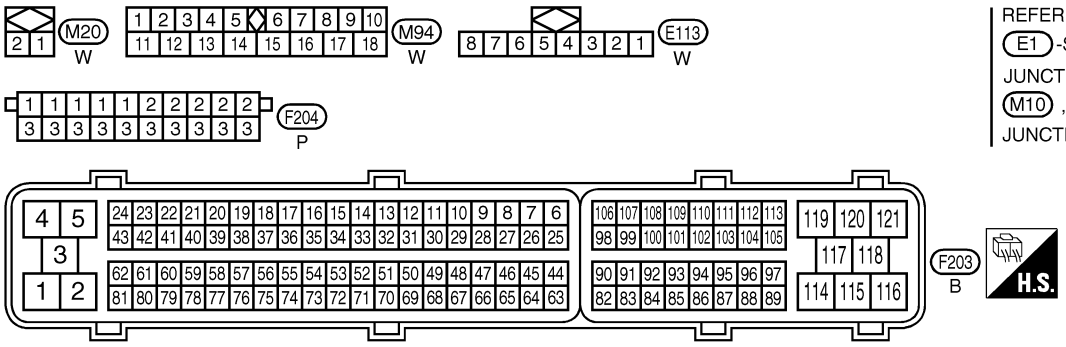

REFER TO THE FOLLOWING.
E1 -SUPER MULTIPLE JUNCTION (SMJ)
M10 , E3 -FUSE BLOCK-JUNCTION BOX (J/B)

MEL041Q

CONSULT-II

NAEL0417

CONSULT-II INSPECTION PROCEDURE

NAEL0417S01

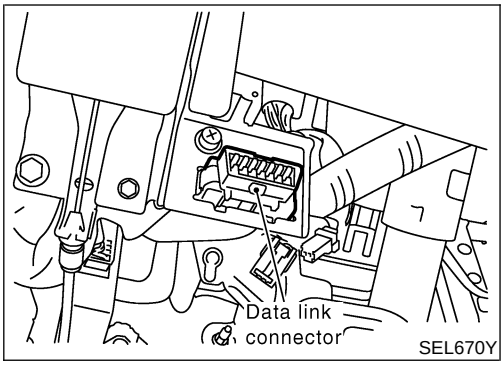

SEL670Y

1. Turn ignition switch OFF.
2. Insert NVIS (NATS) program card into CONSULT-II.

Program card
NATS (AEN02B)

3. Connect “CONSULT-II” and “CONSULT-II CONVERTER” to data link connector.

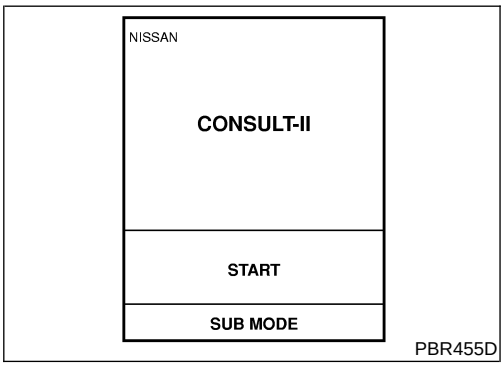

PBR455D

4. Turn ignition switch ON.
5. Touch “START”.

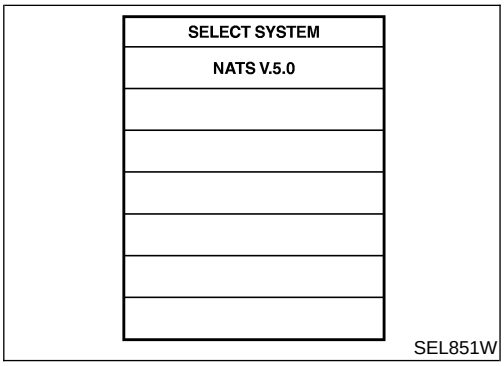

SEL851W

6. Select “NATS V.5.0”.

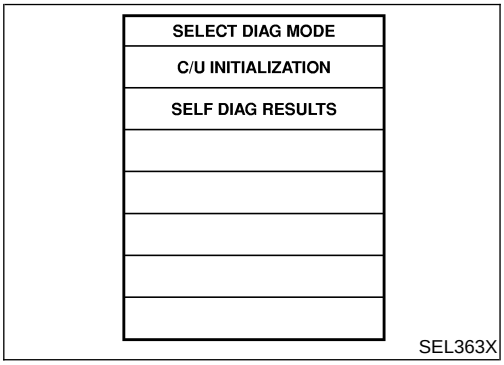

SEL363X

7. Perform each diagnostic test mode according to each service procedure.

For further information, see the CONSULT-II Operation Manual, IVIS/NVIS.

CONSULT-II DIAGNOSTIC TEST MODE FUNCTION

NAEL0417S02

CONSULT-II DIAGNOSTIC TEST MODE	Description
C/U INITIALIZATION	When replacing any of the following three components, C/U initialization and re-registration of all NVIS (NATS) ignition keys are necessary. [NVIS (NATS) ignition key/IMMU/ECM]
SELF-DIAG RESULTS	Detected items (screen terms) are as shown in the chart EL-393.

NOTE:

- **When any initialization is performed, all ID previously registered will be erased and all NVIS (NATS) ignition keys must be registered again.**
- The engine cannot be started with an unregistered key. In this case, the system will show "DIFFERENCE OF KEY" or "LOCK MODE" as a self-diagnostic result on the CONSULT-II screen.
- In rare case, "CHAIN OF ECM-IMMU" might be stored as a self-diagnostic result during key registration procedure, even if the system is not malfunctioning.

HOW TO READ SELF-DIAGNOSTIC RESULTS

NAEL0417S03

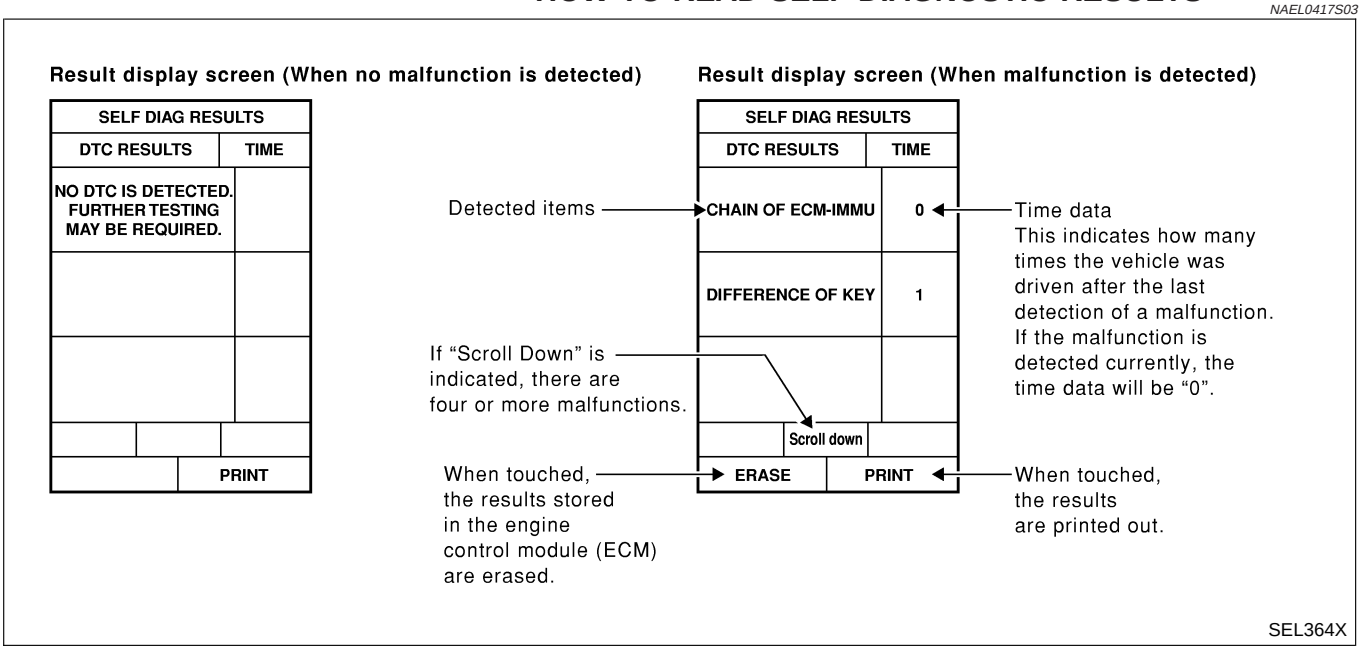

NVIS (NATS) SELF-DIAGNOSTIC RESULTS ITEM CHART

NAEL0417S04

Detected items (NATS program card screen terms)	P No. Code (Self-diagnostic result of "ENGINE")	Malfunction is detected when	Reference page
ECM INT CIRC-IMMU	NATS MALFUNCTION P1613	The malfunction of ECM internal circuit of IMMU communication line is detected.	EL-397
CHAIN OF ECM-IMMU	NATS MALFUNCTION P1612	Communication impossible between ECM and IMMU (In rare case, "CHAIN OF ECM-IMMU" might be stored during key registration procedure, even if the system is not malfunctioning.)	EL-398
DIFFERENCE OF KEY	NATS MALFUNCTION P1615	IMMU can receive the key ID signal but the result of ID verification between key ID and IMMU is NG.	EL-402
CHAIN OF IMMU-KEY	NATS MALFUNCTION P1614	IMMU cannot receive the key ID signal.	EL-403
ID DISCORD, IMM-ECM	NATS MALFUNCTION P1611	The result of ID verification between IMMU and ECM is NG. System initialization is required.	EL-404

Detected items (NATS program card screen terms)	P No. Code (Self-diagnostic result of "ENGINE")	Malfunction is detected when	Reference page
LOCK MODE	NATS MALFUNCTION P1610	When the starting operation is carried out five or more times consecutively under the following conditions, NVIS (NATS) will shift the mode to one which prevents the engine from being started. ● Unregistered ignition key is used. ● IMMU or ECM's malfunctioning.	EL-407
DON'T ERASE BEFORE CHECKING ENG DIAG	—	All engine trouble codes except NVIS (NATS) trouble code has been detected in ECM.	EL-395

Trouble Diagnoses

NAEL0418

WORK FLOW

NAEL0418S01

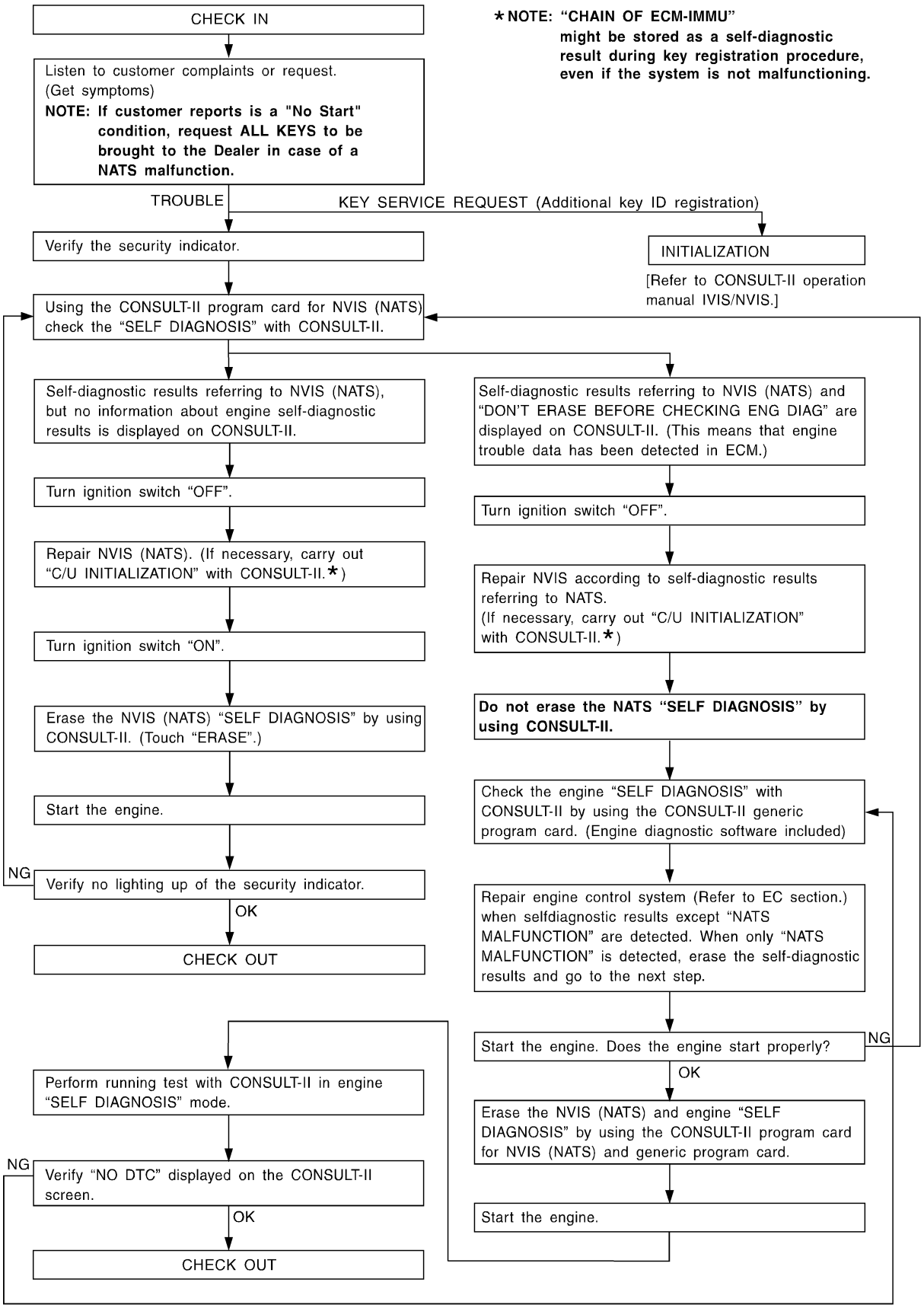

SEL004XA

SYMPTOM MATRIX CHART 1
(Self-diagnosis related item)

NAEL0418S02

SYMPTOM	Displayed "SELF-DIAG RESULTS" on CONSULT-II screen.	DIAGNOSTIC PROCEDURE (Reference page)	SYSTEM (Malfunctioning part or mode)	REFERENCE PART NO. OF ILLUSTRATION ON NEXT PAGE
• Security indicator lighting up* • Engine cannot be started.	ECM INT CIRC-IMMU	PROCEDURE 1 (EL-397)	ECM	B
	CHAIN OF ECM-IMMU	PROCEDURE 2 (EL-398)	In rare case, "CHAIN OF ECM-IMMU" might be stored during key registration procedure, even if the system is not malfunctioning.	—
			Open circuit in battery voltage line of IMMU circuit	C1
			Open circuit in ignition line of IMMU circuit	C2
			Open circuit in ground line of IMMU circuit	C3
			Open circuit in communication line between IMMU and ECM	C4
			Short circuit between IMMU and ECM communication line and battery voltage line	C4
			Short circuit between IMMU and ECM communication line and ground line	C4
			ECM	B
			IMMU	A
	DIFFERENCE OF KEY	PROCEDURE 3 (EL-402)	Unregistered key	D
			IMMU	A
	CHAIN OF IMMU-KEY	PROCEDURE 4 (EL-403)	Malfunction of key ID chip	E
			IMMU	A
	ID DISCORD, IMM-ECM	PROCEDURE 5 (EL-404)	System initialization has not yet been completed.	F
			ECM	F
	LOCK MODE	PROCEDURE 7 (EL-407)	LOCK MODE	D
• MIL staying ON • Security indicator lighting up*	DON'T ERASE BEFORE CHECKING ENG DIAG	WORK FLOW (EL-395)	Engine trouble data and NVIS (NATS) trouble data have been detected in ECM	—

*: When NVIS (NATS) detects trouble, the security indicator lights up while ignition key is in the "ON" position.

SYMPTOM MATRIX CHART 2
(Non self-diagnosis related item)

NAEL0418S03

SYMPTOM	DIAGNOSTIC PROCEDURE (Reference page)	SYSTEM (Malfunctioning part or mode)
Security ind. does not light up.	PROCEDURE 6 (EL-405)	Security ind.
		Open circuit between Fuse and IMMU
		Continuation of initialization mode
		IMMU

DIAGNOSTIC SYSTEM DIAGRAM

NAEL0418S04

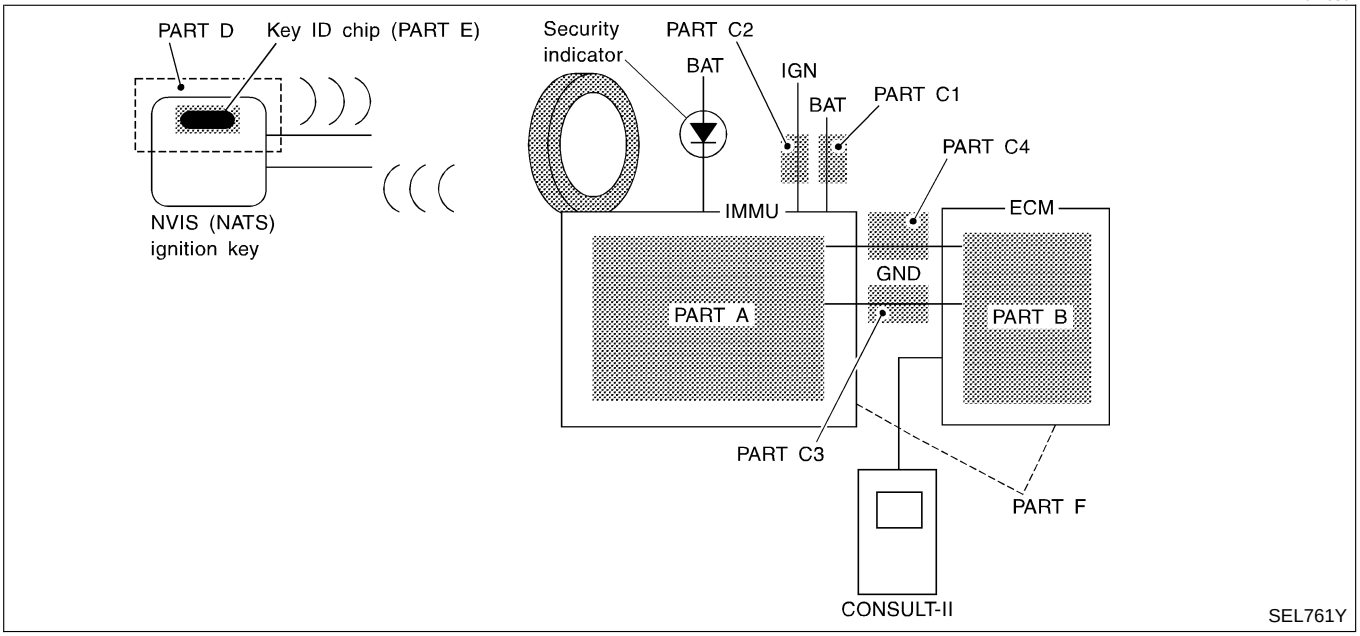

SELF DIAG RESULTS	
DTC RESULTS	TIME
ECM INT CIRC-IMMU	0

SEL365X

DIAGNOSTIC PROCEDURE 1

NAEL0418S05

Self-diagnostic results:
"ECM INT CIRC-IMMU" displayed on CONSULT-II screen

1. Confirm SELF-DIAGNOSTIC RESULTS "ECM INT CIRC-IMMU" displayed on CONSULT-II screen. Ref. part No. B.
2. Replace ECM.
3. Perform initialization with CONSULT-II.
   For initialization, refer to "CONSULT-II operation manual IVIS/NVIS".

DIAGNOSTIC PROCEDURE 2

=NAEL0418S06

Self-diagnostic results:
"CHAIN OF ECM-IMMU" displayed on CONSULT-II screen

1	CONFIRM SELF-DIAGNOSTIC RESULTS

Confirm SELF-DIAGNOSTIC RESULTS "CHAIN OF ECM-IMMU" displayed on CONSULT-II screen.
NOTE:
In rare case, "CHAIN OF ECM-IMMU" might be stored during key registration procedure, even if the system is not malfunctioning.

SELF DIAG RESULTS	
DTC RESULTS	TIME
CHAIN OF ECM-IMMU	0

SEL366X

Is CONSULT-II screen displayed as above?

Yes	▶	GO TO 2.
No	▶	GO TO SYMPTOM MATRIX CHART 1.

2	CHECK POWER SUPPLY CIRCUIT FOR IMMU

1. Disconnect IMMU connector.
2. Check voltage between IMMU harness connector terminal 8 and ground with CONSULT-II or tester.

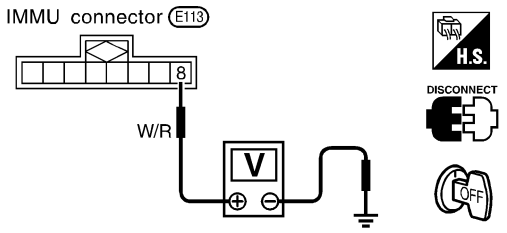

Battery voltage should exist.

SEL302WD

OK or NG

OK	▶	GO TO 3.
NG	▶	**Check the following** ● 7.5A fuse (No. 62, located in the fuse and fusible link box) ● Harness for open or short between fuse and IMMU connector **Ref. Part No. C1**

3	CHECK IGN SW. ON SIGNAL

1. Turn ignition switch ON.
2. Check voltage between IMMU harness connector terminal 7 and ground with CONSULT-II or tester.

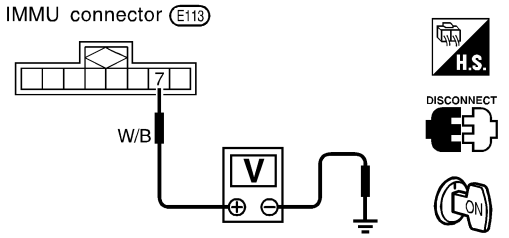

Battery voltage should exist.

SEL303WF

OK or NG

OK	▶	GO TO 4.
NG	▶	**Check the following** ● 10A fuse [No. 16, located in the fuse block (J/B)] ● Harness for open or short between fuse and IMMU connector **Ref. part No. C2**

4	CHECK GROUND CIRCUIT FOR IMMU

1. Turn ignition OFF.
2. Check harness continuity between IMMU harness connector E113 terminal 4 (B) and ECM harness connector F203 terminal 67 (B/P).

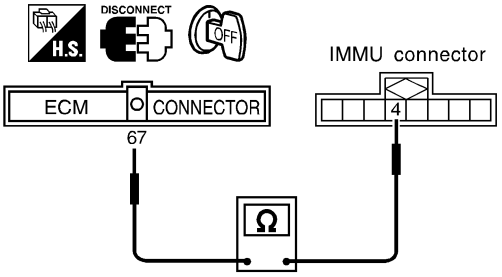

Continuity should exist.

SEL762Y

OK or NG

OK	▶	GO TO 5.
NG	▶	Repair harness. **Ref. part No. C3**

5	CHECK COMMUNICATION LINE OPEN CIRCUIT

1. Disconnect ECM connector.
2. Check harness continuity between ECM harness connector terminal 88 and IMMU harness connector terminal 1.

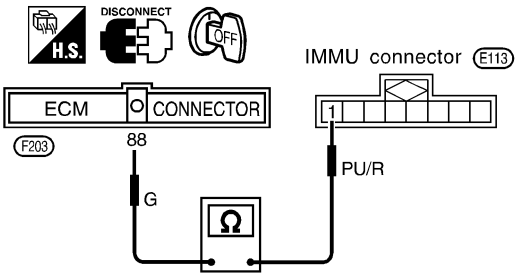

Continuity should exist.

SEL740Y

OK or NG

OK	▶	GO TO 6.
NG	▶	Repair harness or connector. **Ref. part No. C4**

6	CHECK COMMUNICATION LINE BATTERY SHORT CIRCUIT

1. Turn ignition ON.
2. Check voltage between ECM harness connector terminal 88 or IMMU harness connector terminal 1 and ground.

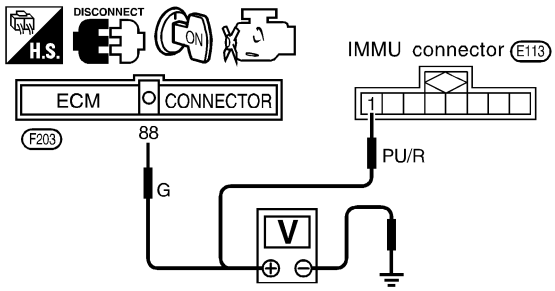

Voltage: 0V

SEL741Y

OK or NG

OK	▶	GO TO 7.
NG	▶	Communication line is short-circuited with battery voltage line or ignition switch ON line. Repair harness or connectors. **Ref. part No. C4**

7	CHECK COMMUNICATION LINE GROUND SHORT CIRCUIT

1. Turn ignition switch OFF.
2. Check continuity between ECM harness connector terminal 88 or IMMU harness connector terminal 1 and ground.

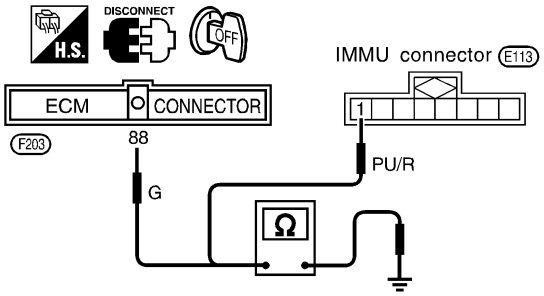

Continuity should not exist.

SEL742Y

OK or NG

OK	▶	GO TO 8.
NG	▶	Communication line is short-circuited with ground line. Repair harness or connectors. **Ref. part No. C4**

8	SIGNAL FROM ECM TO IMMU CHECK

1. Check the signal between ECM harness connector F203 terminal 88 (G) and ground with CONSULT-II or oscilloscope when ignition switch is turned "ON".
2. Make sure signals which are shown in the figure below can be detected during 750 msec. just after ignition switch is turned "ON".

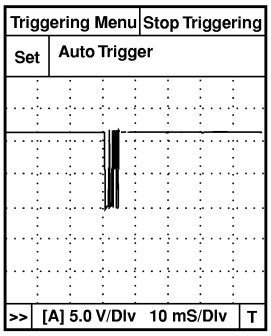

SEL730W

OK or NG

OK	▶	IMMU is malfunctioning. Replace IMMU. **Ref. part No. A** Perform initialization with CONSULT-II. For the operation of initialization, refer to "CONSULT-II Operation Manual IVIS/NVIS".
NG	▶	ECM is malfunctioning. Replace ECM. **Ref. part No. B** Perform initialization with CONSULT-II. For the operation of initialization, refer to "CONSULT-II Operation Manual IVIS/NVIS".

DIAGNOSTIC PROCEDURE 3

=NAEL0418S07

Self-diagnostic results:
"DIFFERENCE OF KEY" displayed on CONSULT-II screen

1	CONFIRM SELF-DIAGNOSTIC RESULTS

Confirm SELF-DIAGNOSTIC RESULTS "DIFFERENCE OF KEY" displayed on CONSULT-II screen.

SELF DIAG RESULTS	
DTC RESULTS	TIME
DIFFERENCE OF KEY	0

SEL367X

Is CONSULT-II screen displayed as above?

Yes	▶	GO TO 2.
No	▶	GO TO SYMPTOM MATRIX CHART 1.

2	PERFORM INITIALIZATION WITH CONSULT-II

Perform initialization with CONSULT-II. Re-register all NVIS (NATS) ignition key IDs.
For initialization and registration of NVIS (NATS) ignition key IDs, refer to "CONSULT-II operation manual NVIS/NVIS".

IMMU INITIALIZATION
INITIALIZATION FAIL
THEN IGN KEY SW 'OFF' AND 'ON', AFTER CONFIRMING SELF-DIAG AND PASSWORD, PERFORM C/U INITIALIZATION AGAIN.

SEL297W

NOTE:
If the initialization is not completed or fails, CONSULT-II shows above message on the screen.

Can the system be initialized and can the engine be started with re-registered NVIS (NATS) ignition key?

Yes	▶	Ignition key ID was unregistered. **Ref. part No. D**
No	▶	IMMU is malfunctioning. Replace IMMU. **Ref. part No. A** Perform initialization with CONSULT-II. For initialization, refer to "CONSULT-II operation manual IVIS/NVIS".

DIAGNOSTIC PROCEDURE 4

=NAEL0418S08

Self-diagnostic results:
"CHAIN OF IMMU-KEY" displayed on CONSULT-II screen

1	CONFIRM SELF-DIAGNOSTIC RESULTS

Confirm SELF-DIAGNOSTIC RESULTS "CHAIN OF IMMU-KEY" displayed on CONSULT-II screen.

SELF DIAG RESULTS	
DTC RESULTS	TIME
CHAIN OF IMMU-KEY	0

SEL368X

Is CONSULT-II screen displayed as above?

Yes	▶	GO TO 2.
No	▶	GO TO SYMPTOM MATRIX CHART 1.

2	CHECK NVIS (NATS) IGNITION KEY ID CHIP

Start engine with another registered NVIS (NATS) ignition key.

Does the engine start?

Yes	▶	Ignition key ID chip is malfunctioning. Replace the ignition key. **Ref. part No. E** Perform initialization with CONSULT-II. For initialization, refer to "CONSULT-II Operation Manual IVIS/NVIS".
No	▶	GO TO 3.

3	CHECK IMMU INSTALLATION

Check IMMU installation.
Refer to "How to Replace IMMU" in EL-408.

OK or NG

OK	▶	IMMU is malfunctioning. Replace IMMU. **Ref. part No. A** Perform initialization with CONSULT-II. For initialization, refer to "CONSULT-II Operation Manual IVIS/NVIS".
NG	▶	Reinstall IMMU correctly.

DIAGNOSTIC PROCEDURE 5

=NAEL0418S09

Self-diagnostic results:
"ID DISCORD, IMM-ECM" displayed on CONSULT-II screen

1	CONFIRM SELF-DIAGNOSTIC RESULTS

Confirm SELF-DIAGNOSTIC RESULTS "ID DISCORD, IMM-ECM" displayed on CONSULT-II screen.

SELF DIAG RESULTS	
DTC RESULTS	TIME
ID DISCORD, IMM-ECM	0

SEL369X

NOTE:
"ID DISCORD IMMU-ECM":
Registered ID of IMMU is in discord with that of ECM.

Is CONSULT-II screen displayed as above?

Yes	▶	GO TO 2.
No	▶	GO TO SYMPTOM MATRIX CHART 1.

2	PERFORM INITIALIZATION WITH CONSULT-II

Perform initialization with CONSULT-II. Re-register all NVIS (NATS) ignition key IDs.
For initialization, refer to "CONSULT-II operation manual IVIS/NVIS".

IMMU INITIALIZATION
INITIALIZATION FAIL
THEN IGN KEY SW 'OFF' AND 'ON', AFTER CONFIRMING SELF-DIAG AND PASSWORD, PERFORM C/U INITIALIZATION AGAIN.

SEL297W

NOTE:
If the initialization is not completed or fails, CONSULT-II shows above message on the screen.

Can the system be initialized?

Yes	▶	Start engine. (END) (System initialization had not been completed. **Ref. part No. F**)
No	▶	ECM is malfunctioning. Replace ECM. **Ref. part No. F** Perform initialization with CONSULT-II. For initialization, refer to "CONSULT-II operation manual IVIS/NVIS".

DIAGNOSTIC PROCEDURE 6
"SECURITY INDICATOR LAMP DOES NOT LIGHT UP"

=NAEL0418S10

1	CHECK FUSE	
Check 10A fuse [No. 12, located in the fuse block (J/B)].		
Is 10A fuse OK?		
Yes	▶	GO TO 2.
No	▶	Replace fuse.

2	CHECK SECURITY INDICATOR LAMP	
1. Install 10A fuse. 2. Perform initialization with CONSULT-II. For initialization, refer to "CONSULT-II Operation Manual IVIS/NVIS". 3. Turn ignition switch OFF. 4. Start engine and turn ignition switch OFF. 5. Check the security indicator lamp lighting. **Security indicator lamp should be blinking.**		
OK or NG		
OK	▶	INSPECTION END
NG	▶	GO TO 3.

3	CHECK SECURITY INDICATOR LAMP POWER SUPPLY CIRCUIT	
1. Disconnect security indicator lamp connector. 2. Check voltage between security indicator lamp harness connector terminal 1 and ground.		

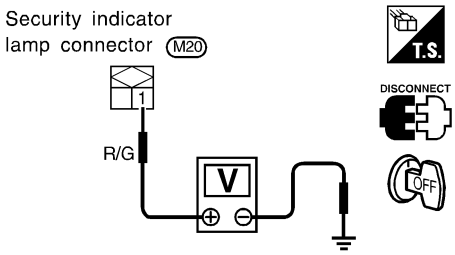

Battery voltage should exist.

SEL370XA

OK or NG		
OK	▶	GO TO 4.
NG	▶	Check harness for open or short between fuse and security indicator lamp.

4	CHECK SECURITY INDICATOR LAMP

1. Disconnect security indicator lamp connector.
2. Apply 12V direct current to security indicator lamp harness connector M20 terminals 1 and 2.

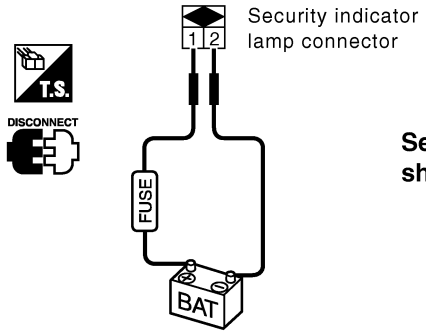

Security indicator lamp should illuminate.

SEL696Y

OK or NG

OK	▶	GO TO 5.
NG	▶	Replace security indicator lamp.

5	CHECK IMMU FUNCTION

1. Connect IMMU connector.
2. Disconnect security indicator lamp connector.
3. Check continuity between IMMU harness connector terminal 5 and ground.

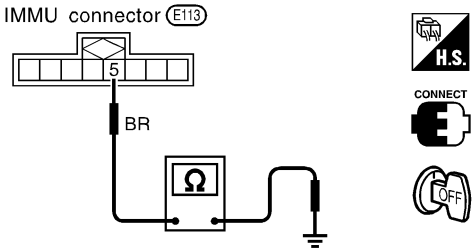

Continuity should exist intermittently.

SEL300WC

OK or NG

OK	▶	Check harness for open or short between security indicator lamp and IMMU.
NG	▶	IMMU is malfunctioning. Replace IMMU. Perform initialization with CONSULT-II. For initialization, refer to "CONSULT-II operation manual IVIS/NVIS".

DIAGNOSTIC PROCEDURE 7

=NAEL0418S11

Self-diagnostic results:
"LOCK MODE" displayed on CONSULT-II screen

1	CONFIRM SELF-DIAGNOSTIC RESULTS

Confirm SELF-DIAGNOSTIC RESULTS "LOCK MODE" is displayed on CONSULT-II screen.

SELF DIAG RESULTS	
DTC RESULTS	TIME
LOCK MODE	0

SEL371X

Is CONSULT-II screen displayed as above?

Yes	▶	GO TO 2.
No	▶	GO TO SYMPTOM MATRIX CHART 1.

2	ESCAPE FROM LOCK MODE

1. Turn ignition switch OFF.
2. Turn ignition switch ON with registered key. (Do not start engine.) Wait 5 seconds.
3. Return the key to OFF position.
4. Repeat steps 2 and 3 twice (total of three cycles).
5. Start the engine.

Does engine start?

Yes	▶	System is OK. (Now system is escaped from "LOCK MODE".)
No	▶	GO TO 3.

3	CHECK IMMU ILLUSTRATION

Check IMMU installation. Refer to "How to Replace IMMU" in EL-408.

OK or NG

OK	▶	GO TO 4.
NG	▶	Reinstall IMMU correctly.

4	PERFORM INITIALIZATION WITH CONSULT-II

Perform initialization with CONSULT-II.
For initialization, refer to "CONSULT-II operation manual IVIS/NVIS".

IMMU INITIALIZATION
INITIALIZATION FAIL
THEN IGN KEY SW 'OFF' AND 'ON', AFTER CONFIRMING SELF-DIAG AND PASSWORD, PERFORM C/U INITIALIZATION AGAIN.

SEL297W

NOTE:
If the initialization is not completed or fails, CONSULT-II shows the above message on the screen.

Can the system be initialized?

Yes	▶	System is OK.
No	▶	GO TO DIAGNOSTIC PROCEDURE 4 to check "CHAIN OF IMMU-KEY", refer to EL-403.

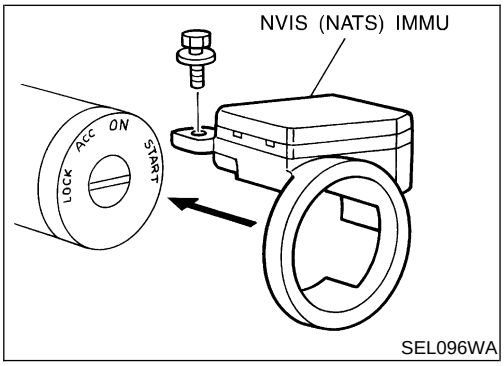

SEL096WA

How to Replace NVIS (NATS) IMMU

NAEL0419

NOTE:

- **If NVIS (NATS) IMMU is not installed correctly, NVIS (NATS) system will not operate properly and SELF-DIAG RESULTS on CONSULT-II screen will show "LOCK MODE".**

System Description

NAEL0462

CAN (Controller Area Network) is a serial communication line for real time application. It is an on-vehicle multiplex communication line with high data communication speed and excellent error detection ability. Many electronic control units are equipped onto a vehicle, and each control unit shares information and links with other control units during operation (not independent). In CAN communication, control units are connected with 2 communication lines (CAN H line, CAN L line) allowing a high rate of information transmission with less wiring. Each control unit transmits/receives data but selectively reads required data only.

CAN Communication Unit

NAEL0463

Go to CAN system, when selecting your CAN system type from the following table.

Body type	Wide/Wagon						
Engine	VQ35DE						
Transmission	A/T						M/T
Brake control	VDC			ABS			
Axle	4WD (All-mode)	4WD (Part time)	2WD	4WD (All-mode)	4WD (Part time)	2WD	4WD (Part time)
CAN system type	1	2		3			4
CAN system trouble diagnosis	EL-414	EL-438		EL-460			EL-473

TYPE 1

System Diagram

=NAEL0463S01

NAEL0463S0101

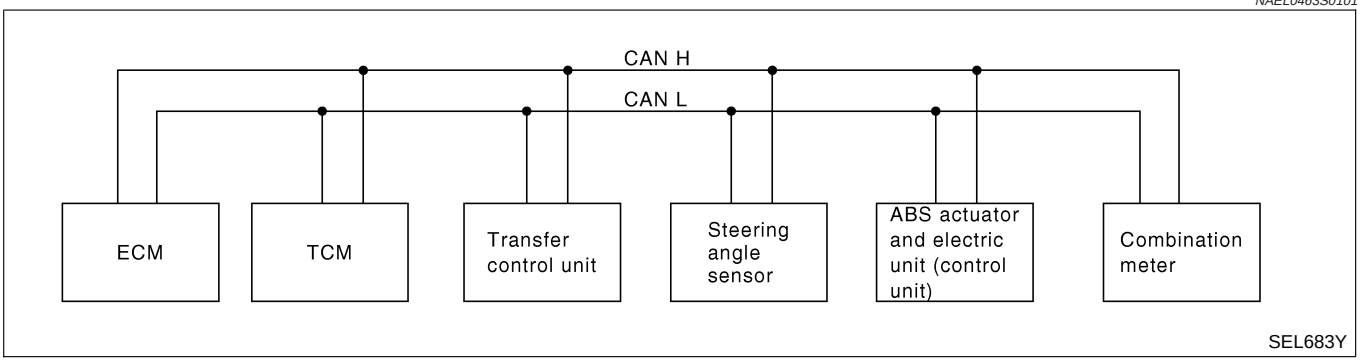

Input/Output Signal Chart

NAEL0463S0102

T: Transmit R: Receive

Signals	ECM	TCM	Transfer control unit	Steering angle sensor	ABS actuator and electric unit (control unit)	Combination meter
Engine speed signal	T		R		R	R
Accelerator pedal position signal	T		R		R	
Closed throttle position signal	T	R				
Wide open throttle position signal	T	R				
VDC operation signal			R		T	
TCS operation signal			R		T	
ABS operation signal			R		T	
Output shaft revolution signal	R	T	R			
During shifting signal		T	R		R	
Steering wheel angle sensor signal				T	R	
Wheel speed sensor signal			R		T	
Stop lamp switch signal		R				T
Malfunction indicator lamp signal	T					R
Engine coolant temperature signal	T					R
Vehicle speed signal					T	R
	R					T
Neutral range switch signal		R				T
Parking range switch signal		R				T
Overdrive control switch signal		R				T
A/C compressor feedback signal	T					R
Fuel level sensor signal	R					T
A/T position indicator signal		T				R
O/D OFF indicator signal		T				R

TYPE 2

System Diagram

=NAEL0463S02

NAEL0463S0201

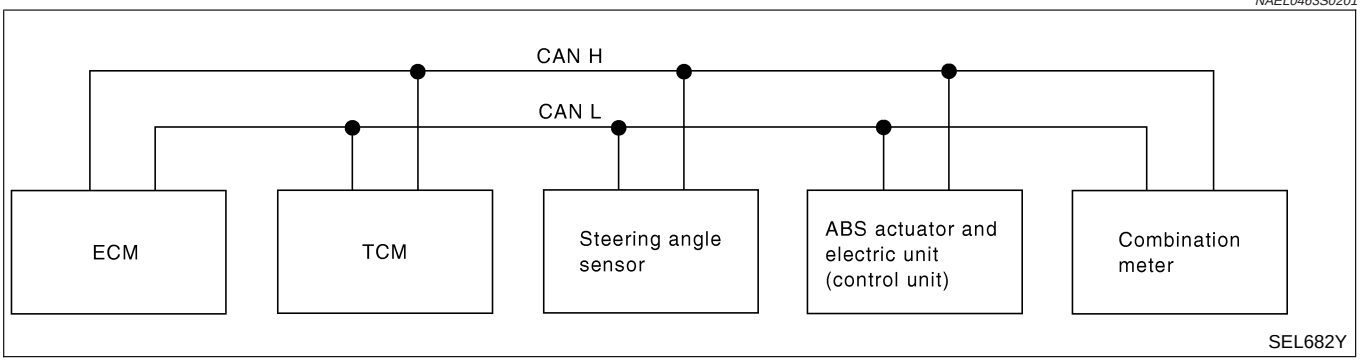

Input/Output Signal Chart

NAEL0463S0202

T: Transmit R: Receive

Signals	ECM	TCM	Steering angle sensor	ABS actuator and electric unit (control unit)	Combination meter
Engine speed signal	T			R	R
Accelerator pedal position signal	T			R	
Closed throttle position signal	T	R			
Wide open throttle position signal	T	R			
Steering wheel angle sensor signal			T	R	
Malfunction indicator lamp signal	T				R
Engine coolant temperature signal	T				R
Vehicle speed signal				T	R
	R				T
Stop lamp switch signal		R			T
Neutral range switch signal		R			T
Parking range switch signal		R			T
Overdrive control switch signal		R			T
A/C compressor feedback signal	T				R
Fuel level sensor signal	R				T
A/T position indicator signal		T			R
O/D OFF indicator signal		T			R

TYPE 3

System Diagram

=NAEL0463S03

NAEL0463S0301

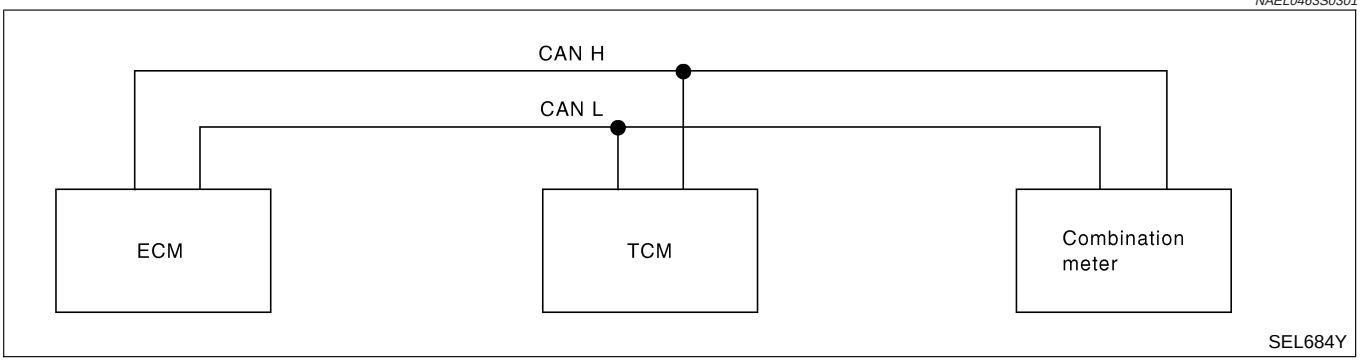

Input/Output Signal Chart

NAEL0463S0302

T: Transmit R: Receive

Signals	ECM	TCM	Combination meter
Engine speed signal	T		R
Closed throttle position signal	T	R	
Wide open throttle position signal	T	R	
Stop lamp switch signal		R	T
Neutral range switch signal		R	T
Parking range switch signal		R	T
Overdrive control switch signal		R	T
Malfunction indicator lamp signal	T		R
Engine coolant temperature signal	T		R
Vehicle speed signal	R		T
A/C compressor feedback signal	T		R
Fuel level sensor signal	R		T
A/T position indicator signal		T	R
O/D OFF indicator signal		T	R

TYPE 4

System Diagram

=NAEL0463S04

NAEL0463S0401

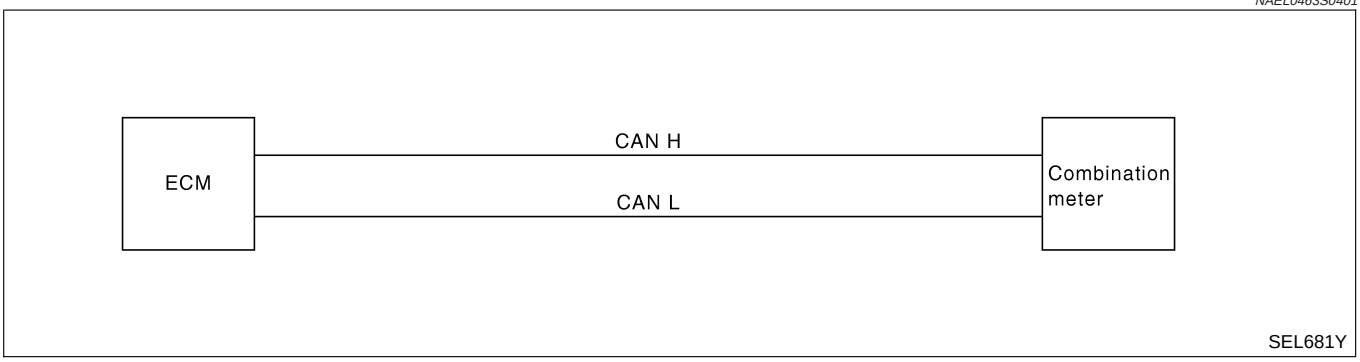

Input/Output Signal Chart

NAEL0463S0402

T: Transmit R: Receive

Signals	ECM	Combination meter
Engine speed signal	T	R
Malfunction indicator lamp signal	T	R
Engine coolant temperature signal	T	R
Vehicle speed signal	R	T
A/C compressor feedback signal	T	R
Fuel level sensor signal	R	T

Component Parts and Harness Connector Location

NAEL0464

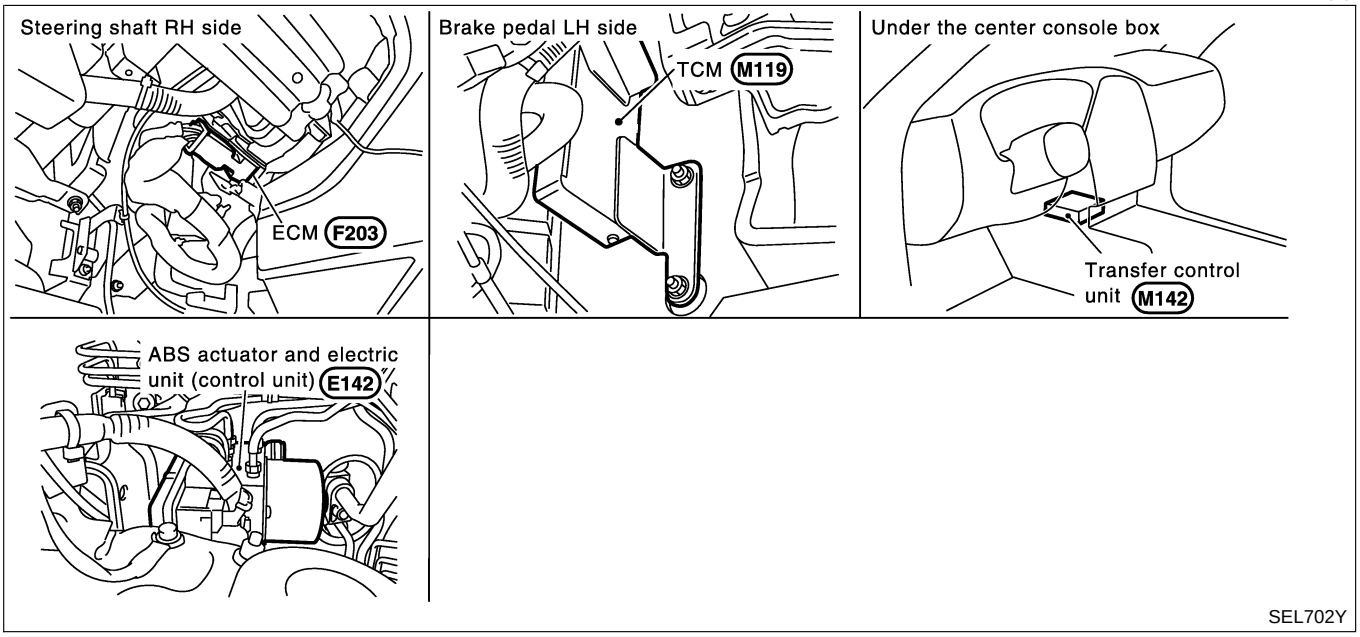

System Description

NAEL0465

CAN (Controller Area Network) is a serial communication line for real time application. It is an on-vehicle multiplex communication line with high data communication speed and excellent error detection ability. Many electronic control units are equipped onto a vehicle, and each control unit shares information and links with other control units during operation (not independent). In CAN communication, control units are connected with 2 communication lines (CAN H line, CAN L line) allowing a high rate of information transmission with less wiring. Each control unit transmits/receives data but selectively reads required data only.

Wiring Diagram — CAN —

NAEL0466

EL-CAN-01

: DATA LINE

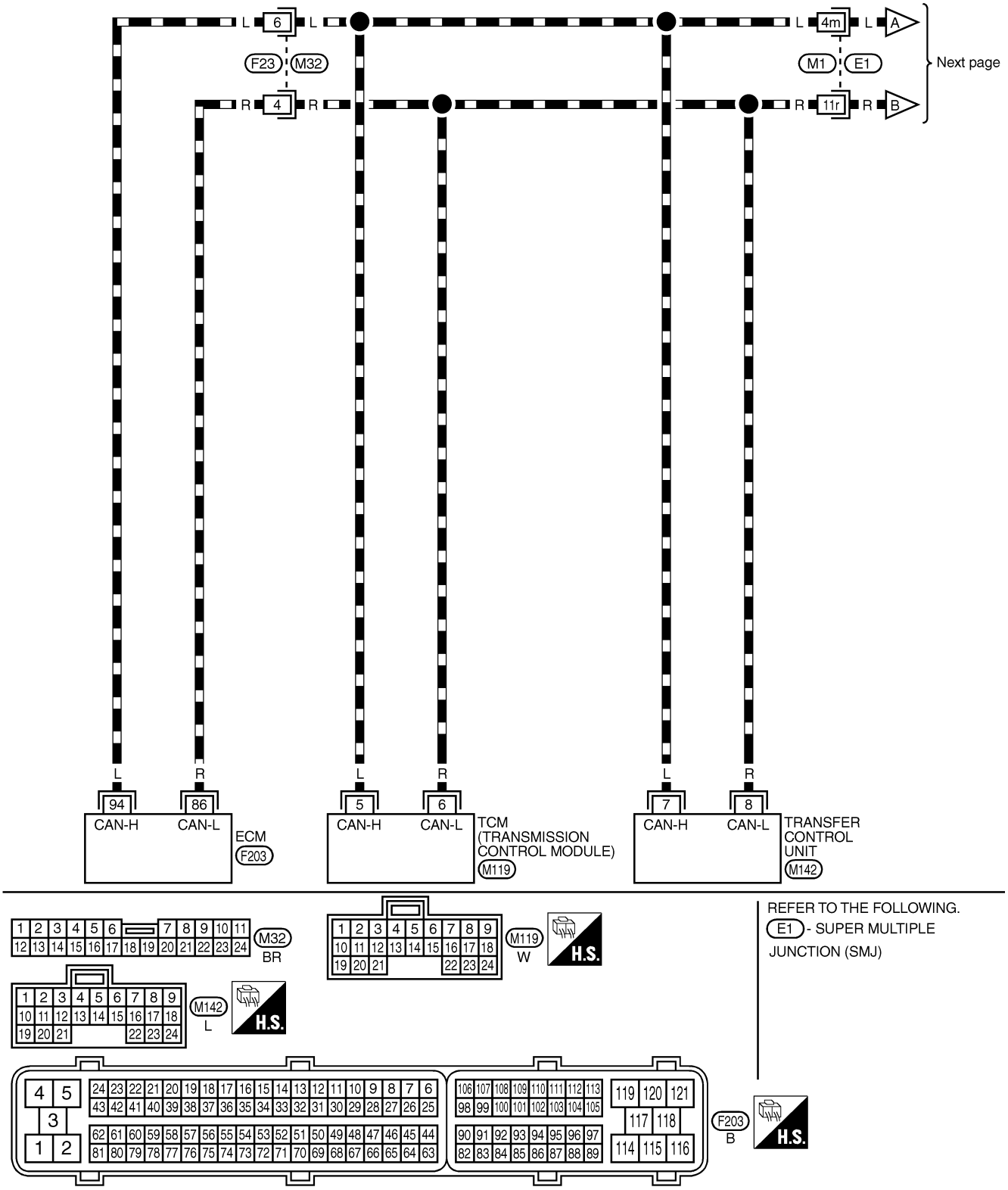

MEL578Q

EL-CAN-02

: DATA LINE

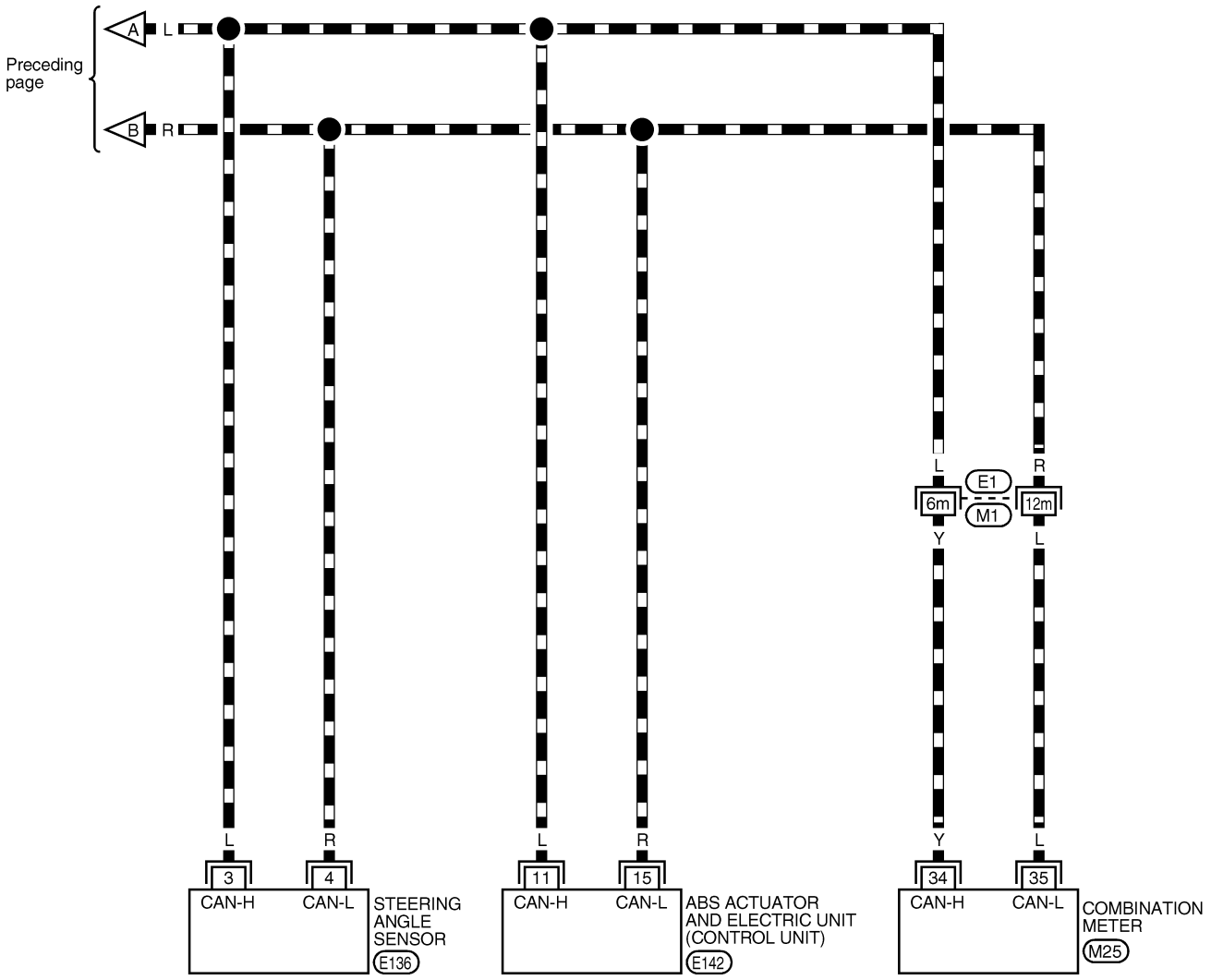

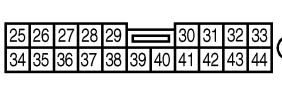

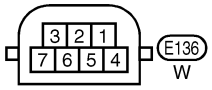

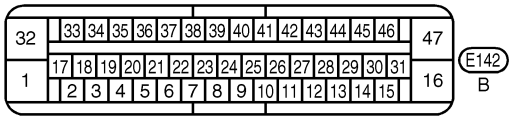

REFER TO THE FOLLOWING.
E1 -SUPER MULTIPLE JUNCTION (SMJ)

MEL579Q

Trouble Diagnoses

NAEL0467

WORK FLOW

NAEL0467S01

1. Print all the data of “SELF-DIAG RESULTS” for “ENGINE”, “A/T”, “ALL MODE AWD/4WD” and “ABS” displayed on CONSULT-II.

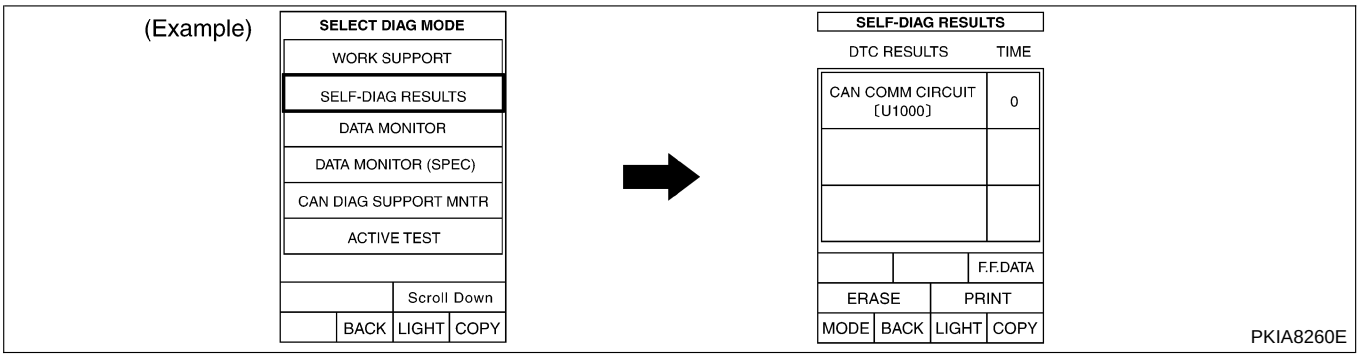

2. Print all the data of “CAN DIAG SUPPORT MNTR” for “ENGINE”, “A/T”, “ALL MODE AWD/4WD” and “ABS” displayed on CONSULT-II.

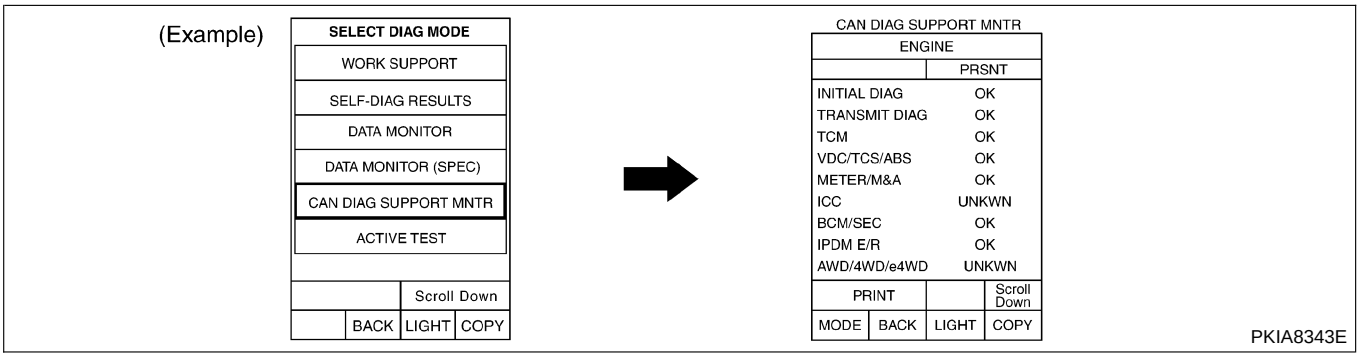

3. Attach the printed sheet of “SELF-DIAG RESULTS” and “CAN DIAG SUPPORT MNTR” onto the check sheet. Refer to “CHECK SHEET” (EL-418).
4. Based on the “CAN DIAG SUPPORT MNTR” results, put “v” marks onto the items with “UNKWN” or “NG” in the check sheet table. Refer to “CHECK SHEET” (EL-418).

NOTE:
If “NG” is displayed on “INITIAL DIAG (Initial diagnosis)” as “CAN DIAG SUPPORT MNTR” for the diagnosed control unit, replace the control unit.

5. According to the check sheet results (example), start inspection. Refer to “CHECK SHEET RESULTS (EXAMPLE)” (EL-419).

CHECK SHEET

=NAEL0467S02

NOTE:

If "NG" is displayed on "INITIAL DIAG (Initial diagnosis)" as "CAN DIAG SUPPORT MNTR" for the diagnosed control unit, replace the control unit.

Check sheet table

SELECT SYSTEM screen	CAN DIAG SUPPORT MNTR							
	Initial diagnosis	Transmit diagnosis	Receive diagnosis					
			ECM	TCM	AWD/4WD	STRG	VDC/TCS/ ABS	METER/ M&A
ENGINE	NG	UNKWN	–	UNKWN	–	–	UNKWN	UNKWN
A/T	NG	UNKWN	UNKWN	–	–	–	UNKWN	UNKWN
ALL MODE AWD/4WD	NG	UNKWN	UNKWN	UNKWN	–	UNKWN	UNKWN	–
ABS	NG	UNKWN	UNKWN	UNKWN	UNKWN	UNKWN	–	UNKWN

Symptoms:

Attach copy of ENGINE SELF-DIAG RESULTS	Attach copy of A/T SELF-DIAG RESULTS	Attach copy of ALL MODE AWD/4WD SELF-DIAG RESULTS	Attach copy of ABS SELF-DIAG RESULTS
Attach copy of ENGINE CAN DIAG SUPPORT MNTR	Attach copy of A/T CAN DIAG SUPPORT MNTR	Attach copy of ALL MODE AWD/4WD CAN DIAG SUPPORT MNTR	Attach copy of ABS CAN DIAG SUPPORT MNTR

PKIA8707E

CHECK SHEET RESULTS (EXAMPLE)

=NAEL0467S03

NOTE:

If "NG" is displayed on "INITIAL DIAG (Initial diagnosis)" as "CAN DIAG SUPPORT MNTR" for the diagnosed control unit, replace the control unit.

Case 1

NAEL0467S0301

Check harness between TCM and transfer control unit. Refer to "CIRCUIT CHECK BETWEEN TCM AND TRANSFER CONTROL UNIT" (EL-424).

SELECT SYSTEM screen	CAN DIAG SUPPORT MNTR							
	Initial diagnosis	Transmit diagnosis	Receive diagnosis					
			ECM	TCM	AWD/4WD	STRG	VDC/TCS/ ABS	METER/ M&A
ENGINE	NG	UNKWN	–	UNKWN	–	–	UNKWN	UNKWN
A/T	NG	UNKWN	UNKWN	–	–	–	UNKWN	UNKWN
ALL MODE AWD/4WD	NG	UNKWN	UNKWN	UNKWN	–	UNKWN	UNKWN	–
ABS	NG	UNKWN	UNKWN	UNKWN	UNKWN	UNKWN	–	UNKWN

PKIA8711E

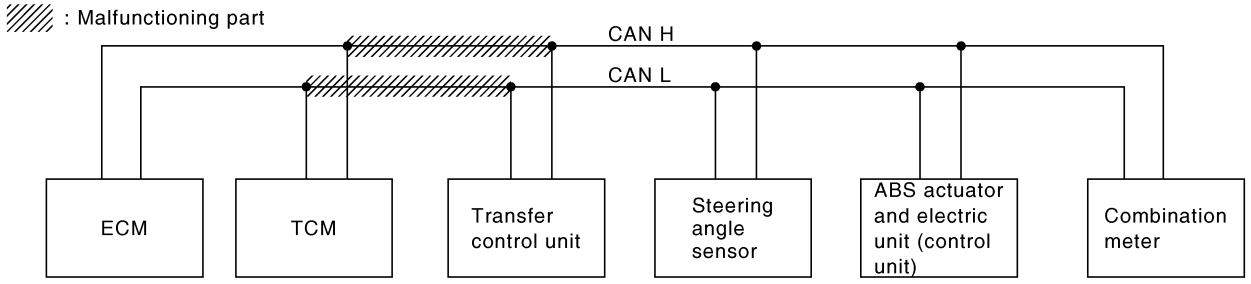

PKIA8734E

Case 2

NAEL0467S0302

Check harness between transfer control unit and steering angle sensor. Refer to "CIRCUIT CHECK BETWEEN TRANSFER CONTROL UNIT AND STEERING ANGLE SENSOR" (EL-425).

SELECT SYSTEM screen	CAN DIAG SUPPORT MNTR							
	Initial diagnosis	Transmit diagnosis	Receive diagnosis					
			ECM	TCM	AWD/4WD	STRG	VDC/TCS/ ABS	METER/ M&A
ENGINE	NG	UNKWN	–	UNKWN	–	–	UNKWN	UNKWN
A/T	NG	UNKWN	UNKWN	–	–	–	UNKWN	UNKWN
ALL MODE AWD/4WD	NG	UNKWN	UNKWN	UNKWN	–	UNKWN	UNKWN	–
ABS	NG	UNKWN	UNKWN	UNKWN	UNKWN	UNKWN	–	UNKWN

PKIA8712E

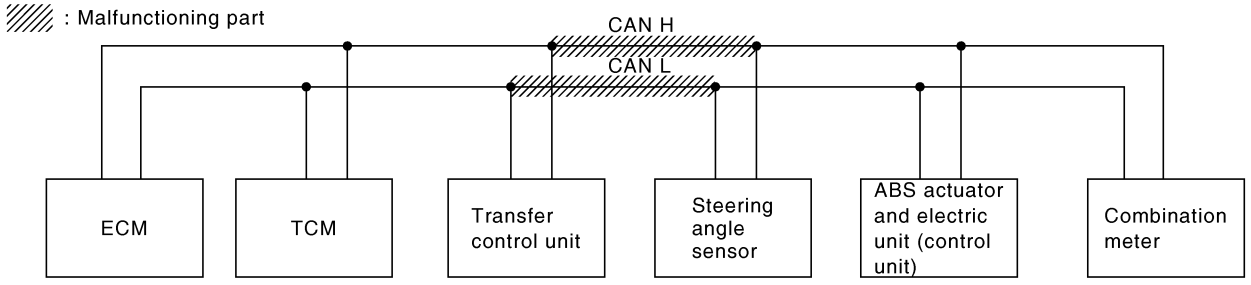

PKIA8735E

Case 3

NAEL0467S0303

Check harness between steering angle sensor and ABS actuator and electric unit (control unit). Refer to "CIRCUIT CHECK BETWEEN STEERING ANGLE SENSOR AND ABS ACTUATOR AND ELECTRIC UNIT (CONTROL UNIT)" (EL-426).

SELECT SYSTEM screen	CAN DIAG SUPPORT MNTR							
	Initial diagnosis	Transmit diagnosis	Receive diagnosis					
			ECM	TCM	AWD/4WD	STRG	VDC/TCS/ ABS	METER/ M&A
ENGINE	NG	UNKWN	–	UNKWN	–	–	UNKWN	UNKWN
A/T	NG	UNKWN	UNKWN	–	–	–	UNKWN	UNKWN
ALL MODE AWD/4WD	NG	UNKWN	UNKWN	UNKWN	–	UNKWN	UNKWN	–
ABS	NG	UNKWN	UNKWN	UNKWN	UNKWN	UNKWN	–	UNKWN

PKIA8713E

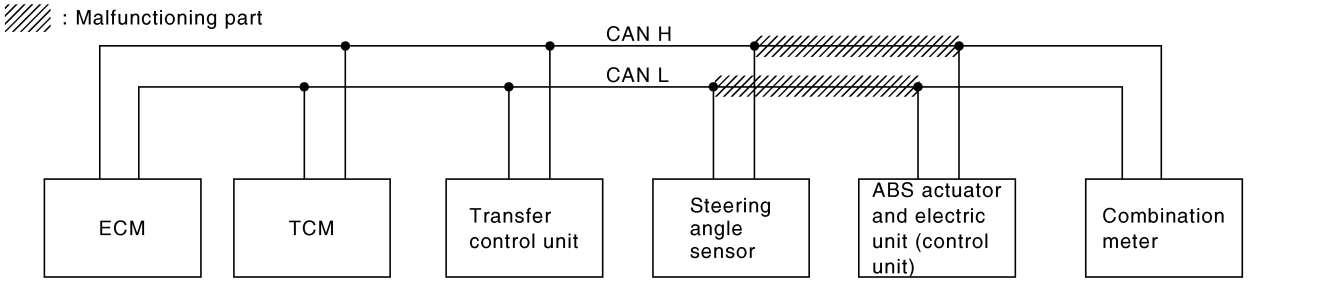

PKIA8736E

Case 4

NAEL0467S0304

Check ECM circuit. Refer to "ECM CIRCUIT CHECK" (EL-427).

SELECT SYSTEM screen	CAN DIAG SUPPORT MNTR							
	Initial diagnosis	Transmit diagnosis	Receive diagnosis					
			ECM	TCM	AWD/4WD	STRG	VDC/TCS/ ABS	METER/ M&A
ENGINE	NG	UNKWN	–	UNKWN	–	–	UNKWN	UNKWN
A/T	NG	UNKWN	UNKWN	–	–	–	UNKWN	UNKWN
ALL MODE AWD/4WD	NG	UNKWN	UNKWN	UNKWN	–	UNKWN	UNKWN	–
ABS	NG	UNKWN	UNKWN	UNKWN	UNKWN	UNKWN	–	UNKWN

PKIA8714E

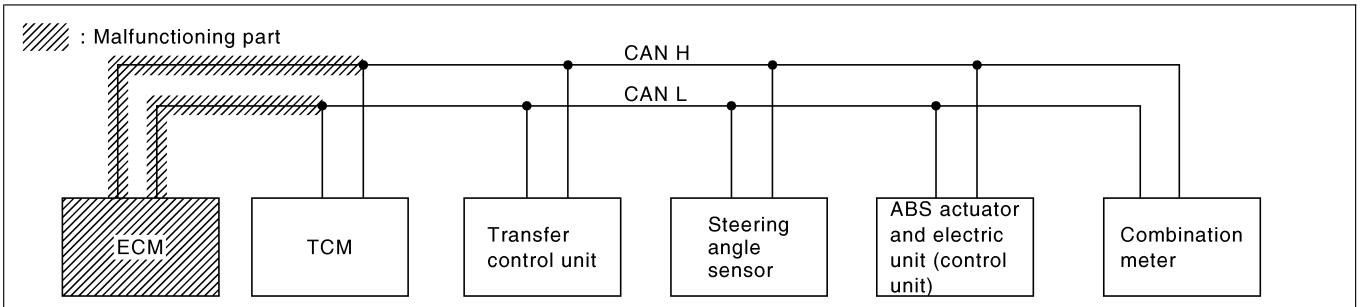

PKIA8737E

Case 5

=NAEL0467S0305

Check TCM circuit. Refer to "TCM CIRCUIT CHECK" (EL-428).

SELECT SYSTEM screen	CAN DIAG SUPPORT MNTR							
	Initial diagnosis	Transmit diagnosis	Receive diagnosis					
			ECM	TCM	AWD/4WD	STRG	VDC/TCS/ ABS	METER/ M&A
ENGINE	NG	UNKWN	–	UNKWN	–	–	UNKWN	UNKWN
A/T	NG	UNKWN	UNKWN	–	–	–	UNKWN	UNKWN
ALL MODE AWD/4WD	NG	UNKWN	UNKWN	UNKWN	–	UNKWN	UNKWN	–
ABS	NG	UNKWN	UNKWN	UNKWN	UNKWN	UNKWN	–	UNKWN

PKIA8715E

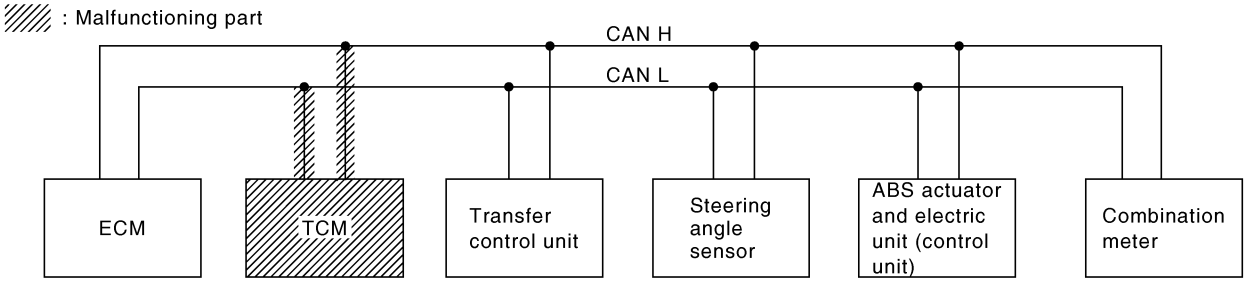

PKIA8738E

Case 6

NAEL0467S0306

Check transfer control unit circuit. Refer to "TRANSFER CONTROL UNIT CIRCUIT CHECK" (EL-429).

SELECT SYSTEM screen	CAN DIAG SUPPORT MNTR							
	Initial diagnosis	Transmit diagnosis	Receive diagnosis					
			ECM	TCM	AWD/4WD	STRG	VDC/TCS/ ABS	METER/ M&A
ENGINE	NG	UNKWN	–	UNKWN	–	–	UNKWN	UNKWN
A/T	NG	UNKWN	UNKWN	–	–	–	UNKWN	UNKWN
ALL MODE AWD/4WD	NG	UNKWN	UNKWN	UNKWN	–	UNKWN	UNKWN	–
ABS	NG	UNKWN	UNKWN	UNKWN	UNKWN	UNKWN	–	UNKWN

PKIA8716E

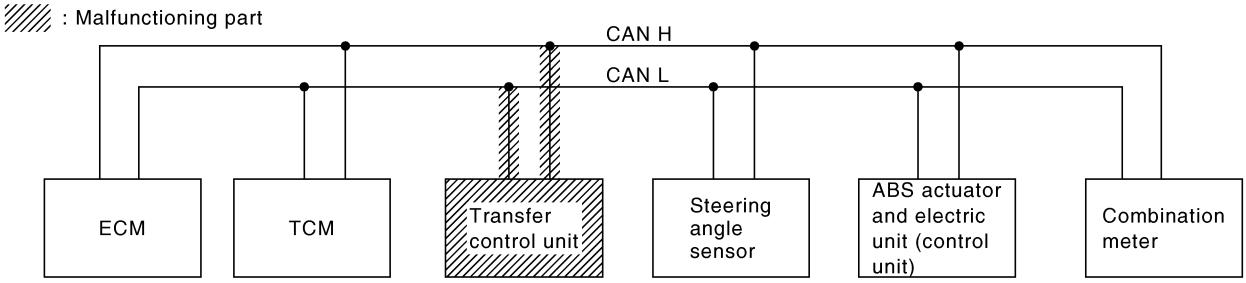

PKIA8739E

Case 7

=NAEL0467S0307

Check steering angle sensor circuit. Refer to "STEERING ANGLE SENSOR CIRCUIT CHECK" (EL-430).

SELECT SYSTEM screen	CAN DIAG SUPPORT MNTR							
	Initial diagnosis	Transmit diagnosis	Receive diagnosis					
			ECM	TCM	AWD/4WD	STRG	VDC/TCS/ ABS	METER/ M&A
ENGINE	NG	UNKWN	–	UNKWN	–	–	UNKWN	UNKWN
A/T	NG	UNKWN	UNKWN	–	–	–	UNKWN	UNKWN
ALL MODE AWD/4WD	NG	UNKWN	UNKWN	UNKWN	–	UNKWN	UNKWN	–
ABS	NG	UNKWN	UNKWN	UNKWN	UNKWN	UNKWN	–	UNKWN

PKIA8717E

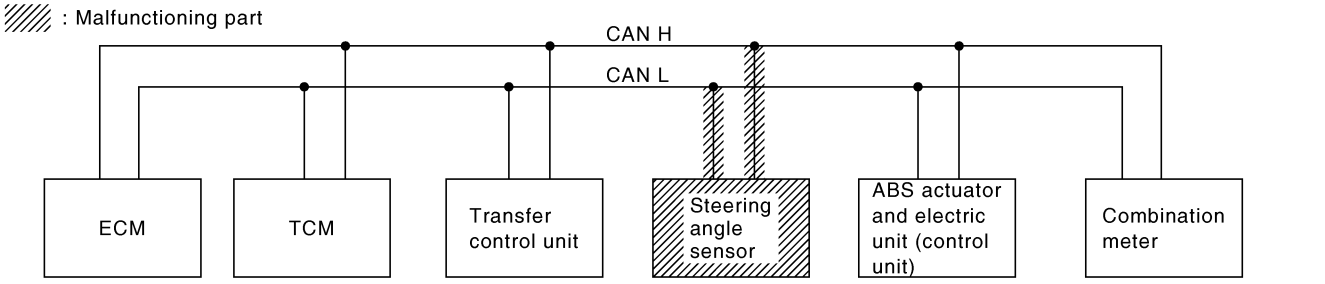

PKIA8740E

Case 8

NAEL0467S0308

Check ABS actuator and electric unit (control unit) circuit. Refer to "ABS ACTUATOR AND ELECTRIC UNIT (CONTROL UNIT) CIRCUIT CHECK" (EL-431).

SELECT SYSTEM screen	CAN DIAG SUPPORT MNTR							
	Initial diagnosis	Transmit diagnosis	Receive diagnosis					
			ECM	TCM	AWD/4WD	STRG	VDC/TCS/ ABS	METER/ M&A
ENGINE	NG	UNKWN	–	UNKWN	–	–	UNKWN	UNKWN
A/T	NG	UNKWN	UNKWN	–	–	–	UNKWN	UNKWN
ALL MODE AWD/4WD	NG	UNKWN	UNKWN	UNKWN	–	UNKWN	UNKWN	–
ABS	NG	UNKWN	UNKWN	UNKWN	UNKWN	UNKWN	–	UNKWN

PKIA8718E

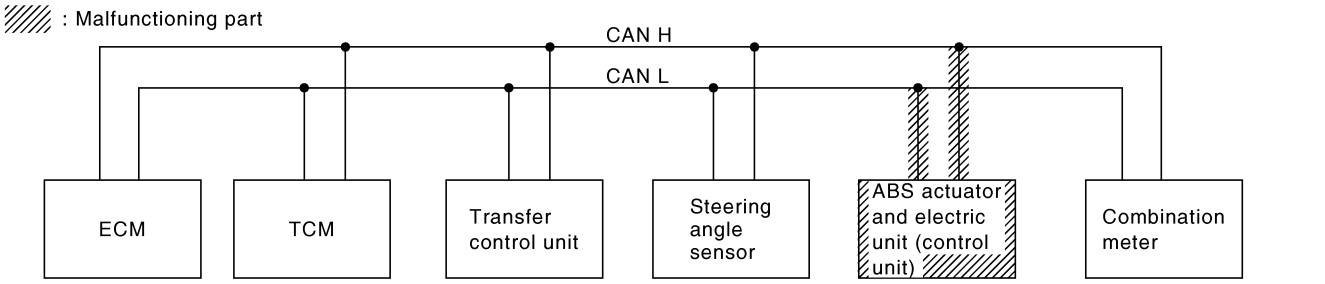

PKIA8741E

Case 9

=NAEL0467S0309

Check combination meter circuit. Refer to "COMBINATION METER CIRCUIT CHECK" (EL-432).

SELECT SYSTEM screen	CAN DIAG SUPPORT MNTR							
	Initial diagnosis	Transmit diagnosis	Receive diagnosis					
			ECM	TCM	AWD/4WD	STRG	VDC/TCS/ ABS	METER/ M&A
ENGINE	NG	UNKWN	–	UNKWN	–	–	UNKWN	UNKWN
A/T	NG	UNKWN	UNKWN	–	–	–	UNKWN	UNKWN
ALL MODE AWD/4WD	NG	UNKWN	UNKWN	UNKWN	–	UNKWN	UNKWN	–
ABS	NG	UNKWN	UNKWN	UNKWN	UNKWN	UNKWN	–	UNKWN

PKIA8719E

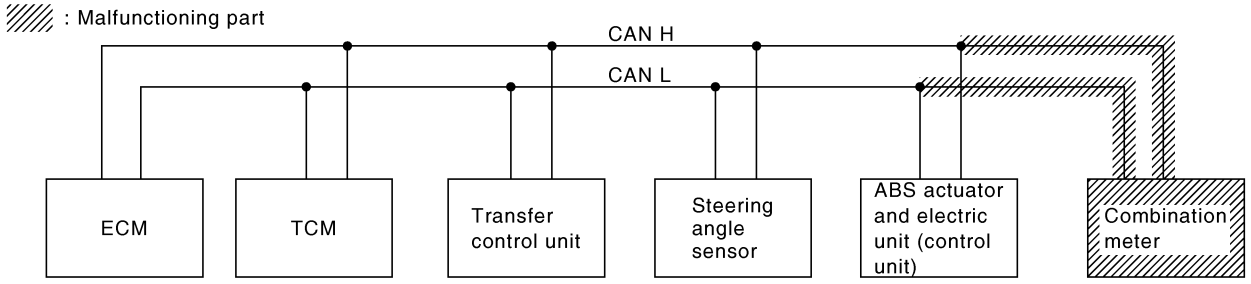

PKIA8742E

Case 10

NAEL0467S0310

Check CAN communication circuit. Refer to "CAN COMMUNICATION CIRCUIT CHECK" (EL-433).

SELECT SYSTEM screen	CAN DIAG SUPPORT MNTR							
	Initial diagnosis	Transmit diagnosis	Receive diagnosis					
			ECM	TCM	AWD/4WD	STRG	VDC/TCS/ ABS	METER/ M&A
ENGINE	NG	UNKWN	–	UNKWN	–	–	UNKWN	UNKWN
A/T	NG	UNKWN	UNKWN	–	–	–	UNKWN	UNKWN
ALL MODE AWD/4WD	NG	UNKWN	UNKWN	UNKWN	–	UNKWN	UNKWN	–
ABS	NG	UNKWN	UNKWN	UNKWN	UNKWN	UNKWN	–	UNKWN

PKIA8720E

CIRCUIT CHECK BETWEEN TCM AND TRANSFER CONTROL UNIT

NAEL0467S05

1	CHECK HARNESS FOR OPEN CIRCUIT	
1. Disconnect TCM connector, transfer control unit connector and combination meter connector. 2. Check continuity between TCM harness connector M119 terminals 5 (L), 6 (R) and transfer control unit harness connector M142 terminals 7 (L), 8 (R). 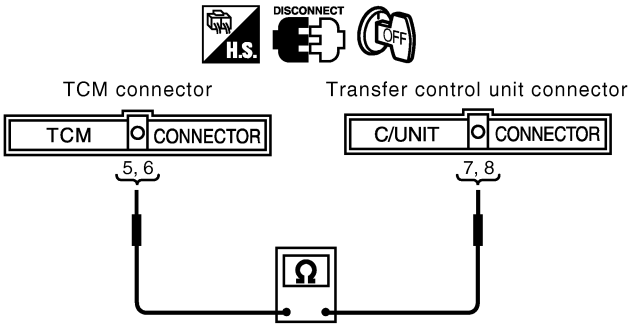 **Continuity should exist.** SEL707Y **OK or NG**		
OK	▶	Connect all the connectors and diagnose again. Refer to "Work Flow" (EL-417).
NG	▶	Repair harness.

CIRCUIT CHECK BETWEEN TRANSFER CONTROL UNIT AND STEERING ANGLE SENSOR

=NAEL0467S06

1	CHECK CONNECTOR

1. Turn ignition switch OFF.
2. Check following terminals and connector for damage, bend and loose connection (connector side and harness side).
- Harness connector M1
- Harness connector E1

OK or NG

OK	▶	GO TO 2.
NG	▶	Repair terminal or connector.

2	CHECK HARNESS FOR OPEN CIRCUIT

1. Disconnect transfer control unit connector and harness connector M1.
2. Check continuity between transfer control unit harness connector M142 terminals 7 (L), 8 (R) and harness connector M1 terminals 4m (L), 11r (R).

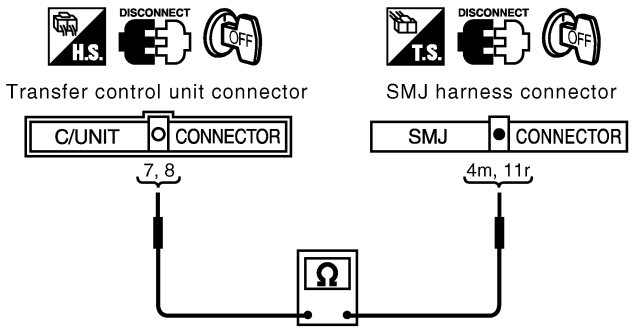

Continuity should exist.

SEL708Y

OK or NG

OK	▶	GO TO 3.
NG	▶	Repair harness.

3	CHECK HARNESS FOR OPEN CIRCUIT

1. Disconnect steering angle sensor connector.
2. Check continuity between harness connector E1 terminals 4m (L), 11r (R) and steering angle sensor harness connector E136 terminals 3 (L), 4 (R).

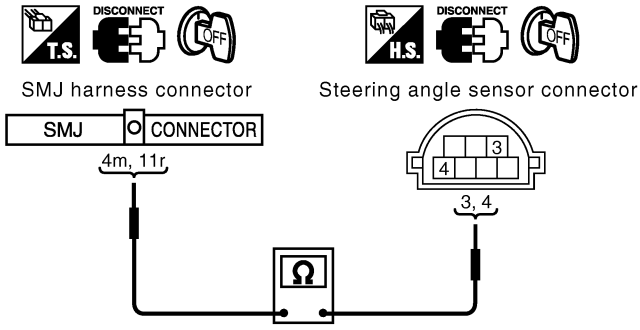

Continuity should exist.

SEL709Y

OK or NG

OK	▶	Connect all the connectors and diagnose again. Refer to "Work Flow" (EL-417).
NG	▶	Repair harness.

CIRCUIT CHECK BETWEEN STEERING ANGLE SENSOR AND ABS ACTUATOR AND ELECTRIC UNIT (CONTROL UNIT)

=NAEL0467S07

1	CHECK HARNESS FOR OPEN CIRCUIT

1. Disconnect steering angle sensor connector, ABS actuator and electric unit (control unit) connector and combination meter connector.
2. Check continuity between steering angle sensor harness connector E136 terminals 3 (L), 4 (R) and ABS actuator and electric unit (control unit) harness connector E142 terminals 11 (L), 15 (R).

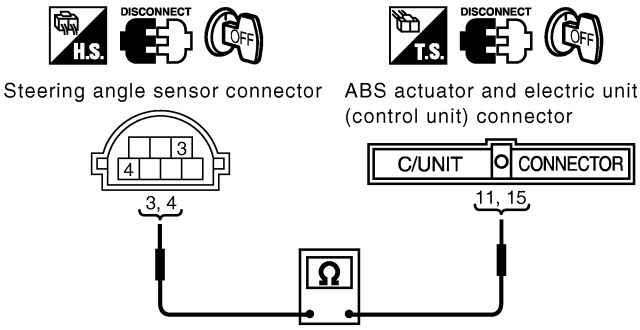

Continuity should exist.

SEL710Y

OK or NG

OK	▶	Connect all the connectors and diagnose again. Refer to "Work Flow" (EL-417).
NG	▶	Repair harness.

ECM CIRCUIT CHECK

=NAEL0467S08

1	CHECK CONNECTOR

1. Turn ignition switch OFF.
2. Check following terminals and connector for damage, bend and loose connection (control module side and harness side).

- ECM
- Harness connector F23
- Harness connector M32

OK or NG

OK	▶	GO TO 2.
NG	▶	Repair terminal or connector.

2	CHECK HARNESS FOR OPEN CIRCUIT

1. Disconnect ECM connector.
2. Check resistance between ECM harness connector F203 terminals 94 (L) and 86 (R).

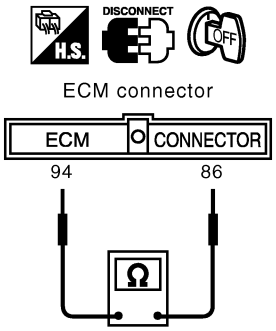

Approx. 108 - 132 Ω

SEL711Y

OK or NG

OK	▶	Replace ECM.
NG	▶	Repair harness between ECM and TCM.

TCM CIRCUIT CHECK

=NAEL0467S09

1	CHECK CONNECTOR	
1. Turn ignition switch OFF. 2. Check the terminals and connector of TCM for damage, bend and loose connection (control module side and harness side).		
OK or NG		
OK	▶	GO TO 2.
NG	▶	Repair terminal or connector.

2	CHECK HARNESS FOR OPEN CIRCUIT	
1. Disconnect TCM connector. 2. Check resistance between TCM harness connector M119 terminals 5 (L) and 6 (R).		
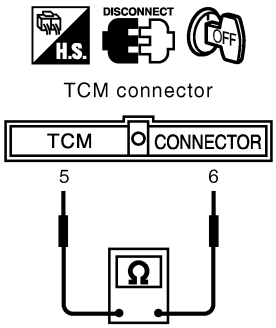 **Approx. 54 - 66 Ω** SEL712Y		
OK or NG		
OK	▶	Replace ECM.
NG	▶	Repair harness between TCM and transfer control unit.

TRANSFER CONTROL UNIT CIRCUIT CHECK

=NAEL0467S10

1	CHECK CONNECTOR
1. Turn ignition switch OFF. 2. Check the terminals and connector of transfer control unit for damage, bend and loose connection (control unit side and harness side).	
OK or NG	
OK ▶	GO TO 2.
NG ▶	Repair terminal or connector.

2	CHECK HARNESS FOR OPEN CIRCUIT
1. Disconnect transfer control unit connector. 2. Check resistance between transfer control unit harness connector M142 terminals 7 (L) and 8 (R).	

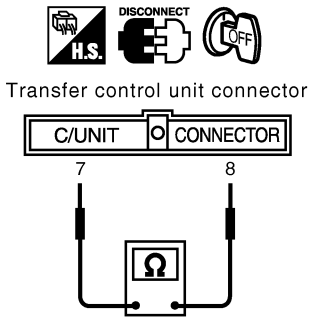

Approx. 54 - 66 Ω

SEL713Y

OK or NG	
OK ▶	Replace transfer control unit.
NG ▶	Repair harness between transfer control unit and harness connector M1.

STEERING ANGLE SENSOR CIRCUIT CHECK

=NAEL0467S11

1	CHECK CONNECTOR	
1. Turn ignition switch OFF. 2. Check the terminals and connector of steering angle sensor for damage, bend and loose connection (sensor side and harness side).		
OK or NG		
OK	▶	GO TO 2.
NG	▶	Repair terminal or connector.

2	CHECK HARNESS FOR OPEN CIRCUIT	
1. Disconnect steering angle sensor connector. 2. Check resistance between steering angle sensor harness connector E136 terminals 3 (L) and 4 (R).		
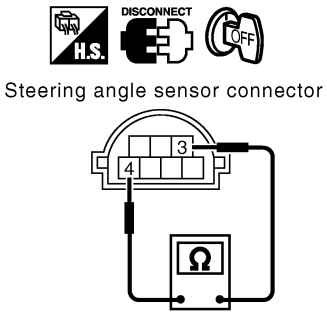 **Approx. 54 - 66 Ω** SEL714Y		
OK or NG		
OK	▶	Replace steering angle sensor.
NG	▶	Repair harness between steering angle sensor and ABS actuator and electric unit (control unit).

ABS ACTUATOR AND ELECTRIC UNIT (CONTROL UNIT) CIRCUIT CHECK

=NAEL0467S12

1	CHECK CONNECTOR
1. Turn ignition switch OFF. 2. Check the terminals and connector of ABS actuator and electric unit (control unit) for damage, bend and loose connection (control unit side and harness side).	
OK or NG	
OK ▶	GO TO 2.
NG ▶	Repair terminal or connector.

2	CHECK HARNESS FOR OPEN CIRCUIT
1. Disconnect ABS actuator and electric unit (control unit) connector. 2. Check resistance between ABS actuator and electric unit (control unit) harness connector E142 terminals 11 (L) and 15 (R).	

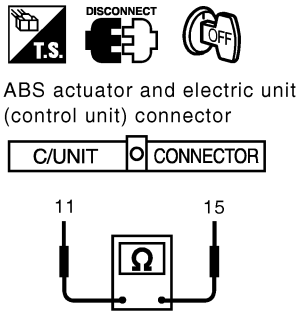

Approx. 54 - 66 Ω

SEL715Y

OK or NG	
OK ▶	Replace ABS actuator and electric unit (control unit).
NG ▶	Repair harness between ABS actuator and electric unit (control unit) and harness connector E1.

COMBINATION METER CIRCUIT CHECK

=NAEL0467S13

1	CHECK CONNECTOR
1. Turn ignition switch OFF. 2. Check following terminals and connector for damage, bend and loose connection (meter side and harness side). ● Combination meter. ● Harness connector M1. ● Harness connector E1.	
OK or NG	
OK ▶	GO TO 2.
NG ▶	Repair terminal or connector.

2	CHECK HARNESS FOR OPEN CIRCUIT
1. Disconnect combination meter connector. 2. Check resistance between combination meter harness connector M25 terminals 34 (Y) and 35 (L).	

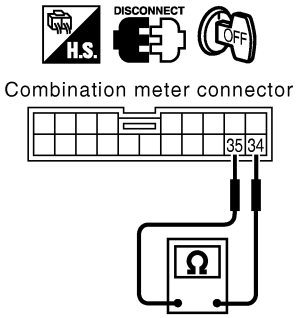

Approx. 108 - 132 Ω

SEL716Y

OK or NG	
OK ▶	Replace combination meter.
NG ▶	Repair harness between combination meter and ABS actuator and electric unit (control unit).

CAN COMMUNICATION CIRCUIT CHECK

=NAEL0467S14

1	CHECK CONNECTOR

1. Turn ignition switch OFF.
2. Check following terminals and connector for damage, bend and loose connection (meter side, control unit side, sensor side, control module side and harness side).

- Combination meter
- ABS actuator and electric unit (control unit)
- Steering angle sensor
- Transfer control unit
- TCM
- ECM
- Between combination meter and ECM

OK or NG

OK	▶	GO TO 2.
NG	▶	Repair terminal or connector.

2	CHECK HARNESS FOR SHORT CIRCUIT

1. Disconnect ECM connector and harness connector F23.
2. Check continuity between ECM harness connector F203 terminals 94 (L) and 86 (R).

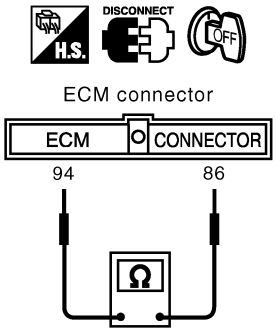

Continuity should not exist.

SEL717Y

OK or NG

OK	▶	GO TO 3.
NG	▶	Repair harness between ECM and harness connector F23.

3	CHECK HARNESS FOR SHORT CIRCUIT

Check continuity between ECM harness connector F203 terminals 94 (L), 86 (R) and ground.

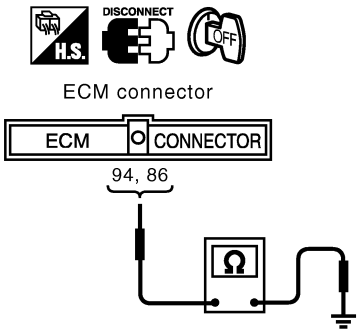

Continuity should not exist.

SEL718Y

OK or NG

OK	▶	GO TO 4.
NG	▶	Repair harness between ECM and harness connector F23.

4	CHECK HARNESS FOR SHORT CIRCUIT

1. Disconnect TCM connector, transfer control unit connector and harness connector M1.
2. Check continuity between TCM harness connector M119 terminals 5 (L) and 6 (R).

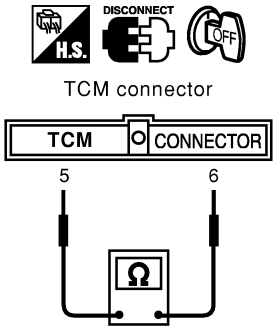

Continuity should not exist.

SEL440Y

OK or NG

OK	▶	GO TO 5.
NG	▶	● Repair harness between TCM and harness connector M1. ● Repair harness between TCM and harness connector M32. ● Repair harness between TCM and transfer control unit.

5	CHECK HARNESS FOR SHORT CIRCUIT

Check continuity between TCM harness connector M119 terminals 5 (L), 6 (R) and ground.

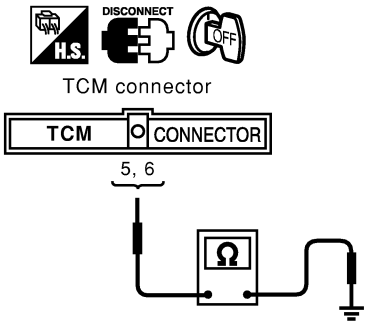

Continuity should not exist.

SEL441Y

OK or NG

OK	▶	GO TO 6.
NG	▶	● Repair harness between TCM and harness connector M1. ● Repair harness between TCM and harness connector M32. ● Repair harness between TCM and transfer control unit.

6	CHECK HARNESS FOR SHORT CIRCUIT

1. Disconnect steering angle sensor connector and ABS actuator and electric unit (control unit) connector.
2. Check continuity between ABS actuator and electric unit (control unit) harness connector E142 terminals 11 (L) and 15 (R).

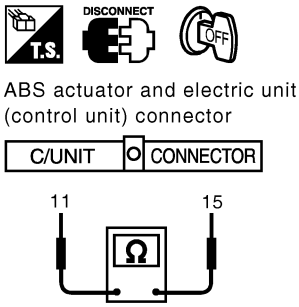

Continuity should not exist.

SEL719Y

OK or NG

OK	▶	GO TO 7.
NG	▶	• Repair harness between ABS actuator and electric unit (control unit) and harness connector E1. • Repair harness between ABS actuator and electric unit (control unit) and steering angle sensor.

7	CHECK HARNESS FOR SHORT CIRCUIT

Check continuity between ABS actuator and electric unit (control unit) harness connector E142 terminals 11 (L), 15 (R) and ground.

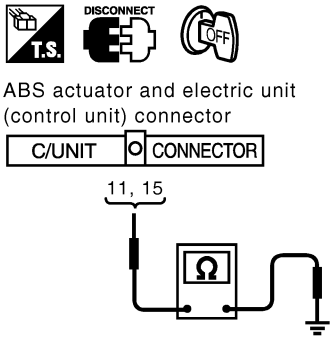

Continuity should not exist.

SEL720Y

OK or NG

OK	▶	GO TO 8.
NG	▶	• Repair harness between ABS actuator and electric unit (control unit) and harness connector E1. • Repair harness between ABS actuator and electric unit (control unit) and steering angle sensor.

8	CHECK HARNESS FOR SHORT CIRCUIT

1. Disconnect combination meter connector.
2. Check continuity between combination meter harness connector M25 terminals 34 (Y) and 35 (L).

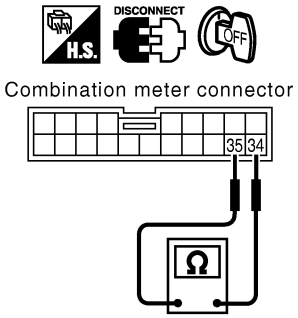

Continuity should not exist.

SEL721Y

OK or NG

OK	▶	GO TO 9.
NG	▶	Repair harness between combination meter and harness connector M1.

9	CHECK HARNESS FOR SHORT CIRCUIT

Check continuity between combination meter harness connector M25 terminals 34 (Y), 35 (L) and ground.

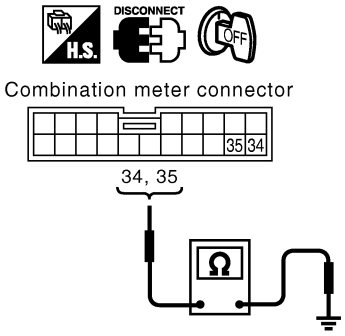

Continuity should not exist.

SEL722Y

OK or NG

OK	▶	GO TO 10.
NG	▶	Repair harness between combination meter and harness connector M1.

10	ECM/COMBINATION METER INTERNAL CIRCUIT INSPECTION

Check components inspection. Refer to "ECM/COMBINATION METER INTERNAL CIRCUIT INSPECTION" (EL-437).

OK or NG

OK	▶	Connect all the connectors and diagnose again. Refer to "Work Flow" (EL-417).
NG	▶	Replace ECM and/or combination meter.

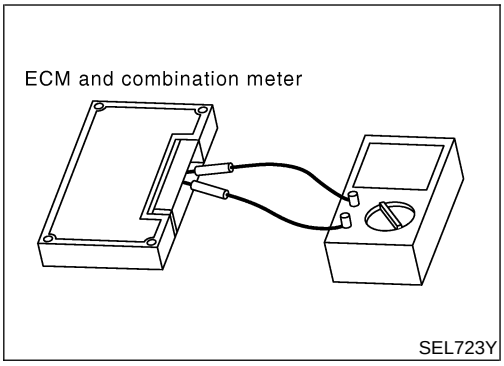

Component Inspection

=NAEL0468

ECM/COMBINATION METER INTERNAL CIRCUIT INSPECTION

NAEL0468S01

- Remove ECM and combination meter from vehicle.
- Check resistance between ECM terminals 94 and 86.
- Check resistance between combination meter terminals 34 and 35.

Unit	Terminal	Resistance value (Ω)
ECM	94 - 86	Approx. 108 - 132
Combination meter	34 - 35	

Component Parts and Harness Connector Location

NAEL0469

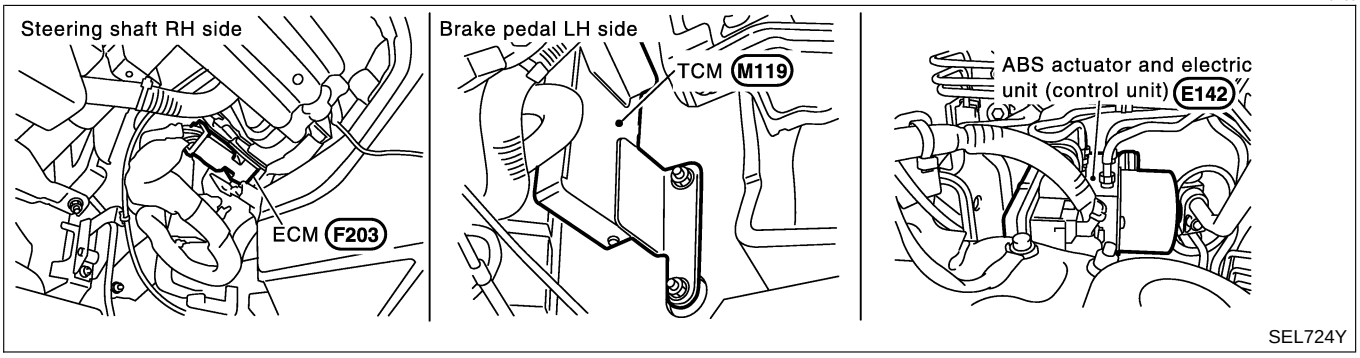

System Description

NAEL0470

CAN (Controller Area Network) is a serial communication line for real time application. It is an on-vehicle multiplex communication line with high data communication speed and excellent error detection ability. Many electonic control units are equipped onto a vehicle, and each control unit shares information and links with other control units during operation (not independent). In CAN communication, control units are connected with 2 communication lines (CAN H line, CAN L line) allowing a high rate of information transmission with less wiring. Each control unit transmits/receives data but selectively reads required data only.

Wiring Diagram — CAN —

NAEL0471

EL-CAN-03

: DATA LINE

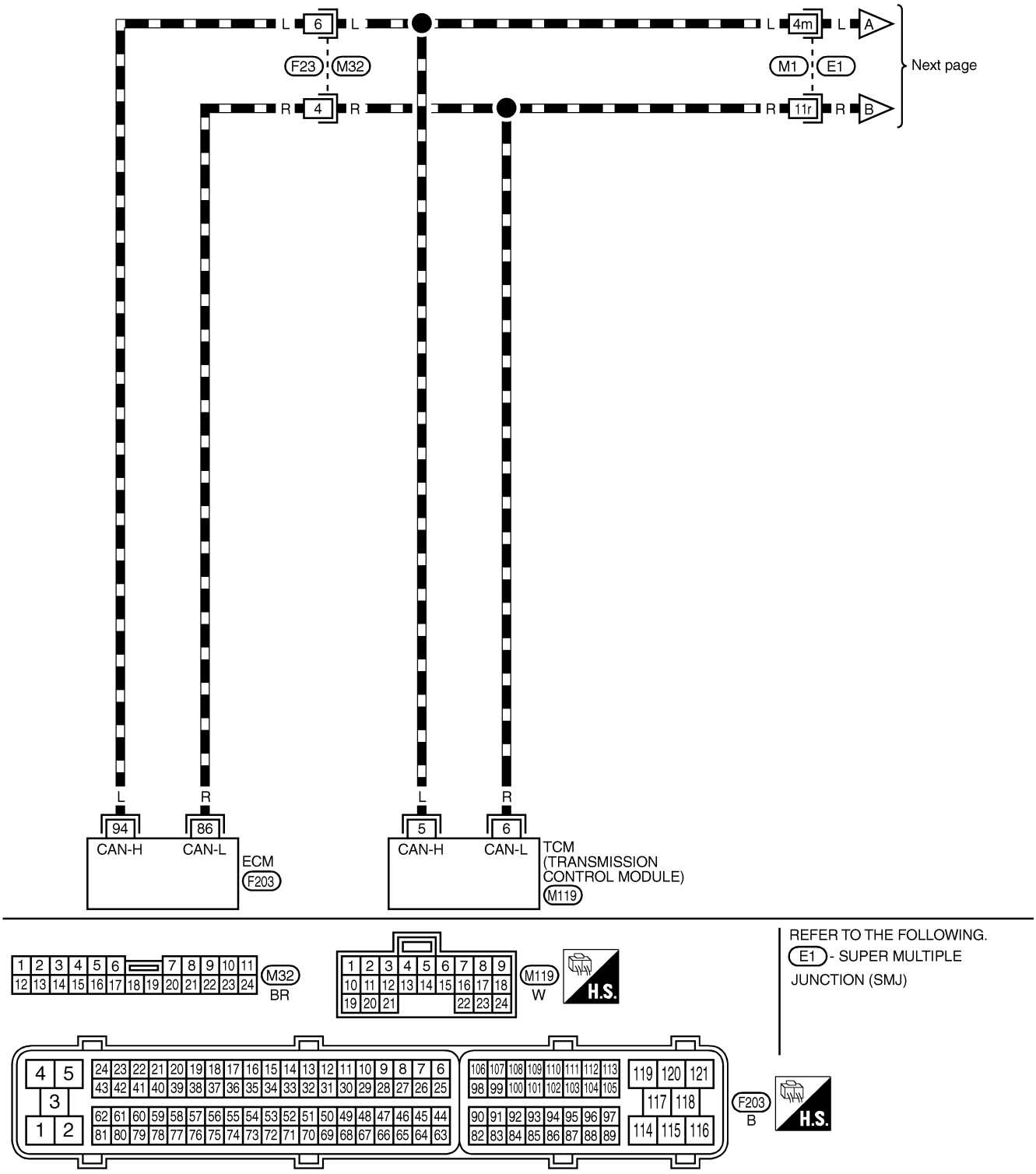

MEL576Q

EL-CAN-04

: DATA LINE

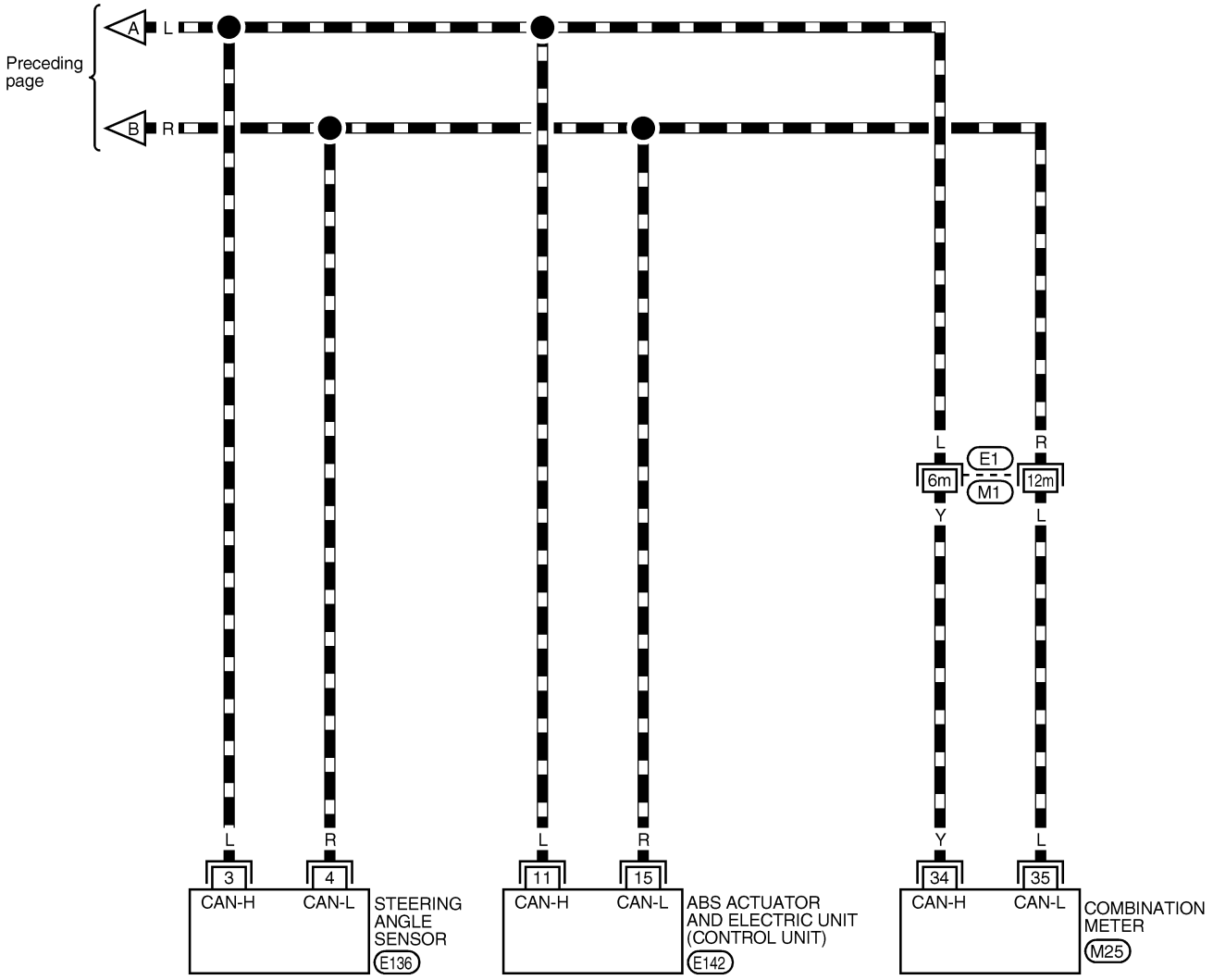

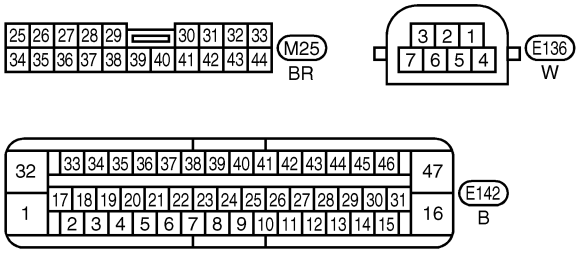

REFER TO THE FOLLOWING.
E1 -SUPER MULTIPLE JUNCTION (SMJ)

MEL577Q

Trouble Diagnoses

NAEL0472

WORK FLOW

NAEL0472S01

1. Print all the data of “SELF-DIAG RESULTS” for “ENGINE”, “A/T” and “ABS” displayed on CONSULT-II.

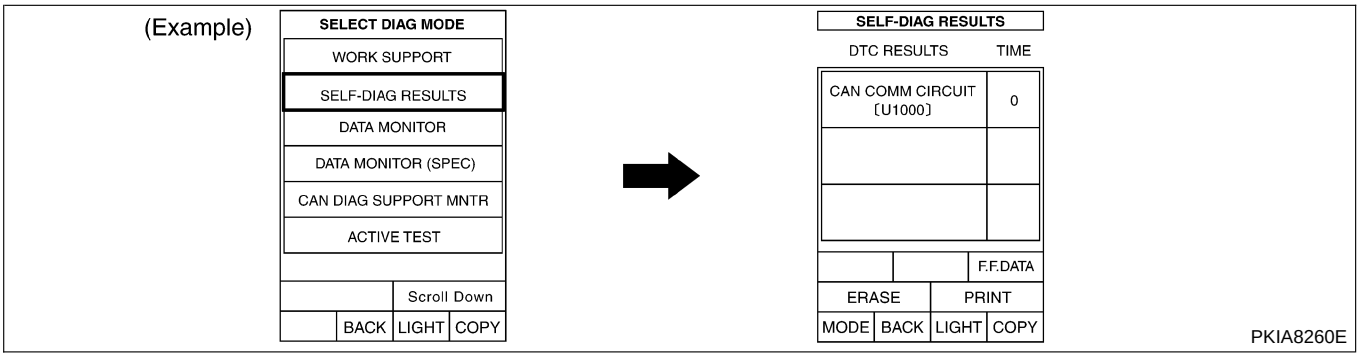

2. Print all the data of “CAN DIAG SUPPORT MNTR” for “ENGINE”, “A/T” and “ABS” displayed on CONSULT-II.

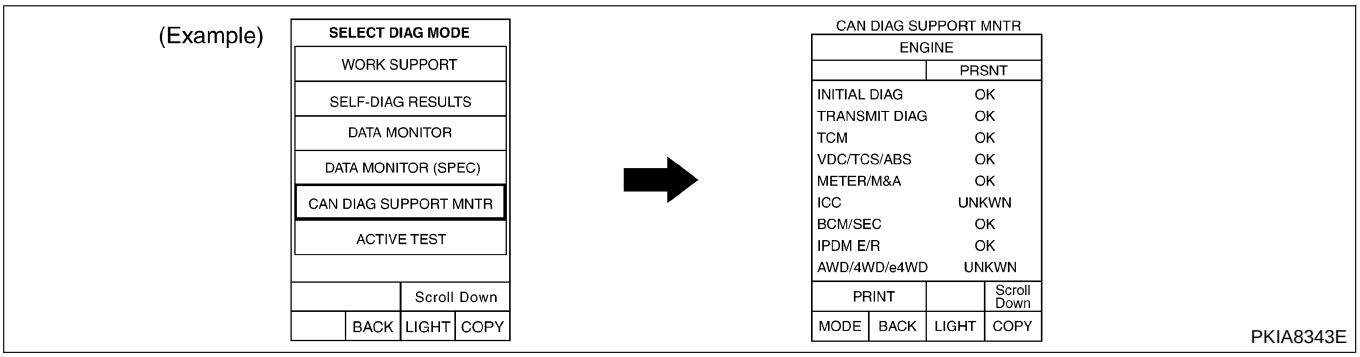

3. Attach the printed sheet of “SELF-DIAG RESULTS” and “CAN DIAG SUPPORT MNTR” onto the check sheet. Refer to “CHECK SHEET” (EL-442).
4. Based on the “CAN DIAG SUPPORT MNTR” results, put “v” marks onto the items with “UNKWN” or “NG” in the check sheet table. Refer to “CHECK SHEET” (EL-442).

NOTE:
If “NG” is displayed on “INITIAL DIAG (Initial diagnosis)” as “CAN DIAG SUPPORT MNTR” for the diagnosed control unit, replace the control unit.

5. According to the check sheet results (example), start inspection. Refer to “CHECK SHEET RESULTS (EXAMPLE)” (EL-443).

CHECK SHEET

=NAEL0472S02

NOTE:

If "NG" is displayed on "INITIAL DIAG (Initial diagnosis)" as "CAN DIAG SUPPORT MNTR" for the diagnosed control unit, replace the control unit.

Check sheet table

SELECT SYSTEM screen	CAN DIAG SUPPORT MNTR						
	Initial diagnosis	Transmit diagnosis	Receive diagnosis				
			ECM	TCM	STRG	VDC/TCS/ ABS	METER/ M&A
ENGINE	NG	UNKWN	–	UNKWN	–	UNKWN	UNKWN
A/T	NG	UNKWN	UNKWN	–	–	UNKWN	UNKWN
ABS	NG	UNKWN	UNKWN	UNKWN	UNKWN	–	UNKWN

Symptoms:

Attach copy of
ENGINE
SELF-DIAG RESULTS

Attach copy of
A/T
SELF-DIAG RESULTS

Attach copy of
ABS
SELF-DIAG RESULTS

Attach copy of
ENGINE
CAN DIAG SUPPORT MNTR

Attach copy of
A/T
CAN DIAG SUPPORT MNTR

Attach copy of
ABS
CAN DIAG SUPPORT MNTR

PKIA8708E

CHECK SHEET RESULTS (EXAMPLE)

=NAEL0472S03

NOTE:

If "NG" is displayed on "INITIAL DIAG (Initial diagnosis)" as "CAN DIAG SUPPORT MNTR" for the diagnosed control unit, replace the control unit.

Case 1

NAEL0472S0301

Check harness between TCM and steering angle sensor. Refer to "CIRCUIT CHECK BETWEEN TCM AND STEERING ANGLE SENSOR" (EL-448).

SELECT SYSTEM screen	CAN DIAG SUPPORT MNTR						
	Initial diagnosis	Transmit diagnosis	Receive diagnosis				
			ECM	TCM	STRG	VDC/TCS/ ABS	METER/ M&A
ENGINE	NG	UNKWN	–	UNKWN	–	UNKWN ✓	UNKWN ✓
A/T	NG	UNKWN	UNKWN	–	–	UNKWN ✓	UNKWN ✓
ABS	NG	UNKWN	UNKWN ✓	UNKWN ✓	UNKWN	–	UNKWN

PKIA8721E

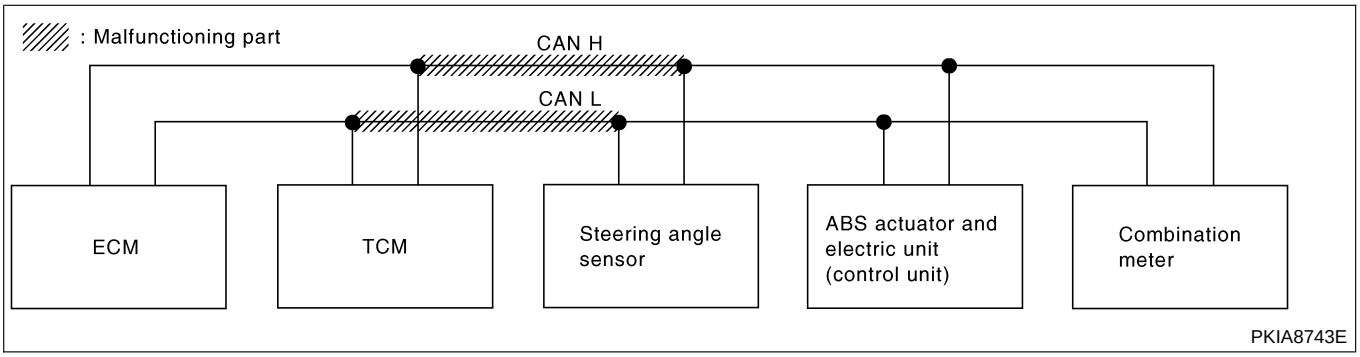

PKIA8743E

Case 2

=NAEL0472S0302

Check harness between steering angle sensor and ABS actuator and electric unit (control unit). Refer to "CIRCUIT CHECK BETWEEN STEERING ANGLE SENSOR AND ABS ACTUATOR AND ELECTRIC UNIT (CONTROL UNIT)" (EL-449).

SELECT SYSTEM screen	CAN DIAG SUPPORT MNTR						
	Initial diagnosis	Transmit diagnosis	Receive diagnosis				
			ECM	TCM	STRG	VDC/TCS/ ABS	METER/ M&A
ENGINE	NG	UNKWN	–	UNKWN	–	UNKWN	UNKWN
A/T	NG	UNKWN	UNKWN	–	–	UNKWN	UNKWN
ABS	NG	UNKWN	UNKWN	UNKWN	UNKWN	–	UNKWN

PKIA8722E

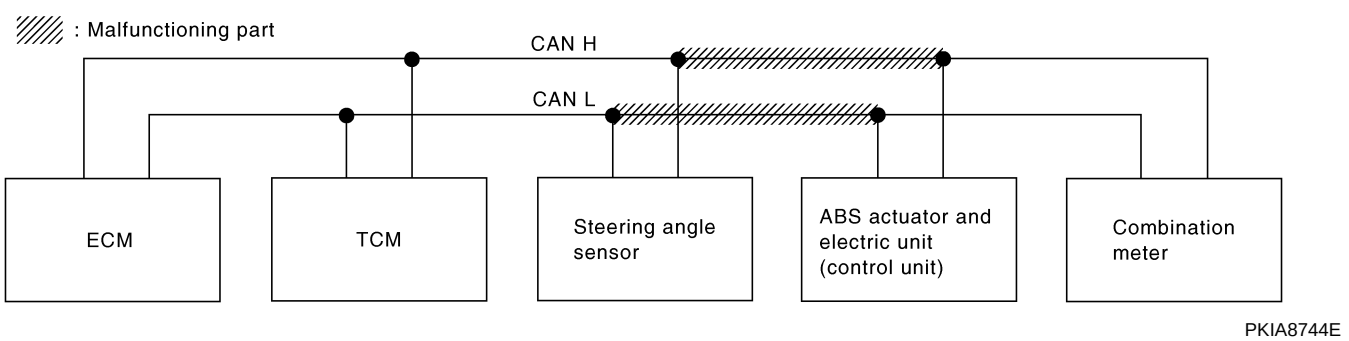

PKIA8744E

Case 3

NAEL0472S0303

Check ECM circuit. Refer to "ECM CIRCUIT CHECK" (EL-450).

SELECT SYSTEM screen	CAN DIAG SUPPORT MNTR						
	Initial diagnosis	Transmit diagnosis	Receive diagnosis				
			ECM	TCM	STRG	VDC/TCS/ ABS	METER/ M&A
ENGINE	NG	UNKWN	–	UNKWN	–	UNKWN	UNKWN
A/T	NG	UNKWN	UNKWN	–	–	UNKWN	UNKWN
ABS	NG	UNKWN	UNKWN	UNKWN	UNKWN	–	UNKWN

PKIA8723E

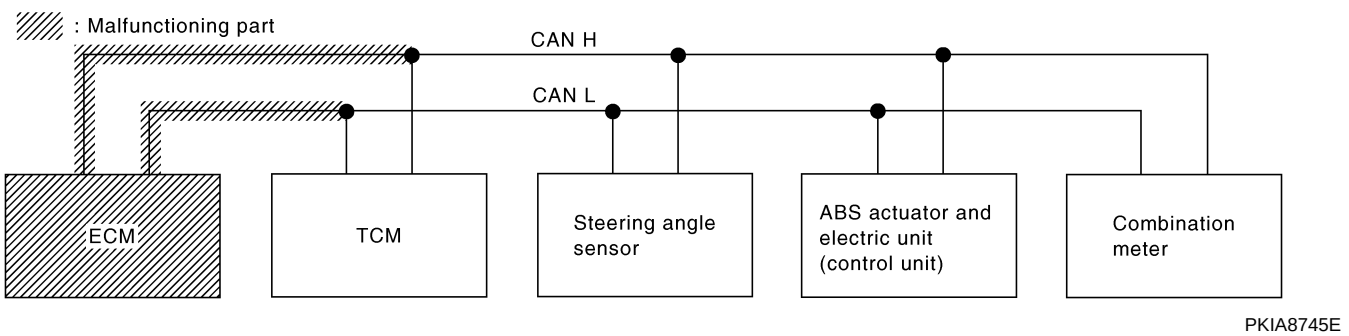

PKIA8745E

Case 4

=NAEL0472S0304

Check TCM circuit. Refer to "TCM CIRCUIT CHECK" (EL-451).

SELECT SYSTEM screen	CAN DIAG SUPPORT MNTR						
	Initial diagnosis	Transmit diagnosis	Receive diagnosis				
			ECM	TCM	STRG	VDC/TCS/ ABS	METER/ M&A
ENGINE	NG	UNKWN	–	UNKWN	–	UNKWN	UNKWN
A/T	NG	UNKWN	UNKWN	–	–	UNKWN	UNKWN
ABS	NG	UNKWN	UNKWN	UNKWN	UNKWN	–	UNKWN

PKIA8724E

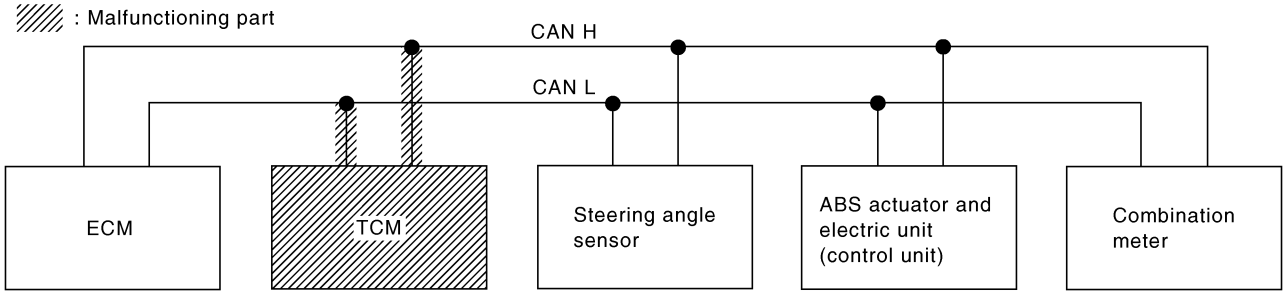

PKIA8746E

Case 5

NAEL0472S0305

Check steering angle sensor circuit. Refer to "STEERING ANGLE SENSOR CIRCUIT CHECK" (EL-452).

SELECT SYSTEM screen	CAN DIAG SUPPORT MNTR						
	Initial diagnosis	Transmit diagnosis	Receive diagnosis				
			ECM	TCM	STRG	VDC/TCS/ ABS	METER/ M&A
ENGINE	NG	UNKWN	–	UNKWN	–	UNKWN	UNKWN
A/T	NG	UNKWN	UNKWN	–	–	UNKWN	UNKWN
ABS	NG	UNKWN	UNKWN	UNKWN	UNKWN	–	UNKWN

PKIA8725E

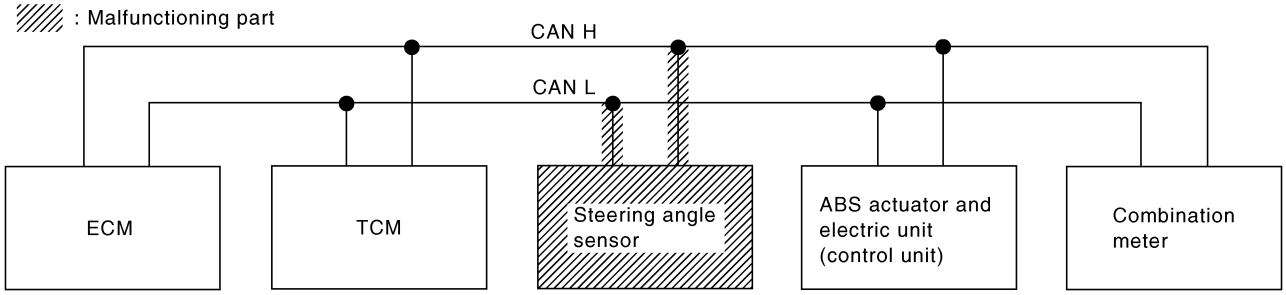

PKIA8747E

Case 6

=NAEL0472S0306

Check ABS actuator and electric unit (control unit) circuit. Refer to "ABS ACTUATOR AND ELECTRIC UNIT (CONTROL UNIT) CIRCUIT CHECK" (EL-453).

SELECT SYSTEM screen	CAN DIAG SUPPORT MNTR						
	Initial diagnosis	Transmit diagnosis	Receive diagnosis				
			ECM	TCM	STRG	VDC/TCS/ ABS	METER/ M&A
ENGINE	NG	UNKWN	–	UNKWN	–	UNKWN ✓	UNKWN
A/T	NG	UNKWN	UNKWN	–	–	UNKWN ✓	UNKWN
ABS	NG	UNKWN ✓	UNKWN ✓	UNKWN ✓	UNKWN ✓	–	UNKWN ✓

PKIA8726E

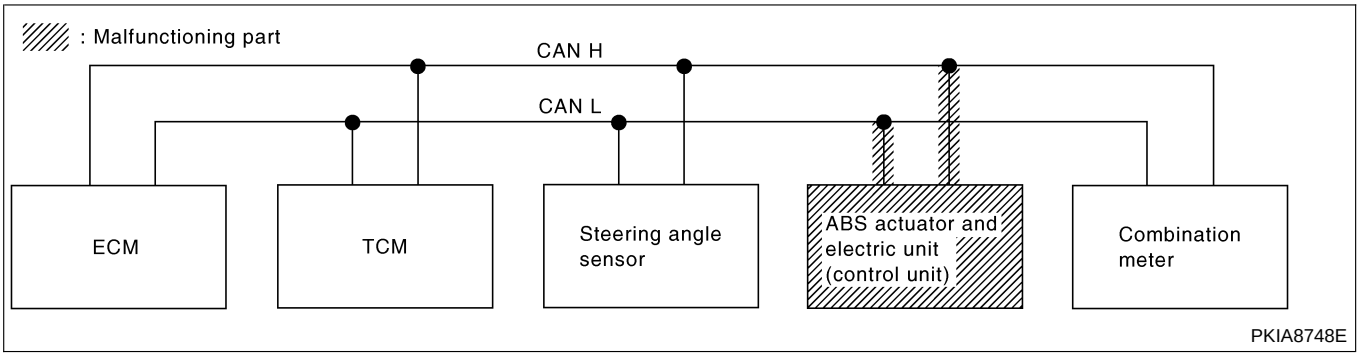

PKIA8748E

Case 7

NAEL0472S0307

Check combination meter circuit. Refer to "COMBINATION METER CIRCUIT CHECK" (EL-454).

SELECT SYSTEM screen	CAN DIAG SUPPORT MNTR						
	Initial diagnosis	Transmit diagnosis	Receive diagnosis				
			ECM	TCM	STRG	VDC/TCS/ ABS	METER/ M&A
ENGINE	NG	UNKWN	–	UNKWN	–	UNKWN	UNKWN ✓
A/T	NG	UNKWN	UNKWN	–	–	UNKWN	UNKWN ✓
ABS	NG	UNKWN	UNKWN	UNKWN	UNKWN	–	UNKWN ✓

PKIA8727E

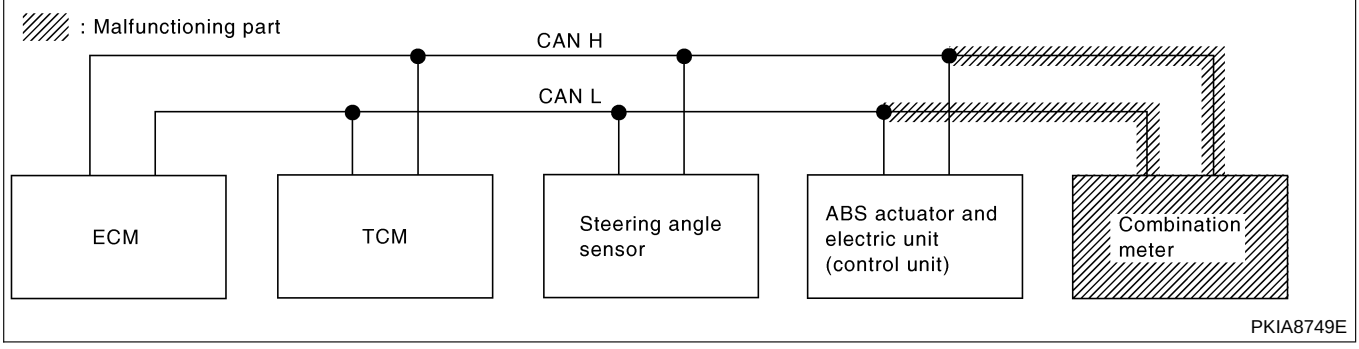

PKIA8749E

Case 8

=NAEL0472S0308

Check CAN communication circuit. Refer to "CAN COMMUNICATION CIRCUIT CHECK" (EL-455).

SELECT SYSTEM screen	CAN DIAG SUPPORT MNTR						
	Initial diagnosis	Transmit diagnosis	Receive diagnosis				
			ECM	TCM	STRG	VDC/TCS/ ABS	METER/ M&A
ENGINE	NG	UNKWN ✓	–	UNKWN ✓	–	UNKWN ✓	UNKWN ✓
A/T	NG	UNKWN ✓	UNKWN ✓	–	–	UNKWN ✓	UNKWN ✓
ABS	NG	UNKWN ✓	UNKWN ✓	UNKWN ✓	UNKWN ✓	–	UNKWN ✓

PKIA8728E

CIRCUIT CHECK BETWEEN TCM AND STEERING ANGLE SENSOR

=NAEL0472S06

1	CHECK CONNECTOR

1. Turn ignition switch OFF.
2. Check following terminals and connector for damage, bend and loose connection (connector side and harness side).
- Harness connector M1
- Harness connector E1

OK or NG

OK	▶	GO TO 2.
NG	▶	Repair terminal or connector.

2	CHECK HARNESS FOR OPEN CIRCUIT

1. Disconnect TCM connector and harness connector M1.
2. Check continuity between TCM harness connector M119 terminals 5 (L), 6 (R) and harness connector M1 terminals 4m (L), 11r (R).

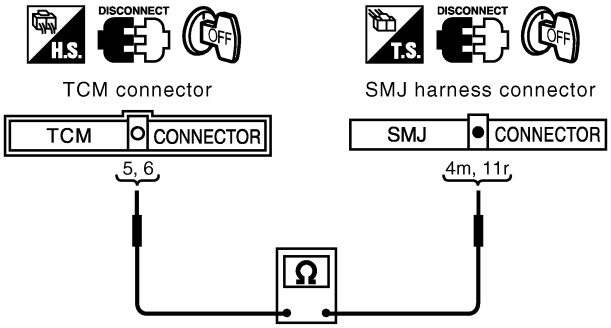

Continuity should exist.

SEL728Y

OK or NG

OK	▶	GO TO 3.
NG	▶	Repair harness.

3	CHECK HARNESS FOR OPEN CIRCUIT

1. Disconnect steering angle sensor connector.
2. Check continuity between harness connector E1 terminals 4m (L), 11r (R) and steering angle sensor harness connector E136 terminals 3 (L), 4 (R).

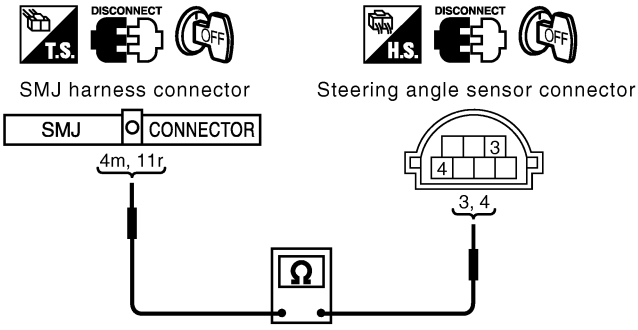

Continuity should exist.

SEL709Y

OK or NG

OK	▶	Connect all the connectors and diagnose again. Refer to "Work Flow" (EL-441).
NG	▶	Repair harness.

CIRCUIT CHECK BETWEEN STEERING ANGLE SENSOR AND ABS ACTUATOR AND ELECTRIC UNIT (CONTROL UNIT)

=NAEL0472S07

1	CHECK HARNESS FOR OPEN CIRCUIT

1. Disconnect steering angle sensor connector, ABS actuator and electric unit (control unit) connector and combination meter connector.
2. Check continuity between steering angle sensor harness connector E136 terminals 3 (L), 4 (R) and ABS actuator and electric unit (control unit) harness connector E142 terminals 11 (L), 15 (R).

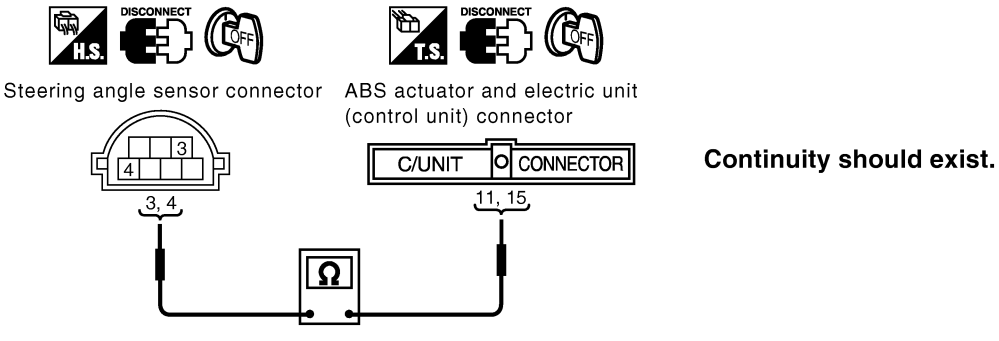

OK or NG

OK	▶	Connect all the connectors and diagnose again. Refer to "Work Flow" (EL-441).
NG	▶	Repair harness.

ECM CIRCUIT CHECK

=NAEL0472S08

1	CHECK CONNECTOR
1. Turn ignition switch OFF. 2. Check following terminals and connector for damage, bend and loose connection (control module side and harness side). ● ECM ● Harness connector F23 ● Harness connector M32	
OK or NG	
OK ▶	GO TO 2.
NG ▶	Repair terminal or connector.

2	CHECK HARNESS FOR OPEN CIRCUIT
1. Disconnect ECM connector. 2. Check resistance between ECM harness connector F203 terminals 94 (L) and 86 (R).	

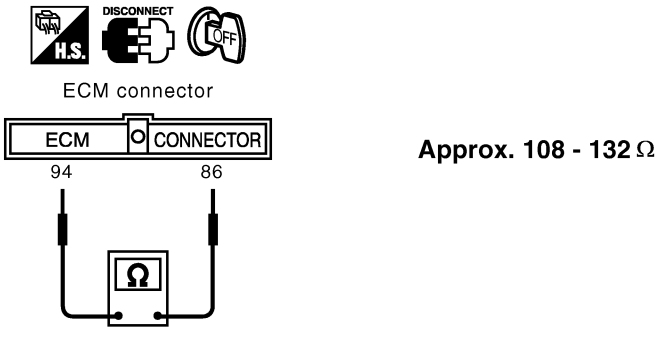

OK or NG	
OK ▶	Replace ECM.
NG ▶	Repair harness between ECM and TCM.

TCM CIRCUIT CHECK

=NAEL0472S09

1	CHECK CONNECTOR	
1. Turn ignition switch OFF. 2. Check the terminals and connector of TCM for damage, bend and loose connection (control module side and harness side).		
OK or NG		
OK	▶	GO TO 2.
NG	▶	Repair terminal or connector.

2	CHECK HARNESS FOR OPEN CIRCUIT	
1. Disconnect TCM connector. 2. Check resistance between TCM harness connector M119 terminals 5 (L) and 6 (R).		

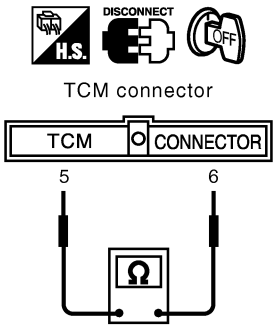

Approx. 54 - 66 Ω

SEL712Y

OK or NG		
OK	▶	Replace TCM.
NG	▶	Repair harness between TCM and harness connector M1.

STEERING ANGLE SENSOR CIRCUIT CHECK

=NAEL0472S11

1	CHECK CONNECTOR	
1. Turn ignition switch OFF. 2. Check the terminals and connector of steering angle sensor for damage, bend and loose connection (sensor side and harness side).		
OK or NG		
OK	▶	GO TO 2.
NG	▶	Repair terminal or connector.

2	CHECK HARNESS FOR OPEN CIRCUIT	
1. Disconnect steering angle sensor connector. 2. Check resistance between steering angle sensor harness connector E136 terminals 3 (L) and 4 (R).		
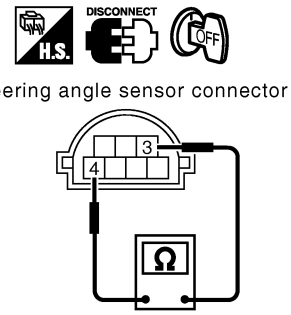 **Approx. 54 - 66 Ω** SEL714Y		
OK or NG		
OK	▶	Replace steering angle sensor.
NG	▶	Repair harness between steering angle sensor and ABS actuator and electric unit (control unit).

ABS ACTUATOR AND ELECTRIC UNIT (CONTROL UNIT) CIRCUIT CHECK

=NAEL0472S12

1	CHECK CONNECTOR	
1. Turn ignition switch OFF. 2. Check the terminals and connector of ABS actuator and electric unit (control unit) for damage, bend and loose connection (control unit side and harness side).		
OK or NG		
OK	▶	GO TO 2.
NG	▶	Repair terminal or connector.

2	CHECK HARNESS FOR OPEN CIRCUIT	
1. Disconnect ABS actuator and electric unit (control unit) connector. 2. Check resistance between ABS actuator and electric unit (control unit) harness connector E142 terminals 11 (L) and 15 (R).		
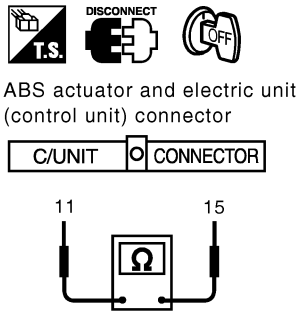 **Approx. 54 - 66 Ω** SEL715Y		
OK or NG		
OK	▶	Replace ABS actuator and electric unit (control unit).
NG	▶	Repair harness between ABS actuator and electric unit (control unit) and harness connector E1.

COMBINATION METER CIRCUIT CHECK

=NAEL0472S13

1	CHECK CONNECTOR
1. Turn ignition switch OFF. 2. Check following terminals and connector for damage, bend and loose connection (meter side and harness side). ● Combination meter. ● Harness connector M1. ● Harness connector E1.	
OK or NG	
OK ▶	GO TO 2.
NG ▶	Repair terminal or connector.

2	CHECK HARNESS FOR OPEN CIRCUIT
1. Disconnect combination meter connector. 2. Check resistance between combination meter harness connector M25 terminals 34 (Y) and 35 (L).	

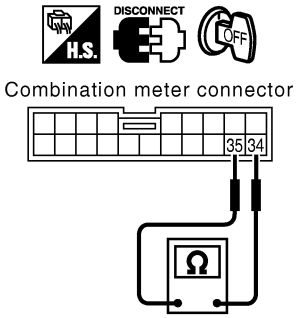

Approx. 108 - 132 Ω

SEL716Y

OK or NG	
OK ▶	Replace combination meter.
NG ▶	Repair harness between combination meter and ABS actuator and electric unit (control unit).

CAN COMMUNICATION CIRCUIT CHECK

=NAEL0472S14

1	CHECK CONNECTOR

1. Turn ignition switch OFF.
2. Check following terminals and connector for damage, bend and loose connection (meter side, control unit side, sensor side, control module side and harness side).

- Combination meter
- ABS actuator and electric unit (control unit)
- Steering angle sensor
- TCM
- ECM
- Between combination meter and ECM

OK or NG

OK	▶	GO TO 2.
NG	▶	Repair terminal or connector.

2	CHECK HARNESS FOR SHORT CIRCUIT

1. Disconnect ECM connector and harness connector F23.
2. Check continuity between ECM harness connector F203 terminals 94 (L) and 86 (R).

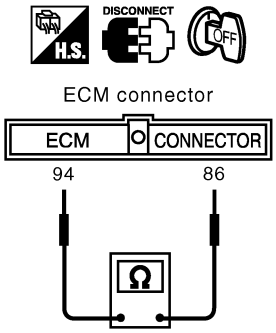

Continuity should not exist.

SEL717Y

OK or NG

OK	▶	GO TO 3.
NG	▶	Repair harness between ECM and harness connector F23.

3	CHECK HARNESS FOR SHORT CIRCUIT

Check continuity between ECM harness connector F203 terminals 94 (L), 86 (R) and ground.

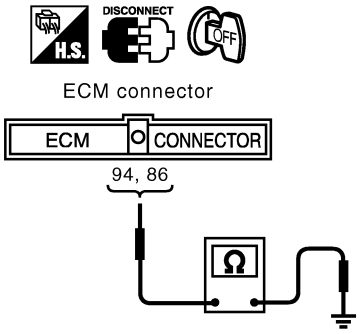

Continuity should not exist.

SEL718Y

OK or NG

OK	▶	GO TO 4.
NG	▶	Repair harness between ECM and harness connector F23.

4	CHECK HARNESS FOR SHORT CIRCUIT

1. Disconnect TCM connector and harness connector M1.
2. Check continuity between TCM harness connector M119 terminals 5 (L) and 6 (R).

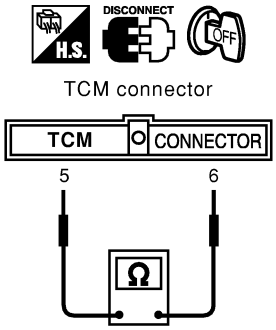

Continuity should not exist.

SEL440Y

OK or NG

OK	▶	GO TO 5.
NG	▶	● Repair harness between TCM and harness connector M1. ● Repair harness between TCM and harness connector M32.

5	CHECK HARNESS FOR SHORT CIRCUIT

Check continuity between TCM harness connector M119 terminals 5 (L), 6 (R) and ground.

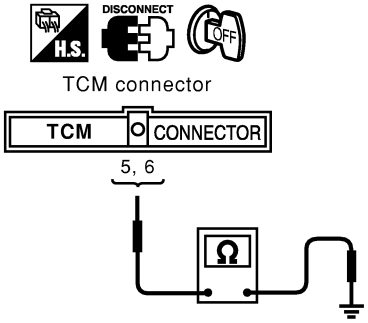

Continuity should not exist.

SEL441Y

OK or NG

OK	▶	GO TO 6.
NG	▶	● Repair harness between TCM and harness connector M1. ● Repair harness between TCM and harness connector M32.

6	CHECK HARNESS FOR SHORT CIRCUIT

1. Disconnect steering angle sensor connector and ABS actuator and electric unit (control unit) connector.
2. Check continuity between ABS actuator and electric unit (control unit) harness connector E142 terminals 11 (L) and 15 (R).

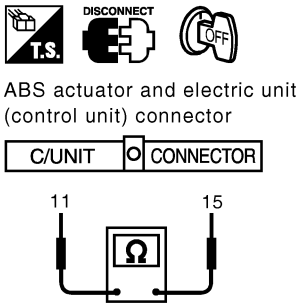

Continuity should not exist.

SEL719Y

OK or NG

OK	▶	GO TO 7.
NG	▶	• Repair harness between ABS actuator and electric unit (control unit) and harness connector E1. • Repair harness between ABS actuator and electric unit (control unit) and steering angle sensor.

7	CHECK HARNESS FOR SHORT CIRCUIT

Check continuity between ABS actuator and electric unit (control unit) harness connector E142 terminals 11 (L), 15 (R) and ground.

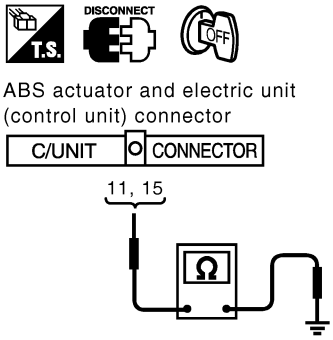

Continuity should not exist.

SEL720Y

OK or NG

OK	▶	GO TO 8.
NG	▶	• Repair harness between ABS actuator and electric unit (control unit) and harness connector E1. • Repair harness between ABS actuator and electric unit (control unit) and steering angle sensor.

8	CHECK HARNESS FOR SHORT CIRCUIT

1. Disconnect combination meter connector.
2. Check continuity between combination meter harness connector M25 terminals 34 (Y) and 35 (L).

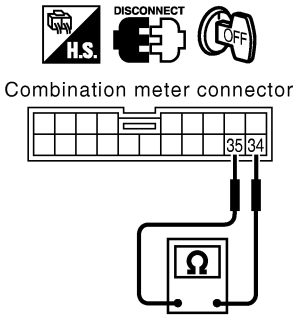

Continuity should not exist.

SEL721Y

OK or NG

OK	▶	GO TO 9.
NG	▶	Repair harness between combination meter and harness connector M1.

9	CHECK HARNESS FOR SHORT CIRCUIT

Check continuity between combination meter harness connector M25 terminals 34 (Y), 35 (L) and ground.

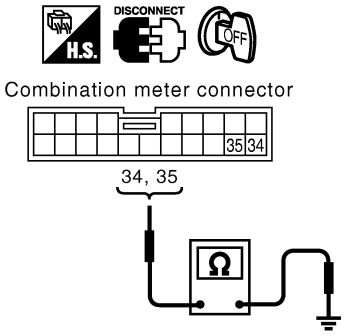

Continuity should not exist.

SEL722Y

OK or NG

OK	▶	GO TO 10.
NG	▶	Repair harness between combination meter and harness connector M1.

10	ECM/COMBINATION METER INTERNAL CIRCUIT INSPECTION

Check components inspection. Refer to "ECM/COMBINATION METER INTERNAL CIRCUIT INSPECTION" (EL-459).

OK or NG

OK	▶	Connect all the connectors and diagnose again. Refer to "Work Flow" (EL-441).
NG	▶	Replace ECM and/or combination meter.

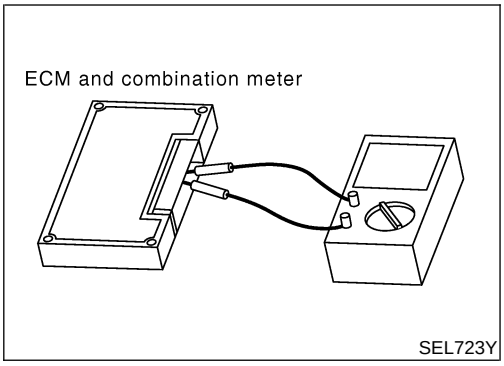

Component Inspection

=NAEL0473

ECM/COMBINATION METER INTERNAL CIRCUIT INSPECTION

NAEL0473S01

- Remove ECM and combination meter from vehicle.
- Check resistance between ECM terminals 94 and 86.
- Check resistance between combination meter terminals 34 and 35.

Unit	Terminal	Resistance value (Ω)
ECM	94 - 86	Approx. 108 - 132
Combination meter	34 - 35	

Component Parts and Harness Connector Location

NAEL0474

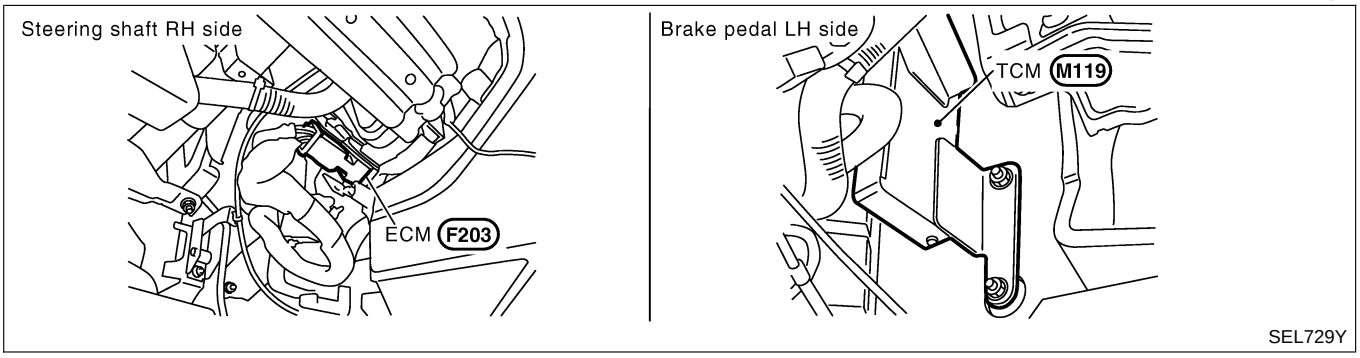

System Description

NAEL0475

CAN (Controller Area Network) is a serial communication line for real time application. It is an on-vehicle multiplex communication line with high data communication speed and excellent error detection ability. Many electonic control units are equipped onto a vehicle, and each control unit shares information and links with other control units during operation (not independent). In CAN communication, control units are connected with 2 communication lines (CAN H line, CAN L line) allowing a high rate of information transmission with less wiring. Each control unit transmits/receives data but selectively reads required data only.

Wiring Diagram — CAN —

NAEL0476

EL-CAN-05

: DATA LINE

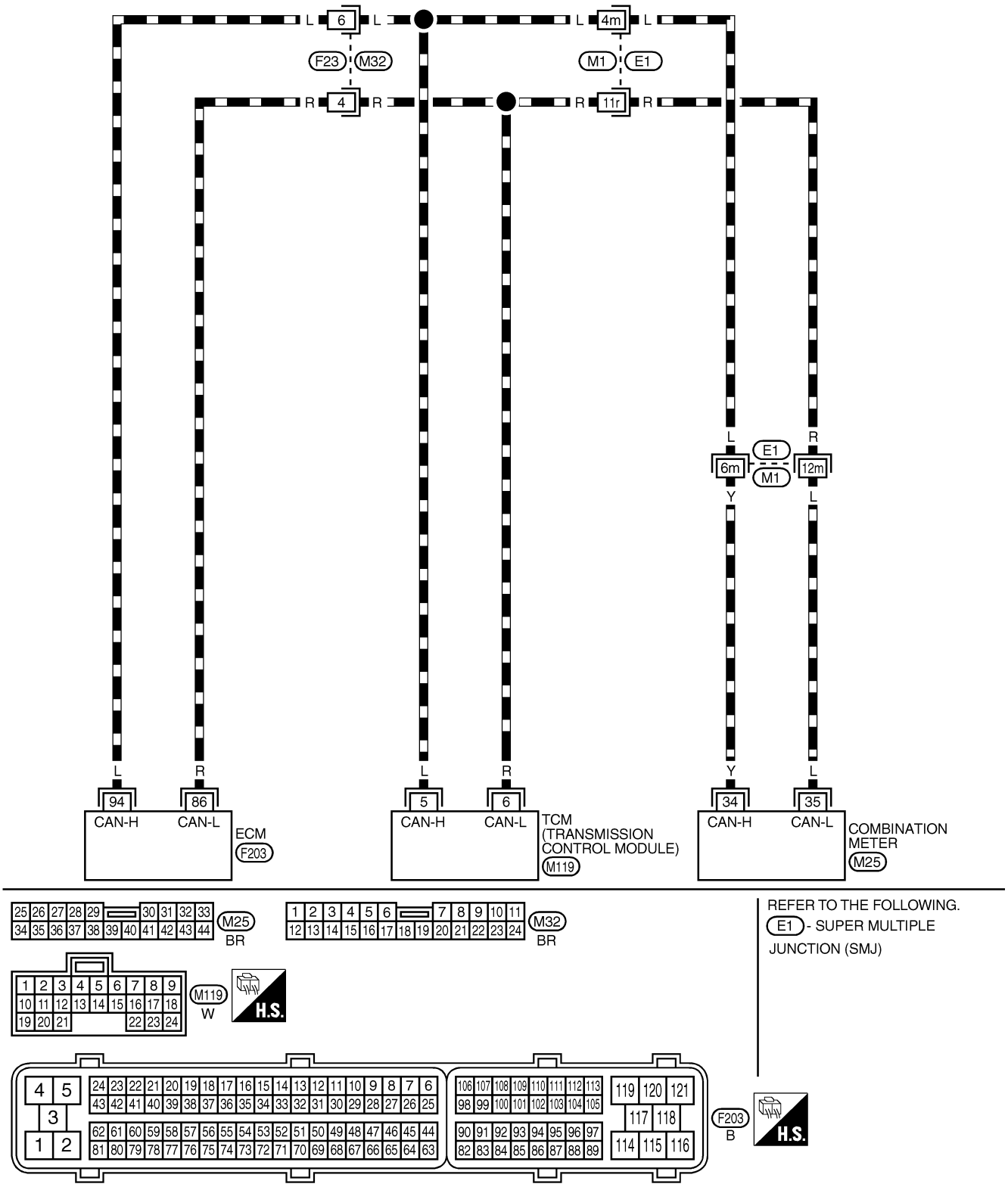

Trouble Diagnoses

NAEL0477

WORK FLOW

NAEL0477S01

1. Print all the data of “SELF-DIAG RESULTS” for “ENGINE” and “A/T” displayed on CONSULT-II.

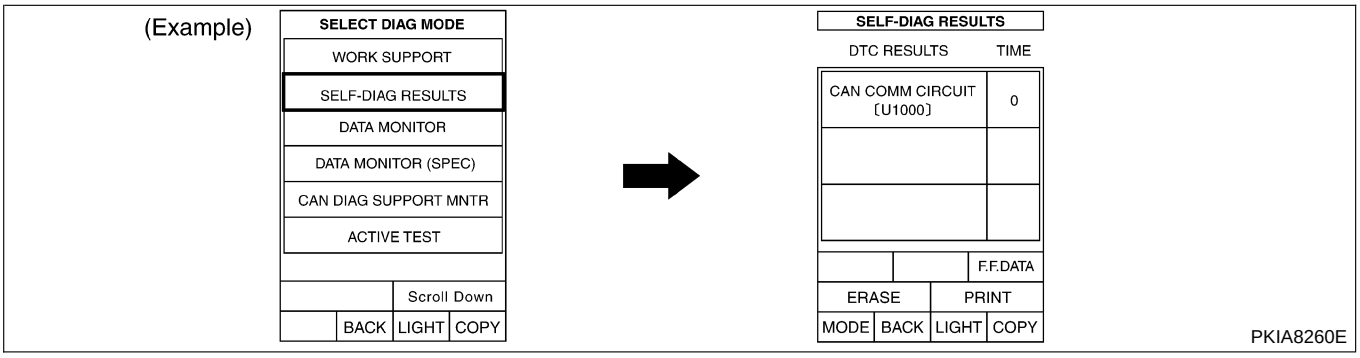

2. Print all the data of “CAN DIAG SUPPORT MNTR” for “ENGINE” and “A/T” displayed on CONSULT-II.

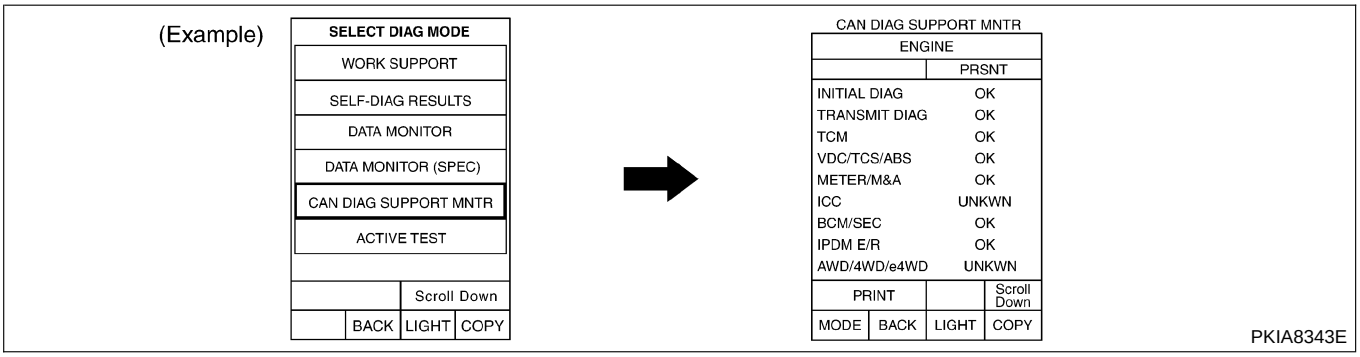

3. Attach the printed sheet of “SELF-DIAG RESULTS” and “CAN DIAG SUPPORT MNTR” onto the check sheet. Refer to “CHECK SHEET” (EL-463).
4. Based on the “CAN DIAG SUPPORT MNTR” results, put “v” marks onto the items with “UNKWN” or “NG” in the check sheet table. Refer to “CHECK SHEET” (EL-463).

NOTE:
If “NG” is displayed on “INITIAL DIAG (Initial diagnosis)” as “CAN DIAG SUPPORT MNTR” for the diagnosed control unit, replace the control unit.

5. According to the check sheet results (example), start inspection. Refer to “CHECK SHEET RESULTS (EXAMPLE)” (EL-464).

CHECK SHEET

=NAEL0477S02

NOTE:

If "NG" is displayed on "INITIAL DIAG (Initial diagnosis)" as "CAN DIAG SUPPORT MNTR" for the diagnosed control unit, replace the control unit.

Check sheet table

SELECT SYSTEM screen	CAN DIAG SUPPORT MNTR				
	Initial diagnosis	Transmit diagnosis	Receive diagnosis		
			ECM	TCM	METER/M&A
ENGINE	NG	UNKWN	–	UNKWN	UNKWN
A/T	NG	UNKWN	UNKWN	–	UNKWN

Symptoms:

Attach copy of
ENGINE
SELF-DIAG RESULTS

Attach copy of
A/T
SELF-DIAG RESULTS

Attach copy of
ENGINE
CAN DIAG SUPPORT MNTR

Attach copy of
A/T
CAN DIAG SUPPORT MNTR

PKIA8709E

CHECK SHEET RESULTS (EXAMPLE)

=NAEL0477S03

NOTE:

If "NG" is displayed on "INITIAL DIAG (Initial diagnosis)" as "CAN DIAG SUPPORT MNTR" for the diagnosed control unit, replace the control unit.

Case 1

NAEL0477S0301

Check ECM circuit. Refer to "ECM CIRCUIT CHECK" (EL-466).

SELECT SYSTEM screen	CAN DIAG SUPPORT MNTR				
	Initial diagnosis	Transmit diagnosis	Receive diagnosis		
			ECM	TCM	METER/M&A
ENGINE	NG	UNKWN ✓	–	UNKWN ✓	UNKWN ✓
A/T	NG	UNKWN	UNKWN ✓	–	UNKWN

PKIA8729E

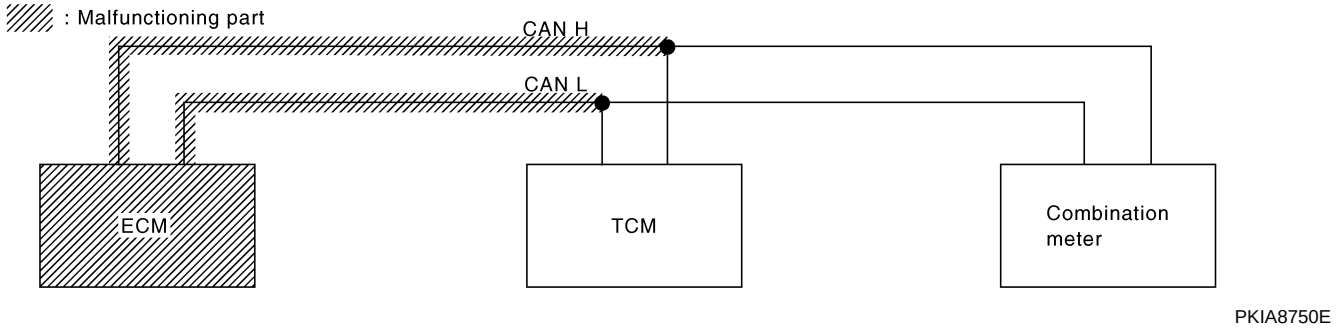

PKIA8750E

Case 2

NAEL0477S0302

Check TCM circuit. Refer to "TCM CIRCUIT CHECK" (EL-467).

SELECT SYSTEM screen	CAN DIAG SUPPORT MNTR				
	Initial diagnosis	Transmit diagnosis	Receive diagnosis		
			ECM	TCM	METER/M&A
ENGINE	NG	UNKWN	–	UNKWN ✓	UNKWN
A/T	NG	UNKWN ✓	UNKWN ✓	–	UNKWN ✓

PKIA8730E

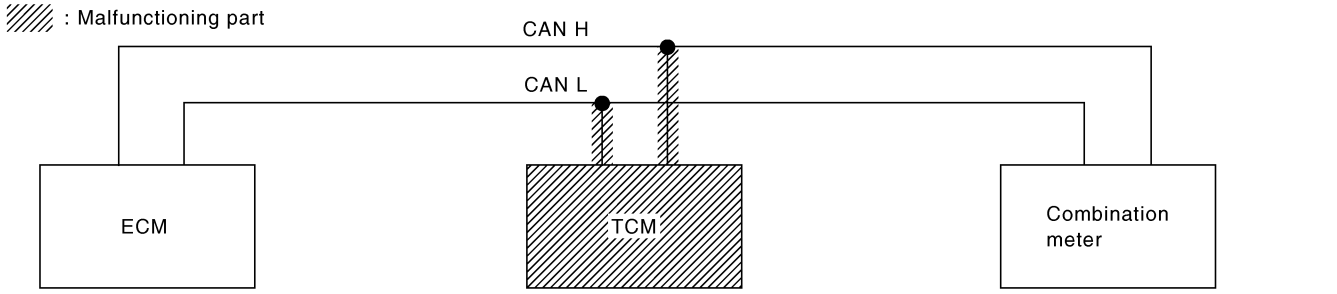

PKIA8751E

Case 3

NAEL0477S0303

Check combination meter circuit. Refer to "COMBINATION METER CIRCUIT CHECK" (EL-468).

SELECT SYSTEM screen	CAN DIAG SUPPORT MNTR				
	Initial diagnosis	Transmit diagnosis	Receive diagnosis		
			ECM	TCM	METER/M&A
ENGINE	NG	UNKWN	–	UNKWN	UNKWN ✓
A/T	NG	UNKWN	UNKWN	–	UNKWN ✓

PKIA8731E

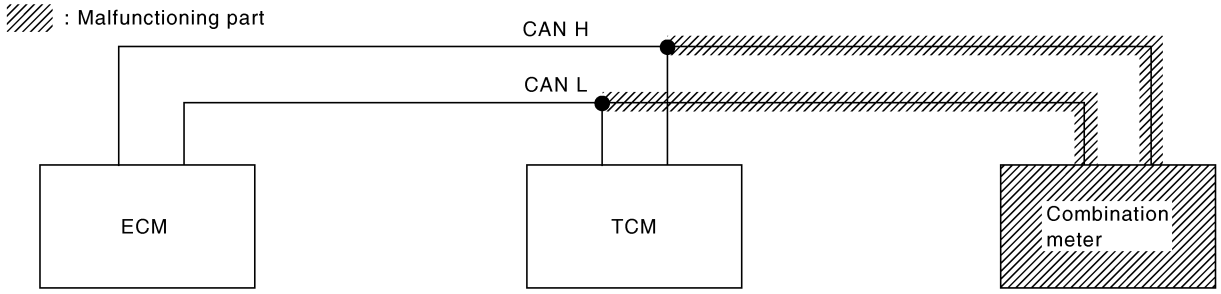

PKIA8752E

Case 4

NAEL0477S0304

Check CAN communication circuit. Refer to "CAN COMMUNICATION CIRCUIT CHECK" (EL-469).

SELECT SYSTEM screen	CAN DIAG SUPPORT MNTR				
	Initial diagnosis	Transmit diagnosis	Receive diagnosis		
			ECM	TCM	METER/M&A
ENGINE	NG	UNKWN ✓	–	UNKWN ✓	UNKWN ✓
A/T	NG	UNKWN ✓	UNKWN ✓	–	UNKWN ✓

PKIA8732E

ECM CIRCUIT CHECK

=NAEL0477S07

1	CHECK CONNECTOR
1. Turn ignition switch OFF. 2. Check following terminals and connector for damage, bend and loose connection (control module side and harness side). ● ECM ● Harness connector F23 ● Harness connector M32	
OK or NG	
OK ▶	GO TO 2.
NG ▶	Repair terminal or connector.

2	CHECK HARNESS FOR OPEN CIRCUIT
1. Disconnect ECM connector. 2. Check resistance between ECM harness connector F203 terminals 94 (L) and 86 (R).	

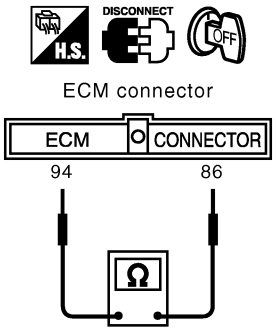

Approx. 108 - 132 Ω

SEL711Y

OK or NG	
OK ▶	Replace ECM.
NG ▶	Repair harness between ECM and TCM.

TCM CIRCUIT CHECK

=NAEL0477S08

1	CHECK CONNECTOR	
1. Turn ignition switch OFF. 2. Check the terminals and connector of TCM for damage, bend and loose connection (control module side and harness side).		
OK or NG		
OK	▶	GO TO 2.
NG	▶	Repair terminal or connector.

2	CHECK HARNESS FOR OPEN CIRCUIT	
1. Disconnect TCM connector. 2. Check resistance between TCM harness connector M119 terminals 5 (L) and 6 (R).		

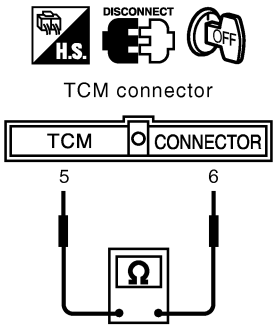

Approx. 54 - 66 Ω

SEL712Y

OK or NG		
OK	▶	Replace TCM.
NG	▶	Repair harness between TCM and harness connector M1.

COMBINATION METER CIRCUIT CHECK

=NAEL0477S11

1	CHECK CONNECTOR	
1. Turn ignition switch OFF. 2. Check following terminals and connector for damage, bend and loose connection (meter side and harness side). ● Combination meter ● Harness connector M1 ● Harness connector E1		
OK or NG		
OK	▶	GO TO 2.
NG	▶	Repair terminal or connector.

2	CHECK HARNESS FOR OPEN CIRCUIT	
1. Disconnect combination meter connector. 2. Check resistance between combination meter harness connector M25 terminals 34 (Y) and 35 (L).		
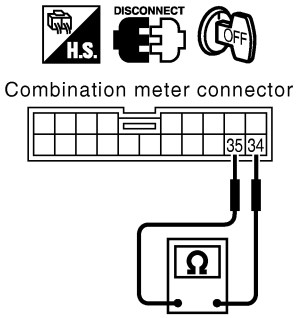 **Approx. 108 - 132 Ω** SEL716Y		
OK or NG		
OK	▶	Replace combination meter.
NG	▶	Repair harness between combination meter and TCM.

CAN COMMUNICATION CIRCUIT CHECK

=NAEL0477S12

1	CHECK CONNECTOR

1. Turn ignition switch OFF.
2. Check following terminals and connector for damage, bend and loose connection (meter side, control module side and harness side).

- Combination meter
- TCM
- ECM
- Between combination meter and ECM

OK or NG

OK	▶	GO TO 2.
NG	▶	Repair terminal or connector.

2	CHECK HARNESS FOR SHORT CIRCUIT

1. Disconnect ECM connector and harness connector F23.
2. Check continuity between ECM harness connector F203 terminals 94 (L) and 86 (R).

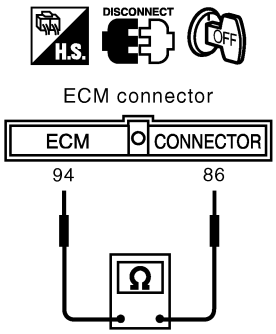

Continuity should not exist.

SEL717Y

OK or NG

OK	▶	GO TO 3.
NG	▶	Repair harness between ECM and harness connector F23.

3	CHECK HARNESS FOR SHORT CIRCUIT

Check continuity between ECM harness connector F203 terminals 94 (L), 86 (R) and ground.

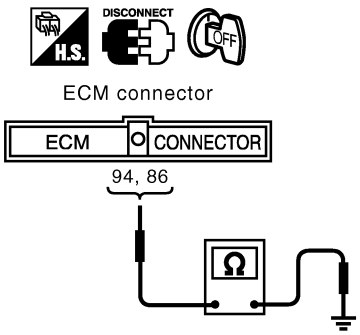

Continuity should not exist.

SEL718Y

OK or NG

OK	▶	GO TO 4.
NG	▶	Repair harness between ECM and harness connector F23.

4	CHECK HARNESS FOR SHORT CIRCUIT

1. Disconnect TCM connector and harness connector M1.
2. Check continuity between TCM harness connector M119 terminals 5 (L) and 6 (R).

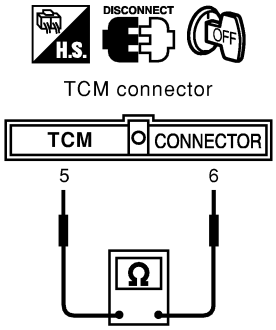

Continuity should not exist.

SEL440Y

OK or NG

OK	▶	GO TO 5.
NG	▶	● Repair harness between TCM and harness connector M1. ● Repair harness between TCM and harness connector M32.

5	CHECK HARNESS FOR SHORT CIRCUIT

Check continuity between TCM harness connector M119 terminals 5 (L), 6 (R) and ground.

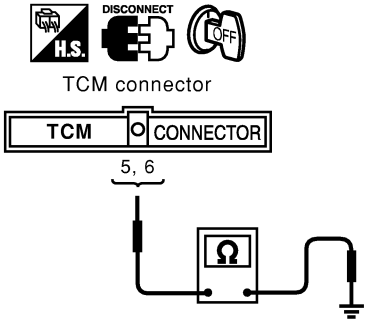

Continuity should not exist.

SEL441Y

OK or NG

OK	▶	GO TO 6.
NG	▶	● Repair harness between TCM and harness connector M1. ● Repair harness between TCM and harness connector M32.

6	CHECK HARNESS FOR SHORT CIRCUIT

Check continuity between harness connector E1 terminals 6m (L) and 12m (R).

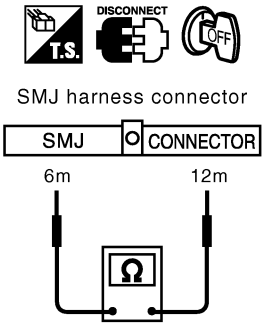

Continuity should not exist.

SEL732Y

OK or NG

OK	▶	GO TO 7.
NG	▶	Repair harness between harness connector E1 and harness connector E1.

7	CHECK HARNESS FOR SHORT CIRCUIT

Check continuity between harness connector E1 terminals 6m (L), 12m (R) and ground.

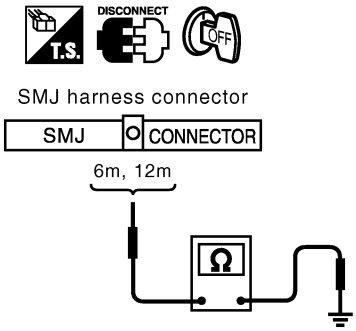

Continuity should not exist.

SEL733Y

OK or NG

OK	▶	GO TO 8.
NG	▶	Repair harness between harness connector E1 and harness connector E1.

8	CHECK HARNESS FOR SHORT CIRCUIT

1. Disconnect combination meter connector.
2. Check continuity between combination meter harness connector M25 terminals 34 (Y) and 35 (L).

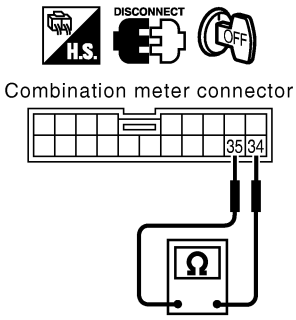

Continuity should not exist.

SEL721Y

OK or NG

OK	▶	GO TO 9.
NG	▶	Repair harness between combination meter and harness connector M1.

9	CHECK HARNESS FOR SHORT CIRCUIT

Check continuity between combination meter harness connector M25 terminals 34 (Y), 35 (L) and ground.

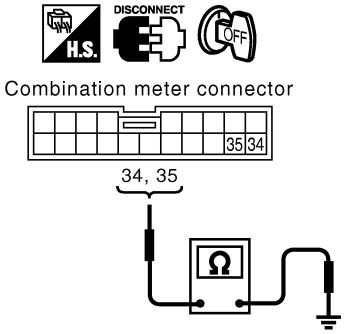

Continuity should not exist.

SEL722Y

OK or NG

OK	▶	GO TO 10.
NG	▶	Repair harness between combination meter and harness connector M1.

10	ECM/COMBINATION METER INTERNAL CIRCUIT INSPECTION

Check components inspection. Refer to "ECM/COMBINATION METER INTERNAL CIRCUIT INSPECTION" (EL-472).

OK or NG

OK	▶	Connect all the connectors and diagnose again. Refer to "Work Flow" (EL-462).
NG	▶	Replace ECM and/or combination meter.

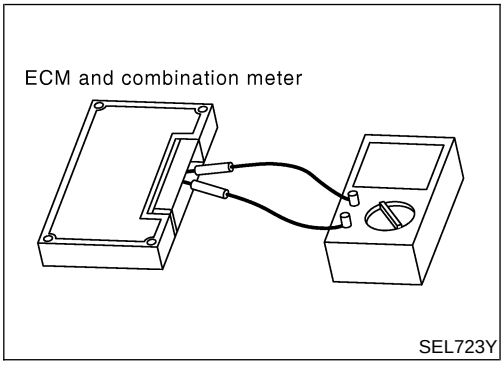

Component Inspection

NAEL0478

ECM/COMBINATION METER INTERNAL CIRCUIT INSPECTION

NAEL0478S01

- Remove ECM and combination meter from vehicle.
- Check resistance between ECM terminals 94 and 86.
- Check resistance between combination meter terminals 34 and 35.

Unit	Terminal	Resistance value (Ω)
ECM	94 - 86	Approx. 108 - 132
Combination meter	34 - 35	

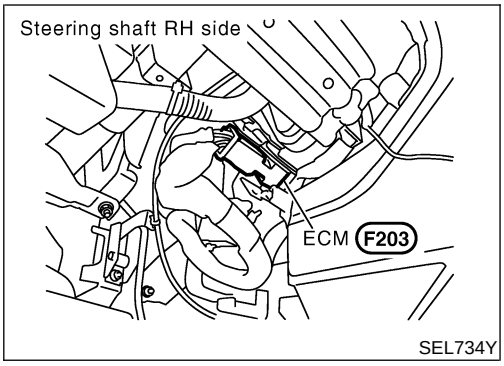

Component Parts and Harness Connector Location

NAEL0479

System Description

NAEL0480

CAN (Controller Area Network) is a serial communication line for real time application. It is an on-vehicle multiplex communication line with high data communication speed and excellent error detection ability. Many electronic control units are equipped onto a vehicle, and each control unit shares information and links with other control units during operation (not independent). In CAN communication, control units are connected with 2 communication lines (CAN H line, CAN L line) allowing a high rate of information transmission with less wiring. Each control unit transmits/receives data but selectively reads required data only.

Wiring Diagram — CAN —

NAEL0481

EL-CAN-06

: DATA LINE

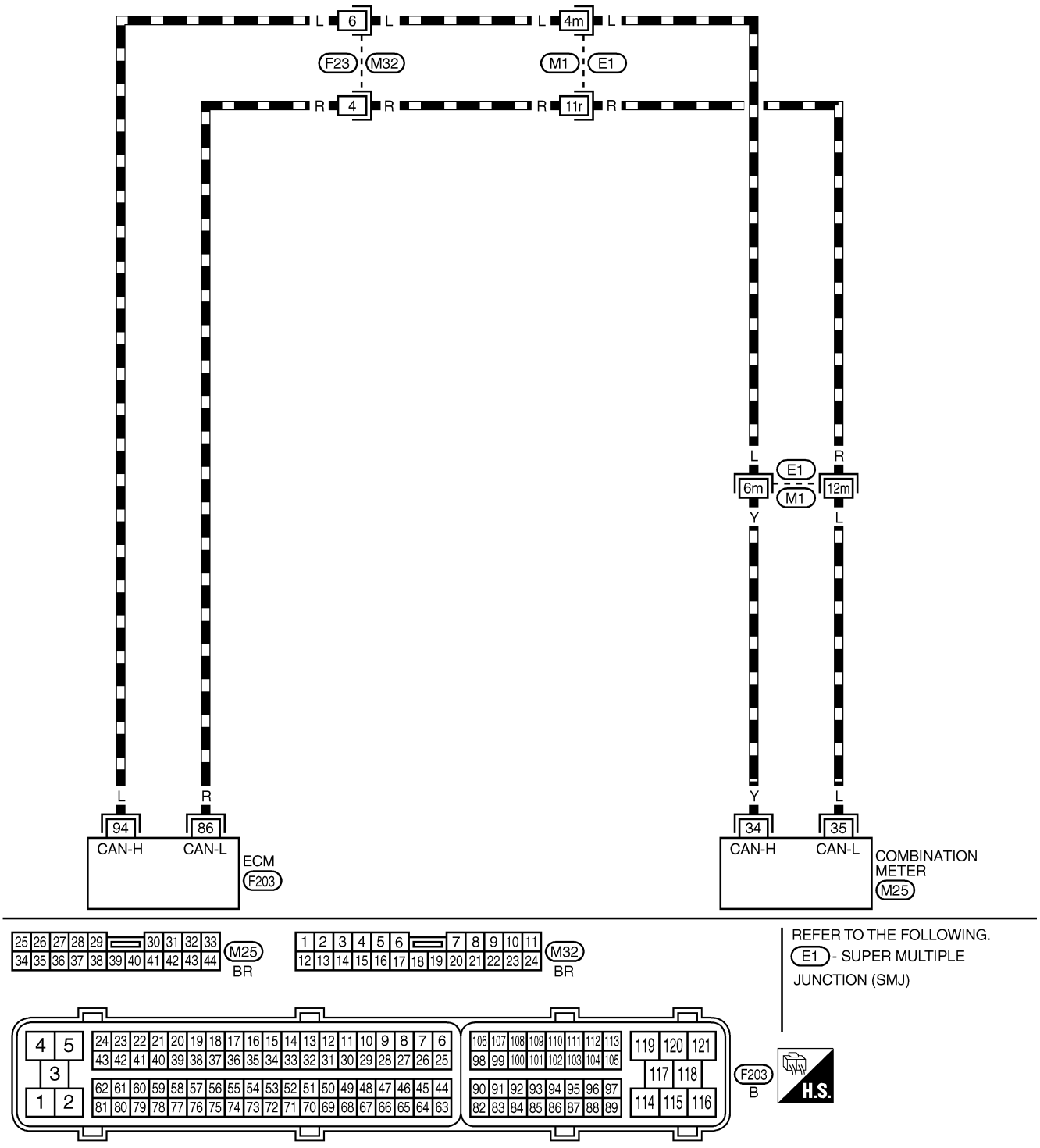

MEL581Q

Trouble Diagnoses

NAEL0482

WORK FLOW

NAEL0482S01

1. Print all the data of “SELF-DIAG RESULTS” for “ENGINE” displayed on CONSULT-II.

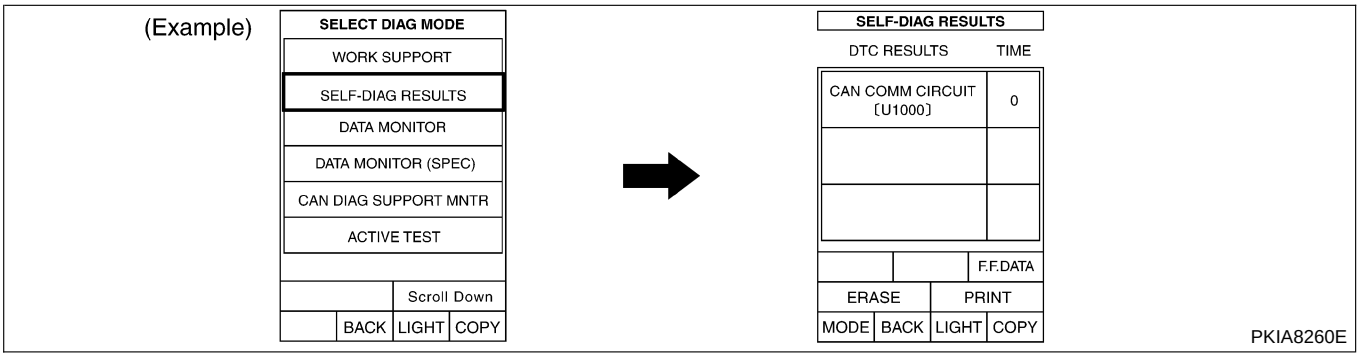

2. Print all the data of “CAN DIAG SUPPORT MNTR” for “ENGINE” displayed on CONSULT-II.

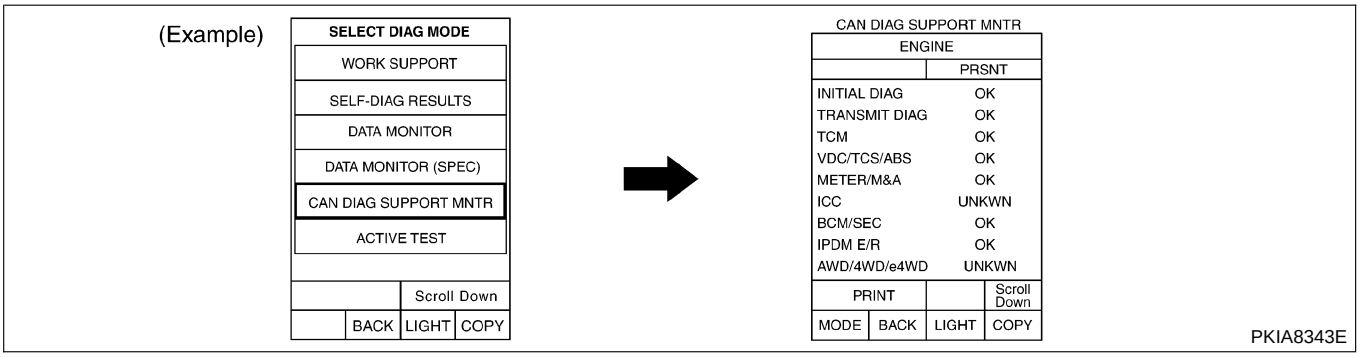

3. Attach the printed sheet of “SELF-DIAG RESULTS” and “CAN DIAG SUPPORT MNTR” onto the check sheet. Refer to “CHECK SHEET” (EL-476).
4. Based on the “CAN DIAG SUPPORT MNTR” results, put “v” marks onto the items with “UNKWN” or “NG” in the check sheet table. Refer to “CHECK SHEET” (EL-476).

NOTE:
If “NG” is displayed on “INITIAL DIAG (Initial diagnosis)” as “CAN DIAG SUPPORT MNTR” for the diagnosed control unit, replace the control unit.

5. According to the check sheet results (example), start inspection. Refer to “CHECK SHEET RESULTS (EXAMPLE)” (EL-476).

CHECK SHEET

=NAEL0482S02

NOTE:

If "NG" is displayed on "INITIAL DIAG (Initial diagnosis)" as "CAN DIAG SUPPORT MNTR" for the diagnosed control unit, replace the control unit.

Check sheet table

SELECT SYSTEM screen	CAN DIAG SUPPORT MNTR			
	Initial diagnosis	Transmit diagnosis	Receive diagnosis	
			ECM	METER/M&A
ENGINE	NG	UNKWN	–	UNKWN

Symptoms:

Attach copy of
ENGINE
SELF-DIAG RESULTS

Attach copy of
ENGINE
CAN DIAG SUPPORT MNTR

PKIA8710E

CHECK SHEET RESULTS (EXAMPLE)

NAEL0482S03

NOTE:

If "NG" is displayed on "INITIAL DIAG (Initial diagnosis)" as "CAN DIAG SUPPORT MNTR" for the diagnosed control unit, replace the control unit.

Case 1

NAEL0482S0301

Check CAN communication circuit. Refer to "CAN COMMUNICATION CIRCUIT CHECK" (EL-477).

SELECT SYSTEM screen	CAN DIAG SUPPORT MNTR			
	Initial diagnosis	Transmit diagnosis	Receive diagnosis	
			ECM	METER/M&A
ENGINE	NG	UNKWN ✓	–	UNKWN ✓

PKIA8733E

CAN COMMUNICATION CIRCUIT CHECK

NAEL0482S08

1	CHECK CONNECTOR

1. Turn ignition switch OFF.
2. Check following terminals and connector for damage, bend and loose connection (meter side, control module side and harness side).

- Combination meter
- ECM
- Between combination meter and ECM

OK or NG

OK	▶	GO TO 2.
NG	▶	Repair terminal or connector.

2	CHECK HARNESS FOR SHORT CIRCUIT

1. Disconnect ECM connector and combination meter connector.
2. Check continuity between ECM harness connector F203 terminals 94 (L) and 86 (R).

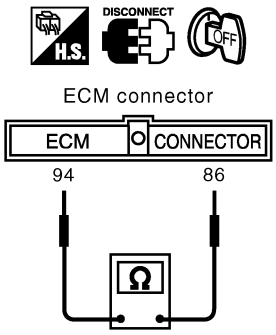

Continuity should not exist.

SEL717Y

OK or NG

OK	▶	GO TO 3.
NG	▶	Repair harness between ECM and combination meter.

3	CHECK HARNESS FOR SHORT CIRCUIT

Check continuity between ECM harness connector F203 terminals 94 (L), 86 (R) and ground.

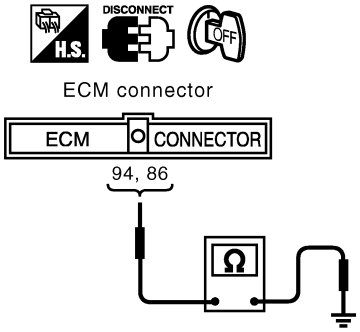

Continuity should not exist.

SEL718Y

OK or NG

OK	▶	GO TO 4.
NG	▶	Repair harness between ECM and combination meter.

4	CHECK HARNESS FOR OPEN CIRCUIT

Check continuity between ECM harness connector F203 terminals 94 (L), 86 (R) and combination meter harness connector M25 terminals 34 (Y), 35 (L).

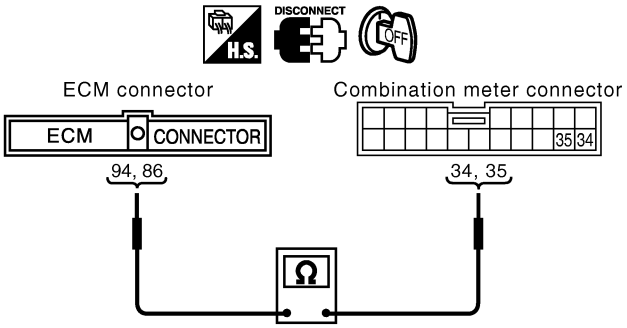

Continuity should exist.

SEL737Y

OK or NG

OK	▶	GO TO 5.
NG	▶	Repair harness.

5	ECM/COMBINATION METER INTERNAL CIRCUIT INSPECTION

Check components inspection. Refer to "ECM/COMBINATION METER INTERNAL CIRCUIT INSPECTION" (EL-478).

OK or NG

OK	▶	Connect all the connectors and diagnose again. Refer to "Work Flow" (EL-475).
NG	▶	Replace ECM and/or combination meter.

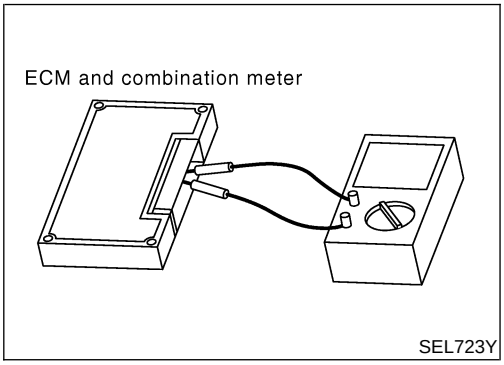

Component Inspection

NAEL0483

ECM/COMBINATION METER INTERNAL CIRCUIT INSPECTION

NAEL0483S01

- Remove ECM and combination meter from vehicle.
- Check resistance between ECM terminals 94 and 86.
- Check resistance between combination meter terminals 34 and 35.

Unit	Terminal	Resistance value (Ω)
ECM	94 - 86	Approx. 108 - 132
Combination meter	34 - 35	

Engine Compartment

NAEL0431

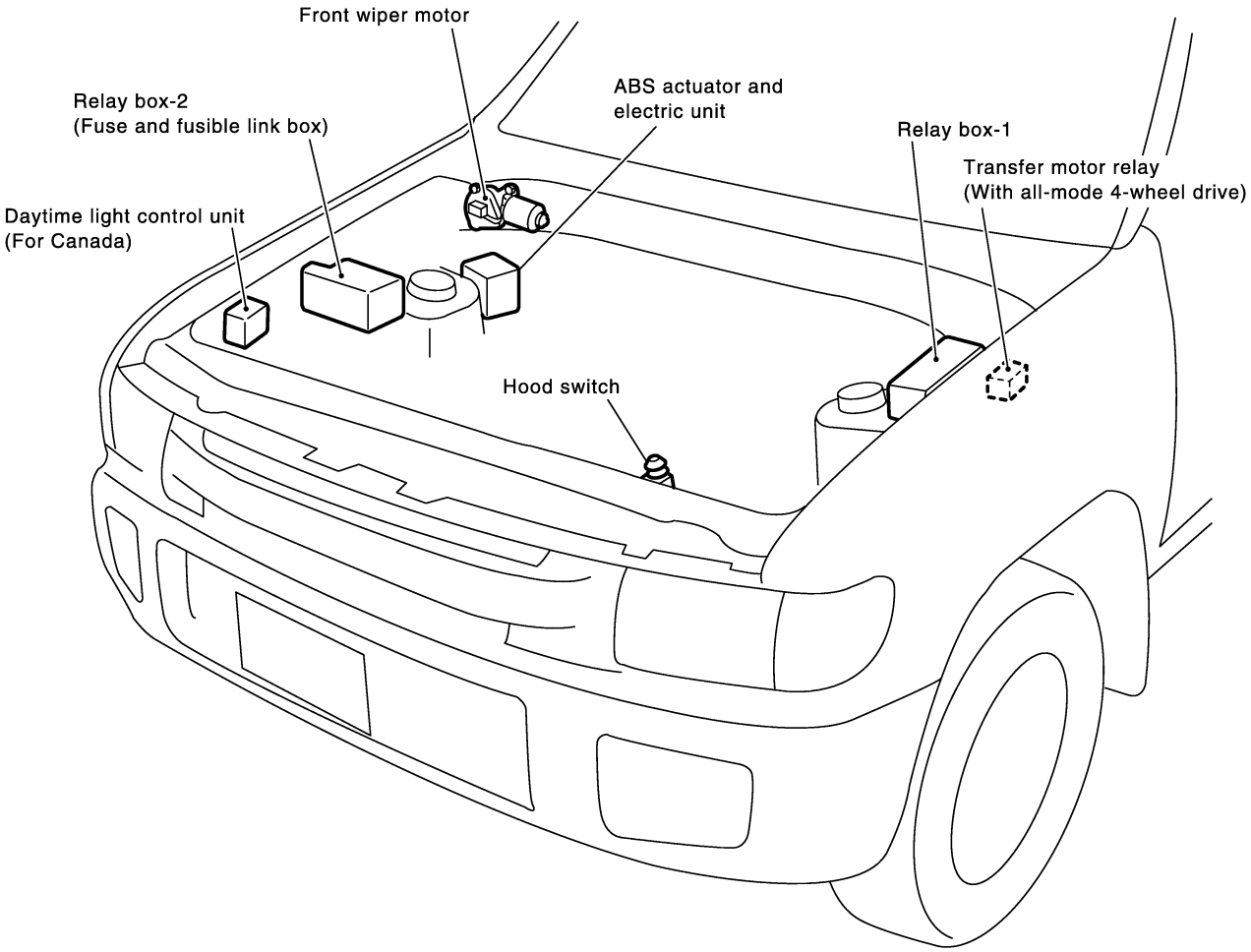

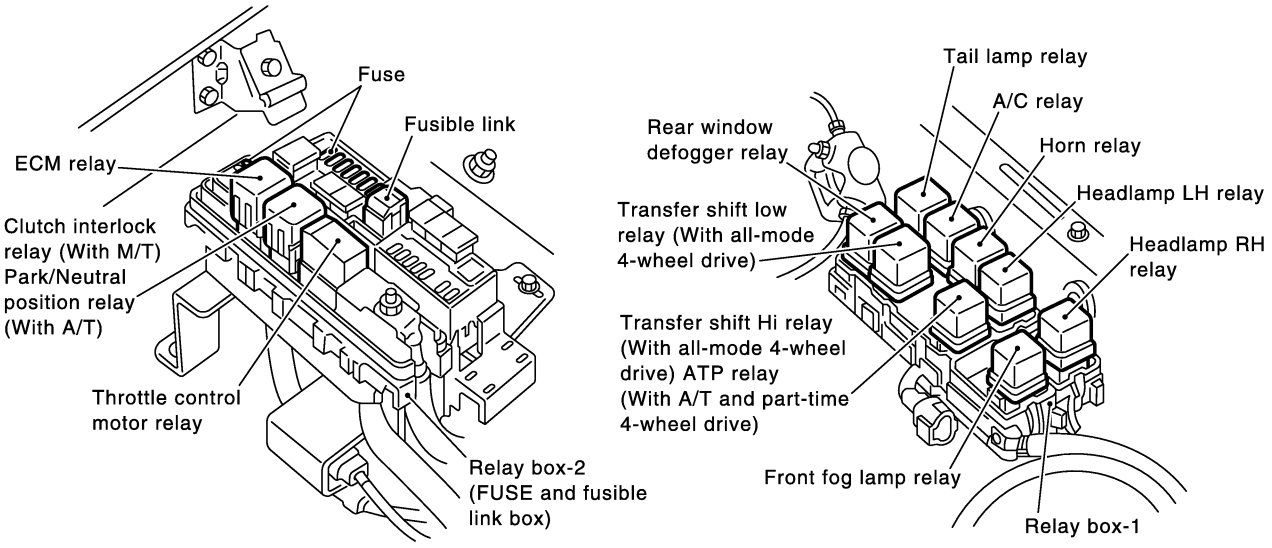

MEL063Q

Passenger Compartment

NAEL0432

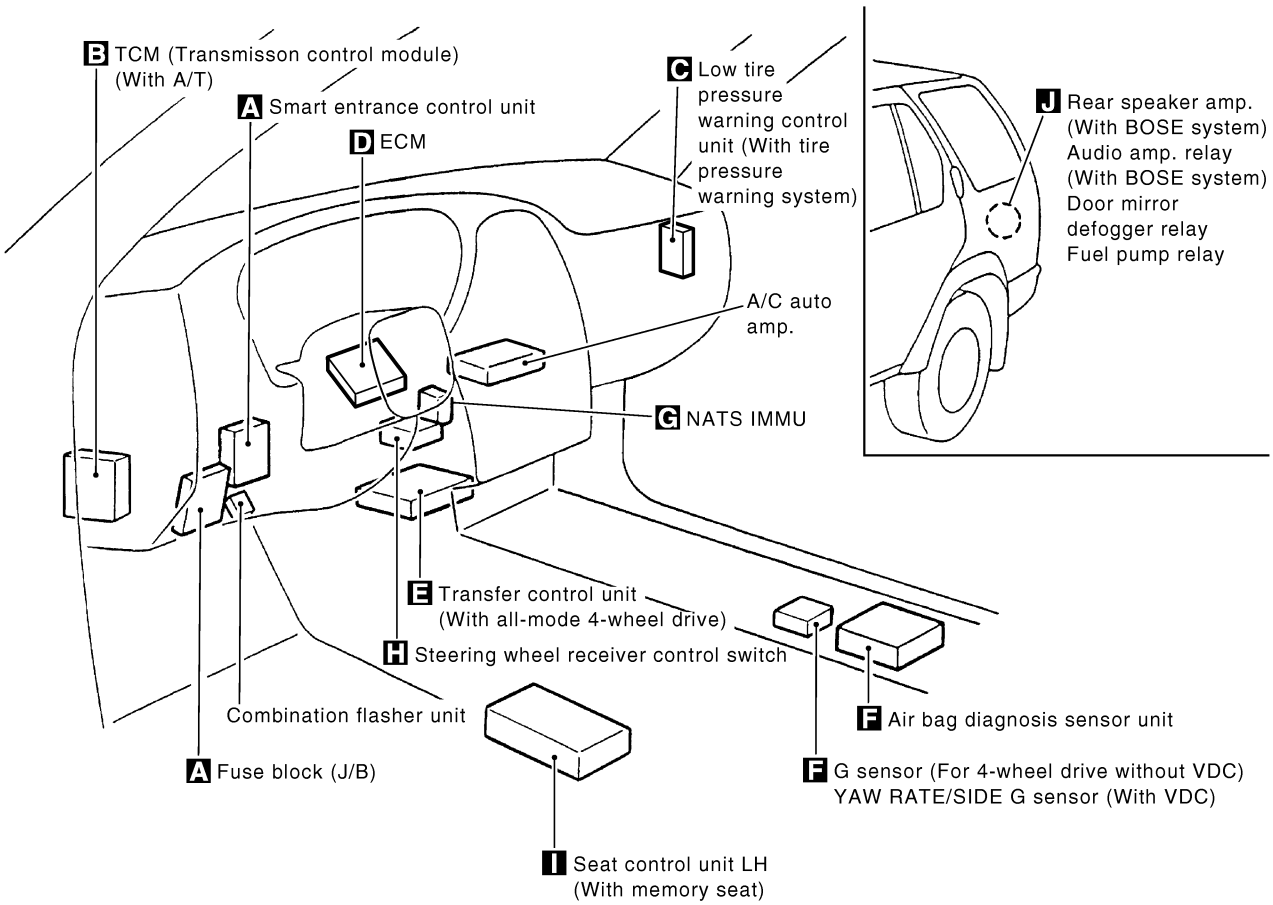

A Instrument panel LH side

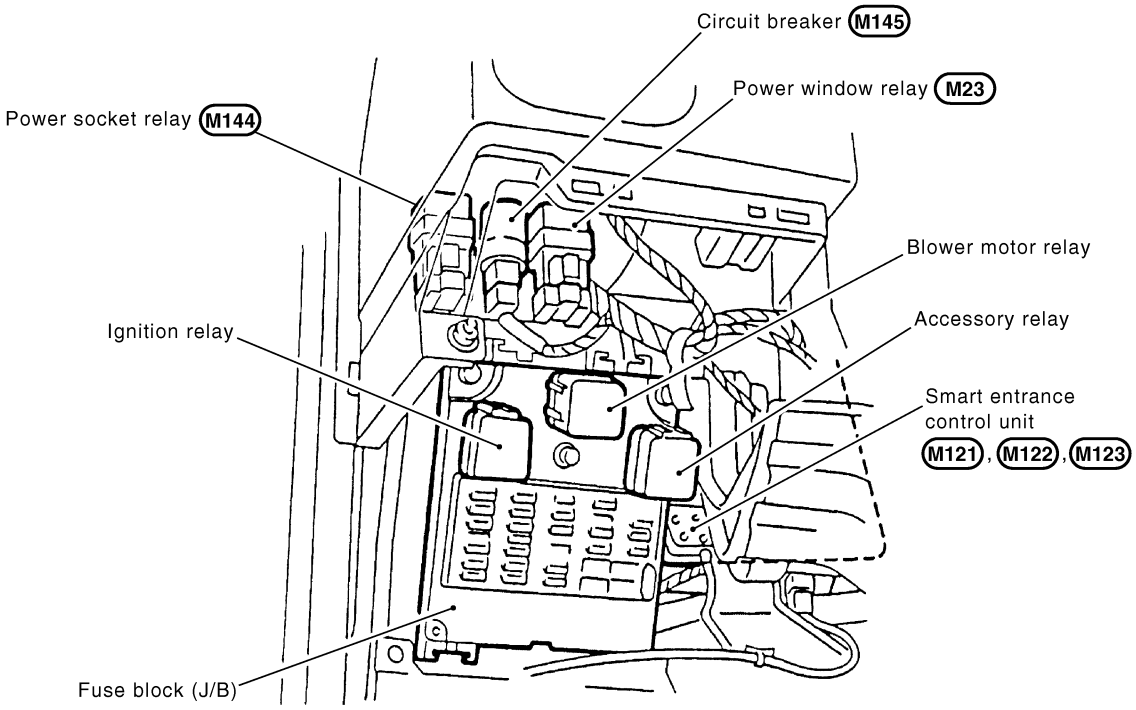

MEL113S

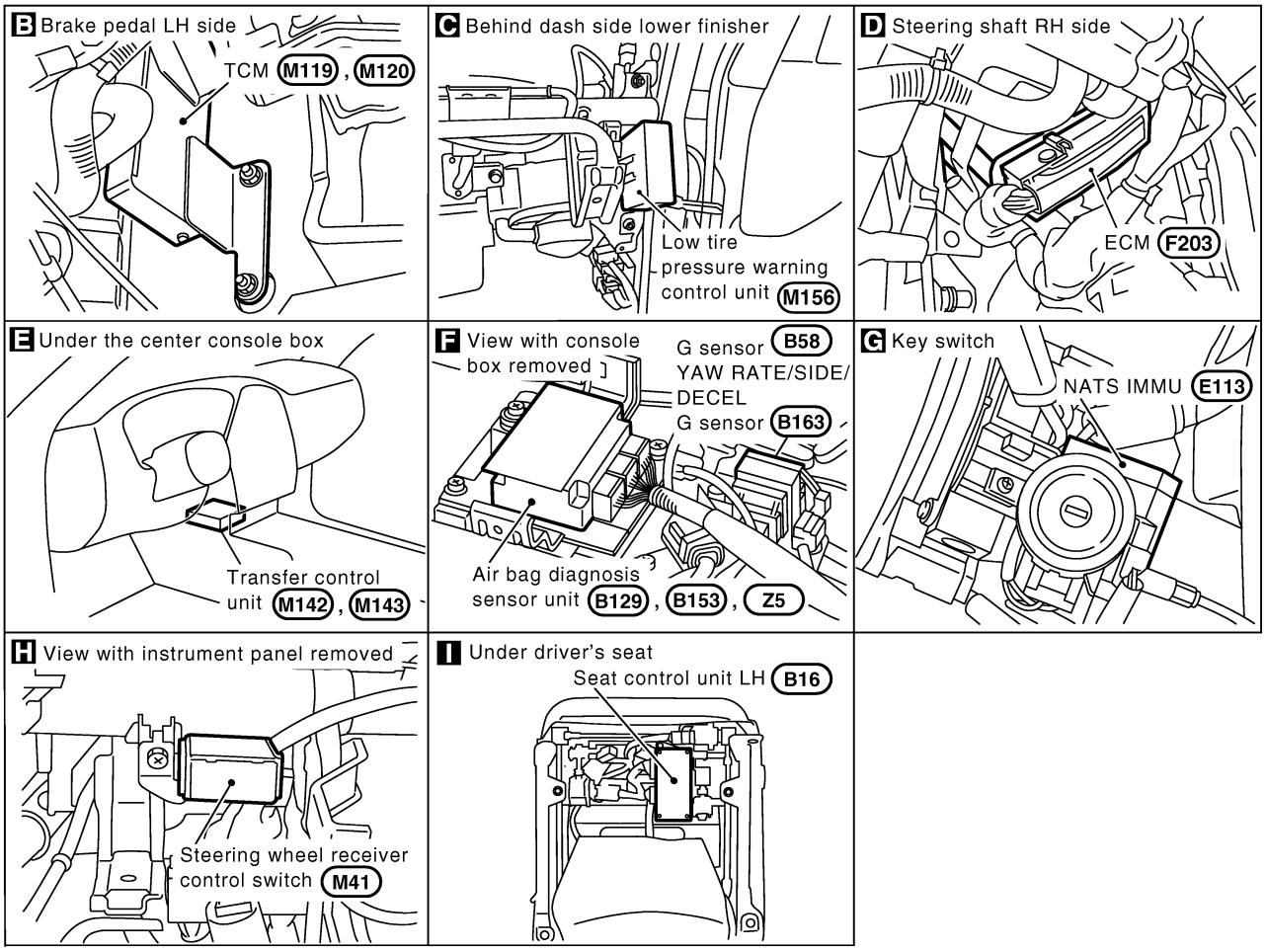

J Behind the luggage room trim LH side

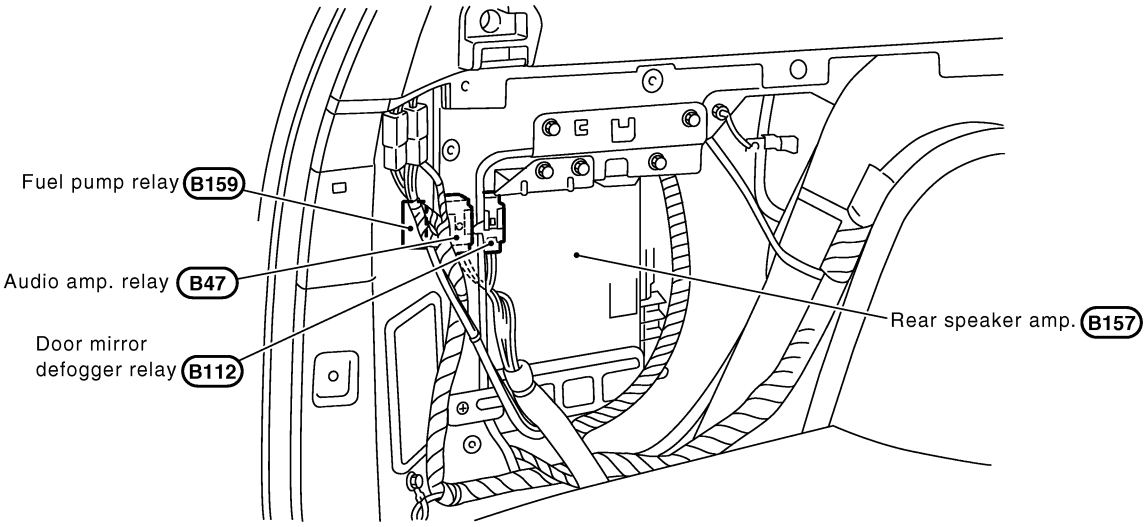

MEL114S

How to Read Harness Layout

NAEL0433

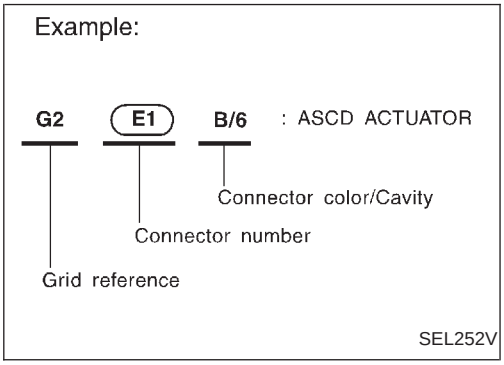

The following Harness Layouts use a map style grid to help locate connectors on the drawings:

- Main Harness
- Engine Room Harness (Engine Compartment)
- Engine Control Harness

TO USE THE GRID REFERENCE

NAEL0433S01

1. Find the desired connector number on the connector list.
2. Find the grid reference.
3. On the drawing, find the crossing of the grid reference letter column and number row.
4. Find the connector number in the crossing zone.
5. Follow the line (if used) to the connector.

CONNECTOR SYMBOL

NAEL0433S02

Main symbols of connector (in Harness Layout) are indicated in the below.

Connector type	Water proof type		Standard type	
	Male	Female	Male	Female
• Cavity: Less than 4 • Relay connector				
• Cavity: From 5 to 8				
• Cavity: More than 9	—	—		
• Ground terminal etc.	—			

Outline

NAEL0434

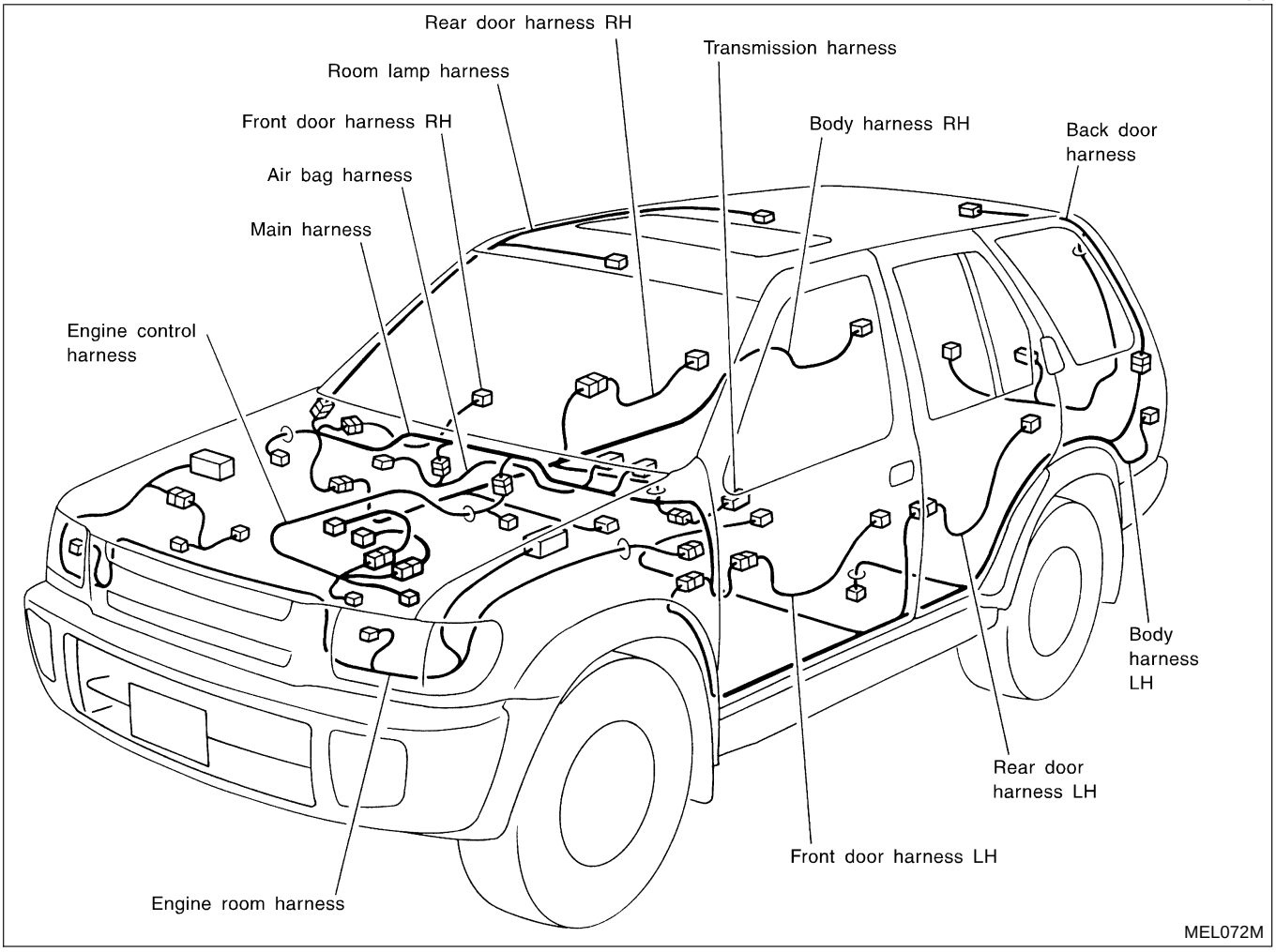

Main Harness

NAEL0435

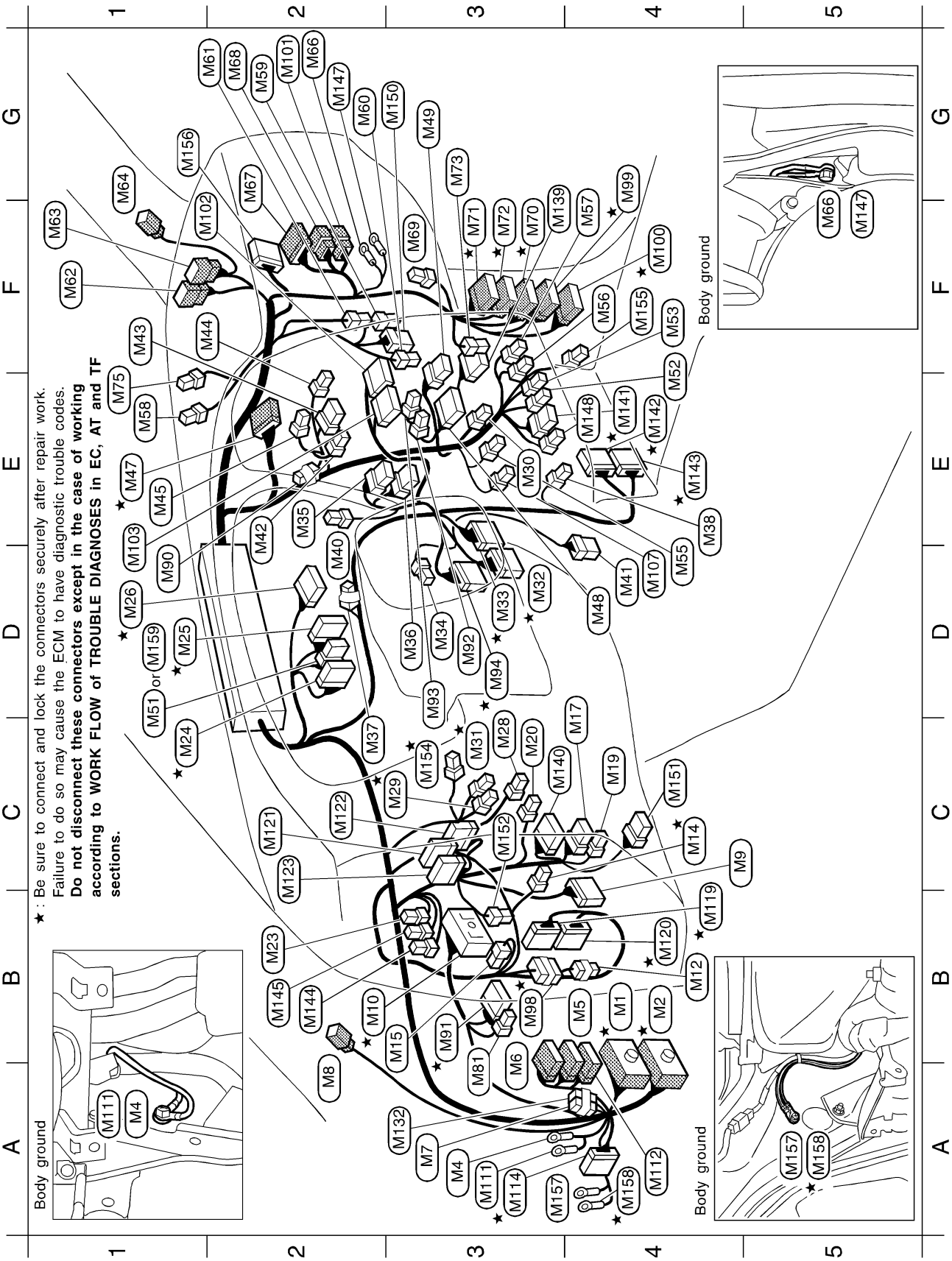

MEL100S

B4★	M1	SMJ	To E1
B4★	M2	SMJ	To B1
A3	M4	—	Body ground
B4	M5	BR/16	To D3
A3	M6	W/10	To D4
A3	M7	B/2	Diode (For Canada)
A2	M8	BR/2	Tweeter LH
C4	M9	W/16	Data link connector
B2★	M10	SMJ	Fuse block (J/B)
B4	M12	GY/3	Diode
C4★	M14	L/2	ASCD clutch switch (With M/T)
B3	M15	B/3	Combination flasher unit
C4	M17	GY/6	Memory seat cancel switch
C4	M19	W/3	Illumination control switch
C3	M20	W/2	Security indicator lamp
B2	M23	L/4	Power window relay
C1★	M24	W/24	Combination meter
D1★	M25	BR/20	Combination meter
D1★	M26	BR/24	Combination meter
C3	M28	L/2	Clutch interlock switch (With M/T)
C3★	M29	BR/2	ASCD brake switch
E3	M30	W/2	Glove box lamp
C3★	M31	B/2	Stop lamp switch (With M/T)
D3★	M32	BR/24	To F23
D3★	M33	GY/16	To F22
D3	M34	W/2	In-vehicle sensor (With auto A/C)
E2	M35	W/8	Hazard switch
D3	M36	W/6	Rear window defogger switch (With auto A/C and normal meter, with manual A/C)
C2	M37	B/2	Diode
E4	M38	W/3	Mode door motor (With auto A/C)
D2	M40	W/4	Clock
D4	M41	W/8	Steering wheel receiver control switch
E2	M42	W/4	Recirculation switch (With manual A/C)
F1	M43	W/6	Fan switch (With manual A/C)
F2	M44	W/3	A/C switch (With manual A/C)
E1	M45	W/3	A/C switch illumination (With manual A/C)
E1★	M47	W/20	To Z1
D4	M48	W/10	Audio unit
G3	M49	W/6	Audio unit
D1	M51	W/8	Combination meter (With all-mode 4-wheel drive and normal meter)
E4	M52	L/4	Heated seat switch LH (With heated seat, without woody instrument finisher)
F4	M53	W/4	Heated seat switch RH (With heated seat, without woody instrument finisher)
D4	M55	W/3	Air mix door motor (With auto A/C)
F4	M56	B/2	Cigarette lighter socket
F4	M57	W/2	Cigarette lighter illumination (For Canada)
E1	M58	B/2	Sunload sensor (With auto A/C)
G2	M59	W/8	Intake door motor (With auto A/C)
G2	M60	W/4	Fan control amp. (With auto A/C)
G1	M61	BR/4	Fan resistor (With manual A/C)
F1	M62	W/6	To R1
F1	M63	W/6	To R2
F1	M64	BR/2	Tweeter RH
G2	M66	—	Body ground
F2	M67	BR/16	To D33
G2	M68	W/6	To D34
F3	M69	W/3	Power antenna
F3★	M70	W/20	To B50
F3★	M71	W/24	To B51
F3★	M72	W/16	To B52
G3	M73	W/2	Blower motor
E1	M75	W/3	Auto light sensor
A3	M81	B/2	Fuse block (J/B)
D1	M90	B/2	Diode (With manual A/C)
B3★	M91	W/12	Fuse block (J/B)
D3	M92	B/2	CD player (Without BOSE system)
D3	M93	W/4	CD player (Without BOSE system)
D3★	M94	W/18	To F27
B3★	M98	GY/6	Joint connector
F4★	M99	W/12	To B77
F4★	M100	GY/20	To B88
G2	M101	BR/6	To D41
F2	M102	GY/16	A/C auto amp. (With auto A/C)
D1	M103	GY/20	A/C auto amp. (With auto A/C)
D4	M107	W/2	Intake sensor
A3	M111	—	Body ground
A4	M112	GY/12	To D13
A3★	M114	W/18	To E116
B4★	M119	W/24	TCM (Transmission control module) (With A/T)
B4★	M120	GY/24	TCM (Transmission control module) (With A/T)
C2	M121	W/24	Smart entrance control unit
C2	M122	GY/24	Smart entrance control unit
C2	M123	GY/16	Smart entrance control unit
A3	M132	B/2	Diode
F3	M139	W/16	Audio unit (With steering receiver control)
C3	M140	W/10	Door mirror remote control switch
E4★	M141	W/8	4WD shift switch (With all-mode 4-wheel drive)
E4★	M142	L/24	Transfer control unit (With all-mode 4-wheel drive)
E4★	M143	G/24	Transfer control unit (With all-mode 4-wheel drive)
B2	M144	W/4	Power socket relay (With all-mode 4-wheel drive)
B2	M145	W/2	Circuit breaker
G2	M147	—	Body ground
E4	M148	W/4	Rear TV switch (With rear TV, without woody instrument finisher)
G3	M150	W/4	Intake door motor (With manual A/C)
C4	M151	L/6	VDC off switch (With VDC)
C3	M152	W/2	Tire pressure warning check switch (With low tire pressure warning system)
C3★	M154	W/4	Stop lamp switch (With A/T)
F4	M155	W/2	Ashtray illumination (With woody instrument finisher)
G1	M156	W/16	Low tire pressure warning control unit (With low tire pressure warning system)
A3	M157	—	Body ground
A4★	M158	—	Body ground
D1	M159	W/6	Combination meter (With all-mode 4-wheel drive and fine vision meter)

★ : Be sure to connect and lock the connectors securely after repair work. Failure to do so may cause the ECM to have diagnostic trouble codes.

Do not disconnect these connectors except in the case of working according to WORK FLOW of TROUBLE DIAGNOSES in EC, AT and TF sections.

Diode M7

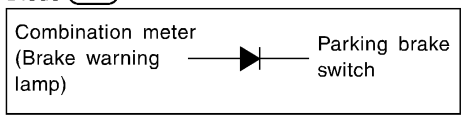

Diode M12

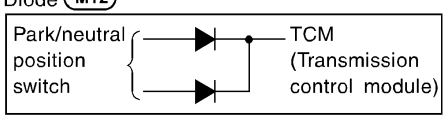

Diode M37

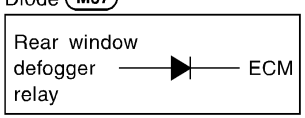

Diode M90

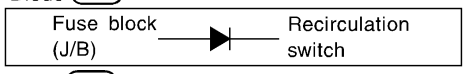

Diode M132

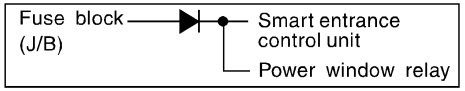

Engine Room Harness

NAEL0436

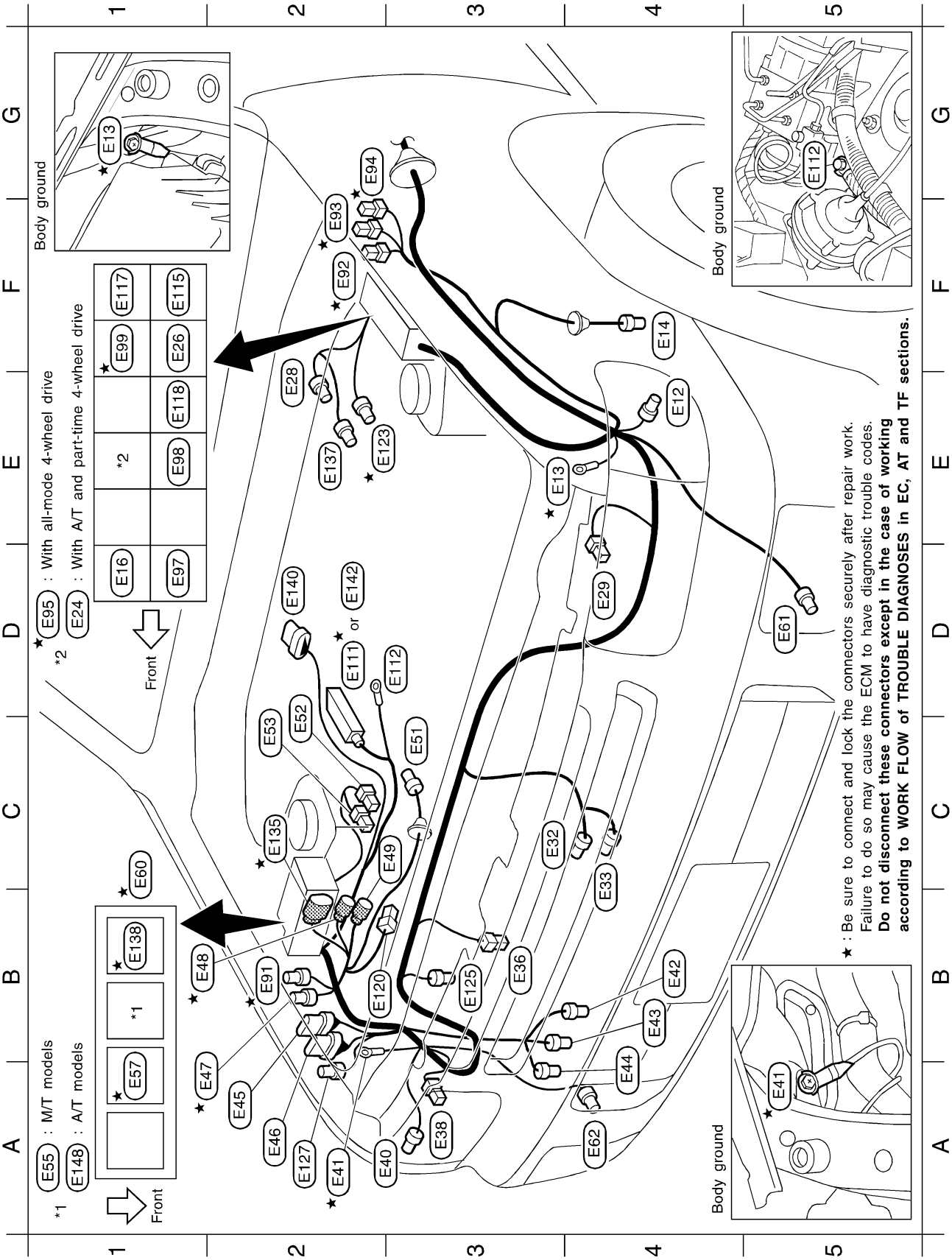

MEL102S

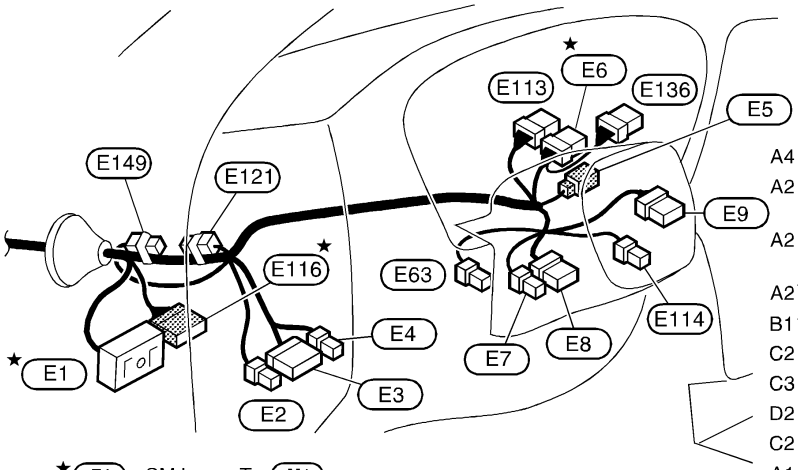

★: Be sure to connect and lock the connectors securely after repair work. Failure to do so may cause the ECM to have diagnostic trouble codes. **Do not disconnect these connectors except in the case of working according to WORK FLOW of TROUBLE DIAGNOSES in EC, AT and TF sections.**

★	E1	SMJ	:	To M1
	E2	B/2	:	Fuse block (J/B)
	E3	W/16	:	Fuse block (J/B)
	E4	W/4	:	Fuse block (J/B)
	E5	BR/2	:	Key switch
★	E6	W/6	:	Ignition switch
	E7	BR/4	:	Combination switch (Lighting switch)
	E8	W/8	:	Combination switch (Lighting and turn signal switch)
	E9	GY/8	:	Combination switch (Front wiper switch)
E4	E12	GY/3	:	Front turn signal and parking lamp LH
E3 ★	E13	—	:	Body ground
F4	E14	BR/2	:	Front wheel sensor LH
D1	E16	L/4	:	Front fog lamp relay (Relay box-1)
D1	E24	B/5	:	ATP relay (With A/T and part-time 4-wheel drive) (Relay box-1)
F1	E26	L/4	:	A/C relay (Relay box-1)
E2	E28	GY/2	:	Brake fluid level switch
D4	E29	B/3	:	Headlamp LH
C3	E32	B/2	:	Ambient sensor (With auto A/C)
C4	E33	B/2	:	Ambient air temperature sensor (For thermometer)
B3	E36	B/1	:	Horn (Low)
A3	E38	B/3	:	Headlamp RH
A3	E40	GY/3	:	Front turn signal and parking lamp RH
A2 ★	E41	—	:	Body ground
B4	E42	BR/2	:	Washer level switch (For Canada)
B4	E43	GY/2	:	Rear washer motor
A4	E44	GY/2	:	Front washer motor
A2	E45	GY/8	:	Daytime light control unit (For Canada)
A2	E46	GY/6	:	Daytime light control unit (For Canada)
A2 ★	E47	GY/2	:	A/T dropping resistor (With A/T)
B1 ★	E48	GY/4	:	To E102
C2	E49	GY/1	:	To E104
C3	E51	GY/2	:	Front wheel sensor RH
D2	E52	B/1	:	Battery
C2	E53	B/1	:	Battery
A1	E55	L/4	:	Clutch interlock relay (With M/T) (Relay box-2)
B1 ★	E57	BR/6	:	ECM relay (Relay box-2)
C1 ★	E60	—	:	Fuse and fusible link box
D5	E61	L/2	:	Front fog lamp LH
A4	E62	L/2	:	Front fog lamp RH
	E63	W/3	:	Combination switch (Front fog lamp switch)
B2 ★	E91	GY/2	:	Transfer dropping resistor (With all-mode 4-wheel drive)
F2 ★	E92	W/1	:	Transfer motor relay (With all-mode 4-wheel drive)
F2 ★	E93	W/1	:	Transfer motor relay (With all-mode 4-wheel drive)
G2 ★	E94	G/2	:	Transfer motor relay (With all-mode 4-wheel drive)
D1 ★	E95	B/5	:	Transfer shift Hi relay (With all-mode 4-wheel drive) (Relay box-1)
D1	E97	L/4	:	Headlamp RH relay (Relay box-1)
E1	E98	L/4	:	Headlamp LH relay (Relay box-1)
F1 ★	E99	B/5	:	Transfer shift Low relay (With all-mode 4-wheel drive) (Relay box-1)
D2 ★	E111	SMJ	:	ABS actuator and electric unit (Without VDC)
D3	E112	–	:	Body ground
	E113	W/8	:	NATS IMMU
	E114	W/4	:	Combination switch (Rear wiper switch)
F1	E115	L/4	:	Tail lamp relay (Relay box-1)
★	E116	W/18	:	To M114
F1	E117	BR/6	:	Rear window defogger relay (Relay box-1)
E1	E118	BR/6	:	Horn relay (Relay box-1)
B2	E120	B/1	:	Horn (High)
	E121	W/2	:	Diode
E2 ★	E123	SB/2	:	Swirl control valve control vacuum check switch
B3	E125	B/3	:	Refrigerant pressure sensor
A2	E127	GY/4	:	Daytime light control unit (For Canada)
C2 ★	E135	GY/8	:	To E132
	E136	W/7	:	Steering angle sensor (With VDC)
E2	E137	—/3	:	VDC pressure sensor
B1 ★	E138	L/4	:	Throttle conrol motor relay (Relay box-2)
D2	E140	GY/6	:	Front wiper motor
D2	E142	SMJ	:	ABS actuator and electric unit (With VDC)
A1	E148	L/4	:	Park/Neutral position relay (With A/T) (Relay box-2)
	E149	W/2	:	To B170 (With trailer)

Diode E121

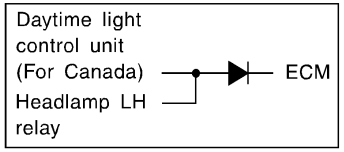

MEL103S

Engine Control Harness

NAEL0437

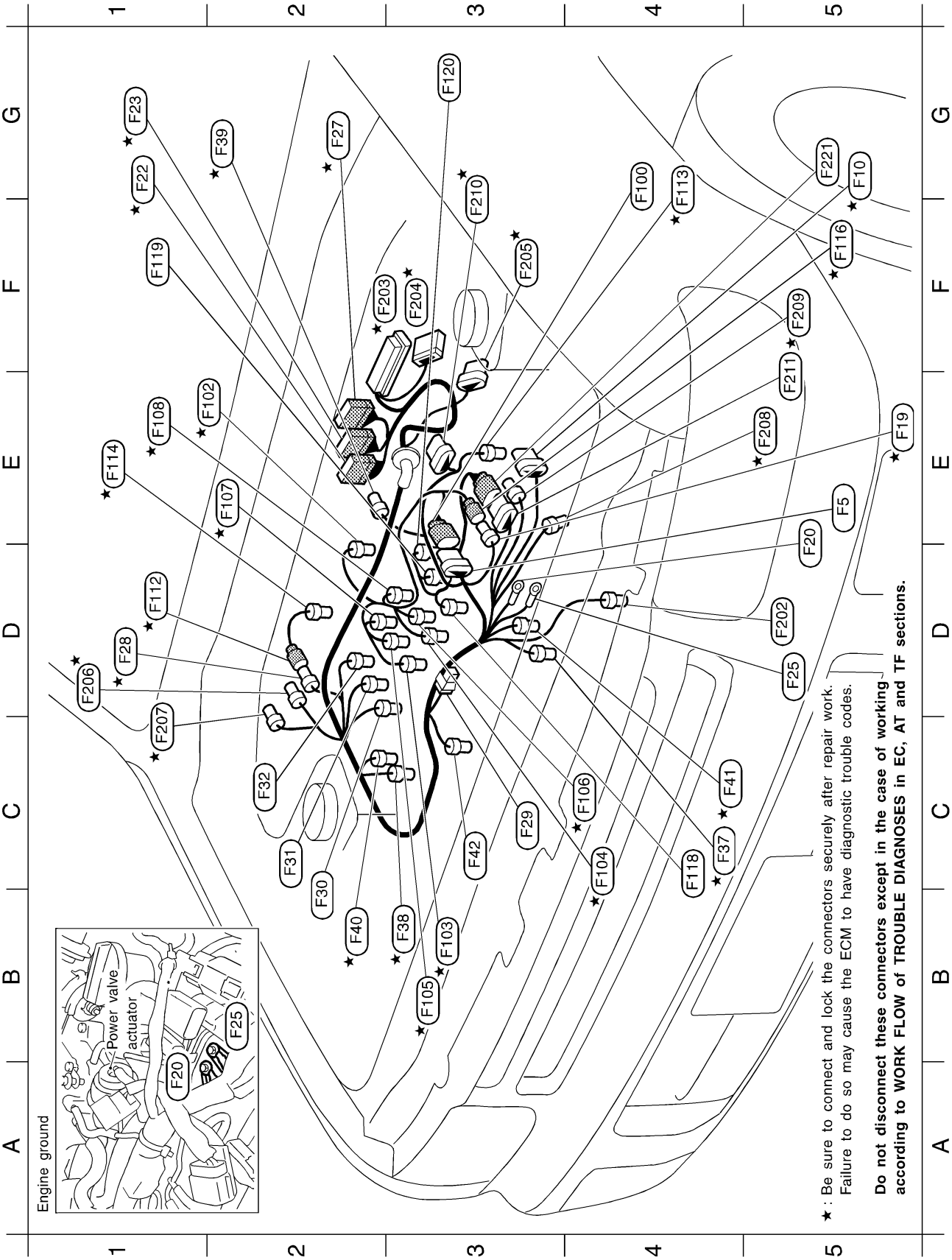

★: Be sure to connect and lock the connectors securely after repair work. Failure to do so may cause the ECM to have diagnostic trouble codes.

Do not disconnect these connectors except in the case of working according to WORK FLOW of TROUBLE DIAGNOSES in EC, AT and TF sections.

MEL104S

E5	F5	L/8	:	To F100
G5★	F10	B/6	:	Mass air flow sensor
E5★	F19	SB/2	:	To F116
D5	F20	—	:	Engine ground
G1★	F22	GY/16	:	To M33
G1★	F23	BR/24	:	To M32
D5	F25	—	:	Engine ground
G2★	F27	W/18	:	To M94
D1★	F28	SB/3	:	To F112
C3	F29	W/2	:	Condenser
B2	F30	GY/3	:	Ignition coil No. 1
C2	F31	GY/3	:	Ignition coil No. 3
C2	F32	GY/3	:	Ignition coil No. 5
C4★	F37	B/3	:	Camshaft position sensor (PHASE) (BANK 2)
B3★	F38	B/3	:	Camshaft position sensor (PHASE) (BANK 1)
G2★	F39	G/2	:	Intake valve timing control solenoid valve (BANK 2)
B2★	F40	SB/2	:	Intake valve timing control solenoid valve (BANK 1)
C4★	F41	G/2	:	Swirl control valve control solenoid valve
C3	F42	BR/2	:	VIAS control solenoid valve (With A/T)
G4	F100	L/8	:	To F5
E2★	F102	L/2	:	Knock sensor
B3★	F103	GY/2	:	Injector No. 1
C4★	F104	GY/2	:	Injector No. 2
B3★	F105	GY/2	:	Injector No. 3
C4★	F106	GY/2	:	Injector No. 4
E2★	F107	GY/2	:	Injector No. 5
E1★	F108	GY/2	:	Injector No. 6
D1★	F112	SB/3	:	To F28
G4★	F113	L/2	:	EVAP canister purge volume control solenoid valve
E1★	F114	GY/2	:	Engine coolant temperature sensor
F5★	F116	SB/2	:	To F19
C4	F118	GY/3	:	Ignition coil No. 2
F1	F119	GY/3	:	Ignition coil No. 4
G3	F120	GY/3	:	Ignition coil No. 6
D5	F202	B/1	:	Compressor (Air conditioner)
F2★	F203	SMJ	:	ECM
F3★	F204	P/20	:	Joint connector
F3★	F205	GY/6	:	Accelerator pedal position sensor
D1★	F206	L/4	:	Heated oxygen sensor 2 (BANK 1)
C1★	F207	G/4	:	Heated oxygen sensor 1 (BANK 1)
E5★	F208	L/4	:	Heated oxygen sensor 2 (BANK 2)
F5★	F209	G/4	:	Heated oxygen sensor 1 (BANK 2)
G3★	F210	G/6	:	Electric throttle control actuator
E5	F211	G/6	:	To F221
G5	F221	G/6	:	To F211

★ : Be sure to connect and lock the connectors securely after repair work. Failure to do so may cause the ECM to have diagnostic trouble codes. **Do not disconnect these connectors except in the case of working according to WORK FLOW of TROUBLE DIAGNOSES in EC, AT and TF sections.**

Body Harness LH

NAEL0438

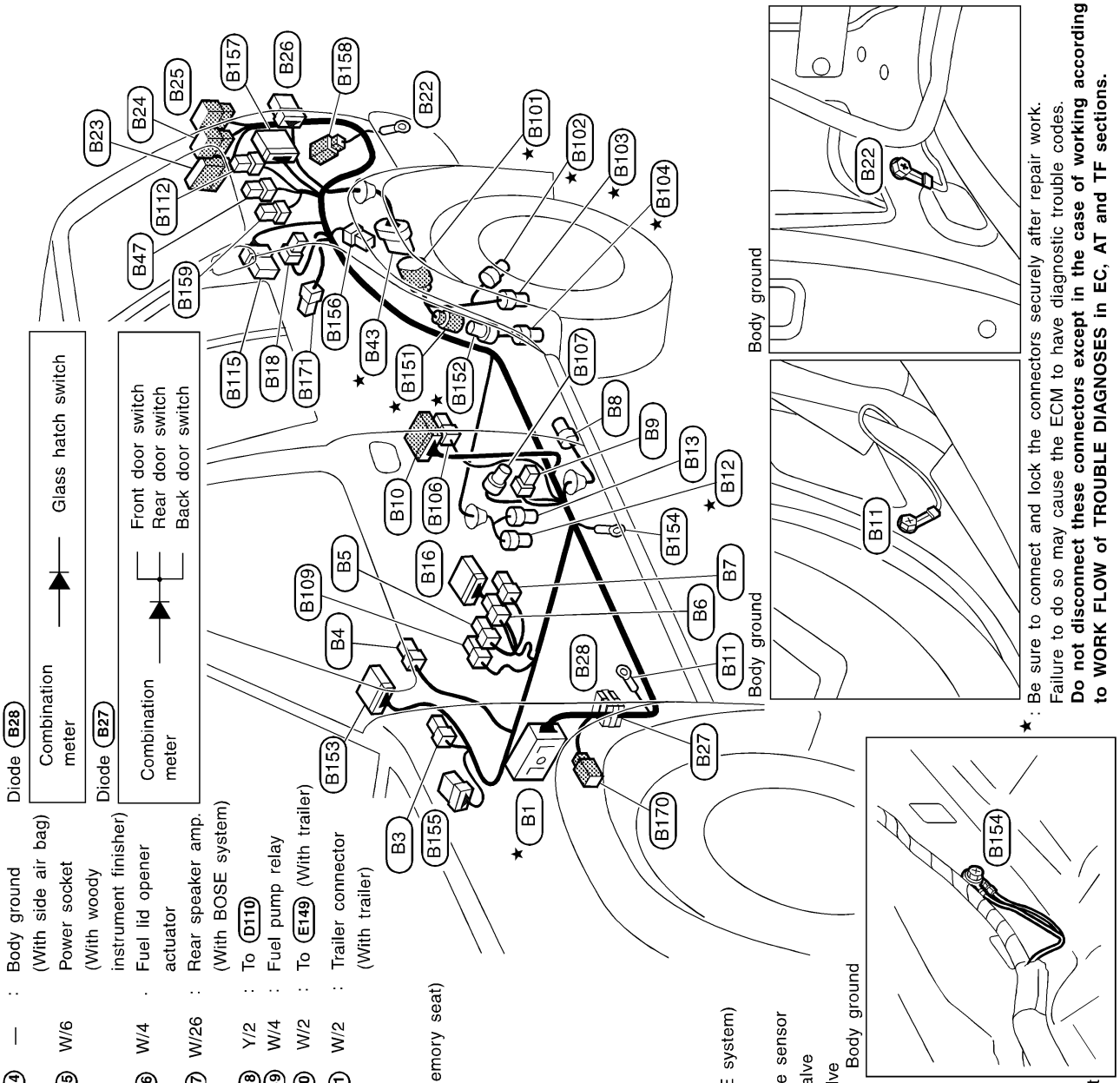

★: Be sure to connect and lock the connectors securely after repair work. Failure to do so may cause the ECM to have diagnostic trouble codes. **Do not disconnect these connectors except in the case of working according to WORK FLOW of TROUBLE DIAGNOSES in EC, AT and TF sections.**

MEL106S

Body Harness RH

NAEL0439

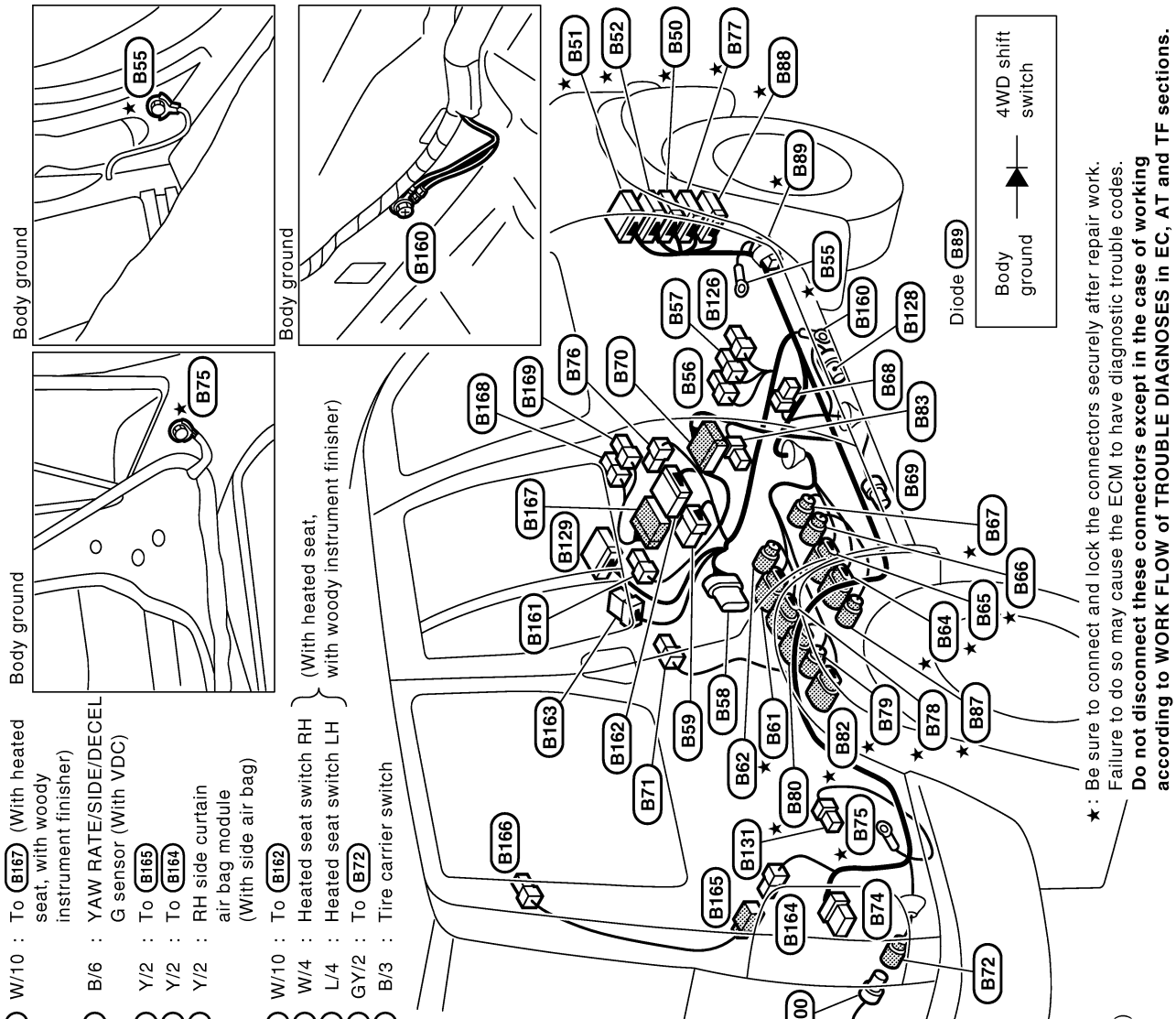

★ B50	W/20	: To M70		
★ B51	W/24	: To M71		
★ B52	W/16	: To M72		
★ B55	–	: Body ground		
B56	GY/3	: Heated seat RH (With heated seat) (Via sub-harness)		
B57	W/2	: Power seat RH		
B58	GY/5	: G sensor (For 4-wheel drive model with ABS)		
B59	GY/8	: A/T device (With A/T) (Via sub-harness)		
★ B61	B/6	: To B200 (With M/T)		
B62	B/4	: To B201 (With A/T and part-time 4-wheel drive)		
★ B64	BR/8	: Terminal cord assembly		
★ B65	GY/8	: Park/neutral position switch	(With A/T)	
★ B66	GY/2	: Park/neutral position switch	(With A/T)	
★ B67	GY/3	: Rear revolution sensor	(With A/T)	
B68	B/3	: Front door switch RH		
B69	BR/2	: Rear wheel sensor RH		
B70	W/10	: To D70		
B71	BR/1	: Rear door switch RH		
B72	GY/2	: To B300		
B74	W/6	: Rear combination lamp RH		
★ B75	–	: Body ground		
B76	W/3	: Ashtray illumination (Without woody instrument finisher)		
★ B77	W/12	: To M99		
★ B78	GY/8	: To B206	(With all-mode 4-wheel drive)	
★ B79	B/4	: To B208	(With all-mode 4-wheel drive)	
★ B80	B/8	: To B207	(With all-mode 4-wheel drive)	
★ B82	GY/6	: To B251	(With all-mode 4-wheel drive)	
B83	Y/2	: Seat belt pre-tensioner RH		
★ B87	BR/4	: Turbine revolution sensor (With A/T)		
★ B88	GY/20	: To M100		
★ B89	W/2	: Diode (With all-mode 4-wheel drive)		
B126	Y/2	: Side air bag module RH (With side air bag)		
B128	Y/2	: Satellite sensor RH (With side air bag)		
B129	Y/12	: Air bag diagnosis sensor unit		
B131	B/2	: Rear power socket		
B160	–	: Body ground (With side air bag)		
B161	W/4	: Rear TV switch (With rear TV, with woody instrument finisher)		
B162	W/10	: To B167	(With heated seat, with woody instrument finisher)	
B163	B/6	: YAW RATE/SIDE/DECEL G sensor (With VDC)		
B164	Y/2	: To B165		
B165	Y/2	: To B164		
B166	Y/2	: RH side curtain air bag module (With side air bag)		
B167	W/10	: To B162		
B168	W/4	: Heated seat switch RH	(With heated seat, with woody instrument finisher)	
B169	L/4	: Heated seat switch LH	(With heated seat, with woody instrument finisher)	
B300	GY/2	: To B72		
B301	B/3	: Tire carrier switch		

MEL107S

Back Door Harness

NAEL0440

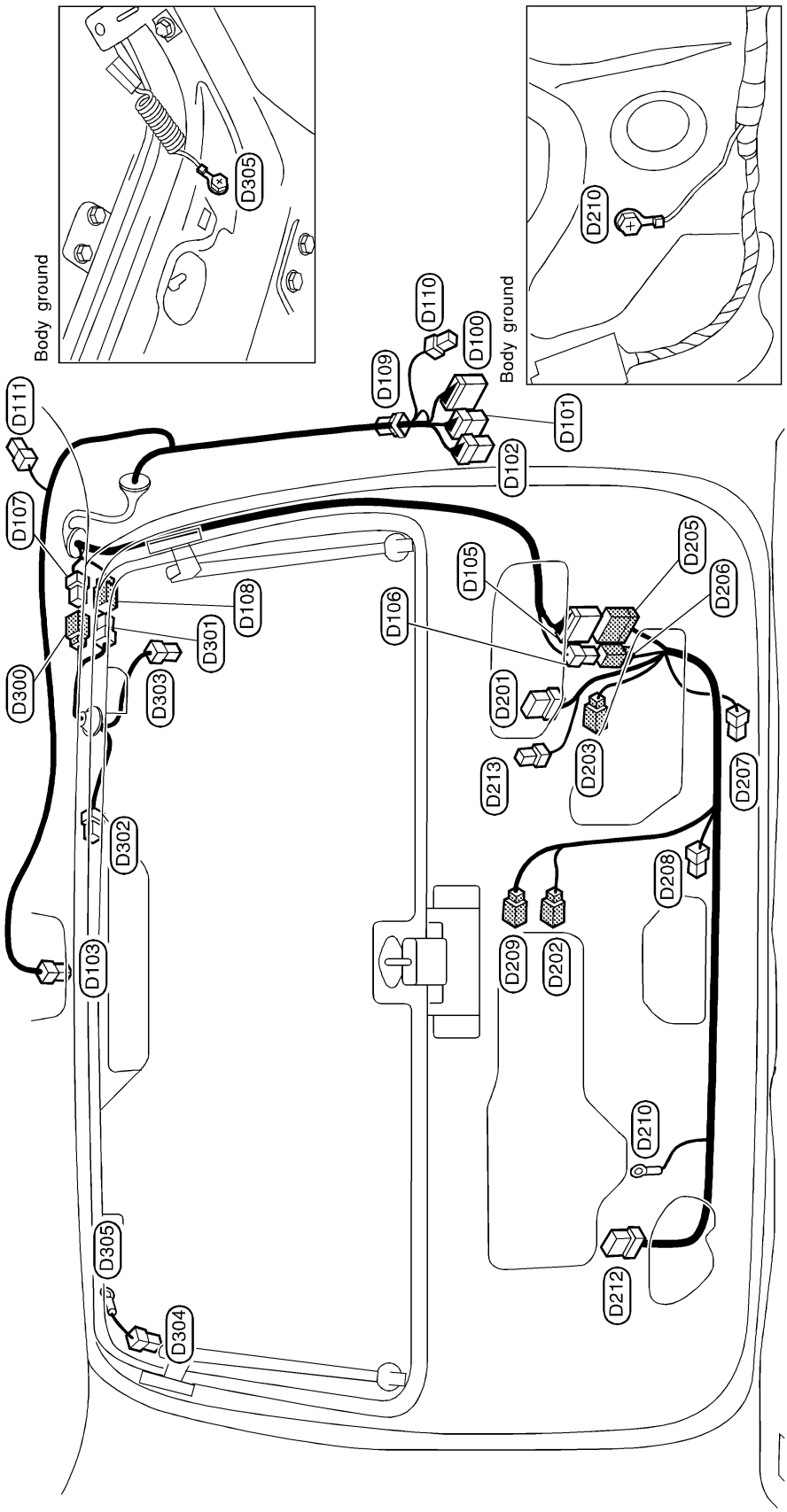

D100	W/12	: To	B23	D202	BR/2	: License plate lamp (Without spare tire carrier)	
D101	W/6	: To	B24				
D102	BR/6	: To	B25	D203	BR/2	: License plate lamp (With spare tire carrier)	
D103	W/3	: Luggage room lamp					
D105	W/16	: To	D205	D205	W/16	: To	D105
D106	W/4	: To	D206	D206	W/4	: To	D106
D107	W/2	: To	D300	D207	W/4	: Back door lock actuator	
D108	W/1	: To	D301	D208	W/2	: Back door switch	
D109	W/2	: Diode		D209	W/2	: Glass hatch switch	
D110	Y/2	: To	B158	D210	—	: Body ground	
D111	OR/2	: LH side curtain air bag module (with side air bag)		D212	W/8	: Rear wiper motor	
D201	W/6	: Back door key cylinder switch		D213	W/4	: Back window opener actuator	
				D300	W/2	: To	D107

D301	W/1	: To	D108		
D302	W/3	: High-mounted stop lamp			
D303	B/1	: Rear window defogger			
D304	B/1	: Rear window defogger			
D305	—	: Body ground			
Diode	D109				

MEL108S

Engine and Transmission Harness

NAEL0441

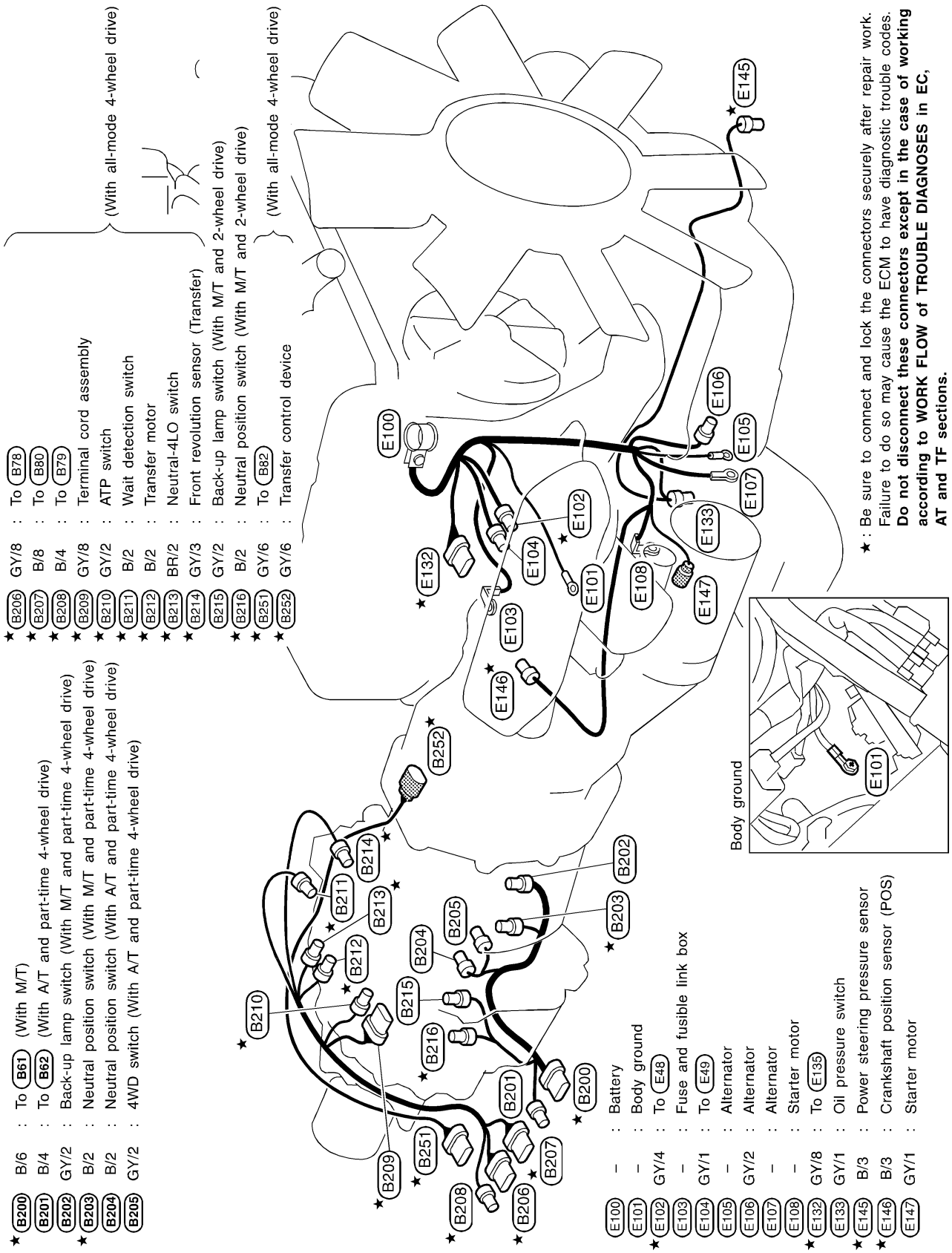

MEL109S

Room Lamp Harness

NAEL0442

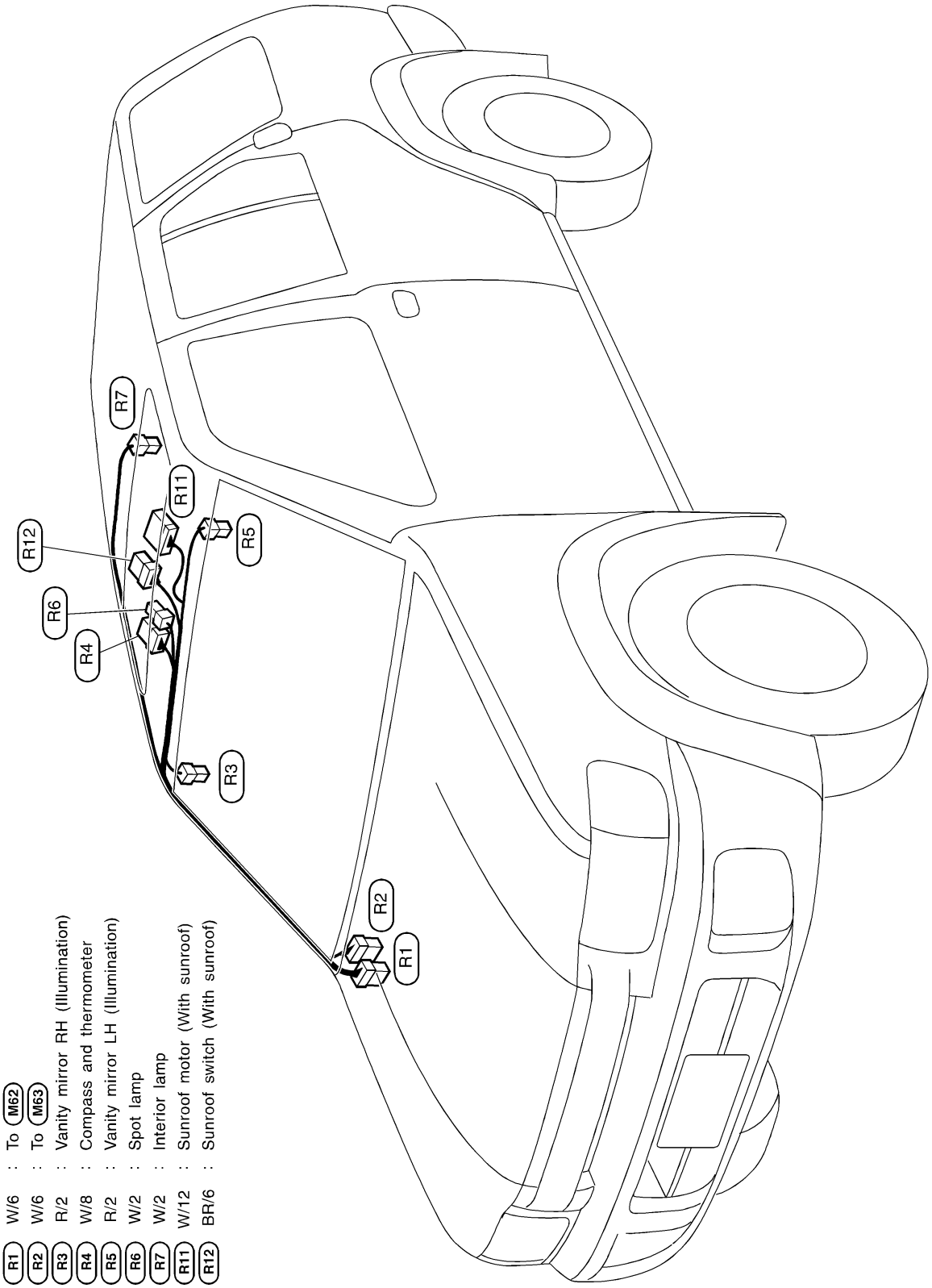

MEL061Q

Air Bag Harness

NAEL0443

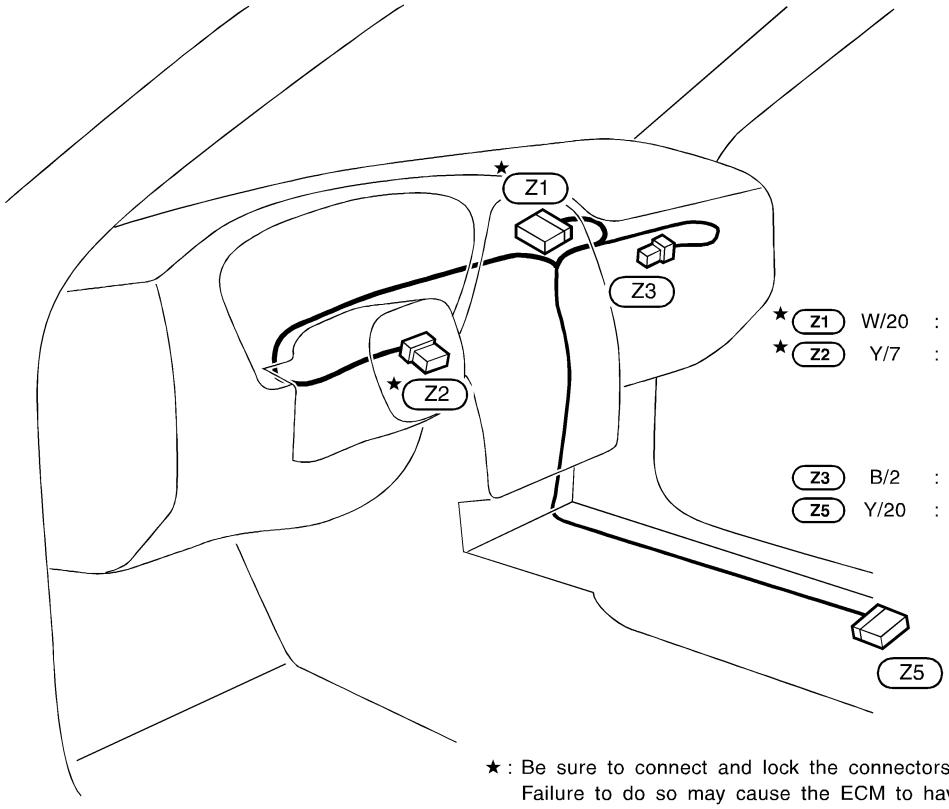

★ Z1 W/20 : To M47
★ Z2 Y/7 : Air bag module (Driver side), AUDIO switch, ASCD steering switch and horn switch via spiral cable
Z3 B/2 : Air bag module (Passenger side)
Z5 Y/20 : Air bag diagnosis sensor unit

★ : Be sure to connect and lock the connectors securely after repair work. Failure to do so may cause the ECM to have diagnostic trouble codes. **Do not disconnect these connectors except in the case of working according to WORK FLOW of TROUBLE DIAGNOSES in EC, AT and TF sections.**

MEL110S

Front Door Harness

NAEL0444

LH side

D1	W/8	:	Door mirror LH
D3	BR/16	:	To M5
D4	W/10	:	To M6
D5	GY/6	:	Front power window motor LH
D6	W/16	:	Power window main switch
D7	GY/4	:	Front door lock actuator LH
D9	BR/3	:	Front door key cylinder switch LH
D10	BR/2	:	Front door speaker LH (Without BOSE system)
D12	W/6	:	Front door speaker LH (With BOSE system)
D13	GY/12	:	To M112
D15	W/3	:	Power window main switch
D16	W/8	:	Seat memory switch (With seat memory)
D17	W/4	:	Trunk and fuel lid opener switch

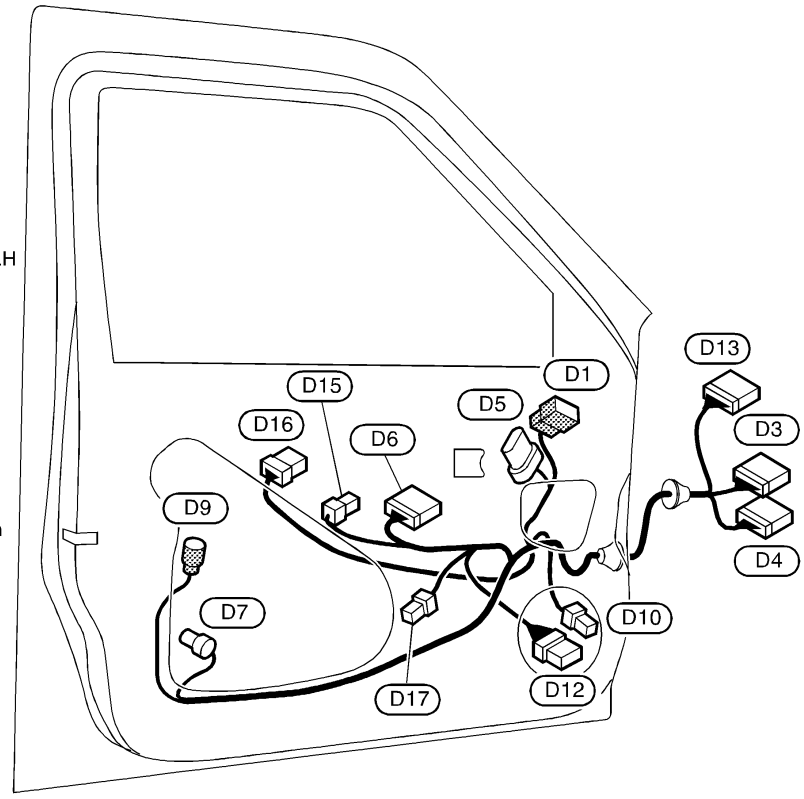

RH side

D31	W/8	:	Door mirror RH
D33	BR/16	:	To M67
D34	W/6	:	To M68
D35	GY/6	:	Front power window motor RH
D37	GY/4	:	Front door lock actuator RH
D40	BR/2	:	Front door speaker RH (Without BOSE system)
D41	BR/6	:	To M101 (With BOSE system)
D42	W/6	:	Front door speaker RH (With BOSE system)
D44	W/16	:	Front power window switch RH

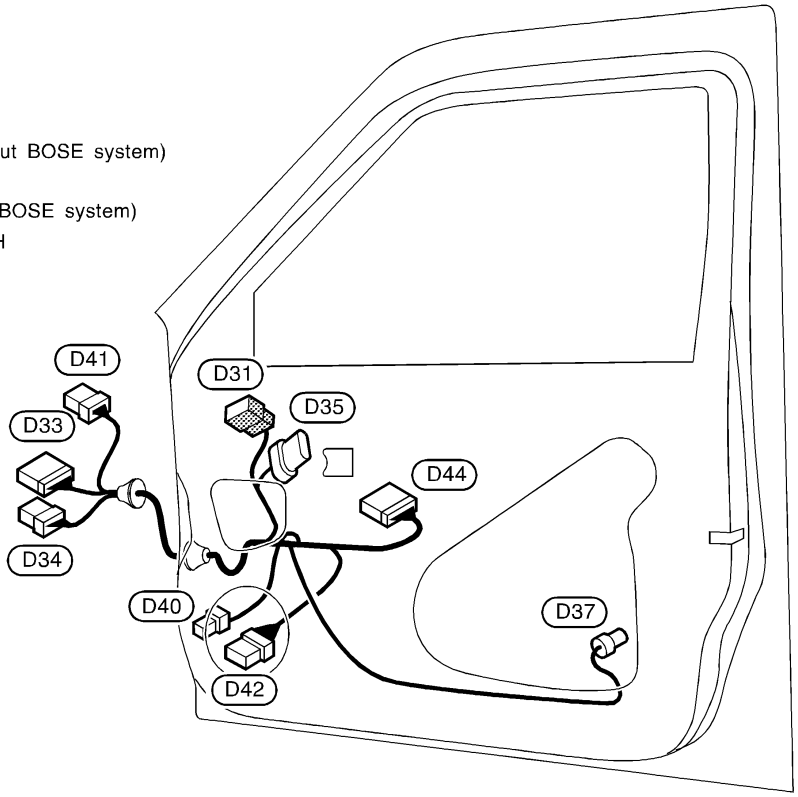

MEL111S

Rear Door Harness

NAEL0445

LH side

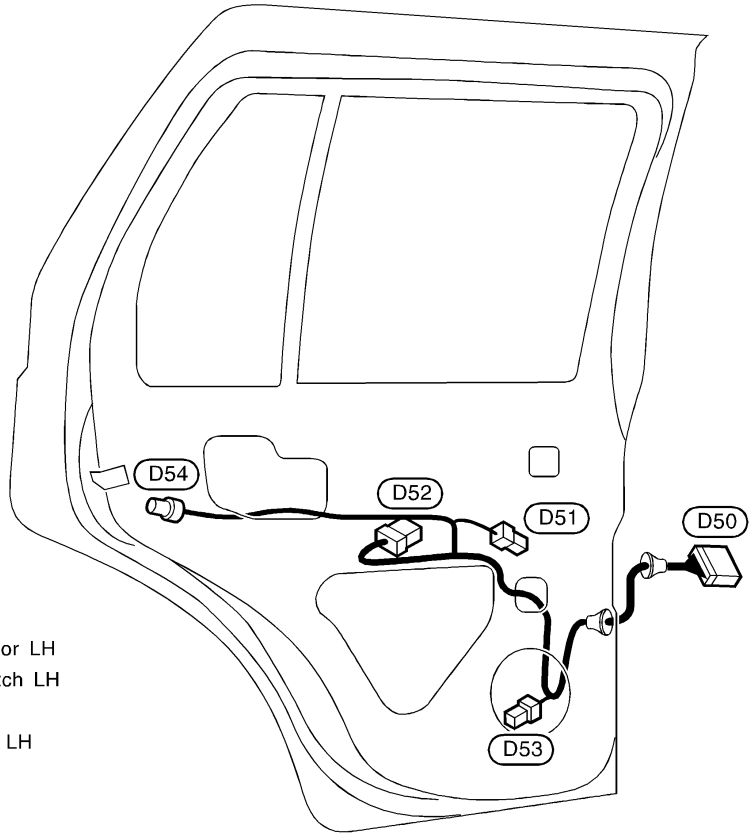

D50	W/10	:	To B10
D51	B/2	:	Rear power window motor LH
D52	W/8	:	Rear power window switch LH
D53	BR/2	:	Rear door speaker LH
D54	GY/4	:	Rear door lock actuator LH

RH side

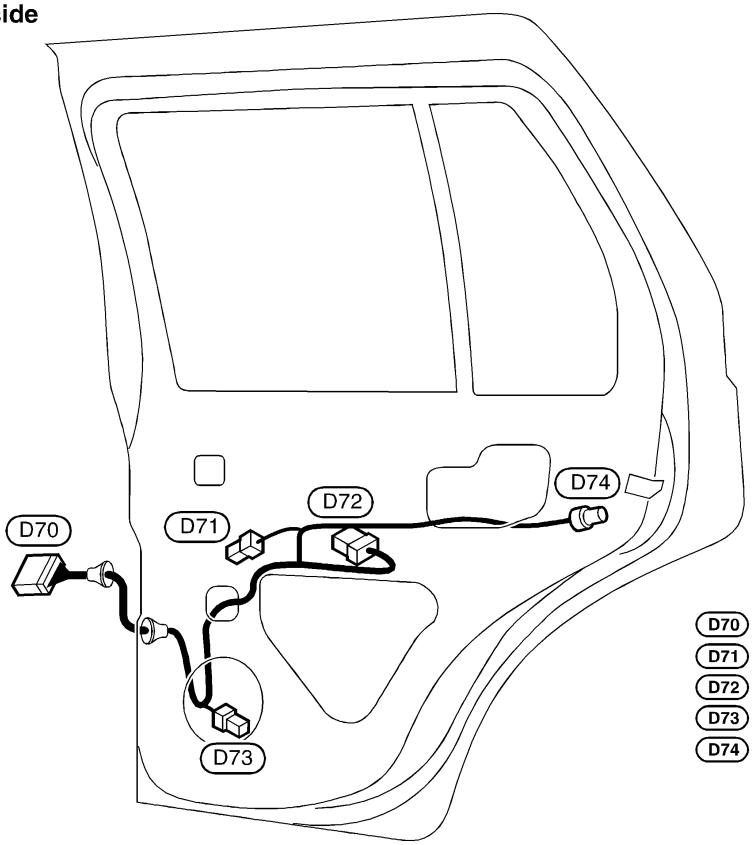

D70	W/10	:	To B70
D71	B/2	:	Rear power window motor RH
D72	W/8	:	Rear power window switch RH
D73	BR/2	:	Rear door speaker RH
D74	GY/4	:	Rear door lock actuator RH

MEL112S

BULB SPECIFICATIONS

Headlamp

Headlamp

NAEL0446S01

Item	Wattage W
High/Low (Semi-sealed beam)	60/55 (HB2)

Exterior Lamp

NAEL0446S02

Item		Wattage W
Front fog lamp		55
Front turn signal lamp		21
Parking lamp		5
Rear combination lamp	Turn signal lamp	27
	Stop/Tail lamp	21/5
	Back-up lamp	18
License plate lamp		5
High-mounted stop lamp		5

Interior Lamp

NAEL0446S03

Item	Wattage W
Interior lamp	10
Vanity mirror lamp	1.4
Spot lamp	8
Luggage room lamp	10

WIRING DIAGRAM CODES (CELL CODES)

Use the chart below to find out what each wiring diagram code stands for.
Refer to the wiring diagram code in the alphabetical index to find the location (page number) of each wiring diagram.

Code	Section	Wiring Diagram Name
1STSIG	AT	A/T 1ST Signal
2NDSIG	AT	A/T 2ND Signal
3RDSIG	AT	A/T 3RD Signal
4THSIG	AT	A/T 4TH Signal
A/C, A	HA	Auto Air Conditioner
A/C, M	HA	Manual Air Conditioner
ABS	BR	Anti-lock Brake System
APPS1	EC	Accelerator Pedal Position Sensor 1
APPS2	EC	Accelerator Pedal Position Sensor 2
APPS	EC	Accelerator Pedal Position Sensor
ASC/BS	EC	Automatic Speed Control Device Brake Switch
ASC/SW	EC	Automatic Speed Control Device Steering Switch
ASCIND	EC	Automatic Speed Control Device Indicator
ASCBOF	EC	Automatic Speed Control Device Brake Switch (Off)
AUDIO	EL	Audio
AUT/DP	EL	Automatic Drive Positioner
BA/FTS	AT	A/T Fluid Temperature Sensor and TCM Power Supply
BACK/L	EL	Back-up Lamp
BRK/SW	EC	Brake Switch
BYPS/V	EC	Vacuum Cut Valve Bypass Valve
CAN	AT	CAN Communication Line
CAN	EC	CAN Communication Line
CAN	EL	CAN System
CHARGE	SC	Charging System
CHIME	EL	Warning Chime
CIGAR	EL	Cigarette Lighter
CLOCK	EL	Clock
COMPAS	EL	Compass and Thermometer
D/LOCK	EL	Power Door Lock
DEF	EL	Rear Window Defogger

Code	Section	Wiring Diagram Name
DTRL	EL	Headlamp — With Daytime Light System —
ECM/PW	EC	ECM Power supply (Back-up)
ECTS	EC	Engine Coolant Temperature Sensor
ENGSS	AT	Engine Speed Signal
ETC1	EC	Electric Throttle Control Function
ETC2	EC	Electric Throttle Control Motor Relay
ETC3	EC	Electric Throttle Control Motor
F/FOG	EL	Front Fog Lamp
F/PUMP	EC	Fuel Pump Control
FTS	AT	A/T Fluid Temperature Sensor
FTTS	EC	Fuel Tank Temperature Sensor
FUELB1	EC	Fuel Injection System Function (Bank 1)
FUELB2	EC	Fuel Injection System Function (Bank 2)
H/LAMP	EL	Headlamp
HEATER	HA	Heater
HORN	EL	Horn
HSEAT	EL	Heated Seat
IATS	EC	Intake Air Temperature Sensor
IGNSYS	EC	Ignition Signal
ILL	EL	Illumination
INJECT	EC	Injector
INT/L	EL	Interior, Spot, Vanity Mirror, and Luggage Room Lamps
IVCB1	EC	Intake Valve Timing Control Solenoid Valve Bank 1
IVCB2	EC	Intake Valve Timing Control Solenoid Valve Bank 2
KEYLES	EL	Remote Keyless Entry System
KS	EC	Knock Sensor
LOAD	EC	Electrical Load Signal
LPSV	AT	Line Pressure Solenoid Valve
MAFS	EC	Mass Air Flow Sensor
MAIN	AT	Main Power Supply and Ground Circuit
MAIN	EC	Main Power Supply and Ground Circuit

WIRING DIAGRAM CODES (CELL CODES)

Code	Section	Wiring Diagram Name
METER	EL	Speedometer, Tachometer, Temp., and Fuel Gauges
MIL/DL	EC	MIL and Data Link Connectors
MIRROR	EL	Door Mirror
NATS	EL	NVIS (NISSAN Vehicle Immobilizer System)
NONDTC	AT	Non-detectable Items
O2H1B1	EC	Heated Oxygen Sensor 1 Heater (Bank 1)
O2H1B2	EC	Heated Oxygen Sensor 1 Heater (Bank 2)
O2H2B1	EC	Heated Oxygen Sensor 2 Heater (Bank 1)
O2H2B2	EC	Heated Oxygen Sensor 2 Heater (Bank 2)
O2S1B1	EC	Heated Oxygen Sensor 1 (Bank 1)
O2S1B2	EC	Heated Oxygen Sensor 1 (Bank 2)
O2S2B1	EC	Heated Oxygen Sensor 2 (Bank 1)
O2S2B2	EC	Heated Oxygen Sensor 2 (Bank 2)
OVRCSV	AT	Overrun Clutch Solenoid Valve
P/ANT	EL	Power Antenna
PHSB1	EC	Camshaft Position Sensor (PHASE) Bank 1
PHSB2	EC	Camshaft Position Sensor (PHASE) Bank 2
PGC/V	EC	EVAP Canister Purge Volume Control Solenoid Valve
PNP/SW	EC	Park/Neutral Position PNP Switch
PNP/SW	AT	Park/Neutral Position PNP Switch
POS	EC	Crankshaft Position Sensor (CKPS) (POS)
POWER	EL	Power Supply Routing
PRE/SE	EC	EVAP Control System Pressure Sensor
PS/SEN	EC	Power Steering Pressure Sensor
REMOTE	EL	Audio (Remote Control Switch)
RP/SEN	EC	Refrigerant Pressure Sensor
S/VCSW	EC	Swirl Control Valve Control Vacuum Check Switch
SEAT	EL	Power Seat

Code	Section	Wiring Diagram Name
SEN/PW	EC	Sensor Power Supply
SHIFT	AT	A/T Shift Lock System
SROOF	EL	Sunroof
SRS	RS	Supplemental Restraint System
SSV/A	AT	Shift Solenoid Valve A
SSV/B	AT	Shift Solenoid Valve B
START	SC	Starting System
STOP/L	EL	Stop Lamp
SWL/V	EC	Swirl Control Valve Control Solenoid Valve
T&FLID	EL	Trunk Lid and Fuel Lid Opener
T/F	TF	Transfer
T/WARN	SU	Low Tire Pressure Warning
TAIL/L	EL	Parking, License and Tail Lamps
TCCSIG	AT	A/T TCC Signal (Lock up)
TCV	AT	Torque Converter Clutch Solenoid Valve
TPS	AT	Throttle Position Sensor
TPS1	EC	Electric Throttle Control Actuator (Throttle Position Sensor 1)
TPS2	EC	Electric Throttle Control Actuator (Throttle Position Sensor 2)
TPS3	EC	Electric Throttle Control Actuator (Throttle Position Sensor)
TRNSCV	EL	Homelink Universal Transceiver
TRSA/T	AT	Turbine Revolution Sensor
TURN	EL	Turn Signal and Hazard Warning Lamps
VDC	BR	Vehicle Dynamics Control System
VEHSEC	EL	Vehicle Security System
VENT/V	EC	EVAP Canister Vent Control Valve
VIAS/V	EC	Variable Induction Air Control System
VSSA/T	AT	Vehicle Speed Sensor A/T (Revolution Sensor)
VSSMTR	AT	Vehicle Speed Sensor MTR
WARN	EL	Warning Lamps
WINDOW	EL	Power Window
WIP/R	EL	Rear Wiper and Washer
WIPER	EL	Front Wiper and Washer

ENGINE MECHANICAL

SECTION EM

CONTENTS

PRECAUTIONS 3
Parts Requiring Angular Tightening 3
Liquid Gasket Application Procedure 3
PREPARATION 4
Special Service Tools 4
Commercial Service Tools 6
NOISE, VIBRATION AND HARSHNESS (NVH) TROUBLESHOOTING 8
NVH Troubleshooting - Engine Noise 9
OUTER COMPONENT PARTS 10
Removal and Installation 10
TIGHTENING PROCEDURES 12
Disassembly and Assembly of Power Valve (A/T) 14
DISASSEMBLY 14
ASSEMBLY 15
INSPECTION AFTER ASSEMBLY 16
MEASUREMENT OF COMPRESSION PRESSURE 17
OIL PAN 19
Components 19
Removal 19
Installation 22
TIMING CHAIN 24
Components 24
POSITION FOR APPLYING LIQUID GASKET 25
Removal 27
Inspection 34
Installation 34
OIL SEAL 42
Replacement 42
VALVE OIL SEAL 42
OIL SEAL INSTALLATION DIRECTION 43
FRONT OIL SEAL 43
REAR OIL SEAL 43
CYLINDER HEAD 44
Components 44
Removal 45
Disassembly 47
Inspection 48
CYLINDER HEAD DISTORTION 48
CAMSHAFT VISUAL CHECK 48
CAMSHAFT RUNOUT 48
CAMSHAFT CAM HEIGHT 48
CAMSHAFT JOURNAL CLEARANCE 49
CAMSHAFT END PLAY 49
CAMSHAFT SPROCKET RUNOUT 50
VALVE GUIDE CLEARANCE 50
VALVE GUIDE REPLACEMENT 50
VALVE SEATS 51
REPLACING VALVE SEAT FOR SERVICE PARTS 51
VALVE DIMENSIONS 52
VALVE SPRING 52
VALVE LIFTER 53
Assembly 53
Installation 54
Valve Clearance 58
CHECKING 58
ADJUSTING 60
ENGINE ASSEMBLY 62
Removal and Installation 62
REMOVAL 63
INSTALLATION 65
CYLINDER BLOCK 66
Components 66
CYLINDER BLOCK HEATER 67
Removal and Installation 67
Disassembly 67
PISTON, CRANKSHAFT AND OIL JET 67
Inspection 69
PISTON AND PISTON PIN CLEARANCE 69
PISTON RING SIDE CLEARANCE 69
PISTON RING END GAP 69
CONNECTING ROD BEND AND TORSION 70
CYLINDER BLOCK DISTORTION AND WEAR 70
PISTON-TO-BORE CLEARANCE 71
CRANKSHAFT 72
BEARING CLEARANCE 72
CONNECTING ROD BUSHING CLEARANCE (SMALL END) 75
FLYWHEEL/DRIVE PLATE RUNOUT 76
Assembly 76
PISTON 76

CONTENTS (Cont'd)

PLUG....77
OIL JET....77
CRANKSHAFT....78
KNOCK SENSOR....80
REPLACEMENT OF PILOT BUSHING (M/T) OR PILOT CONVERTER (A/T)....80
FLYWHEEL/DRIVE PLATE....81
SERVICE DATA AND SPECIFICATIONS (SDS)....82
General Specifications....82
Compression Pressure....82
Cylinder Head....82
Valve....83
VALVE....83
VALVE CLEARANCE....83
VALVE SPRING....83
VALVE LIFTER....83
AVAILABLE LIFTERS (SHIMLESS TYPE)....84
VALVE GUIDE....85
Valve Seat....85
Camshaft and Camshaft Bearing....86
Cylinder Block....87
Piston, Piston Ring and Piston Pin....88
AVAILABLE PISTON....88
PISTON RING....89
PISTON PIN....89
Connecting Rod....89
Crankshaft....90
Available Main Bearing....91
UNDERSIZE....91
Available Connecting Rod Bearing....92
CONNECTING ROD BEARING....92
UNDERSIZE....92
Miscellaneous Components....92
BEARING CLEARANCE....92

Parts Requiring Angular Tightening

NAEM0001

- Use an angle wrench for the final tightening of the following engine parts:

a) Cylinder head bolts
b) Main bearing cap bolts
c) Connecting rod cap bolts
d) Crankshaft pulley bolt (No angle wrench is required as bolt flange is provided with notches for angle tightening)

- Do not use a torque value for final tightening.
- The torque value for these parts are for a preliminary step.
- Ensure thread and seat surfaces are clean and coated with engine oil.

Liquid Gasket Application Procedure

NAEM0002

1. **Use a scraper to remove all traces of old liquid gasket from mating surfaces and grooves. Also, completely clean any oil from these areas.**
2. **Apply a continuous bead of liquid gasket to mating surfaces. (Use Genuine RTV silicone sealant or equivalent. Refer to GI-53.)**

- Be sure liquid gasket diameter is as specified.

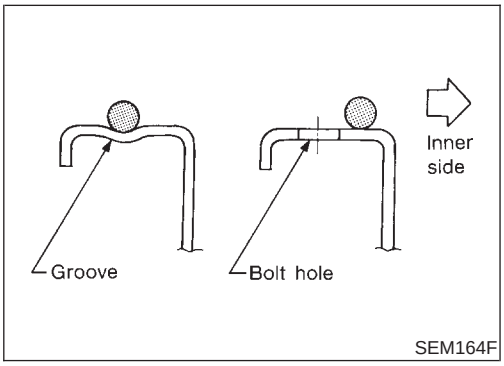

SEM164F

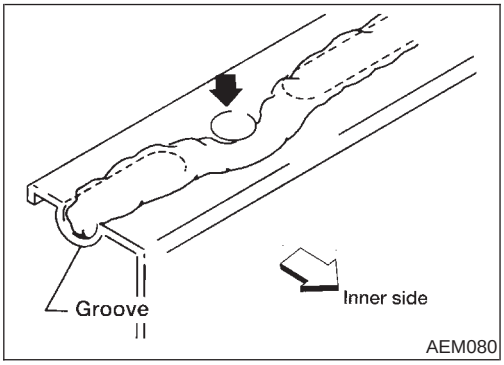

AEM080

3. **Apply liquid gasket around the inner side of bolt holes (unless otherwise specified).**
4. **Assembly should be done within 5 minutes after coating.**
5. **Wait at least 30 minutes before refilling engine oil and engine coolant.**

Special Service Tools

NAEM0003

The actual shapes of Kent-Moore tools may differ from those of special service tools illustrated here.

Tool number (Kent-Moore No.) Tool name	Description	
ST0501S000 (—) Engine stand assembly 1 ST05011000 (—) Engine stand 2 ST05012000 (—) Base	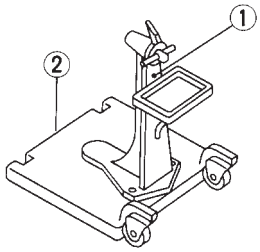 NT042	Disassembling and assembling engine
KV10106500 (—) Engine stand shaft	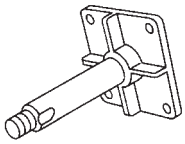 NT028	
KV10117000 (J41262) Engine sub-attachment	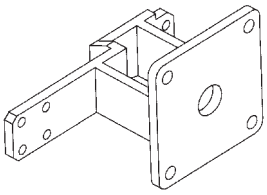 NT373	KV10117000 has been replaced with KV10117001 (KV10117000 is no longer in production, but it is usable).
KV10117001 (—) Engine sub-attachment	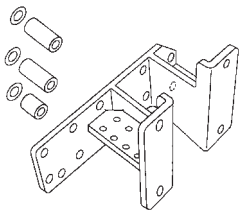 NT372	Installing on the cylinder block
KV10116200 (J26336-A) Valve spring compres-sor 1 KV10115900 (J26336-20) Attachment	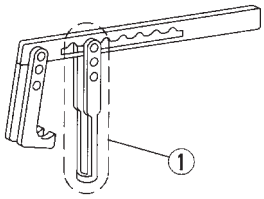 NT022	Disassembling valve mechanism
— (J39386) Valve oil seal drift	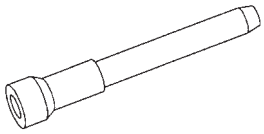 NT024	Installing valve oil seal

Tool number (Kent-Moore No.) Tool name	Description	
EM03470000 (J8037) Piston ring compressor	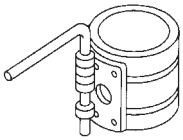 NT044	Installing piston assembly into cylinder bore
ST16610001 (J23907) Pilot bushing puller	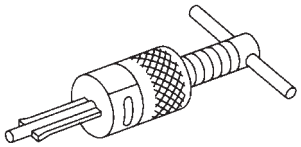 NT045	Removing crankshaft pilot bushing (M/T models) or pilot converter (A/T models)
KV10111100 (J37228) Seal cutter	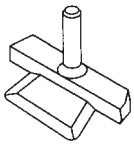 NT046	Removing steel oil pan, aluminum oil pan and rear timing chain case, etc.
WS39930000 (—) Tube presser	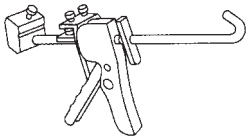 NT052	Pressing the tube of liquid gasket
KV10112100 (BT8653-A) Angle wrench	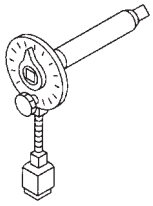 NT014	Tightening bolts for bearing cap, cylinder head, etc.
KV10117100 (J3647-A) Heated oxygen sensor wrench	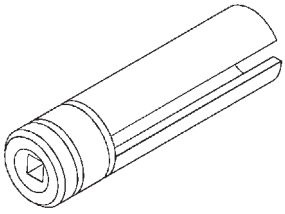 NT379	Loosening or tightening heated oxygen sensor **For 22 mm (0.87 in) hexagon nut**
KV10114400 (J38365) Heated oxygen sensor wrench	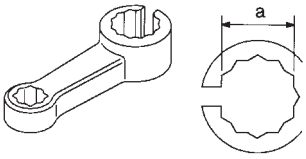 NT636	Loosening or tightening heated oxygen sensor **a: 22 mm (0.87 in)**

Special Service Tools (Cont'd)

Tool number (Kent-Moore No.) Tool name	Description	
KV10117700 (J44716) Ring gear stopper	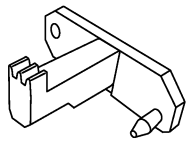 NT822	Removing and installing crankshaft pulley

Commercial Service Tools

NAEM0004

(Kent-Moore No.) Tool name	Description	
(J24239-01) Cylinder head bolt wrench	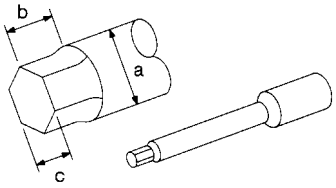 \\> NT583	Loosening and tightening cylinder head bolt, and used with angle wrench [SST: KV10112100 (BT8653-A)] **a: 13 (0.51) dia.** **b: 12 (0.47)** **c: 10 (0.39)** Unit: mm (in)
Spark plug wrench	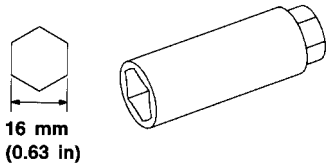 \\> NT047	Removing and installing spark plug
Valve seat cutter set	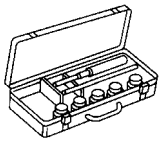 NT048	Finishing valve seat dimensions
Piston ring expander	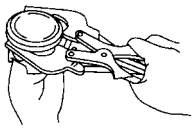 NT030	Removing and installing piston ring
Valve guide drift	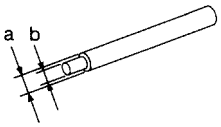 \\> NT015	Removing and installing valve guide **Intake & Exhaust:** **a = 9.5 mm (0.374 in) dia.** **b = 5.5 mm (0.217 in) dia.**
Valve guide reamer	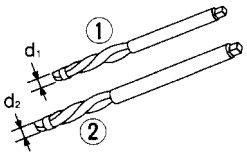 \\> NT016	Reaming valve guide with (1) or hole for oversize valve guide with (2) **Intake & Exhaust:** **d_1 = 6.0 mm (0.236 in) dia.** **d_2 = 10.2 mm (0.402 in) dia.**

(Kent-Moore No.) Tool name	Description	
(J-43897-18) (J-43897-12) Oxygen sensor thread cleaner	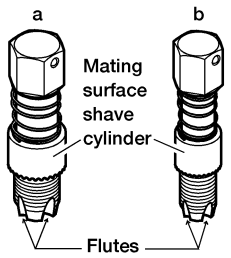 AEM488	Reconditioning the exhaust system threads before installing a new heated oxygen sensor (Use with anti-seize lubricant shown below.) **a = J-43897-18 (18 mm dia.) for zirconia heated oxygen sensor** **b = J-43897-12 (12 mm dia.) for titania heated oxygen sensor**
Anti-seize lubricant (Permatex 133AR or equivalent meeting MIL specification MIL-A-907)	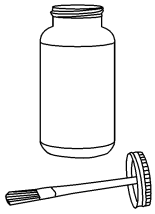 AEM489	Lubricating oxygen sensor thread cleaning tool when reconditioning exhaust system threads

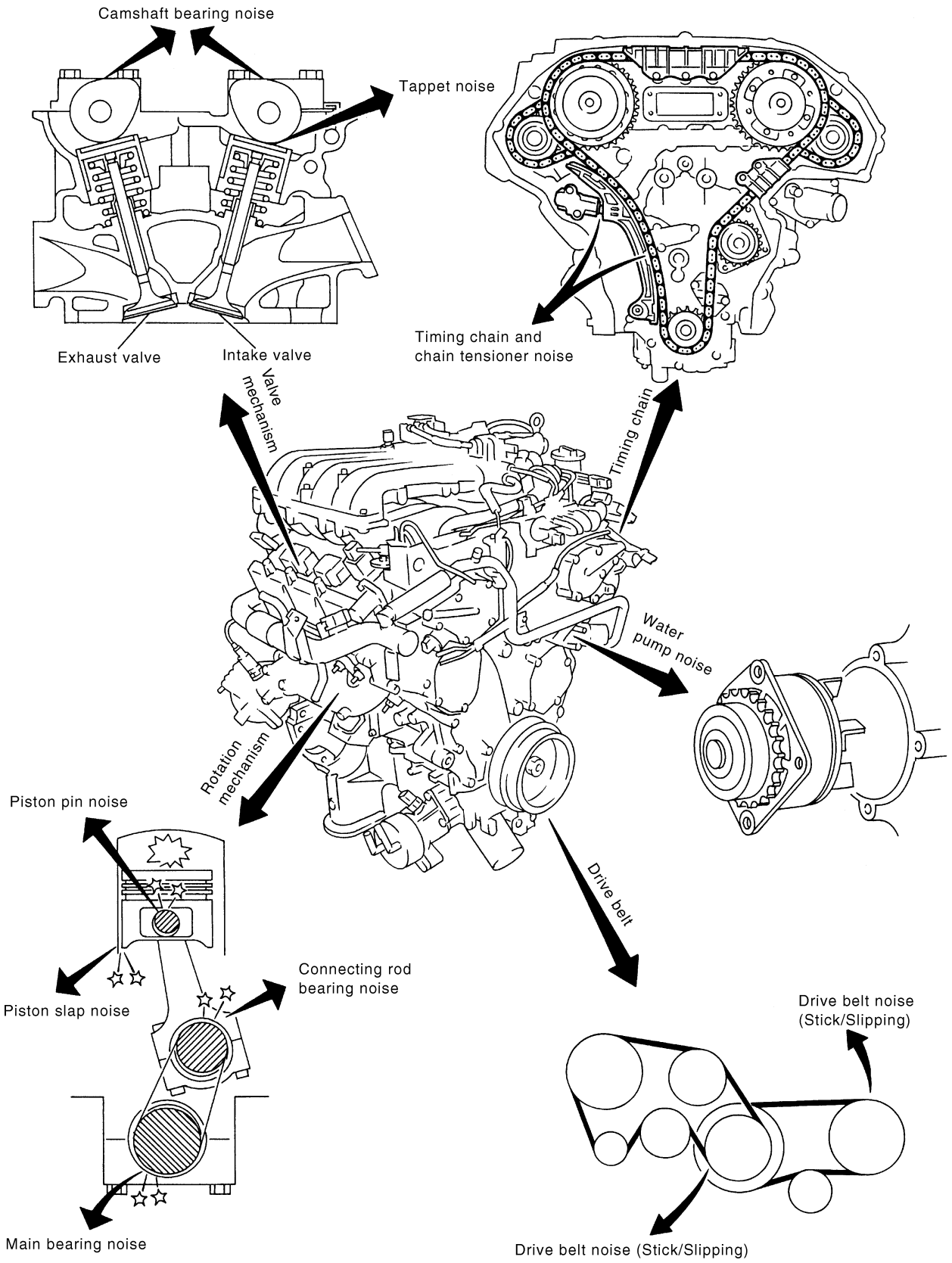
Camshaft bearing noise
Tappet noise
Exhaust valve
Intake valve
Timing chain and
chain tensioner noise
Valve
mechanism
Timing chain
Water
pump noise
Rotation
mechanism
Piston pin noise
Drive belt
Connecting rod
bearing noise
Piston slap noise
Drive belt noise
(Stick/Slipping)
Main bearing noise
Drive belt noise (Stick/Slipping)

SEM472GA

NVH Troubleshooting — Engine Noise

NAEM0005S01

Use the chart below to help you find the cause of the symptom.

1. Locate the area where noise occurs.
2. Confirm the type of noise.
3. Specify the operating condition of engine.
4. Check specified noise source.

If necessary, repair or replace these parts.

Location of noise	Type of noise	Operating condition of engine						Source of noise	Check item	Reference page
		Before warm-up	After warm-up	When starting	When idling	When racing	While driving			
Top of engine Rocker cover Cylinder head	Ticking or clicking	C	A	—	A	B	—	Tappet noise	Valve clearance	EM-60
	Rattle	C	A	—	A	B	C	Camshaft bearing noise	Camshaft journal clearance Camshaft runout	EM-48, 49
Crankshaft pulley Cylinder block (Side of engine) Oil pan	Slap or knock	—	A	—	B	B	—	Piston pin noise	Piston and piston pin clearance Connecting rod bushing clearance	EM-69, 75
	Slap or rap	A	—	—	B	B	A	Piston slap noise	Piston-to-bore clearance Piston ring side clearance Piston ring end gap Connecting rod bend and torsion	EM-69, 69, 70, 71
	Knock	A	B	C	B	B	B	Connecting rod bearing noise	Connecting rod bushing clearance (Small end) Connecting rod bearing clearance (Big end)	EM-75, 74
	Knock	A	B	—	A	B	C	Main bearing noise	Main bearing oil clearance Crankshaft runout	EM-72, 72
Front of engine Timing chain cover	Tapping or ticking	A	A	—	B	B	B	Timing chain and chain tensioner noise	Timing chain cracks and wear Timing chain tensioner operation	EM-34, 24
Front of engine	Squeaking or fizzing	A	B	—	B	—	C	Drive belts (Sticking or slipping)	Drive belts deflection	MA section (“Checking Drive Belts”, “ENGINE MAINTENANCE”)
	Creaking	A	B	A	B	A	B	Drive belts (Slipping)	Idler pulley bearing operation	
	Squall Creak	A	B	—	B	A	B	Water pump noise	Water pump operation	LC section (“Water Pump Inspection”, “ENGINE COOLING SYSTEM”)

A: Closely related B: Related C: Sometimes related —: Not related

Removal and Installation

NAEM0006

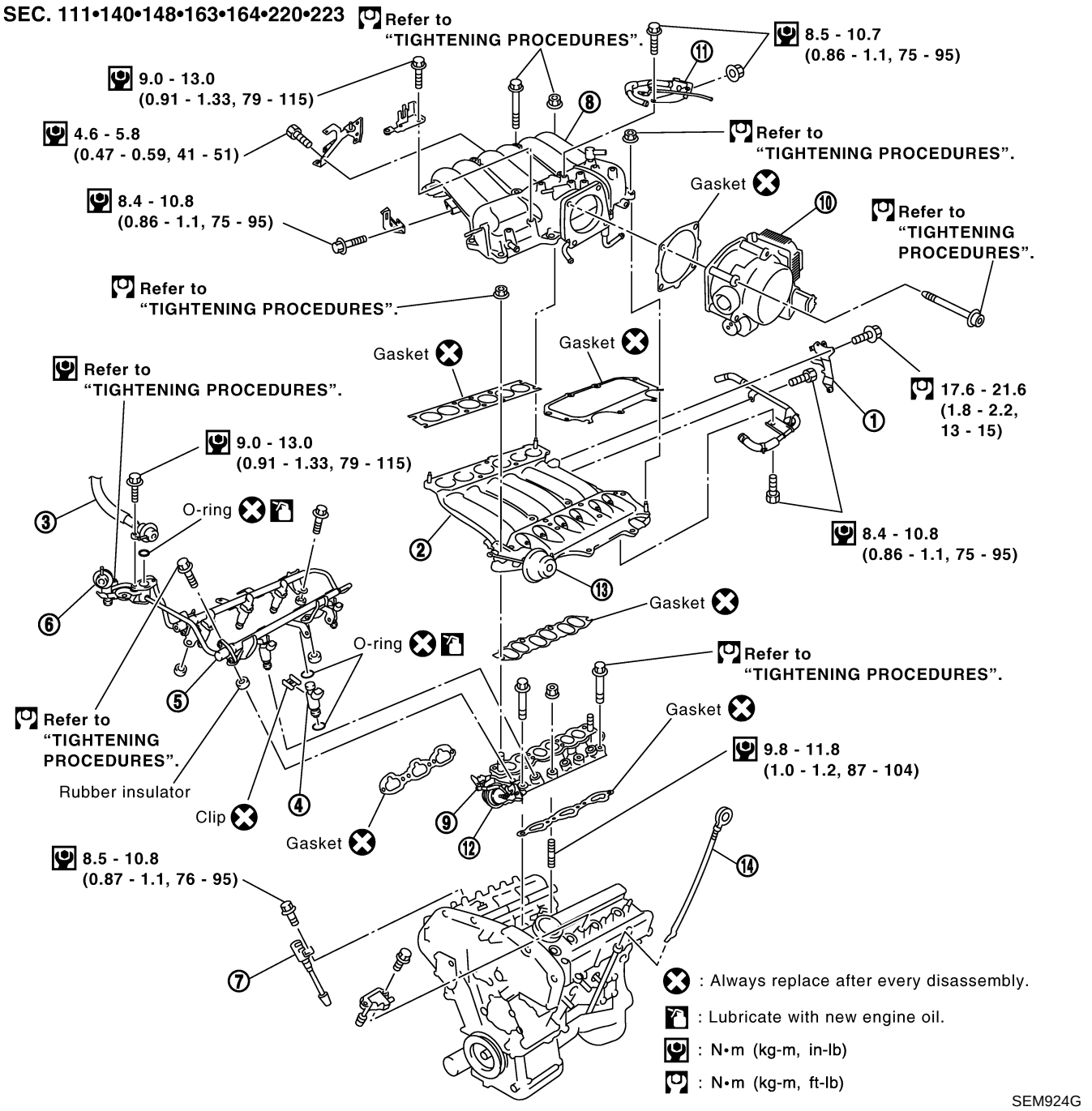

1. Intake manifold collector support
2. Lower intake manifold collector
3. Fuel damper and fuel feed hose assembly
4. Fuel injector
5. Fuel tube assembly
6. Fuel pressure regulator
7. Ignition coil with power transistor
8. Upper intake manifold collector
9. Intake manifold
10. Electric throttle control actuator
11. EVAP canister purge volume control solenoid valve
12. Swirl control valve actuator
13. Power valve actuator (A/T)
14. Oil level gauge

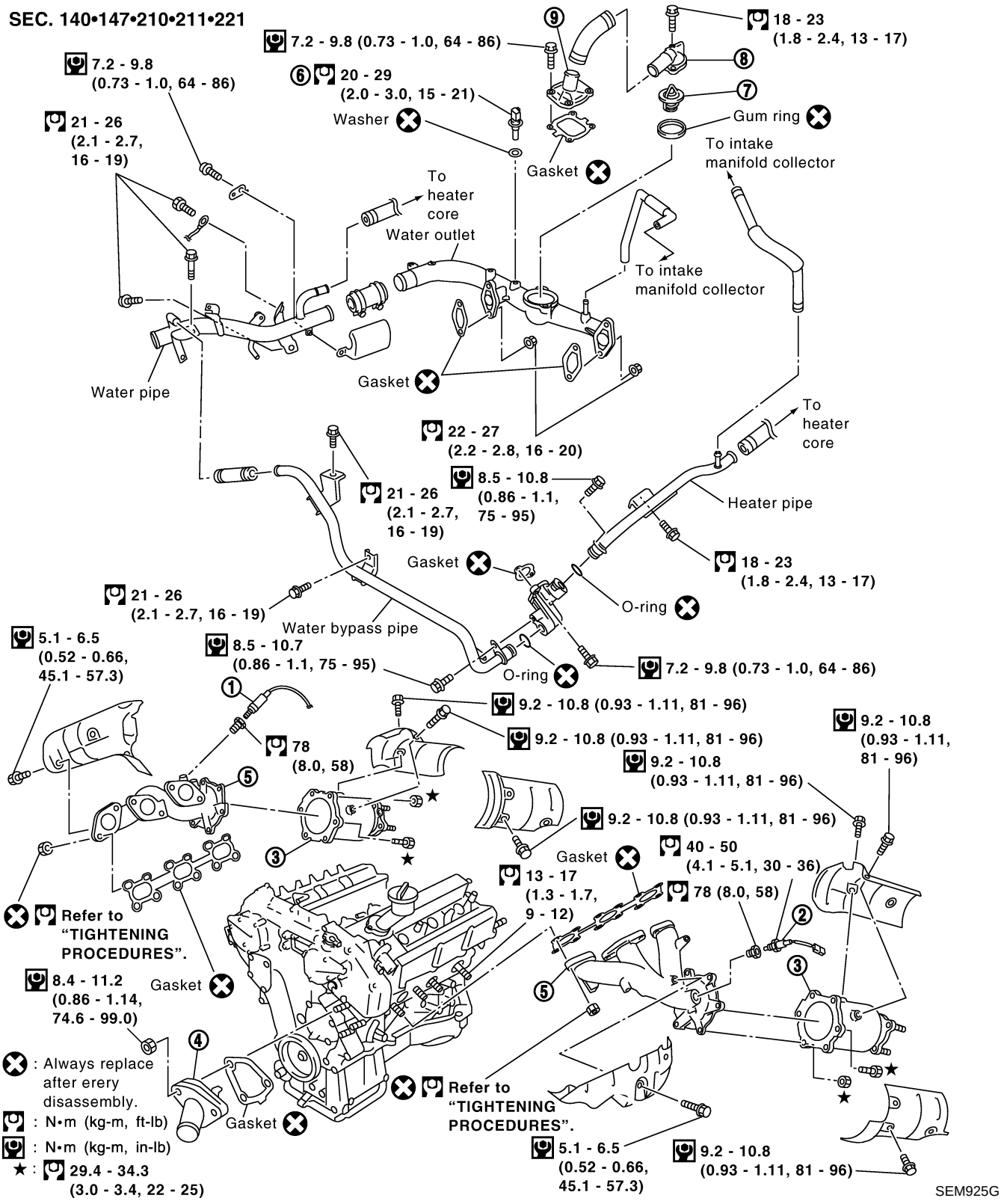

1. Heated oxygen sensor 1 (bank 1)
2. Heated oxygen sensor 1 (bank 2)
3. TWC (manifold)
4. Thermostat with water inlet
5. Exhaust manifold
6. Engine coolant temperature sensor
7. Water control valve
8. Water outlet housing
9. Cylinder block water outlet

TIGHTENING PROCEDURES

NAEM0006S01

Intake Manifold

NAEM0006S0101

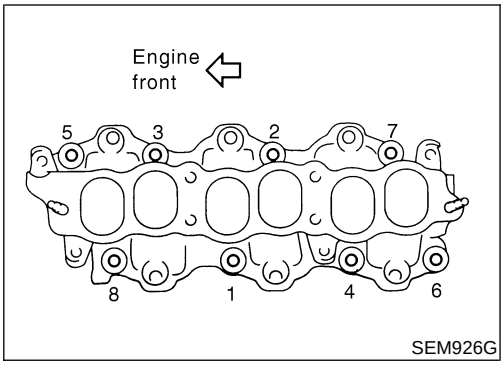

- **Loosen in reverse order and tighten in numerical order shown in the figure.**

1. Tighten all bolts and nuts to 4.9 to 9.8 N·m (0.5 to 1.0 kg-m, 44 to 86 in-lb).
2. Finally tighten all bolts and nuts to 26.5 to 31.4 N·m (2.7 to 3.2 kg-m, 20 to 23 ft-lb).

- Tighten all bolts and nuts to the final torque, evenly dividing the tightening into at least three steps.

Fuel Tube

NAEM0006S0102

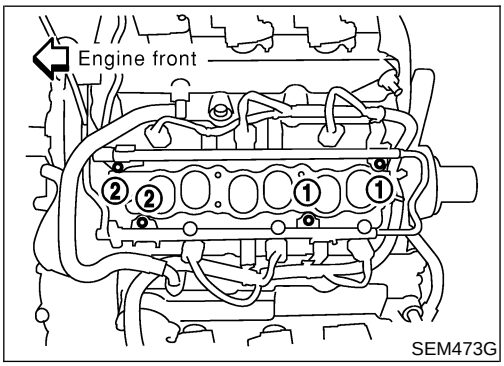

- **Loosen in reverse order shown in the figure.**
- **Tighten in numerical order shown in the figure.**

1. Tighten all bolts to 9.3 to 10.8 N·m (0.95 to 1.1 kg-m, 83 to 95 in-lb).
2. Then tighten all bolts to 20.6 to 26.5 N·m (2.1 to 2.7 kg-m, 16 to 19 ft-lb).

Fuel Pressure Regulator

NAEM0006S0103

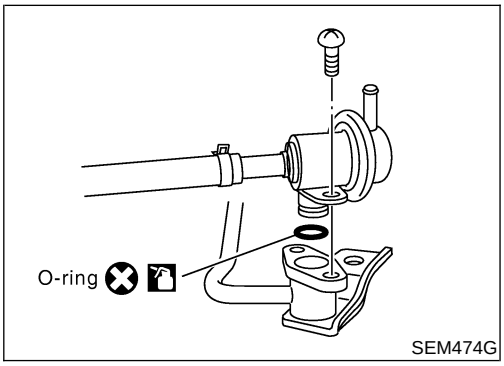

Tighten fuel pressure regulator to 2.9 to 3.8 N·m (0.3 to 0.39 kg-m, 26.0 to 33.9 in-lb).

- **Tighten screws evenly several times to have the fuel pressure regulator tightened at the specified torque.**
- **Always replace O-ring with new ones.**
- **Lubricate O-ring with new engine oil.**

Electric Throttle Control Actuator

NAEM0006S0105

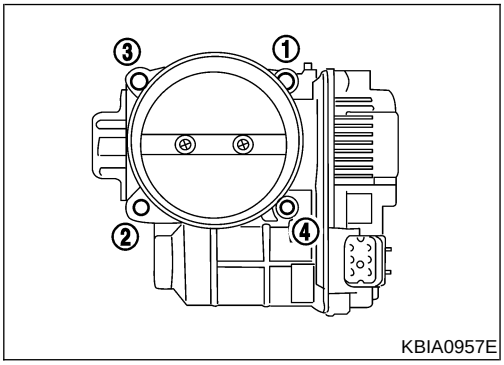

- **Loosen in reverse order shown in the figure.**
- **Tighten all bolts to 7.2 to 9.7 (0.74 to 0.98 kg-m, 64 to 85 in-lb) in numerical order shown in the figure.**
- Perform the "Throttle Valve Closed Position Learning" when harness connector of electric throttle control actuator is disconnected. Refer to EC-73, "Throttle Valve Closed Position Learning".
- Perform the "Idle Air Volume Learning" and "Throttle Valve Closed Position Learning" when electric throttle control actuator is replaced. Refer to EC-73, "Idle Air Volume Learning".

Upper Intake Manifold Collector

NAEM0006S0107

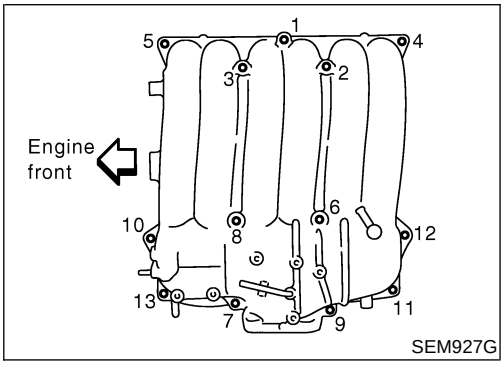

Loosen bolts and nuts in reverse order and tighten to 17.6 to 21.6 N·m (1.8 to 2.2 kg-m, 13 to 15 ft-lb) in numerical order shown in the figure.

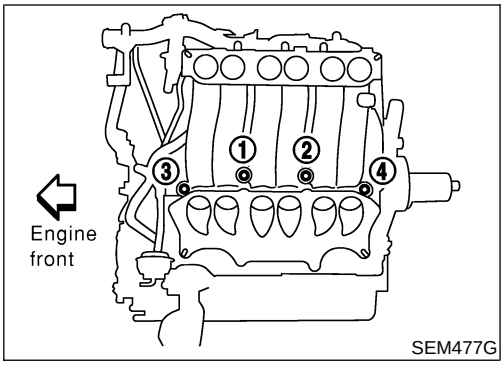

Lower Intake Manifold Collector

NAEM0006S0108

Tighten bolts and nuts to 17.6 to 21.6 N·m (1.8 to 2.2 kg-m, 13 to 15 ft-lb) in numerical order shown in the figure.

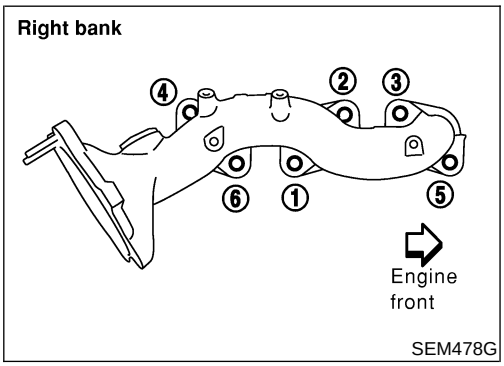

Exhaust Manifold

NAEM0006S0109

Tighten nuts to 28.5 to 32.4 N·m (2.9 to 3.3 kg-m, 21 to 23 ft-lb) in numerical order shown in the figure.

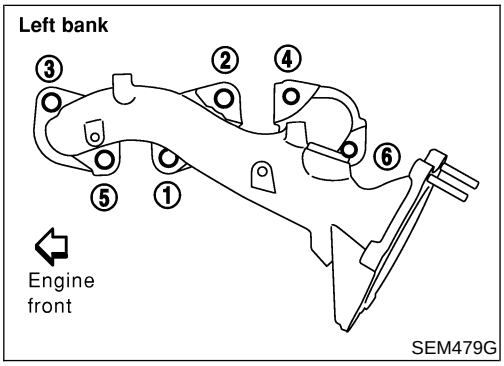

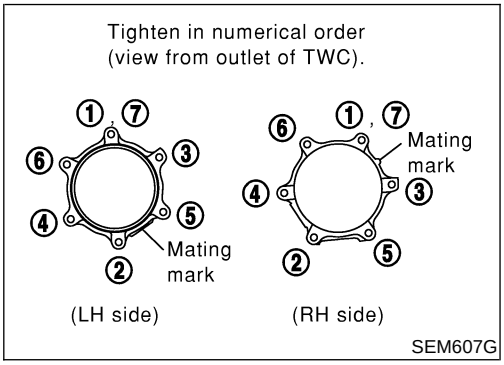

TWC (Manifold)

NAEM0006S0110

- Align the mating mark as shown for locating exhaust flange.

Disassembly and Assembly of Power Valve (A/T)

NAEM0044

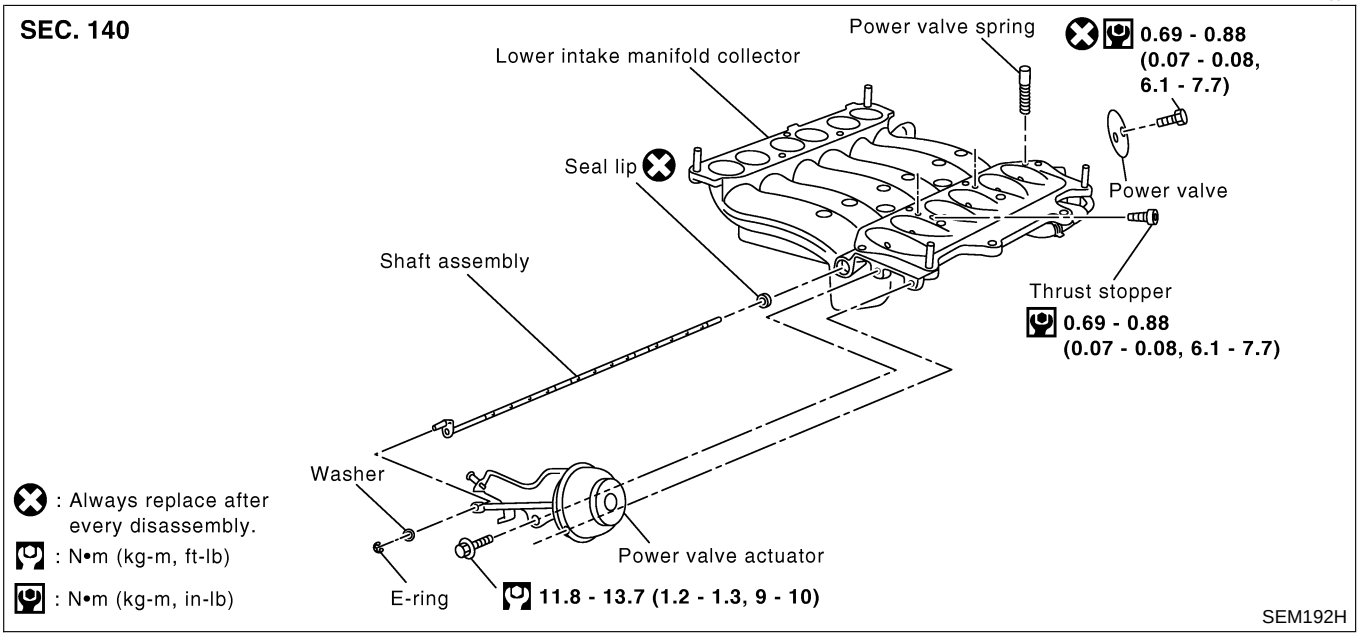

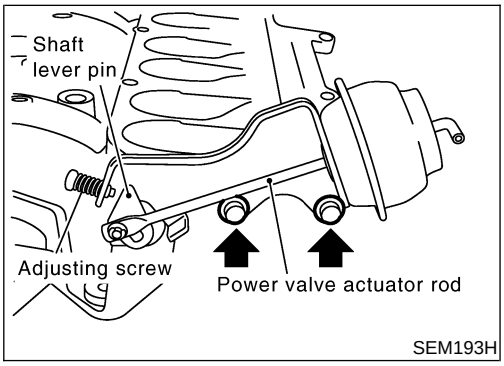

DISASSEMBLY

NAEM0044S01

1. Loosen adjusting screw until it separates from shaft lever pin.
2. Remove power valve actuator rod from shaft lever pin.
3. Remove power valve actuator from lower intake manifold collector.
4. Remove thrust stopper.
5. Remove power valve.

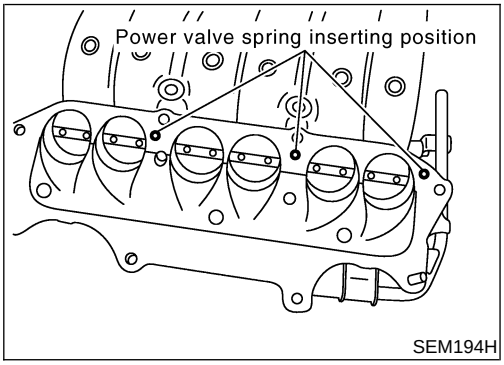

6. Slowly pull out shaft assembly from lower intake manifold collector while rotating counterclockwise.

CAUTION:

Hold power valve spring by hand so as not to lose it because it pops out when pulling out shaft assembly.

7. Remove seal lip from lower intake manifold collector.

ASSEMBLY

NAEM0044S02

1. Press in seal lip.

CAUTION:
- **Be careful not to damage lip when installing.**
- **Do not reuse seal lip.**

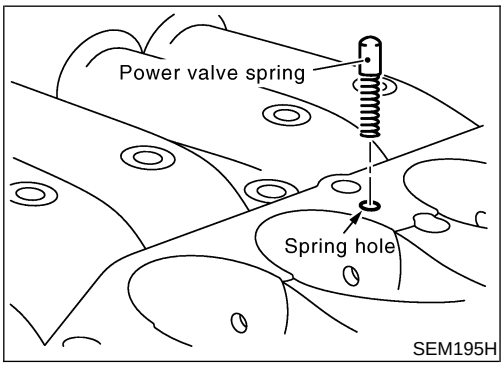

2. Insert power valve spring into lower intake manifold collector.

CAUTION:
Insert power valve spring facing spring down into lower intake manifold collector.

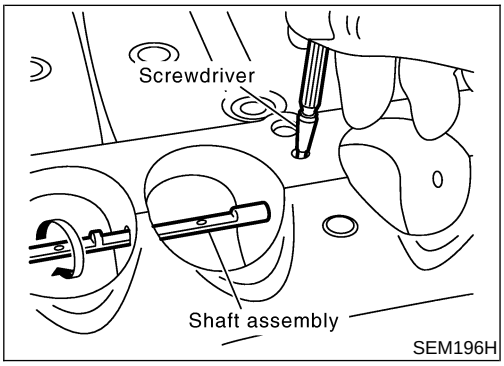

3. Insert shaft assembly into lower intake manifold collector while rotating clockwise.

CAUTION:
- **Be careful not to damage seal lip.**
- **Insert shaft assembly while holding power valve spring using a small screwdriver.**

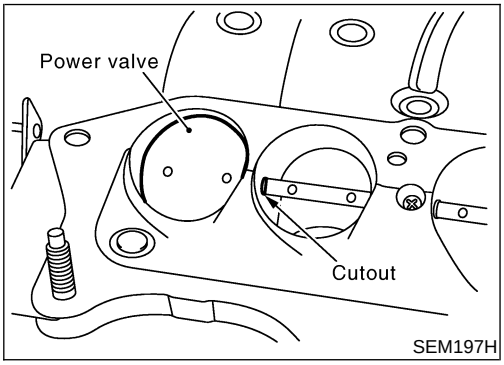

4. Install power valve.

CAUTION:
- **Install power valve with cutout of shaft assembly moving toward left side of port. Push it toward shaft assembly so that there is no clearance with port.**

  Power valve mounting screw:

  : 0.69 - 0.88 N·m (0.07 - 0.08 kg-m, 6.1 - 7.7 in-lb)
- **Do not reuse mounting screw.**
- **Operate power valve by hand after installation, and then make sure that it operates smoothly.**

5. Install thrust stopper.

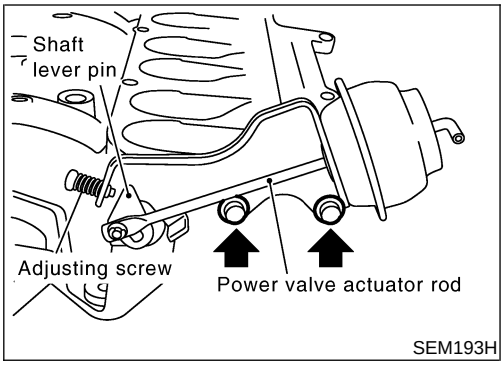

6. Install power valve actuator.
7. Install power valve actuator rod to shaft lever pin.
8. Screw in adjusting screw until its tip contacts with shaft lever pin.

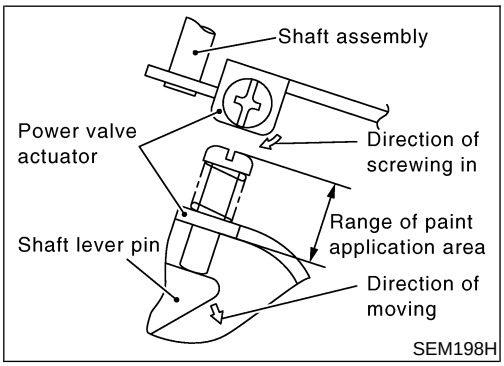

9. Screw in one more turn after contacting the tip of adjusting screw with shaft lever pin.

NOTE:
The paint is applied on adjusting screw thread. Refer to the range of paint application area shown in the figure when installing.

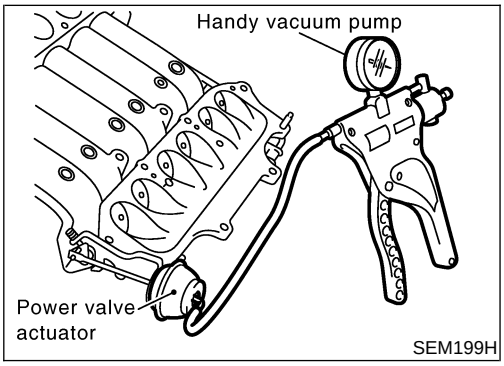

INSPECTION AFTER ASSEMBLY

NAEM0044S03

Power Valve Actuator

NAEM0044S0301

Connect a handy vacuum pump. Make sure that power valve moves smoothly when applying the following vacuum pressure.

Unit: kPa (mmHg, inHg)

	Standard (approximate)
Power valve starts opening	–17.3 (–130, –5.12)
Power valve fully opens	–30.7 (–230, –9.06)
Power valve fully closes	–6.7 (–50, –1.97)

MEASUREMENT OF COMPRESSION PRESSURE

1. Warm up engine.
2. Turn ignition switch OFF.
3. Release fuel pressure.
   Refer to EC-56, “Fuel Pressure Release”.

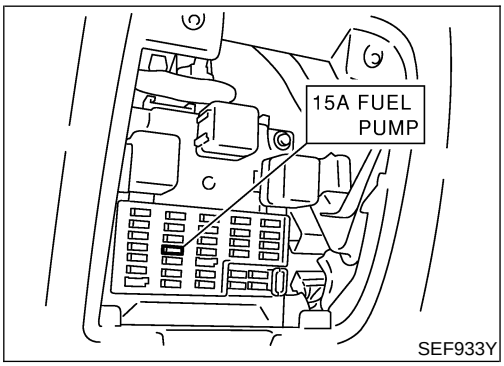

SEF933Y

4. Disconnect fuel pump fuse to avoid injection during measurement.
5. Remove engine cover.
6. Remove air duct with air cleaner case.
7. Remove harness connectors and harness brackets around ignition coils.
8. Remove Electric throttle control actuator. Refer to EM-12, “Electric Throttle Control Actuator”.
9. Disconnect ignition coil with power transistor harness connectors, then remove ignition coils.
10. Remove all spark plugs.
- Clean area around plug with compressed air before removing the spark plug.

11. Connect engine tachometer (not required in use of CONSULT-II).

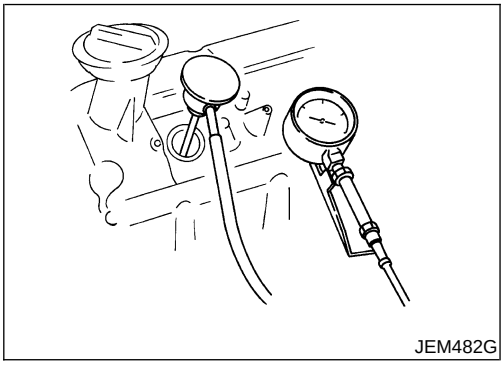
JEM482G

12. Attach a compression tester to No. 1 cylinder.
13. Crank engine and record highest gauge indication.
14. Repeat the measurement on each cylinder as shown above.
- **Always use a fully-charged battery to obtain specified engine speed.**

Unit: kPa (kg/cm^2, psi)/rpm

Standard	Minimum	Difference limit between cylinders
1,270 (13.0, 184)/300	980 (10.0, 142)/300	100 (1.0, 15)/300

20 mm (0.79 in) dia.

Use compressor tester whose end (rubber portion) is less than 20 mm (0.79 in) dia. Otherwise, it may be caught by cylinder head during removal.

SEM387C

15. If compression in one or more cylinders is low:

a. Pour a small amount of engine oil into cylinders through spark plug holes.
b. Retest compression.

- **If adding oil helps compression, piston rings may be worn or damaged. If so, replace piston rings after checking piston.**
- **If pressure stays low, a valve may be sticking or seating improperly. Inspect and repair valve and valve seat. (Refer to SDS, EM-83 and EM-85.) If valve or valve seat is damaged excessively, replace them.**

- **If compression stays low in two cylinders that are next to each other:**

a) The cylinder head gasket may be leaking, or

b) Both cylinders may have valve component damage. Inspect and repair as necessary.

16. Install removed parts in reverse order of removal.
17. Perform “Self-diagnosis Procedure” referring to EC-91, “How to Erase DTC” if any DTC appears.

Components

NAEM0008

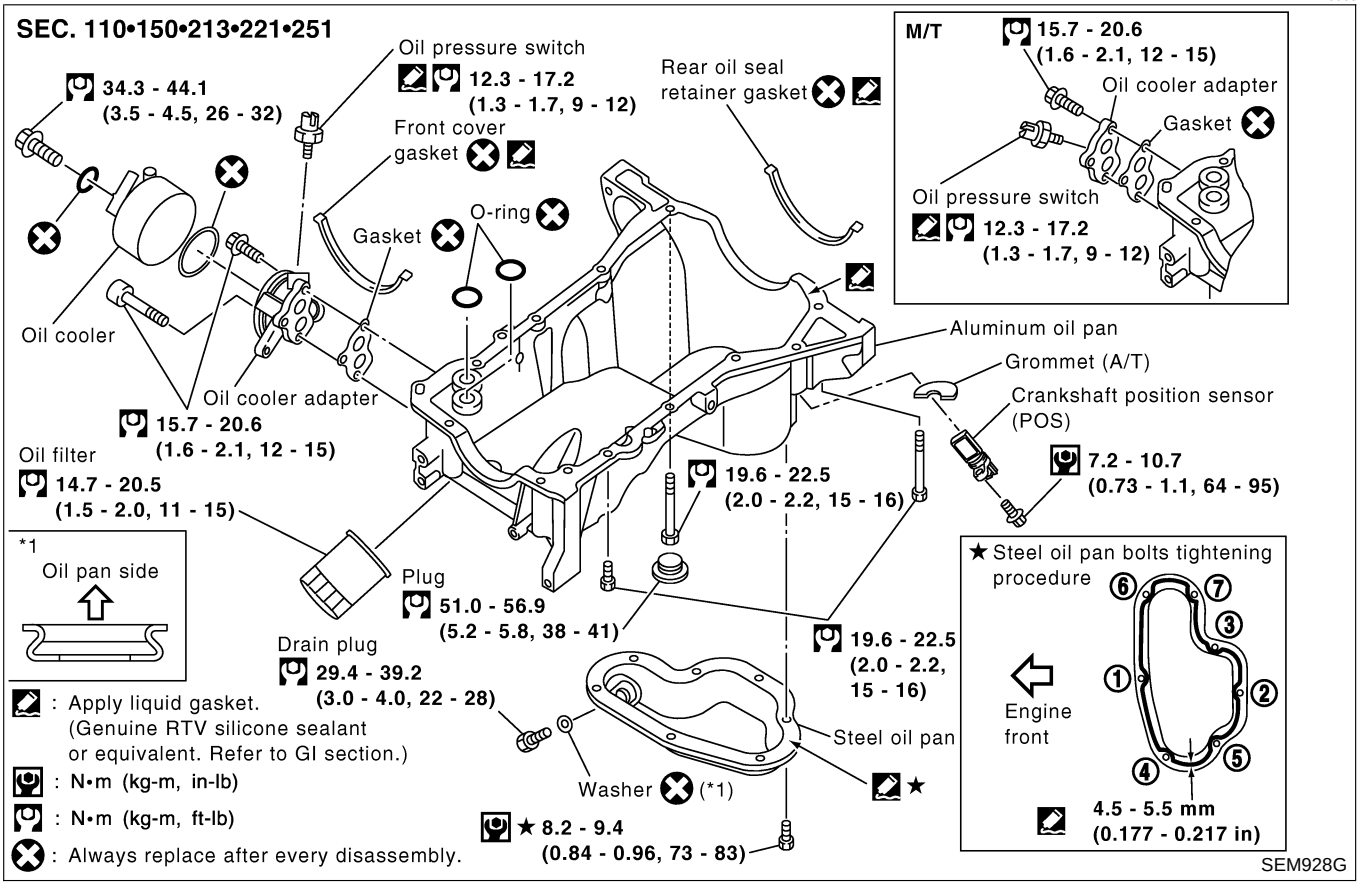

Removal

NAEM0009

WARNING:

- **Place vehicle on a flat and solid surface.**
- **You should not remove oil pan until exhaust system and cooling system have completely cooled off.**
  Otherwise, you may burn yourself and/or fire may break out in the fuel line.
- **When removing front engine mounting nuts, lift up slightly engine for safety work.**

CAUTION:

When removing the aluminum oil pan from engine, first remove the crankshaft position sensor (POS) from the assembly.

Be careful not to damage sensor edges and signal plate teeth.

1. Remove front RH and LH wheels.
2. Remove battery.
3. Remove oil level gauge.
4. Remove engine undercover.
5. Remove suspension member stay.
6. Drain engine coolant from radiator drain plug.
7. Disconnect A/T oil cooler hoses. (A/T)
8. Drain engine oil.

9. Remove the crankshaft position sensor (POS).
10. Remove drive belts and idler pulley with bracket.
11. Remove power steering oil pump, then put it aside holding with a suitable wire.
12. Remove alternator.

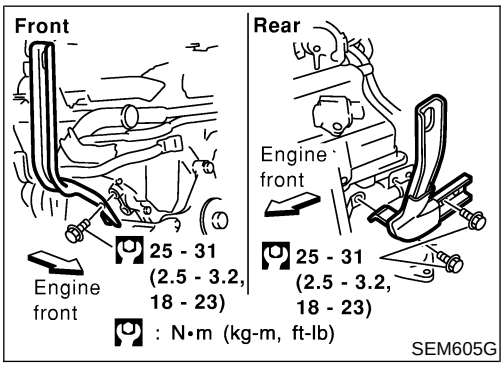

13. Install engine slingers.
14. Remove front propeller shaft. (4WD)
    Refer to PD-8, "Removal and Installation".
15. Remove exhaust front tube heat insulators, then remove rear heated oxygen sensors with Tool.
16. Remove exhaust front tube from both sides.
    Refer to FE-9, "Removal and Installation".
17. Remove front final drive. (4WD)
    Refer to PD-19, "Removal and Installation".
18. Remove starter motor.
19. Disconnect oil pressure switch harness connector.
20. Loosen and disconnect the bolts fixing the steering column assembly lower joint and the power steering gear.

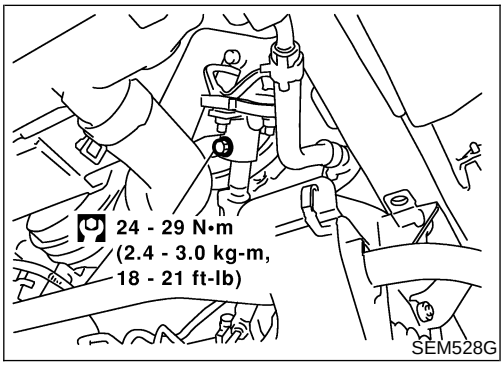

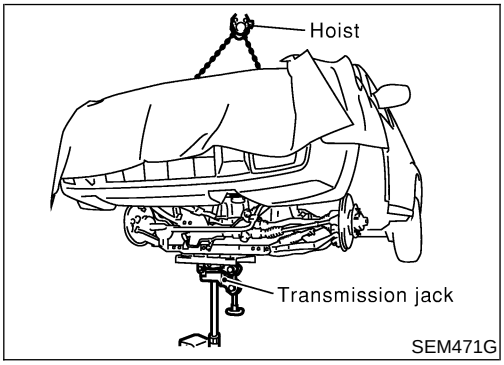

21. Set a suitable transmission jack under the front suspension member and hoist engine with engine slingers.

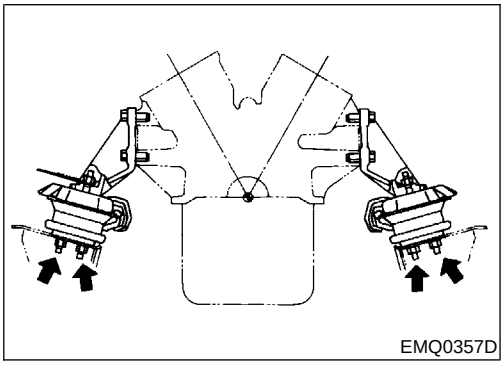

22. Remove front engine mounting nuts from both sides.

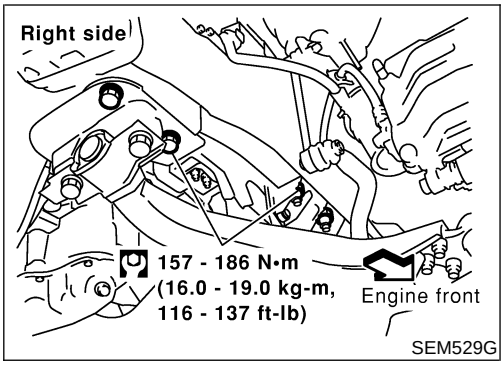

23. Remove front suspension member bolts and nuts.
24. Lower the transmission jack carefully to secure clearance between the oil pan and suspension member.
25. Remove A/T oil cooler tube. (A/T)
26. Remove water hose and tube. (A/T)

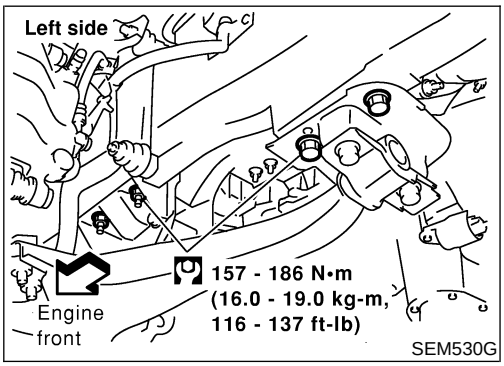

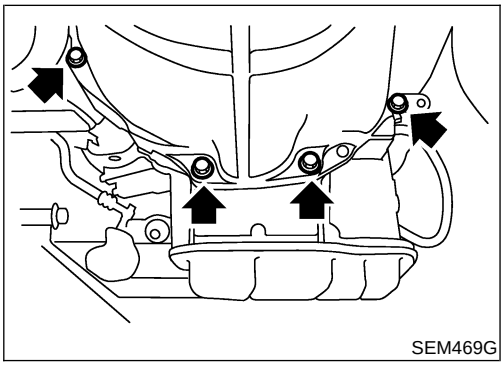

27. Remove the four engine-to-transmission bolts.
28. Loosen steel oil pan bolts in reverse order of tightening. Refer to "Components", EM-19.

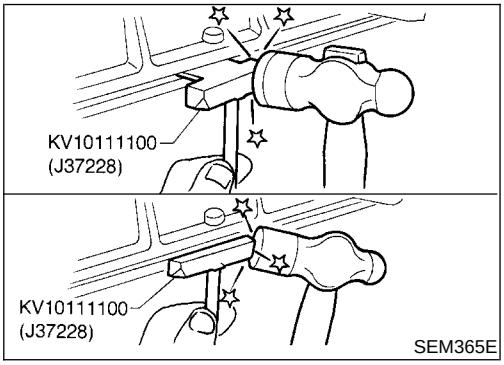

29. Remove steel oil pan.

a. Insert seal cutter (special service tool) between aluminum oil pan and steel oil pan.

- **Be careful not to damage aluminum mating surface.**
- **Do not insert screwdriver, or oil pan flange will be deformed.**

b. Slide seal cutter by tapping on the side of the tool with a hammer.

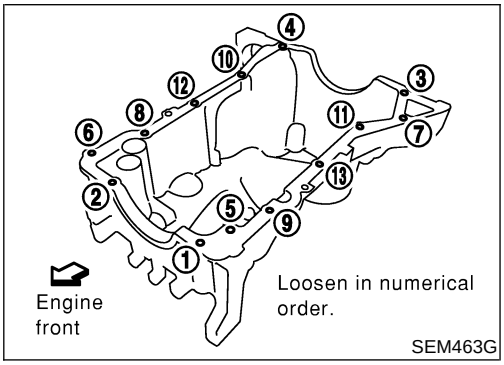

30. Remove pulg from rear right of aluminum oil pan.
- Plug position is under No. 4 bolt in the figure.

31. Remove aluminum oil pan bolts in numerical order.
32. Remove aluminum oil pan.

a. Insert seal cutter between aluminum oil pan and cylinder block.

- **Be careful not to damage aluminum mating surface.**
- **Do not insert screwdriver, or oil pan flange will be deformed.**

b. Slide seal cutter by tapping its side with a hammer.

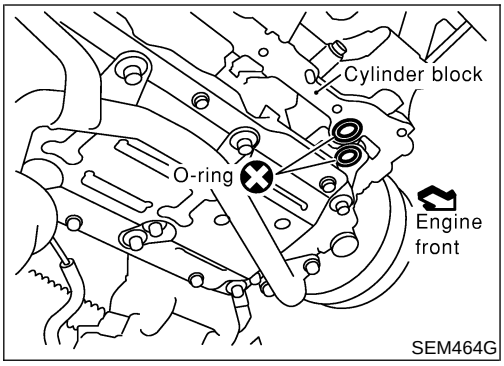

33. Remove O-rings from cylinder block and oil pump body.

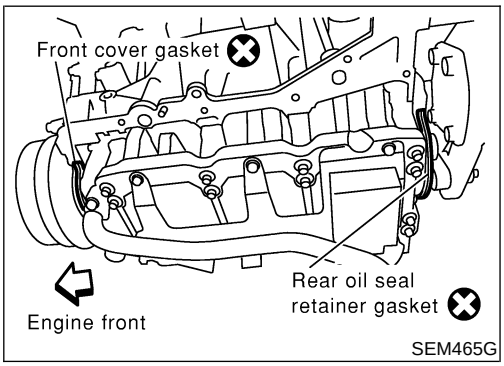

34. Remove front cover gasket and rear oil seal retainer gasket.
35. Clean oil strainer if any object attached.

Installation

NAEM0010

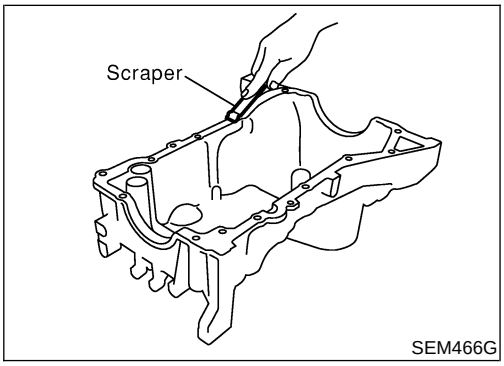

1. Before installing oil pan, remove old liquid gasket from mating surface using a scraper.

- **Also remove old liquid gasket from mating surface of cylinder block.**
- **Remove old liquid gasket from the bolt hole and thread.**

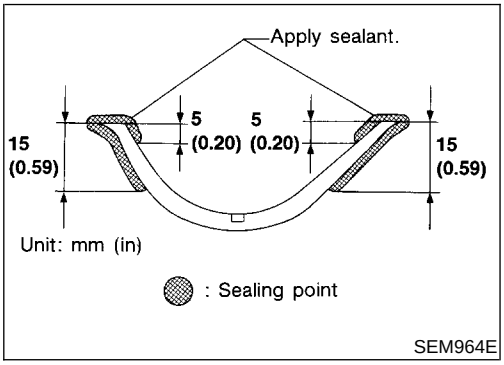

2. Apply sealant to front cover gasket and rear oil seal retainer gasket.

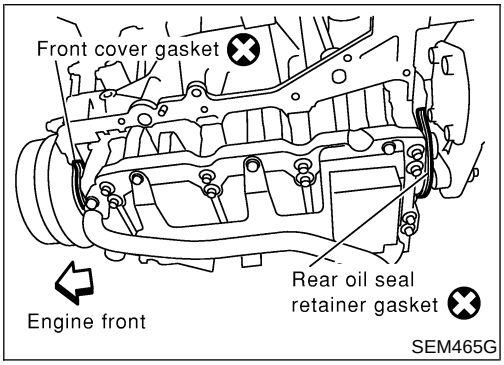

3. Install front cover gasket and rear oil seal retainer gasket.

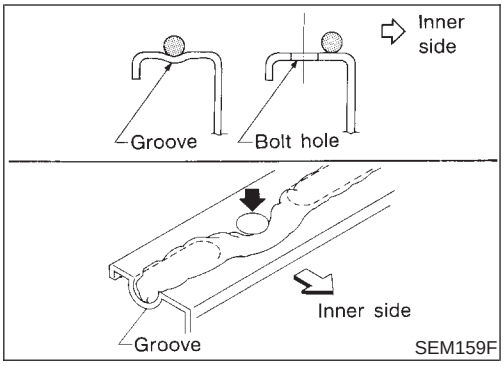

4. Apply a continuous bead of liquid gasket to mating surface of aluminum oil pan.
- **Use Genuine RTV silicone sealant or equivalent. Refer to GI-53.**

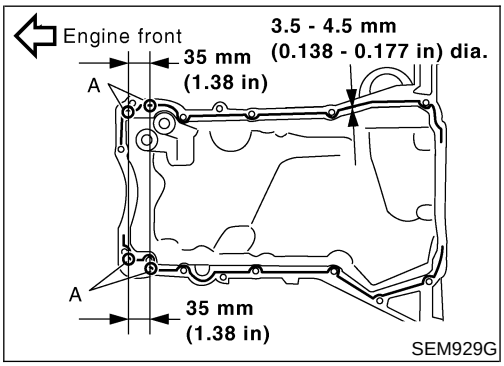

5. Apply liquid gasket to inner sealing surface as shown in figure.
- **Be sure to apply it inside to all bolt holes.**
- **Be sure to apply it to part A at [4.5 to 5.5 mm (0.177 to 0.217 in)].**
- **Attaching should be done within 5 minutes after coating.**

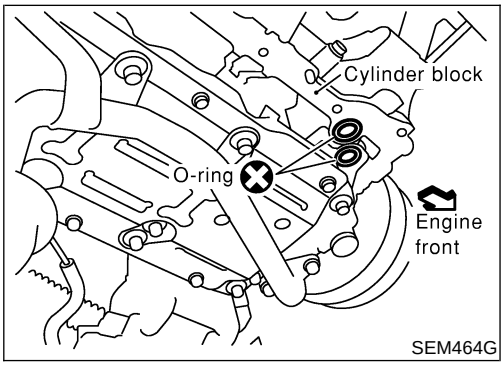

6. Install O-rings, cylinder block and oil pump body.

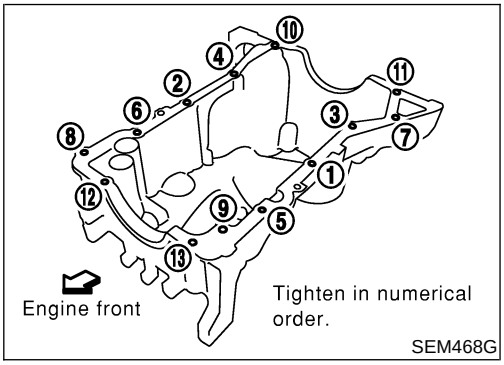

7. Install aluminum oil pan.

CAUTION:
Install avoiding misalignment of both oil pan gasket and O-rings.
- Tighten bolts in numerical order as shown in the figure.
- **Wait at least 30 minutes before refilling engine oil.**

8. Install plug to rear right of aluminum oil pan.
- Plug position is under No. 10 bolt in the figure.

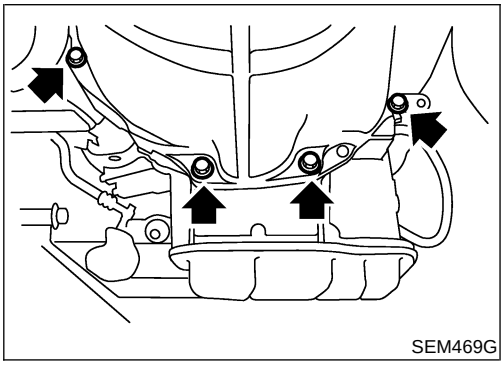

9. Install the four engine-to-transmission bolts. For tightening torque, refer to AT-274 or MT-8, "Installation".
10. Reinstall in the reverse order of removal.

Components

NAEM0011

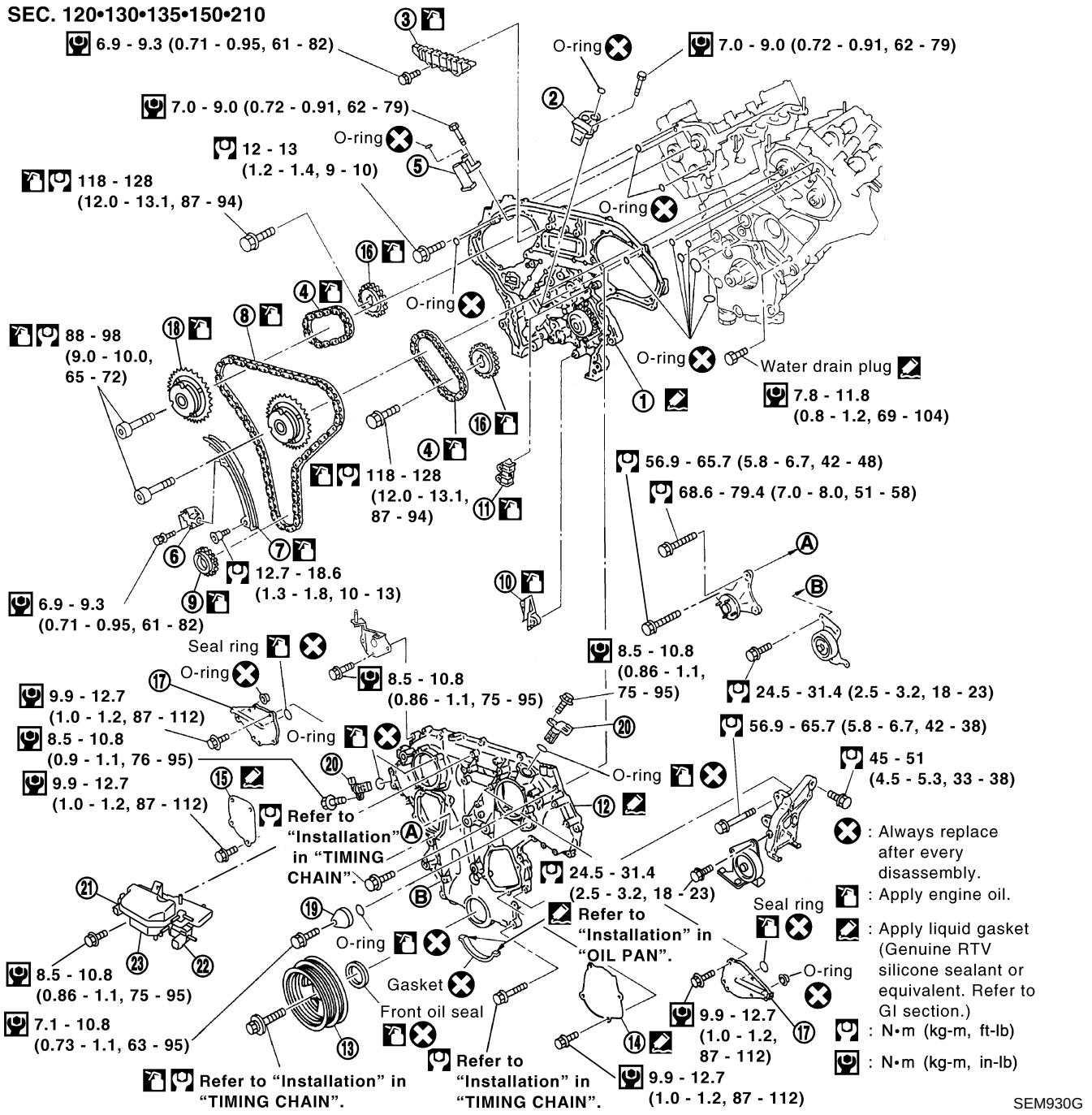

1. Rear timing chain case
2. Left camshaft chain tensioner
3. Internal guide
4. Timing chain (Secondary)
5. Right camshaft chain tensioner
6. Timing chain tensioner
7. Slack guide
8. Timing chain (Primary)
9. Crankshaft sprocket
10. Lower chain guide
11. Upper tension guide
12. Front timing chain case
13. Crankshaft pulley
14. Water pump cover
15. Chain tensioner cover
16. Exhaust camshaft sprocket
17. Intake valve timing control cover
18. Intake camshaft sprocket
19. Cover
20. Camshaft position sensor (PHASE)
21. VIAS control solenoid valve (A/T)
22. Swirl control valve control solenoid valve
23. Vacuum tank

POSITION FOR APPLYING LIQUID GASKET

=NAEM0011S01

Refer to "Liquid Gasket Application Procedure" in "PRECAUTION", EM-3.

- **Before installation, wipe off the protruding sealant.**

Front timing chain case

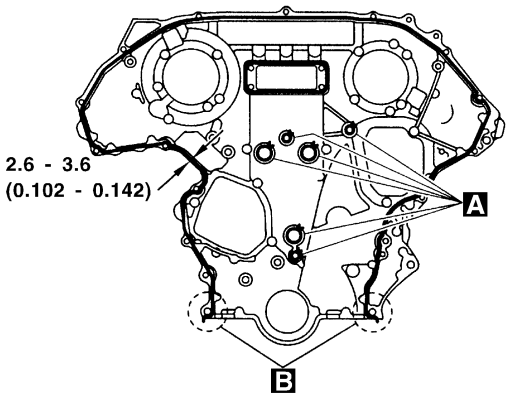

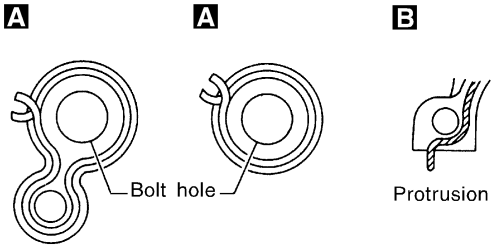

Sealant protrusion away from bolt hole

Rear timing chain case

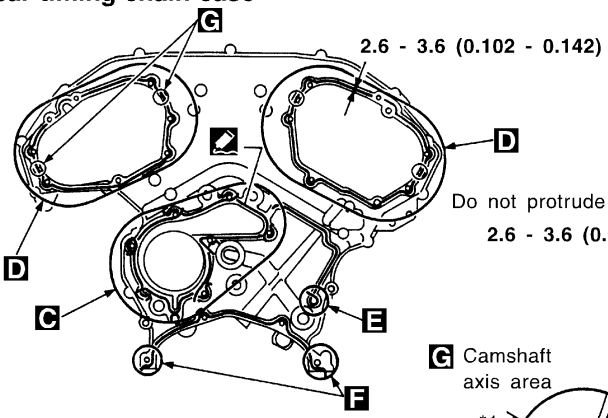

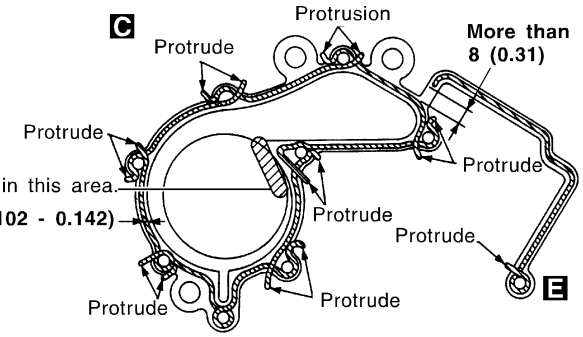

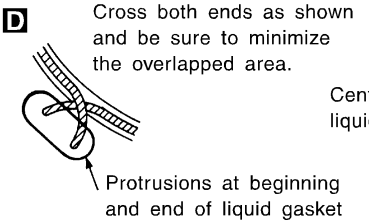

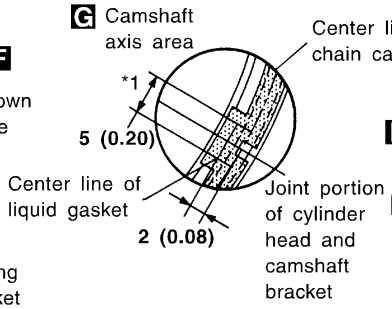

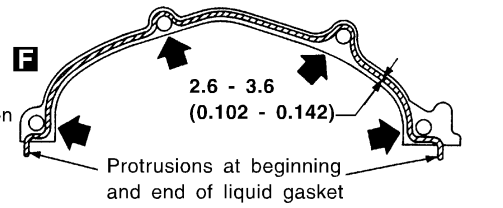

*1: Apply liquid gasket to the chamfered surface between camshaft bracket and cylinder head.

Camshaft bracket

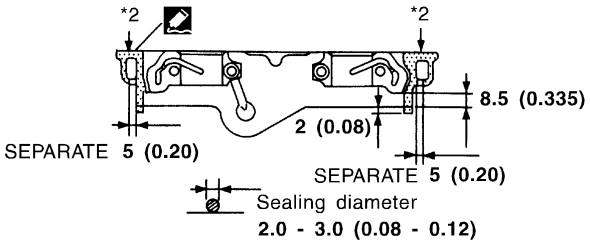

*2: Remove the protruding sealant from front face.
(Remove the hardened sealant from surface only.)

Rocker cover

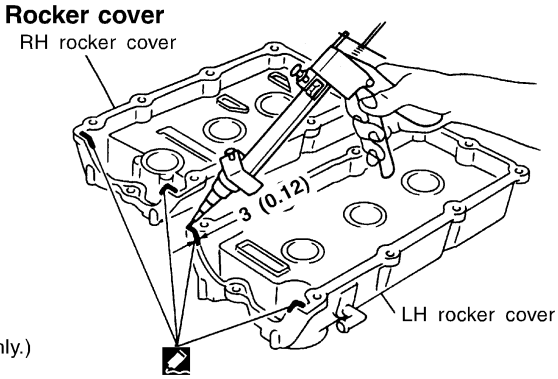

Unit: mm (in)

SEM411G

CAUTION:

- **After removing timing chain, do not turn crankshaft and camshaft separately, or valves will strike piston heads.**
- **When installing camshafts, chain tensioners, oil seals, or other sliding parts, lubricate contacting surfaces with new engine oil.**
- **Apply new engine oil to bolt threads and seat surfaces when installing camshaft sprockets and crankshaft pulley.**
- **Before disconnecting fuel hose, release fuel pressure. Refer to EC-56, "Fuel Pressure Release".**
- **Be careful not to damage sensor edges.**
- **Do not spill engine coolant on drive belts.**

Removal

NAEM0012

1. Release fuel pressure.
   Refer to EC-56, "Fuel Pressure Release".
2. Remove battery.
3. Remove radiator.
   Refer to LC-22, "REMOVAL AND INSTALLATION".
4. Drain engine oil.
5. Remove drive belts and idler pulley with brackets.
6. Remove cooling fan with bracket.
7. Remove engine cover.
8. Remove air duct with air cleaner case, collector, PCV hose, vacuum hoses, fuel hoses, water hoses, harnesses, connectors and so on.
9. Remove the air conditioner compressor, and tie it down using rope or the like to keep it from interfering.
10. Remove the power steering oil pump and reservoir tank. Tie them down using rope or the like to keep them from interfering.
11. Remove alternator.
12. Remove the following.

- Vacuum tank
- Water bypass pipe
- Brackets

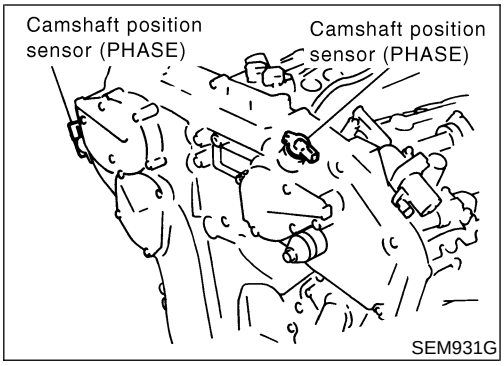

13. Remove camshaft position sensors (PHASE).
- Avoid impact such as dropping.
- Do not disassemble the components.
- Do not place them on areas where iron powder may adhere.
- Keep away from the objects susceptible to magnetism.

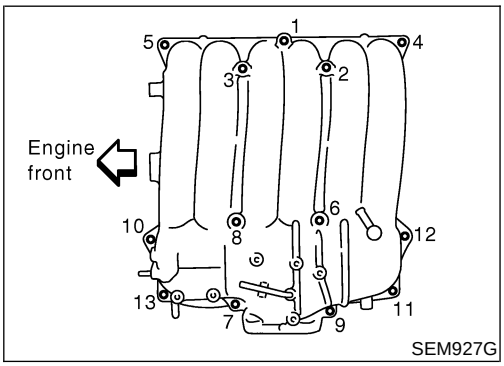

14. Remove upper intake manifold collector in reverse order of illustration.

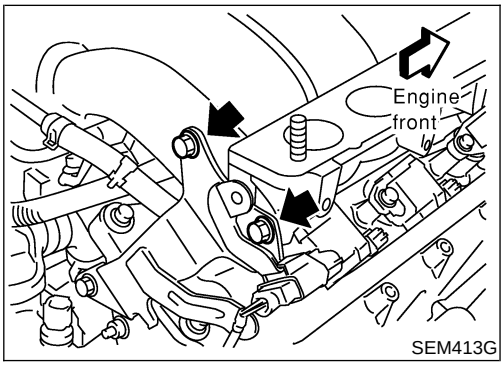

15. Remove intake manifold collector support bolts.

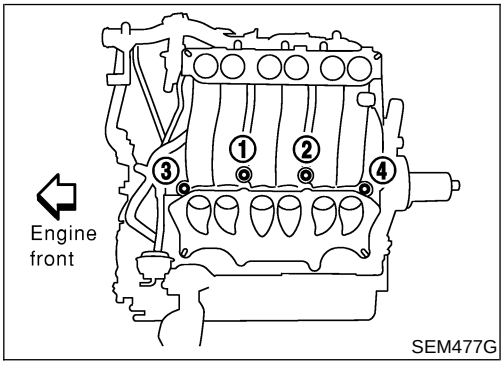

16. Remove lower intake manifold collector in reverse order of illustration.

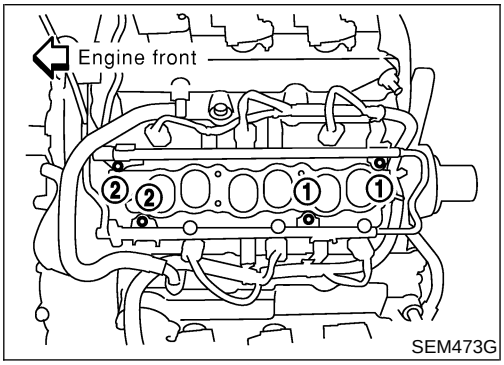

17. Disconnect injector harness connectors.
18. Remove fuel tube assembly in reverse order of illustration.

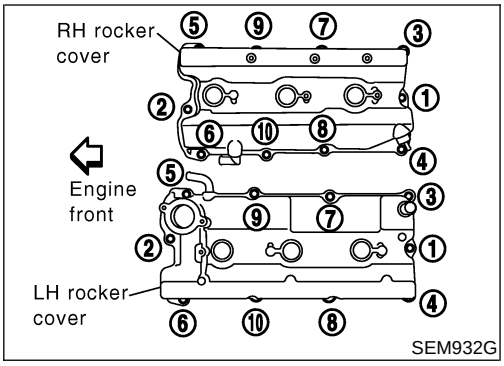

19. Remove ignition coils.
20. Remove RH and LH rocker covers from cylinder head.
- Loosen bolts in numerical order shown in the figure.

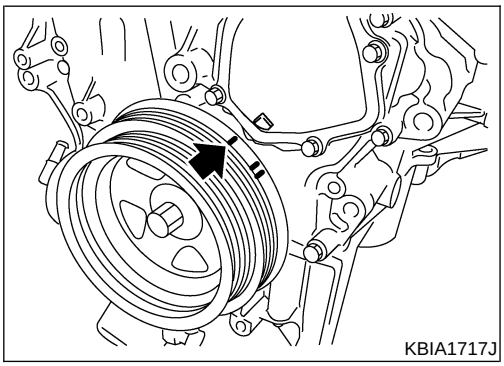

21. Set No. 1 piston at TDC on the compression stroke by rotating crankshaft.
- Align pointer with TDC mark on crankshaft pulley.

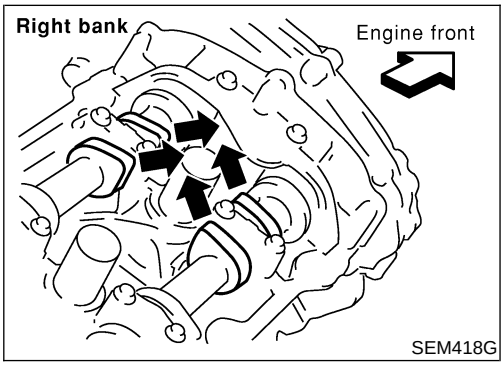

- Check that intake and exhaust cam nose on No. 1 cylinder are located as shown left.
  If not, turn the crankshaft one revolution (360°) and align as above.

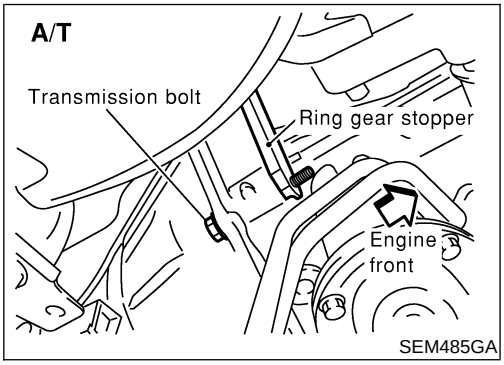

22. Remove starter motor, and set ring gear stopper using the mounting bolt hole.
- **Be careful not to damage the signal plate teeth.**

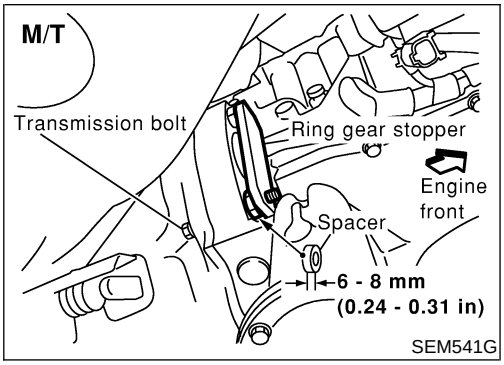

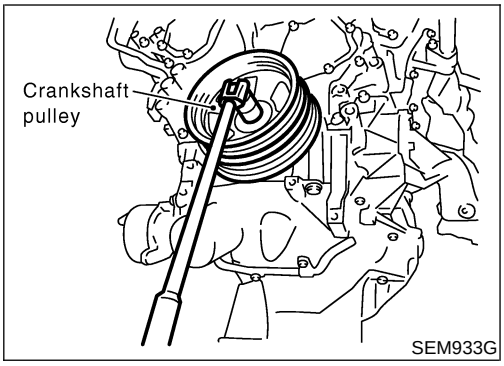

23. Loosen the crankshaft pulley bolt.

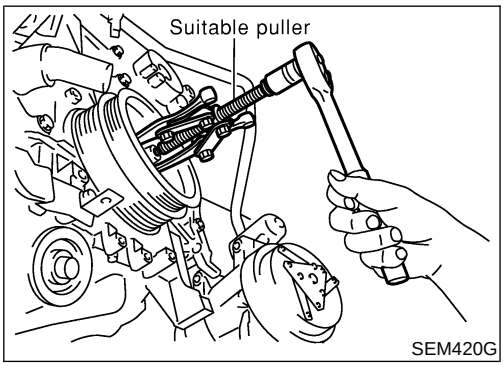

24. Remove crankshaft pulley with a suitable puller.
25. Remove aluminum oil pan.
    Refer to EM-19, "Removal".
26. Temporarily install the suspension member bolts and engine mounting nuts.

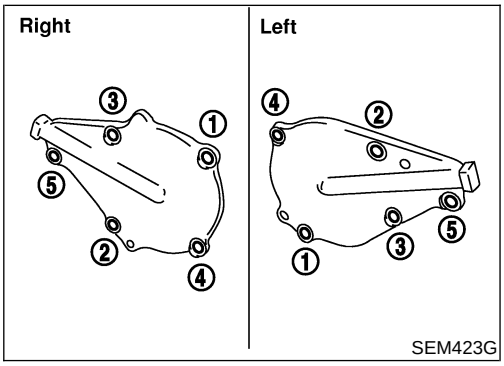

27. Remove intake valve timing control covers.
- **Loosen bolts in numerical order as shown in the figure.**
- In the cover, the shaft is engaged with the center hole of the intake camshaft sprocket. Remove it straight out until the engagement comes off.

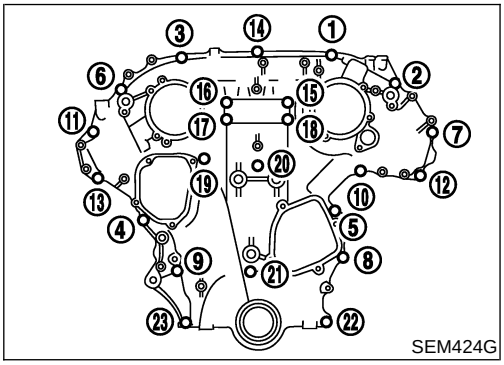

28. Remove front timing chain case bolts.
- **Loosen bolts in numerical order as shown in the figure.**

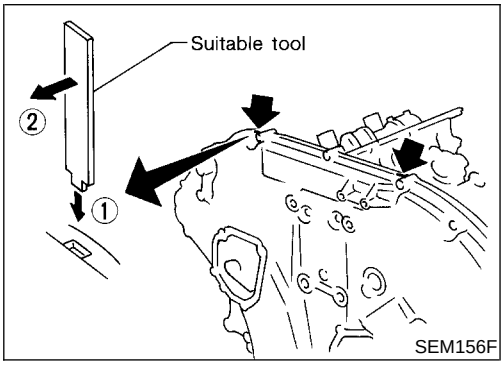

29. Remove front timing chain case.

a. Insert the appropriate size tool into the notch at the top of the front timing chain case as shown (1).

b. Pry off the case by moving the tool as shown (2).

- Use seal cutter (special service tool) or an equivalent tool to cut liquid gasket for removal.

CAUTION:
- **Do not use screwdrivers or something similar.**
- **After removal, handle it carefully so it does not tilt, cant, or warp under a load.**

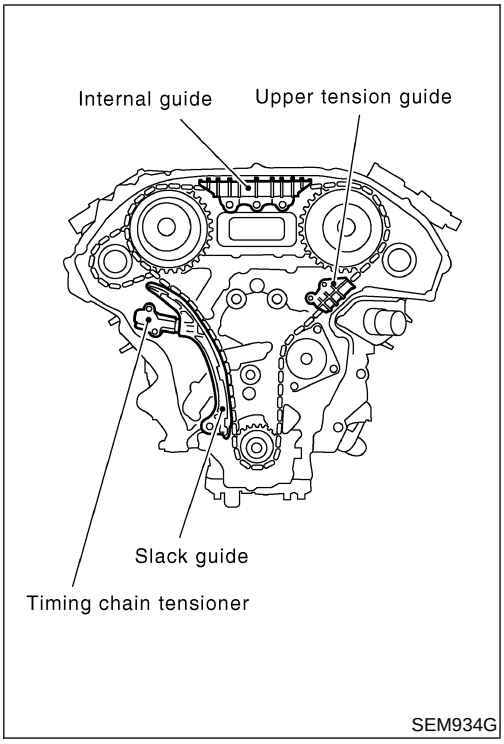

30. Remove internal guide.
31. Remove upper tension guide.
32. Remove timing chain tensioner and slack guide.

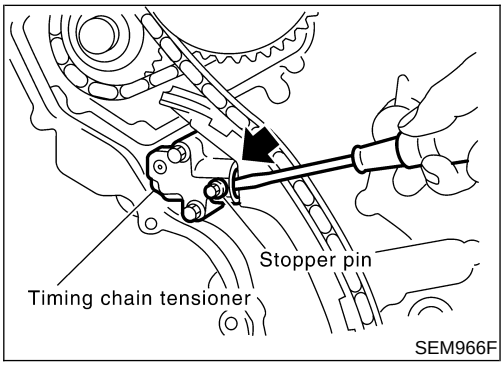

- Remove timing chain tensioner. (Push piston and insert a suitable pin into pinhole.)

33. Remove primary timing chain and crankshaft sprocket.

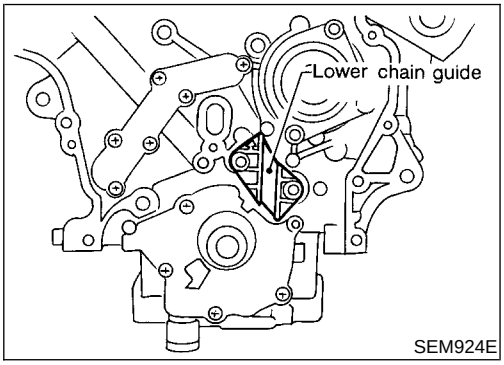

34. Remove lower chain guide.

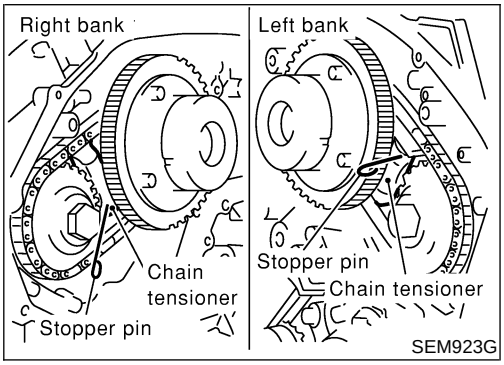

35. Attach a suitable stopper pin to RH and LH camshaft chain tensioners.

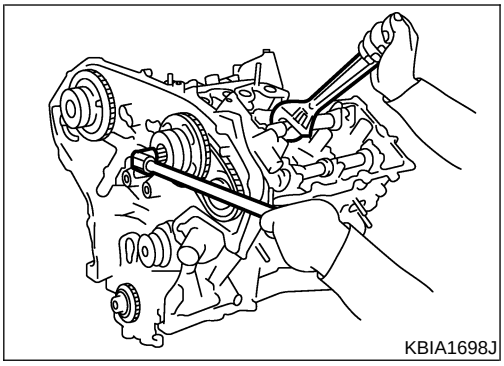

36. Remove intake and exhaust camshaft sprocket bolts.
- **Secure the hexagonal head of the camshaft using a spanner to loosen mounting bolts.**

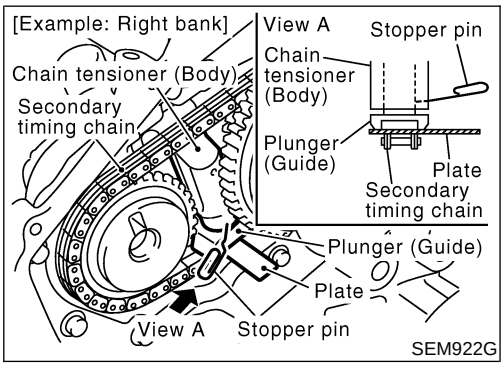

37. Remove secondary timing chains with camshaft sprockets.

a. Rotate camshaft lightly, and slacken timing chain of timing chain tensioner-side.

b. Insert metal or resin plate [thickness: 0.5 mm (0.020 in)] into guide between timing chain and chain tensioner plunger. Remove cam sprocket and secondary timing chain with timing chain floated from guide groove.

CAUTION:

Chain tensioner plunger may move, while fixed stopper pin and plunger both come off when timing chain is removed. Use caution during removal.

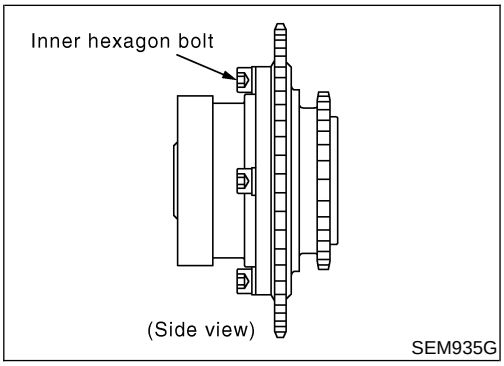

- Intake camshaft sprocket is two-for-one structure of primary and secondary sprockets.
- Handle intake camshaft sprocket, taking care of the following.

CAUTION:
- **Avoid impact.**
- **Do not disassemble (Never loosen inner hexagonal bolts).**

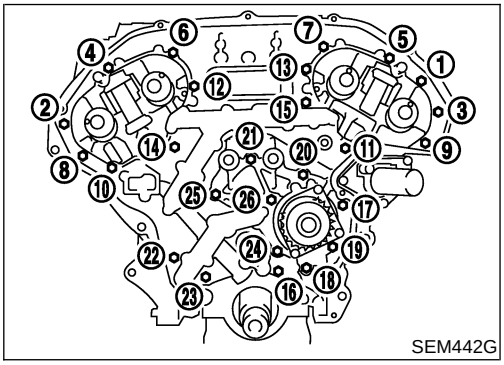

38. Remove rear timing chain case as follows if necessary.

a. Loosen mounting bolts in numerical order shown in figure, and remove them.

b. Disconnect liquid gasket applied portion using seal cutter (special service tool: KV10111100) or an equivalent tool. Then remove rear timing chain case.

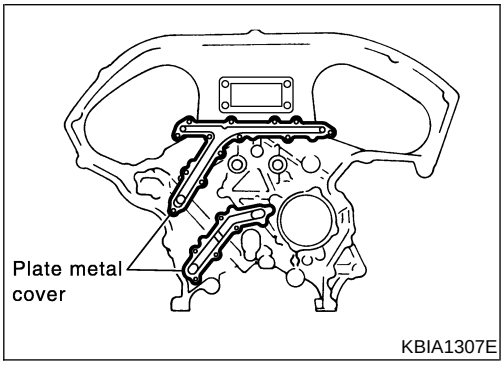

CAUTION:
- **Do not remove plate metal cover of oil passage.**
- **After removing chain case, do not apply any load which affects flatness.**

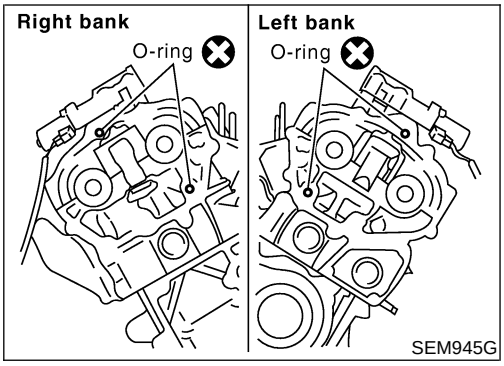

39. Remove O-rings from cylinder head.

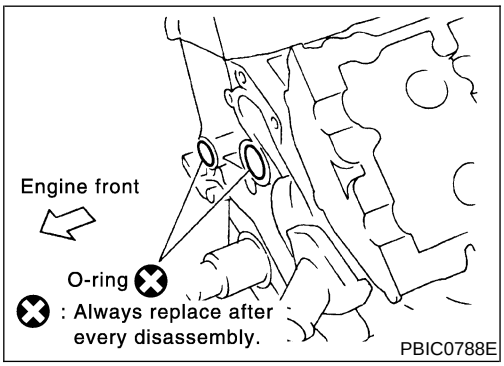

40. Remove O-rings from cylinder block.

41. Remove RH and LH camshaft chain tensioners from cylinder head as follows if necessary.
a. Remove No. 1 camshaft brackets.
Refer to EM-45, "Removal".
b. Remove chain tensioners with stopper pin attached.

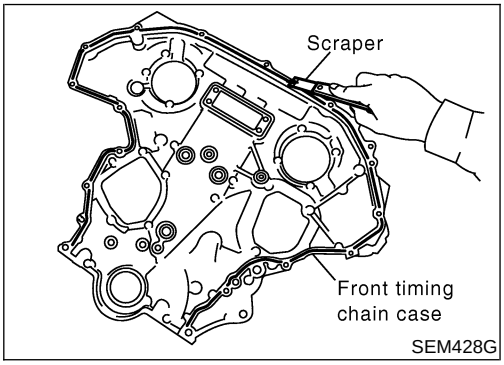

42. Use a scraper to remove all traces of liquid gasket from front and rear timing chain case, and opposite mating surfaces.

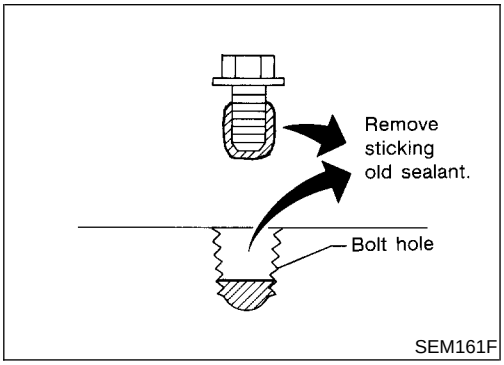

- **Remove old liquid gasket from the bolt hole and thread.**

43. Remove front oil seal from front timing chain case. Refer to EM-43, "FRONT OIL SEAL".
44. Remove water pump cover and chain tensioner cover from front timing chain case if necessary.

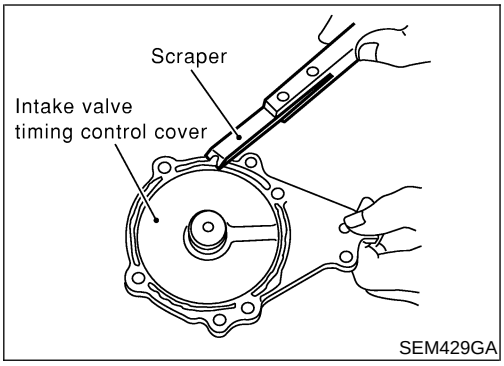

45. Use a scraper to remove all traces of liquid gasket from intake valve timing control cover, water pump cover and chain tensioner cover.

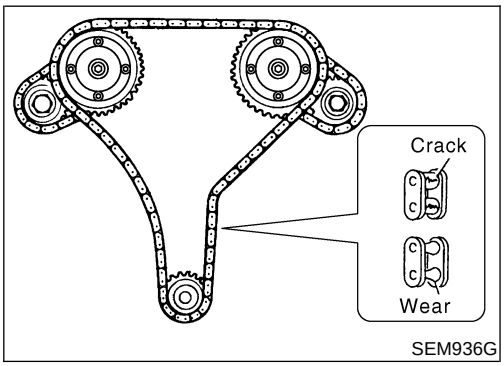

Inspection

NAEM0013

Check for cracks and excessive wear at roller links. Replace chain if necessary.

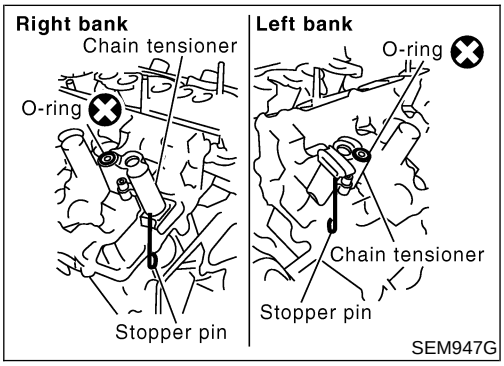

Installation

NAEM0014

1. Install RH and LH camshaft chain tensioners to cylinder head as follows if removed.

a. Install chain tensioners with stopper pin attached and new O-ring.

b. Install No. 1 camshaft brackets.

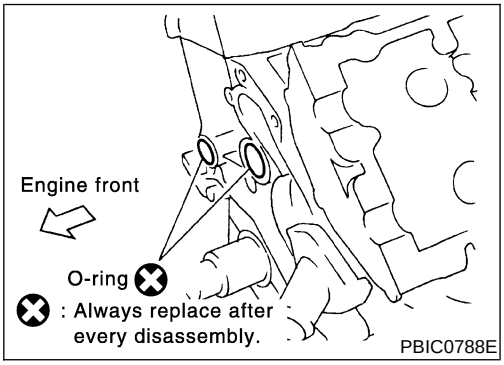

2. Install new O-rings to cylinder block if rear timing chain case is removed.

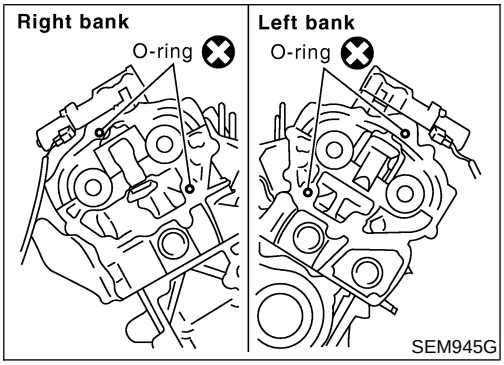

3. Install new O-rings to cylinder head if rear timing chain case is removed.

4. Apply liquid gasket to rear timing chain case. Refer to EM-25, "POSITION FOR APPLYING LIQUID GASKET".

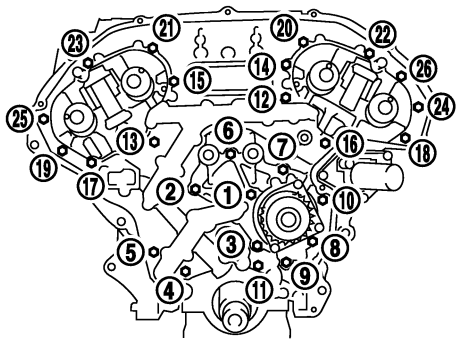

12 - 13 N•m
(1.2 - 1.4 kg-m, 9 - 10 ft-lb)

SEM448G

5. Align rear timing chain case, if removed, with dowel pins (RH and LH) on cylinder block. Then install it.
- Do not allow O-ring to drop.

a. Tighten mounting bolts in order as shown in the figure.
- Install two types of mounting bolts, referring to the following instructions and figure.

Bolt length:

20 mm (0.79 in) (1, 2, 3, 6, 7, 8, 9, and 10 in the figure)

16 mm (0.63 in) (other than the above)

b. After all bolts are temporarily tightened, retighten them to specified torque in order shown in the figure.

6. After installing rear timing chain case, check surface height difference between following parts on oil pan mounting surface.

Standard

Rear timing chain case to cylinder block:

−0.24 to 0.14 mm (−0.0094 to 0.0055 in)

- If not within standard, repeat above installation procedure.

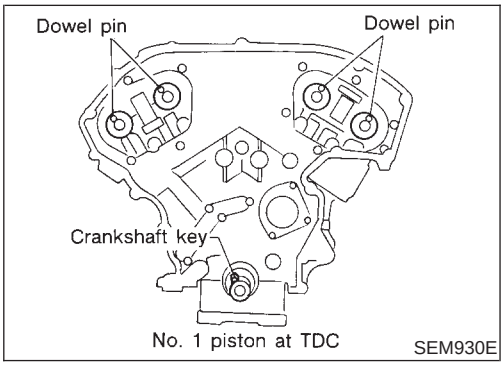

SEM930E

7. Make sure that camshaft and crankshaft are at TDC position of No. 1 cylinder.
- Make sure that dowel pin and crankshaft key are located as shown in the figure.
  Camshaft dowel pin: At cylinder head upper face side in each bank
  Crankshaft key: At cylinder head side of RH bank

NOTE:
Though camshafts are not stopped at the positions as shown in the figure for the cam nose locations, it is appropreate in this step that camshafts are stopped at the basically same direction of the figure.

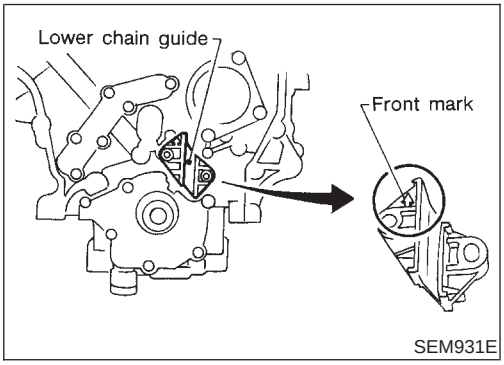

SEM931E

8. Install lower chain guide on dowel pin, with front mark on the guide facing upside.

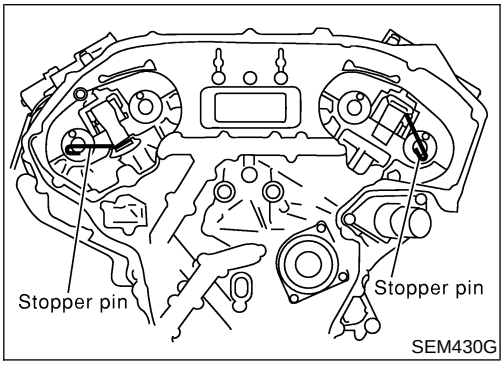

SEM430G

9. Install secondary timing chain and camshaft sprockets.

a. Press and shrink the secondary chain tensioner sleeve, and fix it using stopper pins.
- Lubricate threads and seat surfaces of camshaft sprocket bolts with new engine oil.

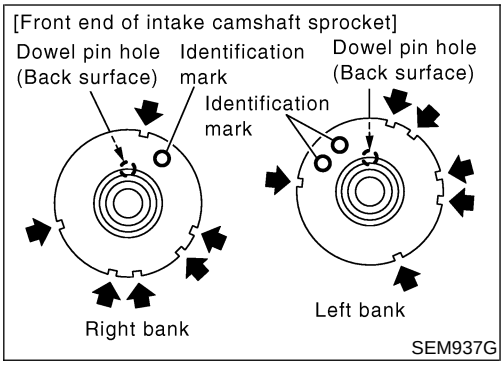

b. Identify intake camshaft sprocket of the right and left bank.

- Identify by front identification mark [10 mm (0.39 in) dia. recess] number and cutout position difference for signal detection of front end circumference.
- Exhaust camshaft sprocket is a common part for both banks.

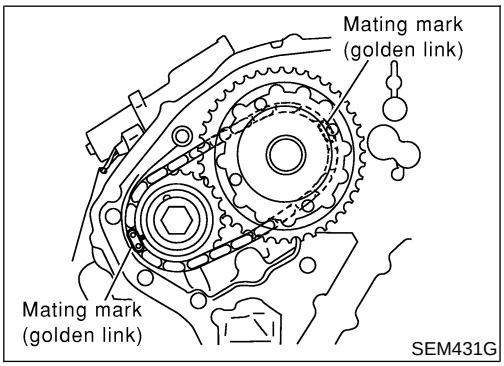

c. Install secondary timing chain and sprocket.

- Align mating marks (golden links) on secondary timing chain with those (punched marks) on the intake and exhaust sprockets.
- Align camshaft dowel pins with the sprocket groove and hole.
- Because camshaft sprocket mounting bolts are tightened in step 10, perform manual tightening to the extent necessary to keep camshaft dowel pin from dislocating.

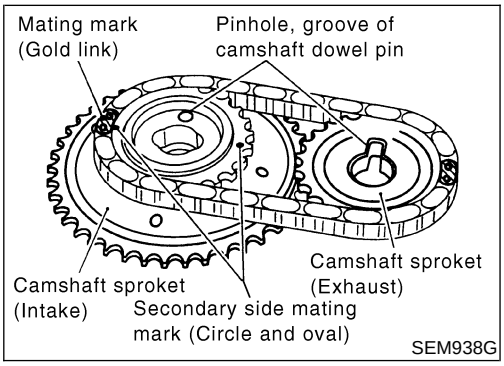

- Mating marks of the intake sprocket are on the back side of the secondary sprockets. There are two types of the marks; circle and oval types, which should be used for right and left banks respectively.

  Right bank: Circle

  Left bank: Oval
- In cases that positions of each mating mark and each dowel pin are not fit on mating parts, make fine adjustment to the position holding the hexagonal head of camshaft with a spanner or equivalent.

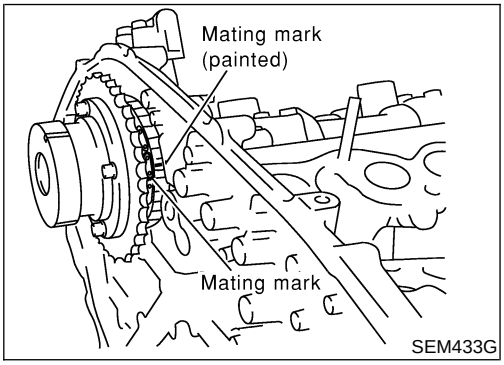

- It may be difficult to visually check the dislocation of mating marks during and after installation. To make the matching easier, make a mating mark on top of the sprocket teeth and its extended line in advance with paint.

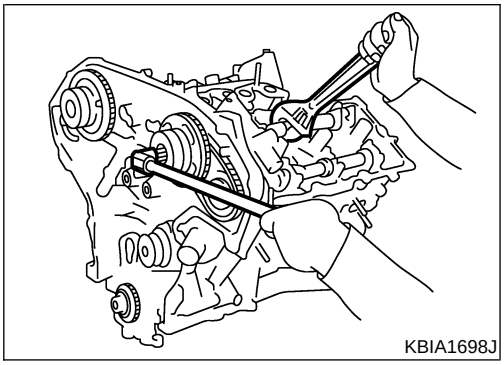

10. After confirming the mating marks are aligned, tighten the camshaft sprocket mounting bolts.

- Secure the camshaft hexagonal head using a spanner to tighten mounting bolts.

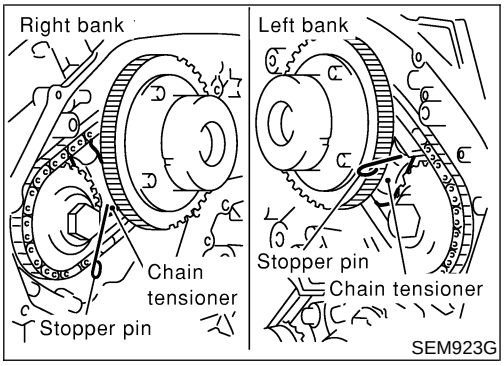

11. Pull out the stopper pin from the secondary timing chain tensioner.
12. Install primary timing chain.

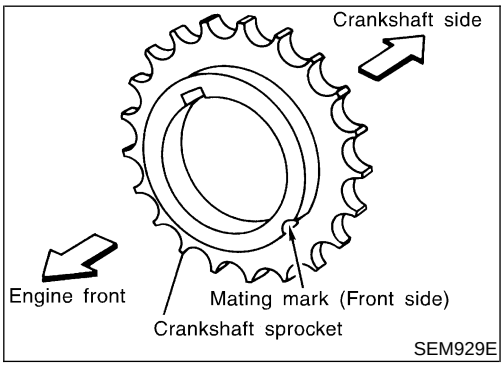

- Install crankshaft sprocket, with mating mark to timing chain facing front of engine.

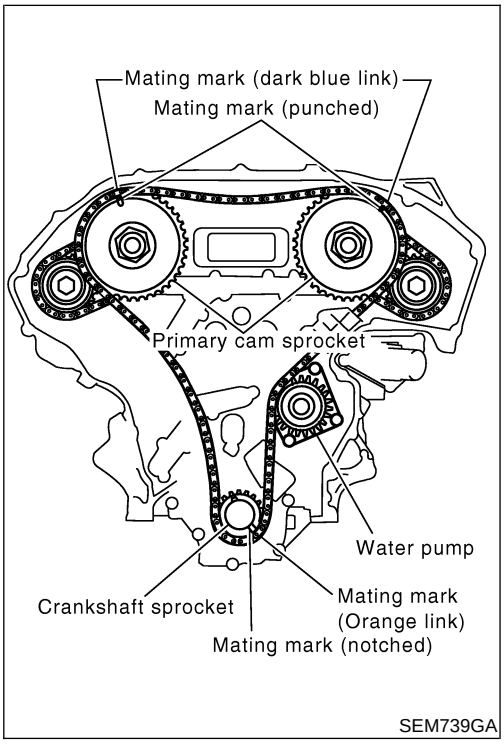

- Install primary timing chain so that mating mark (punched) on camshaft sprocket is aligned with that (dark blue link) on the timing chain, and mating mark (notched) on crankshaft sprocket is aligned with that (orange link) on the timing chain, respectively.
- When it is difficult to align mating marks of the primary timing chain with each sprocket, gradually turn the camshaft hexagonal head using a spanner so it is aligned with the mating mark.
- During alignment, be careful to prevent dislocation of mating marks on the secondary timing chain.

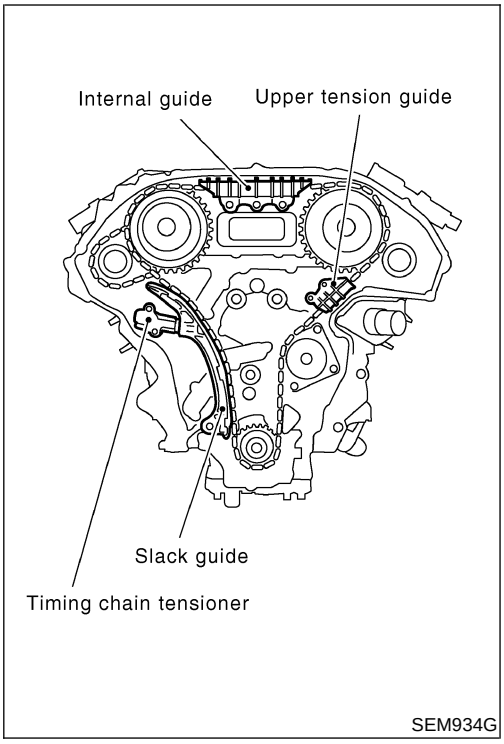

13. Install internal guide.
14. Install upper tension guide and slack guide.

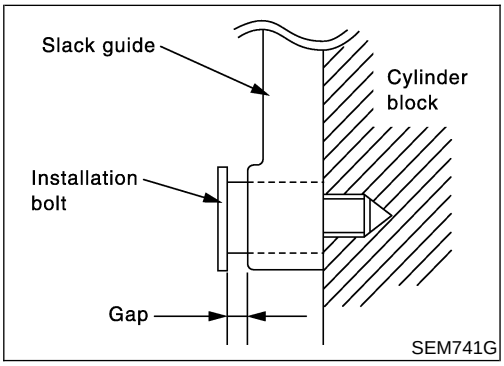

- Do not overtighten the slack guide mounting bolts. It is normal for a gap to exist under the bolt seats when the mounting bolts are tightened to specification.

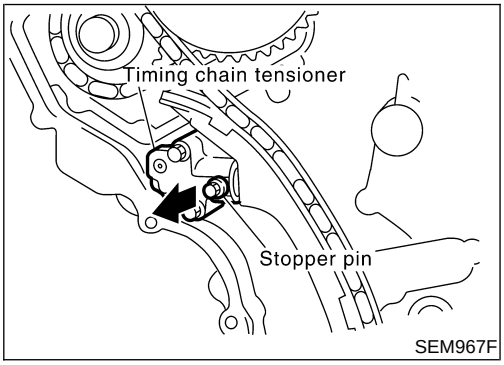

15. Install timing chain tensioner, then remove the stopper pin.
- **When installing the timing chain tensioner, engine oil should be applied to the oil hole and tensioner.**

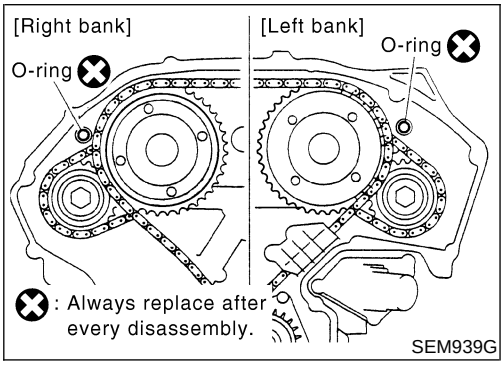

16. Install O-rings on rear timing chain case.

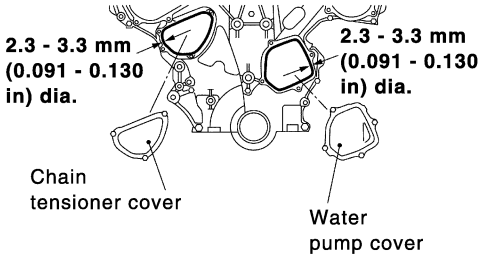

SEM744GA

17. Install the water pump cover and the chain tensioner cover to front timing chain case if removed.
- Apply RTV silicone sealant or equivalent. Refer to GI-53, "RECOMMENDED CHEMICAL PRODUCTS AND SEALANTS".
18. Install new front oil seal, then apply liquid gasket to front timing chain case.
- Refer to "OIL SEAL INSTALLATION DIRECTION", EM-43.
- Refer to "POSITION FOR APPLYING LIQUID GASKET", EM-25.
- **Before installation, wipe off the protruding sealant.**

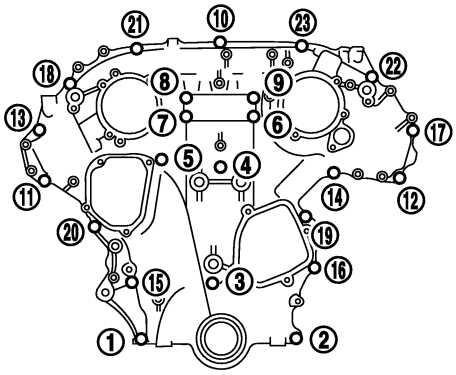

① - ② 8 mm dia. bolts
25.5 - 31.4 N•m
(2.6 - 3.2 kg-m, 18.8 - 23.1 ft-lb)
③ - ㉓ 6 mm dia. bolts
11.8 - 13.7 N•m
(1.2 - 1.4 kg-m, 8.7 - 10.1 ft-lb)

SEM436G

19. Install rear timing chain case pin into dowel pin hole on front timing chain case.
20. Tighten bolts to the specified torque in order shown in the figure.
- **Leave the bolts unattended for 30 minutes or more after tightening.**

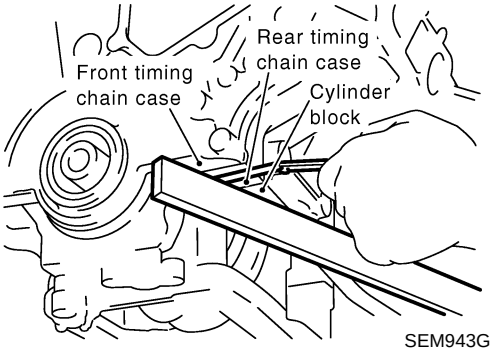

SEM943G

21. After installing front timing chain case, check surface height difference between following parts on oil pan mounting surface.

Standard

Front timing chain case to rear timing chain case:
−0.14 to 0.14 mm (−0.0055 to 0.0055 in)

- If not within standard, repeat above installation procedure.

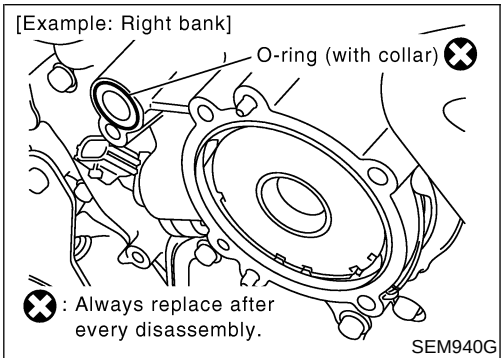

SEM940G

22. Install LH and RH intake valve timing control covers.

a. Install collared O-rings in front timing chain case oil hole (RH and LH sides).

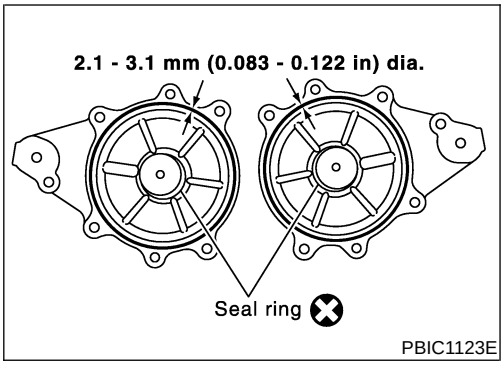

b. Install seal ring at intake valve timing control covers.
c. Apply liquid gasket to intake valve timing control covers.
Use genuine RTV silicone sealant or equivalent. Refer to GI-53.
d. Being careful not to move the seal ring from the installation groove, align the dowel pins on the chain case with the holes to install the intake valve timing control cover.

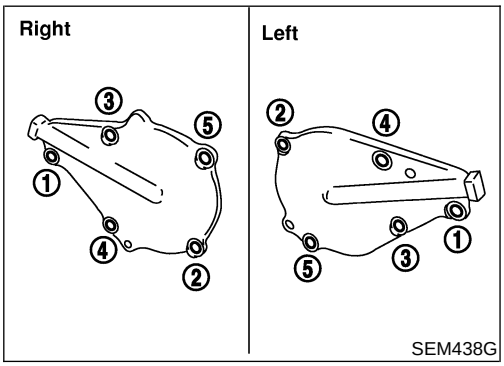

e. Tighten in numerical order as shown in the figure.

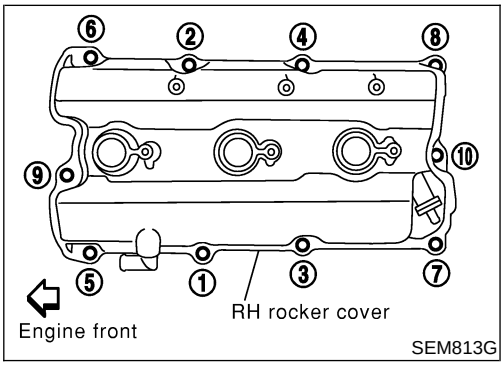

23. Install RH and LH rocker covers.
Rocker cover tightening procedure:
- **Tighten in numerical order as shown in the figure.**

a. Tighten bolts 1 to 10 in that order to 6.9 to 8.8 N·m (0.7 to 0.9 kg-m, 61 to 78 in-lb).
b. Then tighten bolts 1 to 10 as indicated in figure to 6.9 to 8.8 N·m (0.7 to 0.9 kg-m, 61 to 78 in-lb).
24. Hang engine using the right and left side engine slingers with a suitable hoist.
25. Set a suitable transmission jack under the suspension member.
26. Remove right and left side engine mounting nuts.
27. Remove right and left side suspension member bolts.
28. Install oil pan. Refer to EM-22, "Installation".
29. Set ring gear stopper using the mounting bolt hole.
- Be careful not to damage the signal plate teeth.

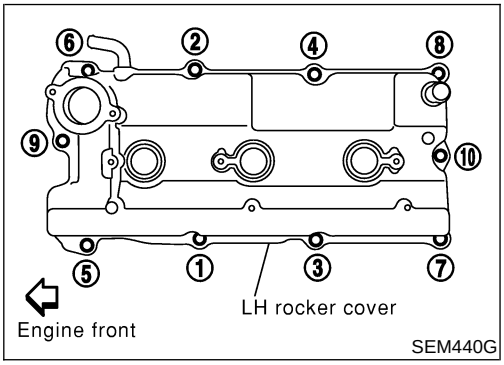

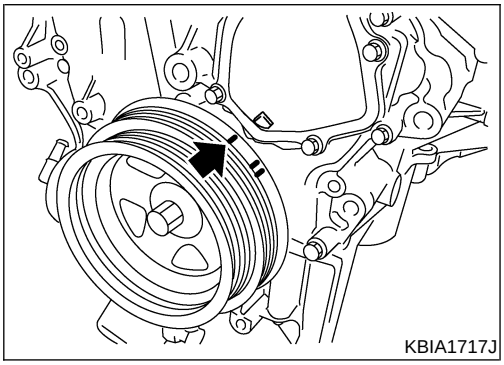

30. Install crankshaft pulley to crankshaft.
- Align pointer with TDC mark on crankshaft pulley.

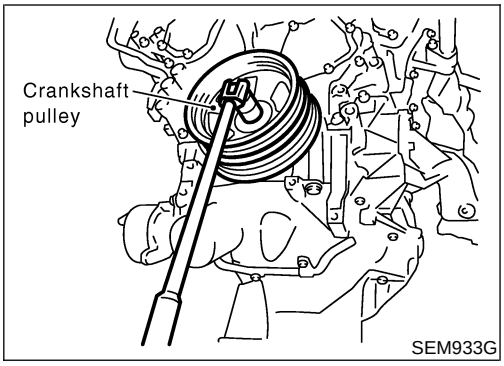

31. Install crankshaft pulley bolt.
- **Lubricate thread and seat surface of the bolt with new engine oil.**

a. Tighten to 39 to 49 N·m (4.0 to 5.0 kg-m, 29 to 36 ft-lb).
b. Put a paint mark on the crankshaft pulley.

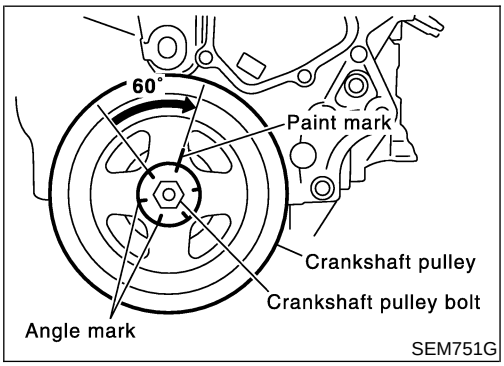

c. Again tighten by turning 60° to 66°, about the angle from one hexagon bolt head corner to another.
32. Install camshaft position sensors (PHASE), crankshaft position sensor (POS).
33. Reinstall removed parts in the reverse order of removal.
- When installing fuel tube and intake manifold collectors, refer to EM-12, "TIGHTENING PROCEDURES".
- **Check oil level. Refer to MA-18, "Changing Engine Oil".**
- **After starting engine, keep idling for three minutes. Then rev engine up to 3,000 rpm under no load to purge air from the high-pressure chamber of the chain tensioners. The engine may produce a rattling noise. This indicates that air still remains in the chamber and is not a matter of concern.**

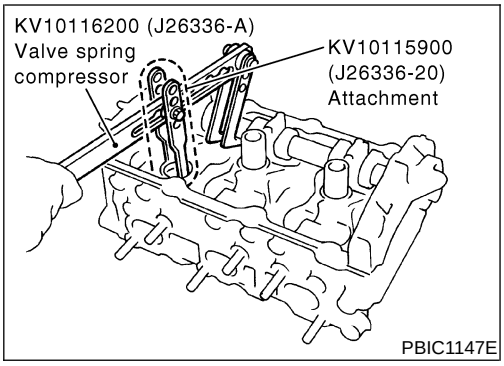

Replacement

NAEM0015

CAUTION:

When removing the oil pans, oil pump assembly and timing chain from engine, first remove the camshaft position sensors (PHASE), intake valve timing control position sensor and the crankshaft position sensor (POS) from the assembly.
Be careful not to damage sensor edges.

VALVE OIL SEAL

NAEM0015S01

1. Remove timing chain. Refer to “Removal”, EM-27.
2. Remove camshaft brackets and camshaft. Refer to “Removal”, EM-45.
3. Remove valve lifters.
4. Remove valve spring with Tool.
   Before removing valve spring, fix valve as follows.
   Piston concerned should be set at TDC to prevent valve from falling.

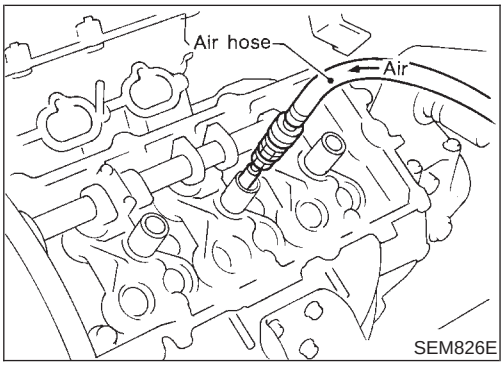

Remove spark plug, then install air hose adapter into spark plug hole and apply air pressure to hold valves in place. Apply a pressure of 490 kPa (5 kg/cm^2, 71 psi).

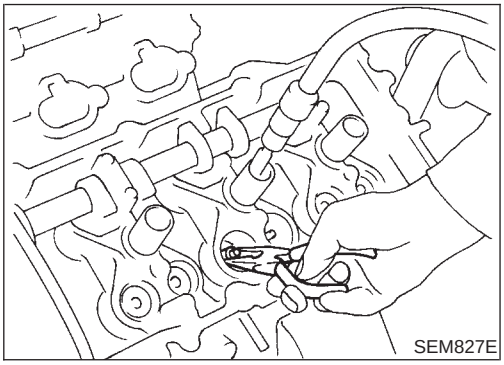

5. Remove valve oil seal.

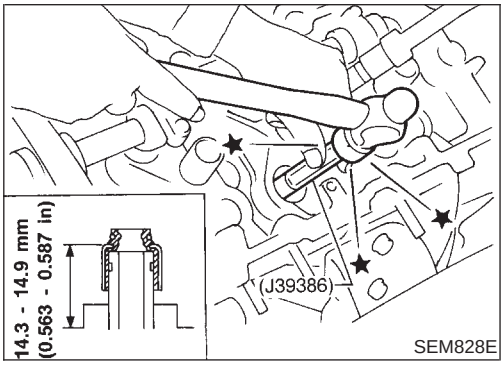

6. Apply engine oil to new valve oil seal and install it with Tool.
7. Reinstall any parts removed in reverse order of removal.

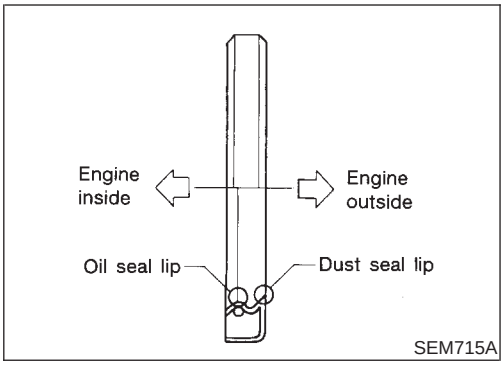

OIL SEAL INSTALLATION DIRECTION

NAEM0015S02

- Install new oil seal in the direction shown in the figure.

FRONT OIL SEAL

NAEM0015S03

1. Remove the following parts:
- Engine undercover
- Suspension member stay
- Drive belts
- Crankshaft pulley: Refer to EM-27, "Removal".
- Radiator: Refer to LC-22, "REMOVAL AND INSTALLATION".
- Cooling fan

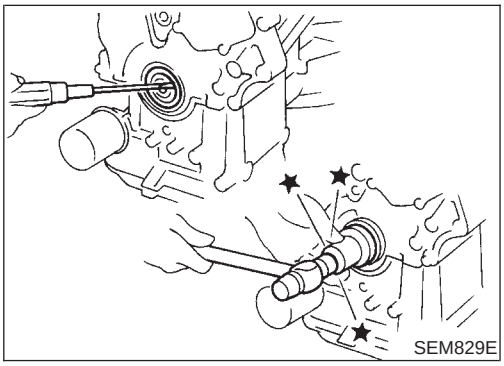

2. Remove front oil seal using a suitable tool.
   Be careful not to scratch front cover.
3. Apply engine oil to new oil seal and install it using a suitable tool until its front end is level with front end of front cover.

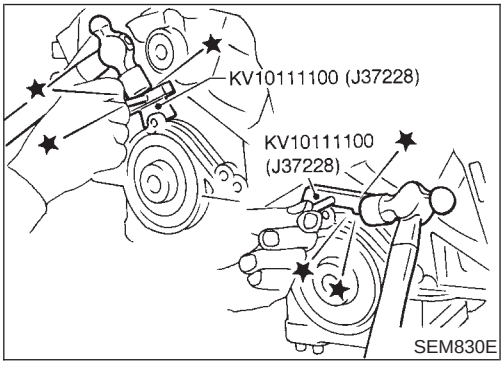

REAR OIL SEAL

NAEM0015S04

1. Remove transmission. Refer to MT-7 or AT-273, "Removal".
2. Remove flywheel or drive plate.
3. Remove oil pan. Refer to EM-19.
4. Remove rear oil seal retainer.

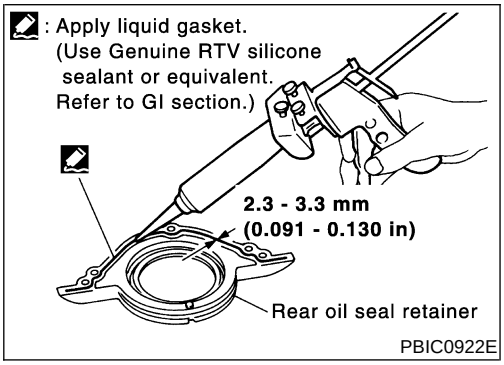

5. Apply liquid gasket to rear oil seal retainer.
- Assembly should be done within 5 minutes after coating.

Components

NAEM0016

SEC. 111•118•130•140•220

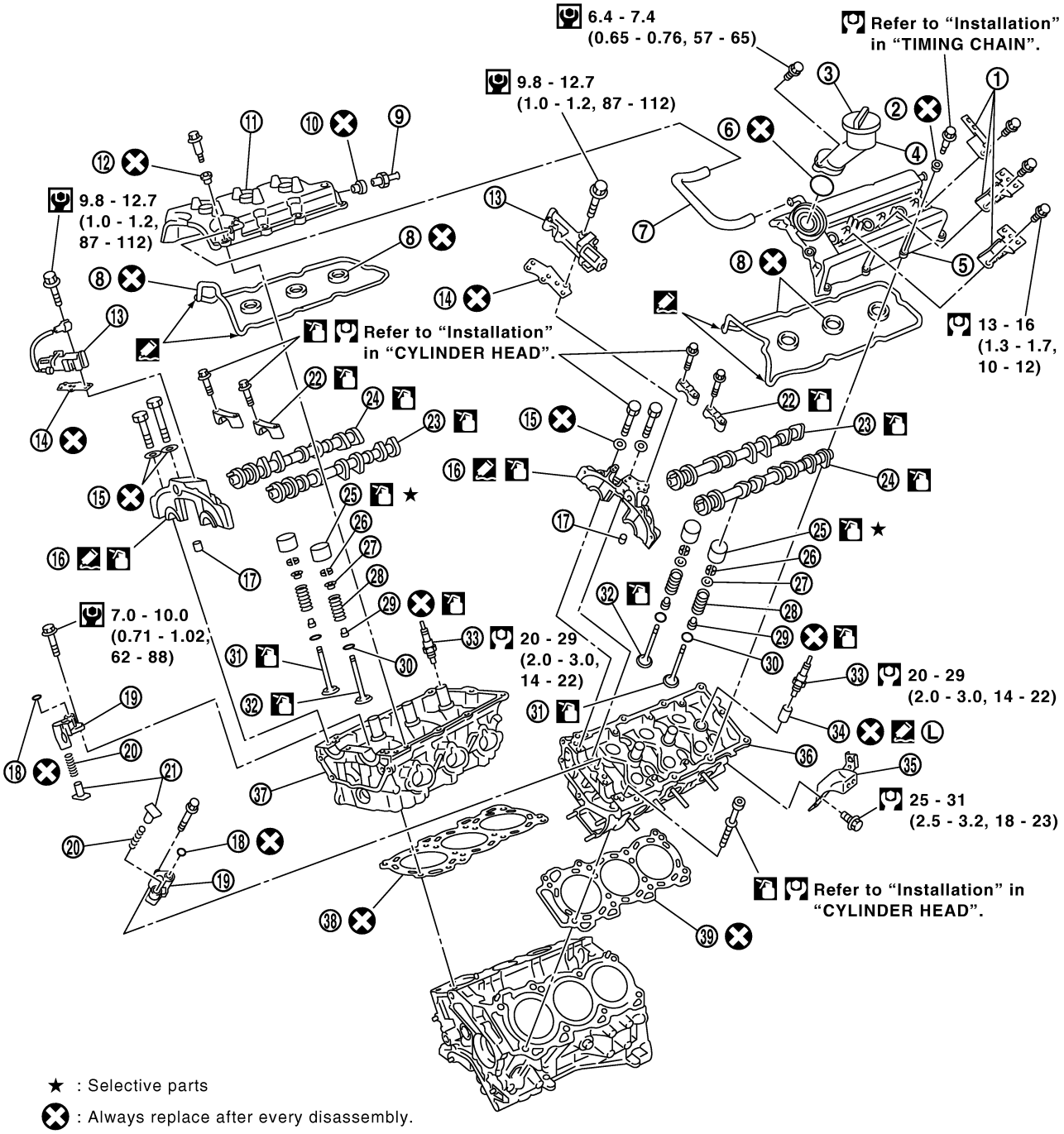

★ : Selective parts

⊗ : Always replace after every disassembly.

: Apply Genuine RTV Silicone Sealant or equivalent. Refer to GI section.

Ⓛ : Apply Genuine High Strength Locking Sealant or equivalent. Refer to GI section.

: Lubricate with new engine oil.

: N•m (kg-m, ft-lb)

: N•m (kg-m, in-lb)

SEM200H

1. Bracket
2. Washer
3. Oil filler cap
4. Oil filler tube
5. LH rocker cover
6. O-ring
7. PCV hose
8. Gasket
9. PCV valve
10. Gasket
11. RH rocker cover
12. Washer
13. Intake valve timing control solenoid valve
14. Gasket
15. Seal washer
16. Camshaft bracket (No. 1)
17. Dowel pin
18. O-ring
19. Chain tensioner
20. Spring
21. Tensioner sleeve
22. Camshaft bracket (No. 2 to No. 4)
23. Camshaft (INT)
24. Camshaft (EXH)
25. Valve lifter
26. Valve collet
27. Valve spring retainer
28. Valve spring
29. Valve oil seal
30. Valve spring seat
31. Valve (EXH)
32. Valve (INT)
33. Spark plug
34. Spark plug tube
35. Engine rear lower slinger
36. Cylinder head (left bank)
37. Cylinder head (right bank)
38. Cylinkder head gasket (right bank)
39. Cylinder head gasket (left bank)

CAUTION:

- **When installing camshafts, chain tensioners, oil seals, or other sliding parts, lubricate contacting surfaces with new engine oil.**
- **Apply new engine oil to threads and seat surfaces when installing cylinder head, camshaft sprocket, crankshaft pulley, and camshaft bracket.**
- **Attach tags to valve lifters so as not to mix them up.**

Removal

NAEM0017

1. Release fuel pressure. Refer to EC-56, "Fuel pressure release".
2. Drain engine coolant and engine oil.
3. Remove the following parts.
- Battery
- Engine undercover
- Radiator shroud
- Radiator: Refer to LC-22, "REMOVAL AND INSTALLATION".
- Cooling fan
- Drive belts
4. Remove exhaust front tubes. Refer to FE-9, "EXHAUST SYSTEM".
5. Remove exhaust manifolds in reverse order of installation. Refer to EM-13, "Exhaust Manifold".
6. Remove aluminum oil pan. Refer to EM-19, "Removal".
7. Remove front timing chain case, timing chain and rear timing chain case. Refer to EM-27, "Removal".

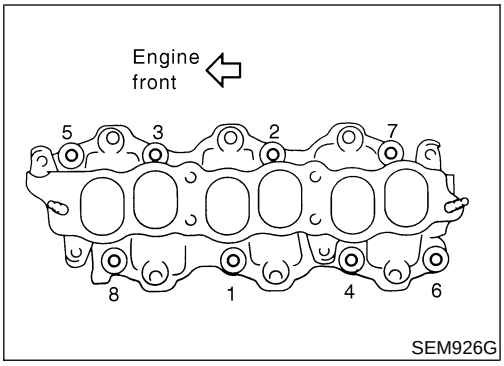

8. Remove intake manifold in reverse order of illustration.
9. Remove water outlet.

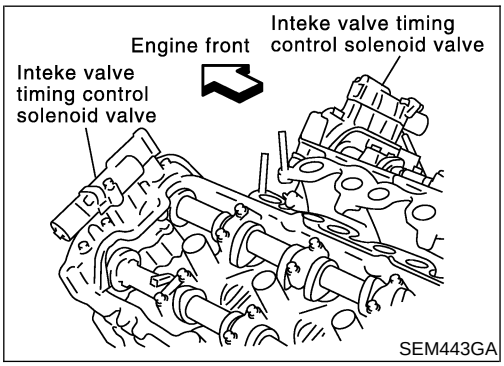

10. Remove intake valve timing control solenoid valves.

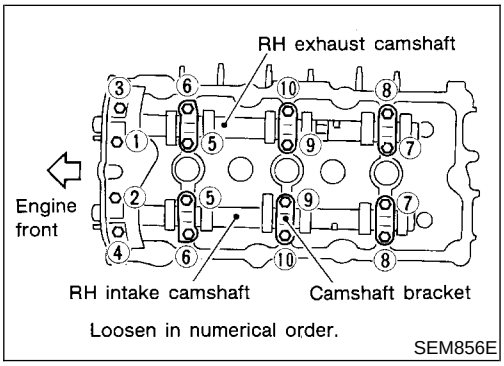

11. Remove intake and exhaust camshafts and camshaft brackets.
- Equally loosen camshaft bracket bolts in several steps in the numerical order shown in the figure.

  For reinstallation, be sure to put marks on camshaft bracket before removal.

12. Remove valve lifters.
- Identify installation positions, and store them without mixing them up.

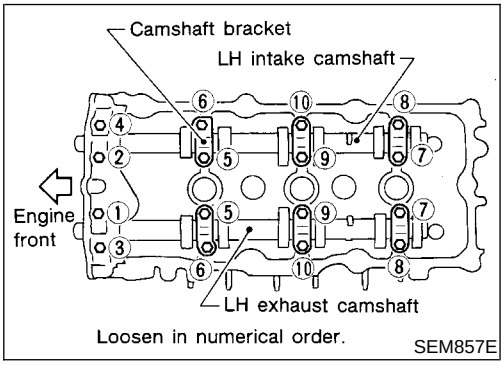

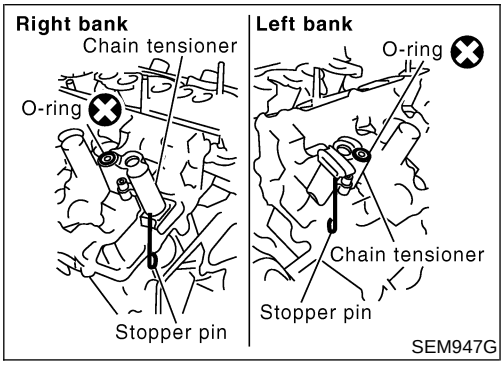

13. Remove RH and LH camshaft chain tensioners from cylinder head.
- Remove chain tensioner with its stopper pin attached.
- Stopper pin was attached when secondary timing chain was removed.

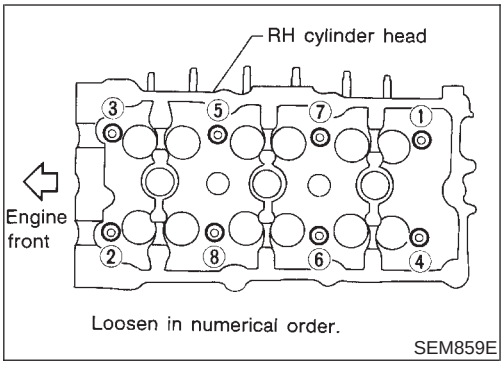

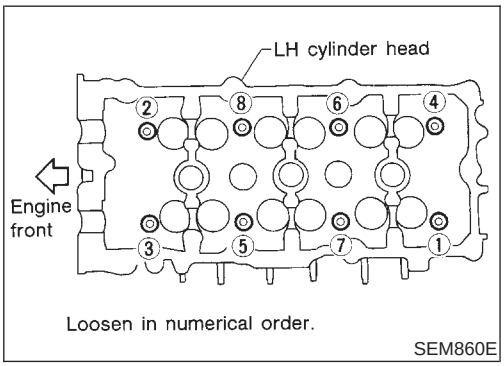

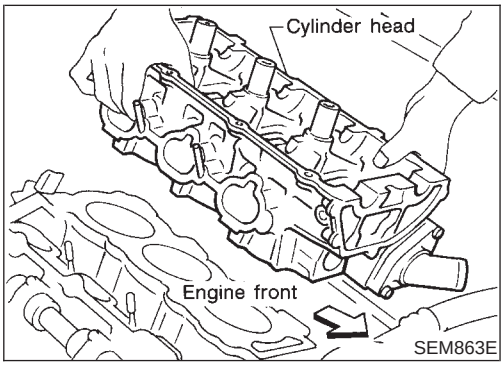

14. Remove cylinder head bolts.
- **Cylinder head bolts should be loosened in two or three steps.**
- **A warped or cracked cylinder head could result from removing in incorrect order.**

15. Remove cylinder head.

Disassembly

NAEM0043

1. Remove spark plug with spark plug wrench (commercial service tool).
2. Remove valve component parts.
   Refer to EM-42, "VALVE OIL SEAL".
- Check the clearance before removing the valve guide. Refer to EM-50, "VALVE GUIDE CLEARANCE".

3. Remove spark plug tube, as necessary.
- Using a pair of pilers, pull spark plug tube out of cylinder head.

CAUTION:
- **Take care not to damage cylinder head.**
- **Once removed, a spark plug tube will be deformed and cannot be reused. Do not remove it unless absolutely necessary.**

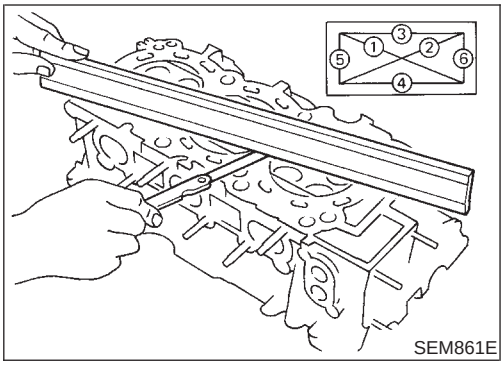

SEM861E

Inspection

NAEM0019

CYLINDER HEAD DISTORTION

NAEM0019S01

Clean surface of cylinder head.
Use a reliable straightedge and feeler gauge to check the flatness of cylinder head surface.
Check along six positions shown in the figure.

Head surface flatness: Limit 0.1 mm (0.004 in)

If beyond the specified limit, resurface or replace it.
The limit for cylinder head resurfacing is determined by the cylinder block resurfacing.

Resurfacing limit:
Amount of cylinder head resurfacing is "A".
Amount of cylinder block resurfacing is "B".
The maximum limit : A + B = 0.2 mm (0.008 in)

After resurfacing cylinder head, check that camshaft rotates freely by hand. If resistance is felt, cylinder head must be replaced.

Nominal cylinder head height:
126.3 - 126.5 mm (4.972 - 4.980 in)

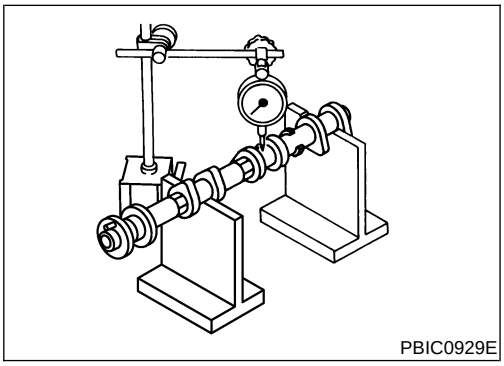
PBIC0929E

CAMSHAFT VISUAL CHECK

NAEM0019S02

Check camshaft for scratches, seizure and wear.

CAMSHAFT RUNOUT

NAEM0019S03

1. Put V block on precise flat bed, and support No. 2 and No. 4 journal of camshaft.
2. Set dial gauge vertically to No. 3 journal.
3. Turn camshaft to one direction with hands, and measure camshaft runout on dial gauge.

   Runout (Total indicator reading):
   Limit 0.05 mm (0.0020 in)
4. If it exceeds the limit, replace camshaft.

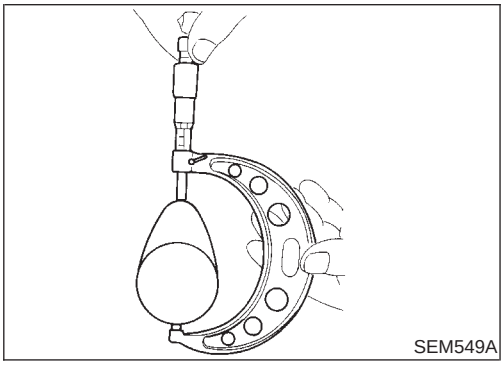
SEM549A

CAMSHAFT CAM HEIGHT

NAEM0019S04

1. Measure camshaft cam height.

   Standard cam height:
   Intake and exhaust
   44.465 - 44.655 mm (1.7506 - 1.7581 in)

   Cam wear limit:
   0.2 mm (0.008 in)
2. If wear is beyond the limit, replace camshaft.

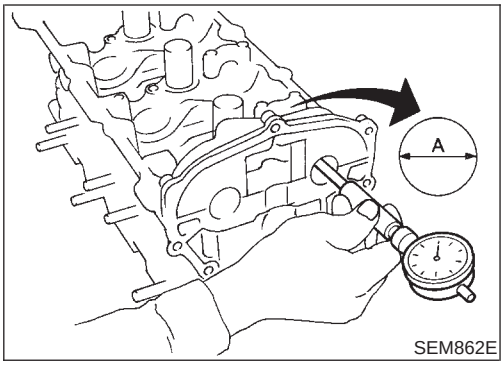

SEM862E

CAMSHAFT JOURNAL CLEARANCE

NAEM0019S05

1. Install camshaft bracket and tighten bolts to the specified torque.
2. Measure inner diameter "A" of camshaft bearing.

   Standard inner diameter:

   No. 1: 26.000 - 26.021 mm (1.0236 - 1.0244 in)

   No. 2, 3, 4: 23.500 - 23.521 mm (0.9252 - 0.9260 in)

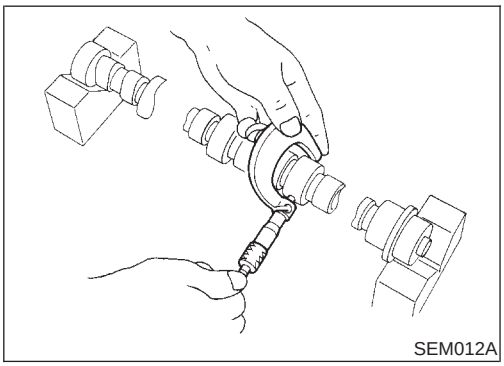
SEM012A

3. Measure outer diameter of camshaft journal.

   Standard outer diameter:

   No. 1: 25.935 - 25.955 mm (1.0211 - 1.0218 in)

   No. 2, 3, 4: 23.445 - 23.465 mm (0.9230 - 0.9238 in)
4. If clearance exceeds the limit, replace camshaft and/or cylinder head.

   Camshaft journal clearance:

   Standard

   No. 1: 0.045 - 0.086 mm (0.0018 - 0.0034 in)

   No. 2, 3, 4: 0.035 - 0.076 mm (0.0014 - 0.0030 in)

   Limit

   0.15 mm (0.0059 in)

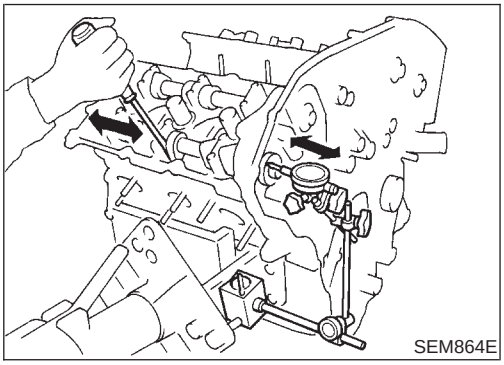
SEM864E

CAMSHAFT END PLAY

NAEM0019S06

1. Install dial indicator in thrust direction on front end of camshaft. Measure the end play of dial indicator when camshaft is moved forward/backward (in direction to axis).

   Standard

   0.115 - 0.188 mm (0.0045 - 0.0074 in)

   Limit

   0.24 mm (0.0094 in)

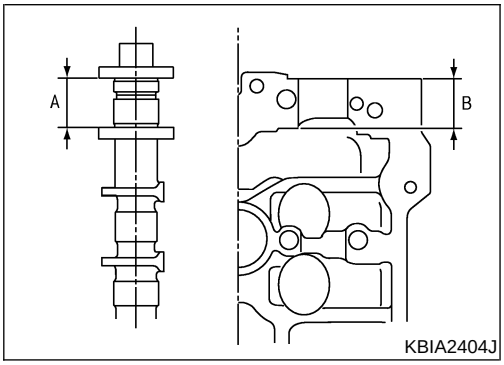

KBIA2404J

2. Measure the following parts if out of the limit.

- Dimension "A" for camshaft No. 1 journal

  Standard

  27.500 - 27.548 mm (1.0827 - 1.0846 in)

- Dimension "B" for cylinder head No. 1 journal bearing

  Standard

  27.360 - 27.385 mm (1.0772 - 1.0781 in)

3. Refer to the standards above, and then replace camshaft and/or cylinder head.

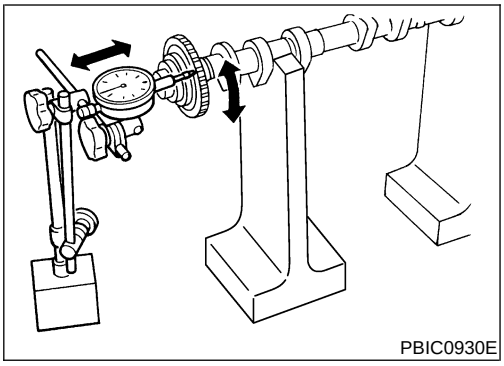
PBIC0930E

CAMSHAFT SPROCKET RUNOUT

NAEM0019S07

1. Put V block on precise flat bed, and support No. 2 and No. 4 journal of camshaft.
2. Install sprocket on camshaft.
3. Turn camshaft to one direction with hands, and measure camshaft sprocket runout on dial gauge.

   Runout (Total indicator reading):
   Less than 0.15 mm (0.0059 in)
4. If it exceeds the limit, replace camshaft sprocket.

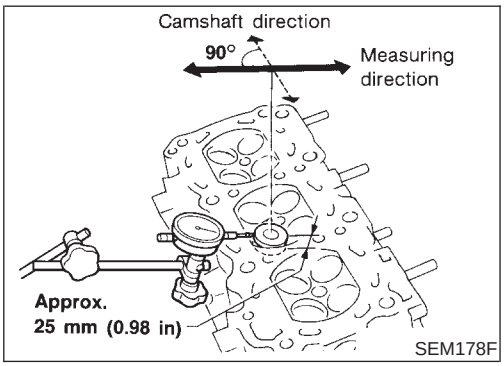

SEM178F

VALVE GUIDE CLEARANCE

NAEM0019S08

1. Measure valve deflection as shown in the figure. (Valve and valve guide mostly wear in this direction.)

   Valve deflection limit (Dial gauge reading):
   Intake 0.24 mm (0.0094 in)
   Exhaust 0.28 mm (0.0110 in)

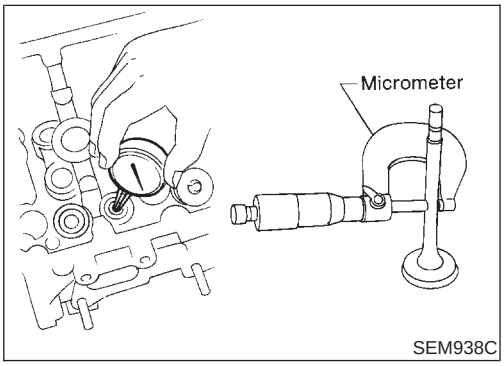

SEM938C

2. If it exceeds the limit, check valve to valve guide clearance.

a. Measure valve stem diameter and valve guide inner diameter.

b. Check that clearance is within specification.

   Valve to valve guide clearance limit:
   Intake 0.08 mm (0.0031 in)
   Exhaust 0.1 mm (0.004 in)

c. If it exceeds the limit, replace valve or valve guide.

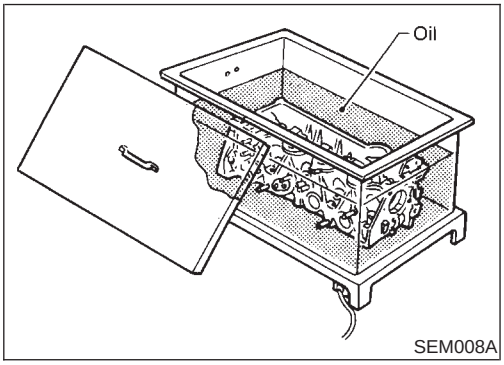

SEM008A

VALVE GUIDE REPLACEMENT

NAEM0019S09

1. To remove valve guide, heat cylinder head to 110 to 130°C (230 to 266°F) by soaking in heated oil.

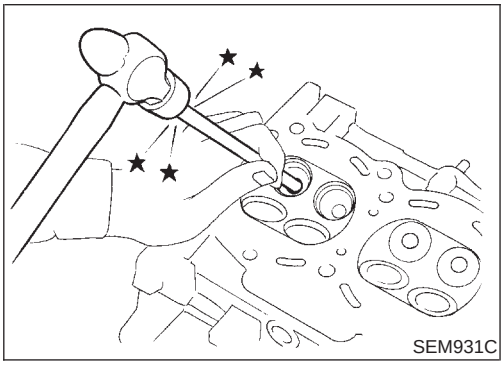
SEM931C

2. Drive out valve guide with a press [under a 20 kN (2 ton, 2.2 US ton, 2.0 Imp ton) pressure] or hammer and suitable tool.

CAUTION:
Cylinder head contains heat. When working, wear protective equipment to avoid getting burned.

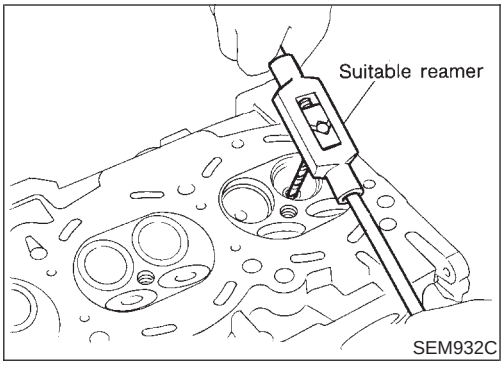

SEM932C

3. Ream cylinder head valve guide hole.

   Valve guide hole diameter (for service parts):

   10.175 - 10.196 mm (0.4006 - 0.4014 in)

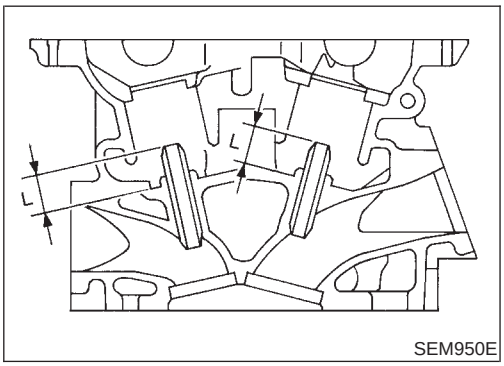

SEM950E

4. Heat cylinder head to 110 to 130°C (230 to 266°F) and press service valve guide onto cylinder head.

   Projection "L":

   12.6 - 12.8 mm (0.496 - 0.504 in)

CAUTION:

Cylinder head contains heat. When working, wear protective equipment to avoid getting burned.

5. Ream valve guide.

   Finished size:

   6.000 - 6.018 mm (0.2362 - 0.2369 in)

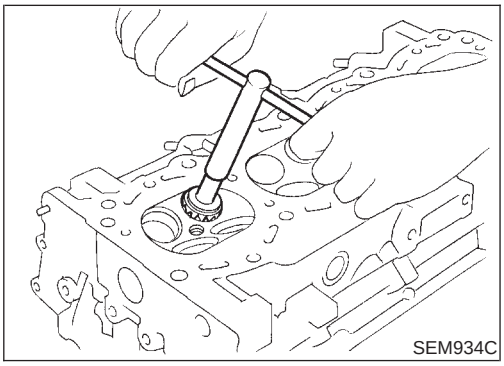
SEM934C

VALVE SEATS

NAEM0019S10

Check valve seats for any evidence of pitting at valve contact surface, and reseat or replace if it has worn out excessively.

- **Before repairing valve seats, check valve and valve guide for wear. If they have worn, replace them. Then correct valve seat.**
- **Use both hands to cut uniformly.**

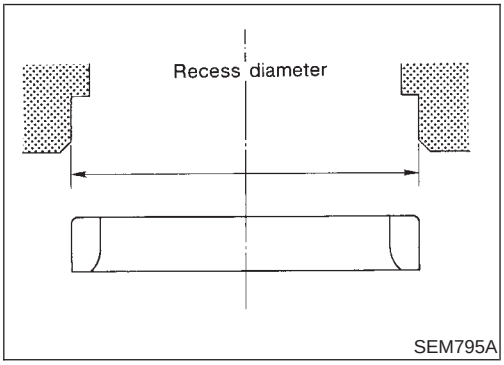

SEM795A

REPLACING VALVE SEAT FOR SERVICE PARTS

NAEM0019S11

1. Bore out old seat until it collapses. Boring should not continue beyond the bottom face of the seat recess in cylinder head. Set the machine depth stop to ensure this.
2. Ream cylinder head recess for service valve seat.

   Oversize [0.5 mm (0.020 in)]:

   Intake 38.500 - 38.516 mm (1.5157 - 1.5164 in)

   Exhaust 32.700 - 32.716 mm (1.2874 - 1.2880 in)

   Be sure to ream in circles concentric to the valve guide center.
   This will enable valve seat to fit correctly.

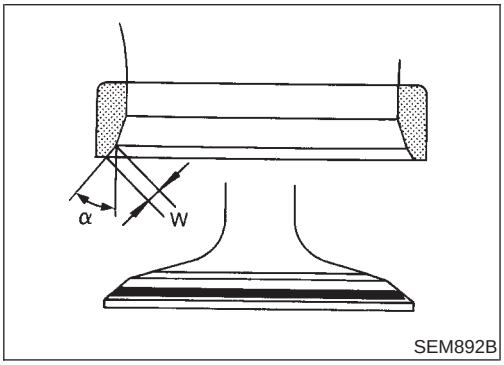

SEM892B

3. Heat cylinder head to 110 to 130°C (230 to 266°F) by soaking in heated oil.
4. Press fit valve seat until it seats on the bottom.

CAUTION:

Cylinder head contains heat. When working, wear protective equipment to avoid getting burned.

5. Cut or grind valve seat using suitable tool to the specified dimensions as shown in SDS (EM-85).
6. After cutting, lap valve seat with abrasive compound.
7. Check valve seating condition.

   Seat face angle "α": 45°

Contacting width "W":
Intake 1.09 - 1.31 mm (0.0429 - 0.0516 in)
Exhaust 1.29 - 1.51 mm (0.0508 - 0.0594 in)

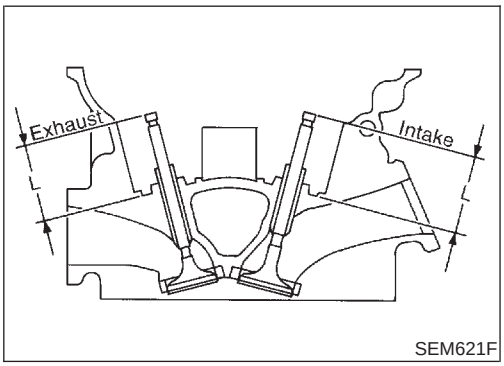

SEM621F

8. Use a depth gauge to measure the distance between the mounting surface of the cylinder head spring seat and the valve stem end. If the distance is shorter than specified, repeat step 5 above to adjust it. If it is longer, replace the valve seat with a new one.

Valve seat resurface limit "L":
Intake 41.07 - 41.67 mm (1.6169 - 1.6405 in)
Exhaust 41.00 - 41.60 mm (1.6142 - 1.6378 in)

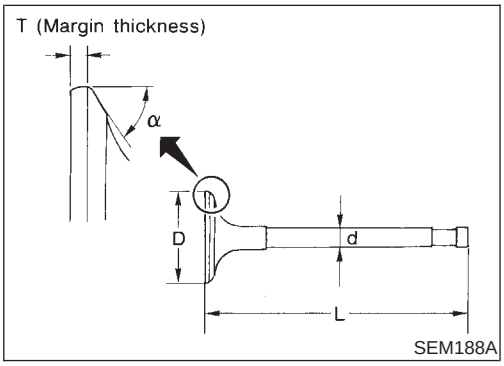

SEM188A

VALVE DIMENSIONS

NAEM0019S12

Check dimensions of each valve. For dimensions, refer to SDS (EM-83).
When valve head has been worn down to 0.5 mm (0.020 in) in margin thickness, replace valve.
Grinding allowance for valve stem tip is 0.2 mm (0.008 in) or less.

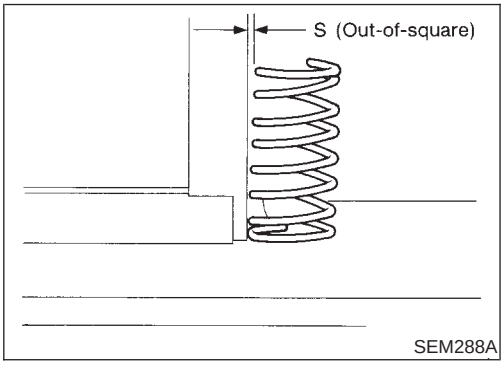

SEM288A

VALVE SPRING

NAEM0019S13

Squareness

NAEM0019S1301

1. Measure dimension "S".

Out-of-square "S":
Less than 2.0 mm (0.079 in)

2. If it exceeds the limit, replace spring.

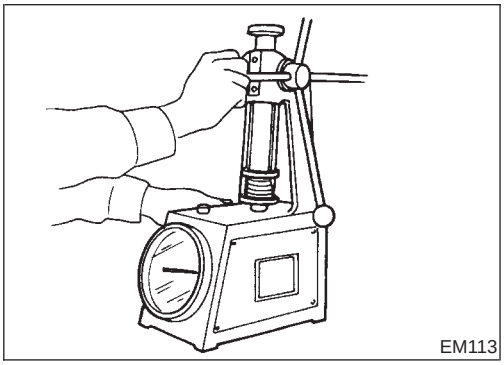
EM113

Pressure

NAEM0019S1302

Check valve spring pressure at specified spring height.

Pressure:
Installation
196 N (20.0 kg, 44.1 lb) at height 37.0 mm (1.457 in)
Valve open
More than 433 N (44.2 kg, 97.3 lb) at height 27.8 mm (1.094 in)

If it exceeds the limit, replace spring.

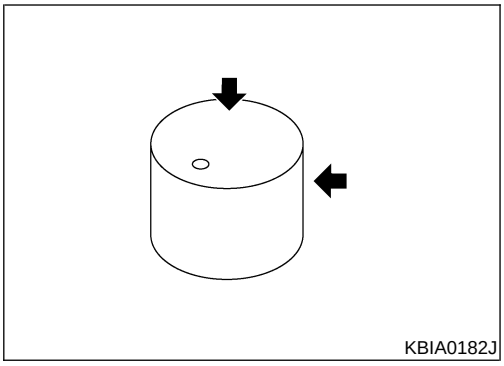
KBIA0182J

VALVE LIFTER

NAEM0019S14

1. Check contact and sliding surfaces for wear or scratches.

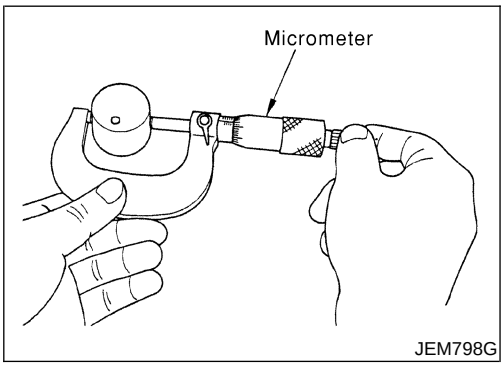

JEM798G

2. Check diameter of valve lifter and valve lifter guide bore.

Valve lifter outer diameter:
33.977 - 33.987 mm (1.3377 - 1.3381 in)

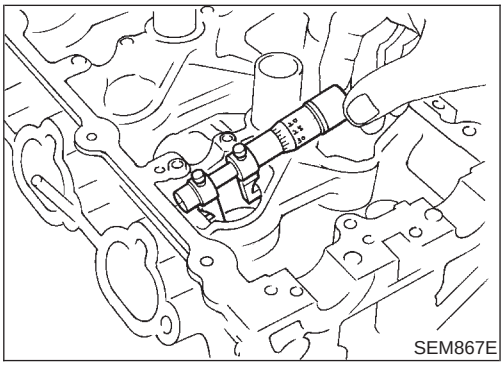
SEM867E

Lifter guide bore diameter:
34.000 - 34.016 mm (1.3386 - 1.3392 in)

Assembly

NAEM0020

1. Install spark plug tube.

- Press-fit spark plug tube following procedure below.

a. Remove old liquid gasket adhering to cylinder-head mounting hole.

b. Apply liquid gasket to area within approximately 12 mm (0.47 in) from edge of spark plug tube press-fit side.

- Use Genuine RTV Silicone Sealant or equivalent. Refer to GI-53, "RECOMENDED CHEMICAL PRODUCTS AND SEALANTS".

c. Using a drift, press-fit spark plug tube so that its height "H" is as specified in the figure.

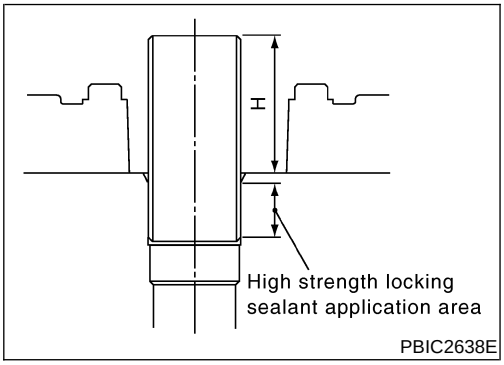

PBIC2638E

Standard press-fit height "H":
38.1 - 39.1 mm (1.500 - 1.539 in)

CAUTION:

- **When press-fitting, take care not to deform spark plug tube.**
- **After press-fitting, wipe off liquid gasket protruding onto cylinder-head upper face.**

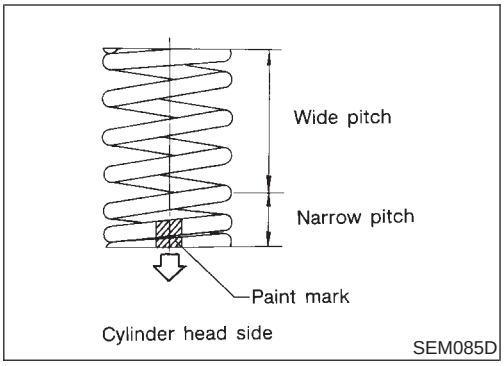

2. Install valve component parts.
- **Always use new valve oil seal. Refer to "VALVE OIL SEAL", EM-42.**
- **Before installing valve oil seal, install valve spring seat.**
- **Install valve spring (uneven pitch type) with its narrow pitch side toward cylinder head side (paint mark).**
- After installing valve component parts, tap valve stem tip with plastic hammer to assure a proper fit.

3. Install spark plug.

Installation

NAEM0021

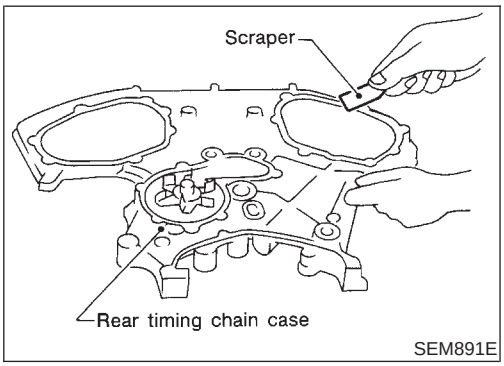

1. Before installing rear timing chain case, remove old liquid gasket from mating surface using a scraper.
- Also remove old liquid gasket from mating surface of cylinder block.

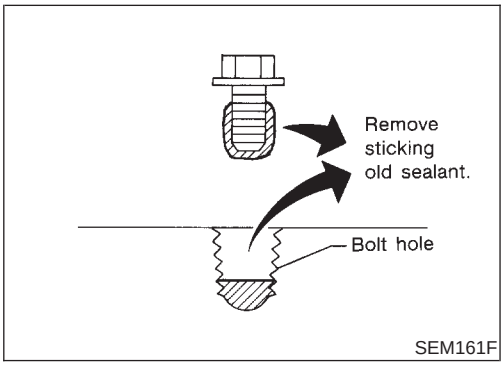

- **Remove old liquid gasket from the bolt hole and thread.**

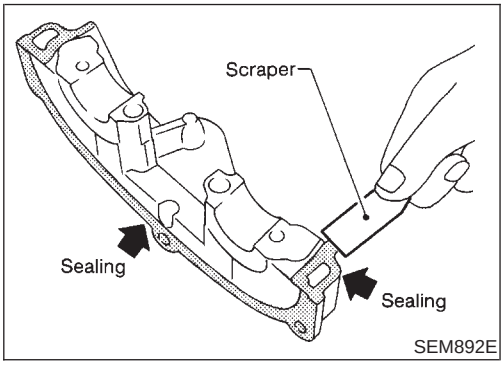

2. Before installing camshaft bracket, remove old liquid gasket from mating surface using a scraper.

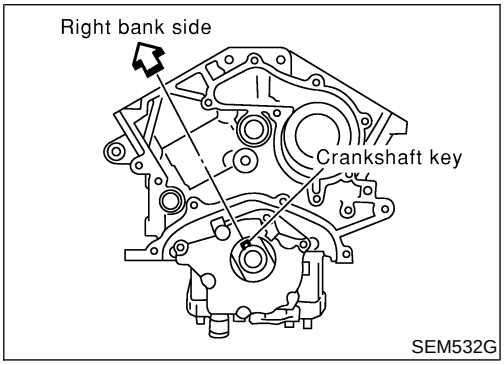

3. Before installing the cylinder head gasket, be sure that No. 1 cylinder is at TDC.
- At this time, the crankshaft key should face toward the right bank.

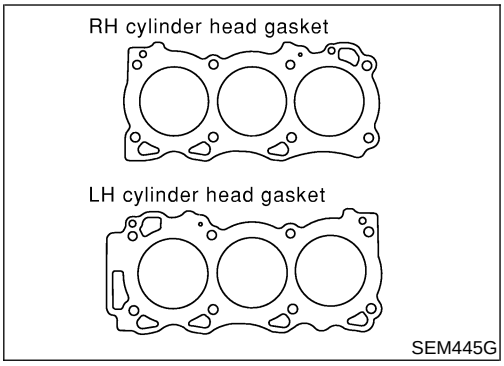

4. Install cylinder heads with new gaskets.

- **Do not rotate crankshaft and camshaft separately, or valves will strike piston heads.**

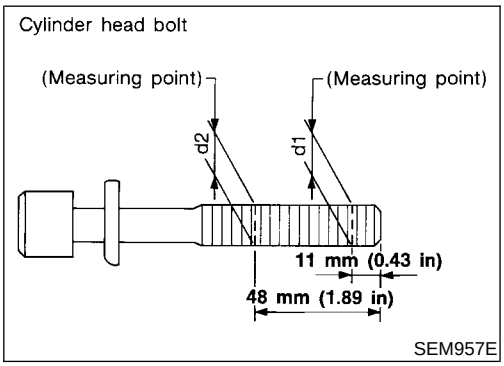

CAUTION:

Cylinder head bolts are tightened by plastic zone tightening method. Whenever the size difference between d1 and d2 exceeds the limit, replace them with new ones.

Limit (d1 - d2):
0.11 mm (0.0043 in)

- **Lubricate threads and seat surfaces of the bolts with new engine oil.**
- **If reduction of outer diameter appears in a position other than d2, use it as d2 point.**

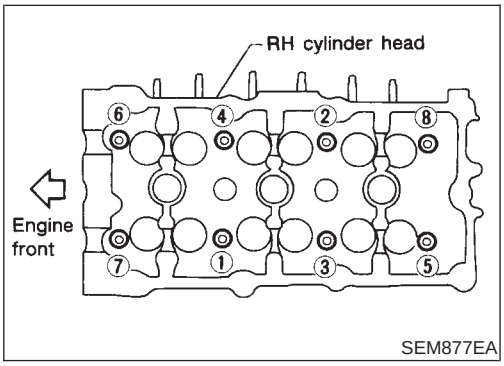

5. Install cylinder head outside bolts.

- **Tightening procedure:**

a. **Tighten all bolts to 98.1 N·m (10 kg-m, 72 ft-lb).**
b. **Completely loosen all bolts in reverse order shown.**
c. **Tighten all bolts to 34.3 to 44.1 N·m (3.5 to 4.4 kg-m, 25 to 33 ft-lb).**
d. **Turn all bolts 90 to 95 degrees clockwise [target: 90 degrees (angle tightening)].**
e. **Turn all bolts 90 to 95 degrees clockwise again [target: 90 degrees (angle tightening)].**

- **Tighten in numerical order shown in the figure.**

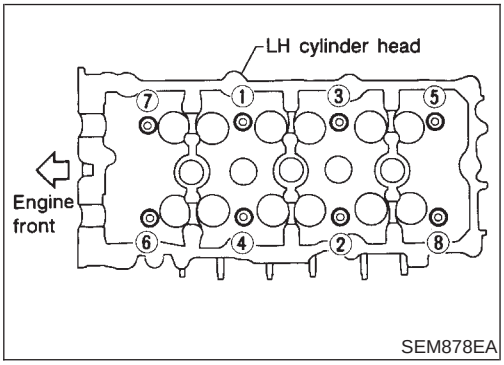

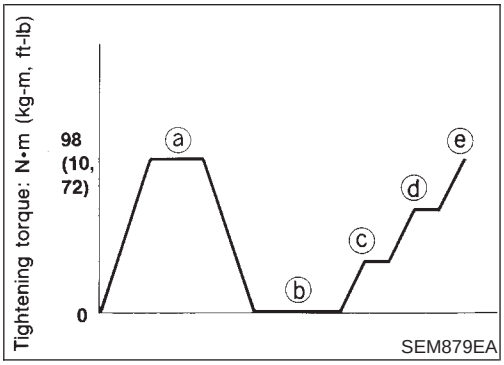

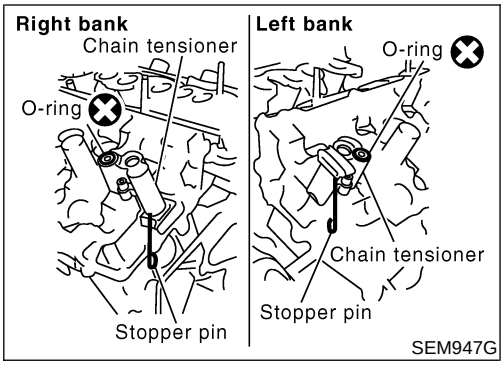

6. Install camshaft chain tensioners on both sides of cylinder head.

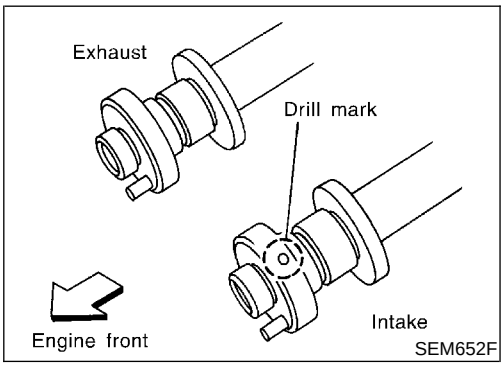

7. Install exhaust and intake camshafts and camshaft brackets.

- **Intake camshaft has a drill mark on camshaft sprocket mounting flange. Install it on the intake side.**

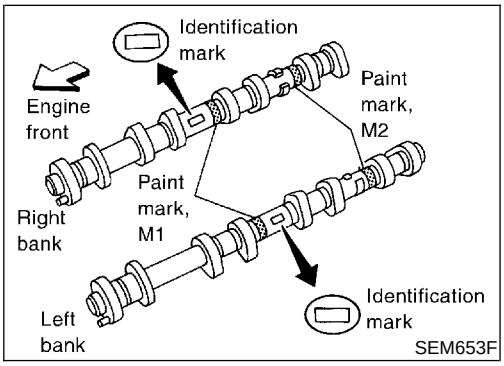

- **Identification marks are present on camshafts.**

Bank	INT/EXH	ID mark	Drill mark	Paint mark	
				M1	M2
RH	INT	R3	Yes	Yes	No
	EXH	R3	No	No	Yes
LH	INT	L3	Yes	Yes	No
	EXH	L3	No	No	Yes

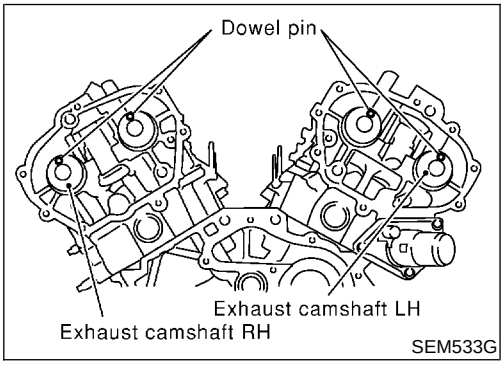

- **Position camshaft**
  RH exhaust camshaft dowel pin at about 10 o'clock
  LH exhaust camshaft dowel pin at about 2 o'clock

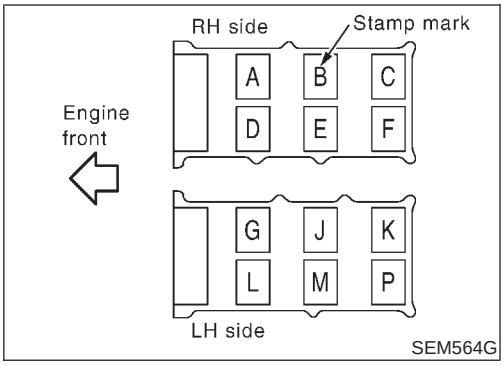

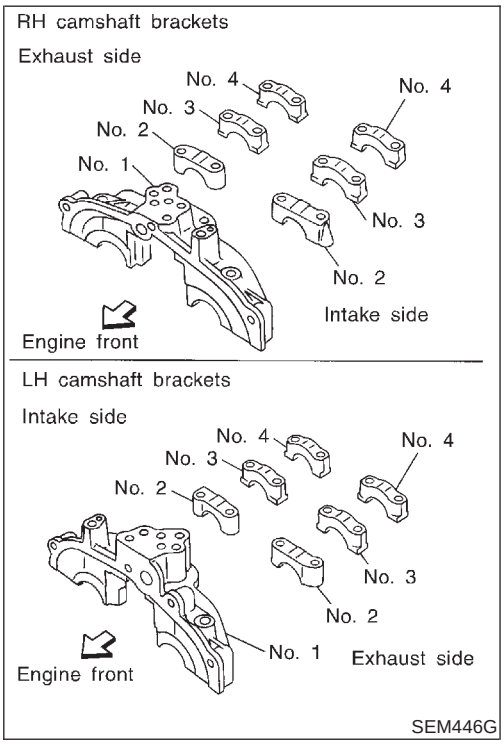

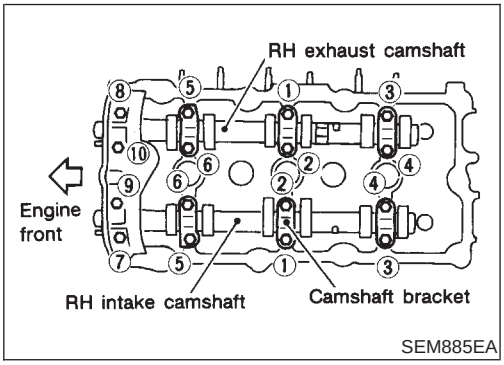

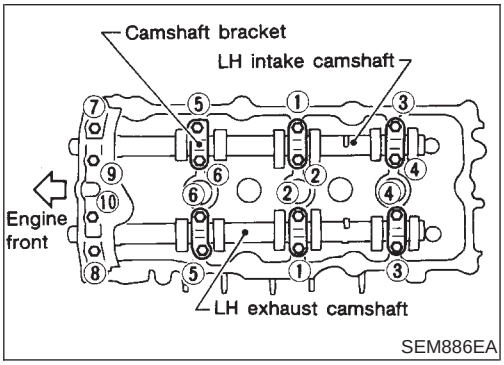

8. Before installing camshaft brackets, apply sealant to mating surface of No. 1 journal head.

- **Use Genuine RTV silicone sealant or equivalent. Refer to GI-53.**
- **Refer to "POSITION FOR APPLYING LIQUID GASKET", EM-25.**
- **Remove foreign material completely from camshaft bracket backside and from cylinder head installation face.**
- **Install camshaft brackets in their original positions. Align stamp mark as shown in the figure.**
- **If any part of valve assembly or camshaft is replaced, check valve clearance according to reference data. After completing assembly check valve clearance. Refer to "Checking" and "Adjusting" in "VALVE CLEARANCE", EM-58 and 60.**

  Reference data valve clearance (Cold):

  Intake

  0.26 - 0.34 mm (0.010 - 0.013 in)

  Exhaust

  0.29 - 0.37 mm (0.011 - 0.015 in)
- **Lubricate threads and seat surfaces of camshaft bracket bolts with new engine oil before installing them.**

- Tighten the camshaft brackets in the following steps.

Step	Tightening torque	Tightening order
1	1.96 N·m (0.2 kg-m, 17 in-lb)	Tighten in the order of 7 to 10, then tighten 1 to 6.
2	5.88 N·m (0.6 kg-m, 52 in-lb)	Tighten in the numerical order.
3	9.02 - 11.8 N·m (0.92 - 1.20 kg-m, 79.9 - 104.2 in-lb)	Tighten in the order of 1 to 6.
	8.3 - 10.3 N·m (0.9 - 1.0 kg-m, 74 - 91 in-lb)	Tighten in the order of 7 to 10.

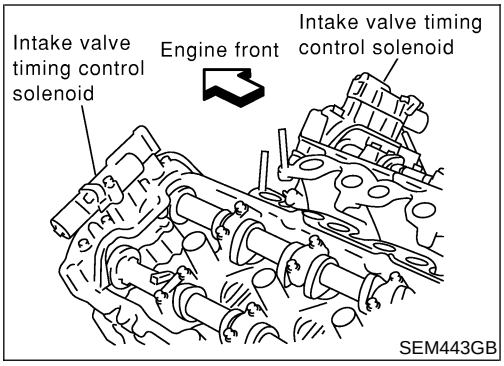

9. Install intake valve timing control solenoid valves.

10. Reinstall all removed parts in reverse order of removal.

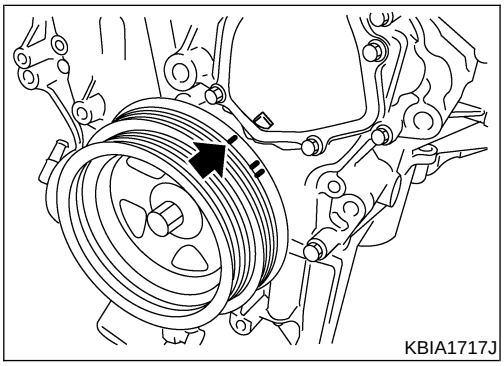

Valve Clearance

NAEM0022

CHECKING

NAEM0022S01

Check valve clearance while engine is cold and not running.

1. Remove engine cover.
2. Remove air duct with air cleaner case, collectors, hoses, harnesses, connectors and so on.
3. Remove upper intake manifold collector. Refer to EM-12, "Upper Intake Manifold Collector".
4. Remove lower intake manifold collector.
   Refer to EM-13, "Lower Intake Manifold Collector".
5. Remove ignition coils and spark plugs.
6. Remove RH and LH rocker covers.
7. Set No. 1 cylinder at TDC on its compression stroke.

- Align pointer with TDC mark on crankshaft pulley.

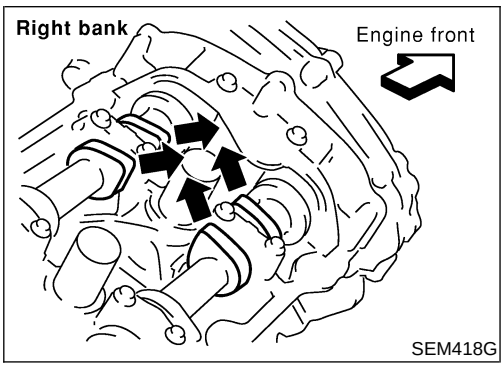

- Check that valve lifters on No. 1 cylinder are loose and valve lifters on No. 4 are tight.
  If not, turn crankshaft one revolution (360°) and align as above.

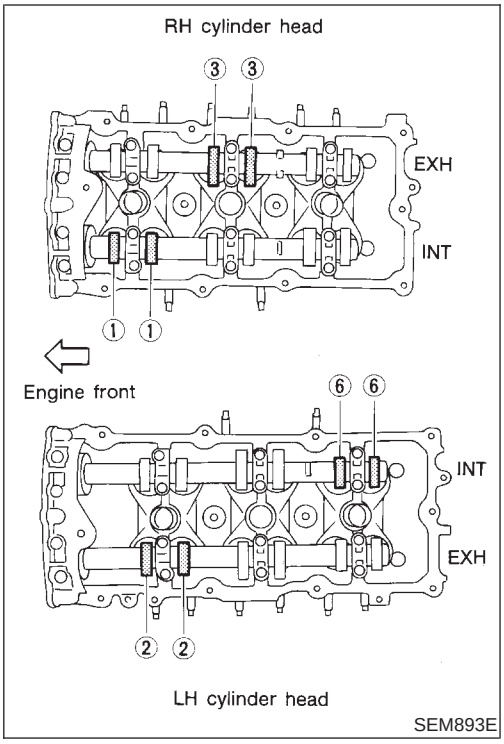

8. Check only those valves shown in the figure.

Measuring position (RH bank)		No. 1 CYL.	No. 3 CYL.	No. 5 CYL.
No. 1 CYL. at TDC	EXH		X	
	INT	X		
Measuring position (LH bank)		**No. 2 CYL.**	**No. 4 CYL.**	**No. 6 CYL.**
No. 1 CYL. at TDC	INT			X
	EXH	X		

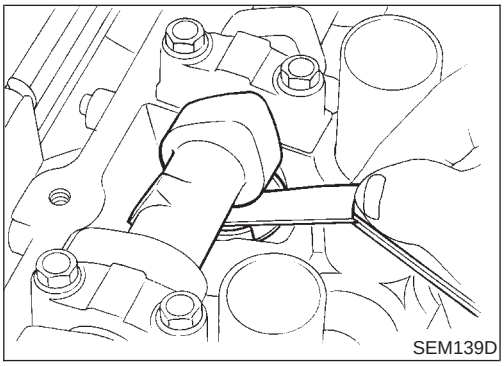

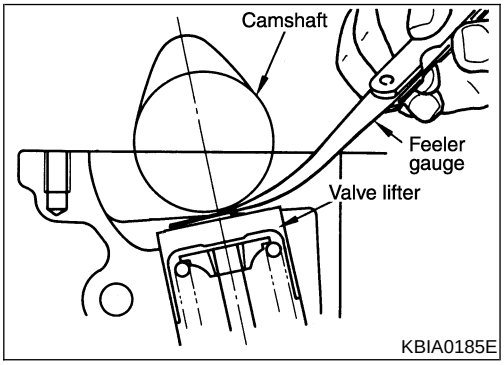

- Using a feeler gauge, measure clearance between valve lifter and camshaft.
- Record any valve clearance measurements which are out of specification. They will be used later to determine the required replacement valve lifter.

Valve clearance for checking:

Cold

Intake

0.26 - 0.34 mm (0.010 - 0.013 in)

Exhaust

0.29 - 0.37 mm (0.011 - 0.015 in)

Hot*

Intake

0.304 - 0.416 mm (0.012 - 0.016 in)

Exhaust

0.308 - 0.432 mm (0.012 - 0.017 in)

***: Approximately 80°C (176°F) (Reference data)**

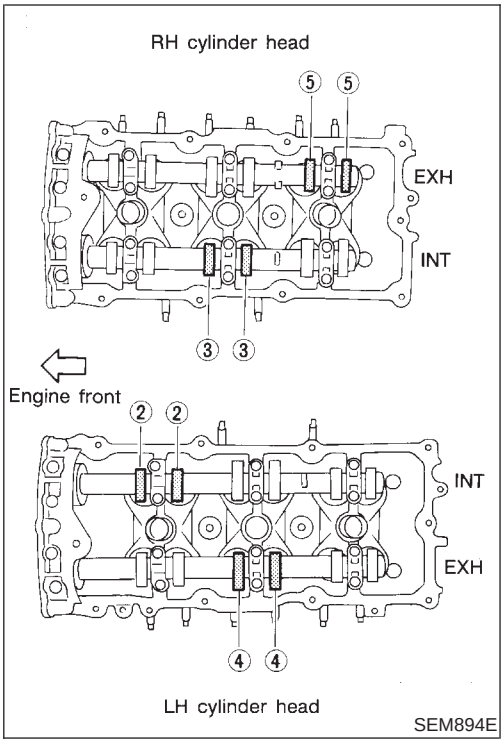

9. Turn crankshaft 240° and align as above.
10. Set No. 3 cylinder at TDC on its compression stroke.
11. Check only those valves shown in the figure.

Measuring position (RH bank)		No. 1 CYL.	No. 3 CYL.	No. 5 CYL.
No. 3 CYL. at TDC	EXH			X
	INT		X	
Measuring position (LH bank)		No. 2 CYL.	No. 4 CYL.	No. 6 CYL.
No. 3 CYL. at TDC	INT	X		
	EXH		X	

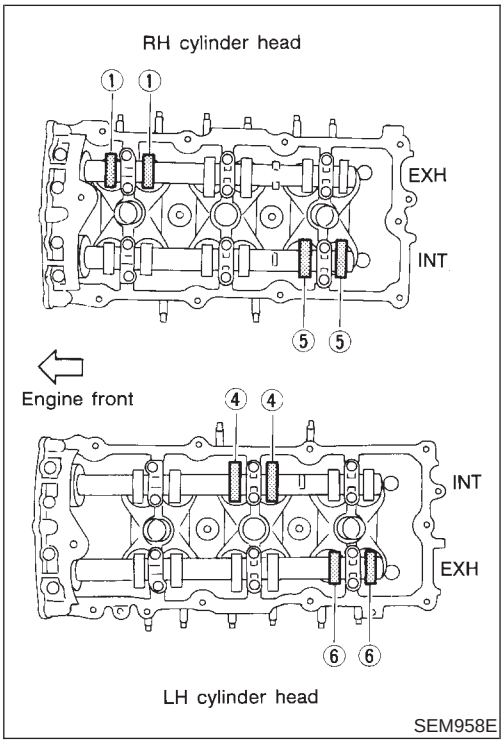

12. Turn crankshaft 240° and align as above.
13. Set No. 5 cylinder at TDC on its compression stroke.
14. Check only those valves shown in the figure.

Measuring position (RH bank)		No. 1 CYL.	No. 3 CYL.	No. 5 CYL.
No. 5 CYL. at TDC	EXH	X		
	INT			X
Measuring position (LH bank)		No. 2 CYL.	No. 4 CYL.	No. 6 CYL.
No. 5 CYL. at TDC	INT		X	
	EXH			X

15. If all valve clearances are within specification, install the following parts. If they are out of specification, adjust the valve clearances.

- Intake manifold collectors
- RH and LH rocker covers
- All spark plugs
- All ignition coils

ADJUSTING

NAEM0022S02

Adjust valve clearance while engine is cold.

Perform adjustment by selecting head thickness of valve lifter (Adjusting shims are not used).

1. Remove camshaft.
2. Remove valve lifter at location where measured value is outside standard.

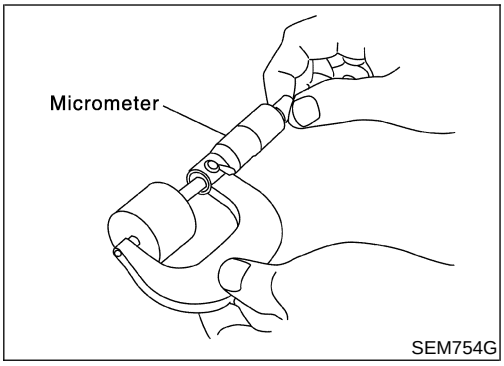

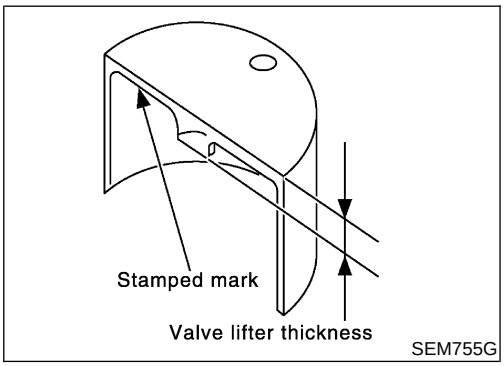

3. Measure center thickness of removed valve lifter with micrometer.
4. Use equation below to calculate valve lifter thickness for replacement.
   Valve lifter thickness calculation:
   Thickness of replacement valve lifter = t1 + (C1 − C2)
   t1 = Thickness of removed valve lifter
   C1 = Measured valve clearance
   C2 = Standard valve clearance:
   Intake: 0.30 mm (0.012 in)
   Exhaust: 0.33 mm (0.013 in)

- Thickness of new valve lifter can be identified by stamp mark on reverse side (inside cylinder).

Unit: mm (in)

Stamp mark	Thickness of valve lifter
Starting: 788U or 788R	7.88 (0.3102)
Ending: 840U or 840R	8.40 (0.3307)

- Available thickness of valve lifter (Factory setting):
  7.88 - 8.40 mm (0.3102 - 0.3307 in) [in 0.02 mm (0.0008 in) step] in 27 sizes (Intake/Exhaust)
  Refer to EM-84.

5. Install selected valve lifter.
6. Install camshaft.
7. Rotate crankshaft a few turns by hand.
8. Confirm that valve clearance is within standard.
9. After repair, confirm that valve clearance is within standard with engine warmed-up.

Valve clearance:

Unit: mm (in)

	Cold	Hot* (reference data)
Intake	0.26 - 0.34 (0.010 - 0.013)	0.304 - 0.416 (0.012 - 0.016)
Exhaust	0.29 - 0.37 (0.011 - 0.015)	0.308 - 0.432 (0.012 - 0.017)

*: Approximately 80°C (176°F)

Removal and Installation

NAEM0042

WARNING:

- **Situate vehicle on a flat and solid surface.**
- **Place chocks at front and back of rear wheels.**
- **Do not remove engine until exhaust system has completely cooled off. Otherwise, you may burn yourself and/or fire may break out in fuel line.**
- **For safety during subsequent steps, the tension of wires should be slackened against the engine.**
- **Before disconnecting fuel hose, release fuel pressure from fuel line.**
  Refer to EC-56, "Fuel Pressure Release".
- **Before removing front axle from transmission, place safety stands under designated front supporting points. Refer to GI section for lifting points and towing.**
- **Be sure to hoist engine and transmission in a safe manner.**
- **For engines not equipped with engine slingers, attach proper slingers and bolts described in PARTS CATALOG.**

CAUTION:

- **When lifting engine, be careful not to strike adjacent parts, especially brake lines, and brake master cylinder.**
- **In hoisting the engine, always use engine slingers in a safe manner.**
- **Before separating engine and transmission, remove crankshaft position sensor (POS) from the assembly.**
- **Always take extra care not to damage edge of crankshaft position sensor (POS), or ring gear teeth.**

REMOVAL

Front Engine Mounting

NAEM0042S01

NAEM0042S0101

SEC. 112

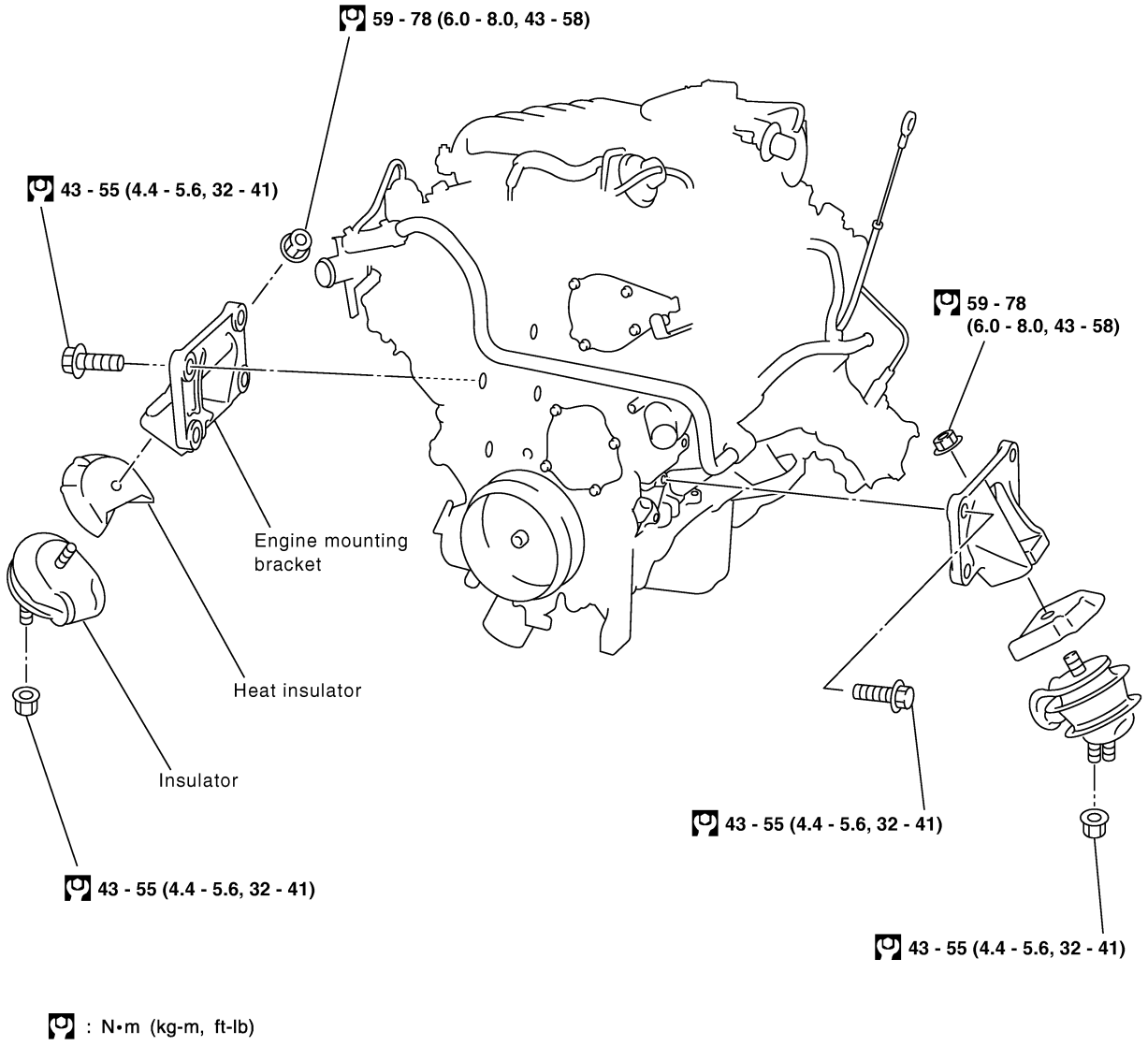

SEM458G

Rear Engine Mounting

NAEM0042S0102

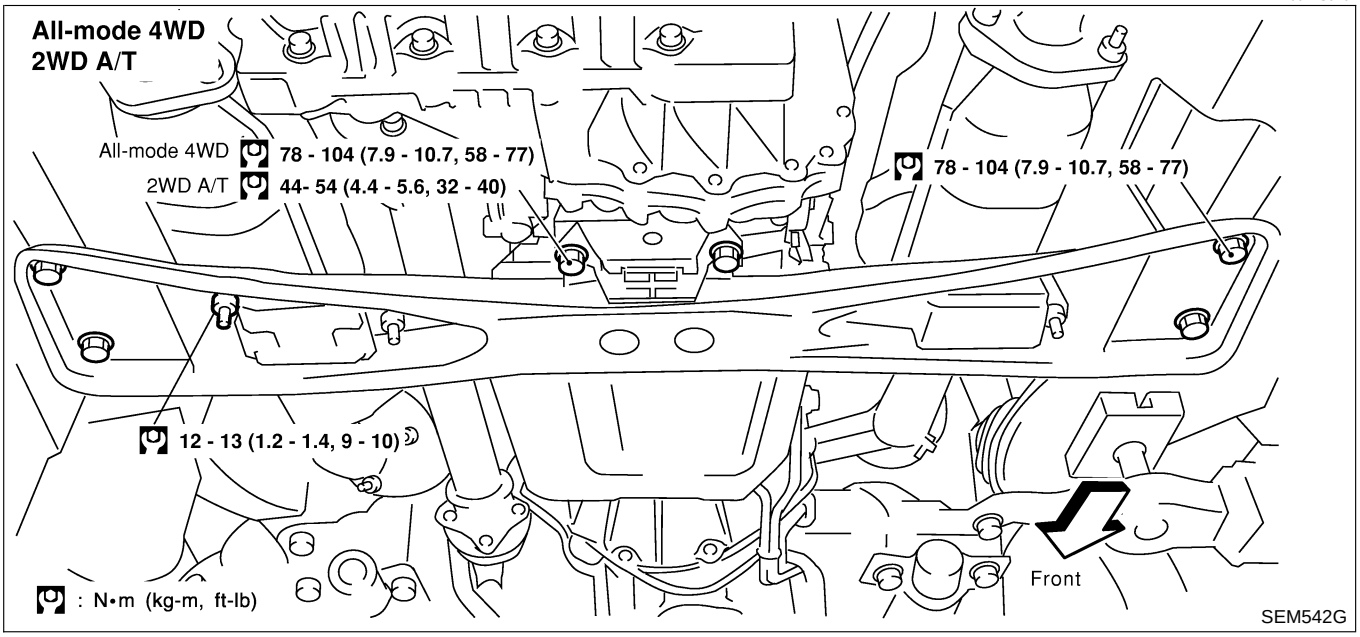

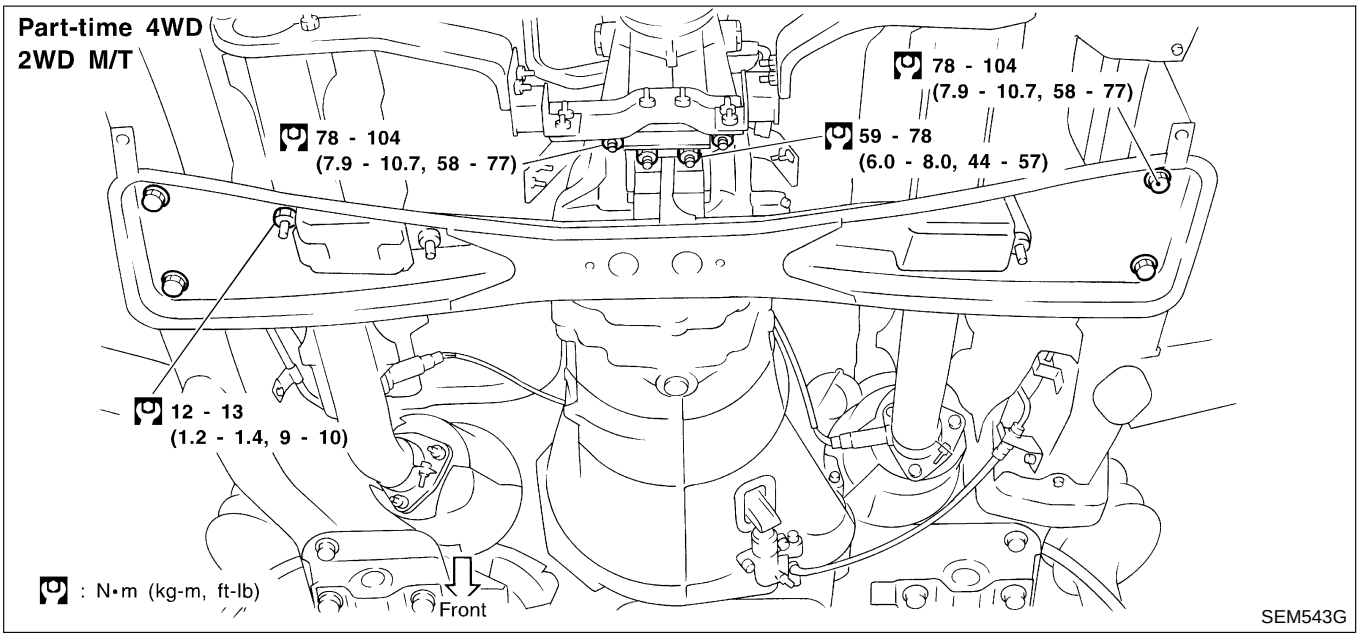

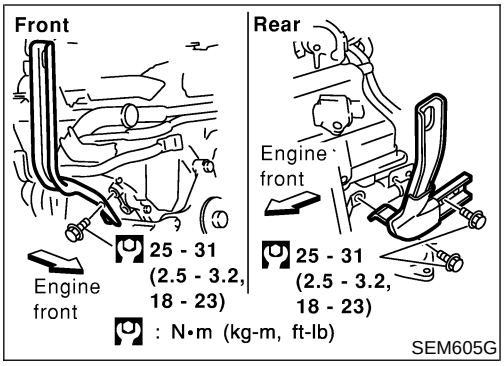

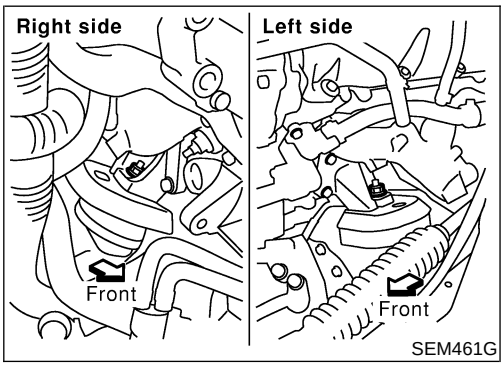

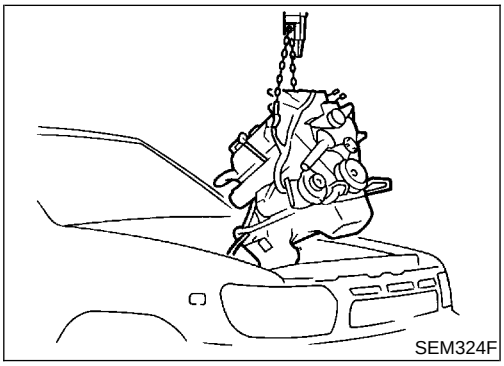

1. Release fuel pressure.
   Refer to EC-56, "Fuel pressure release".
2. Remove engine hood and front RH and LH wheels.
3. Remove engine undercover and suspension member stay.
4. Drain coolant from radiator.
5. Remove the following parts.
   - Radiator shroud
   - Radiator: Refer to LC-22, "REMOVAL AND INSTALLATION".
   - Cooling fan
   - Drive belts
   - Battery
   - Engine cover
   - Air duct with air cleaner case
6. Disconnect vacuum hoses, fuel hoses, heater hoses, EVAP canister hoses, harnesses, connectors and so on.
7. Remove air conditioner compressor from bracket, then put it aside holding with a suitable wire.
8. Remove power steering oil pump and reservoir tank with bracket, then put it aside holding with a suitable wire.
9. Remove alternator.
10. Remove exhaust front tube heat insulators, then remove rear heated oxygen sensors.
11. Remove exhaust front and rear tubes.
    Refer to FE-9, "Removal and Installation".
12. Remove transmission.
    Refer to AT-273, MT-7, "Removal".
13. Remove TWC (manifold) heat insulators, then remove TWC (manifold).
14. Install engine slingers.
15. Hoist engine with engine slingers and remove front engine mounting nuts.
16. Remove engine from vehicle.

INSTALLATION

NAEM0042S02

Installation is in the reverse order of removal.

Components

NAEM0024

SEC. 110•120•226

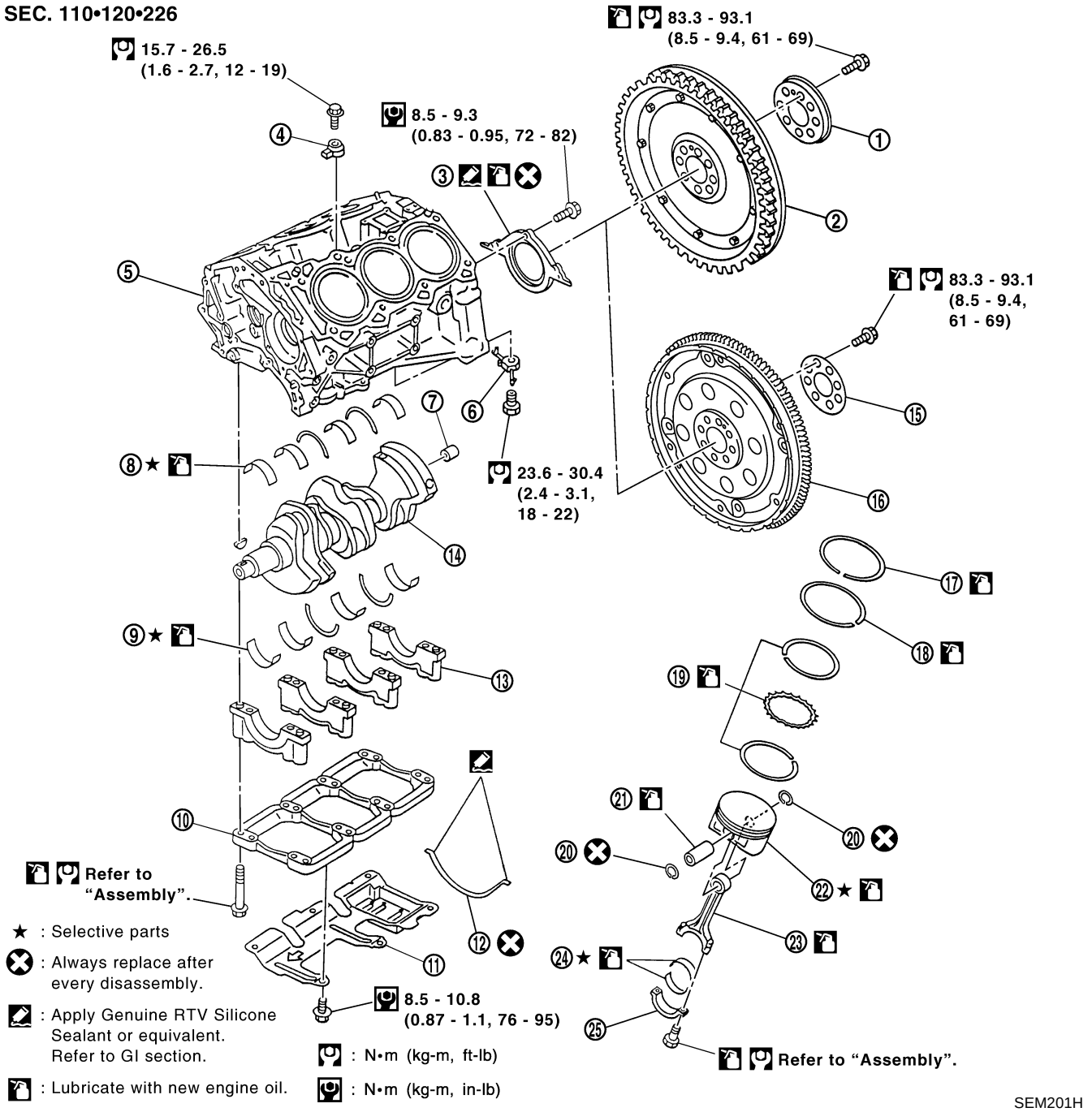

SEM201H

1. Flywheel reinforcement plate (M/T)
2. Flywheel with signal plate (M/T)
3. Rear oil seal retainer
4. Knock sensor
5. Cylinder block
6. Oil jet
7. Pilot bushing (M/T) or pilot converter (A/T)
8. Upper main bearing
9. Lower main bearing
10. Main bearing beam
11. Baffle plate
12. Gasket
13. Main bearing cap
14. Crankshaft
15. Drive plate reinforcement plate (A/T)
16. Drive plate with signal plate (A/T)
17. Top ring
18. 2nd ring
19. Oil ring
20. Snap ring
21. Piston pin
22. Piston
23. Connecting rod
24. Connecting rod bearing
25. Connecting rod bearing cap

CYLINDER BLOCK HEATER

NAEM0024S02

For Canada
SEC. 110

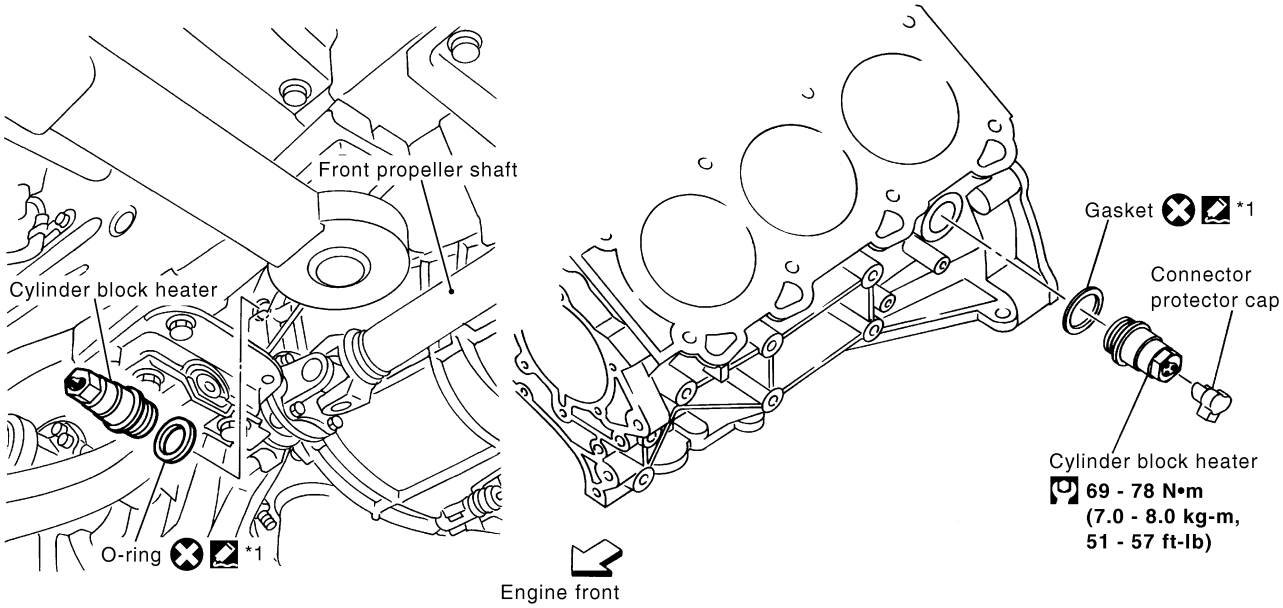

: Apply Anaerobic Liquid Gasket or equivalent. Refer to GI section.

*1 : Sealing point: Front and reverse side.

: Always replace after every disassembly.

• Remove old anaerobic liquid gasket completely after removing cylinder block heater.

SEM202H

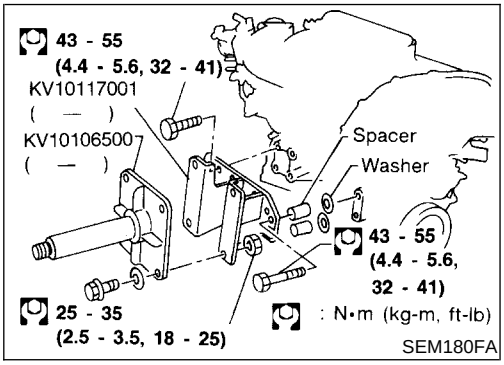

SEM180FA

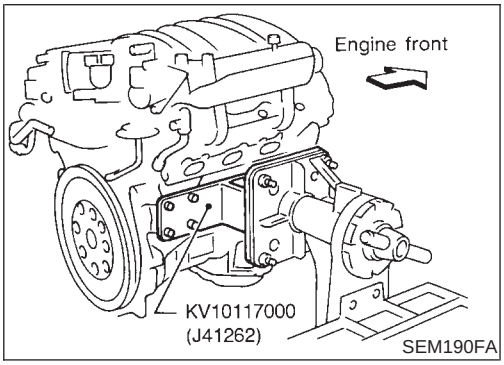

SEM190FA

Removal and Installation

NAEM0025

CAUTION:

- **When installing bearings, pistons, or other sliding parts, lubricate contacting surfaces with new engine oil.**
- **Place removed parts such as bearings and bearing caps in their proper order and direction.**
- **When installing connecting rod nuts, and main bearing cap bolts, apply new engine oil to threads and seating surfaces.**
- **Do not allow any magnetic materials to contact the signal plate teeth of flywheel or drive plate.**

Disassembly

NAEM0026

PISTON, CRANKSHAFT AND OIL JET

NAEM0026S01

1. Remove engine. Refer to "Removal and Installation", EM-62.
2. Place engine on a work stand.
3. Drain engine oil. Refer to "Changing Engine Oil", MA-18.

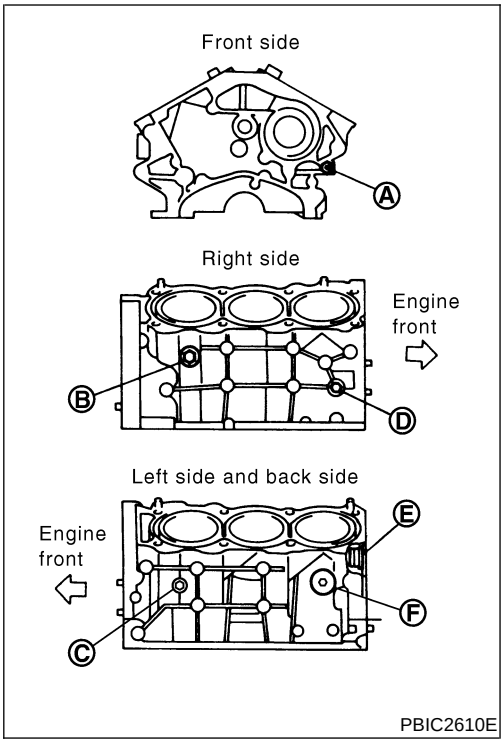

4. Drain engine coolant by removing water drain plugs from cylinder block both sides at "B" and "C" and cylinder block front side at "A" as shown in the figure.
5. Remove oil pan. Refer to "Removal", EM-19.
6. Remove timing chain. Refer to "Removal", EM-27.
7. Remove cylinder head. Refer to "Removal", EM-27.

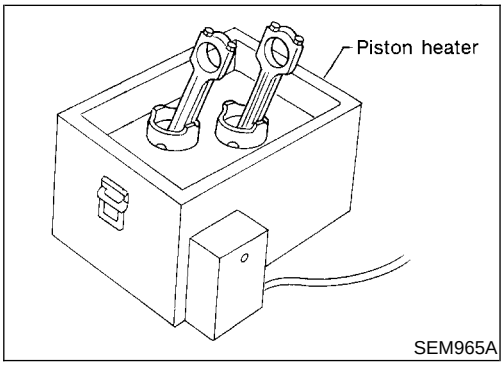

8. Remove baffle plate from main bearing beam.
9. Remove pistons with connecting rods.
- When disassembling piston and connecting rod, remove snap ring first, then heat piston to 60 to 70°C (140 to 158°F).
10. Remove rear oil seal retainer.

CAUTION:
- **When piston rings are not replaced, make sure that piston rings are mounted in their original positions.**
- **When replacing piston rings, if there is no punchmark, install with either side up.**

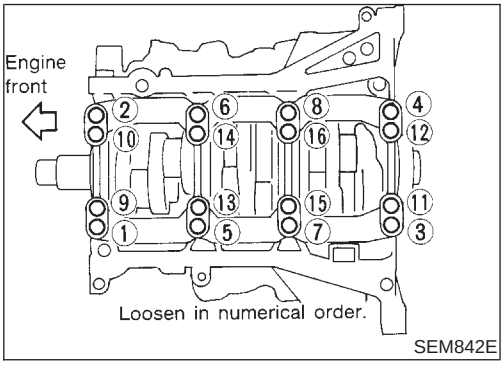

11. Loosen bolts in numerical order as shown and remove main bearing beam, bearing cap and crankshaft.
- **Before removing bearing beam and bearing cap, measure crankshaft end play. Refer to EM-78.**
- **Bolts should be loosened in two or three steps.**

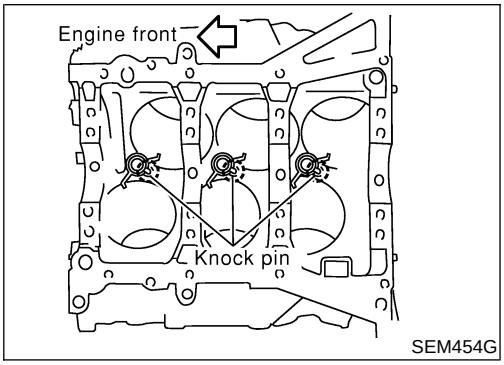

12. Remove oil jets.
13. Remove knock sensor.

CAUTION:
Carefully handle the sensor and avoid impacts.

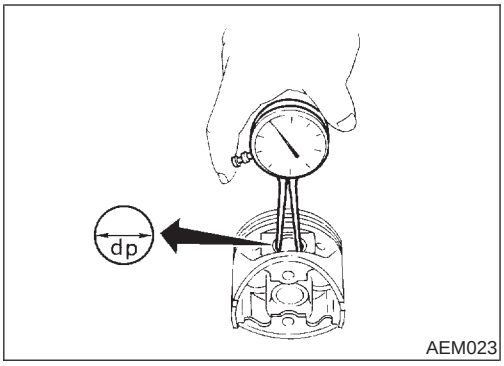

AEM023

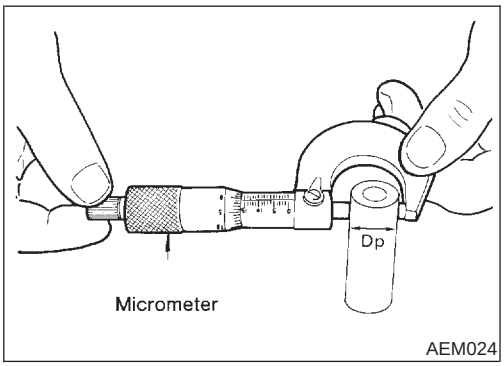

AEM024

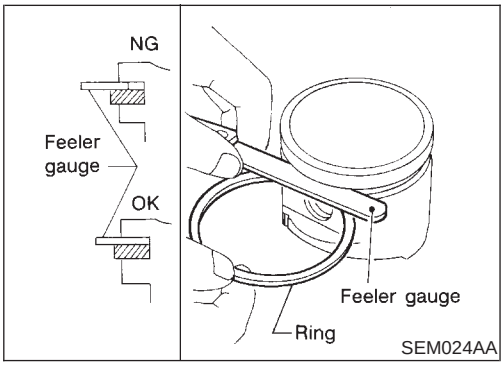

SEM024AA

Inspection

NAEM0027

PISTON AND PISTON PIN CLEARANCE

NAEM0027S01

1. Measure inner diameter of piston pin hole “dp”.

Standard diameter “dp”:

Grade No. 0

21.993 - 21.999 mm (0.8659 - 0.8661 in)

Grade No. 1

21.999 - 22.005 mm (0.8661 - 0.8663 in)

2. Measure outer diameter of piston pin “Dp”.

Standard diameter “Dp”:

Grade No. 0

21.989 - 21.995 mm (0.8657 - 0.8659 in)

Grade No. 1

21.995 - 22.001 mm (0.8659 - 0.8662 in)

3. Calculate interference fit of piston pin to piston.

Dp − dp = 0.002 - 0.006 mm (0.0001 - 0.0002 in)

If it exceeds the above value, replace piston assembly with pin.

PISTON RING SIDE CLEARANCE

NAEM0027S02

Side clearance:

Top ring

0.040 - 0.080 mm (0.0016 - 0.0031 in)

2nd ring

0.030 - 0.070 mm (0.0012 - 0.0028 in)

Oil ring

0.015 - 0.050 mm (0.0006 - 0.0020 in)

Max. limit of side clearance:

Top ring 0.11 mm (0.0043 in)

2nd ring 0.1 mm (0.004 in)

If out of specification, replace piston ring. If clearance exceeds maximum limit with new ring, replace piston.

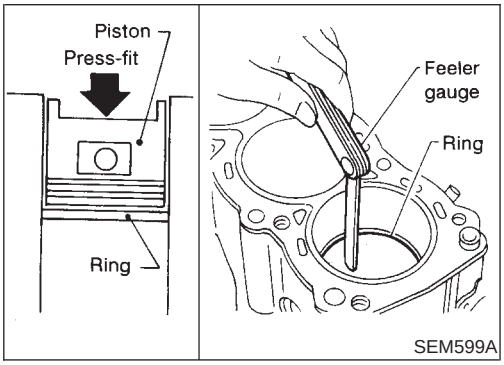

SEM599A

PISTON RING END GAP

NAEM0027S03

End gap:

Top ring 0.23 - 0.33 mm (0.0091 - 0.0130 in)

2nd ring 0.33 - 0.48 mm (0.0130- 0.0189 in)

Oil ring 0.20 - 0.60 mm (0.0079 - 0.0236 in)

Max. limit of ring gap:

Top ring 0.54 mm (0.0213 in)

2nd ring 0.80 mm (0.0315 in)

Oil ring 0.95 mm (0.0374 in)

If out of specification, replace piston ring. If gap still exceeds the limit even with a new ring, do the following. Rebore cylinder and use oversized piston and piston rings.
Refer to SDS (EM-88).

- When replacing the piston, check the cylinder block surface for scratches or seizure. If scratches or seizure is found, hone or replace the cylinder block.

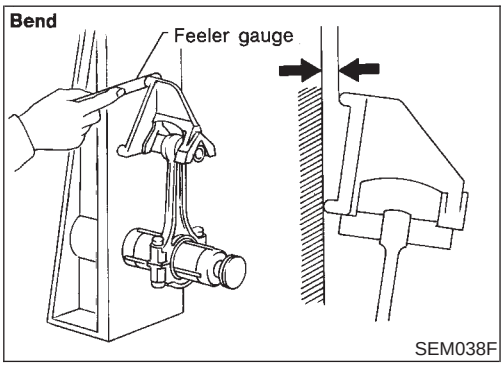

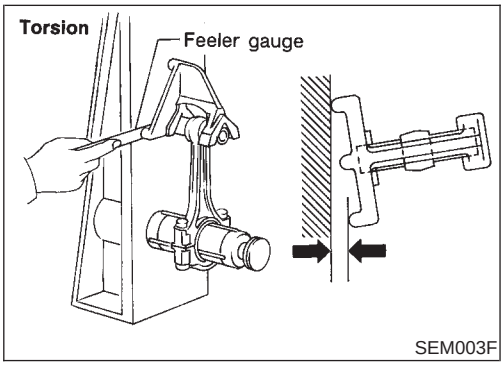

CONNECTING ROD BEND AND TORSION

NAEM0027S04

Bend:
Limit 0.15 mm (0.0059 in)
per 100 mm (3.94 in) length
Torsion:
Limit 0.30 mm (0.0118 in)
per 100 mm (3.94 in) length

If it exceeds the limit, replace connecting rod assembly.

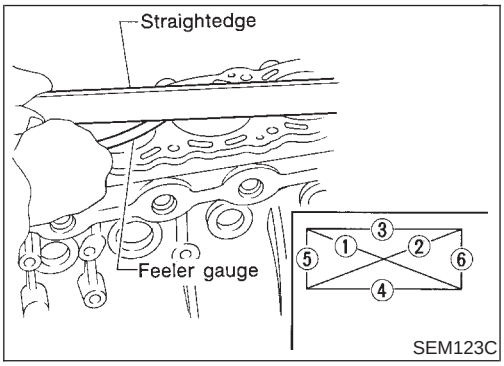

CYLINDER BLOCK DISTORTION AND WEAR

NAEM0027S05

- Clean upper surface of cylinder block.
  Use a reliable straightedge and feeler gauge to check the flatness of cylinder block surface.
  Check along six positions shown in the figure.
  Distortion limit: 0.10 mm (0.0039 in)
- If out of specification, resurface it. The limit for cylinder block resurfacing is determined by cylinder head resurfacing in engine.
  Resurfacing limit:
  Amount of cylinder head resurfacing is "A".
  Amount of cylinder block resurfacing is "B".
  The maximum limit is as follows:
  A + B = 0.2 mm (0.008 in)
  Nominal cylinder block height from crankshaft center:
  214.95 - 215.05 mm (8.4626 - 8.4665 in)
  Refer to SDS (EM-87).
- If necessary, replace cylinder block.

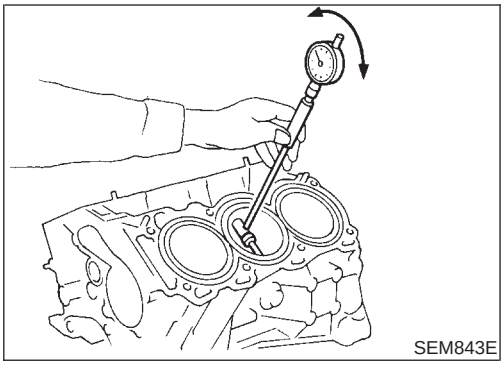

PISTON-TO-BORE CLEARANCE

NAEM0027S06

1. Using a bore gauge, measure cylinder bore for wear, out-of-round and taper.

Cylinder bore inner diameter

Grade No.	Standard inner diameter	Wear limit
No. 1	95.500 - 95.510 mm (3.7598 - 3.7602 in)	0.20 mm (0.0079 in)
No. 2	95.510 - 95.520 mm (3.7602 - 3.7606 in)	
No. 3	95.520 - 95.530 mm (3.7606 - 3.7610 in)	

If it exceeds the limit, rebore all cylinders. Replace cylinder block if necessary.

Out-of-round (Difference between X and Y):
Limit 0.015 mm (0.0006 in)
Taper (Difference between A and C):
Limit 0.015 mm (0.0006 in)

2. Check for scratches and seizure. If seizure is found, hone it.

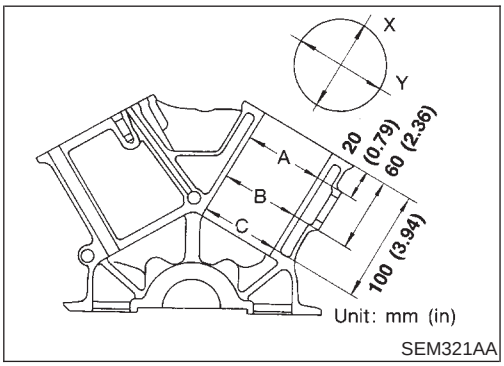

- **If both cylinder block and piston are replaced with new ones, select piston of the same grade number punched on cylinder block rear position. These numbers are punched in either Arabic or Roman numerals.**

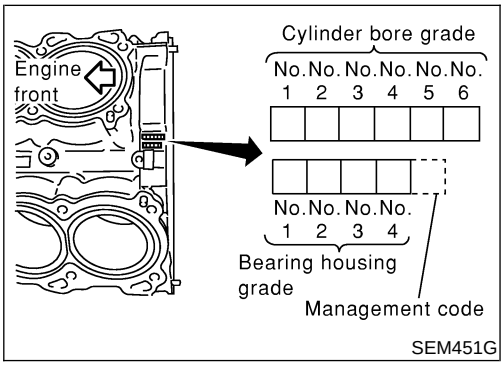

3. Measure piston skirt diameter.

Piston diameter "A": Refer to SDS (EM-88).
Measuring point "a" (Distance from the top):
41.0 mm (1.61 in)

4. Check that piston-to-bore clearance is within specification.

Piston-to-bore clearance "B":
0.010 - 0.030 mm (0.0004 - 0.0012 in)

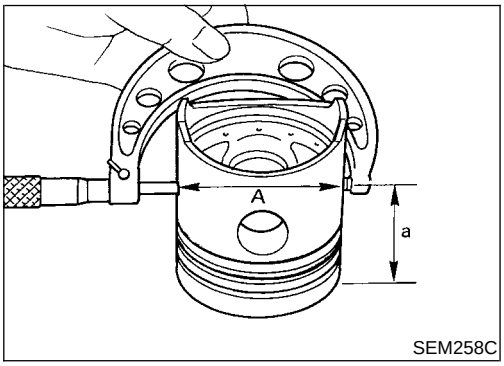

5. Determine piston oversize according to amount of cylinder wear.

Oversize pistons are available for service.
Refer to SDS (EM-88).

- **If oversize piston is used, use it for all cylinders with oversize piston rings.**

6. Cylinder bore size is determined by adding piston-to-bore clearance to piston diameter "A".

Rebored size calculation: D = A + B − C
where,
D: Bored diameter
A: Piston diameter as measured
B: Piston-to-bore clearance
C: Honing allowance 0.02 mm (0.0008 in)

7. Install main bearing caps, and tighten to the specified torque. Otherwise, cylinder bores may be distorted in final assembly.
8. Cut cylinder bores.
- **When any cylinder needs boring, all other cylinders must also be bored.**
- **Do not cut too much out of cylinder bore at a time. Cut only 0.05 mm (0.0020 in) or so in diameter at a time.**
9. Hone cylinders to obtain specified piston-to-bore clearance.
10. Measure finished cylinder bore for out-of-round and taper.
- **Measurement should be done after cylinder bore cools down.**

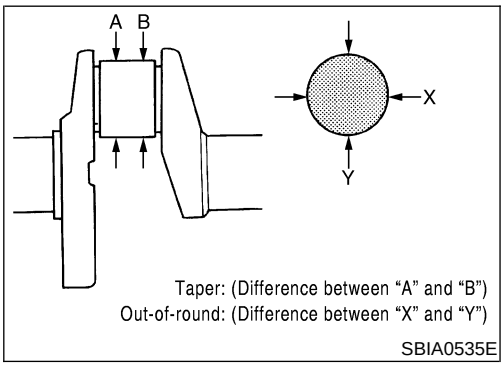

CRANKSHAFT

NAEM0027S07

1. Check crankshaft main and pin journals for score, wear or cracks.
2. With a micrometer, measure journals for taper and out-of-round.

Out-of-round (Difference between "X" and "Y"):
Standard
0.002 mm (0.0001 in)
Taper (Difference between "A" and "B"):
Standard
0.002 mm (0.0001 in)

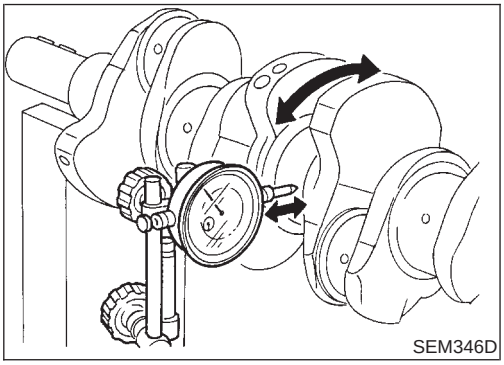

3. Measure crankshaft runout.

Runout (Total indicator reading):
Limit 0.10 mm (0.0039 in)

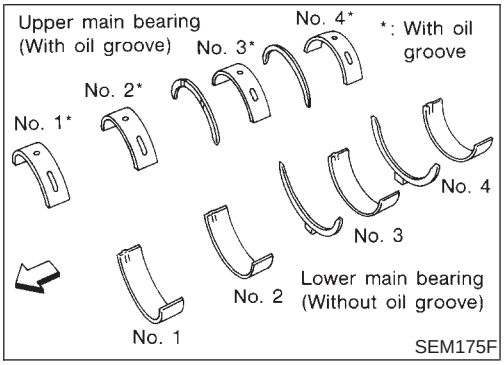

BEARING CLEARANCE

NAEM0027S08

- Use either of the following two methods, however, method "A" gives more reliable results and is preferable.

Method A (Using bore gauge & micrometer)

Main bearing

NAEM0027S0801

1. Set main bearings in their proper positions on cylinder block and main bearing cap.

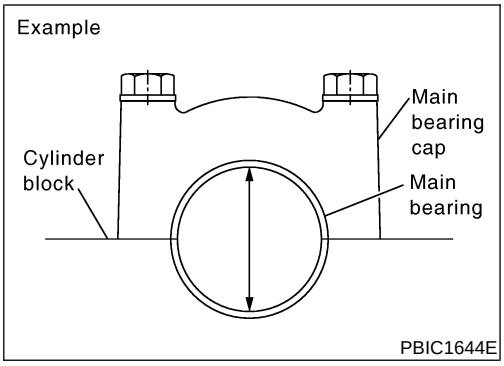

2. Install main bearing cap and bearing beam to cylinder block. **Tighten all bolts in correct order.**
3. Measure inner diameters of each main bearing.
4. Measure outer diameters of each crankshaft main journal.
5. Calculate main bearing clearance.
   Main bearing clearance = Main bearing inner diameter – Crankshaft main journal diameter
   Standard: 0.035 - 0.045 mm (0.0014 - 0.0018 in)
   Limit: 0.065 mm (0.0026 in)

- If it exceeds the limit, replace bearing.
- If clearance cannot be adjusted using any standard bearing grade, grind crankshaft journal and use undersized bearing.

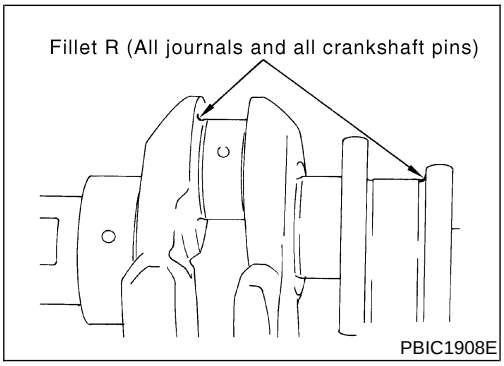

- When using undersize (US) bearing, measure the main bearing inner diameter with bearing installed, and grind main journal so that the main bearing oil clearance satisfies the standard.

CAUTION:
In grinding crankshaft main journal to use undersize bearings, keep the fillet R [1.5 mm (0.059 in)].

- Refer to SDS for grinding crankshaft and available service parts.

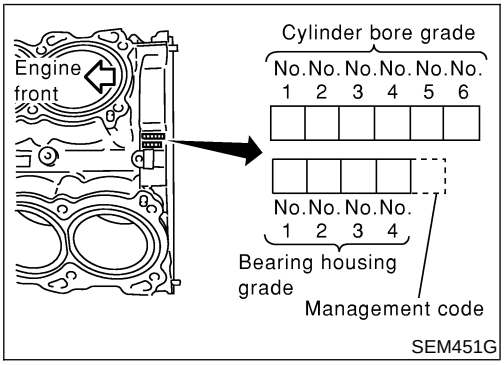

6. If crankshaft or cylinder block is replaced with a new one, select thickness of main bearings as follows:

a. Grade number of each cylinder block main journal is punched on the respective cylinder block. These numbers are punched in either Arabic or Alphabet. Refer to SDS, EM-87.
   If measured diameter is out of grade punched, decide suitable grade using table in SDS.

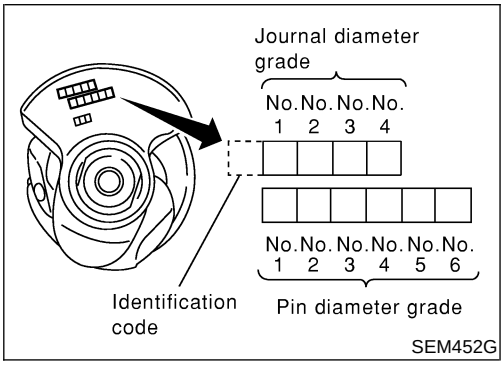

b. Grade number of each crankshaft main journal is punched on the respective crankshaft. These numbers are punched in either Arabic or Alphabet. Refer to SDS, EM-90.
   If measured diameter is out of grade punched, decide suitable grade using table in SDS.

c. Select main bearing with suitable thickness according to the following table.
   Refer to "SDS", EM-91, for available main bearings.

Mark	Axle diameter \ Cylinder block bearing housing inner diameter (Unit: mm (in)) / Crankshaft main journal diameter (Unit: mm (in))	A	B	C	D	E	F	G	H	J	K	L	M	N	P	R	S	T	U	V	W	X	Y	4	7
	Hole diameter	63.993 - 63.994 (2.5194 - 2.5194)	63.994 - 63.995 (2.5194 - 2.5195)	63.995 - 63.996 (2.5195 - 2.5195)	63.996 - 63.997 (2.5195 - 2.5196)	63.997 - 63.998 (2.5196 - 2.5196)	63.998 - 63.999 (2.5196 - 2.5196)	63.999 - 64.000 (2.5196 - 2.5197)	64.000 - 64.001 (2.5197 - 2.5197)	64.001 - 64.002 (2.5197 - 2.5198)	64.002 - 64.003 (2.5198 - 2.5198)	64.003 - 64.004 (2.5198 - 2.5198)	64.004 - 64.005 (2.5198 - 2.5199)	64.005 - 64.006 (2.5199 - 2.5199)	64.006 - 64.007 (2.5199 - 2.5200)	64.007 - 64.008 (2.5200 - 2.5200)	64.008 - 64.009 (2.5200 - 2.5200)	64.009 - 64.010 (2.5200 - 2.5201)	64.010 - 64.011 (2.5201 - 2.5201)	64.011 - 64.012 (2.5201 - 2.5202)	64.012 - 64.013 (2.5202 - 2.5202)	64.013 - 64.014 (2.5202 - 2.5202)	64.014 - 64.015 (2.5202 - 2.5203)	64.015 - 64.016 (2.5203 - 2.5203)	64.016 - 64.017 (2.5203 - 2.5203)
A	59.975 - 59.974 (2.3612 - 2.3612)	0	0	0	01	01	01	1	1	1	12	12	12	2	2	2	23	23	23	3	3	3	34	34	34
B	59.974 - 59.973 (2.3612 - 2.3611)	0	0	01	01	01	1	1	1	12	12	12	2	2	2	23	23	23	3	3	3	34	34	34	4
C	59.973 - 59.972 (2.3611 - 2.3611)	0	01	01	01	1	1	1	12	12	12	2	2	2	23	23	23	3	3	3	34	34	34	4	4
D	59.972 - 59.971 (2.3611 - 2.3611)	01	01	01	1	1	1	12	12	12	2	2	2	23	23	23	3	3	3	34	34	34	4	4	4
E	59.971 - 59.970 (2.3611 - 2.3610)	01	01	1	1	1	12	12	12	2	2	2	23	23	23	3	3	3	34	34	34	4	4	4	45
F	59.970 - 59.969 (2.3610 - 2.3610)	01	1	1	1	12	12	12	2	2	2	23	23	23	3	3	3	34	34	34	4	4	4	45	45
G	59.969 - 59.968 (2.3610 - 2.3609)	1	1	1	12	12	12	2	2	2	23	23	23	3	3	3	34	34	34	4	4	4	45	45	45
H	59.968 - 59.967 (2.3609 - 2.3609)	1	1	12	12	12	2	2	2	23	23	23	3	3	3	34	34	34	4	4	4	45	45	45	5
J	59.967 - 59.966 (2.3609 - 2.3609)	1	12	12	12	2	2	2	23	23	23	3	3	3	34	34	34	4	4	4	45	45	45	5	5
K	59.966 - 59.965 (2.3909 - 2.3608)	12	12	12	2	2	2	23	23	23	3	3	3	34	34	34	4	4	4	45	45	45	5	5	5
L	59.965 - 59.964 (2.3608 - 2.3608)	12	12	2	2	2	23	23	23	3	3	3	34	34	34	4	4	4	45	45	45	5	5	5	56
M	59.964 - 59.963 (2.3608 - 2.3607)	12	2	2	2	23	23	23	3	3	3	34	34	34	4	4	4	45	45	45	5	5	5	56	56
N	59.963 - 59.962 (2.3607 - 2.3607)	2	2	2	23	23	23	3	3	3	34	34	34	4	4	4	45	45	45	5	5	5	56	56	56
P	59.962 - 59.961 (2.3607 - 2.3607)	2	2	23	23	23	3	3	3	34	34	34	4	4	4	45	45	45	5	5	5	56	56	56	6
R	59.961 - 59.960 (2.3607 - 2.3606)	2	23	23	23	3	3	3	34	34	34	4	4	4	45	45	45	5	5	5	56	56	56	6	6
S	59.960 - 59.959 (2.3606 - 2.3606)	23	23	23	3	3	3	34	34	34	4	4	4	45	45	45	5	5	5	56	56	56	6	6	6
T	59.959 - 59.958 (2.3606 - 2.3605)	23	23	3	3	3	34	34	34	4	4	4	45	45	45	5	5	5	56	56	56	6	6	6	67
U	59.958 - 59.957 (2.3605 - 2.3605)	23	3	3	3	34	34	34	4	4	4	45	45	45	5	5	5	56	56	56	6	6	6	67	67
V	59.957 - 59.956 (2.3605 - 2.3605)	3	3	3	34	34	34	4	4	4	45	45	45	5	5	5	56	56	56	6	6	6	67	67	67
W	59.956 - 59.955 (2.3605 - 2.3604)	3	3	34	34	34	4	4	4	45	45	45	5	5	5	56	56	56	6	6	6	67	67	67	7
X	59.955 - 59.954 (2.3604 - 2.3604)	3	34	34	34	4	4	4	45	45	45	5	5	5	56	56	56	6	6	6	67	67	67	7	7
Y	59.954 - 59.953 (2.3604 - 2.3603)	34	34	34	4	4	4	45	45	45	5	5	5	56	56	56	6	6	6	67	67	67	7	7	7
4	59.953 - 59.952 (2.3603 - 2.3603)	34	34	4	4	4	45	45	45	5	5	5	56	56	56	6	6	6	67	67	67	7	7	7	7
7	59.952 - 59.951 (2.3603 - 2.3603)	34	4	4	4	45	45	45	5	5	5	56	56	56	6	6	6	67	67	67	7	7	7	7	7

PBIC0814E

Example

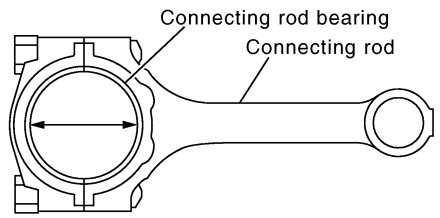

PBIC1642E

Connecting Rod Bearing (Big end)

NAEM0027S0802

1. Install connecting rod bearing to connecting rod and cap.
2. Install connecting rod cap to connecting rod.
   Tighten bolts to the specified torque.
3. Measure inner diameter "C" of connecting rod.

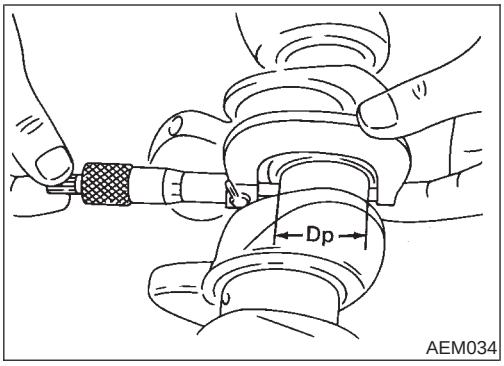

4. Measure outer diameter "Dp" of each crankshaft pin journal.
5. Calculate connecting rod bearing clearance.
   Connecting rod bearing clearance = C − Dp
   Standard: 0.034 - 0.059 mm (0.0013 - 0.0023 in)
   Limit: 0.070 mm (0.0028 in)
6. If it exceeds the limit, replace bearing.
7. If clearance cannot be adjusted within the standard of any bearing, grind crankshaft journal and use undersized bearing. Refer to "BEARING CLEARANCE — Main bearing", EM-72.

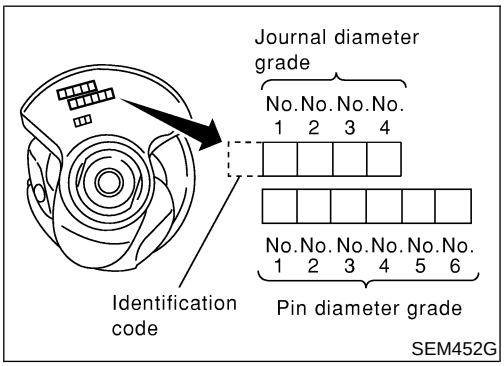

8. If crankshaft is replaced with a new one, select connecting rod bearing according to the following table.
   Connecting rod bearing grade number (Identification color):
   These numbers are punched in either Arabic or Roman numerals.

Crankshaft pin journal grade number	Connecting rod bearing grade number
0	0 (Black)
1	1 (Brown)
2	2 (Green)

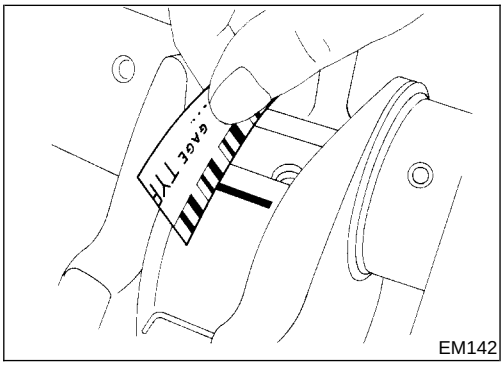

Method B (Using plastigage)

CAUTION:

- **Do not turn crankshaft or connecting rod while plastigage is being inserted.**
- **When bearing clearance exceeds the specified limit, ensure that the proper bearing has been installed. If incorrect bearing clearance exists, use a thicker or undersized main bearing to ensure specified clearance.**

CONNECTING ROD BUSHING CLEARANCE (SMALL END)

NAEM0027S09

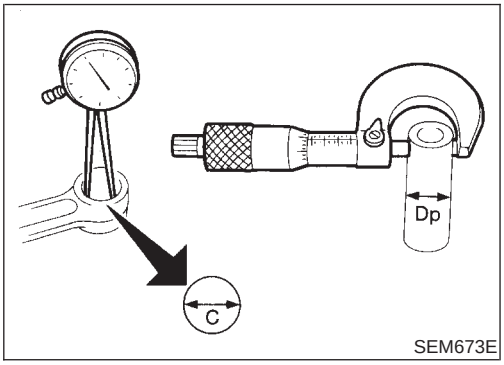

1. Measure inner diameter "C" of bushing.
2. Measure outer diameter "Dp" of piston pin.
3. Calculate connecting rod bushing clearance.
   Connecting rod bushing clearance = C − Dp
   Standard: 0.005 - 0.017 mm (0.0002 - 0.0007 in)
   Limit: 0.030 mm (0.0012 in)

   If it exceeds the limit, replace connecting rod assembly or connecting rod bushing and/or piston set with pin.

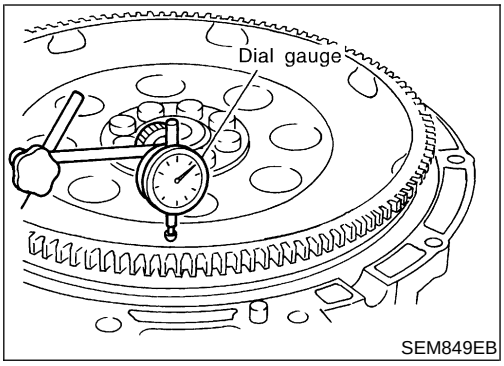

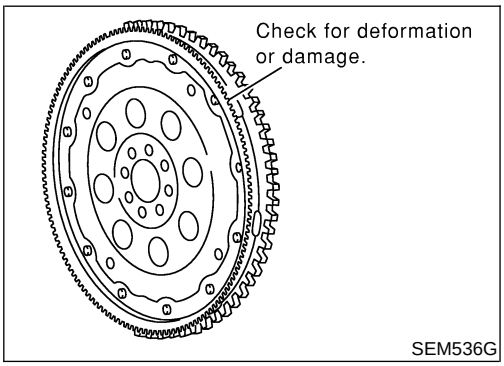

FLYWHEEL/DRIVE PLATE RUNOUT

NAEM0027S11

Runout (Total indicator reading):

Flywheel (M/T model)

Less than 0.15 mm (0.0059 in)

Drive plate (A/T model)

Less than 0.15 mm (0.0059 in)

CAUTION:

- **The signal plate is built into the flywheel/drive plate assembly. Be careful not to damage the signal plate, especially the teeth.**
- **Check the drive plate and signal plate for deformation or cracks.**
- **Never place the flywheel assembly with the signal plate facing down.**
- **Keep any magnetized objects away from the signal plate.**
- **Do not allow any magnetic materials to contact the signal plate teeth.**
- **Do not surface flywheel. Replace as necessary.**

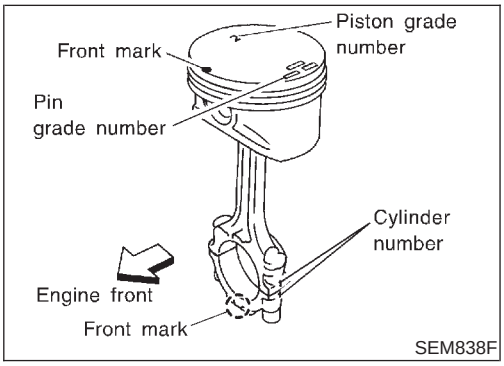

Assembly

NAEM0028

PISTON

NAEM0028S01

1. Install new snap ring on one side of piston pin hole.
2. Heat piston to 60 to 70°C (140 to 158°F) and assemble piston, piston pin, connecting rod and new snap ring.

- **Align the direction of piston and connecting rod.**
- **Numbers stamped on connecting rod and cap correspond to each cylinder.**
- **After assembly, make sure connecting rod swings smoothly.**

3. Set piston rings as shown.

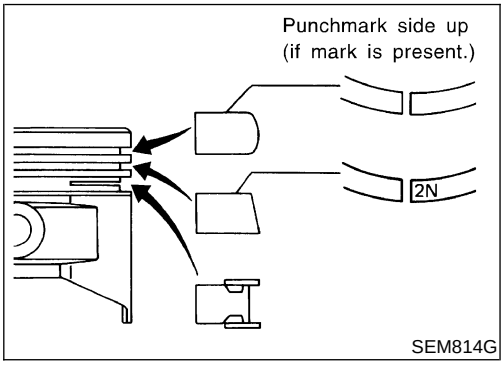

CAUTION:

- **When piston rings are not replaced, make sure that piston rings are mounted in their original positions.**
- **When replacing piston rings, these without punchmarks present, piston rings can be mounted with either side up.**

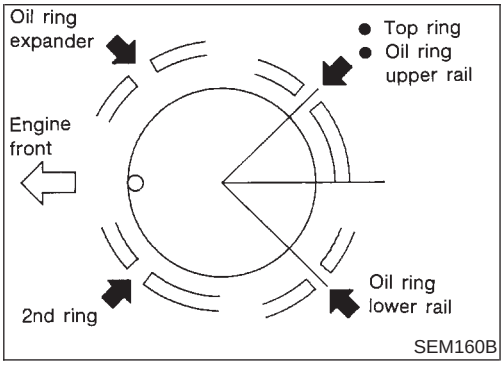

- **Align piston rings so that end gaps are positioned as shown in the figure.**

PLUG

NAEM0028S08

1. Fully air-blow engine coolant and engine oil passages in cylinder block, cylinder bore and crankcase to remove any foreign material.

CAUTION:
Use goggles to protect your eye.

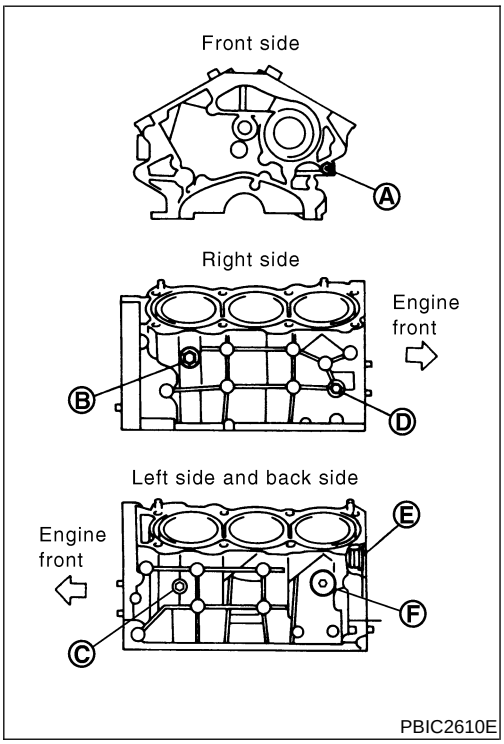

2. Install each water drain plug to cylinder block as shown in the figure.
- Apply thread sealant to the thread of water drain plugs.
  Use Genuine RTV Silicone Sealant or equivalent. Refer to GI-53, "RECOMMENDED CHEMICAL PRODUCTS AND SEALANTS".
- Tighten each water drain plug as specified below.

Part	Gasket	Tightening torque
A	No	7.8 - 11.8 N·m (0.8 - 1.2 kg-m, 69 - 104 in-lb)
B	No	17.6 - 21.6 N·m (1.8 - 2.2 kg-m, 13 - 15 ft-lb)
C	No	17.6 - 21.6 N·m (1.8 - 2.2 kg-m, 13 - 15 ft-lb)

3. Install each plug to cylinder block as shown in the figure if removed.
- Apply thread sealant to the thread of plugs "D" and "E".
  Use Genuine High Strength Thread Locking Sealant or equivalent. Refer to GI-53, "RECOMMENDED CHEMICAL PRODUCTS AND SEALANTS".
- Apply thread sealant to the thread of plug "F".
  Use Anaerobic Liquid Gasket or equivalent. Refer to GI-53, "RECOMMENDED CHEMICAL PRODUCTS AND SEALANTS".
- Tighten each plug as specified below.

Part	Gasket	Tightening torque
D	Yes	9.8 - 14.8 N·m (1.0 - 1.5 kg-m, 87 - 130 in-lb)
E	Yes	59.0 - 65.0 N·m (6.1 - 6.5 kg-m, 44 - 47 ft-lb)
F	Yes	59.0 - 65.0 N·m (6.1 - 6.5 kg-m, 44 - 47 ft-lb)

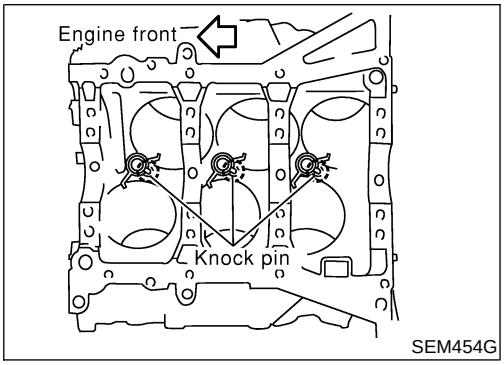

OIL JET

NAEM0028S05

1. Install oil jets.
- Insert oil jet knock pin into the cylinder block knock pin hole, and tighten the mounting bolts.

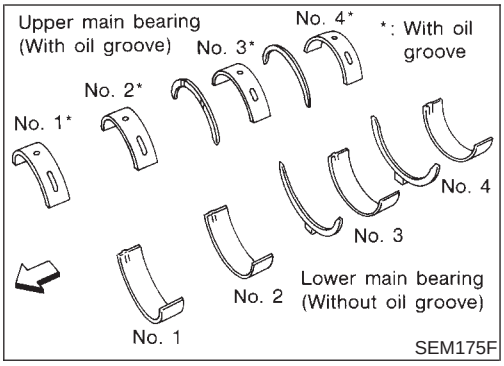

CRANKSHAFT

NAEM0028S02

1. Set main bearings in their proper positions on cylinder block and main bearing beam.

- **Confirm that correct main bearings are used. Refer to "Inspection" of this section.**

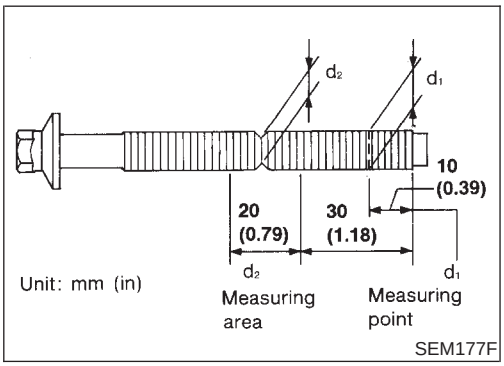

2. Instructions for re-use of main bearing cap bolts.

- **A plastic zone tightening method is used for tightening main bearing cap bolts. Measure d1 and d2 as shown in the figure.**
  d2: Select minimum diameter in the measuring area.
  If the difference between d1 and d2 exceeds the limit, replace the bolts with new ones.
  Limit (d1 - d2): 0.11 mm (0.0043 in)

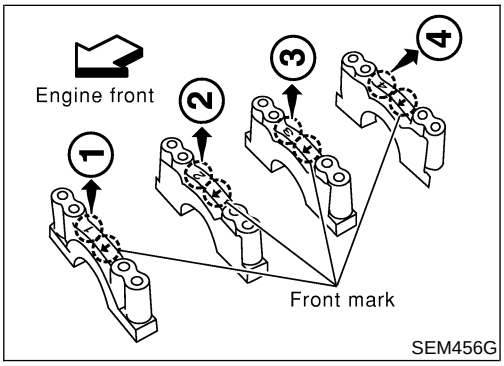

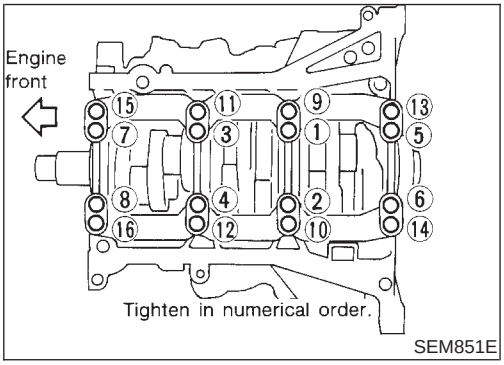

3. After installing crankshaft, main bearing cap, main bearing beam and bearing cap bolts, tighten bearing cap bolts in numerical order as shown.

- **Make sure that the front mark on the main bearing beam faces the front of the engine.**
- **Tightening procedure**

a) **Tighten all bolts to 32 to 38 N·m (3.3 to 3.9 kg-m, 24 to 28 ft-lb) in several different steps.**

b) **Turn all bolts 90 to 95 degrees clockwise with angle wrench.**

- **Prior to tightening bearing cap bolts, place bearing beam in its proper position by shifting crankshaft in the axial direction.**
- **After securing bearing cap bolts, make sure crankshaft turns smoothly by hand.**
- **Lubricate threads and seat surfaces of the bolts with new engine oil.**

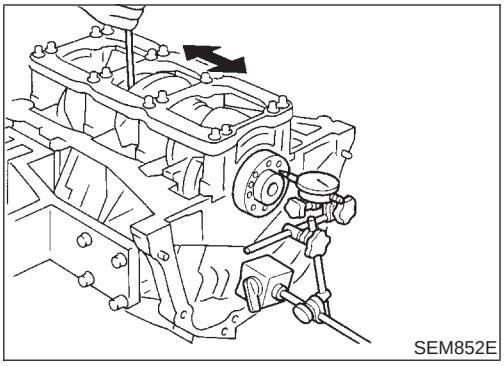

4. Measure crankshaft end play.

Crankshaft end play:

Standard

0.10 - 0.25 mm (0.0039 - 0.0098 in)

Limit

0.30 mm (0.0118 in)

If beyond the limit, replace bearing with a new one.

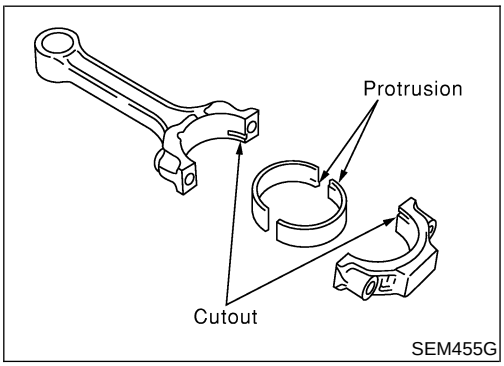

5. Install connecting rod bearings in connecting rods and connecting rod caps.

- **Confirm that correct bearings are used.**

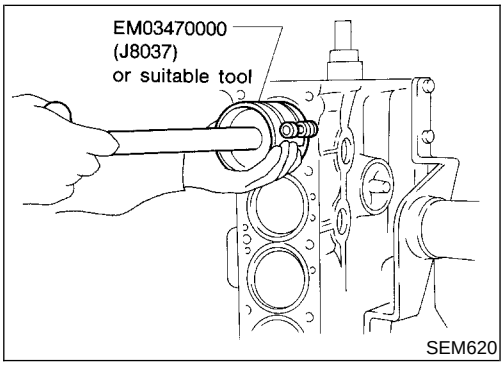

6. Install pistons with connecting rods.

a. Install them into corresponding cylinders with Tool.

- **Be careful not to scratch cylinder wall with the connecting rod.**
- **Arrange so that front mark on piston head faces toward engine front.**

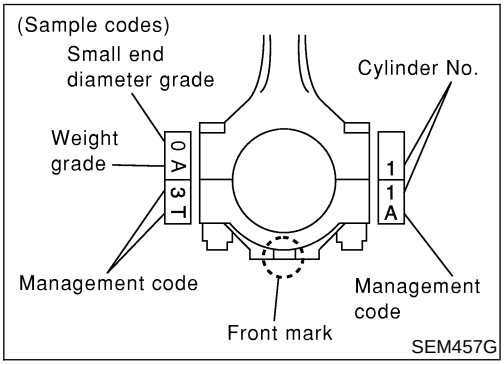

b. Install connecting rod caps.

- **Lubricate threads and seat surfaces with new engine oil.**
- Install so that the cylinder number stamped on the connecting rod agrees with that stamped on cap side.
- Make sure that front mark on the connecting rod cap faces the front of the engine.

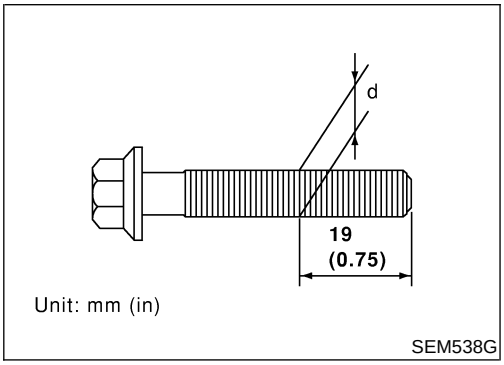

c. Re-use connecting rod cap bolts as follows.

- Make sure that the bolts can be smoothly screwed-in to the end manually.
- If not, measure the outer diameter "d" shown in the figure.

Outer diameter "d" of connecting rod cap bolt:

Standard

7.90 - 8.00 mm (0.3110 - 0.3150 in)

Limit

7.75 mm (0.3051 in)

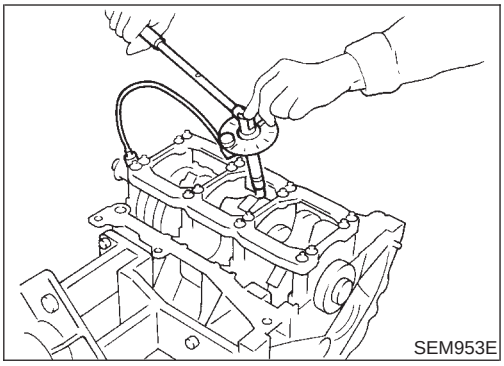
SEM953E

d. Tighten connecting rod cap bolts to the specified torque.

Connecting rod cap bolt:

(1) Tighten nuts to 19 to 21 N·m (1.9 to 2.1 kg-m, 14 to 15 ft-lb).

(2) Turn nuts 90 to 95 degrees clockwise with angle wrench.

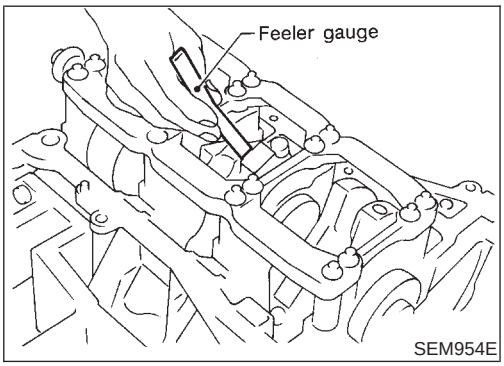

SEM954E

7. Measure connecting rod side clearance.

Connecting rod side clearance:

Standard

0.20 - 0.35 mm (0.0079 - 0.0138 in)

Limit

0.40 mm (0.0157 in)

If beyond the limit, replace connecting rod and/or crankshaft.

8. Install baffle plate to main bearing beam.
9. Install rear oil seal retainer.

KNOCK SENSOR

NAEM0028S07

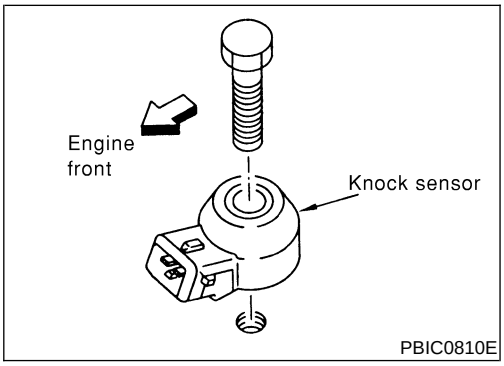

PBIC0810E

1. Install knock sensor.

- Make sure that there is no foreign material on the cylinder block mating surface and the back surface of the knock sensor.
- Install knock sensor so that connector faces front of engine.
- Do not tighten the mounting bolts while holding the connector.
- Make sure that the knock sensor does not interfere with other parts.

CAUTION:

If any impact by dropping is applied to the knock sensor, replace it with new one.

- After installing knock sensor, connect sub-harness, and lay it out to rear of engine.

REPLACEMENT OF PILOT BUSHING (M/T) OR PILOT CONVERTER (A/T)

NAEM0028S04

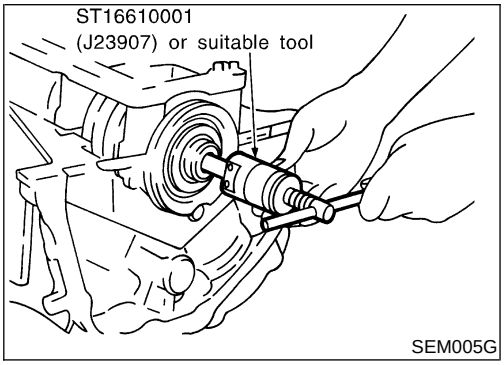

SEM005G

1. Remove pilot bushing or pilot converter using tool or suitable tool.

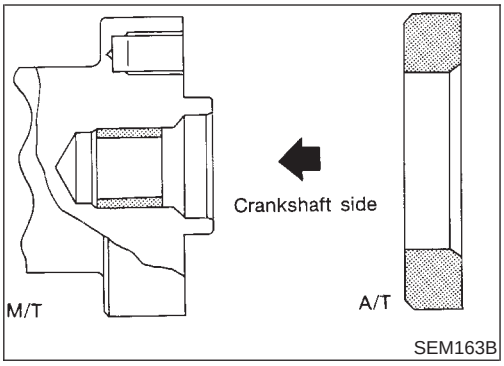

SEM163B

2. Install pilot bushing or pilot converter as shown.

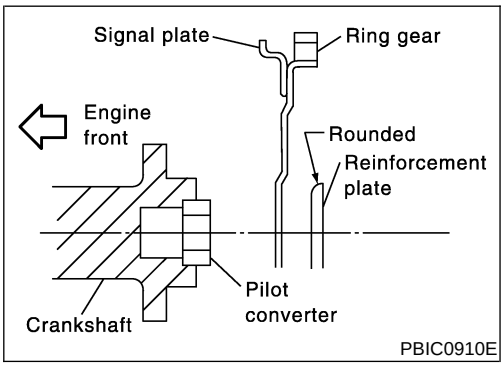

PBIC0910E

FLYWHEEL/DRIVE PLATE

NAEM0028S06

Install drive plate.

- Install the drive plate and reinforce plate in the direction shown in the figure.
- Align dowel pin of crankshaft rear end with pin holes of each part.
- Secure the crankshaft using a ring gear stopper.
- Tighten the installation bolts crosswise over several times.

General Specifications

NAEM0029

Cylinder arrangement		V-6
Displacement cm^3 (cu in)		3,498 (213.45)
Bore and stroke mm (in)		95.5 x 81.4 (3.760 x 3.205)
Valve arrangement		DOHC
Firing order		1-2-3-4-5-6
Number of piston rings	Compression	2
	Oil	1
Number of main bearings		4
Compression ratio		10.0

Compression Pressure

NAEM0030

Unit: kPa (kg/cm^2, psi)/300 rpm

Compression pressure	Standard	1,270 (13.0, 184)
	Minimum	980 (10.0, 142)
	Differential limit between cylinders	100 (1.0, 15)
Cylinder number	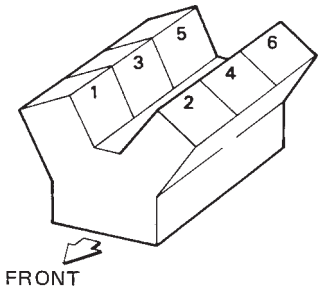 SEM713A	

Cylinder Head

NAEM0031

Unit: mm (in)

	Standard	Limit
Head surface distortion	Less than 0.03 (0.0012)	0.1 (0.004)

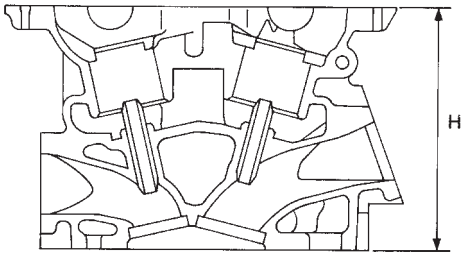

Nominal cylinder head height:
H = 126.3 - 126.5 mm (4.972 - 4.980 in)

SEM949E

Valve

NAEM0032

VALVE

NAEM0032S01

Unit: mm (in)

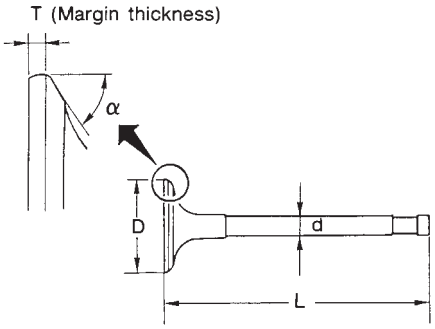

SEM188

Valve head diameter “D”	Intake	37.0 - 37.3 (1.4567 - 1.4685)
	Exhaust	31.2 - 31.5 (1.228 - 1.240)
Valve length “L”	Intake	96.12 - 96.62 (3.7842 - 3.8039)
	Exhaust	93.65 - 94.15 (3.6870 - 3.7067)
Valve stem diameter “d”	Intake	5.965 - 5.980 (0.2348 - 0.2354)
	Exhaust	5.945 - 5.960 (0.2341 - 0.2346)
Valve seat angle “α”	Intake	45°15′ - 45°45′
	Exhaust	
Valve margin “T”	Intake	1.1 (0.044)
	Exhaust	1.3 (0.051)
Valve margin “T” limit		More than 0.5 (0.020)
Valve stem end surface grinding limit		Less than 0.2 (0.008)

VALVE CLEARANCE

NAEM0032S02

Unit: mm (in)

	Cold	Hot* (reference data)
Intake	0.26 - 0.34 (0.010 - 0.013)	0.304 - 0.416 (0.012 - 0.016)
Exhaust	0.29 - 0.37 (0.011 - 0.015)	0.308 - 0.432 (0.012 - 0.017)

*: Approximately 80°C (176°F)

VALVE SPRING

NAEM0032S04

Free height mm (in)		46.52 (1.8315)
Pressure N (kg, lb) at height mm (in)	Installation	196 (20.0, 44.1) at 37.0 (1.457)
	Valve open	433 (44.2, 97.3) at 27.8 (1.094)
Out-of-square mm (in)		Less than 2.0 (0.079)

VALVE LIFTER

NAEM0032S05

Unit: mm (in)

Valve lifter outer diameter	33.977 - 33.987 (1.3377 - 1.3381)
Lifter guide inner diameter	34.000 - 34.016 (1.3386 - 1.3392)
Clearance between lifter and lifter guide	0.013 - 0.039 (0.0005 - 0.0015)

AVAILABLE LIFTERS (SHIMLESS TYPE)

=NAEM0032S08

Identification mark	Thickness mm (in)
788U or 788R	7.88 (0.3102)
790U or 790R	7.90 (0.3110)
792U or 792R	7.92 (0.3118)
794U or 794R	7.94 (0.3126)
796U or 796R	7.96 (0.3134)
798U or 798R	7.98 (0.3142)
800U or 800R	8.00 (0.3150)
802U or 802R	8.02 (0.3157)
804U or 804R	8.04 (0.3165)
806U or 806R	8.06 (0.3173)
808U or 808R	8.08 (0.3181)
810U or 810R	8.10 (0.3189)
812U or 812R	8.12 (0.3197)
814U or 814R	8.14 (0.3205)
816U or 816R	8.16 (0.3213)
818U or 818R	8.18 (0.3220)
820U or 820R	8.20 (0.3228)
822U or 822R	8.22 (0.3236)
824U or 824R	8.24 (0.3244)
826U or 826R	8.26 (0.3252)
828U or 828R	8.28 (0.3260)
830U or 830R	8.30 (0.3268)
832U or 832R	8.32 (0.3276)
834U or 834R	8.34 (0.3283)
836U or 836R	8.36 (0.3291)
838U or 838R	8.38 (0.3299)
840U or 840R	8.40 (0.3307)

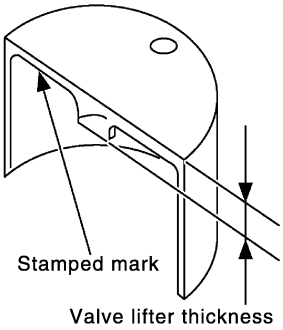

SEM758G

VALVE GUIDE

NAEM0032S06

Unit: mm (in)

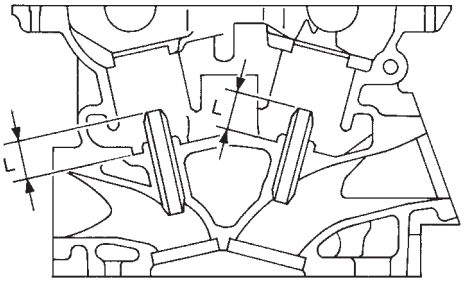

SEM950E

		Standard	Service
Valve guide	Outer diameter	10.023 - 10.034 (0.3946 - 0.3950)	10.223 - 10.234 (0.4025 - 0.4029)
Valve guide	Inner diameter (Finished size)	6.000 - 6.018 (0.2362 - 0.2369)	
Cylinder head valve guide hole diameter		9.975 - 9.996 (0.3927 - 0.3935)	10.175 - 10.196 (0.4006 - 0.4014)
Interference fit of valve guide		0.027 - 0.059 (0.0011 - 0.0023)	
		Standard	Max. tolerance
Stem to guide clearance	Intake	0.020 - 0.053 (0.0008 - 0.0021)	0.08 (0.0031)
	Exhaust	0.040 - 0.073 (0.0016 - 0.0029)	0.1 (0.004)
Valve deflection limit	Intake	—	0.24 (0.0094)
	Exhaust	—	0.28 (0.0110)
Projection length "L"		12.6 - 12.8 (0.496 - 0.504)	

Valve Seat

NAEM0033

Unit: mm (in)

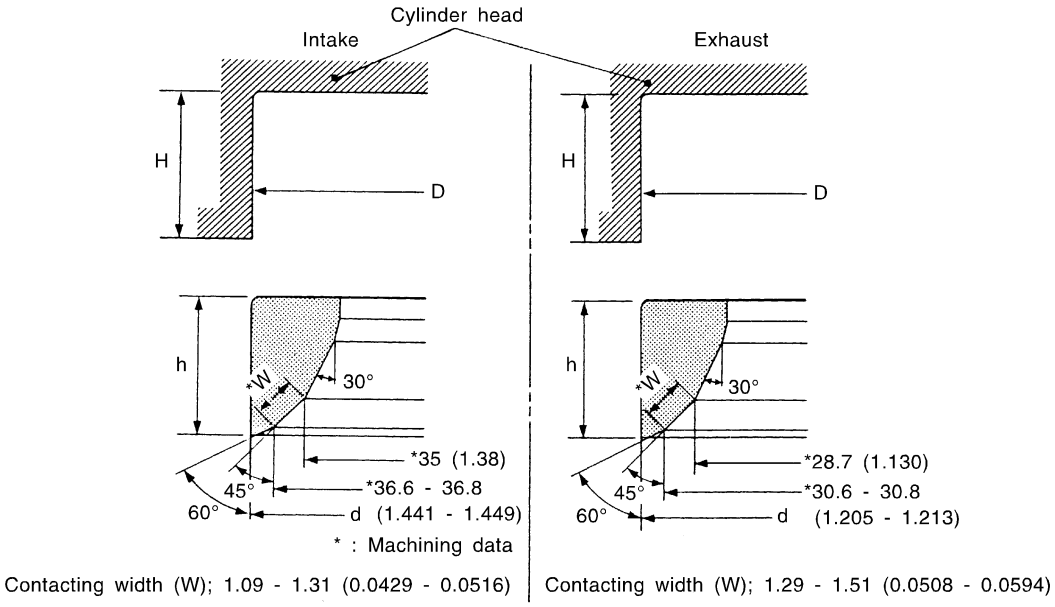

SEM021EB

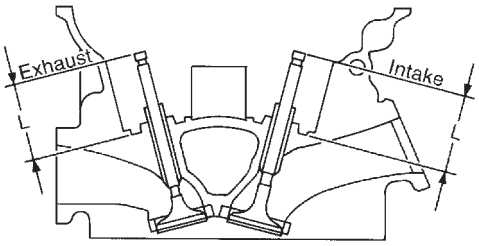

SEM621F

		Standard	Service
Cylinder head seat recess diameter (D)	Intake	38.000 - 38.016 (1.4961 - 1.4967)	38.500 - 38.516 (1.5157 - 1.5164)
	Exhaust	32.200 - 32.216 (1.2677 - 1.2683)	32.700 - 32.716 (1.2874 - 1.2880)
Valve seat interference fit	Intake	0.081 - 0.113 (0.0032 - 0.0044)	
	Exhaust	0.064 - 0.096 (0.0025 - 0.0038)	
Valve seat outer diameter (d)	Intake	38.097 - 38.113 (1.4999 - 1.5005)	38.597 - 38.613 (1.5196 - 1.5202)
	Exhaust	32.280 - 32.296 (1.2709 - 1.2715)	32.780 - 32.796 (1.2905 - 1.2912)
Height (h)	Intake	5.9 - 6.0 (0.232 - 0.236)	5.05 - 5.15 (0.1988 - 0.2028)
	Exhaust	5.9 - 6.0 (0.232 - 0.236)	4.95 - 5.05 (0.1949 - 0.1988)
Depth (H)		5.9 - 6.1 (0.232 - 0.240)	
Depth (L)	Intake	41.07 - 41.67 (1.6169 - 1.6405)	
	Exhaust	41.00 - 41.60 (1.6142 - 1.6378)	

Camshaft and Camshaft Bearing

NAEM0034

Unit: mm (in)

	Standard	Limit
Camshaft journal to bearing clearance	No. 1 0.045 - 0.086 (0.0018 - 0.0034) No. 2, 3, 4 0.035 - 0.076 (0.0014 - 0.0030)	0.15 (0.0059)
Inner diameter of camshaft bearing	No. 1 26.000 - 26.021 (1.0236 - 1.0244) No. 2, 3, 4 23.500 - 23.521 (0.9252 - 0.9260)	—
Outer diameter of camshaft journal	No. 1 25.935 - 25.955 (1.0211 - 1.0218) No. 2, 3, 4 23.445 - 23.465 (0.9230 - 0.9238)	—
Camshaft runout [TIR*]	Less than 0.02 (0.0008)	0.05 (0.0020)
Camshaft sprocket runout [TIR*]	Less than 0.15 (0.0059)	—
Camshaft end play	0.115 - 0.188 (0.0045 - 0.0074)	0.24 (0.0094)

*: Total indicator reading

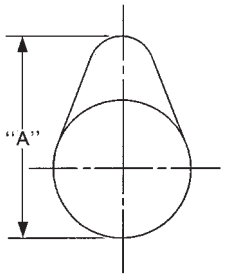

EM671

Cam height "A"	Intake and exhaust	44.465 - 44.655 (1.7506 - 1.7581)
Wear limit of cam height		0.2 (0.008)
Valve timing		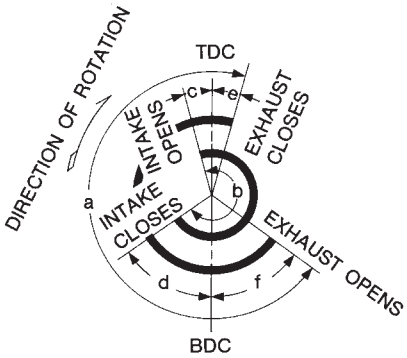

Unit: degree

a	b	c	d	e	f
232	230	–3	53	6	46

Cylinder Block

NAEM0035

Unit: mm (in)

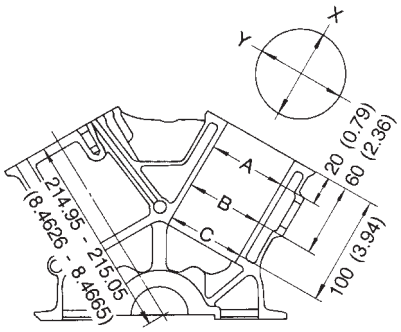

SEM022EA

Surface flatness	Standard			Less than 0.03 (0.0012)
	Limit			0.10 (0.0039)
Cylinder bore	Inner diameter	Standard	Grade No. 1	95.500 - 95.510 (3.7598 - 3.7602)
			Grade No. 2	95.510 - 95.520 (3.7602 - 3.7606)
			Grade No. 3	95.520 - 95.530 (3.7606 - 3.7610)
		Wear limit		0.20 (0.0079)
Out-of-round (Difference between X and Y)				Less than 0.015 (0.0006)
Taper (Difference between A and C)				Less than 0.015 (0.0006)

Main journal inner diameter grade (Without bearing)	Grade No. A	63.993 - 63.994 (2.5194 - 2.5194)
	Grade No. B	63.994 - 63.995 (2.5194 - 2.5195)
	Grade No. C	63.995 - 63.996 (2.5195 - 2.5195)
	Grade No. D	63.996 - 63.997 (2.5195 - 2.5196)
	Grade No. E	63.997 - 63.998 (2.5196 - 2.5196)
	Grade No. F	63.998 - 63.999 (2.5196 - 2.5196)
	Grade No. G	63.999 - 64.000 (2.5196 - 2.5197)
	Grade No. H	64.000 - 64.001 (2.5197 - 2.5197)
	Grade No. J	64.001 - 64.002 (2.5197 - 2.5198)
	Grade No. K	64.002 - 64.003 (2.5198 - 2.5198)
	Grade No. L	64.003 - 64.004 (2.5198 - 2.5198)
	Grade No. M	64.004 - 64.005 (2.5198 - 2.5199)
	Grade No. N	64.005 - 64.006 (2.5199 - 2.5199)
	Grade No. P	64.006 - 64.007 (2.5199 - 2.5200)
	Grade No. R	64.007 - 64.008 (2.5200 - 2.5200)
	Grade No. S	64.008 - 64.009 (2.5200 - 2.5200)
	Grade No. T	64.009 - 64.010 (2.5200 - 2.5201)
	Grade No. U	64.010 - 64.011 (2.5201 - 2.5201)
	Grade No. V	64.011 - 64.012 (2.5201 - 2.5202)
	Grade No. W	64.012 - 64.013 (2.5202 - 2.5202)
	Grade No. X	64.013 - 64.014 (2.5202 - 2.5202)
	Grade No. Y	64.014 - 64.015 (2.5202 - 2.5203)
	Grade No. 4	64.015 - 64.016 (2.5203 - 2.5203)
	Grade No. 7	64.016 - 64.017 (2.5203 - 2.5203)
Difference in inner diameter between cylinders	Standard	Less than 0.03 (0.0012)

Piston, Piston Ring and Piston Pin

NAEM0036

AVAILABLE PISTON

NAEM0036S01

Unit: mm (in)

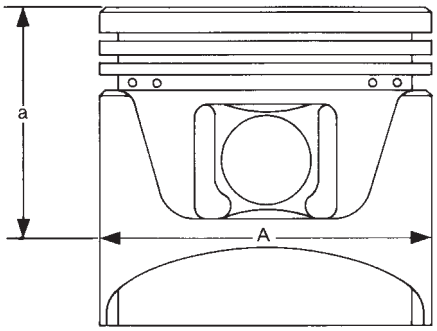

SEM882E

Piston skirt diameter "A"	Standard	Grade No. 1	95.480 - 95.490 (3.7590 - 3.7594)
		Grade No. 2*	95.490 - 95.500 (3.7594 - 3.7598)
		Grade No. 3	95.500 - 95.510 (3.7598 - 3.7602)
		0.20 (0.0079) oversize (Service)	95.680 - 95.710 (3.7669 - 3.7681)
"a" dimension			41.0 (1.614)
Piston pin hole diameter		Grade No. 0	21.993 - 21.999 (0.8659 - 0.8661)
		Grade No. 1	21.999 - 22.005 (0.8661 - 0.8663)
Piston clearance to cylinder block			0.010 - 0.030 (0.0004 - 0.0012)

*: No grade No. is punched on piston.

PISTON RING

=NAEM0036S02

Unit: mm (in)

		Standard	Limit
Side clearance	Top	0.040 - 0.080 (0.0016 - 0.0031)	0.11 (0.0043)
	2nd	0.030 - 0.070 (0.0012 - 0.0028)	0.1 (0.004)
	Oil ring	0.015 - 0.050 (0.0006 - 0.0020)	—
End gap	Top	0.23 - 0.33 (0.0091 - 0.0130)	0.54 (0.0213)
	2nd	0.33 - 0.48 (0.0130 - 0.0189)	0.80 (0.0315)
	Oil (rail ring)	0.20 - 0.60 (0.0079 - 0.0236)	0.95 (0.0374)

PISTON PIN

NAEM0036S03

Unit: mm (in)

Piston pin outer diameter	Grade No. 0	21.989 - 21.995 (0.8657 - 0.8659)
	Grade No. 1	21.995 - 22.001 (0.8659 - 0.8662)
Interference fit of piston pin to piston		0.002 - 0.006 (0.0001 - 0.0002)
Piston pin to connecting rod bushing clearance	Standard	0.005 - 0.017 (0.0002 - 0.0007)
	Limit	0.030 (0.0012)

*: Values measured at ambient temperature of 20°C (68°F)

Connecting Rod

NAEM0037

Unit: mm (in)

Center distance		144.15 - 144.25 (5.6752 - 5.6791)
Bend [per 100 (3.94)]	Limit	0.15 (0.0059)
Torsion [per 100 (3.94)]	Limit	0.30 (0.0118)
Connecting rod small end inner diameter		23.980 - 24.000 (0.9441 - 0.9449)
Piston pin bushing inner diameter*	Grade No. 0	22.000 - 22.006 (0.8661 - 0.8664)
	Grade No. 1	22.006 - 22.012 (0.8664 - 0.8666)
Connecting rod big end inner diameter		55.000 - 55.013 (2.1654 - 2.1659)
Side clearance	Standard	0.20 - 0.35 (0.0079 - 0.0138)
	Limit	0.40 (0.0157)

*: After installing in connecting rod

Crankshaft

NAEM0038

Unit: mm (in)

Main journal dia. “Dm” grade	Grade No. A	59.975 - 59.974 (2.3612 - 2.3612)
	Grade No. B	59.974 - 59.973 (2.3612 - 2.3611)
	Grade No. C	59.973 - 59.972 (2.3611 - 2.3611)
	Grade No. D	59.972 - 59.971 (2.3611 - 2.3611)
	Grade No. E	59.971 - 59.970 (2.3611 - 2.3610)
	Grade No. F	59.970 - 59.969 (2.3610 - 2.3610)
	Grade No. G	59.969 - 59.968 (2.3610 - 2.3609)
	Grade No. H	59.968 - 59.967 (2.3609 - 2.3609)
	Grade No. J	59.967 - 59.966 (2.3609 - 2.3609)
	Grade No. K	59.966 - 59.965 (2.3609 - 2.3608)
	Grade No. L	59.965 - 59.964 (2.3608 - 2.3608)
	Grade No. M	59.964 - 59.963 (2.3608 - 2.3607)
	Grade No. N	59.963 - 59.962 (2.3607 - 2.3607)
	Grade No. P	59.962 - 59.961 (2.3607 - 2.3607)
	Grade No. R	59.961 - 59.960 (2.3607 - 2.3606)
	Grade No. S	59.960 - 59.959 (2.3606 - 2.3606)
	Grade No. T	59.959 - 59.958 (2.3606 - 2.3605)
	Grade No. U	59.958 - 59.957 (2.3605 - 2.3605)
	Grade No. V	59.957 - 59.956 (2.3605 - 2.3605)
	Grade No. W	59.956 - 59.955 (2.3605 - 2.3604)
	Grade No. X	59.955 - 59.954 (2.3604 - 2.3604)
	Grade No. Y	59.954 - 59.953 (2.3604 - 2.3603)
	Grade No. 4	59.953 - 59.952 (2.3603 - 2.3603)
	Grade No. 7	59.952 - 59.951 (2.3603 - 2.3603)
Pin journal dia. “Dp”	Grade No. 0	51.968 - 51.974 (2.0460 - 2.0462)
	Grade No. 1	51.962 - 51.968 (2.0457 - 2.0460)
	Grade No. 2	51.956 - 51.962 (2.0445 - 2.0457)
Center distance “r”		40.36 - 40.44 (1.5890 - 1.5921)
Out-of-round (Difference between “X” and “Y”)	Standard	Less than 0.002 (0.0001)
Taper (Difference between “A” and “B”)	Standard	Less than 0.002 (0.0001)
Runout [TIR*]	Limit	Less than 0.10 (0.0039)
Free end play	Standard	0.10 - 0.25 (0.0039 - 0.0098)
	Limit	0.30 (0.0118)

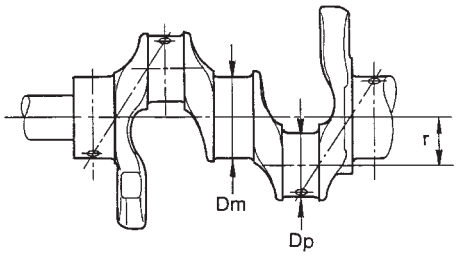

SEM645

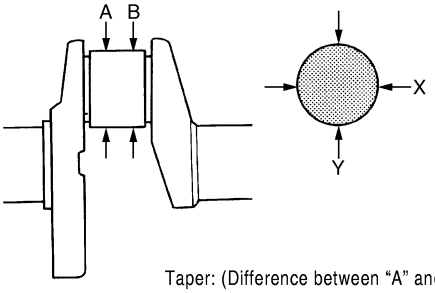

Taper: (Difference between “A” and “B”)
Out-of-round: (Difference between “X” and “Y”)

SBIA0535E

*: Total indicator reading

Available Main Bearing

NAEM0039

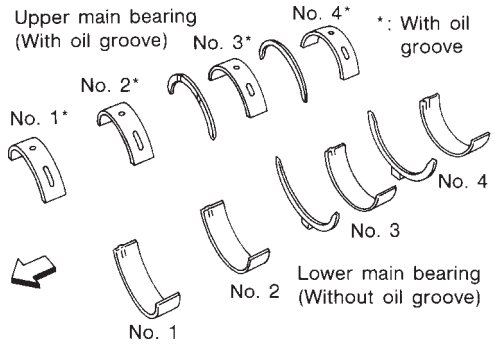

SEM175F

Grade number		Thickness "T" mm (in)	Width "W" mm (in)	Identification color (UPR/LWR)	Remarks
0		2.000 - 2.003 (0.0787 - 0.0789)	19.9 - 20.1 (0.783 - 0.791)	Black	Grade is the same for upper and lower bearings.
1		2.003 - 2.006 (0.0789 - 0.0790)		Brown	
2		2.006 - 2.009 (0.0790 - 0.0791)		Green	
3		2.009 - 2.012 (0.0791 - 0.0792)		Yellow	
4		2.012 - 2.015 (0.0792 - 0.0793)		Blue	
5		2.015 - 2.018 (0.0793 - 0.0794)		Pink	
6		2.018 - 2.021 (0.0794 - 0.0796)		Purple	
7		2.021 - 2.024 (0.0796 - 0.0797)		White	
01	UPP	2.003 - 2.006 (0.0789 - 0.0790)		Brown/Black	Grade is different for upper and lower bearings.
	LWR	2.000 - 2.003 (0.0787 - 0.0789)			
12	UPR	2.006 - 2.009 (0.0790 - 0.0791)		Green/Brown	
	LWR	2.003 - 2.006 (0.0789 - 0.0790)			
23	UPR	2.009 - 2.012 (0.0791 - 0.0792)		Yellow/Green	
	LWR	2.006 - 2.009 (0.0790 - 0.0791)			
34	UPR	2.012 - 2.015 (0.0792 - 0.0793)		Blue/Yellow	
	LWR	2.009 - 2.012 (0.0791 - 0.0792)			
45	UPR	2.015 - 2.018 (0.0793 - 0.0794)		Pink/Blue	
	LWR	2.012 - 2.015 (0.0792 - 0.0793)			
56	UPR	2.018 - 2.021 (0.0794 - 0.0796)		Purple/Pink	
	LWR	2.015 - 2.018 (0.0793 - 0.0794)			
67	UPR	2.021 - 2.024 (0.0796 - 0.0797)		White/Purple	
	LWR	2.018 - 2.021 (0.0794 - 0.0796)			

UNDERSIZE

NAEM0039S01

Unit: mm (in)

	Thickness	Main journal diameter "Dm"
0.25 (0.0098)	2.132 - 2.140 (0.0839 - 0.0843)	Grind so that bearing clearance is the specified value.

Available Connecting Rod Bearing

NAEM0040

CONNECTING ROD BEARING

NAEM0040S01

Grade number	Thickness “T” mm (in)	Identification color (mark)
0	1.500 - 1.503 (0.0591 - 0.0592)	Black
1	1.503 - 1.506 (0.0592 - 0.0593)	Brown
2	1.506 - 1.509 (0.0593 - 0.0594)	Green

UNDERSIZE

NAEM0040S02

Unit: mm (in)

	Thickness	Crank pin journal diameter “Dp”
0.25 (0.0098)	1.626 - 1.634 (0.0640 - 0.0643)	Grind so that bearing clearance is the specified value.

Miscellaneous Components

NAEM0041

Unit: mm (in)

Flywheel runout [TIR]*	Less than 0.15 (0.0059)
Drive plate runout [TIR]*	Less than 0.15 (0.0059)

*: Total indicator reading

BEARING CLEARANCE

NAEM0041S01

Unit: mm (in)

Main bearing clearance	Standard	0.035 - 0.045 (0.0014 - 0.0018)
	Limit	0.065 (0.0026)
Connecting rod bearing clearance	Standard	0.034 - 0.059 (0.0013 - 0.0023)
	Limit	0.070 (0.0028)

ACCELERATOR CONTROL, FUEL & EXHAUST SYSTEMS

SECTION FE

CONTENTS

PREPARATION 2
Special Service Tool 2
Commercial Service Tools 2
ACCELERATOR CONTROL SYSTEM 3
Removal and Installation 3
REMOVAL 3
INSTALLATION 3
INSPECTION AFTER INSTALLATION 3
FUEL SYSTEM 4
Removal and Installation 4
FUEL TANK 5
FUEL PUMP AND FUEL LEVEL SENSOR UNIT 6
EXHAUST SYSTEM 9
Removal and Installation 9

Special Service Tool

NAFE0001

The actual shapes of Kent-Moore tools may differ from those of special service tools illustrated here.

Tool number (Kent-Moore No.) Tool name	Description	
KV10114400 (J38365) Heated oxygen sensor wrench	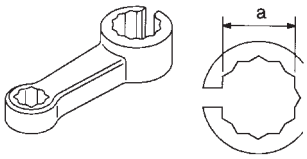 NT636	Loosening or tightening heated oxygen sensor 2 (bank 1) **a: 22 mm (0.87 in)**
KV10117100 (J3647-A) Heated oxygen sensor wrench	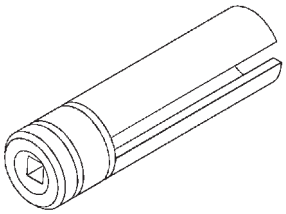 NT379	Loosening or tightening heated oxygen sensor 2 (bank 2) For 22 mm (0.87 in) width hexagon nut

Commercial Service Tools

NAFE0007

(Kent-Moore No.) Tool name	Description	
(J-43897-18) (J-43897-12) Oxygen sensor thread cleaner	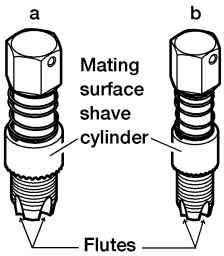 AEM488	Reconditioning the exhaust system threads before installing a new heated oxygen sensor. Use with anti-seize lubricant shown below. **a: J-43897-18 [18 mm (0.71 in) dia.] for Zirconia Heated Oxygen Sensor** **b: J-43897-12 [12 mm (0.47 in) dia.] for Titania Heated Oxygen Sensor**
Anti-seize lubricant (Permatex™ 133AR or equivalent meeting MIL specification MIL-A-907)	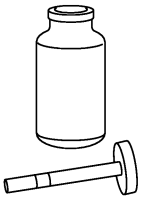 NT779	Lubricating oxygen sensor thread cleaning tool when reconditioning exhaust system threads.

Removal and Installation

NAFE0008

CAUTION:

- **Make sure that throttle valve opens when accelerator pedal is fully depressed. Also check that it returns to idle position when pedal is released when ignition switch is in "ON" position.**
- **Check accelerator control parts for improper contact with any adjacent parts.**

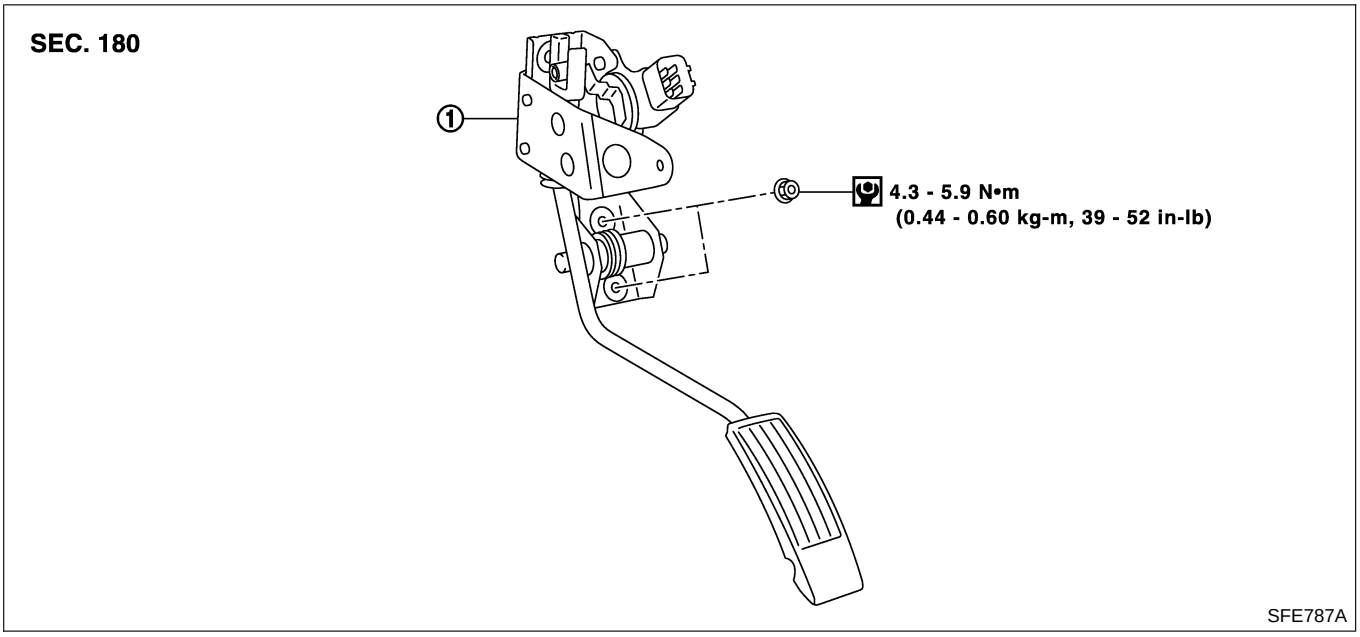

1. Accelerator pedal assembly

REMOVAL

NAFE0008S01

1. Remove accelerator pedal position (APP) sensor harness connector.
2. Loosen nuts then remove accelerator pedal assembly.

CAUTION:

- **Do not disassemble accelerator pedal assembly or remove/install accelerator pedal position (APP) sensor.**
- **Do not drop or shock accelerator pedal assembly.**
- **Keep accelerator pedal assembly from getting wet.**

INSTALLATION

NAFE0008S02

Install in reverse order of removal.

INSPECTION AFTER INSTALLATION

NAFE0008S03

- Make sure that accelerator pedal moves smoothly within the whole operation range.
- Make sure that accelerator pedal returns securely to its original position.
- For electrical inspection of accelerator pedal assembly, refer to EC-697, "DTC P2138 APP SENSOR".

CAUTION:

Perform "Accelerator Pedal Released Position Learning" when removing the accelerator pedal position sensor harness connector. Refer to EC-73, "BASIC SERVICE PROCEDURE".

Removal and Installation

NAFE0004

WARNING:

When replacing fuel line parts, be sure to observe the following:

- **Put a "CAUTION: INFLAMMABLE" sign in the workshop.**
- **Do not smoke while servicing fuel system. Keep open flames and sparks away from work area.**
- **Be sure to work in a well ventilated area and furnish the workshop with a CO_2 fire extinguisher.**

CAUTION:

- **Before removing fuel line parts, perform the following procedures:**

a) **Put drained fuel in an explosion-proof container and put the lid on securely. Keep the container in safe area.**

b) **Release fuel pressure from the fuel line. Refer to MA-17, "Changing Fuel Filter".**

c) **Disconnect battery ground cable.**

- **Always replace O-rings and clamps with new ones.**
- **Do not kink or twist hoses and tubes when they are installed.**
- **Do not tighten hose clamps excessively to avoid damaging hoses.**
- **After connecting fuel tube quick connectors, make sure that quick connectors are secure.**
  Ensure that connector and resin tube do not contact any adjacent parts.
- **For inspection of ORVR system parts, refer to EC-44, "ON Board Refueling Vapor Recovery (ORVR)".**
- **After installation, make sure there is no fuel leaks at connections in the following steps.**

a) **Apply fuel pressure to fuel lines with turning ignition switch ON (with engine stopped). Then check for fuel leaks at connections.**

b) **Start the engine and rev it up and check for fuel leaks at connections.**

- **Use only a genuine NISSAN fuel filler cap as a replacement. If an incorrect fuel filler cap is used, the "MIL" may come on.**
- **For servicing "Evaporative Emission System" parts, refer to EC-38, "Evaporative Emission System".**

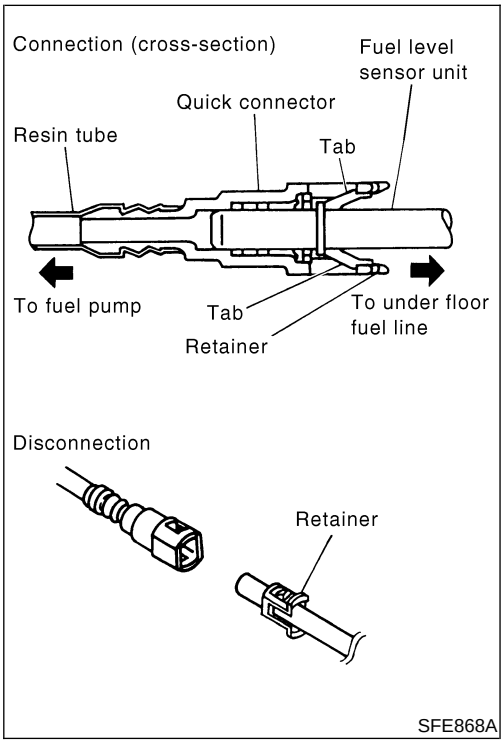

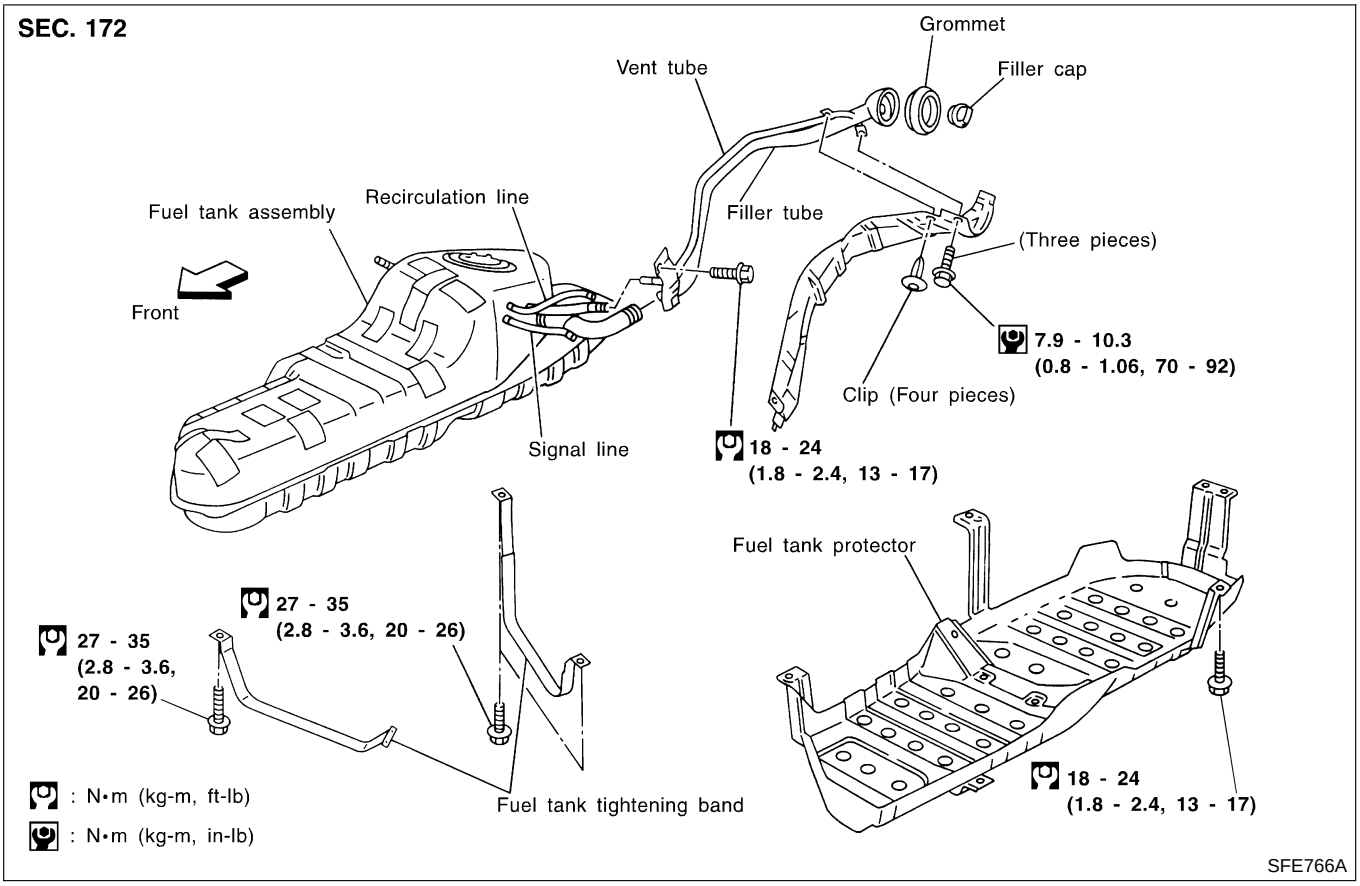

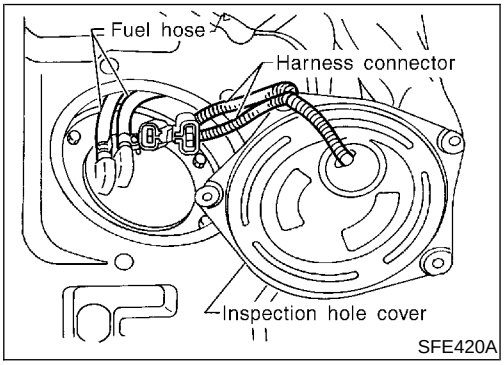

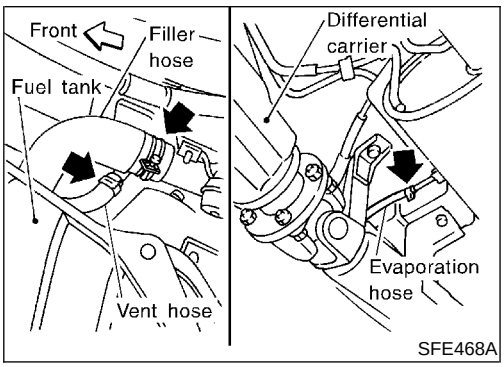

FUEL TANK

NAFE0004S01

1. Release fuel pressure from fuel line.
   Refer to MA-17, "Changing Fuel Filter".
2. Remove inspection hole cover located behind the rear seat.
3. Disconnect harness connectors under inspection hole cover.
4. Disconnect fuel hoses.
   - Put mating marks on hoses for correct installation.
5. Open fuel filler lid.
6. Open the filler cap and release the pressure inside fuel tank.
7. Disconnect filler hose, vent hose and evaporation hose at fuel tank side.

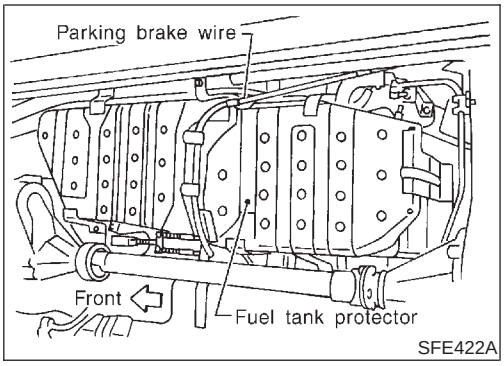

8. Remove parking brake wire from fuel tank protector.
9. Remove fuel tank protector.

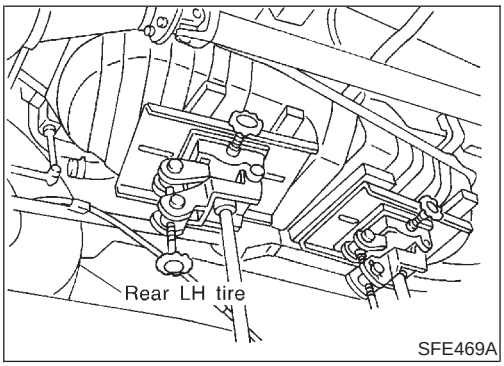

10. Remove fuel tank band mounting bolts while supporting fuel tank.
11. Remove fuel tank.

Installation procedure is the reverse order of removal.

FUEL PUMP AND FUEL LEVEL SENSOR UNIT

NAFE0004S02

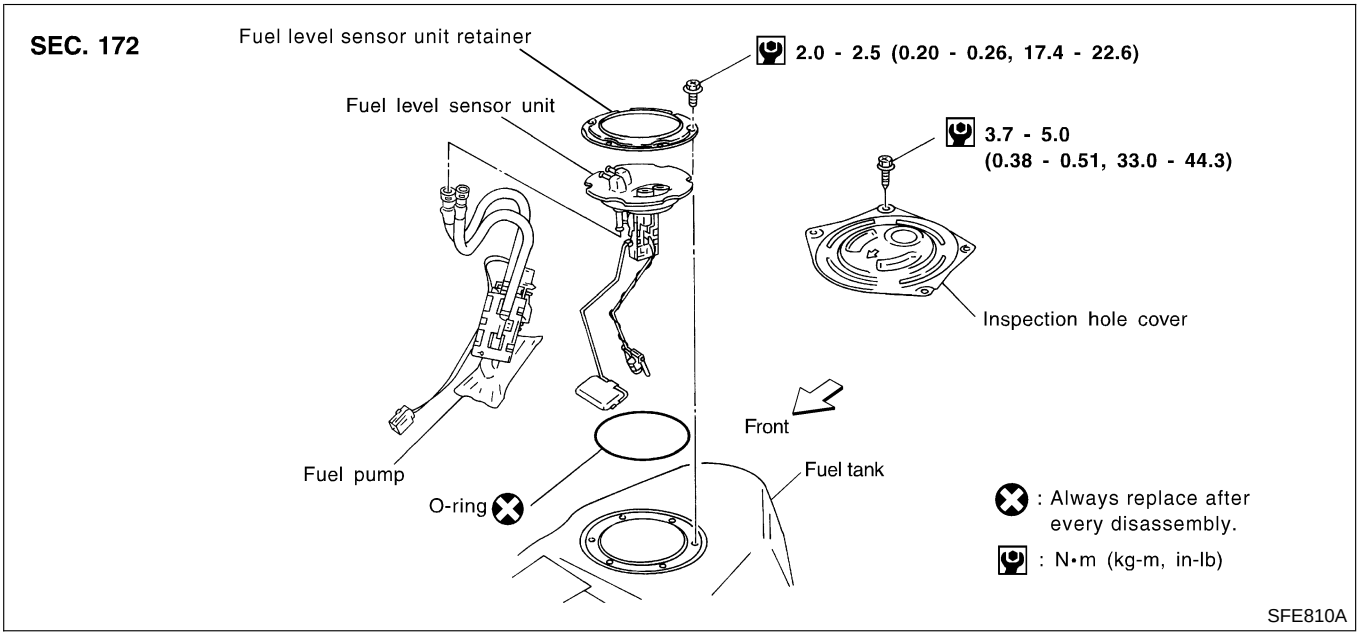

1. Release fuel pressure from fuel line.
   Refer to MA-17, "Changing Fuel Filter".
2. Open fuel filler lid.
3. Open the filler cap and release the pressure inside fuel tank.
4. Remove inspection hole cover located behind the rear seat.
5. Disconnect harness connectors and fuel tubes from upper plate of fuel level sensor unit.
   - Put mating marks on tubes for correct installation.
6. Remove fuel level sensor unit retainer and fuel level sensor unit.

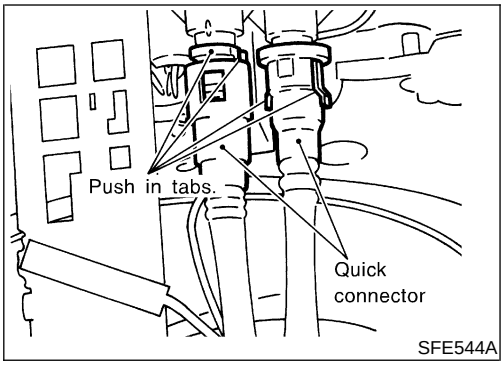

7. Disconnect the quick connectors as follows.
- Hold the sides of the connector, push in tubs and pull out the tube.
- If the connector and the tube are stuck together, push and pull several times until they start to move. Then disconnect them by pulling.

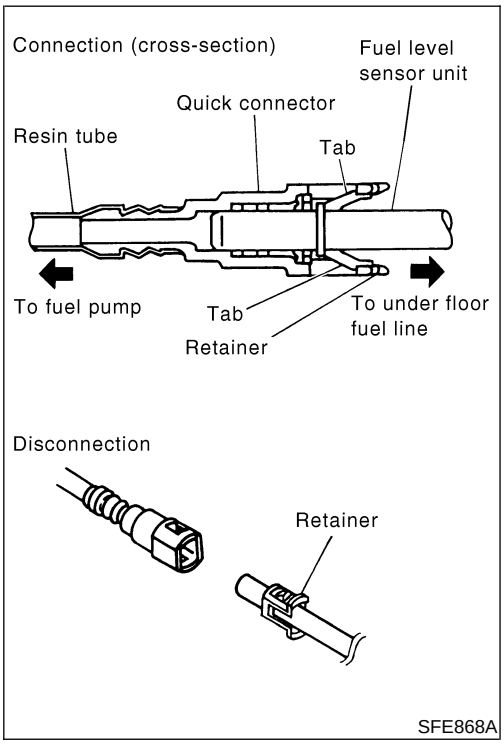

CAUTION:
- **The quick connector can be removed when the tabs are completely depressed. Do not twist it more than necessary.**
- **Do not use any tools to remove the quick connector.**
- **Keep the resin tube away from heat. Be especially careful when welding near the tube.**
- **Prevent acid liquid such as battery electrolyte, etc. from getting on the resin tube.**
- **Do not bend or twist resin tube during connection and disconnection.**
- **Only when the quick connector is replaced, remove the remaining retainer on the fuel level sensor unit. (Feed tube)**
- **When the fuel level sensor unit is replaced, also replace the retainer with a new one [Yellow colored retainer]. (Feed tube)**

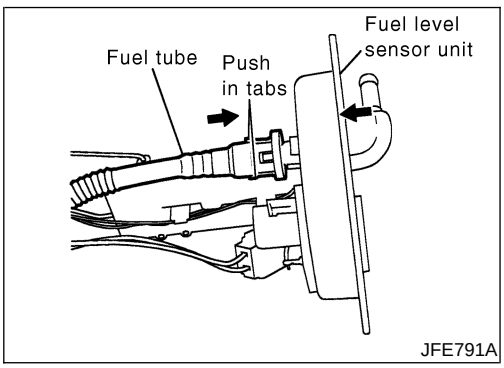

- **Press fuel tube and fuel level sensor unit as shown in the figure. Disconnect the joint by pushing tab and pull out fuel tube. (Return tube)**

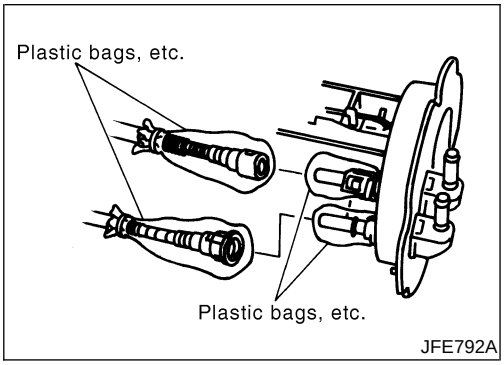

- **To keep the connecting portion clean and to avoid damage and foreign materials, cover them completely with plastic bags or something similar.**

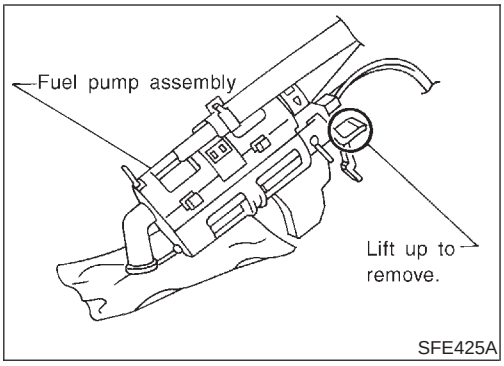

8. Remove fuel pump with bracket while lifting the pawl of the fuel pump bracket upward.

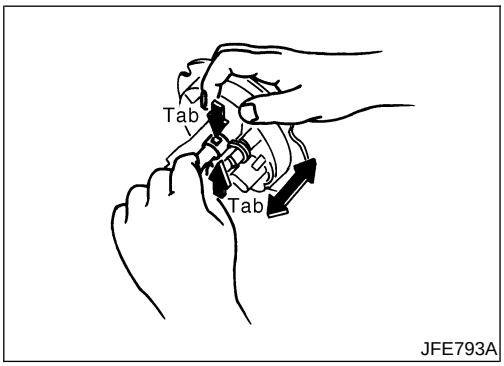

9. To install, reverse the removal procedure.

- Connect the quick connectors as follows.

1) Be sure that the connecting portion is clean and smooth.
2) Align mating marks.
3) Insert tube straight into the connector aligning each center until you hear a click.
4) After connecting, make sure that the connection is secure by following method.

a. Pull the tube and the connector to make sure they are securely connected.
b. Visually confirm that the two retainer tabs are connected to the connector.

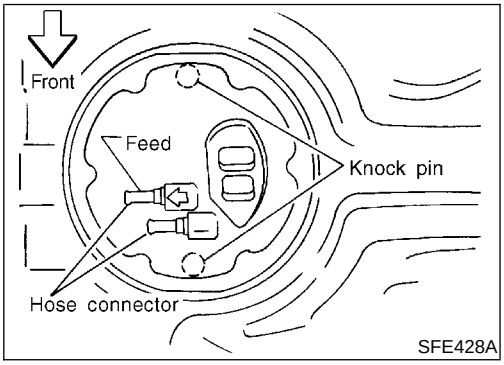

- Face fuel level sensor unit as shown in the figure, and install it with knock pin on back aligned with knock pin hole on fuel tank.

Removal and Installation

NAFE0005

CAUTION:

- **Be sure to use genuine exhaust system parts or equivalents which are specially designed for heat resistance, corrosion resistance, and shape.**
- **Perform the operation with the exhaust system fully cooled down because the system will be hot just after engine stops.**
- **Be careful not to cut your hand on the insulator edge.**
- **Always replace exhaust gaskets with new ones when reassembling.**
- **If heat insulator is badly deformed, repair or replace it. If deposits such as mud pile up on heat insulator, remove them.**
- **Remove deposits from the sealing surface of each connection. Connect them securely to avoid gas leakage.**
- **Temporarily tighten mounting nuts on the exhaust manifold side and mounting bolts on the vehicle side. Check each part for unusual interference, and then tighten them to the specified torque.**
- **With engine running, check all tube connections for exhaust gas leaks, and entire system for unusual noises.**
- **Check to ensure that mounting brackets and mounting rubbers are installed properly and free from undue stress. Improper installation could result in excessive noise or vibration.**
- **Discard any heated oxygen sensor which has been dropped from a height of more than 0.5 m (19.7 in) onto a hard surface such as a concrete floor; use a new one.**
- **Before installing new heated oxygen sensor, clean exhaust system threads using Oxygen Sensor Thread Cleaner tool J-43897-18 of J-43897-12 and approved anti-seize lubricant.**
- **Do not overtorque the heated oxygen sensor. Doing so may cause damage to the heated oxygen sensor, resulting in the MIL coming on.**

SEC. 200•208
4WD model

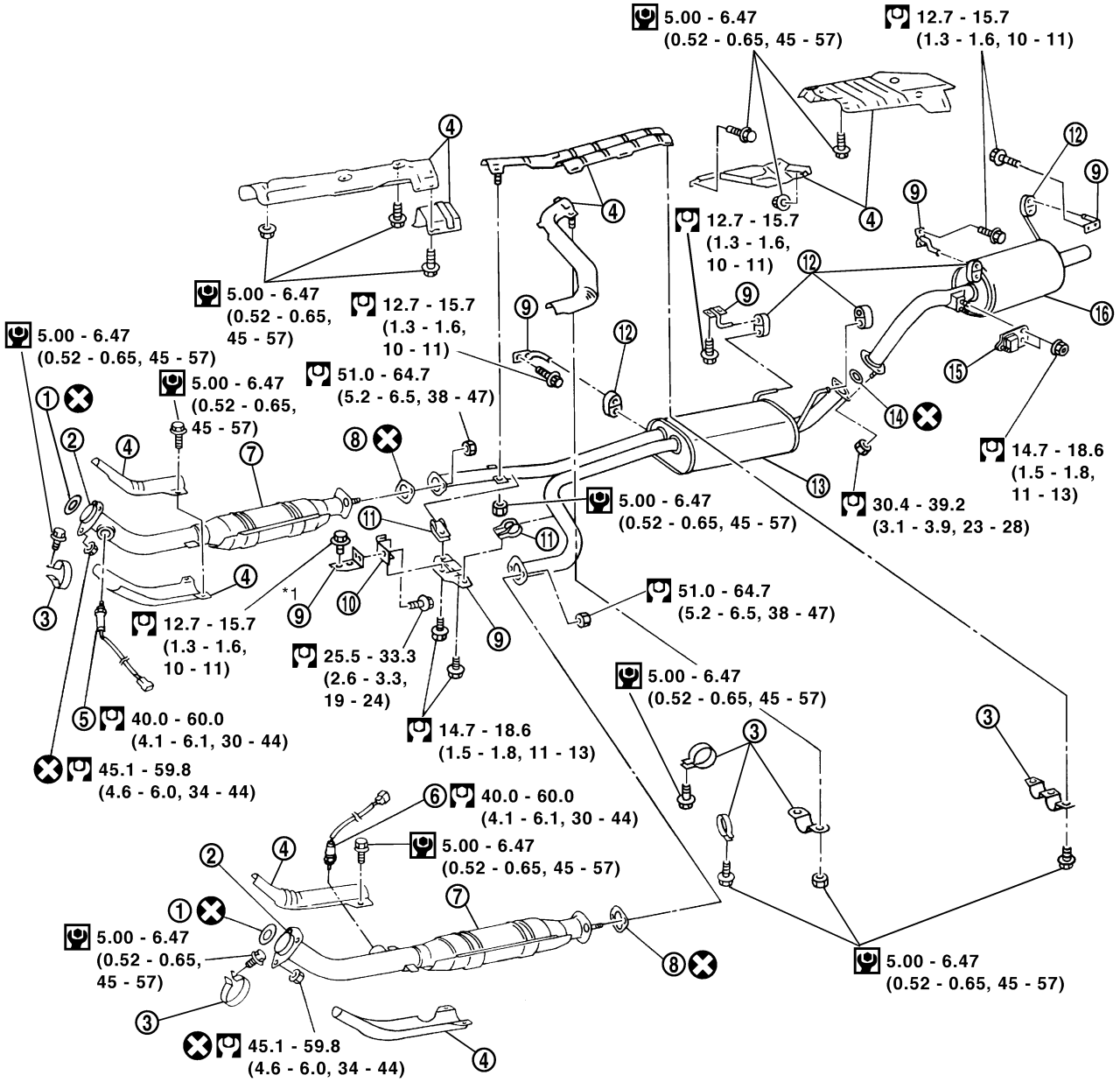

*1: Part-time 4WD models only

: N•m (kg-m, in-lb)

: N•m (kg-m, ft-lb)

: Always replace after every disassembly.

SFE863A

1. Gasket
2. Front tube
3. Clamp
4. Insulator
5. Heated oxygen sensor 2 (bank 1)
6. Heated oxygen sensor 2 (bank 2)
7. TWC (under floor)
8. Gasket
9. Mounting bracket
10. Mounting rubber
11. Clamp
12. Mounting rubber
13. Main muffler
14. Gasket
15. Dynamic damper
16. Post muffler

SEC. 200•208
2WD model

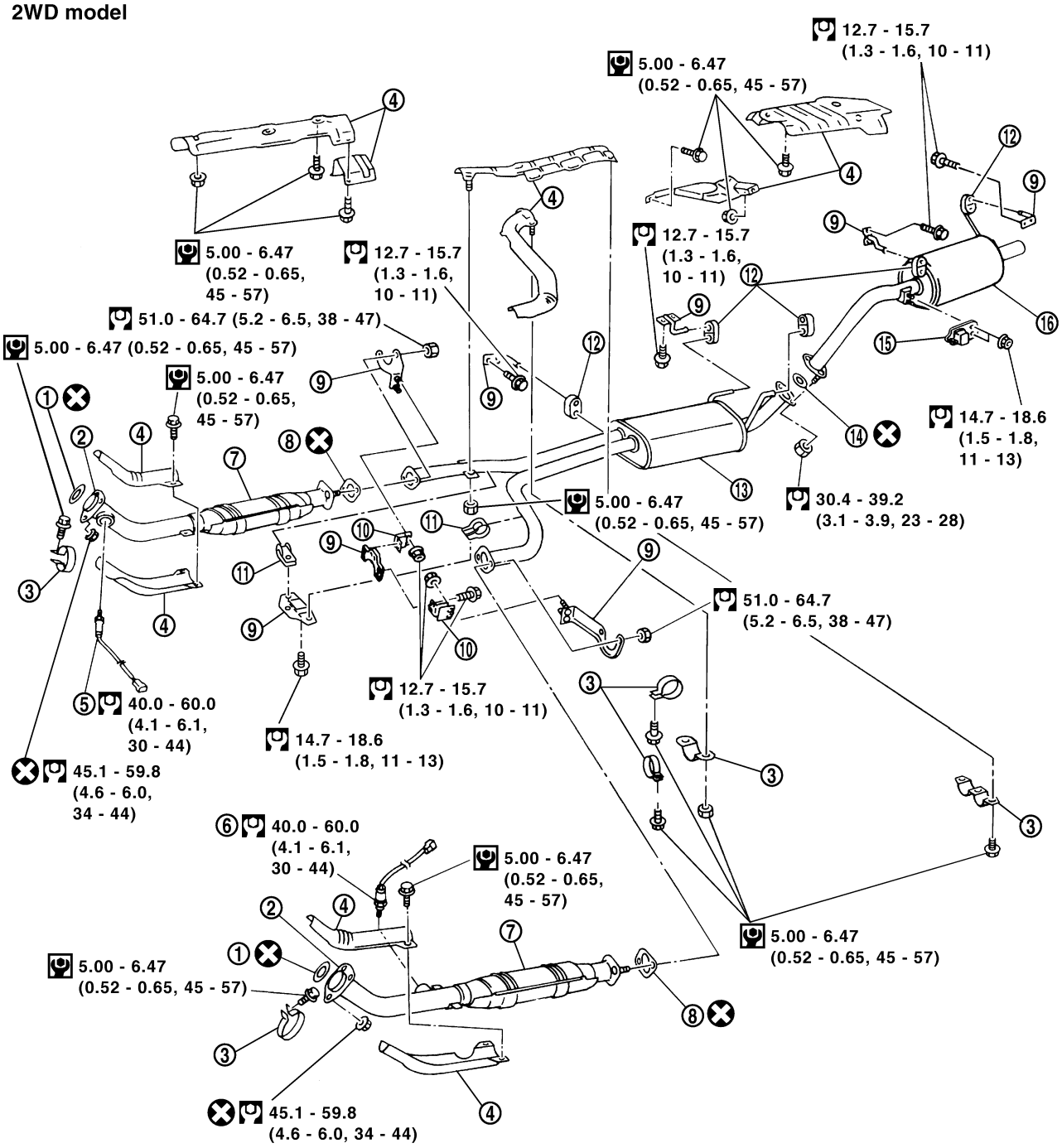

: N•m (kg-m, in-lb)

: N•m (kg-m, ft-lb)

: Always replace after every disassembly.

SFE864A

1. Gasket
2. Front tube
3. Clamp
4. Insulator
5. Heated oxygen sensor 2 (bank 1)
6. Heated oxygen sensor 2 (bank 2)
7. TWC (under floor)
8. Gasket
9. Mounting bracket
10. Mounting rubber
11. Clamp
12. Mounting rubber
13. Main muffler
14. Gasket
15. Dynamic damper
16. Post muffler

NOTES

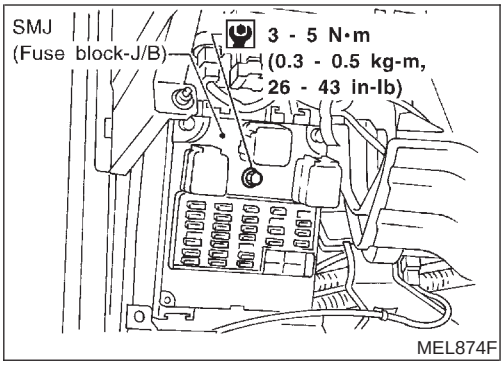

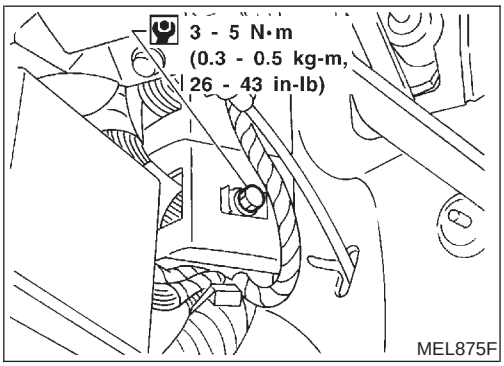

Installation

NAEL0448

To install SMJ, tighten bolts until orange “fulltight” mark appears and then retighten to specified torque as required.

: 3 - 5 N·m
(0.3 - 0.5 kg-m, 26 - 43 in-lb)

CAUTION:
Do not overtighten bolts, otherwise, they may be damaged.

Terminal Arrangement

NAEL0449

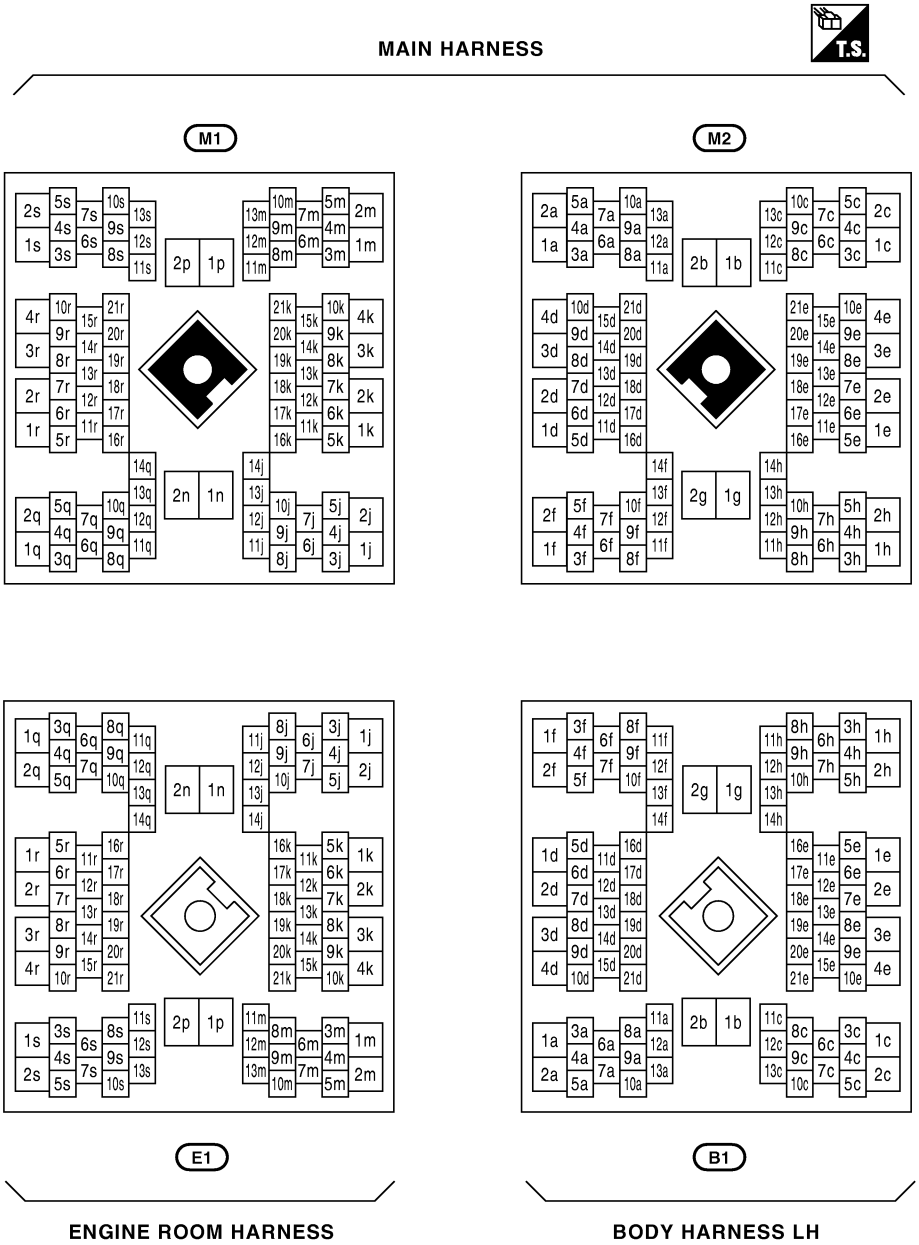

Terminal Arrangement

NAEL0450

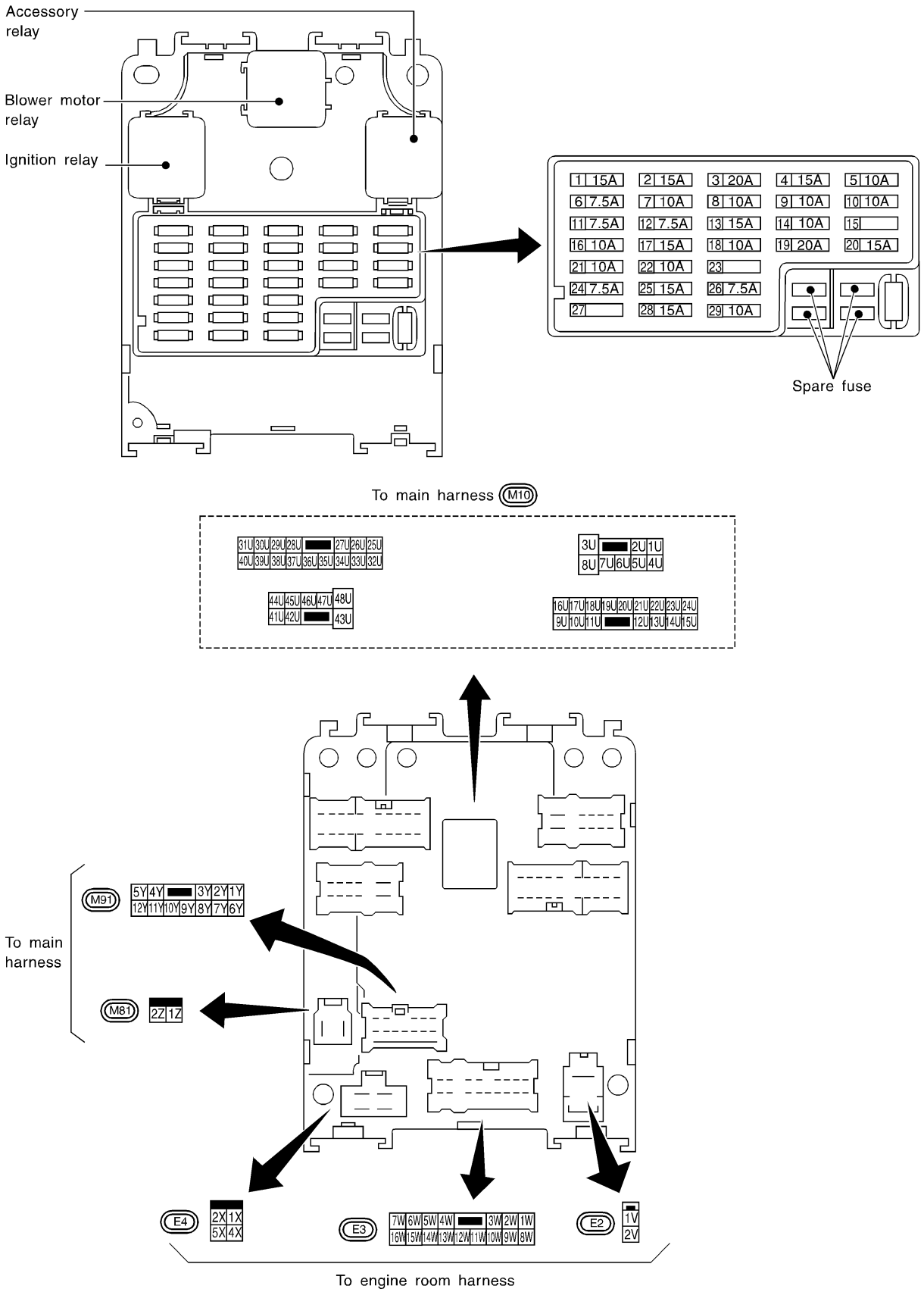

Terminal Arrangement

NAEL0451

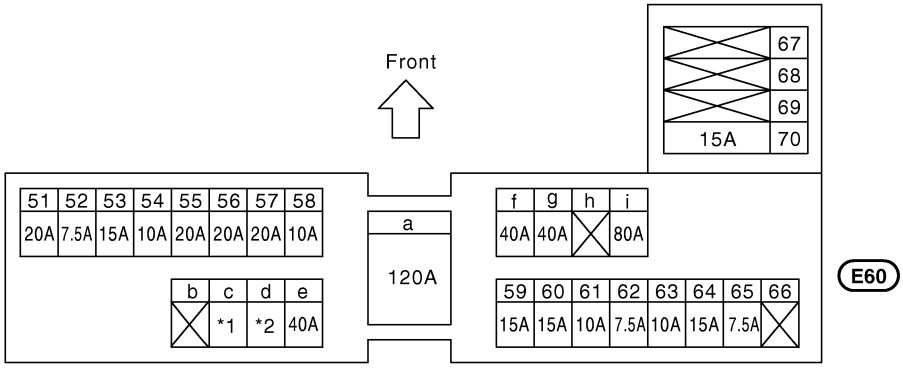

No. 51 - 70: FUSE a - i: FUSIBLE LINK

*1 40A: AB
50A: VD
*2 40A: AB
30A: VD

AB: With ABS
VD: With VDC

MEL130S

Terminal Arrangement

NAEL0150

ECM F203

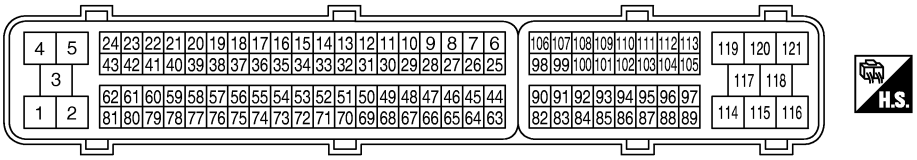

(BLACK)

TCM (TRANSMISSION CONTROL MODULE)

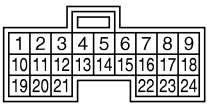

(WHITE)

M119 : A

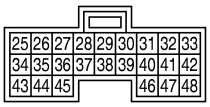

(GRAY)

M120 : A

TRANSFER CONTROL UNIT

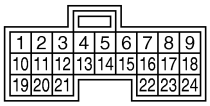

(BLUE)

M142 : AW

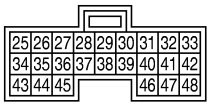

(GREEN)

M143 : AW

A/C AUTO AMP.

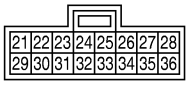

(GRAY)

M102

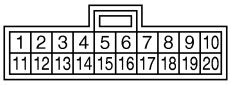

(GRAY)

M103

ABS ACTUATOR AND ELECTRIC UNIT

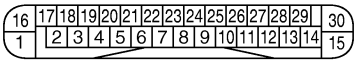

(GRAY)

E111 : OV

A : With A/T

AW : With all-mode 4-wheel drive

OV : Without VDC

VD : With VDC

ABS ACTUATOR AND ELECTRIC UNIT

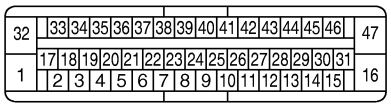

(BLACK)

E142 : VD

SMART ENTRANCE CONTROL UNIT

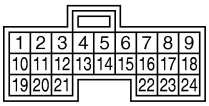

(WHITE)

M121

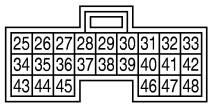

(GRAY)

M122

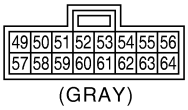

(GRAY)

M123

Terminal Arrangement

NAEL0484

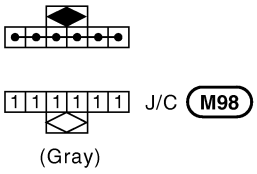

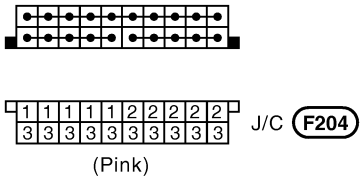

QUICK REFERENCE CHART: PATHFINDER 2004

ENGINE TUNE-UP DATA

Engine model		VQ35DE		
Firing order		1-2-3-4-5-6		
Idle speed rpm	M/T	750±50		
	A/T (in "N" position)	750±50		
Ignition timing (degree BTDC at idle speed)		15°±5°		
CO% at idle		Idle mixture screw is preset and sealed at factory.		
Drive belt deflection (Cold) mm (in)		Used belt		Deflection of new belt
		Limit	Deflection after adjustment	
Alternator Power steering oil pump Fan		7 (0.28)	4 - 5 (0.16 - 0.20)	3.5 - 4.5 (0.138 - 0.177)
Air conditioner compressor		12 (0.47)	9 - 10 (0.35 - 0.39)	8 - 9 (0.31 - 0.35)
Applied pressed force N (kg, lb)		98 (10, 22)		
Drive belt tension adjustment (Cold) N (kg, lb)		Used belt		New belt
		Limit	After adjustment	
Alternator Power steering pump Fan		294 (30, 66)	730 - 818 (74.4 - 83.5, 164 - 184)	838 - 926 (85.4 - 94.5, 188 - 208)
Air conditioner compressor		196 (20, 44)	348 - 436 (35.5 - 44.5, 78 - 98)	470 - 559 (47.9 - 57.0, 106 - 126)
Radiator cap relief pressure kPa (kg/cm^2, psi)		78 - 98 (0.8 - 1.0, 11 - 14)		
Cooling system leakage testing pressure kPa (kg/cm^2, psi)		157 (1.6, 23)		
Compression pressure kPa (kg/cm^2, psi)/rpm	Standard	1,275 (13.0, 185)/300		
	Minimum	981 (10.0, 142)/300		
Spark plug	Standard	PLFR5A-11		
	Cold	PLFR6A-11		
	Hot	PLFR4A-11		

CLUTCH PEDAL

Unit: mm (in)

Clearance "C" between pedal stopper rubber and clutch interlock switch threaded while clutch pedal is fully depressed.	0.1 - 1.0 (0.004 - 0.039)

WHEEL ALIGNMENT (Unladen*)

Camber Degree minute (Decimal degree)	Minimum	−0°35′ (−0.58°)
	Nominal	0°10′ (0.17°)
	Maximum	0°55′ (0.92°)
	Left and right difference	45′ (0.75°) or less
Caster Degree minute (Decimal degree)	Minimum	2°15′ (2.25°)
	Nominal	3°00′ (3.00°)
	Maximum	3°45′ (3.75°)
	Left and right difference	45′ (0.75°) or less
Kingpin inclination Degree minute (Decimal degree)	Minimum	13°35′ (13.58°)
	Nominal	14°20′ (14.33°)
	Maximum	15°05′ (15.08°)
Total toe-in Distance (A − B) mm (in)	Minimum	1 (0.04)
	Nominal	2 (0.08)
	Maximum	3 (0.12)
Angle (left plus right) Degree minute (Decimal degree)	Minimum	5′ (0.08°)
	Nominal	10′ (0.17°)
	Maximum	15′ (0.25°)
Wheel turning angle (Full turn) Inside Degree minute (Decimal degree)	Minimum	30°00′ (30.00°)
	Nominal	33°00′ (33.00°)
	Maximum	34°00′ (34.00°)
Outside Degree minute (Decimal degree)	Minimum	28°00′ (28.00°)
	Nominal	31°00′ (31.00°)
	Maximum	32°00′ (32.00°)

* Fuel, radiator coolant and engine oil full.
Spare tire, jack, hand tools and mats in designated positions.

BRAKE

Unit: mm (in)

Front brake	
Pad wear limit	2.0 (0.079)
Rotor repair limit	26.0 (1.024)
Rear brake	
Lining wear limit	1.5 (0.059)
Drum repair limit	296.5 (11.67)
Pedal free height	
M/T	165 - 175 (6.50 - 6.89)
A/T	175 - 185 (6.89 - 7.28)
Pedal depressed height*1	
M/T	65 (2.56)
A/T	70 (2.76)
Parking brake	
Number of notches*2	6 - 8

*1 Under force of 490 N (50 kg, 110 lb) with engine running
*2 At pulling force: 196 N (20 kg, 44 lb)

REFILL CAPACITIES

Unit			Liter	US measure
Coolant with reservoir			9.2	9-3/4 qt
Engine*	With oil filter		5.0	5-1/4 qt
	Without oil filter		4.8	5-1/8 qt
	Dry engine (engine overhaul)		6.8	7-1/4 qt
Transmission	M/T	4WD	5.1	10-3/4 pt
	A/T	2WD	8.5	9 qt
		4WD		
Transfer	Part-time 4WD		2.2	2-3/8 qt
	All-mode 4WD		3.0	3-1/8 qt
Differential carrier		Front	1.85	3-7/8 pt
		Rear	2.8	5-7/8 pt
Power steering system			0.9	1 qt
Air conditioning system		Refrigerant	0.45 kg	0.99 lb
		Compressor oil	0.18	6.3 fl oz

* For further details, see "Changing Engine Oil" in MA section.

FRONT WHEEL BEARING

Preload (At hub bolt) N (kg, lb)	Wheel bearing lock nut Tightening torque N·m (kg-m, ft-lb)	78 - 98 (8 - 10, 58 - 72)
	Retightening torque after loosening wheel bearing lock nut N·m (kg-m, in-lb)	0.5 - 1.5 (0.05 - 0.15, 4.3 - 13.0)
	Axial end play mm (in)	0 (0)
	Starting force at wheel hub bolt N (kg, lb)	A
	Turning angle degree	15° - 30°
	Starting force at wheel hub bolt N (kg, lb)	B
	Wheel bearing preload at wheel hub bolt B − A N (kg, lb)	7.06 - 20.99 (0.72 - 2.14, 1.59 - 4.72)

NOTES

Edition: SEPTEMBER 2003
Revision: FEBRUARY 2004
Publication No. SM4E-1R50U2

NISSAN PATHFINDER

MODEL R50 SERIES

QUICK REFERENCE INDEX

GENERAL INFORMATION	GI
MAINTENANCE	MA
ENGINE MECHANICAL	EM
ENGINE LUBRICATION & COOLING SYSTEMS	LC
ENGINE CONTROL SYSTEM	EC
ACCELERATOR CONTROL, FUEL & EXHAUST SYSTEMS	FE
CLUTCH	CL
MANUAL TRANSMISSION	MT
AUTOMATIC TRANSMISSION	AT
TRANSFER	TF
PROPELLER SHAFT & DIFFERENTIAL CARRIER	PD
FRONT & REAR AXLE	AX
FRONT & REAR SUSPENSION	SU
BRAKE SYSTEM	BR
STEERING SYSTEM	ST
RESTRAINT SYSTEM	RS
BODY & TRIM	BT
HEATER & AIR CONDITIONER	HA
STARTING & CHARGING SYSTEM	SC
ELECTRICAL SYSTEM	EL
ALPHABETICAL INDEX	IDX

© 2004 NISSAN MOTOR CO., LTD.
All rights reserved. No part of this Service Manual may be reproduced or stored in a retrieval system, or transmitted in any form, or by any means, electronic, mechanical, photocopying, recording or otherwise, without the prior written permission of Nissan Motor Company Ltd., Tokyo, Japan.

FOREWORD

This manual contains maintenance and repair procedures for the 2004 Nissan PATHFINDER.

In order to assure your safety and the efficient functioning of the vehicle, this manual should be read thoroughly. It is especially important that the PRECAUTIONS in the GI section be completely understood before starting any repair task.

All information in this manual is based on the latest product information at the time of publication. The right is reserved to make changes in specifications and methods at any time without notice.

IMPORTANT SAFETY NOTICE

The proper performance of service is essential for both the safety of the technician and the efficient functioning of the vehicle.
The service methods in this Service Manual are described in such a manner that the service may be performed safely and accurately.
Service varies with the procedures used, the skills of the technician and the tools and parts available. Accordingly, anyone using service procedures, tools or parts which are not specifically recommended by NISSAN must first be completely satisfied that neither parsonal safety nor the vehicle's safety will be jeopardized by the service method selected.

NISSAN MOTOR CO., LTD.

PLEASE HELP MAKE THIS SERVICE MANUAL BETTER!

Your comments are important to NISSAN and will help us to improve our Service Manuals.

Use this form to report any issues or comments you may have regarding our Service Manuals.

Please print this form and type or write your comments below. Mail or fax to:

Nissan North America, Inc.
Technical Service Information
39001 Sunrise Drive, P.O. Box 9200
Farmington Hills, MI USA 48331
FAX: (248) 488-3910

SERVICE MANUAL: Model: _____ **Year:** _____

PUBLICATION NO. (Refer to Quick Reference Index): _____

Please describe any Service Manual issues or problems in detail:

Page number(s) _____ *Note: Please include a copy of each page, marked with your comments.*

_____

_____

_____

_____

_____

_____

_____

Are the trouble diagnosis procedures logical and easy to use? (circle your answer) YES NO

If no, what page number(s)?_____*Note: Please include a copy of each page, marked with your comments.*

Please describe the issue or problem in detail: _____

_____

_____

_____

Is the organization of the manual clear and easy to follow? (circle your answer) YES NO

Please comment: _____

_____

_____

_____

_____

What information should be included in NISSAN Service Manuals to better support you in servicing or repairing customer vehicles?

_____

_____

_____

_____

DATE: _____ YOUR NAME: _____ POSITION: _____

DEALER: _____ DEALER NO.: _____ ADDRESS: _____

CITY:_____ STATE/PROV./COUNTRY: _____ ZIP/POSTAL CODE: _____

NOTES

SECTION GI

CONTENTS

PRECAUTIONS 3
Precautions 3
PRECAUTIONS FOR SUPPLEMENTAL RESTRAINT SYSTEM (SRS) "AIR BAG" AND "SEAT BELT PRE-TENSIONER" 3
PRECAUTIONS FOR NVIS (NISSAN VEHICLE IMMOBILIZER SYSTEM - NATS) 3
GENERAL PRECAUTIONS 4
PRECAUTIONS FOR MULTIPORT FUEL INJECTION SYSTEM OR ENGINE CONTROL SYSTEM 6
PRECAUTIONS FOR THREE WAY CATALYST 6
PRECAUTIONS FOR HOSES 6
PRECAUTIONS FOR ENGINE OILS 7
PRECAUTIONS FOR FUEL 8
PRECAUTIONS FOR AIR CONDITIONING 8
HOW TO USE THIS MANUAL 9
HOW TO READ WIRING DIAGRAMS 11
Sample/Wiring Diagram - EXAMPL - 11
OPTIONAL SPLICE 12
Description 13
CONNECTOR SYMBOLS 15
HARNESS INDICATION 16
COMPONENT INDICATION 16
SWITCH POSITIONS 16
DETECTABLE LINES AND NON-DETECTABLE LINES 17
MULTIPLE SWITCH 18
REFERENCE AREA 19
HOW TO CHECK TERMINAL 21
Connector and Terminal Pin Kit 21
How to Probe Connectors 21
PROBING FROM HARNESS SIDE 21
PROBING FROM TERMINAL SIDE 21
How to Check Enlarged Contact Spring of Terminal 22
Waterproof Connector Inspection 23
RUBBER SEAL INSPECTION 23
WIRE SEAL INSPECTION 23
Terminal Lock Inspection 23
HOW TO PERFORM EFFICIENT DIAGNOSIS FOR AN ELECTRICAL INCIDENT 24
Work Flow 24
Incident Simulation Tests 25
INTRODUCTION 25
VEHICLE VIBRATION 25
HEAT SENSITIVE 26
FREEZING 26
WATER INTRUSION 27
ELECTRICAL LOAD 27
COLD OR HOT START UP 27
Circuit Inspection 27
INTRODUCTION 27
TESTING FOR "OPENS" IN THE CIRCUIT 28
TESTING FOR "SHORTS" IN THE CIRCUIT 29
GROUND INSPECTION 30
VOLTAGE DROP TESTS 30
CONTROL UNIT CIRCUIT TEST 32
HOW TO FOLLOW TROUBLE DIAGNOSES 34
How to Follow Test Groups in Trouble Diagnoses 35
Harness Wire Color and Connector Number Indication 36
TYPE 1: HARNESS WIRE COLOR AND CONNECTOR NUMBER ARE SHOWN IN ILLUSTRATION 36
TYPE 2: HARNESS WIRE COLOR AND CONNECTOR NUMBER ARE SHOWN IN TEXT 36
Key to Symbols Signifying Measurements or Procedures 37
CONSULT-II CHECKING SYSTEM 39
Function and System Application 39
Nickel Metal Hydride Battery Replacement 40
Checking Equipment 40
CONSULT-II Start Procedure 41
CONSULT-II Data Link Connector (DLC) Circuit 41
INSPECTION PROCEDURE 41
IDENTIFICATION INFORMATION 43
Model Variation 43
2WD 43
4WD 43

CONTENTS (Cont'd)

PREFIX AND SUFFIX DESIGNATIONS 43
Identification Number 44
VEHICLE IDENTIFICATION NUMBER ARRANGEMENT 44
IDENTIFICATION PLATE 45
ENGINE SERIAL NUMBER 45
MANUAL TRANSMISSION NUMBER 45
AUTOMATIC TRANSMISSION NUMBER 45
TRANSFER SERIAL NUMBER 46
Dimensions 46
Wheels & Tires 46
LIFTING POINTS AND TOW TRUCK TOWING 47
Screw Jack 47
Garage Jack and Safety Stand 48
2-pole Lift 49
Tow Truck Towing 49
2WD MODELS 50
PART TIME 4WD MODELS 50
ALL-MODE 4WD MODELS 51
VEHICLE RECOVERY 51
TIGHTENING TORQUE OF STANDARD BOLTS 52
RECOMMENDED CHEMICAL PRODUCTS AND SEALANTS 53
SAE J1930 TERMINOLOGY LIST 54
SAE J1930 Terminology List 54

Precautions

NAGI0001

Observe the following precautions to ensure safe and proper servicing. These precautions are not described in each individual section.

PRECAUTIONS FOR SUPPLEMENTAL RESTRAINT SYSTEM (SRS) "AIR BAG" AND "SEAT BELT PRE-TENSIONER"

NAGI0001S01

The Supplemental Restraint System such as "AIR BAG" and "SEAT BELT PRE-TENSIONER" used along with a seat belt, helps to reduce the risk or severity of injury to the driver and front passenger for certain types of collision. The SRS composition which is available to NISSAN MODEL R50 is as follows:

- For a frontal collision
  The Supplemental Restraint System consists of driver air bag module (located in the center of the steering wheel), front passenger air bag module (located on the instrument panel on passenger side), seat belt pre-tensioners, a diagnosis sensor unit, warning lamp, wiring harness and spiral cable.
- For a side collision
  The Supplemental Restraint System consists of side air bag module (located in the outer side of front seat), side curtain air bag module (locating in the headlining side of front and rear seat), satellite sensor, diagnosis sensor unit (one of components of air bags for a frontal collision), wiring harness, warning lamp (one of components of air bags for a frontal collision).

WARNING:

- **To avoid rendering the SRS inoperative, which could increase the risk of personal injury or death in the event of a collision which would result in air bag inflation, all maintenance must be performed by an authorized NISSAN dealer.**
- **Improper maintenance, including incorrect removal and installation of the SRS, can lead to personal injury caused by unintentional activation of the system.**
- **Do not use electrical test equipment on any circuit related to the SRS unless instructed to in this Service Manual. SRS wiring harnesses can be identified by yellow and/or orange harness connector (and by yellow harness protector or yellow insulation tape before the harness connectors).**

PRECAUTIONS FOR NVIS (NISSAN VEHICLE IMMOBILIZER SYSTEM — NATS)

NAGI0001S08

NVIS (NATS) will immobilize the engine if someone tries to start it without the registered key of NVIS (NATS).
Both of the originally supplied ignition key IDs have been NVIS (NATS) registered.
The security indicator is located on the instrument panel. The indicator blinks when the ignition switch is in "OFF" or "ACC" position. Therefore, NVIS (NATS) warns outsiders that the vehicle is equipped with the anti-theft system.

- When NVIS (NATS) detects trouble, the security indicator lamp lights up while ignition switch is in "ON" position.
  This lighting up indicates that the anti-theft is not functioning, so prompt service is required.
- When servicing NVIS (NATS) (trouble diagnoses, system initialization and additional registration of other NVIS (NATS) ignition key IDs), CONSULT-II hardware and CONSULT-II NVIS (NATS) software is necessary.
  Regarding the procedures of NVIS (NATS) initialization and NVIS (NATS) ignition key ID registration, refer to CONSULT-II operation manual, IVIS/NVIS.

Therefore, CONSULT-II NVIS (NATS) software (program card and operation manual) must be kept strictly confidential to maintain the integrity of the anti-theft function.

- When servicing NVIS (NATS) (trouble diagnoses, system initialization and additional registration of other NVIS (NATS) ignition key IDs), it may be necessary to re-register original key identification. Therefore, be sure to receive all keys from vehicle owner.
  A maximum of five key IDs can be registered into NVIS (NATS).
- When failing to start the engine first time using the key of NVIS (NATS) (for example, when interference is caused by another NVIS (NATS) key, an automated full road device or automated payment device on the key ring), restart as follows.

a) Leave the ignition switch in "ON" position for approximately 5 seconds.

b) Turn ignition switch to "OFF" or "LOCK" position and wait approximately 5 seconds.

c) Repeat step 1 and 2.

d) Restart the engine while holding the device (which may have caused the interference) separate from the registered NVIS (NATS) key. If the no start condition re-occurs, NISSAN recommends placing the registered nats key on a separate key ring to avoid interference from other devices.

GENERAL PRECAUTIONS

NAGI0001S02

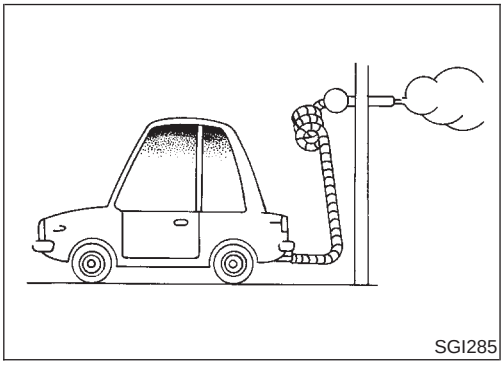

SGI285

- Do not operate the engine for an extended period of time without proper exhaust ventilation.
  Keep the work area well ventilated and free of any inflammable materials. Special care should be taken when handling any inflammable or poisonous materials, such as gasoline, refrigerant gas, etc. When working in a pit or other enclosed area, be sure to properly ventilate the area before working with hazardous materials.
  Do not smoke while working on the vehicle.

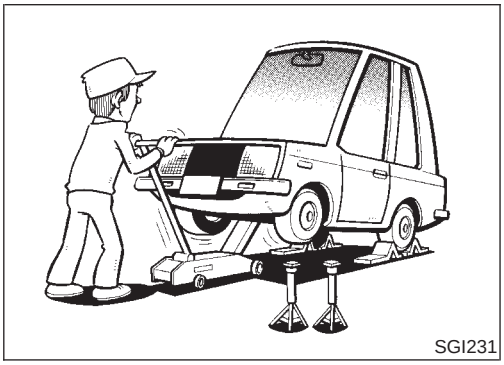

SGI231

- Before jacking up the vehicle, apply wheel chocks or other tire blocks to the wheels to prevent the vehicle from moving. After jacking up the vehicle, support the vehicle weight with safety stands at the points designated for proper lifting before working on the vehicle.
  These operations should be done on a level surface.
- When removing a heavy component such as the engine or transaxle/transmission, be careful not to lose your balance and drop it. Also, do not allow it to strike adjacent parts, especially the brake tubes and master cylinder.

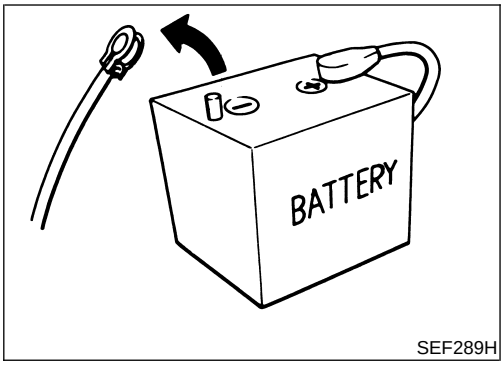

SEF289H

- Before starting repairs which do not require battery power:
  Turn off ignition switch.
  Disconnect the negative battery cable.

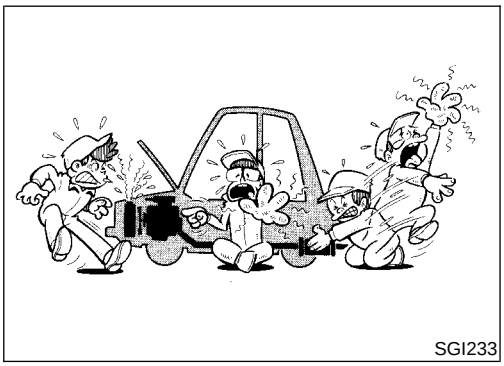
SGI233

- To prevent serious burns:
  Avoid contact with hot metal parts.
  Do not remove the radiator cap when the engine is hot.

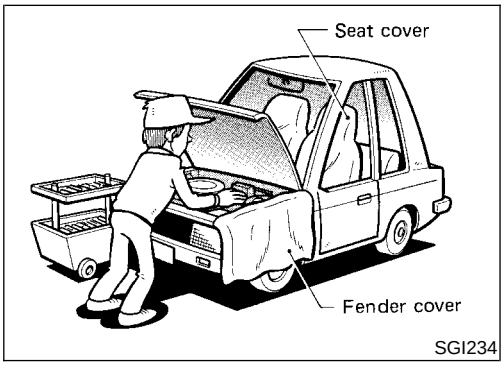

SGI234

- Before servicing the vehicle:
  Protect fenders, upholstery and carpeting with appropriate covers.
  Take caution that keys, buckles or buttons do not scratch paint.

- Clean all disassembled parts in the designated liquid or solvent prior to inspection or assembly.
- Replace oil seals, gaskets, packings, O-rings, locking washers, cotter pins, self-locking nuts, etc. with new ones.
- Replace inner and outer races of tapered roller bearings and needle bearings as a set.
- Arrange the disassembled parts in accordance with their assembled locations and sequence.
- Do not touch the terminals of electrical components which use microcomputers (such as ECMs).
  Static electricity may damage internal electronic components.
- After disconnecting vacuum or air hoses, attach a tag to indicate the proper connection.
- Use only the fluids and lubricants specified in this manual.
- Use approved bonding agent, sealants or their equivalents when required.
- Use tools and recommended special tools where specified for safe and efficient service repairs.
- When repairing the fuel, oil, water, vacuum or exhaust systems, check all affected lines for leaks.
- Dispose of drained oil or the solvent used for cleaning parts in an appropriate manner.

WARNING:

To prevent ECM from storing the diagnostic trouble codes, do not carelessly disconnect the harness connectors which are related to the engine control system and TCM (Transmission Control Module) system. The connectors should be disconnected only when working according to the WORK FLOW of TROUBLE DIAGNOSES in EC and AT sections.

PRECAUTIONS FOR MULTIPORT FUEL INJECTION SYSTEM OR ENGINE CONTROL SYSTEM

NAGI0001S03

- Before connecting or disconnecting any harness connector for the multiport fuel injection system or ECM (Engine Control Module):
  Turn ignition switch to OFF position.
  Disconnect negative battery terminal.
  Otherwise, there may be damage to ECM.
- Before disconnecting pressurized fuel line from fuel pump to injectors, be sure to release fuel pressure.
- Be careful not to jar components such as ECM and mass air flow sensor.

PRECAUTIONS FOR THREE WAY CATALYST

NAGI0001S04

If a large amount of unburned fuel flows into the catalyst, the catalyst temperature will be excessively high. To prevent this, follow the instructions below:

- Use unleaded gasoline only. Leaded gasoline will seriously damage the three way catalyst.
- When checking for ignition spark or measuring engine compression, make tests quickly and only when necessary.
- Do not run engine when the fuel tank level is low, otherwise the engine may misfire causing damage to the catalyst.

Do not place the vehicle on flammable material. Keep flammable material off the exhaust pipe and the three way catalyst.

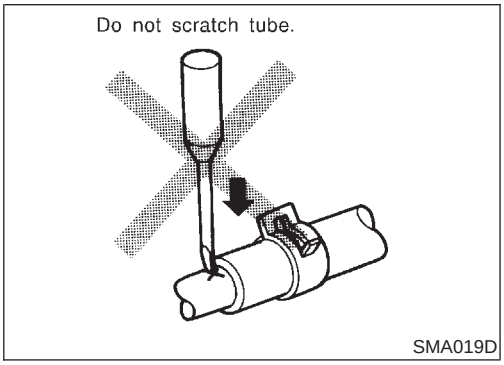

PRECAUTIONS FOR HOSES

NAGI0001S10

Hose Removal and Installation

NAGI0001S1001

- To prevent damage to rubber hose, do not pry off rubber hose with tapered tool or screwdriver.

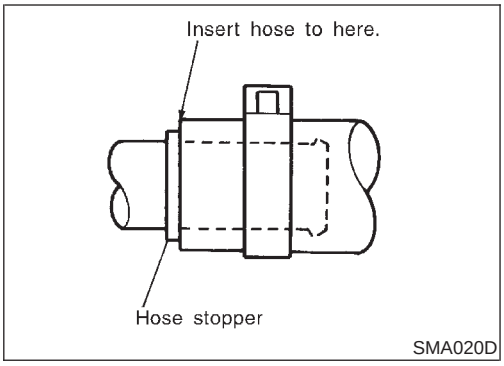

- To reinstall the rubber hose securely, make sure of hose insertion length and clamp orientation. (If tube is equipped with hose stopper, insert rubber hose into tube until it butts up against hose stopper.)

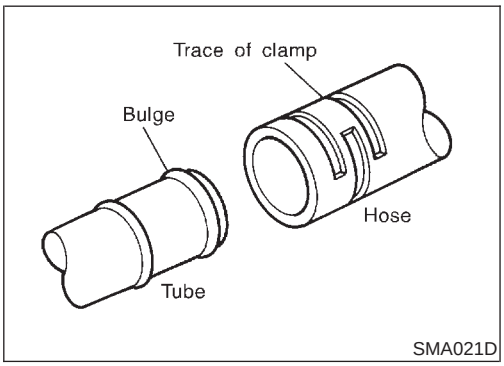

Hose Clamping

NAGI0001S1002

- If old rubber hose is re-used, install hose clamp in its original position (at the indentation where the old clamp was). If there is a trace of tube bulging left on the old rubber hose, align rubber hose at that position.
- Discard old clamps; replace with new ones.

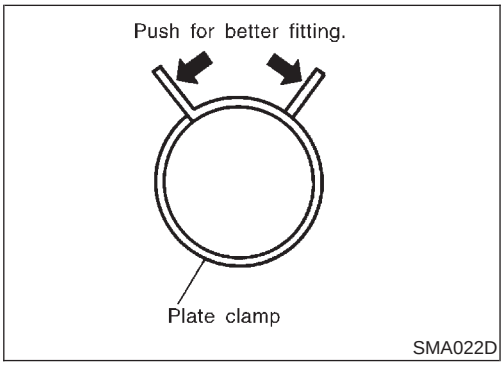

- After installing leaf spring clamps, apply force to them in the direction of the arrow, tightening rubber hose equally all around.

PRECAUTIONS FOR ENGINE OILS

NAGI0001S05

Prolonged and repeated contact with used engine oil may cause skin cancer. Try to avoid direct skin contact with used oil.
If skin contact is made, wash thoroughly with soap or hand cleaner as soon as possible.

Health Protection Precautions

NAGI0001S0501

- Avoid prolonged and repeated contact with oils, particularly used engine oils.
- Wear protective clothing, including impervious gloves where practicable.
- Do not put oily rags in pockets.
- Avoid contaminating clothes, particularly underpants, with oil.
- Heavily soiled clothing and oil-impregnated footwear should not be worn. Overalls must be cleaned regularly.
- First Aid treatment should be obtained immediately for open cuts and wounds.
- Use barrier creams, applying them before each work period, to help the removal of oil from the skin.
- Wash with soap and water to ensure all oil is removed (skin cleansers and nail brushes will help). Preparations containing lanolin replace the natural skin oils which have been removed.

- Do not use gasoline, kerosine, diesel fuel, gas oil, thinners or solvents for cleaning skin.
- If skin disorders develop, obtain medical advice without delay.
- Where practicable, degrease components prior to handling.
- Where there is a risk of eye contact, eye protection should be worn, for example, chemical goggles or face shields; in addition an eye wash facility should be provided.

Environmental Protection Precautions

NAGI0001S0502

Burning used engine oil in small space heaters or boilers can be recommended only for units of approved design. The heating system must meet the requirements of HM Inspectorate of Pollution for small burners of less than 0.4 MW. If in doubt check with the appropriate local authority and/or manufacturer of the approved appliance.

Dispose of used oil and used oil filters through authorized waste disposal contractors to licensed waste disposal sites, or to the waste oil reclamation trade. If in doubt, contact the local authority for advice on disposal facilities.

It is illegal to pour used oil on to the ground, down sewers or drains, or into water courses.

The regulations concerning pollution vary between regions.

PRECAUTIONS FOR FUEL

NAGI0001S06

Use unleaded gasoline with an octane rating of at least 87 AKI (Anti-Knock Index) number (research octane number 91).

CAUTION:

Do not use leaded gasoline. Using leaded gasoline will damage the three way catalyst.

Using a fuel other than that specified could adversely affect the emission control devices and systems, and could also affect the warranty coverage validity.

PRECAUTIONS FOR AIR CONDITIONING

NAGI0001S07

Use an approved refrigerant recovery unit any time the air conditioning system must be discharged. Refer to HA-134, "HFC-134a (R-134a) Service Procedure" for specific instructions.

HOW TO USE THIS MANUAL

- The captions **WARNING** and **CAUTION** warn you of steps that must be followed to prevent personal injury and/or damage to some part of the vehicle.
  WARNING indicates the possibility of personal injury if instructions are not followed.
  CAUTION indicates the possibility of component damage if instructions are not followed.
  BOLD TYPED STATEMENTS except **WARNING** and **CAUTION** give you helpful information.
- **ALPHABETICAL INDEX** is provided at the end of this manual so that you can rapidly find the item and page you are searching for.
- **A QUICK REFERENCE INDEX**, a black tab (e.g. **BR**) is provided on the first page. You can quickly find the first page of each section by mating it to the section's black tab.
- **THE CONTENTS** are listed on the first page of each section.
- **THE TITLE** is indicated on the upper portion of each page and shows the part or system.
- **THE PAGE NUMBER** of each section consists of two letters which designate the particular section and a number (e.g. "BR-5").
- **THE LARGE ILLUSTRATIONS** are exploded views (See below.) and contain tightening torques, lubrication points, section number of the **PARTS CATALOG** (e.g. SEC. 440) and other information necessary to perform repairs.
  The illustrations should be used in reference to service matters only. When ordering parts, refer to the appropriate **PARTS CATALOG**.
  Components shown in an illustration may be identified by a circled number. When this style of illustration is used, the text description of the components will follow the illustration.

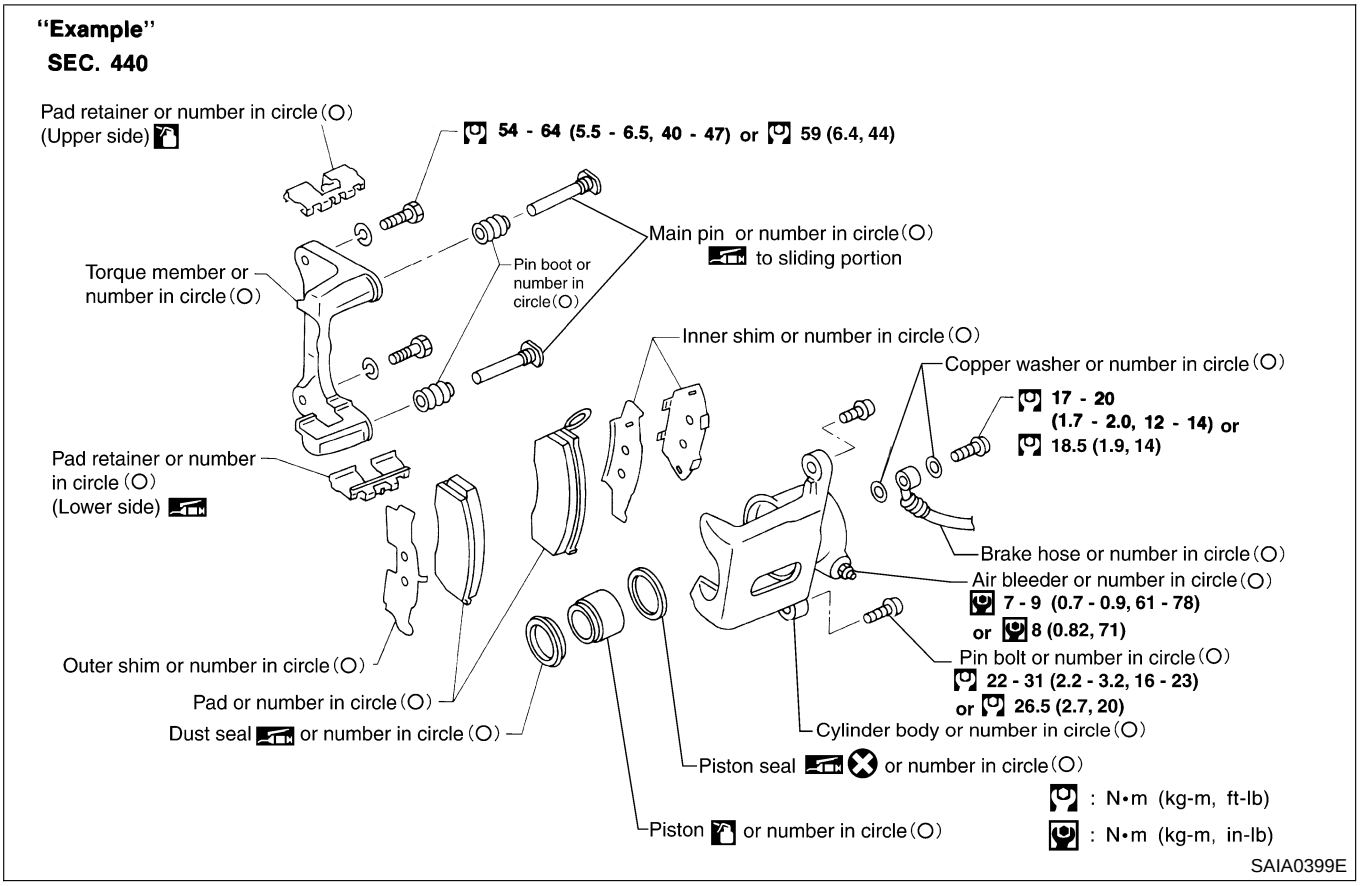

- **THE SMALL ILLUSTRATIONS** show the important steps such as inspection, use of special tools, knacks of work and hidden or tricky steps which are not shown in the previous large illustrations.
  Assembly, inspection and adjustment procedures for the complicated units such as the automatic transaxle or transmission, etc. are presented in a step-by-step format where necessary.
- The **UNITS** given in this manual are primarily expressed as the SI UNIT (International System of Unit), and alternatively expressed in the metric system and in the yard/pound system.
  Also with regard to tightening torque of bolts and nuts, there are descriptions both about range and about the standard tightening torque.

"Example"

Range

Outer socket lock nut: 59 - 78 N·m (6.0 - 8.0 kg-m, 43 - 58 ft-lb)

Standard

Drive shaft installation bolt: 44.3 N·m (4.5 kg-m, 33 ft-lb)

- **TROUBLE DIAGNOSES** are included in sections dealing with complicated components.
- **SERVICE DATA AND SPECIFICATIONS** are contained at the end of each section for quick reference of data.
- The following **SYMBOLS AND ABBREVIATIONS** are used:

SYMBOL	ABBREVIATION	SYMBOL	ABBREVIATION
	Tightening torque	2WD	2-Wheel Drive
	Should be lubricated with grease. Unless otherwise indicated, use recommended multi-purpose grease.	A/C	Air Conditioner
	Should be lubricated with oil.	P/S	Power Steering
	Sealing point	SST	Special Service Tools
	Checking point	SAE	Society of Automotive Engineers, Inc.
	Always replace after every disassembly.	ATF	Automatic Transmission Fluid
Ⓟ	Apply petroleum jelly.	D_1	Drive range 1st gear
ATF	Apply ATF.	D_2	Drive range 2nd gear
★	Select with proper thickness.	D_3	Drive range 3rd gear
☆	Adjustment is required.	D_4	Drive range 4th gear
SDS	Service Data and Specifications	OD	Overdrive
LH, RH	Left-Hand, Right-Hand	2_2	2nd range 2nd gear
FR, RR	Front, Rear	2_1	2nd range 1st gear
M/T	Manual Transaxle/Transmission	1_2	1st range 2nd gear
A/T	Automatic Transaxle/Transmission	1_1	1st range 1st gear
4x4, 4WD	4-Wheel Drive		

Sample/Wiring Diagram — EXAMPL —

NAGI0003S01

- For Description, refer to GI-13.

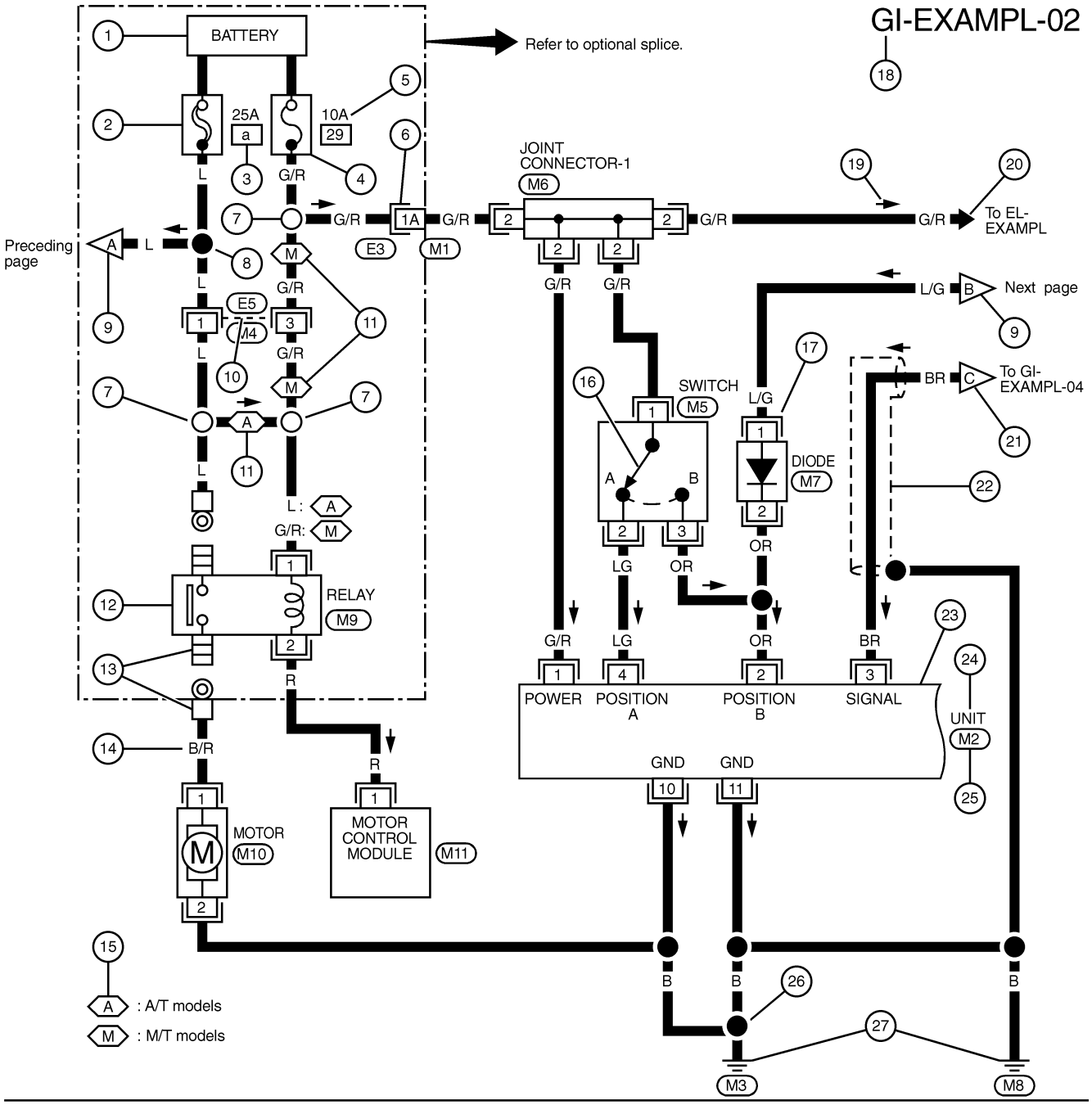

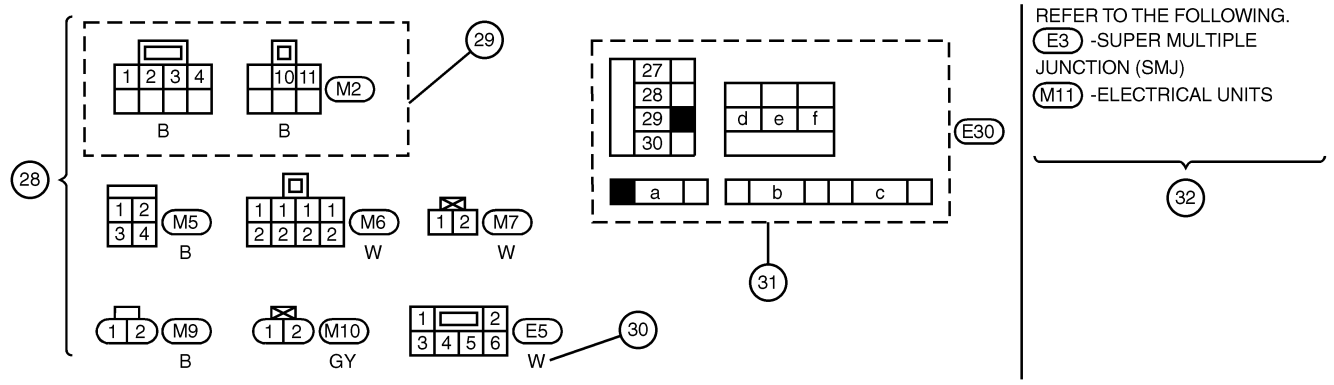

SGI134A

OPTIONAL SPLICE

NAGI0003S0101

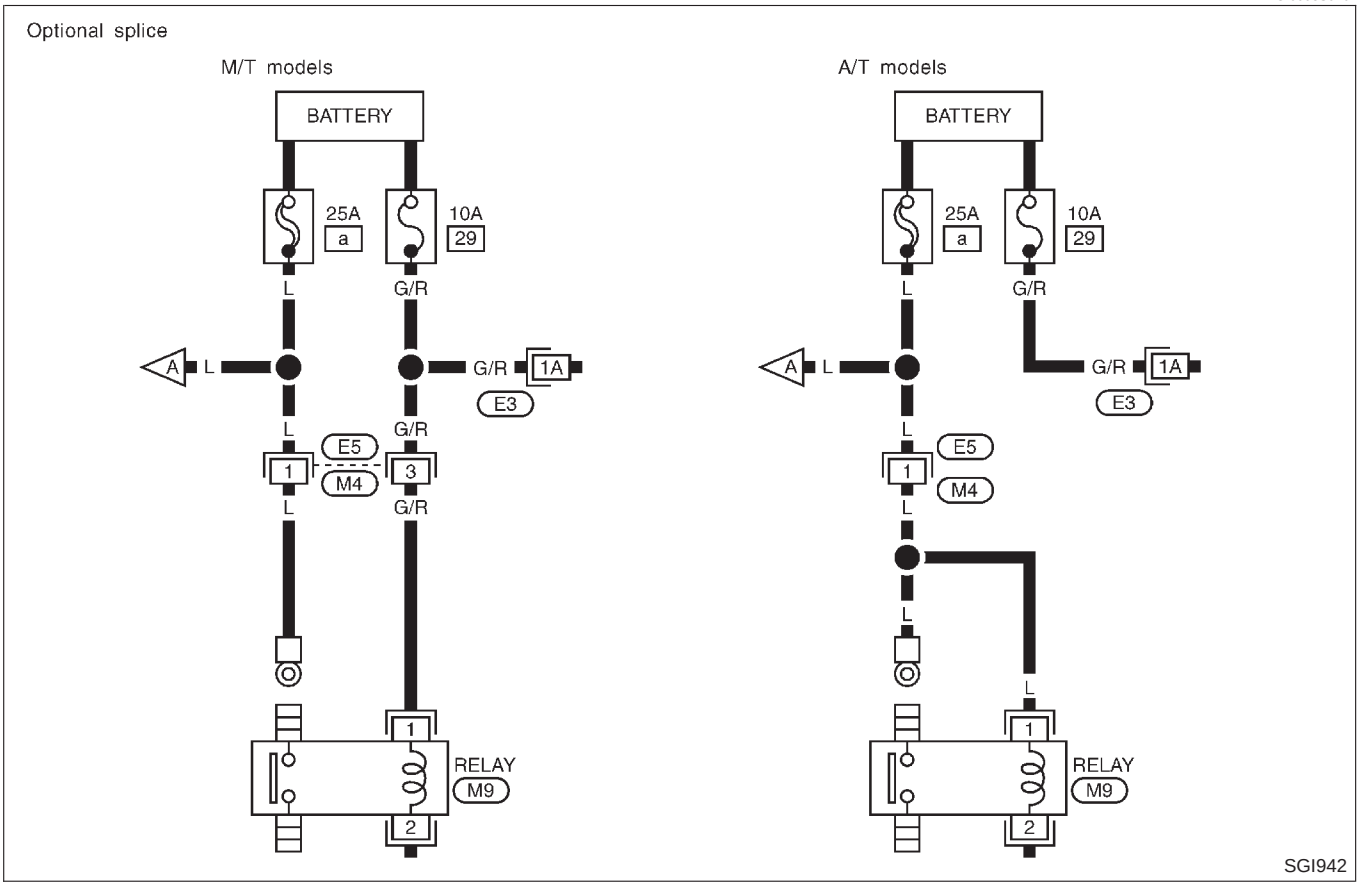

Description

=NAGI0003S02

Number	Item	Description
1	Power condition	● This shows the condition when the system receives battery positive voltage (can be operated).
2	Fusible link	● The double line shows that this is a fusible link. ● The open circle shows current flow in, and the shaded circle shows current flow out.
3	Fusible link/fuse location	● This shows the location of the fusible link or fuse in the fusible link or fuse box. For arrangement, refer to EL-12, “POWER SUPPLY ROUTING”.
4	Fuse	● The single line shows that this is a fuse. ● The open circle shows current flow in, and the shaded circle shows current flow out.
5	Current rating	● This shows the current rating of the fusible link or fuse.
6	Connectors	● This shows that connector E3 is female and connector M1 is male. ● The G/R wire is located in the 1A terminal of both connectors. ● Terminal number with an alphabet (1A, 5B, etc.) indicates that the connector is SMJ connector. Refer to GI-19.
7	Optional splice	● The open circle shows that the splice is optional depending on vehicle application.
8	Splice	● The shaded circle shows that the splice is always on the vehicle.
9	Page crossing	● This arrow shows that the circuit continues to an adjacent page. ● The A will match with the A on the preceding or next page.
10	Common connector	● The dotted lines between terminals show that these terminals are part of the same connector.
11	Option abbreviation	● This shows that the circuit is optional depending on vehicle application.
12	Relay	● This shows an internal representation of the relay. For details, refer to EL-9, “STANDARDIZED RELAY”.
13	Connectors	● This shows that the connector is connected to the body or a terminal with bolt or nut.
14	Wire color	● This shows a code for the color of the wire. B = Black W = White R = Red G = Green L = Blue Y = Yellow LG = Light Green BR = Brown OR = Orange P = Pink PU = Purple GY = Gray SB = Sky Blue CH = Dark Brown DG = Dark Green When the wire color is striped, the base color is given first, followed by the stripe color as shown below: Example: L/W = Blue with White Stripe
15	Option description	● This shows a description of the option abbreviation used on the page.
16	Switch	● This shows that continuity exists between terminals 1 and 2 when the switch is in the A position. Continuity exists between terminals 1 and 3 when the switch is in the B position.
17	Assembly parts	● Connector terminal in component shows that it is a harness incorporated assembly.
18	Cell code	● This identifies each page of the wiring diagram by section, system and wiring diagram page number.
19	Current flow arrow	● Arrow indicates electric current flow, especially where the direction of standard flow (vertically downward or horizontally from left to right) is difficult to follow. ● A double arrow “ ↔ ” shows that current can flow in either direction depending on circuit operation.
20	System branch	● This shows that the system branches to another system identified by cell code (section and system).

Description (Cont'd)

Number	Item	Description
21	Page crossing	● This arrow shows that the circuit continues to another page identified by cell code. ● The C will match with the C on another page within the system other than the next or preceding pages.
22	Shielded line	● The line enclosed by broken line circle shows shield wire.
23	Component box in wave line	● This shows that another part of the component is also shown on another page (indicated by wave line) within the system.
24	Component name	● This shows the name of a component.
25	Connector number	● This shows the connector number. ● The letter shows which harness the connector is located in. ● Example: **M**: main harness. For detail and to locate the connector, refer to EL-484, "Main Harness". A coordinate grid is included for complex harnesses to aid in locating connectors.
26	Ground (GND)	● The line spliced and grounded under wire color shows that ground line is spliced at the grounded connector.
27	Ground (GND)	● This shows the ground connection.
28	Connector views	● This area shows the connector faces of the components in the wiring diagram on the page.
29	Common component	● Connectors enclosed in broken line show that these connectors belong to the same component.
30	Connector color	● This shows a code for the color of the connector. For code meaning, refer to wire color codes, Number 14 of this chart.
31	Fusible link and fuse box	● This shows the arrangement of fusible link(s) and fuse(s), used for connector views of "POWER SUPPLY ROUTING" in EL section. The open square shows current flow in, and the shaded square shows current flow out.
32	Reference area	● This shows that more information on the Super Multiple Junction (SMJ) and Joint Connectors (J/C) exists on the foldout page. Refer to GI-19 for details.

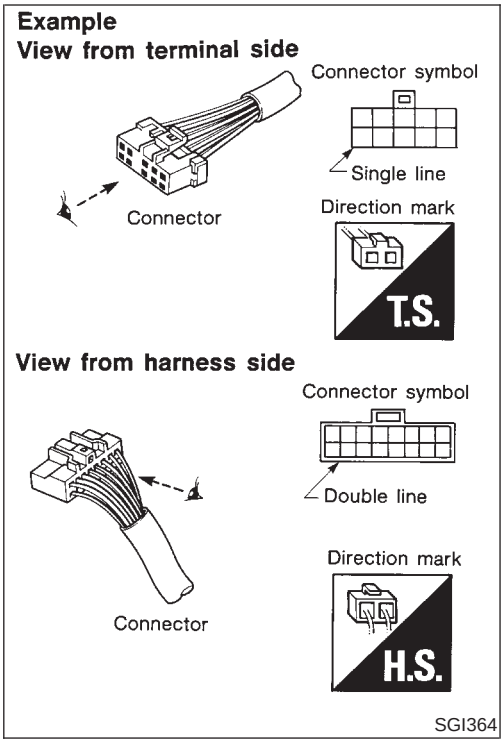

CONNECTOR SYMBOLS

=NAGI0003S0201

Most of connector symbols in wiring diagrams are shown from the terminal side.

- Connector symbols shown from the terminal side are enclosed by a single line and followed by the direction mark.
- Connector symbols shown from the harness side are enclosed by a double line and followed by the direction mark.

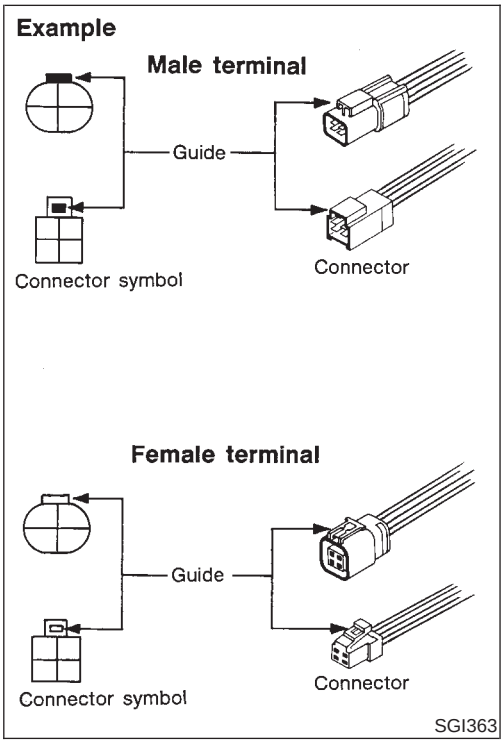

- Male and female terminals
  Connector guides for male terminals are shown in black and female terminals in white in wiring diagrams.

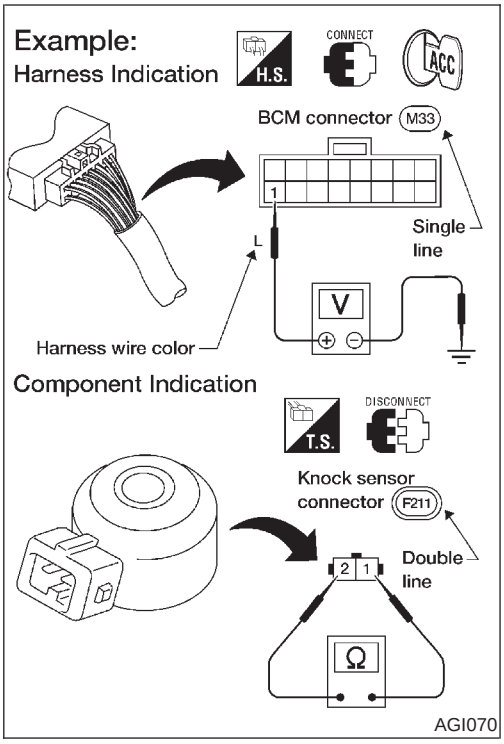

HARNESS INDICATION

NAGI0003S0206

- Letter designations next to test meter probe indicate harness (connector) wire color.
- Connector numbers in a single circle M33 indicate harness connectors.

COMPONENT INDICATION

NAGI0003S0207

- Connector numbers in a double circle F211 indicate component connectors.

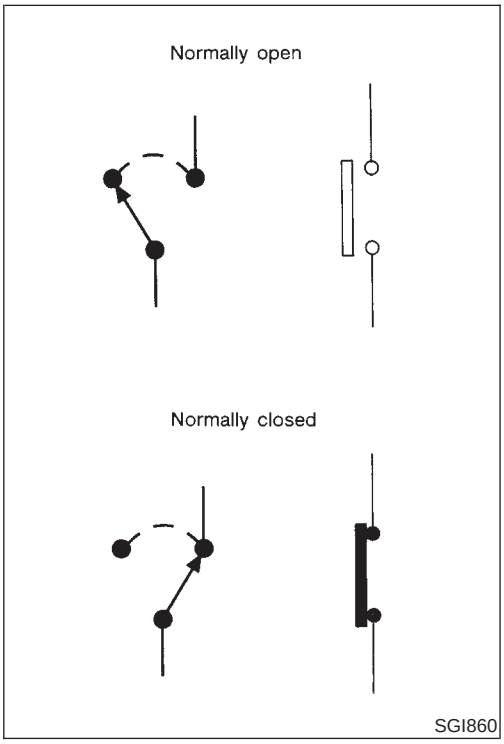

SWITCH POSITIONS

NAGI0003S0202

Switches are shown in wiring diagrams as if the vehicle is in the normal condition.

A vehicle is in the normal condition when:

- ignition switch is OFF,
- doors, hood and trunk lid/back door are closed,
- pedals are not depressed, and
- parking brake is released.

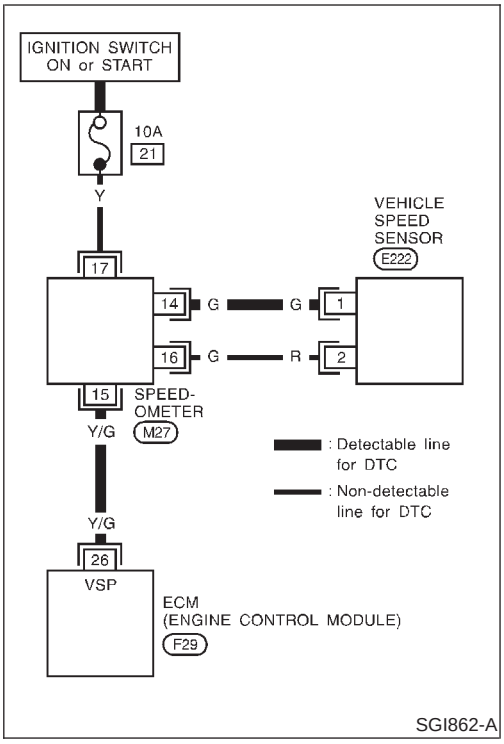

DETECTABLE LINES AND NON-DETECTABLE LINES

NAGI0003S0203

In some wiring diagrams, two kinds of lines, representing wires, with different weight are used.

- A line with regular weight (wider line) represents a "detectable line for DTC (Diagnostic Trouble Code)". A "detectable line for DTC" is a circuit in which ECM (Engine Control Module) can detect its malfunctions with the on board diagnostic system.
- A line with less weight (thinner line) represents a "non-detectable line for DTC". A "non-detectable line for DTC" is a circuit in which ECM cannot detect its malfunctions with the on board diagnostic system.

MULTIPLE SWITCH

=NAGI0003S0204

The continuity of multiple switch is described in two ways as shown below.

- The switch chart is used in schematic diagrams.
- The switch diagram is used in wiring diagrams.

Example

(SWITCH CHART)

WIPER SWITCH

	OFF	INT	LO	HI	WASH
1					○
2				○	
3	○	○	○		
4	○	○			
5		○			
6		○	○	○	○

(SWITCH DIAGRAM)

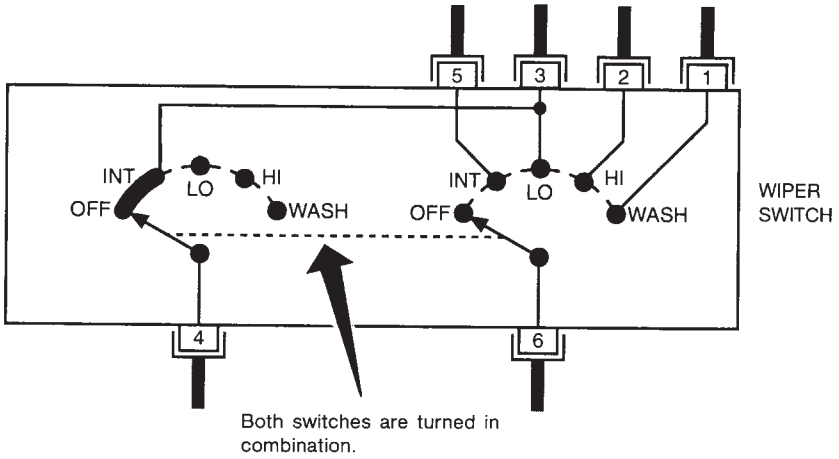

Continuity circuit of wiper switch

SWITCH POSITION	CONTINUITY CIRCUIT
OFF	3-4
INT	3-4, 5-6
LO	3-6
HI	2-6
WASH	1-6

SGI875

REFERENCE AREA

=NAGI0003S0208

The Reference Area of the wiring diagram contains references to additional electrical reference pages at the end of the manual. If connector numbers and titles are shown in the Reference Area of the wiring diagram, these connector symbols are not shown in the Connector Area.

Example

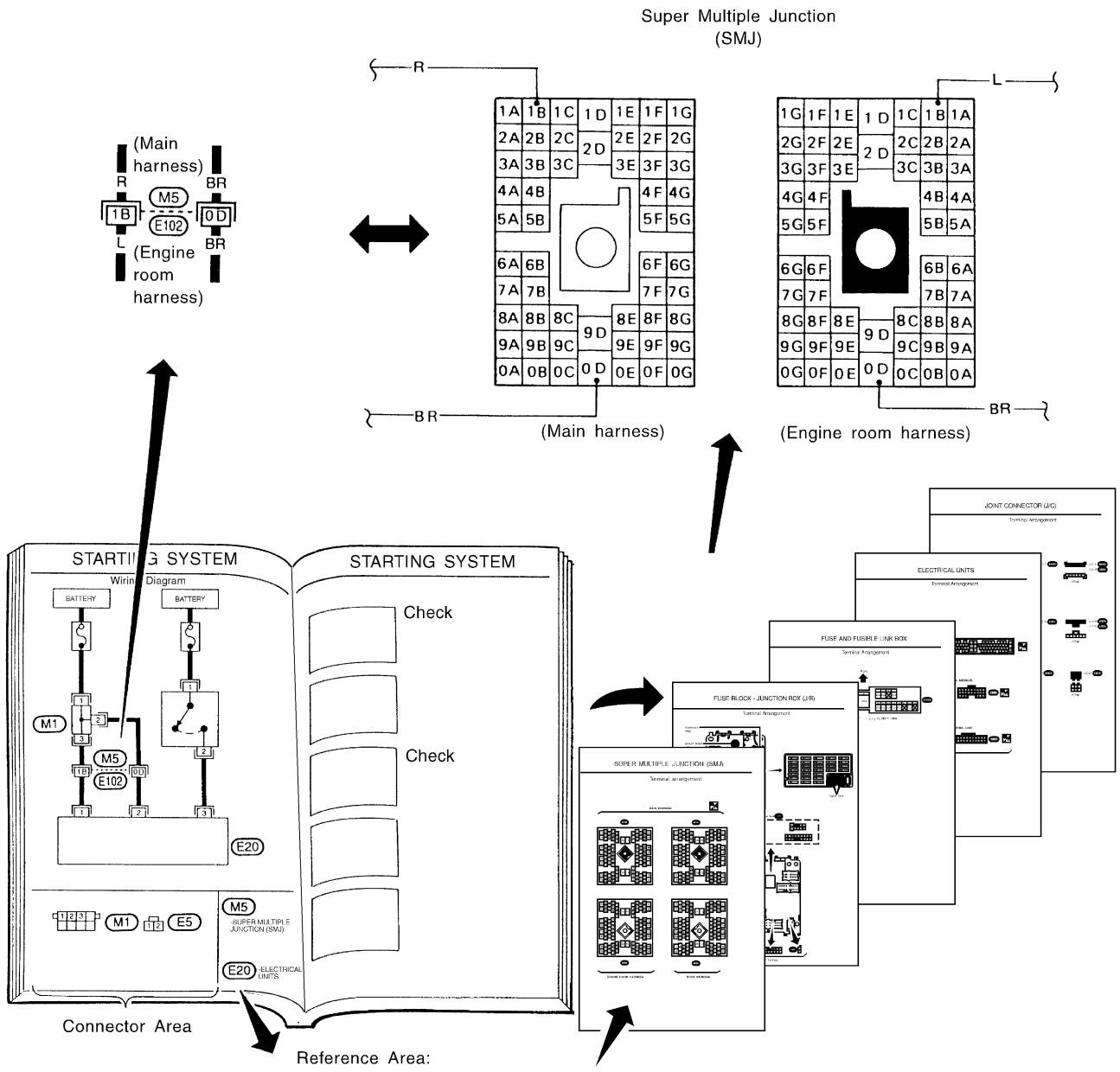

Super multiple junction (SMJ)

In a wiring diagram, the SMJ connectors include a letter of the alphabet in the terminal number.

SMJ connector numbers are shown in the Reference Area of the wiring diagram. SMJ terminal arrangement can be found on the electrical reference pages at the end of the manual. For terminal arrangement of these connectors, refer to the "SUPER MULTIPLE JUNCTION (SMJ)" electrical reference page at the end of the

manual.

Fuse block — Junction box (J/B)

Fuse block — Junction box (J/B) connector number is shown in the Reference Area of the wiring diagram. For connector terminal and fuse arrangement, refer to the "FUSE BLOCK — Junction Box (J/B)" electrical reference page at the end of the manual.

Fuse and fusible link box

For fuse arrangement in the fuse and fusible link box, refer to the "FUSE AND FUSIBLE LINK BOX" electrical reference page at the end of the manual.

Electrical units

Electrical unit connector symbols are shown in the Connector Area of the wiring diagram.

However, when there is not enough space to show the connector terminal arrangement in the Connector Area of the wiring diagram, the electrical unit connector number is shown in the Reference Area of the wiring diagram. For electrical unit connector terminal arrangement, refer to the "ELECTRICAL UNITS" electrical reference page at the end of the manual. Most of the electrical unit connectors on this page are shown from the harness side of the connector.

Joint connector

Joint connector symbols are shown in the connector area of the wiring diagram. For connector internal wiring layout and joint connector terminal arrangement, refer to the "JOINT CONNECTOR (J/C)" electrical reference page at the end of the manual.

Connector and Terminal Pin Kit

NAGI0011S01

Use the connector and terminal pin kit listed below when replacing connectors or terminals.
The connector and terminal pin kit contains some of the most commonly used NISSAN connectors and terminals.

Tool number (Kent-Moore No.) Tool name	Description
— (J38751-95NI) Connector and terminal pin kit — (J42992-98KIT) OBD Terminal Repair Kit	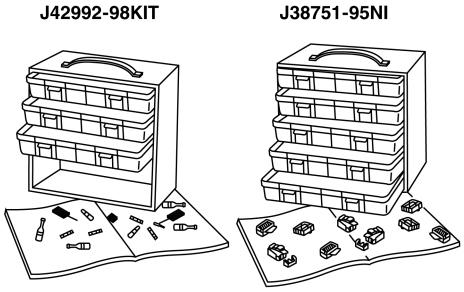 AGI121

How to Probe Connectors

NAGI0011S02

Connector damage and an intermittent connection can result from improperly probing of the connector during circuit checks.
The probe of a digital multimeter (DMM) may not correctly fit the connector cavity. To correctly probe the connector, follow the procedures below using a “T” pin. For the best contact grasp the “T” pin using an alligator clip.

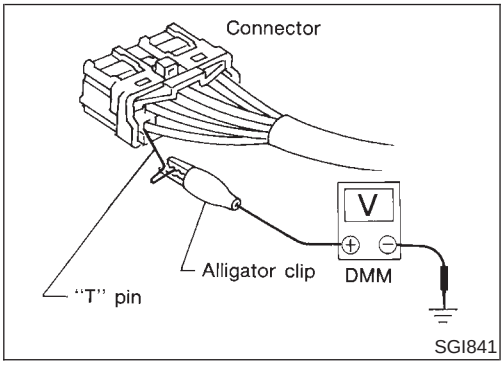

SGI841

PROBING FROM HARNESS SIDE

NAGI0011S0201

Standard type (not waterproof type) connector should be probed from harness side with “T” pin.

- **If the connector has a rear cover such as a ECM connector, remove the rear cover before probing the terminal.**
- **Do not probe waterproof connector from harness side. Damage to the seal between wire and connector may result.**

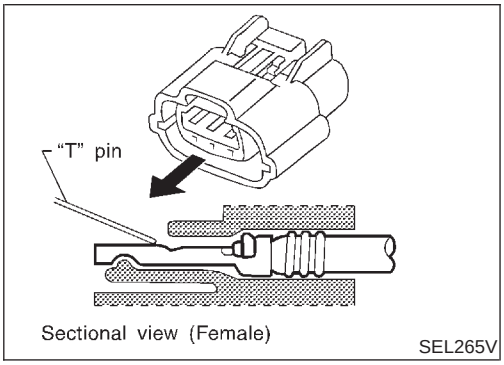

SEL265V

PROBING FROM TERMINAL SIDE

NAGI0011S0202

Female Terminal

- There is a small notch above each female terminal. Probe each terminal with the “T” pin through the notch.
  Do not insert any object other than the same type male terminal into female terminal.

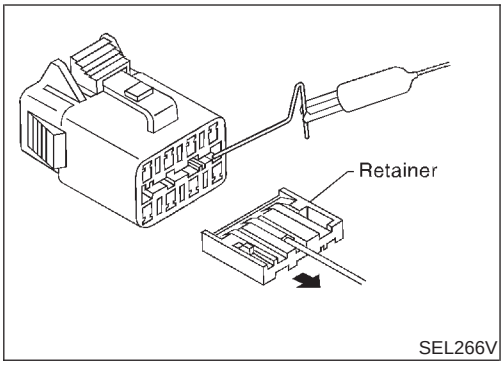

- Some connectors do not have a notch above each terminal. To probe each terminal, remove the connector retainer to make contact space for probing.

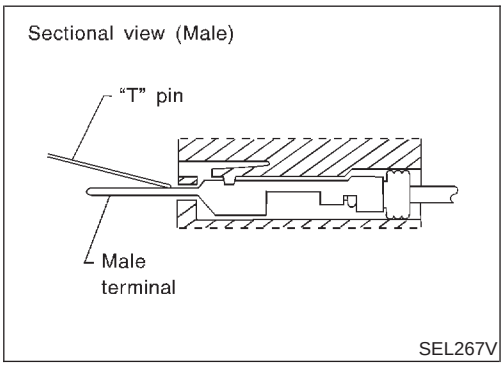

Male Terminal
Carefully probe the contact surface of each terminal using a "T" pin.
Do not bend terminal.

How to Check Enlarged Contact Spring of Terminal

NAGI0011S03

An enlarged contact spring of a terminal may create intermittent signals in the circuit.
If the intermittent open circuit occurs, follow the procedure below to inspect for open wires and enlarged contact spring of female terminal.

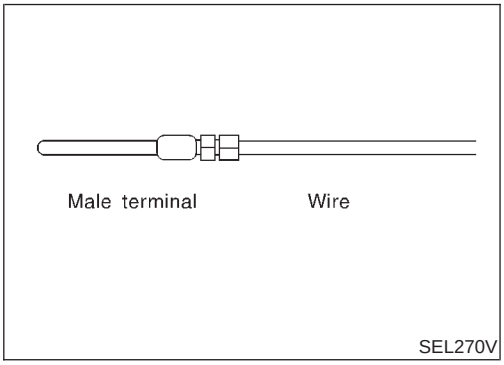

1. Assemble a male terminal and approx. 10 cm (3.9 in) of wire.
   Use a male terminal which matches the female terminal.
2. Disconnect the suspected faulty connector and hold it terminal side up.

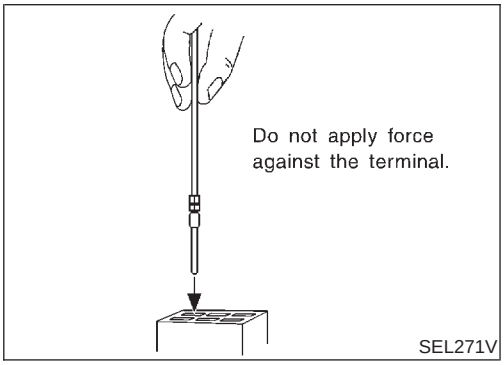

3. While holding the wire of the male terminal, try to insert the male terminal into the female terminal.
   Do not force the male terminal into the female terminal with your hands.

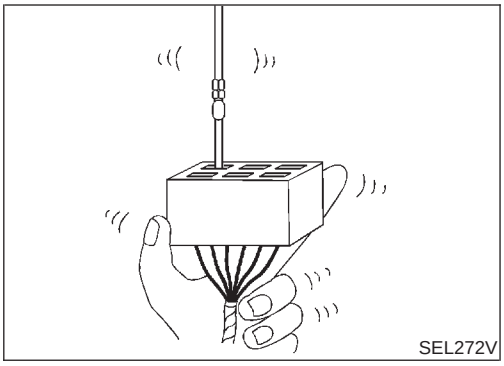
SEL272V

4. While moving the connector, check whether the male terminal can be easily inserted or not.

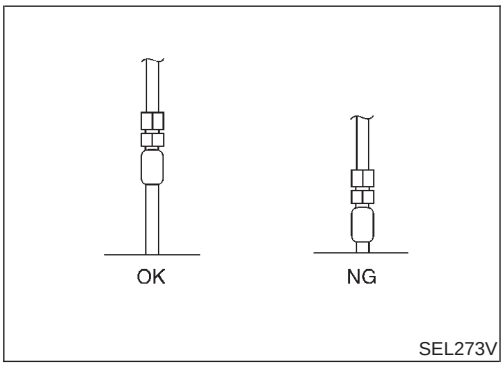

SEL273V

- If the male terminal can be easily inserted into the female terminal, replace the female terminal.

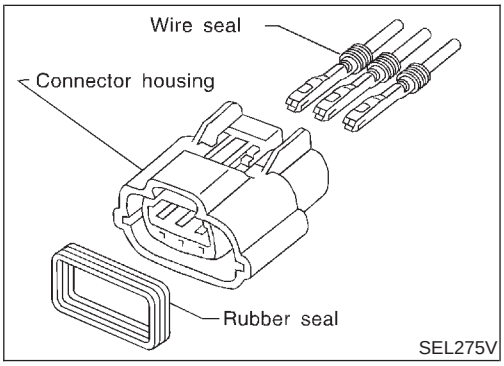

SEL275V

Waterproof Connector Inspection

NAGI0011S04

If water enters the connector, it can short interior circuits. This may lead to intermittent problems.
Check the following items to maintain the original waterproof characteristics.

RUBBER SEAL INSPECTION

NAGI0011S0401

- Most waterproof connectors are provided with a rubber seal between the male and female connectors. If the seal is missing, the waterproof performance may not meet specifications.
- The rubber seal may come off when connectors are disconnected. Whenever connectors are reconnected, make sure the rubber seal is properly installed on either side of male or female connector.

WIRE SEAL INSPECTION

NAGI0011S0402

The wire seal must be installed on the wire insertion area of a waterproof connector. Be sure that the seal is installed properly.

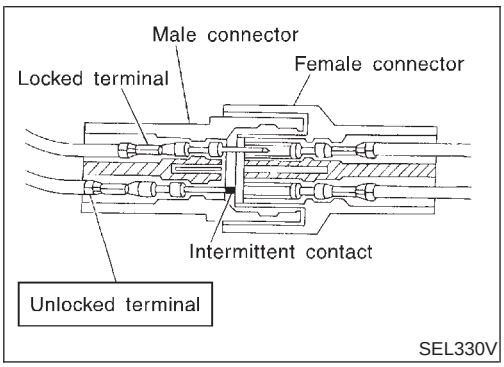

SEL330V

Terminal Lock Inspection

NAGI0011S05

Check for unlocked terminals by pulling wire at the end of connector. An unlocked terminal may create intermittent signals in the circuit.

Work Flow

NAGI0004S01

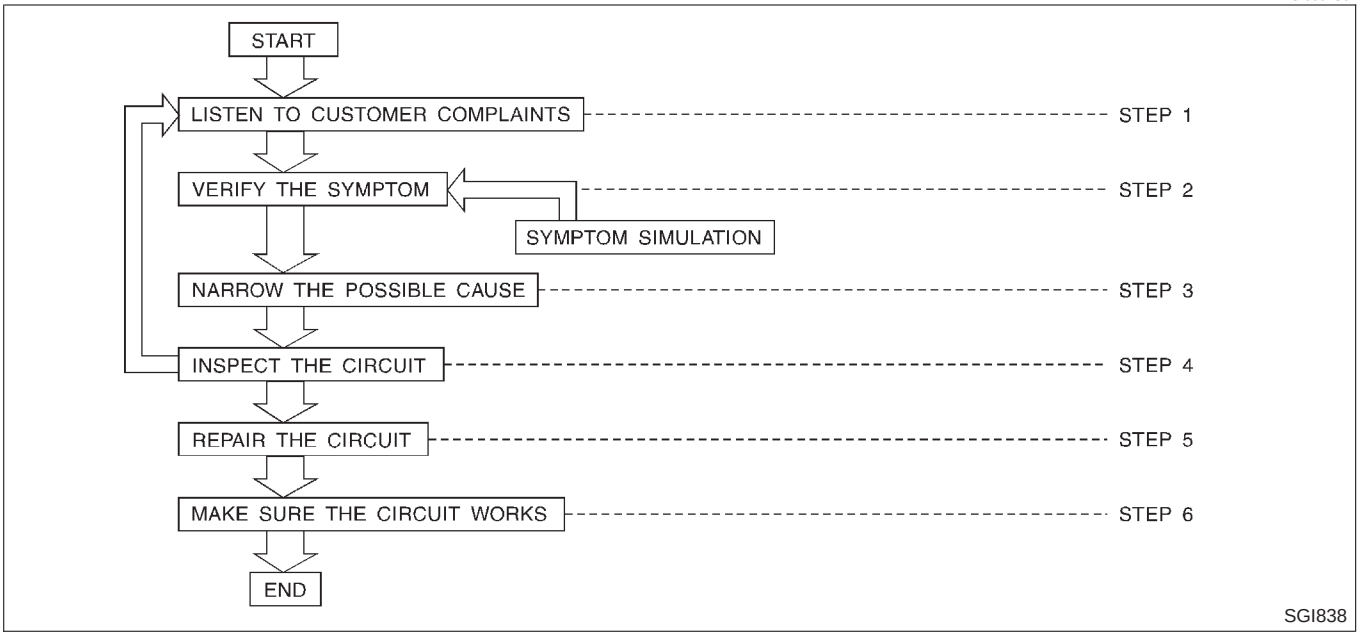

STEP	DESCRIPTION	
STEP 1	Get detailed information about the conditions and the environment when the incident occurred. The following are key pieces of information required to make a good analysis:	
	WHAT	Vehicle Model, Engine, Transmission and the System (i.e. Radio).
	WHEN	Date, Time of Day, Weather Conditions, Frequency.
	WHERE	Road Conditions, Altitude and Traffic Situation.
	HOW	System Symptoms, Operating Conditions (Other Components Interaction). Service History and if any After Market Accessories have been installed.
STEP 2	Operate the system, road test if necessary. Verify the parameter of the incident. If the incident cannot be duplicated, refer to “Incident Simulation Tests” next page.	
STEP 3	Get the proper diagnosis materials together including: POWER SUPPLY ROUTING System Operation Descriptions Applicable Service Manual Sections Check for any Service Bulletin. Identify where to begin diagnosis based upon your knowledge of the system operation and the customer comments.	
STEP 4	Inspect the system for mechanical binding, loose connectors or wiring damage. Determine which circuits and components are involved and diagnose using the Power Supply Routing and Harness Layouts.	
STEP 5	Repair or replace the incident circuit or component.	
STEP 6	Operate the system in all modes. Verify the system works properly under all conditions. Make sure you have not inadvertently created a new incident during your diagnosis or repair steps.	

Incident Simulation Tests

NAGI0004S02

INTRODUCTION

NAGI0004S0201

Sometimes the symptom is not present when the vehicle is brought in for service. If possible, re-create the conditions present at the time of the incident. Doing so may help avoid a No Trouble Found Diagnosis. The following section illustrates ways to simulate the conditions/environment under which the owner experiences an electrical incident.

The section is broken into the six following topics:

- Vehicle vibration
- Heat sensitive
- Freezing
- Water intrusion
- Electrical load
- Cold or hot start up

Get a thorough description of the incident from the customer. It is important for simulating the conditions of the incident.

VEHICLE VIBRATION

NAGI0004S0202

The incident may occur or become worse while driving on a rough road or when engine is vibrating (idle with A/C on). In such a case, you will want to check for a vibration related condition. Refer to the illustration below.

Connectors & Harness

Determine which connectors and wiring harness would affect the electrical system you are inspecting. **Gently** shake each connector and harness while monitoring the system for the incident you are trying to duplicate. This test may indicate a loose or poor electrical connection.

Hint

Connectors can be exposed to moisture. It is possible to get a thin film of corrosion on the connector terminals. A visual inspection may not reveal this without disconnecting the connector. If the problem occurs intermittently, perhaps the incident is caused by corrosion. It is a good idea to disconnect, inspect and clean the terminals on related connectors in the system.

Sensors & Relays

Gently apply a slight vibration to sensors and relays in the system you are inspecting.

This test may indicate a loose or poorly mounted sensor or relay.

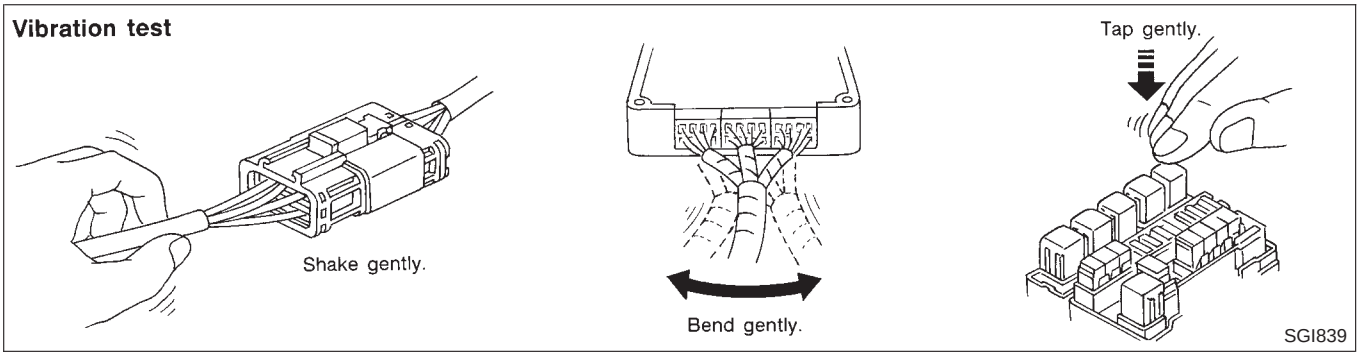

Engine Compartment

There are several reasons a vehicle or engine vibration could cause an electrical complaint. Some of the things to check for are:

- Connectors not fully seated.
- Wiring harness not long enough and is being stressed due to engine vibrations or rocking.
- Wires laying across brackets or moving components.
- Loose, dirty or corroded ground wires.
- Wires routed too close to hot components.

To inspect components under the hood, start by verifying the integrity of ground connections. (Refer to GROUND INSPECTION described later.) First make sure that the system is properly grounded. Then check for loose connection by **gently shaking** the wiring or components as previously explained. Using the wiring diagrams inspect the wiring for continuity.

Behind The Instrument Panel

An improperly routed or improperly clamped harness can become pinched during accessory installation. Vehicle vibration can aggravate a harness which is routed along a bracket or near a screw.

Under Seating Areas

An unclamped or loose harness can cause wiring to be pinched by seat components (such as slide guides) during vehicle vibration. If the wiring runs under seating areas, inspect wire routing for possible damage or pinching.

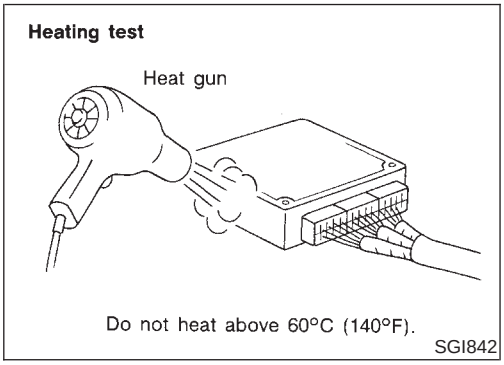

HEAT SENSITIVE

NAGI0004S0203

The owner's incident may occur during hot weather or after car has sat for a short time. In such cases you will want to check for a heat sensitive condition.

To determine if an electrical component is heat sensitive, heat the component with a heat gun or equivalent.

Do not heat components above 60°C (140°F). If incident occurs while heating the unit, either replace or properly insulate the component.

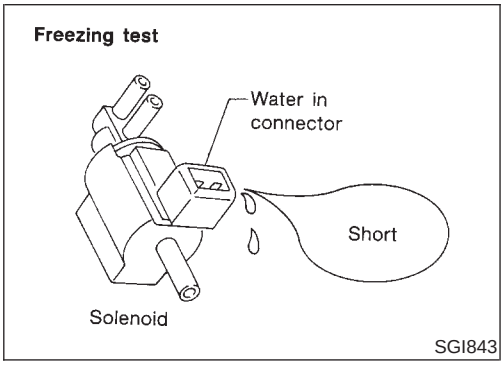

FREEZING

NAGI0004S0204

The customer may indicate the incident goes away after the car warms up (winter time). The cause could be related to water freezing somewhere in the wiring/electrical system.

There are two methods to check for this. The first is to arrange for the owner to leave his car overnight. Make sure it will get cold enough to demonstrate his complaint. Leave the car parked outside overnight. In the morning, do a quick and thorough diagnosis of those electrical components which could be affected.

The second method is to put the suspect component into a freezer long enough for any water to freeze. Reinstall the part into the car and check for the reoccurrence of the incident. If it occurs, repair or replace the component.

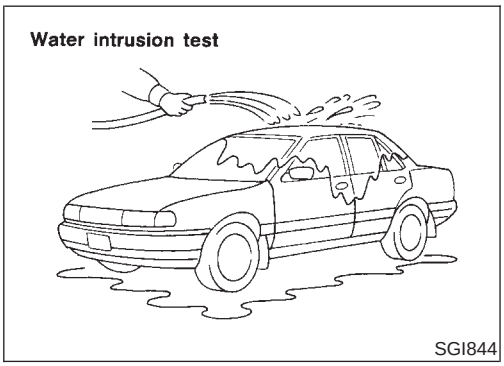

WATER INTRUSION

NAGI0004S0205

The incident may occur only during high humidity or in rainy/snowy weather. In such cases the incident could be caused by water intrusion on an electrical part. This can be simulated by soaking the car or running it through a car wash.

Do not spray water directly on any electrical components.

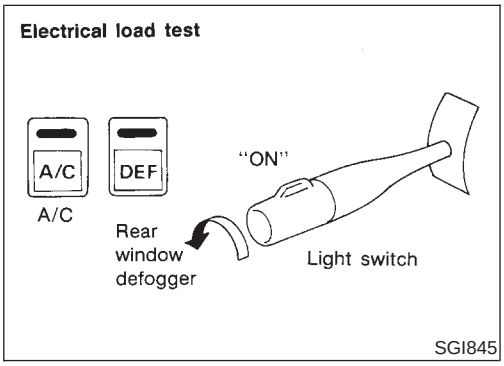

ELECTRICAL LOAD

NAGI0004S0206

The incident may be electrical load sensitive. Perform diagnosis with all accessories (including A/C, rear window defogger, radio, fog lamps) turned on.

COLD OR HOT START UP

NAGI0004S0207

On some occasions an electrical incident may occur only when the car is started cold. Or it may occur when the car is restarted hot shortly after being turned off. In these cases you may have to keep the car overnight to make a proper diagnosis.

Circuit Inspection

NAGI0004S03

INTRODUCTION

NAGI0004S0302

In general, testing electrical circuits is an easy task if it is approached in a logical and organized method. Before beginning it is important to have all available information on the system to be tested. Also, get a thorough understanding of system operation. Then you will be able to use the appropriate equipment and follow the correct test procedure.

You may have to simulate vehicle vibrations while testing electrical components. **Gently shake** the wiring harness or electrical component to do this.

OPEN	A circuit is open when there is no continuity through a section of the circuit.	
SHORT	There are two types of shorts.	
	• SHORT CIRCUIT	When a circuit contacts another circuit and causes the normal resistance to change.
	• SHORT TO GROUND	When a circuit contacts a ground source and grounds the circuit.

NOTE:
Refer to "HOW TO CHECK TERMINAL" in GI-21 to probe or check terminal.

TESTING FOR "OPENS" IN THE CIRCUIT

NAGI0004S0303

Before you begin to diagnose and test the system, you should rough sketch a schematic of the system. This will help you to logically walk through the diagnosis process. Drawing the sketch will also reinforce your working knowledge of the system.

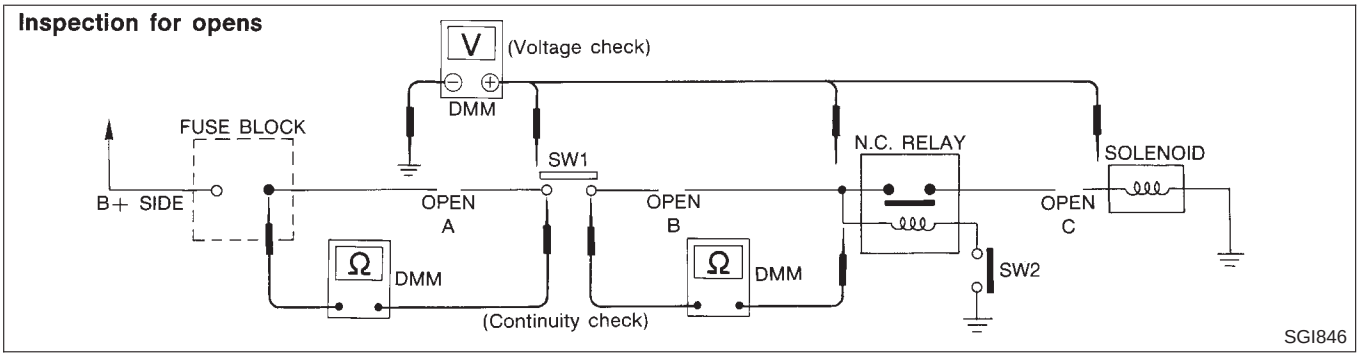

Continuity Check Method

The continuity check is used to find an open in the circuit. The Digital Multimeter (DMM) set on the resistance function will indicate an open circuit as over limit (OL, no beep tone or no ohms symbol). Make sure to always start with the DMM at the highest resistance level.

To help in understanding the diagnosis of open circuits please refer to the schematic above.

1) Disconnect the battery negative cable.
2) Start at one end of the circuit and work your way to the other end. (At the fuse block in this example)
3) Connect one probe of the DMM to the fuse block terminal on the load side.
4) Connect the other probe to the fuse block (power) side of SW1. Little or no resistance will indicate that portion of the circuit has good continuity. If there were an open in the circuit, the DMM would indicate an over limit or infinite resistance condition. (point A)
5) Connect the probes between SW1 and the relay. Little or no resistance will indicate that portion of the circuit has good continuity. If there were an open in the circuit, the DMM would indicate an over limit or infinite resistance condition. (point B)
6) Connect the probes between the relay and the solenoid. Little or no resistance will indicate that portion of the circuit has good continuity. If there were an open in the circuit, the DMM would indicate an over limit or infinite resistance condition. (point C)

Any circuit can be diagnosed using the approach in the above example.

Voltage Check Method

To help in understanding the diagnosis of open circuits please refer to the previous schematic.

In any powered circuit, an open can be found by methodically checking the system for the presence of voltage. This is done by switching the DMM to the voltage function.

1) Connect one probe of the DMM to a known good ground.
2) Begin probing at one end of the circuit and work your way to the other end.
3) With SW1 open, probe at SW1 to check for voltage.
   voltage; open is further down the circuit than SW1.
   no voltage; open is between fuse block and SW1 (point A).
4) Close SW1 and probe at relay.

voltage; open is further down the circuit than the relay.
no voltage; open is between SW1 and relay (point B).

5) Close the relay and probe at the solenoid.
voltage; open is further down the circuit than the solenoid.
no voltage; open is between relay and solenoid (point C).

Any powered circuit can be diagnosed using the approach in the above example.

TESTING FOR "SHORTS" IN THE CIRCUIT

NAGI0004S0304

To simplify the discussion of shorts in the system please refer to the schematic below.

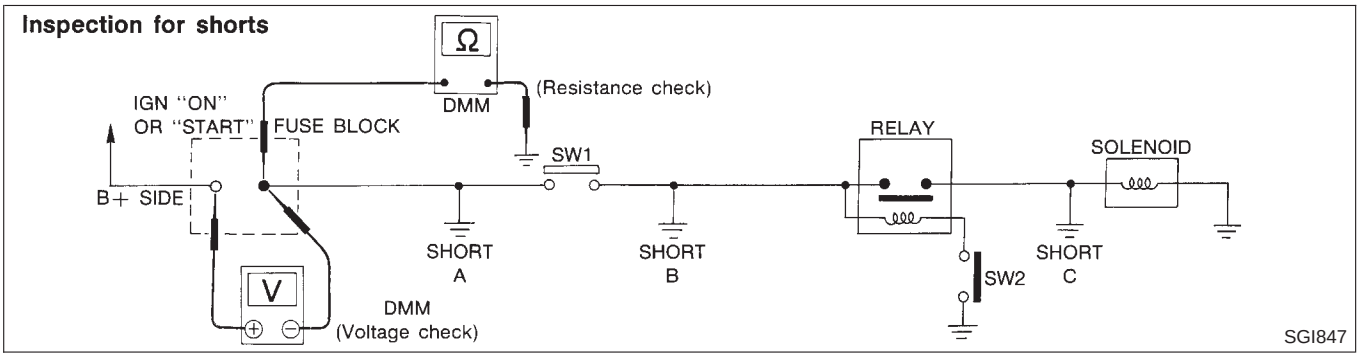

Resistance Check Method

1) Disconnect the battery negative cable and remove the blown fuse.
2) Disconnect all loads (SW1 open, relay disconnected and solenoid disconnected) powered through the fuse.
3) Connect one probe of the ohmmeter to the load side of the fuse terminal. Connect the other probe to a known good ground.
4) With SW1 open, check for continuity.
continuity; short is between fuse terminal and SW1 (point A).
no continuity; short is further down the circuit than SW1.
5) Close SW1 and disconnect the relay. Put probes at the load side of fuse terminal and a known good ground. Then, check for continuity.
continuity; short is between SW1 and the relay (point B).
no continuity; short is further down the circuit than the relay.
6) Close SW1 and jump the relay contacts with jumper wire. Put probes at the load side of fuse terminal and a known good ground. Then, check for continuity.
continuity; short is between relay and solenoid (point C).
no continuity; check solenoid, retrace steps.

Voltage Check Method

1) Remove the blown fuse and disconnect all loads (i.e. SW1 open, relay disconnected and solenoid disconnected) powered through the fuse.
2) Turn the ignition key to the ON or START position. Verify battery voltage at the B + side of the fuse terminal (one lead on the B + terminal side of the fuse block and one lead on a known good ground).
3) With SW1 open and the DMM leads across both fuse terminals, check for voltage.
voltage; short is between fuse block and SW1 (point A).
no voltage; short is further down the circuit than SW1.
4) With SW1 closed, relay and solenoid disconnected and the DMM leads across both fuse terminals, check for voltage.
voltage; short is between SW1 and the relay (point B).

no voltage; short is further down the circuit than the relay.

5) With SW1 closed, relay contacts jumped with fused jumper wire check for voltage.
voltage; short is down the circuit of the relay or between the relay and the disconnected solenoid (point C).
no voltage; retrace steps and check power to fuse block.

GROUND INSPECTION

NAGI0004S0305

Ground connections are very important to the proper operation of electrical and electronic circuits. Ground connections are often exposed to moisture, dirt and other corrosive elements. The corrosion (rust) can become an unwanted resistance. This unwanted resistance can change the way a circuit works.

Electronically controlled circuits are very sensitive to proper grounding. A loose or corroded ground can drastically affect an electronically controlled circuit. A poor or corroded ground can easily affect the circuit. Even when the ground connection looks clean, there can be a thin film of rust on the surface.

When inspecting a ground connection follow these rules:

1) Remove the ground bolt or screw.
2) Inspect all mating surfaces for tarnish, dirt, rust, etc.
3) Clean as required to assure good contact.
4) Reinstall bolt or screw securely.
5) Inspect for "add-on" accessories which may be interfering with the ground circuit.
6) If several wires are crimped into one ground eyelet terminal, check for proper crimps. Make sure all of the wires are clean, securely fastened and providing a good ground path. If multiple wires are cased in one eyelet make sure no ground wires have excess wire insulation.

Ground Inspection

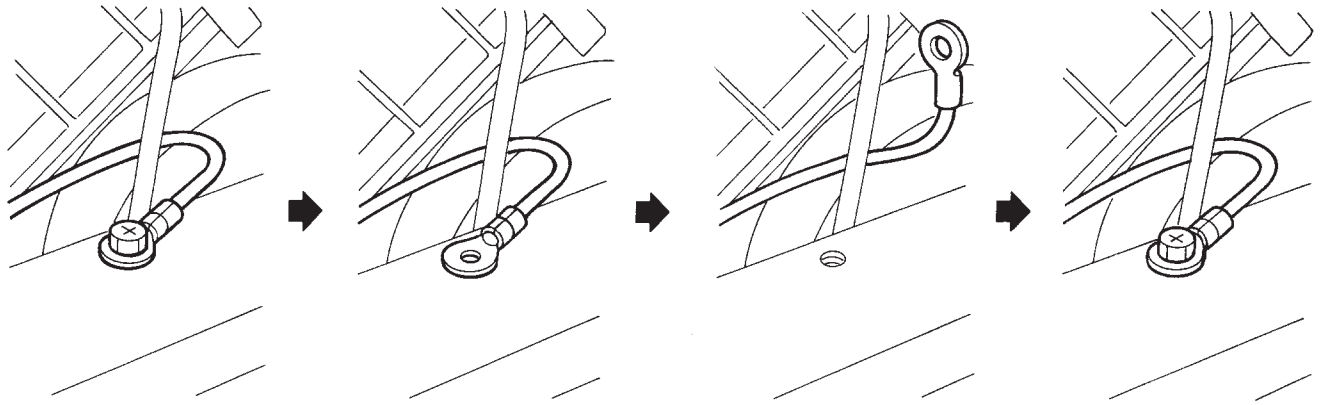

SGI853

VOLTAGE DROP TESTS

NAGI0004S0306

Voltage drop tests are often used to find components or circuits which have excessive resistance. A voltage drop in a circuit is caused by a resistance **when the circuit is in operation**.

Check the wire in the illustration. When measuring resistance with ohmmeter, contact by a single strand of wire will give reading of 0 ohms. This would indicate a good circuit. When the circuit operates, this single strand of wire is not able to carry the current. The single

strand will have a high resistance to the current. This will be picked up as a slight voltage drop.
Unwanted resistance can be caused by many situations as follows:

- Undersized wiring (single strand example)
- Corrosion on switch contacts
- Loose wire connections or splices.

If repairs are needed always use wire that is of the same or larger gauge.

Measuring Voltage Drop — Accumulated Method

1) Connect the voltmeter across the connector or part of the circuit you want to check. The positive lead of the voltmeter should be closer to power and the negative lead closer to ground.
2) Operate the circuit.
3) The voltmeter will indicate how many volts are being used to "push" current through that part of the circuit.

Note in the illustration that there is an excessive 4.1 volt drop between the battery and the bulb.

Symptom: Dim bulb or no operation

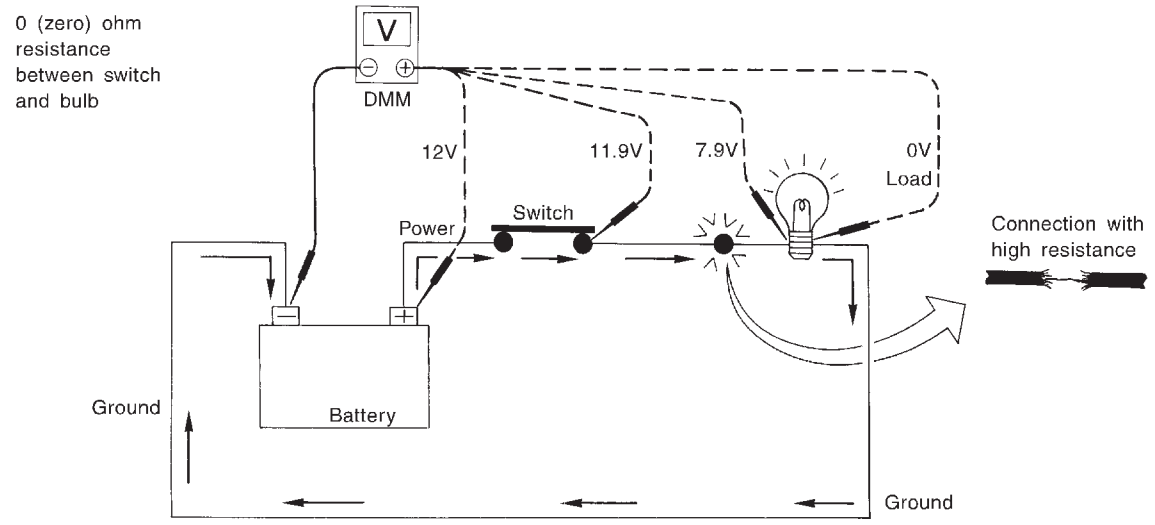

SGI974

Measuring Voltage Drop — Step by Step

The step by step method is most useful for isolating excessive drops in low voltage systems (such as those in "Computer Controlled Systems").
Circuits in the "Computer Controlled System" operate on very low amperage.
The (Computer Controlled) system operations can be adversely affected by any variation in resistance in the system. Such resistance variation may be caused by poor connection, improper installation, improper wire gauge or corrosion.
The step by step voltage drop test can identify a component or wire with too much resistance.

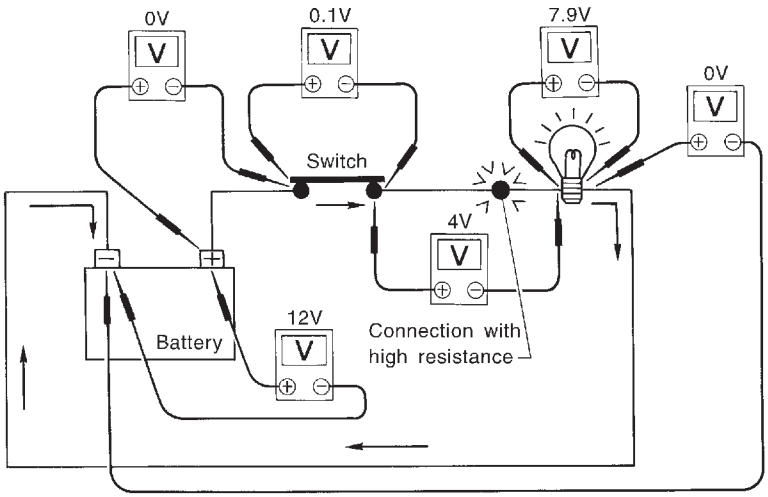

1. Connect the voltmeter as shown, starting at the battery and working your way around the circuit.
2. An unusually large voltage drop will indicate a component or wire that needs to be repaired. As you can see the illustration above, the poor connection causes a 4 volt drop.

The chart that follows illustrates some maximum allowable voltage drops. These values are given as a guideline, the exact value for each component may vary.

COMPONENT	VOLTAGE DROP
Wire	negligible < .001 volts
Ground Connections	Approx. 0.1 volts
Switch Contacts	Approx. 0.3 volts

SGI854

CONTROL UNIT CIRCUIT TEST

NAGI0004S0307

System Description: When the switch is ON, the control unit lights up the lamp.

Case 1

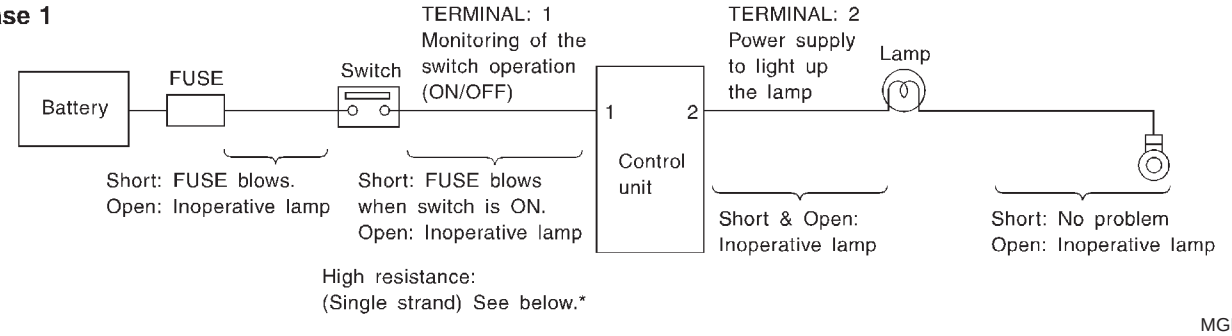

MGI034A

Input-output voltage chart

Pin No.	Item	Condition	Voltage value V	In case of high resistance such as single strand V*
1	Switch	Switch ON	Battery voltage	Lower than battery voltage Approx. 8 (Example)
		Switch OFF	Approx. 0	Approx. 0
2	Lamp	Switch ON	Battery voltage	Approx. 0 (Inoperative lamp)
		Switch OFF	Approx. 0	Approx. 0

The voltage value is based on the body ground.

* : If high resistance exists in the switch side circuit (caused by a single strand), terminal 1 does not detect battery voltage. Control unit does not detect the switch is ON even if the switch does not turn ON. Therefore, the control unit does not supply power to light up the lamp.

Case 2

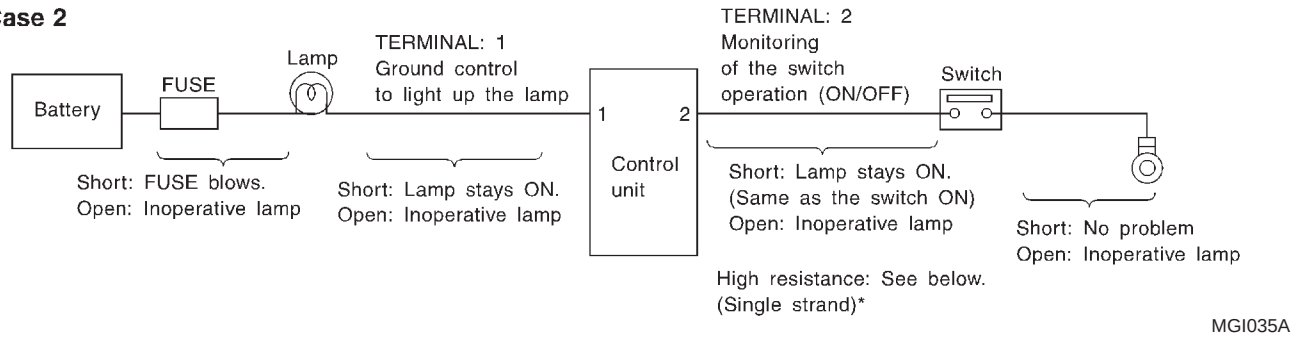

Input-output voltage chart

Pin No.	Item	Condition	Voltage value V	In case of high resistance such as single strand V*
1	Lamp	Switch ON	Approx. 0	Battery voltage (Inoperative lamp)
		Switch OFF	Battery voltage	Battery voltage
2	Switch	Switch ON	Approx. 0	Higher than 0 Approx. 4 (Example)
		Switch OFF	Approx. 5	Approx. 5

The voltage value is based on the body ground.

* : If high resistance exists in the switch side circuit (caused by a single strand), terminal 2 does not detect approx. 0V. Control unit does not detect the switch is ON even if the switch does not turn ON. Therefore, the control unit does not control ground to light up the lamp.

HOW TO FOLLOW TROUBLE DIAGNOSES

NOTICE:
Trouble diagnoses indicate work procedures required to diagnose problems effectively. Observe the following instructions before diagnosing.

1) **Before performing trouble diagnoses, read the “Preliminary Check”, the “Symptom Chart” or the “Work Flow”.**
2) **After repairs, re-check that the problem has been completely eliminated.**
3) **Refer to Component Parts and Harness Connector Location for the Systems described in each section for identification/location of components and harness connectors.**
4) **Refer to the Circuit Diagram for quick pinpoint check.**
   If you need to check circuit continuity between harness connectors in more detail, such as when a sub-harness is used, refer to Wiring Diagram in each individual section and Harness Layout in EL section for identification of harness connectors.
5) **When checking circuit continuity, ignition switch should be OFF.**
6) **Before checking voltage at connectors, check battery voltage.**
7) **After accomplishing the Diagnostic Procedures and Electrical Components Inspection, make sure that all harness connectors are reconnected as they were.**

How to Follow Test Groups in Trouble Diagnoses

NAGI0005S01

Example

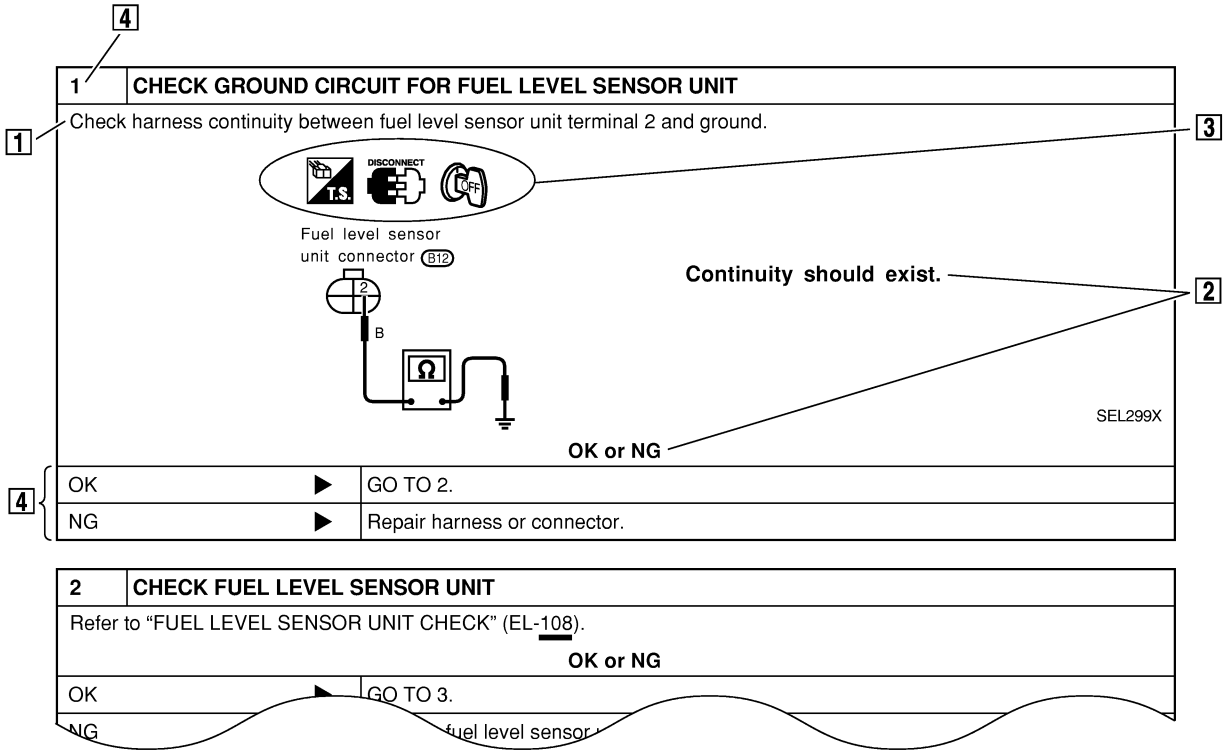

SGI138A

1) **Work and diagnostic procedure**
Start to diagnose an incident using procedures indicated in enclosed test groups.

2) **Questions and required results.**
Questions and required results are indicated in bold type in test group.
The meaning of are as follows:
   a. Battery voltage → 11 - 14V or approximately 12V
   b. Voltage: Approximately 0V → Less than 1V

3) **Symbol used in illustration**
Symbols included in illustrations refer to measurements or procedures. Before diagnosing a problem, familiarize yourself with each symbol. Refer to "CONNECTOR SYMBOLS" (GI-15) and "Key to Symbols Signifying Measurements or Procedures" (GI-37).

4) **Action items**
Next action for each test group is indicated based on result of each question. Test group number is shown in the left upper portion of each test group.

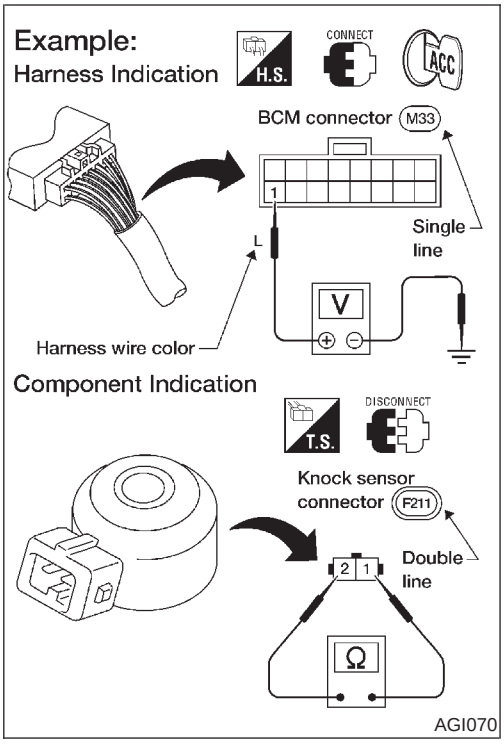

Harness Wire Color and Connector Number Indication

NAGI0005S03

There are two types of harness wire color and connector number indication.

TYPE 1: HARNESS WIRE COLOR AND CONNECTOR NUMBER ARE SHOWN IN ILLUSTRATION

NAGI0005S0301

- Letter designations next to test meter probe indicate harness wire color.
- Connector numbers in a single circle (e.g. M33) indicate harness connectors.
- Connector numbers in a double circle (e.g. F211) indicate component connectors.

TYPE 2: HARNESS WIRE COLOR AND CONNECTOR NUMBER ARE SHOWN IN TEXT

NAGI0005S0302

Example 1:

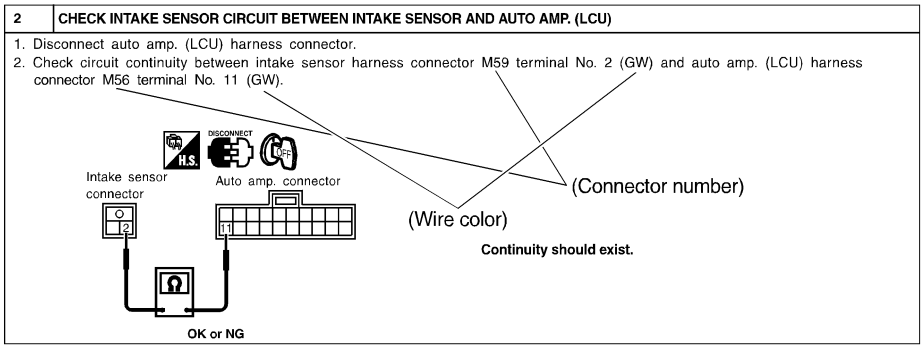

Example 2:

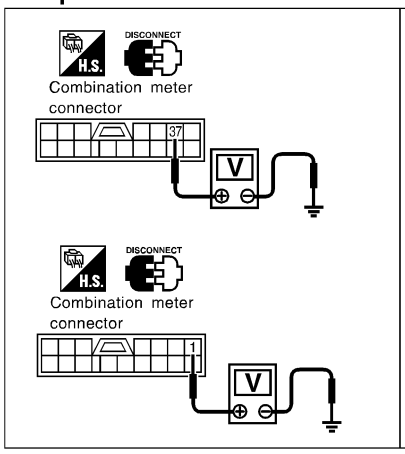

POWER SUPPLY AND GROUND CIRCUIT CHECK

Power Supply Circuit Check

=NCEL00-16S07
NCEL00-16S0701

Terminals			Ignition switch position		
(+)		(–)	OFF	ACC	ON
Connector	Terminal (Wire color)				
M40	37 (Y)	Ground	Battery voltage	Battery voltage	Battery voltage
M41	1 (Y)	Ground	0V	0V	Battery voltage

If NG, check the follwing.
- 7.5A fuse [No. 5, located in fuse block (J/B)]
- 10A fuse [No. 11, located in fuse block (J/B)]
- Harness for open or short between fuse and combination meter

Connector number Wire color

SGI144A

Key to Symbols Signifying Measurements or Procedures

NAGI0005S02

Symbol	Symbol explanation	Symbol	Symbol explanation
	Check after disconnecting the connector to be measured.		Procedure with Generic Scan Tool (GST, OBD-II scan tool)
	Check after connecting the connector to be measured.		Procedure without CONSULT-II or GST
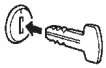	Insert key into ignition switch.		A/C switch is “OFF”.
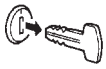	Remove key from ignition switch.		A/C switch is “ON”.
	Turn ignition switch to “OFF” position.		REC switch is “ON”.
	Turn ignition switch to “ON” position.		REC switch is “OFF”.
	Turn ignition switch to “START” position.		Fan switch is “ON”. (At any position except for “OFF” position)
	Turn ignition switch from “OFF” to “ACC” position.		Fan switch is “OFF”.
	Turn ignition switch from “ACC” to “OFF” position.		Apply positive voltage from battery with fuse directly to components.
	Turn ignition switch from “OFF” to “ON” position.		Drive vehicle.
	Turn ignition switch from “ON” to “OFF” position.		Disconnect battery negative cable.
	Do not start engine, or check with engine stopped.		Depress brake pedal.
	Start engine, or check with engine running.		Release brake pedal.
	Apply parking brake.		Depress accelerator pedal.
	Release parking brake.		Release accelerator pedal.

Key to Symbols Signifying Measurements or Procedures (Cont'd)

Symbol	Symbol explanation	Symbol	Symbol explanation
	Check after engine is warmed up sufficiently.	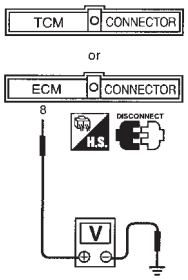	Pin terminal check for SMJ type ECM and TCM connectors. **For details regarding the terminal arrangement, refer to the "ELECTRICAL UNITS" electrical reference page at the end of the manual.** 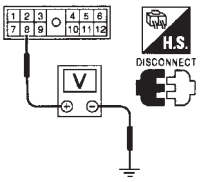
	Voltage should be measured with a voltmeter.		
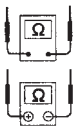	Circuit resistance should be measured with an ohmmeter.		
	Current should be measured with an ammeter.		
	Procedure with CONSULT-II		
	Procedure without CONSULT-II		

Function and System Application

NAGI0006S01

Diagnostic test mode	Function	ENGINE	ALL-MODE AWD/4WD	A/T	ABS	ABS (Including VDC)	AIR BAG	NVIS (NATS)*1	SMART EN-TRANCE	AIR PRES-SURE MONI-TOR
Work support	This mode enables a technician to adjust some devices faster and more accurate by following the indications on CONSULT-II.	x	x	—	—	x	—	—	x	x
Self-diagnostic results	Self-diagnostic results can be read and erased quickly.	x	x	x	x	x	x	x	—	x
Trouble diagnostic record	Current self-diagnostic results and all trouble diagnostic records previously stored can be read.	—	—	—	—	—	x	—	—	—
ECU discriminated No.	Classification number of a replacement ECU can be read to prevent an incorrect ECU from being installed.	—	—	—	—	—	x	—	—	—
Data monitor	Input/Output data in the ECU (ECM) can be read.	x	x	x	x	x	—	—	x	x
DTC work support	This mode enables a technician to set operating conditions to confirm self-diagnosis status/results.	x	—	x	—	—	—	—	—	—
Data monitor (Spec.)	The specified values will be displayed when OK/NG judgement is difficult for the DATA MONITOR items by Barchart and Line Graph.	x	—	—	—	—	—	—	—	—
CAN diagnosis support monitor	Indicates the communication condition of CAN communication line.	x	x	x	—	x	—	—	—	—
Active test	Diagnostic Test Mode in which CONSULT-II drives some actuators apart from the ECMs and also shifts some parameters in a specified range.	x	—	—	x	x	—	—	x	—
ECU (ECM) part number	ECU (ECM) part number can be read.	x	x	x	x	x	—	—	—	x
Control unit initialization	All registered ignition key IDs in NATS components can be initialized and new IDs can be registered.	—	—	—	—	—	—	x	—	—
SRT & DTC confirmation	The results of SRT (System Readiness Test) and the self-diagnosis status/results can be confirmed.	x	—	—	—	—	—	—	—	—

Diagnostic test mode	Function	ENGINE	ALL-MODE AWD/4WD	A/T	ABS	ABS (Including VDC)	AIR BAG	NVIS (NATS)*1	SMART EN-TRANCE	AIR PRES-SURE MONI-TOR
REMO CONT ID SET UP	A maximum of four IDs (identifications) can be registered in the memory using the remote controller. These IDs can be also be confirmed and erased as required.	—	—	—	—	—	—	—	x	—
Function test	Conducted by CONSULT-II instead of a technician to determine whether each system is "OK" or "NG" (No Good).	x	—	x	x	x	x	—	—	—

x: Applicable
*1: NVIS (NATS) [NISSAN Vehicle Immobilizer System (Nissan Anti-Theft System)]

Nickel Metal Hydride Battery Replacement

NAGI0006S06

CONSULT-II contains a nickel metal hydride battery. When replacing the battery obey the following:

WARNING:
Replace the nickel metal hydride battery with Genuine CONSULT-II battery only. Use of another battery may present a risk of fire or explosion. The battery may present a fire or chemical burn hazard if mistreated. Do not recharge, disassemble of dispose of in fire.
Keep the battery out of reach of children and discard used battery conforming to the local regulations.

Checking Equipment

NAGI0006S07

When ordering the below equipment, contact your NISSAN/INFINITI distributor.

Tool name	Description
NISSAN CONSULT-II ① CONSULT-II unit (Tester internal soft: Resident version 3.3.0) and accessories ② Program card AED03E and AEN02B For details, refer to CONSULT-II Operation Manual. ③ CONSULT-II CONVERTER ④ "CONSULT-II Pigtail" Cable	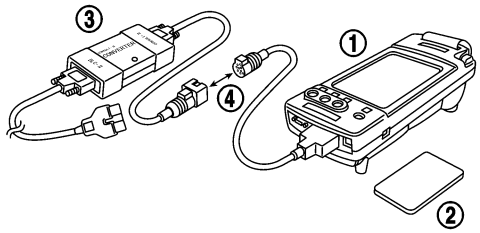 SAIA0363E

NOTE:
- **The CONSULT-II must be used in conjunction with a program card.**
  CONSULT-II does not require loading (Initialization) procedure.
- **Be sure the CONSULT-II is turned off before installing or removing a program card.**

CAUTION:
Previous CONSULT-II "I" and "Y" DLC-I and DLC-II cables should NOT be used anymore because their DDL connector pins can be damaged during cable swapping.

CONSULT-II Start Procedure

NAGI0006S09

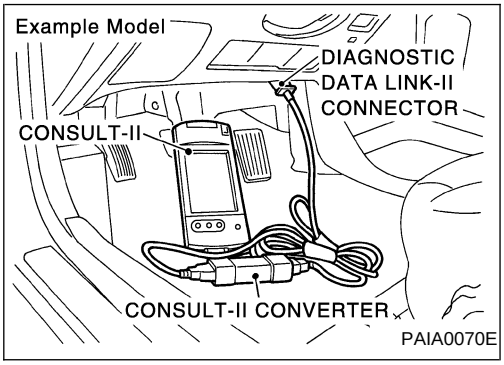

1. Turn off the ignition switch.
2. Connect CONSULT-II and CONSULT-II CONVERTER to the data link connector.

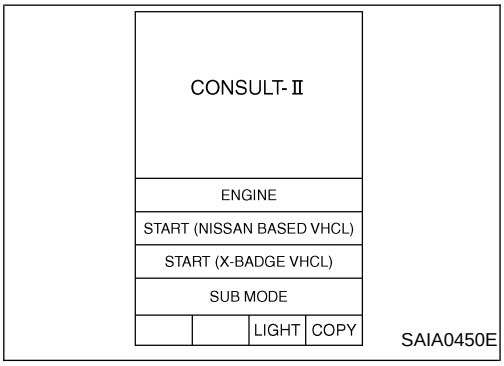

3. Turn on the ignition switch.
4. Touch “START (NISSAN BASED VHCL)” or “System shortcut” (eg: ENGINE) on the screen.

CONSULT-II Data Link Connector (DLC) Circuit

NAGI0006S08

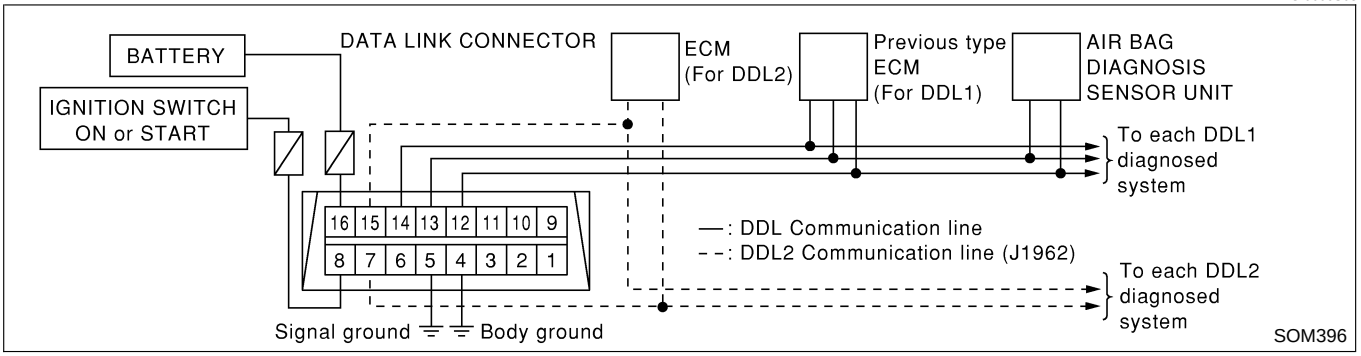

INSPECTION PROCEDURE

NAGI0006S0801

If the CONSULT-II cannot diagnose the system properly, check the following items.

Symptom	Check item
CONSULT-II cannot access any system.	● CONSULT-II DLC power supply circuit (Terminal 8) and ground circuit (Terminal 4) (For detailed circuit, refer to EC-757, “MIL & DATA LINK CONNECTORS”.) ● CONSULT-II (DDL) cable and CONSULT-II CONVERTER
CONSULT-II cannot access individual system. (Other systems can be accessed.)	● CONSULT-II program card (Check the approprite CONSULT-II program card for the system. Refer to “Checking Equipment” above.) ● Power supply and ground circuit for the control unite of the system (For detailed circuit, refer to wiring diagram for each system.) ● Open or short circuit between the system and CONSULT-II DLC (For detailed circuit, refer to wiring diagram for each system.)

NOTE:
The DDL1 and DDL2 circuits from DLC pins 12, 13, 14 and 15 may be connected to more than one system. A short in a DDL circuit connected to a control unit in one system may affect CONSULT-II access to other systems.

Model Variation

NAGI0007S01

2WD

NAGI0007S0101

Destination	Body	Grade	Engine	VQ35DE
			Transmission	RE4R01A (Automatic)
			Differential carrier	H233B
U.S.A.	Wide	SE	4-door	VLJULTAR50EUA
		LE		VLJULVAR50EUA

4WD

NAGI0007S0102

Destination	Body	Grade	Engine		VQ35DE			
			Transmission		FS5R30A (Manual)		RE4R01A (Automatic)	
			Differential carrier		Front R200A	Rear H233B	Front R200A	Rear H233B
U.S.A.	Wide	SE	4-door	Transfer	*1	VLJZLTFR50EUA	*1	VLJZLTAR50EUA
		LE				—	*2	VLJWLVAR50EUA
Canada	Wagon	XE				TLJZLRFR50ENA	*1	TLJZLRAR50ENA
							*2	TLJWLRAR50ENA
	Wide	SE				VLJZLTFR50ENA	*2	VLJWLTAR50ENA
		LE				—		VLJWLVAR50ENA

*1 TX10A (Part time 4WD models)
*2 ATX14A (All-mode 4WD models)

PREFIX AND SUFFIX DESIGNATIONS

NAGI0007S0103

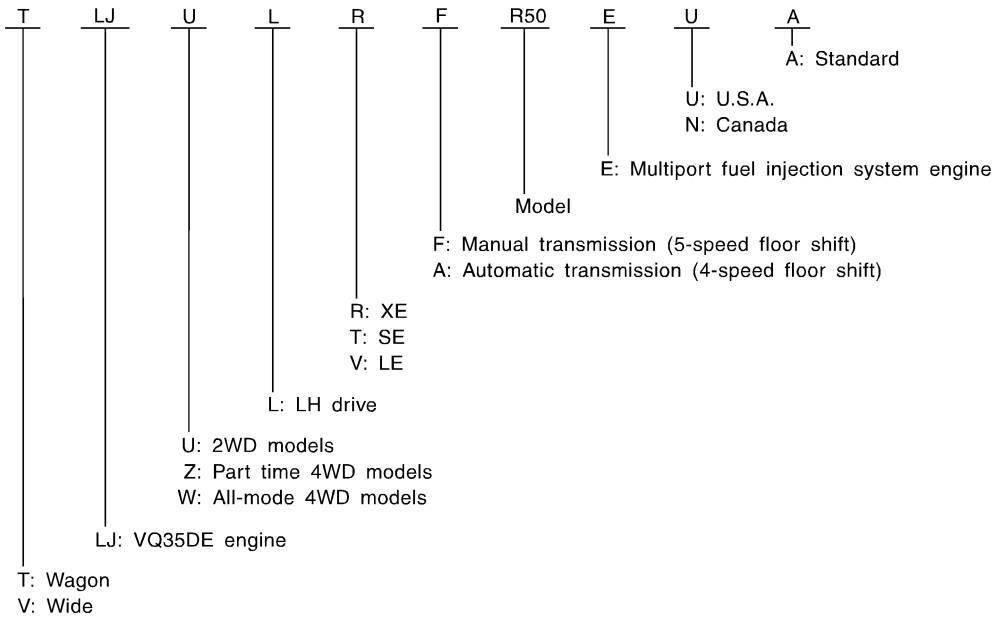

MGI037AB

Identification Number

NAGI0007S02

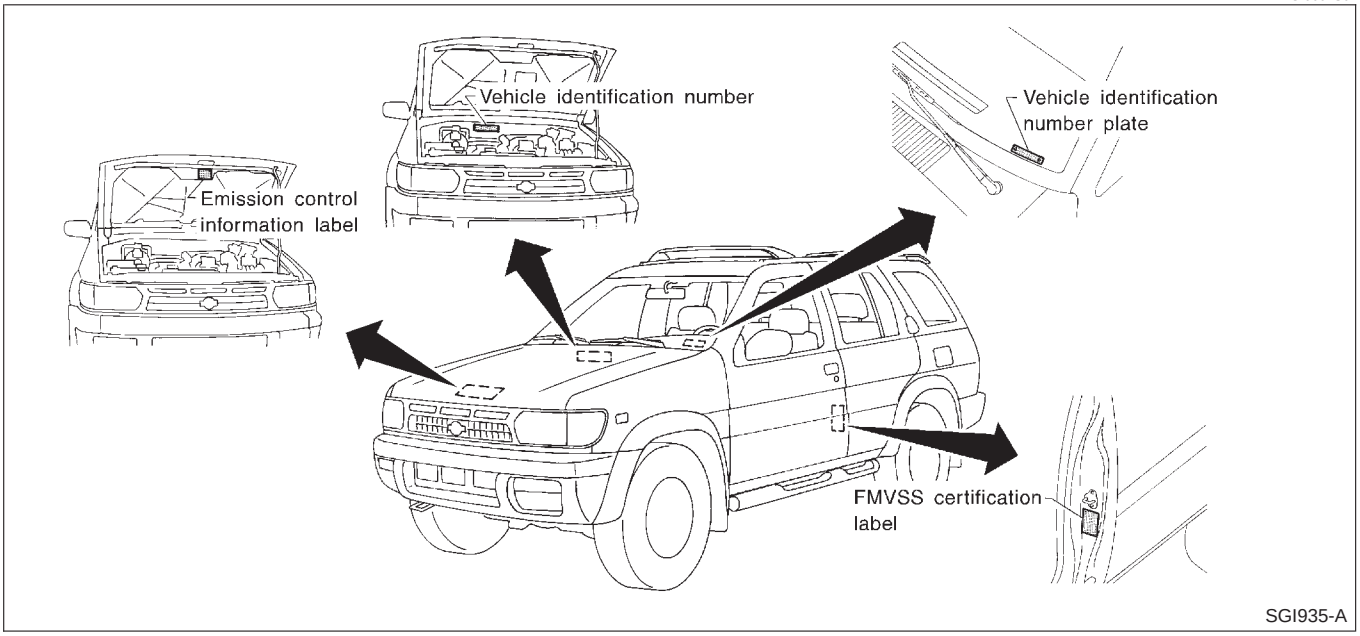

VEHICLE IDENTIFICATION NUMBER ARRANGEMENT

NAGI0007S0201

JN8 D R 0 9 Y * 4 W 800001~ (2WD) 900001~ (4WD)

- Vehicle serial number
- Manufacturing plant
  - W: Kyushu
- Model year
  - 4: 2004 model year
- Check digit (0 to 9 or X)
  - The code for the check digit is determined by mathematical computation.
- Gross vehicle weight rating
  - X: Standard (2WD)
  - Y: Standard (4WD)
- Body type
  - 8: 4-door Van
  - 9: 4-door Wagon and Wide
- Model change
- Vehicle line
  - R: Nissan Pathfinder (R50)
- Engine type
  - D: VQ35DE
- Manufacturer
  - JN6: Japan produced truck
  - JN8: Japan produced multi-purpose vehicle

PAIA0158E

IDENTIFICATION PLATE

NAGI0007S0202

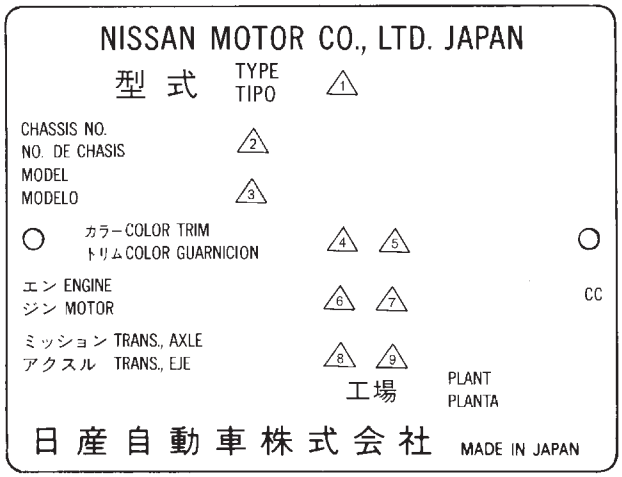

1 Type
2 Vehicle identification number (Chassis number)
3 Model
4 Body color code
5 Trim color code
6 Engine model
7 Engine displacement
8 Transmission model
9 Axle model

MGI039A

ENGINE SERIAL NUMBER

NAGI0007S0203

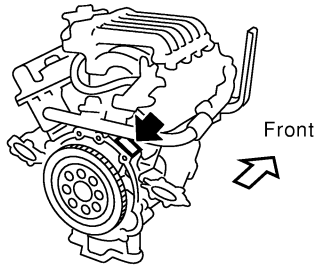

SGI136A

MANUAL TRANSMISSION NUMBER

NAGI0007S0204

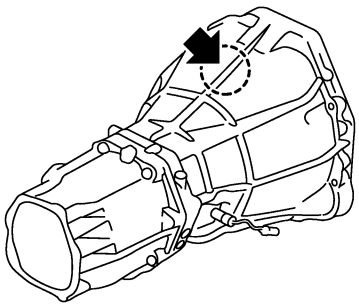

Manual transmission number

SGI185A

AUTOMATIC TRANSMISSION NUMBER

NAGI0007S0205

RE4R01A

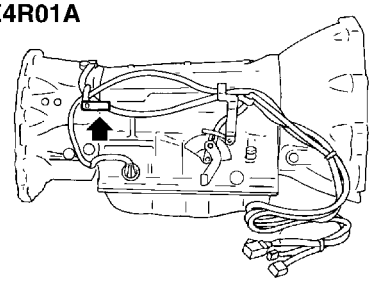

Automatic transmission number

MGI042A

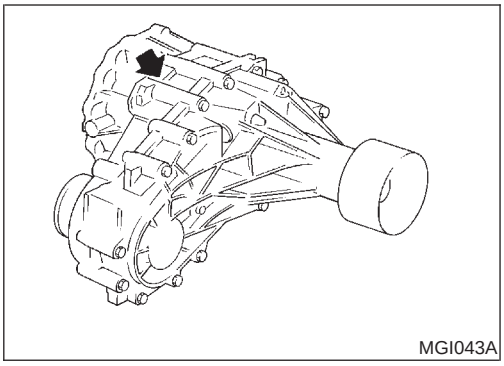

TRANSFER SERIAL NUMBER

NAGI0007S0206

Dimensions

NAGI0007S03

Unit: mm (in)

	Wagon*2	Wide*3
	VQ35DE	
Overall length*1	4,640 (182.7)	
Overall width	1,770 (69.7)	1,820 (71.7)
Overall height	1,730 (68.1)	1,725 (67.9)
Front tread	1,480 (58.3)	1,540 (60.6)
Rear tread	1,485 (58.5)	1,545 (60.8)
Wheelbase	2,700 (106.3)	

*1: On spare tire carrier equipped models, the spare tire carrier adds 240 mm (9.45 in) to the overall length.

*2: XE models

*3: SE models and LE wide models

Wheels & Tires

NAGI0007S04

		Road wheel/offset mm (in)	Tire	Spare tire size
4x2 PATHFINDER	SE	16 x 7JJ Aluminum/20 (0.79)	P255/65R16 106S	Conventional P255/65R16 106S* 215/80R16 103S*
	LE	17 x 8JJ Aluminum/20 (0.79)	P245/65R17 105S	Conventional P245/65R17 105S* 215/80R16 103S*
4x4 PATHFINDER	XE	16 x 7JJ Aluminum/50 (1.97)	P245/70R16 106S	P245/70R16 106S
	SE	16 x 7JJ Aluminum/20 (0.79)	P255/65R16 106S	P255/65R16 106S
	LE	17 x 8JJ Aluminum/20 (0.79)	P245/65R17 105S	P245/65R17 105S

*: If so equipped (US only)

WARNING:

- **Never get under the vehicle while it is supported only by the jack. Always use safety stands to support the frame when you have to get under the vehicle.**
- **Place wheel chocks at both front and back of the wheels on the ground.**

Screw Jack

NAGI0008S01

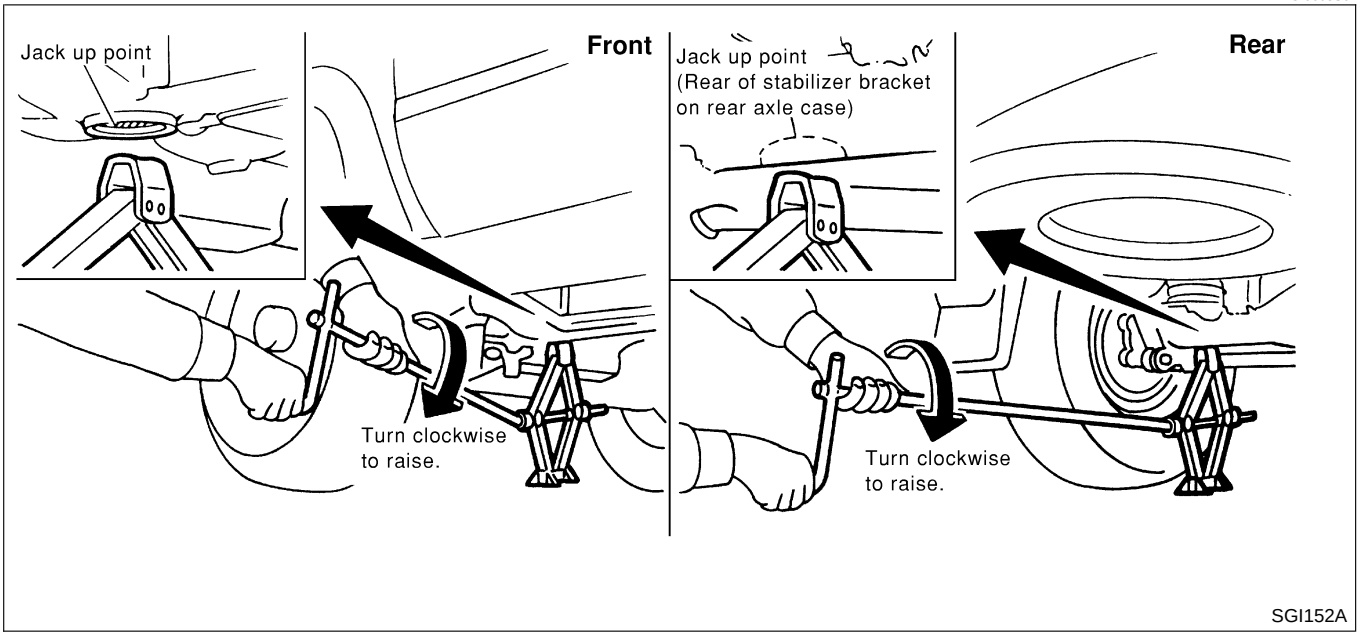

Garage Jack and Safety Stand

=NAGI0008S02

CAUTION:

Place a wooden or rubber block between safety stand and vehicle body when the supporting body is flat.

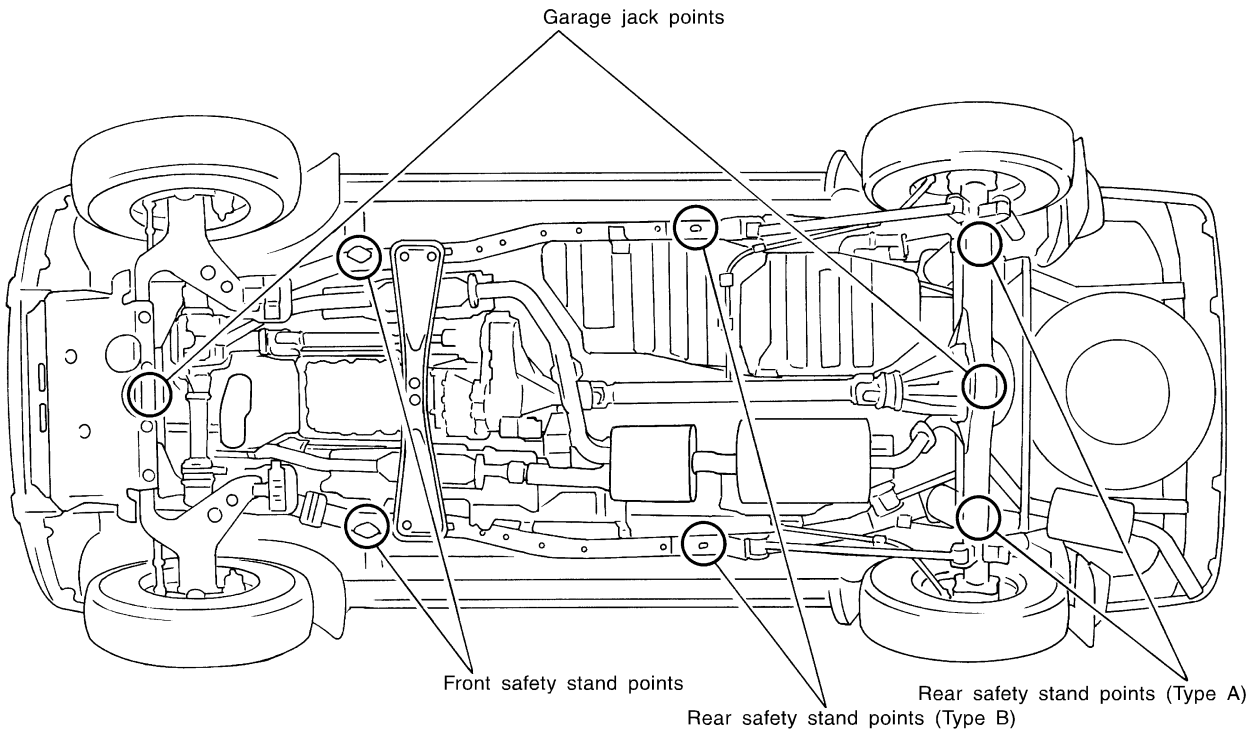

Notes:

(1) Front and rear safety stand points (Type A) are the same as screw jack points.

(2) Rear safety stand points (Type B) are the same as rear 2-pole lift points.

SGI130A

2-pole Lift

=NAGI0008S03

WARNING:

When lifting the vehicle, open the lift arms as wide as possible and ensure that the front and rear of the vehicle are well balanced.

When setting the lift arm, do not allow the arm to contact the brake tubes, brake cable and fuel lines.

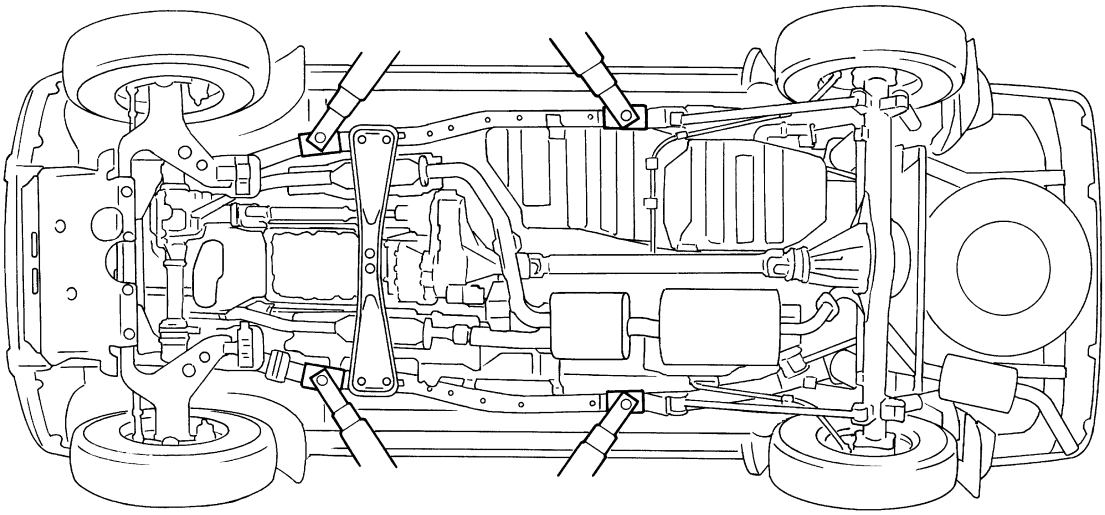

Note: Lift-up points are the same as front safety stand points and rear safety stand points (Type B).

SGI131A

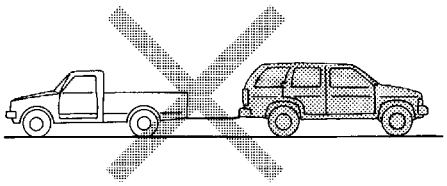

SGI988

Tow Truck Towing

NAGI0008S04

CAUTION:

- **All applicable state or Provincial (in Canada) laws and local laws regarding the towing operation must be obeyed.**
- **It is necessary to use proper towing equipment to avoid possible damage to the vehicle during towing operation. Towing is in accordance with Towing Procedure Manual at dealer.**
- **Always attach safety chains before towing.**
- **When towing, make sure that the transmission, steering system and power train are in good order. If any unit is damaged, dollies must be used.**
- **Never tow an automatic transmission model from the rear (that is backward) with four wheels on the ground as this may cause serious and expensive damage to the transmission.**

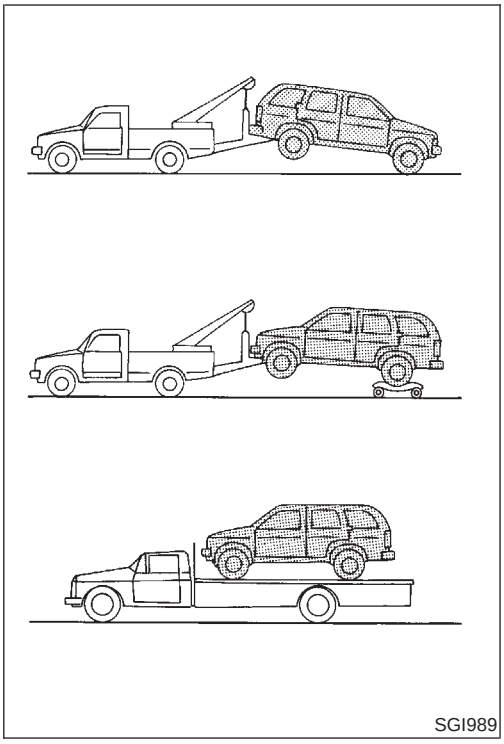
SGI989

2WD MODELS

NAGI0008S0401

NISSAN recommends that vehicle be towed with the driving (rear) wheels off the ground as illustrated.

CAUTION:

- **When towing manual or automatic transmission models with the front wheels on the ground: Turn the ignition key to the OFF position and secure the steering wheel in a straightahead position with a rope or similar device. Never place the ignition key in the LOCK position. This will result in damage to the steering lock mechanism.**
- **When towing manual transmission models with the rear wheels on the ground or four wheels on the ground (if you do not use towing dollies): Always release the parking brake and move the transmission shift lever to the N (neutral) position.**

Observe the following restricted towing speeds and distances.

Manual transmission models:

- **Speed: Below 95 km/h (59 MPH)**
- **Distance: Less than 800 km (500 miles)**

If the speed or distance must necessarily be greater, remove the propeller shaft beforehand to prevent damage to the transmission.

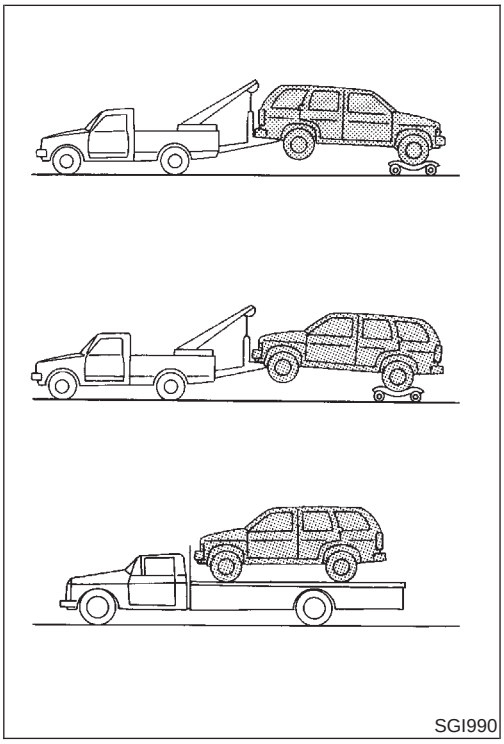
SGI990

PART TIME 4WD MODELS

NAGI0008S0402

NISSAN recommends that a dolly be used as illustrated when towing 4WD models.

CAUTION:

If towing with the front wheels on the ground or with the rear wheels on the ground (if you do not use towing dollies) is necessary: Move the transfer case shift lever into the 2H position.

- **When towing with the front wheels on the ground: On manual transmission models to move the shift lever to the N (neutral) position, turn the ignition key to the OFF position and secure the steering wheel in a straightahead position with a rope or similar device.**
  On automatic transmission models to move the selector lever to N (neutral) position, turn the ignition key to the ACC position. After moving the selector lever to the N (neutral) position, turn the ignition key to the OFF position and secure the steering wheel in a straightahead position with a rope or similar device.
  Never place the ignition key in the LOCK position. This will result in damage to the steering lock mechanism.
- **When towing manual transmission models with the rear wheels on the ground or four wheels on the ground: Always release the parking brake and move the transmission shift lever to the N (neutral) position.**

Observe the following restricted towing speeds and distances.

Manual transmission models:

- **Speed: Below 95 km/h (59 MPH)**
- **Distance: Less than 800 km (500 miles)**

If the speed or distance must necessarily be greater, remove the front and rear propeller shafts beforehand to prevent damage to the transmission.

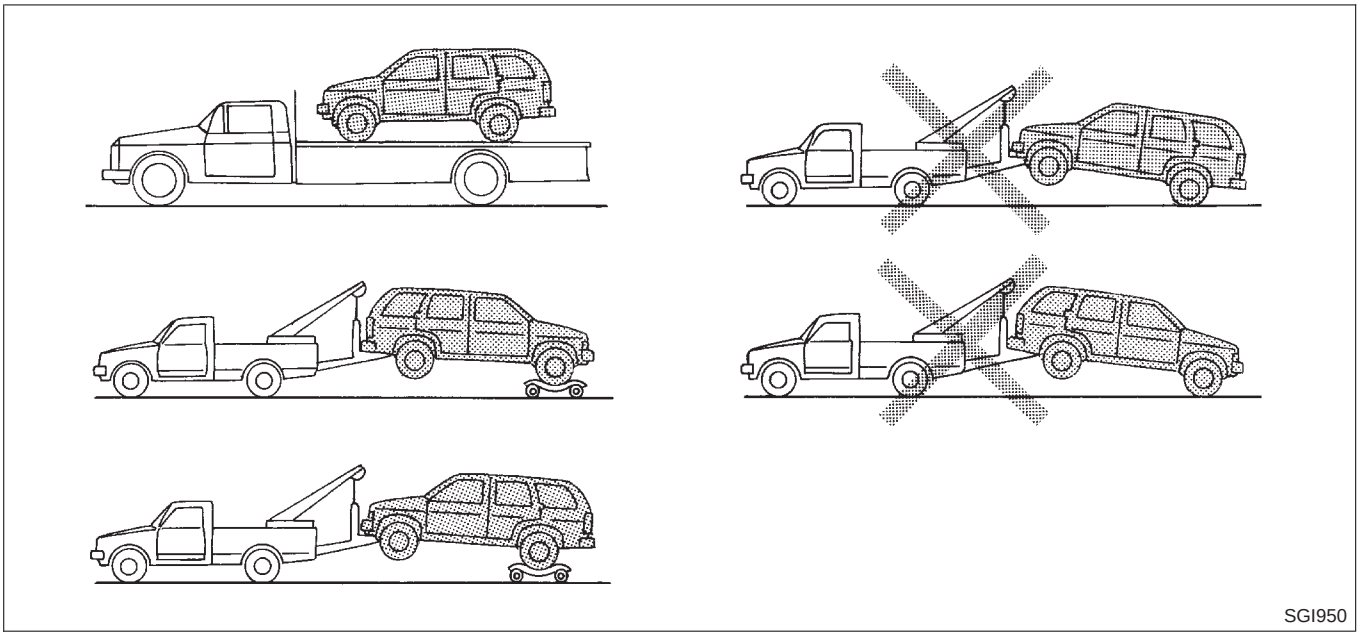

ALL-MODE 4WD MODELS

NAGI0008S0404

NISSAN recommends that a dolly or a flat bed truck be used as illustrated when towing all-mode 4WD models.

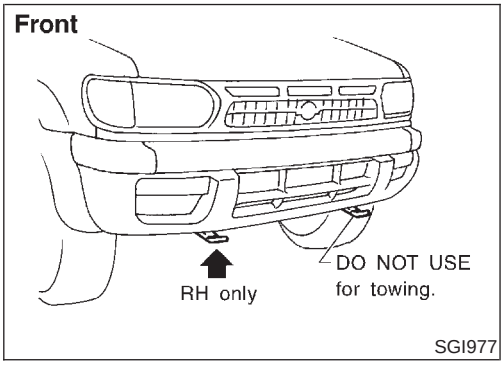

VEHICLE RECOVERY

NAGI0008S0403

- Use the towing **hook** only, not other parts of the vehicle. Otherwise, the vehicle body will be damaged.
- Use the towing hook **only** to free a vehicle stuck in sand, snow, mud, etc. **Never** tow the vehicle for a long distance using only the towing hook.
- The towing hook is under tremendous force when used to free a stuck vehicle. Always pull the cable straight out from the front or rear of the vehicle. **Never** pull on the hook at a sideways angle.
- Stand clear of a stuck vehicle.

TIGHTENING TORQUE OF STANDARD BOLTS

Grade	Bolt size	Bolt diameter * mm	Pitch mm	Tightening torque (Without lubricant)							
				Hexagon head bolt				Hexagon flange bolt			
				N·m	kg-m	ft-lb	in-lb	N·m	kg-m	ft-lb	in-lb
4T	M6	6.0	1.0	5.5	0.56	4	49	7	0.71	5	62
	M8	8.0	1.25	13.5	1.4	10	—	17	1.7	13	—
			1.0	13.5	1.4	10	—	17	1.7	13	—
	M10	10.0	1.5	28	2.9	21	—	35	3.6	26	—
			1.25	28	2.9	21	—	35	3.6	26	—
	M12	12.0	1.75	45	4.6	33	—	55	5.6	41	—
			1.25	45	4.6	33	—	65	6.6	48	—
	M14	14.0	1.5	80	8.2	59	—	100	10	74	—
7T	M6	6.0	1.0	9	0.92	7	80	11	1.1	8	97
	M8	8.0	1.25	22	2.2	16	—	28	2.9	21	—
			1.0	22	2.2	16	—	28	2.9	21	—
	M10	10.0	1.5	45	4.6	33	—	55	5.6	41	—
			1.25	45	4.6	33	—	55	5.6	41	—
	M12	12.0	1.75	80	8.2	59	—	100	10	74	—
			1.25	80	8.2	59	—	100	10	74	—
	M14	14.0	1.5	130	13	96	—	170	17	125	—
9T	M6	6.0	1.0	11	1.1	8	—	13.5	1.4	10	—
	M8	8.0	1.25	28	2.9	21	—	35	3.6	26	—
			1.0	28	2.9	21	—	35	3.6	26	—
	M10	10.0	1.5	55	5.6	41	—	80	8.2	59	—
			1.25	55	5.6	41	—	80	8.2	59	—
	M12	12.0	1.75	100	10	74	—	130	13	96	—
			1.25	100	10	74	—	130	13	96	—
	M14	14.0	1.5	170	17	125	—	210	21	155	—

*: Nominal diameter

1) **Special parts are excluded.**
2) **This standard is applicable to bolts having the following marks embossed on the bolt head.**

Grade	Mark
4T	4
7T	7
9T	9

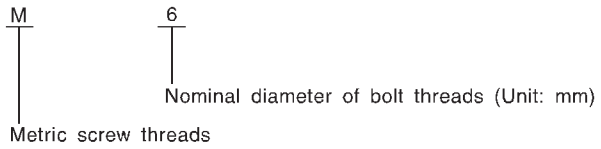

MGI044A

RECOMMENDED CHEMICAL PRODUCTS AND SEALANTS

Refer to the following chart for help in selecting the appropriate chemical product or sealant.

Recommended Chemical Products and Sealants

	Product Description	Purpose	Nissan North America Part No. (USA)	Nissan Canada Part No. (Canada)	Aftermarket Cross Reference Part Nos.
1	Rear View Mirror Adhesive	Used to permanently remount rear view mirrors to windows.	999MP-AM000P	99998-50505	Permatex 81844
2	Anaerobic Liquid Gasket	For metal-to-metal flange sealing. Can fill a 0.38 mm (0.015 inch) gap and provide instant sealing for most powertrain applications.	999MP-AM001P	99998-50503	Permatex 51813 and 51817
3	High Performance Thread Sealant	Provides instant sealing on any threaded straight or parallel threaded fitting. (Thread sealant only, no locking ability.) ● Do not use on plastic.	999MP-AM002P	999MP-AM002P	Permatex 56521
4	Silicone RTV	Gasket Maker	999MP-AM003P (Ultra Grey)	99998-50506 (Ultra Grey)	Permatex Ultra Grey 82194; Three Bond 1207, 1215, 1216, 1217F and 1217G; Nissan RTV Part No. 999MP-A7007
		Gasket Maker for Maxima/Quest 5-speed automatic transmission (RE5F22A)	—	—	Three Bond 1281B or exact equivalent in its quality
5	High Temperature, High Strength Thread Locking Sealant (Red)	Threadlocker	999MP-AM004P	999MP-AM004P	Permatex 27200; Three Bond 1360, 1360N, 1305 N&P, 1307N, 1335, 1335B, 1363B, 1377C, 1386B, D&E and 1388
6	Medium Strength Thread Locking Sealant (Blue)	Threadlocker (service tool removable)	999MP-AM005P	999MP-AM005P	Permatex 24200, 24206, 24240, 24283 and 09178; Three Bond 1322, 1322N, 1324 D&N, 1333D, 1361C, 1364D, 1370C and 1374

SAE J1930 Terminology List

NAGI0010S01

All emission related terms used in this publication in accordance with SAE J1930 are listed. Accordingly, new terms, new acronyms/abbreviations and old terms are listed in the following chart.

NEW TERM	NEW ACRONYM / ABBREVIATION	OLD TERM
Air cleaner	ACL	Air cleaner
Barometric pressure	BARO	***
Barometric pressure sensor-BCDD	BAROS-BCDD	BCDD
Camshaft position	CMP	***
Camshaft position sensor	CMPS	Crank angle sensor
Canister	***	Canister
Carburetor	CARB	Carburetor
Charge air cooler	CAC	Intercooler
Closed loop	CL	Closed loop
Closed throttle position switch	CTP switch	Idle switch
Clutch pedal position switch	CPP switch	Clutch switch
Continuous fuel injection system	CFI system	***
Continuous trap oxidizer system	CTOX system	***
Crankshaft position	CKP	***
Crankshaft position sensor	CKPS	***
Data link connector	DLC	***
Diagnostic test mode	DTM	Diagnostic mode
Diagnostic test mode selector	DTM selector	Diagnostic mode selector
Diagnostic test mode I	DTM I	Mode I
Diagnostic test mode II	DTM II	Mode II
Diagnostic trouble code	DTC	Malfunction code
Direct fuel injection system	DFI system	***
Distributor ignition system	DI system	Ignition timing control
Early fuel evaporation-mixture heater	EFE-mixture heater	Mixture heater
Early fuel evaporation system	EFE system	Mixture heater control
Electrically erasable programmable read only memory	EEPROM	***
Electronic ignition system	EI system	Ignition timing control
Engine control	EC	***
Engine control module	ECM	ECCS control unit
Engine coolant temperature	ECT	Engine temperature
Engine coolant temperature sensor	ECTS	Engine temperature sensor
Engine modification	EM	***
Engine speed	RPM	Engine speed
Erasable programmable read only memory	EPROM	***

NEW TERM	NEW ACRONYM / ABBREVIATION	OLD TERM
Evaporative emission canister	EVAP canister	Canister
Evaporative emission system	EVAP system	Canister control solenoid valve
Exhaust gas recirculation valve	EGR valve	EGR valve
Exhaust gas recirculation control-BPT valve	EGRC-BPT valve	BPT valve
Exhaust gas recirculation control-solenoid valve	EGRC-solenoid valve	EGR control solenoid valve
Exhaust gas recirculation temperature sensor	EGRT sensor	Exhaust gas temperature sensor
EGR temperature sensor		
Flash electrically erasable programmable read only memory	FEEPROM	***
Flash erasable programmable read only memory	FEPROM	***
Flexible fuel sensor	FFS	***
Flexible fuel system	FF system	***
Fuel pressure regulator	***	Pressure regulator
Fuel pressure regulator control solenoid valve	***	PRVR control solenoid valve
Fuel tank temperature sensor	FTT	Tank fuel temperature sensor
Fuel trim	FT	***
Heated Oxygen sensor	HO2S	Exhaust gas sensor
Idle air control system	IAC system	Idle speed control
Idle air control valve-air regulator	IACV-air regulator	Air regulator
Idle air control valve-auxiliary air control valve	IACV-AAC valve	Auxiliary air control (AAC) valve
Idle air control valve-FICD solenoid valve	IACV-FICD solenoid valve	FICD solenoid valve
Idle air control valve-idle up control solenoid valve	IACV-idle up control solenoid valve	Idle up control solenoid valve
Idle speed control-FI pot	ISC-FI pot	FI pot
Idle speed control system	ISC system	***
Ignition control	IC	***
Ignition control module	ICM	***
Indirect fuel injection system	IFI system	***
Intake air	IA	Air
Intake air temperature sensor	IAT sensor	Air temperature sensor
Knock	***	Detonation
Knock sensor	KS	Detonation sensor
Malfunction indicator lamp	MIL	Check engine light
Manifold absolute pressure	MAP	***
Manifold absolute pressure sensor	MAPS	***

NEW TERM	NEW ACRONYM / ABBREVIATION	OLD TERM
Manifold differential pressure	MDP	***
Manifold differential pressure sensor	MDPS	***
Manifold surface temperature	MST	***
Manifold surface temperature sensor	MSTS	***
Manifold vacuum zone	MVZ	***
Manifold vacuum zone sensor	MVZS	***
Mass air flow sensor	MAFS	Air flow meter
Mixture control solenoid valve	MC solenoid valve	Air-fuel ratio control solenoid valve
Multiport fuel injection System	MFI system	Fuel injection control
Neutral position switch	***	Neutral switch
Nonvolatile random access memory	NVRAM	***
On board diagnostic system	OBD system	Self-diagnosis
Open loop	OL	Open loop
Oxidation catalyst	OC	Catalyst
Oxidation catalytic converter system	OC system	***
Oxygen sensor	O2S	Exhaust gas sensor
Park position switch	***	Park switch
Park/neutral position switch	PNP switch	Park/neutral switch
Periodic trap oxidizer system	PTOX system	***
Positive crankcase ventilation	PCV	Positive crankcase ventilation
Positive crankcase ventilation valve	PCV valve	PCV valve
Powertrain control module	PCM	***
Programmable read only memory	PROM	***
Pulsed secondary air injection control solenoid valve	PAIRC solenoid valve	AIV control solenoid valve
Pulsed secondary air injection system	PAIR system	Air induction valve (AIV) control
Pulsed secondary air injection valve	PAIR valve	Air induction valve
Random access memory	RAM	***
Read only memory	ROM	***
Scan tool	ST	***
Secondary air injection pump	AIR pump	***
Secondary air injection system	AIR system	***
Sequential multiport fuel injection system	SFI system	Sequential fuel injection
Service reminder indicator	SRI	***
Simultaneous multiport fuel injection system	***	Simultaneous fuel injection
Smoke puff limiter system	SPL system	***
Supercharger	SC	***

NEW TERM	NEW ACRONYM / ABBREVIATION	OLD TERM
Supercharger bypass	SCB	***
System readiness test	SRT	***
Thermal vacuum valve	TVV	Thermal vacuum valve
Three way catalyst	TWC	Catalyst
Three way catalytic converter system	TWC system	***
Three way + oxidation catalyst	TWC + OC	Catalyst
Three way + oxidation catalytic converter system	TWC + OC system	***
Throttle body	TB	Throttle chamber SPI body
Throttle body fuel injection system	TBI system	Fuel injection control
Throttle position	TP	Throttle position
Throttle position sensor	TPS	Throttle sensor
Throttle position switch	TP switch	Throttle switch
Torque converter clutch solenoid valve	TCC solenoid valve	Lock-up cancel solenoid Lock-up solenoid
Transmission control module	TCM	A/T control unit
Turbocharger	TC	Turbocharger
Vehicle speed sensor	VSS	Vehicle speed sensor
Volume air flow sensor	VAFS	Air flow meter
Warm up oxidation catalyst	WU-OC	Catalyst
Warm up oxidation catalytic converter system	WU-OC system	***
Warm up three way catalyst	WU-TWC	Catalyst
Warm up three way catalytic converter system	WU-TWC system	***
Wide open throttle position switch	WOTP switch	Full switch

NOTES

HEATER & AIR CONDITIONER

SECTION HA

CONTENTS

AUTO

PRECAUTIONS 3
Supplemental Restraint System (SRS) "AIR BAG" and "SEAT BELT PRE-TENSIONER" 3
Precautions for Working with HFC-134a (R-134a) 3
General Refrigerant Precautions 4
Precautions for Leak Detection Dye 4
Precaution for Identification Label on Vehicle 5
Precautions for Refrigerant Connection 5
Precautions for Servicing Compressor 7
Precautions for Service Equipment 8
Wiring Diagrams and Trouble Diagnoses 9
PREPARATION 10
Special Service Tools 10
HFC-134a (R-134a) Service Tools and Equipment 11
DESCRIPTION 15
Refrigeration System 15
V-6 Variable Displacement Compressor 16
Component Layout 20
Introduction 21
Features 21
Overview of Control System 24
Control Operation 25
Discharge Air Flow 27
System Description 28
TROUBLE DIAGNOSES 29
Component Location 29
Circuit Diagram 31
Wiring Diagram - A/C, A - 32
Auto Amp. Terminals and Reference Value 36
Self-diagnosis 39
How to Perform Trouble Diagnoses for Quick and Accurate Repair 59
Operational Check 60
A/C System 65
Mode Door Motor 68
Air Mix Door Motor 75
Intake Door Motor 79
Blower Motor 87
Magnet Clutch 97
Insufficient Cooling 104
Insufficient Heating 113
Noise 115
Self-diagnosis 116
Memory Function 118
ECON (ECONOMY) Mode 120
Ambient Sensor Circuit 121
In-vehicle Sensor Circuit 124
Sunload Sensor Circuit 128
Intake Sensor Circuit 131
Air Mix Door Motor PBR Circuit 133
SERVICE PROCEDURE 134
HFC-134a (R-134a) Service Procedure 134
Maintenance of Lubricant Quantity in Compressor 136
Compressor 139
Compressor Clutch 139
Refrigerant Lines 143
Checking for Refrigerant Leaks 144
Electronic Refrigerant Leak Detector 144
Fluorescent Dye Leak Detector 147
Belt 148
SERVICE DATA AND SPECIFICATIONS (SDS) 149
Auto 149

MANUAL

PRECAUTIONS 150
Supplemental Restraint System (SRS) "AIR BAG" and "SEAT BELT PRE-TENSIONER" 150
Precautions for Working with HFC-134a (R-134a) 150
General Refrigerant Precautions 151
Precautions for Leak Detection Dye 151
Precaution for Identification Label on Vehicle 152
Precautions for Refrigerant Connection 152
Precautions for Servicing Compressor 154

CONTENTS (Cont'd)

Precautions for Service Equipment.....155
Wiring Diagrams and Trouble Diagnoses.....156
PREPARATION 157
Special Service Tools 157
HFC-134a (R-134a) Service Tools and Equipment.....158
DESCRIPTION.....162
Refrigeration System 162
V-6 Variable Displacement Compressor.....163
Component Layout 167
Control Operation 168
Discharge Air Flow.....169
System Description.....170
TROUBLE DIAGNOSES.....171
Component Location.....171
Wiring Diagram - HEATER -.....173
Circuit Diagram - Air Conditioner.....174
Wiring Diagram - A/C, M -.....175
How to Perform Trouble Diagnoses for Quick and Accurate Repair.....178
Operational Check.....179
Intake Door 181
Blower Motor.....188
Insufficient Cooling 195
Insufficient Heating 203
Air Outlet.....205
Magnet Clutch.....207
Noise.....214
SERVICE PROCEDURE.....215
HFC-134a (R-134a) Service Procedure.....215
Maintenance of Lubricant Quantity in Compressor 217
Compressor 220
Compressor Clutch.....220
Refrigerant Lines 224
Checking for Refrigerant Leaks.....225
Electronic Refrigerant Leak Detector 225
Fluorescent Dye Leak Detector.....228
Belt.....229
SERVICE DATA AND SPECIFICATIONS (SDS).....230
Manual 230

Supplemental Restraint System (SRS) "AIR BAG" and "SEAT BELT PRE-TENSIONER"

NAHA0153

The Supplemental Restraint System such as "AIR BAG" and "SEAT BELT PRE-TENSIONER" used along with a seat belt, helps to reduce the risk or severity of injury to the driver and front passenger for certain types of collision. The SRS composition which is available to NISSAN MODEL R50 is as follows:

- For a frontal collision
  The Supplemental Restraint System consists of driver air bag module (located in the center of the steering wheel), front passenger air bag module (located on the instrument panel on passenger side), seat belt pre-tensioners, a diagnosis sensor unit, warning lamp, wiring harness and spiral cable.
- For a side collision
  The Supplemental Restraint System consists of side air bag module (located in the outer side of front seat), side curtain air bag module (locating in the headlining side of front and rear seat), satellite sensor, diagnosis sensor unit (one of components of air bags for a frontal collision), wiring harness, warning lamp (one of components of air bags for a frontal collision).

WARNING:

- **To avoid rendering the SRS inoperative, which could increase the risk of personal injury or death in the event of a collision which would result in air bag inflation, all maintenance must be performed by an authorized NISSAN dealer.**
- **Improper maintenance, including incorrect removal and installation of the SRS, can lead to personal injury caused by unintentional activation of the system.**
- **Do not use electrical test equipment on any circuit related to the SRS unless instructed to in this Service Manual. SRS wiring harnesses can be identified by yellow and/or orange harness connector (and by yellow harness protector or yellow insulation tape before the harness connectors).**

Precautions for Working with HFC-134a (R-134a)

NAHA0154

WARNING:

- **CFC-12 (R-12) refrigerant and HFC-134a (R-134a) refrigerant are not compatible. If the refrigerants are mixed and compressor failure is likely to occur, refer to "CONTAMINATED REFRIGERANT" below. To determine the purity of HFC-134a (R-134a) in the vehicle and recovery tank, use Refrigerant Recovery/Recycling Recharging equipment and Refrigerant Identifier.**
- **Use only specified lubricant for the HFC-134a (R-134a) A/C system and HFC-134a (R-134a) components. If lubricant other than that specified is used, compressor malfunction is likely to occur.**
- **The specified HFC-134a (R-134a) lubricant rapidly absorbs moisture from the atmosphere. The following handling precautions must be observed:**

a) When removing refrigerant components from a vehicle, immediately cap (seal) the component to minimize the entry of moisture from the atmosphere.

b) When installing refrigerant components to a vehicle, do not remove the caps (unseal) until just before connecting the components. Connect all refrigerant loop components as quickly as possible to minimize the entry of moisture into system.

c) Only use the specified lubricant from a sealed container. Immediately reseal containers of lubricant. Without proper sealing, lubricant will become moisture saturated and should not be used.

d) Avoid breathing A/C refrigerant and lubricant vapor or mist. Exposure may irritate eyes, nose and throat. Remove HFC-134a (R-134a) from the A/C system, using certified service equipment meeting requirements of SAE J2210 HFC-134a (R-134a) recycling equipment, or J2209 HFC-134a (R-134a) recovery equipment. If accidental system discharge occurs, ventilate work area before resuming service. Additional health and safety information may be obtained from refrigerant and lubricant manufacturers.

e) Do not allow lubricant (Nissan A/C System Oil Type S) to come in contact with styrofoam parts. Damage may result.

CONTAMINATED REFRIGERANT

NAHA0154S01

If a refrigerant other than pure HFC-134a (R-134a) is identified in a vehicle, your options are:

- Explain to the customer that environmental regulations prohibit the release of contaminated refrigerant into the atmosphere.
- Explain that recovery of the contaminated refrigerant could damage your service equipment and refrigerant supply.

- Suggest the customer return the vehicle to the location of previous service where the contamination may have occurred.
- If you choose to perform the repair, recover the refrigerant using only **dedicated equipment and containers. Do not recover contaminated refrigerant into your existing service equipment.** If your facility does not have dedicated recovery equipment, you may contact a local refrigerant product retailer for available service. This refrigerant must be disposed of in accordance with all federal and local regulations. In addition, replacement of all refrigerant system components on the vehicle is recommended.
- If the vehicle is within the warranty period, the air conditioner warranty is void. Please contact Nissan Customer Affairs for further assistance.

General Refrigerant Precautions

NAHA0155

WARNING:

- **Do not release refrigerant into the air. Use approved recovery/recycling equipment to capture the refrigerant every time an air conditioning system is discharged.**
- **Always wear eye and hand protection (goggles and gloves) when working with any refrigerant or air conditioning system.**
- **Do not store or heat refrigerant containers above 52°C (125°F).**
- **Do not heat a refrigerant container with an open flame; if container warming is required, place the bottom of the container in a warm pail of water.**
- **Do not intentionally drop, puncture, or incinerate refrigerant containers.**
- **Keep refrigerant away from open flames: poisonous gas will be produced if refrigerant burns.**
- **Refrigerant will displace oxygen, therefore be certain to work in well ventilated areas to prevent suffocation.**
- **Do not pressure test or leak test HFC-134a (R-134a) service equipment and/or vehicle air conditioning systems with compressed air during repair. Some mixtures of air and HFC-134a (R-134a) have been shown to be combustible at elevated pressures. These mixtures, if ignited, may cause injury or property damage. Additional health and safety information may be obtained from refrigerant manufacturers.**

Precautions for Leak Detection Dye

NAHA0247

- The A/C system contains a fluorescent leak detection dye used for locating refrigerant leaks. An ultraviolet (UV) lamp is required to illuminate the dye when inspecting for leaks.
- Always wear fluorescence enhancing UV safety goggles to protect your eyes and enhance the visibility of the fluorescent dye.
- A compressor shaft seal should not be repaired because of dye seepage. The compressor shaft seal should only be repaired after confirming the leak with an electronic refrigerant leak detector (J-41995).
- Always remove any dye from the leak area after repairs are complete to avoid a misdiagnosis during a future service.
- Do not allow dye to come into contact with painted body panels or interior components. If dye is spilled, clean immediately with the approved dye cleaner. Fluorescent dye left on a surface for an extended period of time cannot be removed.
- Do not spray the fluorescent dye cleaning agent on hot surfaces (engine exhaust manifold, etc.).
- Do not use more than one refrigerant dye bottle (1/4 ounce /7.4 cc) per A/C system.
- Leak detection dyes for HFC-134a (R-134a) and CFC-12 (R-12) A/C systems are different. Do not use HFC-134a (R-134a) leak detection dye in CFC-12 (R-12) A/C system or CFC-12 (R-12) leak detection dye in HFC-134a (R-134a) A/C systems or A/C system damage may result.
- The fluorescent properties of the dye will remain for over three (3) years unless a compressor malfunction occurs.

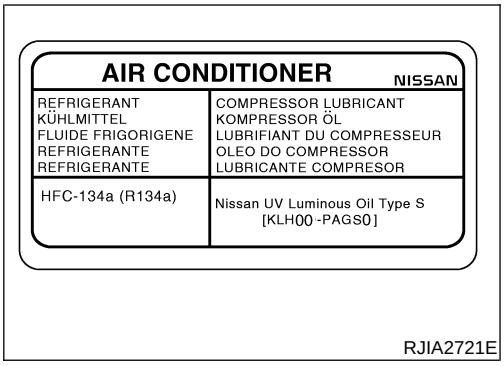

Precaution for Identification Label on Vehicle

NAHA0248

- Vehicles with factory installed fluorescent dye have this identification label on the under side of hood.
- Vehicles with factory installed fluorescent dye have a green label.
- Vehicles without factory installed fluorescent dye have a blue label.

Precautions for Refrigerant Connection

NAHA0156

A new type refrigerant connection has been introduced to all refrigerant lines except the following location.

- Expansion valve to evaporator

FEATURES OF NEW TYPE REFRIGERANT CONNECTION

NAHA0156S01

- The O-ring has been relocated. It has also been provided with a groove for proper installation. This eliminates the chance of the O-ring being caught in, or damaged by, the mating part. The sealing direction of the O-ring is now set vertically in relation to the contacting surface of the mating part to improve sealing characteristics.
- The reaction force of the O-ring will not occur in the direction that causes the joint to pull out, thereby facilitating piping connections.

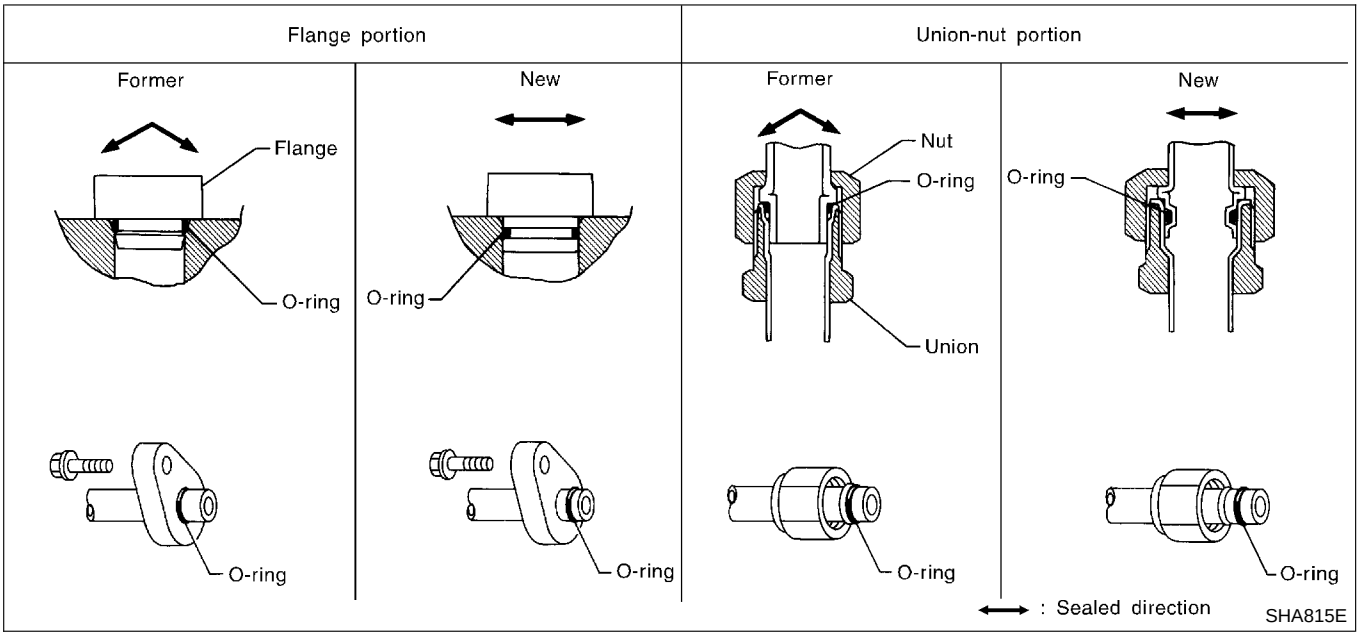

O-RING AND REFRIGERANT CONNECTION

NAHA0156S02

SEC. 271•274•276

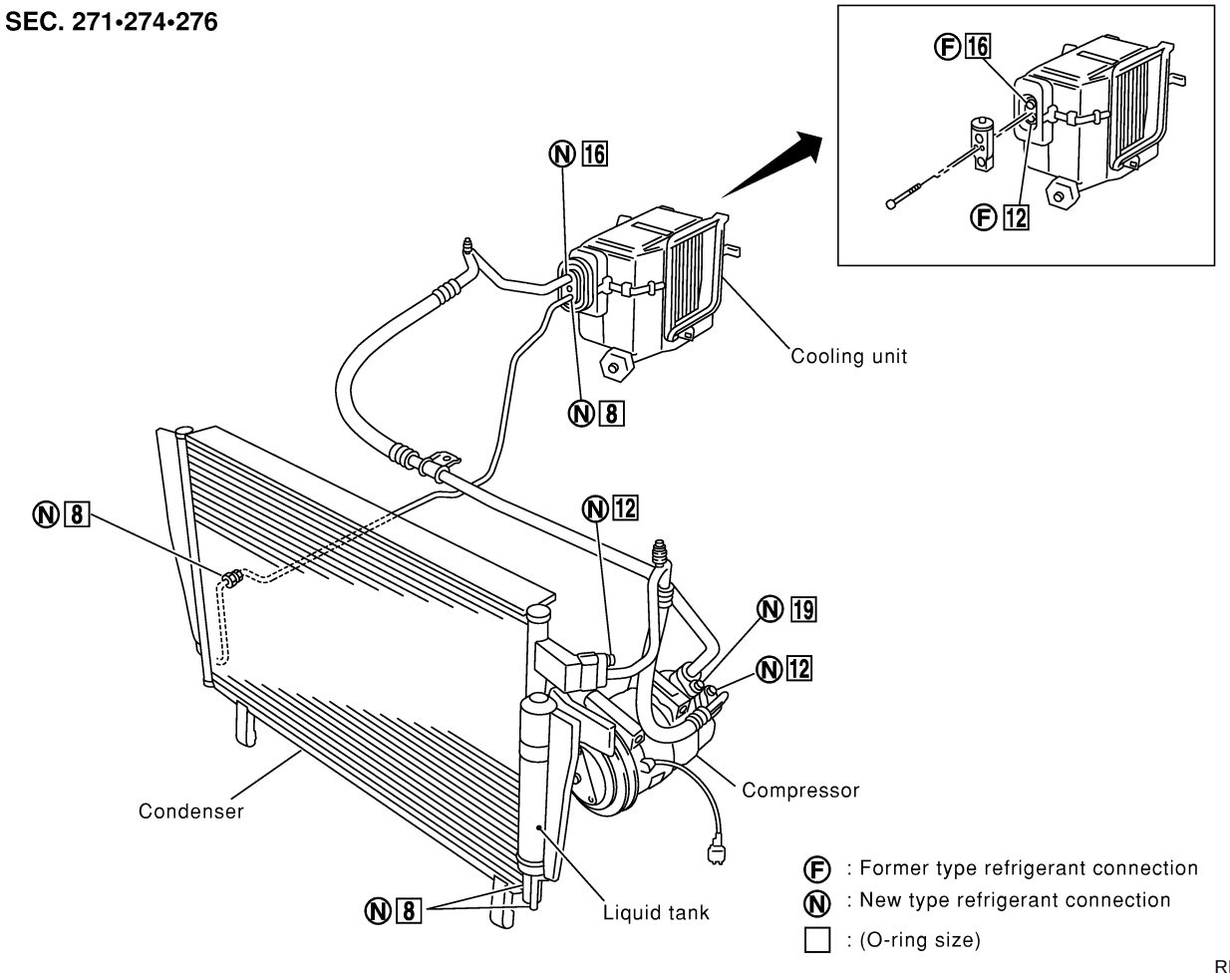

RHA068I

CAUTION:

The new and former refrigerant connections use different O-ring configurations. Do not confuse O-rings since they are not interchangeable. If a wrong O-ring is installed, refrigerant will leak at, or around, the connection.

O-Ring Part Numbers and Specifications

NAHA0156S0201

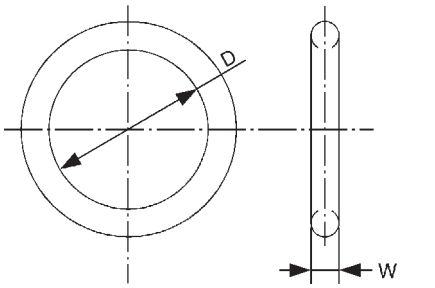

SHA814E

Connection type	O-ring size	Part number	D mm (in)	W mm (in)
New	8	92471 N8210	6.8 (0.268)	1.85 (0.0728)
Former		92470 N8200	6.07 (0.2390)	1.78 (0.0701)
New	12	92472 N8210	10.9 (0.429)	2.43 (0.0957)
Former		92475 71L00	11.0 (0.433)	2.4 (0.094)
New	16	92473 N8210	13.6 (0.535)	2.43 (0.0957)
Former		92475 72L00	14.3 (0.563)	2.3 (0.0906)
New	19	92474 N8210	16.5 (0.650)	2.43 (0.0957)
Former		92477 N8200	17.12 (0.6740)	1.78 (0.0701)

WARNING:

Make sure all refrigerant is discharged into the recycling equipment and the pressure in the system is less than atmospheric pressure. Then gradually loosen the discharge side hose fitting and remove it.

CAUTION:

When replacing or cleaning refrigerant cycle components, observe the following.

- **When the compressor is removed, store it in the same position as it is when mounted on the car. Malfunction to do so will cause lubricant to enter the low pressure chamber.**
- **When connecting tubes, always use a torque wrench and a back-up wrench.**
- **After disconnecting tubes, immediately plug all openings to prevent entry of dirt and moisture.**
- **When installing an air conditioner in the vehicle, connect the pipes as the final stage of the operation. Do not remove the seal caps of pipes and other components until just before required for connection.**
- **Allow components stored in cool areas to warm to working area temperature before removing seal caps. This prevents condensation from forming inside A/C components.**
- **Thoroughly remove moisture from the refrigeration system before charging the refrigerant.**
- **Always replace used O-rings.**
- **When connecting tube, apply lubricant to circle of the O-rings shown in illustration. Be careful not to apply lubricant to threaded portion.**
  Lubricant name: Nissan A/C System Oil Type S
  Part number: KLH00-PAGS0
- **O-ring must be closely attached to dented portion of tube.**
- **When replacing the O-ring, be careful not to damage O-ring and tube.**
- **Connect tube until you hear it click, then tighten the nut or bolt by hand until snug. Make sure that the O-ring is installed to tube correctly.**
- **After connecting line, conduct leak test and make sure that there is no leakage from connections. When the gas leaking point is found, disconnect that line and replace the O-ring. Then tighten connections of seal seat to the specified torque.**

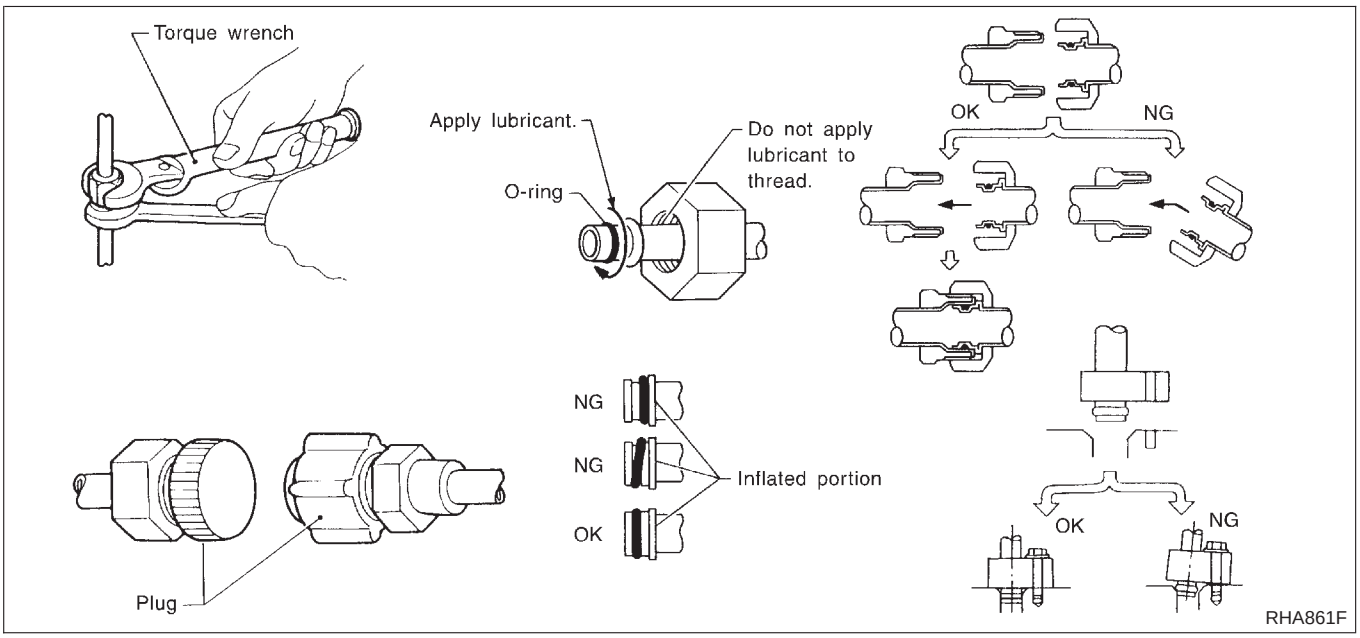

Precautions for Servicing Compressor

NAHA0157

- **Plug all openings to prevent moisture and foreign matter from entering.**
- **When the compressor is removed, store it in the same position as it is when mounted on the car.**
- **When replacing or repairing compressor, follow "Maintenance of Lubricant Quantity in Compressor" exactly. Refer to HA-136.**
- **Keep friction surfaces between clutch and pulley clean. If the surface is contaminated, with lubricant, wipe it off by using a clean waste cloth moistened with thinner.**
- **After compressor service operation, turn the compressor shaft by hand more than five turns in both directions. This will equally distribute lubricant inside the compressor. After the compressor is installed, let the engine idle and operate the compressor for one hour.**
- **After replacing the compressor magnet clutch, apply voltage to the new one and check for usual operation.**

Precautions for Service Equipment

NAHA0158

RECOVERY/RECYCLING EQUIPMENT

NAHA0158S01

Be certain to follow the manufacturers instructions for machine operation and machine maintenance. Never introduce any refrigerant other than that specified into the machine.

ELECTRONIC LEAK DETECTOR

NAHA0158S02

Be certain to follow the manufacturer's instructions for tester operation and tester maintenance.

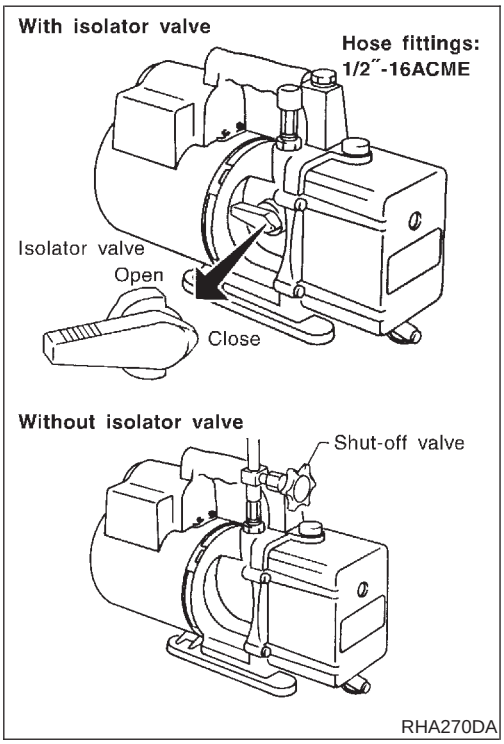

VACUUM PUMP

NAHA0158S03

The lubricant contained inside the vacuum pump is not compatible with the specified lubricant for HFC-134a (R-134a) A/C systems. The vent side of the vacuum pump is exposed to atmospheric pressure. So the vacuum pump lubricant may migrate out of the pump into the service hose. This is possible when the pump is switched off after evacuation (vacuuming) and hose is connected to it.

To prevent this migration, use a manual valve placed near the hose-to-pump connection, as follows.

- Usually vacuum pumps have a manual isolator valve as part of the pump. Close this valve to isolate the service hose from the pump.
- For pumps without an isolator, use a hose equipped with a manual shut-off valve near the pump end. Close the valve to isolate the hose from the pump.
- If the hose has an automatic shut off valve, disconnect the hose from the pump. As long as the hose is connected, the valve is open and lubricating oil may migrate.

Some one-way valves open when vacuum is applied and close under a no vacuum condition. Such valves may restrict the pump's ability to pull a deep vacuum and are not recommended.

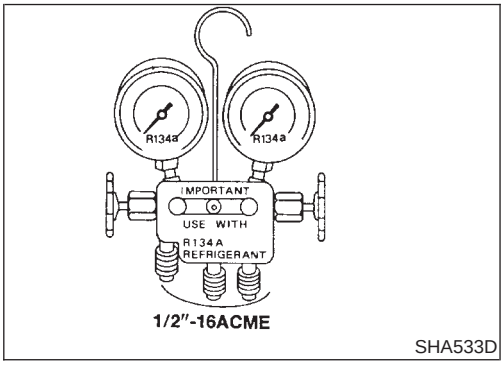

MANIFOLD GAUGE SET

NAHA0158S04

Be certain that the gauge face indicates HFC-134a or R-134a. Be sure the gauge set has 1/2″-16 ACME threaded connections for service hoses. Confirm the set has been used only with refrigerant HFC-134a (R-134a) and specified lubricants.

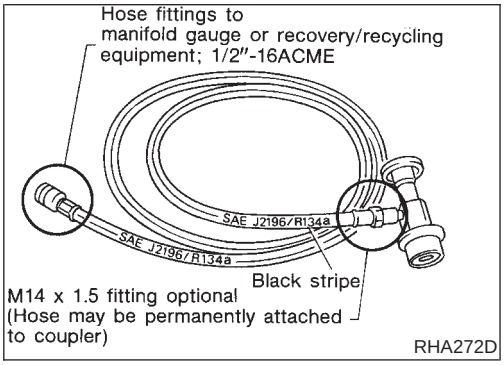

SERVICE HOSES

NAHA0158S05

Be certain that the service hoses display the markings described (colored hose with black stripe). All hoses must include positive shut off devices (either manual or automatic) near the end of the hoses opposite the manifold gauge.

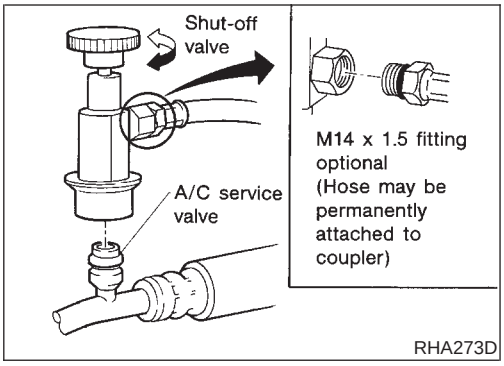

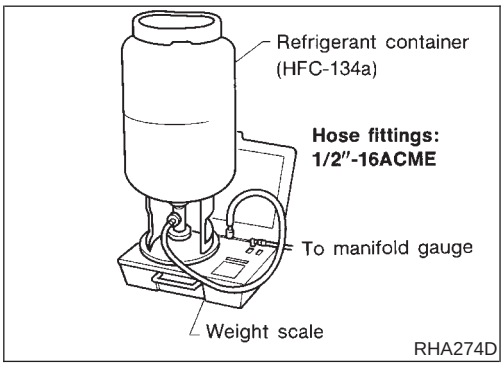

SERVICE COUPLERS

NAHA0158S06

Never attempt to connect HFC-134a (R-134a) service couplers to an CFC-12 (R-12) A/C system. The HFC-134a (R-134a) couplers will not properly connect to the CFC-12 (R-12) system. However, if an improper connection is attempted, discharging and contamination may occur.

Shut-off valve rotation	A/C service valve
Clockwise	Open
Counterclockwise	Close

REFRIGERANT WEIGHT SCALE

NAHA0158S07

Verify that no refrigerant other than HFC-134a (R-134a) and specified lubricants have been used with the scale. If the scale controls refrigerant flow electronically, the hose fitting must be 1/2″-16 ACME.

CHARGING CYLINDER

NAHA0158S09

Using a charging cylinder is not recommended. Refrigerant may be vented into air from cylinder's top valve when filling the cylinder with refrigerant. Also, the accuracy of the cylinder is generally less than that of an electronic scale or of quality recycle/recharge equipment.

Wiring Diagrams and Trouble Diagnoses

NAHA0159

When you read wiring diagrams, refer to the following:

- GI-11, "HOW TO READ WIRING DIAGRAMS"
- EL-12, "Wiring Diagram — POWER —".

When you perform trouble diagnoses, refer to the following:

- GI-34, "HOW TO FOLLOW TROUBLE DIAGNOSES"
- GI-24, "HOW TO PERFORM EFFICIENT DIAGNOSIS FOR AN ELECTRICAL INCIDENT"

Special Service Tools

NAHA0160

The actual shapes of Kent-Moore tools may differ from those of special service tools illustrated here.

Tool number (Kent-Moore No.) Tool name	Description	
KV99106100 (J-41260) Clutch disc wrench	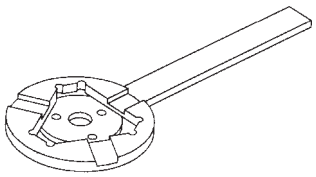 NT232 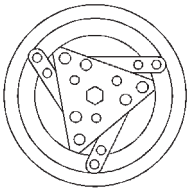 When replacing the magnet clutch in the above compressor, use a clutch disc wrench with the pin side on the clutch disc to remove it. 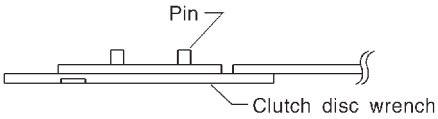 NT378	Removing center bolt
KV99232340 (J-38874) or KV992T0001 (—) Clutch disc puller	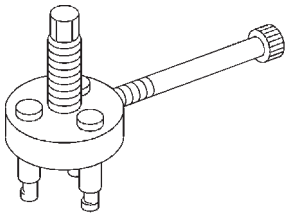 NT376	Removing clutch disc
KV99106200 (J-41261) Pulley installer	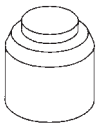 NT235	Installing pulley

HFC-134a (R-134a) Service Tools and Equipment

=NAHA0161

Never mix HFC-134a refrigerant and/or its specified lubricant with CFC-12 (R-12) refrigerant and/or its lubricant.

Separate and non-interchangeable service equipment must be used for handling each type of refrigerant/lubricant.

Refrigerant container fittings, service hose fittings and service equipment fittings (equipment which handles refrigerant and/or lubricant) are different between CFC-12 (R-12) and HFC-134a (R-134a). This is to avoid mixed use of the refrigerants/lubricant.

Adapters that convert one size fitting to another must never be used: refrigerant/lubricant contamination will occur and compressor malfunction will result.

Tool number (Kent-Moore No.) Tool name	Description	
HFC-134a (R-134a) refrigerant	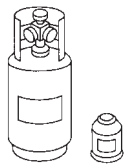 NT196	Container color: Light blue Container marking: HFC-134a (R-134a) Fitting size: Thread size ● Large container 1/2″-16 ACME
KLH00-PAGS0 (—) Nissan A/C System Oil Type S	 NT197	Type: Poly alkylene glycol oil (PAG), type S Application: HFC-134a (R-134a) wobble (swash) plate (piston) compressors (Nissan only) Lubricity: 40 mℓ (1.4 US fl oz, 1.4 Imp fl oz)
(J-43600) Recovery/Recycling Recharging equipment (ACR2000)	 WJIA0293E	Function: Refrigerant Recovery and Recycling and Recharging
(J-41995) Electrical leak detector	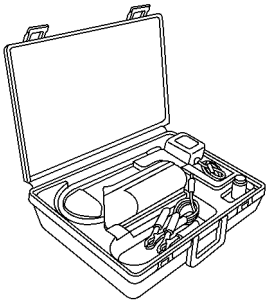 AHA281A	Power supply: ● DC 12V (Cigarette lighter)

HFC-134a (R-134a) Service Tools and Equipment (Cont'd)

Tool number (Kent-Moore No.) Tool name	Description	
(J-43926) Refrigerant dye leak detection kit Kit includes: (J-42220) UV lamp and UV safety goggles (J-41459) Refrigerant dye injector (J-41447) qty. 24 R-134a refrigerant dye (J-43872) Refrigerant dye cleaner	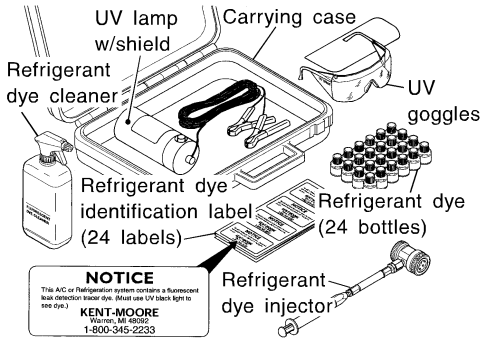 ZHA200H	Power supply: DC 12V (Battery terminal)
(J-42220) UV lamp and UV safety goggles	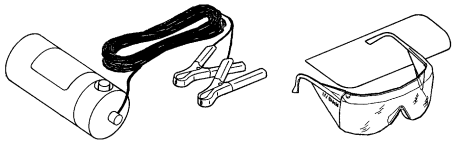 SHA438F	Power supply: DC12V (Battery terminal) For checking refrigerant leak when fluorescent dye is installed in A/C system. Includes: UV lamp and UV safety goggles
(J-41447) R-134a Fluorescent Leak Detection Dye (Box of 24, 1/4 ounce bottles)	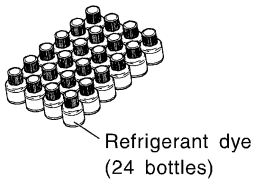 SHA439F	Application: For R-134a PAG oil Container: 1/4 ounce (7.4 cc) bottle (Includes self-adhesive dye identification labels for affixing to vehicle after charging system with dye.)
(J-41459) R-134a Dye Injector Use with J-41447, 1/4 ounce bottle	Dye injector 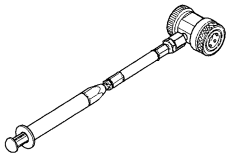 SHA440F	For injecting 1/4 ounce of Fluorescent Leak Detection Dye into A/C system.
(J-43872) Dye cleaner	 SHA441F	For cleaning dye spills.
(J-39183) Manifold gauge set (with hoses and couplers)	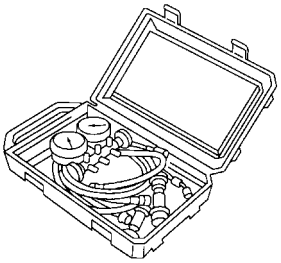 NT199	Identification: ● The gauge face indicates R-134a. Fitting size: Thread size ● 1/2″-16 ACME

Tool number (Kent-Moore No.) Tool name	Description	
Service hoses ● High-pressure side hose (J-39501-72) ● Low-pressure side hose (J-39502-72) ● Utility hose (J-39476-72)	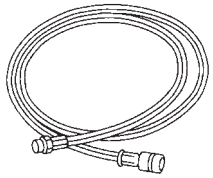 NT201	Hose color: ● Low hose: Blue with black stripe ● High hose: Red with black stripe ● Utility hose: Yellow with black stripe or green with black stripe Hose fitting to gauge: ● 1/2″-16 ACME
Service couplers ● High-pressure side coupler (J-39500-20) ● Low-pressure side coupler (J-39500-24)	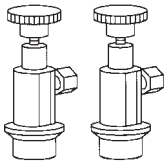 NT202	Hose fitting to service hose: ● M14 x 1.5 fitting is optional or permanently attached.
(J-39650) Refrigerant weight scale	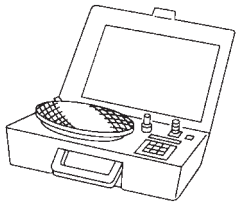 NT200	For measuring of refrigerant Fitting size: Thread size ● 1/2″-16 ACME
(J-39649) Vacuum pump (Including the isolator valve)	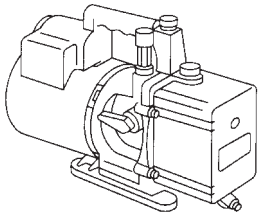 NT203	Capacity: ● Air displacement: 4 CFM ● Micron rating: 20 microns ● Oil capacity: 482 g (17 oz) Fitting size: Thread size ● 1/2″-16 ACME

COMMERCIAL SERVICE TOOL

NAHA0161S01

Tool name	Description	
Refrigerant identifier equipment	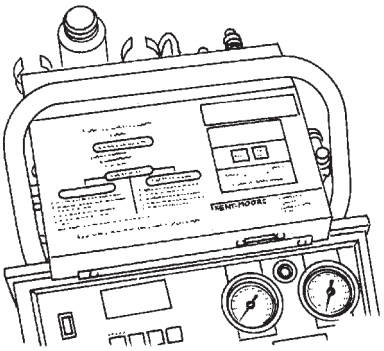 NT765	For checking refrigerant purity and for system contamination

HFC-134a (R-134a) Service Tools and Equipment (Cont'd)

Tool name	Description
Power tool	Loosening bolts and nuts 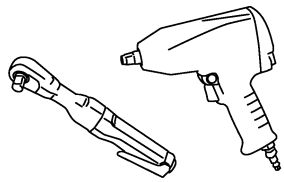 PBIC0190E

Refrigeration System

REFRIGERATION CYCLE

NAHA0162

Refrigerant Flow

NAHA0162S01

The refrigerant flows in the standard pattern, that is, through the compressor, the condenser, the liquid tank, through the evaporator, and back to the compressor. The refrigerant evaporation through the evaporator coil is controlled by an externally equalized expansion valve, located inside the evaporator case.

Freeze Protection

NAHA0162S02

Under usual operating conditions, when the a/c is switched on, the compressor runs continuously, and the evaporator pressure, and therefore temperature, is controlled by the V-6 variable displacement compressor to prevent freeze up.

Refrigerant System Protection

NAHA0162S03

Refrigerant Pressure Sensor

NAHA0162S0301

The refrigerant system is protected against excessively high or low pressures by the refrigerant pressure sensor, located on the condenser. If the system pressure rises above, or falls below the specifications, the refrigerant pressure sensor detects the pressure inside the refrigerant line and sends the voltage signal to the ECM. ECM makes the A/C relay go OFF and stops the compressor when pressure on the high-pressure side detected by refrigerant pressure sensor is over about 2,746 kPa (28 kg/cm^2, 398 psi) or below about 177 kPa (1.8 kg/cm^2, 26 psi).

Pressure Relief Valve

NAHA0162S0302

The refrigerant system is also protected by a pressure relief valve, located in the rear head of the compressor. When the pressure of refrigerant in the system increases to an unusual level [more than 3,727 kPa (38 kg/cm^2, 540 psi)], the release port on the pressure relief valve automatically opens and releases refrigerant into the atmosphere.

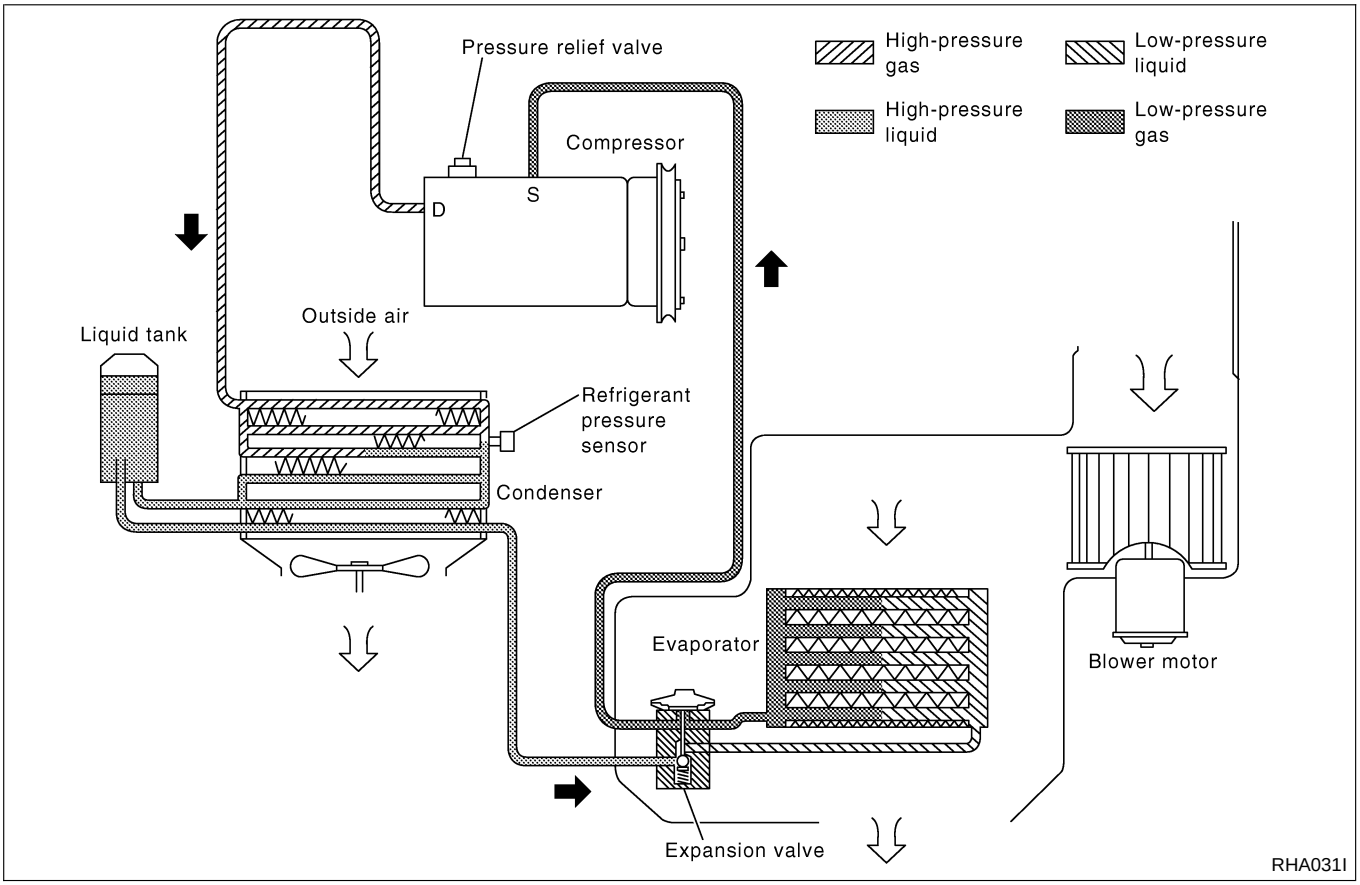

V-6 Variable Displacement Compressor

GENERAL INFORMATION

=NAHA0163

1. The V-6 variable compressor differs from previous units. The vent temperatures of the V-6 variable compress do not drop too far below 5°C (41°F) when:
   - evaporator intake air temperature is less than 20°C (68°F)
   - engine is running at speeds less than 1,500 rpm.

   This is because the V-6 compressor provides a means of “capacity” control.
2. The V-6 variable compressor provides refrigerant control under varying conditions. During cold winters, it may not produce high refrigerant pressure discharge (compared to previous units) when used with air conditioning systems.
3. A “clanking” sound may occasionally be heard during refrigerant charge. The sound indicates that the tilt angle of the wobble (swash) plate has changed and is not a problem.
4. For air conditioning systems with the V-6 compressor, the clutch remains engaged unless: the system main switch, fan switch or ignition switch is turned OFF. When ambient (outside) temperatures are low or when the amount of refrigerant is insufficient, the clutch is disengaged to protect the compressor.
5. A constant range of suction pressure is maintained when engine speed is greater than a certain value. It normally ranges from 147 to 177 kPa (1.5 to 1.8 kg/cm^2, 21 to 26 psi) under varying conditions.
   In previous compressors, however, suction pressure was reduced with increases in engine speed.

DESCRIPTION

=NAHA0164

General

NAHA0164S01

The variable compressor is basically a swash plate type that changes piston stroke in response to the required cooling capacity.
The tilt of the wobble (swash) plate allows the piston's stroke to change so that refrigerant discharge can be continuously changed from 14.5 to 184 cm^3 (0.885 to 11.228 cu in).

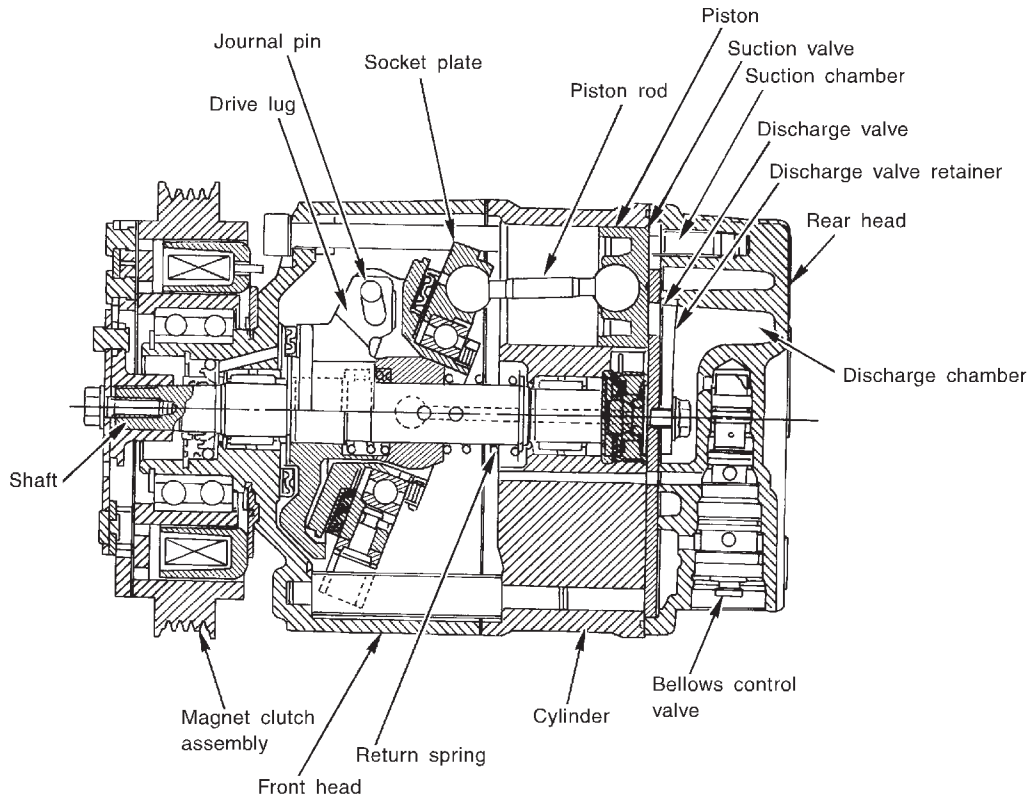

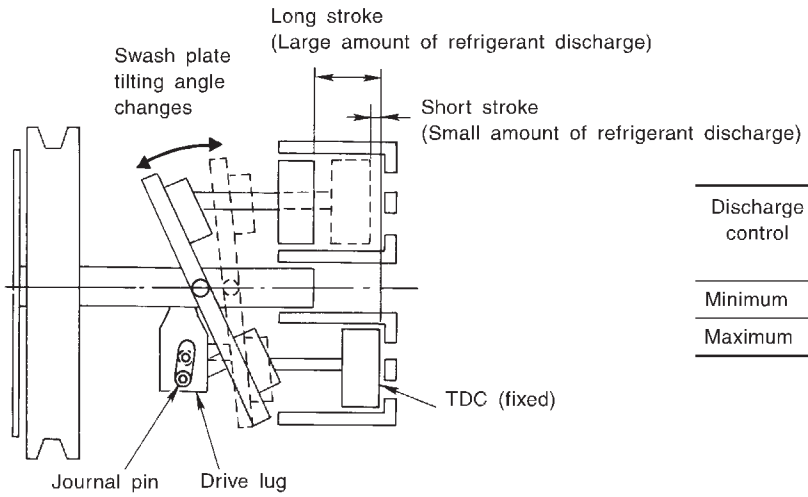

Discharge control	Discharge capacity cm^3 (cu in)/rev.	Piston stroke length mm (in)
Minimum	14.5 (0.885)	2.3 (0.091)
Maximum	184 (11.228)	28.6 (1.126)

RHA037DD

Operation

=NAHA0164S02

1. Operation Control Valve

NAHA0164S0201

Operation control valve is located in the suction port (low-pressure) side, and opens or closes in response to changes in refrigerant suction pressure.
Operation of the valve controls the internal pressure of the crankcase.
The angle of the wobble (swash) plate is controlled between the crankcase's internal pressure and the piston cylinder pressure.

2. Maximum Cooling

NAHA0164S0202

Refrigerant pressure on the low-pressure side increases with an increase in heat loads.
When this occurs, the control valve's bellows compress to open the low-pressure side valve and close the high-pressure side valve.
This causes the following pressure changes:
- the crankcase's internal pressure to equal the pressure on the low-pressure side;
- the cylinder's internal pressure to be greater than the crankcase's internal pressure.

Under this condition, the wobble (swash) plate is set to the maximum stroke position.

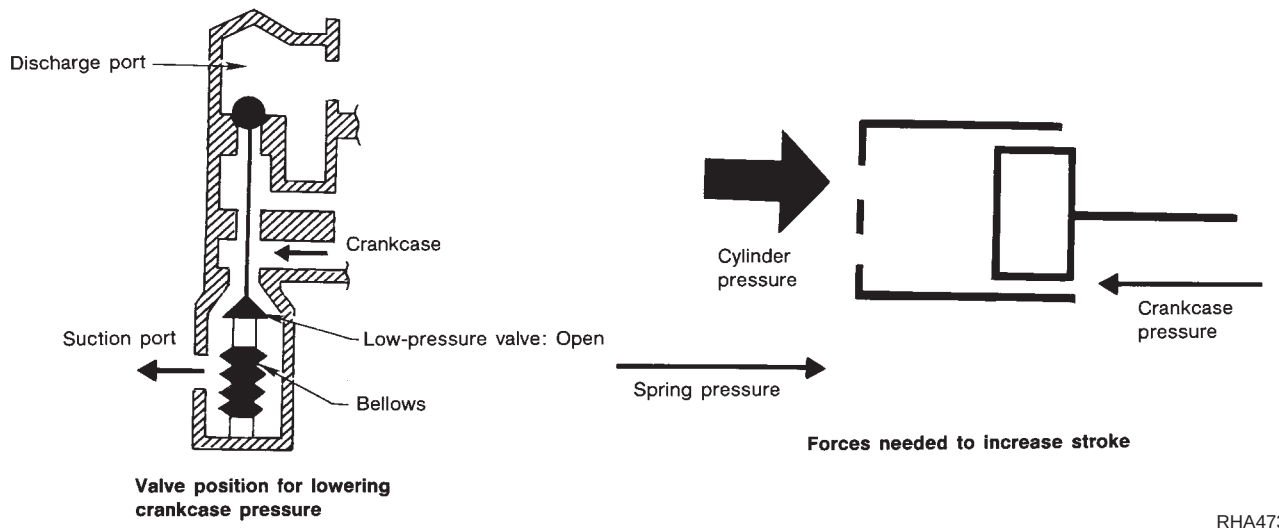

3. Capacity Control

=NAHA0164S0203

- Refrigerant pressure on suction side is low during high speed driving or when ambient or interior temperature is low.
- The bellows expands when refrigerant pressure on the suction pressure side drops below approximately 177 kPa (1.8 kg/cm^2, 26 psi).
  Since suction pressure is low, it makes the suction port close and the discharge port open. Thus, crankcase pressure becomes high as high pressure enters the crankcase.
- The force acts around the journal pin near the wobble (swash) plate, and is generated by the pressure difference before and behind the piston.
  The drive lug and journal pin are located where the piston generates the highest pressure. Piston pressure is between suction pressure Ps and discharge pressure Pd, which is near suction pressure Ps. If crankcase pressure Pc rises due to capacity control, the force around the journal pin makes the wobble (swash) plate angle decrease and also the piston stroke decrease. In other words, crankcase pressure increase triggers pressure difference between the piston and the crankcase. The pressure difference changes the angle of the wobble (swash) plate.

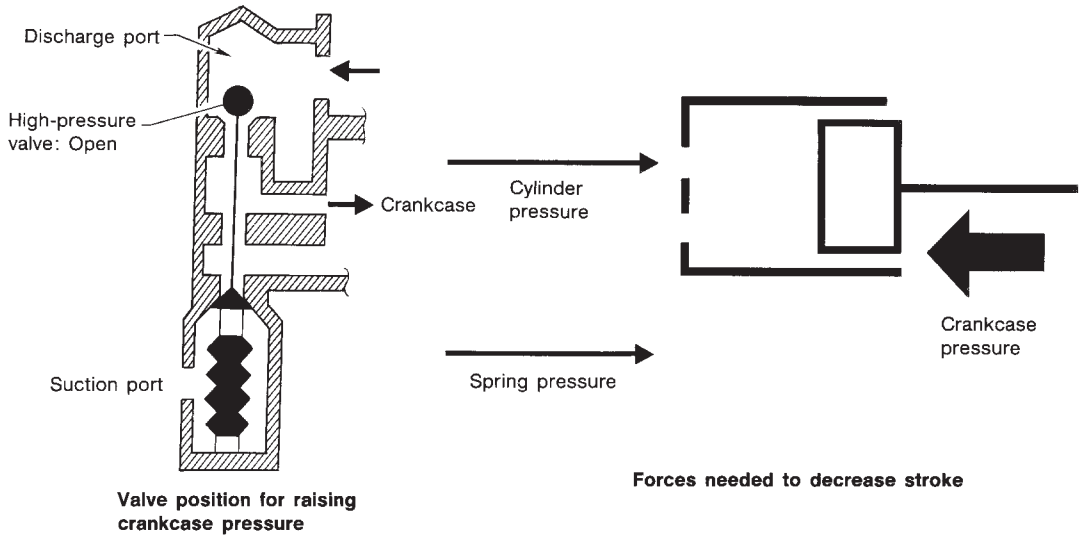

RHA474C

Component Layout

NAHA0166

SEC. 270•271•272•273

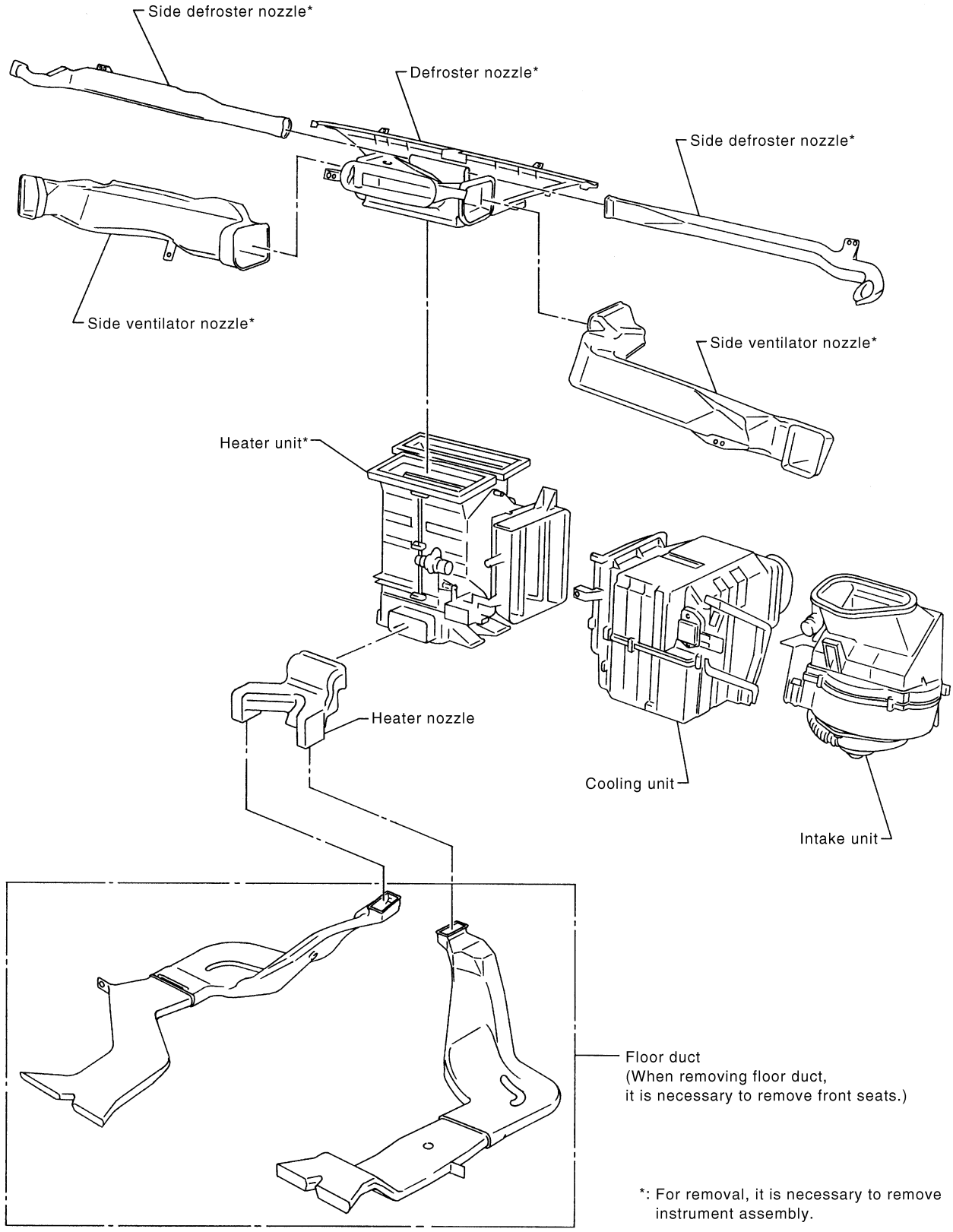

*: For removal, it is necessary to remove instrument assembly.

RHA451GA

Introduction

NAHA0167

AIR CONDITIONER LAN SYSTEM OVERVIEW CONTROL SYSTEM

NAHA0167S01

The LAN system consists of auto amp., mode door motor and air mix door motor.
A configuration of these components is shown in the diagram below.

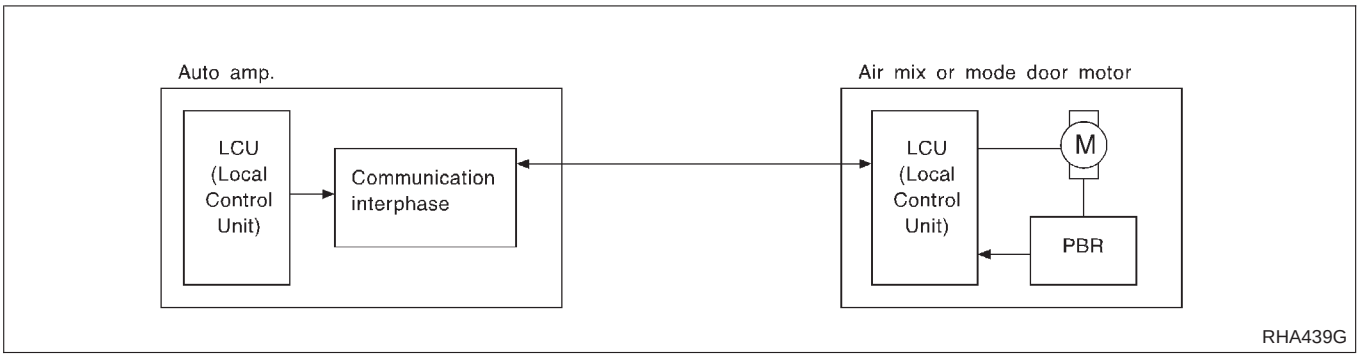

Features

NAHA0168

CAN COMMUNICATION SYSTEM DESCRIPTION

NAHA0168S10

CAN (Controller Area Network) is a serial communication line for real time application. It is an on-vehicle multiplex communication line with high data communication speed and excellent error detection ability. Many electronic control units are equipped onto a vehicle, and each control unit shares information and links with other control units during operation (not independent). In CAN communication, control units are connected with 2 communication lines (CAN H line, CAN L line) allowing a high rate of information transmission with less wiring. Each control unit transmits/receives data but selectively reads required data only.

SYSTEM CONSTRUCTION (LAN)

NAHA0168S01

A small network is constructed between the auto amplifier, mode door motor and air mix door motor. The auto amplifier and motors are connected by data transmission lines and motor power supply lines. The LAN network is built through the ground circuits of the two motors.
Addresses, motor opening angle signals, motor stop signals and error checking messages are all transmitted through the data transmission lines connecting the auto amplifier and two motors.
The following functions are contained in LCUs built into the mode door motor and the air mix door motor.

- Address
- Motor opening angle signals
- Data transmission
- Motor stop and drive decision
- Opening angle sensor (PBR function)
- Comparison
- Decision (Auto amplifier indicated value and motor opening angle comparison)

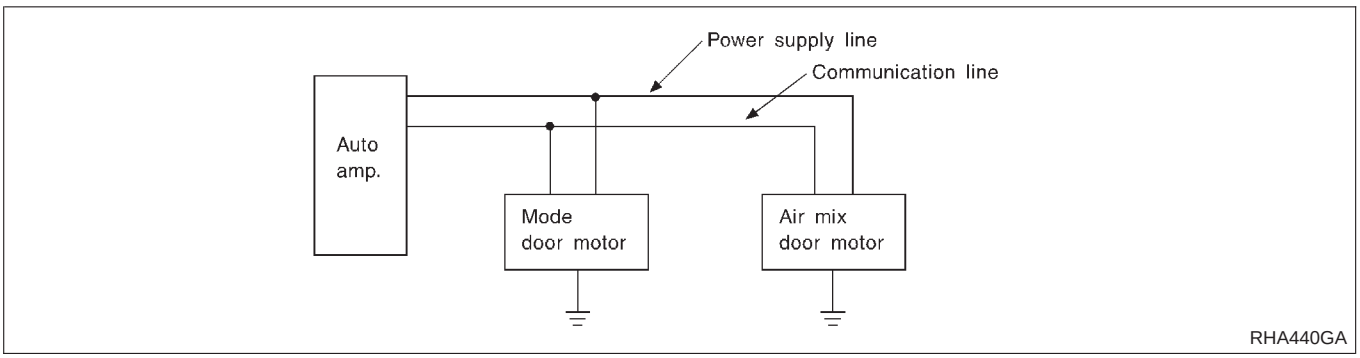

Operation

NAHA0168S0101

The auto amplifier receives data from each of the sensors. The amplifier sends mode door and air mix door opening angle data to the mode door motor LCU and air mix door motor LCU.
The mode door motor and air mix door motor read their respective signals according to the address signal.

Opening angle indication signals received from the auto amplifier and each of the motor position sensors are compared by the LCUs in each motor with the existing decision and opening angles. Subsequently, HOT/COLD or DEFROST/VENT operation is selected. The new selection data is returned to the auto amplifier.

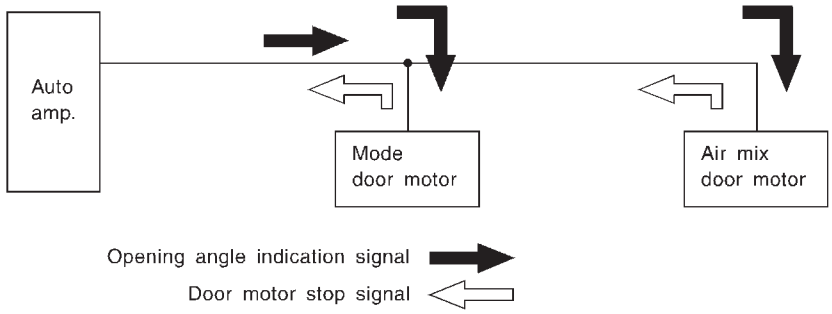

RHA441GA

Transmission Data and Transmission Order

NAHA0168S0102

Amplifier data is transmitted consecutively to each of the door motors following the form shown in figure below.
Start: Initial compulsory signal sent to each of the door motors.
Address: Data sent from the auto amplifier is selected according to data-based decisions made by the mode door motor and air mix door motor.
If the addresses are identical, the opening angle data and error check signals are received by the door motor LCUs. The LCUs then make the appropriate error decision. If the opening angle data is usual, door control begins.
If an error exists, the received data is rejected and corrected data received. Finally, door control is based upon the corrected opening angle data.
Opening angle: Data that shows the indicated door opening angle of each door motor.
Error check: Procedure by which sent and received data is checked for errors. Error data is then compiled. The error check prevents corrupted data from being used by the mode door motor and air mix door motor. Error data can be related to the following symptoms.

- Unusual electrical frequency
- Poor electrical connections
- Signal leakage from transmission lines
- Signal level fluctuation

Stop signal: At the end of each transmission, a stop operation, in-operation, or internal malfunction message is delivered to the auto amplifier. This completes one data transmission and control cycle.

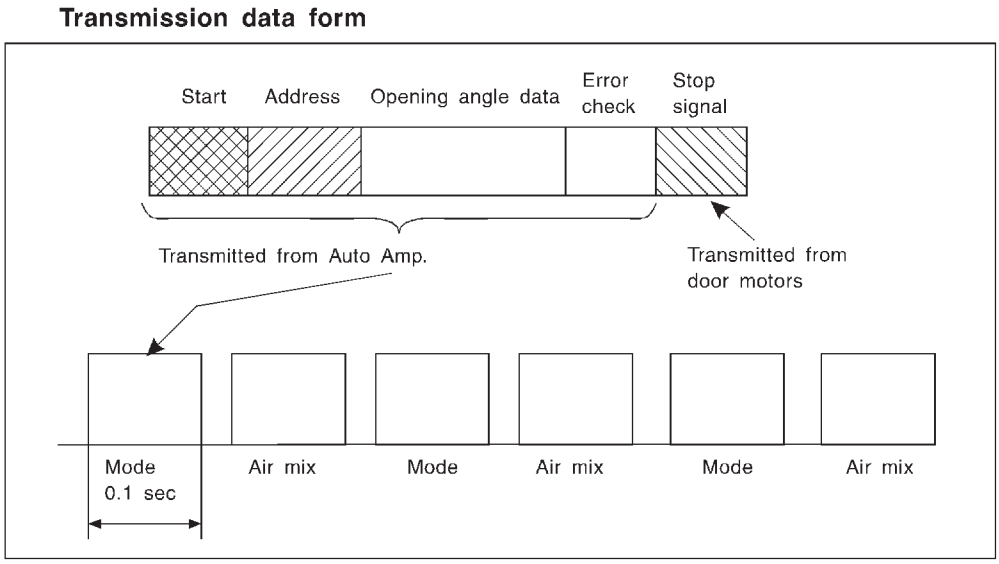

RHA442G

Air Mix Door Control (Automatic Temperature Control)

NAHA0168S0103

The air mix door is automatically controlled so that in-vehicle temperature is maintained at a predetermined value by: The temperature setting, ambient temperature, in-vehicle temperature and amount of sunload.

Fan Speed Control

NAHA0168S0104

Blower speed is automatically controlled based on temperature setting, ambient temperature, in-vehicle temperature, intake temperature, amount of sunload and air mix door position.
With FAN switch set to "AUTO", the blower motor starts to gradually increase air flow volume.
When engine coolant temperature is low, the blower motor operation is delayed to prevent cool air from flowing.

Intake Door Control

NAHA0168S0105

The intake doors are automatically controlled by: The temperature setting, ambient temperature, in-vehicle temperature, intake temperature, amount of sunload and ON-OFF operation of the compressor.

Outlet Door Control

NAHA0168S0106

The outlet door is automatically controlled by: The temperature setting, ambient temperature, in-vehicle temperature, intake temperature and amount of sunload.

Magnet Clutch Control

NAHA0168S0107

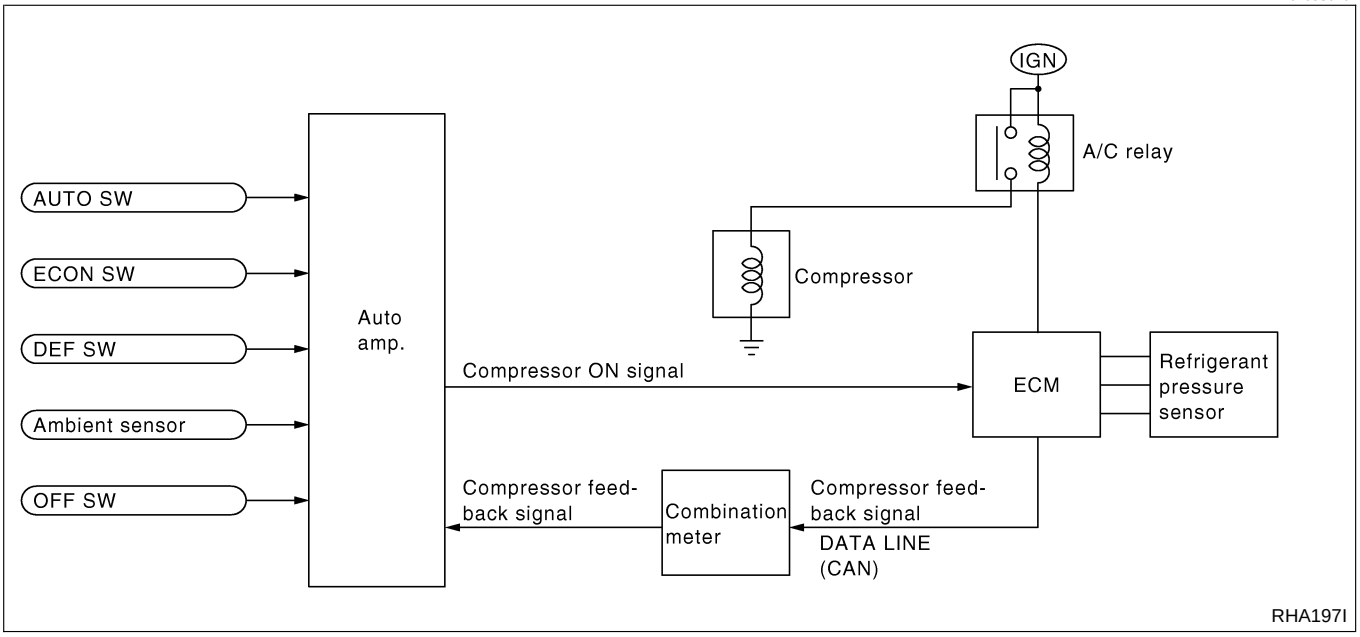

The ECM controls compressor operation using input signals from the throttle position sensor, refrigerant pressure sensor and auto amplifier.

Self-diagnostic System

NAHA0168S0108

The self-diagnostic system is built into the auto amplifier (LCU) to quickly locate the cause of malfunctions.

Overview of Control System

=NAHA0169

The control system consists of input sensors, switches, the automatic amplifier (microcomputer) and outputs. The relationship of these components is shown in the diagram below:

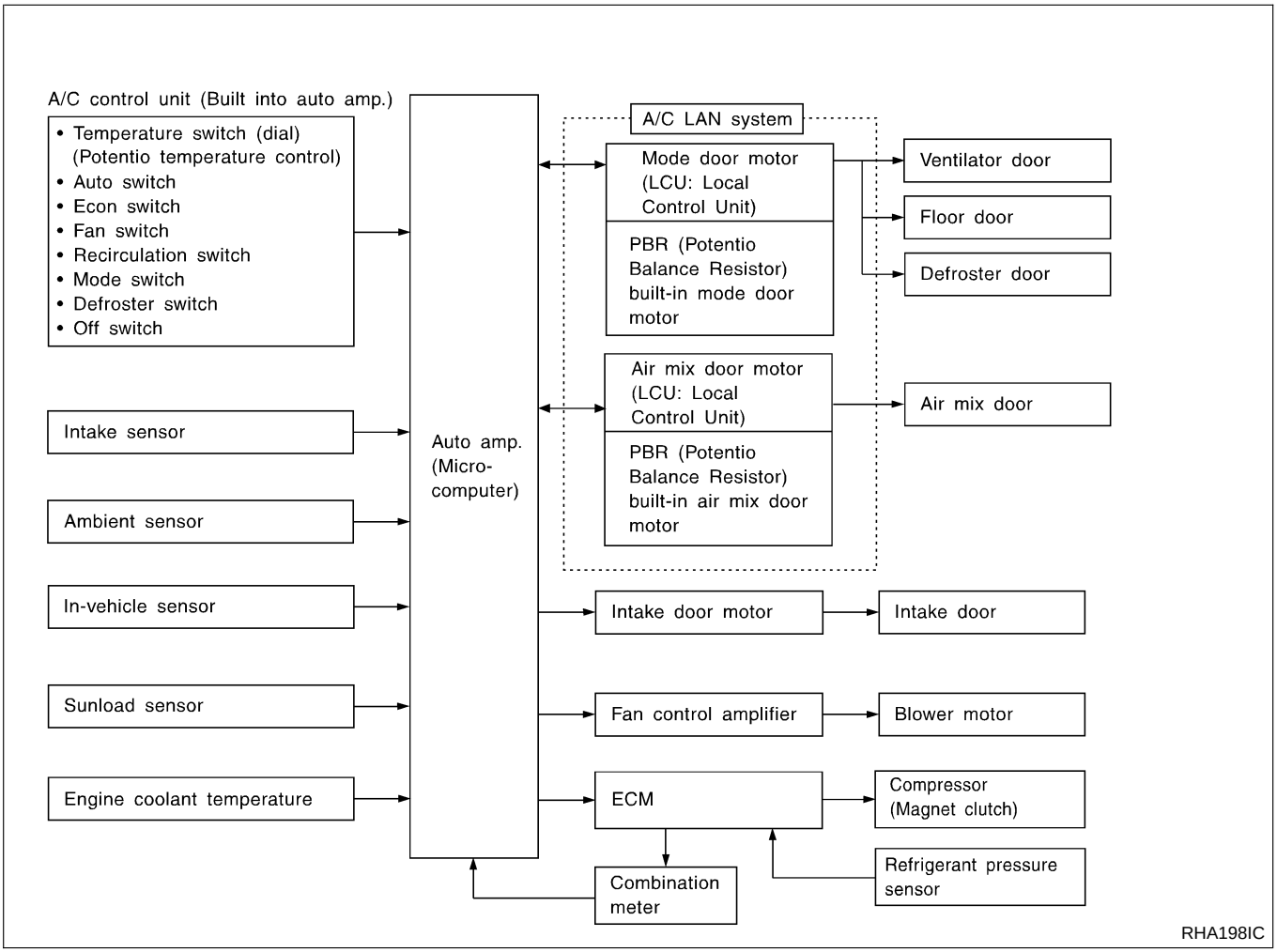

Control Operation

NAHA0170

EXCEPT LE GRADE

NAHA0170S10

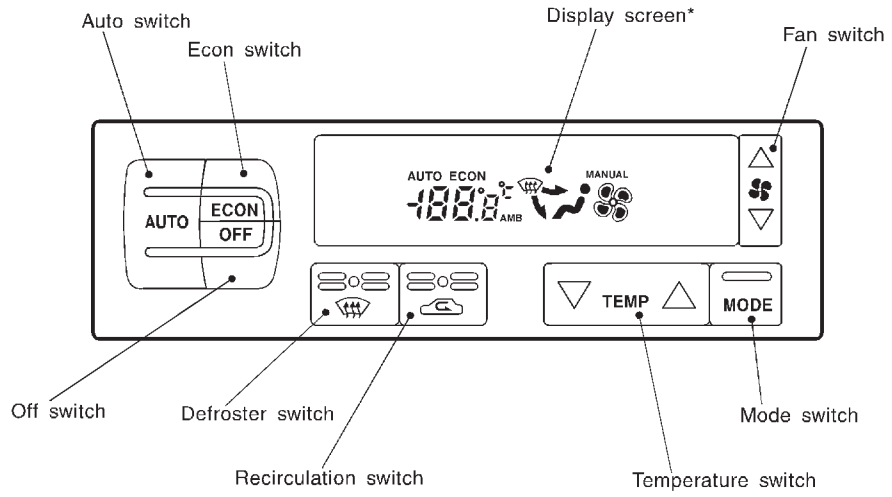

* Display the operation of the system.

RHA452G

Display Screen

NAHA0170S1010

Displays the operational status of the system.

AUTO Switch

NAHA0170S1011

The compressor, intake doors, air mix door, outlet doors, and blower speed are automatically controlled so that the in-vehicle temperature will reach, and be maintained at the set temperature selected by the operator.

ECON Switch

NAHA0170S1012

By pressing the ECON switch, the display should indicate ECON and the compressor always turns OFF. With the compressor OFF, the system will not remove heat (cool) or de-humidify. The system will maintain the in-vehicle temperature at the set temperature when the set temperature is above the ambient (outside) temperature. The system will set the intake doors to the outside air position.

Temperature Switch (Potentio Temperature Control)

NAHA0170S1013

Increases or decreases the set temperature.

OFF Switch

NAHA0170S1014

The compressor and blower are OFF, the intake doors are set to the outside air position, and the air outlet doors are set to the foot (80% foot and 20% defrost) position.

FAN Switch

NAHA0170S1015

Manual control of the blower speed. Four speeds are available for manual control (as shown on the display screen):
low , medium low , medium high , high

Recirculation (REC) Switch

NAHA0170S1016

OFF position: Set the inlet to automatic control. Intake doors are set to FRE (Fresh) position automatically when switched to D/F or DEF and compressor turns OFF.
ON position: Interior air is recirculated inside the vehicle.

Defroster (DEF) Switch

NAHA0170S1017

Positions the air outlet doors to the defrost position. Also positions the intake doors to the outside air position.

MODE Switch

NAHA0170S1018

Controls the air discharge outlets.

LE GRADE

NAHA0170S13

Without navigation system

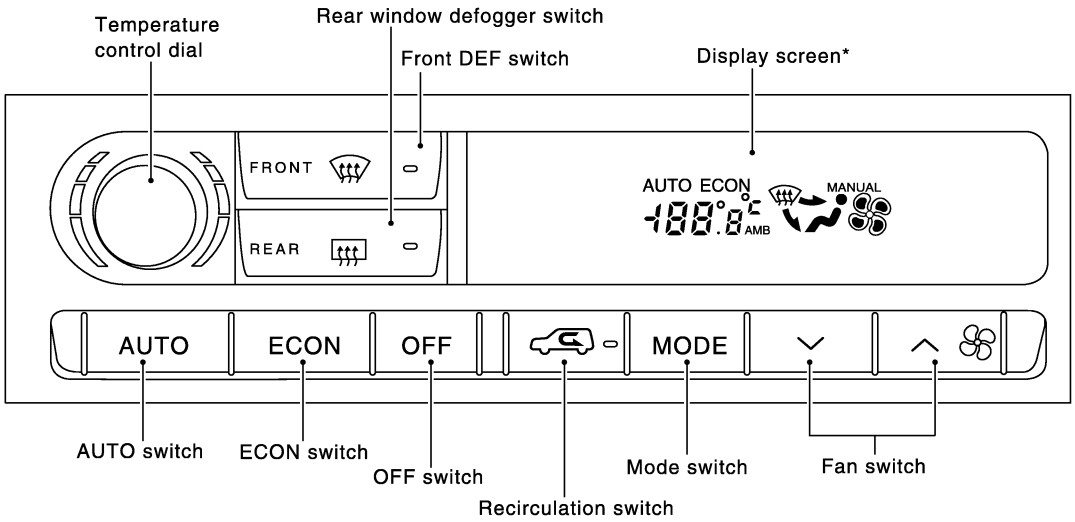

* Display the operation of the system

SHA667F

Display Screen

NAHA0170S1301

Displays the operational status of the system.

AUTO Switch

NAHA0170S1302

The compressor, intake doors, air mix door, outlet doors, and blower speed are automatically controlled so that the in-vehicle temperature will reach, and be maintained at the set temperature selected by the operator.

ECON Switch

NAHA0170S1303

By pressing the ECON switch, the display should indicate ECON and the compressor always turns OFF. With the compressor OFF, the system will not remove heat (cool) or de-humidify. The system will maintain the in-vehicle temperature at the set temperature when the set temperature is above the ambient (outside) temperature. The system will set the intake doors to the outside air position.

OFF Switch

NAHA0170S1304

The compressor and blower are OFF, the intake doors are set to the outside air position, and the air outlet doors are set to the foot (80% foot and 20% defrost) position.

FAN Switch

NAHA0170S1305

Manually controls the blower speed. Four speeds are available for manual control (as shown on the display screen):
low , medium low , medium high , high

RECIRCULATION (REC) Switch

NAHA0170S1306

OFF position: Outside air is drawn into the passenger compartment. Intake doors are set to FRE (Fresh) position automatically when switched to D/F or DEF and compressor turns OFF.
ON position: Interior air is recirculated inside the vehicle.

DEFROSTER (DEF) Switch

NAHA0170S1307

Positions the air outlet doors to the defrost position. Also positions the intake doors to the outside air position.

MODE Switch

NAHA0170S1308

Controls the air discharge outlets.

Temperature Control Dial (Potentio Temperature Control)

NAHA0170S1309

Increases or decreases the set temperature.

Rear Window Defogger Switch

NAHA0170S1310

When illumination is ON, rear window is defogged.

Discharge Air Flow

NAHA0171

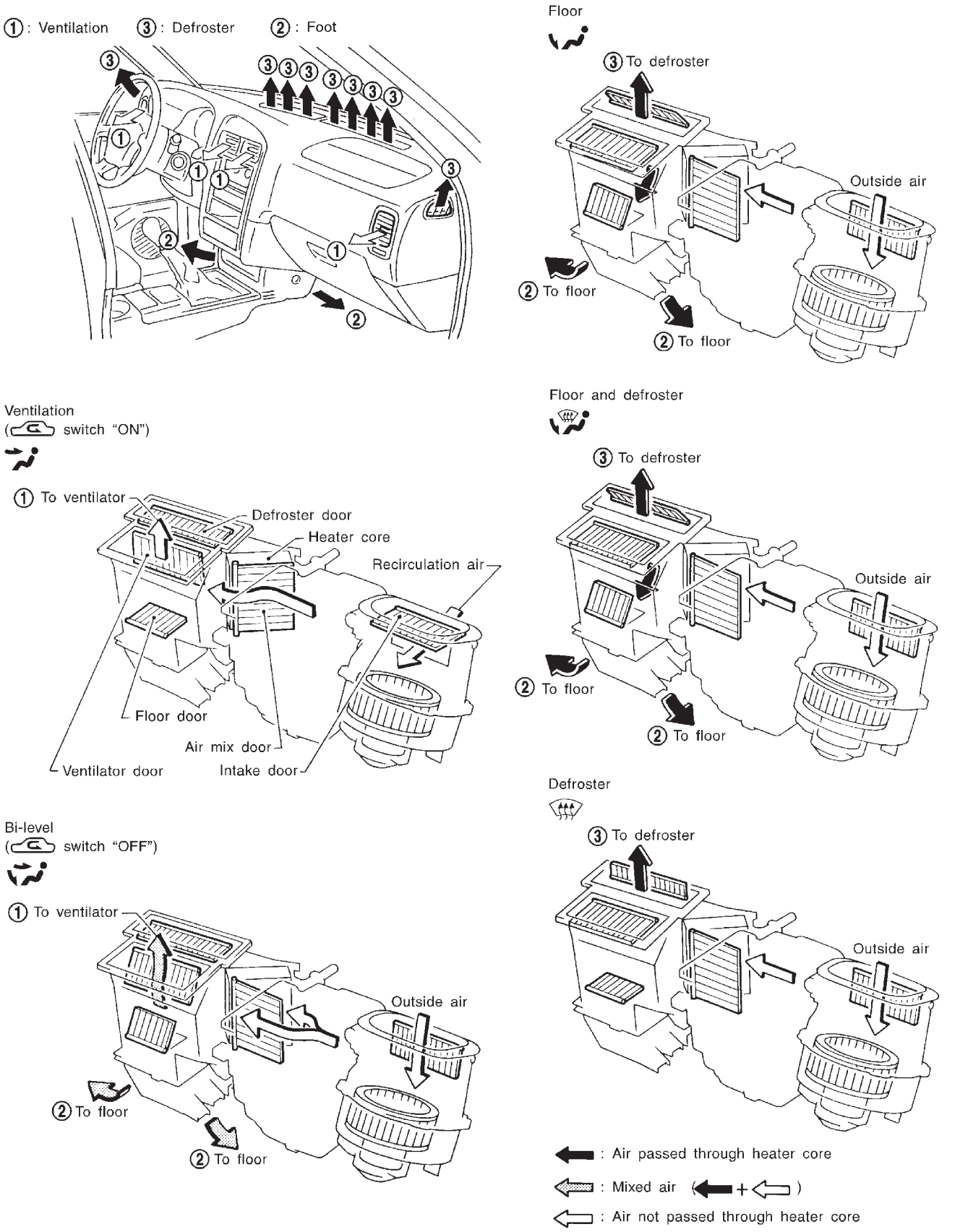

System Description

NAHA0246

SWITCHES AND THEIR CONTROL FUNCTIONS

NAHA0246S01

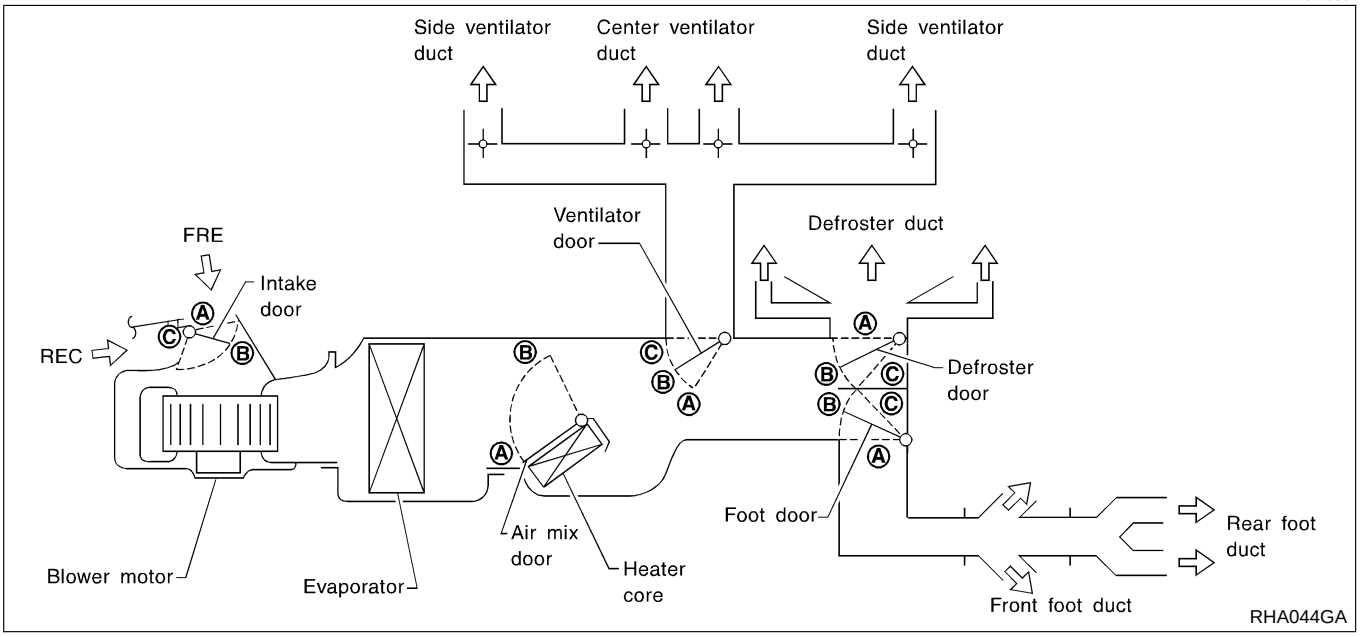

	MODE SW				DEF SW		AUTO SW	ECON SW	REC SW		Temperature SW or dial		
	VENT	B/L	FOOT	D/F	ON	OFF			ON	OFF			
Position or switch							AUTO	ECON			▼ TEMP ▲		
Door											18.0°C (60°F)	—	32.0°C (90°F)
Ventilator door	A	B	C	C	C	—	AUTO	AUTO	—		—		
Foot door	A	B	C	C	A				—		—		
Defroster door	A	A	B	C	C				—		—		
Air mix door	—				—				—		A	AUTO	B
Intake door	—			C	C				A	AUTO*1	—		

*1: Automatically controlled when REC switch is OFF.

Component Location

NAHA0172

ENGINE COMPARTMENT

NAHA0172S01

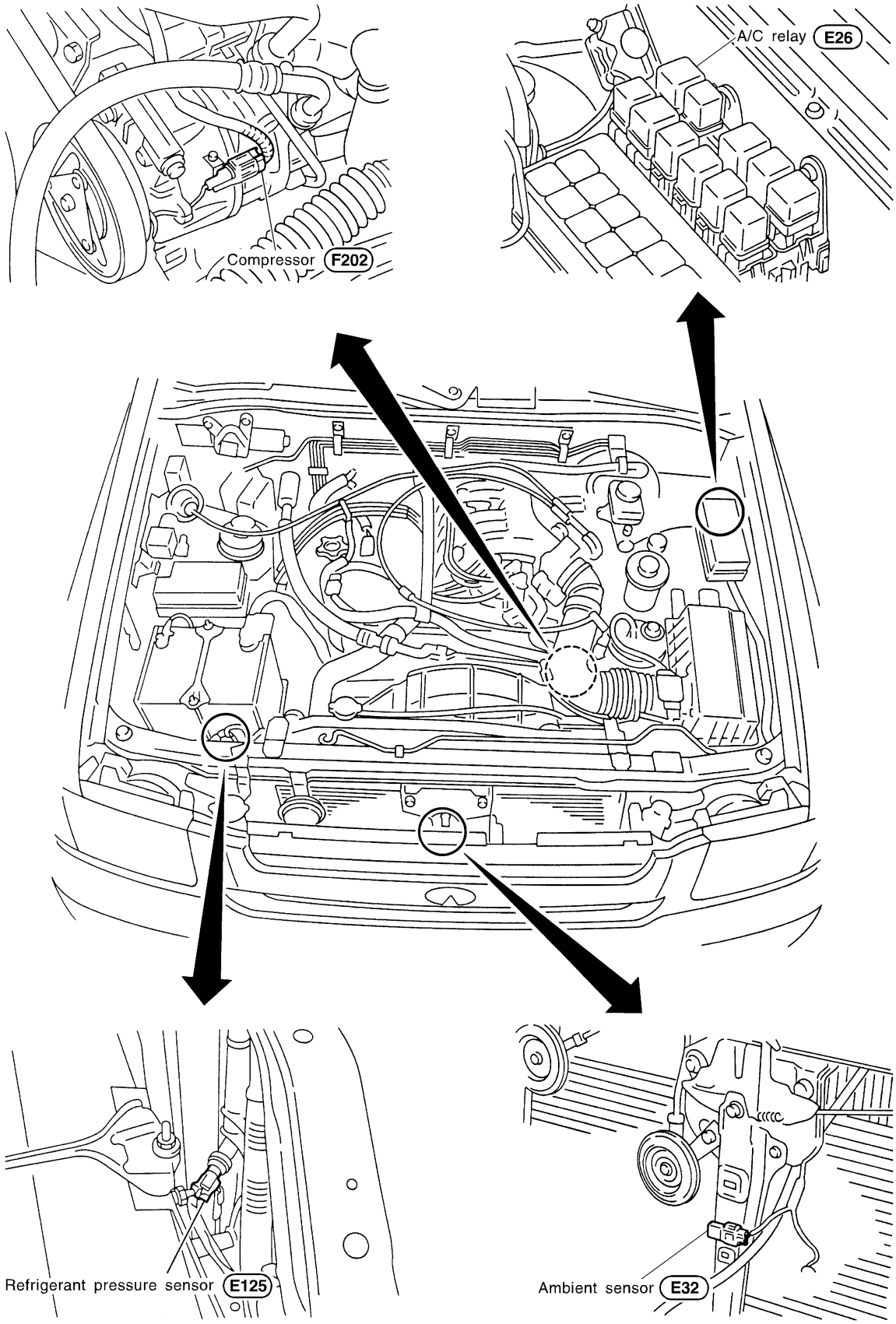

RHA069I

PASSENGER COMPARTMENT

NAHA0172S02

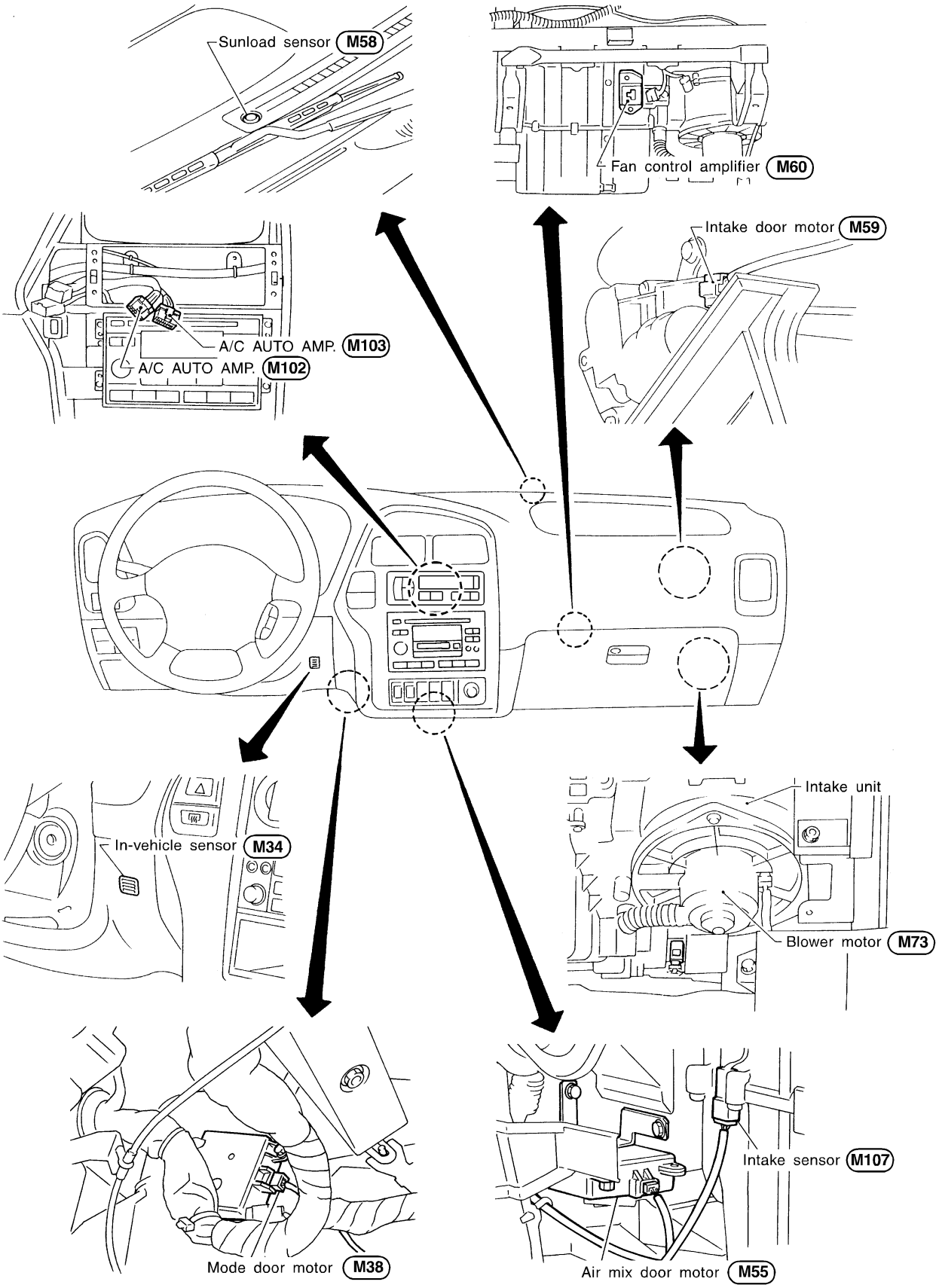

RHA498GC

Circuit Diagram

NAHA0173

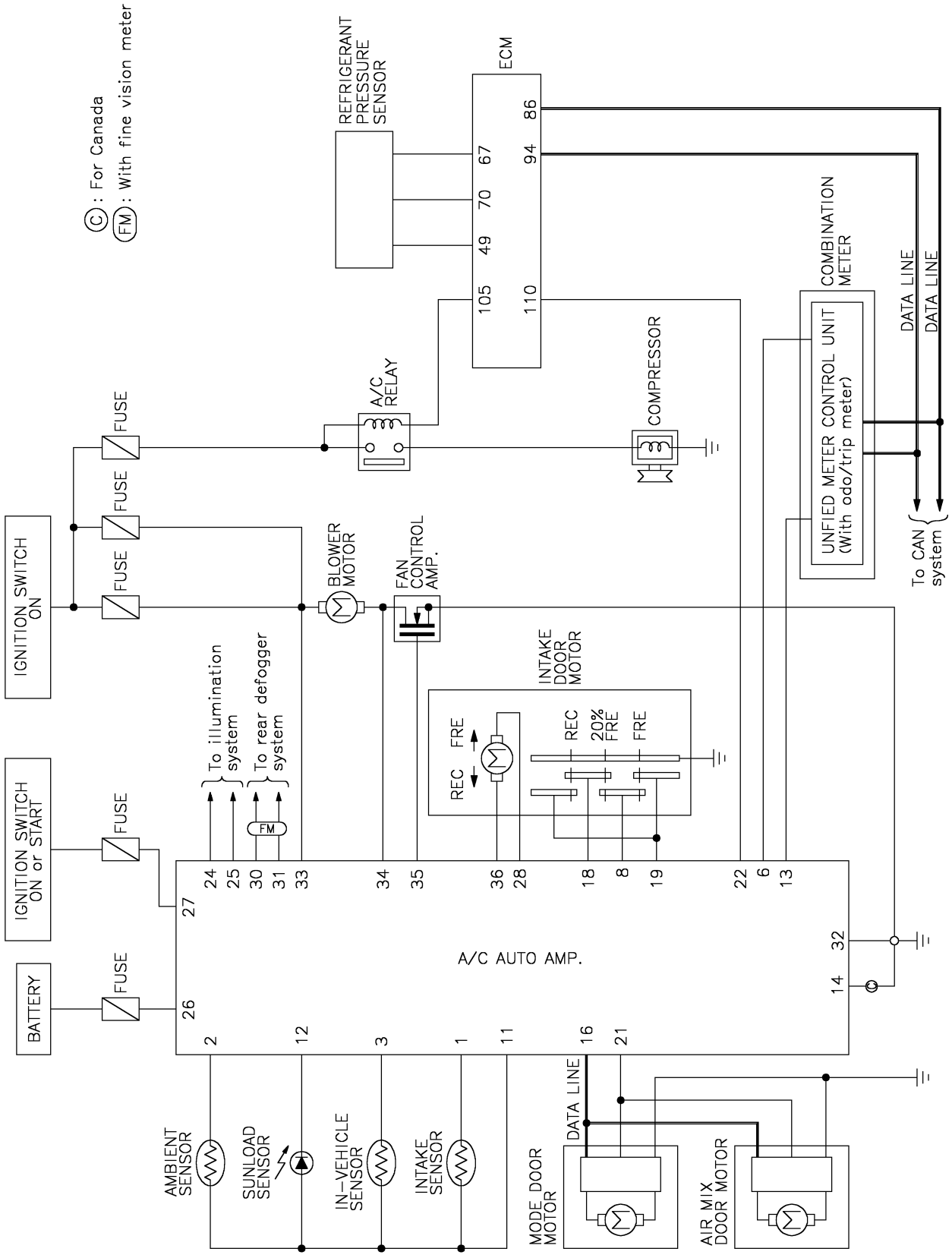

MHA335B

Wiring Diagram — A/C, A —

NAHA0174

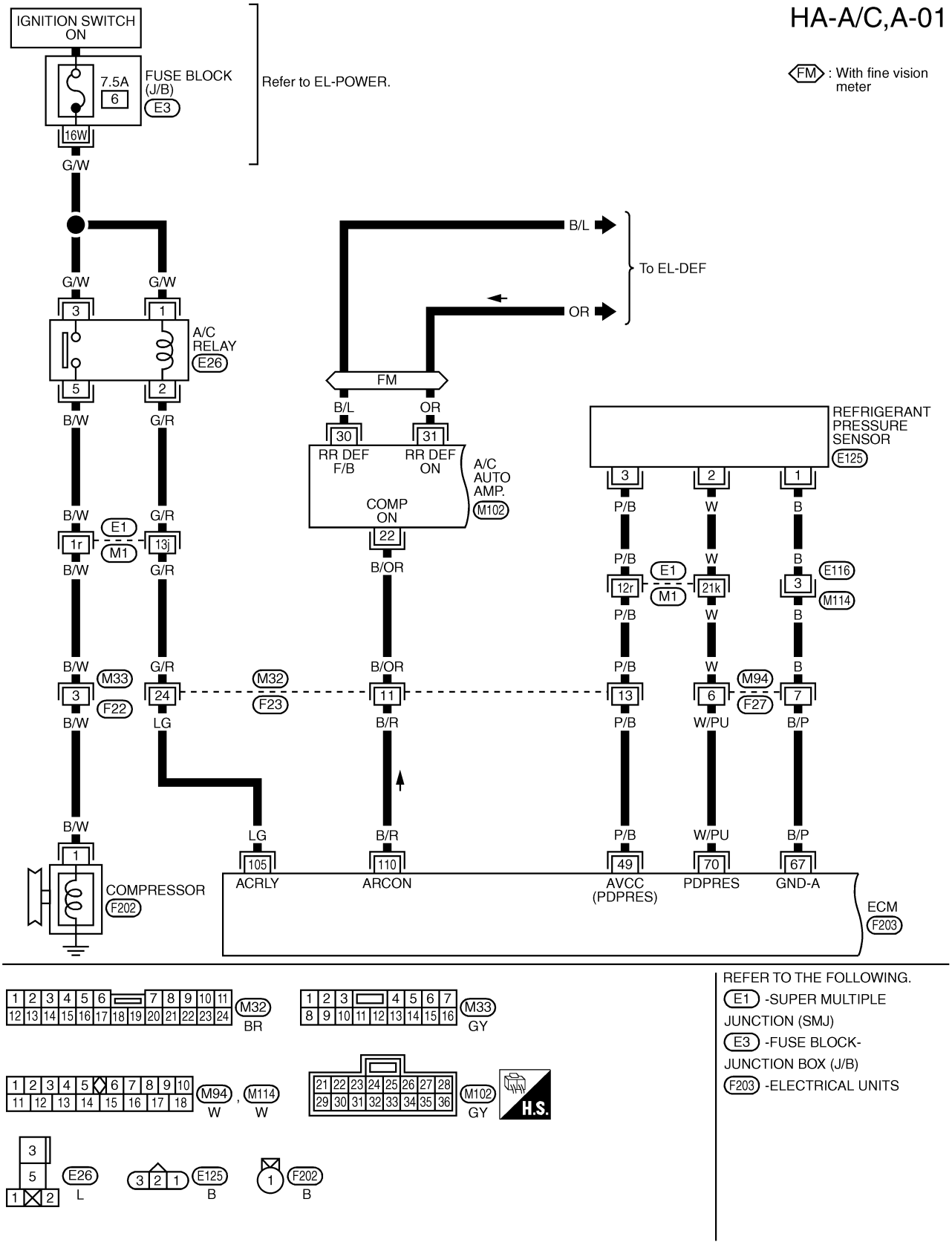

MHA336B

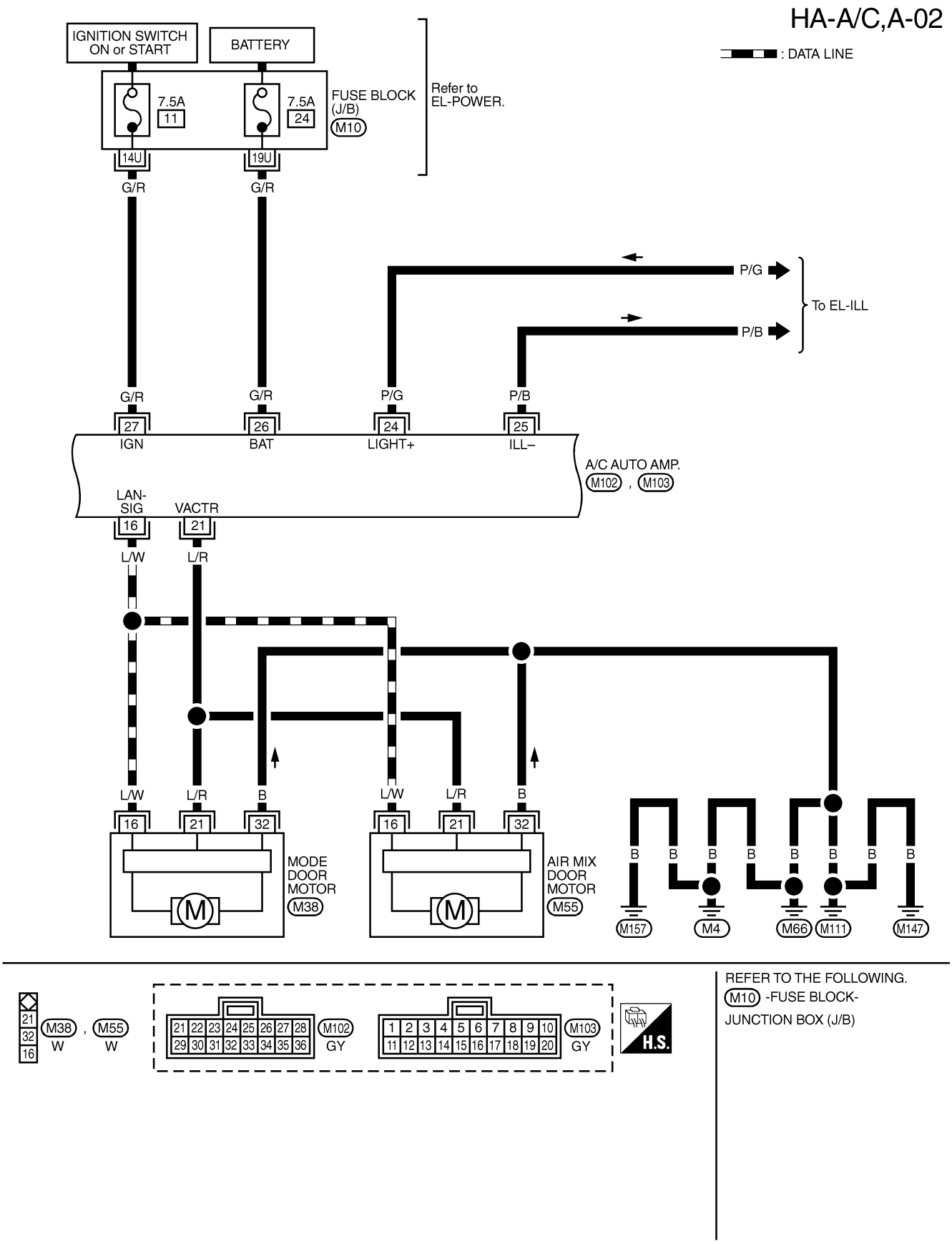
HA-A/C,A-02
: DATA LINE
IGNITION SWITCH ON or START
BATTERY
7.5A
11
7.5A
24
FUSE BLOCK (J/B)
M10
Refer to EL-POWER.
14U
19U
G/R
G/R
P/G
P/B
To EL-ILL
G/R
G/R
P/G
P/B
27
26
24
25
IGN
BAT
LIGHT+
ILL–
A/C AUTO AMP.
M102 , M103
LAN-SIG
VACTR
16
21
L/W
L/R
L/W
L/R
B
L/W
L/R
B
16
21
32
16
21
32
MODE DOOR MOTOR
M38
AIR MIX DOOR MOTOR
M55
M
M
B
M157
M4
M66
M111
M147
21
32
16
M38 , M55
W
W
21 22 23 24 25 26 27 28
29 30 31 32 33 34 35 36
M102
GY
1 2 3 4 5 6 7 8 9 10
11 12 13 14 15 16 17 18 19 20
M103
GY
H.S.
REFER TO THE FOLLOWING.
M10 -FUSE BLOCK-JUNCTION BOX (J/B)
MHA189B

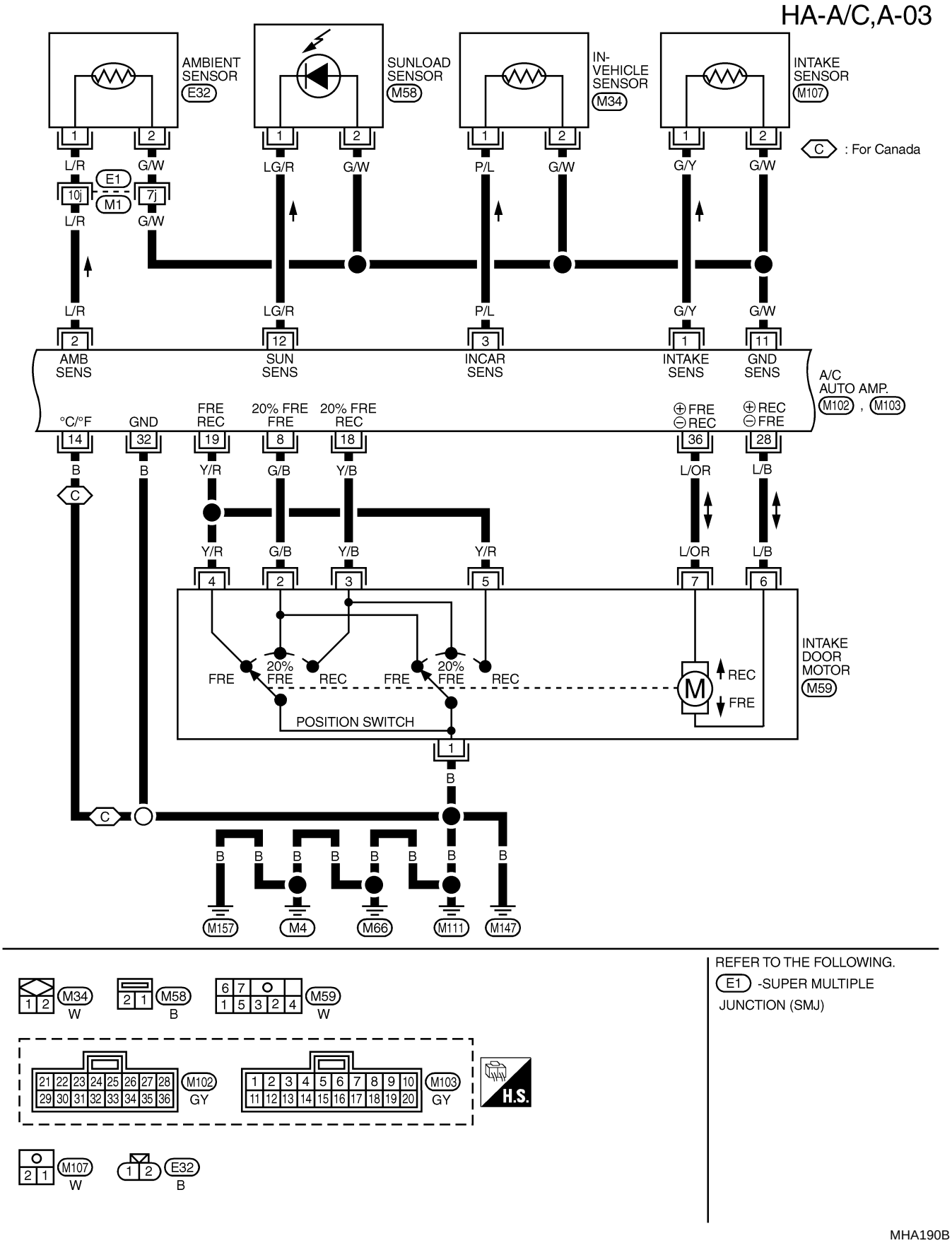
HA-A/C,A-03
AMBIENT SENSOR
E32
SUNLOAD SENSOR
M58
IN-VEHICLE SENSOR
M34
INTAKE SENSOR
M107
C : For Canada
L/R
G/W
LG/R
P/L
G/Y
E1
M1
10j
7j
AMB SENS
SUN SENS
INCAR SENS
INTAKE SENS
GND SENS
A/C AUTO AMP.
M102 , M103
°C/°F
GND
FRE REC
20% FRE FRE
20% FRE REC
⊕ FRE ⊖ REC
⊕ REC ⊖ FRE
B
Y/R
G/B
Y/B
L/OR
L/B
INTAKE DOOR MOTOR
M59
FRE
20% FRE
REC
POSITION SWITCH
M157
M4
M66
M111
M147
M34
W
M58
B
M59
W
M102
GY
M103
GY
H.S.
M107
W
E32
B
REFER TO THE FOLLOWING.
E1 -SUPER MULTIPLE JUNCTION (SMJ)
MHA190B

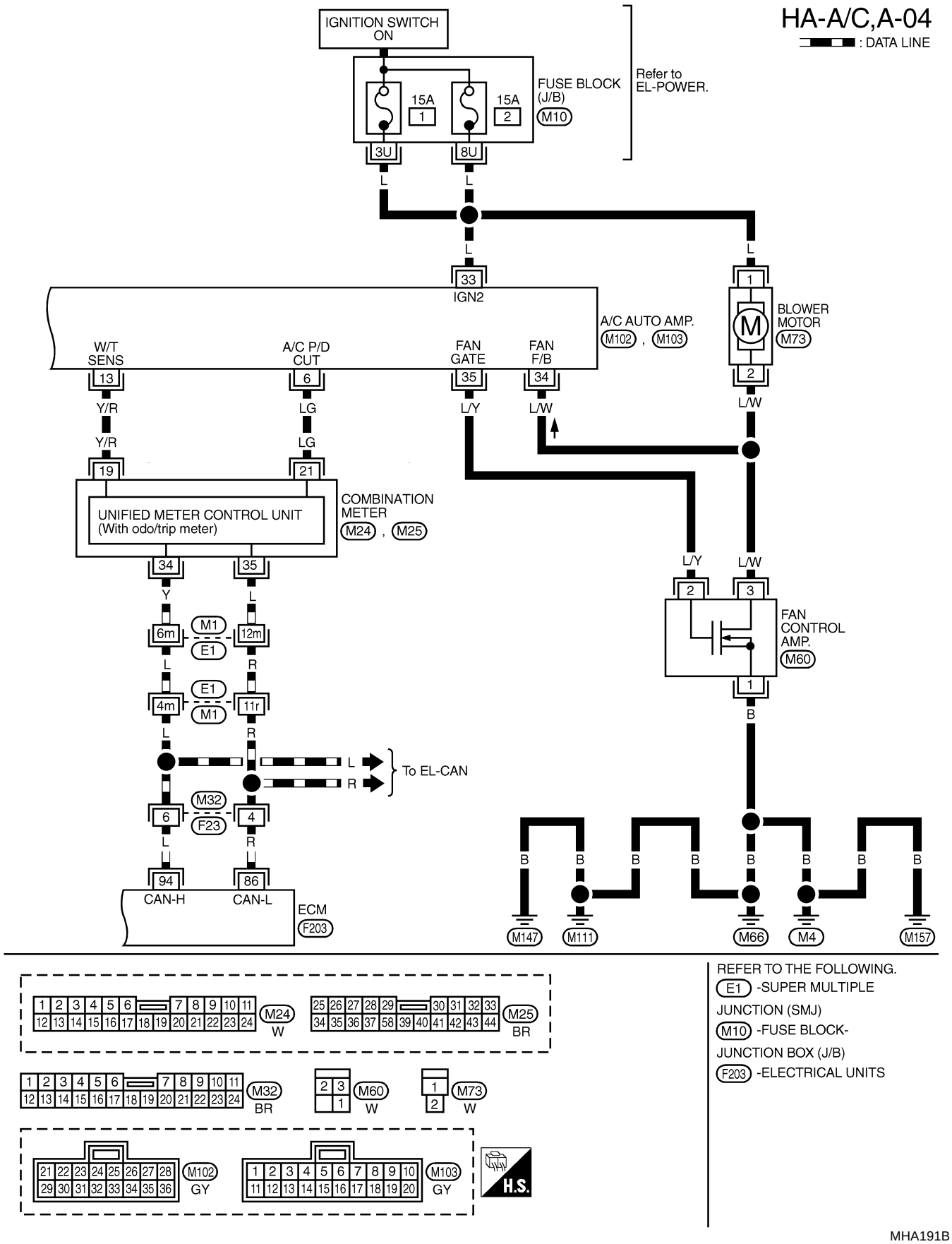
HA-A/C,A-04
: DATA LINE
IGNITION SWITCH ON
FUSE BLOCK (J/B)
M10
15A
1
15A
2
3U
8U
Refer to EL-POWER.
L
33
IGN2
A/C AUTO AMP.
M102 , M103
W/T SENS
A/C P/D CUT
FAN GATE
FAN F/B
13
6
35
34
Y/R
LG
L/Y
L/W
19
21
UNIFIED METER CONTROL UNIT
(With odo/trip meter)
COMBINATION METER
M24 , M25
34
35
Y
6m
M1
E1
12m
4m
11r
M32
F23
6
4
94
86
CAN-H
CAN-L
ECM
F203
To EL-CAN
BLOWER MOTOR
M73
1
2
FAN CONTROL AMP.
M60
3
B
M147
M111
M66
M4
M157
M24
W
M25
BR
M32
BR
M60
W
M73
W
M102
GY
M103
GY
H.S.
REFER TO THE FOLLOWING.
E1 -SUPER MULTIPLE JUNCTION (SMJ)
M10 -FUSE BLOCK-JUNCTION BOX (J/B)
F203 -ELECTRICAL UNITS
MHA191B

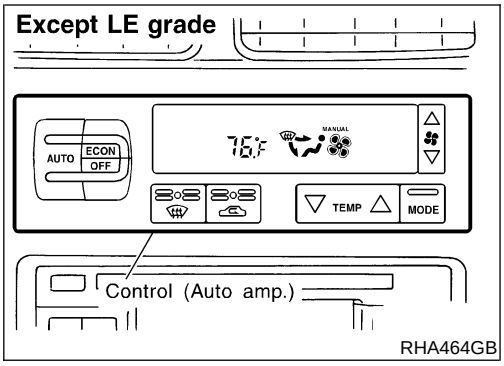

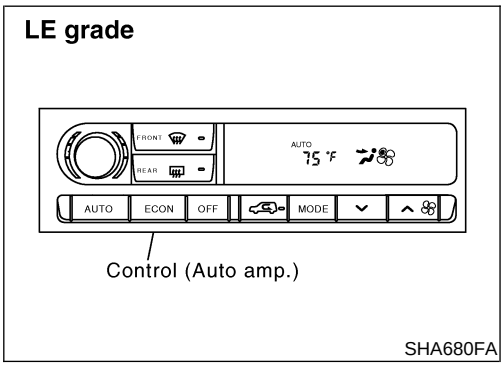

Auto Amp. Terminals and Reference Value

NAHA0175

INSPECTION OF AUTO AMP.

NAHA0175S01

- Measure voltage between each terminal and body ground by following “AUTO AMP. INSPECTION TABLE”.

- Pin connector terminal layout

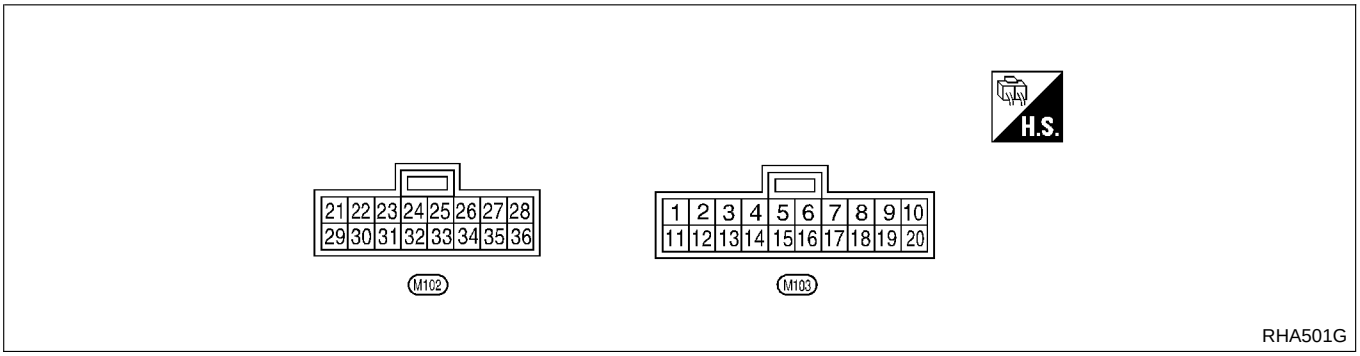

AUTO AMP. INSPECTION TABLE

NAHA0175S02

TERMINAL NO. (Wire color)	ITEM	CONDITION			Voltage V
1 (G/Y)	Intake sensor	—			—
2 (L/R)	Ambient sensor	—			—
3 (P/L)	In-vehicle sensor	—			—
6 (LG)	Compressor feedback signal	ON	AUTO SW: ON		Approximately 0
			AUTO SW: ON	Disconnect refrigerant pressure sensor connector	Approximately 5
8 (G/B)	Intake door position switch		Intake door position	FRESH or 20% FRESH	Approximately 0
				RECIRCULATION	Approximately 5
11 (G/W)	Sensor ground		—		Approximately 0

TERMINAL NO. (Wire color)	ITEM	CONDITION			Voltage V
12 (LG/R)	Sunload sensor	—			—
13 (Y/R)	Water temperature signal		—		—
14 (B)	Ground (for Canada)		—		Approximately 0
16 (L/W)	A/C LAN signal		—		Approximately 5.5
18 (Y/B)	Intake door position switch		Intake door position	20% FRE or RECIRCULATION	Approximately 0
				FRESH	Approximately 5
19 (Y/R)	Intake door position switch		Intake door position	RECIRCULATION or FRESH	Approximately 0
				20% FRE	Approximately 5
21 (L/R)	Power supply for mode door motor and air mix door motor		—		Approximately 12
22 (B/OR)	Compressor ON signal		Compressor	ON	Approximately 0
				OFF	Approximately 5
24 (P/G)	Power supply for illumination		Lighting switch	OFF	Approximately 0
				1st	Approximately 12
25 (P/B)	Illumination ground		—		Approximately 0
26 (G/R)	Power supply for BAT		—		BATTERY VOLTAGE

Auto Amp. Terminals and Reference Value (Cont'd)

TERMINAL NO. (Wire color)	ITEM	CONDITION			Voltage V
27 (G/R)	Power supply for IGN		—		Approximately 12
28 (L/B)	Power supply for intake door motor		Intake door position	FRE → REC	Approximately 12
				REC → FRE	Approximately 0
30 (B/L)	Rear defogger feedback signal (LE grade)		Rear window defogger switch: ON		Approximately 12
			Rear window defogger switch: OFF		Approximately 0
31 (OR)	Rear defogger ON signal (LE grade)		Rear window defogger switch: ON		Approximately 0
			Rear window defogger switch: OFF		Approximately 12
32 (B)	Ground		—		Approximately 0
33 (L)	Power source for A/C		Ignition voltage feedback		Approximately 12
34 (L/W)	Blower motor feedback		Fan speed: Low		Approximately 7 - 10
35 (L/Y)	Fan control AMP. control signal		Fan speed	Low, Middle low or Middle high	Approximately 2.5 - 3.0
				High	Approximately 9 - 10
36 (L/OR)	Power supply for intake door motor		Intake door position	FRE → REC	Approximately 0
				REC → FRE	Approximately 12

Self-diagnosis

=NAHA0176

INTRODUCTION AND GENERAL DESCRIPTION

NAHA0176S01

The self-diagnostic system diagnoses sensors, door motors, blower motor, etc. by system line. Refer to applicable sections (items) for details. Shifting from normal control to the self-diagnostic system is accomplished by starting the engine (turning the ignition switch from “OFF” to “ON”) and pressing “ OFF ” switch for at least 5 seconds. The “ OFF ” switch must be pressed within 10 seconds after starting the engine (ignition switch is turned “ON”). This system will be canceled by either pressing AUTO (AUTO) switch or turning the ignition switch “OFF”. Shifting from one step to another is accomplished by means of pushing ▲ (HOT) or ▼ (COLD) switch, as required.
Additionally shifting from STEP 5 to AUXILIARY MECHANISM is accomplished by means of pushing ✣ (fan) UP switch.

Except LE Grade

NAHA0176S0101

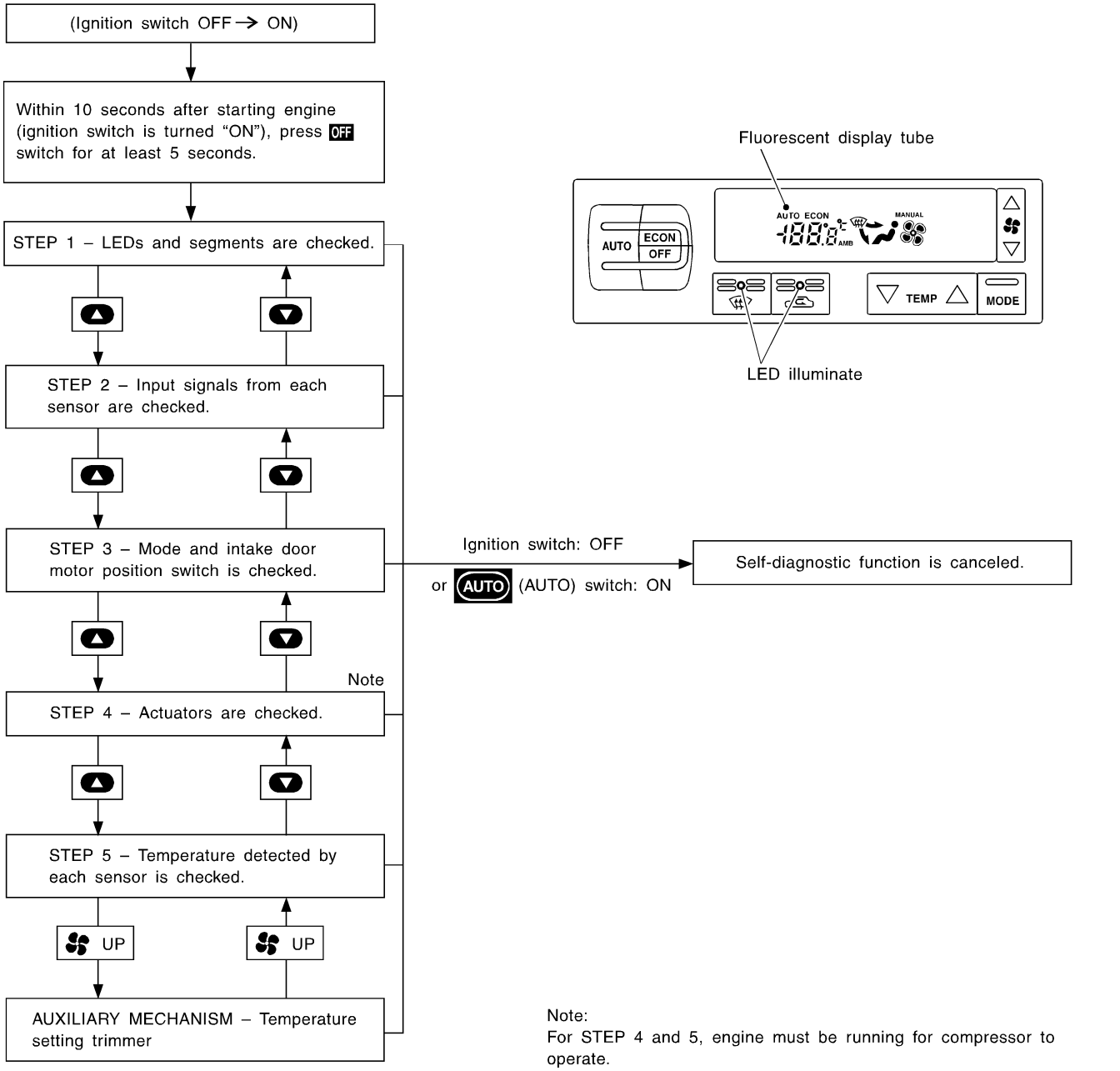

STEP-BY-STEP PROCEDURE

Except LE Grade

=NAHA0176S02

NAHA0176S0201

1	SET IN SELF-DIAGNOSTIC MODE
1. Turn ignition switch ON. 2. Set in self-diagnostic mode as follows. Within 10 seconds after starting engine (ignition switch is turned "ON".), press OFF switch for at least 5 seconds.	
▶	GO TO 2.

2	STEP 1 - ALL LEDs AND SEGMENT ARE CHECKED
Do all LEDs and segments illuminate?	

Display malfunction

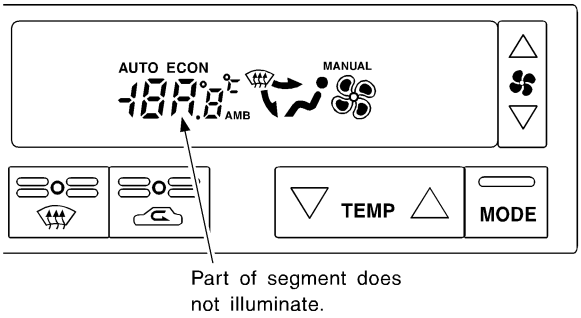

RHA454G

Yes or No

Yes	▶	GO TO 3.
No	▶	Malfunctioning OFF switch, LED or fluorescent display tube. Replace A/C auto amp.

3	CHECK TO ADVANCE SELF-DIAGNOSIS STEP 2
1. Press ▲ (HOT) switch. 2. Advance to self-diagnosis STEP 2?	

Yes or No

Yes	▶	GO TO 4.
No	▶	Malfunctioning ▲ (HOT) switch. Replace A/C auto amp.

4	CHECK TO RETURN SELF-DIAGNOSIS STEP 1
1. Press ▼ (COLD) switch. 2. Return to self-diagnosis STEP 1?	

Yes or No

Yes	▶	GO TO 5.
No	▶	Malfunctioning ▼ (COLD) switch. Replace A/C auto amp.

5	STEP 2 - SENSOR CIRCUITS ARE CHECKED FOR OPEN OR SHORT CIRCUIT

Press ▲ (HOT) switch.
Does code No. 20 appear on the display?

Display (when all sensors are in good order)

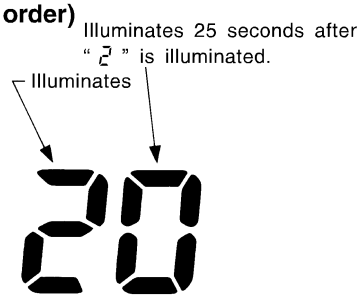

RHA970DB

Yes or No

Yes	▶	GO TO 6.
No	▶	GO TO 13.

6	STEP 3 - MODE DOOR AND INTAKE DOOR POSITIONS ARE CHECKED

Press ▲ (HOT) switch.
Does code No. 30 appear on the display?

Display (when all doors are in good order)

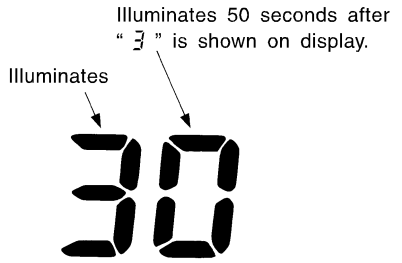

RHA869DD

Yes or No

Yes	▶	GO TO 7.
No	▶	GO TO 14.

7	STEP 4 - OPERATION OF EACH ACTUATOR IS CHECKED
Press ▲ (HOT) switch. Engine running. Press DEF switch, code No. of each actuator test is indicated on the display. 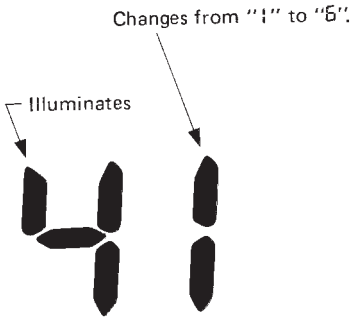 RHA495A	
▶	GO TO 8.

8	CHECK ACTUATORS

Refer to the following chart and confirm discharge air flow, air temperature, blower motor voltage and compressor operation.

Checks must be made visually, by listening to any noise, or by touching air outlets with your hand, etc. for improper operation.

Code No.	Actuator test pattern				
	Mode door	Intake door	Air mix door	Blower motor	Compressor
41	VENT	REC	Full Cold	4 - 5V	ON
42	B/L	REC	Full Cold	9 - 11V	ON
43	B/L	20% FRE	Full Hot	7 - 9V	OFF
44	FOOT	FRE	Full Hot	7 - 9V	OFF
45	D/F	FRE	Full Hot	7 - 9V	ON
46	DEF	FRE	Full Hot	10 - 12V	ON

MTBL0200

Discharge air flow

Mode door position	Air outlet/distribution		
	Face	Foot	Defroster
	100%	—	—
	60%	40%	—
	—	80%	20%
	—	60%	40%
	—	—	100%

MTBL1831

OK or NG

OK	▶	GO TO 9.
NG	▶	• Air outlet does not change. Go to "Mode Door Motor" (HA-68). • Discharge air temperature does not change. Go to "Air Mix Door Motor" (HA-75). • Intake door does not change. Go to "Intake Door Motor" (HA-79). • Blower motor operation is malfunctioning. Go to "Blower Motor" (HA-87). • Magnet clutch does not engage. Go to "Magnet Clutch" (HA-97).

9	STEP 5 - TEMPERATURE OF EACH SENSOR IS CHECKED

Press ▲ (HOT) switch.
Code No. 5 appears on the display.

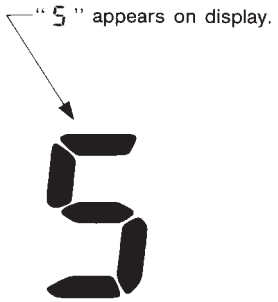

RHA492A

	▶	GO TO 10.

10	CHECK AMBIENT SENSOR

Press (DEF) switch one time, temperature detected by ambient sensor is indicated on the display.
ECON shown in display indicates negative temperature reading.
NOTE:
If temperature shown on display greatly differs from actual temperature, check sensor circuit first, then inspect sensor.

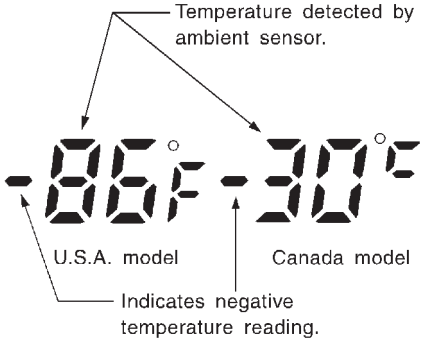

RHA499G

OK or NG

OK	▶	GO TO 11.
NG	▶	Go to Ambient Sensor Circuit (HA-121).

11	CHECK IN-VEHICLE SENSOR

Press (DEF) switch the second time, temperature detected by in-vehicle sensor is indicated on the display screen. ECON shown in display indicates negative temperature reading.
NOTE:
If temperature shown on display greatly differs from actual temperature, check sensor circuit first, then inspect sensor.

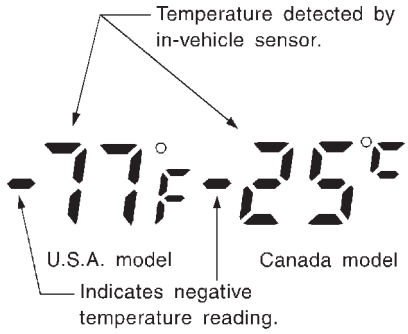

RHA500G

OK or NG

OK	▶	GO TO 12.
NG	▶	Go to In-vehicle Sensor Circuit (HA-124).

12	CHECK INTAKE SENSOR

Press (DEF) switch the third time, temperature detected by intake sensor is indicated on the display.
NOTE:
If temperature shown on display greatly differs from actual temperature, check sensor circuit first, then inspect sensor.

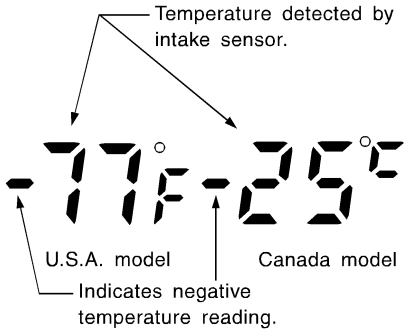

RHA500GB

OK or NG

OK	▶	1. Press (DEF) switch the fourth time. Display returns to original presentation 5. 2. Turn ignition switch OFF or (AUTO) switch ON. 3. END
NG	▶	Go to Intake Sensor Circuit (HA-131).

13	CHECK MALFUNCTIONING SENSOR

Refer to the following chart for malfunctioning code No.
(If two or more sensors malfunction, corresponding code Nos. blink respectively two times.)

Code No.	Malfunctioning sensor (including circuits)	Reference page
21	Ambient sensor	*2
-21		
22	In-vehicle sensor	*3
-22		
24	Intake sensor	*4
-24		
25	Sunload sensor*1	*5
-25		
26	Air mix door motor (LCU) PBR	*6
-26		

MTBL0083

***1: Conduct self-diagnosis STEP 2 under sunshine.**
When conducting indoors, aim a light (more than 60W) at sunload sensor, otherwise Code No. 25 will indicate despite that sunload sensor is functioning properly.
*2: HA-121
*3: HA-124
*4: HA-131
*5: HA-128
*6: HA-133

Display (when sensor malfunctions)

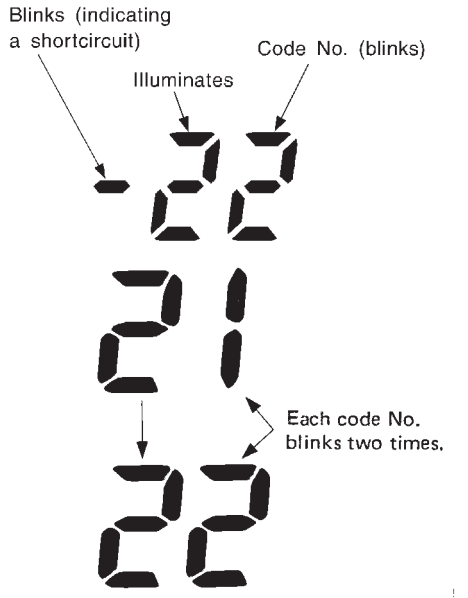

RHA455G

RHA501A

▶	INSPECTION END

14	CHECK MALFUNCTIONING DOOR MOTOR POSITION SWITCH

Mode or (and) intake door motor position switch(es) is (are) malfunctioning.
(If two or more mode or intake doors are out of order, corresponding code numbers blink respectively two times.)

Code No. *1 *2	Mode or intake door position		Reference page
31	VENT	Mode door motor	*3
32	B/L		
34	FOOT		
35	D/F		
36	DEF		
37	FRE	Intake door motor	*4
38	20% FRE		
39	REC		

MTBL0514

*1: If mode door motor harness connector is disconnected, the following display pattern will appear.
31 → 32 → 34 → 35 → 36 → Return to 31
*2: If intake door motor harness connector is disconnected, the following display pattern will appear.
37 → 38 → 39 → Return to 37
*3: HA-68
*4: HA-79

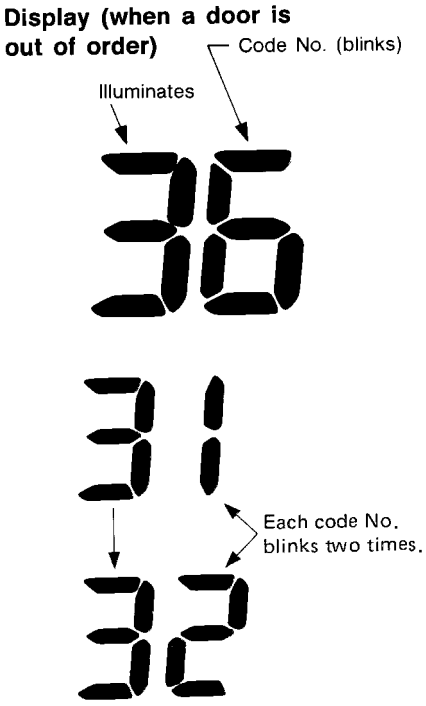

RHA168DA

RHA498A

▶	INSPECTION END

AUXILIARY MECHANISM: TEMPERATURE SETTING TRIMMER

=NAHA0176S03

The trimmer compensates for differences in range of ±3°C (±6°F) between temperature setting (displayed digitally) and temperature felt by driver.
Operating procedures for this trimmer are as follows:

- Begin Self-diagnosis STEP 5 mode.
- Press (fan) UP switch to set system in auxiliary mode.
- Display shows "61" in auxiliary mechanism.
  It takes approximately 3 seconds.
- Press either (HOT) or (COLD) switch as desired. Temperature will change at a rate of 0.5°C (1°F) each time a switch is pressed.

Except LE Grade

NAHA0176S0301

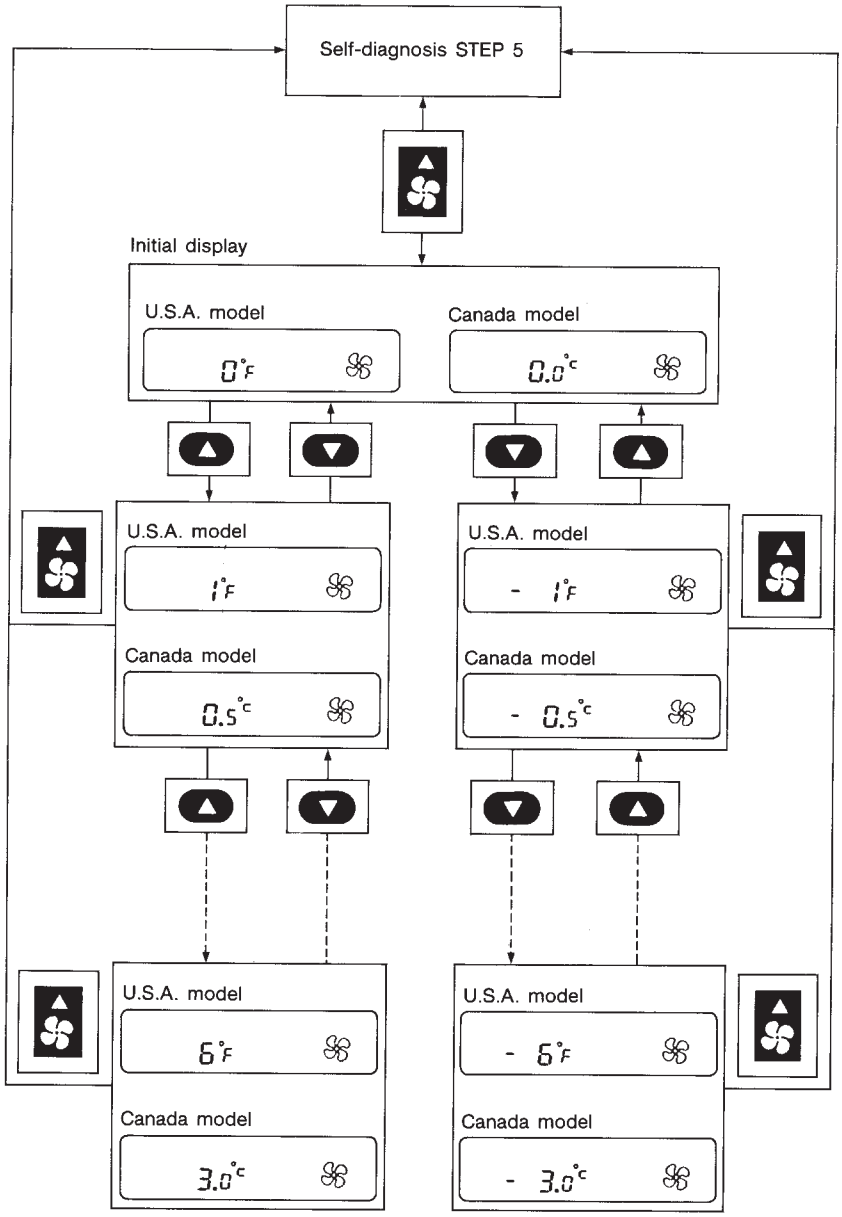

SHA197E

When battery cable is disconnected, trimmer operation is canceled. Temperature set becomes that of initial condition, i.e. 0°C (0°F).

INTRODUCTION AND GENERAL DESCRIPTION

NAHA0176S07

The self-diagnostic system diagnoses sensors, door motors, blower motor, etc. by system line. Refer to applicable sections (items) for details. Shifting from usual control to the self-diagnostic system is accomplished by starting the engine (turning the ignition switch from "OFF" to "ON") and pressing " OFF " switch for at least 5 seconds. The " OFF " switch must be pressed within 10 seconds after starting the engine (ignition switch is turned "ON"). This system will be canceled by either pressing AUTO (AUTO) switch or turning the ignition switch "OFF". Shifting from one step to another is accomplished by means of turning temperature dial, as required.
Additionally shifting from STEP 5 to AUXILIARY MECHANISM is accomplished by means of pushing (fan) UP switch.

LE Grade

NAHA0176S0702

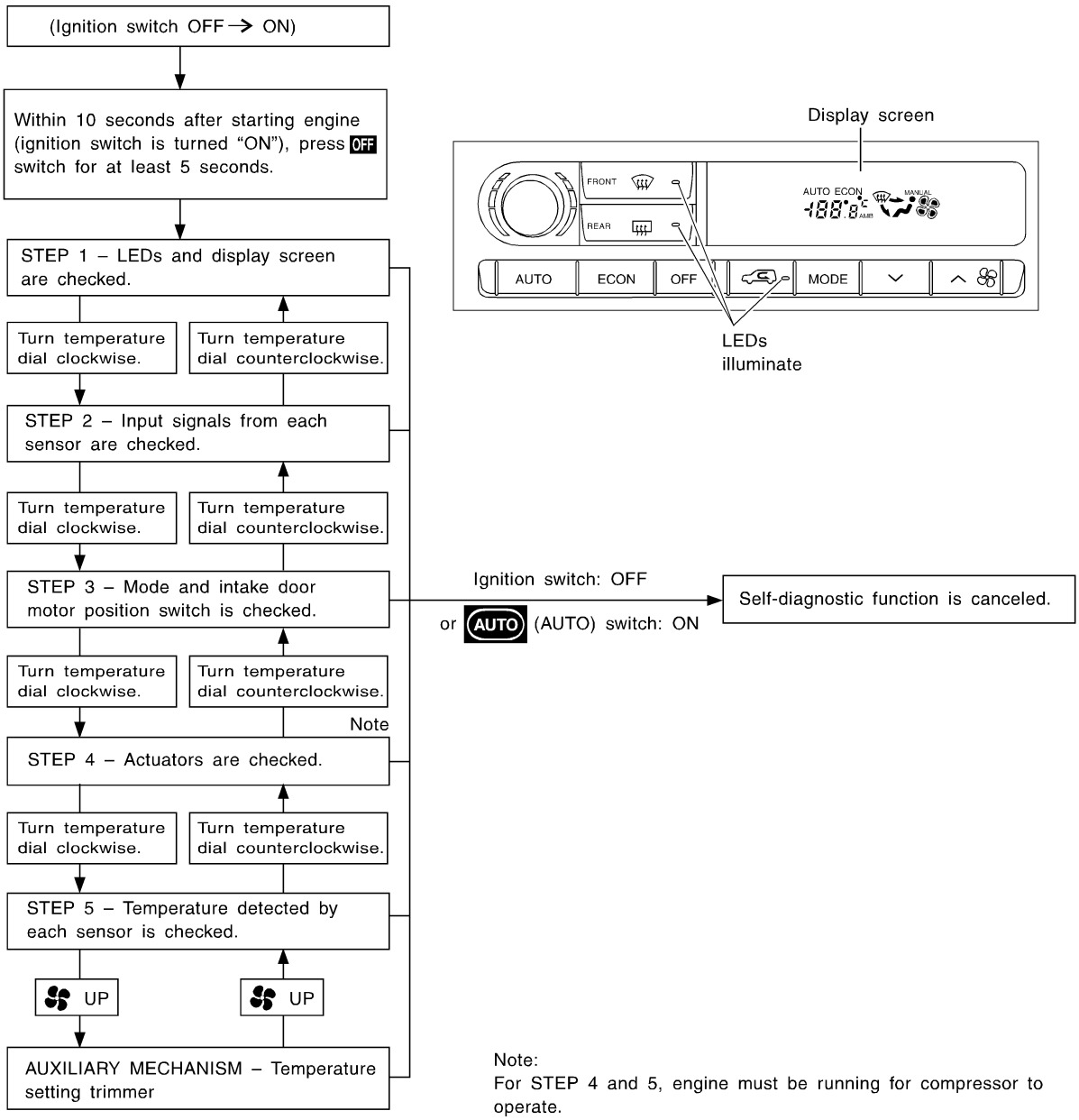

SHA668F

STEP-BY-STEP PROCEDURE

LE Grade

=NAHA0176S08

NAHA0176S0802

1	SET IN SELF-DIAGNOSTIC MODE
1. Turn ignition switch ON. 2. Set in self-diagnostic mode as follows. Within 10 seconds after starting engine (ignition switch is turned "ON".), press OFF switch for at least 5 seconds.	
▶	GO TO 2.

2	STEP 1 - ALL LEDs AND SEGMENT ARE CHECKED
Do all LEDs and segments illuminate?	

Display malfunction

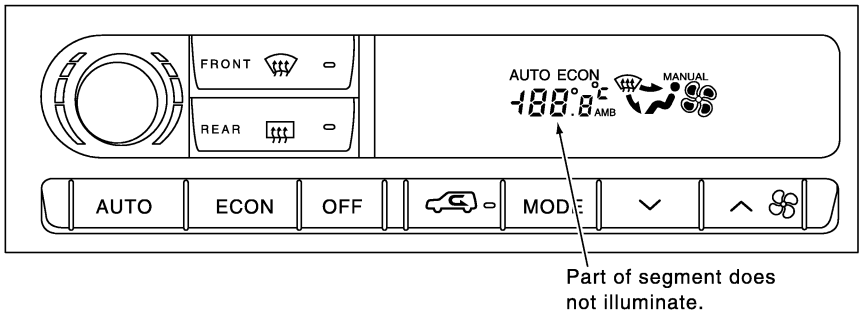

SHA669F

Yes or No

Yes	▶	GO TO 3.
No	▶	Malfunctioning OFF switch, LED or fluorescent display tube. Replace A/C auto amp.

3	VERIFY ADVANCE TO SELF-DIAGNOSIS STEP 2
1. Turn the temperature control dial clockwise. 2. Does advance to self-diagnosis STEP 2?	

Yes or No

Yes	▶	GO TO 4.
No	▶	Malfunctioning temperature control dial. Replace A/C auto amp.

4	VERIFY RETURN TO SELF-DIAGNOSIS STEP 1
1. Turn the temperature dial counterclockwise. 2. Does return to self-diagnosis STEP 1?	

Yes or No

Yes	▶	GO TO 5.
No	▶	Malfunctioning temperature control dial. Replace A/C auto amp.

5	STEP 2 - SENSOR CIRCUITS ARE CHECKED FOR OPEN OR SHORT CIRCUIT

Turn the temperature control dial clockwise, go to STEP 2.
Does code No. 20 appear on the display?

Display (when all sensors are in good order)

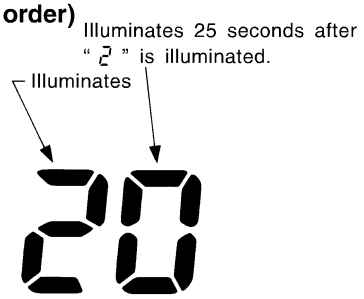

RHA970DB

Yes or No

Yes	▶	GO TO 6.
No	▶	GO TO 13.

6	STEP 3 - MODE DOOR AND INTAKE DOOR POSITIONS ARE CHECKED

Turn the temperature control dial clockwise, go to STEP 3.
Does code No. 30 appear on the display?

Display (when all doors are in good order)

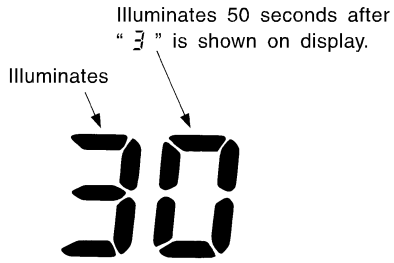

RHA869DD

Yes or No

Yes	▶	GO TO 7.
No	▶	GO TO 14.

7	STEP 4 - OPERATION OF EACH ACTUATOR IS CHECKED
Turn the temperature control dial clockwise, go to STEP 4. Engine running. Press DEF switch, code No. of each actuator test is indicated on the display. 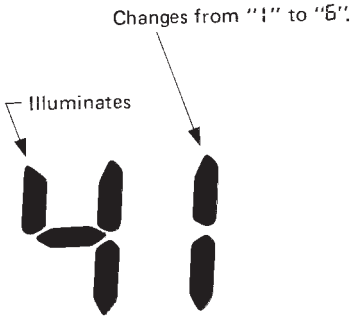 RHA495A	
▶	GO TO 8.

8	CHECK ACTUATORS

Refer to the following chart and confirm discharge air flow, air temperature, blower motor voltage and compressor operation.

Checks must be made visually, by listening to any noise, or by touching air outlets with your hand, etc. for improper operation.

Code No.	Actuator test pattern				
	Mode door	Intake door	Air mix door	Blower motor	Compressor
41	VENT	REC	Full Cold	4 - 5V	ON
42	B/L	REC	Full Cold	9 - 11V	ON
43	B/L	20% FRE	Full Hot	7 - 9V	OFF
44	FOOT	FRE	Full Hot	7 - 9V	OFF
45	D/F	FRE	Full Hot	7 - 9V	ON
46	DEF	FRE	Full Hot	10 - 12V	ON

MTBL0200

Discharge air flow

Mode door position	Air outlet/distribution		
	Face	Foot	Defroster
	100%	—	—
	60%	40%	—
	—	80%	20%
	—	60%	40%
	—	—	100%

MTBL1831

OK or NG

OK ▶	GO TO 9.
NG ▶	• Air outlet does not change. Go to "Mode Door Motor" (HA-68). • Discharge air temperature does not change. Go to "Air Mix Door Motor" (HA-75). • Intake door does not change. Go to "Intake Door Motor" (HA-79). • Blower motor operation is malfunctioning. Go to "Blower Motor" (HA-87). • Magnet clutch does not engage. Go to "Magnet Clutch" (HA-98).

9	STEP 5 - TEMPERATURE OF EACH SENSOR IS CHECKED

Turn the temperature control dial clockwise, go to STEP 5.
Code No. 5 appears on the display.

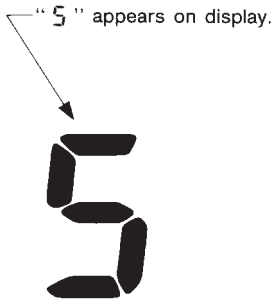

RHA492A

	▶	GO TO 10.

10	CHECK AMBIENT SENSOR

Press (DEF) switch one time, temperature detected by ambient sensor is indicated on the display.
ECON shown in display indicates negative temperature reading.
NOTE:
If temperature shown on display greatly differs from actual temperature, check sensor circuit first, then inspect sensor.

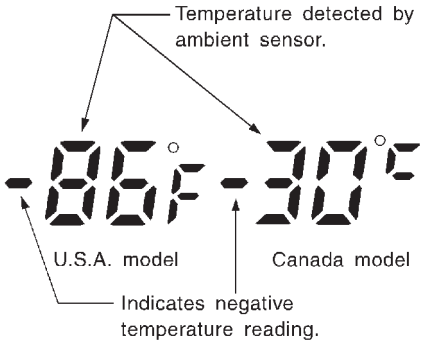

RHA499G

OK or NG

OK	▶	GO TO 11.
NG	▶	Go to Ambient Sensor Circuit (HA-121).

11	CHECK IN-VEHICLE SENSOR

Press (DEF) switch the second time, temperature detected by in-vehicle sensor is indicated on the display screen. ECON shown in display indicates negative temperature reading.
NOTE:
If temperature shown on display greatly differs from actual temperature, check sensor circuit first, then inspect sensor.

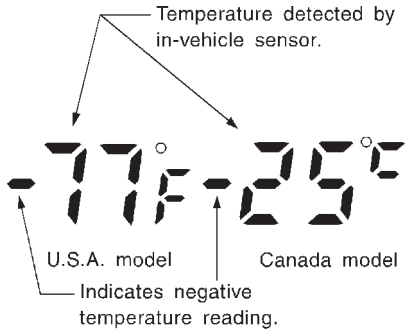

RHA500G

OK or NG

OK	▶	GO TO 12.
NG	▶	Go to In-vehicle Sensor Circuit (HA-124).

12	CHECK INTAKE SENSOR

Press (DEF) switch the third time, temperature detected by intake sensor is indicated on the display.
NOTE:
If temperature shown on display greatly differs from actual temperature, check sensor circuit first, then inspect sensor.

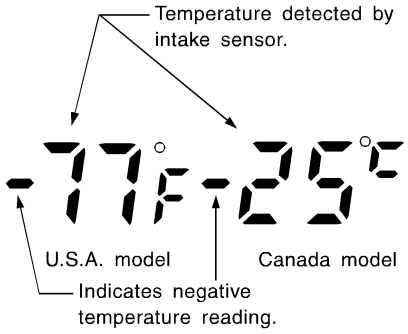

RHA500GB

OK or NG

OK	▶	1. Press (DEF) switch the fourth time. Display returns to original presentation 5. 2. Turn ignition switch OFF or (AUTO) switch ON. 3. END
NG	▶	Go to Intake Sensor Circuit (HA-131).

13	CHECK MALFUNCTIONING SENSOR

Refer to the following chart for malfunctioning code No.
(If two or more sensors malfunction, corresponding code Nos. blink respectively two times.)

Code No.	Malfunctioning sensor (including circuits)	Reference page
21	Ambient sensor	*2
-21		
22	In-vehicle sensor	*3
-22		
24	Intake sensor	*4
-24		
25	Sunload sensor*1	*5
-25		
26	Air mix door motor (LCU) PBR	*6
-26		

MTBL0083

***1: Conduct self-diagnosis STEP 2 under sunshine.**
When conducting indoors, aim a light (more than 60W) at sunload sensor, otherwise Code No. 25 will indicate despite that sunload sensor is functioning properly.
*2: HA-122
*3: HA-125
*4: HA-132
*5: HA-128
*6: HA-133

Display (when sensor malfunctions)

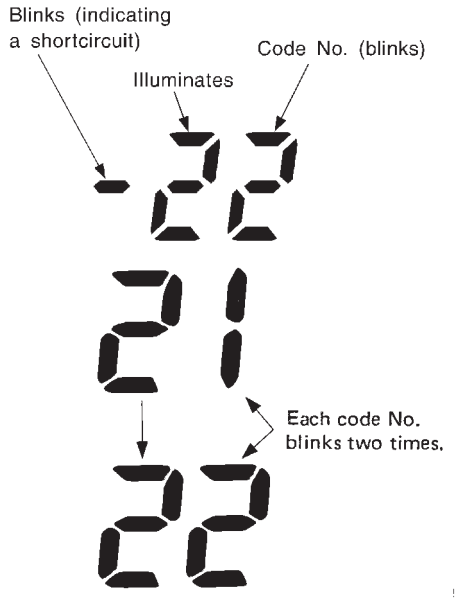

RHA455G

RHA501A

▶	INSPECTION END

14	CHECK MALFUNCTIONING DOOR MOTOR POSITION SWITCH

Mode or (and) intake door motor position switch(es) is (are) malfunctioning.
(If two or more mode or intake doors are out of order, corresponding code numbers blink respectively two times.)

Code No. *1 *2	Mode or intake door position		Reference page
31	VENT	Mode door motor	*3
32	B/L		
34	FOOT		
35	D/F		
36	DEF		
37	FRE	Intake door motor	*4
38	20% FRE		
39	REC		

MTBL0508

*1: If mode door motor harness connector is disconnected, the following display pattern will appear.
31 → 32 → 34 → 35 → 36 → Return to 31
*2: If intake door motor harness connector is disconnected, the following display pattern will appear.
37 → 38 → 39 → Return to 37
*3: HA-69
*4: HA-80

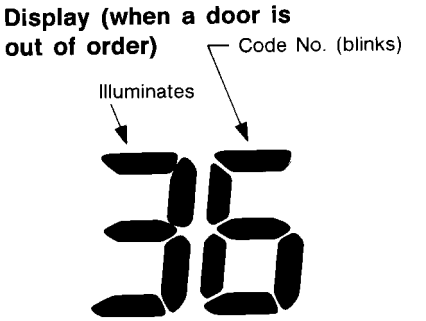

RHA168DA

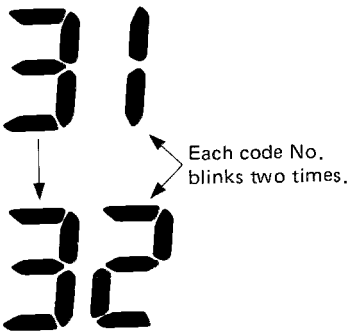

RHA498A

▶	INSPECTION END

AUXILIARY MECHANISM: TEMPERATURE SETTING TRIMMER

=NAHA0176S09

The trimmer compensates for differences in range of ±3°C (±6°F) between temperature setting (displayed digitally) and temperature felt by driver.
Operating procedures for this trimmer are as follows:

- Begin Self-diagnosis STEP 5 mode.
- Press (fan) UP switch to set system in auxiliary mode.
- Display shows "61" in auxiliary mechanism.
  It takes approximately 3 seconds.
- Turn temperature control dial clockwise or counterclockwise. Temperature will change at a rate of 0.5°C (1°F) each time a switch is pressed.

LE Grade

NAHA0176S0902

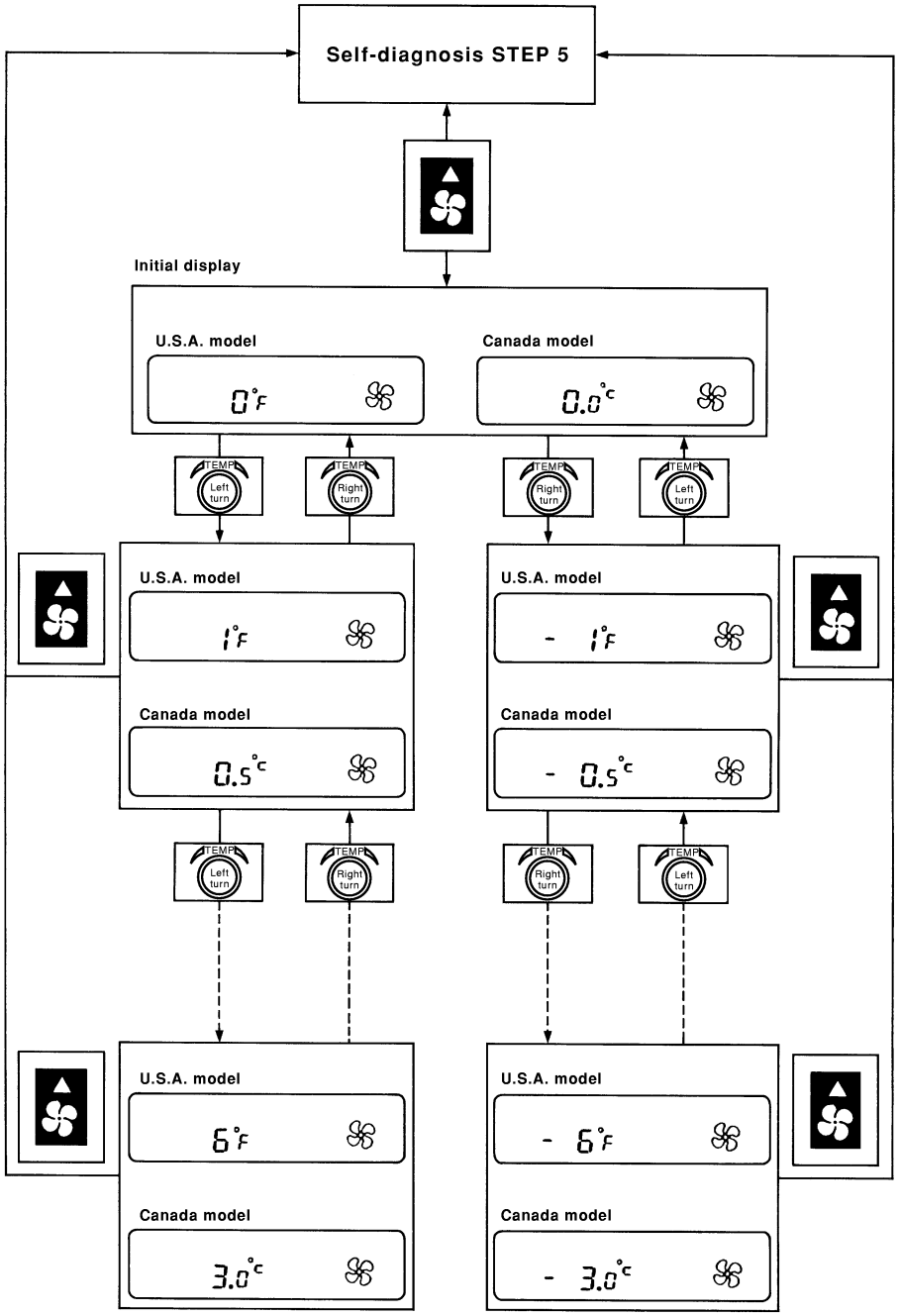

SHA330F

When battery cable is disconnected, trimmer operation is canceled. Temperature set becomes that of initial condition, i.e. 0°C (0°F).

How to Perform Trouble Diagnoses for Quick and Accurate Repair

=NAHA0177

WORK FLOW

NAHA0177S01

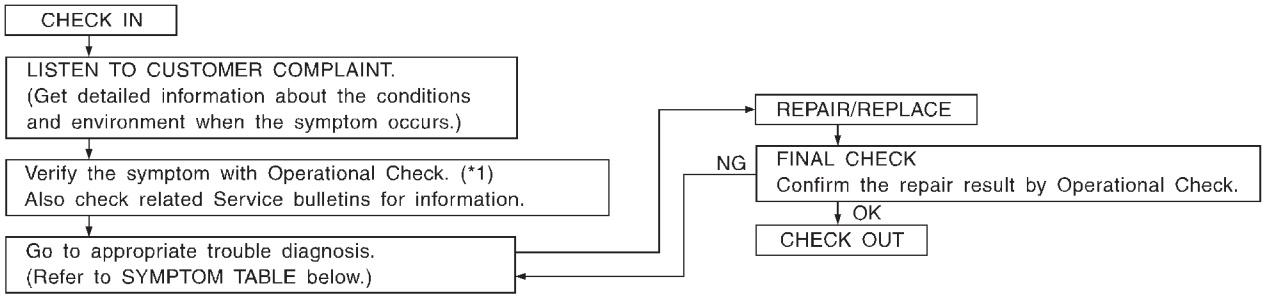

SHA900E

*1: Operational Check (HA-60)

SYMPTOM TABLE

NAHA0177S02

Symptom	Reference Page	
● A/C system does not come on.	● Go to Trouble Diagnosis Procedure for A/C System.	HA-65
● Air outlet does not change. ● Mode door motor does not operate normally.	● Go to Trouble Diagnosis Procedure for Mode Door Motor. (LAN)	HA-68
● Discharge air temperature does not change. ● Air mix door motor does not operate normally.	● Go to Trouble Diagnosis Procedure for Air Mix Door Motor. (LAN)	HA-75
● Intake door does not change. ● Intake door motor does not operate normally.	● Go to Trouble Diagnosis Procedure for Intake Door Motor.	HA-79
● Blower motor operation is malfunctioning. ● Blower motor operation is malfunctioning under out of starting fan speed control.	● Go to Trouble Diagnosis Procedure for Blower Motor.	HA-87
● Magnet clutch does not engage.	● Go to Trouble Diagnosis Procedure for Magnet Clutch.	HA-97
● Insufficient cooling.	● Go to Trouble Diagnosis Procedure for Insufficient Cooling.	HA-104
● Insufficient heating.	● Go to Trouble Diagnosis Procedure for Insufficient Heating.	HA-113
● Noise.	● Go to Trouble Diagnosis Procedure for Noise.	HA-115
● Self-diagnosis cannot be performed.	● Go to Trouble Diagnosis Procedure for Self-diagnosis.	HA-116
● Memory function does not operate.	● Go to Trouble Diagnosis Procedure for Memory Function.	HA-118
● ECON mode does not operate.	● Go to Trouble Diagnosis Procedure for ECON (ECONOMY) — mode.	HA-120

Operational Check

NAHA0178

The purpose of the operational check is to confirm that the system operates properly.

CONDITIONS:

NAHA0178S01

- **Engine running and at normal operating temperature.**

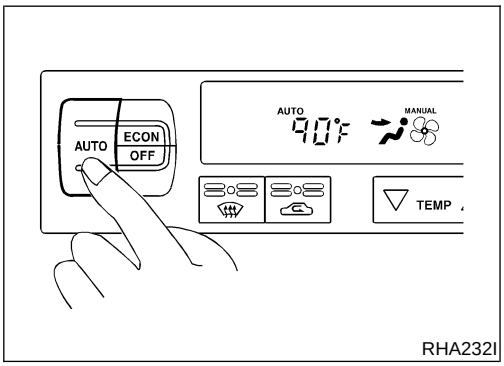

RHA232I

PROCEDURE: (EXCEPT LE GRADE)

NAHA0178S02

1. Check Memory Function

NAHA0178S0201

1. Set the temperature 90°F or 32°C.
2. Press OFF switch.
3. Turn the ignition off.
4. Turn the ignition on.
5. Press the AUTO switch.
6. Confirm that the set temperature remains at previous temperature.
7. Press OFF switch.

If NG, go to trouble diagnosis procedure for memory function (HA-118).
If OK, continue with next check.

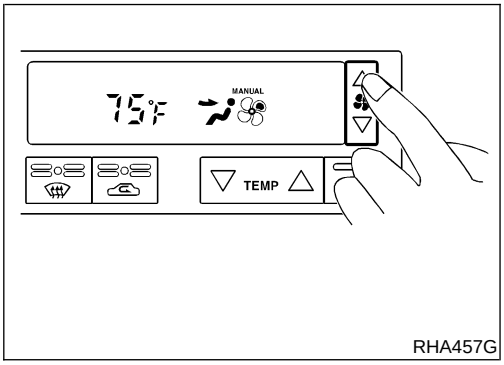

RHA457G

2. Check Blower

NAHA0178S0202

1. Press fan switch (up side) one time.
   Blower should operate on low speed.
   The fan symbol should have one blade lit .
2. Press fan switch (up side) one more time, and continue checking blower speed and fan symbol until all speeds are checked.
3. Leave blower on MAX speed .

If NG, go to trouble diagnosis procedure for blower motor (HA-87).
If OK, continue with next check.

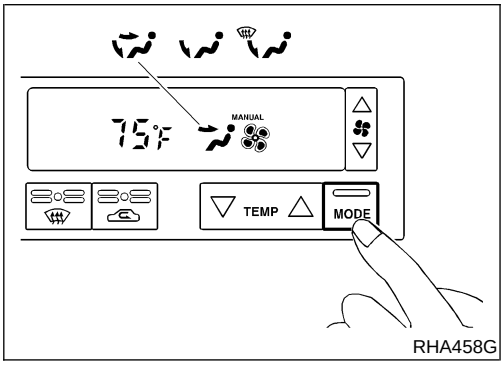

RHA458G

3. Check Discharge Air

NAHA0178S0203

1. Press mode switch four times and DEF button.
2. Each position indicator should change shape.

Discharge air flow

Mode door position	Air outlet/distribution		
	Face	Foot	Defroster
	100%	–	–
	60%	40%	–
	–	80%	20%
	–	60%	40%
	–	–	100%

RHA654FL

3. Confirm that discharge air comes out according to the air distribution table at left.
   Refer to "Discharge Air Flow" (HA-27).

NOTE:
Confirm that the compressor clutch is engaged (sound or visual inspection) and intake door position is at FRESH when the DEF is selected.

Intake door position is checked in the next step.
If NG, go to trouble diagnosis procedure for mode door motor (HA-68).
If OK, continue with next check.

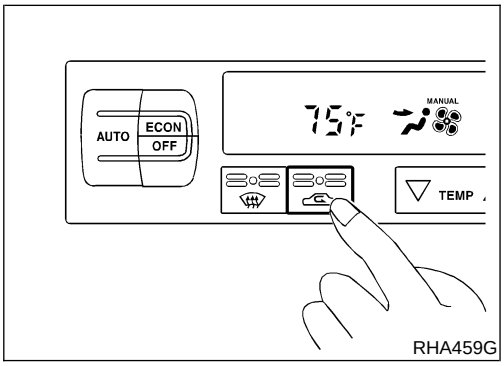

RHA459G

4. Check Recirculation

NAHA0178S0204

1. Press REC switch.
   Recirculation indicator should illuminate.
2. Listen for intake door position change (you should hear blower sound change slightly).

If NG, go to trouble diagnosis procedure for intake door (HA-79).
If OK, continue with next check.

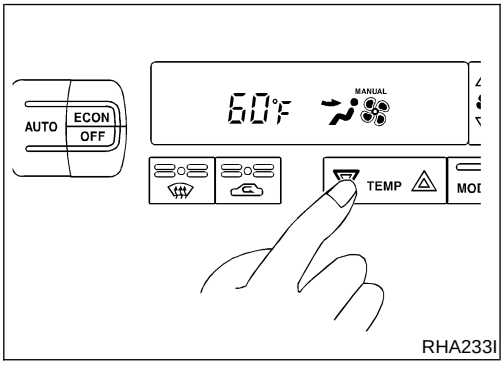

RHA233I

5. Check Temperature Decrease

NAHA0178S0205

1. Press the temperature decrease button until 18°C (60°F) is displayed.
2. Check for cold air at discharge air outlets.

If NG, go to trouble diagnosis procedure for insufficient cooling (HA-104).
If OK, continue with next check.

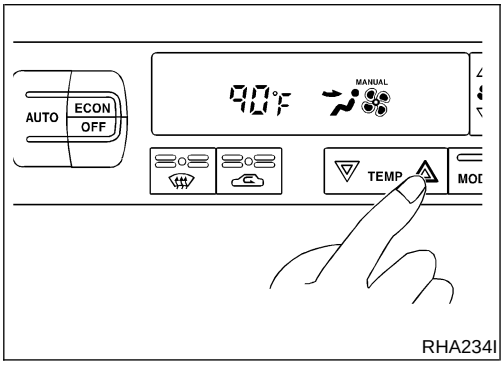

RHA234I

6. Check Temperature Increase

NAHA0178S0206

1. Press the temperature increase button until 32°C (90°F) is displayed.
2. Check for hot air at discharge air outlets.

If NG, go to trouble diagnosis procedure for insufficient heating (HA-113).
If OK, continue with next check.

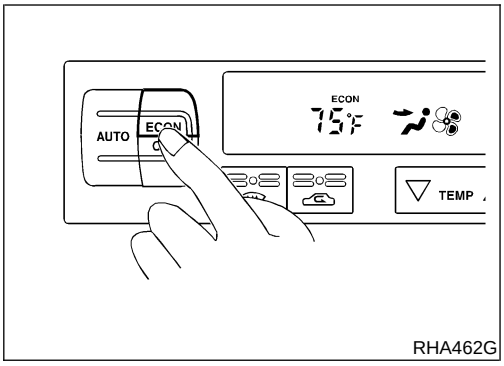

RHA462G

7. Check ECON (Economy) Mode

NAHA0178S0207

1. Set the temperature 75°F or 25°C.
2. Press ECON switch.
3. Display should indicate ECON (not AUTO).
   Confirm that the compressor clutch is not engaged (sound or visual inspection).
   (Discharge air and blower speed will depend on ambient, in-vehicle and set temperatures.)

If NG, go to trouble diagnosis procedure for ECON (Economy) mode (HA-120).
If OK, continue with next check.

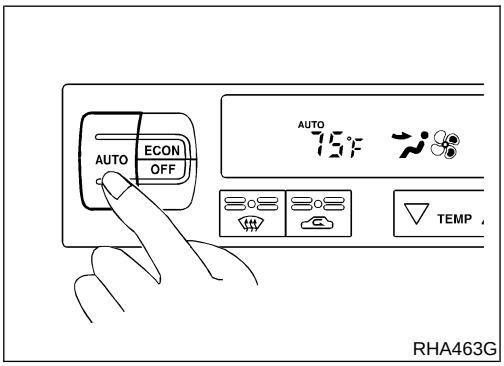

RHA463G

8. Check AUTO Mode

NAHA0178S0208

1. Press AUTO switch.
2. Display should indicate AUTO (no ECON).
   Confirm that the compressor clutch engages (sound or visual inspection).
   (Discharge air and blower speed will depend on ambient, in-vehicle and set temperatures.)

If NG, go to trouble diagnosis procedure for A/C system (HA-65), then if necessary, trouble diagnosis procedure for magnet clutch (HA-97).

If all operational check are OK (symptom can not be duplicated), go to "Incident Simulation Tests" (GI-25) and perform tests as outlined to simulate driving conditions environment. If symptom appears, refer to "Symptom Table" (HA-59) and perform applicable trouble diagnosis procedures.

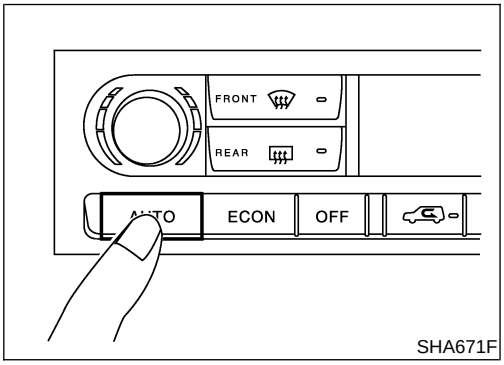

SHA671F

PROCEDURE: (LE GRADE)

NAHA0178S04

1. Check Memory Function

NAHA0178S0401

1. Set the temperature 90°F or 32°C.
2. Press OFF switch.
3. Turn the ignition off.
4. Turn the ignition on.
5. Press the AUTO switch.
6. Confirm that the set temperature remains at previous temperature.
7. Press OFF switch.

If NG, go to trouble diagnosis procedure for memory function (HA-119).
If OK, continue with next check.

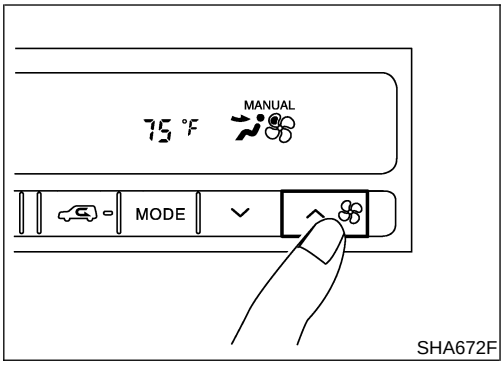

SHA672F

2. Check Blower

NAHA0178S0402

1. Press fan switch (up side) one time.
   Blower should operate on low speed.
   The fan symbol should have one blade lit .
2. Press fan switch (up side) one more time, and continue checking blower speed and fan symbol until all speeds are checked.
3. Leave blower on MAX speed .

If NG, go to trouble diagnosis procedure for blower motor (HA-88).
If OK, continue with next check.

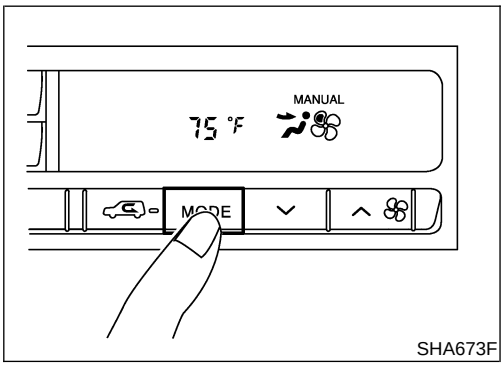

SHA673F

3. Check Discharge Air

NAHA0178S0403

1. Press MODE switch four times and DEF button.
2. Each position indicator should change shape.

Discharge air flow

Mode door position	Air outlet/distribution		
	Face	Foot	Defroster
	100%	–	–
	60%	40%	–
	–	80%	20%
	–	60%	40%
	–	–	100%

RHA654FL

3. Confirm that discharge air comes out according to the air distribution table at left.
   Refer to "Discharge Air Flow" (HA-69).

NOTE:
Confirm that the compressor clutch is engaged (sound or visual inspection) and intake door position is at FRESH when the DEF is selected.

Intake door position is checked in the next step.
If NG, go to trouble diagnosis procedure for mode door motor (HA-69).
If OK, continue with next check.

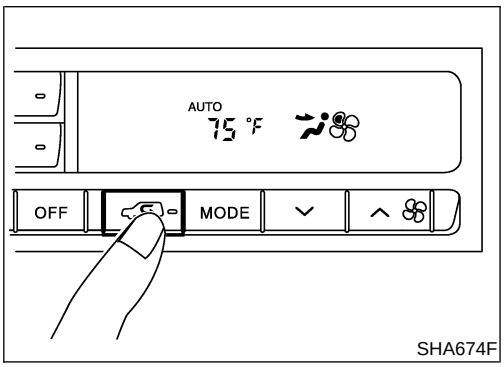

SHA674F

4. Check Recirculation

NAHA0178S0404

1. Press REC switch.
   Recirculation indicator should illuminate.
2. Listen for intake door position change (you should hear blower sound change slightly).

If NG, go to trouble diagnosis procedure for intake door (HA-80).
If OK, continue with next check.

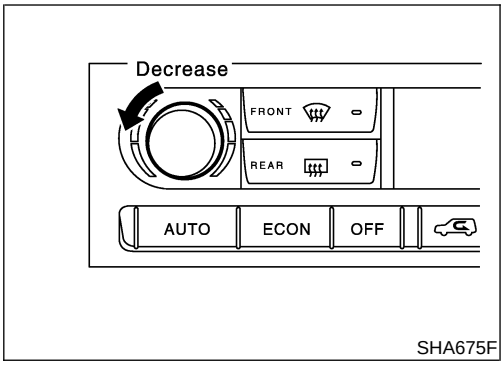

SHA675F

5. Check Temperature Decrease

NAHA0178S0405

1. Turn temperature control dial counterclockwise until 18°C (60°F) is displayed.
2. Check for cold air at discharge air outlets.

If NG, go to trouble diagnosis procedure for insufficient cooling (HA-105).
If OK, continue with next check.

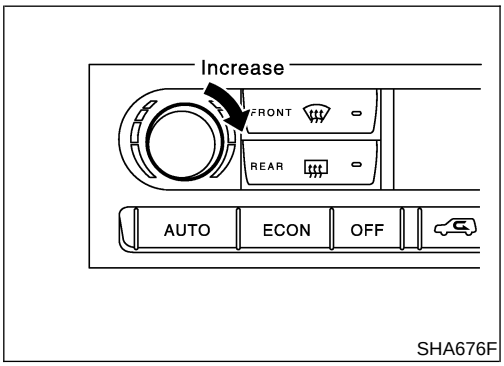

SHA676F

6. Check Temperature Increase

NAHA0178S0406

1. Turn the temperature control dial clockwise until 32°C (90°F) is displayed.
2. Check for hot air at discharge air outlets.

If NG, go to trouble diagnosis procedure for insufficient heating (HA-114).
If OK, continue with next check.

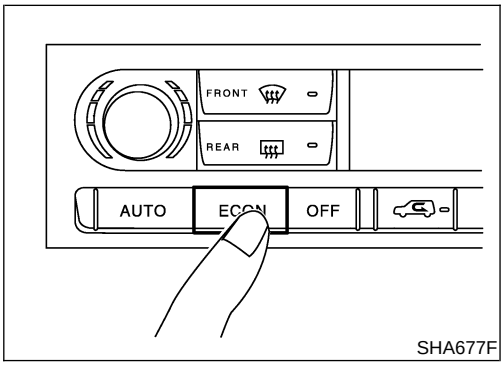

SHA677F

7. Check ECON (Economy) Mode

NAHA0178S0407

1. Set the temperature 75°F or 25°C.
2. Press ECON switch.
3. Display should indicate ECON (not AUTO).
   Confirm that the compressor clutch is not engaged (sound or visual inspection).
   (Discharge air and blower speed will depend on ambient, in-vehicle and set temperatures.)

If NG, go to trouble diagnosis procedure for ECON (Economy) mode (HA-121).
If OK, continue with next check.

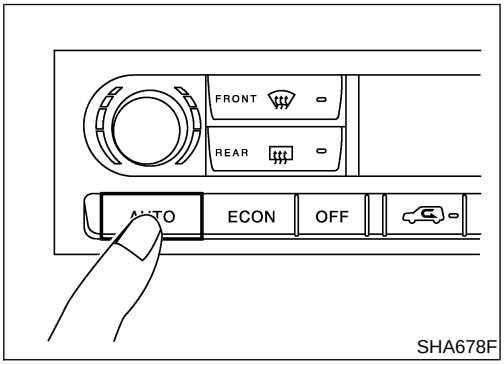

SHA678F

8. Check AUTO Mode

NAHA0178S0408

1. Press AUTO switch.
2. Display should indicate AUTO (not ECON).
   Confirm that the compressor clutch engages (sound or visual inspection).
   (Discharge air and blower speed will depend on ambient, in-vehicle and set temperatures.)

If NG, go to trouble diagnosis procedure for A/C system (HA-65), then if necessary, trouble diagnosis procedure for magnet clutch (HA-98).

If all operational check are OK (symptom can not be duplicated), go to "Incident Simulation Tests" (GI section) and perform tests as outlined to simulate driving conditions environment. If symptom appears, refer to "Symptom Table" (HA-59) and perform applicable trouble diagnosis procedures.

A/C System

TROUBLE DIAGNOSIS PROCEDURE FOR A/C SYSTEM

=NAHA0179

SYMPTOM:

- **A/C system does not come on.**

INSPECTION FLOW

1. Confirm symptom by performing the following operational check.

Except LE grade

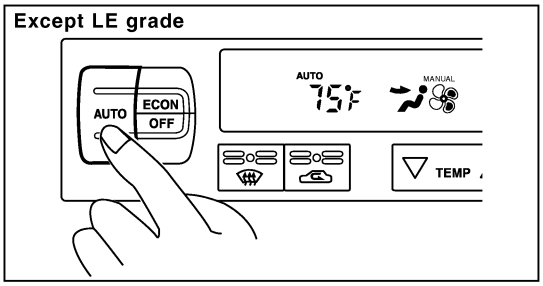

LE grade

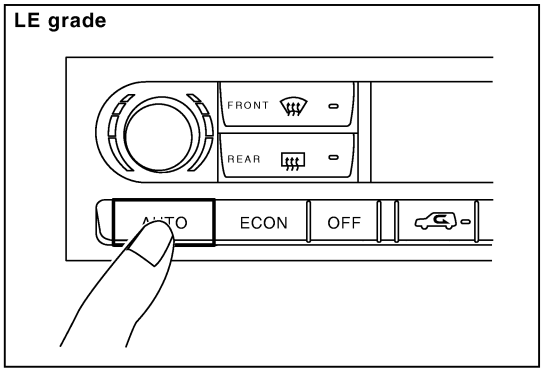

OPERATIONAL CHECK – AUTO mode

a. Press AUTO switch.
b. Display should indicate AUTO (not ECON).
Confirm that the compressor clutch engages (sound or visual inspection).
(Discharge air and blower speed will depend on ambient, in-vehicle and set temperatures.)

If OK (symptom cannot be duplicated), perform complete operational check (*2).
If NG (symptom is confirmed), continue with STEP-2 following.

2. Check for any service bulletins.

3. Check Main Power Supply and Ground Circuit. (*1)

4. Replace auto amp.

SHA924F

*1: HA-66

*2: HA-60

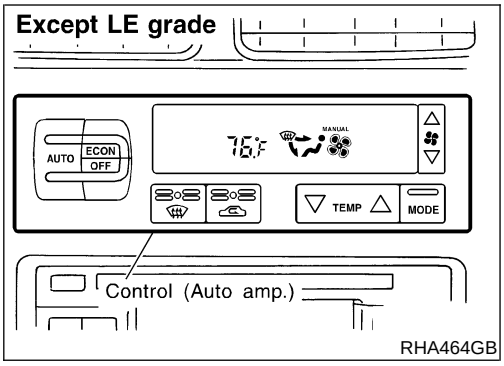

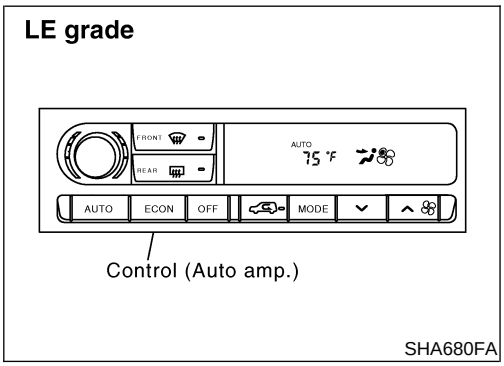

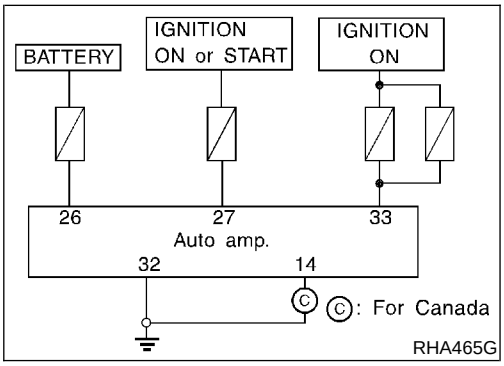

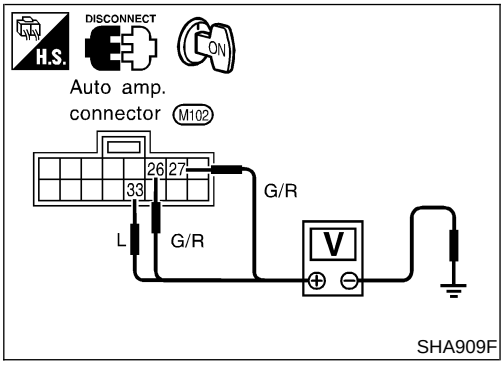

MAIN POWER SUPPLY AND GROUND CIRCUIT CHECK

NAHA0180

Component Description

NAHA0180S01

Automatic Amplifier (Auto Amp.)

NAHA0180S0101

The auto amplifier has a built-in microcomputer which processes information sent from various sensors needed for air conditioner operation. The air mix door motor, mode door motor, intake door motor, blower motor and compressor are then controlled.

The auto amplifier is unitized with control mechanisms. Signals from various switches and Potentio Temperature Control (PTC) are directly entered into auto amplifier.

Self-diagnostic functions are also built into auto amplifier to provide quick check of malfunctions in the auto air conditioner system.

Potentio Temperature Control (PTC)

NAHA0180S0102

The PTC is built into the A/C auto amp. It can be set at an interval of 0.5°C (1.0°F) in the 18°C (60°F) to 32°C (90°F) temperature range by pushing the temperature button. The set temperature is digitally displayed.

DIAGNOSTIC PROCEDURE

NAHA0181

SYMPTOM:

- **A/C system does not come on.**

Auto Amp. Check

NAHA0181S01

Check power supply circuit for auto amp. with ignition switch ON. Measure voltage across terminal Nos. 26, 27, 33 and ground.

Voltmeter terminal		Voltage
(+)	(−)	
26	Ground	Battery voltage
27		
33		

If OK, check auto amp.

- If NG, check 7.5A fuses [Nos. 11 and 24, located in the fuse block — junction box (J/B)] and 15A fuses [Nos. 1 and 2, located in the fuse block — junction box (J/B)].
- If fuses are OK, check for open circuit in wiring harness. Repair or replace as necessary.
- If fuses are NG, replace fuse and check wiring harness for short circuit. Repair or replace as necessary.

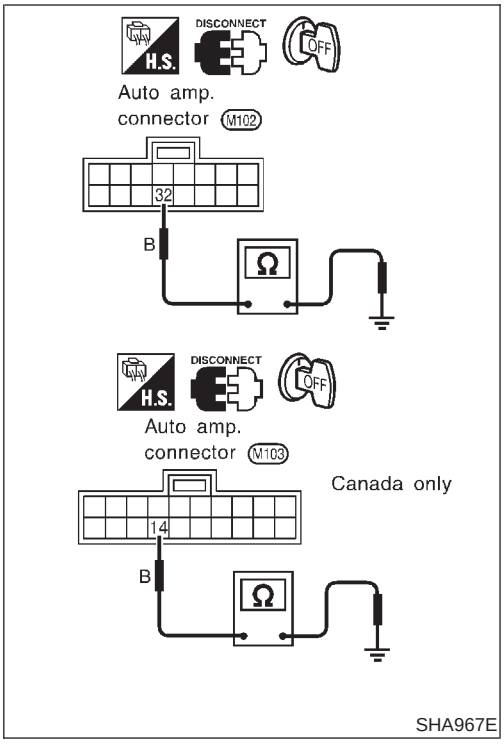

Check ground circuit for auto amp. with ignition switch OFF.
Check for continuity between auto amp. harness connector M102, M103 terminal Nos. 32, 14 and ground.

Ohmmeter terminal		Continuity
(+)	(−)	
32	Ground	Yes
14 (Canada only)		

NOTE:
If OK, replace auto amp.
If NG, repair or replace harness.

Mode Door Motor

TROUBLE DIAGNOSIS PROCEDURE FOR MODE DOOR MOTOR (LAN)

=NAHA0182

SYMPTOM:

- **Air outlet does not change.**
- **Mode door motor does not operate normally.**

Inspection Flow

NAHA0182S01

Except LE Grade

NAHA0182S0101

1. Confirm symptom by performing the following operational check.

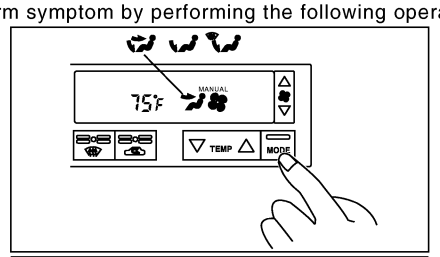

OPERATIONAL CHECK – Discharge air

a. Press mode switch four times and DEF button.
b. Each position indicator should change shape.

Discharge air flow

Mode door position	Air outlet/distribution		
	Face	Foot	Defroster
	100%	–	–
	60%	40%	–
	–	80%	20%
	–	60%	40%
	–	–	100%

c. Confirm that discharge air comes out according to the air distribution table at left.
Refer to “Discharge Air Flow” (*1).

NOTE:

- **If OK (symptom cannot be duplicated), perform complete operational check (*2).**
  If NG (symptom is confirmed), continue with STEP-2 following.
- **Confirm that the compressor clutch is engaged (sound or visual inspection) and intake door position is at FRESH when DEF is selected.**
  Intake door position is checked in the next step.

2. Check for any service bulletins. → 3. Perform self-diagnosis STEP-1. (*3)
4. Perform self-diagnosis STEP-2. (*4)
   - OK → 3.
   - NG → Go to appropriate malfunctioning sensor circuit. (*9)
   - OK ↓
5. Perform self-diagnosis STEP-3. (*4)
   - NG → Go to DIAGNOSTIC PROCEDURE FOR MODE DOOR MOTOR AND AIR MIX DOOR MOTOR CIRCUIT. (*10)
   - OK ↓
6. Perform self-diagnosis STEP-4. (*4)
   - NG → Check mode door control linkage. (*11)
     - NG → Repair or adjust control linkage.
   - OK **[Cause cannot be confirmed by self-diagnosis.]** ↓
7. Check ambient sensor circuit. (*5) ↓ OK
8. Check in-vehicle sensor circuit. (*6) ↓ OK
9. Check sunload sensor circuit. (*7) ↓ OK
10. Check intake sensor circuit. (*14) ↓ OK
11. Check air mix door motor PBR circuit. (*8)
    - OK → If the symptom still exists, perform a complete operational check (*12) and check for other symptoms.
      [Refer to symptom table, (*13).]
      Does another symptom exist?
      - Yes → Go to Trouble Diagnosis for related symptoms. **[Another symptom exists.]**
      - No → Replace auto amp. → INSPECTION END

SHA917FA

*1: HA-27
*2: HA-60
*3: HA-39
*4: HA-40
*5: HA-121
*6: HA-124
*7: HA-128
*8: HA-133
*9: STEP-BY-STEP PROCEDURE (HA-40), see No. 13.
*10: HA-71
*11: HA-74
*12: HA-60
*13: HA-59
*14: HA-131

LE Grade

NAHA0182S0103

1. Confirm symptom by performing the following operational check.

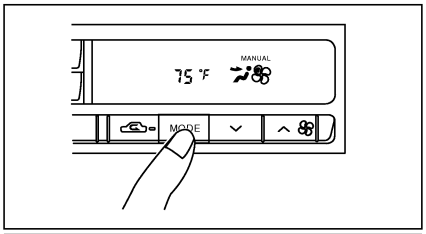

OPERATIONAL CHECK – Discharge air

a. Press mode switch four times and DEF button.
b. Each position indicator should change shape.

Discharge air flow

Mode door position	Air outlet/distribution		
	Face	Foot	Defroster
	100%	–	–
	60%	40%	–
	–	80%	20%
	–	60%	40%
	–	–	100%

c. Confirm that discharge air comes out according to the air distribution table at left.
Refer to "Discharge Air Flow" (*1).

NOTE:
- **If OK (symptom cannot be duplicated), perform complete operational check (*2).**
  If NG (symptom is confirmed), continue with STEP-2 following.
- **Confirm that the compressor clutch is engaged (sound or visual inspection) and intake door position is at FRESH when DEF is selected.**
  Intake door position is checked in the next step.

2. Check for any service bulletins. → 3. Perform self-diagnosis STEP-1. (*3)
4. Perform self-diagnosis STEP-2. (*4) — OK → 3. Perform self-diagnosis STEP-1. (*3); NG → Go to appropriate malfunctioning sensor circuit. (*9)
OK
5. Perform self-diagnosis STEP-3. (*4) — NG → Go to DIAGNOSTIC PROCEDURE FOR MODE DOOR MOTOR AND AIR MIX DOOR MOTOR CIRCUIT. (*10)
OK
6. Perform self-diagnosis STEP-4. (*4) — NG → Check mode door control linkage. (*11) — NG → Repair or adjust control linkage.
OK **[Cause cannot be confirmed by self-diagnosis.]**
7. Check ambient sensor circuit. (*5)
OK
8. Check in-vehicle sensor circuit. (*6)
OK
9. Check sunload sensor circuit. (*7)
OK
10. Check intake sensor circuit. (*14)
OK
11. Check air mix door motor PBR circuit. (*8) — OK → If the symptom still exists, perform a complete operational check (*12) and check for other symptoms. [Refer to symptom table, (*13).] Does another symptom exist?
- Yes → Go to Trouble Diagnosis for related symptoms. **[Another symptom exists.]**
- No → Replace auto amp. → INSPECTION END

RHA152IB

*1: HA-27
*2: HA-62
*3: HA-50
*4: HA-50
*5: HA-121
*6: HA-124
*7: HA-128
*8: HA-133
*9: STEP-BY-STEP PROCEDURE (HA-50), see No. 13.
*10: HA-71
*11: HA-74
*12: HA-62
*13: HA-59
*14: HA-131

SYSTEM DESCRIPTION

=NAHA0183

Component Parts

NAHA0183S01

Mode door control system components are:

1) Auto amp.
2) Mode door motor (LCU)
3) In-vehicle sensor
4) Ambient sensor
5) Sunload sensor
6) Intake sensor

System Operation

NAHA0183S02

The auto amplifier receives data from each of the sensors. The amplifier sends mode door and air mix door opening angle data to the mode door motor LCU and air mix door motor LCU.
The mode door motor and air mix door motor read their respective signals according to the address signal. Opening angle indication signals received from the auto amplifier and each of the motor position sensors are compared by the LCUs in each motor with the existing decision and opening angles. Subsequently, HOT/COLD or DEFROST/VENT operation is selected. The new selection data is returned to the auto amplifier.

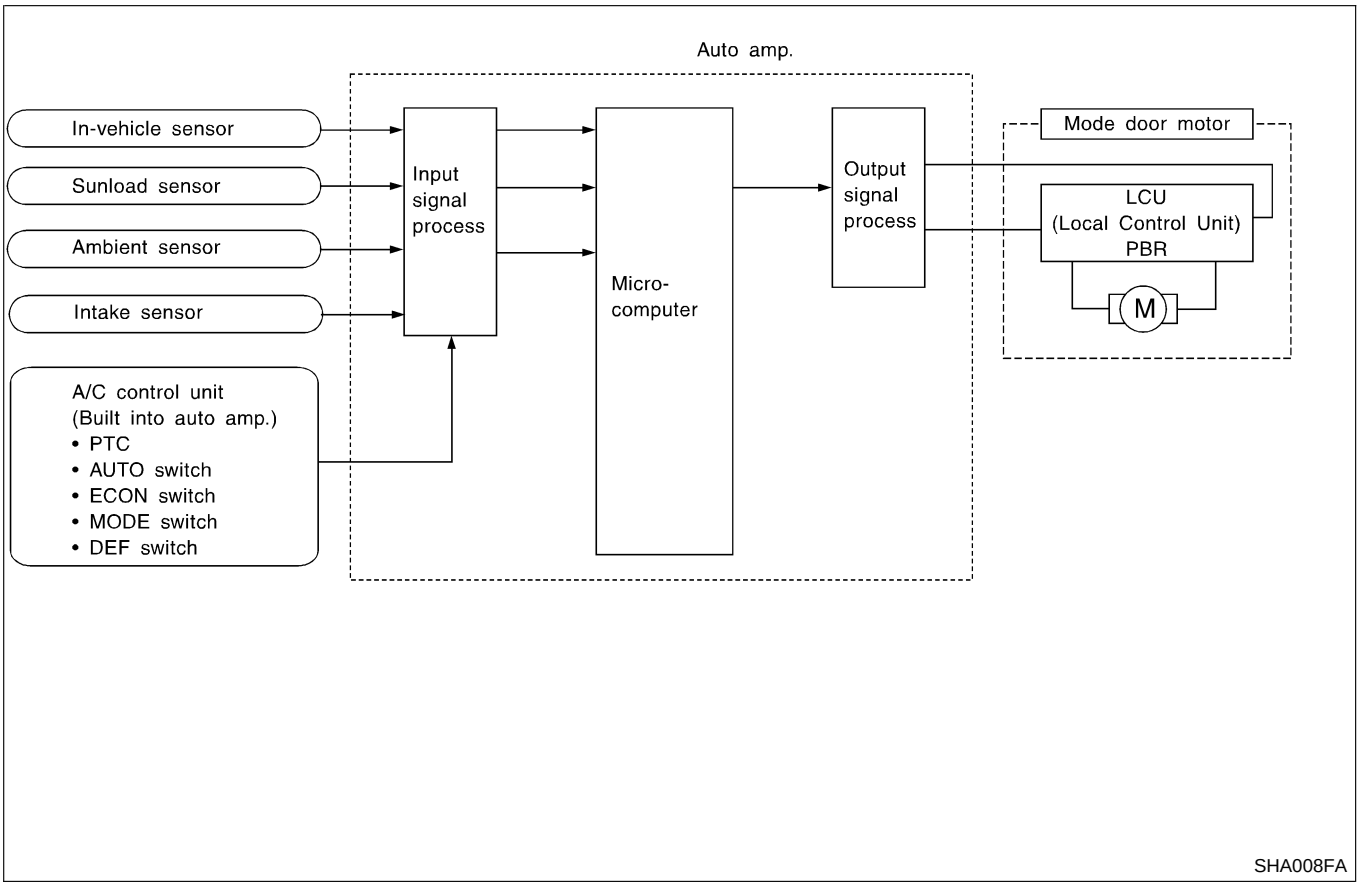

Mode Door Control Specification

NAHA0183S03

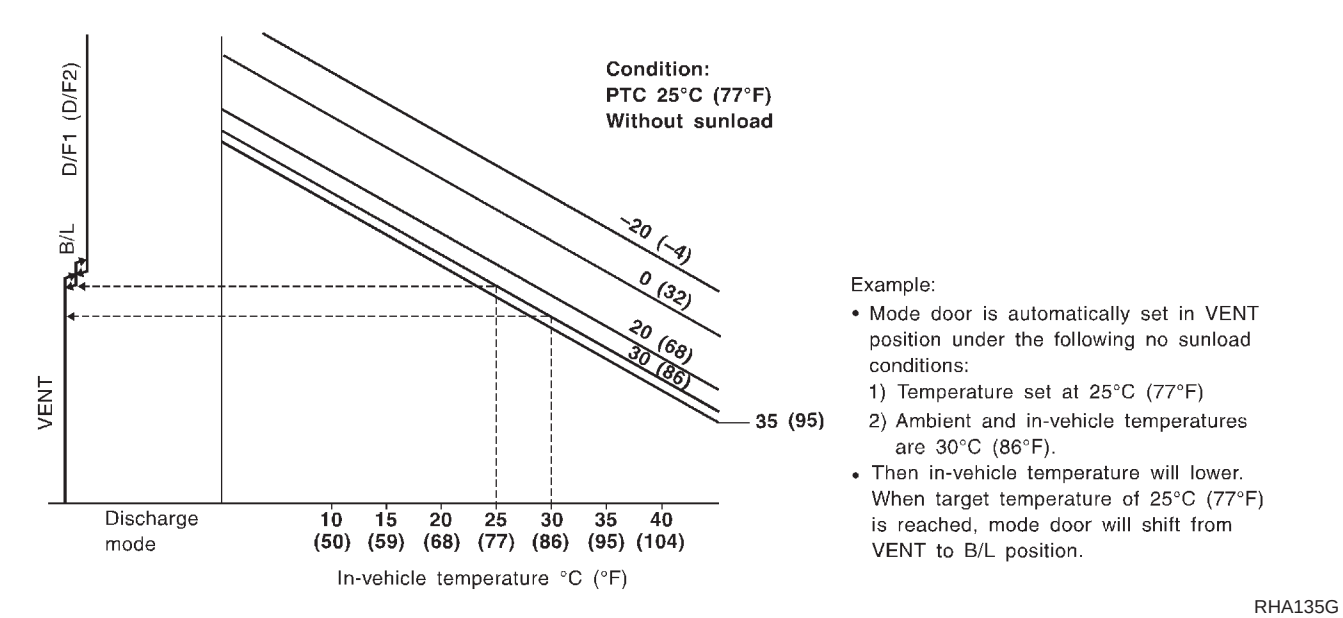

RHA135G

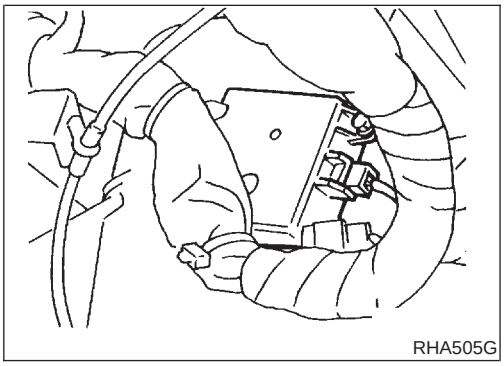

RHA505G

COMPONENT DESCRIPTION

NAHA0184

The mode door motor is attached to the heater unit. It rotates so that air is discharged from the outlet set by the auto amplifier. Motor rotation is conveyed to a link which activates the mode door.

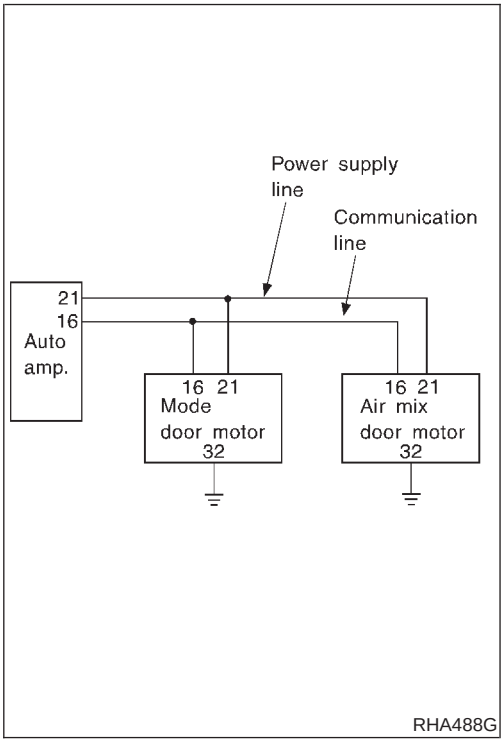

RHA488G

DIAGNOSTIC PROCEDURE FOR MODE DOOR MOTOR AND AIR MIX DOOR MOTOR CIRCUIT

NAHA0185

SYMPTOM: Mode door motor and/or air mix door motor does not operate normally.

1	CHECK POWER SUPPLY FOR AUTO AMP. (LCU) SIDE

Do approx. 12 volts exist between auto amp. (LCU) harness connector M102 terminal No. 21 and ground?

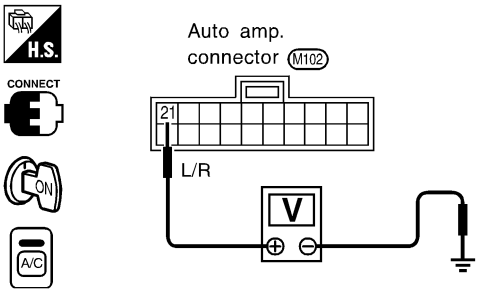

SHA910F

NOTE:
If the result is NG or No after checking circuit continuity, repair harness or connector.

Yes or No

Yes	▶	GO TO 2.
No	▶	Replace auto amp. (LCU).

2	CHECK SIGNAL FOR AUTO AMP. (LCU) SIDE

Do approx. 5.5 volts exist between auto amp. (LCU) harness connector M103 terminal No. 16 and ground?

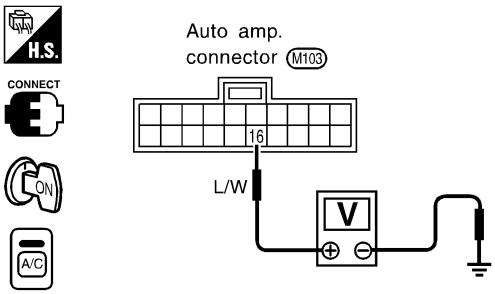

SHA911F

NOTE:
If the result is NG or No after checking circuit continuity, repair harness or connector.

Yes or No

Yes	▶	GO TO 3.
No	▶	Replace auto amp. (LCU).

3	CHECK POWER SUPPLY FOR MOTOR SIDE

Do approx. 12 volts exist between door motor (LCU) harness connector M38 or M55 terminal No. 21 and ground?

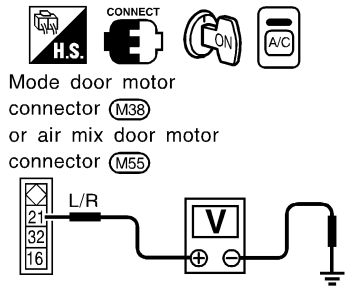

RHA489GC

Yes or No

Yes	▶	GO TO 4.
No	▶	Repair harness or connector.

4	CHECK SIGNAL FOR MOTOR SIDE

Do approx. 5.5 volts exist between door motor (LCU) harness connector M38 or M55 terminal No. 16 and ground?

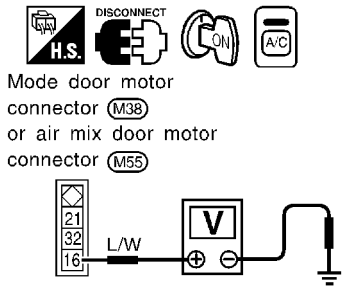

RHA490G

Yes or No

Yes	▶	GO TO 5.
No	▶	Repair harness or connector.

5	CHECK MOTOR GROUND CIRCUIT

Does continuity exist between door motor (LCU) harness connector M38 or M55 terminal No. 32 and ground?

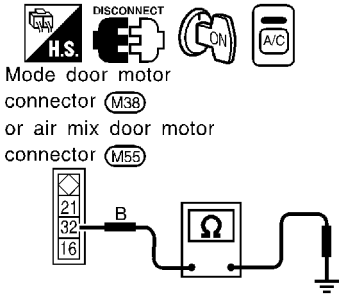

RHA491G

Yes or No

Yes	▶	GO TO 6.
No	▶	Repair harness or connector.

6	CHECK MOTOR OPERATION	
Disconnect and reconnect the motor connector and confirm the motor operation.		
OK or NG		
OK (Return to operate normally)	▶	Poor contacting the motor connector
NG (Does not operate normally)	▶	GO TO 7.

7	CHECK MODE DOOR MOTOR OPERATION	
1. Disconnect the mode door motor and air mix door motor connector. 2. Reconnect the mode door motor and confirm the motor operation.		
OK or NG		
OK (Mode door motor operates normally)	▶	Replace the air mix door motor.
NG (Mode door motor does not operate normally)	▶	GO TO 8.

8	CHECK AIR MIX DOOR MOTOR OPERATION	
1. Disconnect the mode door motor connector. 2. Reconnect the air mix door motor and confirm the air mix door motor operation.		
OK or NG		
OK (Air mix door motor operates normally)	▶	Replace mode door motor.
NG (Air mix door motor does not operate normally)	▶	Replace auto amp.

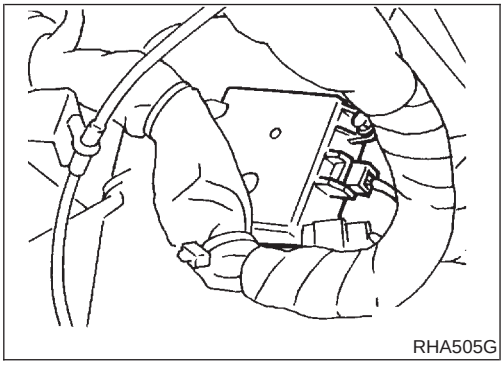
RHA505G

CONTROL LINKAGE ADJUSTMENT

NAHA0186

Mode Door

NAHA0186S01

1. Install mode door motor on heater unit and connect it to main harness.
2. Set up code No. in Self-diagnosis STEP 4. Refer to HA-40 (Except LE grade), HA-50 (LE grade).
3. Move side link by hand and hold mode door in DEF mode.
4. Attach mode door motor rod to side link rod holder.
5. Make sure mode door operates properly when changing from code No. 41 to 46 by pushing DEF switch.

41	42	43	44	45	46
VENT	B/L	B/L	FOOT	D/F	DEF

Air Mix Door Motor

TROUBLE DIAGNOSIS PROCEDURE FOR AIR MIX DOOR (LAN)

=NAHA0187

SYMPTOM:

- **Discharge air temperature does not change.**
- **Air mix door motor does not operate.**

Inspection Flow

NAHA0187S01

Except LE Grade

NAHA0187S0101

1. Confirm symptom by performing the following operational check.

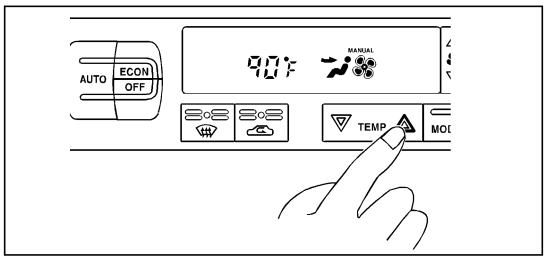

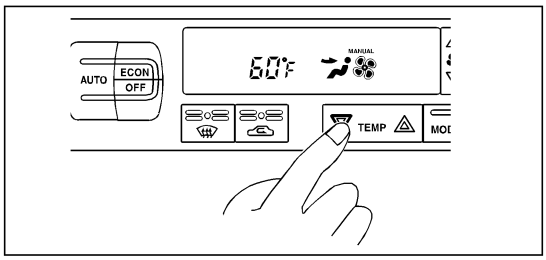

OPERATIONAL CHECK

Temperature increase

a. Press the temperature increase button until 32°C (90°F) is displayed.
b. Check for hot air at discharge air outlets.

Temperature decrease

a. Press the temperature decrease button until 18°C (60°F) is displayed.
b. Check for cold air at discharge air outlets.

If OK (symptom cannot be duplicated), perform complete operational check (*10).
If NG (symptom is confirmed), continue with STEP-2 following.

2. Check for any service bulletins. → 3. Perform self-diagnosis STEP-1. (*1)

OK

4. Perform self-diagnosis STEP-2. (*15) — NG → Go to appropriate malfunctioning sensor circuit. (*6)

OK

5. Perform self-diagnosis STEP-4. (*15) — NG → Check air mix door control linkage. (*8)

OK **[Cause cannot be confirmed by self-diagnosis.]**

Check air mix door control linkage. (*8) — OK → Go to DIAGNOSTIC PROCEDURE FOR MODE DOOR MOTOR AND AIR MIX DOOR MOTOR CIRCUIT. (*7)

Check air mix door control linkage. (*8) — NG → Repair or adjust control linkage. (*9)

6. Check ambient sensor circuit. (*2)

OK

7. Check in-vehicle sensor circuit. (*3)

OK

8. Check sunload sensor circuit. (*4)

OK

9. Check intake sensor circuit. (*14)

OK

10. Check air mix door motor PBR circuit. (*5)

OK

If the symptom still exists, perform a complete operational check (*12) and check for other symptoms. [Refer to symptom table, (*13).] Does another symptom exist?

Yes → Go to Trouble Diagnosis for related symptom.

Another symptom exists.

No → Replace auto amp. → INSPECTION END

RHA239I

*1: HA-39
*2: HA-121
*3: HA-124
*4: HA-128
*5: HA-133
*6: STEP-BY-STEP PROCEDURE (HA-40), see No. 13.
*7: HA-71
*8: HA-78
*9: HA-78
*10: HA-60
*12: HA-60
*13: HA-59
*14: HA-131
*15: HA-40

LE Grade

NAHA0187S0103

1. Confirm symptom by performing the following operational check.

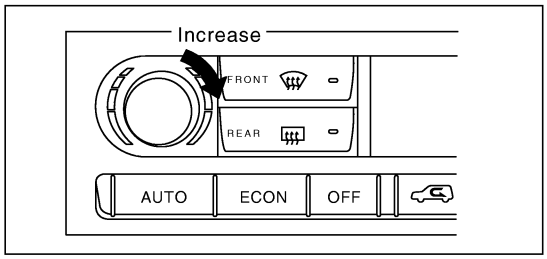

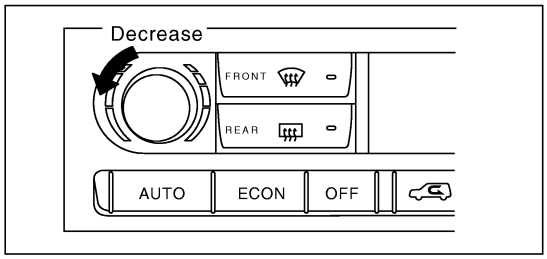

OPERATIONAL CHECK

Temperature increase

a. Turn the temperature dial clockwise until 32˚C (90˚F) is displayed.
b. Check for hot air at discharge air outlets.

Temperature decrease

a. Turn the temperature dial counterclockwise until 18˚C (60˚F) is displayed.
b. Check for cold air at discharge air outlets.

If OK (symptom cannot be duplicated), perform complete operational check (*10).
If NG (symptom is confirmed), continue with STEP-2 following.

2. Check for any service bulletins. → 3. Perform self-diagnosis STEP-1. (*1)

OK

4. Perform self-diagnosis STEP-2. (*15) — NG → Go to appropriate malfunctioning sensor circuit. (*6)

OK

5. Perform self-diagnosis STEP-4. (*15) — NG → Go to DIAGNOSTIC PROCEDURE FOR MODE DOOR MOTOR AND AIR MIX DOOR MOTOR CIRCUIT. (*7) → OK → Check air mix door control linkage. (*8) — NG → Repair or adjust control linkage. (*9)

OK **[Cause cannot be confirmed by self-diagnosis.]**

6. Check ambient sensor circuit. (*2)

OK

7. Check in-vehicle sensor circuit. (*3)

OK

8. Check sunload sensor circuit. (*4)

OK

9. Check intake sensor circuit. (*14)

OK

10. Check air mix door motor PBR circuit. (*5)

OK

If the symptom still exists, perform a complete operational check (*12) and check for other symptoms. [Refer to symptom table, (*13).] Does another symptom exist? — Yes → Go to Trouble Diagnosis for related symptom.

Another symptom exists.

No → Replace auto amp. → INSPECTION END

SHA925F

*1: HA-50
*2: HA-121
*3: HA-124
*4: HA-128
*5: HA-133
*6: STEP-BY-STEP PROCEDURE (HA-50), see No. 13.
*7: HA-71
*8: HA-78
*9: HA-78
*10: HA-62
*12: HA-62
*13: HA-59
*14: HA-131
*15: HA-50

SYSTEM DESCRIPTION

=NAHA0188

Component Parts

NAHA0188S01

Air mix door control system components are:

1) Auto amp.
2) Air mix door motor (LCU)
3) In-vehicle sensor
4) Ambient sensor
5) Sunload sensor
6) Intake sensor

System Operation

NAHA0188S02

The auto amplifier receives data from each of the sensors. The amplifier sends air mix door and mode door opening angle data to the air mix door motor LCU and mode door motor LCU.
The air mix door motor and mode door motor read their respective signals according to the address signal. Opening angle indication signals received from the auto amplifier and each of the motor position sensors are compared by the LCUs in each motor with the existing decision and opening angles. Subsequently, HOT/COLD or DEFROST/VENT operation is selected. The new selection data is returned to the auto amplifier.

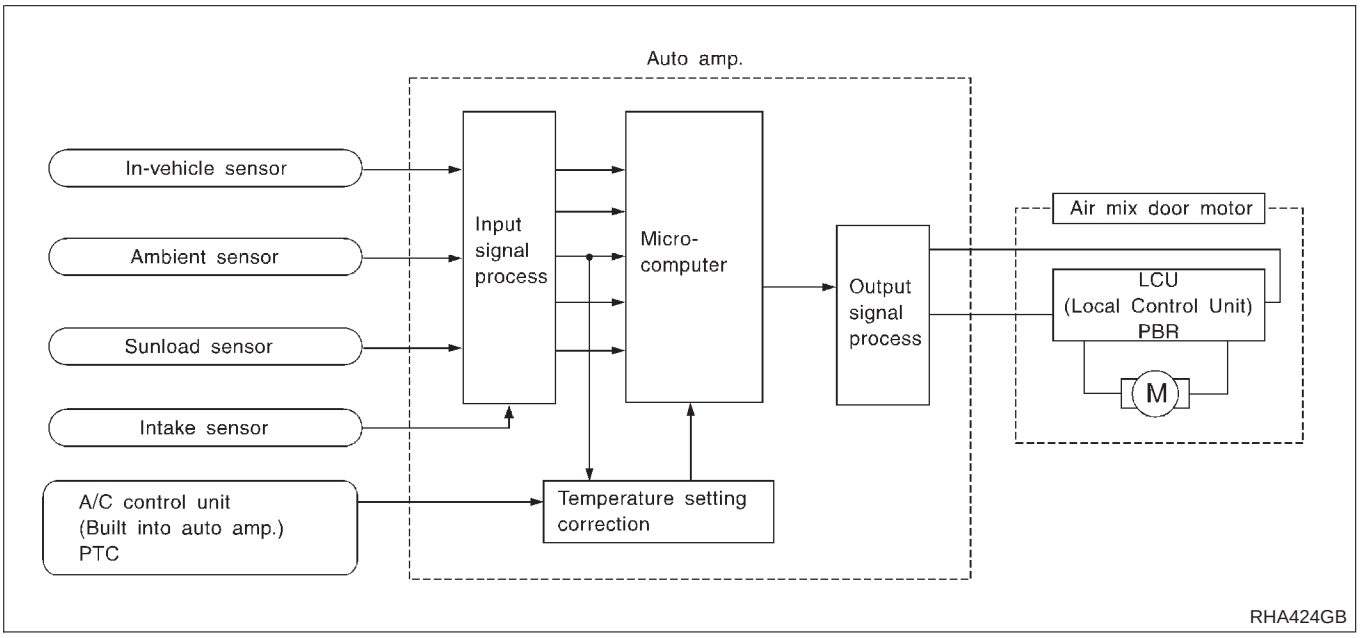

Air Mix Door Control Specification

NAHA0188S03

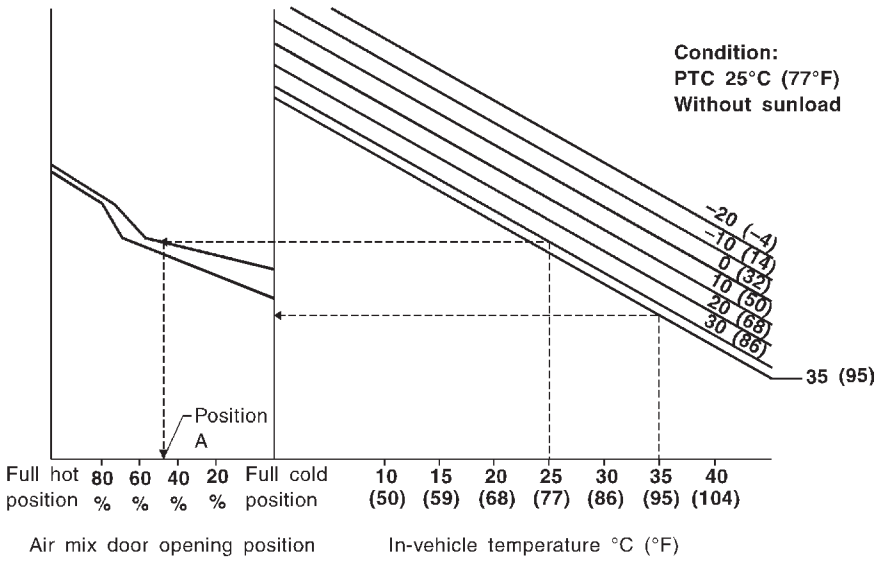

Example:
- Air mix door is initially automatically set in full cold position under the following no sunload conditions:
  1) Temperature set at 25°C (77°F)
  2) Ambient and in-vehicle temperatures are 35°C (95°F).
- Within some period, in-vehicle temperature will lower towards the objective temperature, and the air mix door position will shift gradually towards the cold side and finally stay in this position (A).

Air mix door opening position is always fed back to auto amp. by PBR built-in air mix door.

RHA137G

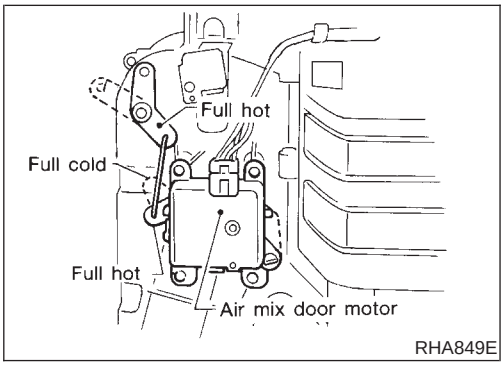

RHA849E

COMPONENT DESCRIPTION

NAHA0189

The air mix door motor is attached to the heater unit. It rotates so that the air mix door is opened or closed to a position set by the auto amplifier. Motor rotation is then conveyed through a shaft and the air mix door position is then fed back to the auto amplifier by PBR built-in air mix door motor.

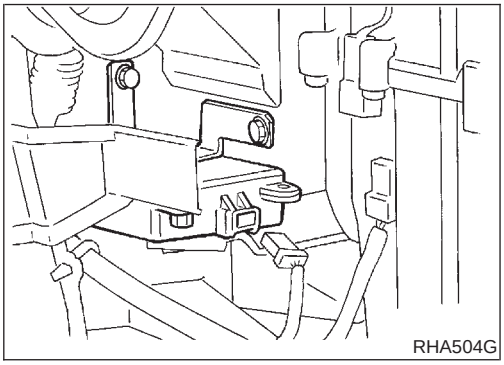

RHA504G

CONTROL LINKAGE ADJUSTMENT

NAHA0190

Air Mix Door

NAHA0190S01

1. Install air mix door motor on heater unit and connect it to main harness.
2. Set up code No. 41 in Self-diagnosis STEP 4. Refer to HA-39 (Except LE grade), HA-50 (LE grade).
3. Move air mix door lever by hand and hold it in full cold position.
4. Attach air mix door lever to rod holder.
5. Make sure air mix door operates properly when changing from code No. 41 to 46 by pushing DEF switch.

41	42	43	44	45	46
Full cold		Full hot			

Intake Door Motor

TROUBLE DIAGNOSIS PROCEDURE FOR INTAKE DOOR

=NAHA0191

SYMPTOM:

- **Intake door does not change.**
- **Intake door motor does not operate normally.**

Inspection Flow

NAHA0191S01

Except LE Grade

NAHA0191S0101

1. Confirm symptom by performing the following operational check.

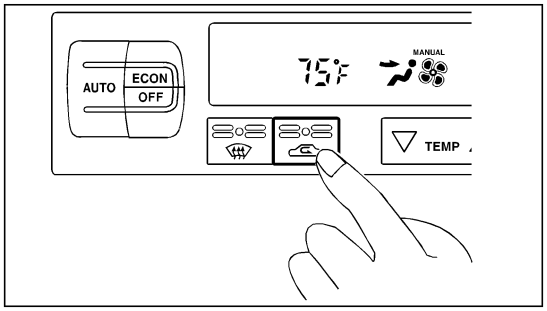

OPERATIONAL CHECK – Recirculation

a. Press REC switch.
Recirculation indicator should illuminate.
b. Listen for intake door position change (you should hear blower sound change slightly).

If OK (symptom cannot be duplicated), perform complete operational check (*9).
If NG (symptom is confirmed), continue with STEP-2 following.

2. Check for any service bulletins.

3. Perform self-diagnosis STEP-1. (*1)

OK

4. Perform self-diagnosis STEP-2. (*10)

NG → Go to appropriate malfunctioning sensor circuit. (*6)

OK

5. Perform self-diagnosis STEP-4. (*10)

NG → Check intake door control linkage. (*8)

NG → Repair or adjust control linkage.

OK → Go to Intake Door Motor Circuit. (*7)

OK

[Cause cannot be confirmed by self-diagnosis.]

6. Check ambient sensor circuit. (*2)

OK

7. Check in-vehicle sensor circuit. (*3)

OK

8. Check sunload sensor circuit. (*4)

OK

9. Check intake sensor circuit. (*13)

OK

10. Check air mix door motor PBR circuit. (*5)

OK

If the symptom still exists, perform a complete operational check (*11) and check for other symptoms. [Refer to symptom table, (*12).] Does another symptom exist?

No → Replace auto amp. → INSPECTION END

Yes → Follow the instruction in the "system table".

Another symptom exists.

SHA247F

*1: HA-39
*2: HA-121
*3: HA-124
*4: HA-128
*5: HA-133
*6: STEP-BY-STEP PROCEDURE (HA-40), see No. 13.
*7: HA-82
*8: HA-86
*9: HA-60
*10: HA-40
*11: HA-60
*12: HA-59
*13: HA-131

LE Grade

NAHA0191S0103

1. Confirm symptom by performing the following operational check.

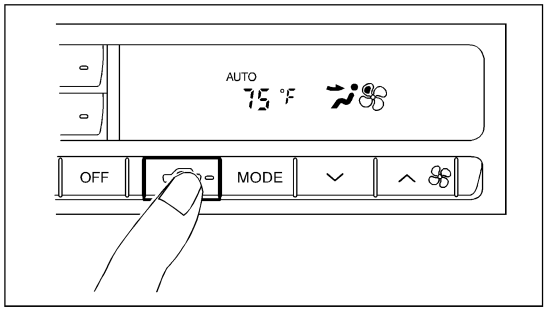

OPERATIONAL CHECK – Recirculation

a. Press REC switch.
Recirculation indicator should illuminate.
b. Listen for intake door position change (you should hear blower sound change slightly).

If OK (symptom cannot be duplicated), perform complete operational check (*9).
If NG (symptom is confirmed), continue with STEP-2 following.

2. Check for any service bulletins.

3. Perform self-diagnosis STEP-1. (*1)

OK

4. Perform self-diagnosis STEP-2. (*10)

NG → Go to appropriate malfunctioning sensor circuit. (*6)

OK

5. Perform self-diagnosis STEP-4. (*10)

NG → Check intake door control linkage. (*8)

NG → Repair or adjust control linkage.

OK → Go to Intake Door Motor Circuit. (*7)

OK

[Cause cannot be confirmed by self-diagnosis.]

6. Check ambient sensor circuit. (*2)

OK

7. Check in-vehicle sensor circuit. (*3)

OK

8. Check sunload sensor circuit. (*4)

OK

9. Check intake sensor circuit. (*13)

OK

10. Check air mix door motor PBR circuit. (*5)

OK

If the symptom still exists, perform a complete operational check (*11) and check for other symptoms. [Refer to symptom table, (*12).] Does another symptom exist?

No → Replace auto amp. → INSPECTION END

Yes → Follow the instruction in the "system table".

Another symptom exists.

RHA154I

*1: HA-50
*2: HA-121
*3: HA-124
*4: HA-128
*5: HA-133
*6: STEP-BY-STEP PROCEDURE (HA-50), see No. 13.
*7: HA-82
*8: HA-86
*9: HA-62
*10: HA-50
*11: HA-62
*12: HA-59
*13: HA-131

SYSTEM DESCRIPTION

=NAHA0192

Component Parts

NAHA0192S01

Intake door control system components are:

1) Auto amp.
2) Intake door motor
3) A/C LAN system (PBR built-in mode motor and air mix door motor)
4) In-vehicle sensor
5) Ambient sensor
6) Sunload sensor
7) Intake sensor

System Operation

NAHA0192S02

The intake door control determines intake door position based on the ambient temperature, the intake air temperature and the in-vehicle temperature. When the ECON, DEFROST, or OFF switches are pushed, the auto amplifier sets the intake door at the "Fresh" position.

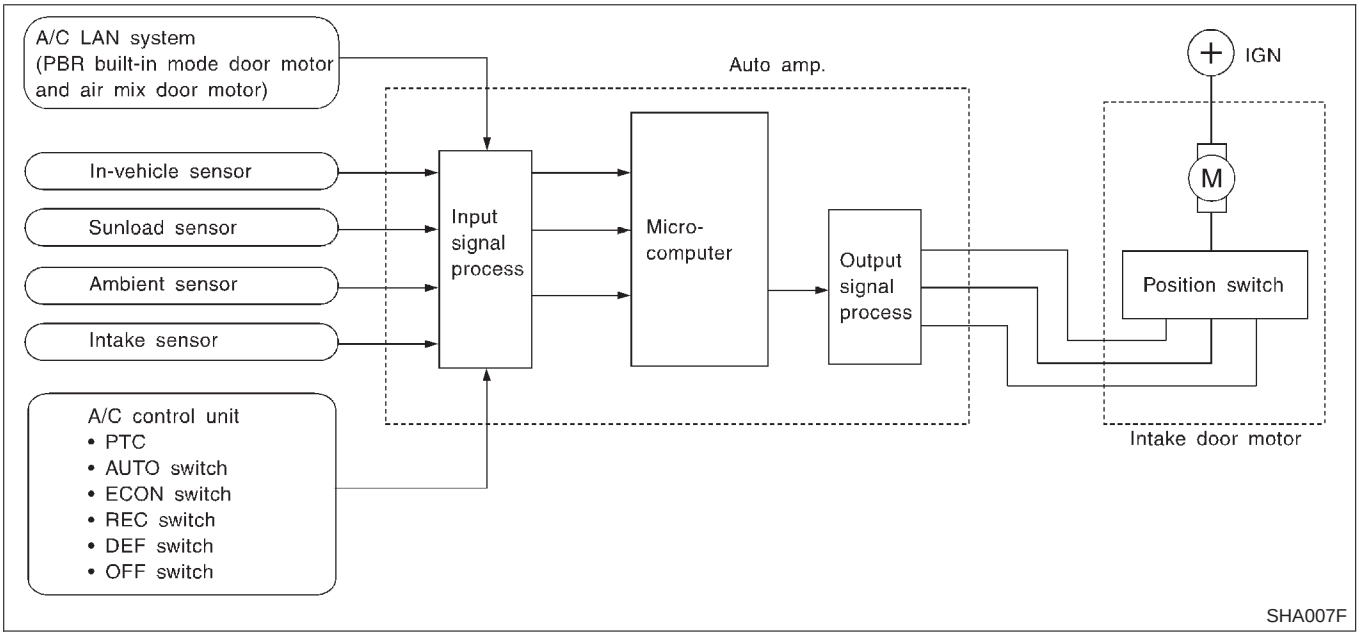

Intake Door Control Specification

NAHA0192S03

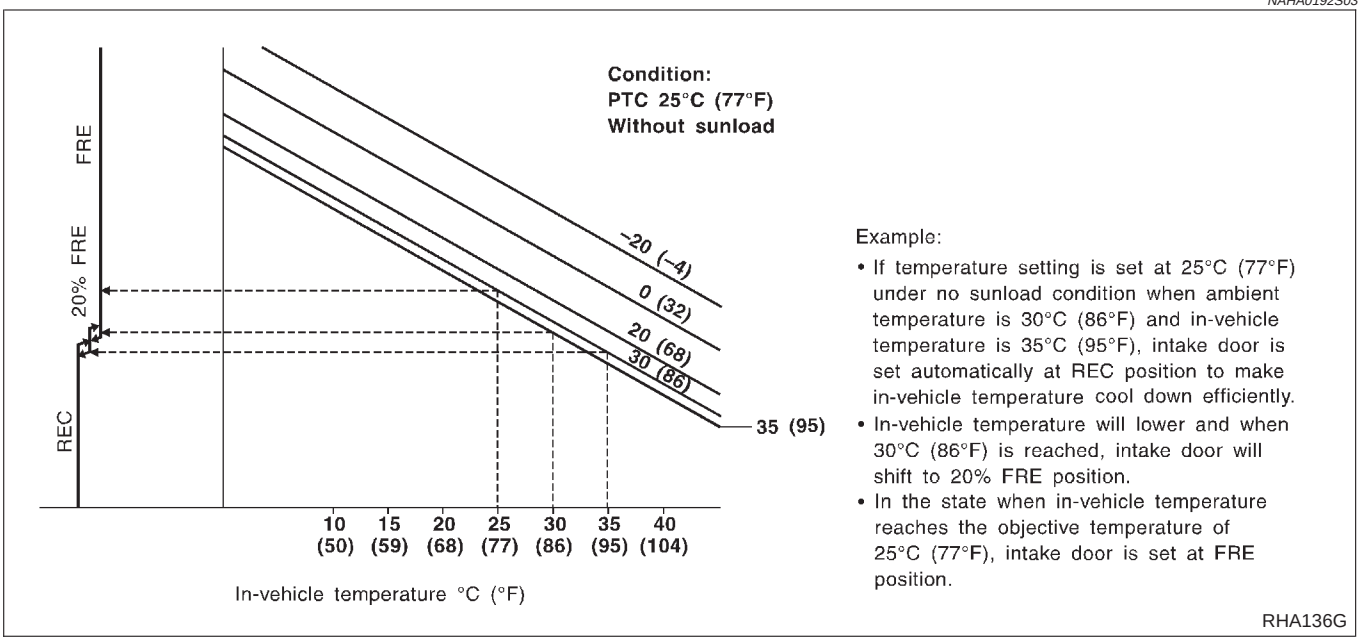

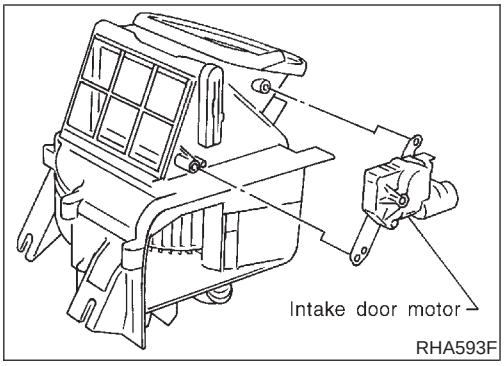

COMPONENT DESCRIPTION

NAHA0193

The intake door motor is attached to the intake unit. It rotates so that air is drawn from inlets set by the auto amplifier. Motor rotation is conveyed to a lever which activates the intake door.

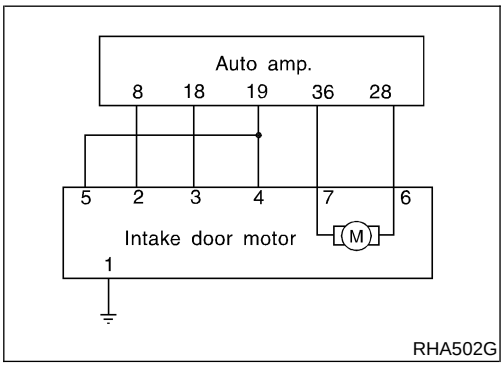

DIAGNOSTIC PROCEDURE

NAHA0194

SYMPTOM: Intake door motor does not operate normally.

1	CHECK BODY GROUND CIRCUIT FOR INTAKE DOOR MOTOR	
Does continuity exist between intake door harness connector M59 terminal No. 1 and ground?		
Yes or No		
Yes	▶	GO TO 2.
No	▶	Repair harness or connector.

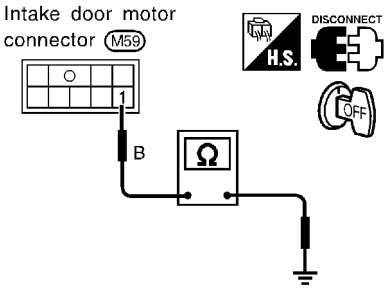

2	CHECK FOR AUTO AMP. OUTPUT

Set up Self-diagnosis STEP 4.
Measure voltage across auto amp. harness connector M103 terminals 8, 18, 19 and ground.

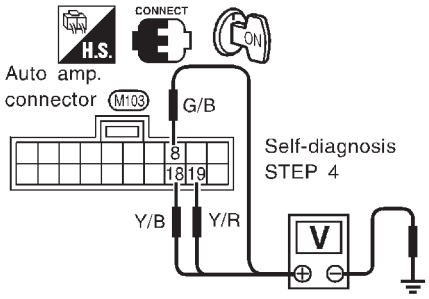

RHA493G

Code No.	Terminals No. (+)	Terminals No. (–)	Condition	Voltage V
41	8	Ground	REC	5
42	18 or 19			0
43	19		20% FRE	5
	8 or 18			0
44	18		FRE	5
45	8 or 19			0
46				

0V: Approx. 0V
5V: Approx. 5V

MTBL1832

OK or NG

OK	▶	INSPECTION END
NG	▶	GO TO 3.

3	CHECK CIRCUIT CONTINUITY BETWEEN AUTO AMP. AND INTAKE DOOR MOTOR

Check circuit continuity between each terminal on auto amp. and on intake door motor.

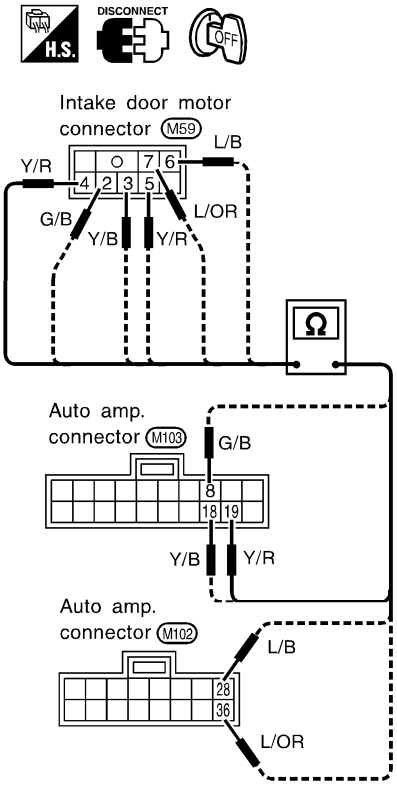

SHA912F

Terminal No.		Continuity
Auto amp.	Intake door motor	
19	4	Yes
8	2	
18	3	
19	5	
28	6	
36	7	

MTBL1833

If OK, check harness for short.

OK or NG

OK	▶	GO TO 4.
NG	▶	Repair harness or connector.

4	CHECK FOR AUTO AMP. OUTPUT

Set up Self-diagnosis STEP 4.
Measure voltage across auto amp. harness connector M102 terminals 28, 36 and ground.

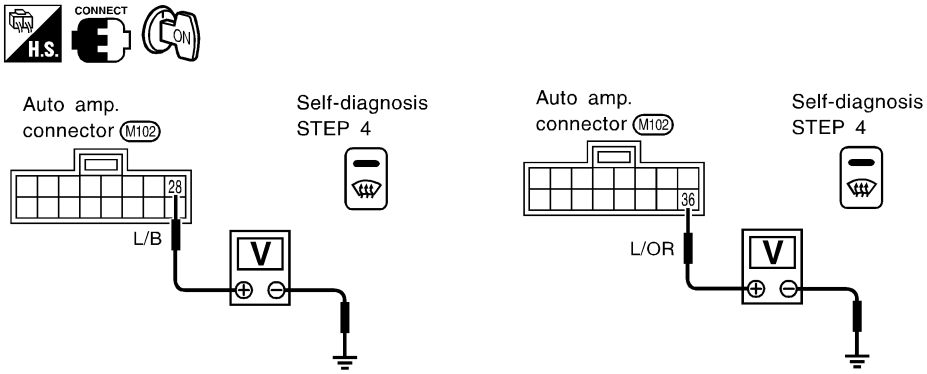

SHA913F

Code No.	Terminals No. (+)	Terminals No. (−)	Condition	Voltage V
41	28	Ground	REC	12
42	36			0
44	28		FRE	0
45				
46	36			12

0V: Approx. 0V
12V: Approx. 12V

MTBL1834

OK or NG

OK	▶	Replace intake door motor.
NG	▶	Replace auto amp.

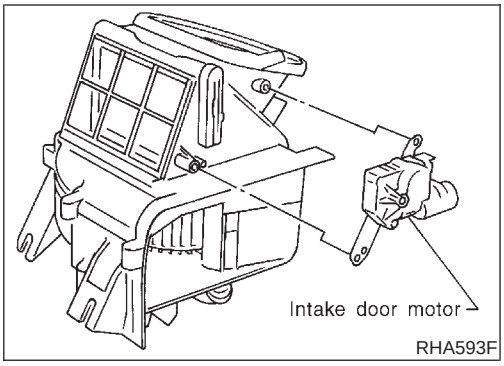

CONTROL LINKAGE ADJUSTMENT

=NAHA0195

Intake Door

NAHA0195S01

1. Install intake door motor on intake unit and connect it to main harness.
2. Set up code No. 41 in Self-diagnosis STEP 4. Refer to HA-40 (Except LE grade), HA-50 (LE grade).
3. Move intake door link by hand and hold it in REC position.
4. Attach intake door lever to rod holder.
5. Make sure intake door operates properly when changing from code No. 41 to 46 by pushing DEF switch.

41	42	43	44	45	46
REC		20% FRE	FRE		

Blower Motor

TROUBLE DIAGNOSIS PROCEDURE FOR BLOWER MOTOR

=NAHA0196

SYMPTOM:

- **Blower motor operation is malfunctioning.**
- **Blower motor operation is malfunctioning under out of starting fan speed control.**

Inspection Flow

NAHA0196S01

Except LE Grade

NAHA0196S0101

1. Confirm symptom by performing the following operational check.

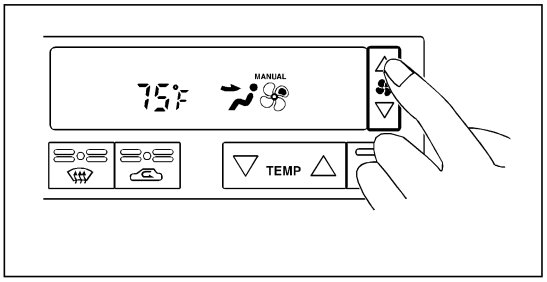

OPERATIONAL CHECK – Blower
a. Press fan switch (up side) one time.
Blower should operate on low speed.
The fan symbol should have one blade lit.
b. Press fan switch (up side) one more time, and continue checking blower speed and fan symbol until all speeds are checked.
c. Leave blower on MAX speed.
If OK (symptom cannot be duplicated), perform complete operational check (*12).
If NG (symptom is confirmed), continue with STEP-2 following.

2. Check for any service bulletins. → 3. Perform self-diagnosis STEP-1. (*1)

OK ↓

4. Perform self-diagnosis STEP-2. (*9)
Code No. 20 should be displayed after approx. 4 second.
NG → Go to appropriate malfunctioning sensor circuit. (*6)

OK ↓

5. Perform self-diagnosis STEP-4. (*9)
Does blower motor speed change according to each code No.?
No → Go to Blower Motor Circuit. (*7)

Code No.	41	42	43	44	45	46
Blower motor speed	Low	Middle high	Middle low			High

Yes ↓

6. Is engine coolant temperature below 55°C (131°F)?
No → Blower motor operation is normal.

Yes ↓

7. Is blower motor operating under starting blower speed control?
No → Go to Blower Motor Circuit. (*8) → OK → Check thermal transmitter control circuit. Refer to EL-(*14), "Electrical Component Inspection".

Yes **[Cause cannot be confirmed by self-diagnosis.]** ↓

8. Check ambient sensor circuit. (*2)

OK ↓

9. Check in-vehicle sensor circuit. (*3)

OK ↓

10. Check sunload sensor circuit. (*4)

OK ↓

11. Check intake sensor circuit. (*13)

OK ↓

12. Check air mix door motor PBR circuit. (*5)

OK ↓

If the symptom still exists, perform a complete operational check (*10) and check for other symptoms. [Refer to symptom table, (*11).] Does another symptom exist?
Yes → Go to Trouble Diagnosis for related symptom.
Another symptom exists.

No ↓

Replace auto amp. → INSPECTION END

SHA691F

*1: HA-39
*2: HA-121
*3: HA-124
*4: HA-128
*5: HA-133
*6: STEP-BY-STEP PROCEDURE (HA-40), see No. 13.
*7: HA-90
*8: HA-90
*9: HA-40
*10: HA-60
*11: HA-59
*12: HA-60
*13: HA-131
*14: EL-140

LE Grade

NAHA0196S0103

1. Confirm symptom by performing the following operational check.

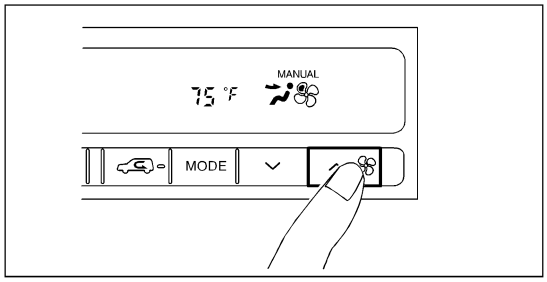

OPERATIONAL CHECK – Blower

a. Press fan switch (up side) one time.
Blower should operate on low speed.
The fan symbol should have one blade lit.

b. Press fan switch (up side) one more time, and continue checking blower speed and fan symbol until all speeds are checked.

c. Leave blower on MAX speed.

If OK (symptom cannot be duplicated), perform complete operational check (*12).
If NG (symptom is confirmed), continue with STEP-2 following.

2. Check for any service bulletins. → 3. Perform self-diagnosis STEP-1. (*1)

OK ↓

4. Perform self-diagnosis STEP-2. (*9)
Code No. 20 should be displayed after approx. 4 second.

NG → Go to appropriate malfunctioning sensor circuit. (*6)

OK ↓

5. Perform self-diagnosis STEP-4. (*9)
Does blower motor speed change according to each code No.?

Code No.	41	42	43	44	45	46
Blower motor speed	Low	Middle high	Middle low			High

No → Go to Blower Motor Circuit. (*7)

Yes ↓

6. Is engine coolant temperature below 55°C (131°F) and ambient temperature below 15°C (59°F)?

No → Blower motor operation is normal.

Yes ↓

7. Is blower motor operating under starting blower speed control?

No → Go to Blower Motor Circuit. (*8)

OK ↓

Check thermal transmitter control circuit. Refer to EL-(*14), "Electrical Components Inspection".

Yes **[Cause cannot be confirmed by self-diagnosis.]** ↓

8. Check ambient sensor circuit. (*2)

OK ↓

9. Check in-vehicle sensor circuit. (*3)

OK ↓

10. Check sunload sensor circuit. (*4)

OK ↓

11. Check intake sensor circuit. (*13)

OK ↓

12. Check air mix door motor PBR circuit. (*5)

OK ↓

If the symptom still exists, perform a complete operational check (*10) and check for other symptoms. [Refer to symptom table, (*11).] Does another symptom exist?

Yes → Go to Trouble Diagnosis for related symptom.

Another symptom exists.

No ↓

Replace auto amp. → INSPECTION END

SHA683F

*1: HA-50
*2: HA-121
*3: HA-124
*4: HA-128
*5: HA-133
*6: STEP-BY-STEP PROCEDURE (HA-50), see No. 13.
*7: HA-90
*8: HA-90
*9: HA-50
*10: HA-62
*11: HA-59
*12: HA-62
*13: HA-131
*14: EL-87

SYSTEM DESCRIPTION

=NAHA0197

Component parts

NAHA0197S01

Fan speed control system components are:

1) Auto amp.
2) Fan control amp.
3) A/C LAN system (PBR built-in mode door motor and air mix door motor)
4) In-vehicle sensor
5) Ambient sensor
6) Sunload sensor
7) Intake sensor

System Operation

NAHA0197S02

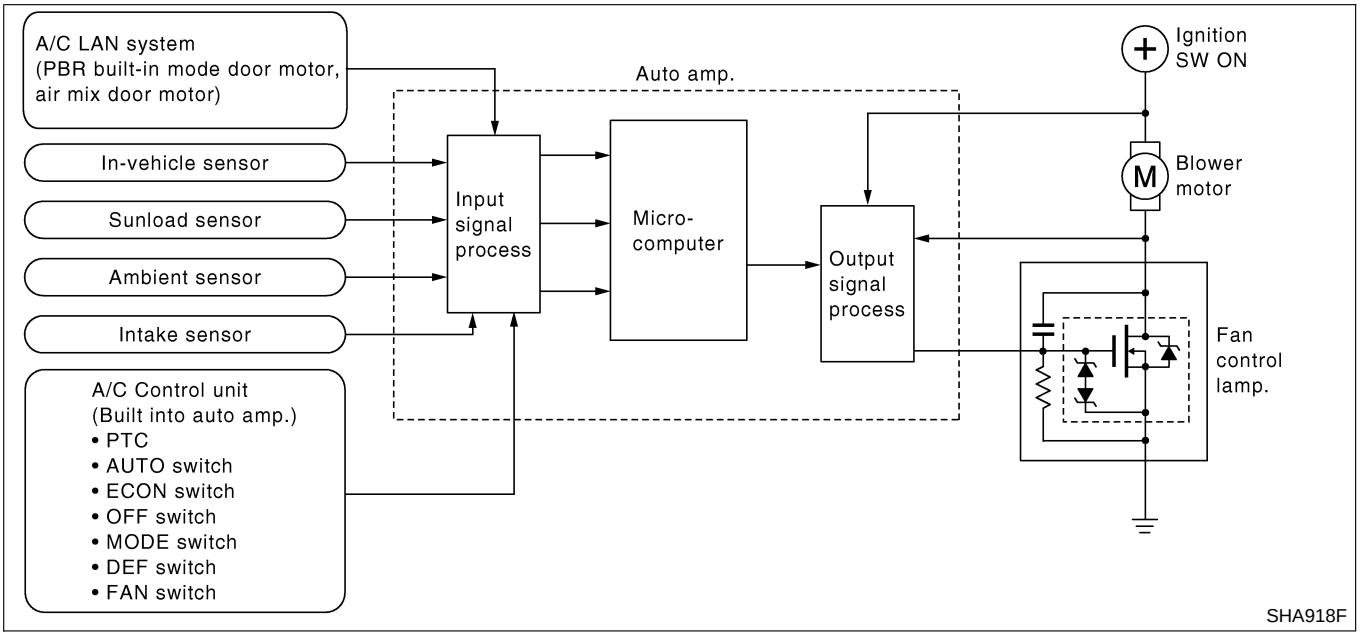

Automatic Mode

NAHA0197S03

In the automatic mode, the blower motor speed is calculated by the automatic amplifier based on inputs from the PBR, in-vehicle sensor, sunload sensor, intake sensor and ambient sensor. The blower motor applied voltage ranges from approximately 5 volts (lowest speed) to 12 volts (highest speed).

The control blower speed (in the range of 5 to 12V), the automatic amplifier supplies a gate voltage to the fan control amplifier. Based on this voltage, the fan control amplifier controls the voltage supplied to the blower motor.

Starting Fan Speed Control

NAHA0197S04

Start Up From "COLD SOAK" Condition (Automatic mode)

NAHA0197S0401

In a cold start up condition where the engine coolant temperature is below 55°C (131°F), the blower will not operate for a short period of time (up to 150 seconds). The exact start delay time varies depending on the ambient and engine coolant temperature.

In the most extreme case (very low ambient) the blower starting delay will be 150 seconds as described above. After this delay, the blower will operate at low speed until the engine coolant temperature rises above 55°C (131°F), at which time the blower speed will increase to the objective speed.

Start Up From Normal or "HOT SOAK" Condition (Automatic mode)

NAHA0197S0402

The blower will begin operation momentarily after the AUTO button is pushed. The blower speed will gradually rise to the objective speed over a time period of 3 seconds or less (actual time depends on the objective blower speed).

Blower Speed Compensation

NAHA0197S05

Sunload

NAHA0197S0501

When the in-vehicle temperature and the set temperature are very close, the blower will be operating at low speed. The low speed will vary depending on the sunload. During conditions of high sunload, the blower low speed is "usual" low speed (approx. 6V). During low or no sunload conditions, the low speed will drop to "low" low speed (approx. 5V).

Fan Speed Control Specification

NAHA0197S06

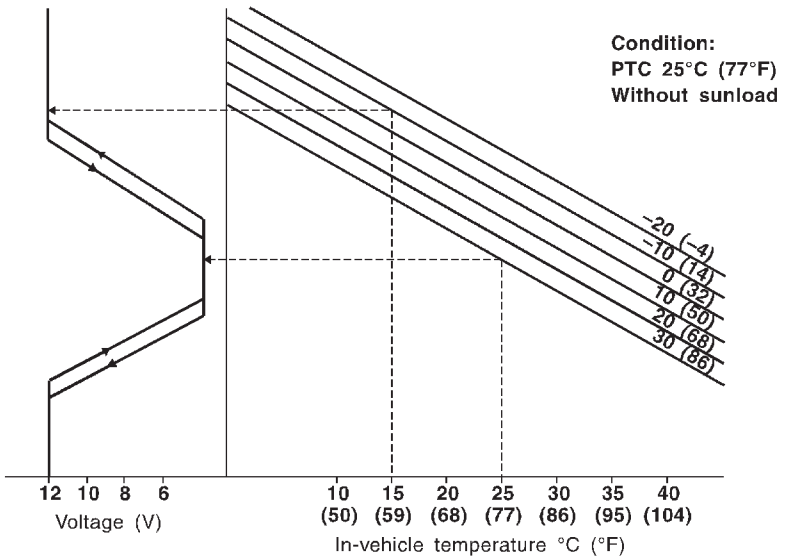

Example:
- If temperature setting is set at 25°C (77°F) under no sunload condition when ambient temperature is –10°C (14°F) and in-vehicle temperature is 15°C (59°F), blower motor voltage is approx. 12 volts.
- When ambient temperature is 30°C (86°F) and in-vehicle temperature is reduced to 25°C (77°F) under the same condition above, blower motor voltage is approx. 5 volts.

RHA138G

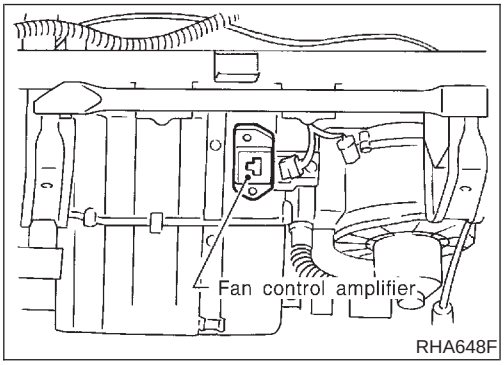

RHA648F

COMPONENT DESCRIPTION

NAHA0198

Fan Control Amplifier

NAHA0198S01

The fan control amplifier is located on the cooling unit. The fan control amp. receives a gate voltage from the auto amp. to steplessly maintain the blower fan motor voltage in the 5 to 12 volt range (approx.).

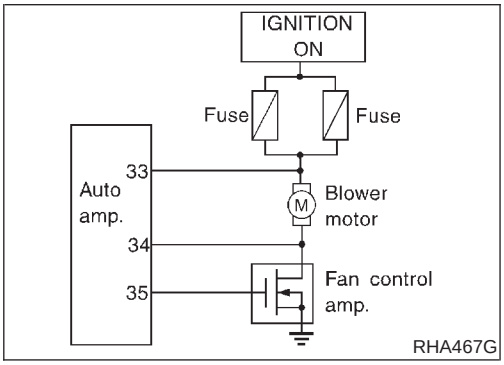

RHA467G

DIAGNOSTIC PROCEDURE

NAHA0199

SYMPTOM: Blower motor operation is malfunctioning under Starting Fan Speed Control.

1	CHECK POWER SUPPLY FOR FAN CONTROL AMP.

Disconnect fan control amp. harness connector.
Do approx. 12 volts exist between fan control amp. harness connector M60 terminal No. 3 and ground?

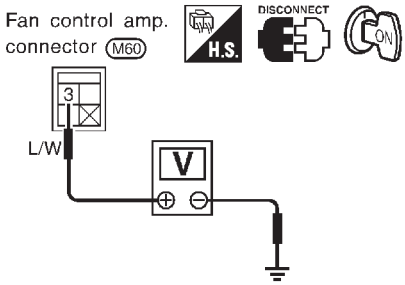

RHA480G

Yes or No

Yes	▶	GO TO 2.
No	▶	GO TO 8.

2	CHECK GROUND CIRCUIT FOR FAN CONTROL AMP.

Does continuity exist between fan control amp. harness connector M60 terminal No. 1 and ground?

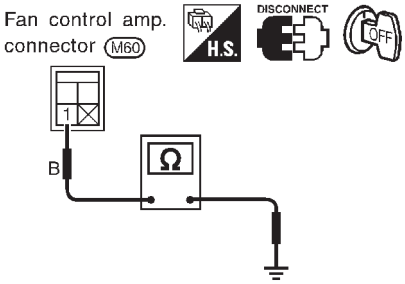

RHA089G

Yes or No

Yes	▶	Reconnect fan control amp. harness connector. And GO TO 3.
No	▶	Repair harness or connector.

3	CHECK VOLTAGE FOR FAN CONTROL AMP.

Set up Self-diagnosis STEP 4.
Measure voltage across fan control amp. harness connector M60 terminal No. 2 and ground.

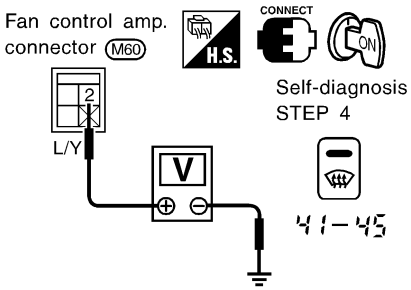

RHA481GC

Code No.	Terminal No.		Voltage
	(+)	(–)	
41–45	(2)	Ground	Approx. 2.5 - 3V

MTBL1835

OK or NG

OK	▶	GO TO 6.
NG	▶	● The voltage is less than 2.5V. Replace fan control amp. ● The voltage is more than 3.0V. GO TO 4.

4	CHECK FAN CONTROL AMP.

Refer to HA-96

OK or NG

OK	▶	GO TO 5.
NG	▶	1. Replace fan control amp. 2. Go to "STEP-BY-STEP PROCEDURE", HA-40 (Except LE grade), HA-50 (LE grade) and perform self-diagnosis STEP 4. Confirm that blower motor operation is usual.

5	CHECK FAN CONTROL AMP. CIRCUIT BETWEEN FAN CONTROL AMP. AND AUTO AMP.

1. Disconnect auto amp. and fan control amp. harness connector.
2. Check circuit continuity between auto amp. harness connector M102 terminal No. 35 and fan control amp. harness connector M60 terminal No. 2.

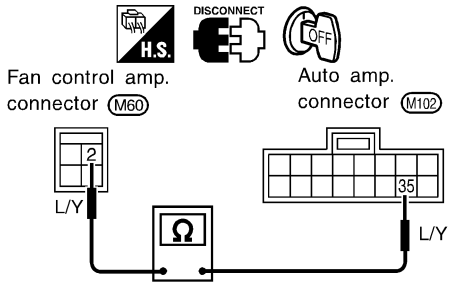

RHA901H

Continuity should exist.
If OK, check harness for short.

OK or NG

OK	▶	GO TO 6.
NG	▶	Repair harness or connector.

6	CHECK POWER SUPPLY FOR AUTO AMP.

Reconnect auto amp. harness connector.
Does battery voltage exist between auto amp. harness connector M102 terminal No. 33 and ground?

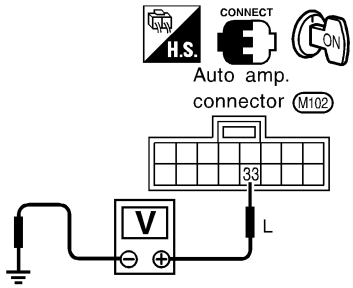

RHA902H

Yes or No

Yes	▶	GO TO 7.
No	▶	Check power supply circuit and 15A fuses [Nos. 1 and 2, located in the fuse block — junction box (J/B)]. Refer to EL-12, "Wiring Diagram — POWER —". ● If OK, check for open circuit in wiring harness. Repair or replace as necessary. ● If NG, replace fuse and check wiring harness for short circuit. Repair or replace as necessary.

7	CHECK FAN FEED BACK CIRCUIT

Do approx. 12 volts exist between auto amp. harness connector M102 terminal No. 34 and ground?

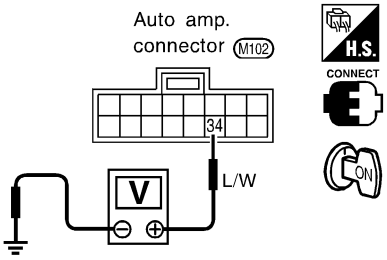

RHA903H

Yes or No

Yes	▶	1. Replace auto amp. 2. Go to self-diagnosis step-by-step procedure HA-40 (Except LE grade), HA-50 (LE grade) and perform self-diagnosis STEP-4. Confirm that blower motor operation is usual.
No	▶	GO TO 10.

8	CHECK POWER SUPPLY FOR BLOWER MOTOR

Disconnect blower motor harness connector.
Do approx. 12 volts exist between blower motor harness connector M73 terminal No. 1 and ground?

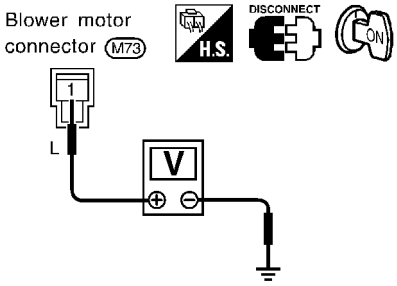

RHA091G

Yes or No

Yes	▶	GO TO 9.
No	▶	**Check power supply circuit and 15A fuses [Nos. 1 and 2, located in the fuse block — junction box (J/B)].** ● If OK, check for open circuit in wiring harness. Repair or replace as necessary. ● If NG, replace fuse and check wiring harness for short circuit. Repair or replace as necessary.

9	CHECK CIRCUIT CONTINUITY BETWEEN BLOWER MOTOR AND FAN CONTROL AMP.

Disconnect blower motor connector and auto amp. connector.
Check circuit continuity between blower motor harness connector M73 terminal No. 2 and fan control amp. harness connector M60 terminal No. 3.

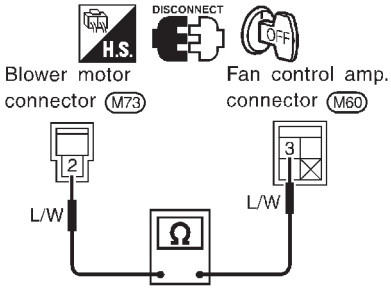

RHA472G

OK or NG

OK	▶	**Check blower motor. (Refer to HA-95.)** 1. If NG, replace blower motor. 2. Go to self-diagnosis step-by-step procedure HA-40 (Except LE grade), HA-50 (LE grade) and perform self-diagnosis STEP-4. Confirm that blower motor operation is usual.
NG	▶	Repair harness or connector.

10	CHECK BLOWER MOTOR CIRCUIT BETWEEN BLOWER MOTOR AND AUTO AMP.

Check circuit continuity between blower motor harness connector M73 terminal No. 2 and auto amp. harness connector M102 terminal No. 34.

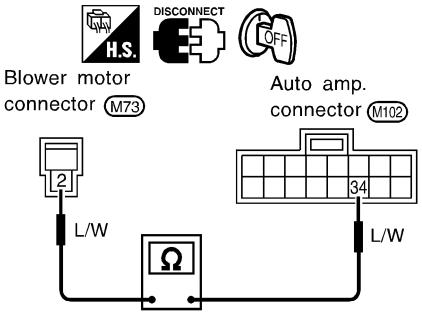

RHA904H

Continuity should exist.

OK or NG

OK	▶	Check harness for short.
NG	▶	Repair harness or connector.

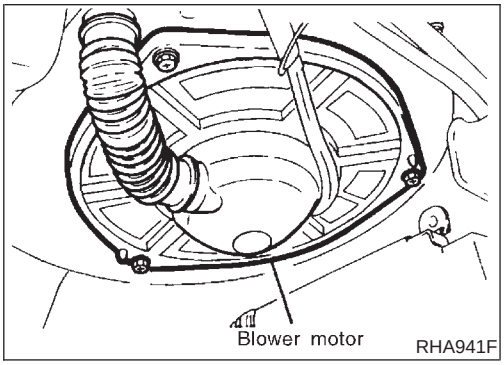

RHA941F

COMPONENT INSPECTION

NAHA0200

Blower Motor

NAHA0200S01

Confirm smooth rotation of the blower motor.

- Ensure that there are no foreign particles inside the intake unit.

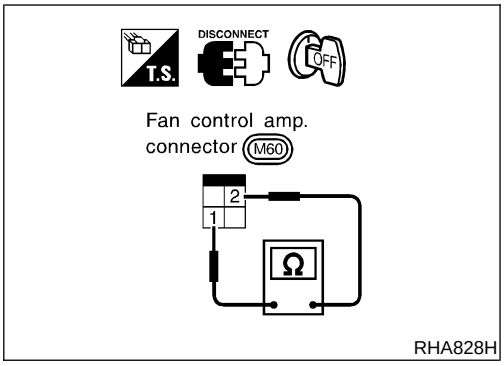

Fan Control Amp.

NAHA0200S02

Check continuity between terminals.

Ohmmeter terminal		Continuity
(+)	(–)	
Terminal Nos.		Yes
2	1	

Magnet Clutch

TROUBLE DIAGNOSIS PROCEDURE FOR MAGNET CLUTCH

=NAHA0201

SYMPTOM:

- **Magnet clutch does not engage.**

Inspection Flow

NAHA0201S01

Except LE Grade

NAHA0201S0101

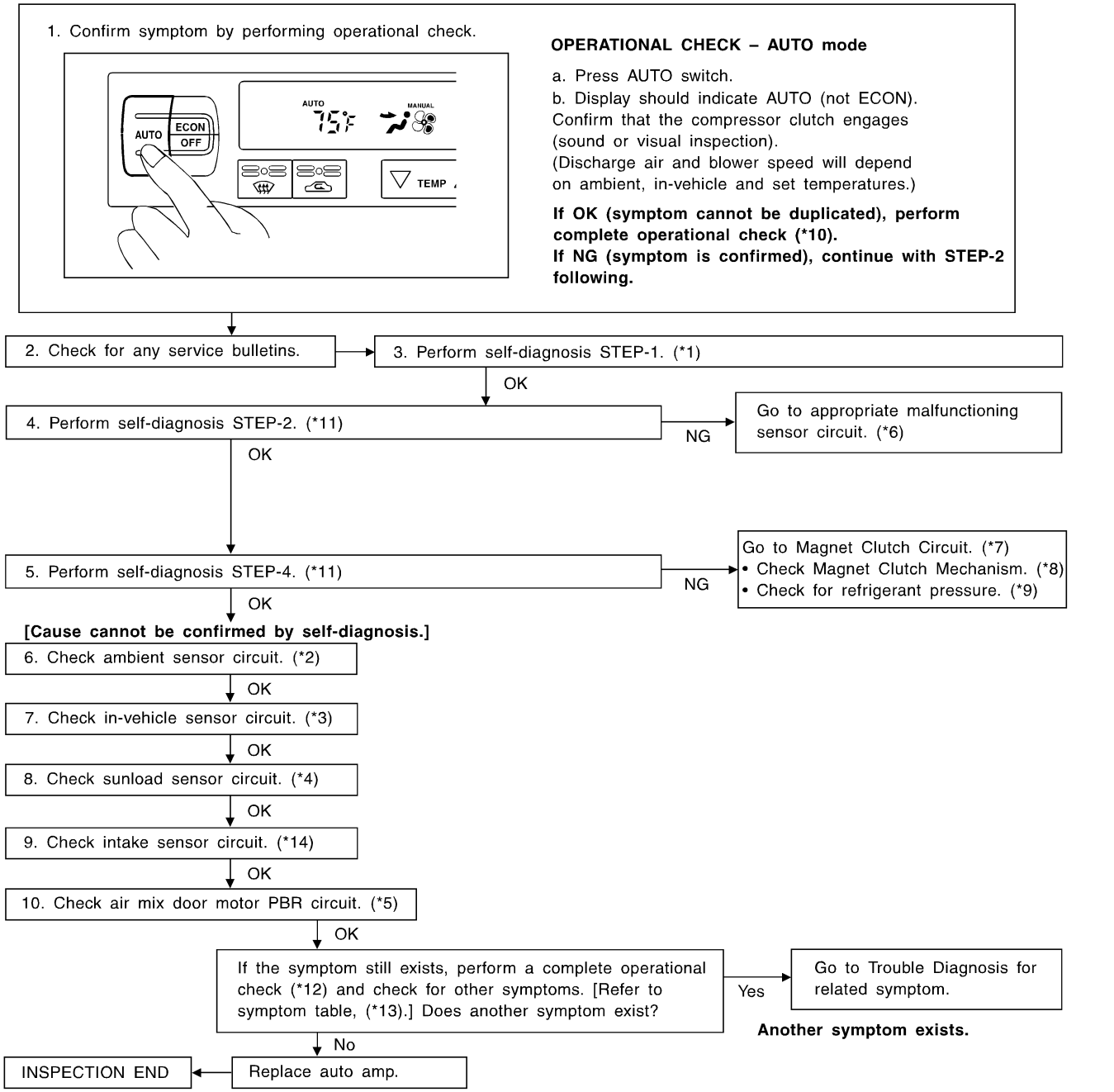

SHA249FB

*1: STEP-BY-STEP PROCEDURE (HA-39)
*2: HA-121
*3: HA-124
*4: HA-128
*5: HA-133
*6: STEP-BY-STEP PROCEDURE (HA-40), see No. 13.
*7: HA-99
*8: HA-139
*9: HA-108
*10: HA-60
*11: HA-40
*12: HA-60
*13: HA-59
*14: HA-131

LE Grade

NAHA0201S0103

1. Confirm symptom by performing operational check.

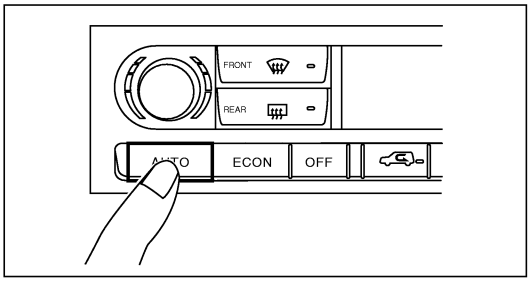

OPERATIONAL CHECK – AUTO mode

a. Press AUTO switch.
b. Display should indicate AUTO (not ECON). Confirm that the compressor clutch engages (audio or visual inspection).
(Discharge air and blower speed will depend on ambient, in-vehicle and set temperatures.)

If OK (symptom cannot be duplicated), perform complete operational check (*10).
If NG (symptom is confirmed), continue with STEP-2 following.

2. Check for any service bulletins. → 3. Perform self-diagnosis STEP-1. (*1)

OK

4. Perform self-diagnosis STEP-2. (*11) → NG → Go to appropriate malfunctioning sensor circuit. (*6)

OK

5. Perform self-diagnosis STEP-4. (*11) → NG → Go to Magnet Clutch Circuit. (*7)
- Check Magnet Clutch Mechanism. (*8)
- Check for refrigerant pressure. (*9)

OK

[Cause cannot be confirmed by self-diagnosis.]

6. Check ambient sensor circuit. (*2)

OK

7. Check in-vehicle sensor circuit. (*3)

OK

8. Check sunload sensor circuit. (*4)

OK

9. Check intake sensor circuit. (*14)

OK

10. Check air mix door motor PBR circuit. (*5)

OK

If the symptom still exists, perform a complete operational check (*12) and check for other symptoms. [Refer to symptom table, (*13).] Does another symptom exist? → Yes → Go to Trouble Diagnosis for related symptom.

Another symptom exists.

No

Replace auto amp. → INSPECTION END

SHA854F

*1: STEP-BY-STEP PROCEDURE (HA-50)
*2: HA-121
*3: HA-124
*4: HA-128
*5: HA-133
*6: STEP-BY-STEP PROCEDURE (HA-50), see No. 13.
*7: HA-99
*8: HA-139
*9: HA-108
*10: HA-62
*11: HA-50
*12: HA-62
*13: HA-59
*14: HA-131

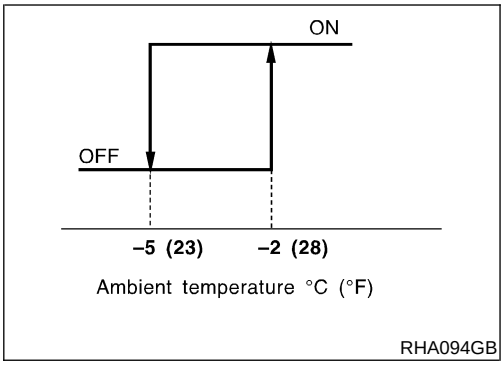

SYSTEM DESCRIPTION

=NAHA0202

Auto amplifier controls compressor operation by ambient temperature and signal from ECM.

Low Temperature Protection Control

NAHA0202S01

Auto amplifier will turn the compressor "ON" or "OFF" as determined by a signal detected by ambient sensor.
When ambient temperatures are greater than −2°C (28°F), the compressor turns "ON". The compressor turns "OFF" when ambient temperatures are less than −5°C (23°F).

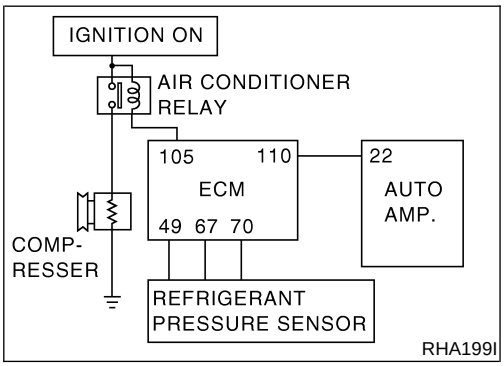

DIAGNOSTIC PROCEDURE

NAHA0203

SYMPTOM: Magnet clutch does not engage when AUTO switch is ON.

1	CHECK POWER SUPPLY FOR COMPRESSOR
Disconnect compressor harness connector. Do approx. 12 volts exist between compressor harness connector F202 terminal No. 1 and ground?	

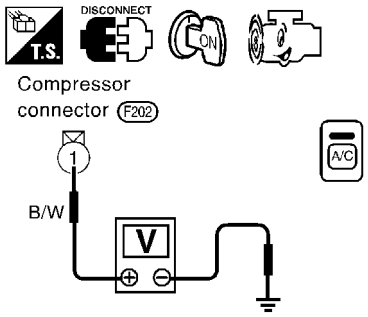

Yes or No

Yes ▶	**Check magnet clutch coil.** 1. If NG, replace magnet clutch. Refer to HA-139. 2. Go to self-diagnosis step-by-step procedure HA-40 (Except LE grade), HA-50 (LE grade) and perform self-diagnosis STEP-4. Confirm that magnet clutch operation is usual.
No ▶	Disconnect A/C relay. And GO TO 2.

2	CHECK CIRCUIT CONTINUITY BETWEEN A/C RELAY AND COMPRESSOR

Check circuit continuity between A/C relay harness connector E26 terminal No. 5 (B/W) and compressor harness connector terminal No. 1 (B/W).

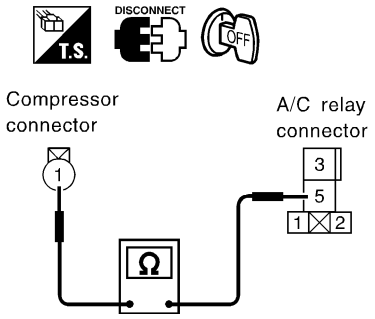

SHA476F

Continuity should exist.
If OK, check harness for short.

OK or NG

OK	▶	GO TO 3.
NG	▶	Repair harness or connector.

3	CHECK POWER SUPPLY FOR A/C RELAY

Disconnect A/C relay.
Do approx. 12 volts exist between A/C relay harness connector E26 terminal Nos. 1 (G/W), 3 (G/W) and ground?

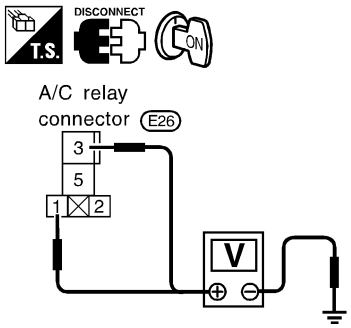

SHA477F

Yes or No

Yes	▶	GO TO 4.
No	▶	Check power supply circuit and 7.5A (No. 6) fuse at fuse block — junction box (J/B). Refer to EL-12, "Wiring Diagram — POWER —". ● If OK, check for open circuit in wiring harness. Repair or replace as necessary. ● If NG, replace fuse and check wiring harness for short circuit. Repair or replace as necessary.

4	CHECK A/C RELAY AFTER DISCONNECTING IT

Refer to HA-103.

OK or NG

OK	▶	Reconnect A/C relay. And GO TO 5.
NG	▶	1. Replace A/C relay. 2. Go to self-diagnosis step-by-step procedure HA-40 (Except LE grade), HA-50 (LE grade) and perform self-diagnosis STEP-4. Confirm that magnet clutch operation is usual.

5	CHECK COIL SIDE CIRCUIT OF A/C RELAY

Do approx. 12 volts exist between ECM harness connector F203 terminal No. 105 and ground?

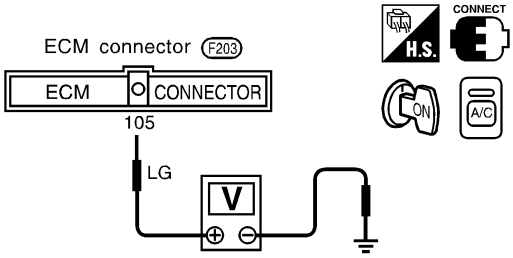

RHA200I

Yes or No

Yes	▶	GO TO 6.
No	▶	Disconnect A/C relay. Disconnect ECM harness connector. GO TO 9.

6	CHECK VOLTAGE FOR ECM

Do approx. 5 volts exist between ECM harness connector F203 terminal No. 110 and ground?

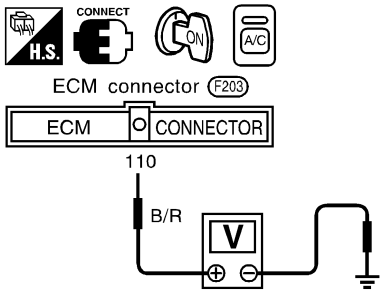

RHA201I

Yes or No

Yes	▶	Disconnect ECM harness connector. Disconnect auto amp. harness connector. GO TO 7.
No	▶	Check ECM. Refer to EC-141, "ECM Terminals and Reference Value".

7	CHECK CIRCUIT CONTINUITY BETWEEN ECM AND AUTO AMP.

Check circuit continuity between ECM harness connector F203 terminal No. 110 and auto amp. harness connector M102 terminal No. 22.

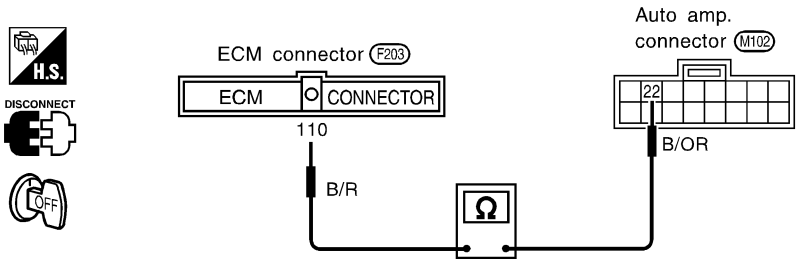

SHA914F

Continuity should exist.

If OK, check harness for short.

OK or NG

OK	▶	GO TO 8.
NG	▶	1. Repair harness or connector. 2. Go to "SETP-BY-STEP PROCEDURE", "Self-diagnosis", HA-40 (Except LE grade), HA-50 (LE grade) and perform self-diagnosis STEP-4. Confirm that magnet clutch operation is usual.

8	CHECK REFRIGERANT PRESSURE SENSOR

Refer to HA-103.

OK or NG

OK	▶	Replace auto amp.
NG	▶	Replace refrigerant pressure sensor.

9	CHECK CIRCUIT CONTINUITY BETWEEN A/C RELAY AND ECM

Check circuit continuity between A/C relay harness connector E26 terminal No. 2 (G/R) and ECM harness connector F203 terminal No. 105 (LG).

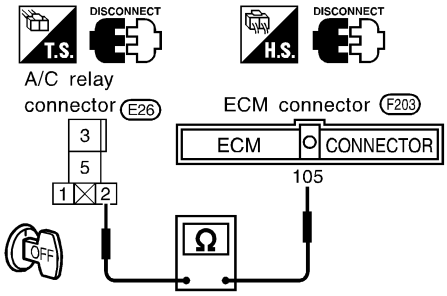

RHA203I

Continuity should exist.

OK or NG

OK	▶	Check harness for short.
NG	▶	Repair harness or connector.

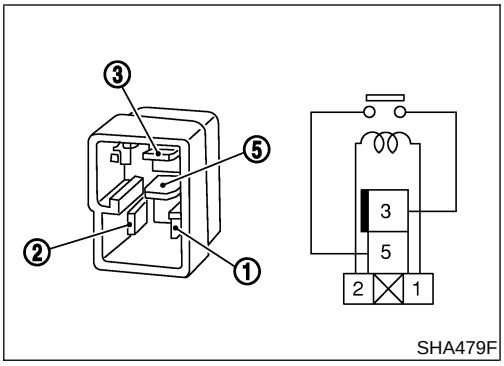

SHA479F

COMPONENT INSPECTION

NAHA0204

A/C Relay

NAHA0204S01

Check continuity between terminal Nos. 3 and 5.

Conditions	Continuity
12V direct current supply between terminal Nos. 1 and 2	Yes
No current supply	No

If NG, replace relay.

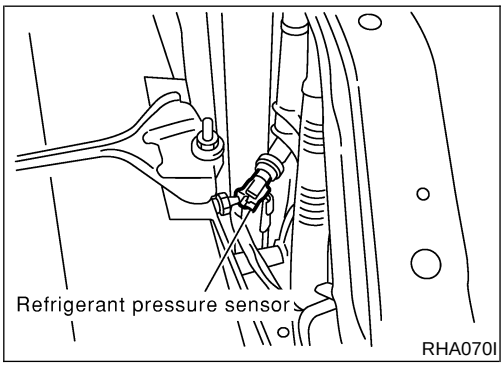

RHA070I

Refrigerant Pressure Sensor

NAHA0204S02

Make sure that higher A/C refrigerant-pressure results in higher refrigerant-pressure sensor output voltage.
Check voltage between ECM harness terminal No. 70 and body ground.
Refer to EC-738, "Diagnostic Procedure".

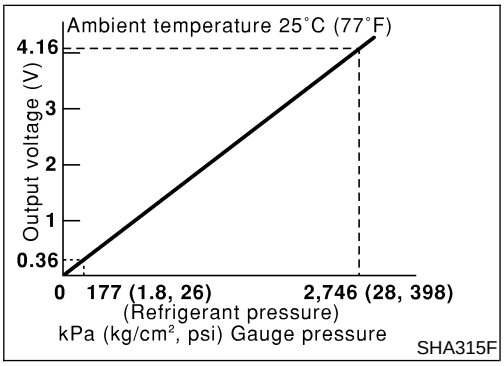

SHA315F

Insufficient Cooling

TROUBLE DIAGNOSIS PROCEDURE FOR INSUFFICIENT COOLING

=NAHA0205

SYMPTOM:

- **Insufficient cooling**

Inspection Flow

NAHA0205S01

Except LE Grade

NAHA0205S0101

1. Confirm symptom by performing the following operational check.

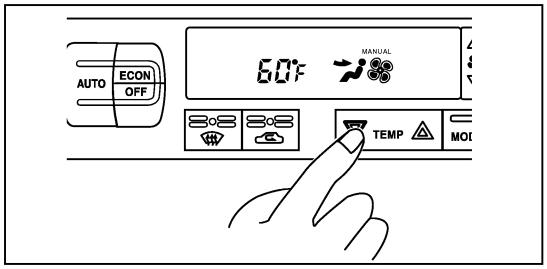

OPERATIONAL CHECK – Temperature decrease

a. Press the temperature decrease button until 18˚C (60˚F) is displayed.

b. Check for cold air at discharge air outlets.

If OK (symptom cannot be duplicated), perform complete operational check (*11).
If NG (symptom is confirmed), continue with STEP-2 following.

2. Check for any service bulletins. → 3. Perform self-diagnosis STEP-1. (*1)

3. Perform self-diagnosis STEP-1. (*1)
- OK ↓
- NG → Go to appropriate malfunctioning sensor circuit. (*5)

4. Perform self-diagnosis STEP-2. (*12)
- OK ↓
- NG → **Go to appropriate malfunctioning items.**
  - Check mode door motor and air mix door motor circuit. (*6)
  - Check intake door circuit. (*7)
  - Check blower motor circuit. (*8)
  - Check magnet clutch circuit. (*9)

5. Perform self-diagnosis STEP-4. (*12)
- OK ↓
- NG → **Go to appropriate malfunctioning items.** (as above)

6. Check compressor belt tension. Refer to MA-(*14), “Checking Drive Belts”.
- OK ↓
- NG → Adjust or replace compressor belt.

7. Check air mix door operation. (*2)
- OK ↓
- NG → Adjust or replace air mix door control linkage.

8. Check cooling fan motor operation.
- OK ↓
- NG → Refer to LC-(*15), “Cooling Fan”.

9. Before connecting Refrigerant/Recycling Recharging equipment to vehicle, check Refrigerant/Recycling Recharging equipment gauges. No refrigerant pressure should be displayed. If NG, recover refrigerant from equipment lines.

10. Confirm refrigerant purity in supply tank using Refrigerant/Recycling Recharging equipment and refrigerant identifier.
- NG → Refer to Contaminated refrigerant. (*13)
- OK ↓

11. Connect Refrigerant/Recycling Recharging equipment to vehicle. Confirm refrigerant purity in vehicle A/C system using Refrigerant/Recycling Recharging equipment and refrigerant identifier.
- NG → Refer to Contaminated refrigerant. (*13)
- OK ↓

12. Check for evaporator coil freeze up.
- (Freeze up.) NG → Perform performance test diagnoses. Refer to (*10).
- (Does not freeze up.) OK ↓

13. Check refrigeration cycle pressure with manifold gauge connected. Refer to (*3).
- NG → Perform performance test diagnoses. Refer to (*10).
- OK ↓

14. Check ducts for air leaks.
- NG → Repair air leaks.
- OK ↓

15. Perform temperature setting trimmer. (*4)
    (1) Set up AUXILIARY MECHANISM mode in self-diagnosis.
    (2) Press ▼ (COLD) switch as desired.
- OK ↓

INSPECTION END

SHA919F

*1: HA-39	*6: HA-70	*11: HA-60
*2: HA-78	*7: HA-81	*12: HA-40
*3: HA-108	*8: HA-89	*13: HA-3
*4: HA-48	*9: HA-99	*14: MA-14
*5: STEP-BY-STEP PROCEDURE (HA-40), see No. 13.	*10: HA-106	*15: LC-23

LE Grade

NAHA0205S0103

1. Confirm symptom by performing the following operational check.

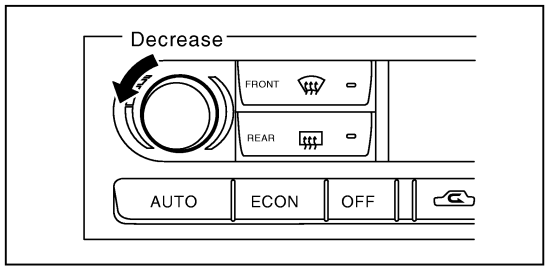

OPERATIONAL CHECK – Temperature decrease

a. Turn the temperature dial counterclockwise until 18˚C (60˚F) is displayed.

b. Check for cold air at discharge air outlets.

If OK (symptom cannot be duplicated), perform complete operational check (*11).
If NG (symptom is confirmed), continue with STEP-2 following.

2. Check for any service bulletins. → 3. Perform self-diagnosis STEP-1. (*1)

OK

4. Perform self-diagnosis STEP-2. (*12) — NG → Go to appropriate malfunctioning sensor circuit. (*5)

OK

5. Perform self-diagnosis STEP-4. (*12) — NG → **Go to appropriate malfunctioning items.**
- Check mode door motor and air mix door motor circuit. (*6)
- Check intake door circuit. (*7)
- Check blower motor circuit. (*8)
- Check magnet clutch circuit. (*9)

OK

6. Check compressor belt tension. Refer to MA-(*14), "Checking Drive Belts". — NG → Adjust or replace compressor belt.

OK

7. Check air mix door operation. (*2) — NG → Adjust or replace air mix door control linkage.

OK

8. Check cooling fan operation. — NG → Refer to LC-(*15), "Cooling Fan".

OK

9. Before connecting Refrigerant/Recycling Recharging equipment to vehicle, check Refrigerant/Recycling Recharging equipment gauges. No refrigerant pressure should be displayed. If NG, recover refrigerant from equipment lines.

OK

10. Confirm refrigerant purity in supply tank using Refrigerant/Recycling Recharging equipment and refrigerant identifier. — NG → Refer to Contaminated refrigerant. (*13)

OK

11. Connect Refrigerant/Recycling Recharging equipment to vehicle. Confirm refrigerant purity in vehicle A/C system using Refrigerant/Recycling Recharging equipment and refrigerant identifier. — NG → Refer to Contaminated refrigerant. (*13)

OK

12. Check for evaporator coil freeze up. — NG (Freeze up.) → Perform performance test diagnoses. Refer to (*10).

(Does not freeze up.)

OK

13. Check refrigeration cycle pressure with manifold gauge connected. Refer to (*3). — NG → Perform performance test diagnoses. Refer to (*10).

14. Check ducts for air leaks. — NG → Repair air leaks.

OK

15. Perform temperature setting trimmer. (*4)
(1) Set up AUXILIARY MECHANISM mode in self-diagnosis.
(2) Press ▼ (COLD) switch as desired.

OK

INSPECTION END

SHA920F

*1: HA-50
*2: HA-77
*3: HA-108
*4: HA-58
*5: STEP-BY-STEP PROCEDURE (HA-50), see No. 13.
*6: HA-71
*7: HA-82
*8: HA-90
*9: HA-99
*10: HA-106
*11: HA-62
*12: HA-50
*13: HA-3
*14: MA-14
*15: LC-23

PERFORMANCE TEST DIAGNOSES

NAHA0206

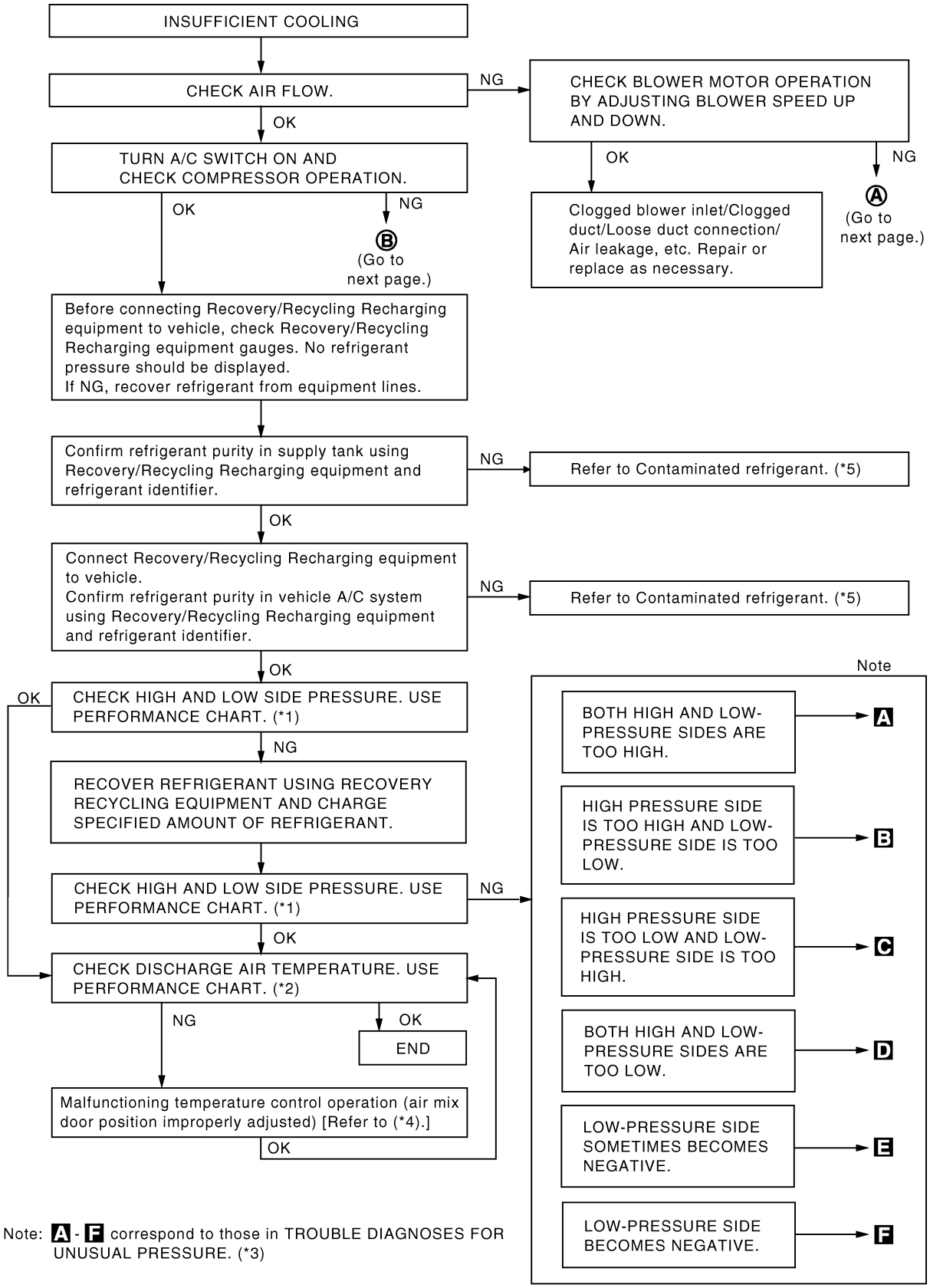

Note: A - F correspond to those in TROUBLE DIAGNOSES FOR UNUSUAL PRESSURE. (*3)

SHA921F

*1: HA-108
*2: HA-108
*3: HA-108
*4: HA-78
*5: HA-3

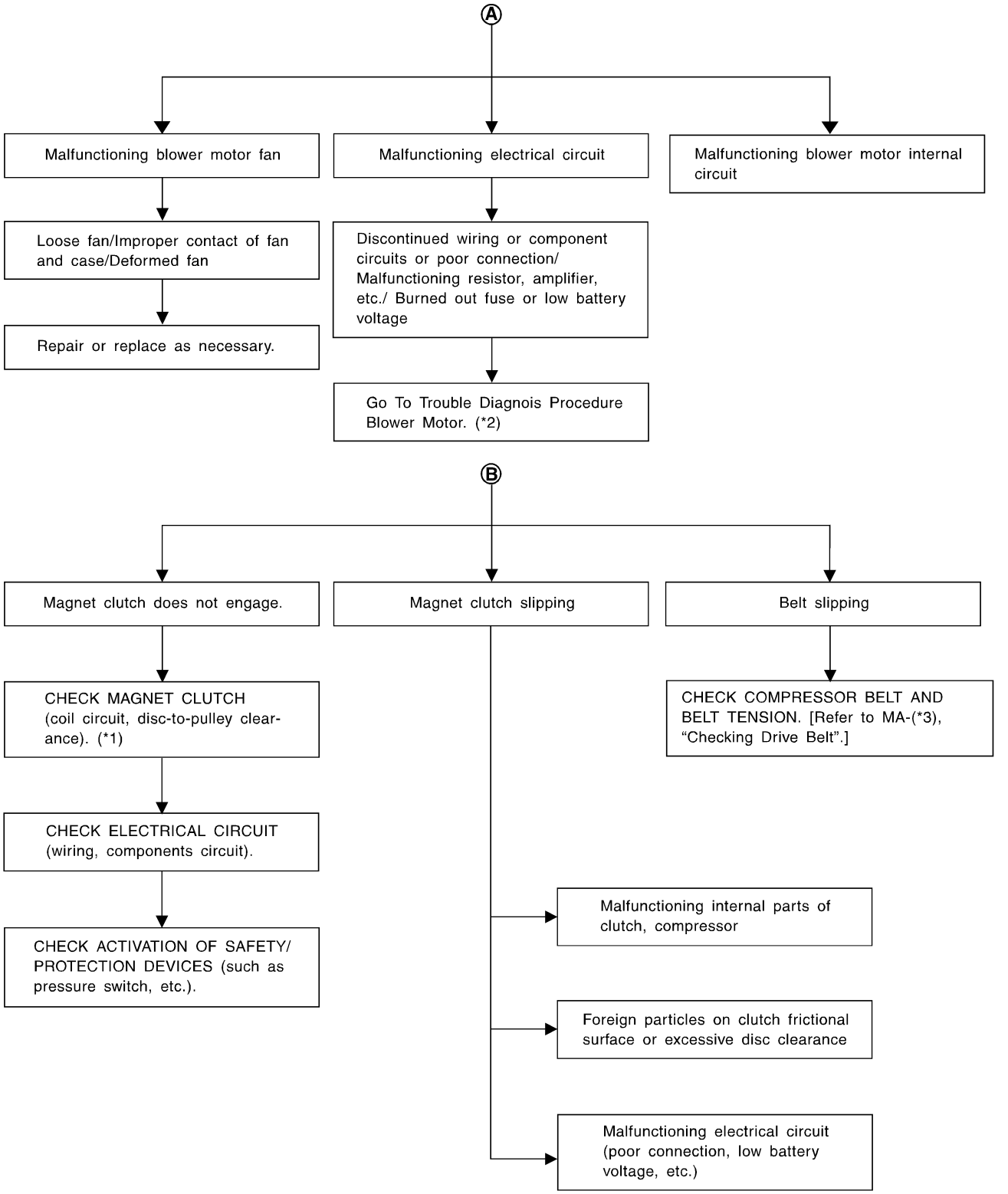

SHA329F

*1: HA-139
*2: HA-87
*3: MA-14

PERFORMANCE CHART

NAHA0207

Test Condition

NAHA0207S01

Testing must be performed as follows:

Vehicle location	Indoors or in the shade (in a well-ventilated place)
Doors	Closed
Door windows	Open
Hood	Open
TEMP.	Max. COLD
Mode switch	(Ventilation) set
REC switch	(Recirculation) set
(blower) speed	Max. speed set
Engine speed	Idle speed
Operate the air conditioning system for 10 minutes before taking measurements.	

Test Reading

NAHA0207S02

Recirculating-to-discharge Air Temperature Table

NAHA0207S0201

Inside air (Recirculating air) at blower assembly inlet		Discharge air temperature at center ventilator °C (°F)
Relative humidity %	Air temperature °C (°F)	
50 - 60	25 (77)	6.0 - 9.0 (43 - 48)
	30 (86)	10.0 - 13.6 (50 - 56)
	35 (95)	15.2 - 19.5 (59 - 67)
	40 (104)	22.5 - 27.1 (73 - 81)
60 - 70	25 (77)	9.0 - 12.2 (48 - 54)
	30 (86)	13.6 - 17.2 (56 - 63)
	35 (95)	19.5 - 23.7 (67 - 75)
	40 (104)	27.1 - 32.3 (81 - 90)

Ambient Air Temperature-to-operating Pressure Table

NAHA0207S0202

Ambient air		High-pressure (Discharge side) kPa (kg/cm^2, psi)	Low-pressure (Suction side) kPa (kg/cm^2, psi)
Relative humidity %	Air temperature °C (°F)		
50 - 70	25 (77)	1,226 - 1,638 (12.5 - 16.7, 178 - 237)	172 - 250 (1.75 - 2.55, 25 - 36)
	30 (86)	1,422 - 1,883 (14.5 - 19.2, 206 - 273)	196 - 275 (2.0 - 2.8, 28 - 40)
	35 (95)	1,657 - 2,187 (16.9 - 22.3, 240 - 317)	231 - 309 (2.35 - 3.15, 33 - 45)
	40 (104)	1,922 - 2,501 (19.6 - 25.5, 279 - 363)	280 - 373 (2.85 - 3.8, 41 - 54)

TROUBLE DIAGNOSES FOR UNUSUAL PRESSURE

NAHA0208

Whenever system's high and/or low side pressure is unusual, diagnose using a manifold gauge. The marker above the gauge scale in the following tables indicates the standard (usual) pressure range. Since the standard (usual) pressure, however, differs from vehicle to vehicle, refer to HA-108 ("Ambient air temperature-to-operating pressure table").

Both High and Low-pressure Sides are Too High.

NAHA0208S01

Gauge indication	Refrigerant cycle	Probable cause	Corrective action
Both high and low-pressure sides are too high. A 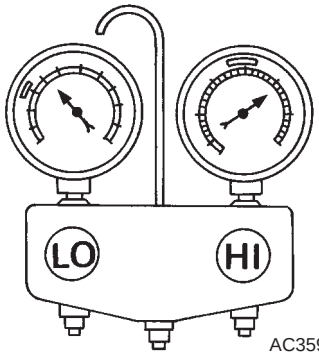 AC359A	● Pressure is reduced soon after water is splashed on condenser.	Excessive refrigerant charge in refrigeration cycle	Reduce refrigerant until specified pressure is obtained.
	Air suction by cooling fan is insufficient.	Insufficient condenser cooling performance ↓ 1. Condenser fins are clogged. 2. Improper fan rotation of cooling fan	● Clean condenser. ● Check and repair cooling fan as necessary.
	● Low-pressure pipe is not cold. ● When compressor is stopped high-pressure value quickly drops by approximately 196 kPa (2 kg/cm^2, 28 psi). It then decreases gradually thereafter.	Poor heat exchange in condenser (After compressor operation stops, high pressure decreases too slowly.) ↓ Air in refrigeration cycle	Evacuate repeatedly and recharge system.
	Engine tends to overheat.	Engine cooling systems malfunction.	Check and repair each engine cooling system.
	● An area of the low-pressure pipe is colder than areas near the evaporator outlet. ● Plates are sometimes covered with frost.	● Excessive liquid refrigerant on low-pressure side ● Excessive refrigerant discharge flow ● Expansion valve is open a little compared with the specification. ↓ 1. Improper expansion valve installation 2. Improper expansion valve adjustment	Replace expansion valve.

High-pressure Side is Too High and Low-pressure Side is Too Low.

NAHA0208S02

Gauge indication	Refrigerant cycle	Probable cause	Corrective action
High-pressure side is too high and low-pressure side is too low. B 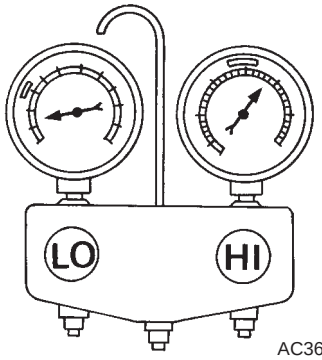 AC360A	Upper side of condenser and high-pressure side are hot, however, liquid tank is not so hot.	High-pressure tube or parts located between compressor and condenser are clogged or crushed.	● Check and repair or replace malfunctioning parts. ● Check lubricant for contamination.

High-pressure Side is Too Low and Low-pressure Side is Too High.

NAHA0208S03

Gauge indication	Refrigerant cycle	Probable cause	Corrective action
High-pressure side is too low and low-pressure side is too high. C 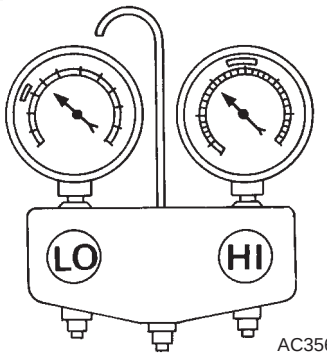 AC356A	High and low-pressure sides become equal soon after compressor operation stops.	Compressor pressure operation is improper. ↓ Damaged inside compressor packings	Replace compressor.
	No temperature difference between high and low-pressure sides	Compressor pressure operation is improper. ↓ Damaged inside compressor packings.	Replace compressor.

Both High- and Low-pressure Sides are Too Low.

NAHA0208S04

Gauge indication	Refrigerant cycle	Probable cause	Corrective action
Both high- and low-pressure sides are too low. **D** 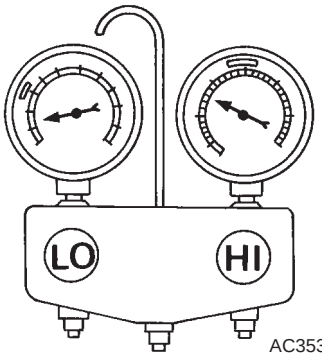 AC353A	● There is a big temperature difference between receiver drier outlet and inlet. Outlet temperature is extremely low. ● Liquid tank inlet and expansion valve are frosted.	Compressor discharge capacity does not change. (Compressor stroke is set at maximum.)	● Replace liquid tank. ● Check lubricant for contamination.
	● Temperature of expansion valve inlet is extremely low as compared with areas near liquid tank. ● Expansion valve inlet may be frosted. ● Temperature difference occurs somewhere in high-pressure side	High-pressure pipe located between receiver drier and expansion valve is clogged.	● Check and repair malfunctioning parts. ● Check lubricant for contamination.
	● Expansion valve and liquid tank are warm or only cool when touched.	Low refrigerant charge ↓ Leaking fittings or components	Check refrigerant for leaks. Refer to "Checking Refrigerant Leaks", HA-144.
	There is a big temperature difference between expansion valve inlet and outlet while the valve itself is frosted.	Expansion valve closes a little compared with the specification. ↓ 1. Improper expansion valve adjustment 2. Malfunctioning expansion valve 3. Outlet and inlet may be clogged.	● Remove foreign particles by using compressed air. ● Check lubricant for contamination.
	An area of the low-pressure pipe is colder than areas near the evaporator outlet.	Low-pressure pipe is clogged or crushed.	● Check and repair malfunctioning parts. ● Check lubricant for contamination.
	Air flow volume is not enough or is too low.	Evaporator is frozen. ↓ Compressor discharge capacity does not change. (Compressor stroke is set at maximum length.)	● Check intake sensor circuit. Refer to HA-131. ● Replace compressor.

Low-pressure Side Sometimes Becomes Negative.

NAHA0208S05

Gauge indication	Refrigerant cycle	Probable cause	Corrective action
Low-pressure side sometimes becomes negative. E 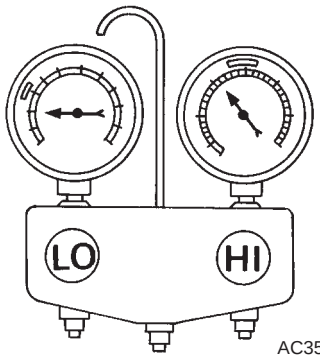 AC354A	• Air conditioning system does not function and does not cyclically cool the compartment air. • The system constantly functions for a certain period of time after compressor is stopped and restarted.	Refrigerant does not discharge cyclically. ↓ Moisture is frozen at expansion valve outlet and inlet. ↓ Water is mixed with refrigerant.	• Drain water from refrigerant or replace refrigerant. • Replace liquid tank.

Low-pressure Side Becomes Negative.

NAHA0208S06

Gauge indication	Refrigerant cycle	Probable cause	Corrective action
Low-pressure side becomes negative. F 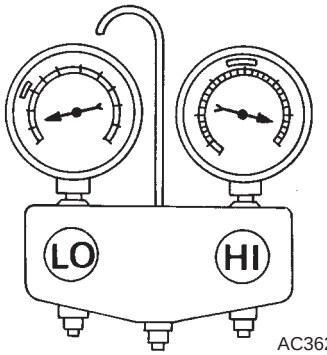 AC362A	Liquid tank or front/rear side of expansion valve's pipe is frosted or dewed.	High-pressure side is closed and refrigerant does not flow. ↓ Expansion valve or liquid tank is frosted.	Leave the system at rest until no frost is present. Start it again to check whether or not the problem is caused by water or foreign particles. • If water is the cause, initially cooling is okay. Then the water freezes causing a blockage. Drain water from refrigerant or replace refrigerant. • If due to foreign particles, remove expansion valve and remove the particles with dry and compressed air (not shop air). • If either of the above methods cannot correct the problem, replace expansion valve. • Replace liquid tank. • Check lubricant for contamination.

Insufficient Heating

TROUBLE DIAGNOSIS PROCEDURE FOR INSUFFICIENT HEATING

=NAHA0209

SYMPTOM:

- **Insufficient heating**

Inspection Flow

NAHA0209S01

Except LE Grade

NAHA0209S0101

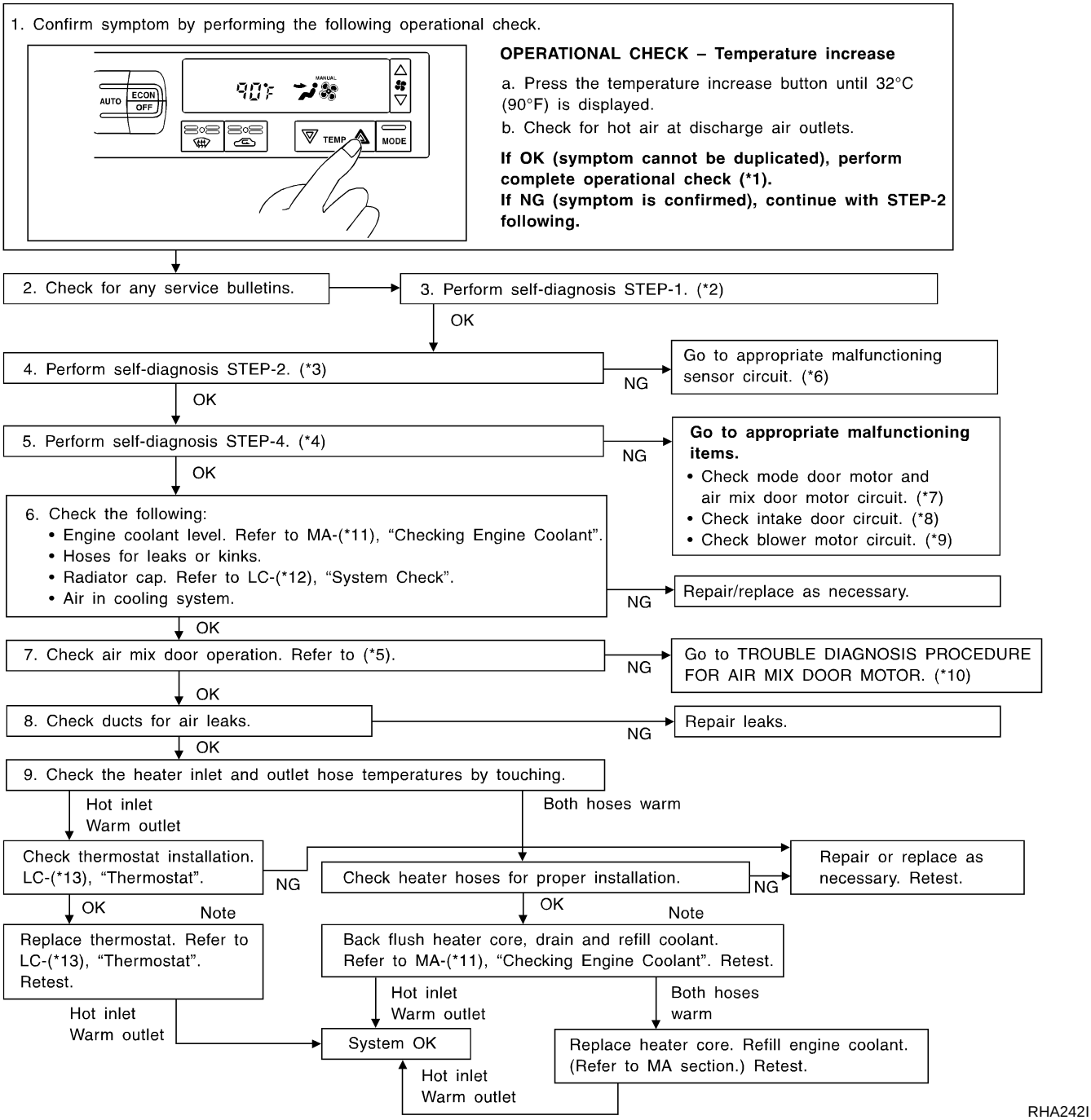

*1: HA-60
*2: HA-39
*3: HA-40
*4: HA-40
*5: HA-78
*6: STEP-BY-STEP PROCEDURE (HA-40), see No. 13.
*7: HA-71
*8: HA-82
*9: HA-90
*10: HA-75
*11: MA-15
*12: LC-12
*13: LC-19

LE Grade

NAHA0209S0103

1. Confirm symptom by performing the following operational check.

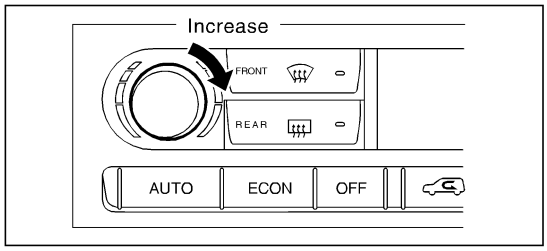

OPERATIONAL CHECK – Temperature increase

a. Turn the temperature dial clockwise until 32°C (85°F) is displayed.

b. Check for hot air at discharge air outlets.

If OK (symptom cannot be duplicated), perform complete operational check (*1).
If NG (symptom is confirmed), continue with STEP-2 following.

2. Check for any service bulletins. → 3. Perform self-diagnosis STEP-1. (*2)

OK

4. Perform self-diagnosis STEP-2. (*3) — NG → Go to appropriate malfunctioning sensor circuit. (*6)

OK

5. Perform self-diagnosis STEP-4. (*4) — NG → **Go to appropriate malfunctioning items.**
- Check mode door motor and air mix door motor circuit. (*7)
- Check intake door circuit. (*8)
- Check blower motor circuit. (*9)

OK

6. Check the following:
- Engine coolant level. Refer to MA-(*11), "Changing Engine Coolant".
- Hoses for leaks or kinks.
- Radiator cap. Refer to LC-(*12), "System Check".
- Air in cooling system.

NG → Repair/replace as necessary.

OK

7. Check air mix door and water cock operation. Refer to (*5). — NG → Go to TROUBLE DIAGNOSIS PROCEDURE FOR AIR MIX DOOR MOTOR. (*10)

OK

8. Check ducts for air leaks. — NG → Repair leaks.

OK

9. Check the heater inlet and outlet hose temperatures by touching.

Hot inlet
Warm outlet

Check thermostat installation. Refer to LC-(*13), "Thermostat". — NG → Check heater hoses for proper installation. — NG → Repair or replace as necessary. Retest.

OK — Note

Replace thermostat. Refer to LC-(*12), "System Check".

Hot inlet
Warm outlet

Both hoses warm

Check heater hoses for proper installation.

OK — Note

Back flush heater core, drain and refill coolant. Refer to MA-(*11), "Changing Engine Coolant". Retest.

Hot inlet
Warm outlet

Both hoses warm

System OK

Replace heater core. Refill engine coolant. Refer to MA-(*11), "Changing Engine Coolant". Retest.

Hot inlet
Warm outlet

SHA687F

*1: HA-62
*2: HA-50
*3: HA-50
*4: HA-50
*5: HA-77
*6: STEP-BY-STEP PROCEDURE (HA-50), see No. 13.
*7: HA-71
*8: HA-82
*9: HA-90
*10: HA-71
*11: MA-15
*12: LC-12
*13: LC-19

Noise

TROUBLE DIAGNOSIS PROCEDURE FOR NOISE

=NAHA0210

SYMPTOM:

- **Noise**

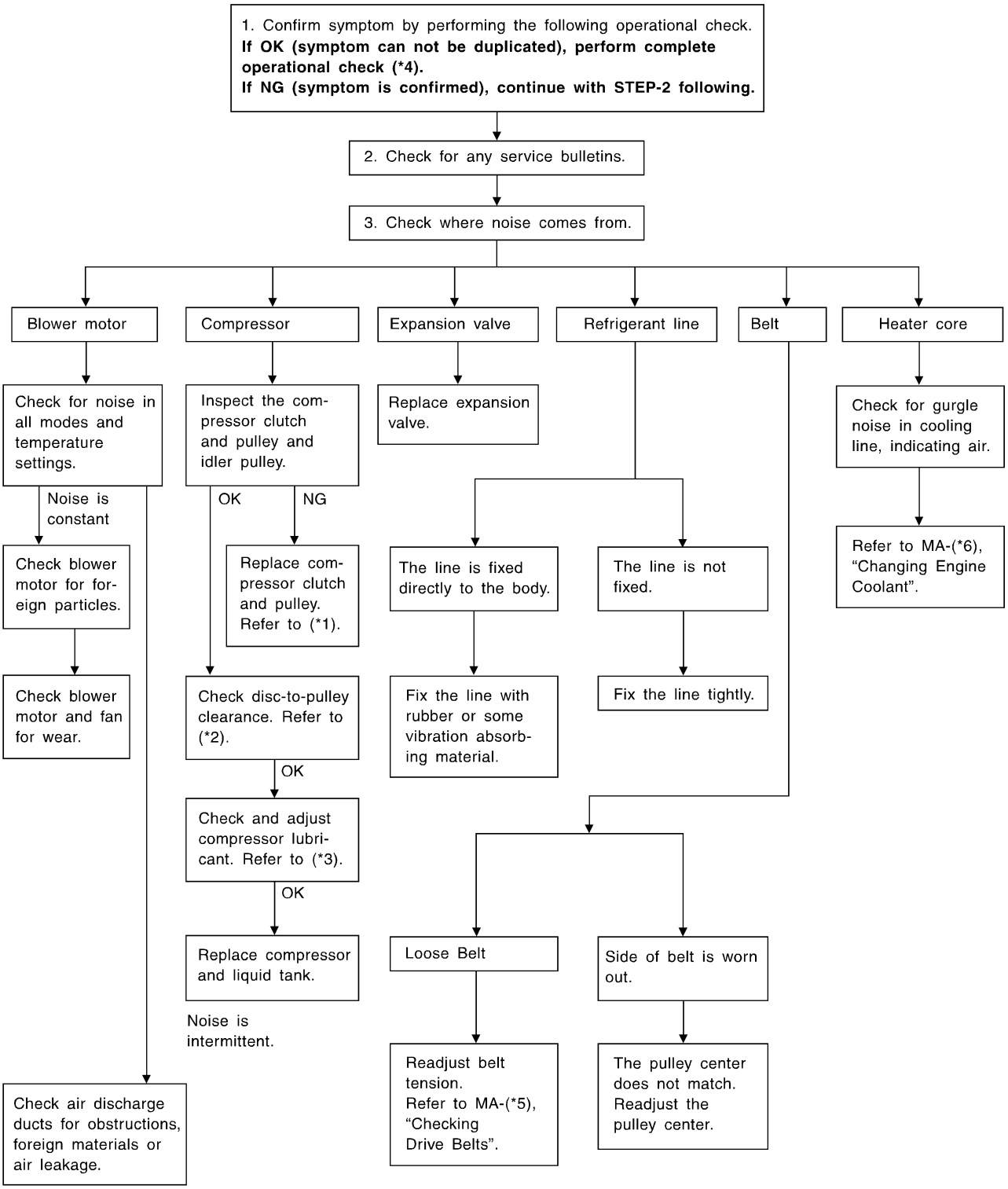

RHA883H

*1: HA-139
*2: HA-141
*3: HA-136
*4: HA-60
*5: MA-14
*6: MA-15

Self-diagnosis

TROUBLE DIAGNOSIS PROCEDURE FOR SELF-DIAGNOSIS

=NAHA0211

SYMPTOM:

- **Self-diagnosis cannot be performed.**

Inspection Flow

NAHA0211S01

Except LE Grade

NAHA0211S0101

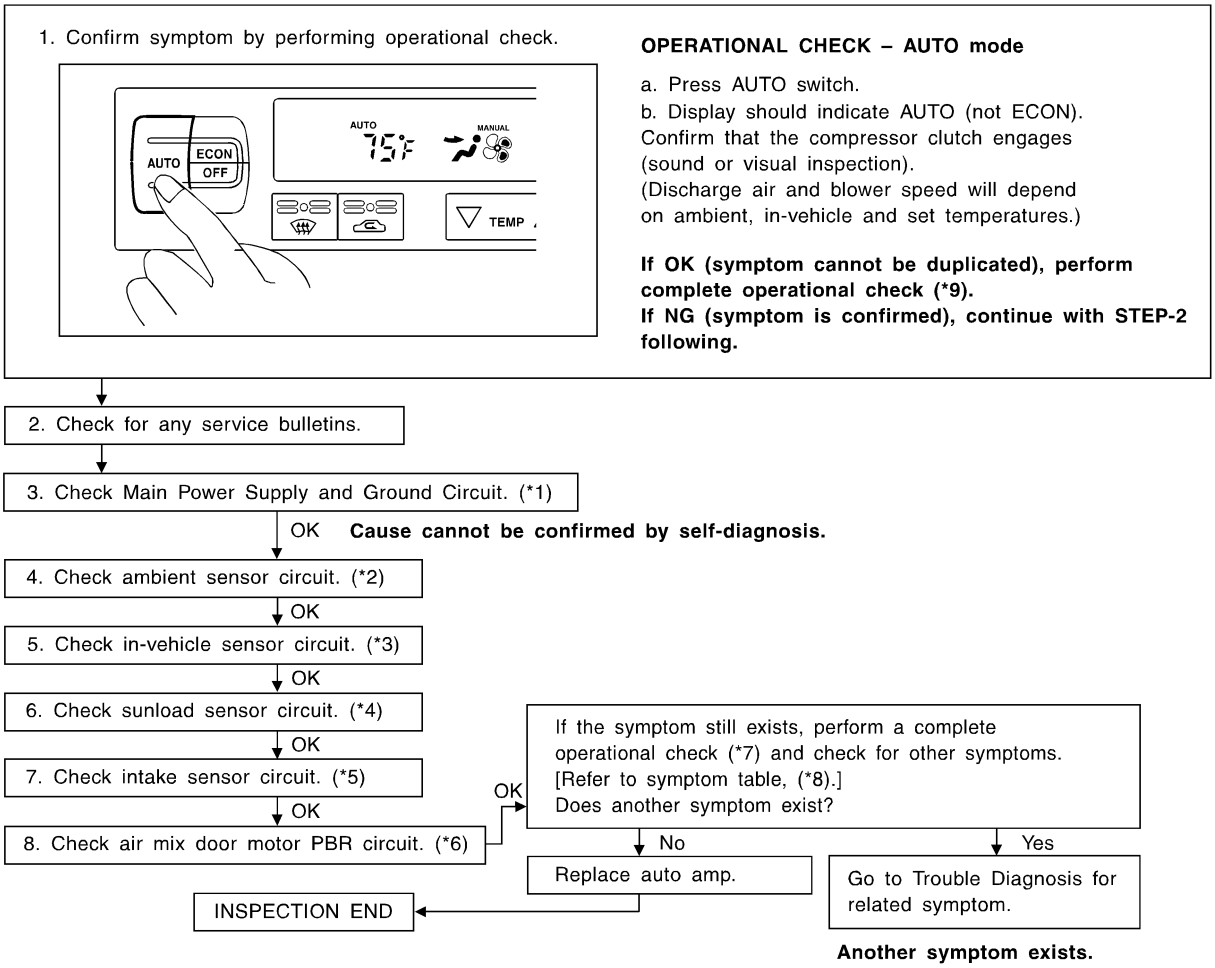

SHA250FA

*1: HA-66	*4: HA-128	*7: HA-60
*2: HA-121	*5: HA-131	*8: HA-59
*3: HA-124	*6: HA-133	*9: HA-60

LE Grade

NAHA0211S0103

1. Confirm symptom by performing operational check.

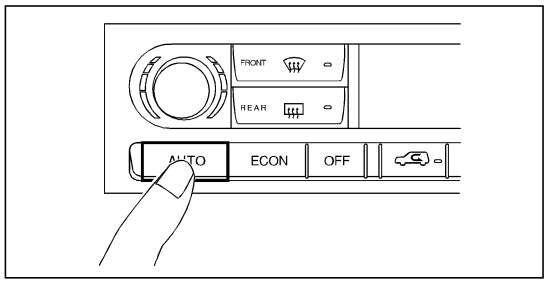

OPERATIONAL CHECK – AUTO mode

a. Press AUTO switch.
b. Display should indicate AUTO (not ECON).
Confirm that the compressor clutch engages (audio or visual inspection).
(Discharge air and blower speed will depend on ambient, in-vehicle and set temperatures.)

If OK (symptom cannot be duplicated), perform complete operational check (*9).
If NG (symptom is confirmed), continue with STEP-2 following.

2. Check for any service bulletins.

3. Check Main Power Supply and Ground Circuit. (*1)

OK **Cause cannot be confirmed by self-diagnosis.**

4. Check ambient sensor circuit. (*2)

OK

5. Check in-vehicle sensor circuit. (*3)

OK

6. Check sunload sensor circuit. (*4)

OK

7. Check intake sensor circuit. (*5)

OK

8. Check air mix door motor PBR circuit. (*6)

OK

If the symptom still exists, perform a complete operational check (*7) and check for other symptoms. [Refer to symptom table, (*8).]
Does another symptom exist?

No: Replace auto amp. → INSPECTION END

Yes: Go to Trouble Diagnosis for related symptom.

Another symptom exists.

SHA688F

*1: HA-66	*4: HA-128	*7: HA-62
*2: HA-121	*5: HA-131	*8: HA-59
*3: HA-124	*6: HA-133	*9: HA-62

Memory Function

TROUBLE DIAGNOSIS PROCEDURE FOR MEMORY FUNCTION

=NAHA0212

SYMPTOM:

- **Memory function does not operate.**

Inspection Flow

NAHA0212S01

Except LE Grade

NAHA0212S0101

1. Confirm symptom by performing the following operational check.

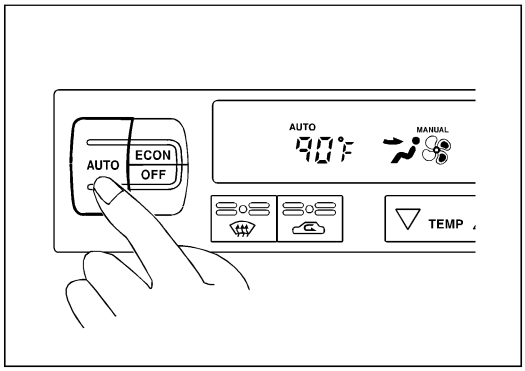

OPERATIONAL CHECK – Memory function

a. Set the temperature 90°F or 32°C.
b. Press OFF switch.
c. Turn the ignition off.
d. Turn the ignition on.
e. Press the AUTO switch.
f. Confirm that the set temperature remains at previous temperature.
g. Press OFF switch.

If OK (symptom cannot be duplicated), perform complete operational check (*2).
If NG (symptom is confirmed), continue with STEP-2 following.

2. Check for any service bulletins.

3. Check Main Power Supply and Ground Circuit. (*1)

OK

4. Replace auto amp.

5. FINAL CHECK
Go to self-diagnosis step-by-step procedure (*3) and perform self-diagnosis STEP-2.
Confirm that code No. 20 is displayed.

RHA244I

*1: HA-66 *2: HA-60 *3: HA-40

LE Grade

NAHA0212S0103

1. Confirm symptom by performing the following operational check.

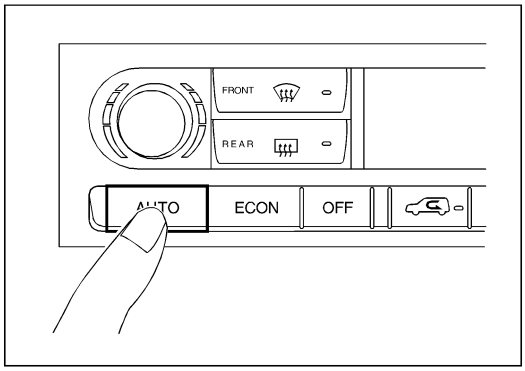

OPERATIONAL CHECK – Memory function

a. Set the temperature 85°F or 32°C.
b. Press OFF switch.
c. Turn the ignition off.
d. Turn the ignition on.
e. Press the AUTO switch.
f. Confirm that the set temperature remains at previous temperature.
g. Press OFF switch.

If OK (symptom cannot be duplicated), perform complete operational check (*2).
If NG (symptom is confirmed), continue with STEP-2 following.

2. Check for any service bulletins.

3. Check Main Power Supply and Ground Circuit. (*1)

OK

4. Replace auto amp.

5. FINAL CHECK
Go to self-diagnosis step-by-step procedure (*3) and perform self-diagnosis STEP-2.
Confirm that code No. 20 is displayed.

SHA689F

*1: HA-66 *2: HA-62 *3: HA-50

ECON (ECONOMY) Mode

TROUBLE DIAGNOSIS PROCEDURE FOR ECON (ECONOMY) MODE

=NAHA0213

SYMPTOM:

- **ECON mode does not operate.**

Inspection Flow

NAHA0213S01

Except LE Grade

NAHA0213S0101

1. Confirm symptom by performing the following operational check.

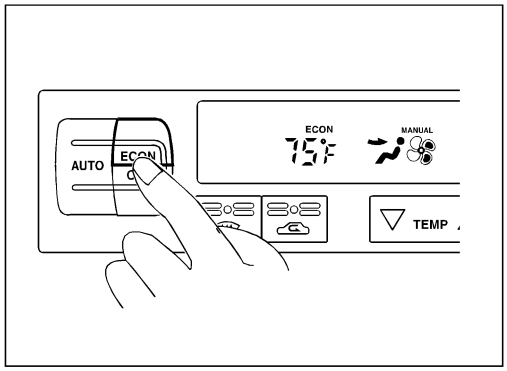

OPERATIONAL CHECK – ECON (ECONOMY) mode

a. Set the temperature 75°F or 25°C.
b. Press ECON switch.
c. Display should indicate ECON (not AUTO).
Confirm that the compressor clutch is not engaged (sound or visual inspection).
(Discharge air and blower speed will depend on ambient, in-vehicle and set temperatures.)

If OK (symptom cannot be duplicated), perform complete operational check (*2).
If NG (symptom is confirmed), continue with STEP-2 following.

↓

2. Check for any service bulletins.

↓

3. Check Main Power Supply and Ground Circuit. (*1)

↓ OK

4. Replace auto amp.

↓

5. FINAL CHECK
Go to self-diagnosis step-by-step procedure (*3) and perform self-diagnosis STEP-2.
Confirm that code No. 20 is displayed.

SHA920EB

*1: HA-66 *2: HA-60 *3: HA-40

LE Grade

NAHA0213S0103

1. Confirm symptom by performing the following operational check.

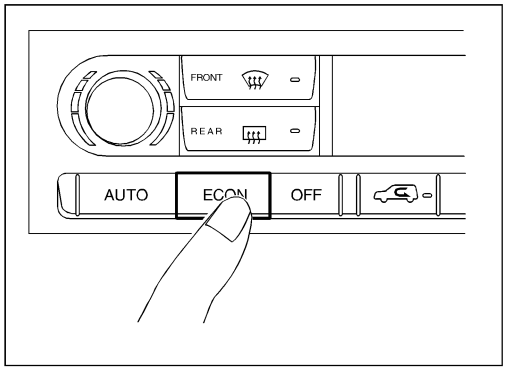

OPERATIONAL CHECK – ECON (ECONOMY) mode

a. Set the temperature 75°F or 25°C.
b. Press ECON switch.
c. Display should indicate ECON (not AUTO).
Confirm that the compressor clutch is not engaged (visual inspection).
(Discharge air and blower speed will depend on ambient, in-vehicle and set temperatures.)

If OK (symptom cannot be duplicated), perform complete operational check (*2).
If NG (symptom is confirmed), continue with STEP-2 following.

2. Check for any service bulletins.

3. Check Main Power Supply and Ground Circuit. (*1)

OK

4. Replace auto amp.

5. FINAL CHECK
Go to self-diagnosis step-by-step procedure (*3) and perform self-diagnosis STEP-2.
Confirm that code No. 20 is displayed.

SHA690F

*1: HA-66 *2: HA-62 *3: HA-50

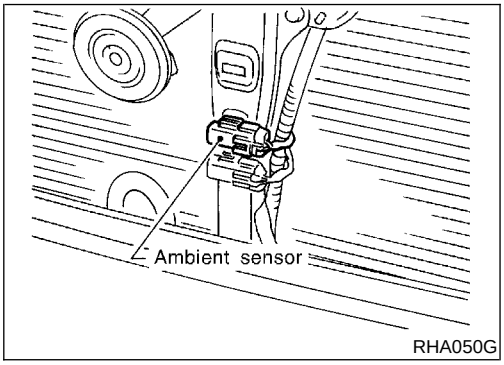

RHA050G

Ambient Sensor Circuit

COMPONENT DESCRIPTION

NAHA0214

The ambient sensor is located on the hood lock stay. It detects ambient temperature and converts it into a resistance value which is then input into the auto amplifier.

AMBIENT TEMPERATURE INPUT PROCESS

NAHA0215

The automatic amplifier includes a "processing circuit" for the ambient sensor input. However, when the temperature detected by the ambient sensor increases quickly, the processing circuit retards the auto amp. function. It only allows the auto amp. to recognize an ambient temperature increase of 0.33°C (0.6°F) per 100 seconds. As an example, consider stopping for a cup of coffee after high speed driving. Although the actual ambient temperature has not changed, the temperature detected by the ambient sensor will increase. This is because the heat from the engine compartment can radiate to the front grille area, location of the ambient sensor.

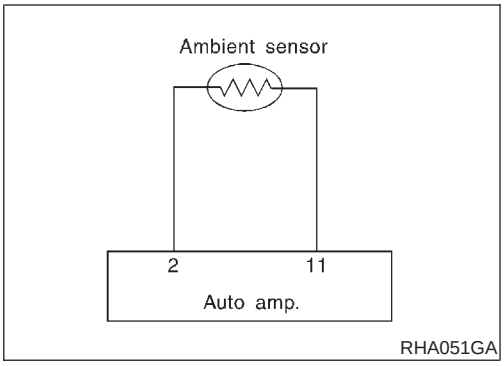

DIAGNOSTIC PROCEDURE

NAHA0216

SYMPTOM: Ambient sensor circuit is open or shorted. (21 or –21 is indicated on the display as a result of conducting Self-diagnosis STEP 2.)

1	CHECK VOLTAGE BETWEEN AMBIENT SENSOR HARNESS CONNECTOR AND GROUND

Disconnect ambient sensor harness connector.
Do approx. 5 volts exist between ambient sensor harness connector E32 terminal No. 1 and ground?

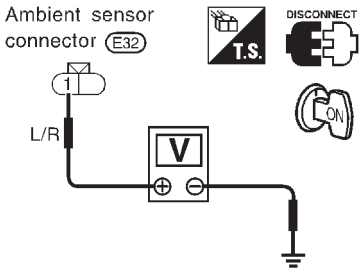

RHA052G

Yes or No

Yes	▶	GO TO 2.
No	▶	GO TO 4.

2	CHECK AMBIENT SENSOR CIRCUIT BETWEEN AMBIENT SENSOR AND AUTO AMP.

1. Disconnect auto amp. harness connector.
2. Check circuit continuity between ambient sensor harness connector E32 terminal No. 2 and auto amp. harness connector M103 terminal No. 11.

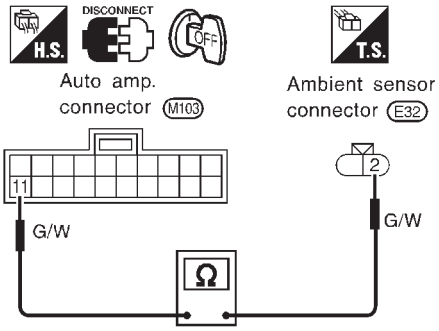

RHA475G

Continuity should exist.
If OK, check harness for short.

OK or NG

OK	▶	GO TO 3.
NG	▶	Repair harness or connector.

3	CHECK AMBIENT SENSOR	
Refer to HA-124.		
	OK or NG	
OK	▶	1. Replace auto amp. 2. Go to self-diagnosis step-by-step procedure HA-40 (Except LE grade), HA-50 (LE grade) and perform self-diagnosis STEP-2. Confirm that code No. 20 is displayed.
NG	▶	Replace ambient sensor.

4	CHECK AMBIENT SENSOR CIRCUIT BETWEEN AMBIENT SENSOR AND AUTO AMP.	
1. Disconnect auto amp. harness connector. 2. Check circuit continuity between ambient sensor harness connector E32 terminal No. 1 and auto amp. harness connector M103 terminal No. 2.		
	OK or NG	
OK	▶	1. Replace auto amp. 2. Go to self-diagnosis step-by-step procedure HA-40 (Except LE grade), HA-50 (LE grade) and perform self-diagnosis STEP-2. Confirm that code No. 20 is displayed.
NG	▶	Repair harness or connector.

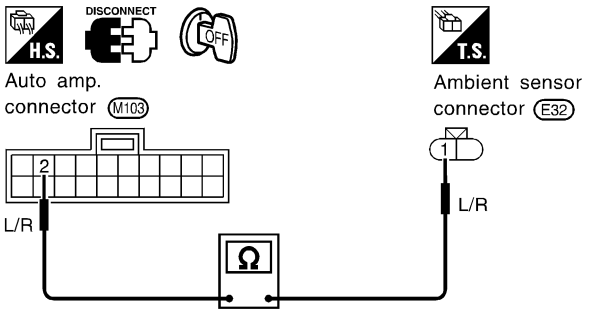

Continuity should exist.
If OK, check harness for short.

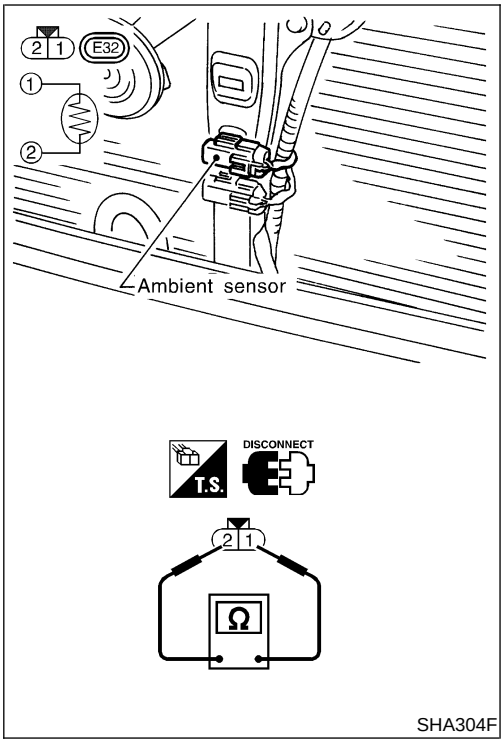

COMPONENT INSPECTION

=NAHA0217

Ambient Sensor

NAHA0217S01

After disconnecting ambient sensor harness connector, measure resistance between terminals 2 and 1 at sensor harness side, using the table below.

Temperature °C (°F)	Resistance kΩ
−15 (5)	12.73
−10 (14)	9.92
−5 (23)	7.80
0 (32)	6.19
5 (41)	4.95
10 (50)	3.99
15 (59)	3.24
20 (68)	2.65
25 (77)	2.19
30 (86)	1.81
35 (95)	1.51
40 (104)	1.27
45 (113)	1.07

If NG, replace ambient sensor.

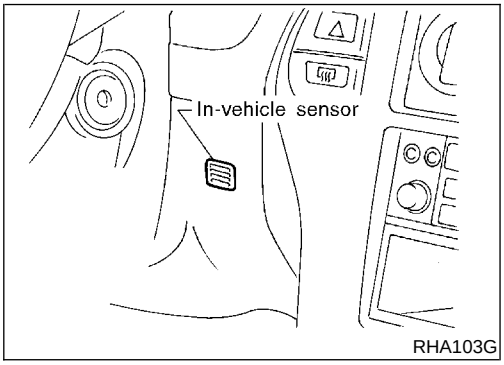

In-vehicle Sensor Circuit

COMPONENT DESCRIPTION

NAHA0218

In-vehicle sensor

NAHA0218S01

The in-vehicle sensor is located on instrument lower panel. It converts variations in temperature of compartment air drawn from the aspirator into a resistance value. It is then input into the auto amplifier.

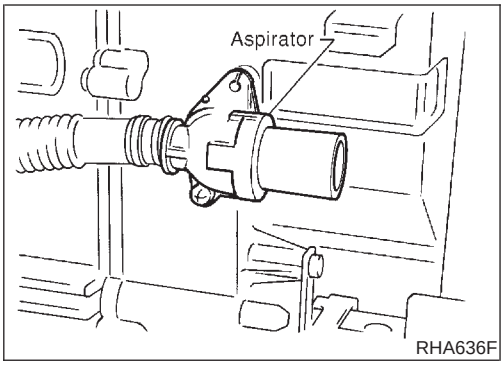

RHA636F

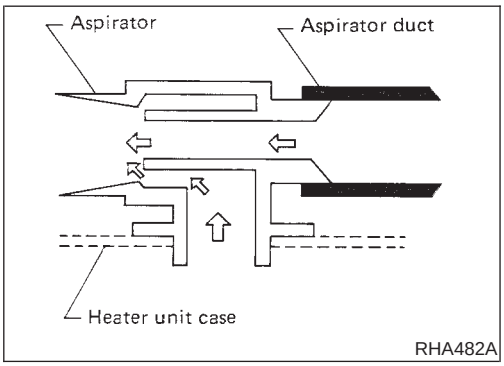

RHA482A

Aspirator

NAHA0218S02

The aspirator is located in front of heater unit. It produces vacuum pressure due to air discharged from the heater unit, continuously taking compartment air in the aspirator.

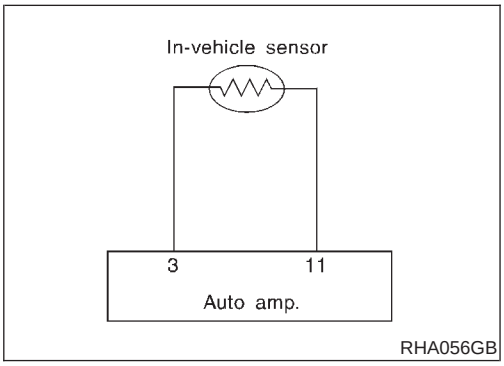

RHA056GB

DIAGNOSTIC PROCEDURE

NAHA0219

SYMPTOM: In-vehicle sensor circuit is open or shorted. (22 or –22 is indicated on the display as a result of conducting Self-diagnosis STEP 2.)

1	CHECK IN-VEHICLE SENSOR CIRCUIT BETWEEN IN-VEHICLE SENSOR AND GROUND	
Disconnect in-vehicle sensor harness connector. Do approx. 5 volts exist between in-vehicle sensor harness connector M34 terminal No. 1 and ground?		
Yes or No		
Yes	▶	GO TO 2.
No	▶	GO TO 4.

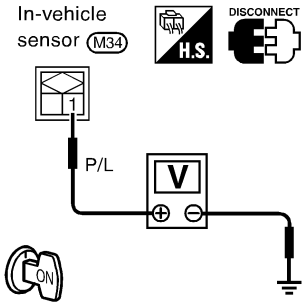

RHA579H

2	CHECK IN-VEHICLE SENSOR CIRCUIT BETWEEN IN-VEHICLE SENSOR AND AUTO AMP.

1. Disconnect auto amp. harness connector.
2. Check circuit continuity between in-vehicle sensor harness connector M34 terminal No. 2 and auto amp. harness connector M103 terminal No. 11.

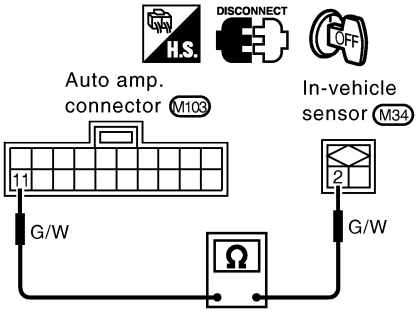

RHA478GG

Continuity should exist.
If OK, check harness for short.

OK or NG

OK	▶	GO TO 3.
NG	▶	Repair harness or connector.

3	CHECK IN-VEHICLE SENSOR

Refer to HA-127.

OK or NG

OK	▶	1. Replace auto amp. 2. Go to self-diagnosis step-by-step procedure HA-40 (Except LE grade), HA-50 (LE grade) and perform self-diagnosis STEP-2. Confirm that code No. 20 is displayed.
NG	▶	1. Replace in-vehicle sensor. 2. Go to self-diagnosis step-by-step procedure HA-40 (Except LE grade), HA-50 (LE grade) and perform self-diagnosis STEP-2. Confirm that code No. 20 is displayed.

4	CHECK IN-VEHICLE SENSOR CIRCUIT BETWEEN IN-VEHICLE SENSOR AND AUTO AMP.

1. Disconnect auto amp. harness connector.
2. Check circuit continuity between in-vehicle sensor harness connector M34 terminal No. 1 and auto amp. harness connector M103 terminal No. 3.

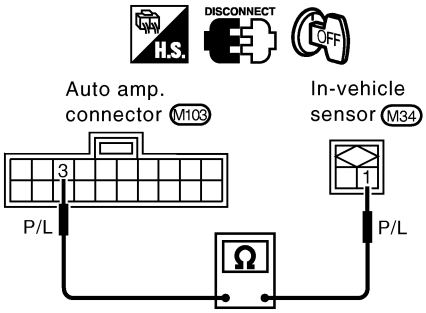

RHA479GE

Continuity should exist.
If OK, check harness for short.

OK or NG

OK	▶	1. Replace auto amp. 2. Go to self-diagnosis step-by-step procedure HA-40 (Except LE grade), HA-58 (LE grade) and perform self-diagnosis STEP-2. Confirm that code No. 20 is displayed.
NG	▶	Repair harness or connector.

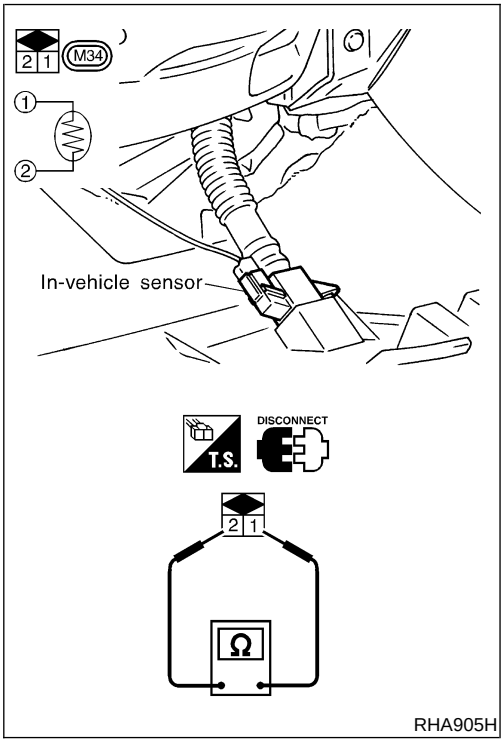

RHA905H

COMPONENT INSPECTION

NAHA0220

In-vehicle Sensor

NAHA0220S01

After disconnecting in-vehicle sensor harness connector, measure resistance between terminals 1 and 2 at sensor harness side, using the table below.

Temperature °C (°F)	Resistance kΩ
−15 (5)	12.73
−10 (14)	9.92
−5 (23)	7.80
0 (32)	6.19
5 (41)	4.95
10 (50)	3.99
15 (59)	3.24
20 (68)	2.65
25 (77)	2.19
30 (86)	1.81

Temperature °C (°F)	Resistance kΩ
35 (95)	1.51
40 (104)	1.27
45 (113)	1.07

If NG, replace in-vehicle sensor.

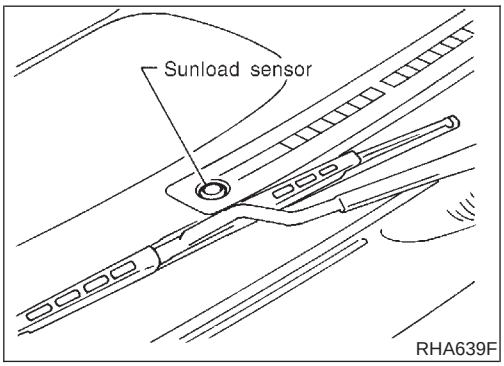

Sunload Sensor Circuit

COMPONENT DESCRIPTION

NAHA0221

The sunload sensor is located on the right defroster grille. It detects sunload entering through windshield by means of a photo diode. The sensor converts the sunload into a current value which is then input into the auto amplifier.

SUNLOAD INPUT PROCESS

NAHA0222

The auto amp. also includes a processing circuit which "average" the variations in detected sunload over a period of time. This prevents drastic swings in the A/C system operation due to small or quick variations in detected sunload.

For example, consider driving along a road bordered by an occasional group of large trees. The sunload detected by the sunload sensor will vary whenever the trees obstruct the sunlight. The processing circuit averages the detected sunload over a period of time, so that the (insignificant) effect of the trees momentarily obstructing the sunlight does not cause any change in the A/C system operation. On the other hand, shortly after entering a long tunnel, the system will recognize the change in sunload, and the system will react accordingly.

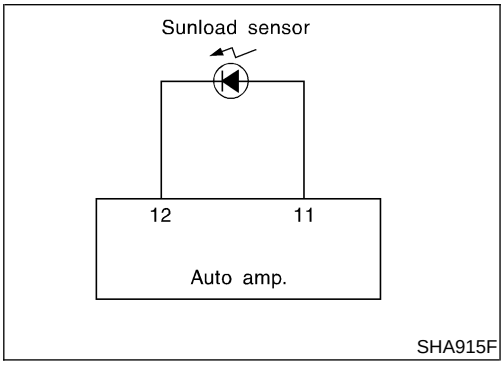

DIAGNOSTIC PROCEDURE

NAHA0223

SYMPTOM: Sunload sensor circuit is open or shorted. (25 or –25 is indicated on the display as a result of conducting Self-diagnosis STEP 2.)

1	CHECK SUNLOAD SENSOR CIRCUIT BETWEEN SUNLOAD SENSOR AND GROUND

Disconnect sunload sensor harness connector.
Do approx. 5 volts exist between sunload sensor harness connector M58 terminal No. 1 and ground?

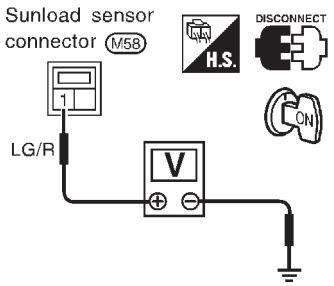

RHA062G

Yes or No

Yes	▶	GO TO 2.
No	▶	GO TO 4.

2	CHECK SUNLOAD SENSOR CIRCUIT BETWEEN SUNLOAD SENSOR AND AUTO AMP.

1. Disconnect auto amp. harness connector.
2. Check circuit continuity between sunload sensor harness connector M58 terminal No. 2 and auto amp. harness connector M103 terminal No. 11.

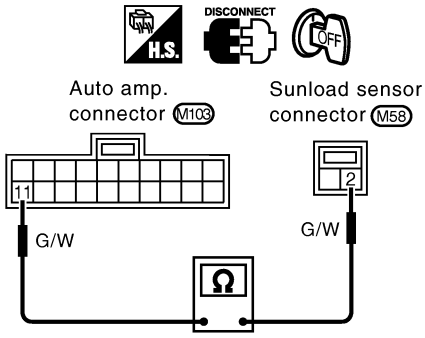

RHA483GH

Continuity should exist.
If OK, check harness for short.

OK or NG

OK	▶	GO TO 3.
NG	▶	Repair harness or connector.

3	CHECK SUNLOAD SENSOR

Refer to HA-130.

OK or NG

OK	▶	1. Replace auto amp. 2. Go to self-diagnosis step-by-step procedure HA-40 (Except LE grade), HA-50 (LE grade) and perform self-diagnosis STEP-2. Confirm that code No. 20 is displayed.
NG	▶	1. Replace sunload sensor. 2. Go to self-diagnosis step-by-step procedure HA-40 (Except LE grade), HA-50 (LE grade) and perform self-diagnosis STEP-2. Confirm that code No. 20 is displayed.

4	CHECK SUNLOAD SENSOR CIRCUIT BETWEEN SUNLOAD SENSOR AND AUTO AMP.

1. Disconnect auto amp. harness connector.
2. Check circuit continuity between sunload sensor harness connector M58 terminal No. 1 and auto amp. harness connector M103 terminal No. 12.

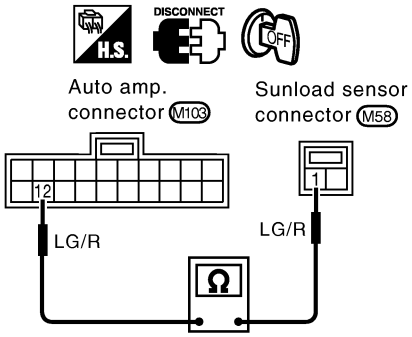

RHA484GF

Continuity should exist.
If OK, check harness for short.

OK or NG

OK	▶	1. Replace auto amp. 2. Go to self-diagnosis step-by-step procedure HA-40 (Except LE grade), HA-50 (LE grade) and perform self-diagnosis STEP-2. Confirm that code No. 20 is displayed.
NG	▶	Repair harness or connector.

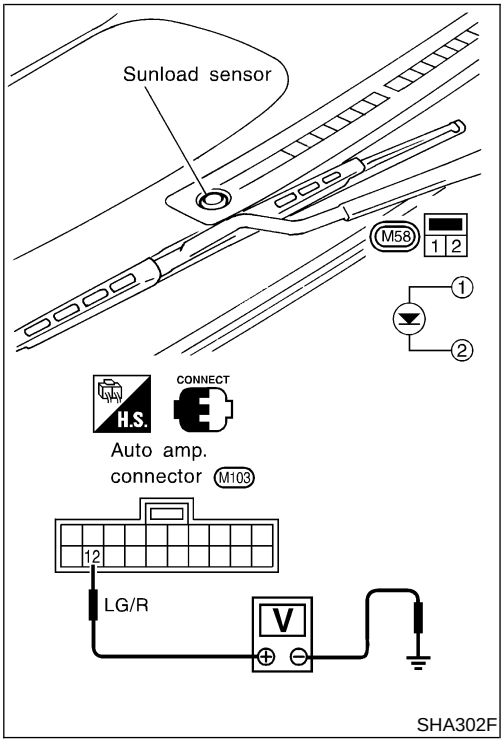

SHA302F

COMPONENT INSPECTION

NAHA0224

Sunload Sensor

NAHA0224S01

Measure voltage between auto amp. terminal No. 12 and ground.
If NG, replace sunload sensor.

- **When checking sunload sensor, select a place where sun shines directly on it.**

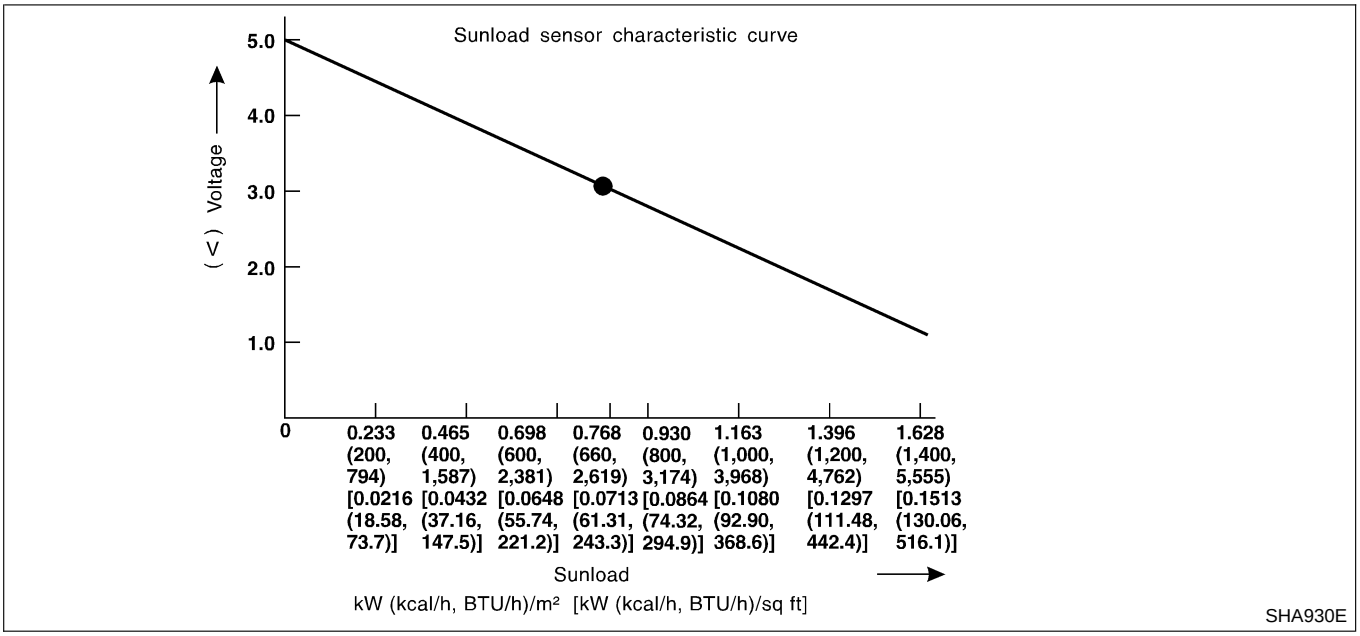

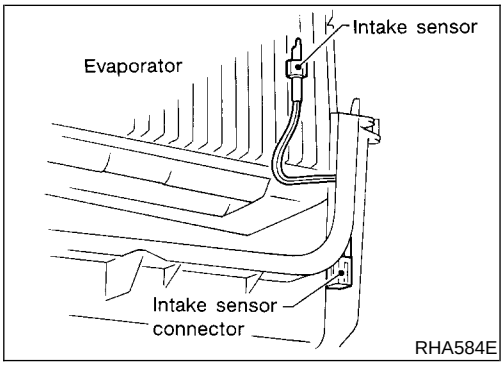

Intake Sensor Circuit

COMPONENT DESCRIPTION

NAHA0225

Intake Sensor

NAHA0225S01

The intake sensor is located on the cooling unit. It converts temperature of air after it passes through the evaporator into a resistance value which is then input to the auto amp.

After disconnecting intake sensor harness connector, measure resistance between terminals 1 and 2 at sensor harness side, using the table below.

Temperature °C (°F)	Resistance kΩ
−15 (5)	12.34
−10 (14)	9.62
−5 (23)	7.56
0 (32)	6.00
5 (41)	4.80
10 (50)	3.87
15 (59)	3.15
20 (68)	2.57
25 (77)	2.12
30 (86)	1.76
35 (95)	1.47
40 (104)	1.23
45 (113)	1.04

If NG, replace intake sensor.

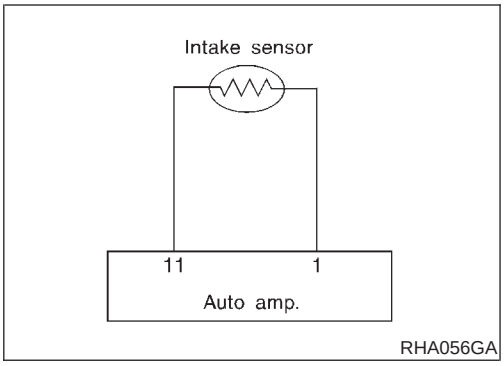

DIAGNOSTIC PROCEDURE

NAHA0226

SYMPTOM: Intake sensor circuit is open or shorted. (24 or −24 is indicated on the display as a result of conducting Self-diagnosis STEP 2.)

1	CHECK INTAKE SENSOR CIRCUIT BETWEEN INTAKE SENSOR AND GROUND

Disconnect intake sensor harness connector.
Do approx. 5 volts exist between intake sensor harness connector M107 terminal No. 1 and ground?

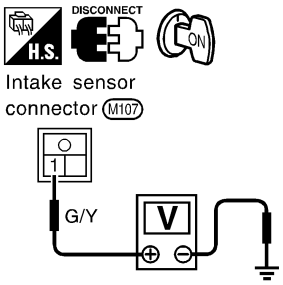

Yes or No

Yes	▶	GO TO 2.
No	▶	GO TO 4.

2	CHECK INTAKE SENSOR CIRCUIT BETWEEN INTAKE SENSOR AND AUTO AMP.

1. Disconnect auto amp. harness connector.
2. Check circuit continuity between intake sensor harness connector M107 terminal No. 2 and auto amp. harness connector M103 terminal No. 11.

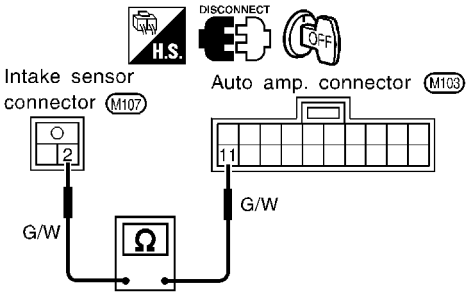

Continuity should exist.
If OK, check harness for short.

OK or NG

OK	▶	GO TO 3.
NG	▶	Repair harness or connector.

3	CHECK INTAKE SENSOR	
Refer to HA-131.		
	OK or NG	
OK	▶	1. Replace auto amp. 2. Go to self-diagnosis step-by-step procedure HA-40 (Except LE grade), HA-50 (LE grade) and perform self-diagnosis STEP-2. Confirm that code No. 20 is displayed.
NG	▶	1. Replace intake sensor. 2. Go to self-diagnosis step-by-step procedure HA-40 (Except LE grade), HA-50 (LE grade) and perform self-diagnosis STEP-2. Confirm that code No. 20 is displayed.

4	CHECK INTAKE SENSOR CIRCUIT BETWEEN INTAKE SENSOR AND AUTO AMP.	
1. Disconnect auto amp. harness connector. 2. Check circuit continuity between intake sensor harness connector M107 terminal No. 1 and auto amp. harness connector M103 terminal No. 1.		
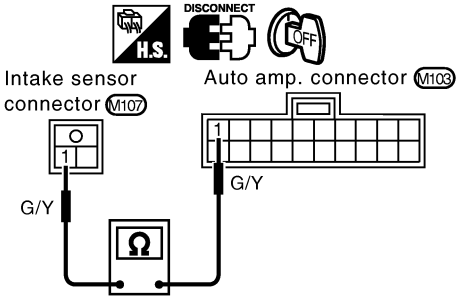 RHA497GD **Continuity should exist.** If OK, check harness for short.		
	OK or NG	
OK	▶	1. Replace auto amp. 2. Go to self-diagnosis step-by-step procedure HA-40 (Except LE grade), HA-50 (LE grade) and perform self-diagnosis STEP-2. Confirm that code No. 20 is displayed.
NG	▶	Repair harness or connector.

Air Mix Door Motor PBR Circuit

DIAGNOSTIC PROCEDURE

NAHA0227

For description of mode door motor and air mix door motor circuit, refer to HA-77.

SYMPTOM: If PBR circuit is open or shorted. (–26 or 26 is indicated on the display as a result of conducting Self-diagnosis STEP 2.)

Perform diagnostic procedure for mode door motor and air mix door motor. Refer to HA-71.

HFC-134a (R-134a) Service Procedure

NAHA0228

SETTING OF SERVICE TOOLS AND EQUIPMENT

NAHA0228S01

Discharging Refrigerant

NAHA0228S0101

WARNING:

Avoid breathing A/C refrigerant and lubricant vapor or mist. Exposure may irritate eyes, nose and throat. Remove HFC-134a (R-134a) from A/C system using certified service equipment meeting requirements of SAE J2210 (R-134a recycling equipment) or J2209 (R-134a recovery equipment). If accidental system discharge occurs, ventilate work area before resuming service. Additional health and safety information may be obtained from refrigerant and lubricant manufacturers.

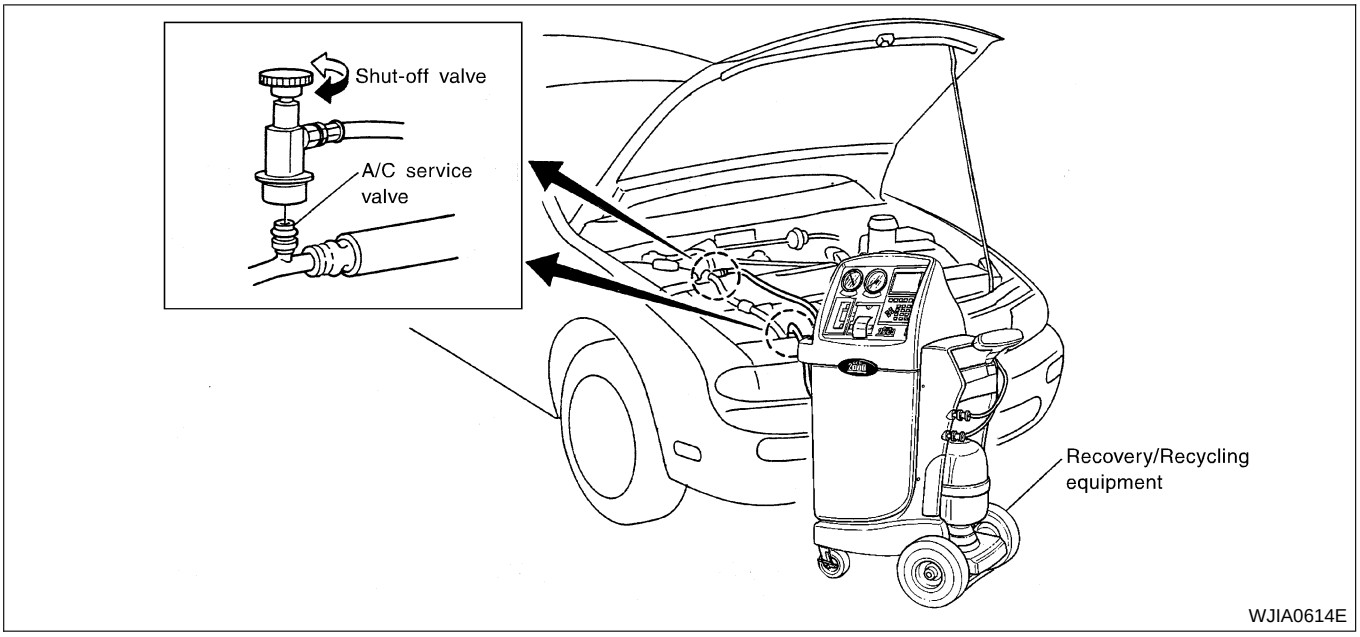

Evacuating System and Charging Refrigerant

NAHA0228S0102

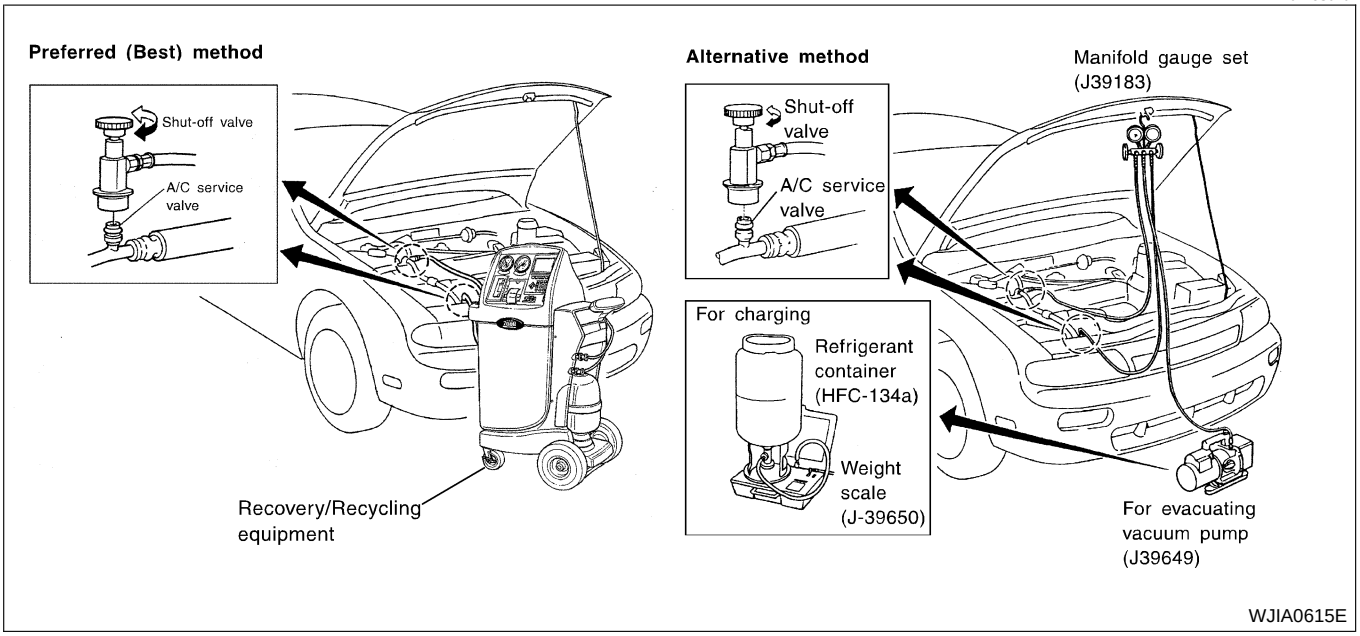

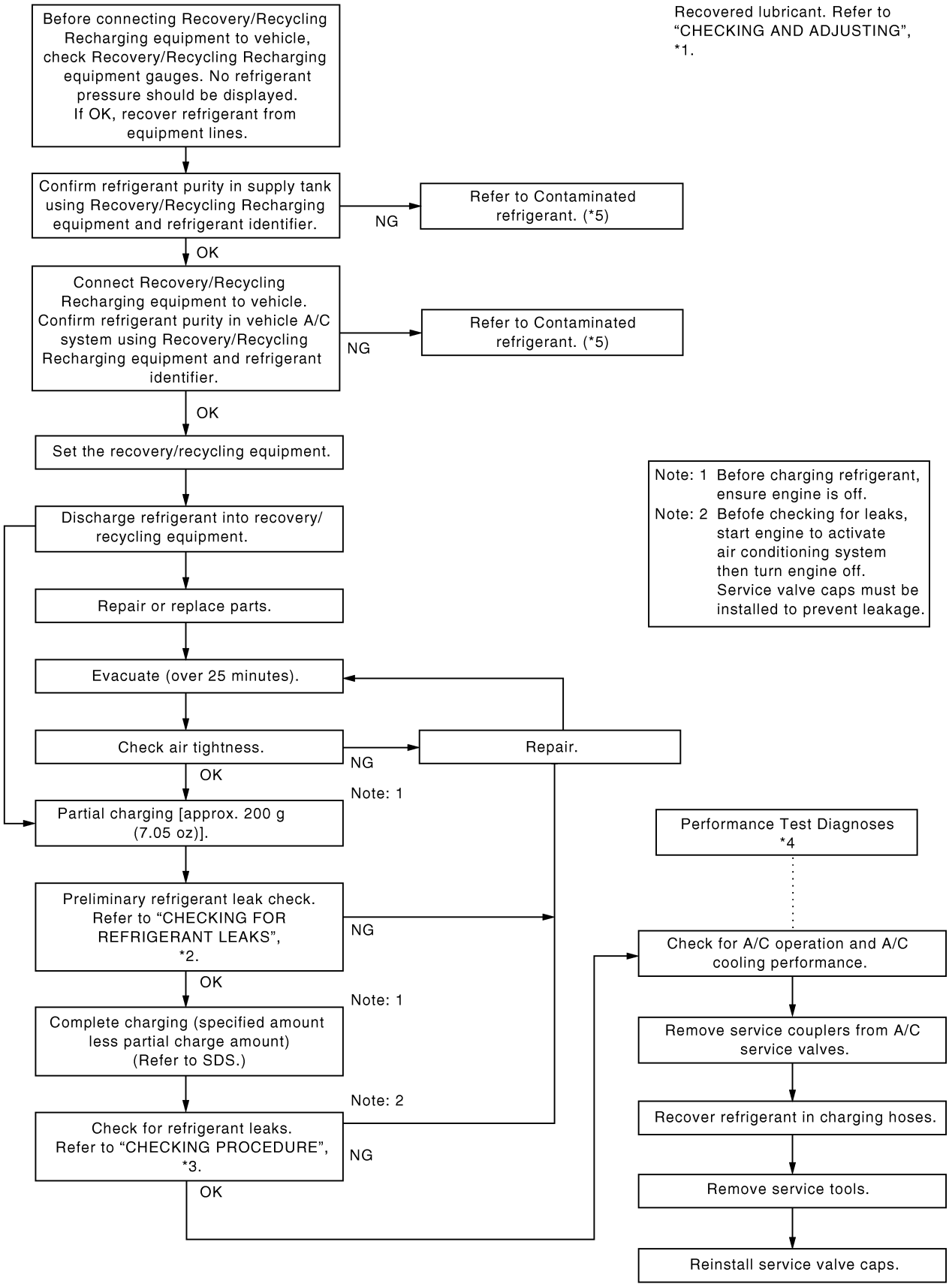
Before connecting Recovery/Recycling Recharging equipment to vehicle, check Recovery/Recycling Recharging equipment gauges. No refrigerant pressure should be displayed. If OK, recover refrigerant from equipment lines.
Recovered lubricant. Refer to "CHECKING AND ADJUSTING", *1.
Confirm refrigerant purity in supply tank using Recovery/Recycling Recharging equipment and refrigerant identifier.
NG
Refer to Contaminated refrigerant. (*5)
OK
Connect Recovery/Recycling Recharging equipment to vehicle. Confirm refrigerant purity in vehicle A/C system using Recovery/Recycling Recharging equipment and refrigerant identifier.
NG
Refer to Contaminated refrigerant. (*5)
OK
Set the recovery/recycling equipment.
Note: 1 Before charging refrigerant, ensure engine is off.
Note: 2 Befofe checking for leaks, start engine to activate air conditioning system then turn engine off. Service valve caps must be installed to prevent leakage.
Discharge refrigerant into recovery/ recycling equipment.
Repair or replace parts.
Evacuate (over 25 minutes).
Check air tightness.
NG
Repair.
OK
Note: 1
Partial charging [approx. 200 g (7.05 oz)].
Performance Test Diagnoses *4
Preliminary refrigerant leak check. Refer to "CHECKING FOR REFRIGERANT LEAKS", *2.
NG
OK
Note: 1
Complete charging (specified amount less partial charge amount) (Refer to SDS.)
Note: 2
Check for refrigerant leaks. Refer to "CHECKING PROCEDURE", *3.
NG
OK
Check for A/C operation and A/C cooling performance.
Remove service couplers from A/C service valves.
Recover refrigerant in charging hoses.
Remove service tools.
Reinstall service valve caps.
SHA922F

*1: HA-136
*2: HA-144
*3: HA-145
*4: HA-106
*5: HA-3

Maintenance of Lubricant Quantity in Compressor

NAHA0229

The lubricant in the compressor circulates through the system with the refrigerant. Add lubricant to compressor when replacing any component or after a large gas leakage occurred. It is important to maintain the specified amount.
If lubricant quantity is not maintained properly, the following malfunctions may result:

- Lack of lubricant: May lead to a seized compressor
- Excessive lubricant: Inadequate cooling (thermal exchange interference)

LUBRICANT

NAHA0229S01

Name: Nissan A/C System Oil Type S
Part number: KLH00-PAGS0

CHECKING AND ADJUSTING

NAHA0229S02

Adjust the lubricant quantity according to the test group shown below.

1	CHECK LUBRICANT RETURN OPERATION	
Can lubricant return operation be performed? ● A/C system works properly. ● There is no evidence of a large amount of lubricant leakage. **CAUTION:** **If excessive lubricant leakage is noted, do not perform the lubricant return operation.**		
	Yes or No	
Yes	▶	GO TO 2.
No	▶	GO TO 3.

2	PERFORM LUBRICANT RETURN OPERATION, PROCEEDING AS FOLLOWS:	
1. Start engine, and set the following conditions: ● **Test condition** **Engine speed: Idling to 1,200 rpm** **AUTO switch: ON** **Blower speed: Max. position** **Temp. control: Optional [Set so that intake air temperature is 25 to 30°C (77 to 86°F).]** 2. **Next item is for V-6 compressor. Connect the manifold gauge, and check that the high pressure side pressure is 588 kPa (6 kg/cm^2, 85 psi) or higher.** **If less than the reference level, attach a cover to the front face of the condenser to raise the pressure.** 3. Perform lubricant return operation for about 10 minutes. 4. Stop engine.		
OK	▶	GO TO 3.

3	CHECK COMPRESSOR	
Should the compressor be replaced?		
	Yes or No	
Yes	▶	Go to "Lubricant Adjustment Procedure for Compressor Replacement", (HA-137).
No	▶	GO TO 4.

4	CHECK ANY PART	
Is there any part to be replaced? (Evaporator, condenser, liquid tank or in case there is evidence of a large amount of lubricant leakage.)		
	Yes or No	
Yes	▶	Go to "Lubricant Adjusting Procedure for Components Replacement Except Compressor", (HA-137).
No	▶	Carry out the A/C performance test.

Lubricant Adjusting Procedure for Components Replacement Except Compressor

NAHA0229S0201

After replacing any of the following major components, add the correct amount of lubricant to the system.

Amount of lubricant to be added

Part replaced	Lubricant to be added to system	Remarks
	Amount of lubricant mℓ (US fl oz, Imp fl oz)	
Evaporator	75 (2.5, 2.6)	—
Condenser	75 (2.5, 2.6)	—
Liquid tank	5 (0.2, 0.2)	Add if compressor is not replaced. *1
In case of refrigerant leak	30 (1.0, 1.1)	Large leak
	—	Small leak *2

*1: If compressor is replaced, addition of lubricant is included in the table.
*2: If refrigerant leak is small, no addition of lubricant is needed.

Lubricant Adjusting Procedure for Compressor Replacement

NAHA0229S0202

1. Before connecting Recovery/Recycling Recharging equipment to vehicle, check Recovery/Recycling Recharging equipment gauges. No refrigerant pressure should be displayed. If NG, recover refrigerant from equipment lines.
2. Connect Recovery/Recycling Recharging equipment to vehicle. Confirm refrigerant purity in supply tank using Recovery/Recycling Recharging equipment and refrigerant identifier. If NG, refer to "CONTAMINATED REFRIGERANT", HA-3.
3. Confirm refrigerant purity in vehicle A/C system using Recovery/Recycling Recharging equipment and refrigerant identifier. If NG, refer to "CONTAMINATED REFRIGERANT", HA-3.
4. Discharge refrigerant into the refrigerant recovery/recycling equipment. Measure lubricant discharged into the recovery/recycling equipment.
5. Remove the drain plug of the "old" (removed) compressor.

Drain the lubricant into a graduated container and record the amount of drained lubricant.

6. Remove the drain plug and drain the lubricant from the "new" compressor into a separate, clean container.
7. Measure an amount of new lubricant installed equal to amount drained from "old" compressor. Add this lubricant to "new" compressor through the suction port opening.
8. Measure an amount of new lubricant equal to the amount recovered during discharging. Add this lubricant to "new" compressor through the suction port opening.
9. Torque the drain plug.

   18 - 19 N·m (1.8 - 1.9 kg-m, 13 - 14 ft-lb)
10. If the liquid tank also needs to be replaced, add an additional 5 mℓ (0.2 US fl oz, 0.2 Imp fl oz) of lubricant at this time.
    Do not add this 5 mℓ (0.2 US fl oz, 0.2 Imp fl oz) of lubricant if only replacing the compressor.

Lubricant adjusting procedure for compressor replacement

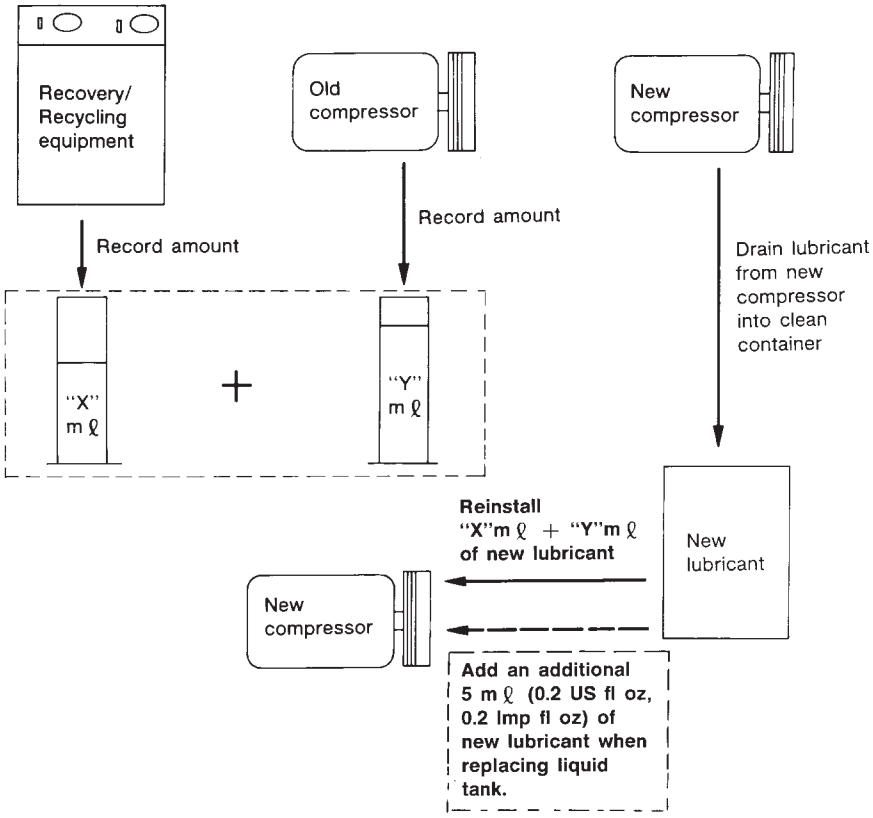

RHA065DD

Compressor

REMOVAL AND INSTALLATION

NAHA0230

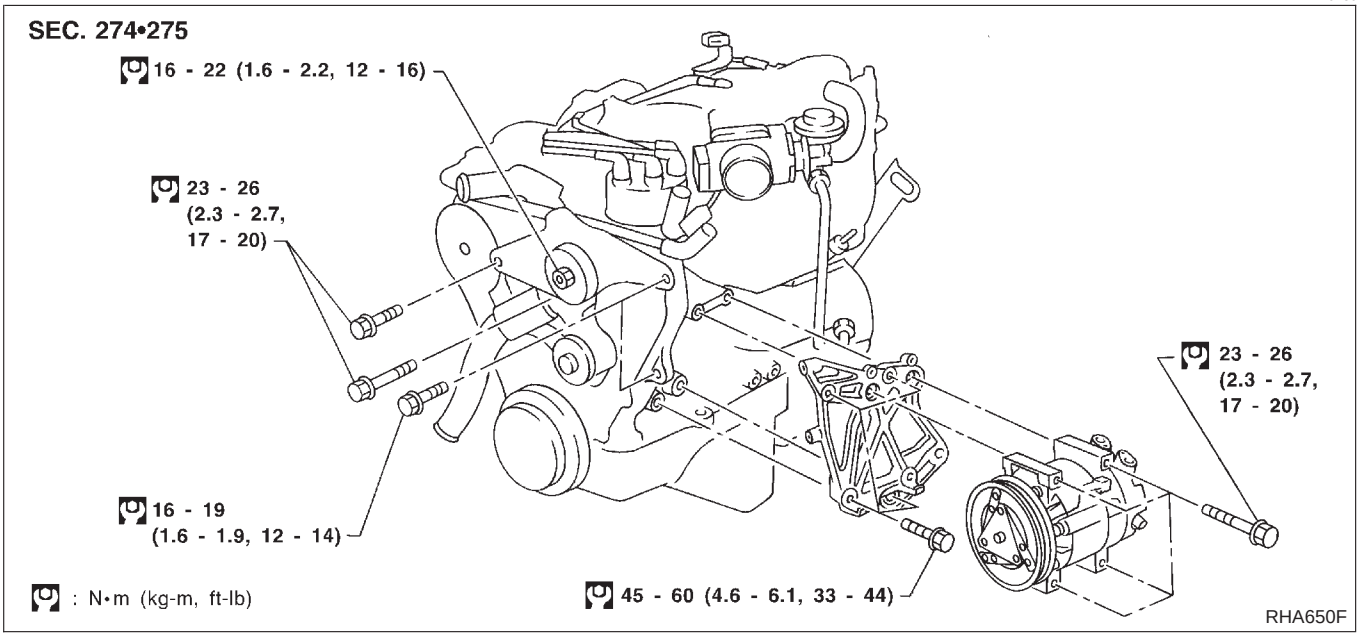

Compressor Clutch

OVERHAUL

NAHA0231

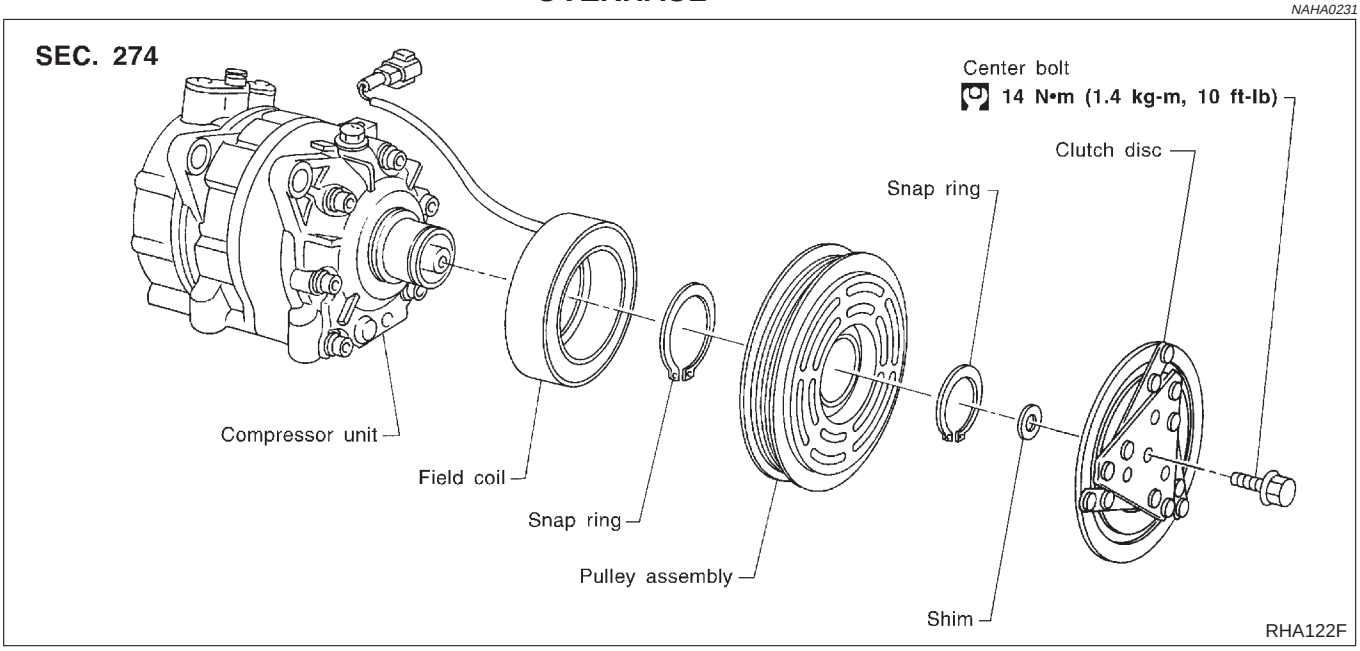

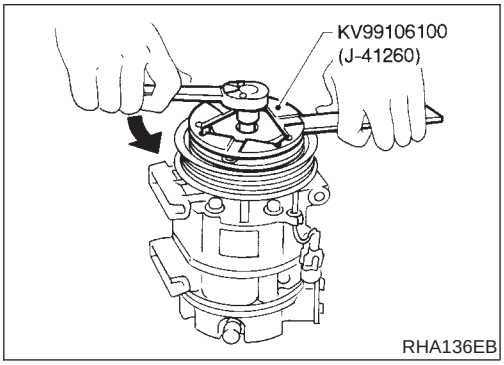

REMOVAL

NAHA0232

- When removing center bolt, hold clutch disc with clutch disc wrench.

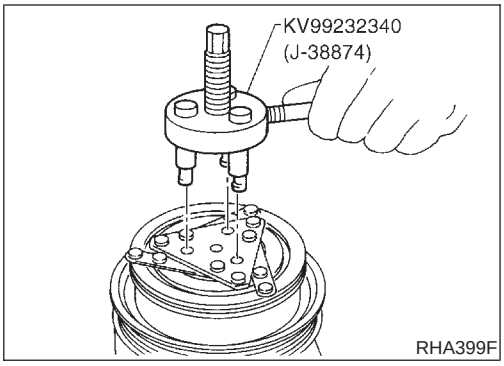

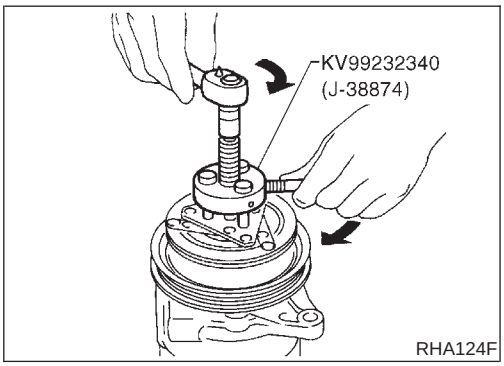

- Remove the clutch disc using the clutch disc puller.
  Insert the holder's three pins into the holes in the clutch disc. Rotate the holder clockwise to hook it onto the plate. Then, tighten the center bolt to remove the clutch disc.
  After removing the clutch disc, remove the shims from either the drive shaft or the clutch disc.

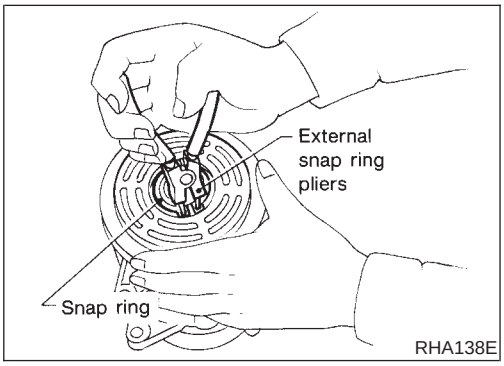

- Remove the snap ring using external snap ring pliers.

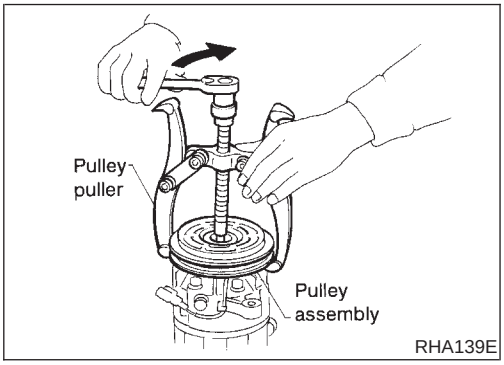

- Pulley removal
  Position the center pulley puller on the end of the drive shaft, and remove the pulley assembly using any commercially available pulley puller.
  To prevent the pulley groove from being deformed, the puller claws should be positioned onto the edge of the pulley assembly.

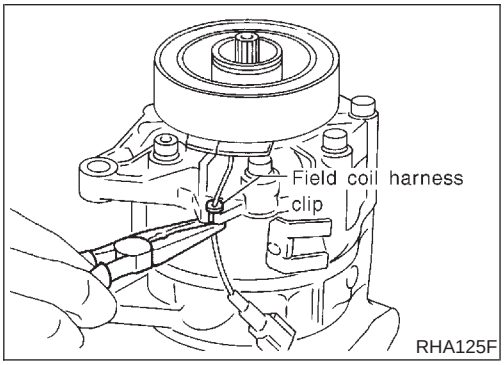

- Remove the field coil harness clip using a pair of pliers.

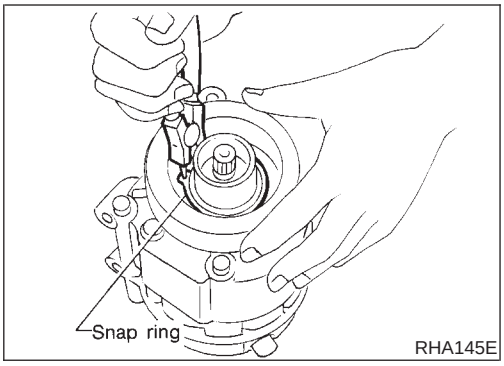

RHA145E

- Remove the snap ring using external snap ring pliers.

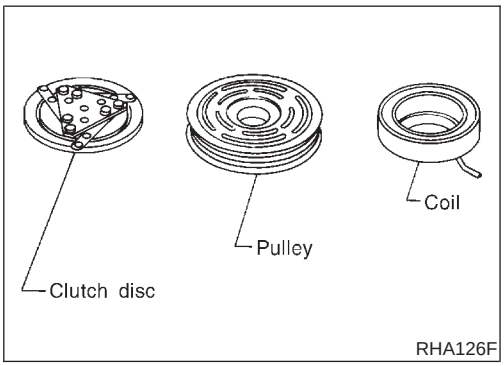

RHA126F

INSPECTION

NAHA0233

Clutch Disc

NAHA0233S01

If the contact surface shows signs of damage due to excessive heat, replace clutch disc and pulley.

Pulley

NAHA0233S02

Check the appearance of the pulley assembly. If the contact surface of pulley shows signs of excessive grooving, replace clutch disc and pulley. The contact surfaces of the pulley assembly should be cleaned with a suitable solvent before reinstallation.

Coil

NAHA0233S03

Check coil for loose connection or cracked insulation.

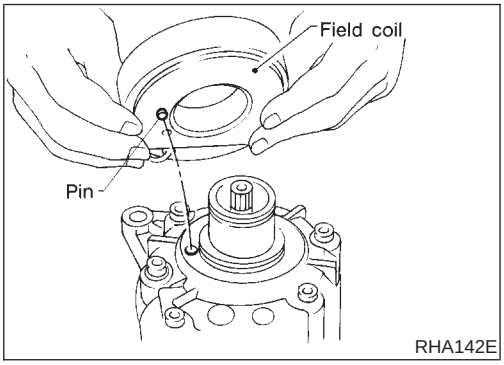

RHA142E

INSTALLATION

NAHA0234

- Install the field coil.
  Be sure to align the coil's pin with the hole in the compressor's front head.
- Install the field coil harness clip using a screwdriver.

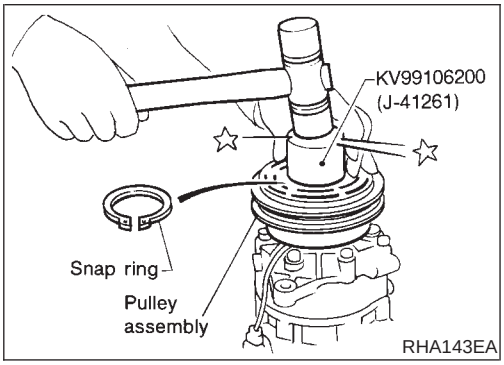

RHA143EA

- Install the pulley assembly using the installer and a hand press, and then install the snap ring using snap ring pliers.

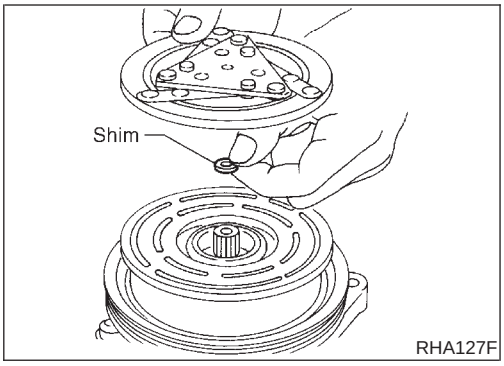

- Install the clutch disc on the drive shaft, together with the original shim(s). Press the clutch disc down by hand.

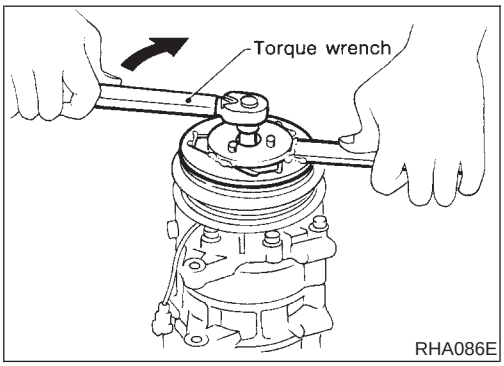

- Using the holder to prevent clutch disc rotation, tighten the bolt to 14 N·m (1.4 kg-m, 10 ft-lb) torque.
  After tightening the bolt, check that the pulley rotates smoothly.

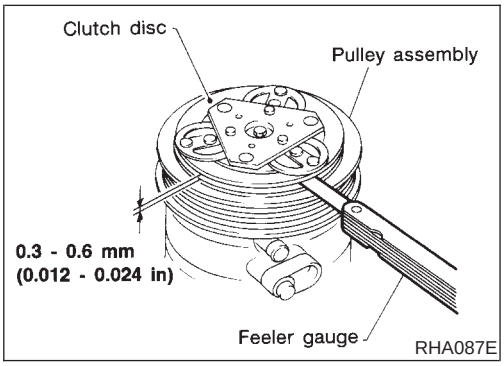

- Check clearance around the entire periphery of clutch disc.
  Disc-to-pulley clearance:
  0.3 - 0.6 mm (0.012 - 0.024 in)
  If the specified clearance is not obtained, replace adjusting spacer and readjust.

Break-in Operation

NAHA0234S01

When replacing compressor clutch assembly, always carry out the break-in operation. This is done by engaging and disengaging the clutch about thirty times. Break-in operation raises the level of transmitted torque.

Refrigerant Lines

REMOVAL AND INSTALLATION

=NAHA0235

- Refer to page HA-5 regarding “Precautions for Refrigerant Connection”.

SEC. 271•274•276

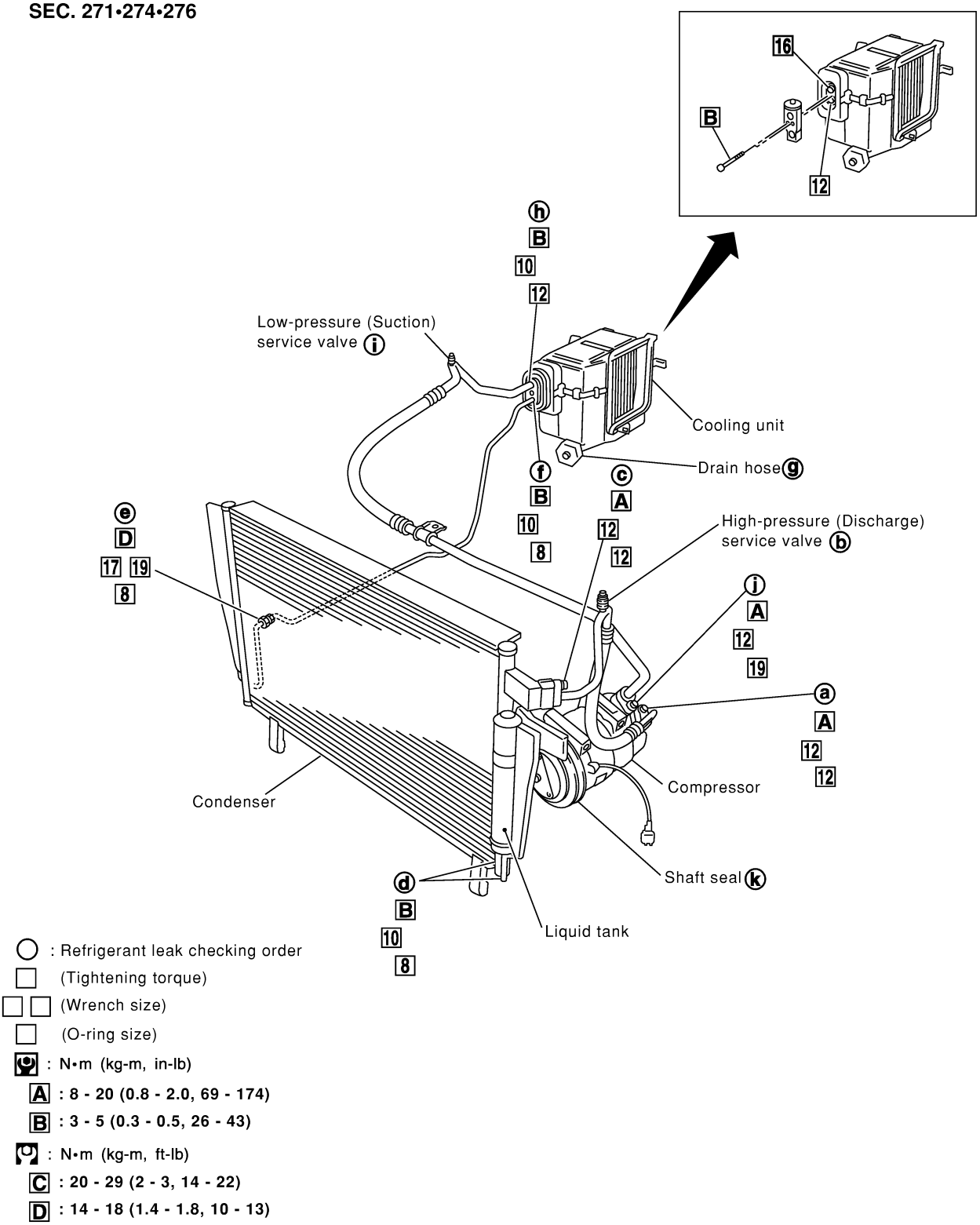

RHA072I

Checking for Refrigerant Leaks

=NAHA0236

PRELIMINARY CHECK

NAHA0236S04

- Perform a visual inspection of all refrigeration parts, fittings, hoses and components for signs of A/C lubricant leakage, damage and corrosion. A/C lubricant leakage may indicate an area of refrigerant leakage. Allow extra inspection time in these areas when using either an electronic refrigerant leak detector or fluorescent dye leak detector.
- If dye is observed, confirm the leak with an electronic refrigerant leak detector. It is possible a prior leak was repaired and not properly cleaned.
- When searching for leaks, do not stop when one leak is found but continue to check for additional leaks at all system components and connections.
- When searching for refrigerant leaks using an electronic leak detector, move the probe along the suspected leak area at 25 to 50 mm (1 to 2 in) per second and no further than 1/4 inch from the component.

NOTE:
Moving the electronic leak detector probe slower and closer to the suspected leak area will improve the chances of finding a leak.

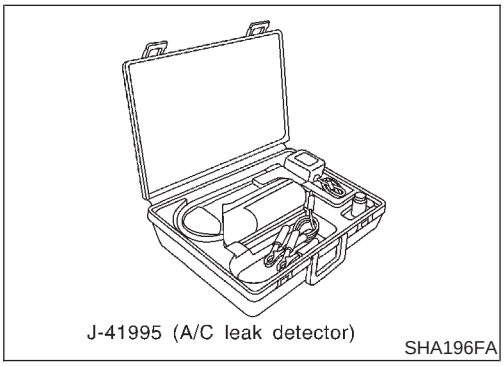

Electronic Refrigerant Leak Detector

NAHA0250

PRECAUTIONS FOR HANDLING LEAK DETECTOR

NAHA0250S01

When performing a refrigerant leak check, use a J-41995 A/C leak detector or equivalent. Ensure that the instrument is calibrated and set properly per the operating instructions.
The leak detector is a delicate device. In order to use the leak detector properly, read the operating instructions and perform any specified maintenance.

- **Other gases in the work area or substances on the A/C components, for example, anti-freeze, windshield washer fluid, solvents and lubricants, may falsely trigger the leak detector. Make sure the surfaces to be checked are clean. Clean with a dry cloth or blow off with shop air.**
- **Do not allow the sensor tip of the detector to contact with any substance. This can also cause false readings and may damage the detector.**

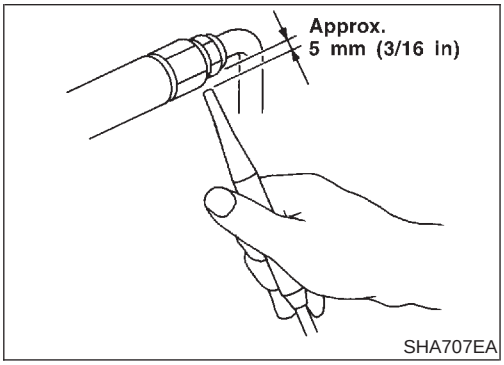

1. Position probe approximately 5 mm (3/16 in) away from point to be checked.

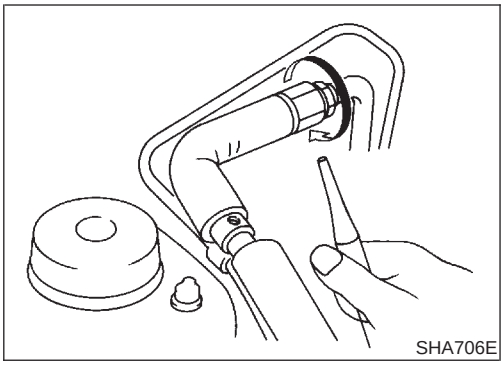
SHA706E

2. When testing, circle each fitting completely with probe.

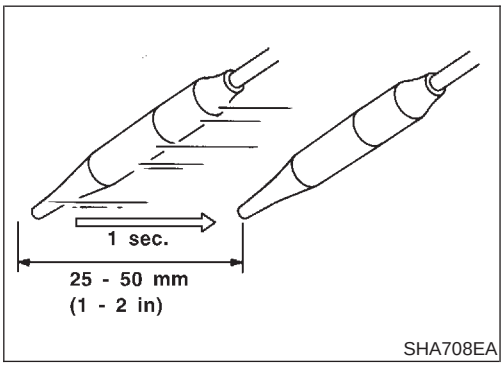

SHA708EA

3. Move probe along component approximately 25 to 50 mm (1 to 2 in)/sec.

CHECKING PROCEDURE

NAHA0250S02

To prevent inaccurate or false readings, make sure there is no refrigerant vapor, shop chemicals, or cigarette smoke in the vicinity of the vehicle. Perform the leak test in calm area (low air/wind movement) so that the leaking refrigerant is not dispersed.

1. Turn engine off.
2. Connect a suitable A/C manifold gauge set to the A/C service ports.
3. Check if the A/C refrigerant pressure is at least 345 kPa (3.52 kg/cm^2, 50 psi) above 16°C (61°F). If less than specification, recover/evacuate and recharge the system with the specified amount of refrigerant.

NOTE:
At temperatures below 16°C (61°F), leaks may not be detected since the system may not reach 345 kPa (3.52 kg/cm^2, 50 psi).

4. Conduct the leak test from the high side (compressor discharge **a** to evaporator inlet **f**) to the low side (evaporator drain hose **g** to shaft seal **k**). Refer to HA-143. Perform a leak check for the following areas carefully. Clean the component to be checked and move the leak detector probe completely around the connection/component.

- **Compressor**
  Check the fitting of high and low pressure hoses, relief valve and shaft seal.
- **Liquid tank**
  Check the tube fitting.
- **Service valves**
  Check all around the service valves. Ensure service valve caps are secured on the service valves (to prevent leaks).

NOTE:
After removing A/C manifold gauge set from service valves, wipe any residue from valves to prevent any false readings by leak detector.

- **Cooling unit (Evaporator)**
  With engine OFF, turn blower fan on "High" for at least 15 seconds to dissipate any refrigerant trace in the cooling unit. Wait a minimum of 10 minutes accumulation time (refer to the manufacturer's recommended procedure for actual wait time) before inserting the leak detector probe into the drain hose. Keep the probe inserted for at least ten seconds. Use caution not to contaminate the probe tip with water or dirt that may be in the drain hose.

5. If a leak detector detects a leak, verify at least once by blowing compressed air into area of suspected leak, then repeat check as outlined above.
6. Do not stop when one leak is found. Continue to check for additional leaks at all system components.
   If no leaks are found, perform steps 7 - 10.
7. Start engine.
8. Set the A/C control as follows:

1) AUTO switch ON.
2) Ventilation (VENT)
3) Recirculation switch ON
4) Max cold temperature
5) Fan speed high

9. Run engine at 1,500 rpm for at least 2 minutes.
10. Turn engine off and perform leak check again following steps 4 through 6 above.

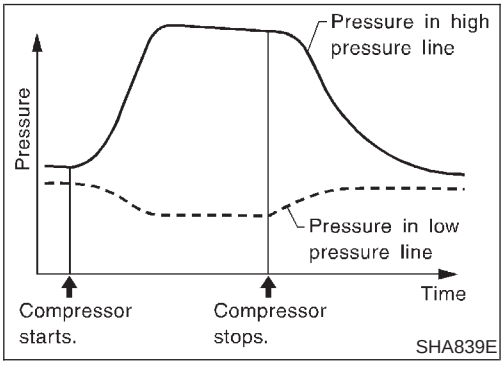

Refrigerant leaks should be checked immediately after stopping the engine. Begin with the leak detector at the compressor. The pressure on the high pressure side will gradually drop after refrigerant circulation stops and pressure on the low pressure side will gradually rise, as shown in the graph. Some leaks are more easily detected when pressure is high.

11. Before connecting Recovery/Recycling Recharging equipment to vehicle, check Recovery/Recycling Recharging equipment gauges. No refrigerant pressure should be displayed. If pressure is displayed, recover refrigerant from equipment lines and then check refrigerant purity.
12. Confirm refrigerant purity in supply tank using Recovery/Recycling Recharging equipment and refrigerant identifier.
13. Confirm refrigerant purity in vehicle A/C system using Recovery/Recycling Recharging equipment and refrigerant identifier.
14. Discharge A/C system using approved refrigerant recovery

equipment. Repair the leaking fitting or component as necessary.

15. Evacuate and recharge A/C system and perform the leak test to confirm no refrigerant leaks.
16. Conduct A/C performance test to ensure system works properly.

Fluorescent Dye Leak Detector

PRECAUTIONS FOR FLUORESCENT DYE LEAK DETECTION

NAHA0263

- The fluorescent dye leak detector is not a replacement for an electronic refrigerant leak detector. The fluorescent dye leak detector should be used in conjunction with an electronic refrigerant leak detector (J-41995) to pinpoint refrigerant leaks.
- For your safety and your customer's satisfaction, read and follow all manufacturer's operating instructions and precautions prior to performing the work.
- Refer to "Precautions for Leak Detection Dye", HA-4.

CHECKING SYSTEM FOR LEAKS USING THE FLUORESCENT LEAK DETECTOR

NAHA0264

1. Check A/C system for leaks using the UV lamp and safety goggles (J-42220) in a low sunlight area (area without windows preferable). Illuminate all components, fittings and lines. The dye will appear as a bright green/yellow area at the point of leakage. Fluorescent dye observed at the evaporator drain opening indicates an evaporator core assembly (tubes, core or expansion valve) leak.
2. If the suspected area is difficult to see, use an adjustable mirror or wipe the area with a clean shop rag or cloth, then check the cloth with the UV lamp for dye residue.
3. Confirm any suspected leaks with an approved electronic refrigerant leak detector.
4. After the leak is repaired, remove any residual dye using dye cleaner (J-43872) to prevent future misdiagnosis.
5. Perform a system performance check and verify the leak repair with an approved electronic refrigerant leak detector.

DYE INJECTION

NAHA0265

(This procedure is only necessary when re-charging the system or when the compressor has seized and was replaced.)
Refer to "Precautions for Leak Detection Dye", HA-4.

1. Check A/C system static (at rest) pressure. Pressure must be at least 345 kPa (3.52 kg/cm^2, 50 psi).
2. Pour one bottle (1/4 ounce / 7.4 cc) of the A/C refrigerant dye into the injector tool (J-41459).
3. Connect the injector tool to the A/C LOW-PRESSURE side service fitting.
4. Start engine and switch A/C ON.
5. With the A/C operating (compressor running), inject one bottle (1/4 ounce / 7.4 cc) of fluorescent dye through the low-pressure service valve using dye injector tool J-41459 (refer to the manufacturer's operating instructions).

6. With the engine still running, disconnect the injector tool from the service fitting.

CAUTION:
Be careful not to allow dye to spray or drip when disconnecting the injector from the system.

NOTE:
If repairing the A/C system or replacing a component, pour the dye directly into the open system connection and proceed with the service procedures.

7. Operate the A/C system for a minimum of 20 minutes to mix the dye with the system oil. Depending on the leak size, operating conditions and location of the leak, it may take from minutes to days for the dye to penetrate a leak and become visible.

Belt

TENSION ADJUSTMENT

NAHA0237

- **Refer to MA-14, "Checking Drive Belts".**

Auto

COMPRESSOR

NAHA0241

Model		Calsonic Kansei make V-6
Type		V-6 variable displacement
Displacement cm^3 (cu in)/rev.	Max.	184 (11.228)
	Min.	14.5 (0.885)
Cylinder bore x stroke mm (in)		37 (1.46) x [2.3 - 28.6 (0.091 - 1.126)]
Direction of rotation		Clockwise (viewed from drive end)
Drive belt		Poly V

LUBRICANT

NAHA0242

Model		Calsonic Kansei make V-6
Name		Nissan A/C System Oil Type S
Part number*		KLH00-PAGS0
Capacity mℓ (US fl oz, Imp fl oz)	Total in system	180 (6.1, 6.3)
	Compressor (Service part) charging amount	180 (6.1, 6.3)

*: Always check with the Parts Department for the latest parts information.

REFRIGERANT

NAHA0243

Type	HFC-134a (R-134a)
Capacity kg (lb)	0.45 (0.99)

ENGINE IDLING SPEED (WHEN A/C IS ON)

NAHA0244

- **Refer to EC-758, “Idle Speed and Ignition Timing”.**

BELT TENSION

NAHA0245

- **Refer to MA-14, “Checking Drive Belts”.**

Supplemental Restraint System (SRS) "AIR BAG" and "SEAT BELT PRE-TENSIONER"

NAHA0060

The Supplemental Restraint System such as "AIR BAG" and "SEAT BELT PRE-TENSIONER" used along with a seat belt, helps to reduce the risk or severity of injury to the driver and front passenger for certain types of collision. The SRS composition which is available to NISSAN MODEL R50 is as follows:

- For a frontal collision
  The Supplemental Restraint System consists of driver air bag module (located in the center of the steering wheel), front passenger air bag module (located on the instrument panel on passenger side), seat belt pre-tensioners, a diagnosis sensor unit, warning lamp, wiring harness and spiral cable.
- For a side collision
  The Supplemental Restraint System consists of side air bag module (located in the outer side of front seat), side curtain air bag module (locating in the headlining side of front and rear seat), satellite sensor, diagnosis sensor unit (one of components of air bags for a frontal collision), wiring harness, warning lamp (one of components of air bags for a frontal collision).

WARNING:

- **To avoid rendering the SRS inoperative, which could increase the risk of personal injury or death in the event of a collision which would result in air bag inflation, all maintenance must be performed by an authorized NISSAN dealer.**
- **Improper maintenance, including incorrect removal and installation of the SRS, can lead to personal injury caused by unintentional activation of the system.**
- **Do not use electrical test equipment on any circuit related to the SRS unless instructed to in this Service Manual. SRS wiring harnesses can be identified by yellow and/or orange harness connector (and by yellow harness protector or yellow insulation tape before the harness connectors).**

Precautions for Working with HFC-134a (R-134a)

NAHA0061

WARNING:

- **CFC-12 (R-12) refrigerant and HFC-134a (R-134a) refrigerant are not compatible. If the refrigerants are mixed and compressor malfunction is likely to occur, refer to "CONTAMINATED REFRIGERANT" below. To determine the purity of HFC-134a (R-134a) in the vehicle and recovery tank, use Refrigerant Recovery/Recycling Recharging equipment and Refrigerant Identifier.**
- **Use only specified lubricant for the HFC-134a (R-134a) A/C system and HFC-134a (R-134a) components. If lubricant other than that specified is used, compressor malfunction is likely to occur.**
- **The specified HFC-134a (R-134a) lubricant rapidly absorbs moisture from the atmosphere. The following handling precautions must be observed:**

a) When removing refrigerant components from a vehicle, immediately cap (seal) the component to minimize the entry of moisture from the atmosphere.

b) When installing refrigerant components to a vehicle, do not remove the caps (unseal) until just before connecting the components. Connect all refrigerant loop components as quickly as possible to minimize the entry of moisture into system.

c) Only use the specified lubricant from a sealed container. Immediately reseal containers of lubricant. Without proper sealing, lubricant will become moisture saturated and should not be used.

d) Avoid breathing A/C refrigerant and lubricant vapor or mist. Exposure may irritate eyes, nose and throat. Remove HFC-134a (R-134a) from the A/C system, using certified service equipment meeting requirements of SAE J2210 HFC-134a (R-134a) recycling equipment, or J2209 HFC-134a (R-134a) recovery equipment. If accidental system discharge occurs, ventilate work area before resuming service. Additional health and safety information may be obtained from refrigerant and lubricant manufacturers.

e) Do not allow lubricant (Nissan A/C System Oil Type S) to come in contact with styrofoam parts. Damage may result.

CONTAMINATED REFRIGERANT

NAHA0061S01

If a refrigerant other than pure HFC-134a (R-134a) is identified in a vehicle, your options are:

- Explain to the customer that environmental regulations prohibit the release of contaminated refrigerant into the atmosphere.
- Explain that recovery of the contaminated refrigerant could damage your service equipment and refrigerant supply.

- Suggest the customer return the vehicle to the location of previous service where the contamination may have occurred.
- If you choose to perform the repair, recover the refrigerant using only **dedicated equipment and containers. Do not recover contaminated refrigerant into your existing service equipment.** If your facility does not have dedicated recovery equipment, you may contact a local refrigerant product retailer for available service. This refrigerant must be disposed of in accordance with all federal and local regulations. In addition, replacement of all refrigerant system components on the vehicle is recommended.
- If the vehicle is within the warranty period, the air conditioner warranty is void. Please contact Nissan Customer Affairs for further assistance.

General Refrigerant Precautions

NAHA0062

WARNING:

- **Do not release refrigerant into the air. Use approved recovery/recycling equipment to capture the refrigerant every time an air conditioning system is discharged.**
- **Always wear eye and hand protection (goggles and gloves) when working with any refrigerant or air conditioning system.**
- **Do not store or heat refrigerant containers above 52°C (125°F).**
- **Do not heat a refrigerant container with an open flame; if container warming is required, place the bottom of the container in a warm pail of water.**
- **Do not intentionally drop, puncture, or incinerate refrigerant containers.**
- **Keep refrigerant away from open flames: poisonous gas will be produced if refrigerant burns.**
- **Refrigerant will displace oxygen, therefore be certain to work in well ventilated areas to prevent suffocation.**
- **Do not pressure test or leak test HFC-134a (R-134a) service equipment and/or vehicle air conditioning systems with compressed air during repair. Some mixtures of air and HFC-134a (R-134a) have been shown to be combustible at elevated pressures. These mixtures, if ignited, may cause injury or property damage. Additional health and safety information may be obtained from refrigerant manufacturers.**

Precautions for Leak Detection Dye

NAHA0251

- The A/C system contains a fluorescent leak detection dye used for locating refrigerant leaks. An ultraviolet (UV) lamp is required to illuminate the dye when inspecting for leaks.
- Always wear fluorescence enhancing UV safety goggles to protect your eyes and enhance the visibility of the fluorescent dye.
- A compressor shaft seal should not be repaired because of dye seepage. The compressor shaft seal should only be repaired after confirming the leak with an electronic refrigerant leak detector (J-41995).
- Always remove any dye from the leak area after repairs are complete to avoid a misdiagnosis during a future service.
- Do not allow dye to come into contact with painted body panels or interior components. If dye is spilled, clean immediately with the approved dye cleaner. Fluorescent dye left on a surface for an extended period of time cannot be removed.
- Do not spray the fluorescent dye cleaning agent on hot surfaces (engine exhaust manifold, etc.).
- Do not use more than one refrigerant dye bottle (1/4 ounce / 7.4 cc) per A/C system.
- Leak detection dyes for HFC-134a (R-134a) and CFC-12 (R-12) A/C systems are different. Do not use HFC-134a (R-134a) leak detection dye in CFC-12 (R-12) A/C system or CFC-12 (R-12) leak detection dye in HFC-134a (R-134a) A/C systems or A/C system damage may result.
- The fluorescent properties of the dye will remain for over three (3) years unless a compressor malfunction occurs.

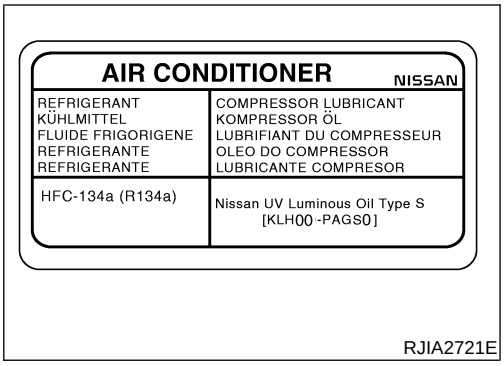

Precaution for Identification Label on Vehicle

NAHA0252

- Vehicles with factory installed fluorescent dye have this identification label on the under side of hood.
- Vehicles with factory installed fluorescent dye have a green label.
- Vehicles without factory installed fluorescent dye have a blue label.

Precautions for Refrigerant Connection

NAHA0063

A new type refrigerant connection has been introduced to all refrigerant lines except the following portion.

- Expansion valve to evaporator

FEATURES OF NEW TYPE REFRIGERANT CONNECTION

NAHA0063S01

- The O-ring has been relocated. It has also been provided with a groove for proper installation. This eliminates the chance of the O-ring being caught in, or damaged by, the mating part. The sealing direction of the O-ring is now set vertically in relation to the contacting surface of the mating part to improve sealing characteristics.
- The reaction force of the O-ring will not occur in the direction that causes the joint to pull out, thereby facilitating piping connections.

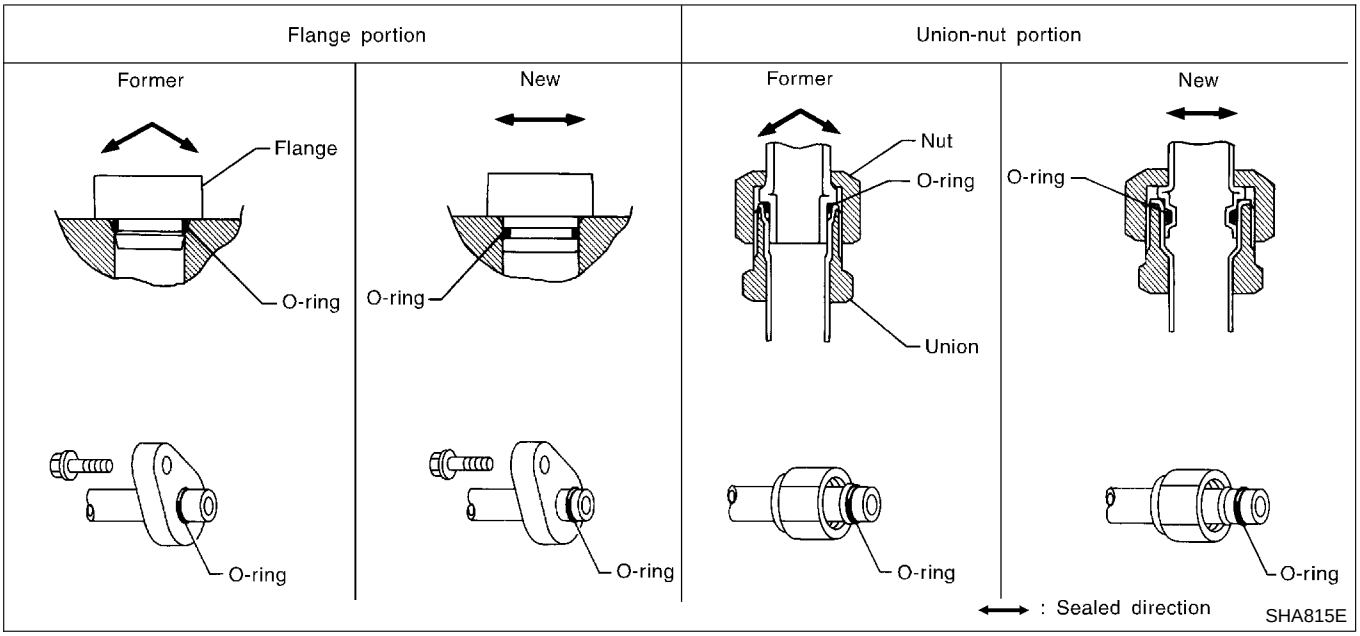

O-RING AND REFRIGERANT CONNECTION

NAHA0063S02

SEC. 271•274•276

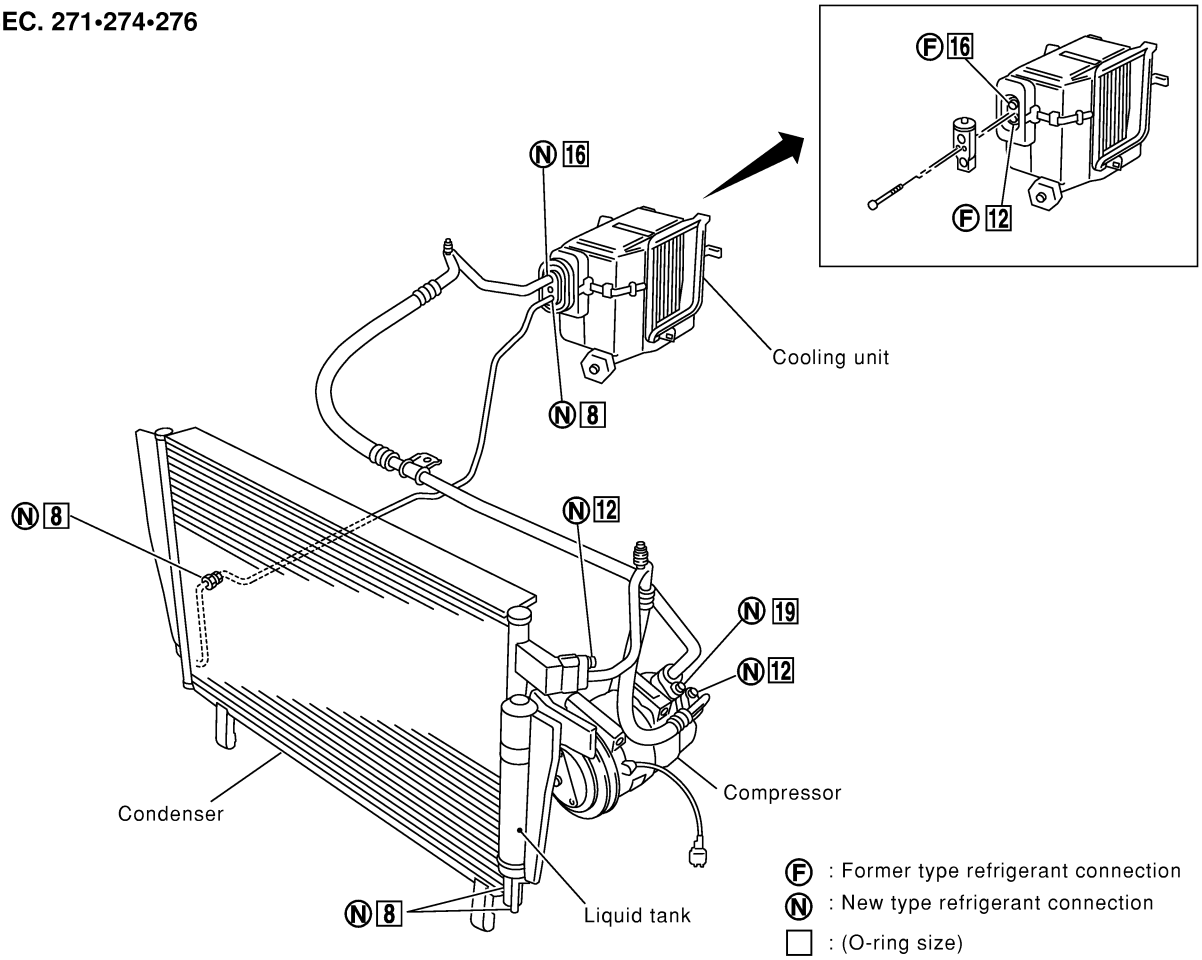

RHA068I

CAUTION:
The new and former refrigerant connections use different O-ring configurations. Do not confuse O-rings since they are not interchangeable. If a wrong O-ring is installed, refrigerant will leak at, or around, the connection.

O-Ring Part Numbers and Specifications

NAHA0063S0201

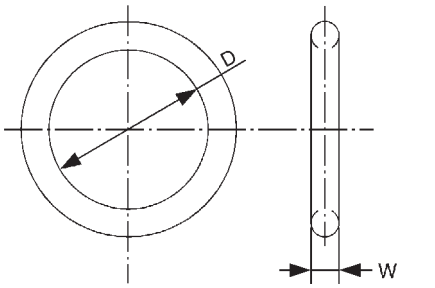

SHA814E

Connection type	O-ring size	Part number	D mm (in)	W mm (in)
New	8	92471 N8210	6.8 (0.268)	1.85 (0.0728)
Former		92470 N8200	6.07 (0.2390)	1.78 (0.0701)
New	12	92472 N8210	10.9 (0.429)	2.43 (0.0957)
Former		92475 71L00	11.0 (0.433)	2.4 (0.094)
New	16	92473 N8210	13.6 (0.535)	2.43 (0.0957)
Former		92475 72L00	14.3 (0.563)	2.3 (0.0906)
New	19	92474 N8210	16.5 (0.650)	2.43 (0.0957)
Former		92477 N8200	17.12 (0.6740)	1.78 (0.0701)

WARNING:
Make sure all refrigerant is discharged into the recycling equipment and the pressure in the system is less than atmospheric pressure. Then gradually loosen the discharge side hose fitting and remove it.

CAUTION:

When replacing or cleaning refrigerant cycle components, observe the following.

- **When the compressor is removed, store it in the same position as it is when mounted on the car. Failure to do so will cause lubricant to enter the low pressure chamber.**
- **When connecting tubes, always use a torque wrench and a back-up wrench.**
- **After disconnecting tubes, immediately plug all openings to prevent entry of dirt and moisture.**
- **When installing an air conditioner in the vehicle, connect the pipes as the final stage of the operation. Do not remove the seal caps of pipes and other components until just before required for connection.**
- **Allow components stored in cool areas to warm to working area temperature before removing seal caps. This prevents condensation from forming inside A/C components.**
- **Thoroughly remove moisture from the refrigeration system before charging the refrigerant.**
- **Always replace used O-rings.**
- **When connecting tube, apply lubricant to circle of the O-rings shown in illustration. Be careful not to apply lubricant to threaded portion.**
  Lubricant name: Nissan A/C System Oil Type S
  Part number: KLH00-PAGS0
- **O-ring must be closely attached to dented portion of tube.**
- **When replacing the O-ring, be careful not to damage O-ring and tube.**
- **Connect tube until you hear it click, then tighten the nut or bolt by hand until snug. Make sure that the O-ring is installed to tube correctly.**
- **After connecting line, conduct leak test and make sure that there is no leakage from connections. When the gas leaking point is found, disconnect that line and replace the O-ring. Then tighten connections of seal seat to the specified torque.**

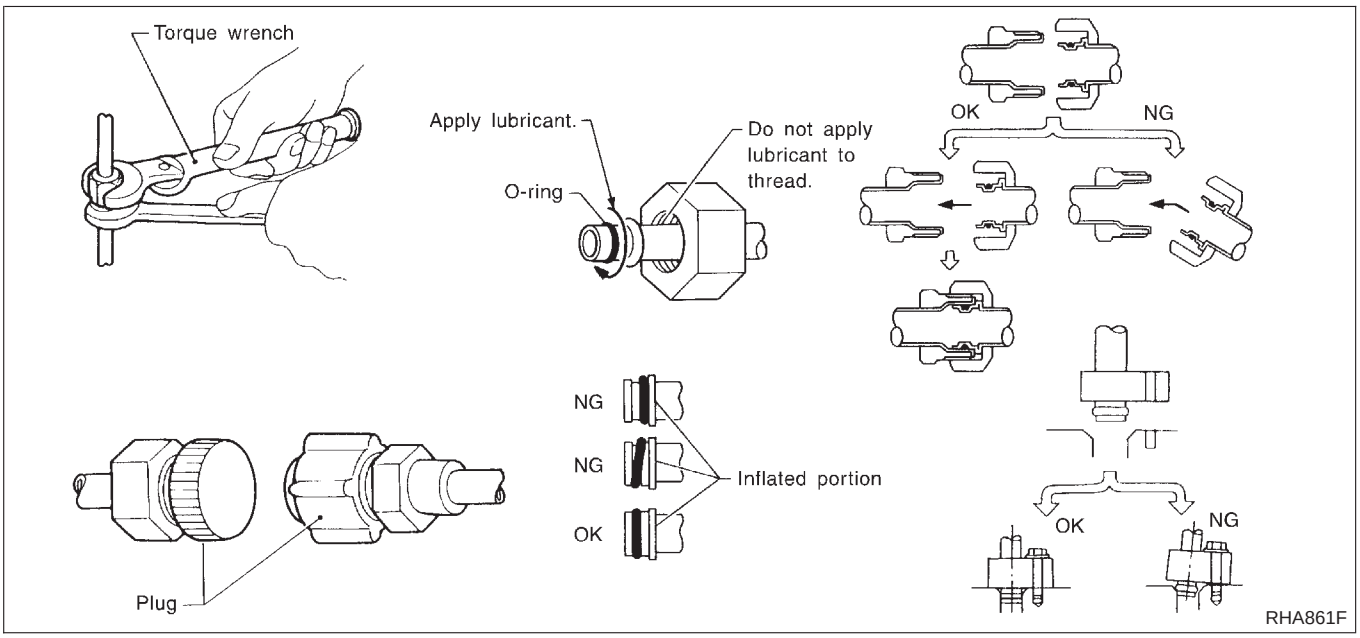

Precautions for Servicing Compressor

NAHA0064

- **Plug all openings to prevent moisture and foreign matter from entering.**
- **When the compressor is removed, store it in the same position as it is when mounted on the car.**
- **When replacing or repairing compressor, follow "Maintenance of Lubricant Quantity in Compressor" exactly. Refer to HA-217.**
- **Keep friction surfaces between clutch and pulley clean. If the surface is contaminated, with lubricant, wipe it off by using a clean waste cloth moistened with thinner.**
- **After compressor service operation, turn the compressor shaft by hand more than five turns in both directions. This will equally distribute lubricant inside the compressor. After the compressor is installed, let the engine idle and operate the compressor for one hour.**
- **After replacing the compressor magnet clutch, apply voltage to the new one and check for normal operation.**

Precautions for Service Equipment

NAHA0065

RECOVERY/RECYCLING EQUIPMENT

NAHA0065S01

Follow the manufacturer's instructions for machine operation and machine maintenance. Never introduce any refrigerant other than that specified into the machine.

ELECTRONIC LEAK DETECTOR

NAHA0065S02

Follow the manufacture's instructions for tester operation and tester maintenance.

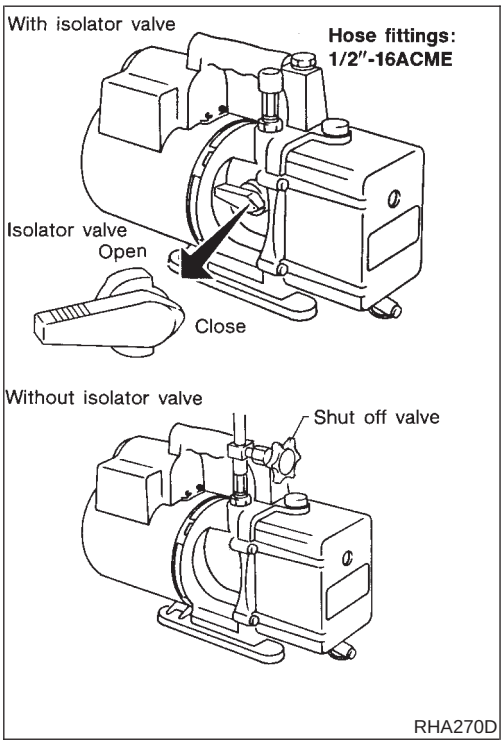

VACUUM PUMP

NAHA0065S03

The lubricant contained inside the vacuum pump is not compatible with the specified lubricant for HFC-134a (R-134a) A/C systems. The vent side of the vacuum pump is exposed to atmospheric pressure. So the vacuum pump lubricant may migrate out of the pump into the service hose. This is possible when the pump is switched off after evacuation (vacuuming) and hose is connected to it.

To prevent this migration, use a manual valve situated near the hose-to-pump connection, as follows.

- Usually vacuum pumps have a manual isolator valve as part of the pump. Close this valve to isolate the service hose from the pump.
- For pumps without an isolator, use a hose equipped with a manual shut-off valve near the pump end. Close the valve to isolate the hose from the pump.
- If the hose has an automatic shut off valve, disconnect the hose from the pump: as long as the hose is connected, the valve is open and lubricating oil may migrate.

Some one-way valves open when vacuum is applied and close under a no vacuum condition. Such valves may restrict the pump's ability to pull a deep vacuum and are not recommended.

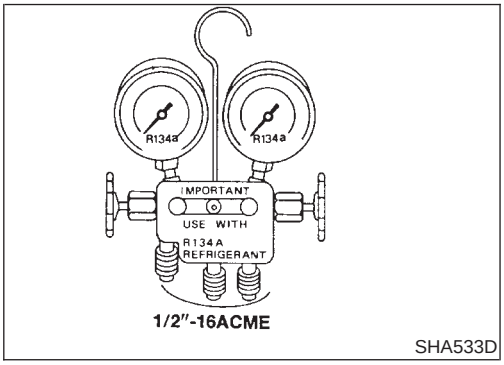

MANIFOLD GAUGE SET

NAHA0065S04

Be certain that the gauge face indicates HFC-134a or R-134a. Make sure the gauge set has 1/2″-16 ACME threaded connections for service hoses. Confirm the set has been used only with refrigerant HFC-134a (R-134a) along with specified lubricant.

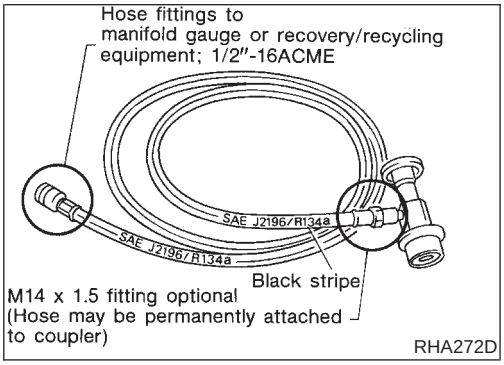

SERVICE HOSES

NAHA0065S05

Be certain that the service hoses display the markings described (colored hose with black stripe). All hoses must include positive shut off devices (either manual or automatic) near the end of the hoses opposite the manifold gauge.

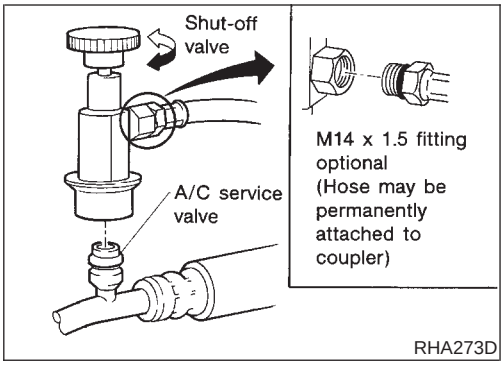

SERVICE COUPLERS

NAHA0065S06

Never attempt to connect HFC-134a (R-134a) service couplers to an CFC-12 (R-12) A/C system. The HFC-134a (R-134a) couplers will not properly connect to the CFC-12 (R-12) system. However, if an improper connection is attempted, discharging and contamination may occur.

Shut-off valve rotation	A/C service valve
Clockwise	Open
Counterclockwise	Close

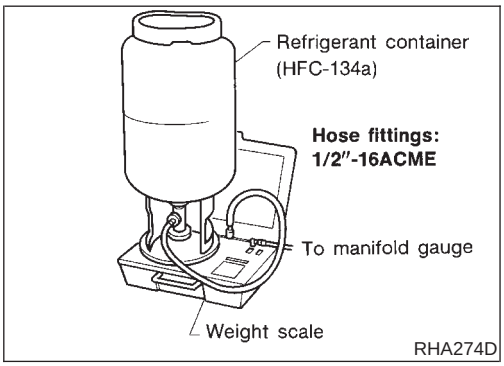

REFRIGERANT WEIGHT SCALE

NAHA0065S07

Verify that no refrigerant other than HFC-134a (R-134a) and specified lubricants have been used with the scale. If the scale controls refrigerant flow electronically, the hose fitting must be 1/2″-16 ACME.

CHARGING CYLINDER

NAHA0065S08

Using a charging cylinder is not recommended. Refrigerant may be vented into air from cylinder's top valve when filling the cylinder with refrigerant. Also, the accuracy of the cylinder is generally less than that of an electronic scale or of quality recycle/recharge equipment.

Wiring Diagrams and Trouble Diagnoses

NAHA0066

When you read wiring diagrams, refer to the following:

- GI-11, "HOW TO READ WIRING DIAGRAMS"
- EL-12, "Wiring Diagram — POWER —"

When you perform trouble diagnoses, refer to the following:

- GI-34, "HOW TO FOLLOW TROUBLE DIAGNOSES"
- GI-24, "HOW TO PERFORM EFFICIENT DIAGNOSIS FOR AN ELECTRICAL INCIDENT"

Special Service Tools

NAHA0067

The actual shapes of Kent-Moore tools may differ from those of special service tools illustrated here.

Tool number (Kent-Moore No.) Tool name	Description
KV99106100 (J-41260) Clutch disc wrench	Removing center bolt 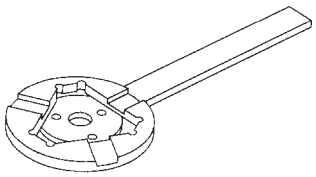 NT232 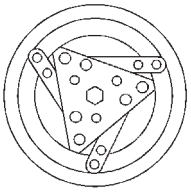 When replacing the magnet clutch in the above compressor, use a clutch disc wrench with the pin side on the clutch disc to remove it. 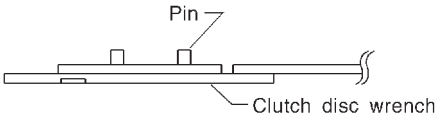 NT378
KV99232340 (J-38874) or KV992T0001 (—) Clutch disc puller	Removing clutch disc 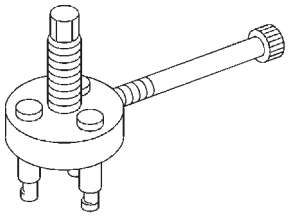 NT376
KV99106200 (J-41261) Pulley installer	Installing pulley 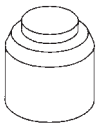 NT235

HFC-134a (R-134a) Service Tools and Equipment

=NAHA0068

Never mix HFC-134a refrigerant and/or its specified lubricant with CFC-12 (R-12) refrigerant and/or its lubricant.

Separate and non-interchangeable service equipment must be used for handling each type of refrigerant/lubricant.

Refrigerant container fittings, service hose fittings and service equipment fittings (equipment which handles refrigerant and/or lubricant) are different between CFC-12 (R-12) and HFC-134a (R-134a). This is to avoid mixed use of the refrigerants/lubricant.

Adapters that convert one size fitting to another must never be used: refrigerant/lubricant contamination will occur and compressor malfunction will result.

Tool number (Kent-Moore No.) Tool name	Description	
HFC-134a (R-134a) refrigerant	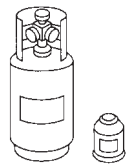 NT196	Container color: Light blue Container marking: HFC-134a (R-134a) Fitting size: Thread size ● Large container 1/2″-16 ACME
KLH00-PAGS0 (—) Nissan A/C System Oil Type S	 NT197	Type: Poly alkylene glycol oil (PAG), type S Application: HFC-134a (R-134a) wobble (swash) plate (piston) compressors (Nissan only) Lubricity: 40 mℓ (1.4 US fl oz, 1.4 Imp fl oz)
(J-43600) Recovery/Recycling Recharging equipment (ACR2000)	 WJIA0293E	Function: Refrigerant Recovery and Recycling and Recharging
(J-41995) Electrical leak detector	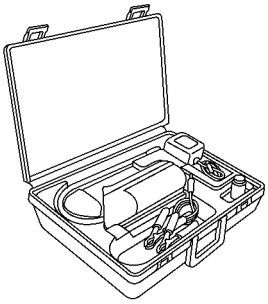 AHA281A	Power supply: ● DC 12V (Cigarette lighter)

Tool number (Kent-Moore No.) Tool name	Description	
(J-43926) Refrigerant dye leak detection kit Kit includes: (J-42220) UV lamp and UV safety goggles (J-41459) Refrigerant dye injector (J-41447) qty. 24 R-134a refrigerant dye (J-43872) Refrigerant dye cleaner	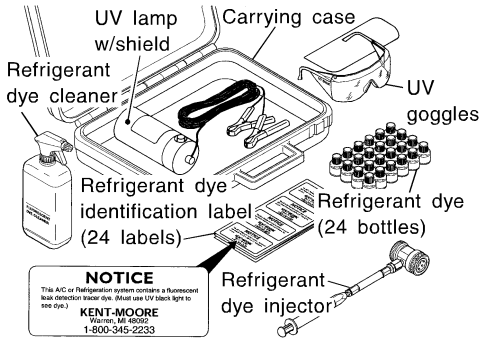 ZHA200H	Power supply: DC 12V (Battery terminal)
(J-42220) UV lamp and UV safety goggles	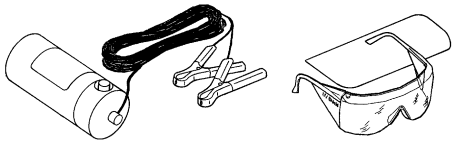 SHA438F	Power supply: DC12V (Battery terminal) For checking refrigerant leak when fluorescent dye is installed in A/C system. Includes: UV lamp and UV safety goggles
(J-41447) R134a Fluorescent Leak Detection Dye (Box of 24, 1/4 ounce bottles)	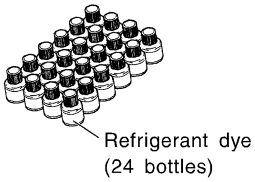 SHA439F	Application: For R-134a PAG oil Container: 1/4 ounce (7.4 cc) bottle (Includes self-adhesive dye identification labels for affixing to vehicle after charging system with dye.)
(J-41459) R134a Dye Injector Use with J-41447, 1/4 ounce bottle	Dye injector 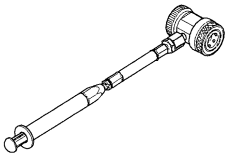 SHA440F	For injecting 1/4 ounce of Fluorescent Leak Detection Dye into A/C system.
(J-43872) Dye cleaner	 SHA441F	For cleaning dye spills.
(J-39183) Manifold gauge set (with hoses and couplers)	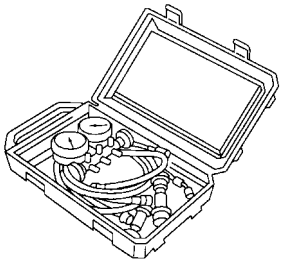 NT199	Identification: ● The gauge face indicates R-134a. Fitting size: Thread size ● 1/2″-16 ACME

Tool number (Kent-Moore No.) Tool name	Description	
Service hoses ● High-pressure side hose (J-39501-72) ● Low-pressure side hose (J-39502-72) ● Utility hose (J-39476-72)	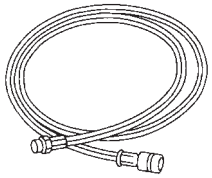 NT201	Hose color: ● Low hose: Blue with black stripe ● High hose: Red with black stripe ● Utility hose: Yellow with black stripe or green with black stripe Hose fitting to gauge: ● 1/2″-16 ACME
Service couplers ● High-pressure side coupler (J-39500-20) ● Low-pressure side coupler (J-39500-24)	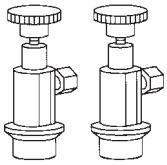 NT202	Hose fitting to service hose: ● M14 x 1.5 fitting is optional or permanently attached.
(J-39650) Refrigerant weight scale	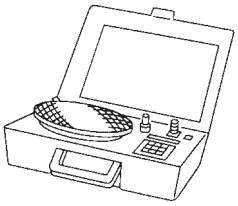 NT200	For measuring of refrigerant Fitting size: Thread size ● 1/2″-16 ACME
(J-39649) Vacuum pump (Including the isolator valve)	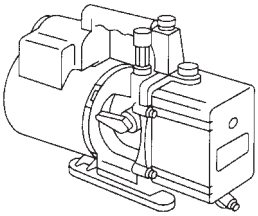 NT203	Capacity: ● Air displacement: 4 CFM ● Micron rating: 20 microns ● Oil capacity: 482 g (17 oz) Fitting size: Thread size ● 1/2″-16 ACME

COMMERCIAL SERVICE TOOL

NAHA0068S01

Tool name	Description	
Refrigerant identifier equipment	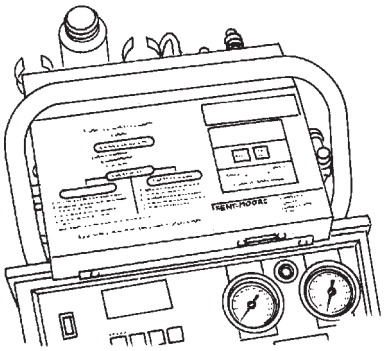 NT765	For checking refrigerant purity and for system contamination

Tool name	Description
Power tool	Loosening bolts and nuts 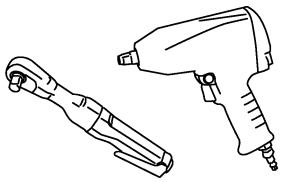 PBIC0190E

Refrigeration System

REFRIGERATION CYCLE

NAHA0069

Refrigerant Flow

NAHA0069S01

The refrigerant flows in the standard pattern, that is, through the compressor, the condenser, the liquid tank, through the evaporator, and back to the compressor. The refrigerant evaporation through the evaporator coil is controlled by an externally equalized expansion valve, located inside the evaporator case.

Freeze Protection

NAHA0069S02

Under usual operating conditions, when the A/C is switched on, the compressor runs continuously, and the evaporator pressure, and therefore temperature, is controlled by the V-6 variable displacement compressor to prevent freeze up.

Refrigerant System Protection

NAHA0069S03

Refrigerant Pressure Sensor

NAHA0069S0301

The refrigerant system is protected against excessively high or low pressures by the refrigerant pressure sensor, located on the condenser. If the system pressure rises above, or falls below the specifications, the refrigerant pressure sensor detects the pressure inside the refrigerant line and sends the voltage signal to the ECM. ECM makes the A/C relay go OFF and stops the compressor when pressure on the high-pressure side detected by refrigerant pressure sensor is over about 2,746 kPa (28 kg/cm^2, 398 psi) or below about 177 kPa (1.8 kg/cm^2, 26 psi).

Pressure Relief Valve

NAHA0069S0302

The refrigerant system is also protected by a pressure relief valve, located in the rear head of the compressor. When the pressure of refrigerant in the system increases to an unusual level [more than 3,727 kPa (38 kg/cm^2, 540 psi)], the release port on the pressure relief valve automatically opens and releases refrigerant into the atmosphere.

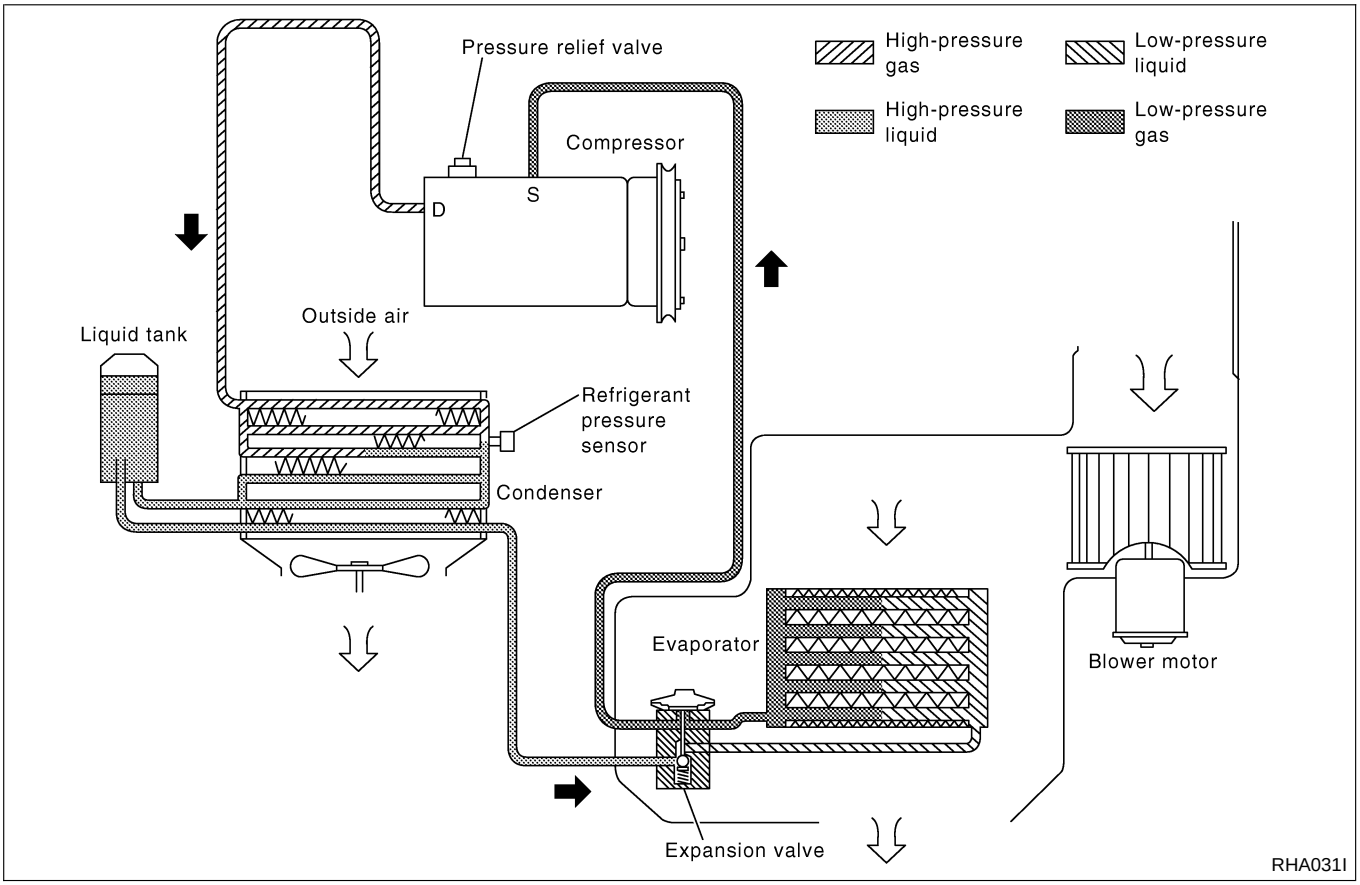

V-6 Variable Displacement Compressor

GENERAL INFORMATION

=NAHA0070

1. The V-6 variable compressor differs from previous units. The vent temperatures of the V-6 variable compress do not drop too far below 5°C (41°F) when:
- evaporator intake air temperature is less than 20°C (68°F)
- engine is running at speeds less than 1,500 rpm.

   This is because the V-6 compressor provides a means of “capacity” control.
2. The V-6 variable compressor provides refrigerant control under varying conditions. During cold winters, it may not produce high refrigerant pressure discharge (compared to previous units) when used with air conditioning systems.
3. A “clanking” sound may occasionally be heard during refrigerant charge. The sound indicates that the tilt angle of the swash plate has changed and is not a problem.
4. For air conditioning systems with the V-6 compressor, the clutch remains engaged unless: the system main switch, fan switch or ignition switch is turned OFF. When ambient (outside) temperatures are low or when the amount of refrigerant is insufficient, the clutch is disengaged to protect the compressor.
5. A constant range of suction pressure is maintained when engine speed is greater than a certain value. It normally ranges from 147 to 177 kPa (1.5 to 1.8 kg/cm^2, 21 to 26 psi) under varying conditions.
   In previous compressors, however, suction pressure was reduced with increases in engine speed.

DESCRIPTION

=NAHA0132

General

NAHA0132S01

The variable compressor is basically a swash plate type that changes piston stroke in response to the required cooling capacity.

The tilt of the wobble (swash) plate allows the piston's stroke to change so that refrigerant discharge can be continuously changed from 14.5 to 184 cm^3 (0.885 to 11.228 cu in).

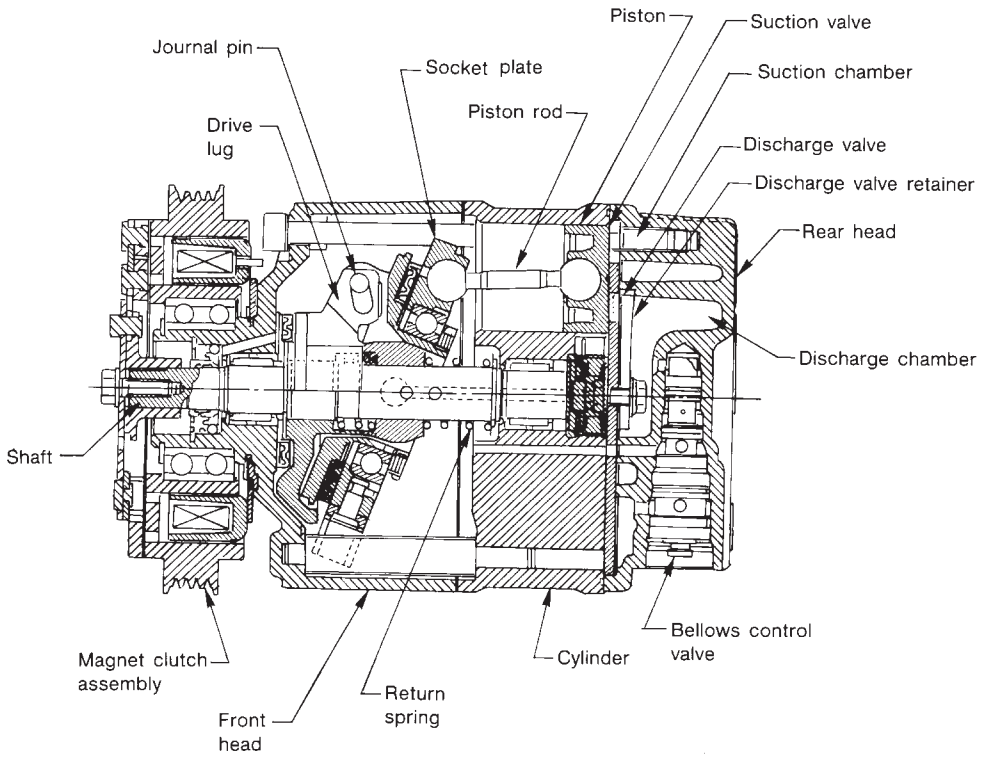

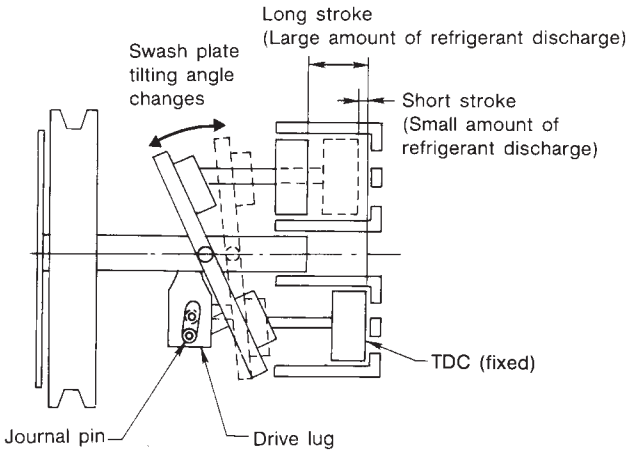

Discharge control	Discharge capacity cm^3 (cu in)/rev.	Piston stroke length mm (in)
Minimum	14.5 (0.885)	2.3 (0.091)
Maximum	184 (11.228)	28.6 (1.126)

RHA037DB

Operation

=NAHA0132S02

1. Operation Control Valve

NAHA0132S0201

Operation control valve is located in the suction port (low-pressure) side, and opens or closes in response to changes in refrigerant suction pressure.
Operation of the valve controls the internal pressure of the crankcase.
The angle of the wobble (swash) plate is controlled between the crankcase's internal pressure and the piston cylinder pressure.

2. Maximum Cooling

NAHA0132S0202

Refrigerant pressure on the low-pressure side increases with an increase in heat loads.
When this occurs, the control valve's bellows compress to open the low-pressure side valve and close the high-pressure side valve.
This causes the following pressure changes:
- the crankcase's internal pressure to equal the pressure on the low-pressure side;
- the cylinder's internal pressure to be greater than the crankcase's internal pressure.

Under this condition, the wobble (swash) plate is set to the maximum stroke position.

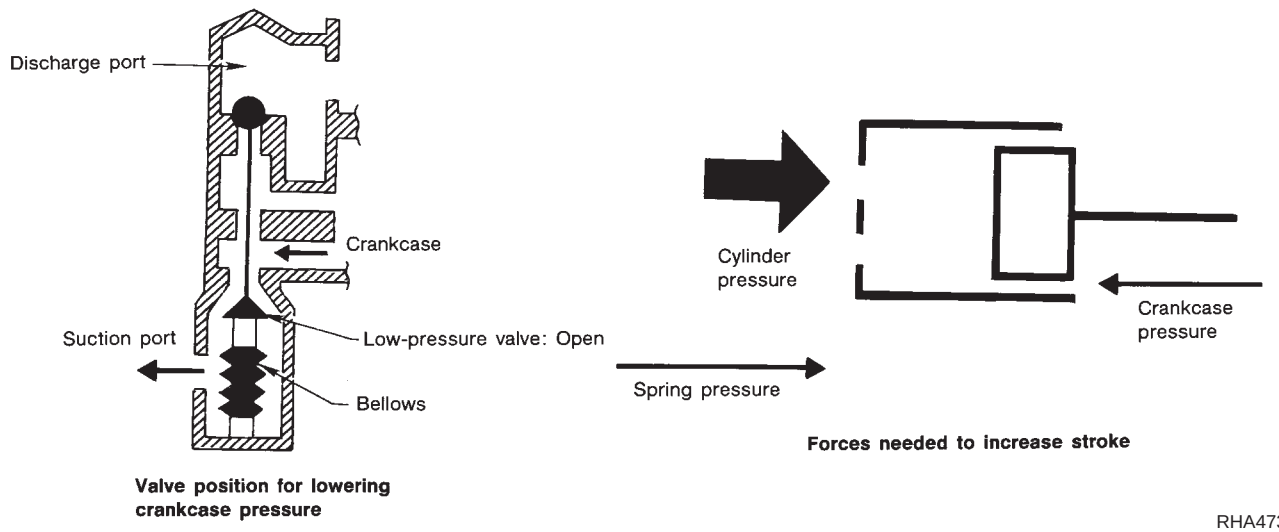

3. Capacity Control

=NAHA0132S0203

- Refrigerant pressure on suction side is low during high speed driving or when ambient or interior temperature is low.
- The bellows expands when refrigerant pressure on the suction pressure side drops below approximately 177 kPa (1.8 kg/cm^2, 26 psi).
  Since suction pressure is low, it makes the suction port close and the discharge port open. Thus, crankcase pressure becomes high as high pressure enters the crankcase.
- The force acts around the journal pin near the wobble (swash) plate, and is generated by the pressure difference before and behind the piston.
  The drive lug and journal pin are located where the piston generates the highest pressure. Piston pressure is between suction pressure Ps and discharge pressure Pd, which is near suction pressure Ps. If crankcase pressure Pc rises due to capacity control, the force around the journal pin makes the swash plate angle decrease and also the piston stroke decrease. In other words, crankcase pressure increase triggers pressure difference between the piston and the crankcase. The pressure difference changes the angle of the wobble (swash) plate.

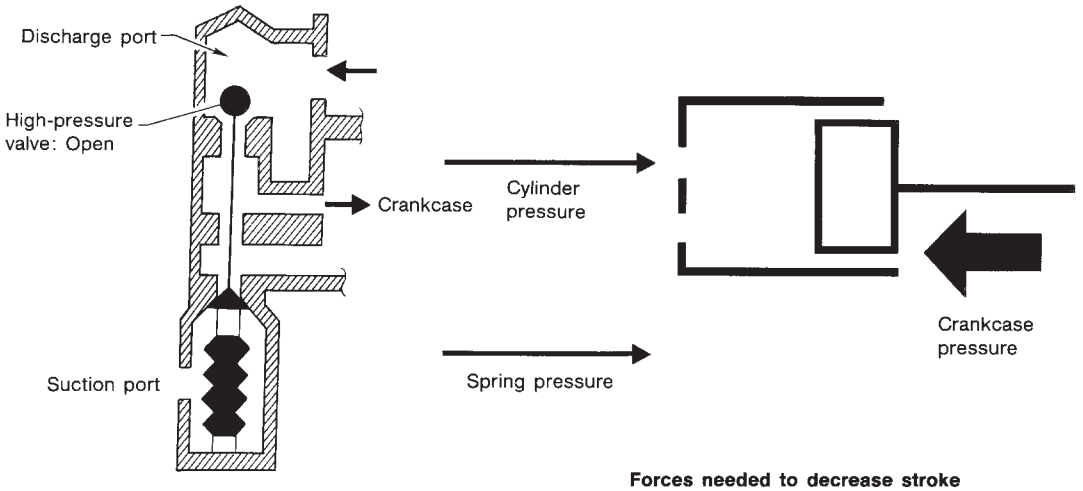

Valve position for raising crankcase pressure

Forces needed to decrease stroke

RHA474C

Component Layout

NAHA0071

SEC. 270•271•272•273

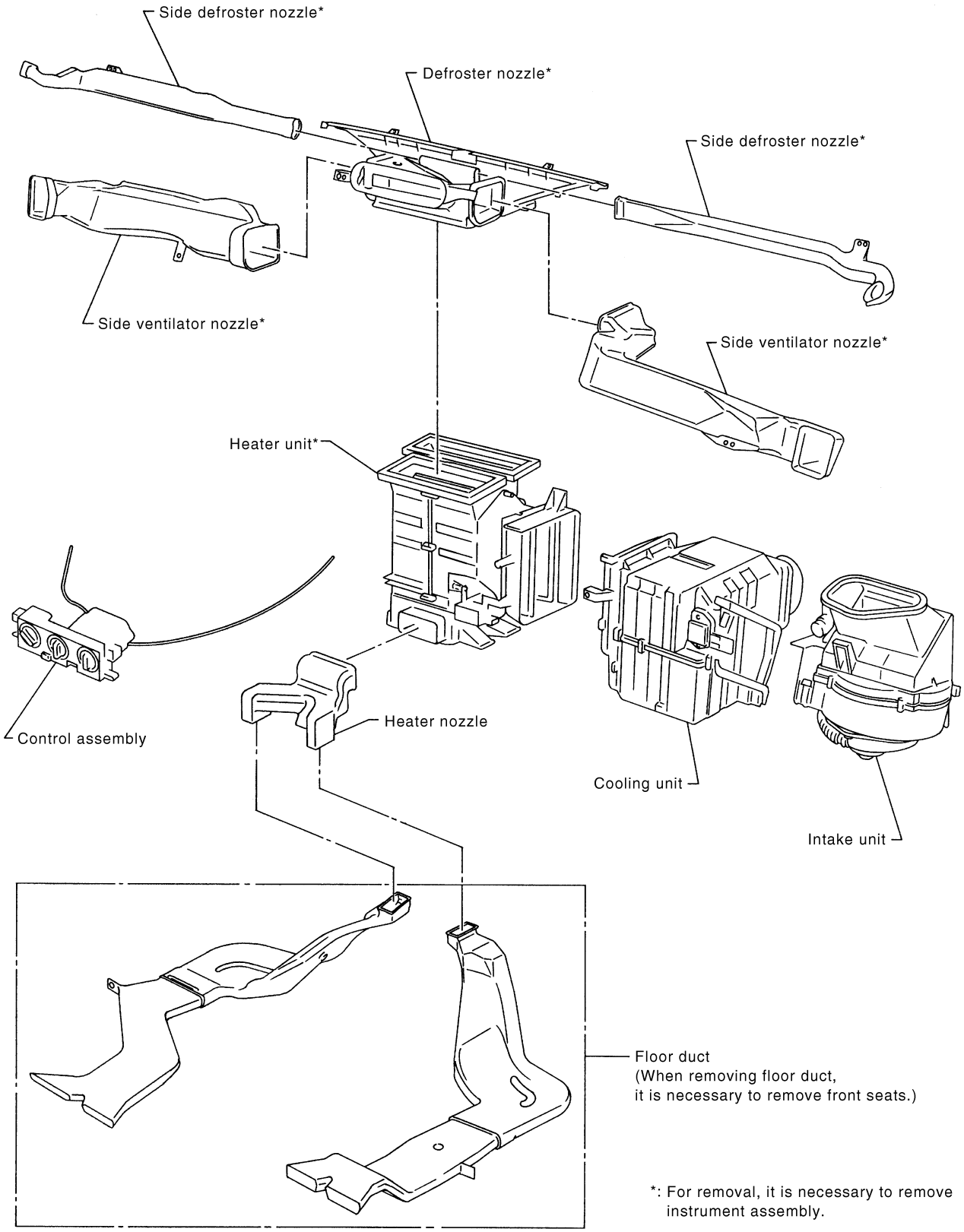

*: For removal, it is necessary to remove instrument assembly.

SHA926F

Control Operation

NAHA0072

Manual air conditioner

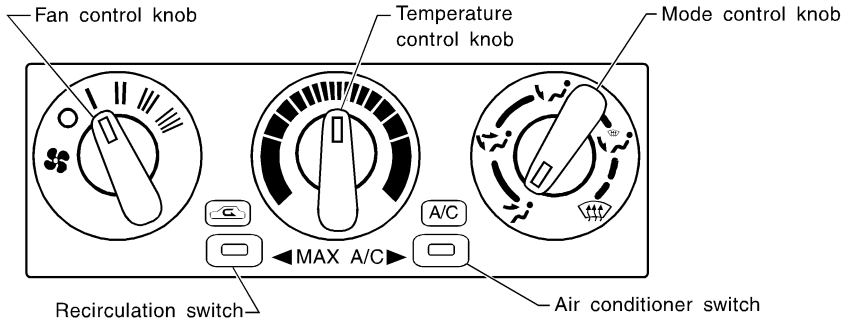

RHA073I

FAN CONTROL KNOB

NAHA0072S01

This knob turns the fan ON and OFF, and controls fan speed.

MODE CONTROL KNOB

NAHA0072S02

This knob controls the outlet air flow.
In “DEF” or “D/F” mode, the intake door is set to “FRESH”.

TEMPERATURE CONTROL KNOB

NAHA0072S03

This knob allows adjustment of the temperature of the outlet air.

RECIRCULATION (REC) SWITCH

NAHA0072S04

OFF position: Outside air is drawn into the passenger compartment.
ON position: Interior air is recirculated inside the vehicle. The indicator lamp will also light.

AIR CONDITIONER SWITCH

NAHA0072S05

The air conditioner switch controls the A/C system. When the switch is depressed with the fan ON, the compressor will turn ON. The indicator lamp will also light.
The air conditioner cooling function operates only when the engine is running.

MAX A/C POSITION

NAHA0072S06

The A/C system operates at maximum performance when the REC switch and A/C switch are both ON.

Discharge Air Flow

NAHA0073

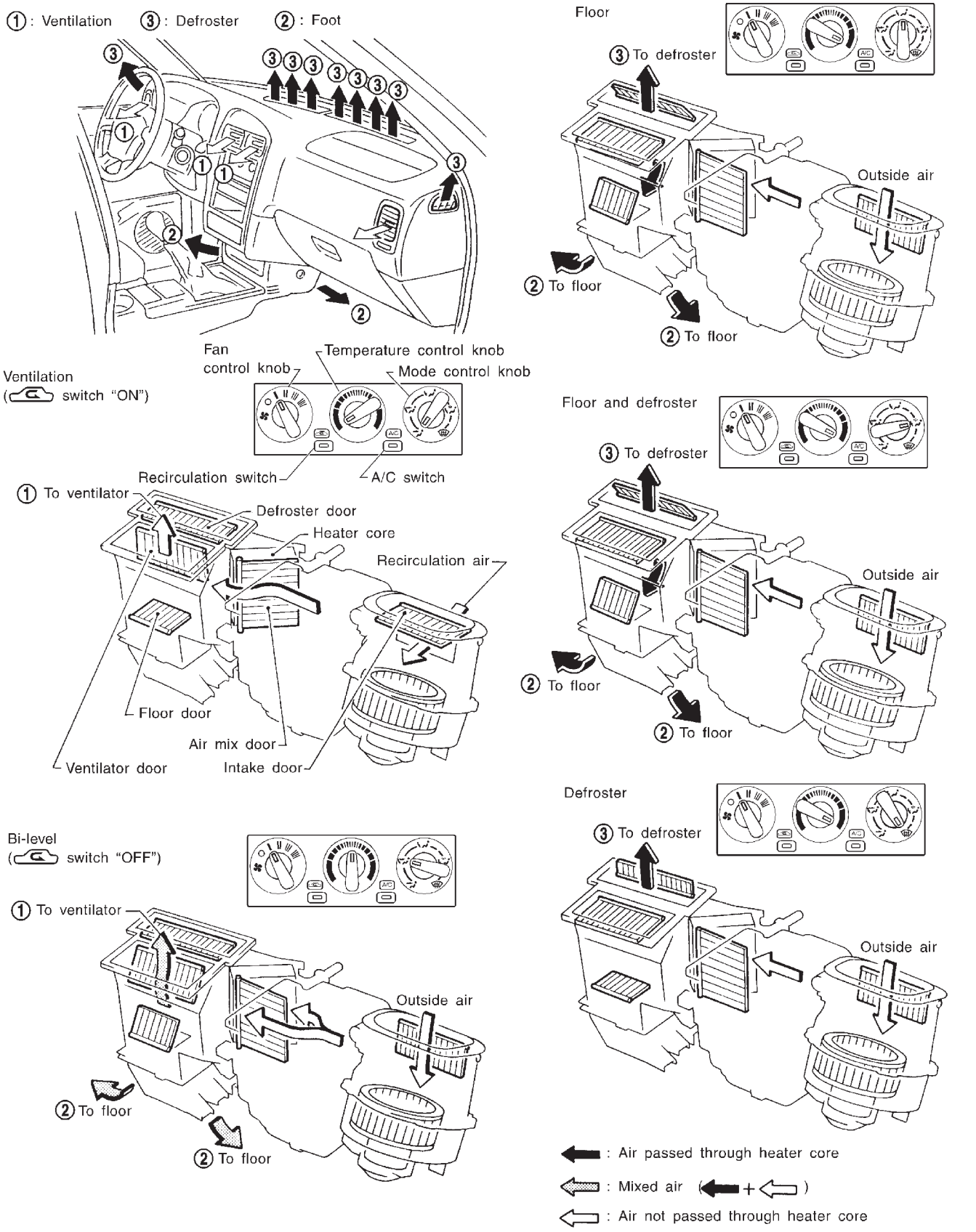

SHA963E

System Description

NAHA0074

SWITCHES AND THEIR CONTROL FUNCTIONS

NAHA0074S01

Knob/Switch		Knob/Switch position							Air outlet	Intake air	Compressor
		A/C									
A/C		○							—	—	ON*1
Mode			○						VENT	—	—
				○					B/L	—	—
					○				FOOT	—	—
						○			D/F	FRE	—
							○		DEF	FRE	—
								○	—	REC*2	—

*1: Compressor is operated by ECM.

*2: In DEF and D/F modes, REC switch is canceled.

Component Location

NAHA0085

ENGINE COMPARTMENT

NAHA0085S01

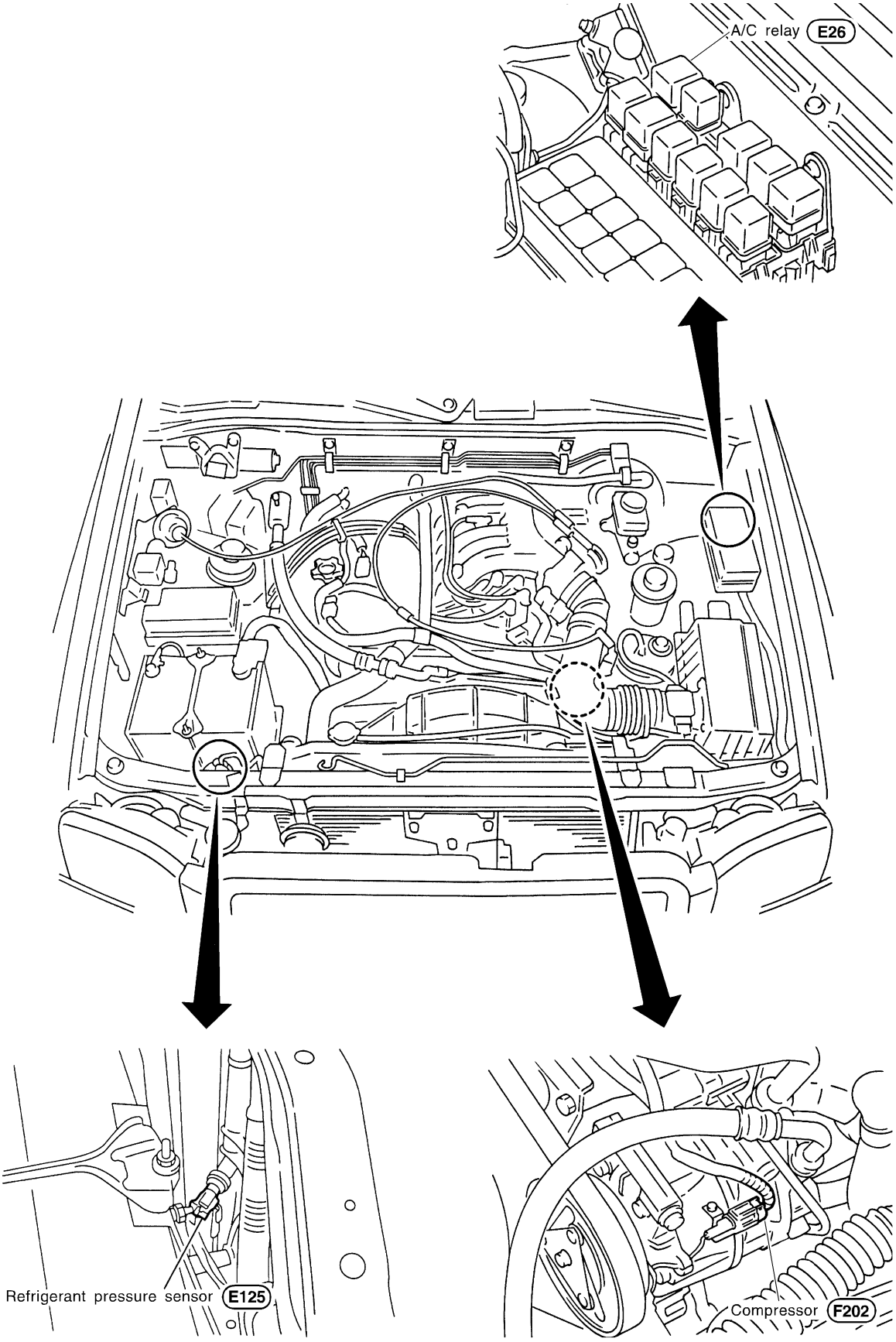

RHA074I

PASSENGER COMPARTMENT

NAHA0085S02

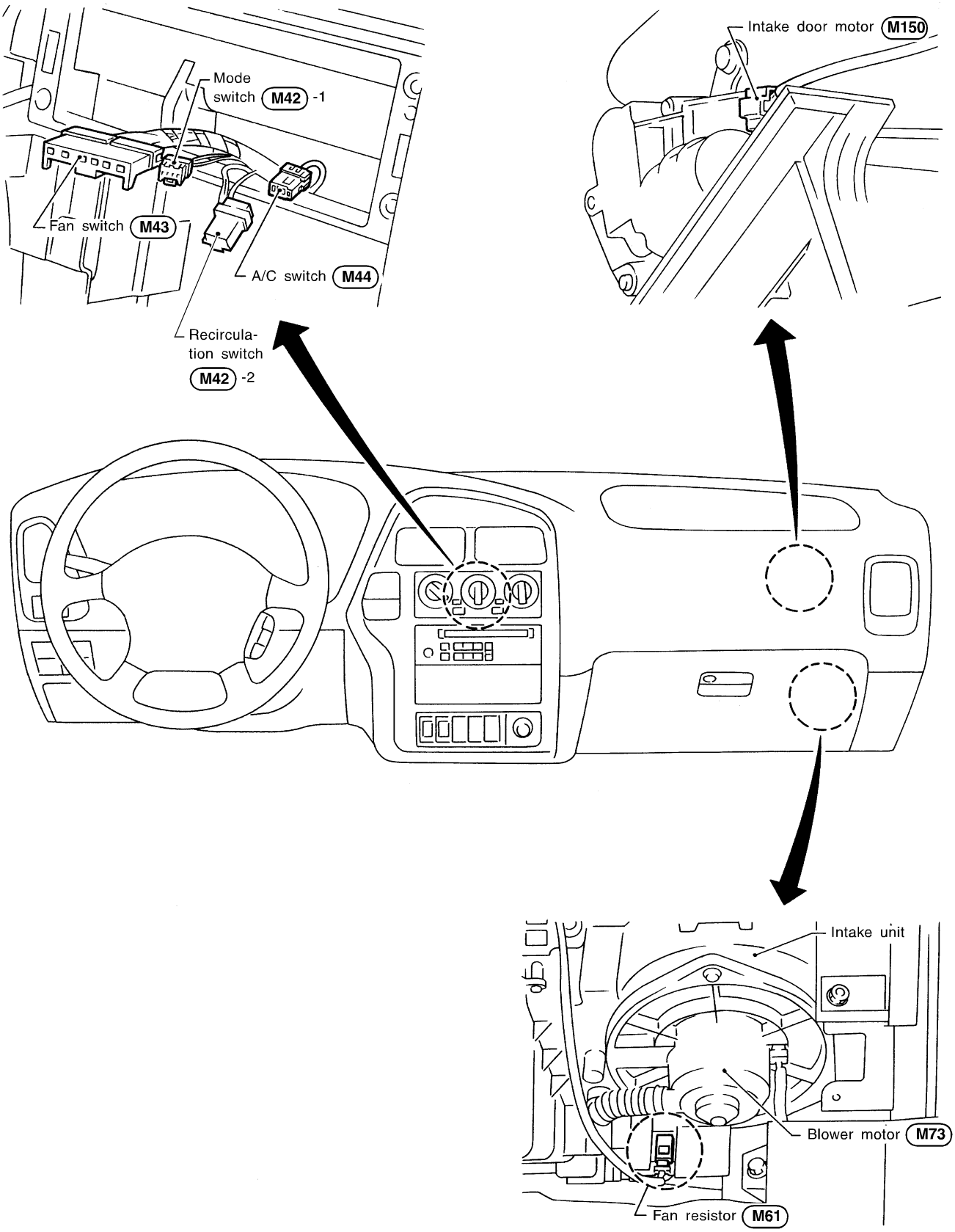

RHA204I

Wiring Diagram — HEATER —

NAHA0086

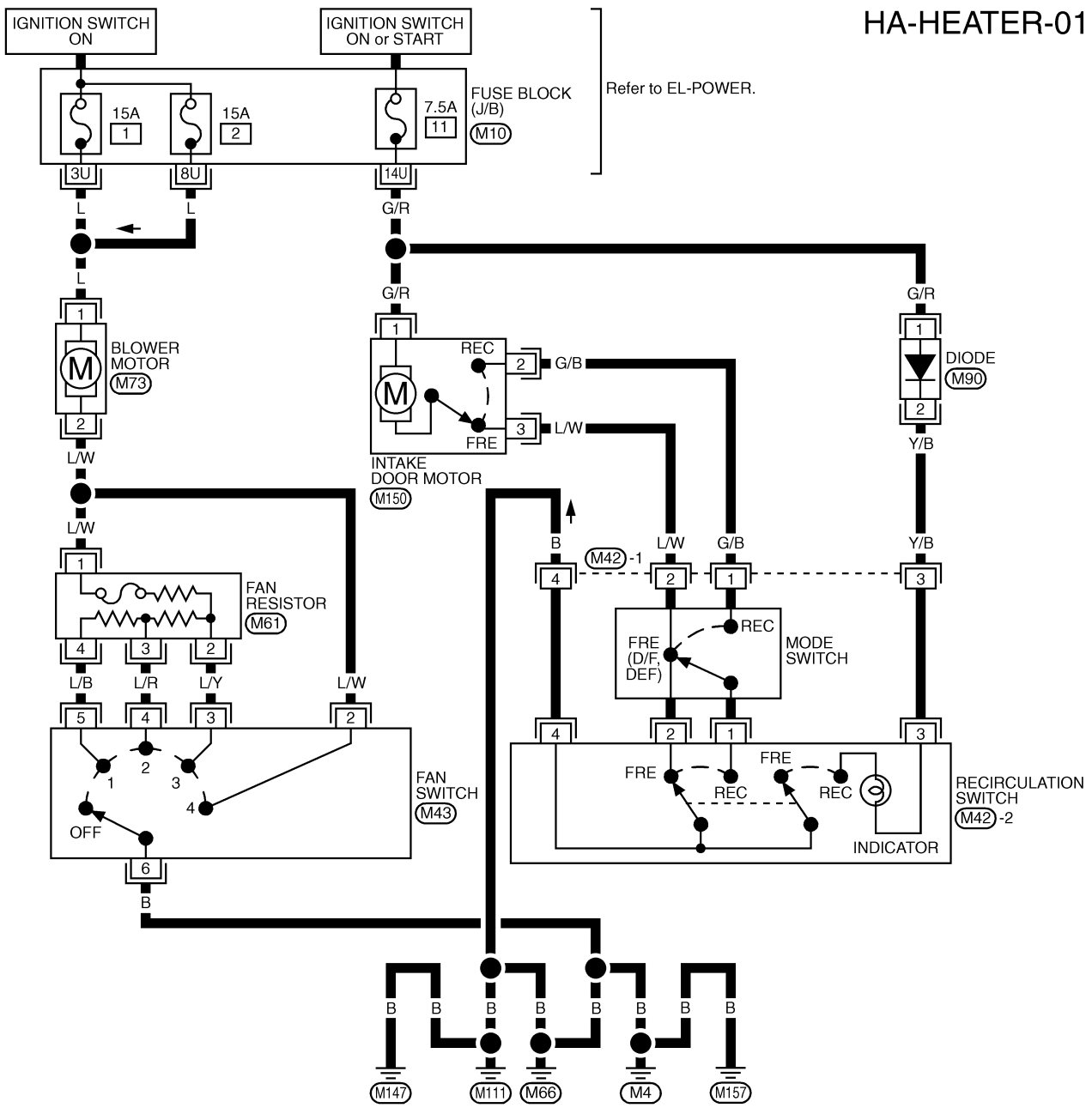

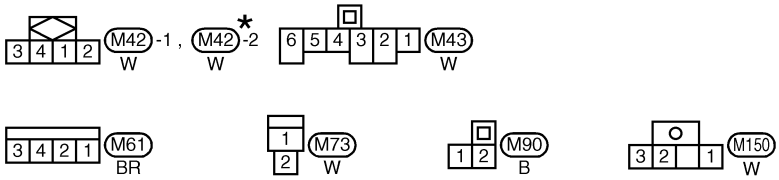

* : This connector is not shown in "HARNESS LAYOUT", EL section.

REFER TO THE FOLLOWING.
M10 -FUSE BLOCK-JUNCTION BOX (J/B)

MHA337B

Circuit Diagram — Air Conditioner

NAHA0087

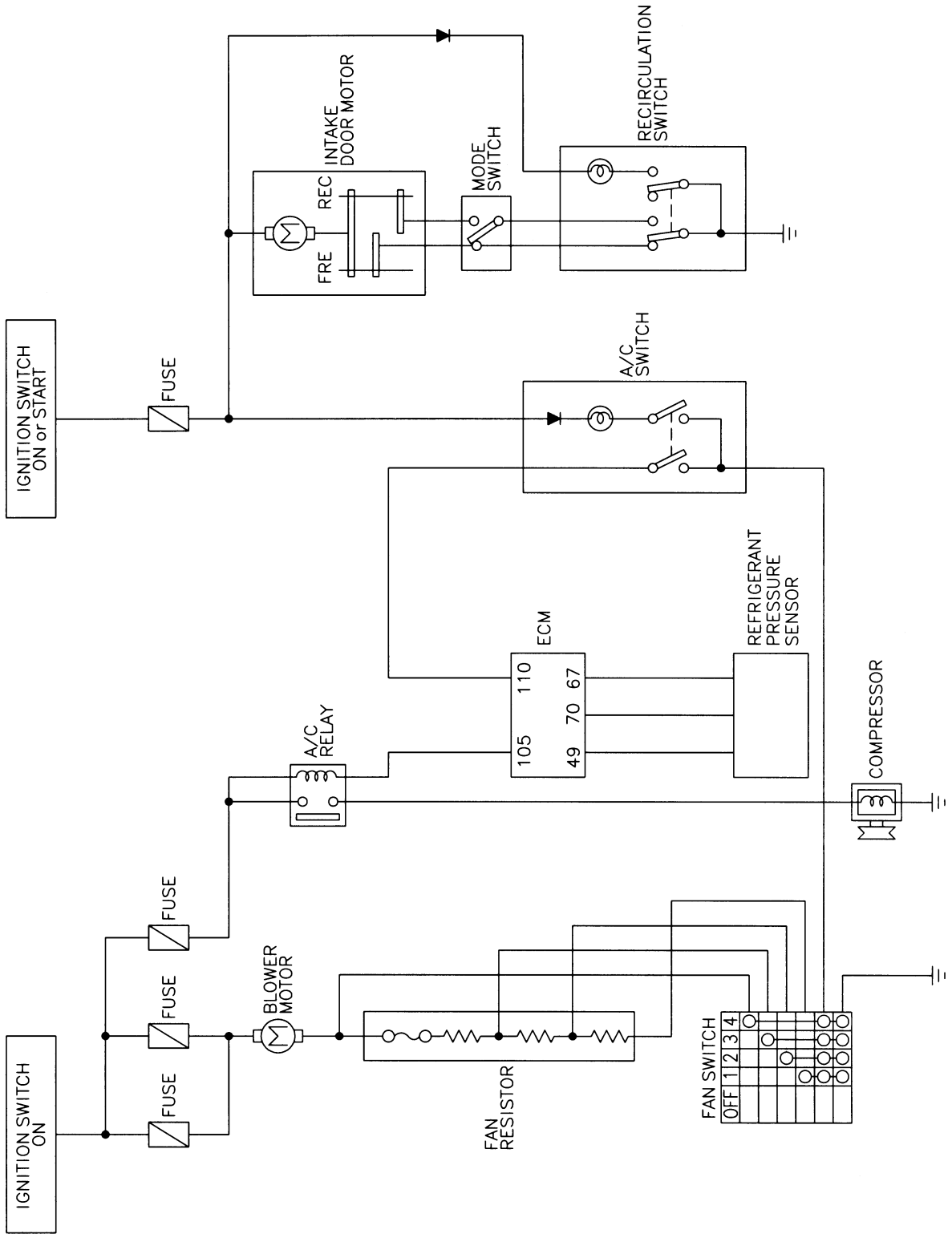

MHA198B

Wiring Diagram — A/C, M —

NAHA0088

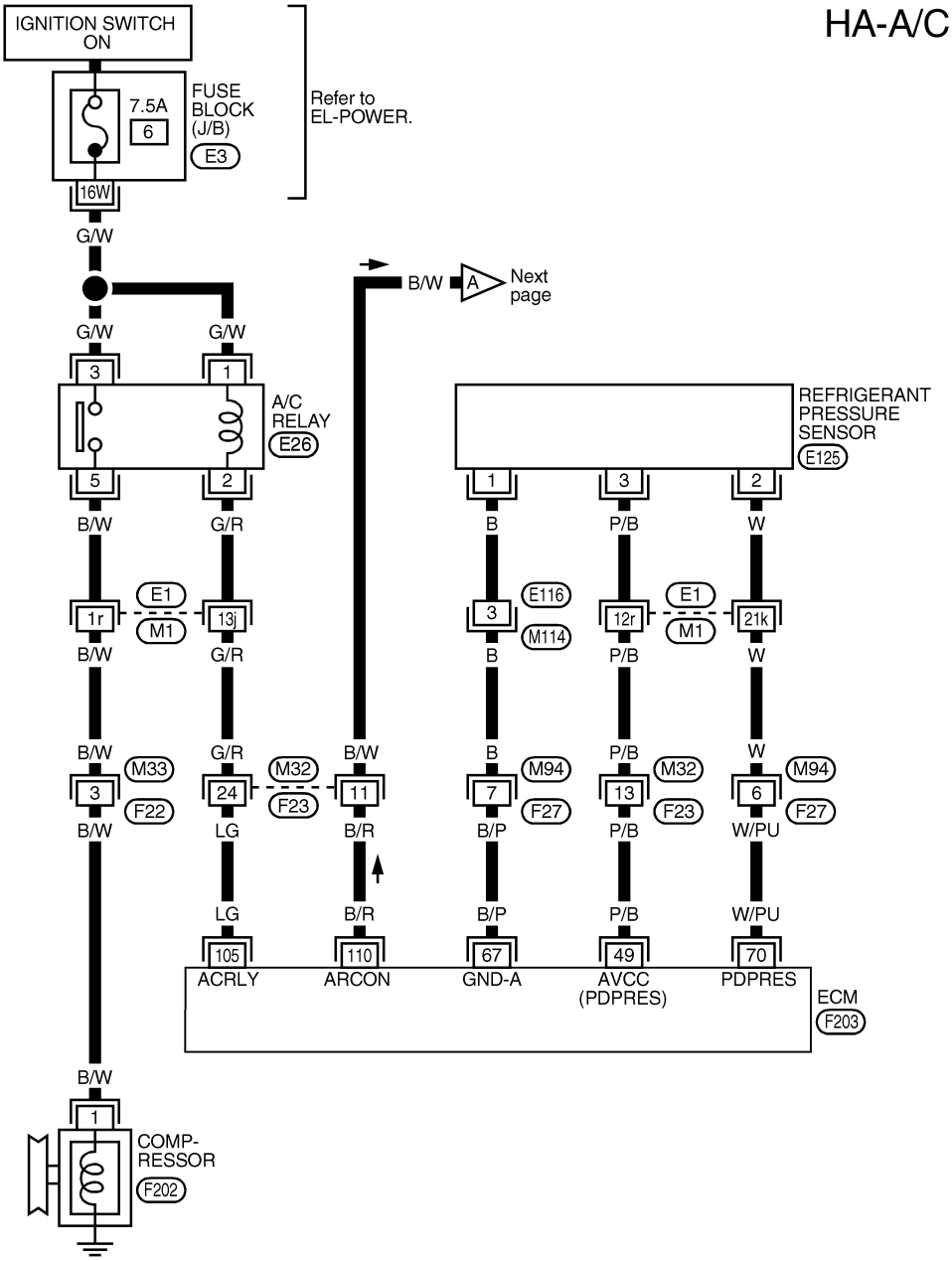

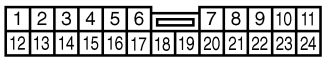

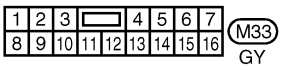

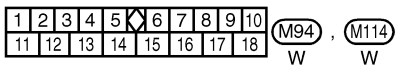

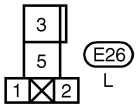

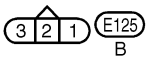

REFER TO THE FOLLOWING.
E1 -SUPER MULTIPLE JUNCTION (SMJ)
E3 -FUSE BLOCK-JUNCTION BOX (J/B)
F203 -ELECTRICAL UNITS

MHA199B

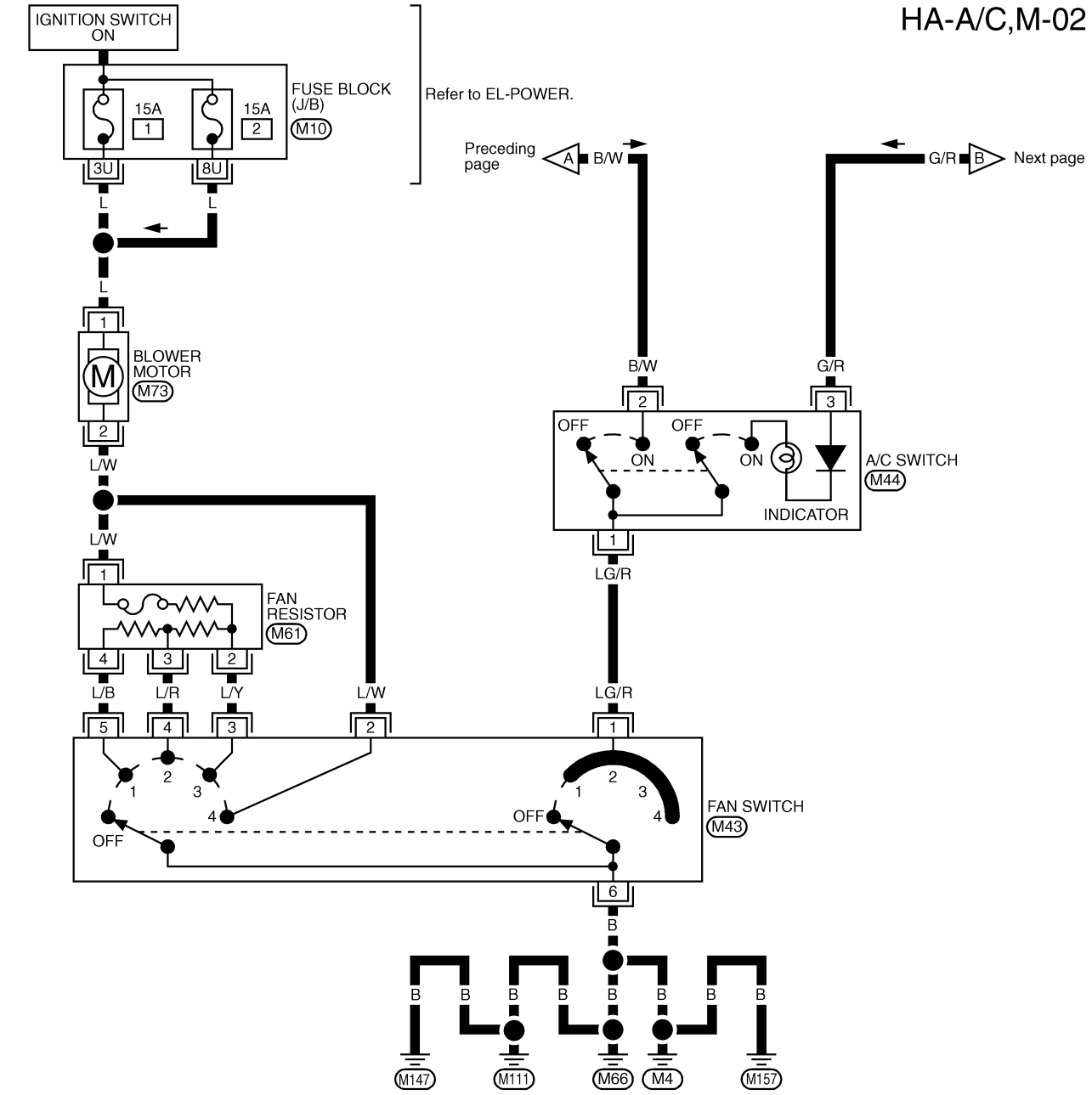

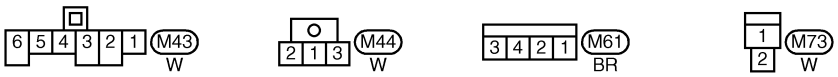

REFER TO THE FOLLOWING.
M10 -FUSE BLOCK-JUNCTION BOX (J/B)

MHA338B

HA-A/C,M-03

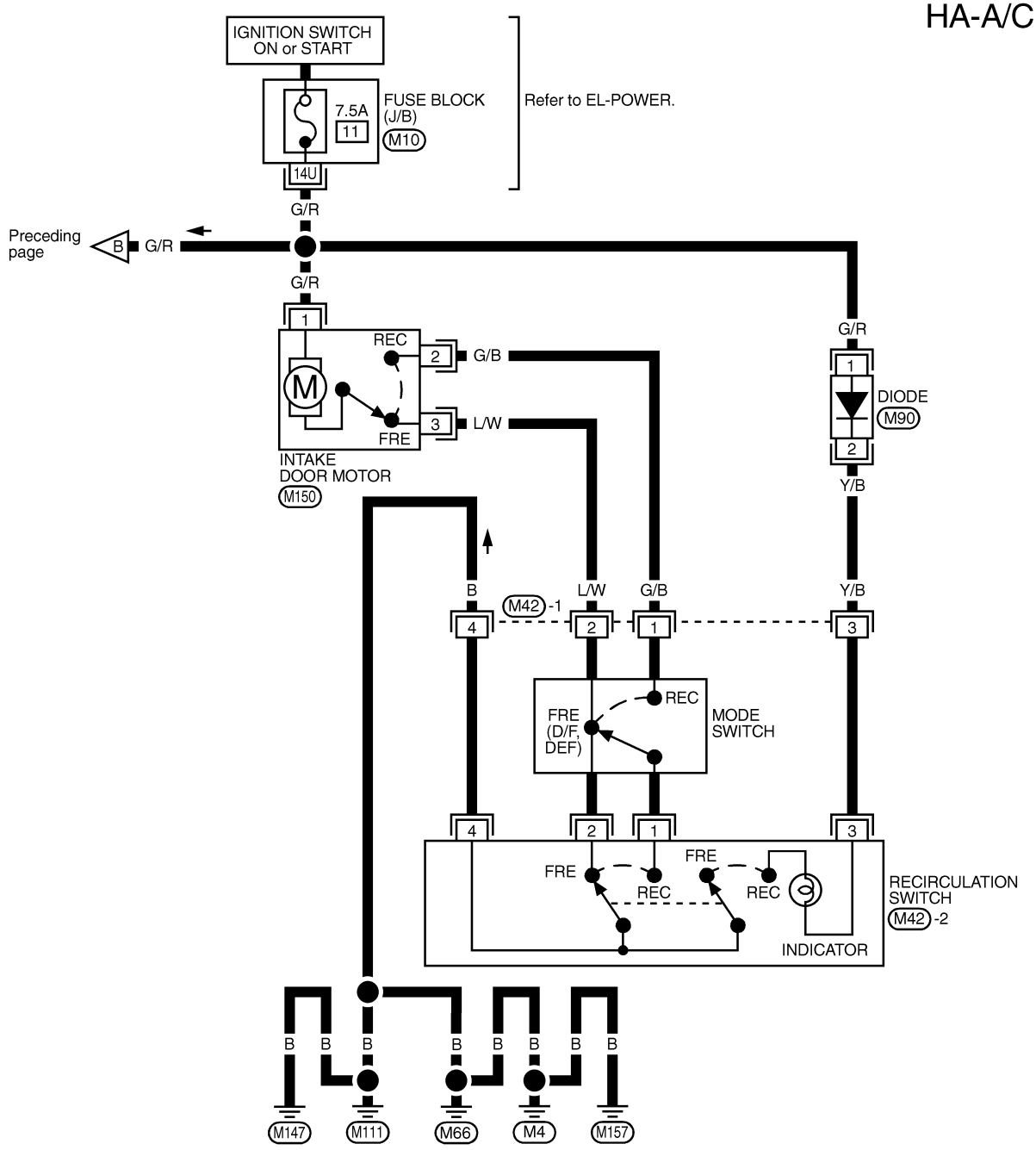

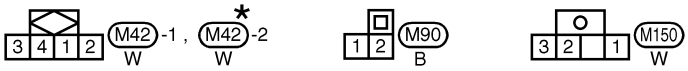

★ : This connector is not shown in "HARNESS LAYOUT", EL section.

REFER TO THE FOLLOWING.
M10 -FUSE BLOCK-JUNCTION BOX (J/B)

MHA201B

How to Perform Trouble Diagnoses for Quick and Accurate Repair

NAHA0075

WORK FLOW

NAHA0075S01

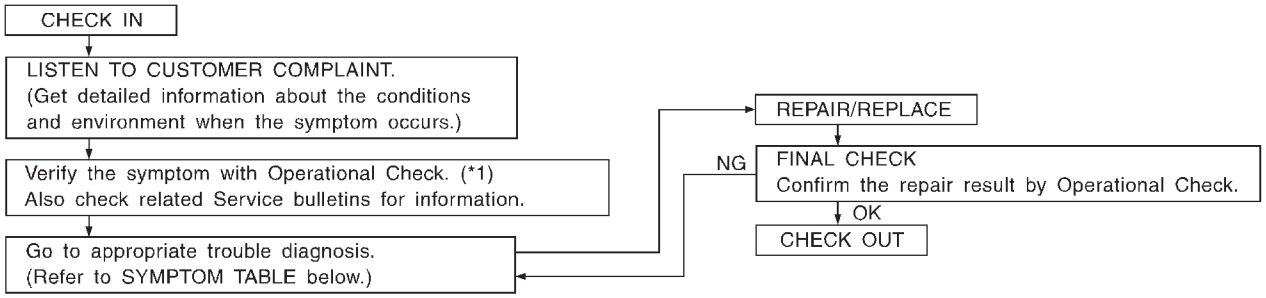

SHA900E

*1: HA-179

SYMPTOM TABLE

NAHA0075S02

Symptom	Reference page	
● Intake door does not change in VENT, B/L or FOOT mode.	● Go to Trouble Diagnosis Procedure for Intake Door.	HA-181
● Blower motor does not rotate at all.	● Go to Trouble Diagnosis Procedure for Blower Motor.	HA-188
● Insufficient cooling.	● Go to Trouble Diagnosis Procedure for Insufficient cooling.	HA-195
● Insufficient heating.	● Go to Trouble Diagnosis Procedure for Insufficient heating.	HA-203
● Air outlet does not change.	● Go to Trouble Diagnosis Procedure for Air Outlet.	HA-205
● Magnet clutch does not engage when A/C switch and fan switch are ON.	● Go to Trouble Diagnosis Procedure for Magnet Clutch.	HA-207
● Noise	● Go to Trouble Diagnosis Procedure for Noise.	HA-214

Operational Check

=NAHA0076

The purpose of the operational check is to confirm that the system operates as it should. The systems which are checked are the blower, mode (discharge air), intake air, temperature decrease, temperature increase.

CONDITIONS:

NAHA0076S01

Engine running at normal operating temperature.

PROCEDURE:

NAHA0076S02

1. Check Blower

NAHA0076S0201

1. Turn fan control knob to 1-speed.
   Blower should operate on 1-speed.
2. Then turn fan control knob to 2-speed.
3. Continue checking blower speed until all four speeds are checked.
4. Leave blower on 4-speed.

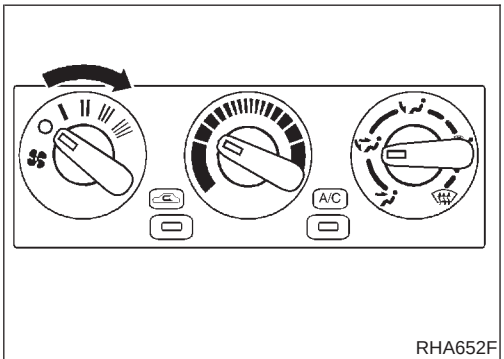

RHA652F

2. Check Discharge Air

NAHA0076S0202

1. Turn mode control knob.

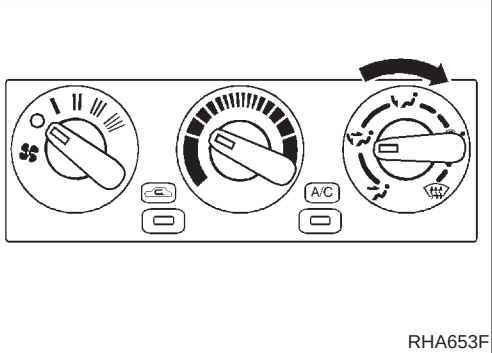

RHA653F

2. Confirm that discharge air comes out according to the air distribution table at left.
   Refer to “Discharge Air Flow” in “DESCRIPTION” (HA-169).

Discharge air flow

Mode control knob	Air outlet/distribution		
	Face	Foot	Defroster
	100%	–	–
	60%	40%	–
	–	80%	20%
	–	60%	40%
	–	–	100%

RHA654F

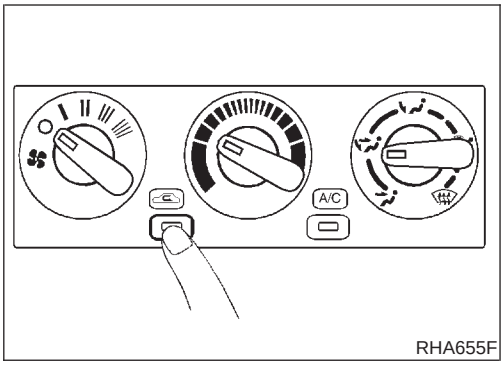

RHA655F

3. Check Recirculation

NAHA0076S0203

1. Press recirculation switch.
   Recirculation indicator should light.
2. Listen for intake door position change (you should hear blower sound change slightly).

NOTE:
Confirm that the RECIRCULATION (REC) switch is canceled in the DEF ( ) and D/F ( ) mode.

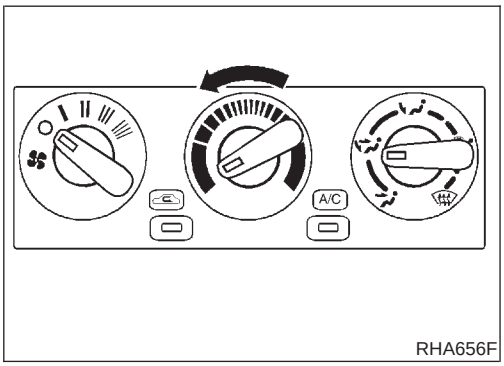

RHA656F

4. Check Temperature Decrease

NAHA0076S0204

1. Turn temperature control knob to full cold.
2. Check for cold air at discharge air outlets.

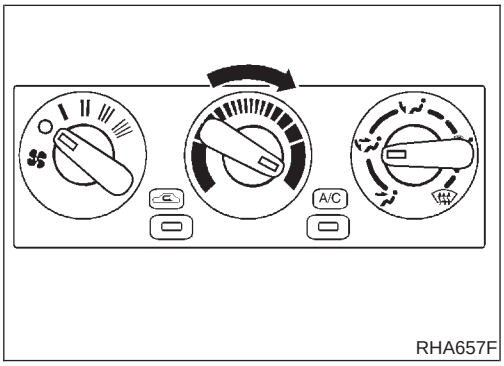

RHA657F

5. Check Temperature Increase

NAHA0076S0205

1. Turn temperature control knob to full hot.
2. Check for hot air at discharge air outlets.

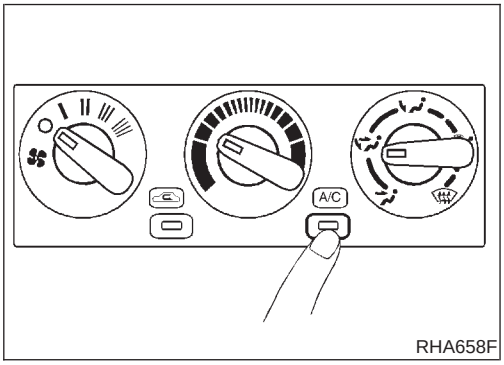

RHA658F

6. Check Air Conditioner Switch

NAHA0076S0206

Turn fan control knob to the desired (1 to 4-speed) position and push the air conditioner switch to turn ON the air conditioner.
The indicator light should come on when air conditioner is ON.

Intake Door

TROUBLE DIAGNOSIS PROCEDURE FOR INTAKE DOOR

=NAHA0135

Symptom:

- **Intake door does not change in VENT, B/L or FOOT mode.**

Inspection Flow

1. Confirm symptom by performing the following operational check.

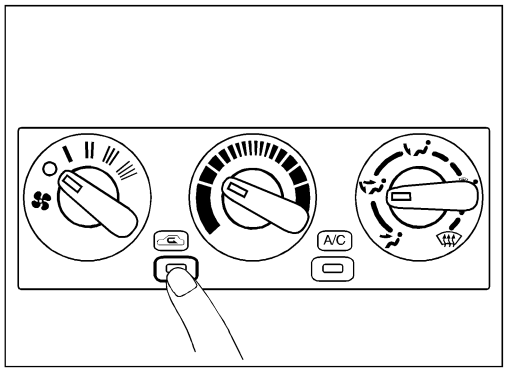

OPERATIONAL CHECK – Recirculation

1) Press recirculation switch.
   Recirculation indicator should light.
2) Listen for intake door position change (you should hear blower sound change slightly).

NOTE:
Confirm that the RECIRCULATION (REC) switch is canceled in the DEF ( ) and D/F ( ) mode.

2. Check for any service bulletins.

3. Check intake door motor circuit. (*1)

OK

If the symptom still exist, perform a complete operational check (*2) and check for other symptoms.
[Refer to symptom table, (*3).]
Does another symptom exist?

Yes → Go to Trouble Diagnosis for related symptom.
[Another symptom exists.]

No → INSPECTION END

SHA260F

*1: HA-183 *2: HA-179 *3: HA-178

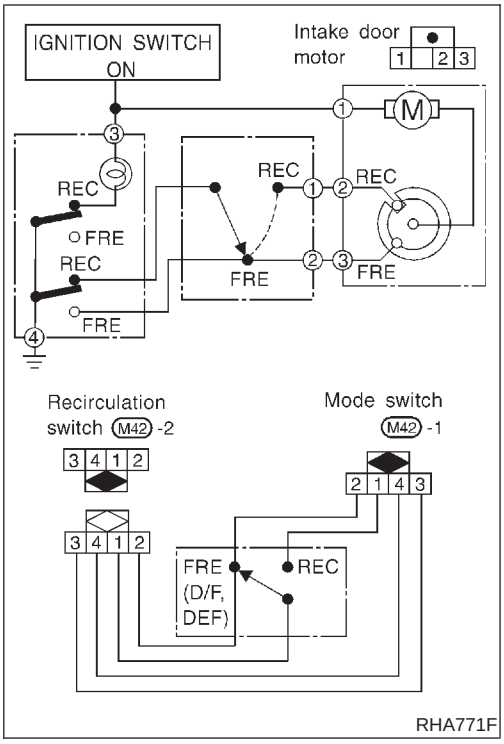

RHA771F

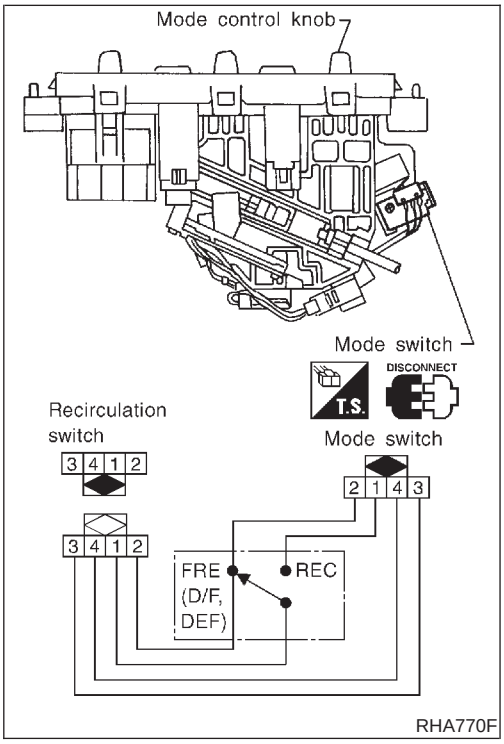

RHA770F

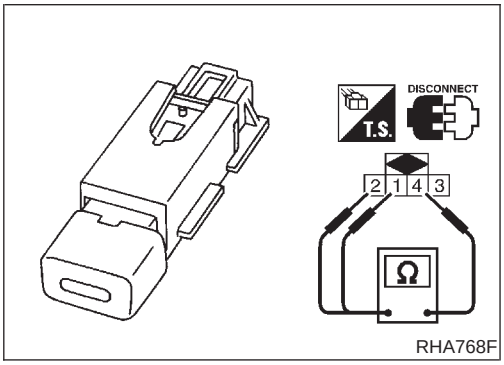

RHA768F

SYSTEM DESCRIPTION

NAHA0136

Intake Door Motor

NAHA0136S01

The intake door motor is installed on the intake unit. Using a link it opens and closes the intake door.

When RECIRCULATION switch is at REC (except DEF and D/F modes), the ground line of the motor is switched from intake door motor terminal 3 to 2. This starts the motor because the position switch contacts built into it make current flow. When RECIRCULATION switch is at FRE (except DEF and D/F modes), the ground line is switched from intake door motor terminal 2 to 3. The contacts turn along with the motor. When they reach the non-current flow position, the motor will stop. The motor always turns in the same direction.

RECIRCULATION switch is canceled by MODE switch in DEF and D/F modes.

ELECTRICAL COMPONENTS INSPECTION

NAHA0137

Mode Switch

NAHA0137S01

Check continuity between terminals at each switch position.

Terminal No.		Mode control knob condition	Continuity
Mode switch (+)	Recirculation switch connector (−)		
1	1	VENT, B/L, FOOT	Yes
		D/F, DEF	No
2	1	VENT, B/L, FOOT	No
		D/F, DEF	Yes
2	2	All	Yes
3	3	All	Yes
4	4	All	Yes

Recirculation Switch

NAHA0137S02

Check continuity between terminals at each switch position.

Terminal No.		Recirculation switch condition	Continuity
(+)	(−)		
1	4	REC	Yes
		FRE	No
2	4	REC	No
		FRE	Yes

INTAKE DOOR MOTOR CIRCUIT

=NAHA0090

SYMPTOM:

- **Intake door does not change in VENT, B/L or FOOT mode.**

1	CHECK POWER SUPPLY FOR INTAKE DOOR MOTOR
Disconnect intake door motor harness connector. Do approx. 12 volts exist between intake door motor harness connector M150 terminal No. 1 and ground? 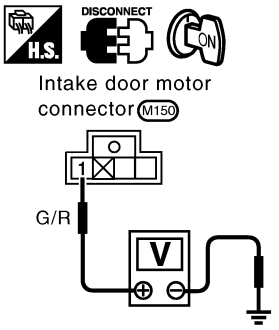 RHA350FD **Yes or No**	
Yes ▶	GO TO 2.
No ▶	Check 7.5A (No. 11) fuse at fuse block. (Refer to EL-12, "Wiring Diagram — POWER —".)

2	CHECK GROUND CIRCUIT FOR INTAKE DOOR MOTOR

Check continuity between intake door motor harness connector M150 terminals and ground.

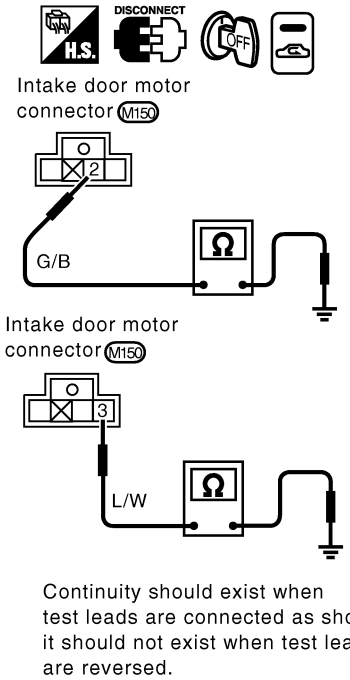

RHA580FB

Recirculation switch condition	Terminal No.		Continuity
	(+)	(–)	
REC	2	Ground	Yes
	3		No
FRE	2		No
	3		Yes

MTBL1836

OK or NG

OK	▶	GO TO 3.
NG	▶	Disconnect mode switch harness connector. GO TO 4.

3	CHECK INTAKE DOOR LINKAGE

Refer to Control Linkage Adjustment.
(HA-187)

OK or NG

OK	▶	Replace intake door motor.
NG	▶	Repair or adjust.

4	CHECK CONTINUITY BETWEEN MODE SWITCH AND INTAKE DOOR MOTOR

Check circuit continuity between mode switch harness connector M42-1 terminal No. 1, (2) and intake door motor harness connector M150 terminal No. 2, (3).

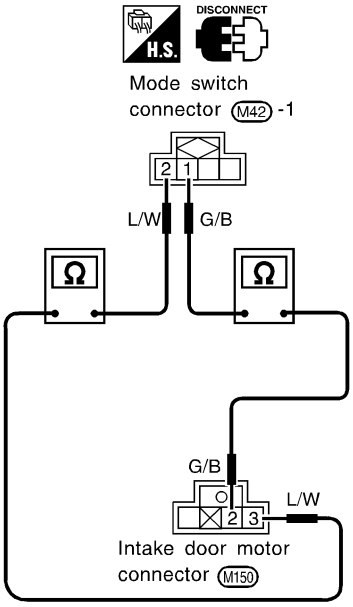

RHA581FB

Continuity should exist.
If OK, check harness for short.

OK or NG

OK	▶	GO TO 5.
NG	▶	Repair harness or connector.

5	CHECK MODE SWITCH

(Refer to Electrical Components Inspection.)
(HA-182)

OK or NG

OK	▶	GO TO 6.
NG	▶	Replace mode switch.

6	CHECK CIRCUIT CONTINUITY BETWEEN MODE SWITCH AND RECIRCULATION SWITCH

Check circuit continuity between mode switch harness connector M42-1 terminal No. 4 and recirculation switch harness connector M42-2 terminal No. 4.

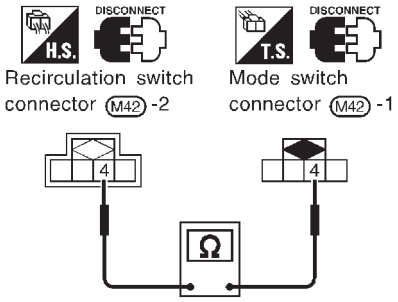

RHA769FB

Continuity should exist.
If OK, check harness for short.

OK or NG

OK	▶	GO TO 7.
NG	▶	Replace mode switch.

7	CHECK GROUND CIRCUIT FOR MODE SWITCH

Check circuit continuity between mode switch harness connector M42-1 terminal No. 4 and ground.

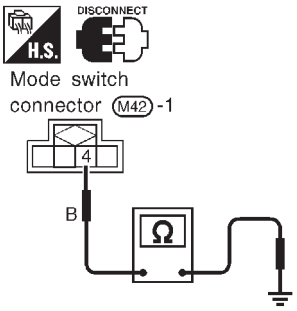

RHA582F

Continuity should exist.
If OK, check harness for short.

OK or NG

OK	▶	GO TO 8.
NG	▶	Repair harness or connector.

8	CHECK RECIRCULATION SWITCH

(Refer to Electrical Components Inspection.)
(HA-182)

OK or NG

OK	▶	INSPECTION END
NG	▶	Replace recirculation switch.

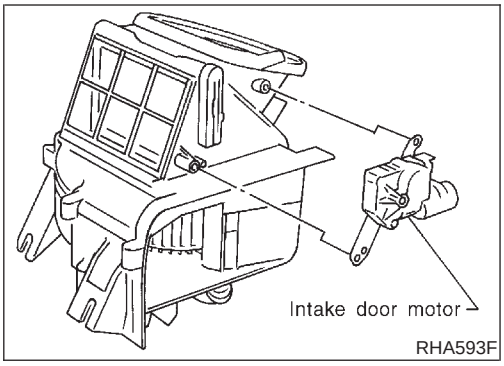

CONTROL LINKAGE ADJUSTMENT

NAHA0093

Intake Door Motor

NAHA0093S04

1. Install intake door motor on intake unit.
   Ensure that the intake door motor lever is fitted into the slit portion of intake door link.
2. Connect the intake door motor harness connector.
3. Turn ignition switch to ON.
4. Check that intake door operates properly when RECIRCULATION switch is turned ON and OFF.

Blower Motor

TROUBLE DIAGNOSIS PROCEDURE FOR BLOWER MOTOR

=NAHA0138

Symptom:

- **Blower motor does not rotate at all.**

Inspection Flow

1. Confirm symptom by performing the following operational check.

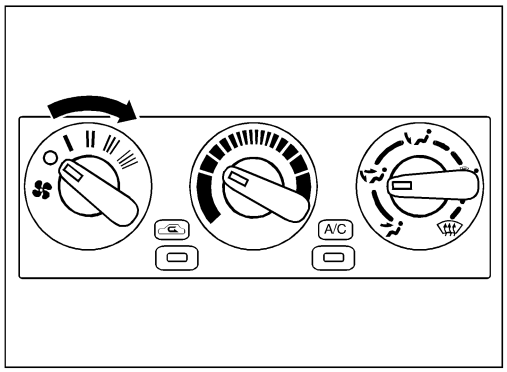

OPERATIONAL CHECK – Blower motor

1) Turn fan control knob to 1-speed.
   Blower should operate on 1-speed.
2) Then turn fan control knob to 2-speed.
3) Continue checking blower speed until all four speeds are checked.
4) Leave blower on 4-speed.

2. Check for any service bulletins.

3. Check blower motor circuit. (*1)

OK

If the symptom still exist, perform a complete operational check (*2) and check for other symptoms.
[Refer to symptom table, (*3).]
Does another symptom exist?

Yes → Go to Trouble Diagnosis for related symptom.
[Another symptom exists.]

No → INSPECTION END

SHA261F

*1: HA-190 *2: HA-179 *3: HA-178

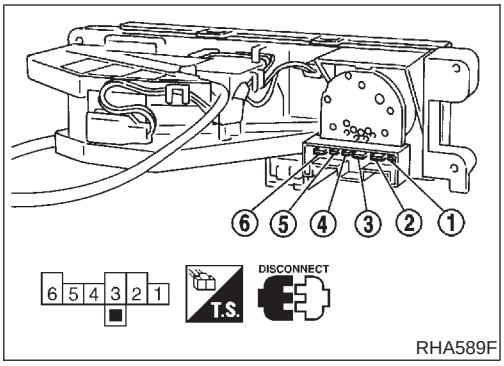

ELECTRICAL COMPONENTS INSPECTION

=NAHA0139

Fan Switch

NAHA0139S01

Check continuity between terminals at each switch position.

KNOB POSITION	Continuity between terminals
OFF	No continuity
1	5 — 1 — 6
2	4 — 1 — 6
3	3 — 1 — 6
4	2 — 1 — 6

Blower Motor

NAHA0139S02

Confirm smooth rotation of the blower motor.

- Ensure that there are no foreign particles inside the intake unit.

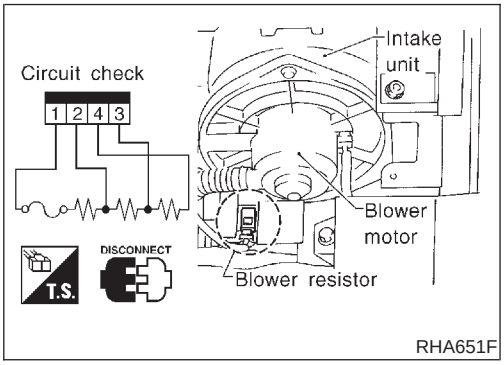

Blower Resistor

NAHA0139S03

Check resistance between terminals.

Terminal No.		Resistance
(+)	(−)	
3	1	Approx. 1.4 - 1.6Ω
4		Approx. 2.5 - 2.8Ω
2		Approx. 0.5 - 0.6Ω

BLOWER MOTOR CIRCUIT

=NAHA0089

SYMPTOM:

- **Blower motor does not rotate.**

Test group No.	INCIDENT
1	Fan fails to rotate.
2	Fan does not rotate at 1-speed.
3	Fan does not rotate at 2-speed.
4	Fan does not rotate at 3-speed.
5	Fan does not rotate at 4-speed.

1	**DIAGNOSTIC PROCEDURE**	
Check if blower motor rotates properly at each fan speed. Conduct checks as per table at above.		
1	▶	GO TO 2.
2, 3, 4	▶	GO TO 8.
5	▶	GO TO 10.

2	**CHECK POWER SUPPLY FOR BLOWER MOTOR**	
1. Disconnect blower motor harness connector. 2. Do approx. 12 volts exist between blower motor harness connector M73 terminal No. 1 and ground?		

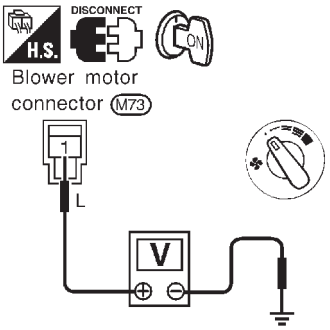

RHA343FA

Yes or No

Yes	▶	GO TO 3.
No	▶	Check 15A (Nos. 1 and No. 2) fuses at fuse block. (Refer to EL-12, "Wiring Diagram — POWER".)

3	CHECK CIRCUIT CONTINUITY FOR BLOWER MOTOR

1. Turn fan control knob to any position except OFF.
2. Check circuit continuity between blower motor harness connector M73 terminal No. 2 and ground.

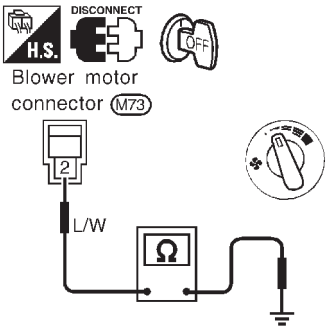

RHA344FA

Continuity should exist.

OK or NG

OK	▶	GO TO 4.
NG	▶	Reconnect blower motor harness connector. GO TO 5.

4	CHECK BLOWER MOTOR

(Refer to Electrical Components Inspection.)
(HA-189)

OK or NG

OK	▶	INSPECTION END
NG	▶	Replace blower motor.

5	CHECK BLOWER MOTOR CIRCUIT BETWEEN BLOWER MOTOR AND RESISTOR

Do approx. 12 volts exist between resistor harness connector M61 terminal No. 1 and ground?

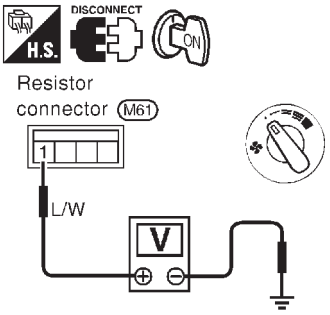

RHA575F

Yes or No

Yes	▶	Disconnect fan switch harness connector. GO TO 7.
No	▶	Disconnect blower motor and resistor harness connectors. GO TO 6.

6	CHECK CIRCUIT CONTINUITY BETWEEN BLOWER MOTOR AND RESISTOR

Check circuit continuity between blower motor harness M73 terminal No. 2 and resistor harness connector M61 terminal No. 1.

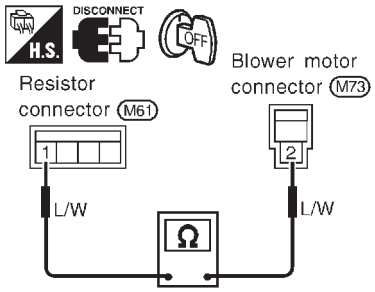

RHA576F

Continuity should exist.

OK or NG

OK	▶	Check harness for short.
NG	▶	Repair harness or connector.

7	CHECK GROUND CIRCUIT FOR FAN SWITCH

Check circuit continuity between fan switch harness connector M43 terminal No. 6 and ground.

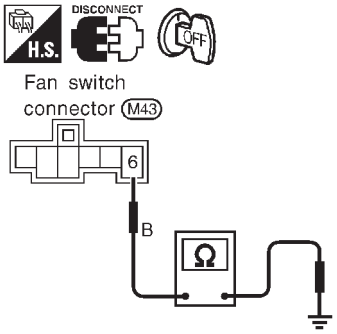

RHA577F

OK or NG

OK	▶	GO TO 8.
NG	▶	Repair harness or connector.

8	CHECK RESISTOR AFTER DISCONNECTING IT

(Refer to Electrical Components Inspection.)
(HA-189)

OK or NG

OK	▶	GO TO 9.
NG	▶	Replace resistor.

9	CHECK RESISTOR HARNESS CONNECTOR

Reconnect resistor harness connector.

OK or NG

1	▶	GO TO 12.
2, 3, 4	▶	GO TO 10.

10	CHECK FAN SWITCH CIRCUIT

Do approx. 12 volts exist between each fan switch harness connector M43 terminal and ground?

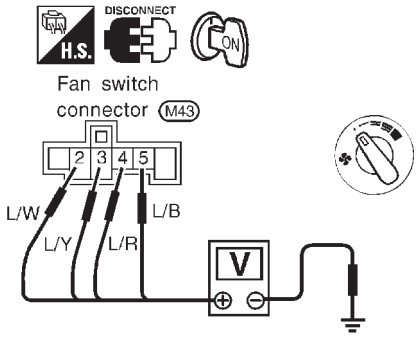

RHA578F

Test group No.	Terminal No. (+)	Terminal No. (−)	Voltage
2	5	Ground	Approx. 12V
3	4		
4	3		
5	2		

MTBL1837

Yes or No

Yes	▶	GO TO 12.
No	▶	GO TO 11.

11	CHECK CIRCUIT CONTINUITY BETWEEN FAN SWITCH AND RESISTOR

Check circuit continuity between fan switch harness connector M43 terminal and resistor harness connector M61 terminal.

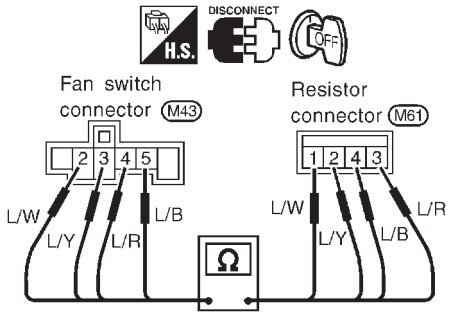

RHA579F

Terminal No.		Continuity
Fan Switch	Resistor	
2	1	Yes
3	2	
4	3	
5	4	

MTBL1838

Continuity should exist.

OK or NG

OK	▶	Check harness for short.
NG	▶	Repair harness or connector.

12	CHECK FAN SWITCH AFTER DISCONNECTING IT

(Refer to Electrical Components Inspection.)
(HA-189)

OK or NG

OK	▶	INSPECTION END
NG	▶	Replace fan switch.

Insufficient Cooling

TROUBLE DIAGNOSIS PROCEDURE FOR INSUFFICIENT COOLING

=NAHA0150

Symptom:

- **Insufficient Cooling.**

Inspection Flow

1. Confirm symptom by performing the following operational check.

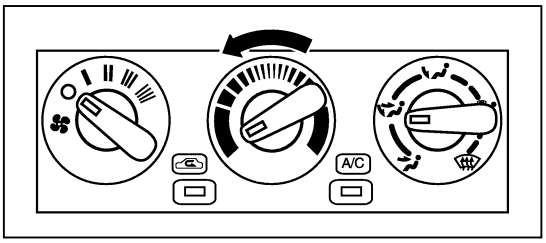

OPERATIONAL CHECK – Temperature decrease

1) Turn temperature control knob to full cold.
2) Check for cold air at discharge air outlets.

2. Check for any service bulletins.

3. Check compressor belt tension. Refer to MA-(*8), “Checking Drive Belts”.
   - NG → Adjust or replace compressor belt.
   - OK ↓

4. Check air mix door. (*1)
   - NG → Adjust or replace air mix door.
   - OK ↓

5. Check cooling fan motor operation.
   - NG → Refer to LC-(*9), “Cooling Fan”.
   - OK ↓

Before connecting Recovery/Recycling Recharging equipment to vehicle, check Recovery/Recycling Recharging equipment gauges. No refrigerant pressure should be displayed. If NG, recover refrigerant from equipment lines.

OK ↓

Confirm refrigerant purity in supply tank using Recovery/Recycling Recharging equipment and refrigerant identifier.
- NG → Refer to Contaminated refrigerant. (*7)
- OK ↓

Connect Recovery/Recycling Recharging equipment to vehicle. Confirm refrigerant purity in vehicle A/C system using Recovery/Recycling Recharging equipment and refrigerant identifier.
- NG → Refer to Contaminated refrigerant. (*7)
- OK ↓

6. Check for evaporator coil freeze up.
   - NG (Freeze up) → Perform Performance Test Diagnoses. Refer to (*3).
   - (Does not freeze up.) OK ↓

7. Check refrigeration cycle pressure with manifold gauge connected. Refer to (*2).
   - NG → Perform Performance Test Diagnoses. Refer to (*3).
   - OK ↓

8. Check ducts for air leaks.
   - NG → Repair air leaks.
   - OK ↓

If the symptom still exist, perform a complete operational check (*4) and check for other symptoms. [Refer to symptom table, (*5).] Does another symptom exist?
- Yes → Go to Trouble Diagnosis for related symptom. **[Another symptom exists.]**
- No ↓

INSPECTION END

SHA923F

*1: HA-204	*4: HA-179	*7: HA-150
*2: HA-198	*5: HA-178	*8: MA-14
*3: HA-196	*6: HA-220	*9: LC-23

PERFORMANCE TEST DIAGNOSES

NAHA0082

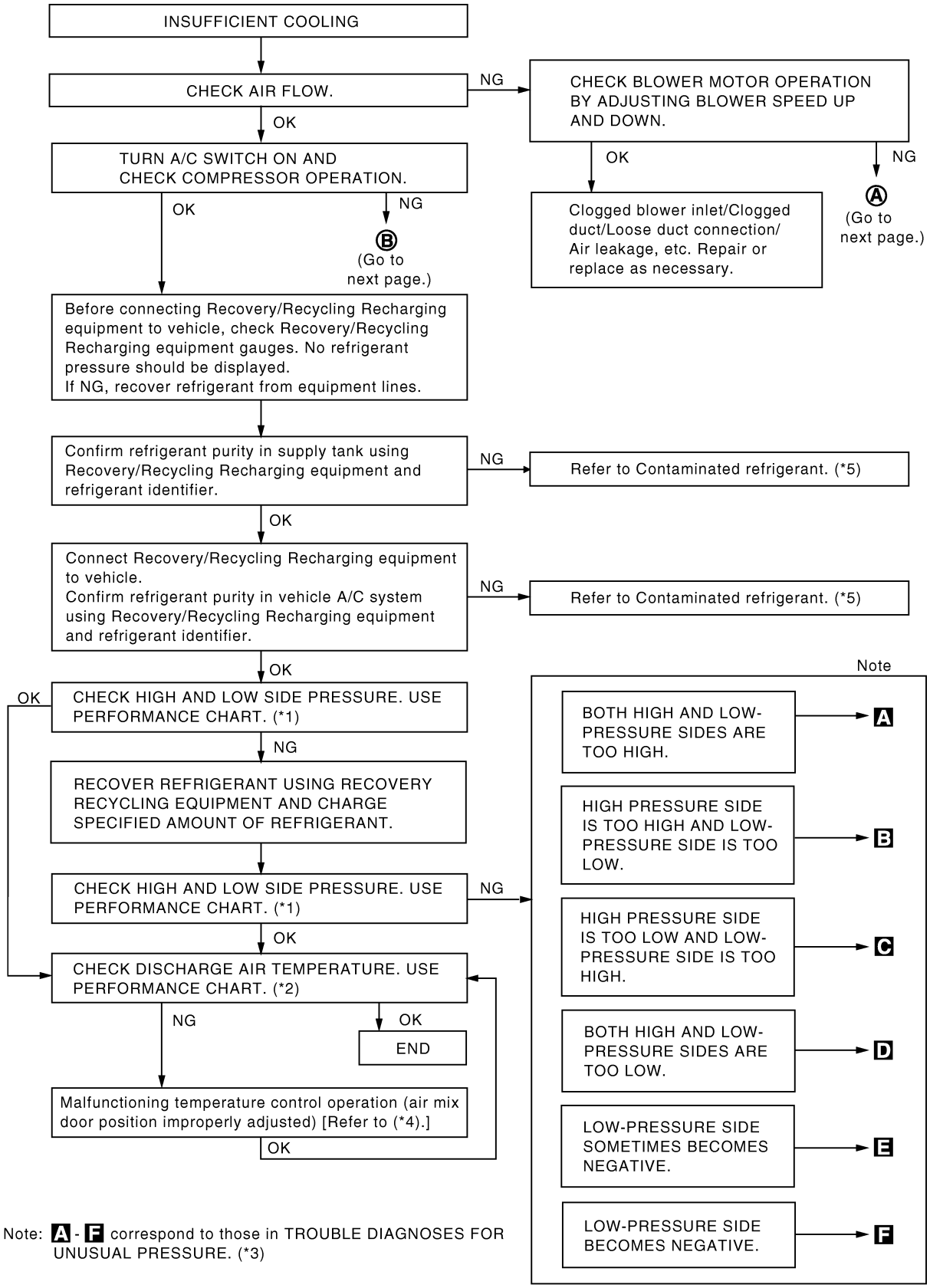

Note: A - F correspond to those in TROUBLE DIAGNOSES FOR UNUSUAL PRESSURE. (*3)

SHA921F

*1: HA-198
*2: HA-198
*3: HA-198
*4: HA-204
*5: HA-150

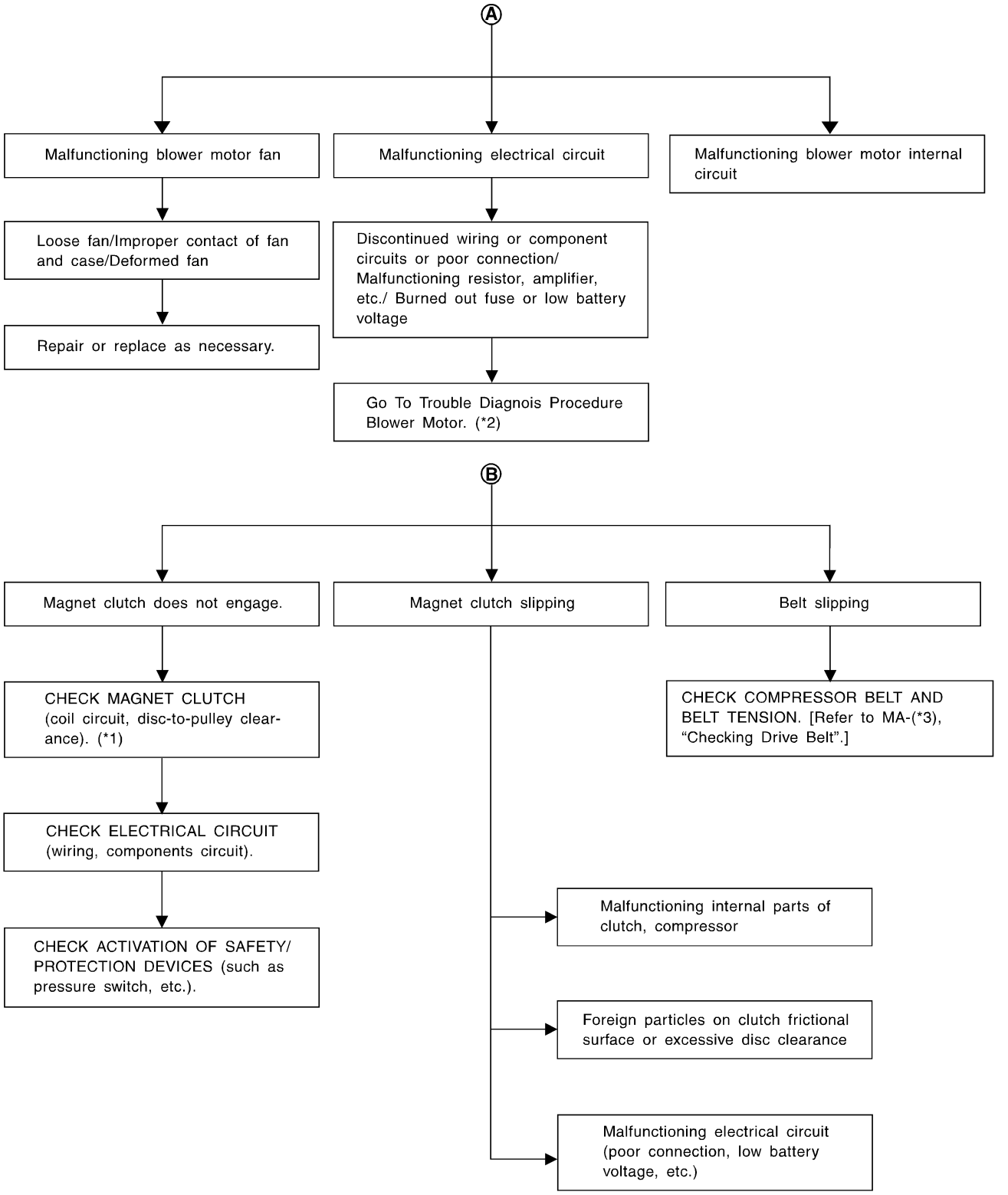

SHA329F

*1: HA-222
*2: HA-188
*3: MA-14

PERFORMANCE CHART

=NAHA0083

Test Condition

NAHA0083S01

Testing must be performed as follows:

Vehicle location	Indoors or in the shade (in a well-ventilated place)
Doors	Closed
Door windows	Open
Hood	Open
TEMP.	Max. COLD
Discharge Air	Face (Ventilation) set
REC switch	(Recirculation) set
FAN speed	High speed
Engine speed	Idle speed
Operate the air conditioning system for 10 minutes before taking measurements.	

Test Reading

NAHA0083S02

Recirculating-to-discharge Air Temperature Table

NAHA0083S0201

Inside air (Recirculating air) at blower assembly inlet		Discharge air temperature at center ventilator °C (°F)
Relative humidity %	Air temperature °C (°F)	
50 - 60	25 (77)	6.0 - 9.0 (43 - 48)
	30 (86)	10.0 - 13.6 (50 - 56)
	35 (95)	15.2 - 19.5 (59 - 67)
	40 (104)	22.5 - 27.1 (73 - 81)
60 - 70	25 (77)	9.0 - 12.2 (48 - 54)
	30 (86)	13.6 - 17.2 (56 - 63)
	35 (95)	19.5 - 23.7 (67 - 75)
	40 (104)	27.1 - 32.3 (81 - 90)

Ambient Air Temperature-to-operating Pressure Table

NAHA0083S0202

Ambient air		High-pressure (Discharge side) kPa (kg/cm^2, psi)	Low-pressure (Suction side) kPa (kg/cm^2, psi)
Relative humidity %	Air temperature °C (°F)		
50 - 70	25 (77)	1,226 - 1,638 (12.5 - 16.7, 178 - 237)	172 - 250 (1.75 - 2.55, 25 - 36)
	30 (86)	1,422 - 1,883 (14.5 - 19.2, 206 - 273)	196 - 275 (2.0 - 2.8, 28 - 40)
	35 (95)	1,657 - 2,187 (16.9 - 22.3, 240 - 317)	231 - 309 (2.35 - 3.15, 33 - 45)
	40 (104)	1,922 - 2,501 (19.6 - 25.5, 279 - 363)	280 - 373 (2.85 - 3.8, 41 - 54)

TROUBLE DIAGNOSES FOR UNUSUAL PRESSURE

NAHA0084

Whenever system's high and/or low side pressure is unusual, diagnose using a manifold gauge. The marker above the gauge scale in the following tables indicates the standard (usual) pressure range. Since the standard (usual) pressure, however, differs from vehicle to vehicle, refer to HA-198 ("Ambient air temperature-to-operating pressure table").

Both High and Low-pressure Sides are Too High.

NAHA0084S01

Gauge indication	Refrigerant cycle	Probable cause	Corrective action
Both high and low-pressure sides are too high. A 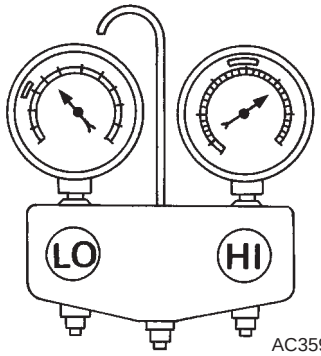 AC359A	● Pressure is reduced soon after water is splashed on condenser.	Excessive refrigerant charge in refrigeration cycle	Reduce refrigerant until specified pressure is obtained.
	Air suction by cooling fan is insufficient.	Insufficient condenser cooling performance ↓ 1. Condenser fins are clogged. 2. Improper fan rotation of cooling fan	● Clean condenser. ● Check and repair cooling fan as necessary.
	● Low-pressure pipe is not cold. ● When compressor is stopped high-pressure value quickly drops by approximately 196 kPa (2 kg/cm^2, 28 psi). It then decreases gradually thereafter.	Poor heat exchange in condenser (After compressor operation stops, high pressure decreases too slowly.) ↓ Air in refrigeration cycle	Evacuate repeatedly and recharge system.
	Engine tends to overheat.	Engine cooling systems malfunction.	Check and repair each engine cooling system.
	● An area of the low-pressure pipe is colder than areas near the evaporator outlet. ● Plates are sometimes covered with frost.	● Excessive liquid refrigerant on low-pressure side ● Excessive refrigerant discharge flow ● Expansion valve is open a little compared with the specification. ↓ 1. Improper expansion valve installation 2. Improper expansion valve adjustment	Replace expansion valve.

High-pressure Side is Too High and Low-pressure Side is Too Low.

NAHA0084S02

Gauge indication	Refrigerant cycle	Probable cause	Corrective action
High-pressure side is too high and low-pressure side is too low. B 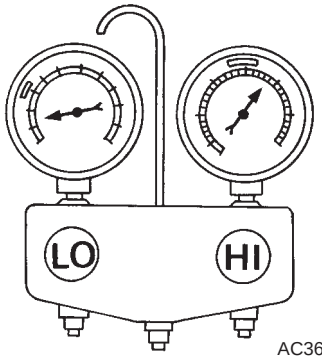 AC360A	Upper side of condenser and high-pressure side are hot, however, liquid tank is not so hot.	High-pressure tube or parts located between compressor and condenser are clogged or crushed.	● Check and repair or replace malfunctioning parts. ● Check lubricant for contamination.

High-pressure Side is Too Low and Low-pressure Side is Too High.

NAHA0084S03

Gauge indication	Refrigerant cycle	Probable cause	Corrective action
High-pressure side is too low and low-pressure side is too high. C 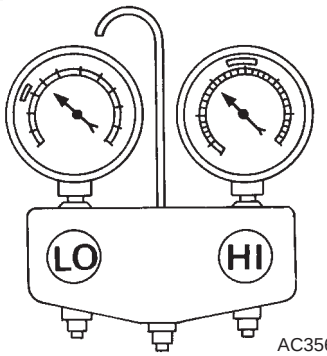 AC356A	High and low-pressure sides become equal soon after compressor operation stops.	Compressor pressure operation is improper. ↓ Damaged inside compressor packings	Replace compressor.
	No temperature difference between high and low-pressure sides	Compressor pressure operation is improper. ↓ Damaged inside compressor packings.	Replace compressor.

Both High- and Low-pressure Sides are Too Low.

NAHA0084S04

Gauge indication	Refrigerant cycle	Probable cause	Corrective action
Both high- and low-pressure sides are too low. **D** 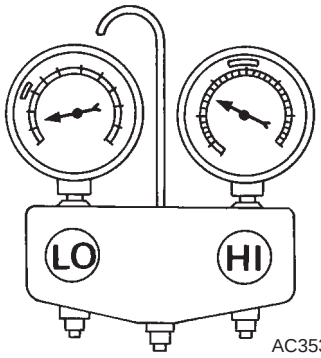 AC353A	● There is a big temperature difference between receiver drier outlet and inlet. Outlet temperature is extremely low. ● Liquid tank inlet and expansion valve are frosted.	Compressor discharge capacity does not change. (Compressor stroke is set at maximum.)	● Replace liquid tank. ● Check lubricant for contamination.
	● Temperature of expansion valve inlet is extremely low as compared with areas near liquid tank. ● Expansion valve inlet may be frosted. ● Temperature difference occurs somewhere in high-pressure side	High-pressure pipe located between receiver drier and expansion valve is clogged.	● Check and repair malfunctioning parts. ● Check lubricant for contamination.
	● Expansion valve and liquid tank are warm or only cool when touched.	Low refrigerant charge ↓ Leaking fittings or components	Check refrigerant for leaks. Refer to "Checking Refrigerant Leaks", HA-225.
	There is a big temperature difference between expansion valve inlet and outlet while the valve itself is frosted.	Expansion valve closes a little compared with the specification. ↓ 1. Improper expansion valve adjustment 2. Malfunctioning expansion valve 3. Outlet and inlet may be clogged.	● Remove foreign particles by using compressed air. ● Check lubricant for contamination.
	An area of the low-pressure pipe is colder than areas near the evaporator outlet.	Low-pressure pipe is clogged or crushed.	● Check and repair malfunctioning parts. ● Check lubricant for contamination.
	Air flow volume is not enough or is too low.	Evaporator is frozen. ↓ Compressor discharge capacity does not change. (Compressor stroke is set at maximum length.)	● Check intake sensor circuit. ● Replace compressor.

Low-pressure Side Sometimes Becomes Negative.

NAHA0084S05

Gauge indication	Refrigerant cycle	Probable cause	Corrective action
Low-pressure side sometimes becomes negative. E 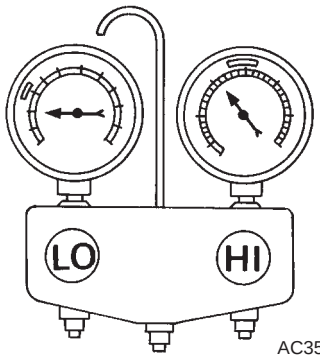 AC354A	• Air conditioning system does not function and does not cyclically cool the compartment air. • The system constantly functions for a certain period of time after compressor is stopped and restarted.	Refrigerant does not discharge cyclically. ↓ Moisture is frozen at expansion valve outlet and inlet. ↓ Water is mixed with refrigerant.	• Drain water from refrigerant or replace refrigerant. • Replace liquid tank.

Low-pressure Side Becomes Negative.

NAHA0084S06

Gauge indication	Refrigerant cycle	Probable cause	Corrective action
Low-pressure side becomes negative. F 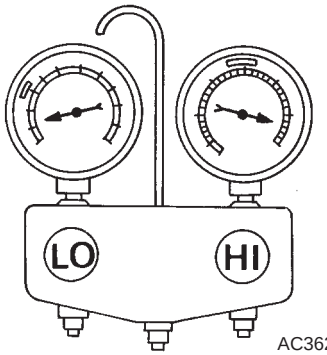 AC362A	Liquid tank or front/rear side of expansion valve's pipe is frosted or dewed.	High-pressure side is closed and refrigerant does not flow. ↓ Expansion valve or liquid tank is frosted.	Leave the system at rest until no frost is present. Start it again to check whether or not the problem is caused by water or foreign particles. • If water is the cause, initially cooling is okay. Then the water freezes causing a blockage. Drain water from refrigerant or replace refrigerant. • If due to foreign particles, remove expansion valve and remove particles with dry and compressed air (not shop air). • If either of the above methods cannot correct the problem, replace expansion valve. • Replace liquid tank. • Check lubricant for contamination.

Insufficient Heating

TROUBLE DIAGNOSIS PROCEDURE FOR INSUFFICIENT HEATING

=NAHA0140

Symptom:

- **Insufficient Heating.**

Inspection Flow

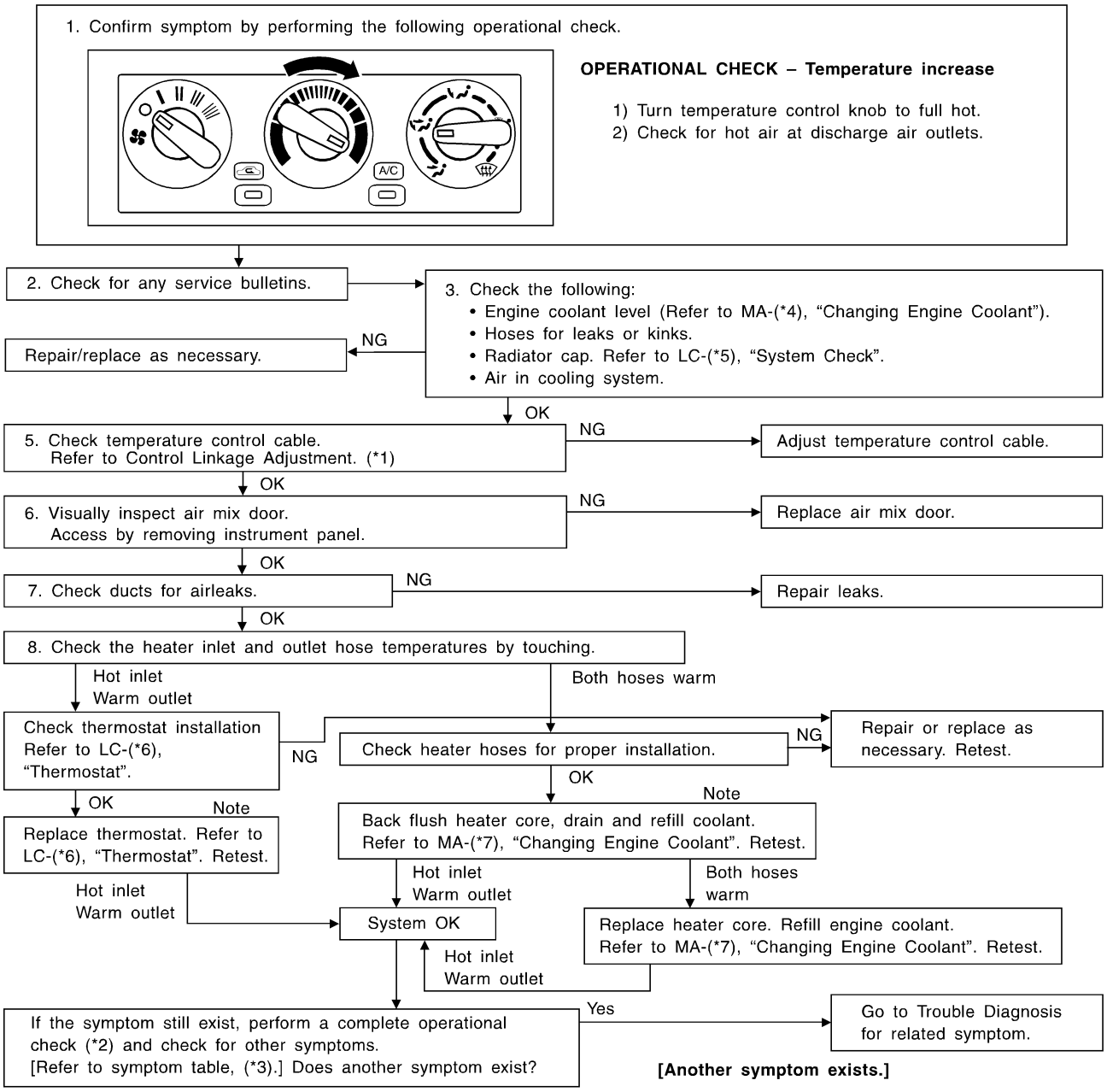

RHA075I

*1: HA-204
*2: HA-179
*3: HA-178
*4: MA-15
*5: LC-12
*6: LC-19
*7: MA-15

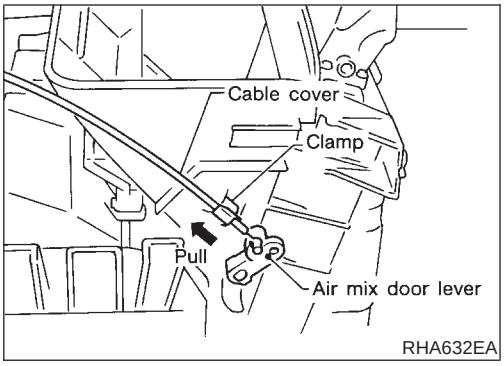

CONTROL LINKAGE ADJUSTMENT

NAHA0141

Temperature Control Cable

NAHA0141S02

1. Move the temperature control knob to the full hot position.
2. Set the air mix door lever in the full hot position.
3. Pull on the cable cover in the direction of the arrow, then clamp it.

After positioning control cable, check that it operates properly.

Air Outlet

TROUBLE DIAGNOSIS PROCEDURE FOR AIR OUTLET

=NAHA0142

Symptom:

- **Air outlet does not change.**

Inspection Flow

1. Confirm symptom by performing the following operational check.

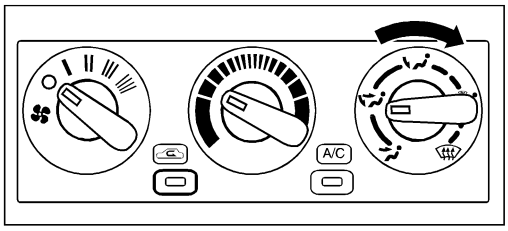

OPERATIONAL CHECK – Discharge air.

1) Turn mode control knob.

2) Confirm that discharge air comes out according to the air distribution table at left.
Refer to "Discharge Air Flow" in "DESCRIPTION" (*4).

Discharge air flow

Mode control knob	Air outlet/distribution		
	Face	Foot	Defroster
	100%	–	–
	60%	40%	–
	–	80%	20%
	–	60%	40%
	–	–	100%

2. Check for any service bulletins.

3. Check mode control cable. (*1)

OK

If the symptom still exist, perform a complete operational check (*2) and check for other symptoms.
[Refer to symptom table, (*3).]
Does another symptom exist?

Yes → Go to Trouble Diagnosis for related symptom.
[Another symptom exists.]

No → INSPECTION END

SHA263F

*1: HA-206
*2: HA-179
*3: HA-178
*4: HA-169

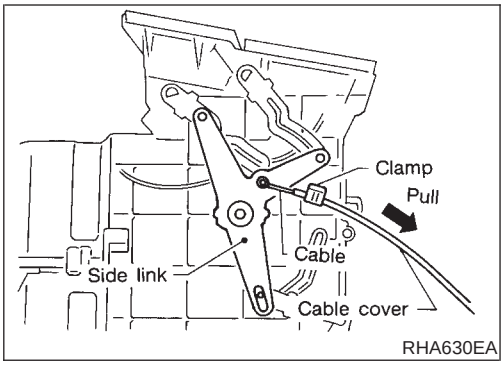

CONTROL LINKAGE ADJUSTMENT

NAHA0151

Mode Control Cable

NAHA0151S01

1. Turn the mode control knob to the DEF position.
2. Set the side link in the DEF position by hand.
3. Pull on the cable cover in the direction of the arrow, then clamp it.

After positioning control cable, check that it operates properly.

Magnet Clutch

TROUBLE DIAGNOSIS PROCEDURE FOR MAGNET CLUTCH

=NAHA0119

Symptom:

- **Magnet clutch does not operate when A/C switch and fan switch are ON.**

Inspection Flow

1. Confirm symptom by performing the following operational check.

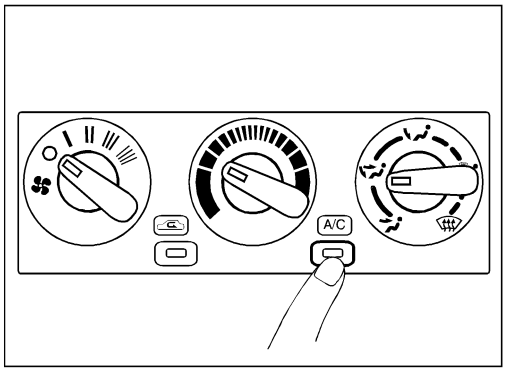

OPERATIONAL CHECK – A/C switch

Turn fan control knob to the desired (1 to 4-speed) position and push the air conditioner switch to turn ON the air conditioner. The indicator light should come on when air conditioner is ON.

2. Check for any service bulletins.

3. Check compressor belt tension.
   Refer to MA-(*5), “Checking Drive Belts”.
   - NG → Adjust or replace compressor belt.
   - OK ↓

4. Check refrigerant.
   Connect manifold gauge then check system pressure.
   - NG → Check for refrigerant leaks. Refer to (*1).
   - OK ↓

5. Check magnet clutch circuit. (*2)
   - OK ↓

If the symptom still exist, perform a complete operational check (*3) and check for other symptoms.
[Refer to symptom table, (*4).]
Does another symptom exist?

- Yes → Go to Trouble Diagnosis for related symptom. **[Another symptom exists.]**
- → INSPECTION END

SHA264FA

*1: HA-225
*2: HA-208
*3: HA-179
*4: HA-178
*5: MA-14

MAGNET CLUTCH CIRCUIT

=NAHA0091

SYMPTOM:

- **Magnet clutch does not engage when A/C switch and fan switch are ON.**

1	CHECK POWER SUPPLY FOR COMPRESSOR

Disconnect compressor harness connector.
Do approx. 12 volts exist between compressor harness connector F202 terminal No. 1 and ground?

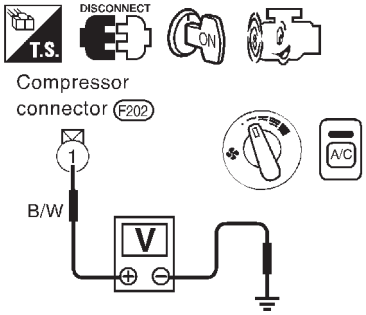

RHA747FA

Yes or No

Yes	▶	GO TO 2.
No	▶	Disconnect A/C relay. GO TO 3.

2	CHECK MAGNET CLUTCH COIL

OK or NG

NG	▶	Replace magnet clutch. Refer to HA-220.

3	CHECK CIRCUIT CONTINUITY BETWEEN A/C RELAY AND COMPRESSOR

Check circuit continuity between A/C relay harness connector E26 terminal No. 5 (B/W) and compressor harness connector F202 terminal No. 1 (B/W).

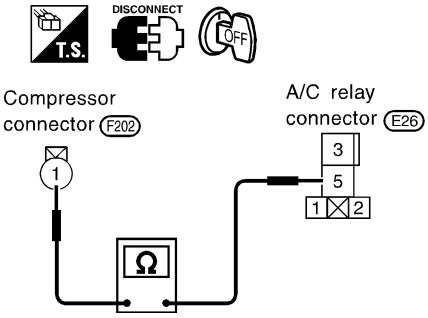

SHA480F

Continuity should exist.
If OK, check harness for short.

OK or NG

OK	▶	GO TO 4.
NG	▶	Repair harness or connector.

4	CHECK POWER SUPPLY FOR A/C RELAY

Disconnect A/C relay.
Do approx. 12 volts exist between A/C relay harness connector E26 terminal Nos. 1 (G/W), 3 (G/W) and ground?

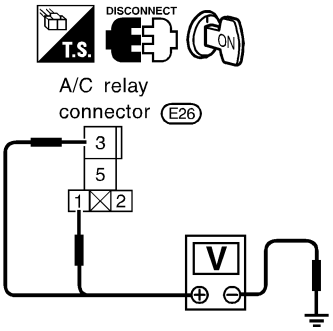

SHA481F

Yes or No

Yes	▶	GO TO 5.
No	▶	Check power supply circuit and 7.5A (No. 6) fuse at fuse block. Refer to EL-12, "Wiring Diagram — POWER —".

5	CHECK A/C RELAY AFTER DISCONNECTING IT

Refer to HA-213.

OK or NG

OK	▶	Reconnect A/C relay. GO TO 6.
NG	▶	Replace A/C relay.

6	CHECK COIL SIDE CIRCUIT OF A/C RELAY

Do approx. 12 volts exist between ECM harness connector F203 terminal No. 105 and ground?

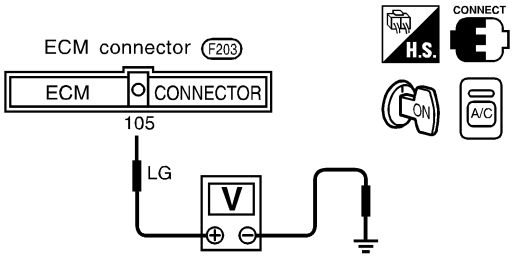

RHA200I

Yes or No

Yes	▶	GO TO 8.
No	▶	Disconnect A/C relay. Disconnect ECM harness connector. GO TO 7.

7	CHECK CIRCUIT CONTINUITY BETWEEN A/C RELAY AND ECM

Check circuit continuity between A/C relay harness connector F203 terminal No. 2 (GR) and ECM harness connector F203 terminal No. 105 (LG).

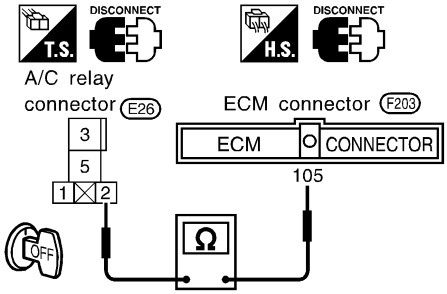

RHA203I

Continuity should exist.

OK or NG

OK	▶	Check harness for short.
NG	▶	Repair harness or connector.

8	CHECK VOLTAGE FOR ECM

Do approx. 5 volts exist between ECM harness connector F203 terminal No. 110 and ground?

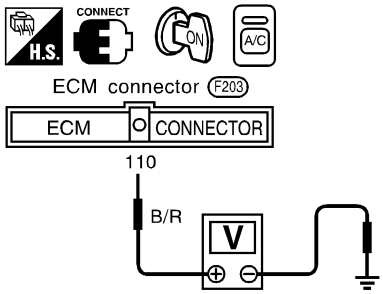

RHA201I

Yes or No

Yes	▶	GO TO 9.
No	▶	Check ECM. Refer to EC-141, "ECM Terminals and Reference Value".

9	CHECK REFRIGERANT PRESSURE SENSOR

Refer to HA-213.

OK or NG

OK	▶	Disconnect A/C switch harness connector. GO TO 10.
NG	▶	Replace refrigerant pressure sensor.

10	CHECK CIRCUIT CONTINUITY BETWEEN ECM AND A/C SWITCH

Check circuit continuity between ECM harness connector F203 terminal No. 110 and A/C switch harness connector M44 terminal No. 2.

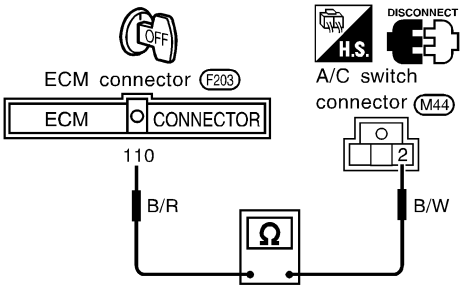

RHA205I

Continuity should exist.
If OK, check harness for short.

OK or NG

OK	▶	GO TO 11.
NG	▶	Repair harness or connector.

11	CHECK A/C SWITCH

Refer to HA-213.

OK or NG

OK	▶	Disconnect fan switch harness connector. GO TO 12.
NG	▶	Replace A/C switch.

12	CHECK CIRCUIT CONTINUITY BETWEEN A/C SWITCH AND FAN SWITCH

Check circuit continuity between A/C switch harness connector M44 terminal No. 1 and fan switch harness connector M43 terminal No. 1.

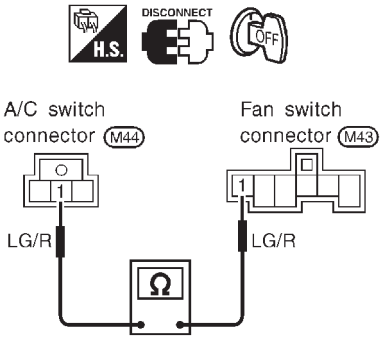

RHA617F

Continuity should exist.
If OK, check harness for short.

OK or NG

OK	▶	GO TO 13.
NG	▶	Repair harness or connector.

13	CHECK BODY GROUND CIRCUIT FOR FAN SWITCH

Does continuity exist between fan switch harness connector M43 terminal No. 6 and ground?

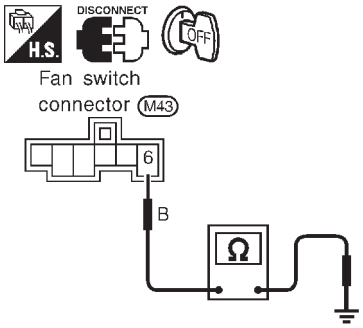

RHA588F

Yes or No

Yes	▶	GO TO 14.
No	▶	Repair harness or connector.

14	CHECK FAN SWITCH

Refer to HA-189.

OK or NG

OK	▶	INSPECTION END
NG	▶	Replace fan switch.

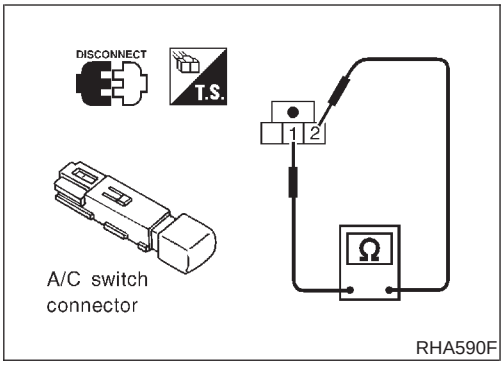

RHA590F

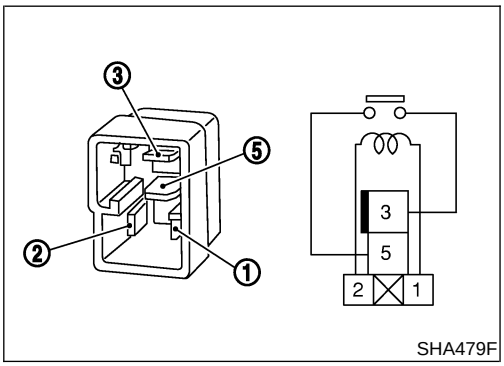

SHA479F

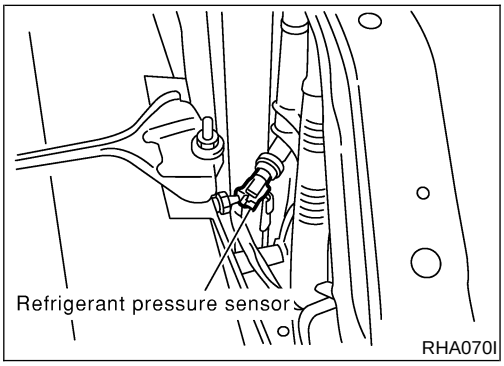

RHA070I

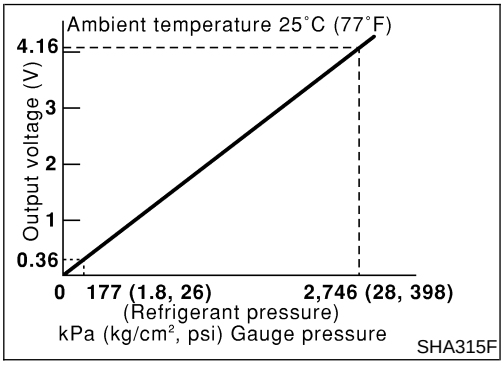

SHA315F

ELECTRICAL COMPONENTS INSPECTION

=NAHA0092

A/C Switch

NAHA0092S04

Check continuity between terminals at each switch position.

Switch condition	Terminal No.		Continuity
A/C	(+)	(−)	
ON	2	1	Yes
OFF			No

A/C Relay

NAHA0092S07

Check continuity between terminal Nos. 3 and 5.

Conditions	Continuity
12V direct current supply between terminal Nos. 1 and 2	Yes
No current supply	No

If NG, replace relay.

Refrigerant Pressure Sensor

NAHA0092S08

Make sure that higher A/C refrigerant pressure results in higher refrigerant-pressure sensor output voltage.
Check voltage between ECM harness terminal No. 70 and body ground.
Refer to EC-738, "Diagnostic Procedure".

Noise

TROUBLE DIAGNOSIS PROCEDURE FOR NOISE

=NAHA0080

Symptom:

- **Noise**

Inspection Flow

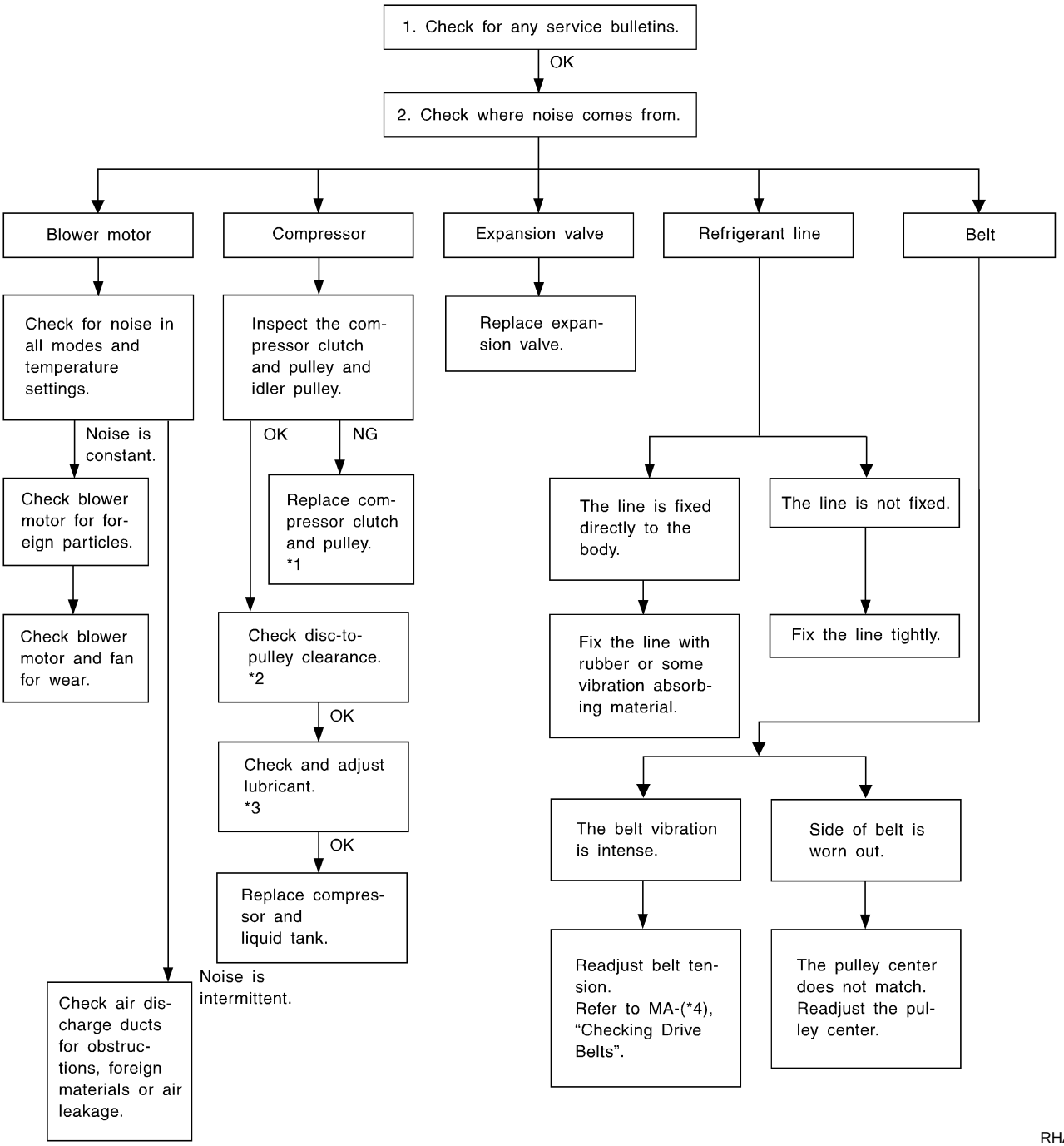

RHA586H

*1: HA-222
*2: HA-222
*3: HA-217
*4: MA-14

HFC-134a (R-134a) Service Procedure

NAHA0094

SETTING OF SERVICE TOOLS AND EQUIPMENT

NAHA0094S01

Discharging Refrigerant

NAHA0094S0101

WARNING:

Avoid breathing A/C refrigerant and lubricant vapor or mist. Exposure may irritate eyes, nose and throat. Remove HFC-134a (R-134a) from A/C system using certified service equipment meeting requirements of SAE J2210 (R-134a recycling equipment) or J2209 (R-134a recovery equipment). If accidental system discharge occurs, ventilate work area before resuming service. Additional health and safety information may be obtained from refrigerant and lubricant manufacturers.

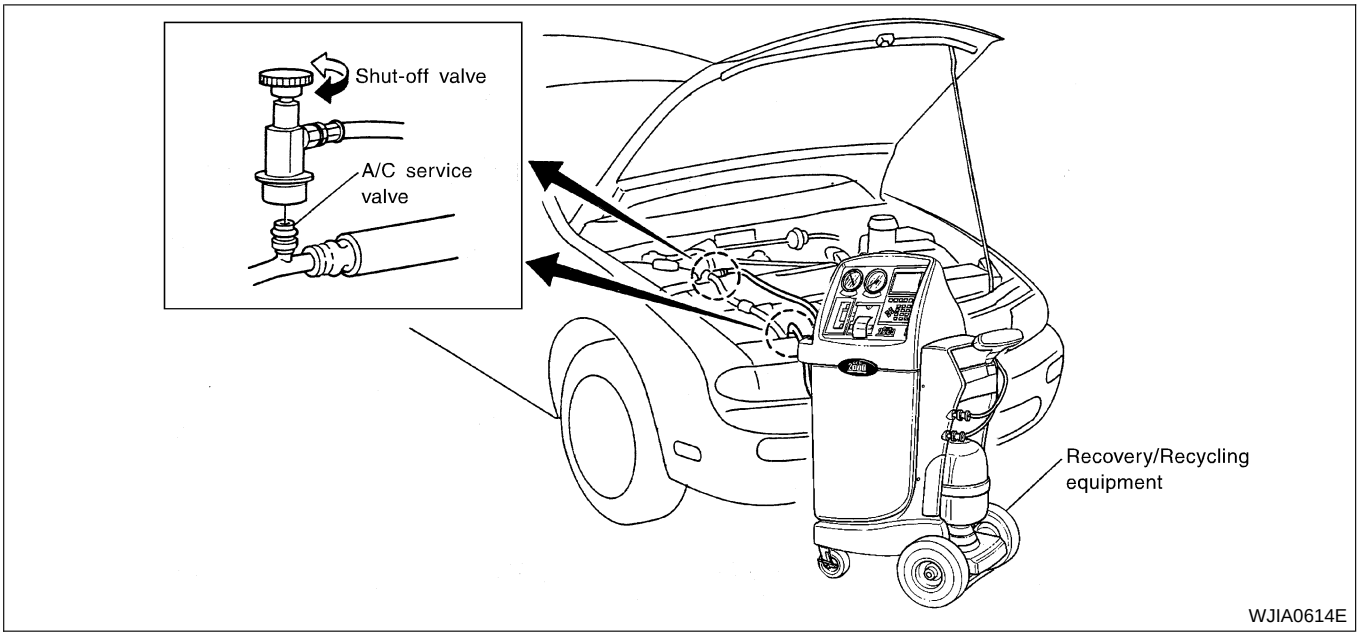

Evacuating System and Charging Refrigerant

NAHA0094S0102

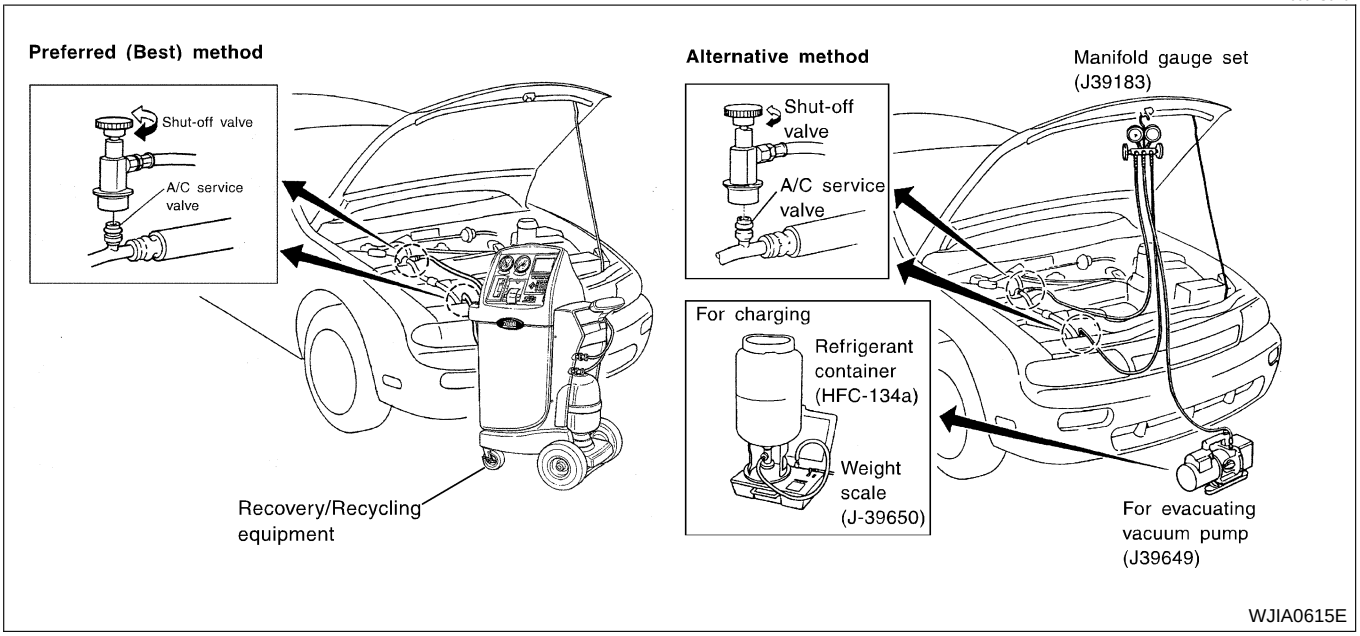

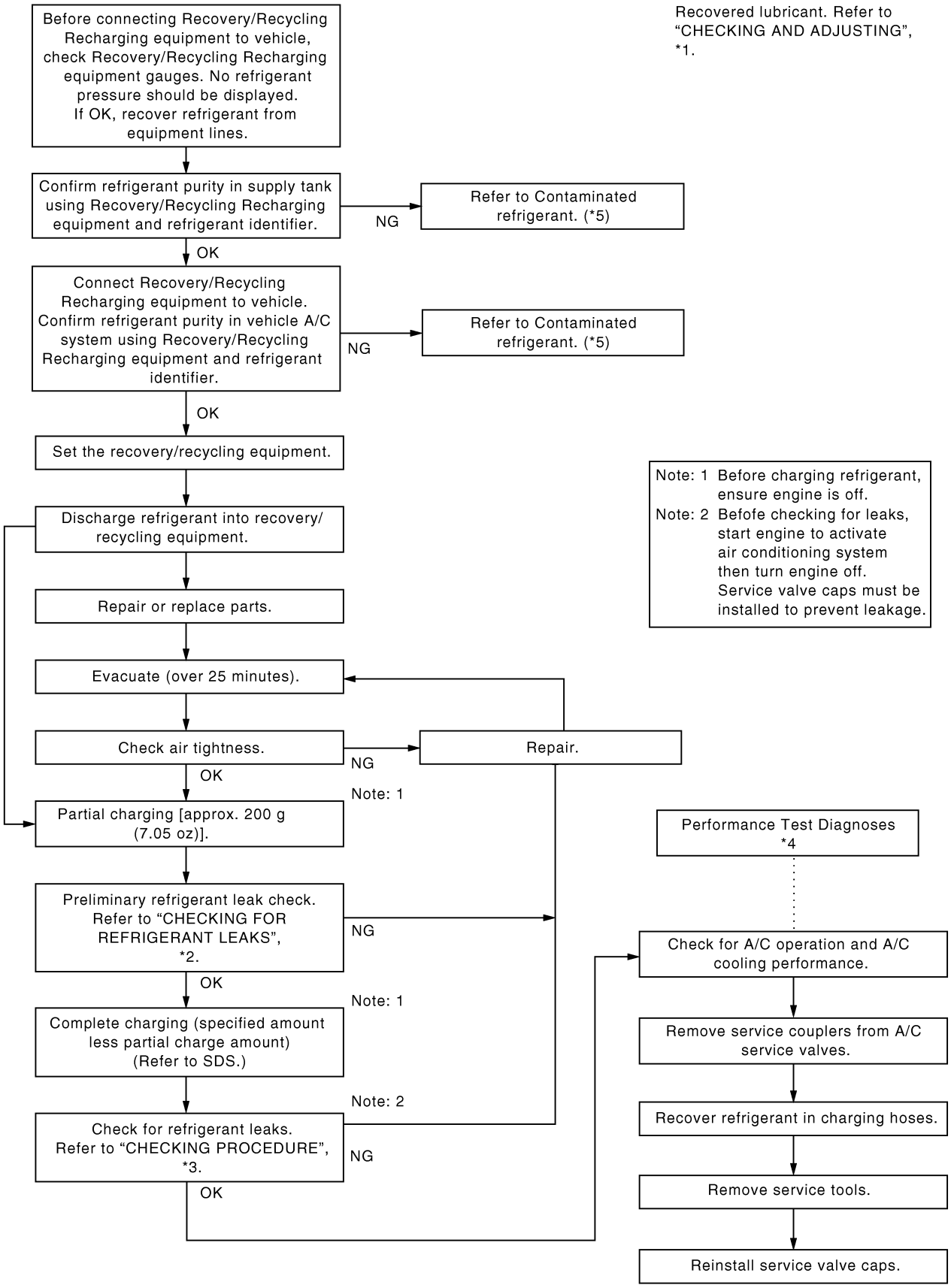
Before connecting Recovery/Recycling Recharging equipment to vehicle, check Recovery/Recycling Recharging equipment gauges. No refrigerant pressure should be displayed. If OK, recover refrigerant from equipment lines.
Recovered lubricant. Refer to "CHECKING AND ADJUSTING", *1.
Confirm refrigerant purity in supply tank using Recovery/Recycling Recharging equipment and refrigerant identifier.
NG
Refer to Contaminated refrigerant. (*5)
OK
Connect Recovery/Recycling Recharging equipment to vehicle. Confirm refrigerant purity in vehicle A/C system using Recovery/Recycling Recharging equipment and refrigerant identifier.
NG
Refer to Contaminated refrigerant. (*5)
OK
Set the recovery/recycling equipment.
Note: 1 Before charging refrigerant, ensure engine is off.
Note: 2 Befofe checking for leaks, start engine to activate air conditioning system then turn engine off. Service valve caps must be installed to prevent leakage.
Discharge refrigerant into recovery/ recycling equipment.
Repair or replace parts.
Evacuate (over 25 minutes).
Check air tightness.
NG
Repair.
OK
Note: 1
Partial charging [approx. 200 g (7.05 oz)].
Performance Test Diagnoses *4
Preliminary refrigerant leak check. Refer to "CHECKING FOR REFRIGERANT LEAKS", *2.
NG
OK
Note: 1
Complete charging (specified amount less partial charge amount) (Refer to SDS.)
Note: 2
Check for refrigerant leaks. Refer to "CHECKING PROCEDURE", *3.
NG
OK
Check for A/C operation and A/C cooling performance.
Remove service couplers from A/C service valves.
Recover refrigerant in charging hoses.
Remove service tools.
Reinstall service valve caps.

SHA922F

*1: HA-217
*2: HA-225
*3: HA-226
*4: HA-196
*5: HA-150

Maintenance of Lubricant Quantity in Compressor

NAHA0095

The lubricant in the compressor circulates through the system with the refrigerant. Add lubricant to compressor when replacing any component or after a large gas leakage occurred. It is important to maintain the specified amount.
If lubricant quantity is not maintained properly, the following malfunctions may result:

- Lack of lubricant: May lead to a seized compressor
- Excessive lubricant: Inadequate cooling (thermal exchange interference)

LUBRICANT

NAHA0095S01

Name: Nissan A/C System Oil Type S
Part number: KLH00-PAGS0

CHECKING AND ADJUSTING

NAHA0095S02

Adjust the lubricant quantity according to the test group shown below.

1	LUBRICANT RETURN OPERATION	
Can lubricant return operation be performed? ● A/C system works properly. ● There is no evidence of a large amount of lubricant leakage. **CAUTION:** **If excessive lubricant leakage is noted, do not perform the lubricant return operation.**		
	Yes or No	
Yes	▶	GO TO 2.
No	▶	GO TO 3.

2	PERFORM LUBRICANT RETURN OPERATION, PROCEEDING AS FOLLOWS	
1. Start engine, and set the following conditions: ● **Test condition** **Engine speed: Idling to 1,200 rpm** **A/C switch: ON** **Blower speed: Max. position** **Temp. control: Optional [Set so that intake air temperature is 25 to 30°C (77 to 86°F).]** 2. **Next item is for V-6 compressor. Connect the manifold gauge, and check that the high pressure side pressure is 588 kPa (6 kg/cm^2, 85 psi) or higher.** **If less than the reference level, attach a cover to the front face of the condenser to raise the pressure.** 3. Perform lubricant return operation for about 10 minutes. 4. Stop engine.		
	▶	GO TO 3.

3	CHECK COMPRESSOR	
Should the compressor be replaced?		
	Yes or No	
Yes	▶	GO TO HA-218.
No	▶	GO TO 4.

4	CHECK ANY PART	
Is there any part to be replaced? (Evaporator, condenser, liquid tank or in case there is evidence of a large amount of lubricant leakage.)		
	Yes or No	
Yes	▶	GO TO HA-218.
No	▶	Carry out the A/C performance test.

Lubricant Adjusting Procedure for Components Replacement Except Compressor

NAHA0095S0201

After replacing any of the following major components, add the correct amount of lubricant to the system.

Amount of lubricant to be added

Part replaced	Lubricant to be added to system	Remarks
	Amount of lubricant mℓ (US fl oz, Imp fl oz)	
Evaporator	75 (2.5, 2.6)	—
Condenser	75 (2.5, 2.6)	—
Liquid tank	5 (0.2, 0.2)	Add if compressor is not replaced. *1
In case of refrigerant leak	30 (1.0, 1.1)	Large leak
	—	Small leak *2

*1: If compressor is replaced, addition of lubricant is included in the table.
*2: If refrigerant leak is small, no addition of lubricant is needed.

Lubricant Adjustment Procedure for Compressor Replacement

NAHA0095S0202

1. Before connecting Recovery/Recycling Recharging equipment to vehicle, check Recovery/Recycling Recharging equipment gauges. No refrigerant pressure should be displayed. If OK, recover refrigerant from equipment lines.
2. Confirm refrigerant purity in supply tank using Recovery/Recycling Recharging equipment and refrigerant identifier. If NG, refer to "CONTAMINATED REFRIGERANT", HA-150.
3. Connect Recovery/Recycling Recharging equipment to vehicle. Confirm refrigerant purity in vehicle A/C system using Recovery/Recycling Recharging equipment and refrigerant identifier. If NG, refer to "CONTAMINATED REFRIGERANT", HA-150.
4. Discharge refrigerant into the refrigerant recovery/recycling equipment. Measure lubricant discharged into the recovery/recycling equipment.
5. Remove the drain plug of the "old" (removed) compressor. Drain the lubricant into a graduated container and record the amount of drained lubricant.

6. Remove the drain plug and drain the lubricant from the "new" compressor into a separate, clean container.
7. Measure an amount of new lubricant installed equal to amount drained from "old" compressor. Add this lubricant to "new" compressor through the suction port opening.
8. Measure an amount of new lubricant equal to the amount recovered during discharging. Add this lubricant to "new" compressor through the suction port opening.
9. Torque the drain plug.

   V-6 compressor:

   18 - 19 N·m (1.8 - 1.9 kg-m, 13 - 14 ft-lb)
10. If the liquid tank also needs to be replaced, add an additional 5 mℓ (0.2 US fl oz, 0.2 Imp fl oz) of lubricant at this time.
    Do not add this 5 mℓ (0.2 US fl oz, 0.2 Imp fl oz) of lubricant if only replacing the compressor.

Lubricant adjusting procedure for compressor replacement

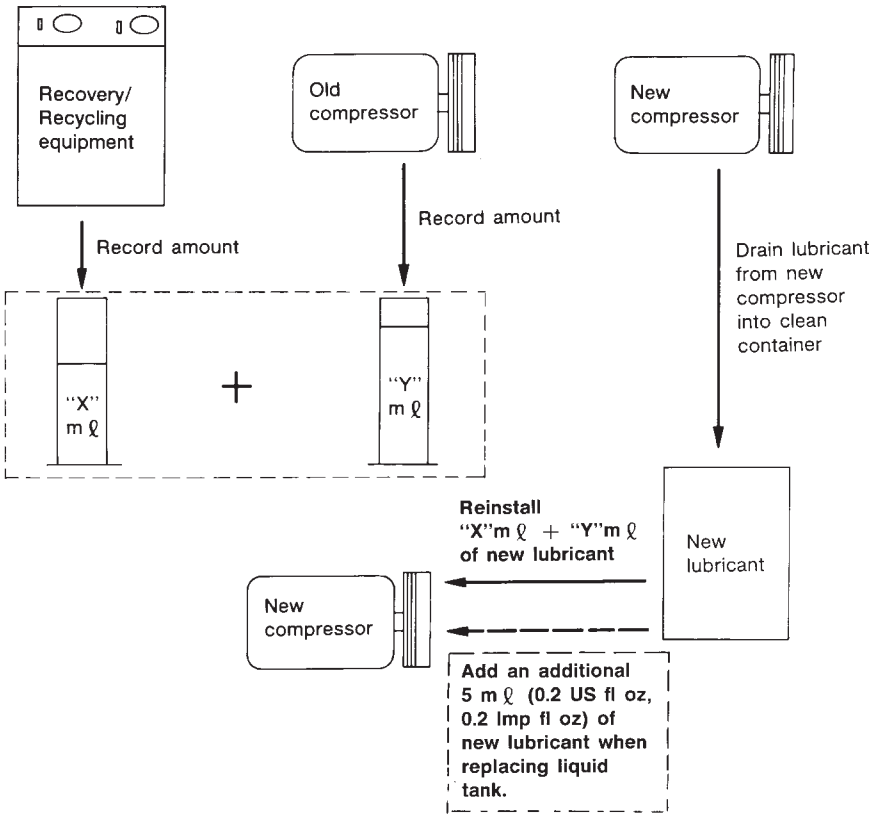

RHA065DD

Compressor

REMOVAL AND INSTALLATION

NAHA0096

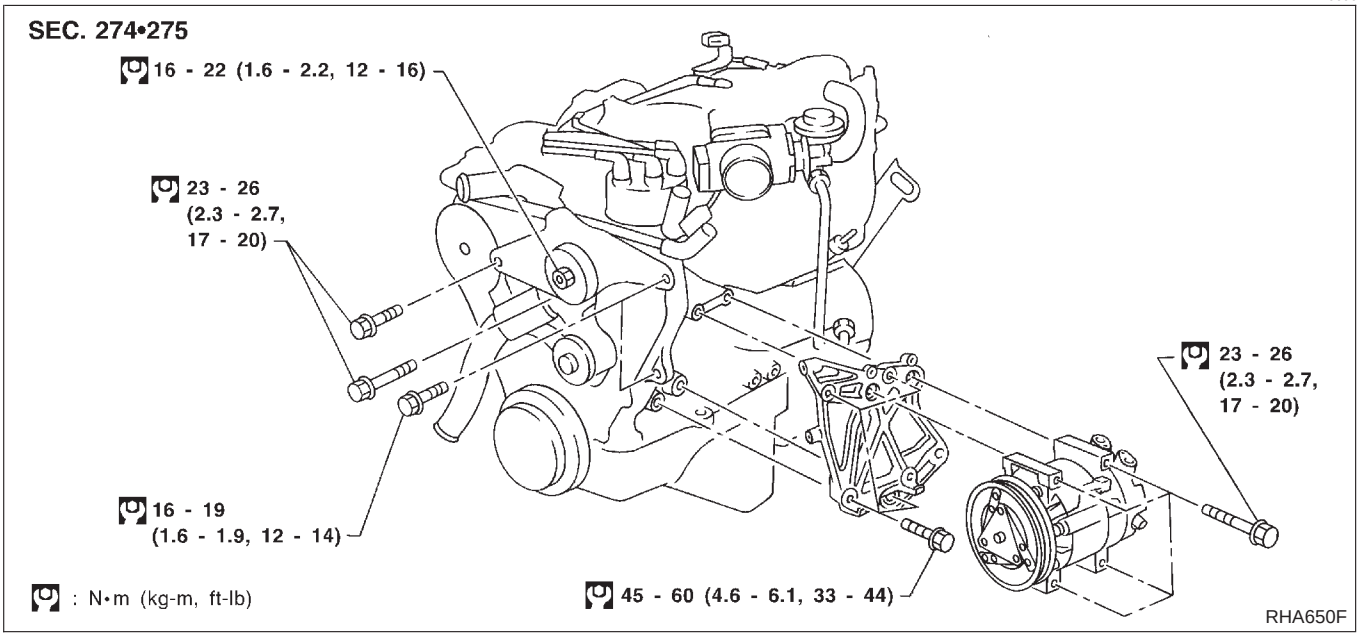

Compressor Clutch

OVERHAUL

NAHA0097

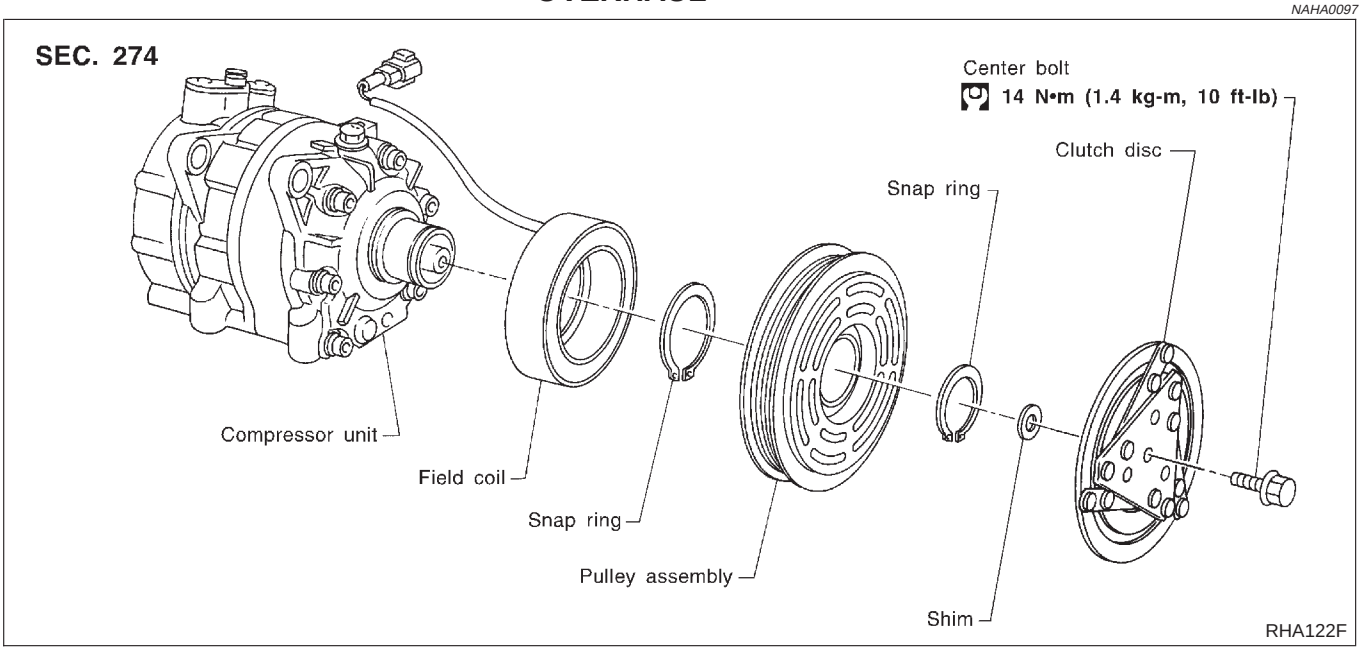

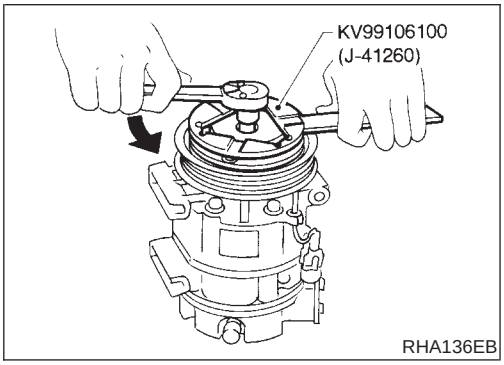

REMOVAL

NAHA0098

- When removing center bolt, hold clutch disc with clutch disc wrench.

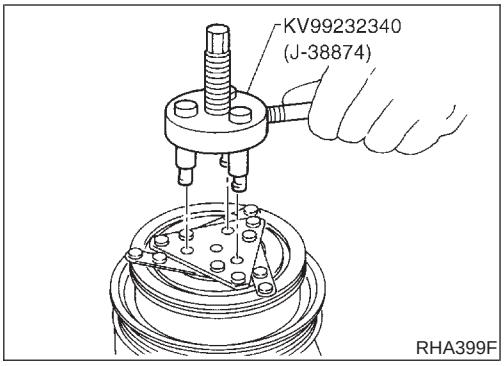

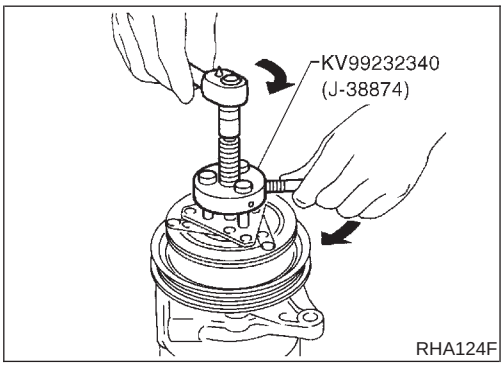

- Remove the clutch disc using the clutch disc puller.
  Insert the holder's three pins into the holes in the clutch disc. Rotate the holder clockwise to hook it onto the plate. Then, tighten the center bolt to remove the clutch disc.
  After removing the clutch disc, remove the shims from either the drive shaft or the clutch disc.

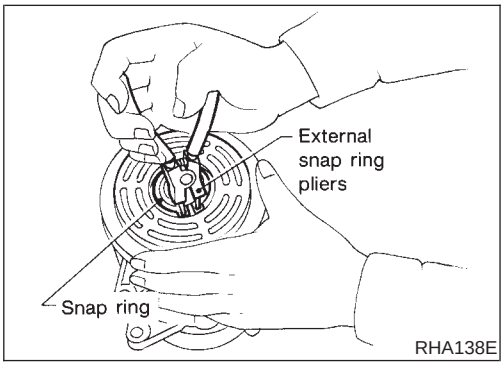

- Remove the snap ring using external snap ring pliers.

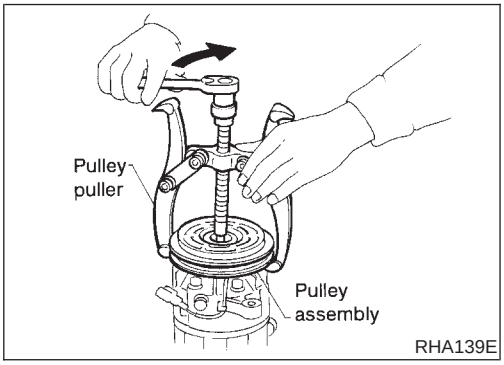

- Pulley removal
  Position the center pulley puller on the end of the drive shaft, and remove the pulley assembly using any commercially available pulley puller.
  To prevent the pulley groove from being deformed, the puller claws should be positioned onto the edge of the pulley assembly.

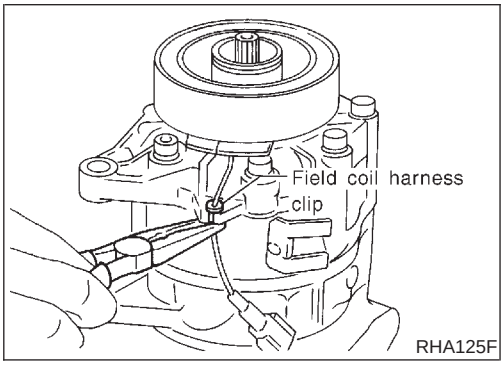

- Remove the field coil harness clip using a pair of pliers.

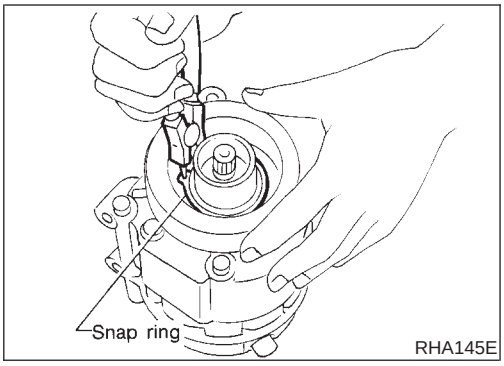

- Remove the snap ring using external snap ring pliers.

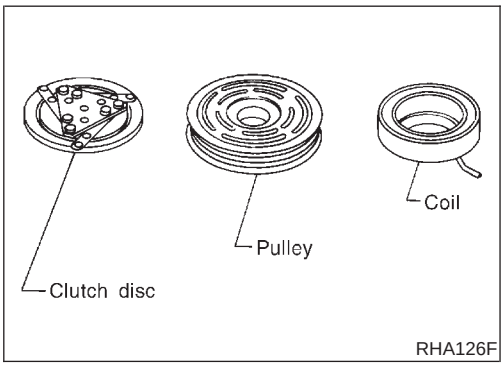

INSPECTION

NAHA0099

Clutch Disc

NAHA0099S01

If the contact surface shows signs of damage due to excessive heat, replace clutch disc and pulley.

Pulley

NAHA0099S02

Check the appearance of the pulley assembly. If the contact surface of pulley shows signs of excessive grooving, replace clutch disc and pulley. The contact surfaces of the pulley assembly should be cleaned with a suitable solvent before reinstallation.

Coil

NAHA0099S03

Check coil for loose connection or cracked insulation.

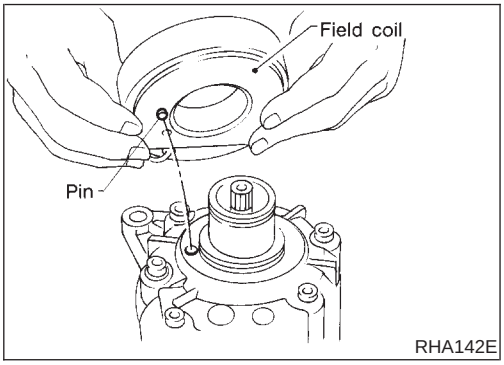

INSTALLATION

NAHA0100

- Install the field coil.
  Be sure to align the coil's pin with the hole in the compressor's front head.
- Install the field coil harness clip using a screwdriver.

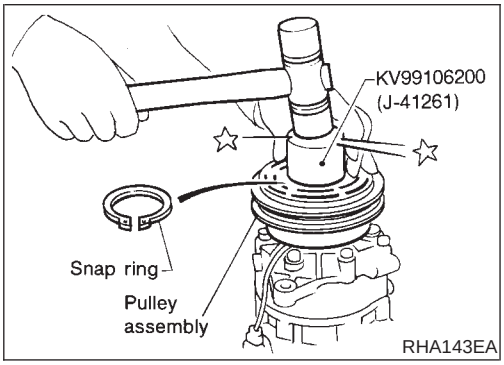

- Install the pulley assembly using the installer and a hand press, and then install the snap ring using snap ring pliers.

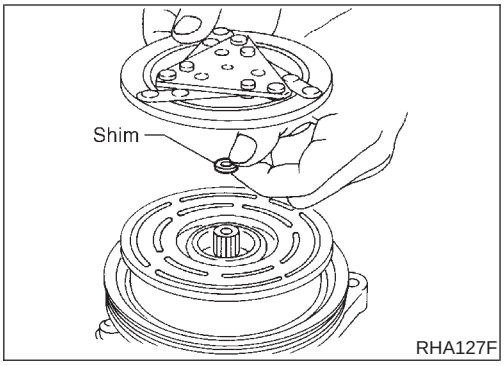

- Install the clutch disc on the drive shaft, together with the original shim(s). Press the clutch disc down by hand.

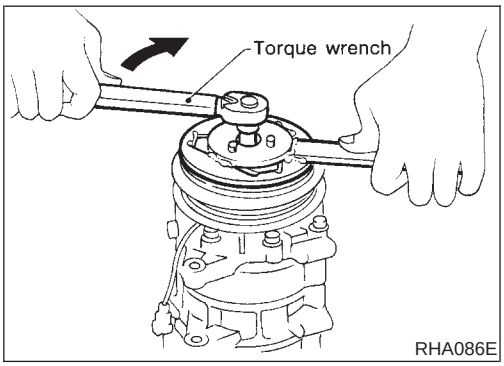

- Using the holder to prevent clutch disc rotation, tighten the bolt to 14 N·m (1.4 kg-m, 10 ft-lb) torque.
  After tightening the bolt, check that the pulley rotates smoothly.

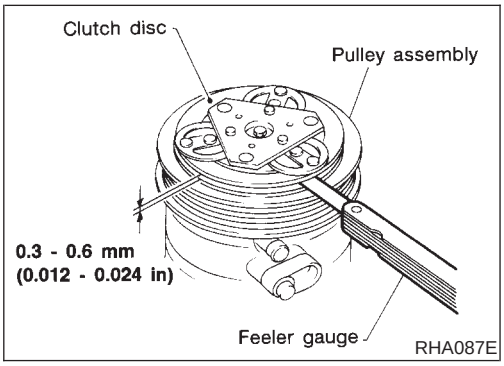

- Check clearance around the entire periphery of clutch disc.
  Disc-to-pulley clearance:
  0.3 - 0.6 mm (0.012 - 0.024 in)
  If the specified clearance is not obtained, replace adjusting spacer and readjust.

Break-in Operation

NAHA0100S01

When replacing compressor clutch assembly, always carry out the break-in operation. This is done by engaging and disengaging the clutch about thirty times. Break-in operation raises the level of transmitted torque.

Refrigerant Lines

REMOVAL AND INSTALLATION

=NAHA0101

- Refer to page HA-152 regarding “Precautions for Refrigerant Connection”.

SEC. 271•274•276

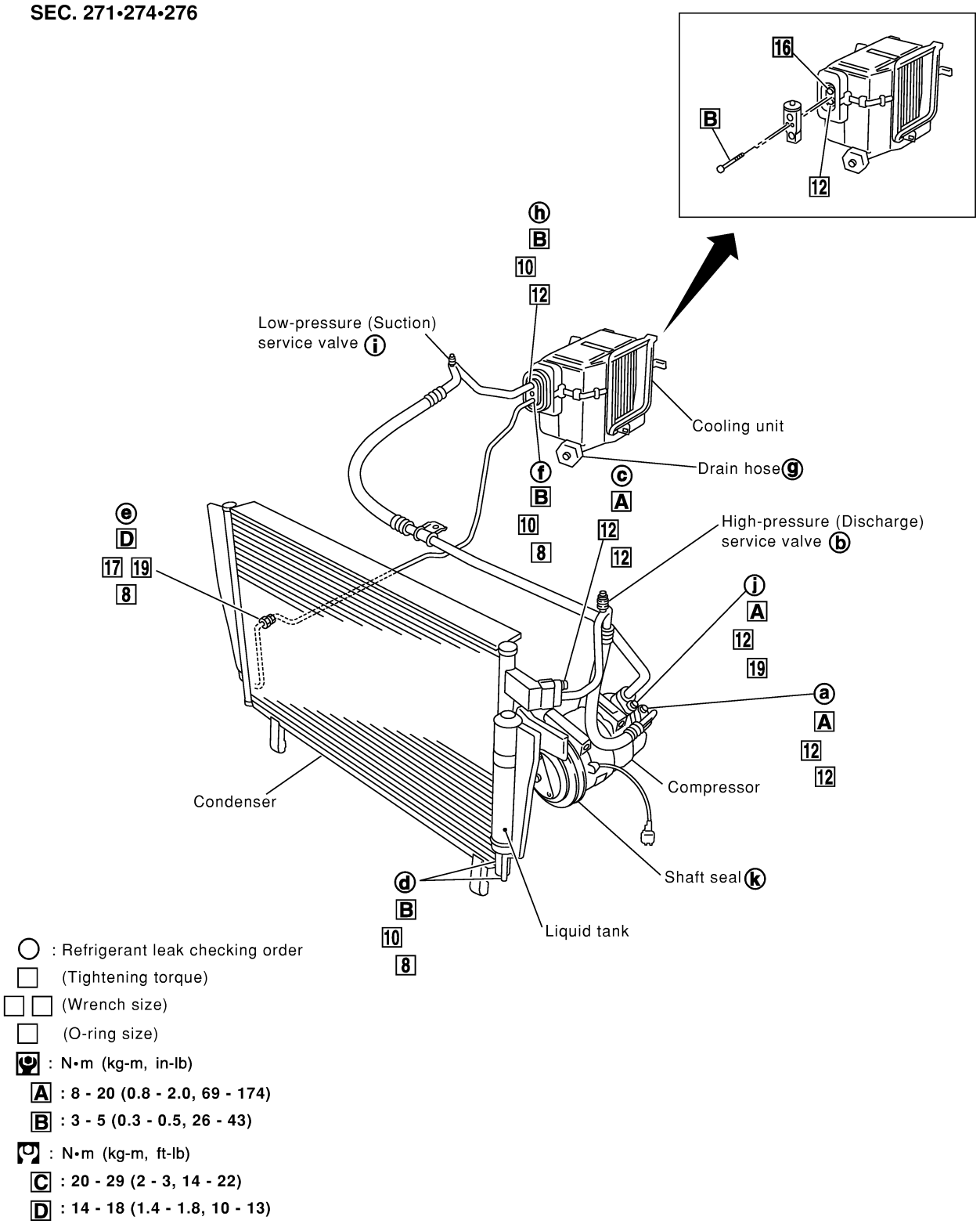

RHA072I

Checking for Refrigerant Leaks

=NAHA0102

PRELIMINARY CHECK

NAHA0102S04

- Perform a visual inspection of all refrigeration parts, fittings, hoses and components for signs of A/C lubricant leakage, damage and corrosion. A/C lubricant leakage may indicate an area of refrigerant leakage. Allow extra inspection time in these areas when using either an electronic refrigerant leak detector or fluorescent dye leak detector.
- If dye is observed, confirm the leak with an electronic refrigerant leak detector. It is possible a prior leak was repaired and not properly cleaned.
- When searching for leaks, do not stop when one leak is found but continue to check for additional leaks at all system components and connections.
- When searching for refrigerant leaks using an electronic leak detector, move the probe along the suspected leak area at 25 to 50 mm (1 to 2 in) per second and no further than 1/4 inch from the component.

NOTE:
Moving the electronic leak detector probe slower and closer to the suspected leak area will improve the chances of finding a leak.

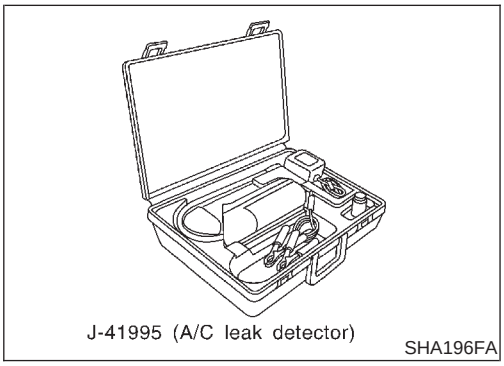

Electronic Refrigerant Leak Detector

NAHA0254

PRECAUTIONS FOR HANDLING LEAK DETECTOR

NAHA0254S01

When performing a refrigerant leak check, use a J-41995 A/C leak detector or equivalent. Ensure that the instrument is calibrated and set properly per the operating instructions.
The leak detector is a delicate device. In order to use the leak detector properly, read the operating instructions and perform any specified maintenance.

- **Other gases in the work area or substances on the A/C components, for example, anti-freeze, windshield washer fluid, solvents and lubricants, may falsely trigger the leak detector. Make sure the surfaces to be checked are clean. Clean with a dry cloth or blow off with shop air.**
- **Do not allow the sensor tip of the detector to contact with any substance. This can also cause false readings and may damage the detector.**

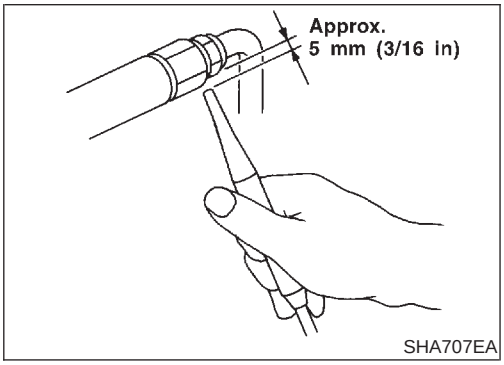

1. Position probe approximately 5 mm (3/16 in) away from point to be checked.

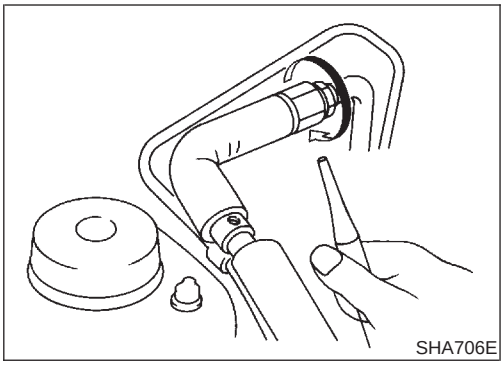
SHA706E

2. When testing, circle each fitting completely with probe.

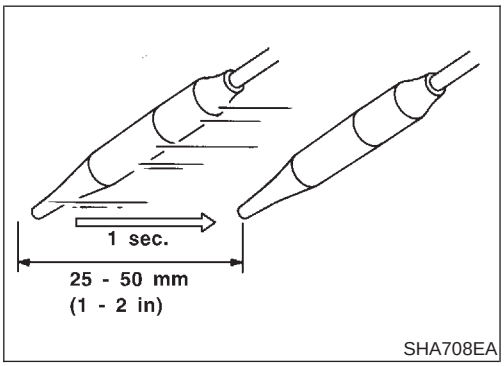

SHA708EA

3. Move probe along component approximately 25 to 50 mm (1 to 2 in)/sec.

CHECKING PROCEDURE

NAHA0254S02

To prevent inaccurate or false readings, make sure there is no refrigerant vapor, shop chemicals, or cigarette smoke in the vicinity of the vehicle. Perform the leak test in calm area (low air/wind movement) so that the leaking refrigerant is not dispersed.

1. Turn engine off.
2. Connect a suitable A/C manifold gauge set to the A/C service ports.
3. Check if the A/C refrigerant pressure is at least 345 kPa (3.52 kg/cm^2, 50 psi) above 16°C (61°F). If less than specification, recover/evacuate and recharge the system with the specified amount of refrigerant.

NOTE:
At temperatures below 16°C (61°F), leaks may not be detected since the system may not reach 345 kPa (3.52 kg/cm^2, 50 psi).

4. Conduct the leak test from the high side (compressor discharge **a** to evaporator inlet **f**) to the low side (evaporator drain hose **g** to shaft seal **k**). Refer to HA-224. Perform a leak check for the following areas carefully. Clean the component to be checked and move the leak detector probe completely around the connection/component.

- **Compressor**
  Check the fitting of high and low pressure hoses, relief valve and shaft seal.
- **Liquid tank**
  Check the tube fitting.
- **Service valves**
  Check all around the service valves. Ensure service valve caps are secured on the service valves (to prevent leaks).

NOTE:
After removing A/C manifold gauge set from service valves, wipe any residue from valves to prevent any false readings by leak detector.

- **Cooling unit (Evaporator)**
  With engine OFF, turn blower fan on "High" for at least 15 seconds to dissipate any refrigerant trace in the cooling unit. Wait a minimum of 10 minutes accumulation time (refer to the manufacturer's recommended procedure for actual wait time) before inserting the leak detector probe into the drain hose. Keep the probe inserted for at least ten seconds. Use caution not to contaminate the probe tip with water or dirt that may be in the drain hose.

5. If a leak detector detects a leak, verify at least once by blowing compressed air into area of suspected leak, then repeat check as outlined above.
6. Do not stop when one leak is found. Continue to check for additional leaks at all system components.
   If no leaks are found, perform steps 7 - 10.
7. Start engine.
8. Set the A/C control as follows:

1) A/C switch ON.
2) Ventilation (VENT)
3) Recirculation switch ON
4) Max cold temperature
5) Fan speed high

9. Run engine at 1,500 rpm for at least 2 minutes.
10. Turn engine off and perform leak check again following steps 4 through 6 above.

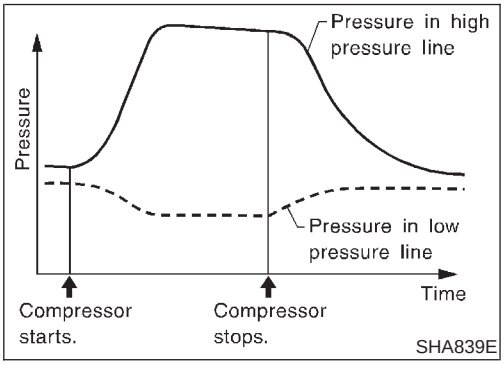

Refrigerant leaks should be checked immediately after stopping the engine. Begin with the leak detector at the compressor. The pressure on the high-pressure side will gradually drop after refrigerant circulation stops and pressure on the low-pressure side will gradually rise, as shown in the graph. Some leaks are more easily detected when pressure is high.

11. Before connecting Recovery/Recycling Recharging equipment to vehicle, check Recovery/Recycling Recharging equipment gauges. No refrigerant pressure should be displayed. If pressure is displayed, recover refrigerant from equipment lines and then check refrigerant purity.
12. Confirm refrigerant purity in supply tank using Recovery/Recycling Recharging equipment and refrigerant identifier.
13. Confirm refrigerant purity in vehicle A/C system using Recovery/Recycling Recharging equipment and refrigerant identifier.
14. Discharge A/C system using approved refrigerant recovery

equipment. Repair the leaking fitting or component as necessary.

15. Evacuate and recharge A/C system and perform the leak test to confirm no refrigerant leaks.
16. Conduct A/C performance test to ensure system works properly.

Fluorescent Dye Leak Detector

PRECAUTIONS FOR FLUORESCENT DYE LEAK DETECTION

NAHA0266

- The fluorescent dye leak detector is not a replacement for an electronic refrigerant leak detector. The fluorescent dye leak detector should be used in conjunction with an electronic refrigerant leak detector (J-41995) to pinpoint refrigerant leaks.
- For your safety and your customer's satisfaction, read and follow all manufacturer's operating instructions and precautions prior to performing the work.
- Refer to "Precautions for Leak Detection Dye", HA-151.

CHECKING SYSTEM FOR LEAKS USING THE FLUORESCENT LEAK DETECTOR

NAHA0267

1. Check A/C system for leaks using the UV lamp and safety goggles (J-42220) in a low sunlight area (area without windows preferable). Illuminate all components, fittings and lines. The dye will appear as a bright green/yellow area at the point of leakage. Fluorescent dye observed at the evaporator drain opening indicates an evaporator core assembly (tubes, core or TXV) leak.
2. If the suspected area is difficult to see, use an adjustable mirror or wipe the area with a clean shop rag or cloth, then check the cloth with the UV lamp for dye residue.
3. Confirm any suspected leaks with an approved electronic refrigerant leak detector.
4. After the leak is repaired, remove any residual dye using dye cleaner (J-43872) to prevent future misdiagnosis.
5. Perform a system performance check and verify the leak repair with an approved electronic refrigerant leak detector.

DYE INJECTION

NAHA0268

(This procedure is only necessary when re-charging the system or when the compressor has seized and was replaced.)
Refer to "Precautions for Leak Detection Dye", HA-151.

1. Check A/C system static (at rest) pressure. Pressure must be at least 345 kPa (3.52 kg/cm^2, 50 psi).
2. Pour one bottle (1/4 ounce / 7.4 cc) of the A/C refrigerant dye into the injector tool (J-41459).
3. Connect the injector tool to the A/C LOW PRESSURE side service fitting.
4. Start engine and switch A/C ON.
5. With the A/C operating (compressor running), inject one bottle (1/4 ounce / 7.4 cc) of fluorescent dye through the low-pressure service valve using dye injector tool J-41459 (refer to the manufacturer's operating instructions).

6. With the engine still running, disconnect the injector tool from the service fitting.

CAUTION:
Be careful not to allow dye to spray or drip when disconnecting the injector from the system.

NOTE:
If repairing the A/C system or replacing a component, pour the dye directly into the open system connection and proceed with the service procedures.

7. Operate the A/C system for a minimum of 20 minutes to mix the dye with the system oil. Depending on the leak size, operating conditions and location of the leak, it may take from minutes to days for the dye to penetrate a leak and become visible.

Belt

TENSION ADJUSTMENT

NAHA0103

- **Refer to MA-14, "Checking Drive Belts".**

Manual

COMPRESSOR

NAHA0105

Model		Calsonic Kansei make V-6
Type		V-6 variable displacement
Displacement cm^3 (cu in)/rev.	Max.	184 (11.228)
	Min.	14.5 (0.885)
Cylinder bore x stroke mm (in)		37 (1.46) x [2.3 - 28.6 (0.091 - 1.126)]
Direction of rotation		Clockwise (viewed from drive end)
Drive belt		Poly V

LUBRICANT

NAHA0106

Model		Calsonic Kansei make V-6
Name		Nissan A/C System Oil Type S
Part number*		KLH00-PAGS0
Capacity mℓ (US fl oz, Imp fl oz)	Total in system	180 (6.1, 6.3)
	Compressor (Service part) charging amount	180 (6.1, 6.3)

*: Always check with the Parts Department for the latest parts information.

REFRIGERANT

NAHA0107

Type	HFC-134a (R-134a)
Capacity kg (lb)	0.45 (0.99)

ENGINE IDLING SPEED (WHEN A/C IS ON)

NAHA0108

- Refer to EC-758, “Idle Speed and Ignition Timing”.

BELT TENSION

NAHA0109

- Refer to MA-14, “Checking Drive Belts”.

ALPHABETICAL INDEX

SECTION IDX

A

ABS - Wiring diagram BR-37
ABS sensor rotor.....AX-6, 20
ABS/TCS C/U signal EC-549, 551
A/C air flow.....HA-27, 169
A/C component layout.....HA-20, 167
A/C compressor clutch removal and installation.....HA-139, 220
A/C compressor description HA-162
A/C compressor precaution HA-7, 154
A/C compressor special service tool HA-10, 157
A/C control linkage adjustment (manual A/C) HA-187, 204, 206
A/C control operation (auto A/C).....HA-25
A/C control operation (manual A/C) HA-168
A/C diagnostic work flow (auto A/C) HA-59
A/C diagnostic work flow (manual A/C).....HA-178
A/C HFC134a (R134a) system precaution.....HA-3, 150
A/C HFC134a (R134a) system service procedure.....HA-134, 215
A/C HFC134a (R134a) system service tools HA-11, 158
A/C HFC134a system service equipment precaution.....HA-8, 155
A/C lubricant (R134a) HA-136, 217
A/C operational check.....HA-60, 179
A/C performance chart.....HA-108, 198
A/C performance test diagnoses HA-106, 196
A/C relay HA-103, 213
A/C self-diagnoses (auto A/C).....HA-39
A/C service data specification.....HA-149, 230
A/C switch HA-213
A/C system description (auto A/C).....HA-24
A/C trouble diagnoses (auto A/C) HA-29
A/C trouble diagnoses (manual A/C) HA-171
A/C, A - Wiring diagram HA-32
A/C, M - Wiring diagram HA-175
Accelerator control system FE-3
Accelerator pedal position (APP) sensor.....EC-675, 682, 697
Accelerator pedal released position learning EC-73
Actuator lever (Transfer) TF-156
Air bag RS-11
Air bag disposal.....RS-25
Air bag precautions GI-3
Air bleeding for brake system BR-9
Air cleaner filter replacement.....MA-18
Air conditioner cut control EC-37
Air flow meter - See Mass air flow sensor.....EC-187, 194
Air mix door control linkage adjustment.....HA-78
Air mix. door motor HA-75, 133
Air spoiler, rear.....BT-38
All-mode 4WD system TF-43
Alternator SC-30
Ambient sensor HA-121
Angular tightening application.....EM-3
Antenna - See Power antenna EL-218
Anti-lock brake system - Wiring diagram.....BR-37
APPS1 - Wiring diagram EC-678
APPS2 - Wiring diagram EC-685
APPS3 - Wiring diagram EC-700
ASC/BS - Wiring diagram EC-655
ASC/SW - Wiring diagram EC-647
ASCBOF - Wiring diagram.....EC-742
ASCD.....EC-54
ASCD (automatic speed control device) EL-271
ASCD brake switch EC-652, 741
ASCD clutch switch.....EC-652, 741
ASCD steering switch EC-645
ASCIND - Wiring diagram EC-750
A/T - Wiring diagram - AT - FTS AT-110
A/T - Wiring diagram - AT - MAIN.....AT-99
A/T - Wiring diagram - AT - PNP/SW.....AT-104
A/T - Wiring diagram - AT - VSS A/T AT-116
A/T fluid temperature sensor.....AT-113
A/T self-diagnoses.....AT-48
A/T shift lock system AT-262
A/T shift lock system - Wiring diagram AT-263
A/T trouble diagnoses AT-55
A/T Wiring diagram - AT - ENG SS AT-120
A/T Wiring diagram AT - 1ST.....AT-126
A/T Wiring diagram AT - 2ND AT-132
A/T Wiring diagram AT - 3RD AT-138
A/T Wiring diagram AT - 4TH.....AT-145
A/T Wiring diagram AT - BA/FTS.....AT-192
A/T Wiring diagram AT - CAN.....AT-204
A/T Wiring diagram AT - LPSV AT-167
A/T Wiring diagram AT - NONDTC AT-215
A/T Wiring diagram AT - OVRCSV AT-187
A/T Wiring diagram AT - SSV/A.....AT-172
A/T Wiring diagram AT - SSV/B.....AT-176
A/T Wiring diagram AT - TCCSIG AT-159
A/T Wiring diagram AT - TCV AT-153
A/T Wiring diagram AT - TPS.....AT-182
A/T Wiring diagram AT - VSSMTR.....AT-199
ATP switch TF-148
ATP warning lamp.....TF-138
Audio EL-206
AUDIO - Wiring diagram.....EL-207
Audio and A/C control removal and installation - See Instrument panel BT-24
AUT/DP - Wiring diagram EL-241
Auto air conditioner - Wiring diagram HA-32
Automatic amplifier.....HA-36, 66
Automatic drive positioner EL-236
Automatic speed control system - See ASCD EL-271
Automatic transmission fluid replacement.....MA-23
Automatic transmission number GI-45
Axle MA-29
Axle housing (rear) AX-20

B

Back door BT-17
Back door opener - See Back door BT-17
Back door trim BT-37
Back-up lamp EL-78
Back-up lamp switch (M/T) MT-5
BACK/L - Wiring diagram EL-78
Ball joint (front) SU-15
Basic inspection EC-123
Battery SC-4
Battery/Starting/Charging System Tester SC-7, 13, 23
Baulk ring (M/T) MT-11
Blower motor HA-87, 189
Blower resistor HA-189
Body alignment BT-64
Brake booster BR-19
Brake control valve (Proportioning valve) BR-12
Brake fluid change BR-8
Brake fluid level MA-27
Brake fluid level and line check BR-8
Brake hydraulic line BR-10
Brake inspection MA-27
Brake lines and cables inspection MA-27
Brake lining wear temporary checking MA-28
Brake master cylinder BR-15
Brake pedal BR-13
Brake switch EC-669
BRK/SW - Wiring diagram EC-671
Bulb specifications EL-498
Bumper, front BT-13
Bumper, rear BT-17
BYPS/V - Wiring diagram EC-629, 636

C

Camshaft inspection EM-48
Camshaft position sensor (PHASE) EC-326
CAN (Controller Area Network) ...EL-409, 414, 438, 460, 473
CAN - Wiring diagram EC-167, EL-415, 439, 461, 474
CAN communication ...EC-54, 166, BR-90, EL-409, 414, 438, 460, 473
Canister - See EVAP canister EC-38
Center bearing assembly (propeller shaft) PD-11
Center bearing disassembly (propeller shaft) PD-9
Center case (Transfer) TF-17, 159
CHARGE - Wiring diagram SC-22
Charging system SC-21
Chassis and body maintenance MA-22
CHIME - Wiring diagram EL-166
CIGAR - Wiring diagram EL-190
Cigarette lighter EL-190
Circuit breaker EL-18
Clock EL-191
CLOCK - Wiring diagram EL-191
Closed loop control (Bank 1) EC-541
Closed loop control (Bank 2) EC-541
Clutch cover CL-12
Clutch disc CL-12
Clutch drum (Transfer) TF-161
Clutch fluid level MA-22
Clutch force release limit adjustment TF-74
Clutch master cylinder CL-8
Clutch operating cylinder CL-9
Clutch pedal CL-5
Clutch pressure switch (Transfer) TF-147
Clutch release bearing CL-10
Clutch withdrawal lever CL-10
Coil spring (front) SU-10
Coil spring (rear) SU-40
Collision diagnosis RS-63
Combination lamp, front, removal and installation BT-13
Combination lamp, rear, removal and installation BT-38
Combination meter EL-124
Combination meter removal and installation - See Instrument panel BT-24
Combination switch EL-32
COMPAS - Wiring diagram EL-142
Compass EL-141
Component Location (auto A/C) HA-29
Component Location (manual A/C) HA-171
Compression pressure EM-17
Compressor clutch removal and installation HA-139, 220
Compressor description HA-162
Compressor precaution HA-7, 154
Compressor special service tool HA-10, 157
Connecting rod EM-70
Connecting rod bearing clearance EM-74
Connecting rod bushing clearance EM-75
Connector inspection GI-21
Console box - See Instrument panel BT-24
CONSULT for ABS BR-43
CONSULT for all-mode 4WD TF-64
CONSULT for engine EC-103
CONSULT for VDC BR-103
CONSULT-II general information GI-39
Control valve (A/T) AT-298
Control valve (Transfer) TF-164
Controller Area Network (CAN) EL-409, 414, 438, 460, 473
Converter housing installation AT-274
Coolant mixture ratio MA-13
Coolant replacement MA-15
Cooling circuit (engine) LC-11
Counter gear (M/T) MT-11
Counter gear (Transfer) TF-18
Coupling sleeve (M/T) MT-11
Crankcase emission control system - See positive crankcase ventilation EC-53
Crankshaft EM-72

Crankshaft position sensor (POS) EC-319
Cruise control - See ASCD EL-271
Cylinder block EM-66
Cylinder head EM-44
Cylinder head bolt tightening EM-55

D

Data link connector for Consult.....EC-103
Daytime light system.....EL-50
Daytime running light - See Daytime light system EL-50
DEF - Wiring diagram EL-194
Detonation sensor - See Knock sensor EC-314
Diagnostic trouble code (DTC) for OBD system EC-9, 78
Diagnostic trouble code (DTC) inspection priority chart EC-129
Differential carrier assembly.....PD-31, 58
Differential carrier disassembly PD-45
Differential gear oil replacement MA-26
Dimensions GI-46
D/LOCK - Wiring diagram EL-293
Dome light - See Interior lamp EL-98
Door glass BT-21
Door lock BT-21
Door mirror BT-63
Door trim BT-33
Door, front BT-21
Door, rear BT-23
Drive belt inspection MA-14
Drive chain (Transfer) TF-18, 161
Drive pinion diff. inspection PD-24, 48
Drive pinion height PD-26, 54
Drive plate runout EM-76
Drive shaft MA-30
Drive shaft (front) AX-12
Dropping resistor (A/T) AT-170
DTC work support.....EC-114
DTRL - Wiring diagram EL-55

E

ECM input/output signal EC-141
ECM power supply EC-443
ECM/PW - Wiring diagram EC-445
ECTS - Wiring diagram EC-206
Electric sun roof EL-222
Electric throttle control actuator EC-457, 459
Electrical diagnoses.....GI-24
Electrical ignition system EC-36
Electrical unit .....Foldout
Electrical units location EL-479
Engine compartment BT-65
Engine control circuit diagram.....EC-30
Engine control component parts location EC-25
Engine control module (ECM) EC-441
Engine control system diagram and chart EC-31
Engine coolant temperature sensor (ECTS).....EC-204, 217
Engine fail-safe system EC-130
Engine oil filter replacement MA-19
Engine oil precautions GI-7
Engine oil replacement MA-18
Engine outer component parts EM-10
Engine removal EM-62
Engine room - See Engine compartment.....BT-65
Engine serial number GI-45
ETC1 - Wiring diagram EC-461
ETC2 - Wiring diagram EC-469
ETC3 - Wiring diagram EC-474
EVAP canister.....EC-39
EVAP canister purge volume control solenoid valve.....EC-38, 364, 582
EVAP canister vent control valve EC-371, 594, 602
EVAP control system (small leak) diagnosis EC-349, 394, 407, 567, 611
EVAP control system pressure sensor EC-378, 384
EVAP control system purge flow monitoring diagnosis.....EC-339
EVAP vapor lines inspection MA-21
Evaporative emission (EVAP) system.....EC-38
Exhaust system FE-9
Exhaust system inspection MA-22
Exterior BT-38

F

4LO indicator lamp.....TF-140
4WD shift indicator lamp.....TF-134
4WD shift switch TF-147
4WD solenoid valve TF-147
4WD warning lamp TF-46
Fan control amp. HA-90
Fan switch HA-189
F/FOG - Wiring diagram EL-80
Final drive disassembly PD-44
Final drive pre-inspection PD-44
Final drive removal and installation PD-44
Finisher, interior - See Trim BT-31
Fluid temperature sensor (A/T) AT-113
Fluids.....MA-12
Flywheel (clutch) CL-13
Flywheel runout.....EM-76
Fog lamp, front.....EL-79
Fog lamp, front, removal and installation BT-13
Fork rod (M/T) MT-13
Forward clutch.....AT-317
F/PUMP - Wiring diagram EC-731
Freeze frame data.....EC-79
Front axle.....AX-2
Front bumper BT-13

Front case (Transfer) TF-17, 169
Front combination lamp removal and installation BT-13
Front disc brake BR-22
Front door BT-21
Front drive shaft (Transfer).....TF-18, 161
Front final drive disassembly (4WD).....PD-19
Front final drive pre-inspection (4WD) PD-19
Front final drive removal and installation (4WD).....PD-19
Front fog lamp.....EL-79
Front fog lamp removal and installation BT-13
Front revolution sensor (Transfer) TF-148
Front seat.....BT-45
Front seat belt RS-5
Front suspension.....SU-3
Front washer EL-178
Front wiper EL-178
Fuel cut control (at no load & high engine speed).....EC-38
Fuel filler lid.....BT-17
Fuel filter replacement MA-17
Fuel gauge EL-124
Fuel injection system EC-273, 282
Fuel injection system (Bank 1) EC-273, 282
Fuel injection system (Bank 2) EC-273, 282
Fuel level sensor.....EC-423, 425, 428
Fuel line inspection MA-17
Fuel precautions GI-8
Fuel pressure check.....EC-56
Fuel pressure regulator EC-57
Fuel pressure release EC-56
Fuel pump EC-729
Fuel system FE-4
Fuel tank temperature sensor.....EC-290, 293
Fuel tank vacuum relief valve EC-39
FUELB1 - Wiring diagram.....EC-275, 284
FUELB2 - Wiring diagram.....EC-276, 285
Fuse EL-18
Fuse and fusible link box .....Foldout
Fuse block .....Foldout
Fusible link EL-18

G

Garage jack and safety stand GI-48
Gauges.....EL-124
Gear components (M/T) MT-11
Generator - See Alternator.....SC-30
Generic scan tool (GST).....EC-117
Glass BT-21
Glass hatch opener, electric EL-229
Grease MA-12
Ground distribution.....EL-19

H

Harness connector.....EL-7
Harness connector inspection GI-21
Harness layout EL-482
Hazard warning lamp.....EL-83
Headlamp.....EL-35
Headlining - See Roof trim BT-36
Heated oxygen sensor 1 (bank 1).....EC-224, 233, 246, 504, 512
Heated oxygen sensor 1 (bank 2).....EC-224, 233, 246, 504, 512
Heated oxygen sensor 2 (bank 1).....EC-255, 263, 521, 531
Heated oxygen sensor 2 (bank 2).....EC-255, 263, 521, 531
Heated oxygen sensor 2 heater (bank 1) EC-173, 181
Heated oxygen sensor 2 heater (bank 2) EC-173, 181
Heated oxygen sensor heater.....EC-173, 181
Heated seat.....BT-48, EL-232
Height (Dimensions) GI-46
HFC134a (R134a) system precaution HA-3, 150
HFC134a (R134a) system service procedure.....HA-134, 215
HFC134a (R134a) system service tools HA-11, 158
HFC134a system service equipment precaution.....HA-8, 155
High clutch.....AT-314
H/LAMP - Wiring diagram.....EL-39
Homelink universal transceiver.....EL-385
Hood.....BT-13
Horn EL-189
HORN - Wiring diagram.....EL-189
How to erase DTC for OBD system.....EC-91
HSEAT - Wiring diagram.....EL-232

I

IATS - Wiring diagram.....EC-201
Identification plate.....GI-45
Idle air volume learning.....EC-73
Idle mixture ratio.....EC-61
Idle speed.....EC-61, 123
IGN/SG - Wiring diagram EC-715
Ignition control system EC-714
Ignition timing EC-61, 123
ILL - Wiring diagram EL-91
Illumination EL-88
In vehicle sensor HA-124
INJECT - Wiring diagram EC-725
Injector.....EC-724
Injector removal and installation EC-58
Instrument panel BT-24
INT/L - Wiring diagram.....EL-101
Intake air temparature sensor.....EC-200, 220
Intake door control linkage adjustment..HA-86, 187
Intake door motor.....HA-79, 182
Intake manifold.....EM-12
Intake sensor.....HA-131
Intake valve timing control EC-169, 448

Intake valve timing control (Bank 1) EC-169, 448
Intake valve timing control (Bank 2) EC-169, 448
Intake valve timing control solenoid valve EC-172
Intake valve timing control solenoid valve (Bank 1).....EC-451
Intake valve timing control solenoid valve (Bank 2).....EC-451
Integrated homelink transmitter EL-385
Interior BT-31
Interior lamp EL-98
Interior lamp on-off control.....EL-99
Internal gear (Transfer) TF-170
IVCB1 - Wiring diagram EC-453
IVCB2 - Wiring diagram EC-454

J

Jacking points.....GI-47
Journal bearing assembly (propeller shaft) PD-11
Journal bearing disassembly (propeller shaft).....PD-10
Junction box (J/B).....Foldout

K

KEYLES - Wiring diagram EL-319
Keyless entry system - See Multi-remote control system.....EL-314
Knock sensor (KS) EC-314
Knuckle spindle AX-10
KS - Wiring diagram.....EC-315

L

Length (Dimensions) GI-46
License lamp.....EL-66
Lifting points GI-49
Limited slip diff. adjustment.....PD-51
Limited slip diff. assembly PD-52
Limited slip diff. disassembly.....PD-49
Limited slip diff. inspection PD-50
Line pressure solenoid valve.....AT-150, 164, 170
Line pressure switch (Transfer) TF-147
Line pressure test (A/T) AT-64
Liquid gasket application EM-3
LOAD - Wiring diagram.....EC-753
Location of electrical units EL-479
Lock, door BT-21
Low and reverse brake AT-321
Low tire pressure warning system SU-16
Low tire pressure warning system - trouble diagnoses SU-25
Low tire pressure warning system - Wiring diagram.....SU-18
Lubricant (R134a) A/C HA-136, 217
Lubricants.....MA-12
Lubrication circuit (engine) LC-3
Lubrication-locks, hinges and hood latches MA-30
Luggage room lamp.....EL-98

M

MAFS - Wiring diagram EC-190, 196
Magnet clutch.....HA-97, 139, 220
MAIN - Wiring diagram.....EC-157
Main drive gear (M/T) MT-11
Main gear (Transfer) TF-18
Main oil pump (Transfer).....TF-167
Mainshaft (M/T).....MT-11
Mainshaft (Transfer).....TF-18, 161
Maintenance (engine) MA-14
MAJOR OVERHALL.....AT-278
Major overhaul (Transfer) TF-16, 156
Malfunction indicator lamp (MIL).....EC-94
Manual air conditioner - Wiring diagram.....HA-175
Manual transmission number GI-45
Manual transmission oil replacement MA-22
Mass air flow sensor (MAFS).....EC-187, 194
Master cylinder (brake) BR-15
Master cylinder (clutch) CL-8
Meter EL-124
METER - Wiring diagram.....EL-132
MIL & Data link connectors circuit EC-757
MIL/DL - Wiring diagram EC-757
MIRROR - Wiring diagram.....EL-228
Mirror defogger EL-192
Mirror, door.....BT-63
Mirror, outside BT-63
Misfire EC-305
Mode door control linkage adjustment...HA-74, 206
Mode door motor.....HA-68
Model variation GI-43
Molding - See Exterior BT-38
M/T major overhaul MT-10
M/T removal and installation MT-7
Multi-remote control system.....EL-314
Multiport fuel injection (MFI) system EC-34
Multiport fuel injection precautions.....GI-6

N

NATS (Nissan anti-theft system).....EL-389
NATS - Wiring diagram.....EL-391
Neutral-4LO switch TF-148
NVH troubleshooting (AX).....AX-3, 19
NVH troubleshooting (BR).....BR-7
NVH troubleshooting (CL) CL-4
NVH troubleshooting (M/T) MT-4
NVH troubleshooting (PD).....PD-4
NVH troubleshooting (ST).....ST-6
NVH troubleshooting (SU) SU-4, 37
NVH troubleshooting (Transfer).....TF-10

NVIS (Nissan vehicle immobilizer system) EL-389

O

O2H1B1 - Wiring diagram EC-176
O2H1B2 - Wiring diagram EC-177
O2H2B1 - Wiring diagram EC-183
O2H2B2 - Wiring diagram EC-184
O2S1B1 - Wiring diagram EC-226, 236, 249
O2S1B2 - Wiring diagram EC-227, 237, 250
O2S2B1 - Wiring diagram ...EC-257, 266, 524, 534
O2S2B2 - Wiring diagram ...EC-258, 267, 525, 535
Oil change (capacity) MA-12
Oil filter (Transfer) TF-154
Oil pan (engine) EM-19
Oil pressure (engine) LC-5
Oil pump (A/T) AT-294
Oil pump (engine) LC-6
Oil pump regulator valve (engine) LC-7
Oil seal replacement (engine) EM-42
Oil seal replacement (front final drive 4WD) PD-16
Oil seal replacement (front of final drive) PD-41
On board diagnostic system EC-77
Operating cylinder (clutch) CL-9
ORVR (On-board Refueling Vapor Recovery) EC-44
Outside mirror BT-63
Overdrive control switch AT-260
Overheat EC-553
Overrun clutch AT-317
Overrun clutch solenoid valve AT-189

P

P/ANT - Wiring diagram EL-219
Park/Neutral position switch EC-663
Park/neutral position switch (A/T) AT-106, 260
Park/neutral position switch (M/T) MT-5
Parking brake control BR-30
Parking lamp EL-66
PCV (positive crankcase ventilation) EC-53
Periodic maintenance MA-7
PGC/V - Wiring diagram EC-367, 585
PHASE - Wiring diagram EC-328
Pinion bearing preload diff. PD-26
Pinion gear height diff. PD-26, 54
Piston assembly EM-76
Piston pin inspection EM-69
Piston ring inspection EM-69
Piston to bore clearance EM-71
Planetary carrier (Transfer) TF-170
PNP/SW - Wiring diagram EC-665
POS - Wiring diagram EC-321
POWER - Wiring diagram EL-12
Power antenna EL-218
Power door lock EL-291
Power door mirror EL-228
Power seat EL-230
Power steering fluid level MA-29, ST-8
Power steering gear ST-17
Power steering hydraulic pressure ST-10
Power steering oil pump ST-27
Power steering pressure (PSP) sensor EC-436
Power steering system bleeding ST-9
Power supply routing EL-11
Power transistor & ignition coil EC-714
Power window EL-272
PRE/SE - Wiring diagram EC-380, 386
Precautions (General) GI-4
Pressure plate - See Clutch cover CL-12
Pressure test (A/T) AT-64
Propeller shaft PD-3
Propeller shaft greasing MA-25
Propeller shaft inspection MA-25
Propeller shaft on vehicle service PD-8
Propeller shaft vibration PD-8
PS/SEN - Wiring diagram EC-437

R

Rack retainer adjustment ST-8
Radiator LC-22, 24
Radio - See Audio EL-206
Rear air spoiler BT-38
Rear axle AX-18
Rear bumper BT-17
Rear case (Transfer) TF-17, 159
Rear combination lamp removal and installation BT-38
Rear cover packing replacement diff. PD-17
Rear door BT-23
Rear drum brake BR-26
Rear heated oxygen sensor (HO2S) EC-521
Rear seat BT-49
Rear seat belt RS-6
Rear side window BT-62
Rear suspension SU-37
Rear washer EL-183
Rear window defogger EL-192
Rear wiper EL-183
Refregerant pressure sensor HA-103, 213
Refrigerant connection precaution HA-5, 152
Refrigerant discharging evacuating charging HA-134
Refrigerant general precaution HA-4, 151
Refrigerant lines HA-143, 224
Refrigerant pressure sensor EC-736
Refrigeration cycle HA-15, 162
Release bearing (clutch) CL-10
REMOTE - Wiring diagram EL-217
Removal and installation (A/T) AT-273
Removal and installation (Transfer) TF-15, 155
Reverse clutch AT-311
Reverse idler shaft (M/T) MT-11

Reverse lamp switch (M/T) - See Back-up lamp switch (M/T).....MT-5
Reverse main gear (M/T) MT-11
Revolution sensor (A/T).....AT-118
Ring gear diff. inspection PD-24, 48
Road wheel size GI-46
Roof trim BT-36
Room lamp - See Interior lamp EL-98
RP/SEN - Wiring diagram EC-737

S

SAE J1930 terminology list GI-54
Screw jack GI-47
Seal - See Exterior BT-38
SEAT - Wiring diagram EL-230
Seat belt inspection MA-31, RS-8
Seat belt pre-tensioner.....RS-3
Seat belt pre-tensioner disposal RS-25
Seat belt, front.....RS-5
Seat belt, rear.....RS-6
Seat, front BT-45
Seat, rear BT-49
Self-diagnosis (Transfer).....TF-61
SEN/PW - Wiring diagram EC-564
SHIFT - Wiring diagram AT-263
Shift control (Transfer) TF-19, 31
Shift control components (M/T).....MT-13
Shift fork (M/T) MT-13
Shift lever MT-13
Shift lock system AT-262
Shift schedule.....AT-353
Shift solenoid valve A (A/T) ..AT-128, 140, 150, 174
Shift solenoid valve B (A/T)..AT-128, 134, 150, 178
Shock absorber (rear) SU-40
Side air bag RS-22
Side bearing preload (front final drive 4WD).....PD-25
Side trim.....BT-31
Side window - See Rear side window.....BT-62
Smart entrance control unit EL-376
SMJ (super multiple junction).....Foldout
Spare tire size GI-46
Spark plug replacement.....MA-20
Speedometer.....EL-124
Spiral cable.....RS-18
Splice location EL-414, 438, 460, 473
Spot lamp.....EL-98
Spring (Wheelarch) height SU-7
SROOF - Wiring diagram EL-223
SRS - See Supplemental Restraint System RS-11
SRS - Wiring diagram RS-38
Stabilizer bar (front).....SU-13
Stabilizer bar (rear) SU-42
Stall test (A/T) AT-61
Standardized relay EL-9
START - Wiring diagram.....SC-11
Starter.....SC-19
Starting system.....SC-10
Steering gear, linkage and transfer gear inspection MA-28
Steering linkage ST-17
Steering switch.....EL-34
Steering transfer gear ST-15
Steering wheel and column.....ST-11
Steering wheel play ST-7
Steering wheel turning force.....ST-9
Stop lamp.....EL-76
Stop lamp switch.....EC-652, 669, 741
STOP/L - Wiring diagram.....EL-76
Striking rod (M/T) MT-13
Strut (front) SU-10
Sub-gear (M/T) MT-11
Sub-oil pump (Transfer) TF-167
Sun gear (Transfer).....TF-170
Sunload sensor HA-128
Sunroof.....BT-50
Sunroof, electric EL-222
Supplemental Restraint System RS-11
Supplemental restraint system - Wiring diagram.....RS-38
Suspension MA-29
S/VCSW - Wiring diagram EC-545
Swirl control valve control solenoid valve EC-477, 498
Swirl control valve control vacuum check switch EC-543
SWL/V - Wiring diagram EC-481, 500
Symbols and abbreviations GI-10
Symptom matrix chart EC-131
Synchronizer (M/T) MT-11
System readiness test (SRT) code EC-79

T

2-4WD shift solenoid valve TF-147
T&FLID - Wiring diagram.....EL-229
Tachometer EL-124
Tail lamp.....EL-66
TAIL/L - Wiring diagram EL-69
TCM circuit diagram.....AT-13
TCM inspection table AT-95
Temperature control cable and linkage adjustment HA-204
TFTS - Wiring diagram.....EC-295
Theft warning system.....EL-343
Thermometer.....EL-141
Thermostat.....LC-19
Three way catalyst function (Bank 1) EC-334
Three way catalyst function (Bank 2) EC-334
Three way catalyst precautions.....GI-6
Throttle body EM-12
Throttle control motor EC-472
Throttle control motor relay EC-467
Throttle position sensor (TPS)....EC-210, 298, 558, 560, 562, 690
Throttle valve closed position learning.....EC-73
Throwout bearing - See Clutch release bearing CL-10

Tie-rod ST-21
Tie-rod ball joints.....ST-21
Tightening torque of standard bolts.....GI-52
Timing chain.....EM-24
Tire rotation MA-26
Tire size GI-46
Tooth contact (front final drive 4WD) PD-30
Tooth contact diff. PD-57
Torque converter clutch solenoid
valve AT-155, 164
Torque converter installation AT-274
Tow truck towing.....GI-49
Towing point.....GI-51
TPS1 - Wiring diagram.....EC-301
TPS2 - Wiring diagram.....EC-213
TPS3 - Wiring diagram.....EC-693
Transfer case TF-17
Transfer control unit inspection table.....TF-89
Transfer dropping resistor.....TF-148
Transfer fluid replacement (All-mode
4WD model) MA-24
Transfer fluid replacement (Part time
4WD model) MA-24
Transfer fluid temperature sensor.....TF-147
Transfer motor.....TF-154
Transfer motor relay.....TF-149
Transfer serial number GI-46
Transmission case (M/T).....MT-10
TRANSMT - Wiring diagram EL-385
Tread-FR&RR (Dimensions).....GI-46
Trim BT-31
TRNSCV - Wiring diagram EL-385
Trouble diagnoses GI-34
Turbine revolution sensor.....AT-206
TURN - Wiring diagram EL-85
Turn signal lamp EL-83
Two trip detection logic EC-77
Two-pole lift GI-49

U

Under body BT-67

V

Vacuum cut valve EC-38
Vacuum cut valve bypass valve.....EC-38, 627, 633
Vacuum hose (brake system).....BR-21
Vacuum hose drawing (Engine control) EC-32
Valve clearance.....EM-58
Valve guide.....EM-50
Valve seat.....EM-51
Valve spring.....EM-52
Vanity mirror lamp EL-98
VDC (vehicle dynamics control).....BR-88
Vehicle identification number.....GI-44
Vehicle recovery (freeing a stuck
vehicle).....GI-51
Vehicle security (theft warning) system EL-343
Vehicle speed sensor (VSS) EC-430
VEHSEC - Wiring Diagram.....EL-350
VENT/V - Wiring diagram EC-373, 596, 605
VIAS EC-705
VIAS/V - Wiring diagram EC-707
Viscosity number (SAE) MA-13

W

Wait detection switch TF-148
WARN - Wiring diagram EL-146, 155
Warning chime EL-164
Warning lamps EL-145
Washer, front.....EL-178
Washer, rear.....EL-183
Water pump LC-14
Water temperature gauge EL-124
Weatherstrip - See Exterior BT-38
Wheel balance MA-26
Wheel bearing (front).....AX-4
Wheel bearing (rear) AX-19
Wheel hub (front).....AX-6
Wheel sensor (VDC) BR-139
Wheel sensors (ABS).....BR-56, 80
Wheel size GI-46
Wheelarch height SU-7
Wheelbase (Dimensions) GI-46
Width (Dimensions) GI-46
WINDOW - Wiring diagram EL-276
Window, door BT-21
Window, rear side BT-62
Window, side - See Rear side window.....BT-62
Windshield.....BT-60
WIP/R - Wiring diagram.....EL-185
WIPER - Wiring diagram EL-180
Wiper, front.....EL-178
Wiper, rear EL-183
Wiring Diagram (Cell code) list.....EL-499
Wiring diagram (Transfer) TF-52
Wiring diagrams.....GI-11
Withdrawal lever (clutch) CL-10
Wrist pin - See Piston pin inspection.....EM-69

NOTES

ENGINE LUBRICATION & COOLING SYSTEMS

SECTION LC

CONTENTS

ENGINE LUBRICATION SYSTEM 2
Precautions 2
LIQUID GASKET APPLICATION PROCEDURE 2
Preparation 2
SPECIAL SERVICE TOOLS 2
COMMERCIAL SERVICE TOOL 3
Lubrication Circuit 3
Oil Pressure Check 5
Oil Pump 6
REMOVAL AND INSTALLATION 6
DISASSEMBLY AND ASSEMBLY 6
OIL PUMP INSPECTION 7
REGULATOR VALVE INSPECTION 7
OIL FILTER 8
Oil Cooler 8
REMOVAL AND INSTALLATION 8
INSPECTION 9
Service Data and Specifications (SDS) 9
OIL PRESSURE 9
REGULATOR VALVE 9
OIL PUMP 9
ENGINE COOLING SYSTEM 10
Precautions 10
LIQUID GASKET APPLICATION PROCEDURE 10
Preparation 10
SPECIAL SERVICE TOOLS 10
COMMERCIAL SERVICE TOOL 11
Cooling Circuit 11
System Check 12
CHECKING COOLING SYSTEM HOSES 12
CHECKING RADIATOR 12
CHECKING RADIATOR CAP 13
CHECKING COOLING SYSTEM FOR LEAKS 13
Water Pump 14
REMOVAL AND INSTALLATION 14
REMOVAL 15
INSPECTION 16
INSTALLATION 17
Thermostat 19
REMOVAL AND INSTALLATION 19
INSPECTION 19
Water Control Valve 20
REMOVAL AND INSTALLATION 20
INSPECTION 21
Radiator 22
REMOVAL AND INSTALLATION 22
Cooling Fan (Crankshaft driven) 23
REMOVAL AND INSTALLATION 23
INSPECTION 23
Refilling Engine Coolant 23
Radiator (Aluminum type) 24
PREPARATION 24
DISASSEMBLY 24
ASSEMBLY 25
INSPECTION 26
Overheating Cause Analysis 27
Service Data and Specifications (SDS) 28
THERMOSTAT 28
WATER CONTROL VALVE 28
RADIATOR 28

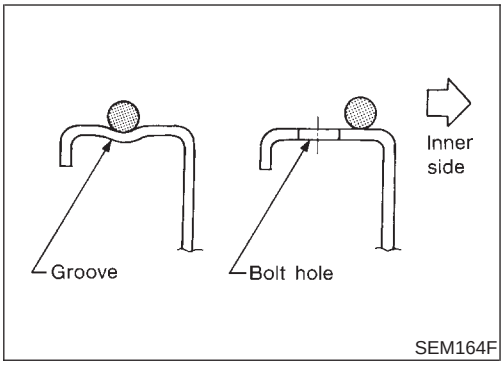

SEM164F

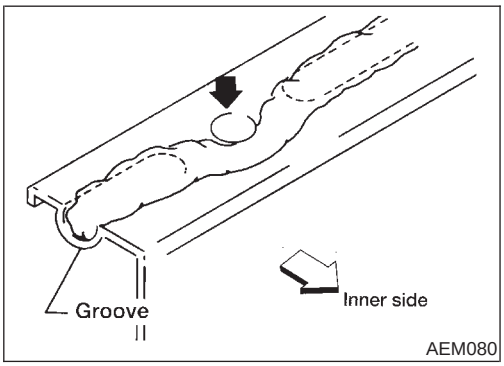

AEM080

Precautions

LIQUID GASKET APPLICATION PROCEDURE

NALC0001

1. Use a scraper to remove all traces of old liquid gasket from mating surfaces and grooves. Also, completely clean any oil from these areas.
2. Apply a continuous bead of liquid gasket to mating surfaces. **(Use Genuine RTV silicone sealant or equivalent. Refer to GI-53.)**
   - For oil pan, be sure liquid gasket diameter is 4.0 to 5.0 mm (0.157 to 0.197 in).
   - For areas except oil pan, be sure liquid gasket diameter is 2.0 to 3.0 mm (0.079 to 0.118 in).
3. Apply liquid gasket around the inner side of bolt holes (unless otherwise specified).
4. Assembly should be done within 5 minutes after coating.
5. Wait at least 30 minutes before refilling engine oil and engine coolant.

Preparation

SPECIAL SERVICE TOOLS

NALC0002

The actual shapes of Kent-Moore tools may differ from those of special service tools illustrated here.

Tool number (Kent-Moore No.) Tool name	Description	
ST25051001 (J25695-1) Oil pressure gauge	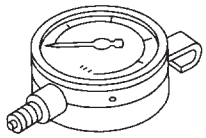 NT050	Measuring oil pressure **Maximum measuring range:** **2,452 kPa (24.52 bar, 25 kg/cm^2, 356 psi)**
ST25052000 (J25695-2) Hose	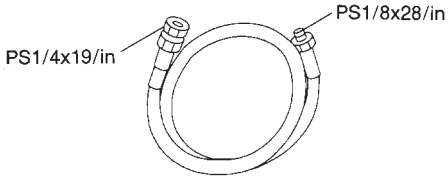 NT559	Adapting oil pressure gauge to upper oil pan
KV10115801 (J38956) Oil filter wrench	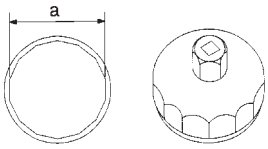 NT375	Removing oil filter **a: 64.3 mm (2.531 in)**
WS39930000 (—) Tube pressure	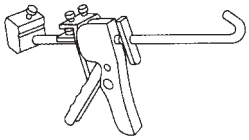 NT052	Pressing the tube of liquid gasket

COMMERCIAL SERVICE TOOL

NALC0040

Tool name	Description
Deep socket	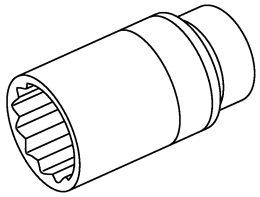 Removing and installing oil pressure switch Deep socket 26 mm, 3/8 drive NT818

Lubrication Circuit

NALC0003

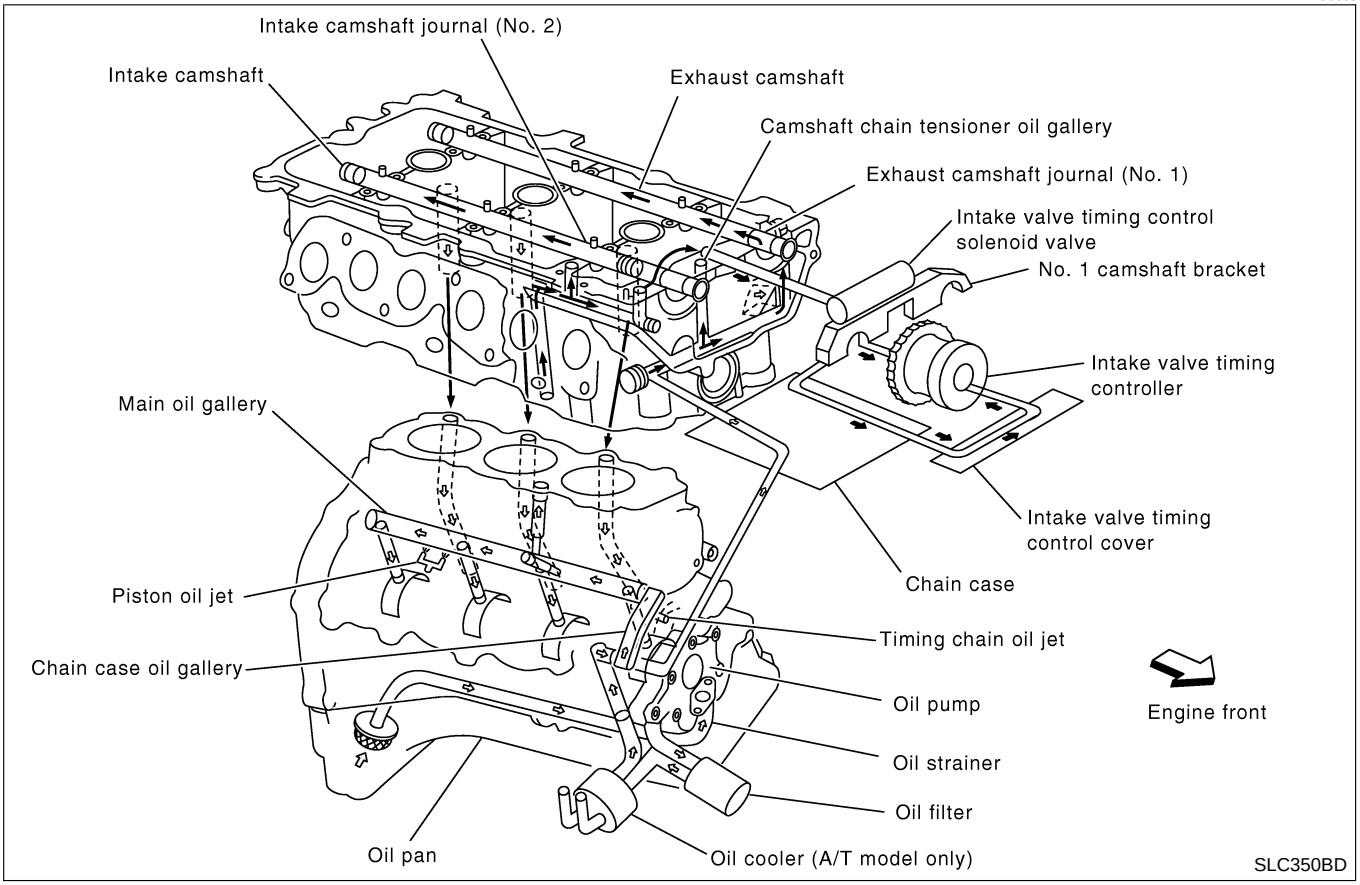

Lubrication Circuit (Cont'd)

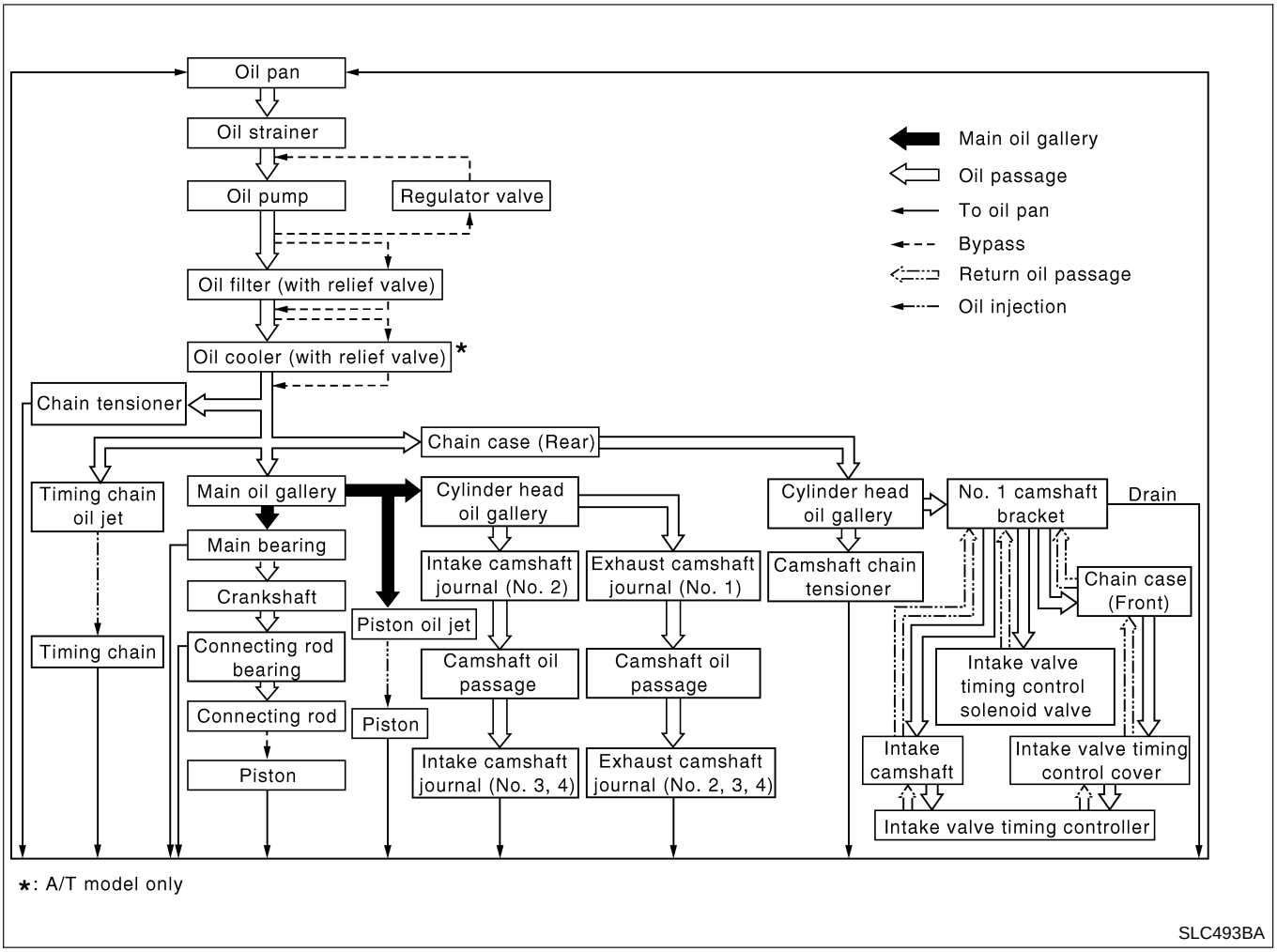

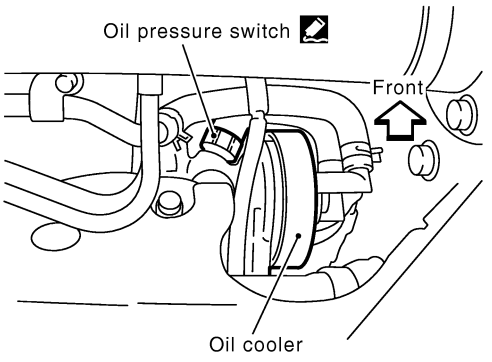

: Apply liquid gasket (Genuine RTV silicone sealant or equivalent. Refer to GI section.).

SLC497B

M/T models

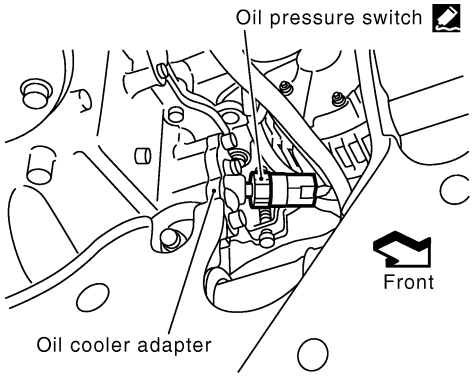

: Apply liquid gasket (Genuine RTV silicone sealant or equivalent. Refer to GI section.).

SLC498B

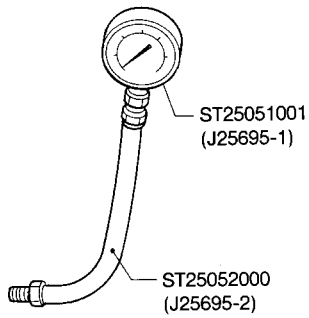

SLC926

Oil Pressure Check

NALC0004

WARNING:

- **Be careful not to burn yourself, as the engine and engine oil may be hot.**
- **Oil pressure check should be done in "Neutral position" (M/T) or "Parking position" (A/T).**

1. Check engine oil level.
2. Disconnect oil pressure switch harness connector.
3. Remove oil pressure switch using a deep socket. (Commercial service tool)
4. Install oil pressure gauge and hose.
5. Start engine and warm it up to normal operating temperature.
6. Check oil pressure with engine running under no-load.

Engine speed rpm	Approximate discharge pressure kPa (kg/cm^2, psi)
Idle speed 2,000	More than 100 (1.0, 15) 290 (3.0, 42)

If difference is extreme, check oil passage and oil pump for oil leaks.

7. After the inspections, install the oil pressure switch as follows.

a. Remove the old sealant adhering to switch and engine.

b. Apply Genuine RTV silicone sealant or equivalent to the thread and tighten. Refer to GI-53.

13 - 17 N·m (1.25 - 1.75 kg-m, 9 - 12 ft-lb)

Oil Pump

REMOVAL AND INSTALLATION

=NALC0005

1. Remove timing chain. Refer to EM-27, “Removal”.
2. Remove oil pump assembly.
- Inspect the oil pump after removing it.
3. Reinstall any parts removed in reverse order of removal.

DISASSEMBLY AND ASSEMBLY

NALC0006

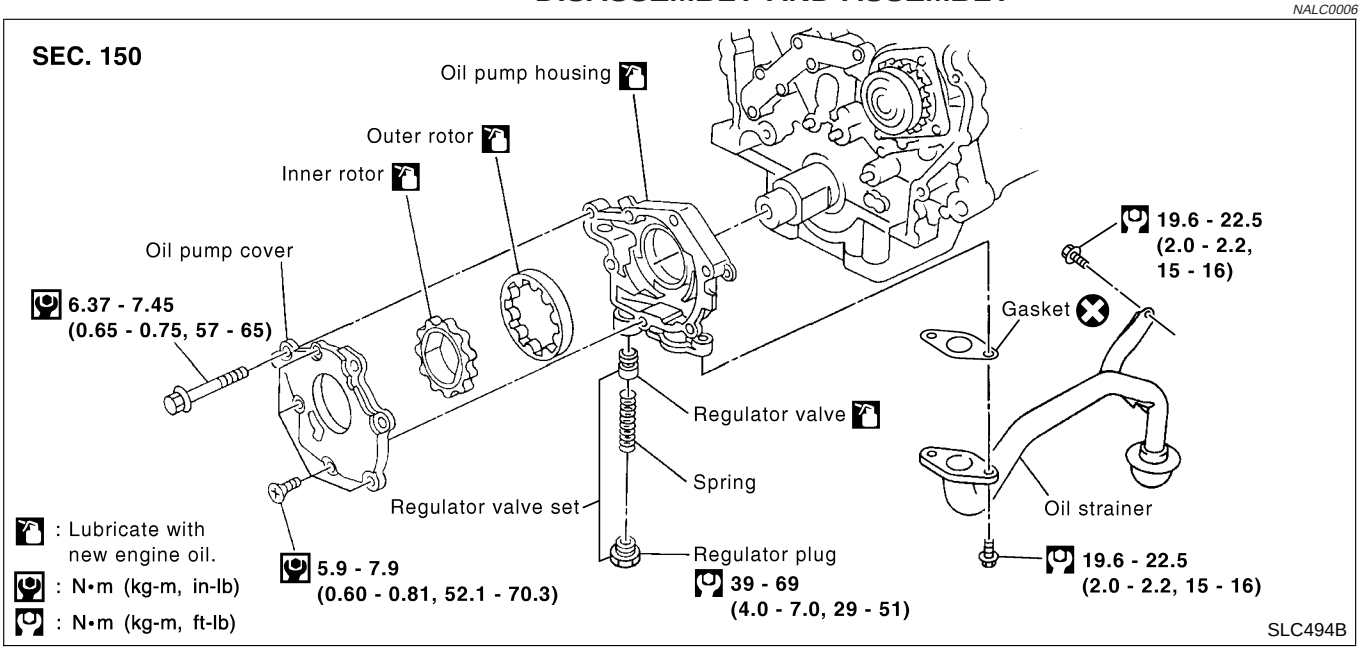

- **When installing oil pump, apply engine oil to rotors.**

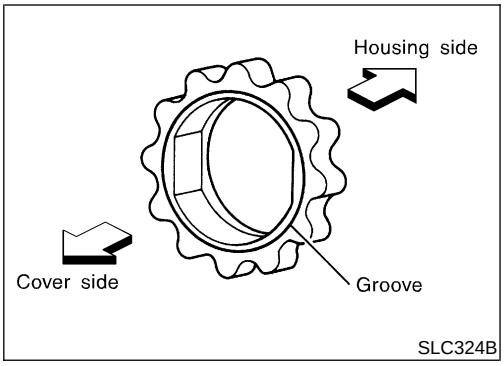

SLC324B

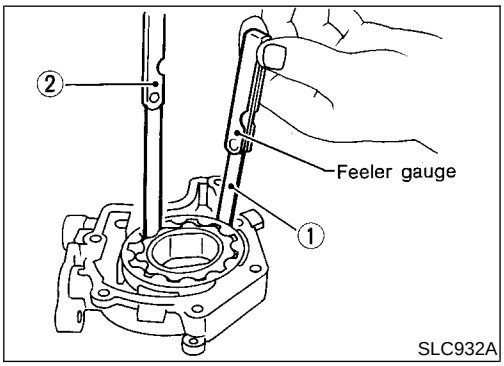

SLC932A

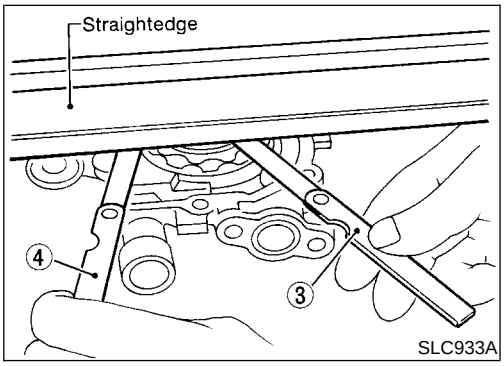

SLC933A

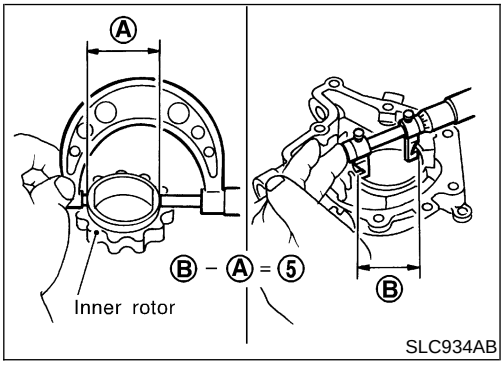

SLC934AB

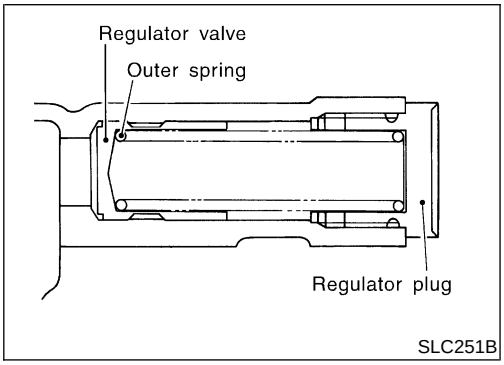

SLC251B

OIL PUMP INSPECTION

NALC0007

- **Install oil pump with the groove of the inner rotor facing the oil pump cover.**

Using a feeler gauge, straightedge and micrometers, check the following clearances:

Unit: mm (in)

Body to outer rotor radial clearance 1	0.114 - 0.260 (0.0045 - 0.0102)
Inner rotor to outer gear tip clearance 2	Below 0.180 (0.0071)
Body to inner rotor axial clearance 3	0.030 - 0.070 (0.0012 - 0.0028)
Body to outer rotor axial clearance 4	0.050 - 0.110 (0.0020 - 0.0043)
Inner rotor to brazed portion of housing clearance 5	0.045 - 0.091 (0.0018 - 0.0036)

- **If measured/calculated values are out of the standard, replace oil pump assembly.**

REGULATOR VALVE INSPECTION

NALC0008

1. Visually inspect components for wear and damage.
2. Check oil pressure regulator valve sliding surface and valve spring.
3. Coat regulator valve with engine oil. Check that it falls smoothly into the valve hole by its own weight.

If damaged, replace oil pump assembly.

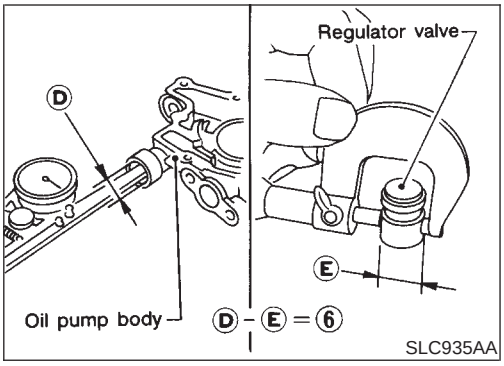

4. Check regulator valve to oil pump body clearance.

Clearance:

6 : 0.040 - 0.097 mm (0.0016 - 0.0038 in)

If it exceeds the limit, replace oil pump assembly.

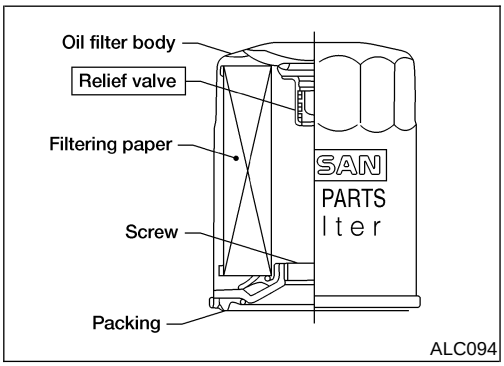

OIL FILTER

NALC0009

The oil filter is a small, full-flow cartridge type and is provided with a relief valve.

- **Use Tool for removing oil filter.**

Oil Cooler

REMOVAL AND INSTALLATION

NALC0036

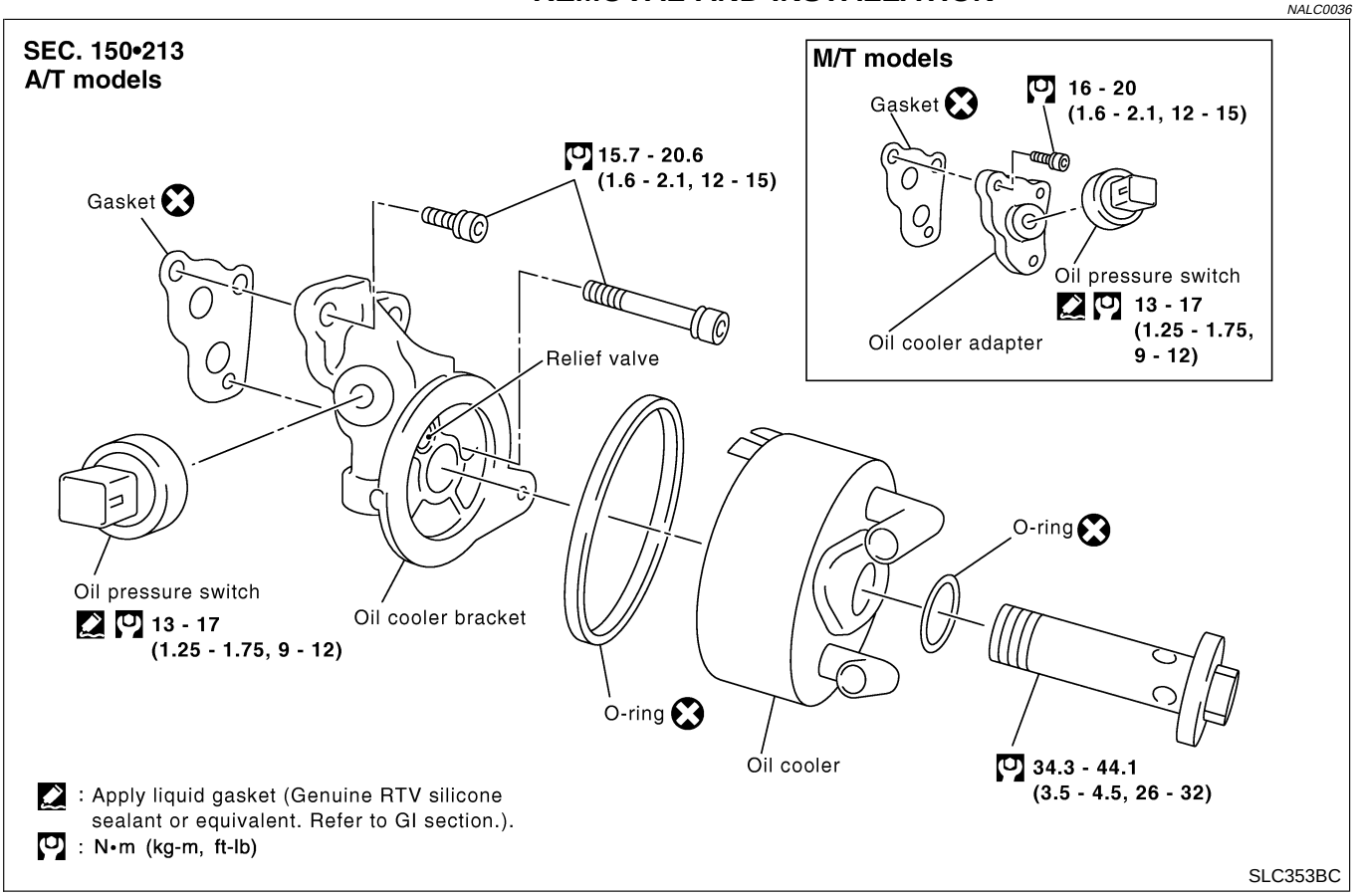

1. Disconnect water hoses from oil cooler, pinching water hose to prevent engine coolant spill.

- **Do not spill engine coolant on the drive belt.**

2. Remove oil cooler.

- Inspect the oil cooler after removing it.

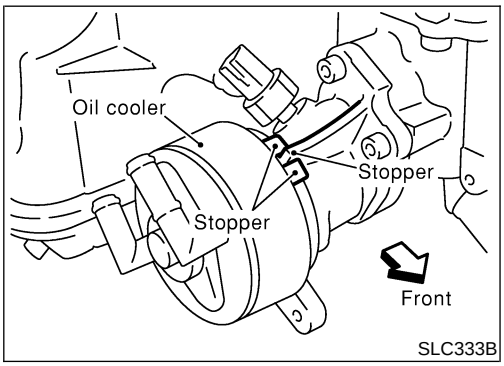

3. Installation is in reverse order of removal.
- **When installing the oil cooler, align the oil cooler stopper with the stopper of the oil cooler bracket.**

INSPECTION

NALC0037

Oil Cooler

NALC0037S01

1. Check oil cooler for cracks.
2. Check oil cooler for clogging by blowing through engine coolant inlet.
   If necessary, replace oil cooler assembly.

Oil Pressure Relief Valve

NALC0037S02

Inspect oil pressure relief valve for movement, cracks and breaks by pushing the ball. If replacement is necessary, remove valve by prying it out with a suitable tool. Install a new valve in place by tapping it.

Service Data and Specifications (SDS)

OIL PRESSURE

NALC0010

Engine speed rpm	Approximate discharge pressure kPa (kg/cm^2, psi)
Idle speed 2,000	More than 100 (1.0, 15) 290 (3.0, 42)

REGULATOR VALVE

NALC0011

Unit: mm (in)

Regulator valve to oil pump cover clearance	0.040 - 0.097 (0.0016 - 0.0038)

OIL PUMP

NALC0012

Unit: mm (in)

Body to outer rotor radial clearance	0.114 - 0.260 (0.0045 - 0.0102)
Inner rotor to outer rotor tip clearance	Below 0.180 (0.0071)
Body to inner rotor axial clearance	0.030 - 0.070 (0.0012 - 0.0028)
Body to outer rotor axial clearance	0.050 - 0.110 (0.0020 - 0.0043)
Inner rotor to brazed portion of housing clearance	0.045 - 0.091 (0.0018 - 0.0036)

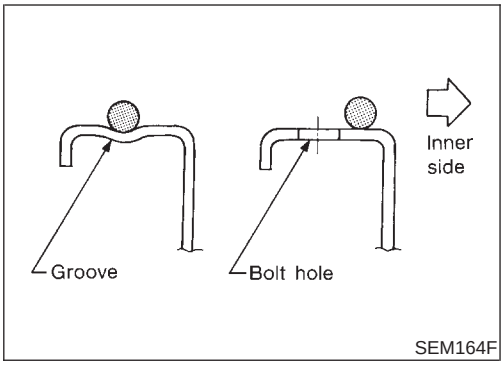

SEM164F

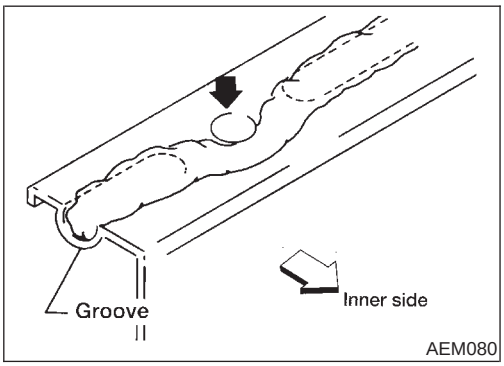

AEM080

Precautions

LIQUID GASKET APPLICATION PROCEDURE

NALC0013

1. Use a scraper to remove all traces of old liquid gasket from mating surfaces and grooves. Also, completely clean any oil from these areas.
2. Apply a continuous bead of liquid gasket to mating surfaces. **(Use Genuine RTV silicone sealant or equivalent. Refer to GI-53.)**
3. Apply liquid gasket around the inner side of bolt holes (unless otherwise specified).
4. Assembly should be done within 5 minutes after coating.
5. Wait at least 30 minutes before refilling engine oil and engine coolant.

Preparation

SPECIAL SERVICE TOOLS

NALC0014

The actual shapes of Kent-Moore tools may differ from those of special service tools illustrated here.

Tool number (Kent-Moore No.) Tool name	Description	
WS39930000 (—) Tube pressure	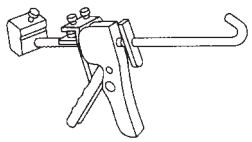 NT052	Pressing the tube of liquid gasket
EG17650301 (J33984-A) Radiator cap tester adapter	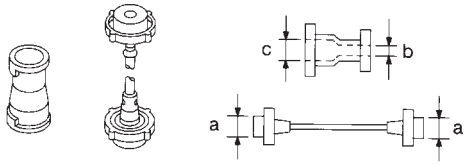 NT564	Adapting radiator cap tester to radiator cap and radiator filler neck **a: 28 (1.10) dia.** **b: 31.4 (1.236) dia.** **c: 41.3 (1.626) dia.** Unit: mm (in)
KV99103510 (—) Radiator plate pliers A	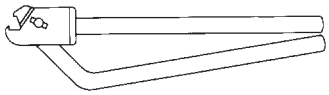 NT224	Installing radiator upper and lower tanks
KV99103520 (—) Radiator plate pliers B	 NT225	Removing radiator upper and lower tanks

COMMERCIAL SERVICE TOOL

NALC0041

Tool name	Description
Radiator cap tester	Checking radiator and radiator cap 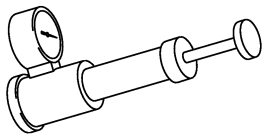 PBIC1982E

Cooling Circuit

NALC0015

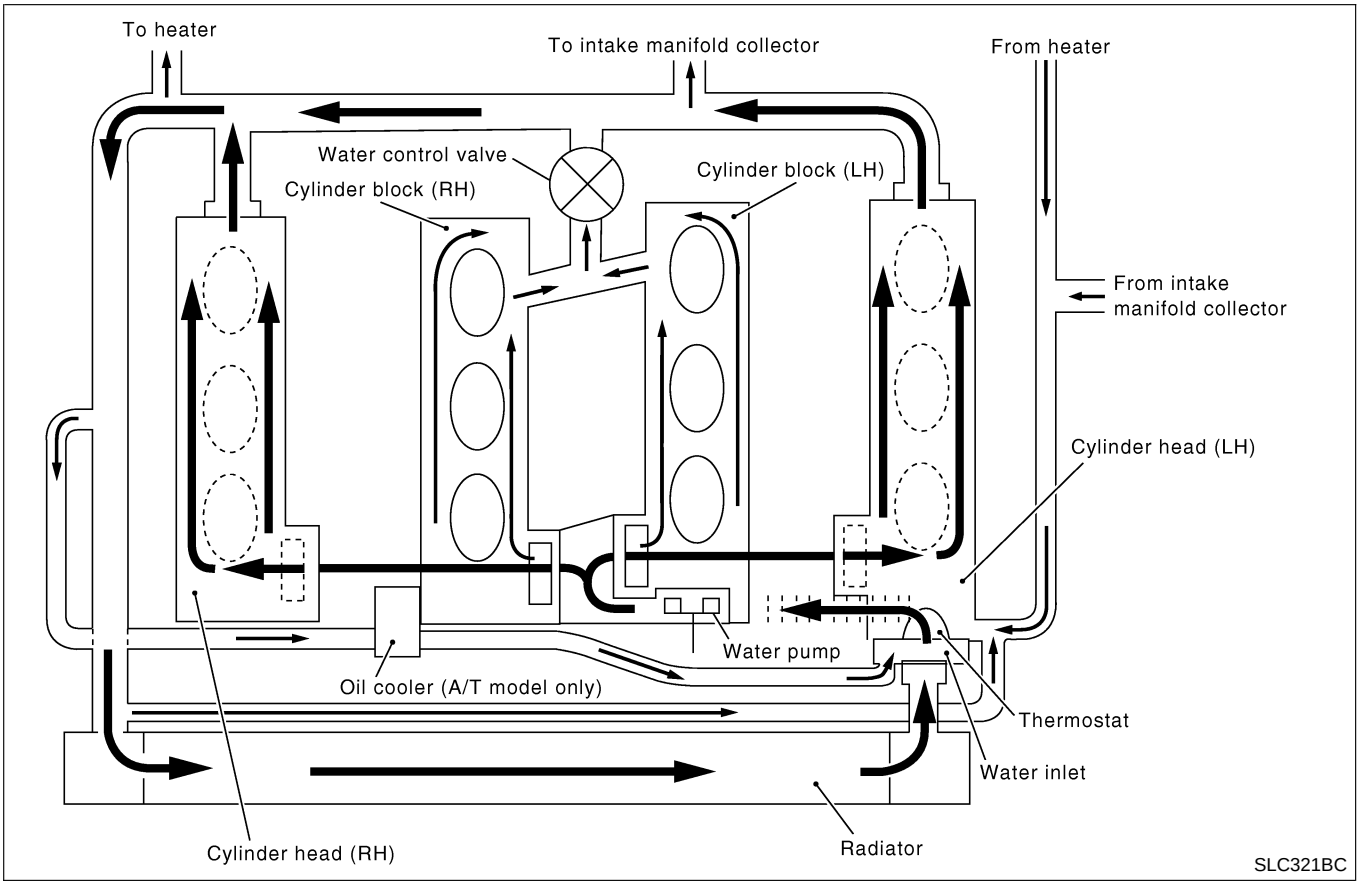

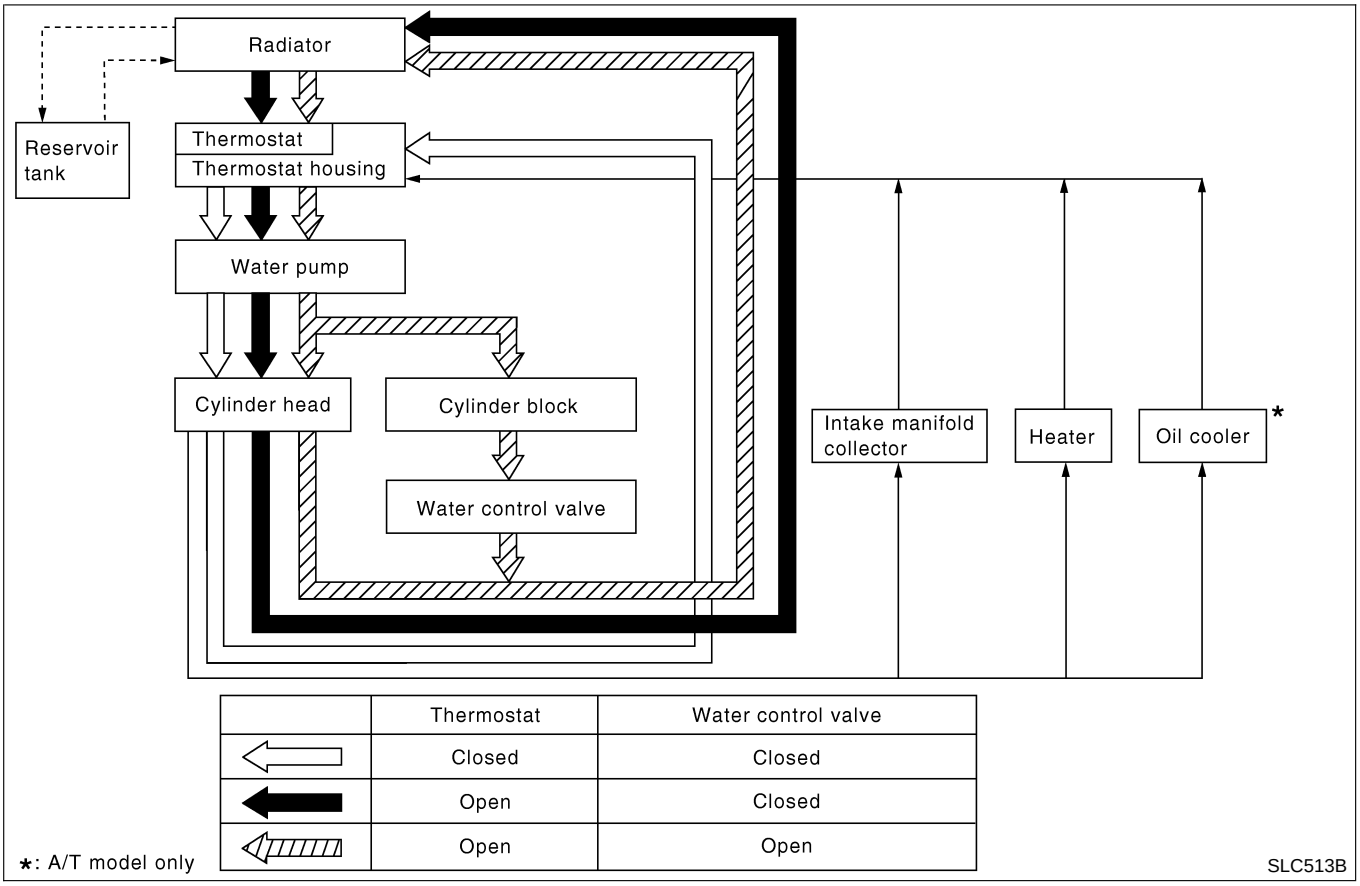

	Thermostat	Water control valve
⇦	Closed	Closed
◀	Open	Closed
⇦	Open	Open

*: A/T model only

System Check

NALC0016

WARNING:

Never remove the radiator cap when the engine is hot; serious burns could be caused by high pressure fluid escaping from the radiator.

Wrap a thick cloth around the cap and carefully remove it by turning it a quarter turn to allow built-up pressure to escape and then turn the cap all the way off.

CHECKING COOLING SYSTEM HOSES

NALC0016S01

Check hoses for improper attachment, leaks, cracks, damage, loose connections, chafing and deterioration.

CHECKING RADIATOR

NALC0016S02

Check radiator for mud or clogging. If necessary, clean radiator as follows.

- Be careful not to bend or damage the radiator fins.
- When radiator is cleaned without removal, remove all surrounding parts such as cooling fan, radiator shroud and horns. Then tape the harness and electrical connectors to prevent water from entering.

1. Apply water by hose to the back side of the radiator core vertically downward.

2. Apply water again to all radiator core surfaces once per minute.
3. Stop washing if any stains no longer flow out from the radiator.
4. Blow air into the back side of radiator core vertically downward.
   - Use compressed air lower than 490 kPa (5 kg/cm^2, 71 psi) and keep distance more than 30 cm (11.8 in).
5. Blow air again into all the radiator core surfaces once per minute until no water sprays out.

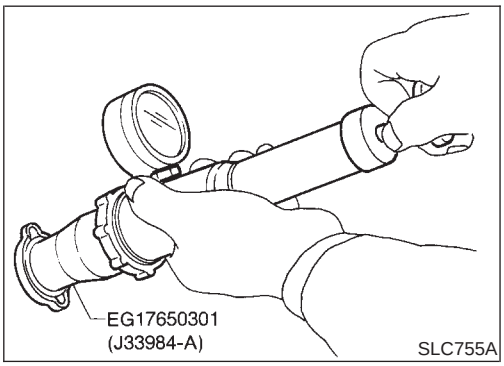

CHECKING RADIATOR CAP

NALC0016S03

To check radiator cap, apply pressure to cap with a tester.

Radiator cap relief pressure:
Standard
78 - 98 kPa
(0.8 - 1.0 kg/cm^2, 11 - 14 psi)
Limit
59 kPa (0.6 kg/cm^2, 9 psi)

- When connecting radiator cap to radiator cap tester (commercial service tool) with Tool, apply engine coolant to the cap seal surface.

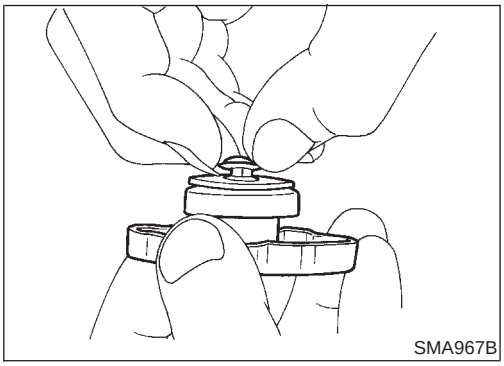

Pull the negative pressure valve to open it.
Check that it closes completely when released.

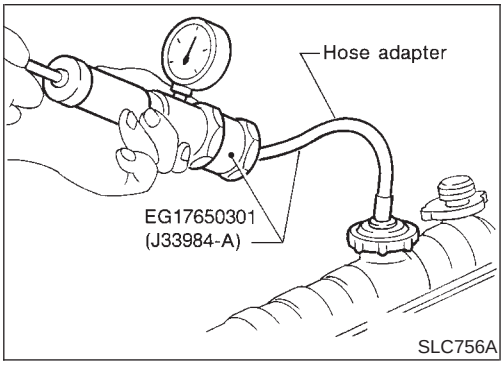

CHECKING COOLING SYSTEM FOR LEAKS

NALC0016S04

To check for leakage, apply pressure to the cooling system with a tester.

Testing pressure:
157 kPa (1.6 kg/cm^2, 23 psi)

CAUTION:
Higher than the specified pressure may cause radiator damage.

NOTE:
When engine coolant decreases, replenish radiator with engine coolant.

Water Pump

REMOVAL AND INSTALLATION

NALC0017

CAUTION:

- **When removing water pump assembly, be careful not to get engine coolant on drive belt.**
- **Water pump cannot be disassembled and should be replaced as a unit.**
- **After installing water pump, connect hose and clamp securely, then check for leaks using radiator cap tester (commercial service tool).**

SEC. 130•210

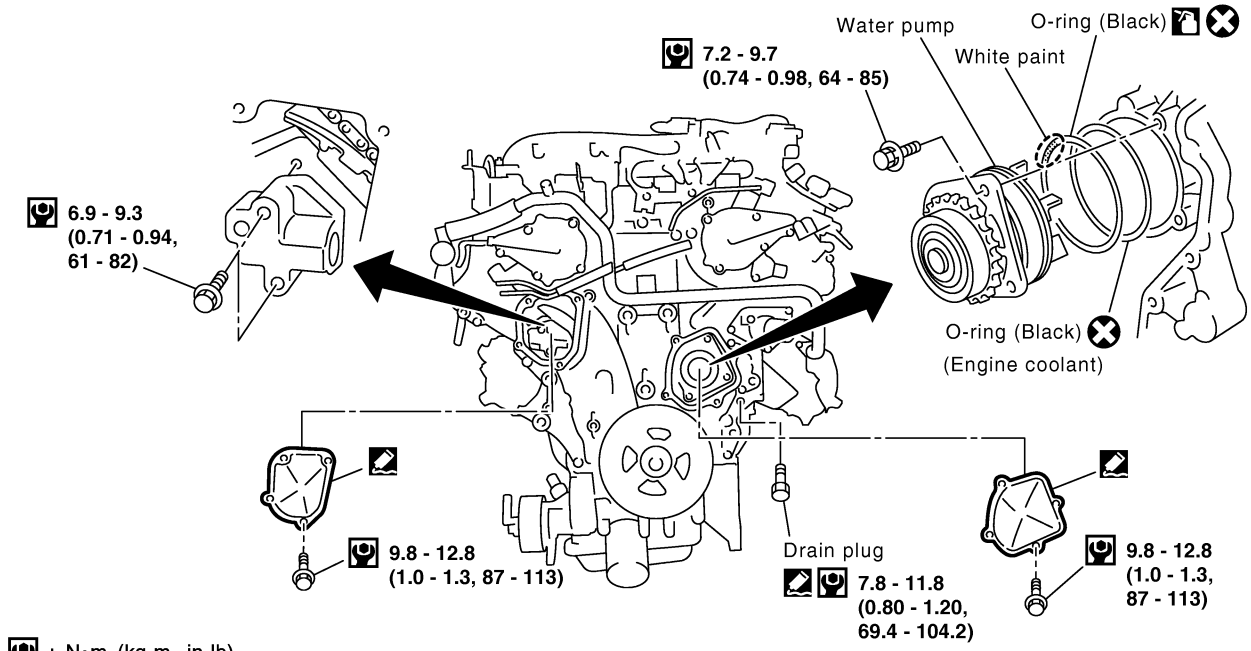

: N•m (kg-m, in-lb)

: Apply liquid gasket (Genuine RTV silicone sealant or equivalent. Refer to GI section.).

: Lubricate with new engine oil.

: Always replace after every disassembly.

SLC509BB

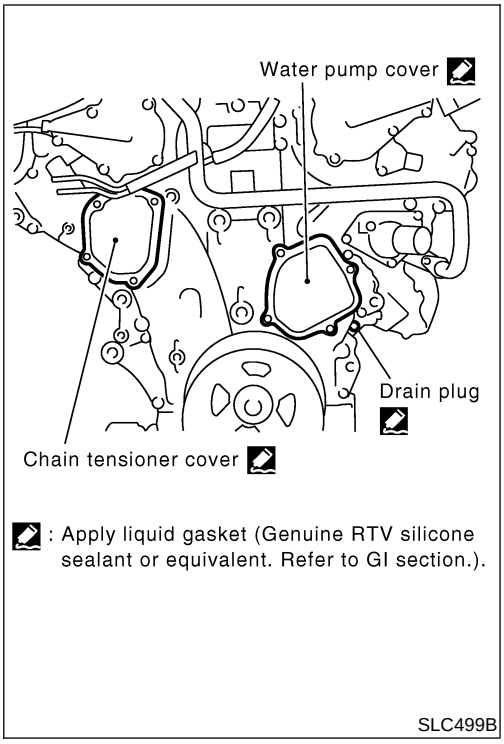

REMOVAL

=NALC0018

1. Remove undercover.
2. Remove suspension member stay.
3. Drain coolant from radiator.
4. Remove radiator shrouds.
5. Remove drive belts.
6. Remove cooling fan.
7. Remove water drain plug on water pump side of cylinder block.
8. Remove chain tensioner cover and water pump cover.

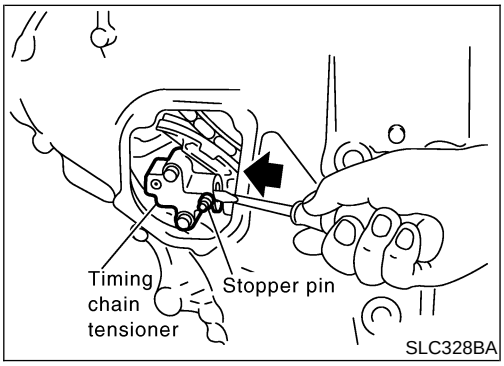

9. Pushing timing chain tensioner sleeve, apply a stopper pin so it does not return. Then remove timing chain tensioner.

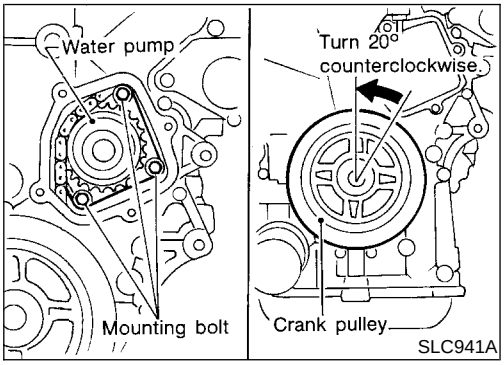

10. Remove the 3 water pump fixing bolts. Secure a gap between water pump gear and timing chain, by turning crankshaft pulley 20° backwards.

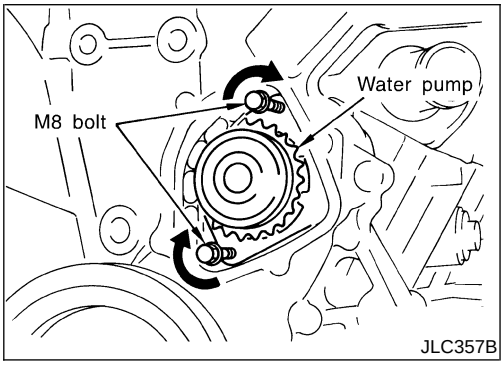

11. Put M8 bolts [pitch: 1.25 mm (0.0492 in), length: approx. 50 mm (1.97 in)] to two water pump fixing bolt holes.

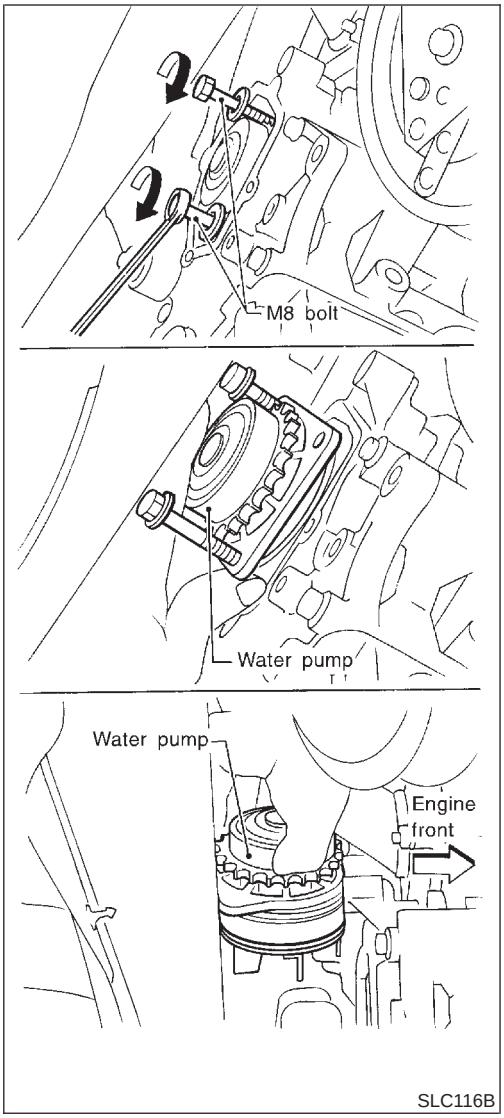

12. Tighten M8 bolts by turning half turn alternately until they reach timing chain rear case.
- In order to prevent damages to water pump or timing chain rear case, do not tighten one bolt continuously. Always turn each bolt half turn each time.

13. Lift up water pump and remove it.
- When lifting up water pump, do not allow water pump gear to hit timing chain.

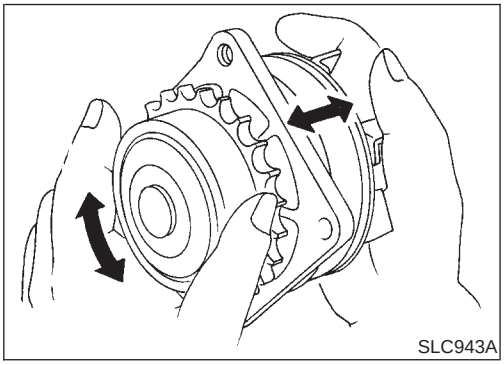

INSPECTION

NALC0019

1. Check for badly rusted or corroded body assembly.
2. Check for rough operation due to excessive end play.

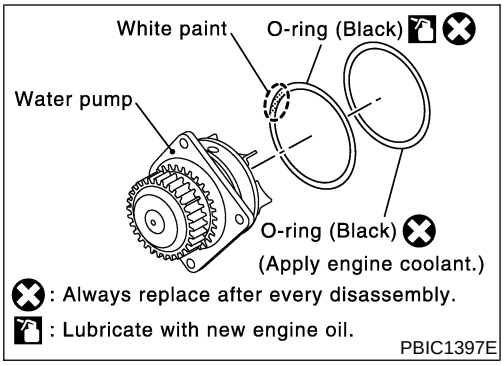

INSTALLATION

=NALC0020

1. Apply engine oil and engine coolant to O-rings as shown in the figure.
- Install O-ring with a white paint mark to the front side.

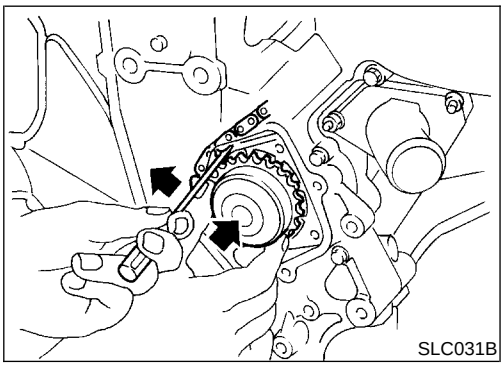

2. Install water pump.
- **Do not allow cylinder block to nip O-rings when installing water pump.**

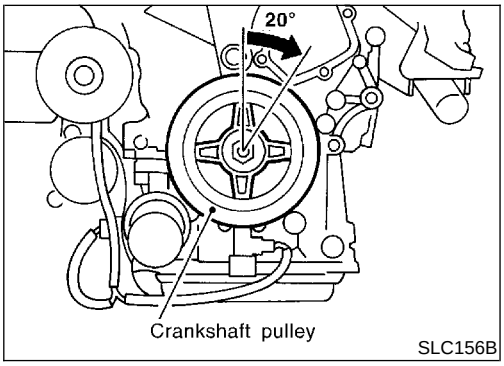

3. Return the crankshaft pulley to its original position by turning it 20° forward.

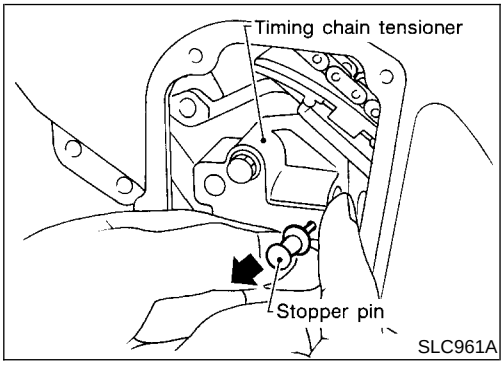

4. Install timing chain tensioner, then remove the stopper pin.
- **When installing the timing chain tensioner, engine oil should be applied to the oil hole and tensioner.**

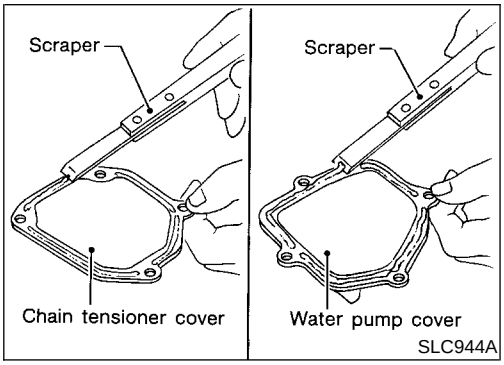

5. Install chain tensioner cover and water pump cover.

a. Before installing, remove all traces of liquid gasket from mating surface of water pump cover and chain tensioner cover using a scraper.
Also remove traces of liquid gasket from mating surface of front cover.

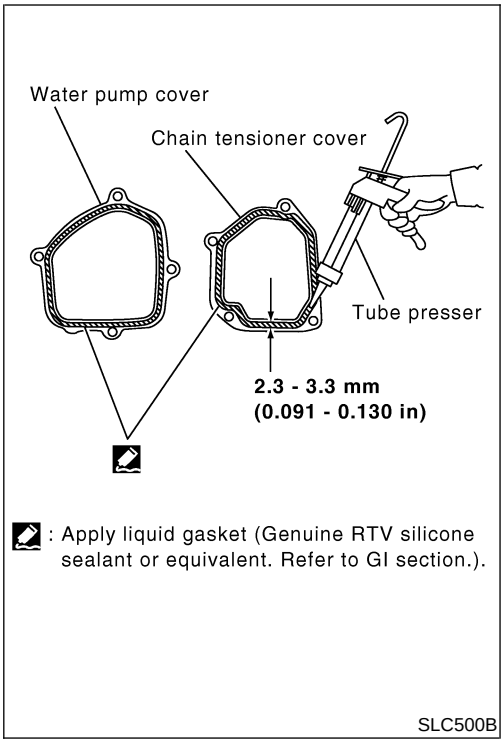

b. Apply a continuous bead of liquid gasket to mating surface of chain tensioner cover and water pump cover.
Use Genuine RTV silicone sealant or equivalent. Refer to GI-53.

6. Reinstall any parts removed in reverse order of removal.

- **After starting engine, let idle for three minutes, then rev engine up to 3,000 rpm under no load to purge air from the high-pressure chamber of the chain tensioners. The engine may produce a rattling noise. This indicates that air still remains in the chamber and is not a matter of concern.**

Thermostat

REMOVAL AND INSTALLATION

=NALC0021

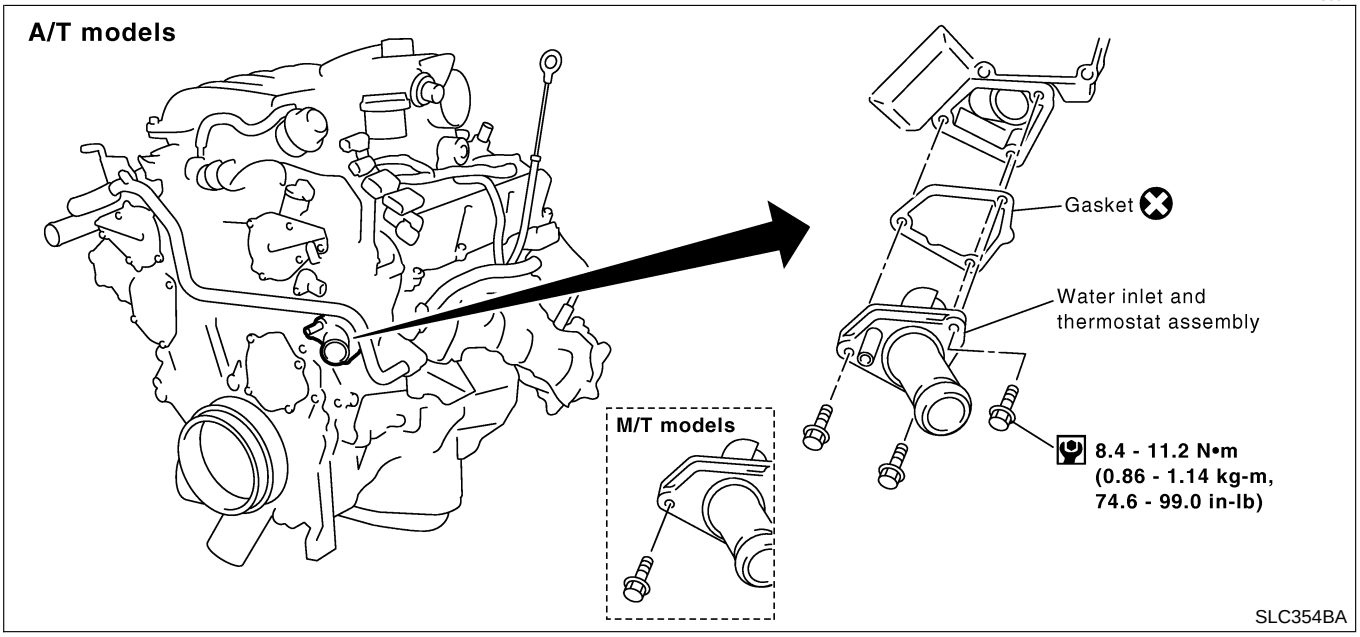

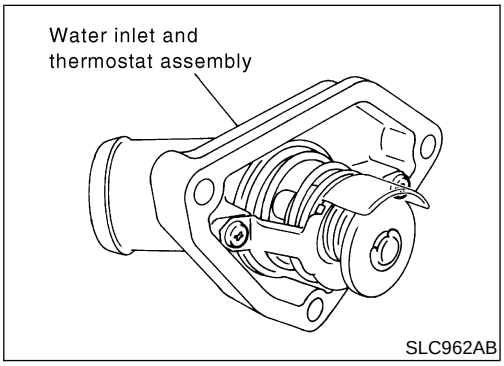

1. Remove undercover.
2. Remove suspension member stay.
3. Drain engine coolant from radiator.
4. Remove drive belts.
5. Remove water drain plug on water pump side of cylinder block.
6. Disconnect lower radiator hose.
7. Remove water inlet and thermostat assembly.
- **Do not disassemble water inlet and thermostat assembly. Replace them as a unit, if necessary.**

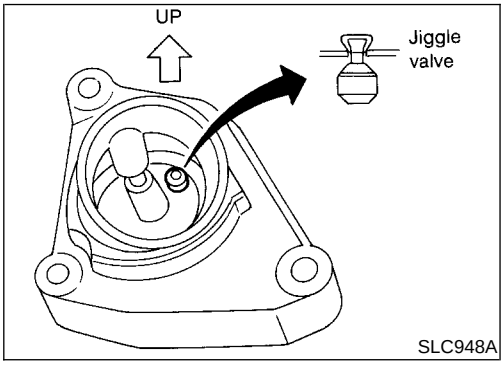

8. Install thermostat with jiggle valve facing upward.
- **After installation, run engine for a few minutes, and check for leaks.**
- **Be careful not to spill engine coolant over engine compartment. Use a rag to absorb engine coolant.**
9. Reinstall any removed parts in reverse order of removal.

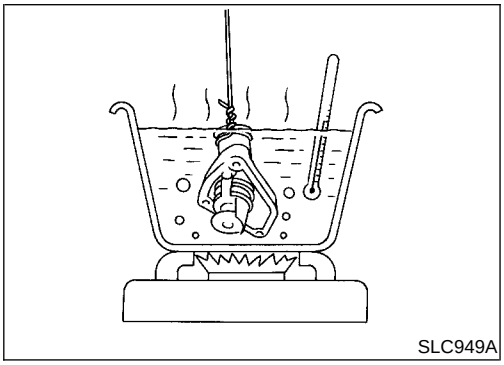

INSPECTION

NALC0022

1. Check valve seating condition at ordinary room temperatures. It should seat tightly.
2. Check valve opening temperature and maximum valve lift.

	Standard
Valve opening temperature	76.5°C (170°F)
Valve lift	More than 8.6 mm/90°C (0.339 in/194°F)

3. Then check if valve closes at 5°C (9°F) below valve opening temperature.

Water Control Valve

REMOVAL AND INSTALLATION

NALC0032

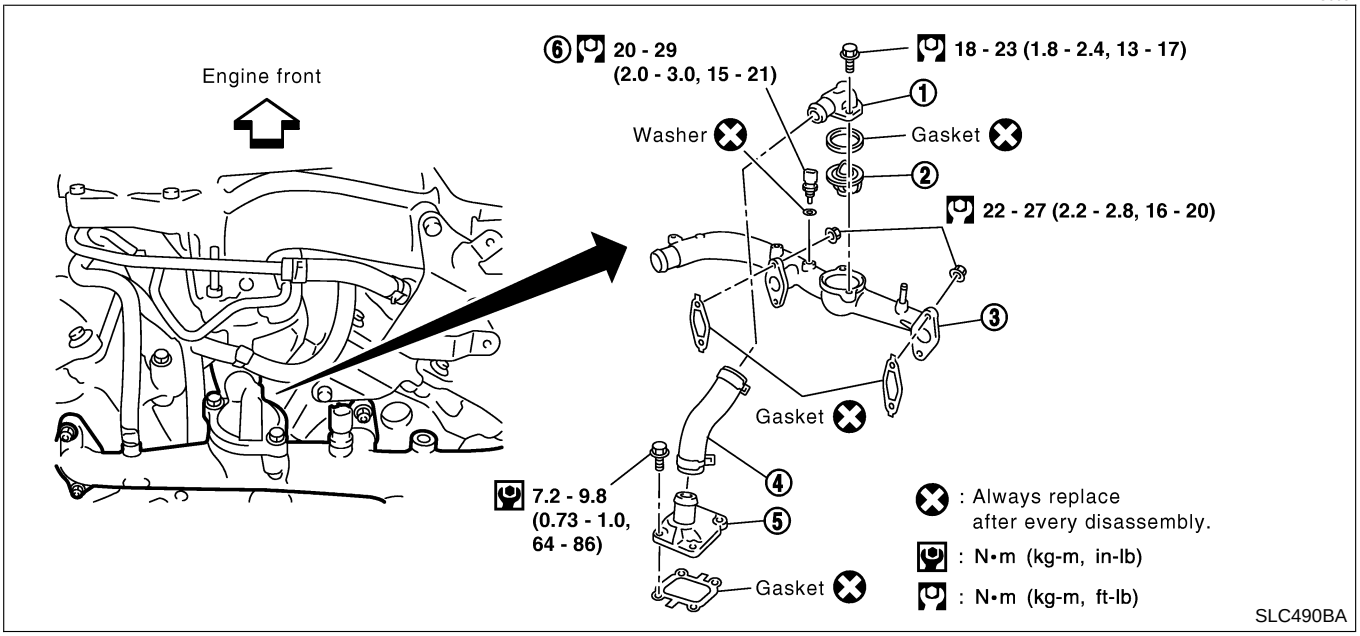

1. Water outlet housing
2. Water control valve
3. Water outlet
4. Water hose
5. Cylinder block water outlet
6. Engine coolant temperature sensor

1. Release fuel pressure.
   Refer to EC-56, "Fuel Pressure Release".
2. Remove undercover.
3. Remove suspension member stay.
4. Drain engine coolant from radiator.
5. Remove engine cover.
6. Remove air duct with air cleaner assembly.
7. Disconnect hoses, harness and so on.
8. Remove upper intake manifold corrector.
9. Remove intake manifold corrector support bolts.
10. Remove lower intake manifold corrector.
11. Disconnect injector harness connectors.
12. Remove injector tube.
13. Remove intake manifold.
14. Remove water outlet housing and water control valve.

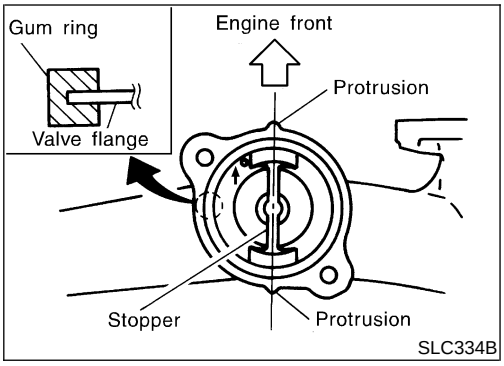

15. Install water control valve and water outlet housing.
a. Install gum ring to thermostat.
b. Point the arrow on the upper surface of the valve to the front of the engine, and also be sure to install the protrusions and the valve stopper so that they are aligned in a straight line.
16. Reinstall any removed parts in reverse order of removal.

- **When installing intake manifold, injector tube and intake manifold collectors, refer to EM-12, "TIGHTENING PROCEDURES".**
- **After installation, run engine for a few minutes, and check for leaks.**
- **Be careful not to spill engine coolant over engine compartment. Use a rag to absorb engine coolant.**

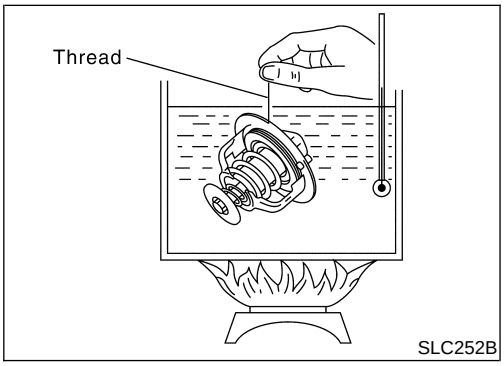

INSPECTION

NALC0033

1. Check valve seating condition at ordinary room temperatures. It should seat tightly.
2. Check valve opening temperature and maximum valve lift.

	Standard
Valve opening temperature	95°C (203°F)
Valve lift	More than 8.0 mm/108°C (0.315 in/226°F)

3. Then check if valve closes at 5°C (9°F) below valve opening temperature.

Radiator

REMOVAL AND INSTALLATION

=NALC0023

1. Remove undercover.
2. Remove suspension member stay.
3. Drain engine coolant from radiator.
4. Disconnect radiator upper and lower hoses.
5. Remove upper and lower radiator shroud.
6. Remove A/T oil cooler hoses. (A/T)
7. Disconnect reservoir tank hose.
8. Remove radiator mounting bracket.
9. Remove radiator.
10. After repairing or replacing radiator, install any part removed in reverse order of removal.

When filling radiator with engine coolant, refer to MA-15, “Changing Engine Coolant”.

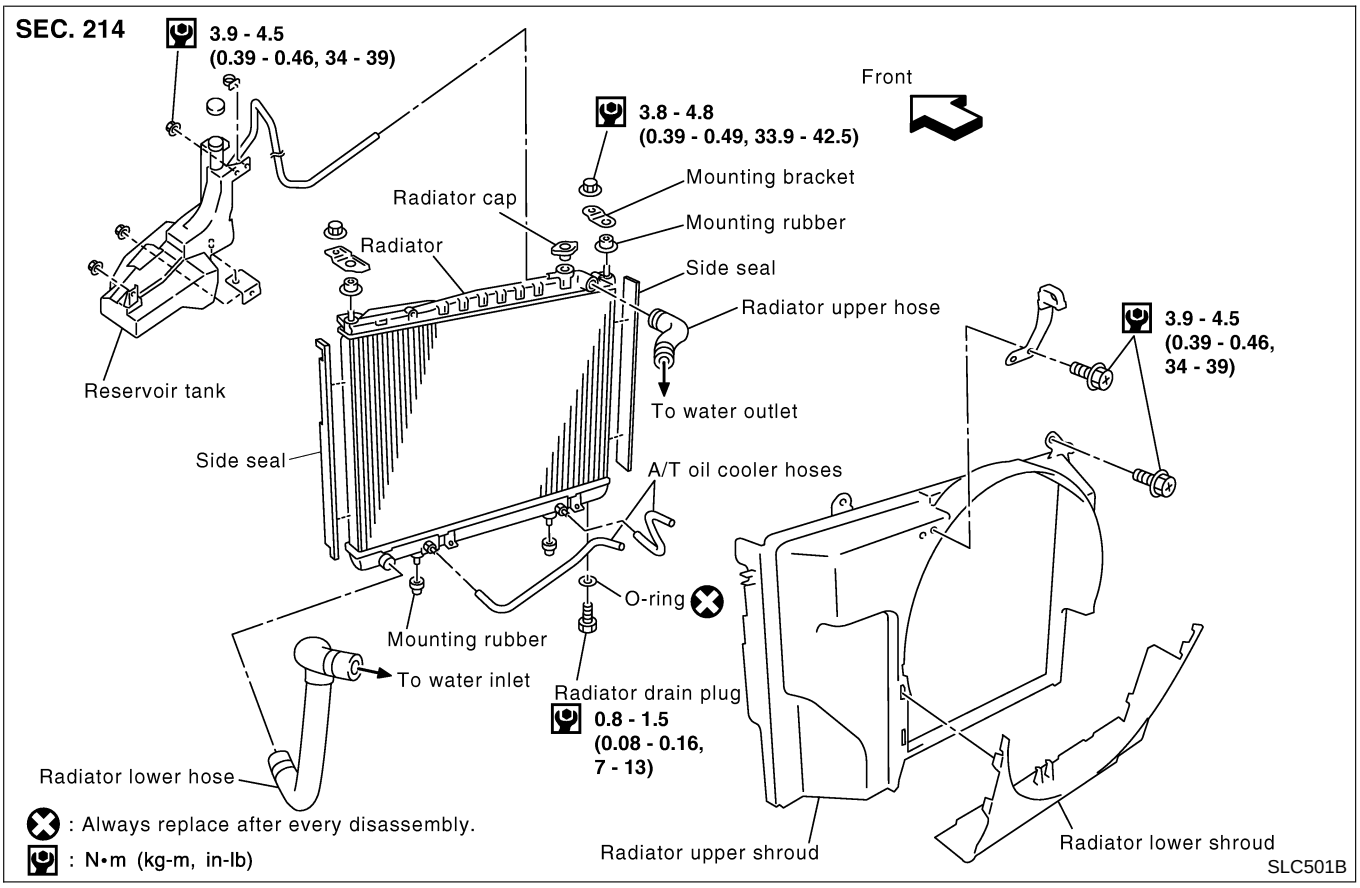

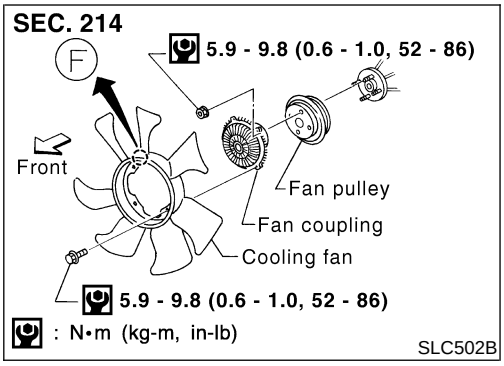

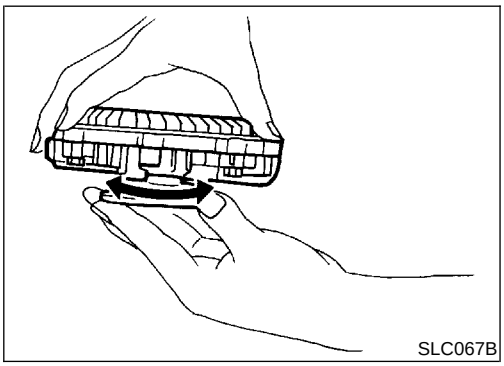

Cooling Fan (Crankshaft driven)

REMOVAL AND INSTALLATION

=NALC0038

- Do not release the drive belt tension by removing the fan pulley.
- Fan coupling cannot be disassembled and should be replaced as a unit. If front mark **F** is present, install fan so that side marked **F** faces the front.
- Install the drive belt only after the fan and fan coupling to fan pulley bracket flange bolts/nuts have been properly torqued.

INSPECTION

NALC0039

Check fan coupling for rough operation, wobbling, oil leakage or bent bimetal.
After assembly, verify the fan does not wobble or flap while the engine is running.

WARNING:

- **When the engine is running, keep hands and clothing away from moving parts such as drive belts and fan.**

Refilling Engine Coolant

NALC0034

For details on refilling engine coolant, refer to MA-16, “REFILLING ENGINE COOLANT”.

Radiator (Aluminum type)

PREPARATION

=NALC0025

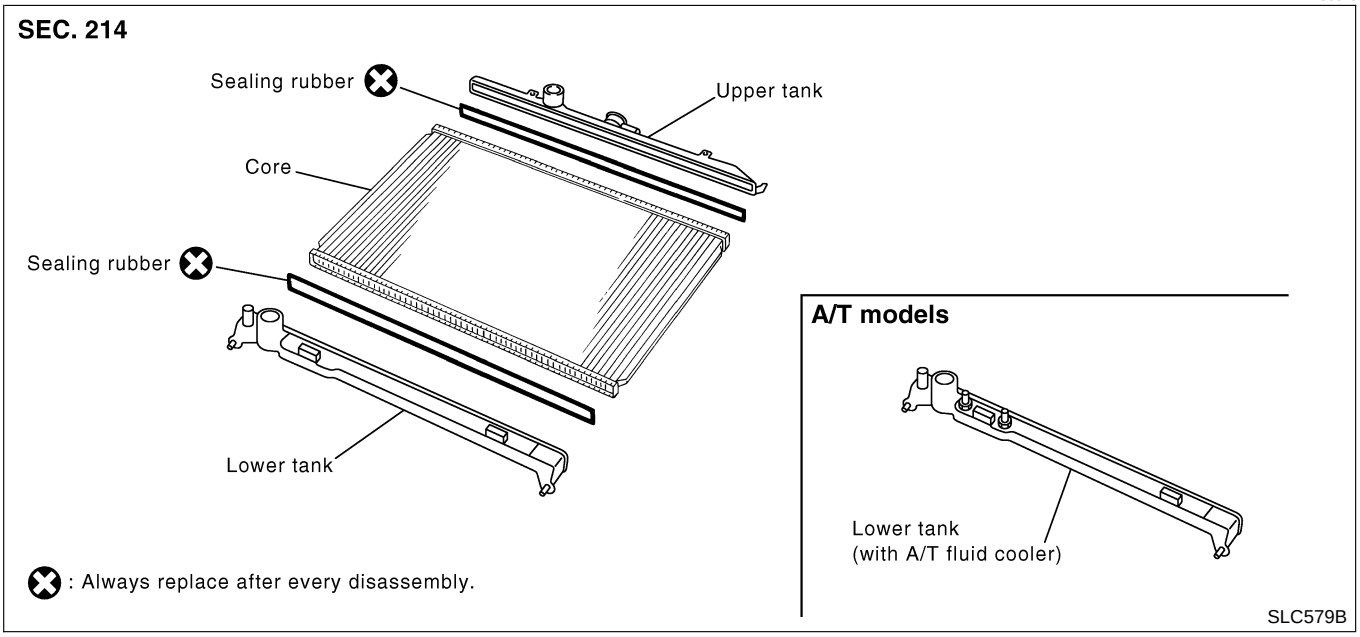

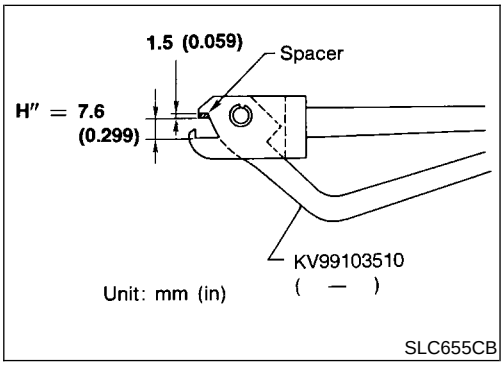

1. Attach the spacer to the tip of the radiator plate pliers A. Spacer specification: 1.5 mm (0.059 in) thick x 18 mm (0.71 in) wide x 8.5 mm (0.335 in) long.
2. Make sure that when radiator plate pliers A are closed dimension H″ is approx. 7.6 mm (0.299 in).
3. Adjust dimension H″ with the spacer, if necessary.

DISASSEMBLY

NALC0026

1. Remove upper and lower tanks with Tool.

CAUTION:

Do not disassemble lower tank and A/T fluid cooler. (A/T models)

NOTE:

Regard lower tank and A/T fluid cooler as an assembly.

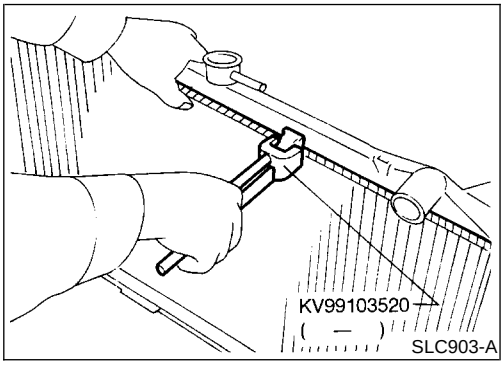

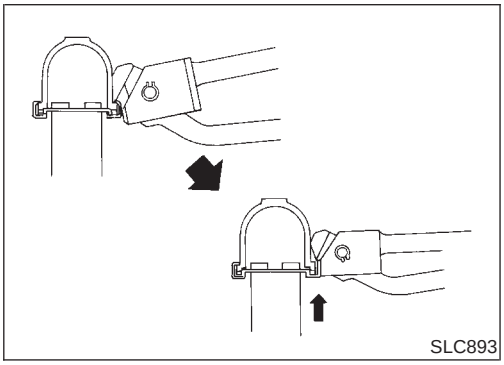

- Grip the crimped edge and bend it upwards so that Tool slips off.

Do not bend excessively.

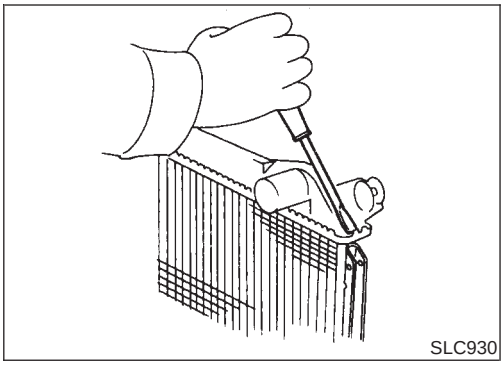
SLC930

- In areas where Tool cannot be used, use a screwdriver to bend the edge up.

Be careful not to damage tank.

2. Remove sealing rubbers.

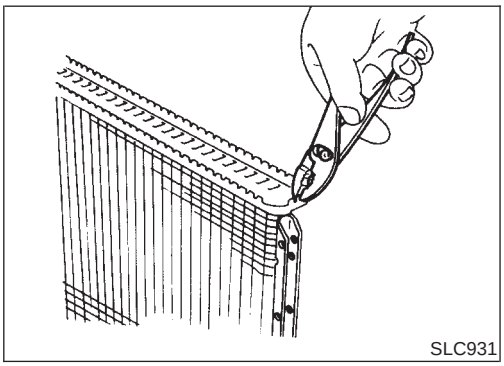
SLC931

3. Make sure the edge stands straight up.

ASSEMBLY

NALC0027

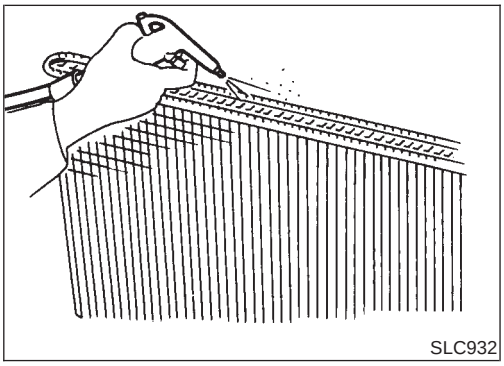
SLC932

1. Clean contact portion of tank.

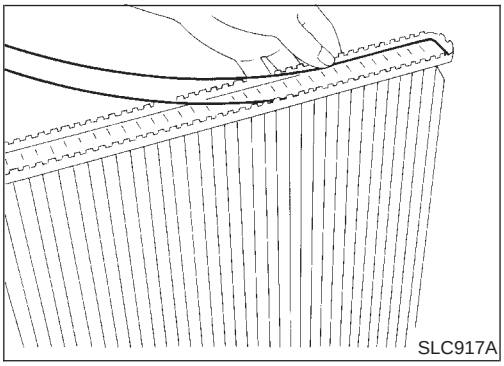
SLC917A

2. Install sealing rubber.

Push it in with fingers.
Be careful not to twist sealing rubber.

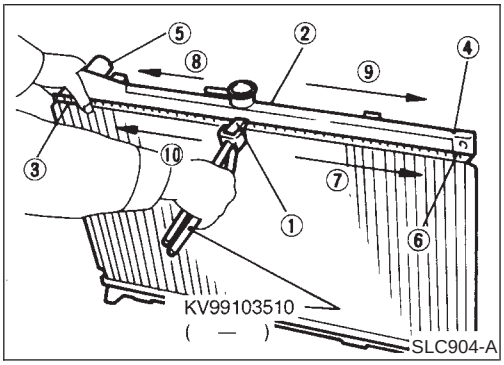

SLC904-A

3. Caulk tank in specified sequence with Tool.

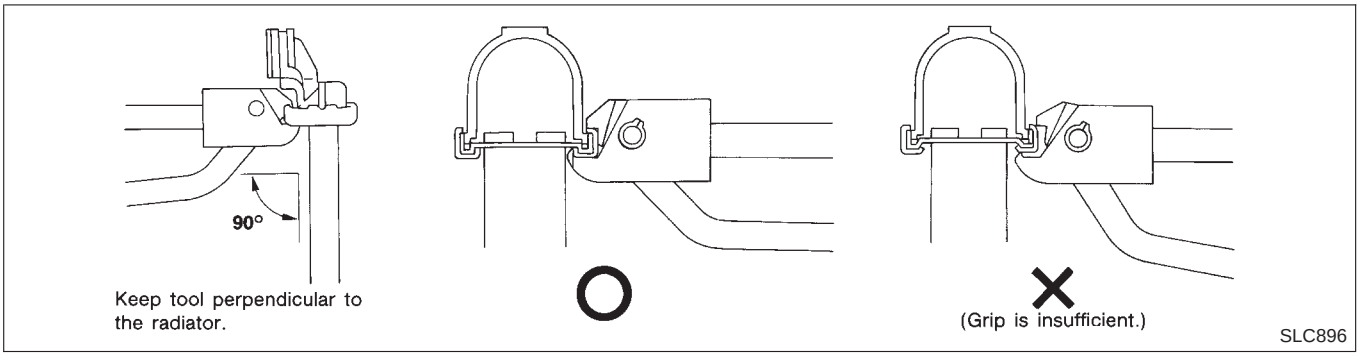

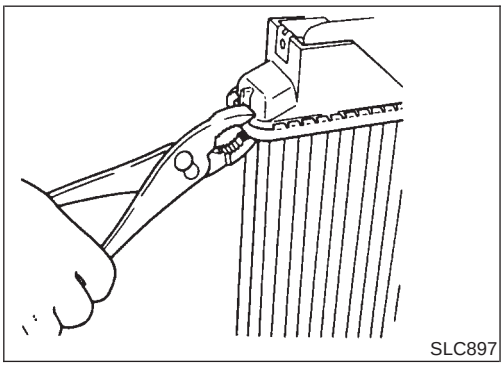

- Use pliers in the locations where Tool cannot be used.

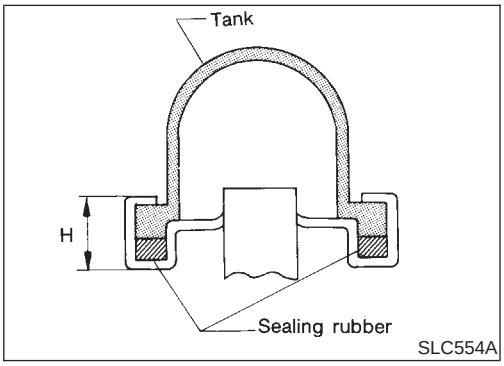

4. Make sure that the rim is completely crimped down.

   Standard height "H":

   8.0 - 8.4 mm (0.315 - 0.331 in)

5. Confirm that there is no leakage.

Refer to Inspection.

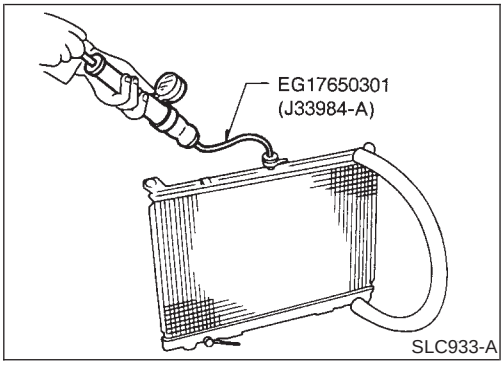

INSPECTION

NALC0028

1. Apply pressure with radiator cap tester (commercial service tool) and Tool.

   Specified pressure value:

   157 kPa (1.6 kg/cm^2, 23 psi)

WARNING:

To prevent the risk of the hose coming undone while under pressure, securely fasten it down with a hose clamp.
Attach a hose to the oil cooler to seal its inlet and outlet. (A/T models only)

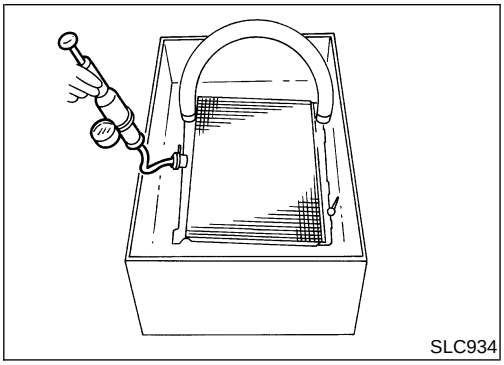

2. Check for leakage by soaking radiator in water container.

Overheating Cause Analysis

NALC0029

	Symptom		Check items	
Cooling system parts malfunction	Poor heat transfer	Water pump malfunction	Worn or loose drive belt	—
		Thermostat stuck closed	—	
		Damaged fins	Dust contamination or paper clogging	
			Physical damage	
		Clogged radiator cooling tube	Excess foreign material (rust, dirt, sand, etc.)	
	Reduced air flow	Cooling fan does not operate	Fan assembly	—
		High resistance to fan rotation		
		Damaged fan blades		
	Damaged radiator shroud	—	—	—
	Improper coolant mixture ratio	—	—	—
	Poor coolant quality	—	Coolant density	—
	Insufficient coolant	Coolant leaks	Cooling hose	Loose clamp
				Cracked hose
			Water pump	Poor sealing
			Radiator cap	Loose
				Poor sealing
			Radiator	O-ring for damage, deterioration or improper fitting
				Cracked radiator tank
				Cracked radiator core
			Reservoir tank	Cracked reservoir tank
		Overflowing reservoir tank	Exhaust gas leaks into cooling system	Cylinder head deterioration
				Cylinder head gasket deterioration

Overheating Cause Analysis (Cont'd)

	Symptom		Check items	
Except cooling system parts malfunction	—	Overload on engine	Abusive driving	High engine rpm under no load
				Driving in low gear for extended time
				Driving at extremely high speed
			Powertrain system malfunction	—
			Installed improper size wheels and tires	
			Dragging brakes	
			Improper ignition timing	
	Blocked or restricted air flow	Blocked bumper	—	—
		Blocked radiator grille	Installed car brassiere	
			Mud contamination or paper clogging	
		Blocked radiator	—	
		Blocked condenser	Blocked airflow	
		Installed large fog lamp		

Service Data and Specifications (SDS)

THERMOSTAT

NALC0030

Valve opening temperature	76.5°C (170°F)
Valve lift	More than 8.6 mm/90°C (0.339 in/194°F)

WATER CONTROL VALVE

NALC0035

Valve opening temperature	95°C (203°F)
Valve lift	More than 8.0 mm/108°C (0.315 in/226°F)

RADIATOR

NALC0031

Unit: kPa (kg/cm^2, psi)

Cap relief pressure	Standard	78 - 98 (0.8 - 1.0, 11 - 14)
	Limit	59 (0.6, 9)
Leakage test pressure		157 (1.6, 23)

MAINTENANCE

SECTION MA

CONTENTS

PRECAUTIONS 3
Precautions for Supplemental Restraint System (SRS) "AIR BAG" and "SEAT BELT PRE-TENSIONER" 3
PREPARATION 4
Special Service Tool 4
Commercial Service Tool 4
GENERAL MAINTENANCE 5
PERIODIC MAINTENANCE 7
Schedule 1 8
EMISSION CONTROL SYSTEM MAINTENANCE 8
CHASSIS AND BODY MAINTENANCE 9
Schedule 2 10
EMISSION CONTROL SYSTEM MAINTENANCE 10
CHASSIS AND BODY MAINTENANCE 11
RECOMMENDED FLUIDS AND LUBRICANTS 12
Fluids and Lubricants 12
SAE Viscosity Number 13
GASOLINE ENGINE OIL 13
Anti-freeze Coolant Mixture Ratio 13
ENGINE MAINTENANCE 14
Checking Drive Belts 14
Changing Engine Coolant 15
-DRAINING ENGINE COOLANT- 15
-REFILLING ENGINE COOLANT- 16
-FLUSHING COOLING SYSTEM- 16
Checking Fuel Lines 17
Changing Fuel Filter 17
WITH CONSULT-II 17
WITHOUT CONSULT-II 18
Changing Air Cleaner Filter 18
VISCOUS PAPER TYPE 18
Changing Engine Oil 18
Changing Oil Filter 19
Changing Spark Plugs 20
Checking EVAP Vapor Lines 21
CHASSIS AND BODY MAINTENANCE 22
Checking Exhaust System 22
Checking Clutch Fluid Level and Leaks 22
Checking M/T Oil 22
Changing M/T Oil 22
Checking A/T Fluid 23
Changing A/T Fluid 23
Checking Part Time 4WD Transfer Fluid 24
Changing Part Time 4WD Transfer Fluid 24
Checking All-mode 4WD Transfer Fluid 24
Changing All-mode 4WD Transfer Fluid 24
Checking Propeller Shaft 25
Greasing Propeller Shaft 25
Checking Differential Gear Oil 25
Changing Differential Gear Oil 26
LIMITED-SLIP DIFFERENTIAL GEAR 26
Balancing Wheels 26
Tire Rotation 26
Checking Brake Fluid Level and Leaks 27
Checking Brake Lines and Cables 27
Checking Disc Brake 27
ROTOR 27
CALIPER 27
PAD 27
Checking Drum Brake 28
WHEEL CYLINDER 28
DRUM 28
LINING 28
TEMPORARY METHOD FOR CHECKING LINING WEAR 28
Checking Steering Gear, Linkage and Transfer Gear 28
STEERING GEAR 28
STEERING LINKAGE 28
STEERING TRANSFER GEAR 28
Checking Power Steering Fluid and Lines 29
CHECKING FLUID LEVEL 29
CHECKING LINES 29
Axle and Suspension Parts 29
FRONT WHEEL BEARING 30
Drive Shaft 30
Lubricating Locks, Hinges and Hood Latches 30
Checking Seat Belts, Buckles, Retractors, Anchors and Adjusters 31

CONTENTS (Cont'd)

SERVICE DATA AND SPECIFICATIONS (SDS) 32
Engine Maintenance 32
DRIVE BELT DEFLECTION 32
DRIVE BELT TENSION 32
SPARK PLUG (PLATINUM-TIPPED TYPE) 32
Chassis and Body Maintenance 32
WHEEL BALANCE 32

Precautions for Supplemental Restraint System (SRS) “AIR BAG” and “SEAT BELT PRE-TENSIONER”

NAMA0001

The Supplemental Restraint System such as “AIR BAG” and “SEAT BELT PRE-TENSIONER” used along with a seat belt, helps to reduce the risk or severity of injury to the driver and front passenger for certain types of collision. The SRS composition which is available to NISSAN MODEL R50 is as follows:

- For a frontal collision
  The Supplemental Restraint System consists of driver air bag module (located in the center of the steering wheel), front passenger air bag module (located on the instrument panel on passenger side), seat belt pre-tensioners, a diagnosis sensor unit, warning lamp, wiring harness and spiral cable.
- For a side collision
  The Supplemental Restraint System consists of side air bag module (located in the outer side of front seat), side curtain air bag module (locating in the headlining side of front and rear seat), satellite sensor, diagnosis sensor unit (one of components of air bags for a frontal collision), wiring harness, warning lamp (one of components of air bags for a frontal collision).

WARNING:

- **To avoid rendering the SRS inoperative, which could increase the risk of personal injury or death in the event of a collision which would result in air bag inflation, all maintenance must be performed by an authorized NISSAN dealer.**
- **Improper maintenance, including incorrect removal and installation of the SRS, can lead to personal injury caused by unintentional activation of the system.**
- **Do not use electrical test equipment on any circuit related to the SRS unless instructed to in this Service Manual. SRS wiring harnesses can be identified by yellow and/or orange harness connector (and by yellow harness protector or yellow insulation tape before the harness connectors).**

Special Service Tool

NAMA0002

The actual shapes of Kent-Moore tools may differ from those of special service tools illustrated here.

Tool number (Kent-Moore No.) Tool name	Description
KV10115801 (J38956) Oil filter cap wrench	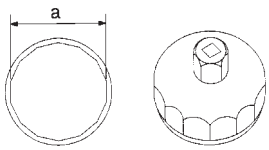 NT375 Removing oil filter **a: 64.3 mm (2.531 in)**

Commercial Service Tool

NAMA0045

Tool name (Kent-Moore No.)	Description
Belt tension gauge (BT3373-F)	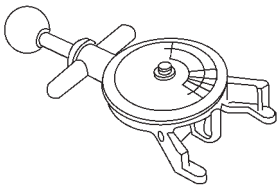 AMA126 Checking drive belt tension

GENERAL MAINTENANCE

General maintenance includes those items which should be checked during the normal day-to-day operation of the vehicle. They are essential if the vehicle is to continue operating properly. The owners can perform checks and inspections themselves or they can have their NISSAN dealers do them.

OUTSIDE THE VEHICLE

The maintenance items listed here should be performed from time to time, unless otherwise specified.

Item		Reference page
Tires	Check the pressure with a gauge, including the spare, at least once a month and always prior to a long distance trips. Adjust to the specified pressure if necessary. Check carefully for damage, cuts or excessive wear.	—
Wheel nuts	When checking the tires, make sure no nuts are missing, and check for any loose nuts. Tighten if necessary.	—
Tire rotation	Tires should be rotated every 12,000 km (7,500 miles).	MA-26
Wheel alignment and balance	If the vehicle pulls to either side while driving on a straight and level road, or if you detect uneven or abnormal tire wear, there may be a need for wheel alignment. If the steering wheel or seat vibrates at normal highway speeds, wheel balancing may be needed.	MA-26, SU-8, “Front Wheel Alignment”
Windshield wiper blades	Check for cracks or wear if they do not wipe properly.	—
Doors and engine hood	Check that all doors and the engine hood operate smoothly as well as the trunk lid and back hatch. Also make sure that all latches lock securely. Lubricate if necessary. Make sure that the secondary latch keeps the hood from opening when the primary latch is released. When driving in areas using road salt or other corrosive materials, check lubrication frequently.	MA-30

INSIDE THE VEHICLE

The maintenance items listed here should be checked on a regular basis, such as when performing periodic maintenance, cleaning the vehicle, etc.

Item		Reference page
Lamps	Make sure that the headlamps, stop lamps, tail lamps, turn signal lamps, and other lamps are all operating properly and installed securely. Also check headlamp aim.	—
Warning lamps and buzzers/chimes	Make sure that all warning lamps and buzzers/chimes are operating properly.	—
Windshield wiper and washer	Check that the wipers and washer operate properly and that the wipers do not streak.	—
Windshield defroster	Check that the air comes out of the defroster outlets properly and in sufficient quantity when operating the heater or air conditioning.	—
Steering wheel	Check that it has the specified play. Be sure to check for changes in the steering condition, such as excessive play, hard steering or strange noises. **Free play: Less than 35 mm (1.38 in)**	—
Seats	Check seat position controls such as seat adjusters, seatback recliner, etc. to make sure they operate smoothly and that all latches lock securely in every position. Check that the head restrains move up and down smoothly and that the locks (if equipped) hold securely in all latched positions. Check that the latches lock securely for folding-down rear seatbacks.	—
Seat belts	Check that all parts of the seat belt system (e.g. buckles, anchors, adjusters and retractors) operate properly and smoothly and are installed securely. Check the belt webbing for cuts, fraying, wear or damage.	MA-31
Clutch pedal	Make sure the pedal operates smoothly and check that it has the proper free play.	CL-6, “Adjusting Clutch Pedal”
Brakes	Check that the brake does not pull the vehicle to one side when applied.	—

Item		Reference page
Brake pedal and booster	Check the pedal for smooth operation and make sure it has the proper distance under it when depressed fully. Check the brake booster function. Be sure to keep floor mats away from the pedal.	Refer to BR-13, “Brake Pedal and Bracket” and “Brake Booster”
Parking brake	Check that the lever has the proper travel and make sure that the vehicle is held securely on a fairly steep hill when only the parking brake is applied.	Refer to BR-31, “Parking Brake Control”
Automatic transmission “Park” mechanism	Check that the lock release button on the selector lever operates properly and smoothly. On a fairly steep hill check that the vehicle is held securely with the selector lever in the “P” position without applying any brakes.	—

UNDER THE HOOD AND VEHICLE

The maintenance items listed here should be checked periodically (e.g. each time you check the engine oil or refuel).

Item		Reference page
Windshield washer fluid	Check that there is adequate fluid in the tank.	—
Engine coolant level	Check the coolant level when the engine is cold.	MA-15
Radiator and hoses	Check the front of the radiator and clean off any dirt, insects, leaves, etc., that may have accumulated. Make sure the hoses have no cracks, deformation, deterioration or loose connections.	—
Brake and clutch fluid levels	Make sure that the brake and clutch fluid levels are between the “MAX” and “MIN” lines on the reservoir.	MA-22, 27
Battery	Check the fluid level in each cell. It should be between the “MAX” and “MIN” lines. Vehicles operated in high temperatures or under severe conditions require frequent checks of the battery fluid level.	—
Engine drive belts	Make sure that no belt is frayed, worn, cracked or oily.	MA-14
Engine oil level	Check the level on the dipstick after parking the vehicle on a level spot and turning off the engine.	MA-18
Power steering fluid level and lines	Check the level on the dipstick with the engine off. Check the lines for improper attachment, leaks, cracks, etc.	MA-29
Automatic transmission fluid level	Check the level on the dipstick after putting the selector lever in “P” with the engine idling.	MA-23
Exhaust system	Make sure there are no loose supports, cracks or holes. If the sound of the exhaust seems unusual or there is a smell of exhaust fumes, immediately locate the trouble and correct it.	MA-22
Underbody	The underbody is frequently exposed to corrosive substances such as those used on icy roads or to control dust. It is very important to remove these substances, otherwise rust will form on the floor pan, frame, fuel lines and around the exhaust system. At the end of winter, the underbody should be thoroughly flushed with plain water, being careful to clean those areas where mud and dirt can easily accumulate.	—
Fluid leaks	Check under the vehicle for fuel, oil, water or other fluid leaks after the vehicle has been parked for a while. Water dripping from the air conditioner after use is normal. If you should notice any leaks or gasoline fumes are evident, check for the cause and correct it immediately.	—

PERIODIC MAINTENANCE

Two different maintenance schedules are provided, and should be used, depending upon the conditions in which the vehicle is mainly operated. **After 60,000 miles (96,000 km) or 48 months, continue the periodic maintenance at the same mileage/time intervals.**

Schedule 1	Follow Periodic Maintenance Schedule 1 if your driving habits frequently includes one or more of the following driving conditions: ● Repeated short trips of less than 5 miles (8 km). ● Repeated short trips of less than 10 miles (16 km) with outside temperatures remaining below freezing. ● Operating in hot weather in stop-and-go “rush hour” traffic. ● Extensive idling and/or low speed driving for long distances, such as police, taxi or door-to-door delivery use. ● Driving in dusty conditions. ● Driving on rough, muddy, or salt spread roads. ● Towing a trailer, using a camper or a car-top carrier.	Emission Control System Maintenance	MA-8
		Chassis and Body Maintenance	MA-9
Schedule 2	Follow Periodic Maintenance Schedule 2 if none of the driving conditions shown in Schedule 1 apply to your driving habits.	Emission Control System Maintenance	MA-10
		Chassis and Body Maintenance	MA-11

Maintenance for off-road driving (4x4 only)

Whenever you drive off-road through sand, mud or water, more frequent maintenance may be required of the following items:

▲ Brake pads and discs
▲ Brake lining and drums
▲ Brake lines and hoses
▲ Wheel bearing grease
▲ Differential, transmission and transfer oil
▲ Steering linkage
▲ Propeller shaft and drive shafts
▲ Air cleaner filter
▲ Clutch housing

EMISSION CONTROL SYSTEM MAINTENANCE

Schedule 1

Abbreviations: R = Replace. I = Inspect. Correct or replace if necessary. [ ]: At the mileage intervals only

MAINTENANCE OPERATION		MAINTENANCE INTERVAL																Reference Section - Page or - Content Title
Perform at number of miles, kilometers or months, whichever comes first.	Miles x 1,000 (km x 1,000) Months	3.75 (6) 3	7.5 (12) 6	11.25 (18) 9	15 (24) 12	18.75 (30) 15	22.5 (36) 18	26.25 (42) 21	30 (48) 24	33.75 (54) 27	37.5 (60) 30	41.25 (66) 33	45 (72) 36	48.75 (78) 39	52.5 (84) 42	56.25 (90) 45	60 (96) 48	
Drive belts									I*								I*	MA-14
Air cleaner filter	NOTE (1)								[R]								[R]	MA-18
EVAP vapor lines									I*								I*	MA-21
Fuel lines									I*								I*	MA-17
Fuel filter*	NOTE (2)																	MA-17
Engine coolant	NOTE (3)																R*	MA-15
Engine oil		R	R	R	R	R	R	R	R	R	R	R	R	R	R	R	R	MA-18
Engine oil filter (Use part No. 15208-31U00 or equivalent.)		R	R	R	R	R	R	R	R	R	R	R	R	R	R	R	R	MA-19
Spark plugs (PLATINUM-TIPPED type)		Replace every 105,000 miles (169,000 km)																MA-20
Intake & exhaust valve clearance*	NOTE (4)																	EM-58

NOTE:

(1) If operating mainly in dusty conditions, more frequent maintenance may be required.

(2) When the filter becomes clogged, the vehicle speed cannot be increased as the driver wishes. In such an event, replace the filter.

(3) After 60,000 miles (96,000 km) or 48 months, replace every 30,000 miles (48,000 km) or 24 months.

(4) If valve noise increases, inspect valve clearance.

★ Maintenance items and intervals with "*" are recommended by NISSAN for reliable vehicle operation. The owner need not perform such maintenance in order to maintain the emission warranty or manufacturer recall liability. Other maintenance items and intervals are required.

NAMA0004S01
NAMA0004S0101

Schedule 1 (Cont'd)

Abbreviations: R = Replace. I = Inspect. Correct or replace if necessary. L = Lubricate.

MAINTENANCE OPERATION		MAINTENANCE INTERVAL																Reference Section - Page or - Content Title
Perform at number of miles, kilometers or months, whichever comes first.	Miles x 1,000 (km x 1,000) Months	3.75 (6) 3	7.5 (12) 6	11.25 (18) 9	15 (24) 12	18.75 (30) 15	22.5 (36) 18	26.25 (42) 21	30 (48) 24	33.75 (54) 27	37.5 (60) 30	41.25 (66) 33	45 (72) 36	48.75 (78) 39	52.5 (84) 42	56.25 (90) 45	60 (96) 48	
Brake lines & cables					I				I				I				I	MA-27
Brake pads, rotors, drums & linings			I		I		I		I		I		I		I		I	MA-27, 28
Automatic transmission fluid, (all-mode 4WD) transfer fluid, manual transmission oil & differential gear oil (exc. LSD)	NOTE (1)				I				I				I				I	MA-22, 23, 24, 25
LSD gear oil	NOTE (1)				I				R				I				R	MA-26
Steering gear, linkage & transfer gear, axle & suspension parts			I		I		I		I		I		I		I		I	MA-28 MA-29
Tire rotation	NOTE (2)																	MA-5 MA-26
Drive shaft boots & propeller shaft (4x4)			I		I		I		I		I		I		I		I	MA-30 MA-25
Propeller shaft	NOTE (3)		L		L		L		L		L		L		L		L	MA-25
"Front wheel bearing grease"	4x2								I								I	MA-30
Front wheel bearing grease	4x4				I				R				I				R	MA-30
Exhaust system			I		I		I		I		I		I		I		I	MA-22

NOTE:

(1) If towing a trailer, using a camper or a car-top carrier, or driving on rough or muddy roads, change (not just inspect) oil (exc. LSD) at every 30,000 miles (48,000 km) or 24 months, and change LSD gear oil every 15,000 miles (24,000 km) or 12 months.

(2) Refer to "Tire rotation" under the "GENERAL MAINTENANCE" heading earlier in this section.

(3) The propeller shaft should be re-greased after being immersed in water.

NAMA0004S0102

EMISSION CONTROL SYSTEM MAINTENANCE

Schedule 2

NAMA0004S02

NAMA0004S0201

Abbreviations: R = Replace. I = Inspect. Correct or replace if necessary. [ ]: At the mileage intervals only

MAINTENANCE OPERATION		MAINTENANCE INTERVAL								Reference Section - Page or - Content Title
Perform at number of miles, kilometers or months, whichever comes first.	Miles x 1,000 (km x 1,000) Months	7.5 (12) 6	15 (24) 12	22.5 (36) 18	30 (48) 24	37.5 (60) 30	45 (72) 36	52.5 (84) 42	60 (96) 48	
Drive belts					I*				I*	MA-14
Air cleaner filter					[R]				[R]	MA-18
EVAP vapor lines					I*				I*	MA-21
Fuel lines					I*				I*	MA-17
Fuel filter*	NOTE (1)									MA-17
Engine coolant	NOTE (2)								R*	MA-15
Engine oil		R	R	R	R	R	R	R	R	MA-18
Engine oil filter (Use part No. 15208-31U00 or equivalent.)		R	R	R	R	R	R	R	R	MA-19
Spark plugs (PLATINUM-TIPPED type)		Replace every 105,000 miles (169,000 km)								MA-20
Intake & exhaust valve clearance*	NOTE (3)									EM-58

NOTE:

(1) When the filter becomes clogged, the vehicle speed cannot be increased as the driver wishes. In such an event, replace the filter.

(2) After 60,000 miles (96,000 km) or 48 months, replace every 30,000 miles (48,000 km) or 24 months.

(3) If valve noise increases, inspect valve clearance.

★ Maintenance items and intervals with "*" are recommended by NISSAN for reliable vehicle operation. The owner need not perform such maintenance in order to maintain the emission warranty or manufacturer recall liability. Other maintenance items and intervals are required.

Abbreviations: R = Replace. I = Inspect. Correct or replace if necessary. L = Lubricate.

MAINTENANCE OPERATION		MAINTENANCE INTERVAL								Reference Section - Page or - Content Title
Perform at number of miles, kilometers or months, whichever comes first.	Miles x 1,000 (km x 1,000) Months	7.5 (12) 6	15 (24) 12	22.5 (36) 18	30 (48) 24	37.5 (60) 30	45 (72) 36	52.5 (84) 42	60 (96) 48	
Brake lines & cables			I		I		I		I	MA-27
Brake pads, rotors, drums & linings			I		I		I		I	MA-27, 28
Automatic transmission fluid, (all-mode 4WD) transfer fluid, manual transmission oil & differential gear oil (exc. LSD)			I		I		I		I	MA-22, 23, 24, 25
LSD gear oil			I		R		I		R	MA-26
Steering gear, linkage & transfer gear, axle & suspension parts					I				I	MA-28 MA-29
Tire rotation	NOTE (1)									MA-5 MA-26
Drive shaft boots & propeller shaft (4x4)			I		I		I		I	MA-30 MA-25
Propeller shaft	NOTE (2)		L		L		L		L	MA-25
Front wheel bearing grease (4x2)					I				I	MA-30
Front wheel bearing grease (4x4)			I		R		I		R	MA-30
Exhaust system					I				I	MA-22

NOTE:

(1) Refer to “Tire rotation” under the “GENERAL MAINTENANCE” heading earlier in this section.

(2) The propeller shaft should be re-greased after being immersed in water.

Schedule 2 (Cont'd)

NAMA0004S0202

Fluids and Lubricants

NAMA0005S01

			Capacity (Approximate)			Recommended Fluids/Lubricants
			US measure	Imp measure	Liter	
Engine oil	Drain and refill	With oil filter	5-1/4 qt	4-3/8 qt	5.0	● API Certification Mark*1 ● API grade SG/SH, Energy Conserving I & II or API grade SJ or SL, Energy Conserving*1 ● ILSAC grade GF-I, GF-II & GF-III*1
		Without oil filter	5-1/8 qt	4-1/4 qt	4.8	
	Dry engine (Engine overhaul)		7-1/4 qt	6 qt	6.8	
Cooling system (With reservoir)			9-3/4 qt	8-1/8 qt	9.2	Genuine Nissan Long Life Antifreeze/ Coolant or equivalent
Manual transmission gear oil			10-3/4 pt	9 pt	5.1	API GL-4, Viscosity SAE 75W-85
Transfer fluid	Part time 4WD model		2-3/8 qt	2 qt	2.2	API GL-4, viscosity SAE 75W-90 or Genuine Nissan MATIC D ATF or Canada NISSAN Automatic Transmission Fluid*2
	All-mode 4WD model		3-1/8 qt	2-5/8 qt	3.0	Genuine Nissan Matic D ATF (Continental U.S. and Alaska) or Canada NISSAN Automatic Transmission Fluid*2
Differential carrier gear oil	Front (4WD)		4 pt	3-3/8 pt	1.9	Standard differential gear: API GL-5, viscosity SAE 80W-90*4 Limited-slip differential (LSD) gear: Use only LSD gear oil API GL-5 and SAE 80W-90*4 approved for NISSAN LSD*5.
	Rear		5-1/8 pt	4-1/4 pt	2.4	
Automatic transmission fluid	2WD		9 qt	7-1/2 qt	8.5	Genuine Nissan Matic D ATF (Continental U.S. and Alaska) or Canada NISSAN Automatic Transmission Fluid*2
	4WD					
Power steering fluid (PSF)			—	—	—	Genuine NISSAN PSF or equivalent*6
Brake and clutch fluid			—	—	—	Genuine Nissan Super Heavy Duty Brake Fluid*3 or equivalent DOT 3 (U.S. FMVSS No. 116)
Propeller shaft grease			—	—	—	NLGI No. 2 (Lithium soap base)
Multi-purpose grease			—	—	—	NLGI No. 2 (Lithium soap base)
Windshield washer fluid			—	—	—	Genuine Nissan Windshield Washer Concentrate Cleaner & Antifreeze Fluid or equivalent

*1: For further details, see “SAE Viscosity Number”.

*2: DEXRON™ III/MERCON™ or equivalent may also be used. Outside the continental United States and Alaska contact a NISSAN dealership for more information regarding suitable fluids, including recommended brand(s) of DEXRON™ III/MERCON™ Automatic Transmission Fluid.

*3: Available in mainland USA through your NISSAN dealer.

*4: For hot areas, viscosity SAE 90 is suitable for ambient temperatures above 0°C (32°F).

*5: Contact a NISSAN dealer for a list of approved oils.

*6: For Canada, NISSAN Automatic Transmission Fluid (ATF), DEXRON™ III/MERCON™ or equivalent ATF may also be used.

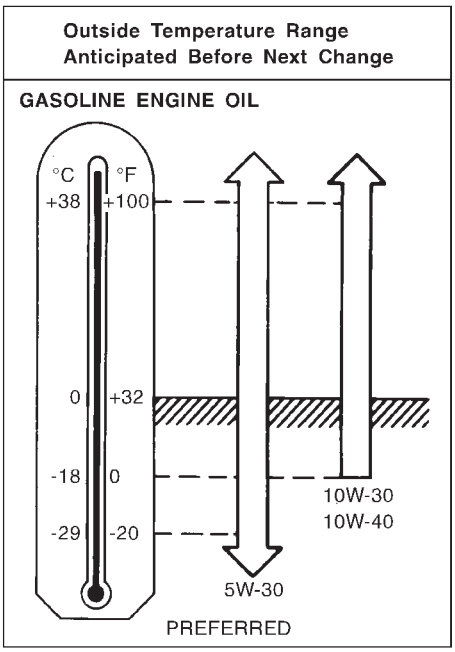

MMA117AA

SAE Viscosity Number

NAMA0005S02

GASOLINE ENGINE OIL

NAMA0005S0201

SAE 5W-30 viscosity oil is preferred for all ambient temperatures. SAE 10W-30, 10W-40 viscosity oil may be used if the ambient temperature is above −18°C (0°F).

Outside temperature down to		Anti-freeze	Demineralized water or distilled water
°C	°F		
–35	–30	50%	50%

SMA947CA

Anti-freeze Coolant Mixture Ratio

NAMA0005S03

The engine cooling system is filled at the factory with a high-quality, year-round, anti-freeze coolant solution. The anti-freeze solution contains rust and corrosion inhibitors. Therefore, additional cooling system additives are not necessary.

CAUTION:

When adding or replacing coolant, be sure to use only a Genuine Nissan Long Life Antifreeze/Coolant or equivalent with the proper mixture ratio of 50% anti-freeze and 50% demineralized water/distilled water. Other types of coolant solutions may damage your engine cooling system.

Checking Drive Belts

NAMA0049

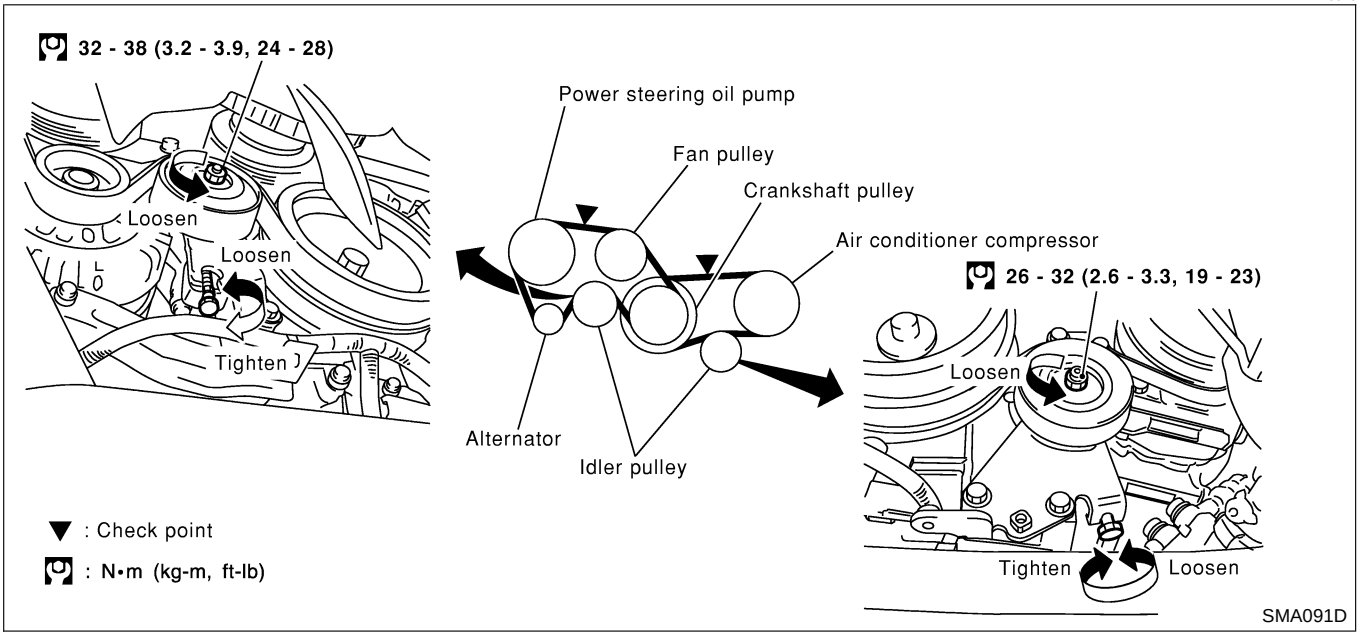

1. Inspect belt for cracks, fraying, wear and oil. If necessary, replace.
2. Inspect drive belt deflection or tension at a point on the belt midway between pulleys.
3. Check belt tension using belt tension gauge (BT3373-F or equivalent).

Inspect drive belt deflection or tension when engine is cold. Adjust if belt deflections exceed the limit or if belt tension is not within specifications.

Belt deflection and tension

	Deflection adjustment		Unit: mm (in)	Tension adjustment *1		Unit: N (kg, lb)
	Used belt		New belt	Used belt		New belt
	Limit	After adjustment		Limit	After adjustment	
Alternator Power steering oil pump Fan	7 (0.28)	4 - 5 (0.16 - 0.20)	3.5 - 4.5 (0.138 - 0.177)	294 (30, 66)	730 - 818 (74.4 - 83.5, 164 - 184)	838 - 926 (85.4 - 94.5, 188 - 208)
Air conditioner compressor	12 (0.47)	9 - 10 (0.35 - 0.39)	8 - 9 (0.31 - 0.35)	196 (20, 44)	348 - 436 (35.5 - 44.5, 78 - 98)	470 - 559 (47.9 - 57.0, 106 - 126)
Applied pushing force	98 N (10 kg, 22 lb)			—		

*1 If belt tension gauge cannot be installed at check points shown, check drive belt tension at a different location on the belt.

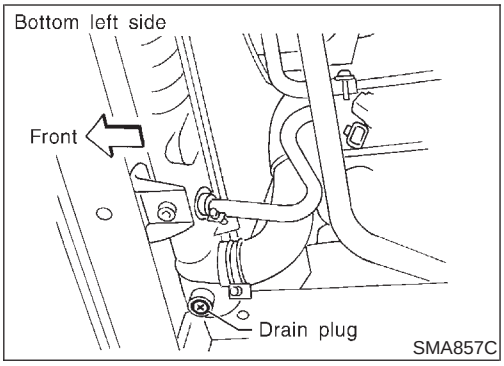

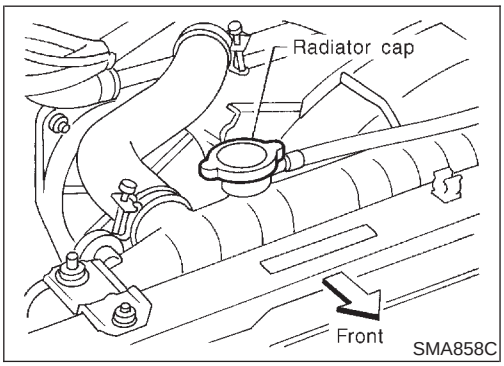

Changing Engine Coolant

NAMA0050

WARNING:

To avoid the danger of being scalded, never change the engine coolant when the engine is hot.

—DRAINING ENGINE COOLANT—

NAMA0050S01

1. Set air conditioning system as follows to prevent engine coolant from remaining in the system.
   a. Turn ignition switch “ON” and set temperature controller to maximum hot position.
   b. Wait 10 seconds before turning ignition switch “OFF”.
2. Open radiator drain plug at the bottom of radiator.
3. Remove radiator cap.

- **Be careful not to allow engine coolant to contact drive belts.**

When draining all the engine coolant in the system, also perform the following two steps.

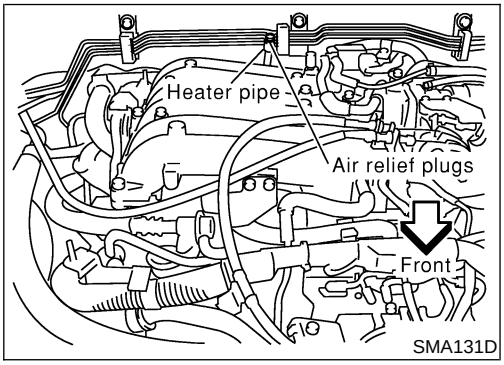

1) Open drain plugs on cylinder block. Refer to “Disassembly”, EM-67.
2) Open air relief plugs to drain engine coolant.

4. Remove reservoir tank, drain engine coolant and clean tank before installing.
5. Check drained engine coolant for contaminants such as rust, corrosion or discoloration. If contaminated flush engine cooling system, refer to “FLUSHING COOLING SYSTEM”, MA-16.

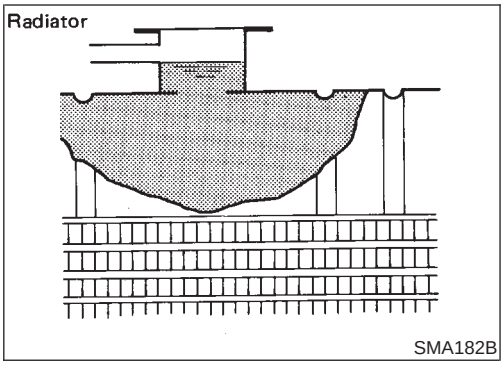

SMA182B

—REFILLING ENGINE COOLANT—

NAMA0050S02

1. Install reservoir tank and radiator drain plug.
2. Close and tighten cylinder block drain plugs securely if removed. Refer to "Assembly", EM-76.
3. Fill radiator slowly with engine coolant.
   If air relief plug was removed, fill until engine coolant spills from the air relief plug, then install air relief plug.

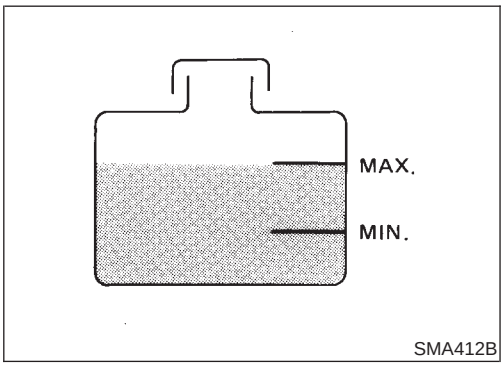

SMA412B

4. Fill reservoir tank if removed with engine coolant up to the MAX level and install radiator cap.

Use Genuine Nissan Long Life Antifreeze/Coolant or equivalent mixed with demineralized water/distilled water.
For engine coolant mixture ratio, refer to "RECOMMENDED FLUIDS AND LUBRICANTS", MA-13.

Coolant capacity (Without reservoir tank):
8.6 ℓ (9-1/8 US qt, 7-5/8 Imp qt)
Reservoir tank capacity (for MAX level):
0.6 ℓ (5/8 US qt, 1/2 Imp qt)

Pour engine coolant through engine coolant filler neck slowly to allow air in system to escape.

5. Warm up engine to normal operating temperature with radiator cap installed.
6. Run engine at 2,500 rpm for 10 seconds and return to idle speed.

- Repeat 2 or 3 times.

Watch engine coolant temperature gauge so as not to overheat the engine.

7. Stop engine and cool it down.

- Cool down using a fan to reduce the time.

8. Refill reservoir tank to Max line with engine coolant.
9. Repeat steps 5 through step 8 two or more times until coolant level no longer drops.
10. Check cooling system for leaks with engine running.
11. Warm up engine, and check for sound of engine coolant flow while running engine from idle up to 3,000 rpm with heater temperature control set at several positions between COOL and HOT.

- Sound may be noticeable at heater water cock.

12. If sound is heard, bleed air from cooling system by repeating steps 5 through 8 until engine coolant level no longer drops.

- **Clean excess engine coolant from engine.**

—FLUSHING COOLING SYSTEM—

NAMA0050S03

1. Open air relief plug.
2. Fill radiator with water until water spills from the air relief holes, then close air relief plugs. Fill radiator and reservoir tank with water and reinstall radiator cap.
3. Run engine and warm it up to normal operating temperature.
4. Rev engine two or three times under no-load.
5. Stop engine and wait until it cools down.
6. Drain water.

7. Repeat steps 1 through 6 until clear water begins to drain from radiator.

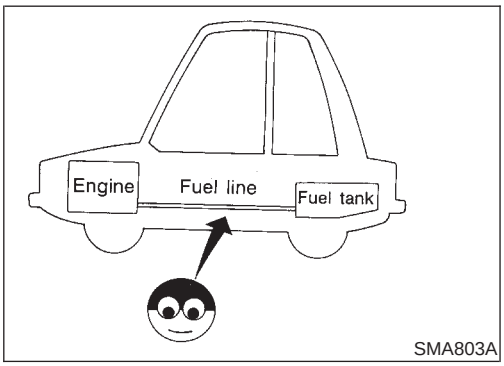

Checking Fuel Lines

NAMA0051

Inspect fuel lines and tank for improper attachment, leaks, cracks, damage, loose connections, chafing or deterioration.
If necessary, repair or replace faulty parts.

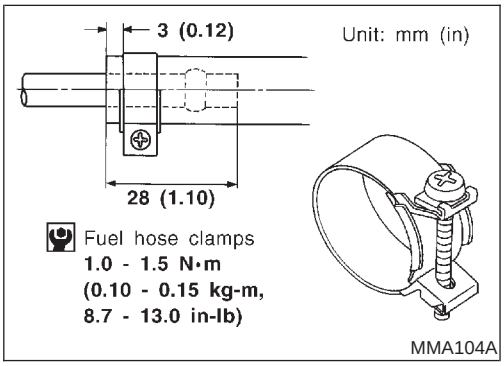

CAUTION:
Tighten high-pressure rubber hose clamp so that clamp end is 3 mm (0.12 in) from hose end.
Tightening torque specifications are the same for all rubber hose clamps.
Ensure that screw does not contact adjacent parts.

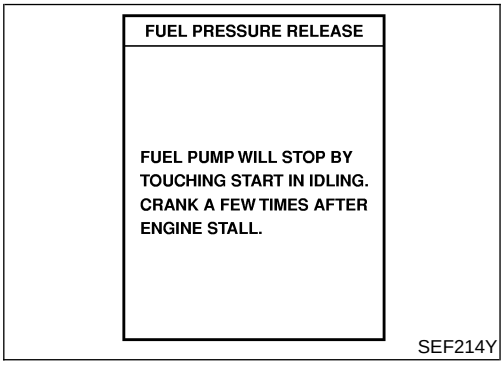

Changing Fuel Filter

NAMA0052

WARNING:
Before removing fuel filter, release fuel pressure from fuel line.

WITH CONSULT-II

NAMA0052S01

1. Turn ignition switch "ON".
2. Perform "FUEL PRESSURE RELEASE" in "WORK SUPPORT" mode with CONSULT-II.
3. Start engine.
4. After engine stalls, crank engine two or three times to release all fuel pressure.
5. Turn ignition switch "OFF".

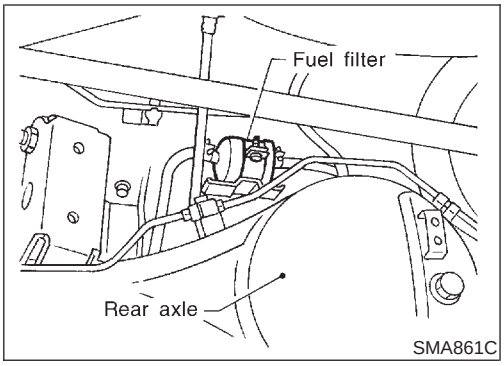

6. Loosen fuel hose clamps.
7. Replace fuel filter.

- **Be careful not to spill fuel over engine compartment. Place a shop towel to absorb fuel.**
- **Use a high-pressure type fuel filter. Do not use a synthetic resinous fuel filter.**
- **When tightening fuel hose clamps, refer to "Checking Fuel Lines".**

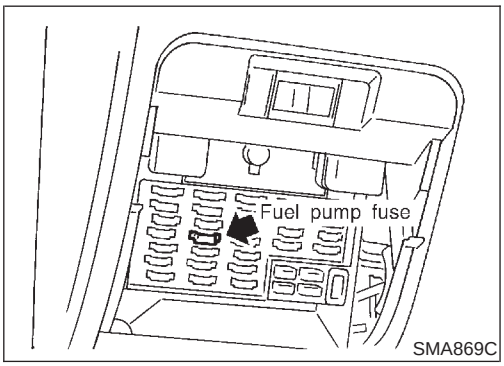

WITHOUT CONSULT-II

NAMA0052S02

1. Remove fuel pump fuse located in fuse box.
2. Start engine.
3. After engine stalls, crank it two or three times to release all fuel pressure.
4. Turn ignition switch "OFF" and install fuel pump fuse.

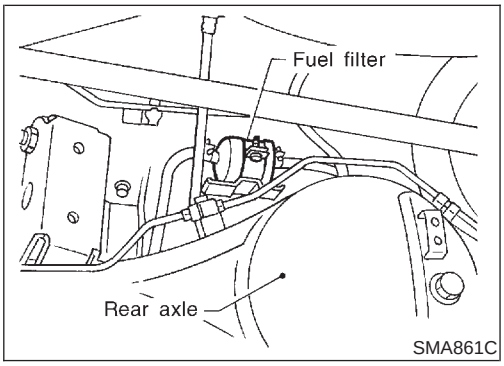

5. Loosen fuel hose clamps.
6. Replace fuel filter.

- **Be careful not to spill fuel over engine compartment. Place a shop towel to absorb fuel.**
- **Use a high-pressure type fuel filter. Do not use a synthetic resinous fuel filter.**
- **When tightening fuel hose clamps, refer to "Checking Fuel Lines".**

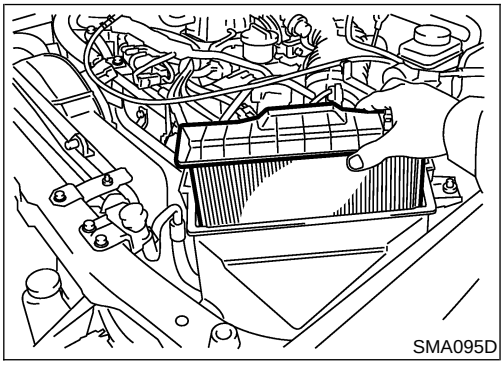

Changing Air Cleaner Filter

NAMA0053

VISCOUS PAPER TYPE

NAMA0053S01

The viscous paper type filter does not need cleaning between replacement intervals.

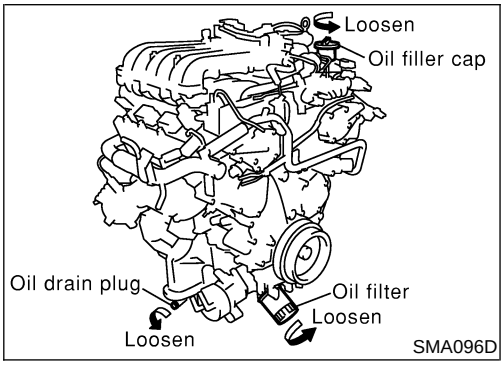

Changing Engine Oil

NAMA0054

WARNING:

- **Be careful not to burn yourself, as the engine oil is hot.**
- **Prolonged and repeated contact with used engine oil may cause skin cancer; try to avoid direct skin contact with used oil. If skin contact is made, wash thoroughly with soap or hand cleaner as soon as possible.**

1. Warm up engine, and check for oil leakage from engine components.
2. Stop engine and wait for more than 10 minutes.
3. Remove drain plug and oil filler cap.

4. Drain oil and refill with new engine oil.

Oil specification and viscosity

- Refer to MA-12, "RECOMMENDED FLUIDS AND LUBRICANTS".

Oil capacity (Approximately):

Unit: ℓ (US qt, Imp qt)

Drain and refill	With oil filter change	5.0 (5-1/4, 4-3/8)
	Without oil filter change	4.8 (5-1/8, 4-1/4)
Dry engine (engine overhaul)		6.8 (7-1/4, 6)

CAUTION:

- **Be sure to clean drain plug and install with new washer.**
  Oil pan drain plug:
  : 29.4 - 39.2 N·m (3.0 - 4.0 kg-m, 22 - 29 ft-lb)
- **The refill capacity depends on the oil temperature and drain time. Use these specifications for reference only. Always use the dipstick to determine when the proper amount of oil is in the engine.**

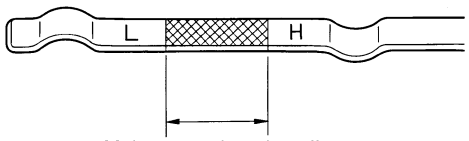

Make sure that the oil level is between "L" and "H".

JMA122D

5. Warm up engine and check area around drain plug and oil filter for oil leakage.
6. Stop engine and wait for more than 10 minutes.
7. Check oil level.

Changing Oil Filter

NAMA0055

1. Remove oil filter with Tool.

WARNING:

Be careful not to burn yourself, as the engine and engine oil are hot.

The filter is a full-flow cartridge type and is provided with a relief valve.

Refer to LC-8, "Oil Filter".

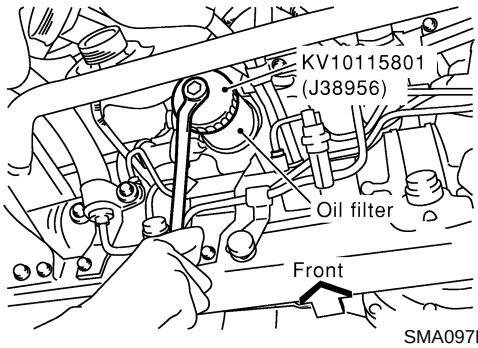

SMA097D

2. Clean oil filter mounting surface on cylinder block. Coat rubber seal of new oil filter with engine oil.

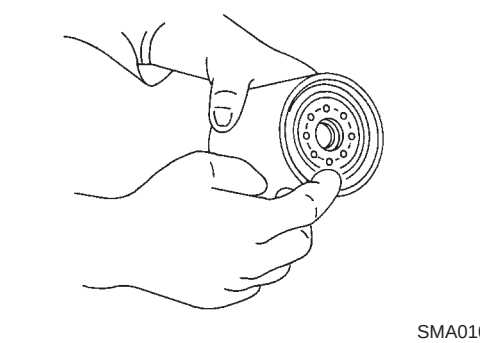

SMA010

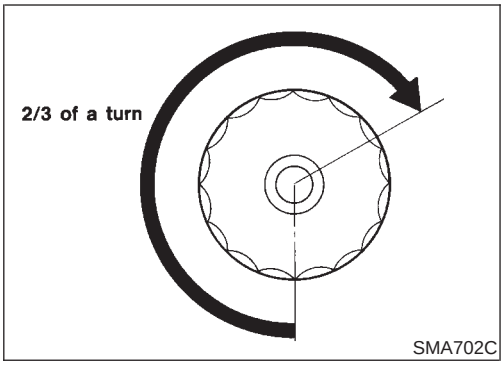

3. Screw in the oil filter until a slight resistance is felt, then tighten an additional 2/3 turn.
4. Add engine oil.

Refer to MA-18, "Changing Engine Oil".

- **Clean excess oil from engine.**

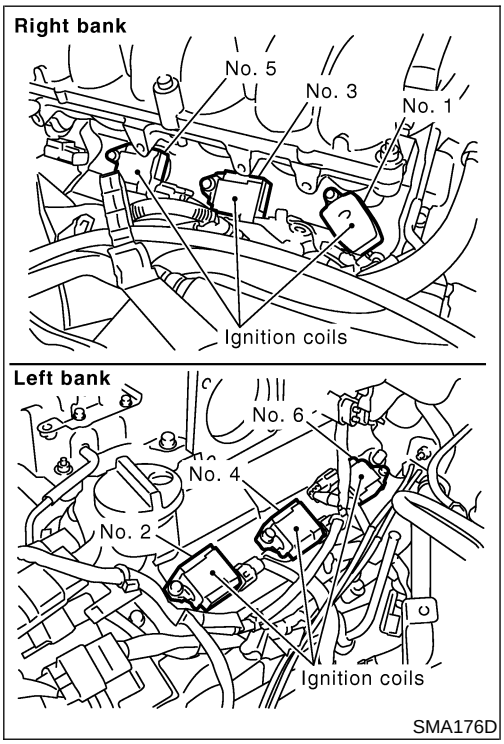

Changing Spark Plugs

NAMA0056

1. Remove engine cover.
2. Remove air duct with air cleaner assembly.
3. Disconnect harness connectors and harness brackets around ignition coil sides.
4. Remove electric throttle control actuator. (Only when removing the No. 4 cylinder spark plug)
5. Disconnect ignition coil harness connectors.
6. Loosen ignition coil fixing bolts and pull out coil from rocker cover.

Ignition coil:

: 8.5 - 10.8 N·m (0.87 - 1.1 kg-m, 76 - 95 in-lb)

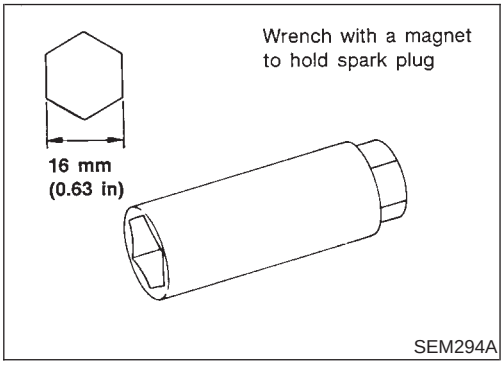

7. Check type and gap of new spark plug.

Spark plug type (Platinum-tipped type):

	Symbol	Make
Standard type	PLFR5A-11	NGK
Cold type	PLFR6A-11	NGK
Hot type	PLFR4A-11	NGK

Gap (Nominal): 1.1 mm (0.043 in)

Spark plug:

: 19.6 - 29.4 N·m (2.0 - 2.9 kg-m, 15 - 22 ft-lb)

Use standard type spark plug for normal condition.

The hot type spark plug is suitable when fouling may occur with the standard type spark plug such as:

- frequent engine starts
- low ambient temperatures

The cold type spark plug is suitable when spark knock may occur with the standard type spark plug such as:

- extended highway driving
- frequent high engine revolution

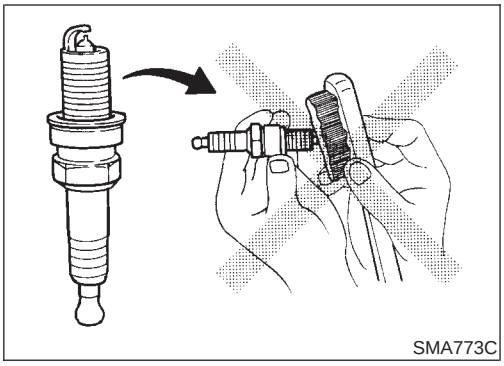
SMA773C

- **Do not use a wire brush for cleaning.**
- **If plug tip is covered with carbon, spark plug cleaner may be used.**
  - **Cleaner air pressure:**
    - **Less than 588 kPa (6 kg/cm^2, 85 psi)**
  - **Cleaning time:**
    - **Less than 20 seconds**

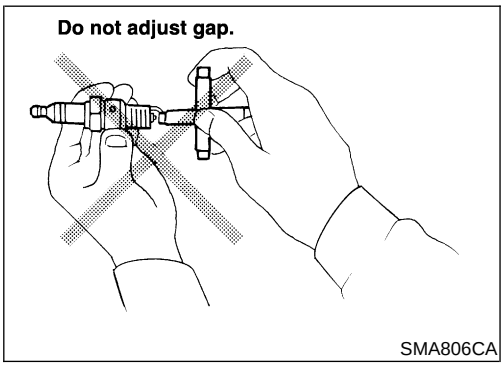

SMA806CA

- **Checking and adjusting plug gap is not required between change intervals.**

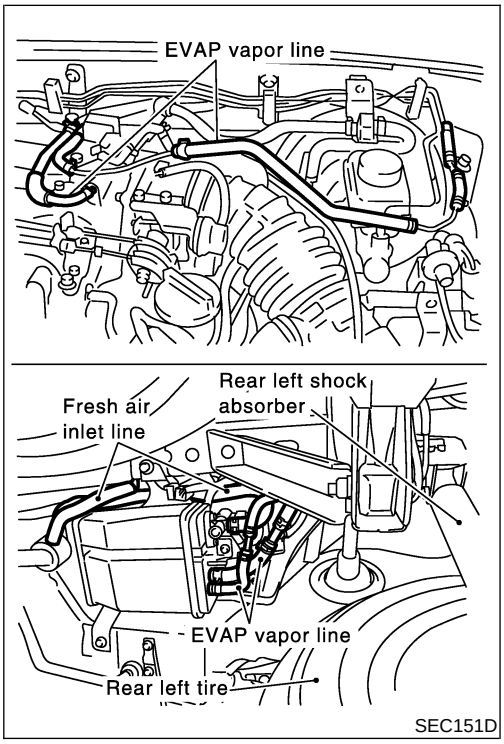

SEC151D

Checking EVAP Vapor Lines

NAMA0057

1. Visually inspect EVAP vapor lines for improper attachment, cracks, damage, loose connections, chafing or deterioration.
2. Inspect vacuum relief valve of fuel tank filler cap for clogging, sticking, etc.

Refer to EC-38, "EVAPORATIVE EMISSION SYSTEM".

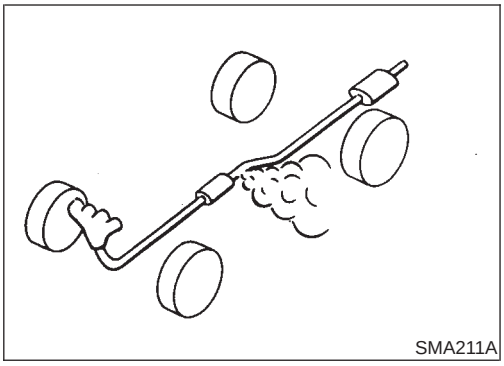
SMA211A

Checking Exhaust System

NAMA0019

Check exhaust pipes, muffler and mounting for improper attachment, leaks, cracks, damage, loose connections, chafing or deterioration.

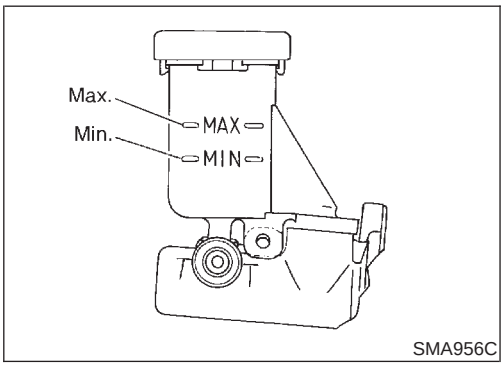

SMA956C

Checking Clutch Fluid Level and Leaks

NAMA0020

If fluid level is extremely low, check clutch system for leaks.

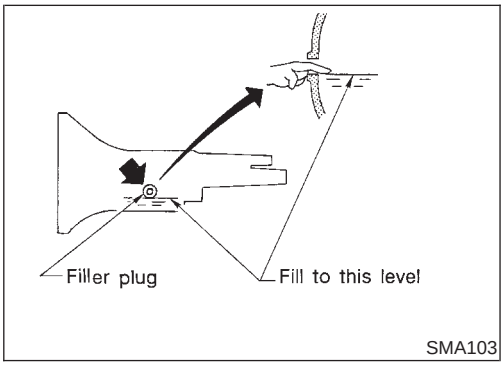

SMA103

Checking M/T Oil

NAMA0021

Check if oil is leaking from transmission or around it.

Changing M/T Oil

NAMA0022

1. Drain oil from drain plug and refill with new gear oil.
2. Check oil level from filler hole as shown in the figure.

Oil grade: API GL-4

Viscosity: Refer to "RECOMMENDED FLUIDS AND LUBRICANTS", MA-12.

Oil capacity: 5.1 ℓ (10-3/4 US pt, 9 Imp pt)

Filler plug and drain plug:
: 25 - 34 N·m (2.5 - 3.5 kg-m, 18 - 25 ft-lb)

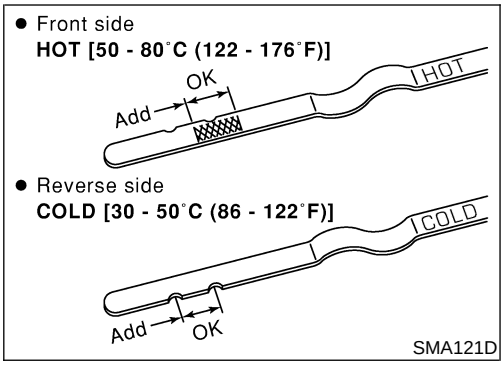

SMA121D

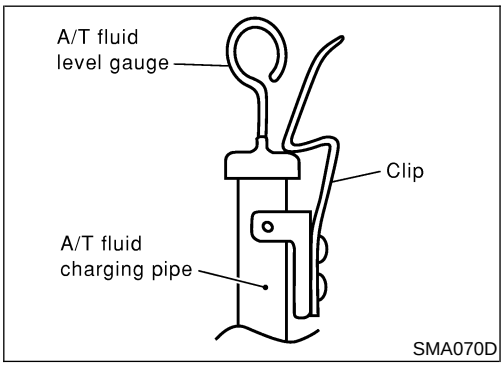

SMA070D

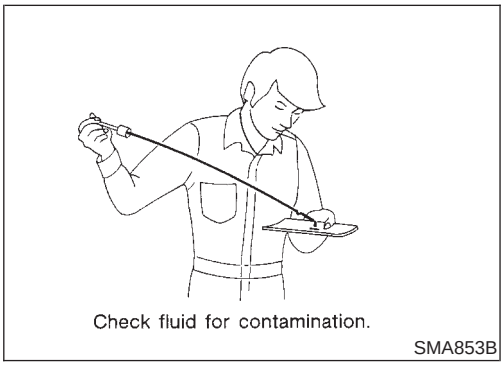

SMA853B

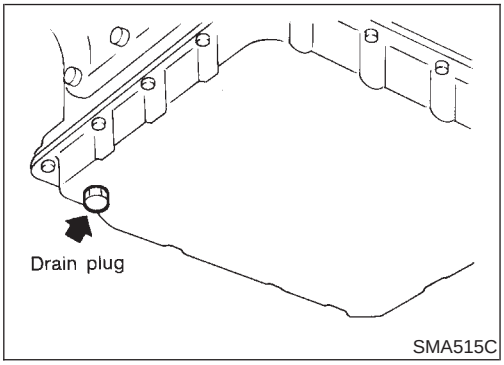

SMA515C

Checking A/T Fluid

NAMA0024

1. Warm up engine.
2. Check for fluid leakage.
3. Before driving, fluid level can be checked at fluid temperatures of 30 to 50°C (86 to 122°F) using “COLD” range on dipstick.

a. Park vehicle on level surface and set parking brake.
b. Start engine and move selector lever through each gear position. Leave selector lever in “P” position.
c. Check fluid level with engine idling.
d. Remove dipstick and note reading. If level is at low side of either range, and fluid to the charging pipe.
e. Re-insert dipstick into charging pipe as far as it will go.
f. Remove dipstick and note reading. If reading is at low side of range, add fluid to the charging pipe.

Do not overfill.

4. Drive vehicle for approximately 5 minutes in urban areas.
5. Re-check fluid level at fluid temperatures of 50 to 80°C (122 to 176°F) using “HOT” range on dipstick.

CAUTION:
Securely install A/T fluid level gauge.

6. Check fluid condition.

- If fluid is very dark or smells burned, refer to AT section for checking operation of A/T. Flush cooling system after repair of A/T.
- If A/T fluid contains frictional material (clutches, bands, etc.), replace radiator and flush cooler line using cleaning solvent and compressed air after repair of A/T. Refer to LC-22, “Radiator”.

Changing A/T Fluid

NAMA0025

1. Warm up A/T fluid.
2. Stop engine.
3. Drain A/T fluid from drain plug and refill with new A/T fluid. Always refill same volume with drained fluid.

Fluid grade:

Genuine Nissan Matic D ATF (Continental U.S. and Alaska) or Canada NISSAN Automatic Transmission Fluid. Refer to “RECOMMENDED FLUIDS AND LUBRICANTS”, MA-12.

Fluid capacity (With torque converter):

2WD, 4WD 8.5 ℓ (9 US qt, 7-1/2 Imp qt)

Drain plug:

: 29 - 39 N·m (3.0 - 4.0 kg-m, 22 - 29 ft-lb)

4. Run engine at idle speed for five minutes.
5. Check fluid level and condition. Refer to MA-23, “ Checking A/T Fluid”. If fluid is still dirty, repeat steps 2 through 5.

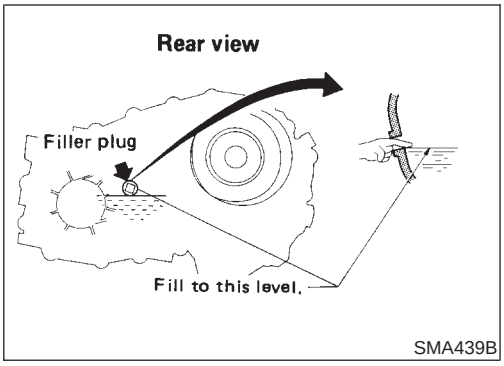

Checking Part Time 4WD Transfer Fluid

NAMA0026

Check for fluid leakage and fluid level.

A/T fluid is used for the transfer in the factory.
Never start engine while checking fluid level.

Filler plug:

: 25 - 34 N·m (2.5 - 3.5 kg-m, 18 - 25 ft-lb)

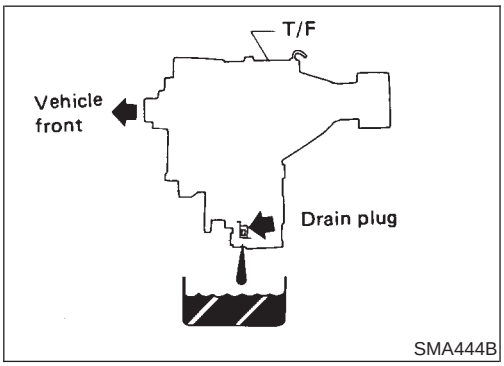

Changing Part Time 4WD Transfer Fluid

NAMA0027

When changing transfer fluid completely, A/T fluid may be used.

Fluid grade:

API GL-4 or Genuine Nissan Matic D ATF (Continental U.S. and Alaska) or Canada NISSAN Automatic Transmission Fluid

Refer to "RECOMMENDED FLUIDS AND LUBRICANTS", MA-12.

Fluid capacity:

2.2 ℓ (2-3/8 US qt, 2 Imp qt)

Drain plug:

: 25 - 34 N·m (2.5 - 3.5 kg-m, 18 - 25 ft-lb)

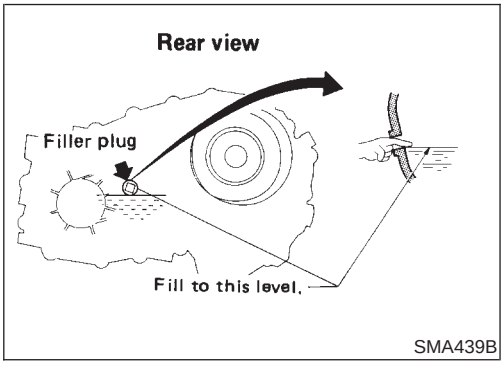

Checking All-mode 4WD Transfer Fluid

NAMA0047

Check for oil leakage and fluid level.

A/T fluid is used for the all-mode 4WD transfer in the factory.
Never start engine while checking fluid level.

Filler plug:

: 10 - 20 N·m (1.0 - 2.0 kg-m, 87 - 174 in-lb)

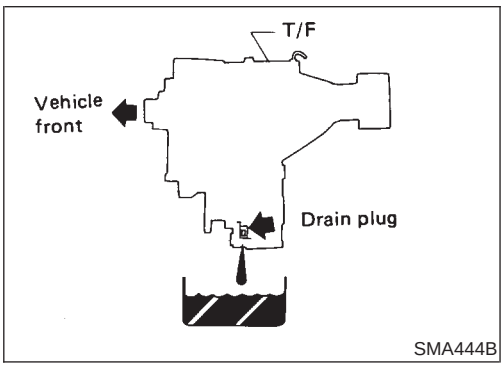

Changing All-mode 4WD Transfer Fluid

NAMA0048

When changing all-mode 4WD transfer fluid completely, A/T fluid may be used.

Fluid grade:

Genuine Nissan Matic D ATF (Continental U.S. and Alaska) or Canada NISSAN Automatic Transmission Fluid

Refer to "RECOMMENDED FLUIDS AND LUBRICANTS", MA-12.

Fluid capacity:

3.0 ℓ (3-1/8 US qt, 2-5/8 Imp qt)

Drain plug:
: 10 - 20 N·m (1.0 - 2.0 kg-m, 87 - 174 in-lb)

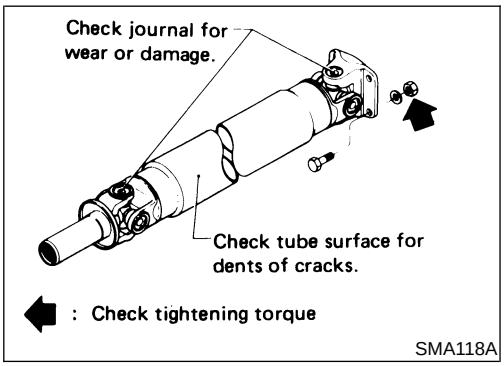

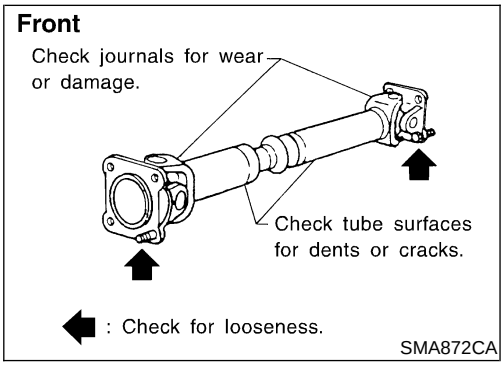

Checking Propeller Shaft

NAMA0028

Check propeller shaft for damage, looseness or grease leakage.

Tightening torque:

Front

Refer to "FRONT PROPELLER SHAFT", PD-5.

Rear

Refer to "REAR PROPELLER SHAFT", PD-6.

Greasing Propeller Shaft

NAMA0029

Apply specified grease to nipples provided on propeller shaft.

Grease grade:

Refer to "RECOMMENDED FLUIDS AND LUBRICANTS", MA-12.

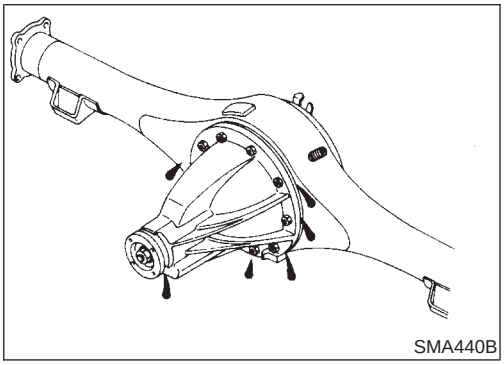

Checking Differential Gear Oil

NAMA0030

Check for oil leakage and oil level.

Filler plug:

Front

: 39 - 59 N·m (4 - 6 kg-m, 29 - 43 ft-lb)

Rear

: 59 - 118 N·m (6 - 12 kg-m, 43 - 87 ft-lb)

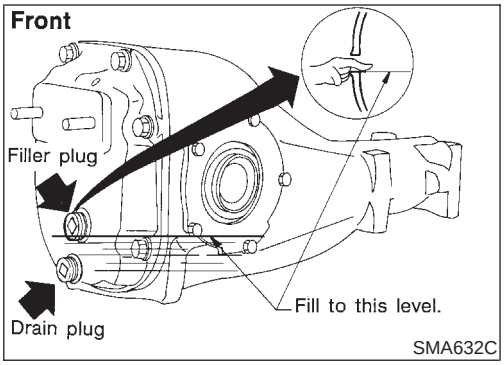

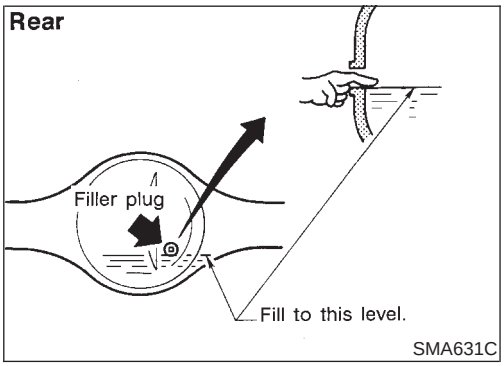

Changing Differential Gear Oil

NAMA0031

1. Drain oil from drain plug and refill with new gear oil.
2. Check oil level.

Oil grade and viscosity:
See "RECOMMENDED FLUIDS AND LUBRICATNS", MA-12.
Oil capacity:
Front
1.9ℓ (4 US pt, 3-3/8 Imp pt)
Rear
2.4ℓ (5-1/8 US pt, 4-1/4 Imp pt)
Filler plug:
Front
: 39 - 59 N·m (4 - 6 kg-m, 29 - 43 ft-lb)
Rear
: 59 - 118 N·m (6 - 12 kg-m, 43 - 87 ft-lb)
Drain plug:
Front
: 59 - 98 N·m (6 - 10 kg-m, 43 - 72 ft-lb)
Rear
: 59 - 118 N·m (6 - 12 kg-m, 43 - 87 ft-lb)

LIMITED-SLIP DIFFERENTIAL GEAR

NAMA0031S01

- Use only approved limited-slip differential gear oil.
- Limited-slip differential identification.

1. Lift both rear wheels off the ground.
2. Turn one rear wheel by hand.
3. If both rear wheels turn in the same direction simultaneously, vehicle is equipped with limited-slip differential.

Balancing Wheels

NAMA0032

Adjust wheel balance using the road wheel center.

Wheel balance (Maximum allowable unbalance):
Refer to SDS, MA-32.

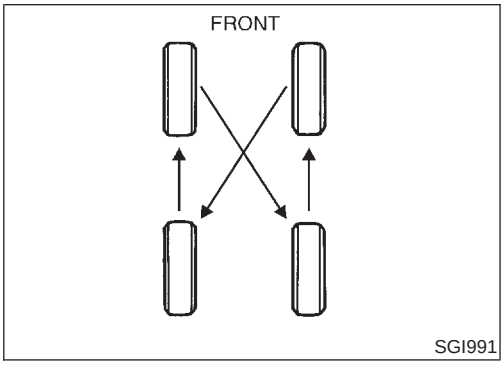

Tire Rotation

NAMA0033

- **After rotating the tires, adjust the tire pressure.**
- **Retighten the wheel nuts after the vehicle has been driven for the 1,000 km (600 miles). (also in cases of a flat tire, etc.)**

Wheel nuts:
: 118 - 147 N·m (12 - 15 kg-m, 87 - 108 ft-lb)

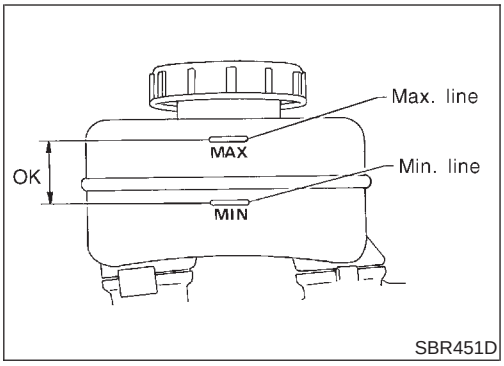

SBR451D

Checking Brake Fluid Level and Leaks

NAMA0034

If fluid level is extremely low, check brake system for leaks.

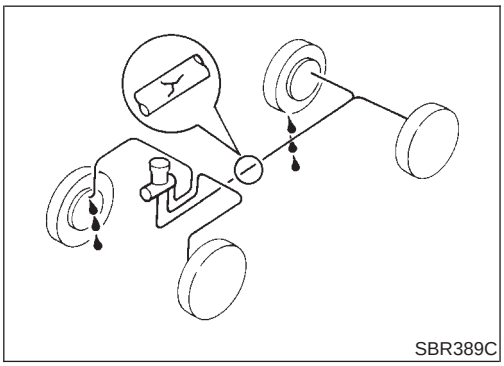
SBR389C

Checking Brake Lines and Cables

NAMA0035

Check brake fluid lines and parking brake cables for improper attachment, leaks, chafing, abrasions and deterioration.

Checking Disc Brake

NAMA0036

ROTOR

NAMA0036S01

Check condition, wear and damage.

Standard thickness:
28 mm (1.10 in)
Minimum thickness:
26 mm (1.02 in)

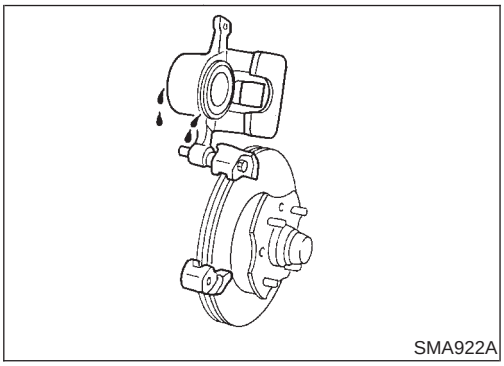
SMA922A

CALIPER

NAMA0036S02

Check for leakage.

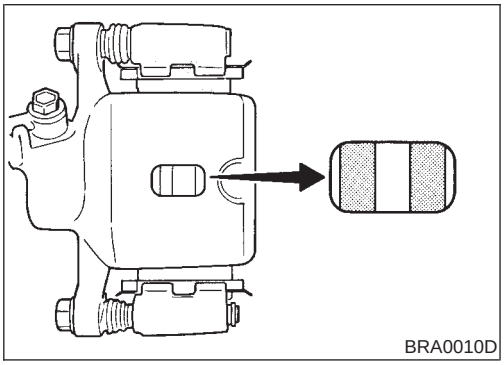
BRA0010D

PAD

NAMA0036S03

Check wear or damage.

Standard thickness:
11 mm (0.43 in)
Minimum thickness: 2 mm (0.08 in)

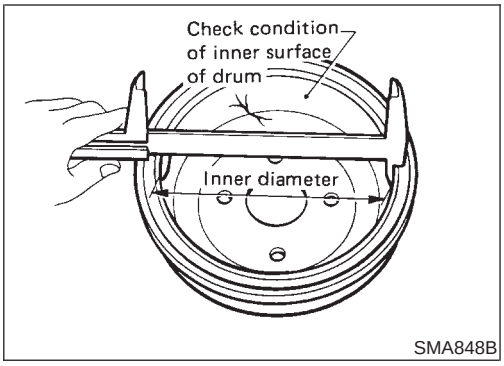

SMA848B

Checking Drum Brake

NAMA0037

WHEEL CYLINDER

NAMA0037S01

Check for leakage.

DRUM

NAMA0037S02

Check condition and inner surface.

Standard inner diameter:
295 mm (11.61 in)
Drum repair limit (Inner diameter):
296.5 mm (11.67 in)

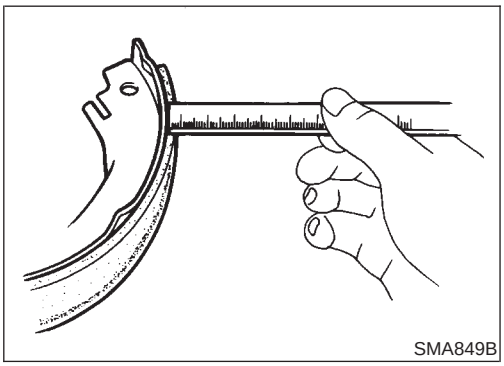
SMA849B

LINING

NAMA0037S03

Check wear or damage.

Standard thickness:
6.1 mm (0.240 in)
Lining wear limit (Minimum thickness):
1.5 mm (0.059 in)

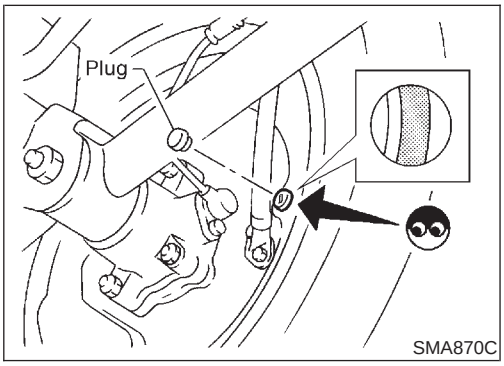

SMA870C

TEMPORARY METHOD FOR CHECKING LINING WEAR

NAMA0037S04

Remove inspection hole plug and check for lining wear.

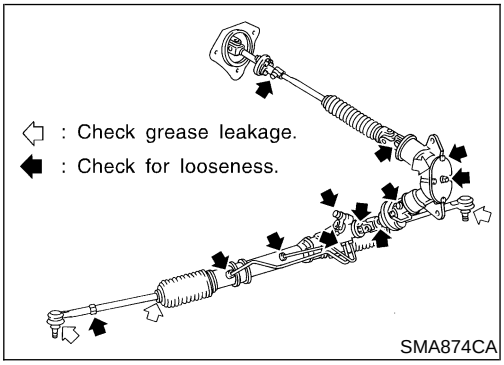

SMA874CA

Checking Steering Gear, Linkage and Transfer Gear

NAMA0038

STEERING GEAR

NAMA0038S01

- Check gear housing and boots for looseness, damage and grease leakage.
- Check connection with steering column for looseness.

STEERING LINKAGE

NAMA0038S02

- Check ball joint, dust cover and other component parts for looseness, wear, damage and grease leakage.

STEERING TRANSFER GEAR

NAMA0038S03

- Check gear box for looseness, damage and grease leakage.

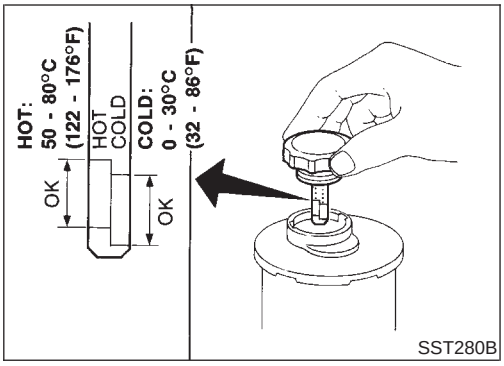

SST280B

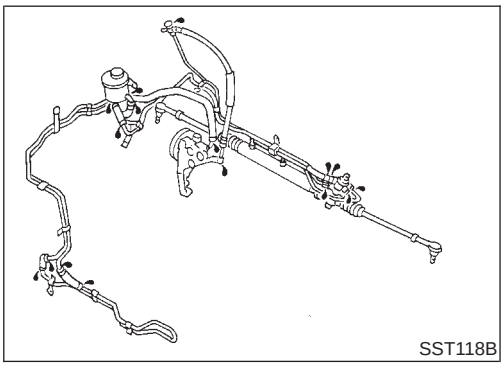
SST118B

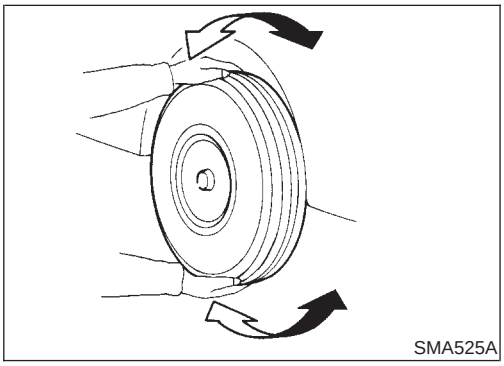
SMA525A

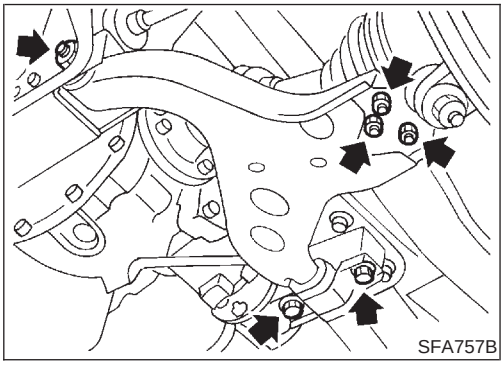
SFA757B

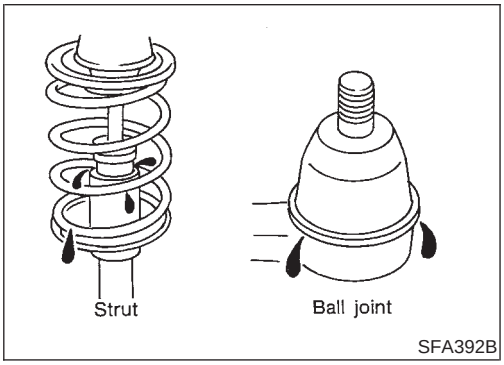

SFA392B

Checking Power Steering Fluid and Lines

NAMA0039

CHECKING FLUID LEVEL

NAMA0039S01

- Check fluid level with engine off.
- Check fluid level with dipstick on reservoir cap. Use “HOT” range at fluid temperatures of 50 to 80°C (122 to 176°F). Use “COLD” range at fluid temperatures of 0 to 30°C (32 to 86°F).

CAUTION:

- **Do not overfill.**
- **Recommended fluid is Genuine NISSAN PSF or equivalent. Refer to “RECOMMENDED FLUIDS AND LUBRICANTS”, MA-12.**

CHECKING LINES

NAMA0039S02

- Check lines for improper attachment, leaks, cracks, damage, loose connections, chafing and deterioration.
- Check rack boots for accumulation of power steering fluid.

Axle and Suspension Parts

NAMA0061

Check front and rear axle and suspension parts for excessive play, cracks, wear, or other damage.

- Shake each wheel to check for excessive play.
- Rotate each wheel to check for abnormal noise.
- Check axle and suspension nuts and bolts for looseness.
- Check strut (shock absorber) for oil leakage or other damage.
- Check suspension ball joint for grease leakage and ball joint dust cover for cracks or other damage.

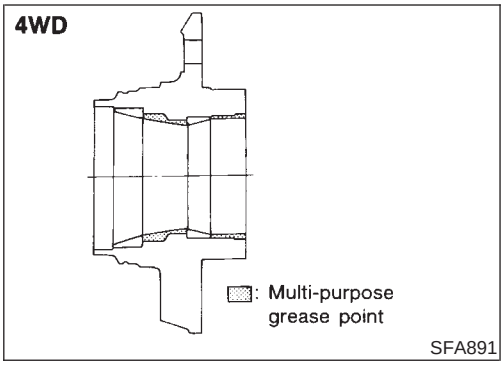

SFA891

FRONT WHEEL BEARING

NAMA0061S01

Apply multi-purpose grease sparingly to the following parts:

- Threaded portion of spindle
- Contact surface between wheel bearing lock washer (chamfered side) and outer wheel bearing
- Grease seal lip
- Wheel hub (as shown at left) — 4WD —

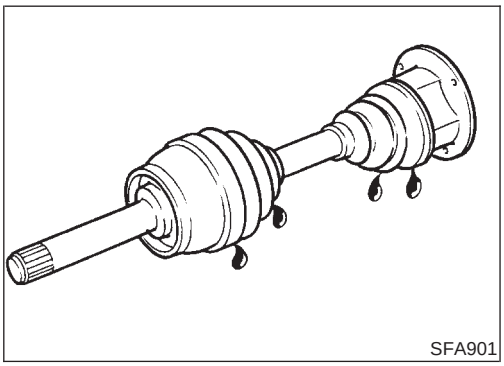
SFA901

Drive Shaft

NAMA0062

Check boot and drive shaft for cracks, wear, damage and grease leakage.

Lubricating Locks, Hinges and Hood Latches

NAMA0040

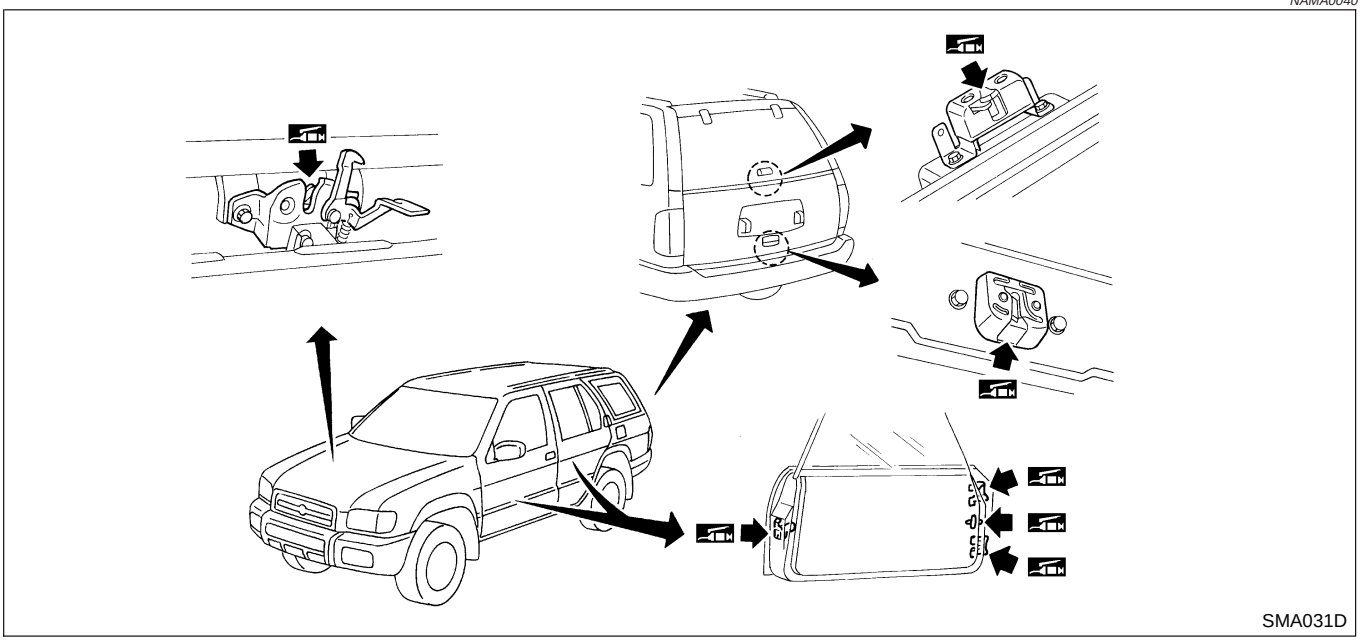
SMA031D

Checking Seat Belts, Buckles, Retractors, Anchors and Adjusters

NAMA0041

CAUTION:

- **After any collision, inspect all seat belt assemblies, including retractors and other attached hardwares (i.e. anchor bolt, guide rail set). Nissan recommends to replace all seat belt assemblies in use during a collision, unless not damaged and properly operating after minor collision.**
  Also inspect seat belt assemblies not in use during a collision, and replace if damaged or improperly operating.
  Seat belt pre-tensioner should be replaced even if the seat belts are not in use during a frontal collision where the driver and passenger air bags are deployed.
- **If any component of seat belt assembly is questionable, do not repair. Replace as seat belt assembly.**
- **If webbing is cut, frayed, or damaged, replace belt assembly.**
- **Never oil tongue and buckle.**
- **Use a genuine seat belt assembly.**

For details, refer to "Seat Belt Inspection", "SEAT BELTS" in RS section.

Anchor bolt

43.1 - 54.9 N·m (4.4 - 5.6 kg-m, 32 - 40 ft-lb)

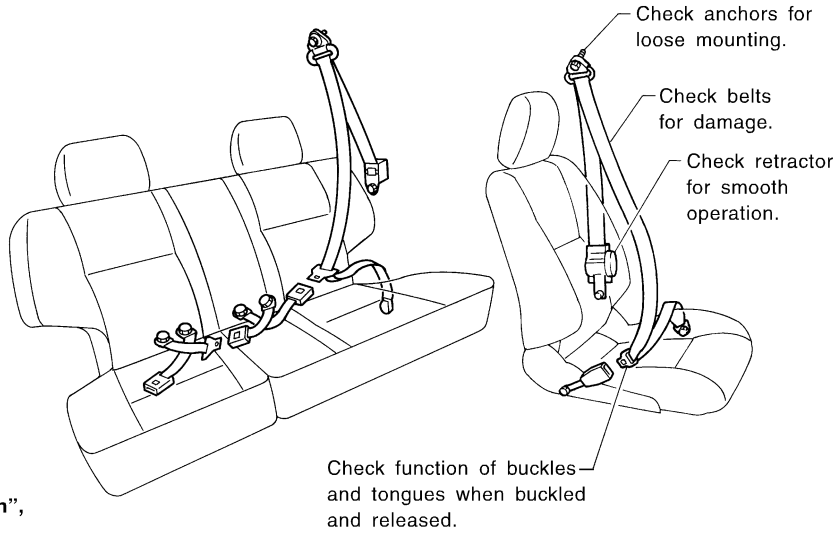

SMA854CD

Engine Maintenance

DRIVE BELT DEFLECTION

NAMA0058

Unit: mm (in)

	Used belt deflection		Deflection of new belt
	Limit	Deflection after adjustment	
Alternator Power steering oil pump Fan	7 (0.28)	4 - 5 (0.16 - 0.20)	3.5 - 4.5 (0.138 - 0.177)
Air conditioner compressor	12 (0.47)	9 - 10 (0.35 - 0.39)	8 - 9 (0.31 - 0.35)
Applied pushing force	98 N (10 kg, 22 lb)		

DRIVE BELT TENSION

NAMA0059

Unit: N (kg, lb)

	Used belt		New belt
	Limit	After adjustment	
Generator Power steering oil pump Fan	294 (30, 66)	730 - 818 (74.4 - 83.5, 164 - 184)	838 - 926 (85.4 - 94.5, 188 - 208)
Air conditioner compressor	196 (20, 44)	348 - 436 (35.5 - 44.5, 78 - 98)	470 - 559 (47.9 - 57.0, 106 - 126)

SPARK PLUG (PLATINUM-TIPPED TYPE)

NAMA0060

	Symbol	Make
Standard type	PLFR5A-11	NGK
Cold type	PLFR6A-11	NGK
Hot type	PLFR4A-11	NGK
Plug gap (Nominal)	1.1 mm (0.043 in)	

Chassis and Body Maintenance

WHEEL BALANCE

NAMA0044

Maximum allowable unbalance	Dynamic (At rim flange) g (oz)	10 (0.35) (one side)
	Static g (oz)	20 (0.71)

MANUAL TRANSMISSION

SECTION MT

CONTENTS

PREPARATION 2
Special Service Tools 2
Commercial Service Tool 3
NOISE, VIBRATION AND HARSHNESS (NVH) TROUBLESHOOTING 4
NVH Troubleshooting Chart 4
MANUAL TRANSMISSION 4
ON-VEHICLE SERVICE 5
Position Switch Check 5
DESCRIPTION 6
Cross-sectional View 6
REMOVAL AND INSTALLATION 7
Removal 7
Installation 8
OVERHAUL 10
Case Components 10
Gear Components 11
Shift Control Components 13
DISASSEMBLY 14
Case Components 14
DISASSEMBLY 14
Shift Control Components 15
DISASSEMBLY 15
Gear Components 16
DISASSEMBLY 16
INSPECTION 20
Shift Control Components 20
INSPECTION 20
Gear Components 20
INSPECTION 20
ASSEMBLY 22
Gear Components 22
ASSEMBLY 22
Shift Control Components 30
ASSEMBLY 30
Case Components 30
ASSEMBLY 30
SERVICE DATA AND SPECIFICATIONS (SDS) 33
General Specifications 33
Gear End Play 33
Clearance Between Baulk Ring and Gear 33
2ND AND 3RD BAULK RING 34
Distance Between Rear Surface of Reverse Cone and Reverse Baulk Ring 34
Available Snap Ring 34
MAIN DRIVE GEAR SNAP RING 34
MAINSHAFT FRONT SNAP RING 34
COUNTER GEAR REAR SNAP RING 35
Available C-ring 35
MAINSHAFT C-RING 35
Available Shim and Washer 36
TABLE FOR SELECTING PROPER COUNTER GEAR FRONT BEARING THRUST WASHER 36
REVERSE IDLER REAR THRUST WASHER 36

Special Service Tools

NAMT0001

The actual shapes of Kent-Moore tools may differ from those of special service tools illustrated here.

Tool number (Kent-Moore No.) Tool name	Description	
ST23540000 (J25689-A) Pin punch	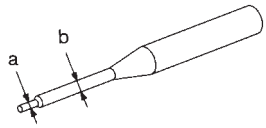 NT442	Removing and installing retaining pin **a: 2.3 mm (0.091 in) dia.** **b: 4 mm (0.16 in) dia.**
ST30031000 (J22912-01) Puller	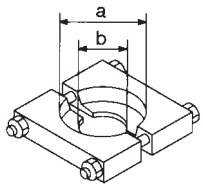 NT411	Removing 1st & 2nd synchronizer assembly Removing counter gear rear thrust bearing Removing main drive bearing **a: 90 mm (3.54 in) dia.** **b: 50 mm (1.97 in) dia.**
ST33230000 (—) Drift	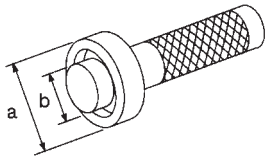 NT084	Removing mainshaft and counter gear **a: 51 mm (2.01 in) dia.** **b: 28.5 mm (1.122 in) dia.**
ST22350000 (J25678-01) Drift	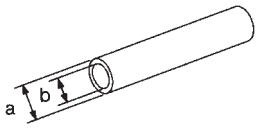 NT065	Removing counter gear front bearing (Use with KV38100300) **a: 34 mm (1.34 in) dia.** **b: 28 mm (1.10 in) dia.**
KV38100300 (J25523) Drift	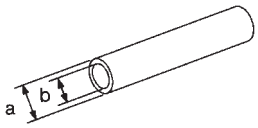 NT065	Removing counter gear front bearing (Use with ST22350000) Installing counter gear rear bearing **a: 54 mm (2.13 in) dia.** **b: 32 mm (1.26 in) dia.**
ST30720000 1 (J34286) 2 (J34331) Drift	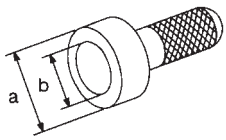 NT115	1 Removing mainshaft front bearing 2 Installing mainshaft front bearing **a: 77 mm (3.03 in) dia.** **b: 55.5 mm (2.185 in) dia.**
ST33210000 1 (J25523) 2 (J25803-01) Drift	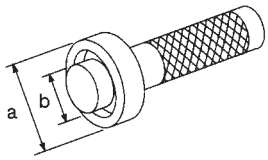 NT084	1 Installing counter gear front bearing 2 Installing front cover oil seal **a: 44 mm (1.73 in) dia.** **b: 24.5 mm (0.965 in) dia.**
ST30613000 (J25742-3) Drift	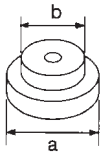 NT073	Installing main drive gear bearing **a: 72 mm (2.83 in) dia.** **b: 48 mm (1.89 in) dia.**

Tool number (Kent-Moore No.) Tool name	Description	
ST37750000 1 (J34286) 2 (J34332) 3 (J34334) 4 (J25679-01) Drift	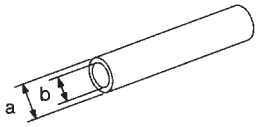 NT065	1 Removing counter gear rear bearing 2 Installing OD gear bushing 2 Removing and installing mainshaft rear bearing 2 Installing reverse cone 3 Installing reverse counter gear 4 Installing counter gear rear end bearing **a: 40 mm (1.57 in) dia.** **b: 31 mm (1.22 in) dia.**
ST22452000 (J34337) Drift	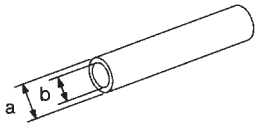 NT065	Installing reverse hub **a: 45 mm (1.77 in) dia.** **b: 36 mm (1.42 in) dia.**
(J26349-3) Puller leg	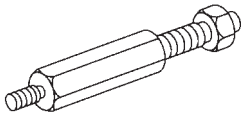 NT078	Installing mainshaft and counter gear (Use with J34328)
(J34328) Puller	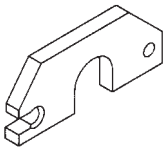 NT079	Installing mainshaft and counter gear (Use with J26349-3)
(J26092) Drift	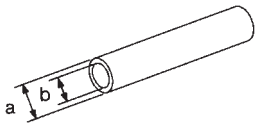 NT065	Installing sub-gear snap ring **a: 44.5 mm (1.752 in) dia.** **b: 38.5 mm (1.516 in) dia.**
(J34342) Drift	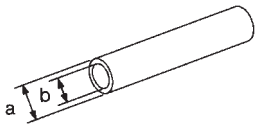 NT065	Installing OD main gear Installing reverse gear bushing **a: 44.5 mm (1.752 in) dia.** **b: 40.5 mm (1.594 in) dia.**
ST33220000 (J25804-01) Drift	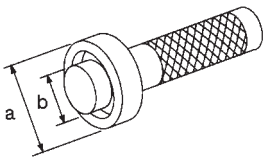 NT084	Installing mainshaft rear bearing **a: 37 mm (1.46 in) dia.** **b: 22 mm (0.87 in) dia.**

Commercial Service Tool

NAMT0002

Tool name	Description	
Puller	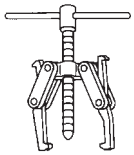 NT077	Removing counter gear rear end bearing Removing reverse synchronizer hub Removing reverse counter gear

NVH Troubleshooting Chart

NAMT0023S01

Use the chart below to help you find the cause of the problem. The numbers indicate the order of the inspection. If necessary, repair or replace these parts.

MANUAL TRANSMISSION

NAMT0023S0101

Reference page			Refer to MA-22, "Checking M/T Oil".		MT-10	MT-10	MT-13	MT-13	MT-13	MT-11	MT-11	MT-11	MT-11
SUSPECTED PARTS (Possible cause)		OIL (Level low)	OIL (Wrong)	OIL (Level too high)	GASKET (Damaged)	OIL SEAL (Worn or damaged)	O-RING (Worn or damaged)	CHECK PLUG RETURN SPRING AND CHECK BALL (Worn or damaged)	SHIFT FORK (Worn)	GEAR (Worn or damaged)	BEARING (Worn or damaged)	BAULK RING (Worn or damaged)	INSERT SPRING (Damaged)
Symptom	Noise	1	2							3	3		
	Oil leakage		3	1	2	2	2						
	Hard to shift or will not shift		1	1								2	2
	Jumps out of gear							1	2	2			

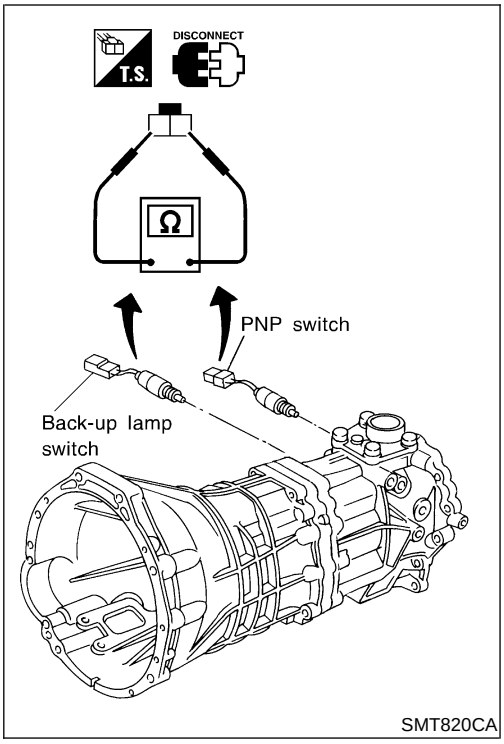

Position Switch Check

NAMT0024

Switch	Gear position	Continuity
Back-up lamp switch	Reverse	Yes
	Except reverse	No
PNP switch	Neutral	Yes
	Except neutral	No

Cross-sectional View

NAMT0005S02

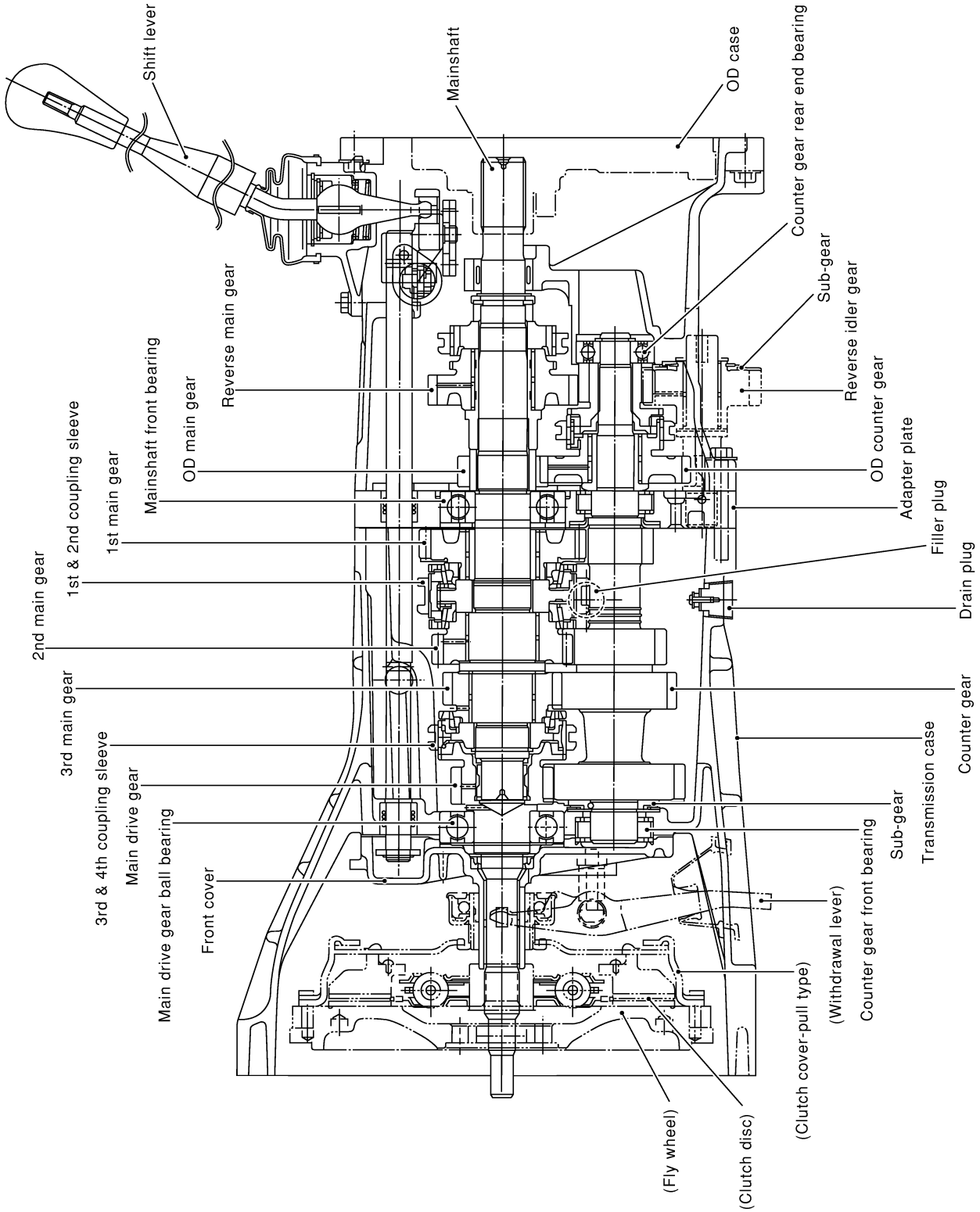

SMT990D

Removal

NAMT0006S01

CAUTION:

When removing the M/T assembly from engine, first remove the crankshaft position sensor (OBD) from the M/T assembly. Be careful not to damage sensor edge.

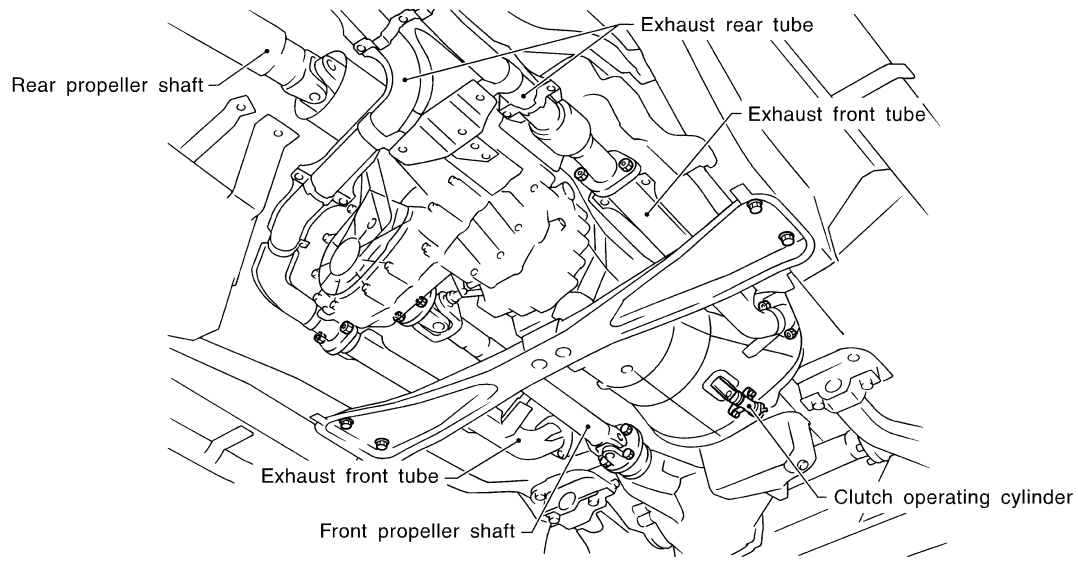

SMT815CB

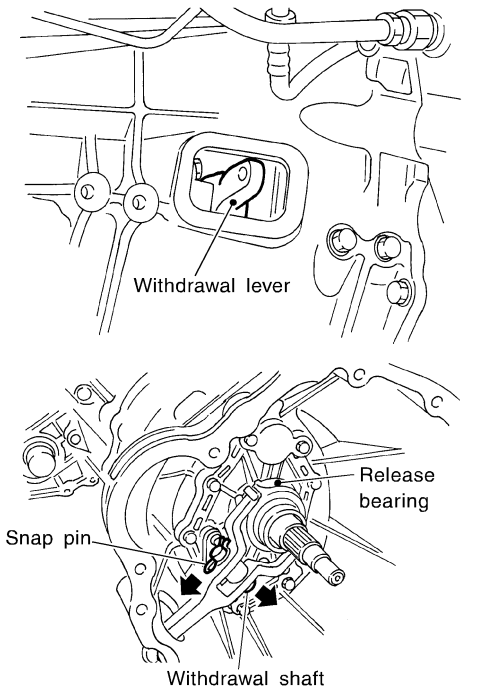

SMT006E

1. Remove battery negative terminal.
2. Remove shift lever from transmission and control lever from transfer.
3. Remove crankshaft position sensor (OBD) from lower side of transmission case.
4. Remove clutch operating cylinder from transmission. Tighten clutch operating cylinder to the specified torque. Refer to CL-5, “CLUTCH SYSTEM”.
5. Lower the transmission out of the body with the speed sensor and other harnesses still connected. The harnesses are attached to the body in four places.
6. Remove starter motor from transmission.

   : 41 - 52 N·m (4.2 - 5.3 kg-m, 30 - 38 ft-lb)
7. Remove front and rear propeller shafts. Refer to PD-8, “Removal and Installation”.

- **Insert plug into rear oil seal after removing propeller shaft.**
- **Be careful not to damage spline, sleeve yoke and rear oil seal when removing propeller shaft.**

8. Remove clutch withdrawal lever and release bearing following the procedures below.

a. Remove the dust cover on the withdrawal lever hole from the transmission case.

b. Pull out snap pin on the withdrawal shaft, and then pull out withdrawal shaft to remove withdrawal lever and release bearing.
9. Remove exhaust tube mounting bracket from transmission. Refer to FE-9, "EXHAUST SYSTEM".
10. Support manual transmission with a jack.
11. Remove rear mounting member. Tighten rear mounting member to the specified torque. Refer to EM-64, "Removal and Installation".
12. Remove bolt securing engine to manual transmission to separate engine from the transmission.
13. Lower manual transmission as much as possible.

WARNING:
Support Manual Transmission together with transfer, while removing it.

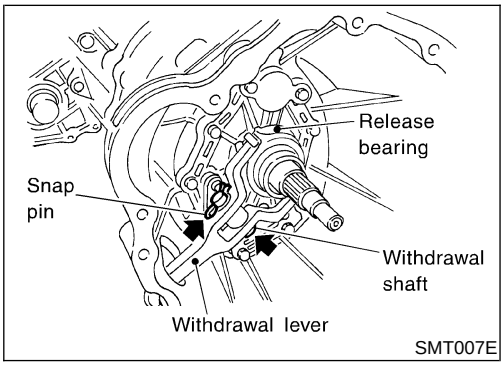

Installation

NAMT0006S02

1. Set withdrawal shaft, washer and snap pin to withdrawal lever and release bearing.
2. Install the manual transmission in reverse order of removal.

- Apply sealant as below

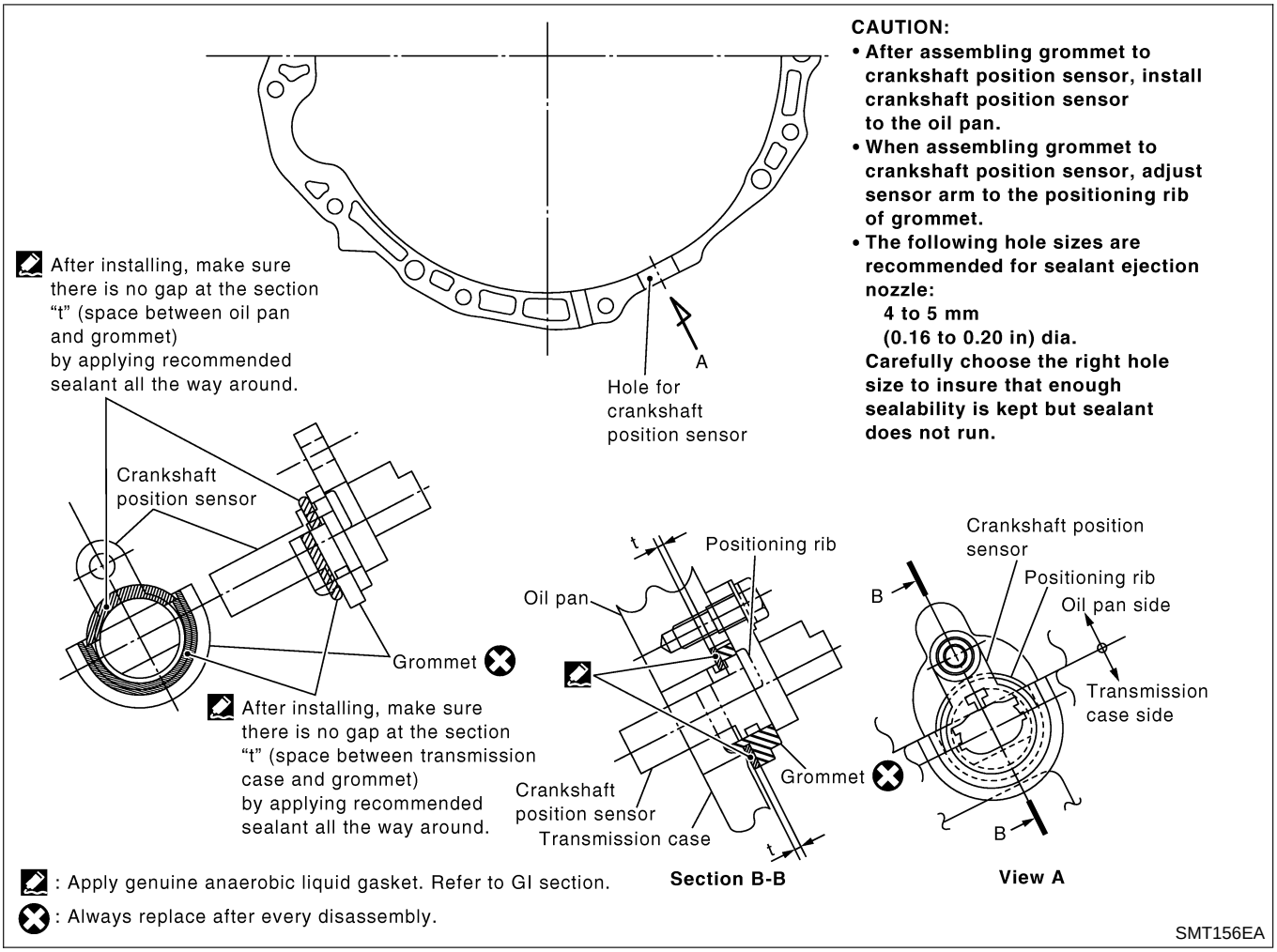

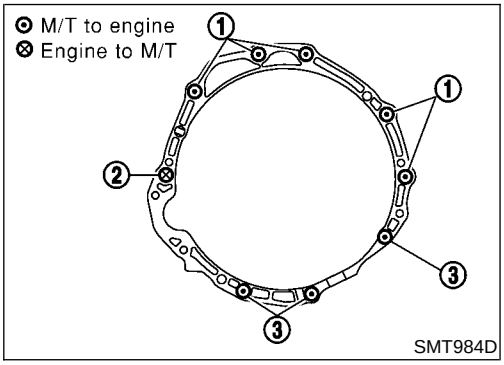

- Tighten bolt securing transmission.

Bolt No.	Tightening torque N·m (kg-m, ft-lb)	ℓ mm (in)
1	70 - 79 (7.1 - 8.1, 52 - 58)	65 (2.56)
2	70 - 79 (7.1 - 8.1, 52 - 58)	55 (2.17)
3	29 - 39 (3.0 - 4.0, 22 - 28)	40 (1.57)

Case Components

NAMT0007S01

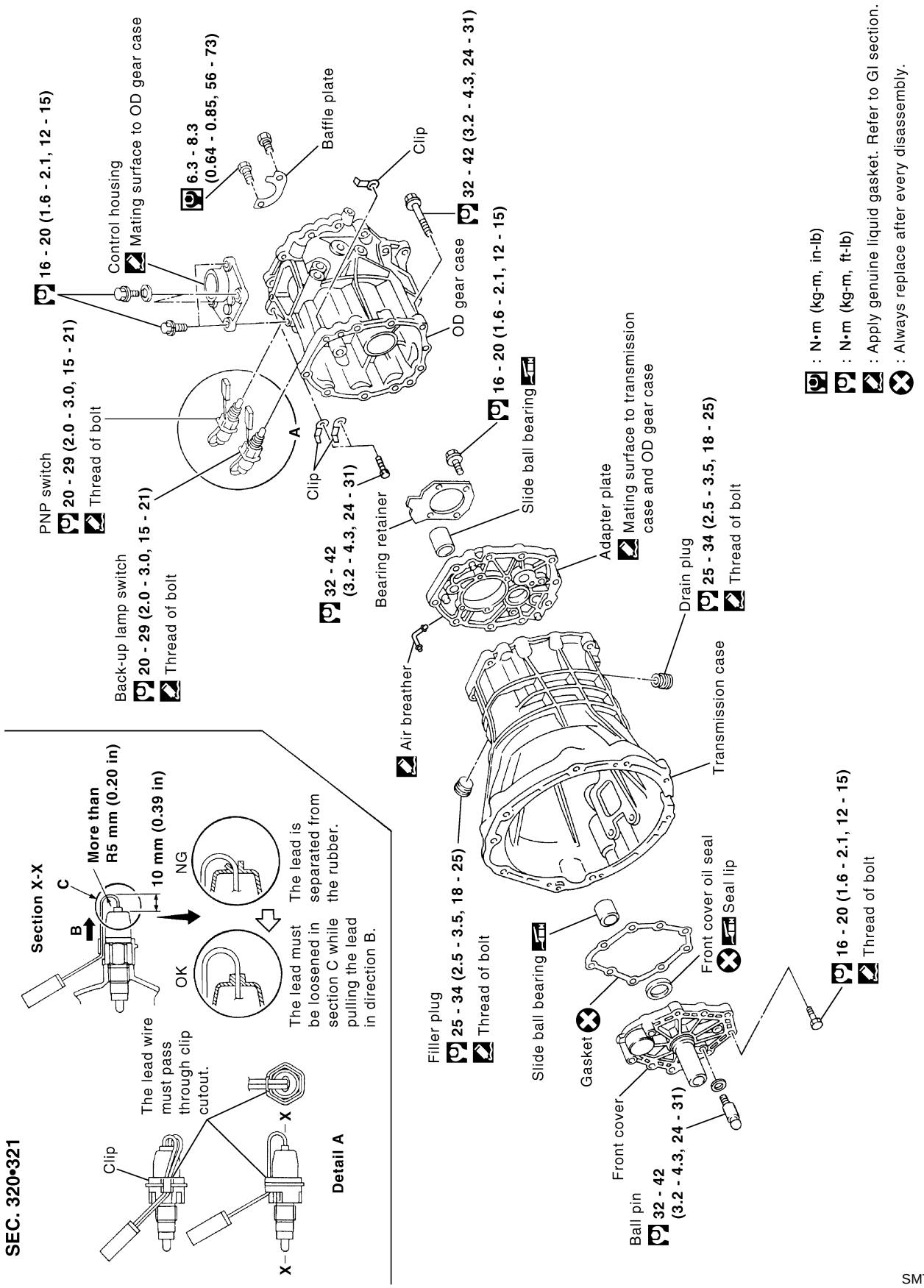

SMT159EA

Gear Components

NAMT0007S02

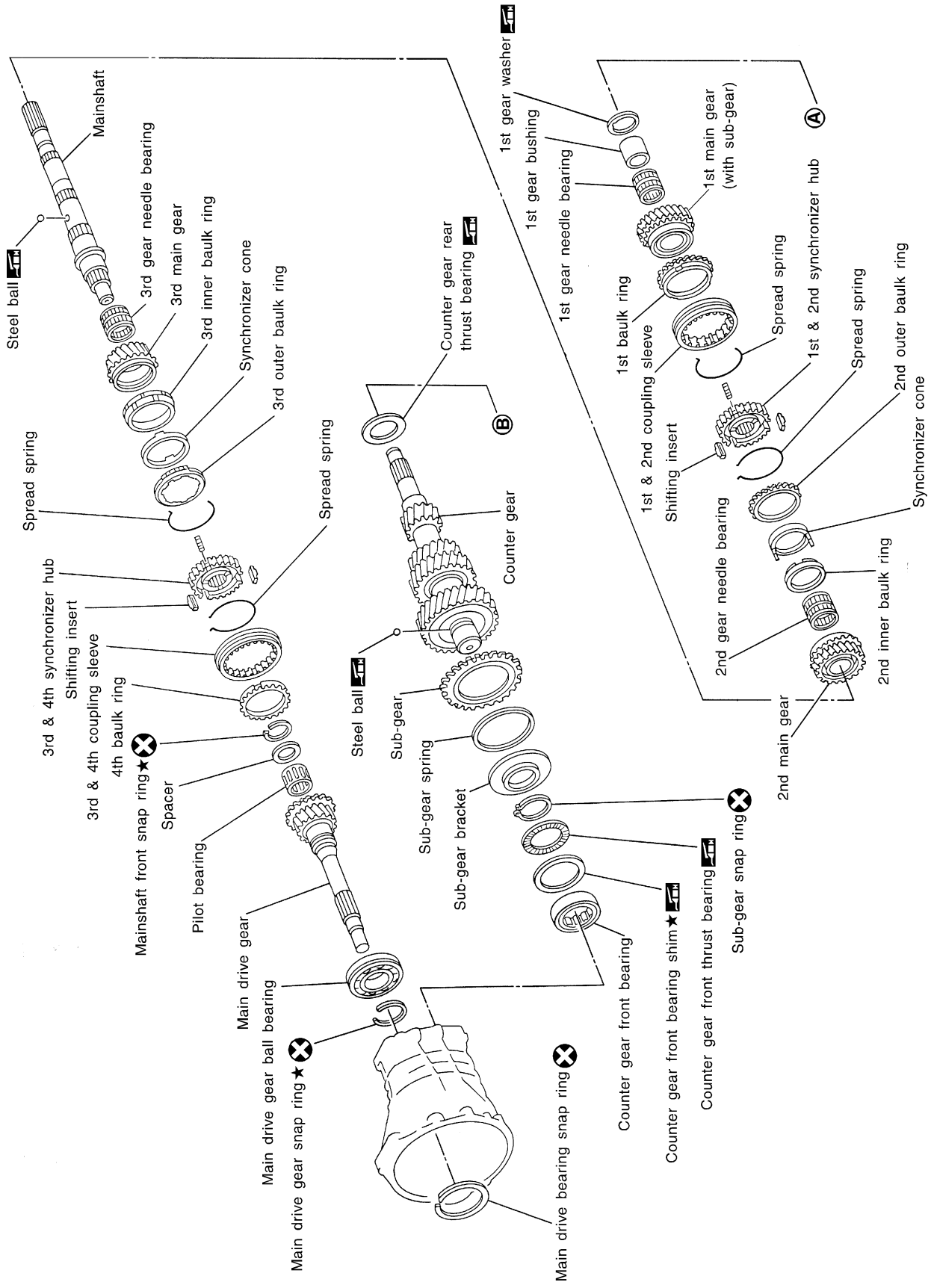

SMT049E

SEC. 322

Gear Components (Cont'd)

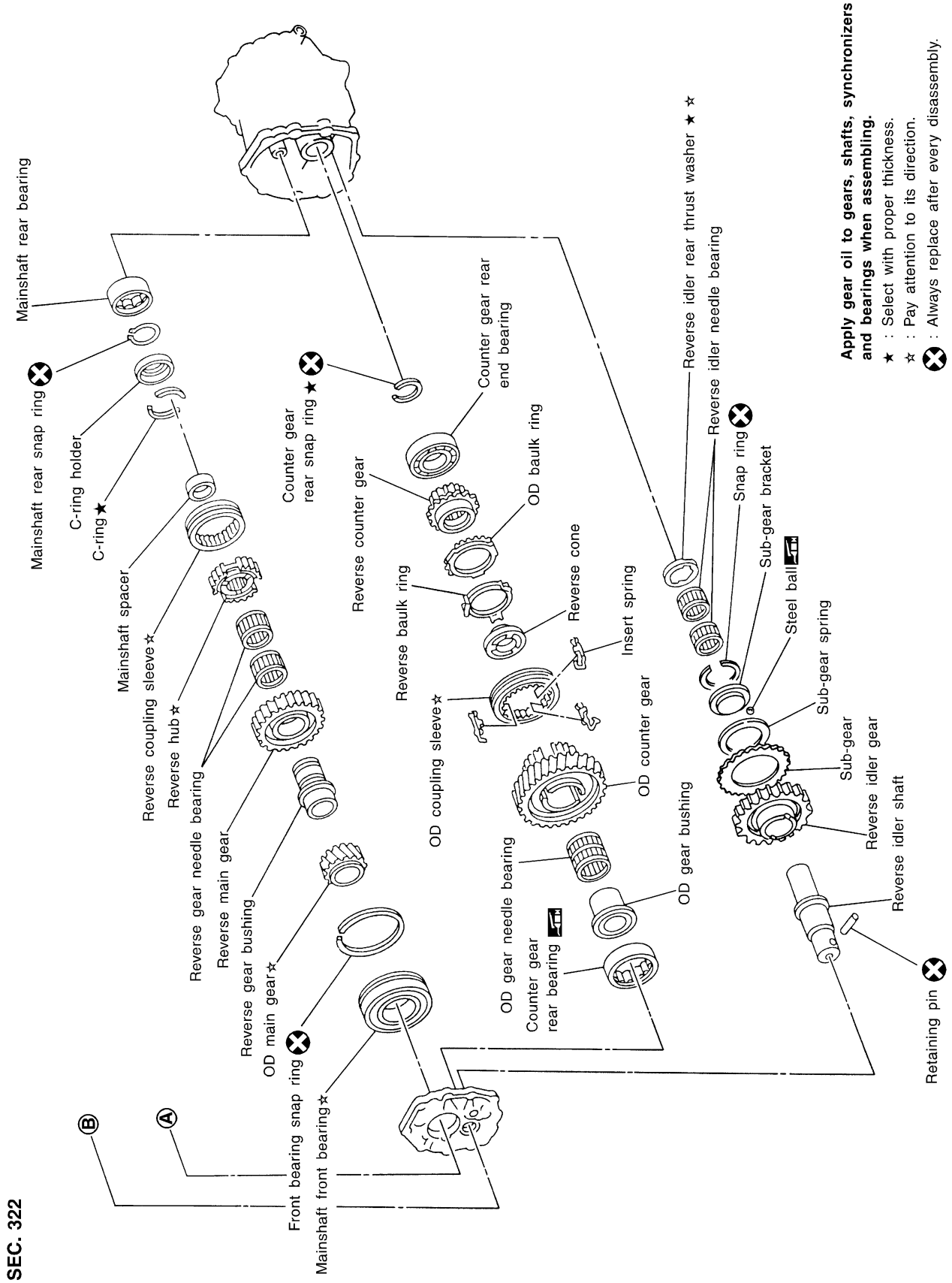

SEC. 322

SMT111EA

Shift Control Components

NAMT0007S03

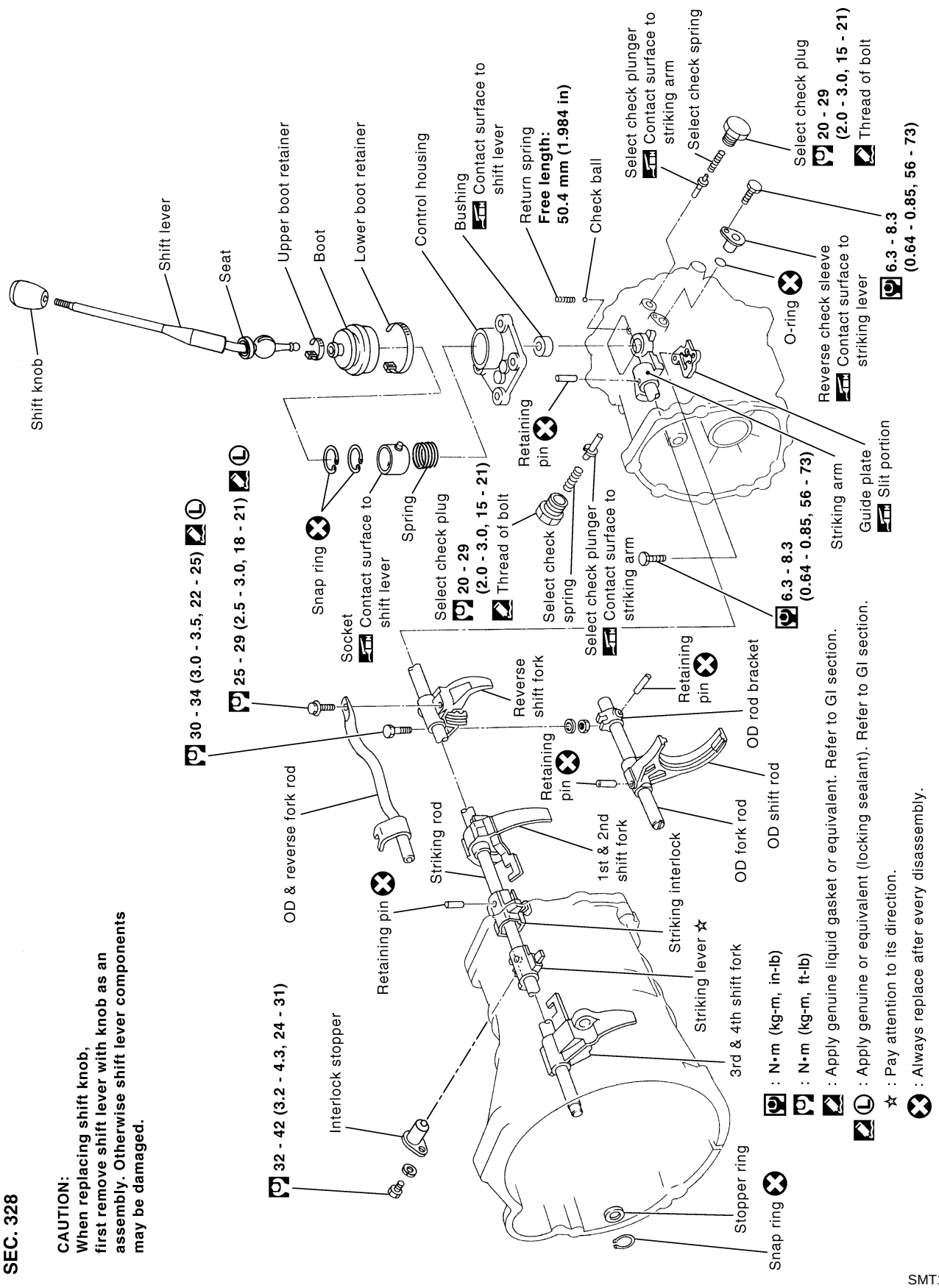

SEC. 328

CAUTION:
When replacing shift knob, first remove shift lever with knob as an assembly. Otherwise shift lever components may be damaged.

SMT160EA

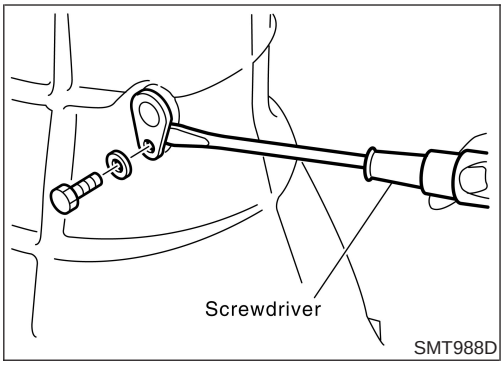

Case Components

DISASSEMBLY

NAMT0008

1. Remove check ball plug, check spring and check ball. Then remove interlock stopper.

- **If interlock assembly is removed as a unit, the check ball can fall into transmission case.**
- **Be careful not to lose check ball.**

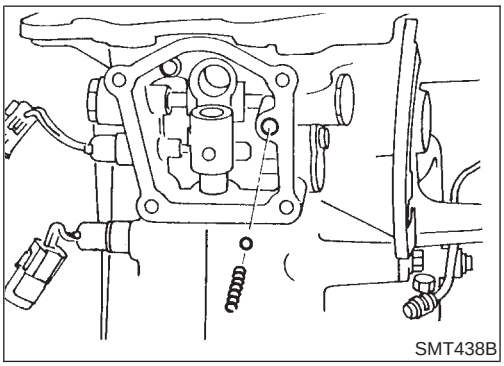

2. Remove control housing, return spring and check ball.

- **Be careful not to lose check ball.**

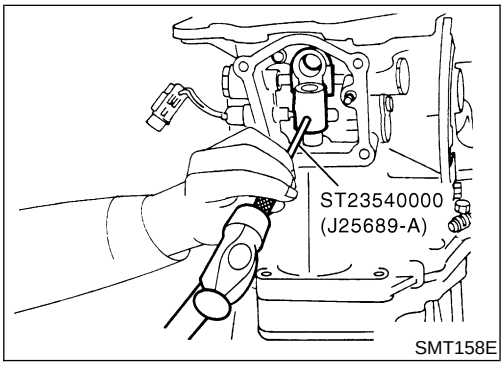

3. Drive out retaining pin from striking arm.

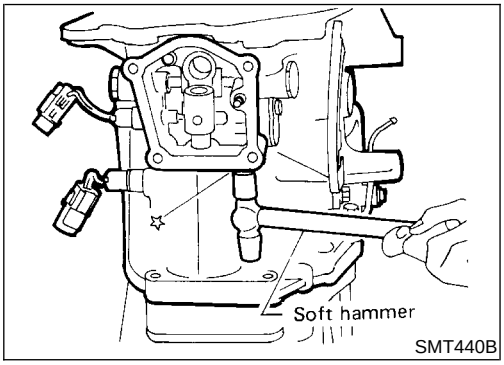

4. Remove OD gear case together with striking arm by tapping lightly.

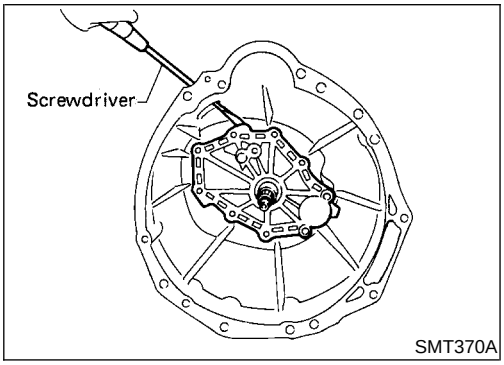

5. Remove front cover and gasket.

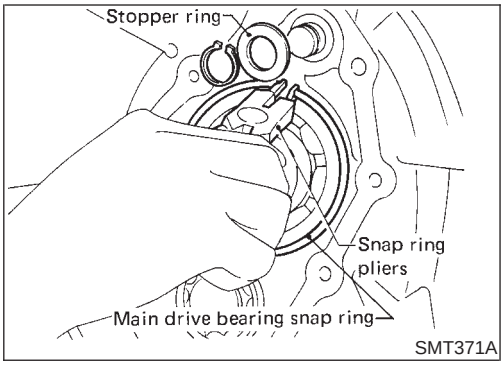

6. Remove stopper ring and main drive bearing snap ring.

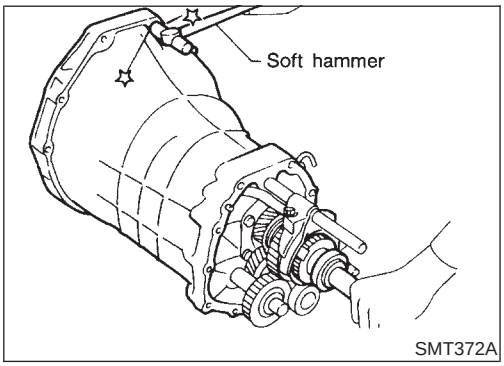

7. Remove transmission case by tapping lightly.

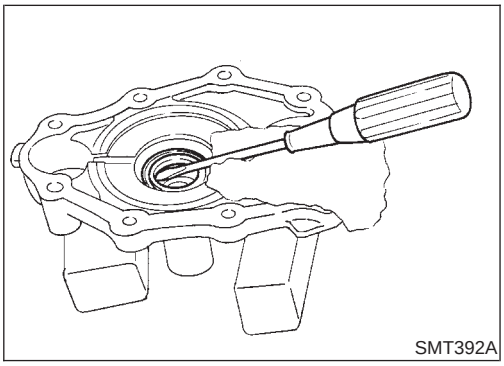

8. Remove front cover oil seal.

Shift Control Components

DISASSEMBLY

NAMT0009

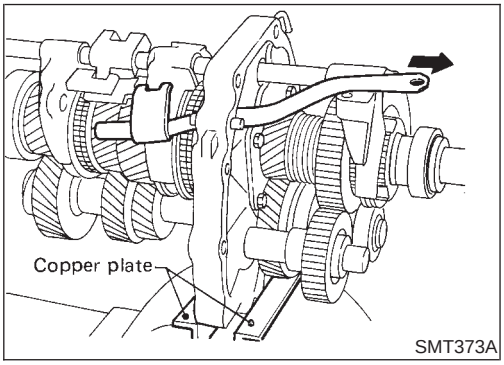

1. Mount adapter plate on vise.
2. Remove OD & reverse fork rod.

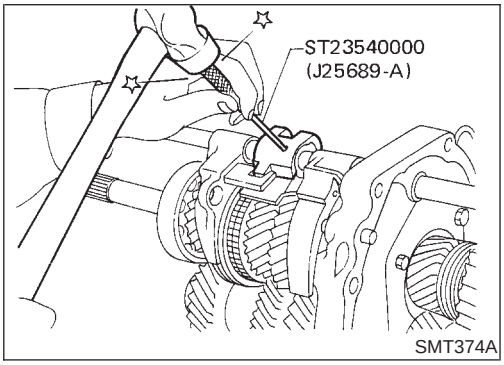

3. Drive out retaining pin from striking lever.
4. While pulling out striking rod, remove striking lever and striking interlock. Then remove 1st & 2nd, 3rd & 4th and reverse shift fork.

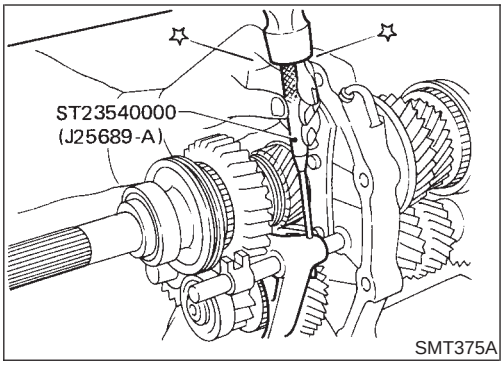

SMT375A

5. Drive out retaining pin from OD shift fork.
6. Pull out OD fork rod and then remove OD shift fork.

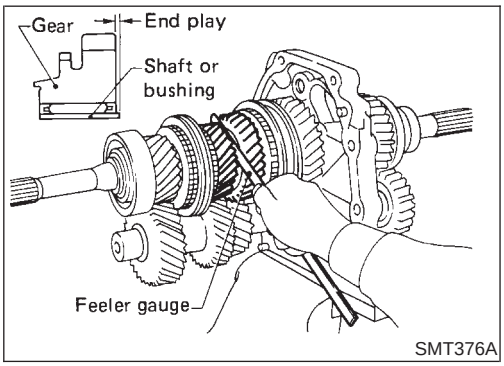

SMT376A

Gear Components

DISASSEMBLY

NAMT0010

1. Before removing gears and shafts, measure each gear end play.

   Gear end play:

   Refer to SDS, MT-33.

- If not within specification, disassemble and check contact surface of gear to hub, washer, bushing, needle bearing and shaft.

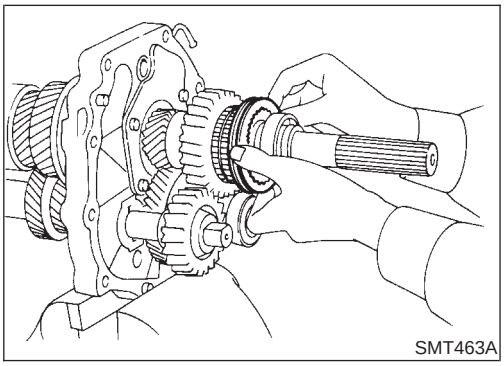
SMT463A

2. Remove rear side components on mainshaft and counter gear.

a. Remove reverse coupling sleeve.

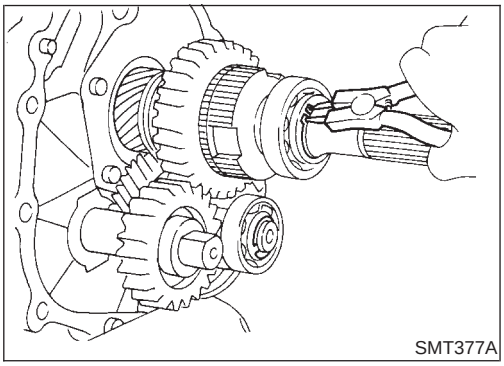
SMT377A

b. Remove mainshaft rear snap ring and counter gear rear snap ring.

c. Remove C-ring holder and mainshaft C-rings from mainshaft. Use punch and hammer to remove C-rings.

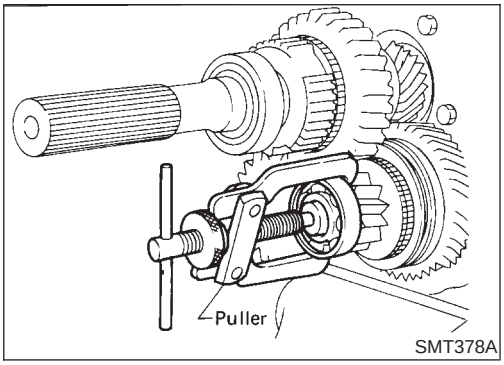

SMT378A

d. Pull out counter gear rear end bearing.

e. Remove reverse idler gear and reverse idler thrust washers.

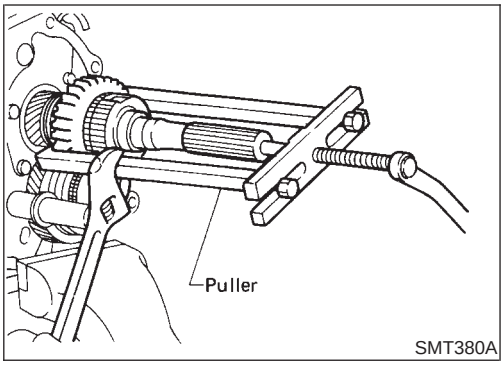

SMT380A

f. Pull out reverse main gear together with mainshaft spacer and reverse synchronizer hub. Then remove reverse gear needle bearings.

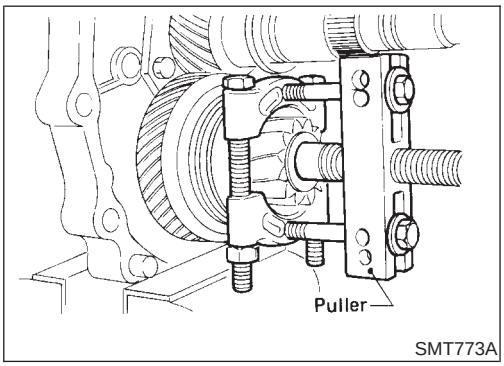

SMT773A

g. Pull out reverse counter gear.

h. Remove OD coupling sleeve together with OD baulk ring, reverse baulk ring and spring inserts.

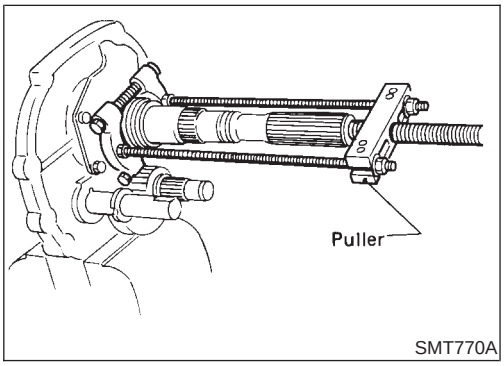

SMT770A

i. Pull out reverse gear bushing.

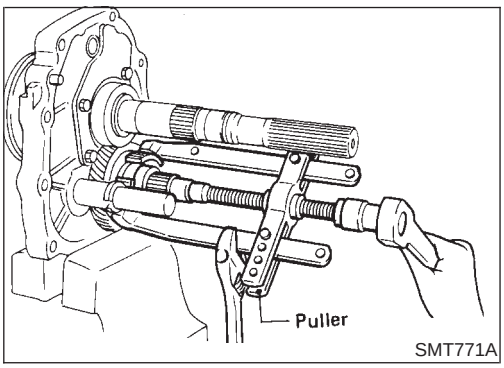

SMT771A

j. Pull out OD counter gear together with reverse cone.

3. Press out mainshaft and counter gear alternately.

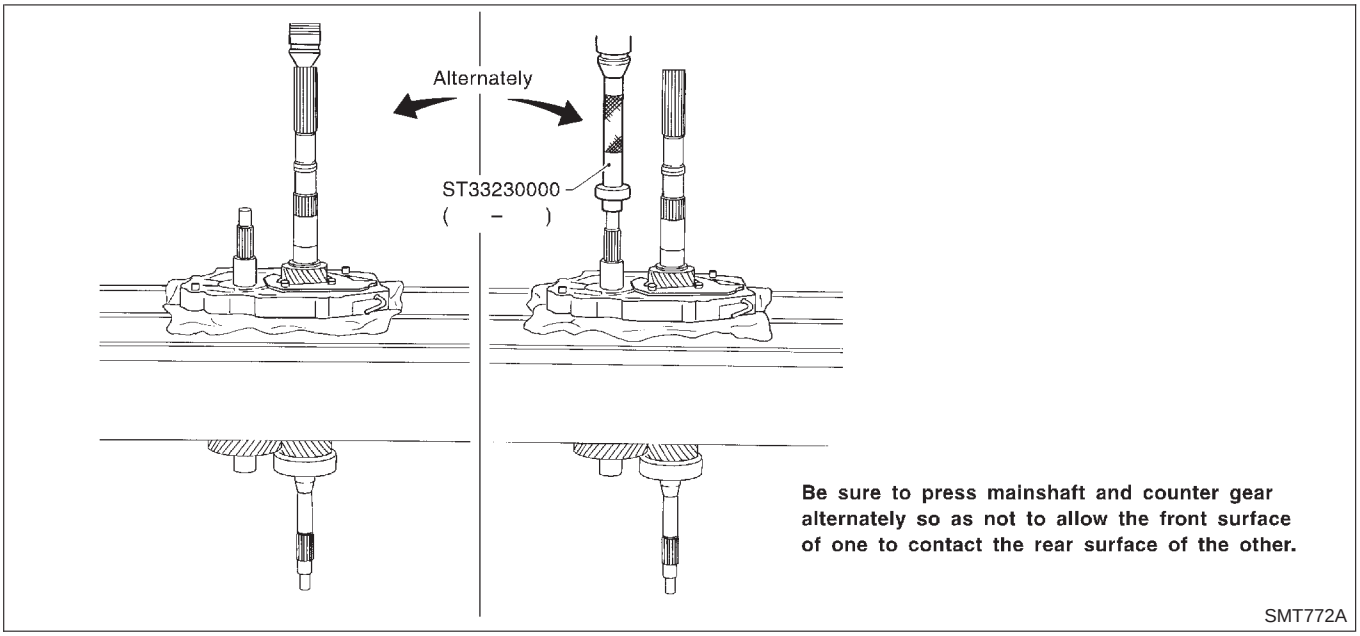

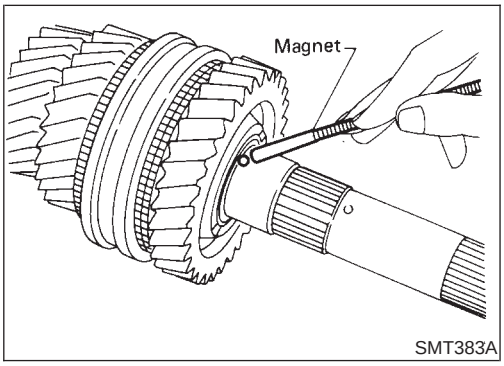

4. Remove front side components on mainshaft.
a. Remove 1st gear washer and steel ball.
b. Remove 1st main gear and 1st gear needle bearing.
- **Be careful not to lose steel ball.**

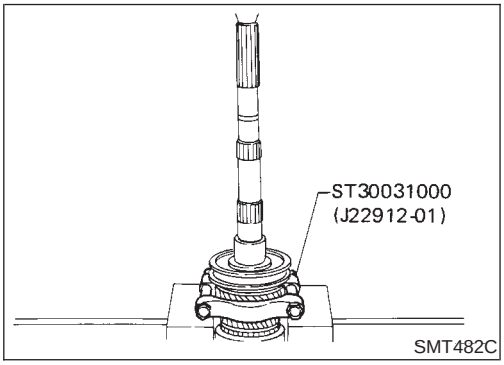

c. Press out 2nd main gear together with 1st gear bushing and 1st & 2nd synchronizer assembly.
d. Remove mainshaft front snap ring.

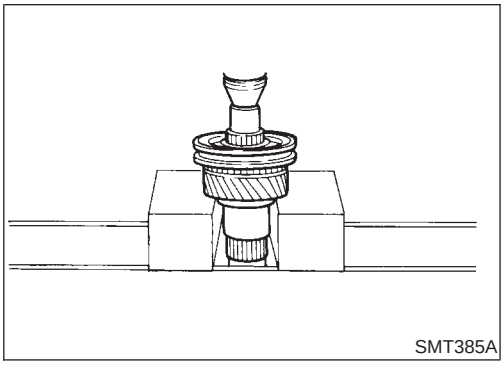

e. Press out 3rd main gear together with 3rd & 4th synchronizer assembly and 3rd gear needle bearing.

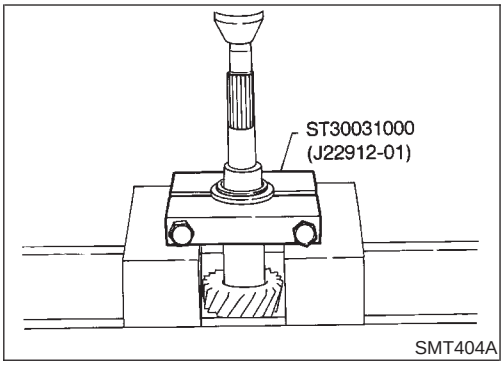

5. Remove front side components on counter gear.
a. Remove counter gear rear thrust bearing.

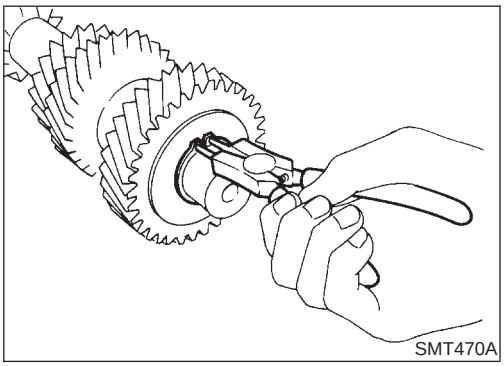

b. Remove sub-gear components.

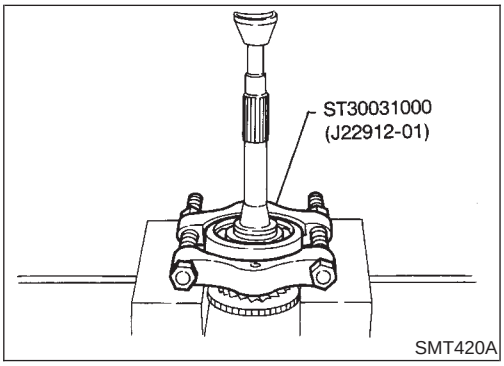

6. Remove main drive gear bearing.
a. Remove main drive gear snap ring.
b. Press out main drive gear bearing.

7. Remove bearings from case components.

Counter gear front bearing in transmission case

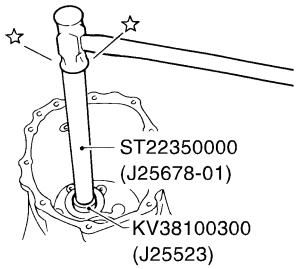

Mainshaft front bearing in adapter plate

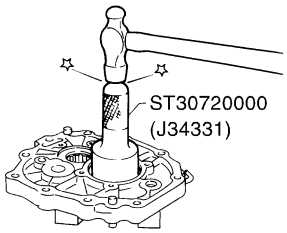

Mainshaft rear bearing in OD gear case

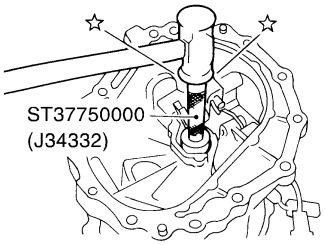

Counter gear rear bearing in adapter plate

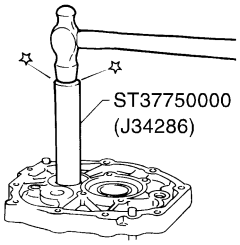

SMT206DA

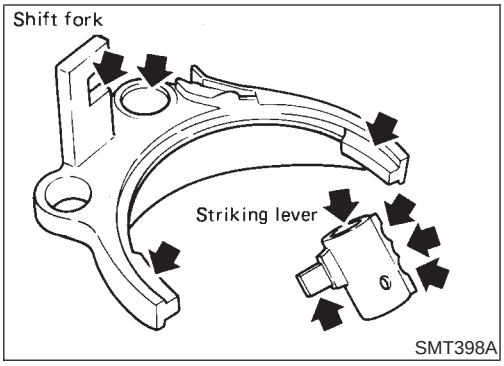

Shift Control Components

INSPECTION

NAMT0011

- Check contact surface and sliding surface for wear, scratches, projections or other damage.

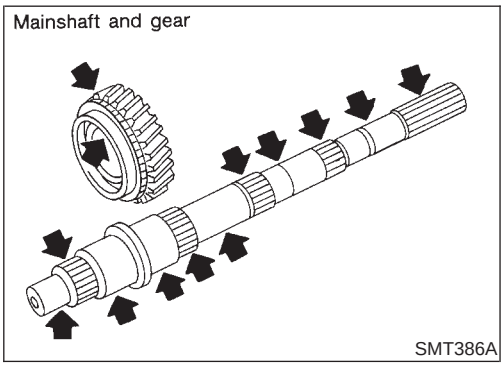

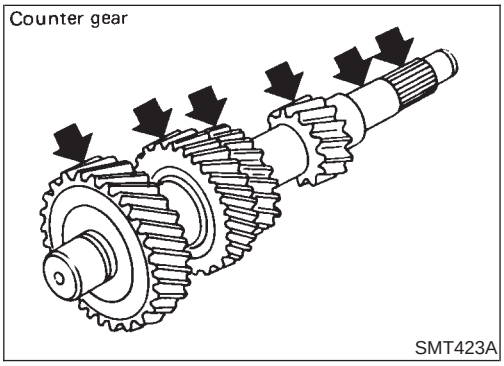

Gear Components

INSPECTION

NAMT0012

Gears and Shafts

NAMT0012S01

- Check shafts for cracks, wear or bending.
- Check gears for excessive wear, chips or cracks.

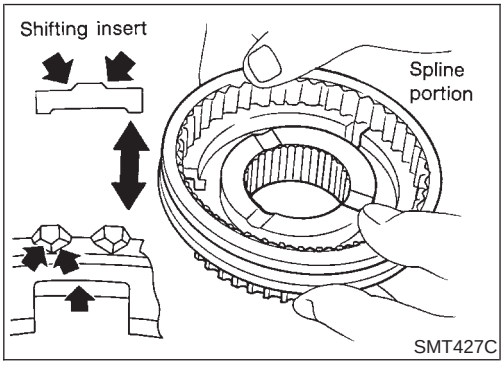

Synchronizers

NAMT0012S02

- Check spline portion of coupling sleeves, hubs, and gears for wear or cracks.
- Check baulk rings for cracks or deformation.
- Check shifting inserts for wear or deformation.
- Check insert springs for deformation.

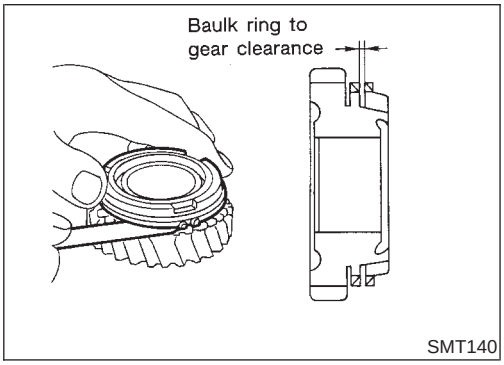

- Measure wear of main drive, 1st and OD baulk rings.

  Clearance between baulk ring and gear:

  Refer to SDS, MT-33.

- If the clearance is smaller than the wear limit, replace baulk ring.

Inner baulk ring

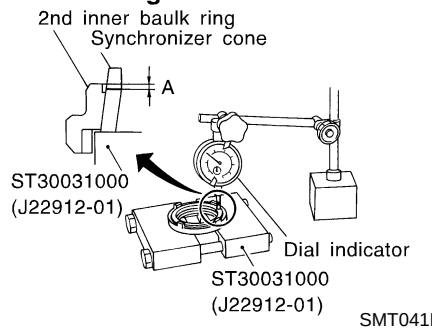

SMT041BF

- Measure wear of 2nd and 3rd baulk rings.

a) Place baulk rings in position on synchronizer cone.

b) While holding baulk rings against synchronizer cone as far as it will go, measure dimensions "A" and "B".

Standard:

A 0.7 - 0.9 mm (0.028 - 0.035 in)

B 0.6 - 1.1 mm (0.024 - 0.043 in)

Wear limit:

0.2 mm (0.008 in)

- If dimension "A" or "B" is smaller than the wear limit, replace outer baulk ring, inner baulk ring and synchronizer cone as a set.

Outer baulk ring

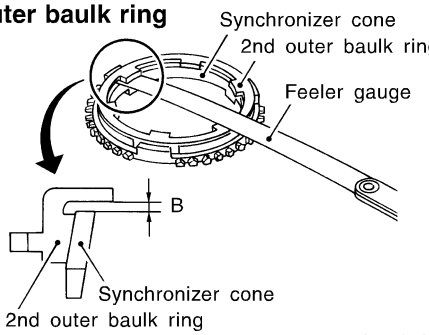

SMT042BC

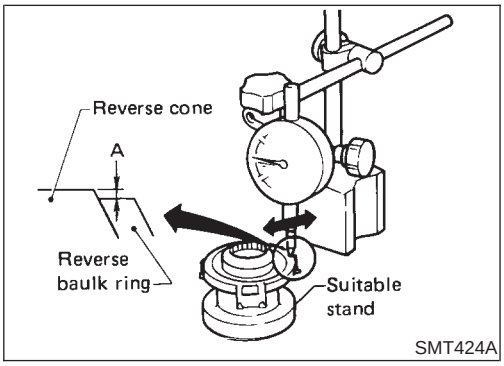

SMT424A

- Measure wear of reverse baulk ring.

a) Place baulk ring in position on reverse cone.

b) While holding baulk ring against reverse cone as far as it will go, measure dimension "A" with dial indicator.

Dimension "A":

Standard −0.45 to 1.05 mm (−0.0177 to 0.0413 in)

Wear limit 0.7 mm (0.028 in)

c) If dimension "A" is larger than the wear limit, replace baulk ring.

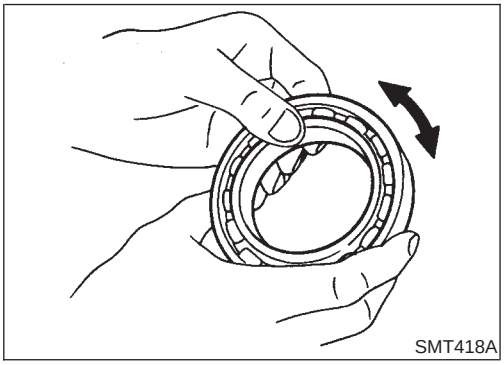

SMT418A

Bearings

NAMT0012S03

- Make sure bearings roll freely and are free from noise, crack, pitting or wear.

Gear Components

ASSEMBLY

NAMT0013

Counter gear front bearing in transmission case

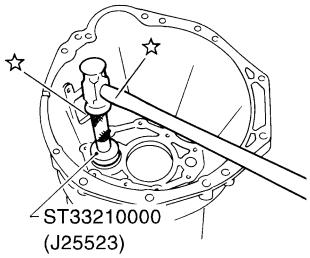

Mainshaft front bearing in adapter plate

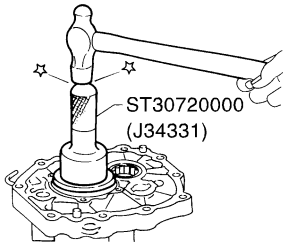

Mainshaft rear bearing in OD gear case

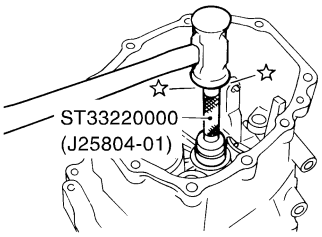

Be flush with front surface of OD gear case.

Counter gear rear bearing in adapter plate

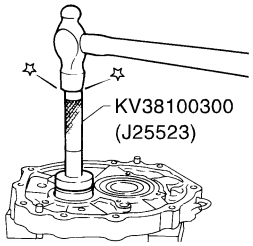

SMT207DA

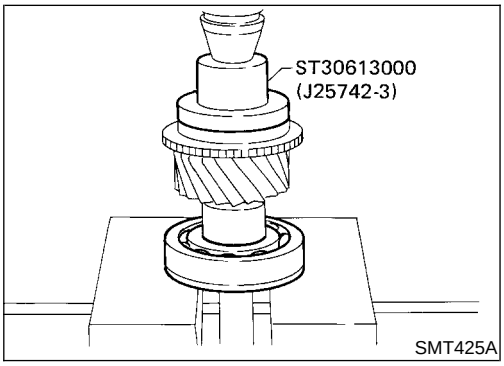

SMT425A

1. Install bearings into case components.
2. Install main drive gear bearing.

a. Press main drive gear bearing.

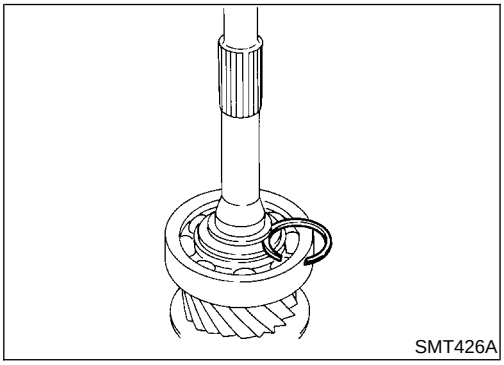

SMT426A

b. Select proper main drive gear snap ring to minimize clearance of groove.

Allowable clearance of groove:
0 - 0.1 mm (0 - 0.004 in)
Main drive gear snap ring:
Refer to SDS, MT-34.

c. Install selected snap ring on main drive gear.

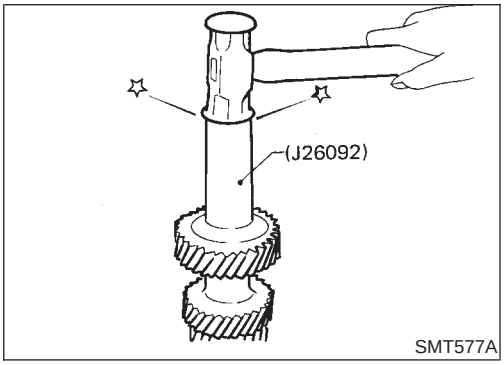

SMT577A

3. Install components on counter gear.

a. Install sub-gear components.

- **When installing sub-gear snap ring, tap sub-gear snap ring into position on counter gear.**

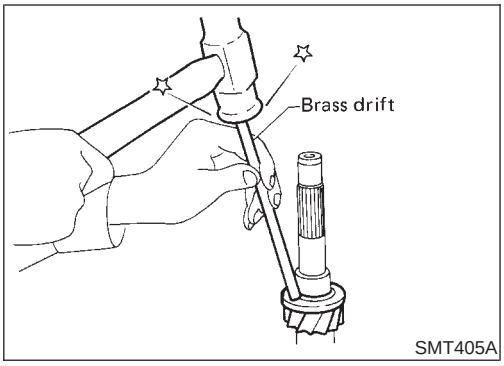

SMT405A

b. Install counter gear rear thrust bearing.

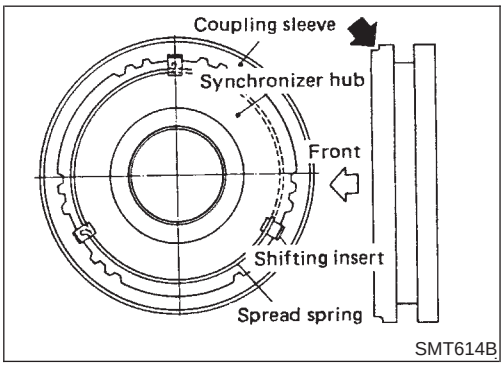

SMT614B

4. Install front side components on mainshaft.
a. Assemble 1st & 2nd synchronizer.

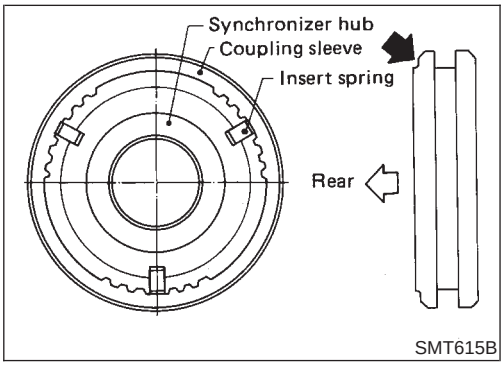

SMT615B

b. Assemble 3rd & 4th synchronizer.

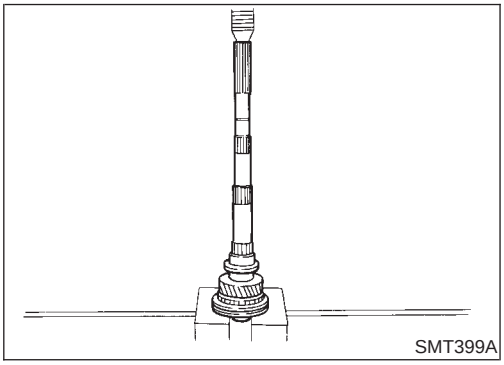
SMT399A

c. Press on 3rd & 4th synchronizer assembly together with 3rd main gear and 3rd gear needle bearing.

- **Pay attention to direction of synchronizer assembly.**

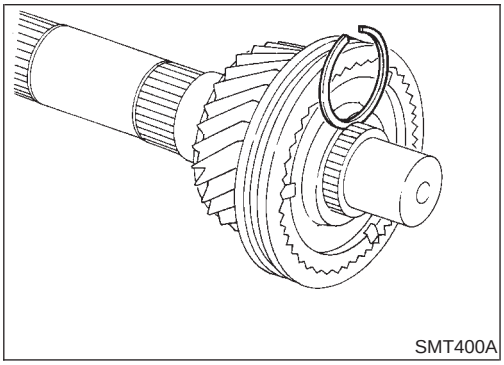
SMT400A

d. Select proper snap ring to minimize clearance of groove.

Allowable clearance of groove:
0 - 0.1 mm (0 - 0.004 in)
Mainshaft front snap ring:
Refer to SDS, MT-34.

e. Install selected snap ring on mainshaft.

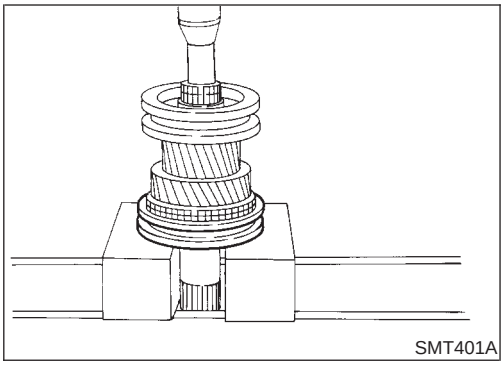

SMT401A

f. Press on 1st & 2nd synchronizer assembly together with 2nd main gear and 2nd gear needle bearing.

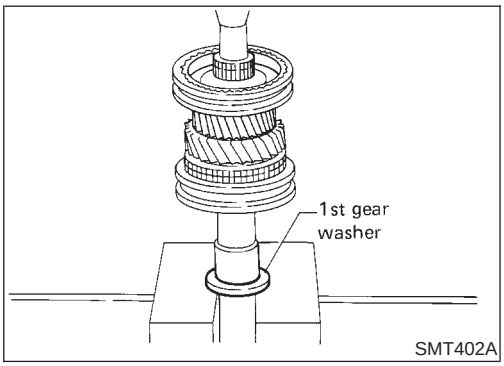

SMT402A

g. Press on 1st gear bushing using 1st gear washer.

h. Install 1st main gear and needle bearing.

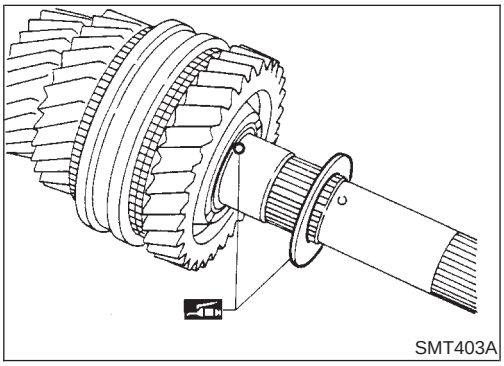

SMT403A

i. Install steel ball and 1st gear washer.

- **Apply multi-purpose grease to steel ball and 1st gear washer before installing.**

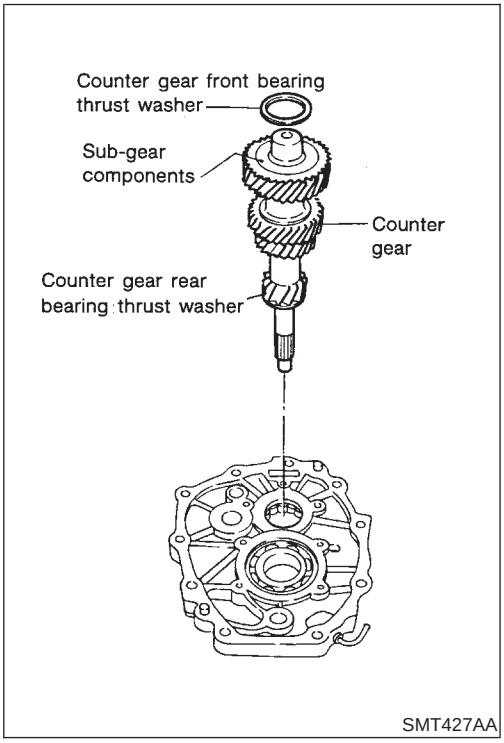

SMT427AA

5. Select proper counter gear front bearing thrust washer when replacing transmission case, counter gear, counter gear rear thrust bearing or sub-gear components.

a. Install counter gear with sub-gear components, counter gear front and rear bearing thrust washer on adapter plate.

b. Remove counter gear front bearing thrust washer from transmission case.

c. Place adapter plate and counter gear assembly in transmission case (case inverted).

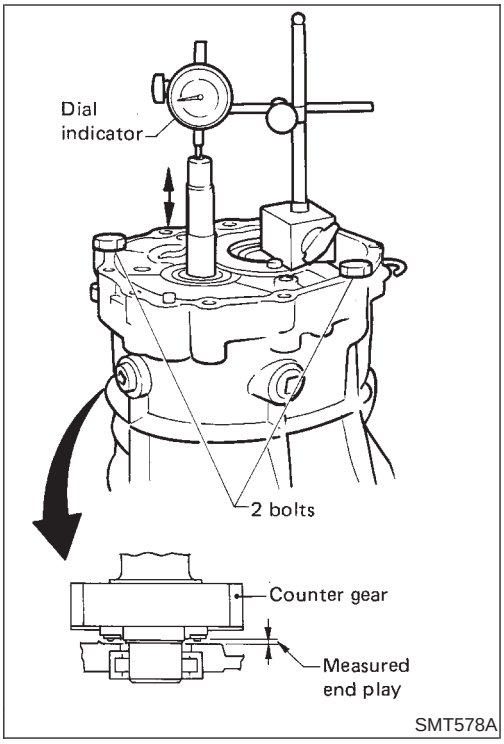

d. Tighten adapter plate to transmission case using 2 bolts.

e. Place dial indicator on rear end of counter gear.

f. Move counter gear up and down and measure dial indicator deflection.

g. Select proper thrust washer using table below as a guide.

Counter gear end play:

0.10 - 0.25 mm (0.0039 - 0.0098 in)

Table for selecting proper counter gear front bearing thrust washer:

Refer to SDS, MT-36.

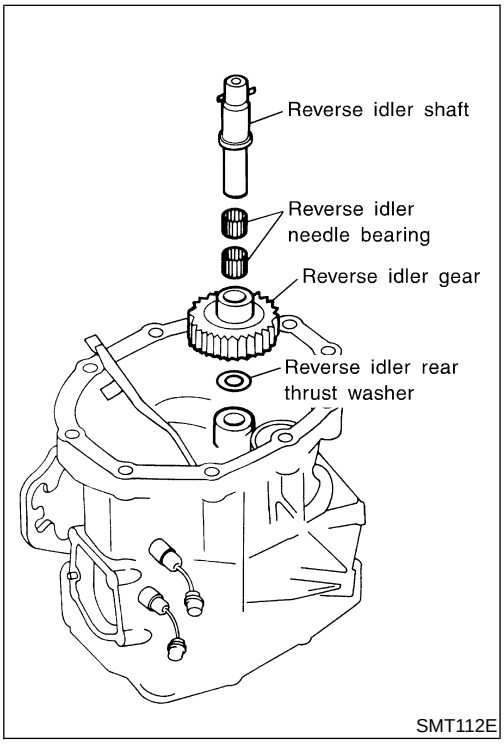

6. Select proper reverse idler rear thrust washer when replacing OD gear case, reverse idler gear (with sub-gear components), reverse idler shaft.

a. Install reverse idler gear (with sub-gear components), reverse idler needle bearings and reverse idler shaft into OD gear case.

- **When replacing reverse idler rear thrust washer, install either A or B.**

Reverse idler rear thrust washer:

Refer to SDS, MT-36.

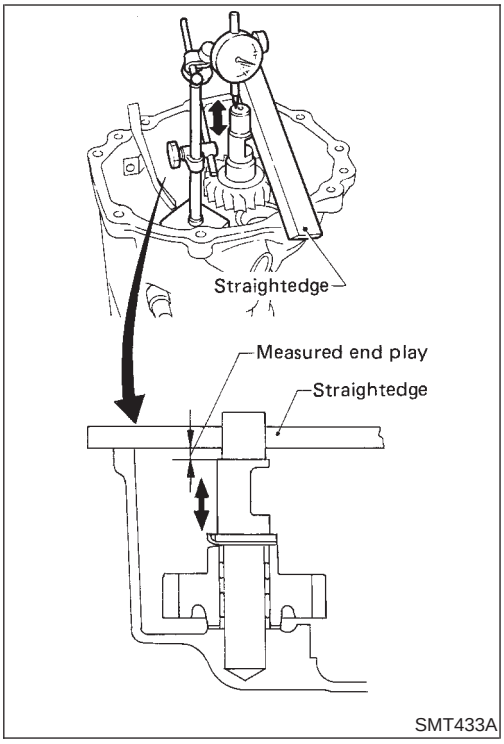

b. Place dial indicator on front end of reverse idler shaft.

c. Put straightedge on front surface of rear extension (or OD gear case) as a stopper of reverse idler shaft.

d. Move reverse idler shaft up and down and measure reverse idler gear end play.

Reverse idler gear end play:
0.30 - 0.53 mm (0.0118 - 0.0209 in)

e. If not within specification, replace reverse idler rear thrust washer with the other (A or B) and check again.

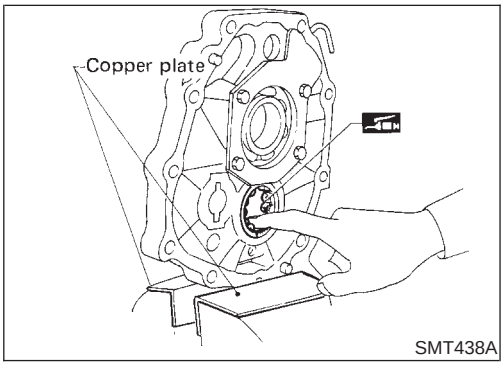

7. Install mainshaft and counter gear on adapter plate and main drive gear on mainshaft.

a. Mount adapter plate on vise and apply multi-purpose grease to counter gear rear bearing.

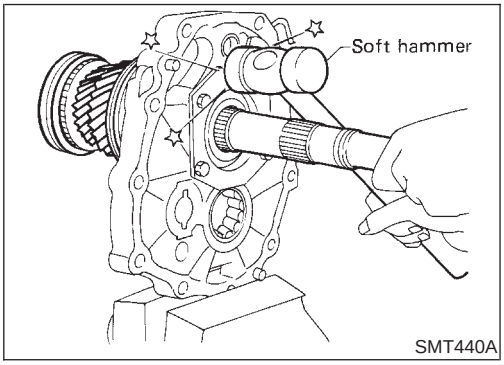

b. Install mainshaft a little on mainshaft front bearing.

- **To allow for installation of counter gear, do not install mainshaft completely.**

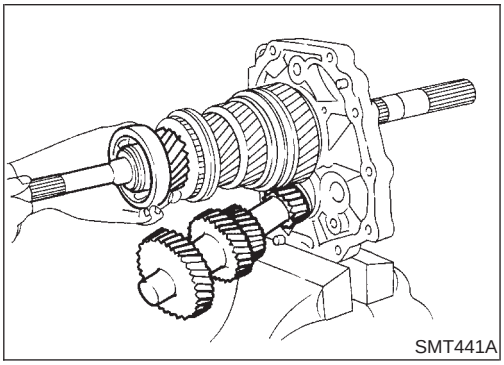

c. Install counter gear on counter gear rear bearing and install main drive gear, pilot bearing and spacer on mainshaft.

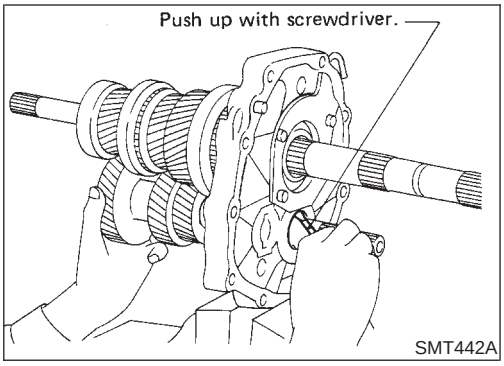

- **When installing counter gear into counter gear rear bearing, push up on upper roller of counter gear rear bearing with screwdriver.**

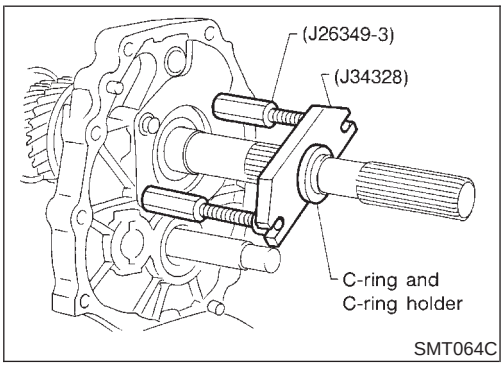

d. Install Tools (J26349-3) onto adapter plate and C-ring and C-ring holder on mainshaft.

e. Install Tool (J34328) on mainshaft.

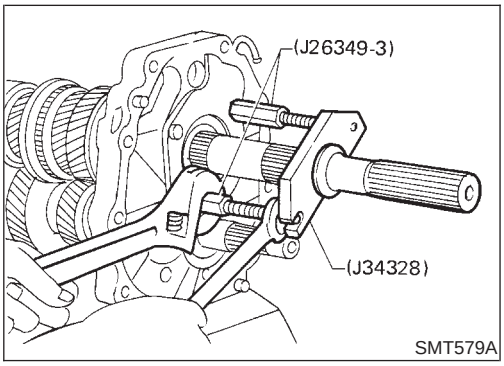

f. Install mainshaft and counter gear completely by extending length of (J26349-3).

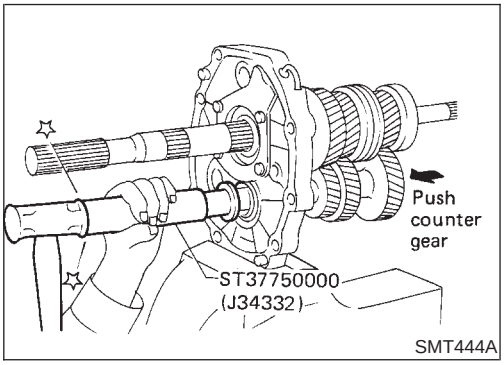

8. Install rear side components on mainshaft and counter gear.

a. Install OD gear bushing while pushing on the front of counter gear.

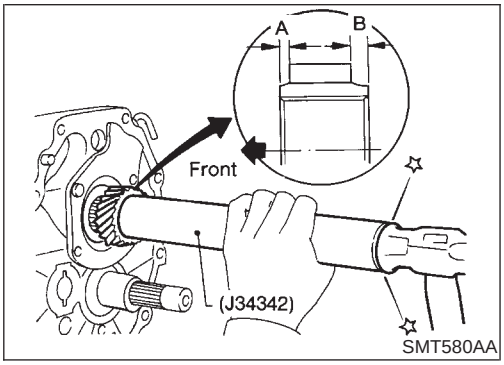

b. Install OD main gear.

- **Pay attention to direction of OD main gear. (B is wider than A as shown at left.)**

c. Install adapter plate with gear assembly onto transmission case.

d. Install OD gear needle bearing and then install OD counter gear and reverse idler shaft.

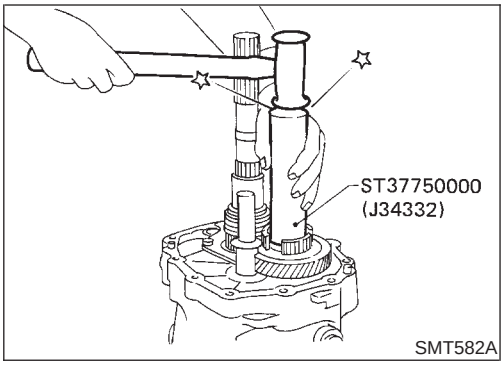

e. Install reverse cone.

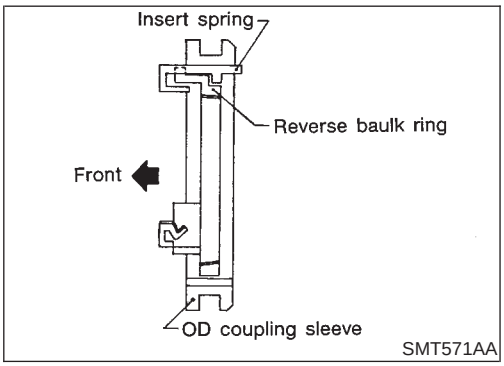

f. Install insert springs and reverse baulk ring on OD coupling sleeve. Then install them and OD baulk ring on OD counter gear.

- **Pay attention to direction of OD coupling sleeve.**

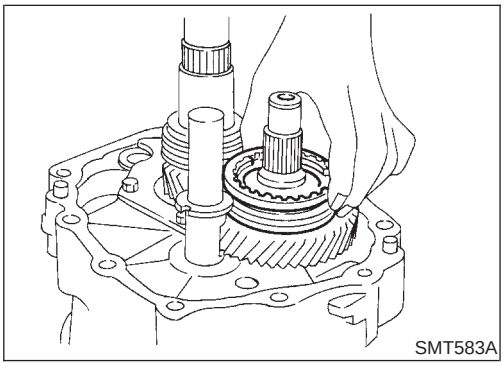

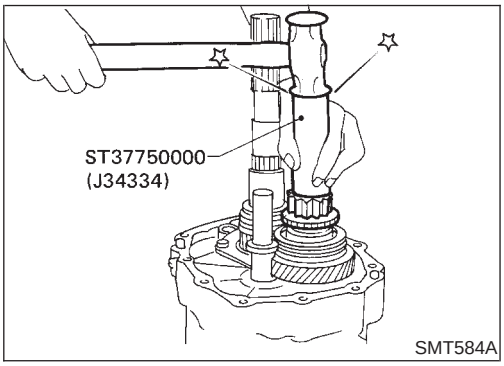

g. Install reverse counter gear.

h. Install reverse gear needle bearing and then install reverse main gear, reverse idler gear and reverse idler thrust washers.

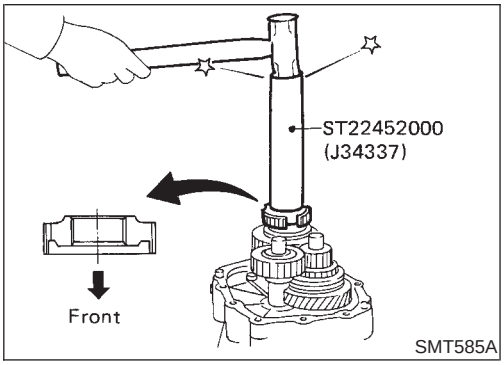

i. Install reverse hub.

- **Pay attention to its direction.**

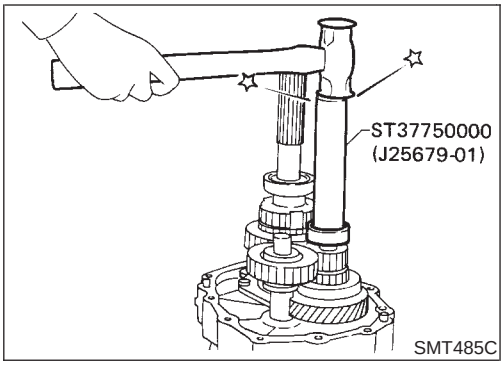

j. Install counter gear rear end bearing.

k. Separate adapter plate from transmission case and mount adapter plate on vice again.

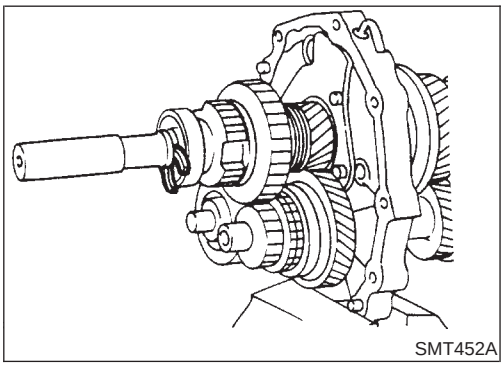

l. Select proper mainshaft C-ring to minimize clearance of groove.

Allowable clearance of groove:

0 - 0.1 mm (0 - 0.004 in)

Mainshaft C-ring:

Refer to SDS, MT-35.

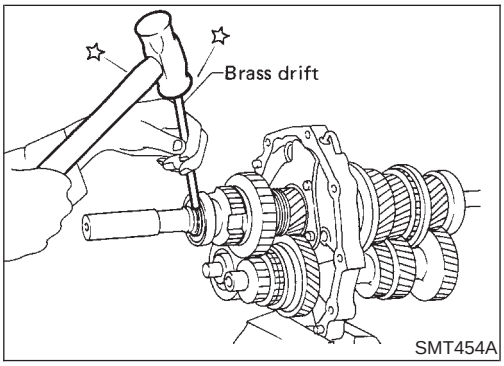

m. Install selected C-ring, C-ring holder and mainshaft rear snap ring.

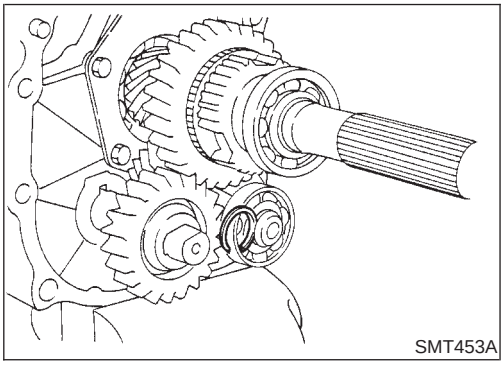

n. Select proper counter gear rear snap ring to minimize clearance of groove.

Allowable clearance of groove:

0 - 0.1 mm (0 - 0.004 in)

Counter gear rear snap ring:

Refer to SDS, MT-35.

o. Install selected counter gear rear snap ring.

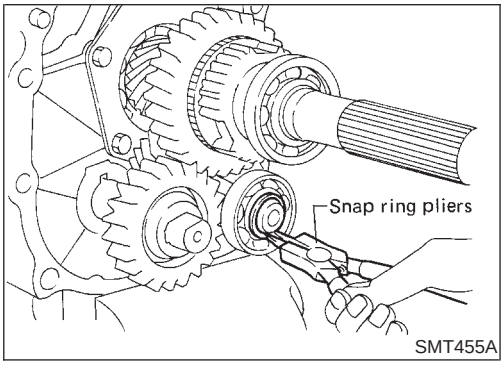

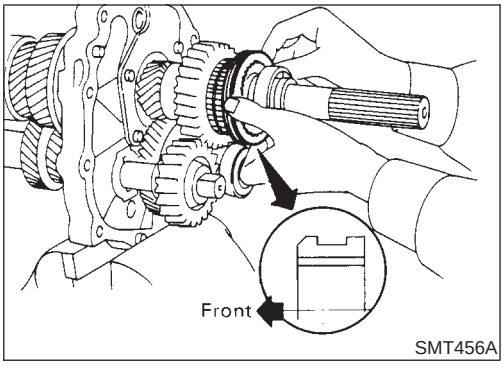

SMT456A

p. Install reverse coupling sleeve.
- **Pay attention to its direction.**

q. Measure each gear end play as a final check. Refer to "DISASSEMBLY", MT-16.

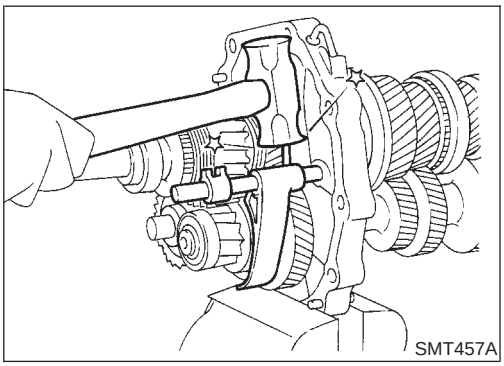
SMT457A

Shift Control Components

ASSEMBLY

NAMT0014

1. Install OD fork rod and OD shift fork. Then install retaining pin into OD shift fork.
2. Install 1st & 2nd, 3rd & 4th and reverse shift fork onto coupling sleeve.

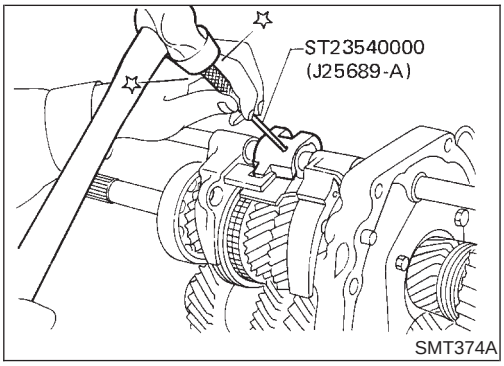

SMT374A

3. Install striking rod into hole of shift forks, striking lever and interlock and then install retaining pin into striking lever.
- **Make sure that striking rod moves smoothly.**

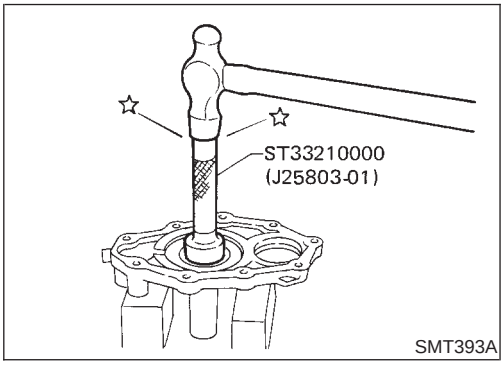

SMT393A

Case Components

ASSEMBLY

NAMT0015

1. Install front cover oil seal.
- **Apply multi-purpose grease to seal lip.**

2. Install selected counter gear front bearing shim onto transmission case.
- **Apply multi-purpose grease.**

3. Apply sealant to mating surface of transmission case.

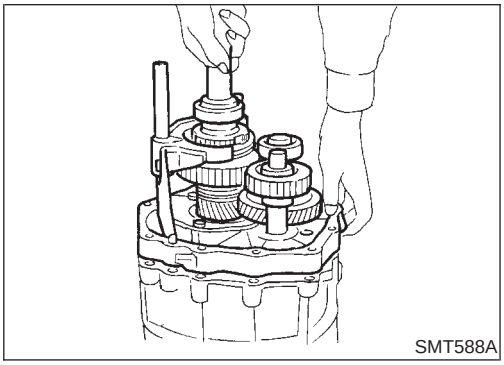
SMT588A

4. Install gear assembly onto transmission case.
5. Install check spring and check ball into interlock stopper.
- **Apply multi-purpose grease to check ball.**

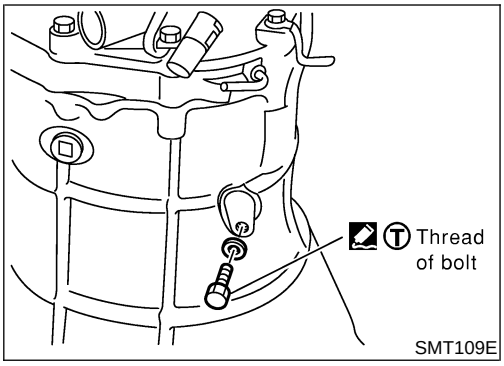

6. Install interlock stopper assembly and then tighten check ball plug.
- **Apply genuine thread sealant to thread of check ball plug. Refer to Shift Control Components, MT-13.**

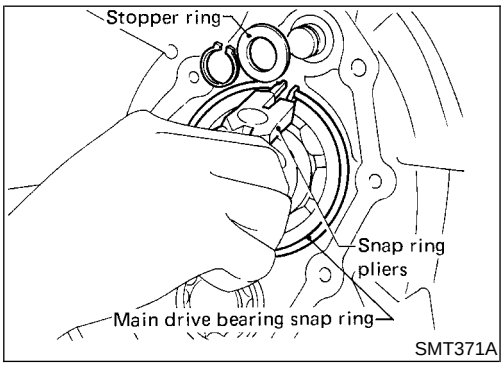

7. Install stopper ring and main drive bearing snap ring.

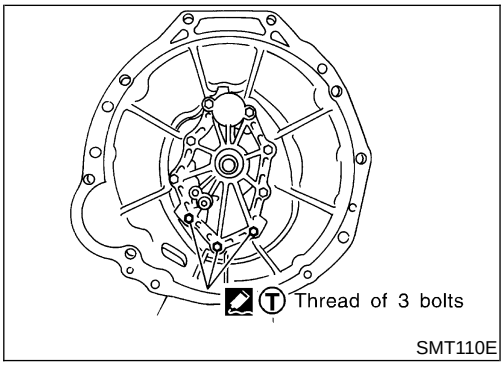

8. Install front cover and gasket.
- **Apply genuine thread sealant to thread of 3 bolts shown left.**
  Refer to Case Components, MT-10.
9. Apply sealant to mating surface of adapter plate.

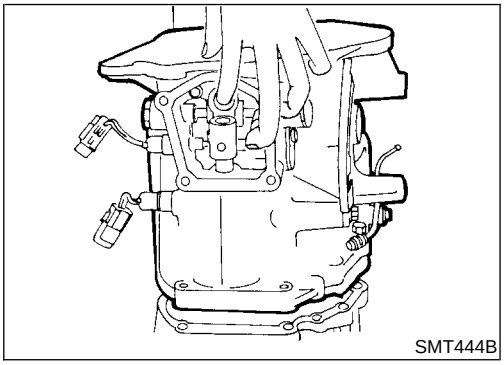

10. Install OD gear case together with striking arm.

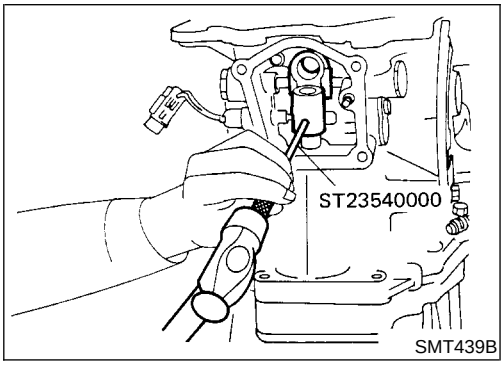

11. Install retaining pin into striking arm.

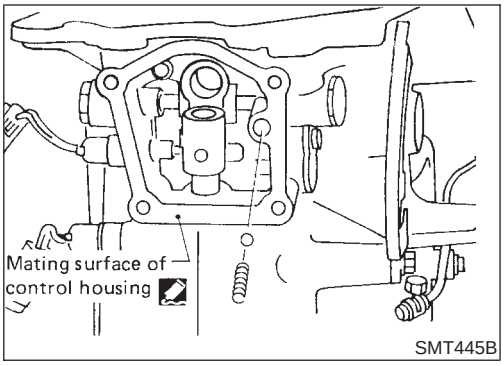

12. Install return spring and check ball and then install control housing.

- **Apply sealant to mating surface of OD gear case. Refer to Case Components, MT-10.**

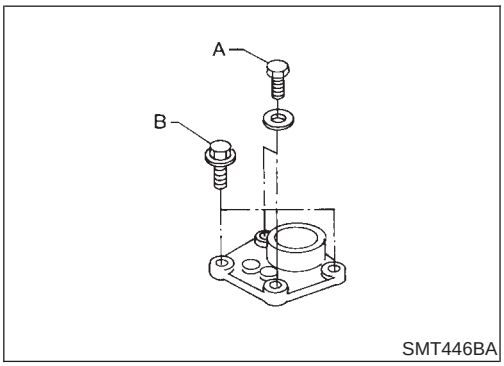

13. Tighten control housing bolts.

Bolt head size:

A bolts 12 mm (0.47 in)

B bolts 13 mm (0.51 in)

General Specifications

NAMT0016

Applied model	VQ35DE		
	4WD		
Transmission	FS5R30A		
Model code number	4W120		
Number of speed	5		
Shift pattern	MT-SDS-2		
Synchromesh type	Warner		
	Gear ratio	Number of teeth	
		Mainshaft	Countershaft
Drive	—	22	32
1st	3.580	32	13
2nd	2.077	30	21
3rd	1.360	29	31
4th	1.000	—	—
OD	0.811	24	43
Reverse	3.636	30	12
Reverse idler gear	22		
Oil capacity ℓ (US pt, Imp pt)*	5.1 (10-3/4, 9)		
Remarks	2nd & 3rd double baulk ring type synchronizer		

*: Refer to MA-12, “Fluids and Lubricants”.

Gear End Play

NAMT0017

Unit: mm (in)

Gear	End play
1st main gear	0.23 - 0.33 (0.0091 - 0.0130)
2nd main gear	0.23 - 0.33 (0.0091 - 0.0130)
3rd main gear	0.06 - 0.16 (0.0024 - 0.0063)
OD counter gear	0.23 - 0.33 (0.0091 - 0.0130)
Reverse main gear	0.33 - 0.43 (0.0130 - 0.0169)
Counter gear	0.10 - 0.25 (0.0039 - 0.0098)
Reverse idler gear	0.30 - 0.53 (0.0118 - 0.0209)

Clearance Between Baulk Ring and Gear

NAMT0018

Unit: mm (in)

	Standard	Wear limit
1st	1.05 - 1.3 (0.0413 - 0.0512)	0.7 (0.028)
Main drive	1.05 - 1.3 (0.0413 - 0.0512)	
OD	1.05 - 1.3 (0.0413 - 0.0512)	

2ND AND 3RD BAULK RING

NAMT0018S01
Unit: mm (in)

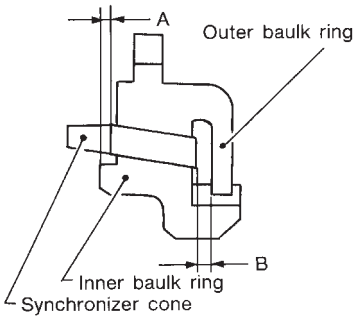

SMT742C

Dimension	Standard	Wear limit
A	0.7 - 0.9 (0.028 - 0.035)	0.2 (0.008)
B	0.6 - 1.1 (0.024 - 0.043)	

Distance Between Rear Surface of Reverse Cone and Reverse Baulk Ring

NAMT0019
Unit: mm (in)

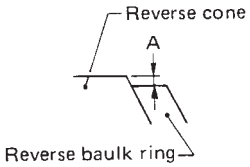

SMT428C

	Standard	Wear limit
Dimension "A"	0.3 to 0.75 (0.012 to 0.0295)	1.1 (0.043)

Available Snap Ring

NAMT0020

MAIN DRIVE GEAR SNAP RING

NAMT0020S01
Unit: mm (in)

Allowable clearance 0 - 0.1 (0 - 0.004)

Thickness	Part number*	Thickness	Part number*
1.89 (0.0744)	32204-01G60	2.03 (0.0799)	32204-01G63
1.95 (0.0768)	32204-01G61	2.07 (0.0815)	32204-01G64
1.99 (0.0783)	32204-01G62	2.11 (0.0831)	32204-01G65

*: Always check with the Parts Department for the latest parts information.

MAINSHAFT FRONT SNAP RING

NAMT0020S02
Unit: mm (in)

Allowable clearance 0 - 0.1 (0 - 0.004)

Thickness	Part number*	Thickness	Part number*
1.99 (0.0783)	32204-01G62	2.11 (0.0831)	32204-01G65
2.03 (0.0799)	32204-01G63	2.15 (0.0846)	32204-01G66
2.07 (0.0815)	32204-01G64	2.19 (0.0862)	32204-01G67

*: Always check with the Parts Department for the latest parts information.

COUNTER GEAR REAR SNAP RING

NAMT0020S03

Unit: mm (in)

Allowable clearance	0 - 0.11 (0 - 0.0043)		
Thickness	Part number*	Thickness	Part number*
1.32 (0.0520)	32236-01G00	1.56 (0.0614)	32236-01G04
1.38 (0.0543)	32236-01G01	1.62 (0.0638)	32236-01G05
1.44 (0.0567)	32236-01G02	1.68 (0.0661)	32236-01G06
1.50 (0.0591)	32236-01G03	1.74 (0.0685)	32236-01G07

*: Always check with the Parts Department for the latest parts information.

Available C-ring

NAMT0021

MAINSHAFT C-RING

NAMT0021S01

Unit: mm (in)

Allowable clearance	0 - 0.1 (0 - 0.004)		
Thickness	Part number*	Thickness	Part number*
2.63 (0.1035)	32348-01G15	3.19 (0.1256)	32348-01G07
2.70 (0.1063)	32348-01G00	3.26 (0.1283)	32348-01G08
2.77 (0.1091)	32348-01G01	3.33 (0.1311)	32348-01G09
2.84 (0.1118)	32348-01G02	3.40 (0.1339)	32348-01G10
2.91 (0.1146)	32348-01G03	3.47 (0.1366)	32348-01G11
2.98 (0.1173)	32348-01G04	3.54 (0.1394)	32348-01G12
3.05 (0.1201)	32348-01G05	3.61 (0.1421)	32348-01G13
3.12 (0.1228)	32348-01G06	3.68 (0.1449)	32348-01G14

*: Always check with the Parts Department for the latest parts information.

Available Shim and Washer

=NAMT0022

TABLE FOR SELECTING PROPER COUNTER GEAR FRONT BEARING THRUST WASHER

NAMT0022S01

Unit: mm (in)

Dial indicator deflection	Thickness of proper washer	Part number*
0.93 - 1.02 (0.0366 - 0.0402)	0.80 (0.0315)	32218-01G00
1.01 - 1.10 (0.0398 - 0.0433)	0.88 (0.0346)	32218-01G11
1.09 - 1.18 (0.0429 - 0.0465)	0.96 (0.0378)	32218-01G12
1.17 - 1.26 (0.0461 - 0.0496)	1.04 (0.0409)	32218-01G13
1.25 - 1.34 (0.0492 - 0.0528)	1.12 (0.0441)	32218-01G14
1.33 - 1.42 (0.0524 - 0.0559)	1.20 (0.0472)	32218-01G04
1.41 - 1.50 (0.0555 - 0.0591)	1.28 (0.0504)	32218-01G15
1.49 - 1.58 (0.0587 - 0.0622)	1.36 (0.0535)	32218-01G16
1.57 - 1.66 (0.0618 - 0.0654)	1.44 (0.0567)	32218-01G17

*: Always check with the Parts Department for the latest parts information.

REVERSE IDLER REAR THRUST WASHER

NAMT0022S02

Unit: mm (in)

Thickness		Part number*
A	1.97 (0.0776)	32284-01G10
B	2.07 (0.0815)	32284-01G11

*: Always check with the Parts Department for the latest parts information.

PROPELLER SHAFT & DIFFERENTIAL CARRIER

SECTION PD

CONTENTS

PROPELLER SHAFT 3
Preparation 3
SPECIAL SERVICE TOOLS 3
Noise, Vibration and Harshness (NVH) Troubleshooting 4
NVH TROUBLESHOOTING CHART 4
Components....5
FRONT PROPELLER SHAFT 5
REAR PROPELLER SHAFT 6
On-vehicle Service....8
PROPELLER SHAFT VIBRATION 8
APPEARANCE CHECKING 8
Removal and Installation 8
Inspection....9
Disassembly....9
CENTER BEARING - 2WD - 9
JOURNAL (71H AND 80B)....10
Assembly 11
CENTER BEARING - 2WD - 11
JOURNAL (71H AND 80B)....11
Service Data and Specifications (SDS)....12
GENERAL SPECIFICATIONS 12
SERVICE DATA....13
SNAP RING (80B)....13
SNAP RING (71H) 13
SNAP RING (1310) 13

R200A

FRONT FINAL DRIVE 14
Preparation 14
SPECIAL SERVICE TOOLS 14
Noise, Vibration and Harshness (NVH) Troubleshooting 16
On-vehicle Service....16
FRONT OIL SEAL REPLACEMENT....16
REAR COVER GASKET REPLACEMENT....17
Components....18
Removal and Installation 19
REMOVAL....19
INSTALLATION....19
Disassembly....19
PRE-INSPECTION 19
FINAL DRIVE HOUSING 20
DIFFERENTIAL CASE....22
DIFFERENTIAL SIDE SHAFT 23
Inspection....24
DRIVE GEAR AND DRIVE PINION 24
DIFFERENTIAL CASE ASSEMBLY 24
BEARING 24
Adjustment 25
SIDE BEARING PRELOAD....25
PINION GEAR HEIGHT AND PINION BEARING PRELOAD 26
TOOTH CONTACT....30
Assembly 31
DIFFERENTIAL SIDE SHAFT 31
DIFFERENTIAL CASE....32
FINAL DRIVE HOUSING 33
Service Data and Specifications (SDS)....37
R200A....37

H233B

REAR FINAL DRIVE 39
Preparation 39
SPECIAL SERVICE TOOLS 39
Noise, Vibration and Harshness (NVH) Troubleshooting 41
On-vehicle Service....41
FRONT OIL SEAL REPLACEMENT....41
Components....43
Removal and Installation 44
REMOVAL....44
INSTALLATION....44
Disassembly....44
PRE-INSPECTION 44
DIFFERENTIAL CARRIER 45
DIFFERENTIAL CASE....47
Inspection....48
DRIVE GEAR AND DRIVE PINION 48
DIFFERENTIAL CASE ASSEMBLY 48

CONTENTS (Cont'd)

BEARING 48
Limited Slip Differential 48
PREPARATION FOR DISASSEMBLY 48
DISASSEMBLY 49
INSPECTION 50
ADJUSTMENT 51
ASSEMBLY 52
Adjustment 54
PINION GEAR HEIGHT 54
TOOTH CONTACT 57
Assembly 58
DIFFERENTIAL CASE 58
DIFFERENTIAL CARRIER 59
Service Data and Specifications (SDS) 62
H233B 62

Preparation

SPECIAL SERVICE TOOLS

NAPD0001

The actual shapes of Kent-Moore tools may differ from those of special service tools illustrated here.

Tool number (Kent-Moore No.) Tool name	Description	
KV38108300 (J44195) Companion flange wrench	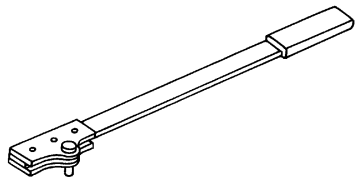 NT771	Removing and installing propeller shaft lock nut, and drive pinion lock nut
ST3090S000 (—) Drive pinion rear inner race puller set 1 ST30031000 (J22912-01) Puller 2 ST30901000 (J26010-01) Base	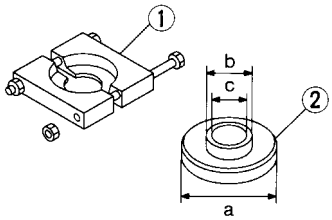 NT527	Removing and installing drive pinion rear inner cone **a: 79 mm (3.11 in) dia.** **b: 45 mm (1.77 in) dia.** **c: 35 mm (1.38 in) dia.**

Noise, Vibration and Harshness (NVH) Troubleshooting

=NAPD0049

NVH TROUBLESHOOTING CHART

NAPD0049S01

Use the chart below to help you find the cause of the symptom. If necessary, repair or replace these parts.

Reference page			—	PD-6	—	—	—	PD-8	PD-8	PD-24, 48	PD-30, 57	PD-24, 48	PD-19, 44	—	—	—	—	AX-3	AX-3	SU-4	SU-4	SU-4	BR-7	ST-6
Possible cause and SUSPECTED PARTS			Uneven rotation torque	Center bearing improper installation	Excessive center bearing axial end play	Center bearing mounting (insulator) cracks, damage or deterioration	Excessive joint angle	Rotation imbalance	Excessive runout	Rough gear tooth	Improper gear contact	Tooth surfaces worn	Incorrect backlash	Companion flange excessive runout	Improper gear oil	PROPELLER SHAFT	DIFFERENTIAL	DRIVE SHAFT	AXLE	SUSPENSION	TIRES	ROAD WHEEL	BRAKES	STEERING
Symptom	PROPEL-LER SHAFT	Noise	×	×	×	×	×	×	×								×	×	×	×	×	×	×	×
		Shake		×			×											×	×	×	×	×	×	×
		Vibration	×	×	×	×	×	×	×									×	×	×	×			×
	DIFFER-ENTIAL	Noise								×	×	×	×	×	×	×		×	×	×	×	×	×	×

×: Applicable

Components

NAPD0002

FRONT PROPELLER SHAFT

NAPD0002S01

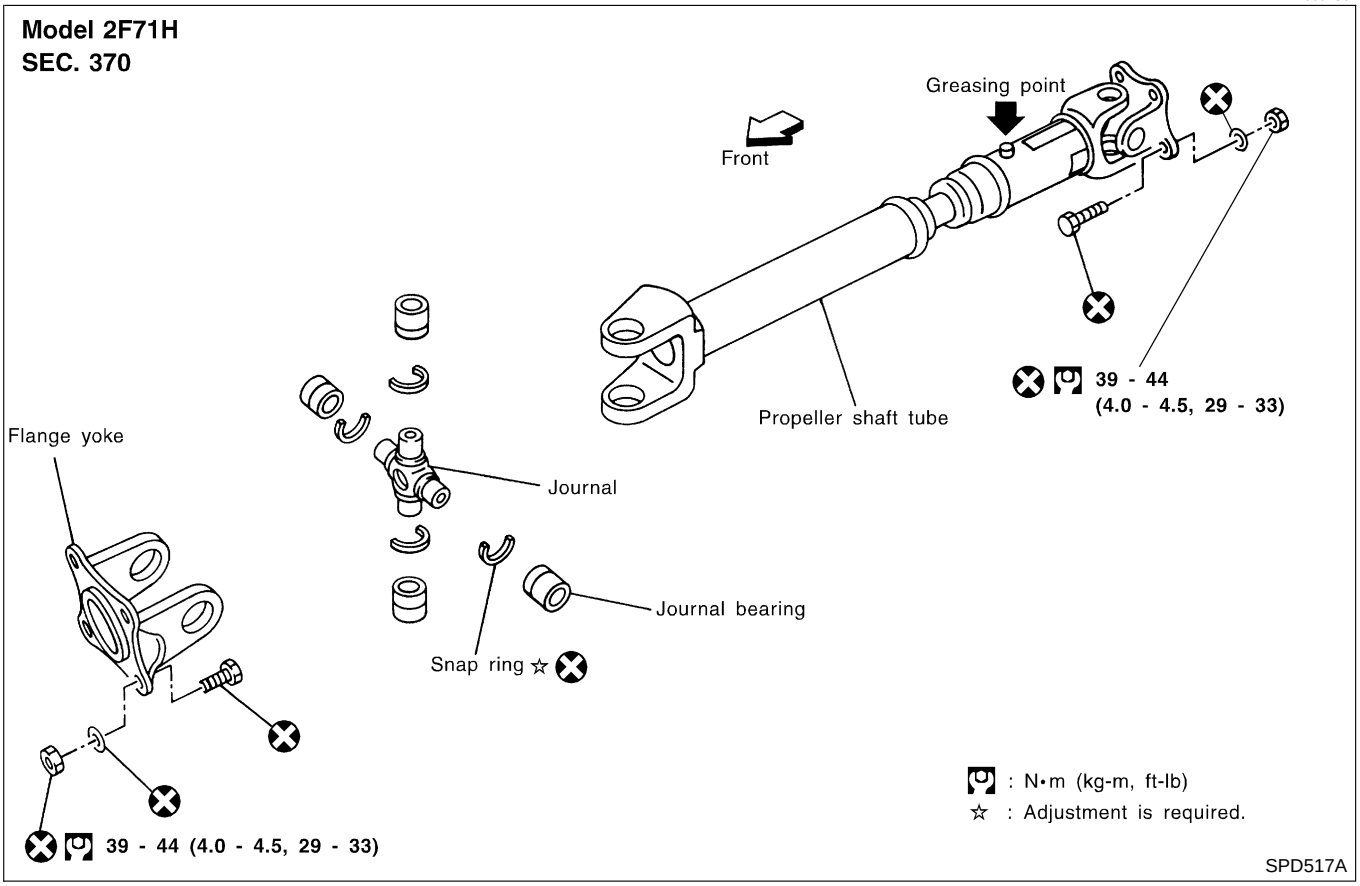

REAR PROPELLER SHAFT

NAPD0002S02

MODEL 3F80B-2BJ – 2WD A/T model – SEC. 370

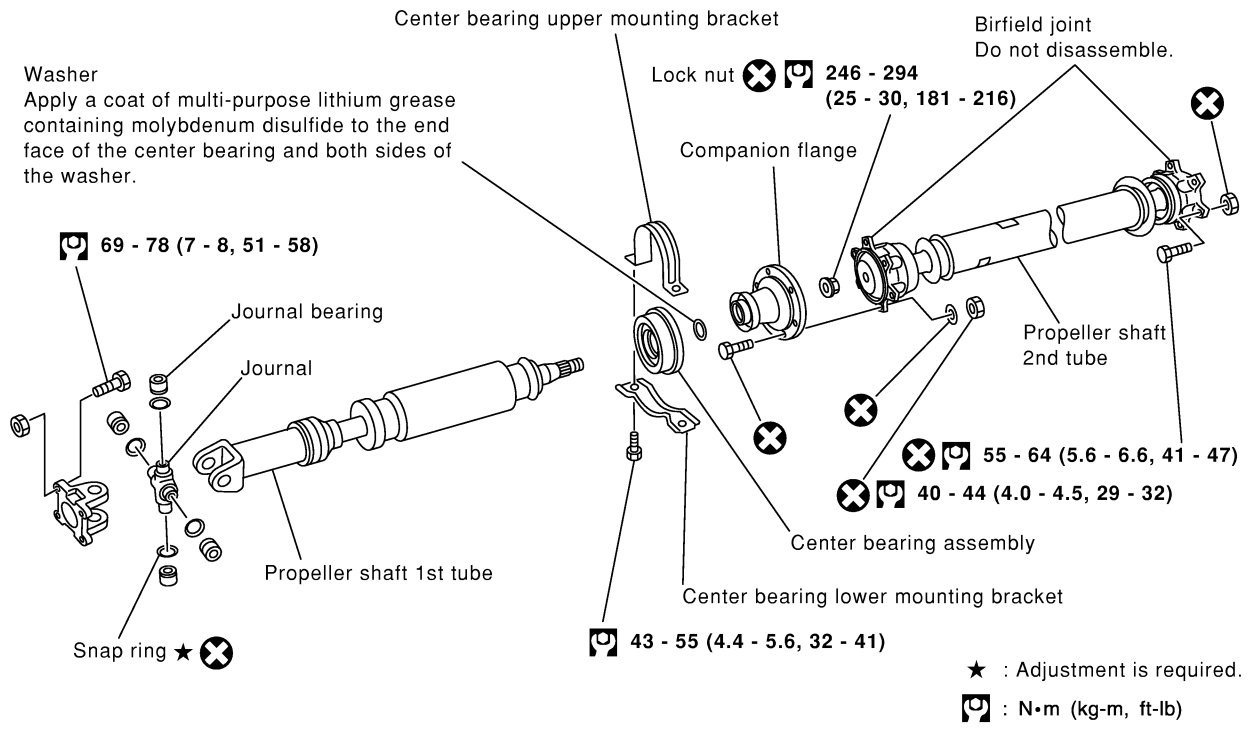

SPD522A

MODEL 2S1310 – 4WD M/T model – SEC. 370

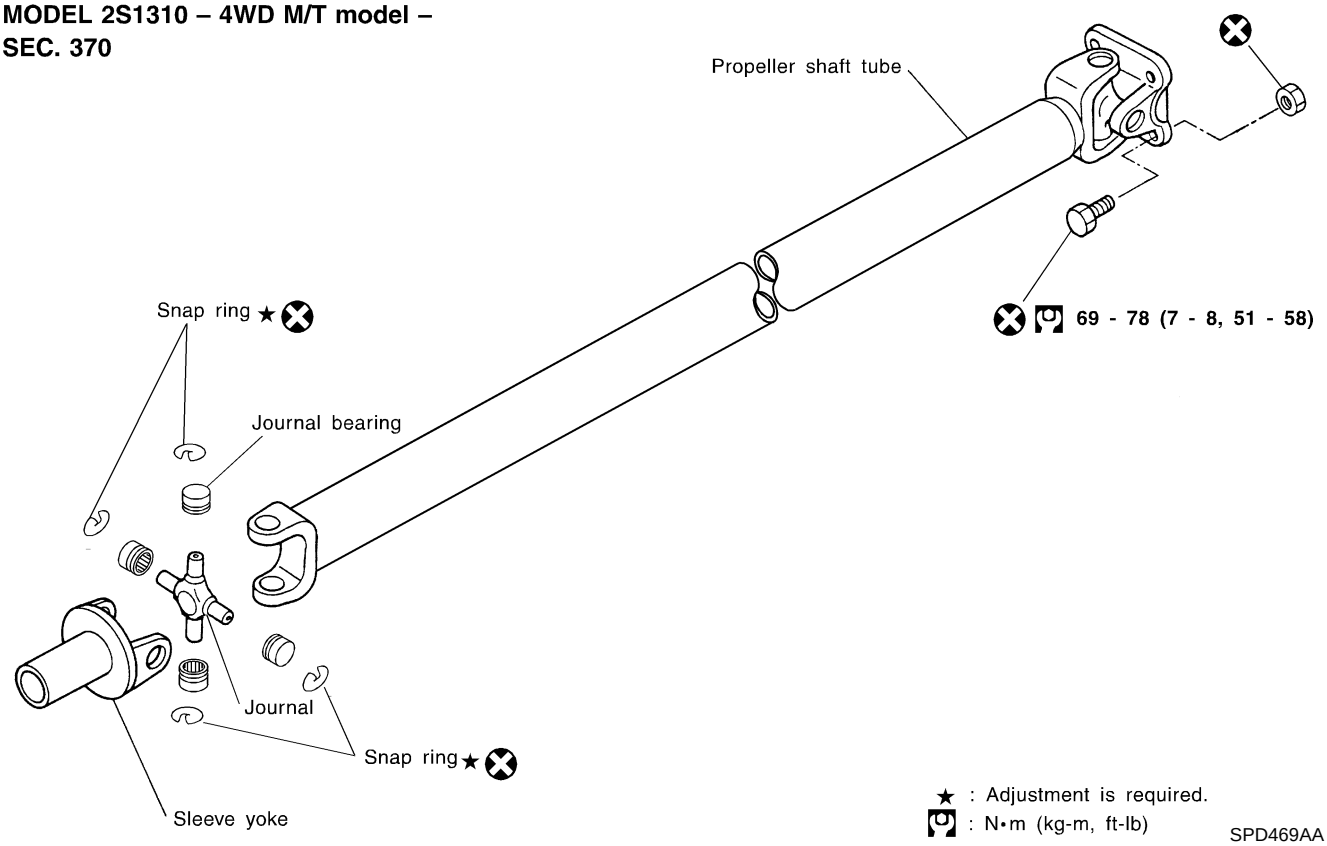

SPD469AA

Components (Cont'd)

MODEL 2S80B-T – 4WD A/T model – SEC. 370

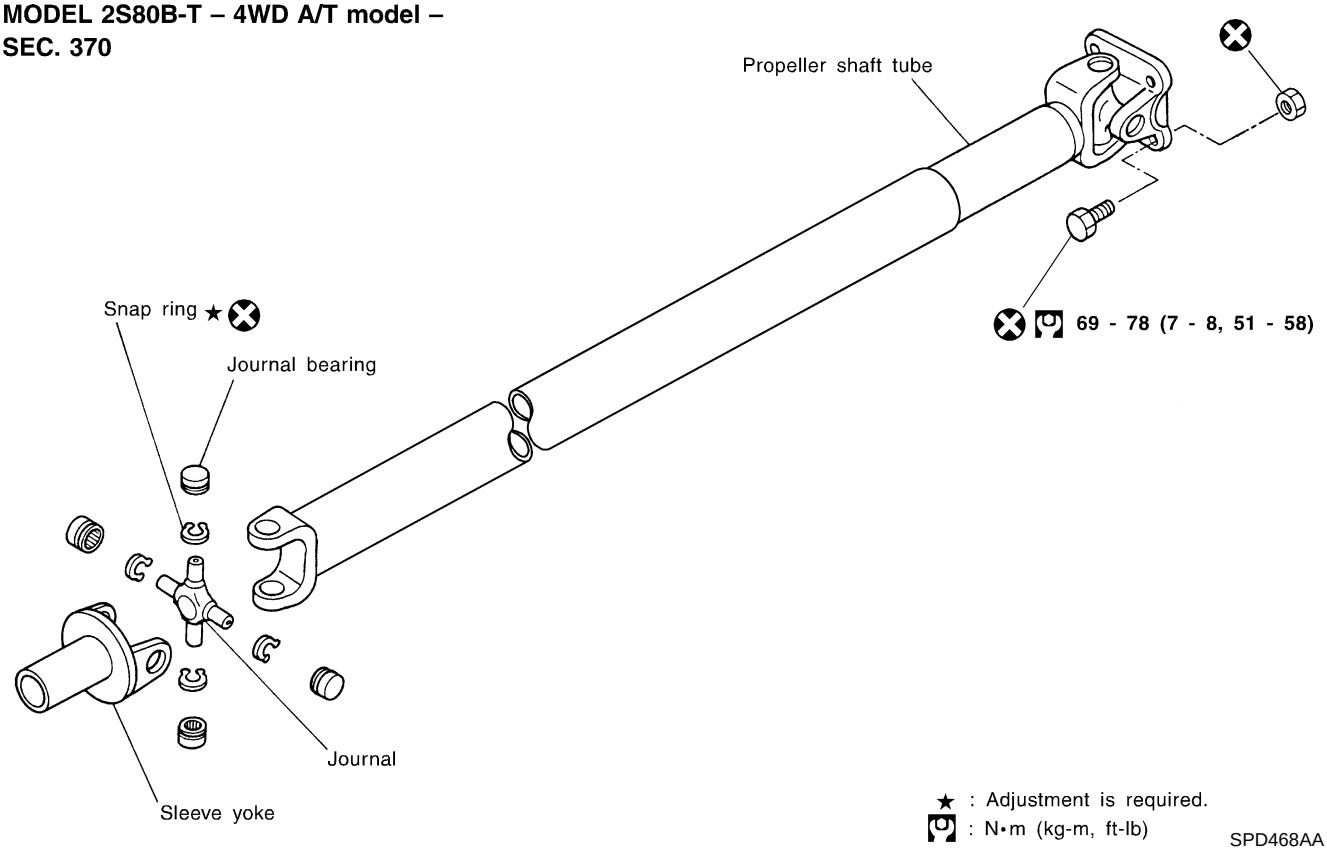

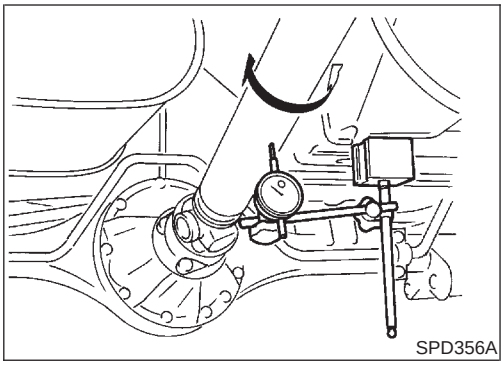
SPD356A

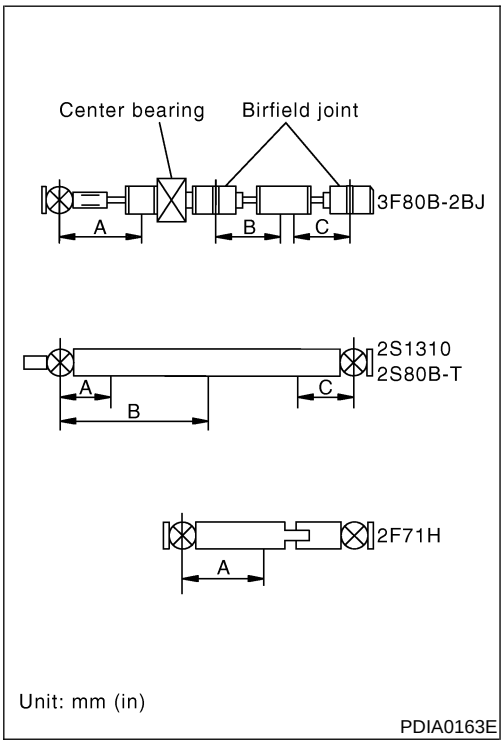

PDIA0163E

On-vehicle Service

PROPELLER SHAFT VIBRATION

NAPD0003

If vibration is present at high speed, inspect propeller shaft runout first.

1. Raise rear wheels.
2. Measure propeller shaft runout at several points by rotating final drive companion flange with hands.

Runout limit: 0.6 mm (0.024 in)

Propeller shaft runout measuring points:

Unit: mm (in)

Distance		A	B	C
3F80B-2BJ	2WD A/T	372.5 (14.67)	240 (9.45)	240 (9.45)
2S1310		280 (11.02)	480.8 (18.93)	266.5 (10.49)
2S80B-T	Part-time 4WD	280 (11.02)	480 (18.90)	266.5 (10.49)
	Full-time 4WD	280 (11.02)	463.5 (18.25)	266.5 (10.49)
2F71H	Part-time 4WD	179.5 (7.07)	—	—
	Full-time 4WD	173.5 (6.83)	—	—

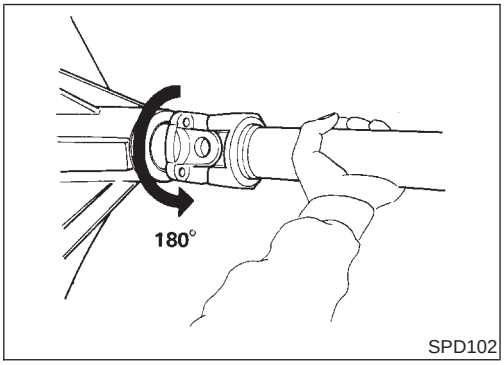

SPD102

3. If runout exceeds specifications, disconnect propeller shaft at final drive companion flange; then rotate companion flange 180 degrees and reconnect propeller shaft.
4. Check runout again. If runout still exceeds specifications, replace propeller shaft assembly.
5. Perform road test.

APPEARANCE CHECKING

NAPD0004

- Inspect propeller shaft tube surface for dents or cracks. If damaged, replace propeller shaft assembly.
- If center bearing is noisy or damaged, replace center bearing.

Removal and Installation

NAPD0005

- Put matching marks on flanges and separate propeller shaft from final drive.

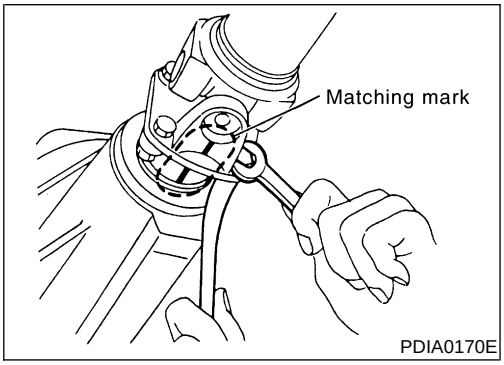

PDIA0170E

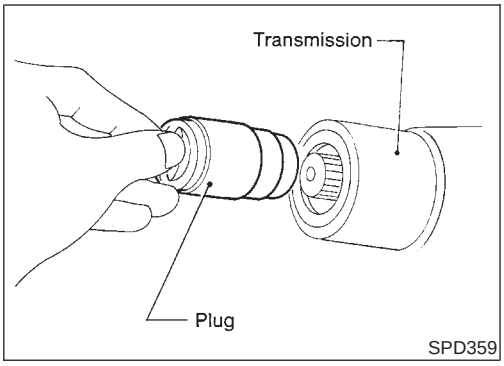

SPD359

- Draw out propeller shaft from transmission and plug up rear end of transmission rear extension housing.

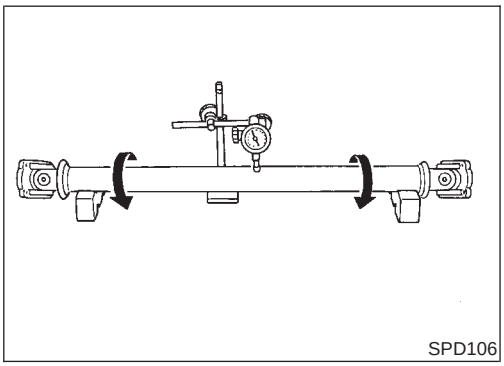
SPD106

Inspection

NAPD0006

- Inspect propeller shaft runout. If runout exceeds specifications, replace propeller shaft assembly.

  Runout limit: 0.6 mm (0.024 in)

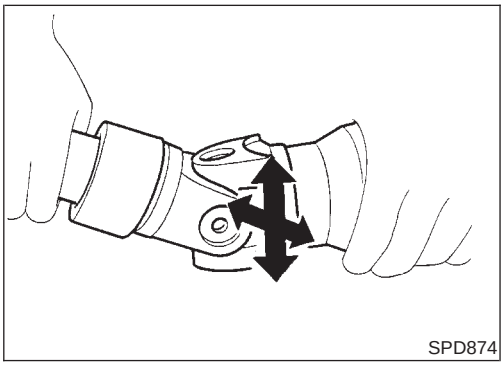
SPD874

- If the play exceeds specifications, replace propeller shaft assembly.

  Journal axial play:
  0.02 mm (0.0008 in) or less

Disassembly

NAPD0007

CENTER BEARING — 2WD —

NAPD0007S01

1. Put matching marks on flanges, and separate 2nd tube from 1st tube.

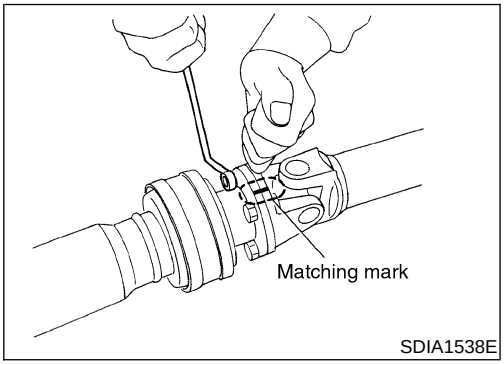

SDIA1538E

2. Put matching marks on the flange and shaft.

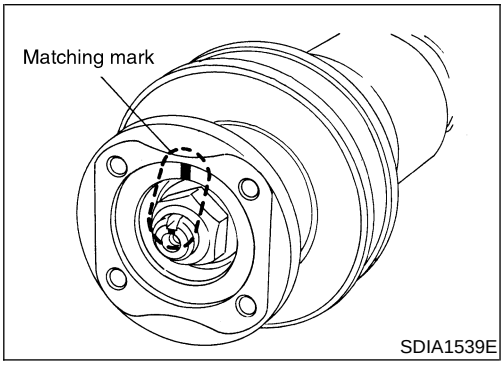

SDIA1539E

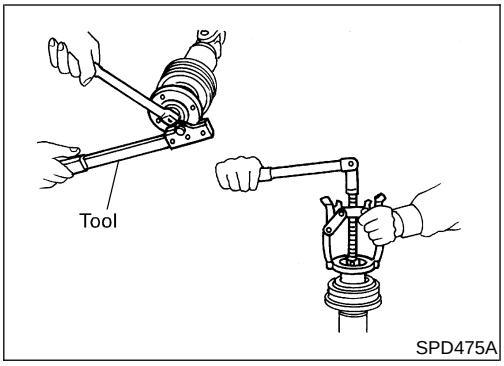

3. Remove locking nut with Tool.
   Tool number:
   KV38108300 (J44195)
4. Remove companion flange with puller.

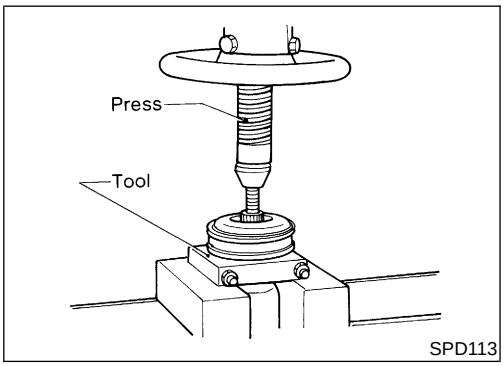

5. Remove center bearing with Tool and press.
   Tool number: ST30031000 (J22912-01)

JOURNAL (71H AND 80B)

NAPD0007S02

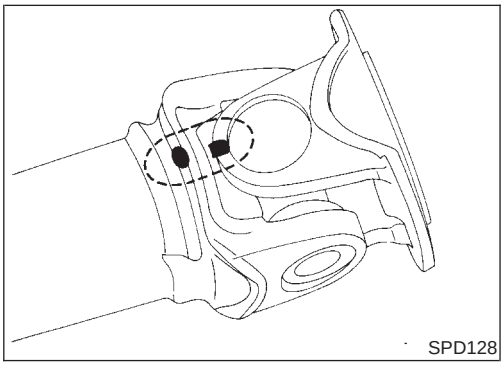

1. Put matching marks on shaft and flange or yoke.

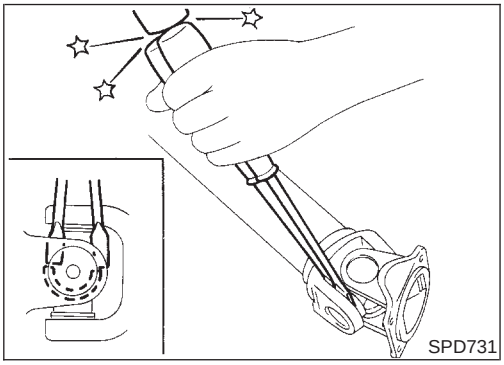

2. Remove snap ring.

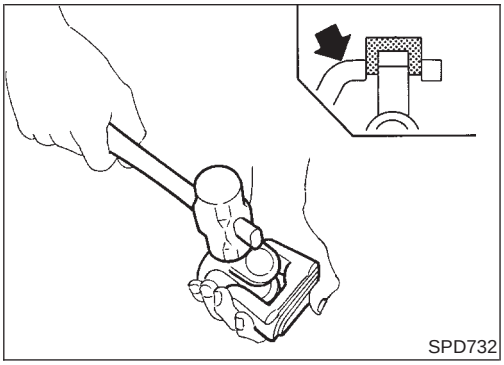

3. Remove pushed out journal bearing by lightly tapping yoke with a hammer, taking care not to damage journal and yoke hole.

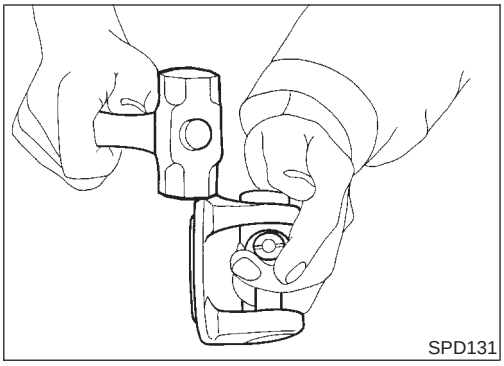
SPD131

4. Remove bearing at opposite side in above operation.

Put marks on disassembled parts so that they can be reinstalled in their original positions from which they were removed.

Assembly

NAPD0008

CENTER BEARING — 2WD —

NAPD0008S01

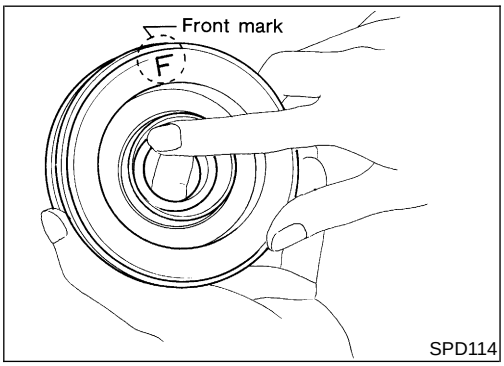

SPD114

- When installing center bearing, position the "F" mark on center bearing toward front of vehicle.
- **Apply a coat of multi-purpose lithium grease containing molybdenum disulfide to the end face of the center bearing and both sides of the washer.**

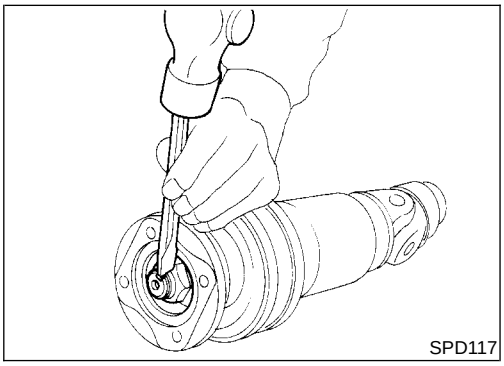
SPD117

- Stake the nut. Always use new one.
- Align match marks when assembling tubes.

JOURNAL (71H AND 80B)

NAPD0008S02

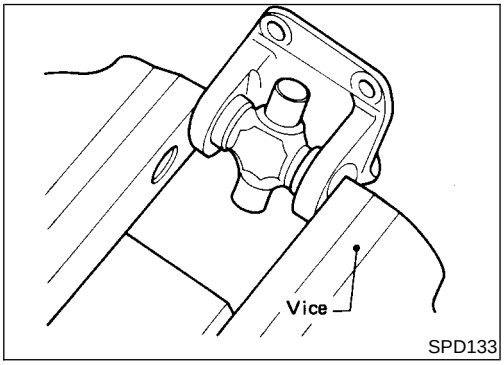

SPD133

1. Assemble journal bearing. Apply recommended multi-purpose grease on bearing inner surface.

When assembling, be careful that needle bearing does not fall down.

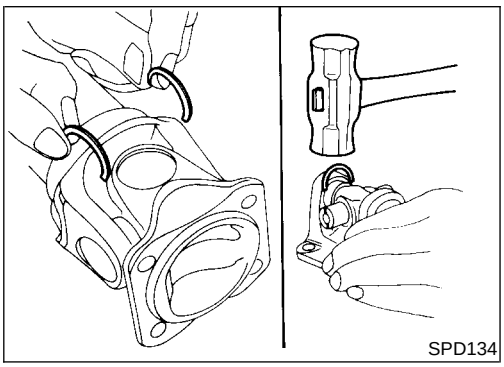
SPD134

2. Select snap ring that will provide specified play in axial direction of journal, and install them.
   Refer to SDS, PD-13.

Select snap rings with a difference in thickness at both sides within 0.06 mm (0.0024 in).

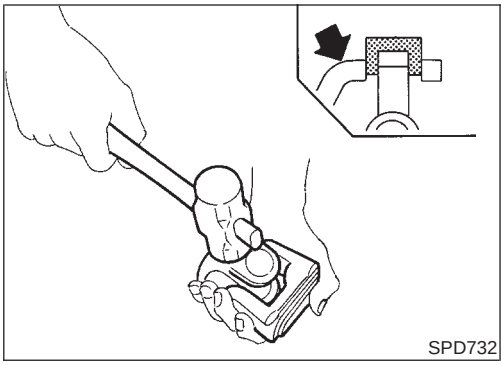

3. Adjust thrust clearance between bearing and snap ring to zero by tapping yoke.

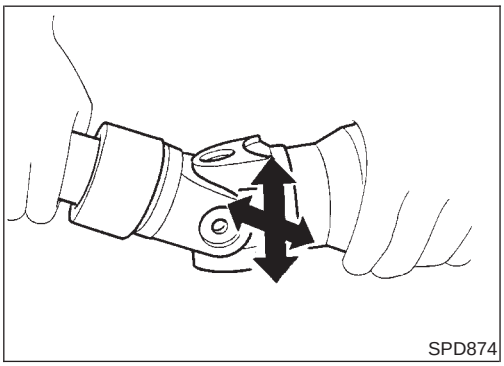

4. Check to see that journal moves smoothly and check for axial play.

   Axial play: 0.02 mm (0.0008 in) or less

Service Data and Specifications (SDS)

GENERAL SPECIFICATIONS

2WD Model

NAPD0009

NAPD0009S01

Transmission		A/T
Propeller shaft model		3F80B-2BJ
Number of joints		3
Coupling method with transmission		Flange type
Type of journal bearings		Solid type (disassembly type — without Birfield joint —)
Distance between yokes mm (in)		80 (3.15)
Shaft length (Spider to spider) mm (in)	1st	650 (25.59)
	2nd	749 (29.49)
Shaft outer diameter mm (in)	1st	75 (2.95)
	2nd	65 (2.56)

4WD Model

NAPD0009S02

Location	Front		Rear		
			M/T	A/T	
	Full-time	Part-time		Full time	Part time
Propeller shaft model	2F71H		2S1310	2S80B-T	
Number of joints	2				
Coupling method with transmission	Flange type		Sleeve type		
Type of journal bearings	Solid type (disassembly type)				
Distance between yokes mm (in)	71 (2.80)		80 (3.15)		
Shaft length (Spider to spider) mm (in)	553 (21.77)	565 (22.24)	965.1 (38.00)	927 (36.50)	960 (37.80)
Shaft outer diameter mm (in)	50.8 (2.000)		76.2 (3.000)	75 and 63.5 (2.95 and 2.500)	

SERVICE DATA

NAPD0010
Unit: mm (in)

Propeller shaft runout limit	0.6 (0.024)
Journal axial play	0.02 (0.0008) or less

SNAP RING (80B)

NAPD0011
Unit: mm (in)

Thickness	Color	Part number*
1.99 (0.0783)	White	37146-C9400
2.02 (0.0795)	Yellow	37147-C9400
2.05 (0.0807)	Red	37148-C9400
2.08 (0.0819)	Green	37149-C9400
2.11 (0.0831)	Blue	37150-C9400
2.14 (0.0843)	Light brown	37151-C9400
2.17 (0.0854)	Black	37152-C9400
2.20 (0.0866)	No paint	37153-C9400

*: Always check with the Parts Department for the latest parts information.

SNAP RING (71H)

NAPD0012
Unit: mm (in)

Thickness	Color	Part number*
1.99 (0.0783)	White	37146-01G00
2.02 (0.0795)	Yellow	37147-01G00
2.05 (0.0807)	Red	37148-01G00
2.08 (0.0819)	Green	37149-01G00
2.11 (0.0831)	Blue	37150-01G00
2.14 (0.0843)	Light brown	37151-01G00
2.17 (0.0854)	Pink	37152-01G00
2.20 (0.0866)	No paint	37153-01G00

*: Always check with the Parts Department for the latest parts information.

SNAP RING (1310)

NAPD0052
Unit: mm (in)

Thickness	Color	Part number*
1.99 (0.0783)	White	37146-C9400
2.02 (0.0795)	Yellow	37147-C9400
2.05 (0.0807)	Red	37148-C9400
2.08 (0.0819)	Green	37149-C9400
2.11 (0.0831)	Blue	37150-C9400
2.14 (0.0843)	Light brown	37151-C9400
2.17 (0.0854)	Black	37152-C9400
2.20 (0.0866)	No paint	37153-C9400

*: Always check with the Parts Department for the latest parts information.

Preparation

SPECIAL SERVICE TOOLS

NAPD0013

The actual shapes of Kent-Moore tools may differ from those of special service tools illustrated here.

Tool number (Kent-Moore No.) Tool name	Description	
ST3127S000 (See J25765-A) Preload gauge 1 GG91030000 (J25765) Torque wrench 2 HT62940000 (—) Socket adapter 3 HT62900000 (—) Socket adapter	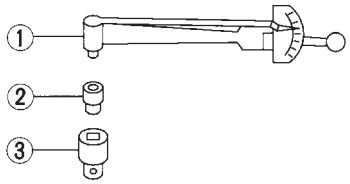 NT124	Measuring pinion bearing preload and total preload
KV38100800 (J34310, J25604-01) Differential attachment	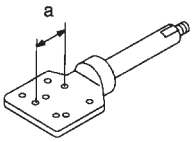 NT119	Mounting final drive (To use, make a new hole.) **a: 152 mm (5.98 in)**
KV38108300 (J44195) Companion flange wrench	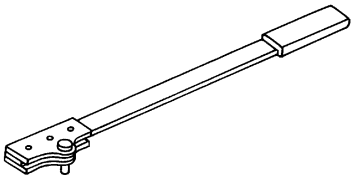 NT771	Removing and installing propeller shaft lock nut, and drive pinion lock nut
ST3090S000 (—) Drive pinion rear inner race puller set 1 ST30031000 (J22912-01) Puller 2 ST30901000 (J26010-01) Base	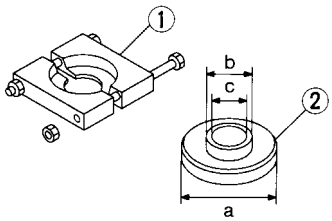 NT527	Removing and installing drive pinion rear inner cone **a: 79 mm (3.11 in) dia.** **b: 45 mm (1.77 in) dia.** **c: 35 mm (1.38 in) dia.**
ST3306S001 Differential side bearing puller set 1 ST33051001 (J22888-20) Body 2 ST33061000 (J8107-2) Adapter	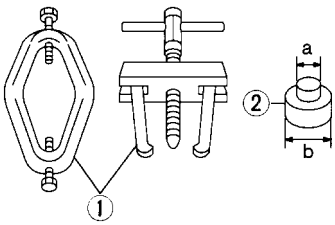 NT072	Removing and installing differential side bearing inner cone **a: 28.5 mm (1.122 in) dia.** **b: 38 mm (1.50 in) dia.**
KV38100300 (J25523) Differential side bearing drift	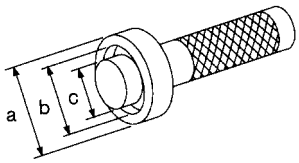 NT085	Installing side bearing inner cone **a: 54 mm (2.13 in) dia.** **b: 46 mm (1.81 in) dia.** **c: 32 mm (1.26 in) dia.**

Tool number (Kent-Moore No.) Tool name	Description	
KV38100600 (J25267) Side bearing spacer drift	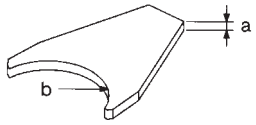 NT528	Installing side bearing spacer **a: 8 mm (0.31 in)** **b: R42.5 mm (1.673 in)**
ST30611000 (J25742-1) Drift	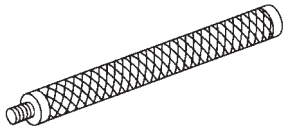 NT090	Installing pinion rear bearing outer race (Use with ST30621000 or ST30613000)
ST30621000 (J25742-5) Drift	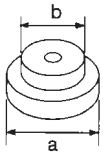 NT073	Installing pinion rear bearing outer race (Use with ST30611000) **a: 79 mm (3.11 in) dia.** **b: 59 mm (2.32 in) dia.**
ST30613000 (J25742-3) Drift	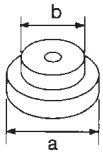 NT073	Installing pinion front bearing outer race (Use with ST30611000) **a: 72 mm (2.83 in) dia.** **b: 48 mm (1.89 in) dia.**
KV38100500 (J25273) Gear carrier front oil seal drift	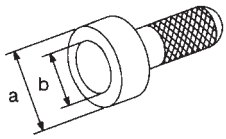 NT115	Installing front oil seal **a: 85 mm (3.35 in) dia.** **b: 60 mm (2.36 in) dia.**
KV38100200 (J26233) Gear carrier side oil seal drift	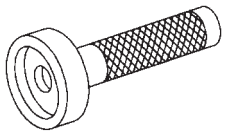 NT120	Installing side oil seal
(J34309) Differential shim selector	 NT134	Adjusting bearing pre-load and gear height
(J25269-4) Side bearing discs (2 Req'd)	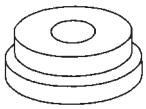 NT136	Selecting pinion height adjusting washer

Tool number (Kent-Moore No.) Tool name	Description
(J8129) Spring gauge	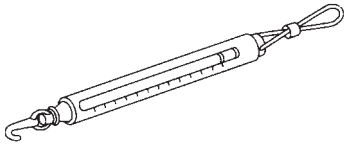 NT127 Measuring carrier turning torque

Noise, Vibration and Harshness (NVH) Troubleshooting

NAPD0050

Refer to "NVH TROUBLESHOOTING CHART", PD-4.

On-vehicle Service

FRONT OIL SEAL REPLACEMENT

NAPD0014

1. Remove front propeller shaft.
2. Loosen drive pinion nut.

   Tool number: KV38108300 (J44195)

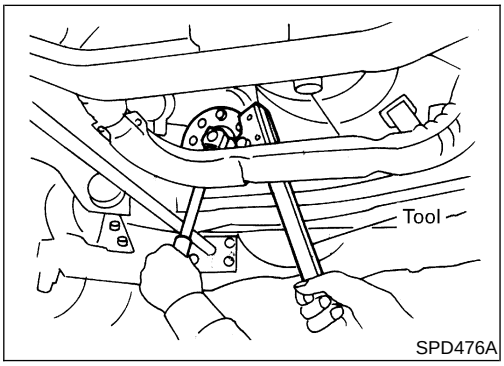

SPD476A

3. Remove companion flange.

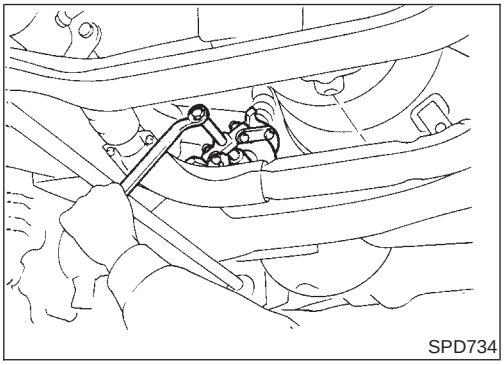
SPD734

4. Remove front oil seal.

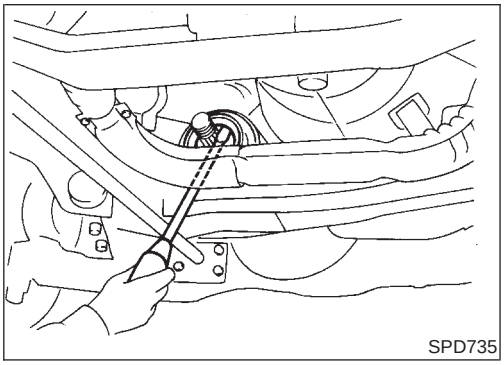
SPD735

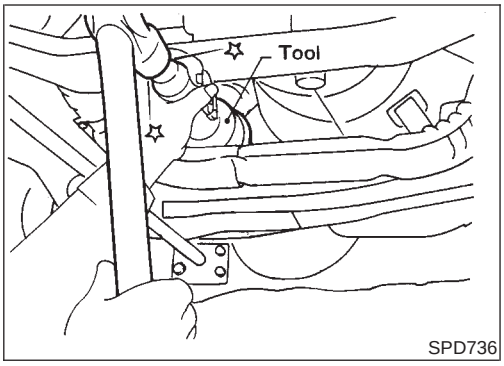

SPD736

5. Apply multi-purpose grease to cavity at sealing lips of oil seal. Press front oil seal into carrier.
6. Install companion flange and drive pinion nut.
7. Install propeller shaft.

Tool number:
KV38100500 (J25273)

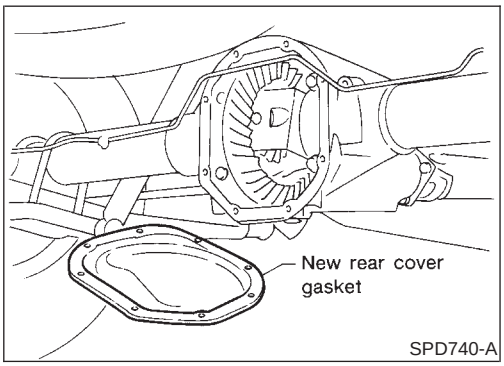

SPD740-A

REAR COVER GASKET REPLACEMENT

NAPD0015

1. Drain gear oil.
2. Remove rear cover and rear cover gasket.
3. Install new rear cover gasket and rear cover.
4. Fill final drive with recommended gear oil.

Components

NAPD0016

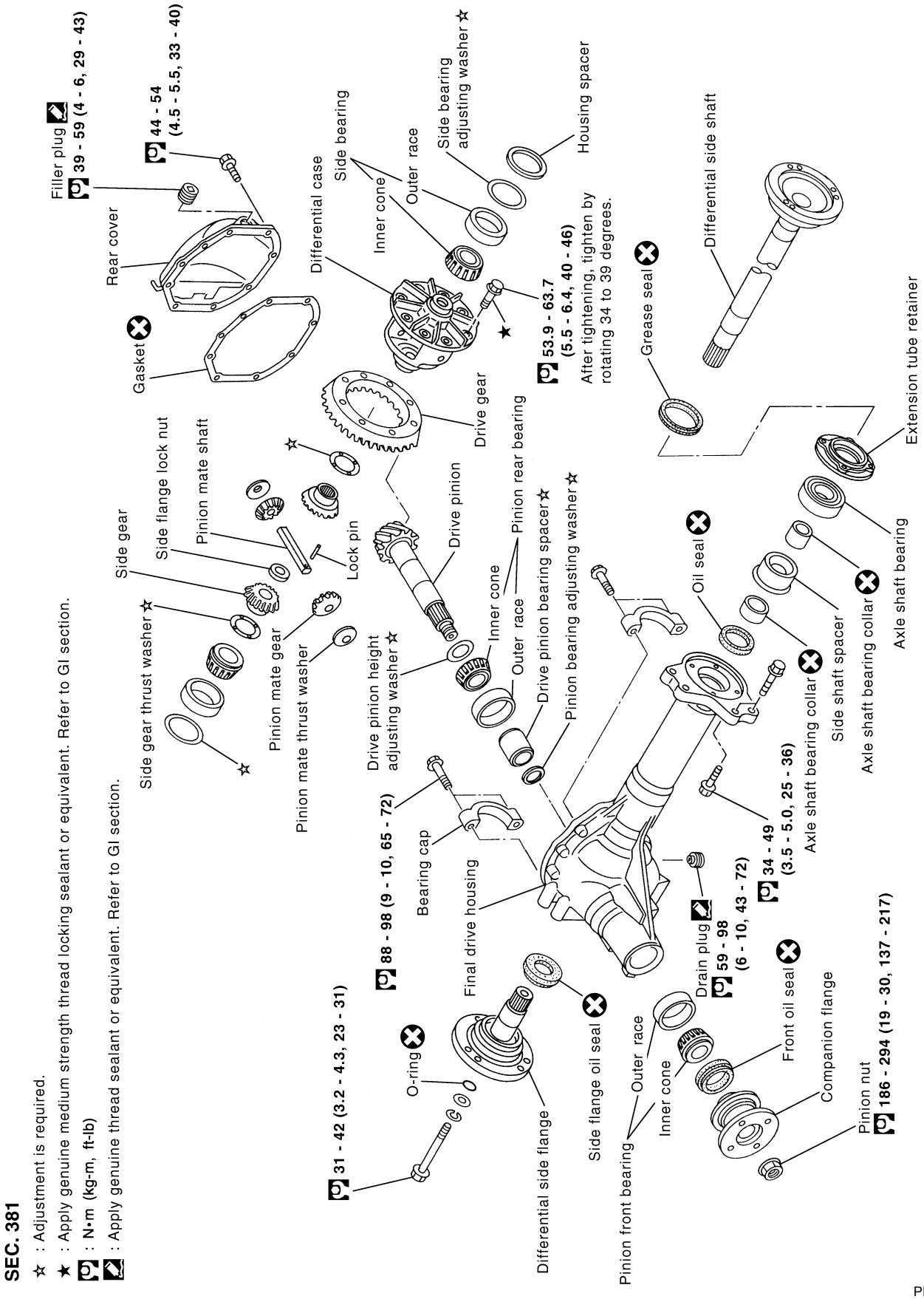

SEC. 381

☆ : Adjustment is required.

★ : Apply genuine medium strength thread locking sealant or equivalent. Refer to GI section.

: N•m (kg-m, ft-lb)

: Apply genuine thread sealant or equivalent. Refer to GI section.

PDIA0164E

Removal and Installation

NAPD0017

REMOVAL

NAPD0017S01

- Remove front of propeller shaft.
  Plug front end of transfer.
- Remove drive shaft. Refer to AX-12, “Removal”.
- Remove front final drive mounting bolts.

CAUTION:
Be careful not to damage spline, sleeve yoke and front oil seal when removing propeller shaft.

INSTALLATION

NAPD0017S02

- Fill final drive with recommended gear oil.

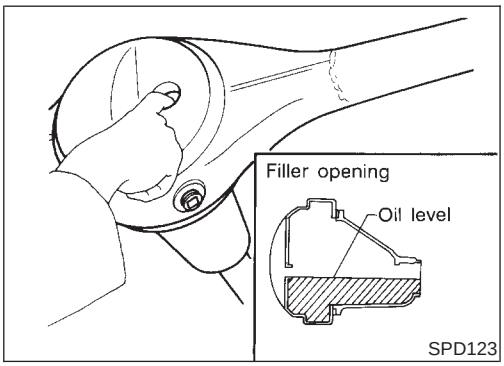

Disassembly

NAPD0018

PRE-INSPECTION

NAPD0018S01

Before disassembling final drive, perform the following inspection.

- Total preload

a) Turn drive pinion in both directions several times to set bearing rollers.

b) Check total preload with Tool.

Tool number: ST3127S000 (J25765-A)

Total preload:

P_1 + [0.3 - 1.5 N·m (3 - 15 kg-cm, 2.6 - 13.0 in-lb)]

P_1 = Drive pinion preload

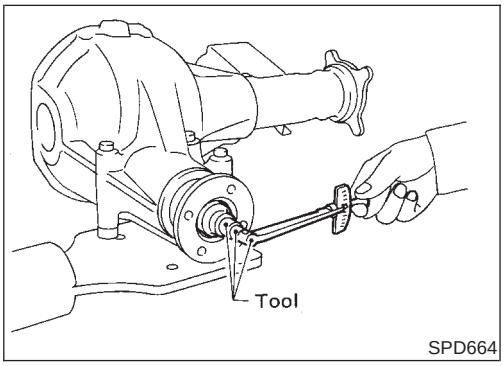

- Drive gear to drive pinion backlash
  Check backlash of drive gear with a dial indicator at several points.

Drive gear-to-drive pinion backlash:
0.10 - 0.15 mm (0.0039 - 0.0059 in)

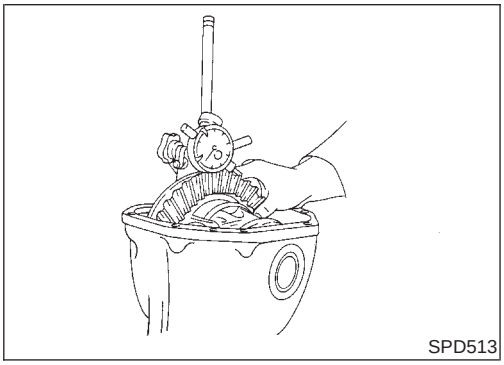

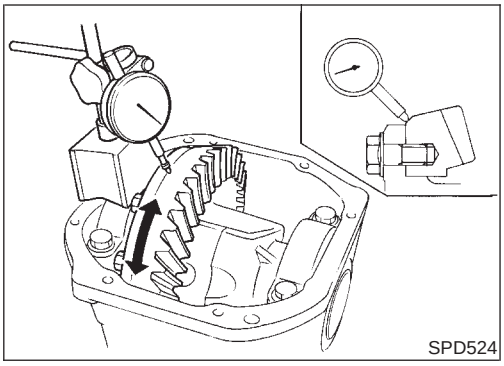
SPD524

- Drive gear runout
  Check runout of drive gear with a dial gauge.
  Runout limit:
  0.05 mm (0.0020 in)
- Tooth contact
  Check tooth contact. Refer to "TOOTH CONTACT", PD-30.

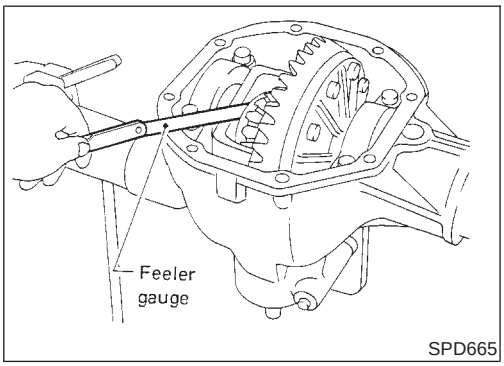

SPD665

- Side gear to pinion mate gear backlash
  Using a feeler gauge, measure clearance between side gear thrust washer and differential case.
  Clearance between side gear thrust washer and differential case:
  Less than 0.15 mm (0.0059 in)

FINAL DRIVE HOUSING

NAPD0018S02

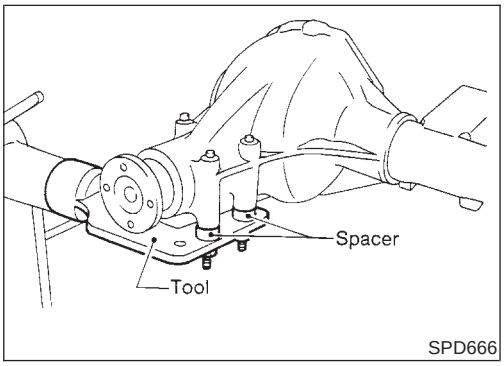

SPD666

1. Using three spacers [20 mm (0.79 in)], mount final drive assembly on Tool.
   Tool number:
   KV38100800 (J34310, J25604-01)

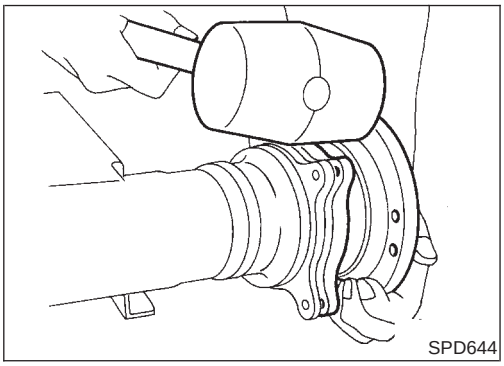
SPD644

2. Remove differential side shaft assembly.

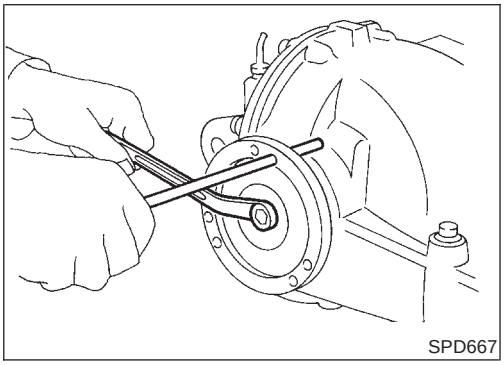
SPD667

3. Remove differential side flange.

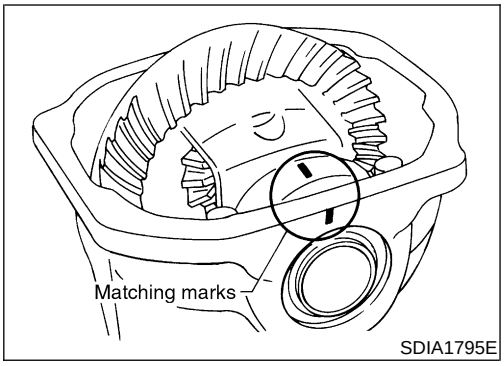

SDIA1795E

4. Put matching marks on one side of side bearing cap with paint or punch to ensure that it is replaced in proper position during reassembly.

Bearing caps are line-bored during manufacture and should be put back in their original places.

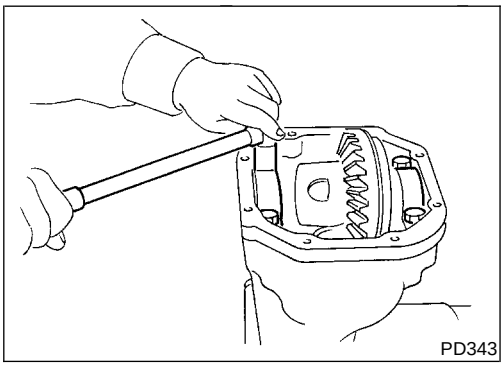
PD343

5. Remove side bearing caps.

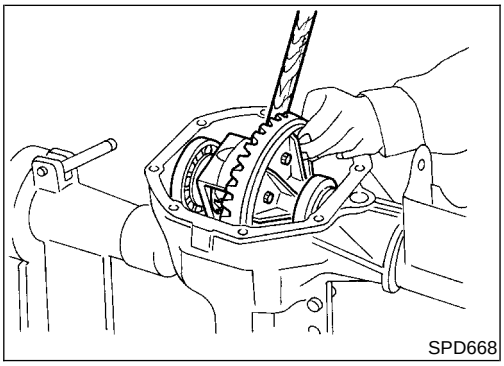
SPD668

6. Remove differential case assembly with a pry bar.

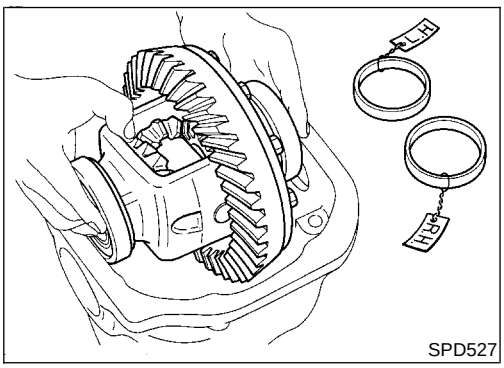

SPD527

Be careful to keep the side bearing outer races together with their respective inner cones — do not mix them up.

CAUTION:

Side bearing spacer is placed on either the left or right depending upon final drive gear ratio. It should be labeled so that it may be replaced correctly.

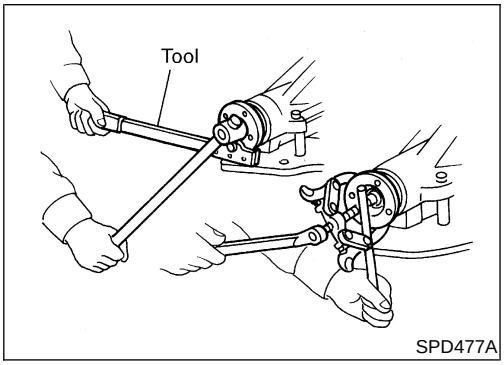

SPD477A

7. Loosen drive pinion nut.

   Tool number: KV38108300 (J44195)

8. Remove companion flange with puller.

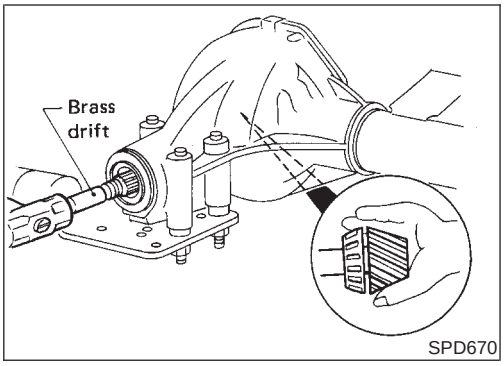

SPD670

9. Take out drive pinion together with rear bearing inner cone, drive pinion bearing spacer and pinion bearing adjusting washer.
10. Remove front oil seal and pinion front bearing inner cone.

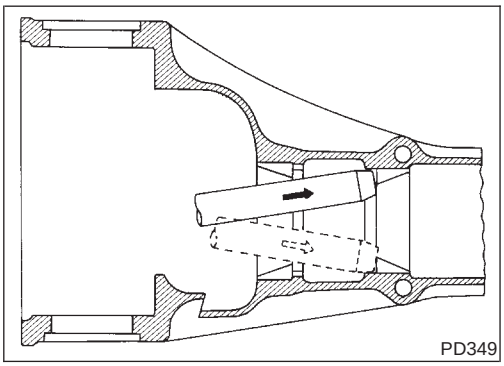
PD349

11. Remove pinion bearing outer races with a brass drift.

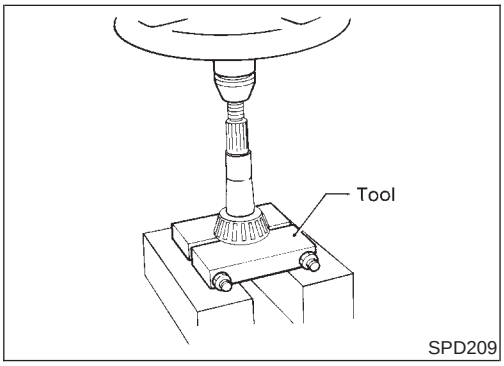

SPD209

12. Remove pinion rear bearing inner cone and drive pinion height adjusting washer.

Tool number: ST30031000 (J22912-01)

DIFFERENTIAL CASE

NAPD0018S03

1. Remove side bearing inner cones.

To prevent damage to bearing, engage puller jaws in grooves.

Tool number:
A ST33051001 (J22888-20)
B ST33061000 (J8107-2)

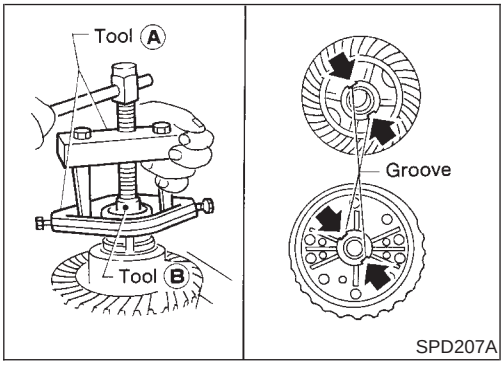

SPD207A

Be careful not to confuse the right and left hand parts.
Keep bearing and bearing race for each side together.

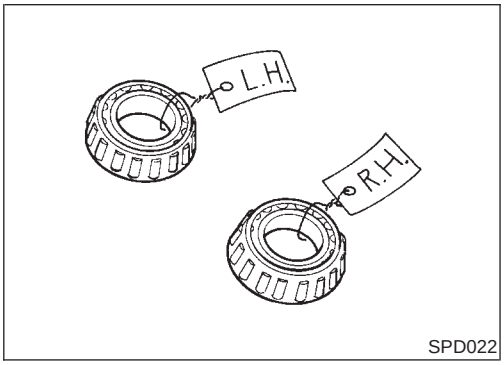

SPD022

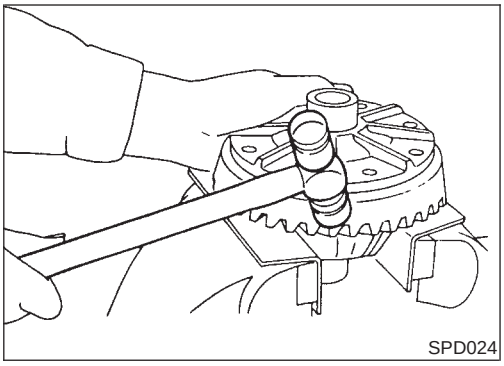
SPD024

2. Loosen drive gear bolts in a criss-cross pattern.
3. Tap drive gear off the differential case with a soft hammer.

Tap evenly all around to keep drive gear from binding.

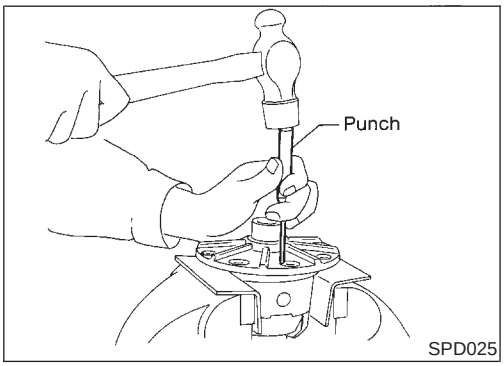

SPD025

4. Punch off pinion mate shaft lock pin from drive gear side.

DIFFERENTIAL SIDE SHAFT

NAPD0018S04

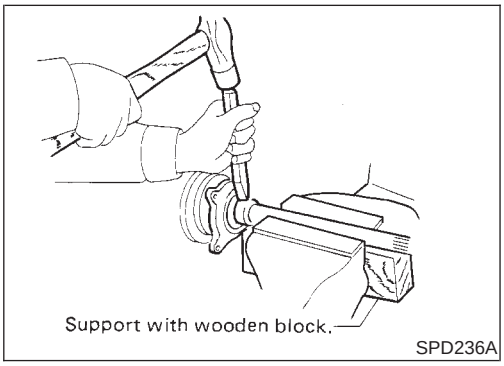

SPD236A

1. Cut collar with cold chisel. Be careful not to damage differential side shaft.

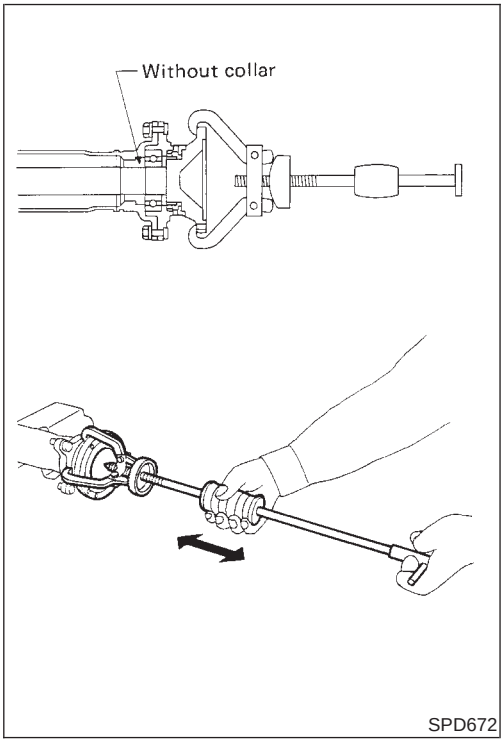

SPD672

2. Reinstall differential side shaft into extension tube and secure with bolts. Remove rear axle bearing by drawing out differential side shaft from rear axle bearing with puller.

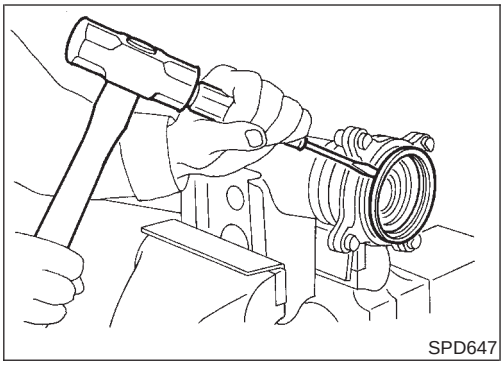
SPD647

3. Remove grease seal and oil seal.

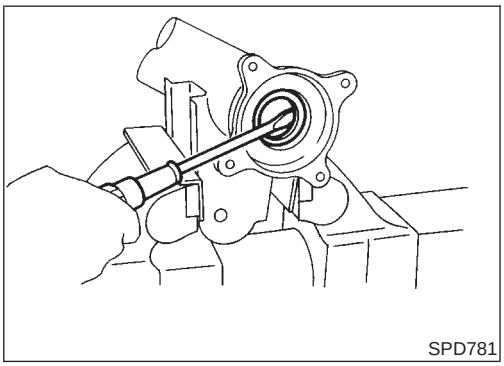
SPD781

Inspection

NAPD0019

DRIVE GEAR AND DRIVE PINION

NAPD0019S01

Check gear teeth for scoring, cracking or chipping.
If any damaged part is evident, replace drive gear and drive pinion as a set (hypoid gear set).

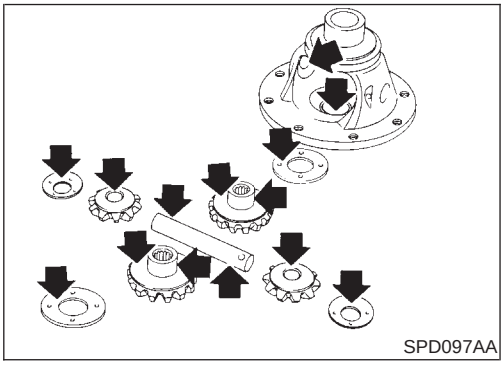
SPD097AA

DIFFERENTIAL CASE ASSEMBLY

NAPD0019S02

Check mating surfaces of differential case, side gears, pinion mate gears, pinion mate shaft and thrust washers.

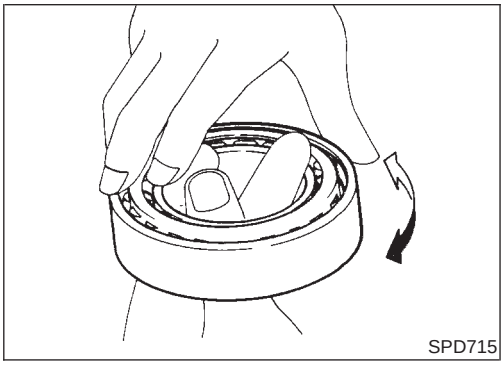
SPD715

BEARING

NAPD0019S03

1. Thoroughly clean bearing.
2. Check bearing for wear, scratches, pitting or flaking.
   Check tapered roller bearing for smooth rotation. If damaged, replace outer race and inner cone as a set.

Adjustment

NAPD0020

For quiet and reliable final drive operation, the following five adjustments must be made correctly:

1. Side bearing preload
2. Pinion gear height
3. Pinion bearing preload
4. Drive gear-to-pinion backlash. Refer to SDS, PD-38.
5. Drive and pinion gear tooth contact pattern

SIDE BEARING PRELOAD

NAPD0020S01

A selection of carrier side bearing adjusting washer is required for successful completion of this procedure.

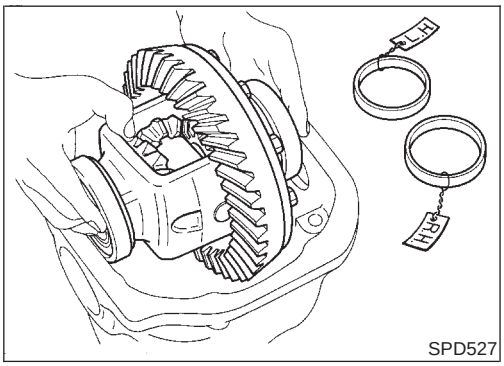

SPD527

1. Make sure all parts are clean and that the bearings are well lubricated with light oil or "DEXRON™" type automatic transmission fluid.
2. Place the differential carrier, with side bearings and bearing races installed, into the final drive housing.

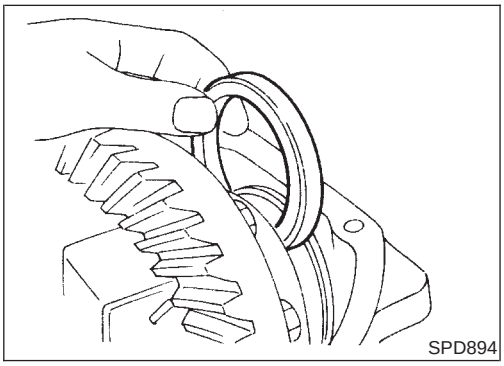
SPD894

3. Put the side bearing spacer in place.

CAUTION:

Side bearing spacer is placed on either the right or left depending upon final drive gear ratio. Be sure to replace it on the correct side.

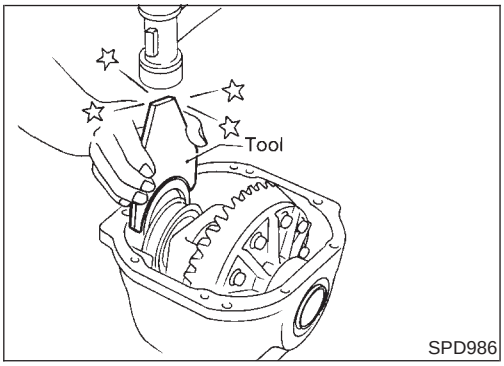

SPD986

4. Using Tool, install original carrier side bearing preload shims on the carrier end, opposite the drive gear.

   Tool number: KV38100600 (J25267)

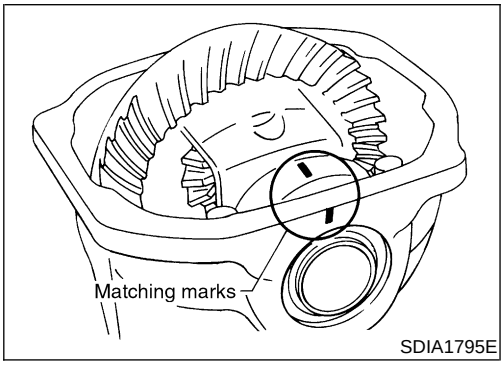

SDIA1795E

5. Install the side bearing caps in their correct locations and torque the bearing cap retaining bolts.

   Specification:

   88 - 98 N·m (9 - 10 kg-m, 65 - 72 ft-lb)

6. Turn the carrier several times to seat the bearings.

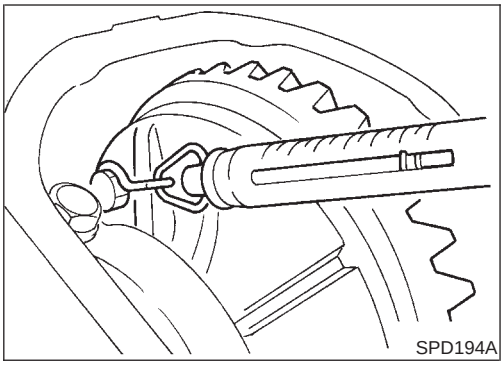
SPD194A

7. Measure the turning torque of the carrier at the drive gear retaining bolts with a spring gauge, J8129.

Specification:

34.3 - 39.2 N (3.5 - 4.0 kg, 7.7 - 8.8 lb) of pulling force at the drive gear bolt

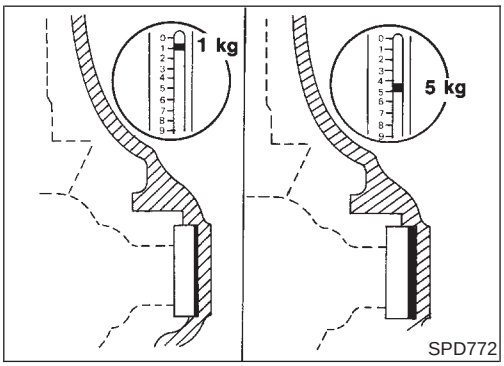

SPD772

8. If the carrier turning torque is not within the specification range, increase or decrease the total thickness of the side bearing adjusting washers until the turning torque is correct. If the turning torque is less than the specified range, install washers of greater thickness; if the turning torque is greater than the specification, install thinner washers. See the SDS section for washer dimensions and part numbers.
9. Record the total amount of washer thickness required for the correct carrier side bearing preload.

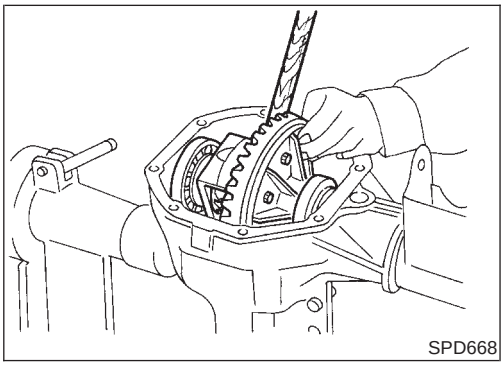
SPD668

10. Remove the carrier from the final drive housing, saving the selected preload washers for later use during the assembly of the final drive unit.

PINION GEAR HEIGHT AND PINION BEARING PRELOAD

NAPD0020S02

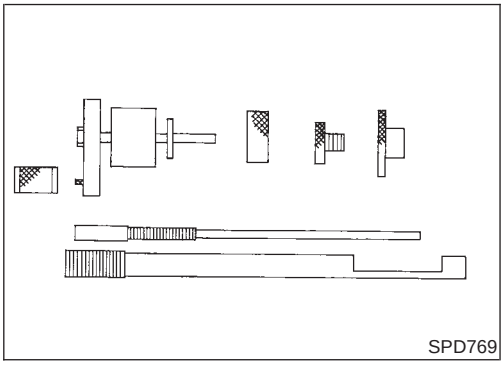
SPD769

1. Make sure all parts are clean and that the bearings are well lubricated.
2. Assemble the pinion gear bearings into the pinion pre-load shim selector Tool, J34309.

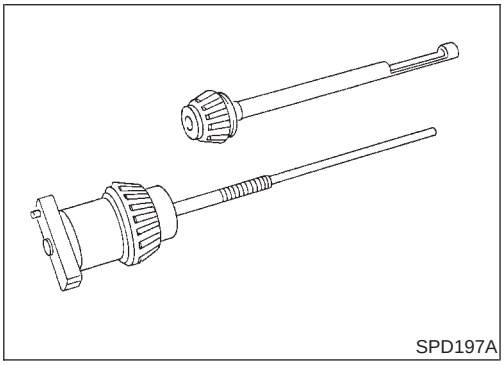
SPD197A

- **Front Pinion Bearing** — make sure the J34309-3 front pinion bearing seat is secured tightly against the J34309-2 gauge anvil. Then turn the front pinion bearing pilot, J34309-5, to secure the bearing in its proper position.
- **Rear Pinion Bearing** — the rear pinion bearing pilot, J34309-15, is used to center the rear pinion bearing only. The rear pinion bearing locking seat, J34309-4, is used to lock the bearing to the assembly.

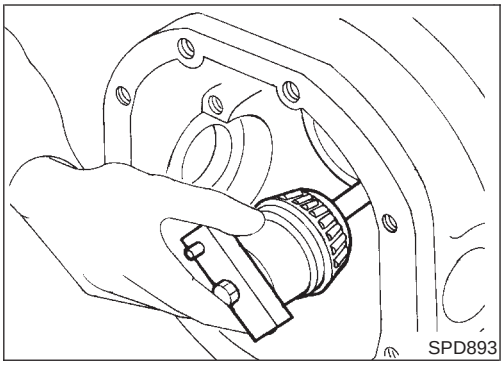
SPD893

3. Place the pinion preload shim selector Tool, J34309-1, gauge screw assembly with the pinion rear bearing inner cone installed into the final drive housing.

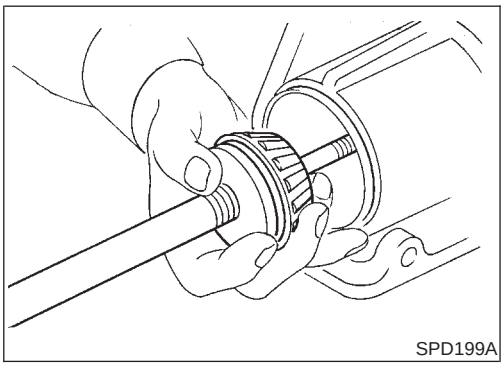
SPD199A

4. Assemble the front pinion bearing inner cone and the J34309-2 gauge anvil together with the J34309-1 gauge screw in the final drive housing. Make sure that the pinion height gauge plate, J34309-16, will turn a full 360 degrees, and tighten the two sections together by hand.

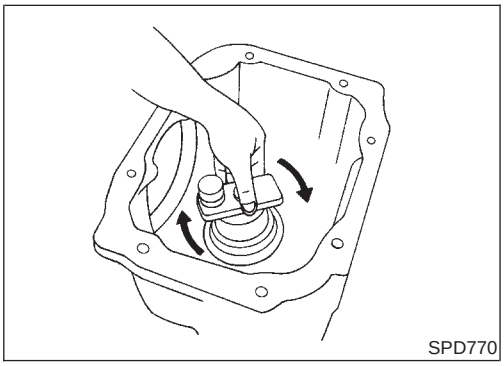
SPD770

5. Turn the assembly several times to seat the bearings.

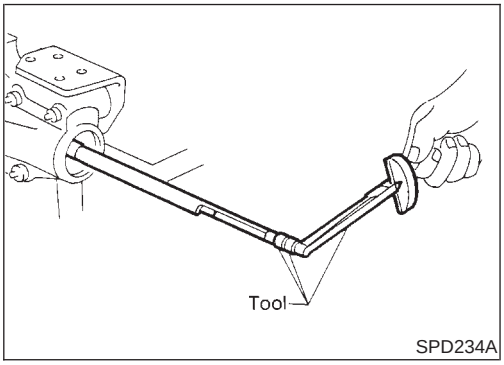

SPD234A

6. Measure the turning torque at the end of the J34309-2 gauge anvil using torque wrench J25765A.

   Turning torque specification:
   1.0 - 1.3 N·m (10 - 13 kg-cm, 8.7 - 11.3 in-lb)

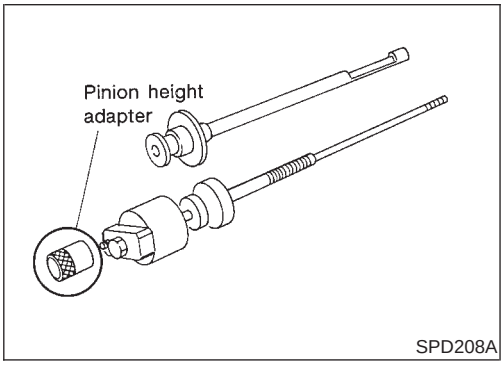

SPD208A

7. Place the J34309-1 "R200A" pinion height adapter onto the gauge plate and tighten it by hand.

CAUTION:
Make sure all machined surfaces are clean.

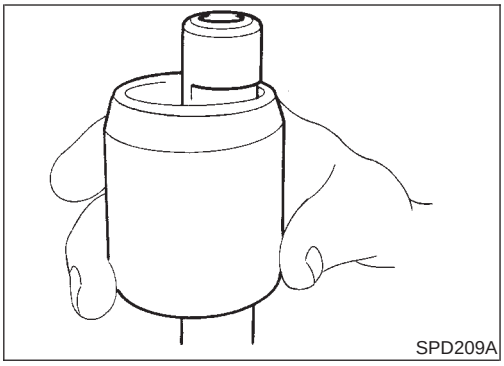
SPD209A

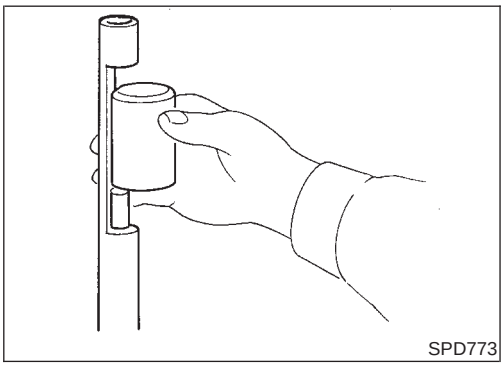
SPD773

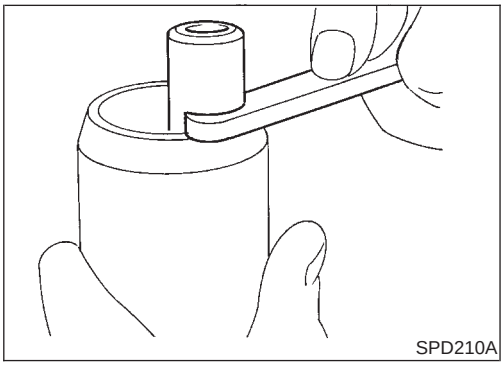
SPD210A

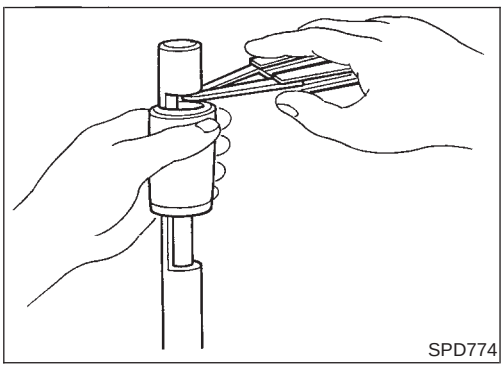
SPD774

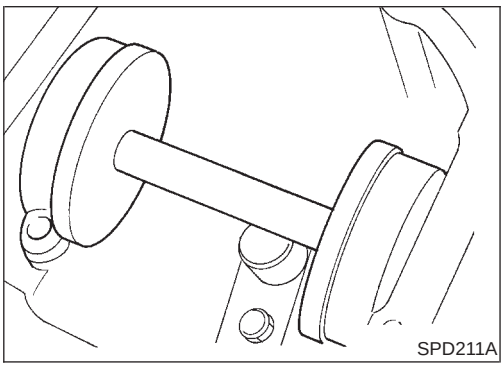
SPD211A

PINION BEARING PRELOAD WASHER SELECTION

8. Place the solid pinion bearing spacer, small end first, over the J34309-2 gauge anvil and seat the small end squarely against the tip of the J34309-1 gauge screw in the tool recessed portion.

9. Select the correct thickness of pinion bearing preload adjusting washer using a standard gauge of 3.5 mm (0.138 in) and your J34309-101 feeler gauge. The exact measure you get with your gauges is the thickness of the adjusting washer required. Select the correct washer.

   Drive pinion bearing preload adjusting washer:
   Refer to SDS, PD-38.

10. Set your selected, correct pinion bearing preload adjusting washer aside for use when assembling the pinion gear and bearings into the final drive.

PINION HEIGHT ADJUSTING WASHER SELECTION

11. Now, position the side bearing discs, J25269-4, and arbor firmly into the side bearing bores.

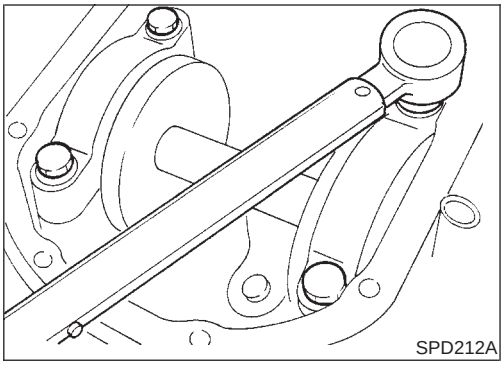
SPD212A

12. Install the side bearing caps and tighten the cap bolts.

Specification:
88 - 98 N·m (9 - 10 kg-m, 65 - 72 ft-lb)

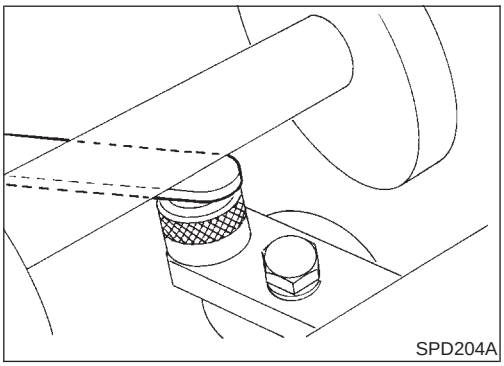
SPD204A

13. Select the correct standard pinion height adjusting washer thickness by using a standard gauge of 3.0 mm (0.118 in) and your J34309-101 feeler gauge. Measure the gap between the J34309-11 "R200A" pinion height adapter and the arbor.

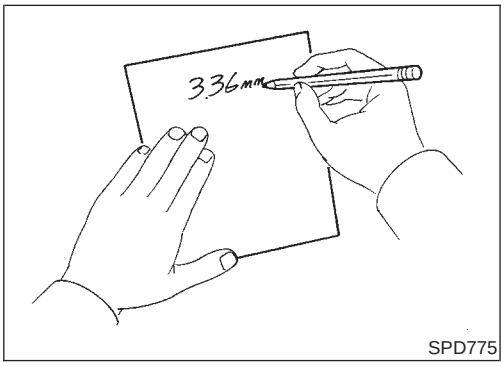

SPD775

14. Write down your exact total measurement.

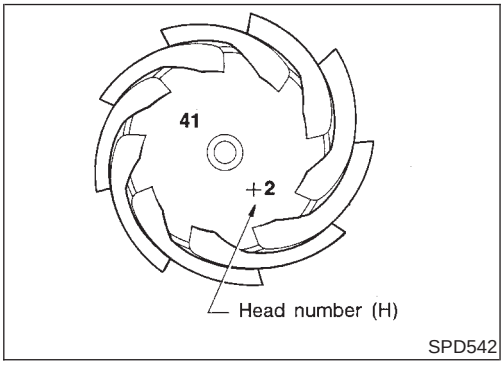

SPD542

15. Correct the pinion height washer size by referring to the "pinion head number".

There are two numbers painted on the pinion gear. The first one refers to the pinion and drive gear as a matched set and should be the same as the number on the drive gear. The second number is the "pinion head height number", and it refers to the ideal pinion height from standard for quietest operation. Use the following chart to determine the correct pinion height washer. Refer to SDS, PD-38.

Pinion Head Height Number	Add or Remove from the Standard Pinion Height Washer Thickness Measurement
−6	Add 0.06 mm (0.0024 in)
−5	Add 0.05 mm (0.0020 in)
−4	Add 0.04 mm (0.0016 in)
−3	Add 0.03 mm (0.0012 in)
−2	Add 0.02 mm (0.0008 in)
−1	Add 0.01 mm (0.0004 in)
0	Use the selected washer thickness
+1	Subtract 0.01 mm (0.0004 in)
+2	Subtract 0.02 mm (0.0008 in)
+3	Subtract 0.03 mm (0.0012 in)
+4	Subtract 0.04 mm (0.0016 in)
+5	Subtract 0.05 mm (0.0020 in)
+6	Subtract 0.06 mm (0.0024 in)

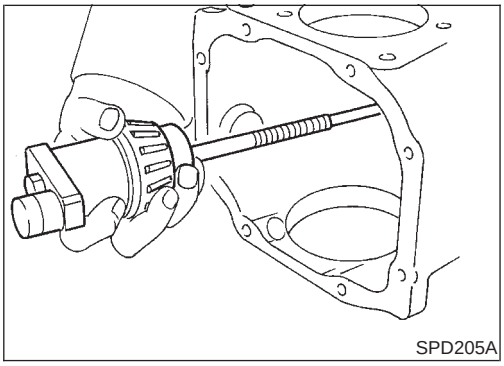
SPD205A

16. Remove the J34309 pinion preload shim selector tool from the final drive housing and disassemble to retrieve the pinion bearings.

TOOTH CONTACT

NAPD0020S03

Gear tooth contact pattern check is necessary to verify correct relationship between drive gear and drive pinion.

Hypoid gear sets which are not positioned properly in relation to one another may be noisy, or have short life, or both. With a pattern check, the most desirable contact for low noise level and long life can be assured.

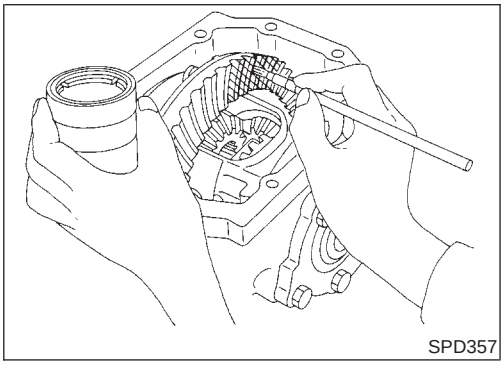
SPD357

1. Thoroughly clean drive gear and drive pinion teeth.
2. Sparingly apply a mixture of powdered ferric oxide and oil or equivalent to 3 or 4 teeth of drive gear drive side.

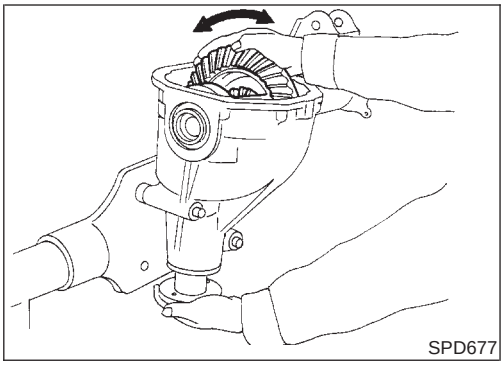
SPD677

3. Hold companion flange steady by hand and rotate the drive gear in both directions.

Usually the pattern will be correct if washers are correctly calculated and the backlash is correct.
However, in rare cases, trial and error processes may be employed to obtain a correct pattern.
The tooth pattern is the best indication of how well a differential has been set up.

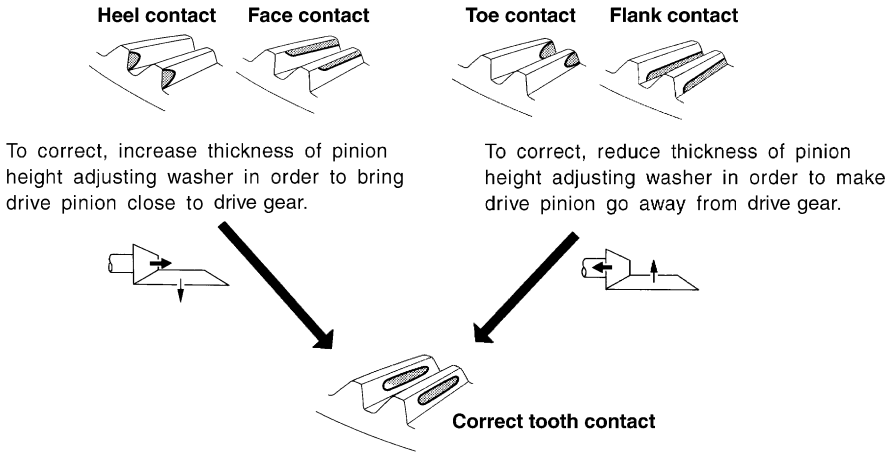

When adjustment is completed, be sure to wipe off completely the ferric oxide and oil or their equivalent.

SDIA1796E

Assembly

NAPD0021

DIFFERENTIAL SIDE SHAFT

NAPD0021S01

1. Install oil seal and grease seal.

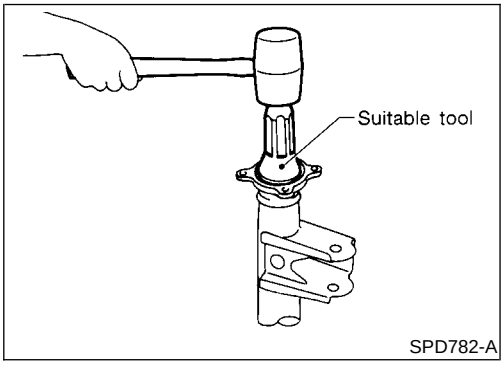

SPD782-A

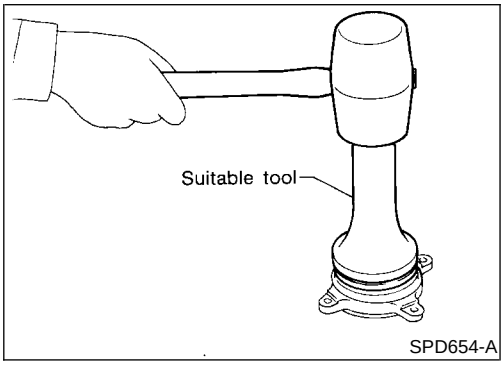

SPD654-A

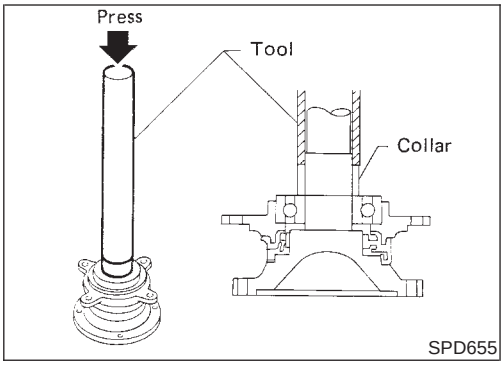

2. Install extension tube retainer, rear axle bearing and rear axle shaft bearing collar on differential side shaft.

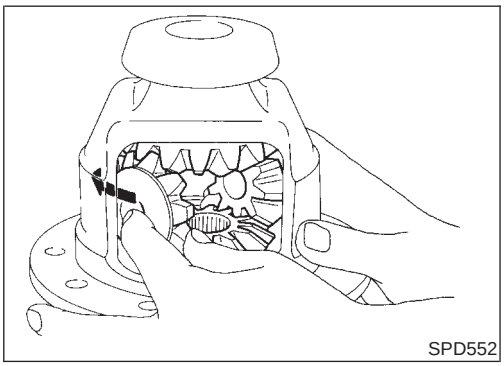

DIFFERENTIAL CASE

NAPD0021S02

1. Install side gears, pinion mate gears and thrust washers into differential case.

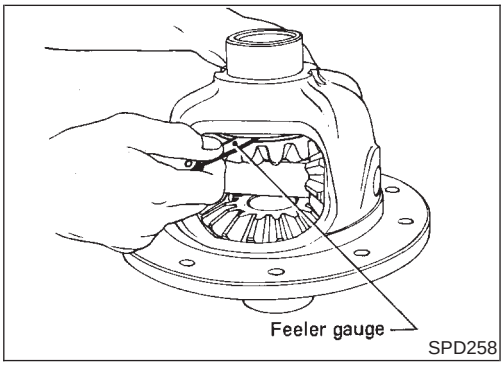

2. Fit pinion mate shaft to differential case so that it meets lock pin holes.
3. Adjust backlash between side gear and pinion mate gear by selecting side gear thrust washer.
   Refer to SDS, PD-37.

   Backlash between side gear and pinion mate gear (Clearance between side gear thrust washer and differential case):

   Less than 0.15 mm (0.0059 in)

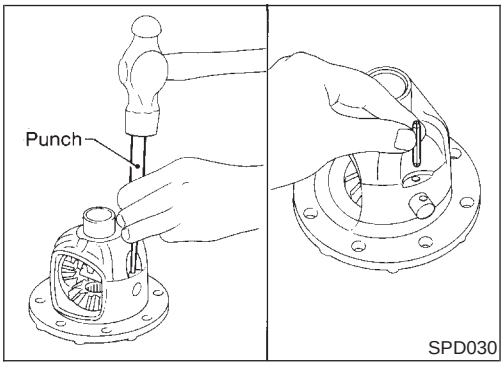

4. Install pinion mate shaft lock pin with a punch.

Make sure lock pin is flush with case.

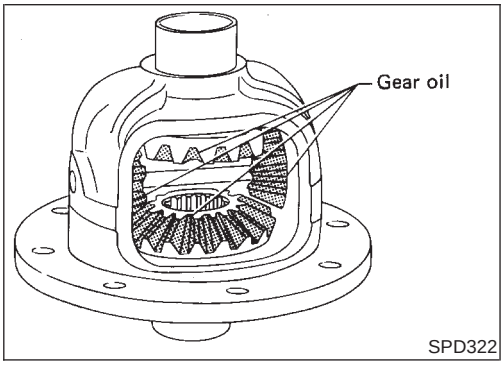

5. Apply gear oil to gear tooth surfaces and thrust surfaces and check to see they turn properly.

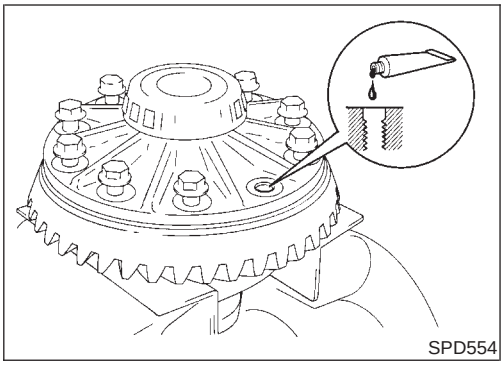

6. Install differential case assembly on drive gear.
7. Apply genuine medium strength thread locking sealant or equivalent. Refer to GI section, "Recommended chemical products and sealants" to drive gear bolts, and install them. After tightening, tighten by rotating 34 to 39 degress.

Tighten bolts in a criss-cross pattern, lightly tapping bolt head with a hammer.

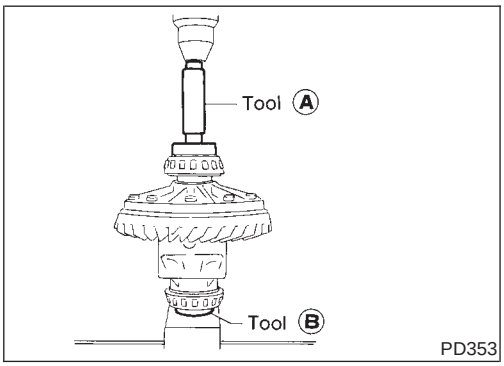

8. Press-fit side bearing inner cones on differential case with Tool.

Tool number:
A KV38100300 (J25523)
B ST33061000 (J8107-2)

FINAL DRIVE HOUSING

NAPD0021S03

1. Press-fit front and rear bearing outer races with Tools.

Tool number:
A ST30611000 (J25742-1)
B ST30621000 (J25742-5)
C ST30613000 (J25742-3)

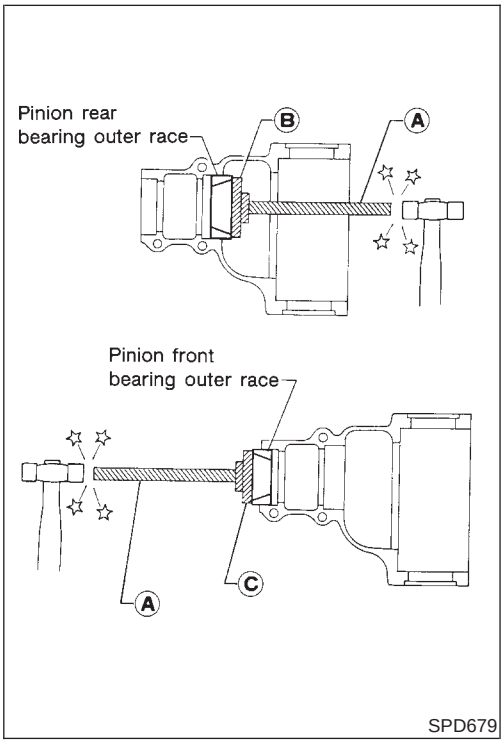

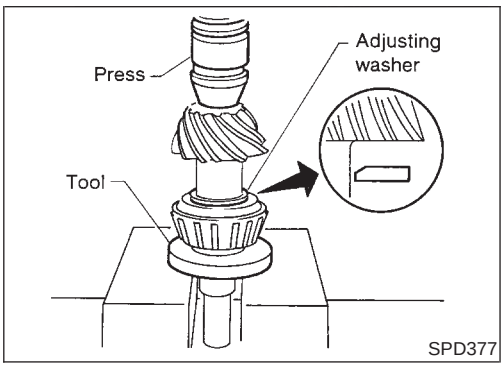

2. Select drive pinion height adjusting washer and pinion bearing adjusting washer. Refer to "PINION GEAR HEIGHT AND PINION BEARING PRELOAD", PD-26.
3. Install drive pinion height adjusting washer in drive pinion, and press-fit pinion rear bearing inner cone in it, using press and Tool.

Tool number:
ST30901000 (J26010-01)

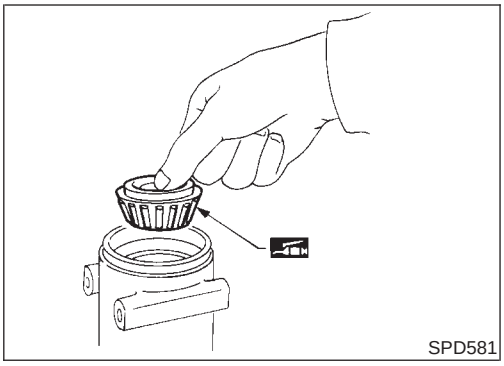
SPD581

4. Place pinion front bearing inner cone in final drive housing.

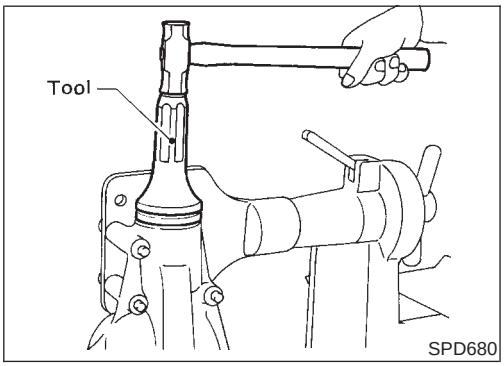

SPD680

5. Apply multi-purpose grease to cavity at sealing lips of oil seal. Install front oil seal.

   Tool number:
   KV38100500 (J25273)

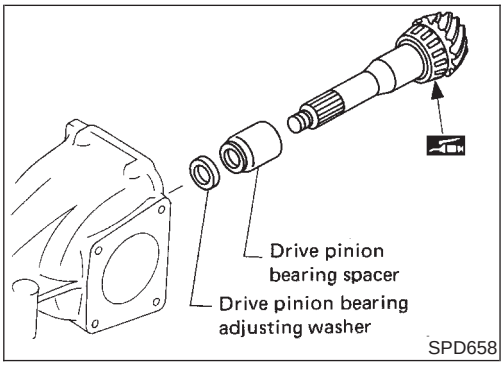

SPD658

6. Place drive pinion bearing spacer, drive pinion bearing adjusting washer and drive pinion in final drive housing.

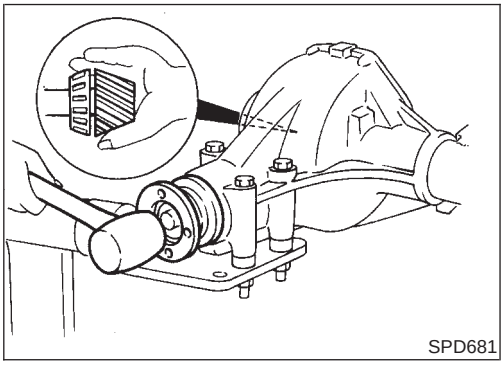
SPD681

7. Insert companion flange into drive pinion by tapping the companion flange with a soft hammer.

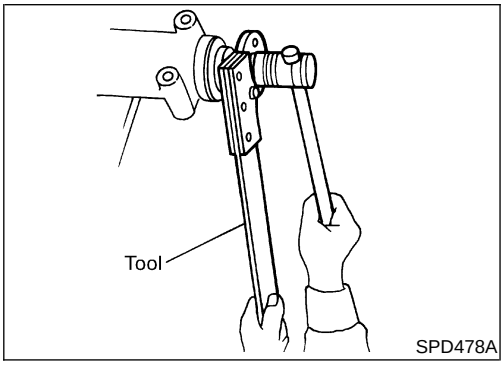

SPD478A

8. Tighten pinion nut to the specified torque.

The threaded portion of drive pinion and pinion nut should be free from oil or grease.

Tool number: KV38108300 (J44195)

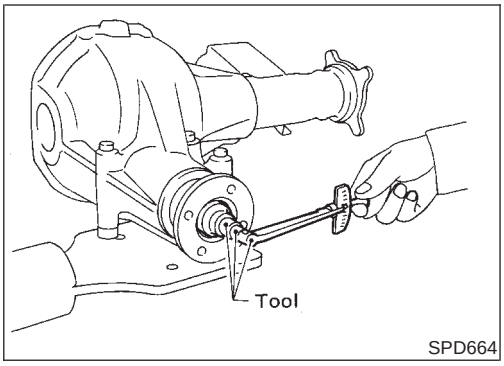

SPD664

9. Turn drive pinion in both directions several revolutions, and measure pinion bearing preload.
   Tool number: ST3127S000 (J25765-A)
   Pinion bearing preload:
   1.1 - 1.4 N·m (11 - 14 kg-cm, 9.5 - 12.2 in-lb)

When pinion bearing preload is outside the specifications, replace pinion bearing adjusting washer and spacer with a different thickness.

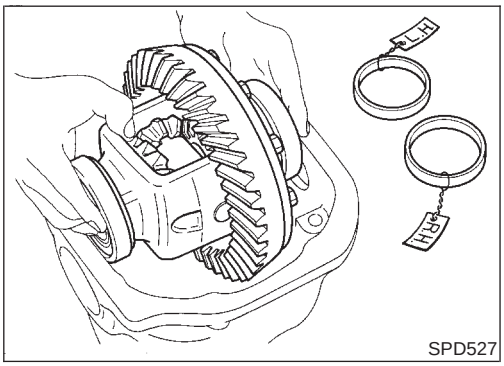
SPD527

10. Select side bearing adjusting washer.
    Refer to "SIDE BEARING PRELOAD", PD-25.
11. Install differential case assembly with side bearing outer races into final drive housing.

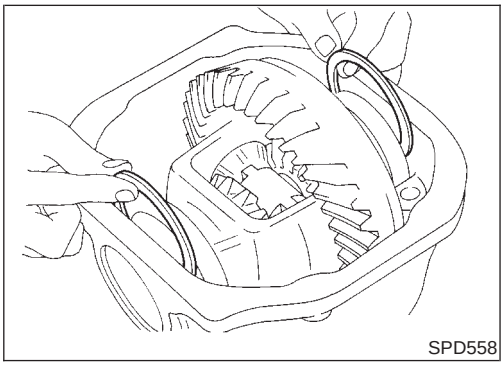
SPD558

12. Insert left and right side bearing adjusting washers in place between side bearings and final drive housing.

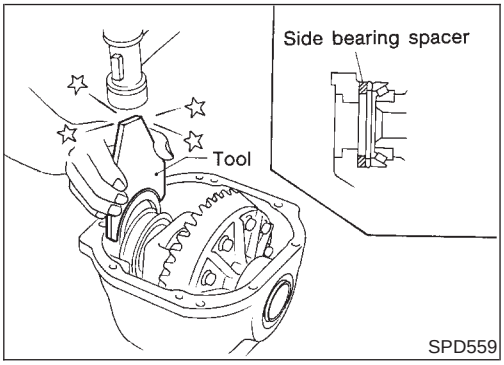

SPD559

13. Drive in side bearing spacer with Tool.
    Tool number: KV38100600 (J25267)

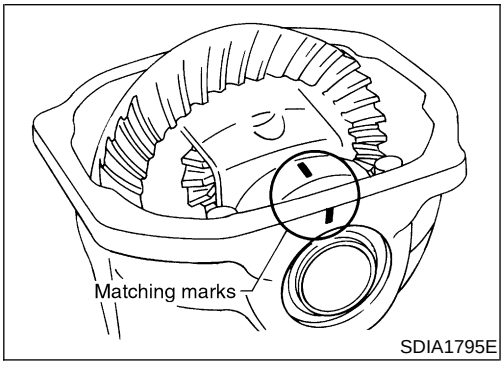

SDIA1795E

14. Align mark on bearing cap with that on final drive housing and install bearing cap on final drive housing.

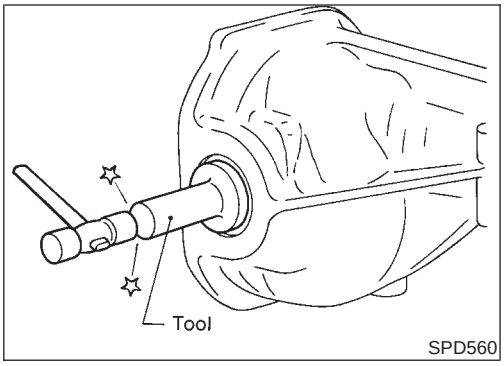

15. Apply multi-purpose grease to cavity at sealing lips of oil seal. Install side oil seal.
    Tool number: KV38100200 (J26233)

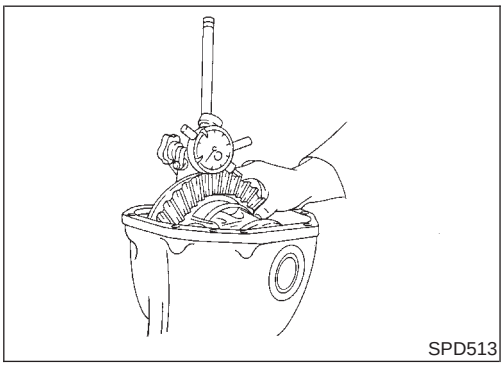

16. Measure drive gear to drive pinion backlash with a dial gauge.
    Drive gear-to-drive pinion backlash:
    0.10 - 0.15 mm (0.0039 - 0.0059 in)
- If backlash is too small, decrease thickness of right shim and increase thickness of left shim by the same amount.
  If backlash is too great, reverse the above procedure.

Never change the total amount of shims as it will change the bearing preload.

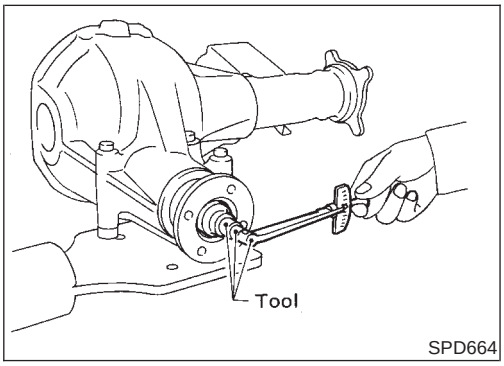

17. Check total preload with Tool.
    When checking preload, turn drive pinion in both directions several times to set bearing rollers.
    Tool number: ST3127S000 (J25765-A)
    Total preload:
    P_1 + [0.3 - 1.5 N·m (3 - 15 kg-cm, 2.6 - 13.0 in-lb)]
    P_1 = Drive pinion preload

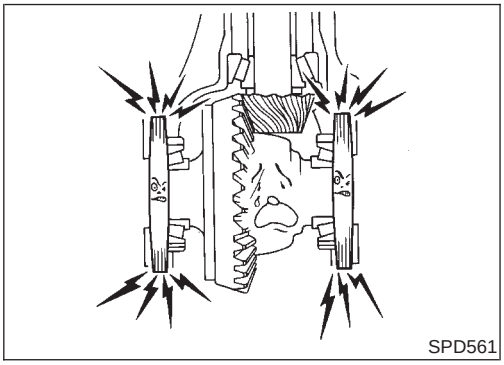

- If preload is too great, remove the same amount of shim from each side.
- If preload is too small, add the same amount of shim to each side.

Never add or remove a different number of shims for each side as it will change drive gear to drive pinion backlash.

18. Recheck drive gear to drive pinion backlash because increase or decrease in thickness of shims will cause change of drive gear-to-pinion backlash.

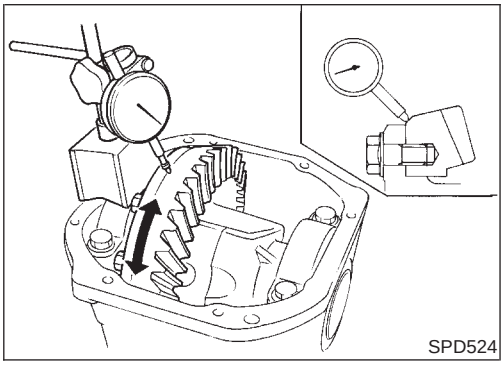

19. Check runout of drive gear with a dial gauge.
    Runout limit:
    0.05 mm (0.0020 in)
- If backlash varies excessively in different places, the variance may have resulted from foreign matter caught between the drive gear and the differential case.
- If the backlash varies greatly when the runout of the drive gear is within a specified range, the hypoid gear set or differential case should be replaced.

20. Check tooth contact. Refer to "TOOTH CONTACT", PD-30.
21. Install rear cover and gasket.

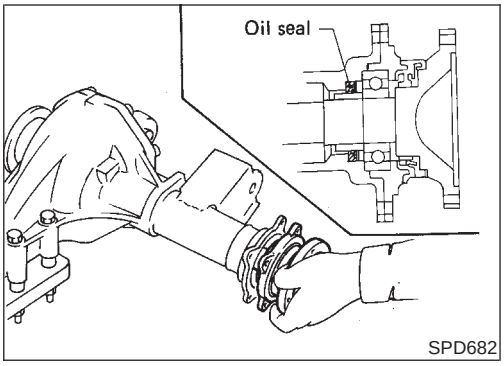

22. Install differential side shaft assembly.

Service Data and Specifications (SDS)

R200A
General Specifications

NAPD0022

NAPD0022S01

Front final drive	Standard
	R200A
	2-pinion
Gear ratio	4.363
Number of teeth (Drive gear/drive pinion)	48/11
Oil capacity (Approx.) ℓ (US pt, Imp pt)	1.85 (3-7/8, 3-1/4)

Drive Gear Runout

NAPD0022S02

Drive gear runout limit mm (in)	0.05 (0.0020)

Side Gear Adjustment

NAPD0022S03

Side gear backlash (Clearance between side gear and differential case) mm (in)		Less than 0.15 (0.0059)
Available side gear thrust washers	Thickness mm (in)	Part number*
	0.75 (0.0295)	38424-N3110
	0.78 (0.0307)	38424-N3111
	0.81 (0.0319)	38424-N3112
	0.84 (0.0331)	38424-N3113
	0.87 (0.0343)	38424-N3114
	0.90 (0.0354)	38424-N3115
	0.93 (0.0366)	38424-N3116

*: Always check with the Parts Department for the latest parts information.

Side Bearing Adjustment

NAPD0022S04

Differential carrier assembly turning resistance N (kg, lb)		34.3 - 39.2 (3.5 - 4.0, 7.7 - 8.8)
Available side bearing adjusting washers	Thickness mm (in)	Part number*
	2.00 (0.0787)	38453-N3100
	2.05 (0.0807)	38453-N3101
	2.10 (0.0827)	38453-N3102
	2.15 (0.0846)	38453-N3103
	2.20 (0.0866)	38453-N3104
	2.25 (0.0886)	38453-N3105
	2.30 (0.0906)	38453-N3106
	2.35 (0.0925)	38453-N3107
	2.40 (0.0945)	38453-N3108
	2.45 (0.0965)	38453-N3109
	2.50 (0.0984)	38453-N3110
	2.55 (0.1004)	38453-N3111
	2.60 (0.1024)	38453-N3112

*: Always check with the Parts Department for the latest parts information.

Total Preload Adjustment

NAPD0022S05

Total preload N·m (kg-cm, in-lb)	P_1 + [0.3 - 1.5 (3 - 15, 2.6 - 13.0)]
Ring gear backlash mm (in)	0.10 - 0.15 (0.0039 - 0.0059)

P_1 = Drive pinion preload

Drive Pinion Height Adjustment

NAPD0022S06

	Thickness mm (in)	Part number*
Available pinion height adjusting washers	3.09 (0.1217)	38154-P6017
	3.12 (0.1228)	38154-P6018
	3.15 (0.1240)	38154-P6019
	3.18 (0.1252)	38154-P6020
	3.21 (0.1264)	38154-P6021
	3.24 (0.1276)	38154-P6022
	3.27 (0.1287)	38154-P6023
	3.30 (0.1299)	38154-P6024
	3.33 (0.1311)	38154-P6025
	3.36 (0.1323)	38154-P6026
	3.39 (0.1335)	38154-P6027
	3.42 (0.1346)	38154-P6028
	3.45 (0.1358)	38154-P6029
	3.48 (0.1370)	38154-P6030
	3.51 (0.1382)	38154-P6031
	3.54 (0.1394)	38154-P6032
	3.57 (0.1406)	38154-P6033
	3.60 (0.1417)	38154-P6034
	3.63 (0.1429)	38154-P6035
	3.66 (0.1441)	38154-P6036

*: Always check with the Parts Department for the latest parts information.

Drive Pinion Preload Adjustment

NAPD0022S07

Drive pinion bearing preload adjusting method		Adjusting washer and spacer
Drive pinion preload with front oil seal N·m (kg-cm, in-lb) [P_1]		1.1 - 1.4 (11 - 14, 9.5 - 12.2)
	Thickness mm (in)	Part number*
Available drive pinion bearing preload adjusting washers	3.81 (0.1500)	38125-61001
	3.83 (0.1508)	38126-61001
	3.85 (0.1516)	38127-61001
	3.87 (0.1524)	38128-61001
	3.89 (0.1531)	38129-61001
	3.91 (0.1539)	38130-61001
	3.93 (0.1547)	38131-61001
	3.95 (0.1555)	38132-61001
	3.97 (0.1563)	38133-61001
	3.99 (0.1571)	38134-61001
	4.01 (0.1579)	38135-61001
	4.03 (0.1587)	38136-61001
	4.05 (0.1594)	38137-61001
	4.07 (0.1602)	38138-61001
	4.09 (0.1610)	38139-61001
	Length mm (in)	Part number*
Available drive pinion bearing preload adjusting spacers	54.50 (2.1457)	38165-B4000
	54.80 (2.1575)	38165-B4001
	55.10 (2.1693)	38165-B4002
	55.40 (2.1811)	38165-B4003
	55.70 (2.1929)	38165-B4004
	56.00 (2.2047)	38165-61001

*: Always check with the Parts Department for the latest parts information.

Preparation

SPECIAL SERVICE TOOLS

NAPD0029

The actual shapes of Kent-Moore tools may differ from those of special service tools illustrated here.

Tool number (Kent-Moore No.) Tool name	Description	
ST3127S000 (See J25765-A) Preload gauge 1 GG91030000 (J25765) Torque wrench 2 HT62940000 (—) Socket adapter 3 HT62900000 (—) Socket adapter	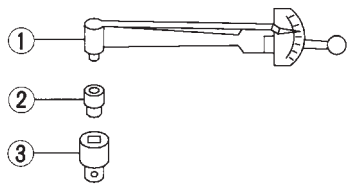 NT124	Measuring pinion bearing preload and total preload
ST06340000 (J24310, J34310) Differential attachment	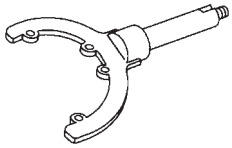 NT140	Mounting final drive
ST32580000 (J34312) Differential side bearing adjusting nut wrench	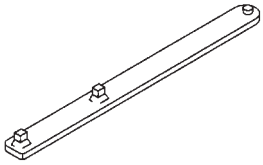 NT141	Adjusting side bearing preload and backlash (ring gear-drive pinion)
KV38108300 (J44195) Companion flange wrench	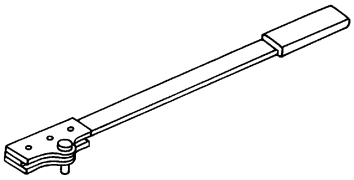 NT771	Removing and installing propeller shaft lock nut, and drive pinion lock nut
ST3090S000 (—) Drive pinion rear inner race puller set 1 ST30031000 (J22912-01) Puller 2 ST30901000 (J26010-01) Base	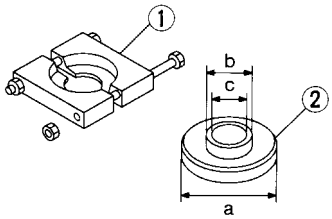 NT527	Removing and installing drive pinion rear inner cone **a: 79 mm (3.11 in) dia.** **b: 45 mm (1.77 in) dia.** **c: 35 mm (1.38 in) dia.**
ST3306S001 Differential side bearing puller set 1 ST33051001 (J22888-20) Body 2 ST33061000 (J8107-2) Adapter	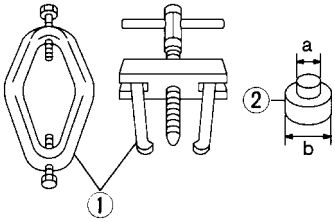 NT072	Removing and installing differential side bearing inner cone **a: 28.5 mm (1.122 in) dia.** **b: 38 mm (1.50 in) dia.**

Tool number (Kent-Moore No.) Tool name	Description	
ST33190000 (J25523) Differential side bearing drift	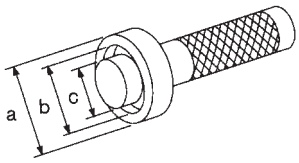 NT085	Installing side bearing inner cone **a: 52 mm (2.05 in) dia.** **b: 45.5 mm (1.791 in) dia.** **c: 34 mm (1.34 in) dia.**
ST33081000 (—) Side bearing puller adapter	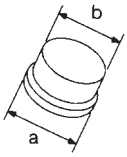 NT431	Installing side bearing inner cone **a: 43 mm (1.69 in) dia.** **b: 33.5 mm (1.319 in) dia.**
ST30611000 (J25742-1) Drift	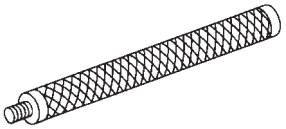 NT090	Installing pinion rear bearing outer race (Use with ST30621000 or ST30613000)
ST30621000 (J25742-5) Drift	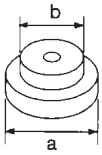 NT073	Installing pinion rear bearing outer race **a: 79 mm (3.11 in) dia.** **b: 59 mm (2.32 in) dia.**
ST30613000 (J25742-3) Drift	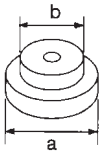 NT073	Installing pinion front bearing outer race (Use with ST30611000) **a: 72 mm (2.83 in) dia.** **b: 48 mm (1.89 in) dia.**
KV381025S0 (—) Oil seal fitting tool 1 ST30720000 (J25405) Drift bar 2 KV38102510 (—) Drift	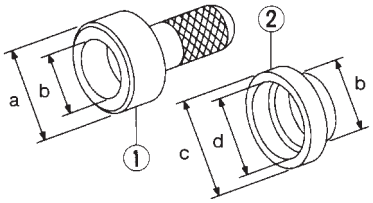 NT525	Installing front oil seal **a: 77 mm (3.03 in) dia.** **b: 55 mm (2.17 in) dia.** **c: 71 mm (2.80 in) dia.** **d: 65 mm (2.56 in) dia.**
(J34309) Differential shim selector	 NT134	Adjusting bearing pre-load and gear height

Tool number (Kent-Moore No.) Tool name	Description	
(J25269-18) Side bearing discs (2 Req'd)	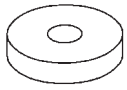 NT135	Selecting pinion height adjusting washer
KV381052S0 (—) Rear axle shaft dummy 1 KV38105210 (—) Torque wrench side 2 KV38105220 (—) Vice side	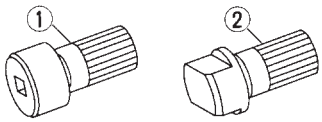 NT142	Checking differential torque on limited slip differential
KV38100500 (J25273) Gear carrier front oil seal drift	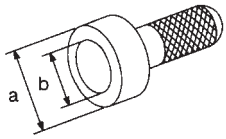 NT115	Installing front oil seal **a: 85 mm (3.35 in) dia.** **b: 60 mm (2.36 in) dia.**

Noise, Vibration and Harshness (NVH) Troubleshooting

NAPD0051

Refer to "NVH TROUBLESHOOTING CHART", PD-4.

On-vehicle Service

FRONT OIL SEAL REPLACEMENT

NAPD0030

1. Remove propeller shaft.
2. Loosen drive pinion nut.

   Tool number: KV38108300 (J44195)

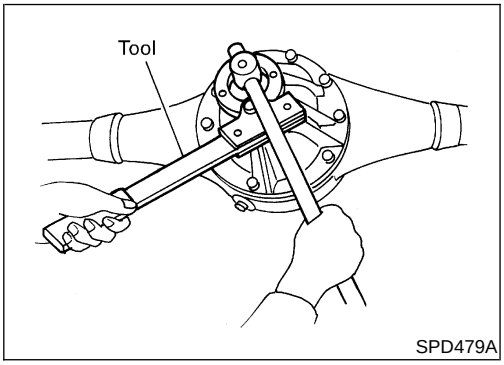

SPD479A

3. Remove companion flange.

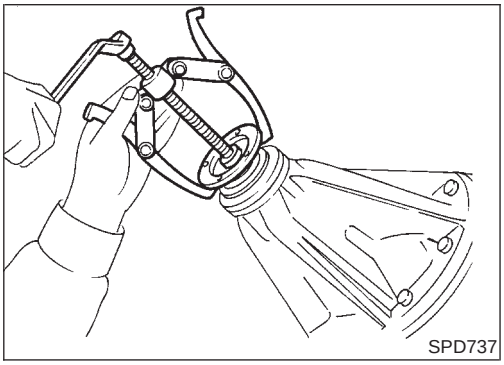
SPD737

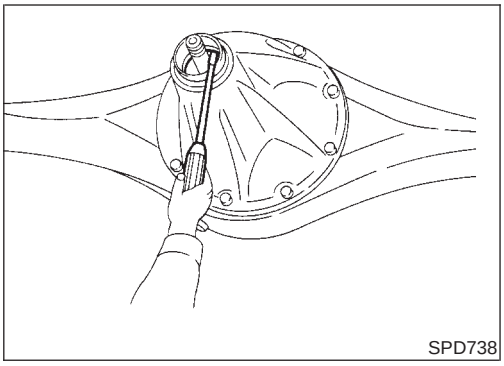
SPD738

4. Remove front oil seal.

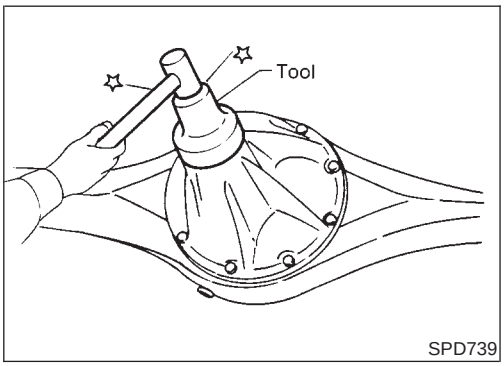

SPD739

5. Apply multi-purpose grease to cavity at sealing lips of oil seal. Press front oil seal into carrier.

   Tool number:

   KV38100500 (J25273)
6. Install companion flange and drive pinion nut.
7. Install rear propeller shaft.

Components

NAPD0031

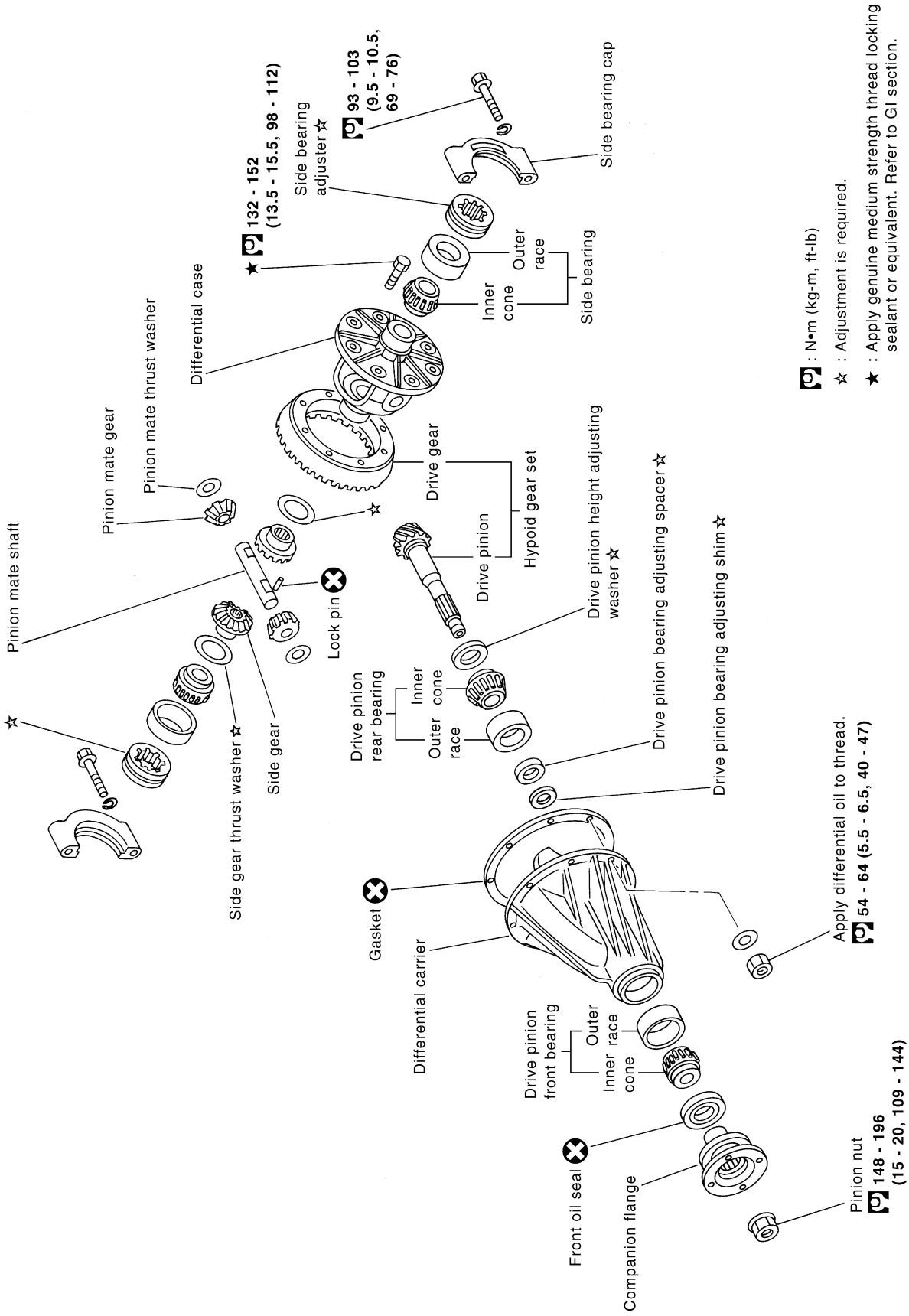

: N•m (kg-m, ft-lb)

☆ : Adjustment is required.

★ : Apply genuine medium strength thread locking sealant or equivalent. Refer to GI section.

PDIA0169E

SEC. 380

Removal and Installation

NAPD0032

REMOVAL

NAPD0032S01

- Remove rear of propeller shaft.
  Plug front end of transfer.
- Remove axle shaft.
  Refer to AX-20, “Removal”.
- Remove rear final drive mounting bolts.

CAUTION:
Be careful not to damage spline, sleeve yoke and front oil seal when removing propeller shaft.

INSTALLATION

NAPD0032S02

- Fill final drive with recommended gear oil.

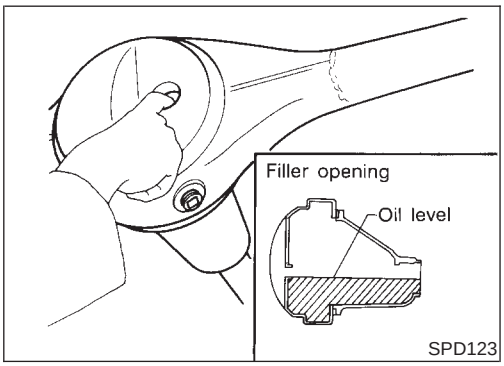

- Pay attention to the direction of gasket.

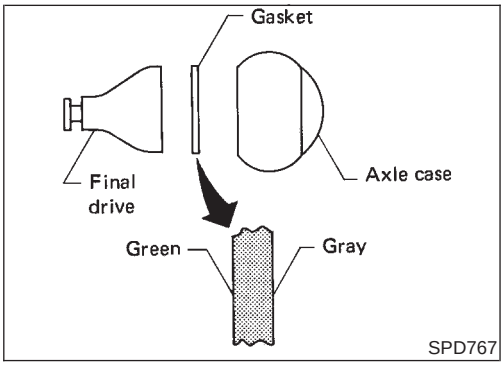

Disassembly

NAPD0033

PRE-INSPECTION

NAPD0033S01

Before disassembling final drive, perform the following inspection.

- Total preload

a) Turn drive pinion in both directions several times to seat bearing rollers correctly.

b) Check total preload with Tool.

Tool number: ST3127S000 (J25765-A)
Total preload:
1.2 - 2.0 N·m (12 - 20 kg-cm, 10 - 17 in-lb)

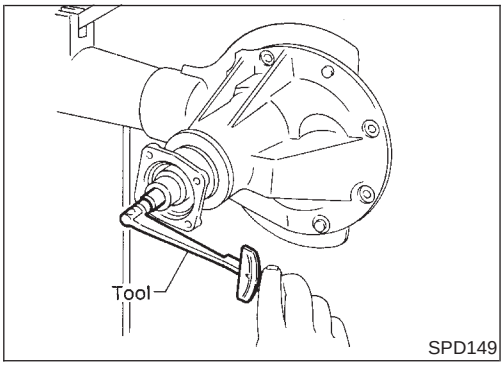

- Drive gear to drive pinion backlash
  Check backlash of drive gear with a dial gauge at several points.

Drive gear-to-drive pinion backlash:
0.13 - 0.18 mm (0.0051 - 0.0071 in)

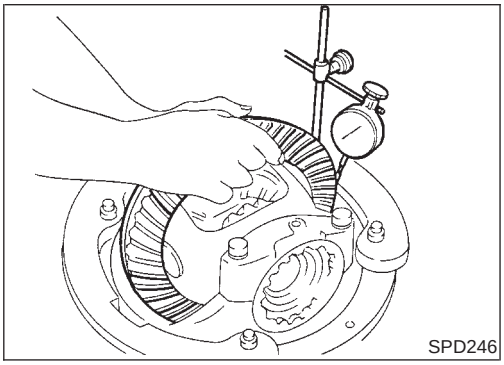

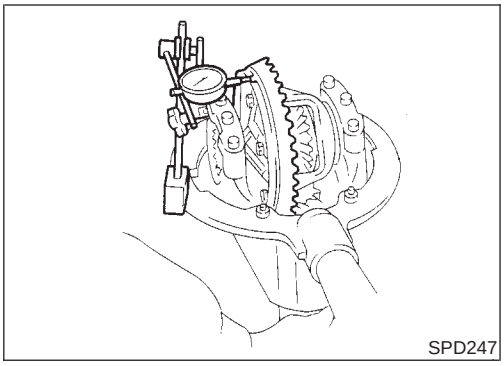
SPD247

- Drive gear runout
  Check runout of drive gear with a dial gauge.
  Runout limit:
  0.08 mm (0.0031 in)

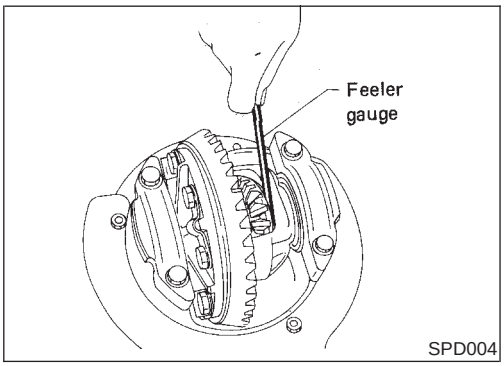

SPD004

- Tooth contact
  Check tooth contact. Refer to "TOOTH CONTACT", PD-57.
- Side gear to pinion mate gear backlash
  Measure clearance between side gear thrust washer and differential case with a feeler gauge.
  Clearance between side gear thrust washer and differential case:
  0.10 - 0.20 mm (0.0039 - 0.0079 in)

DIFFERENTIAL CARRIER

NAPD0033S02

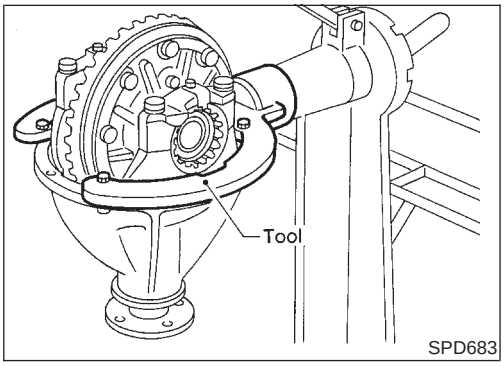

SPD683

1. Mount final drive assembly on Tool.
   Tool number:
   ST06340000 (J24310, J34310)

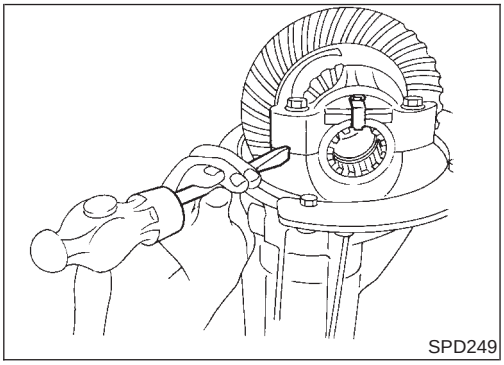
SPD249

2. Put matching marks on one side of side bearing cap with paint or punch to ensure that it is replaced in proper position during reassembly.

Bearing caps are line-bored during manufacture and should be put back in their original places.

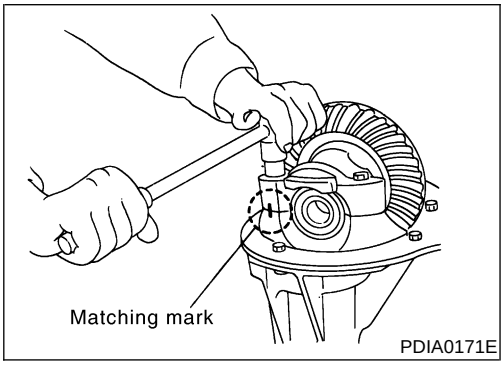

PDIA0171E

3. Remove side lock fingers and side bearing caps.

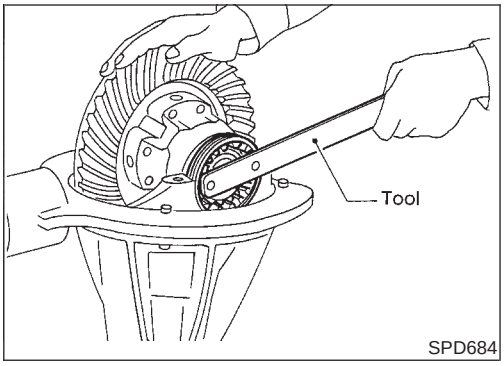

4. Remove side bearing adjuster with Tool.
   Tool number: ST32580000 (J34312)

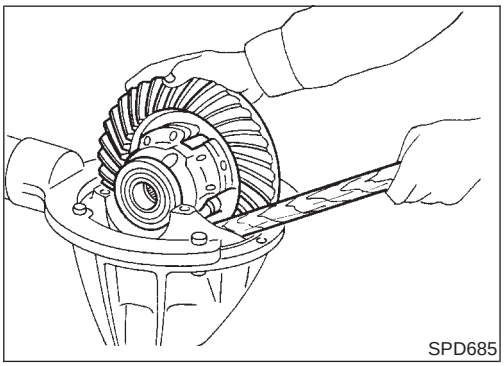

5. Remove differential case assembly with a pry bar.

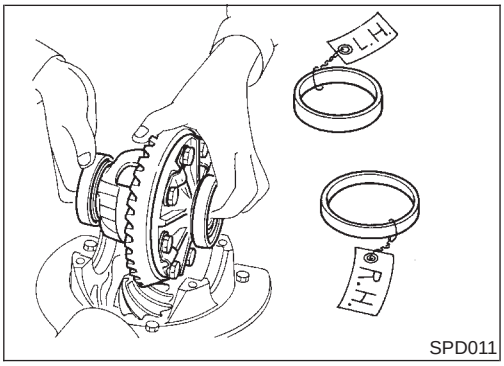

Be careful to keep the side bearing outer races together with their respective inner cones — do not mix them up.

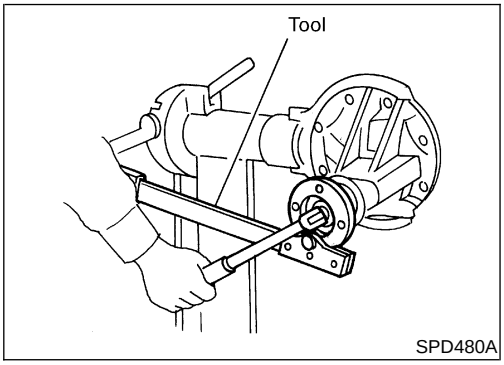

6. Remove drive pinion nut with Tool.
   Tool number: KV38108300 (J44195)
7. Remove companion flange with puller.

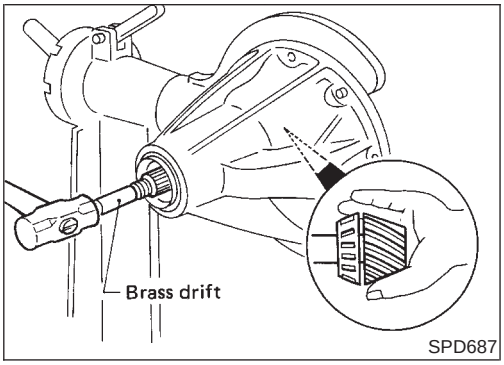

8. Take out drive pinion together with pinion rear bearing inner cone, drive pinion bearing spacer and pinion bearing adjusting shim.

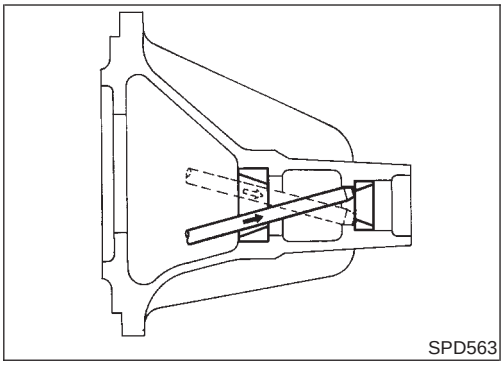
SPD563

9. Remove front oil seal and pinion front bearing inner cone.
10. Remove pinion bearing outer races with a brass drift.

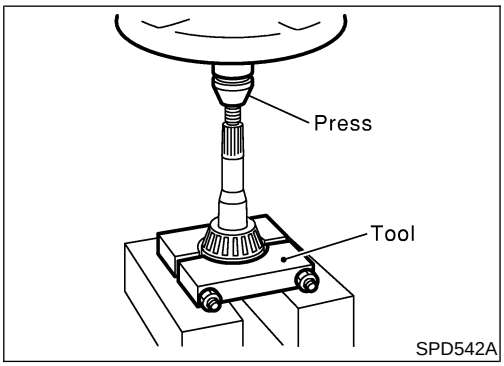

SPD542A

11. Remove pinion rear bearing inner cone and drive pinion adjusting washer.
    Tool number: ST30031000 (J22912-01)

DIFFERENTIAL CASE

NAPD0033S03

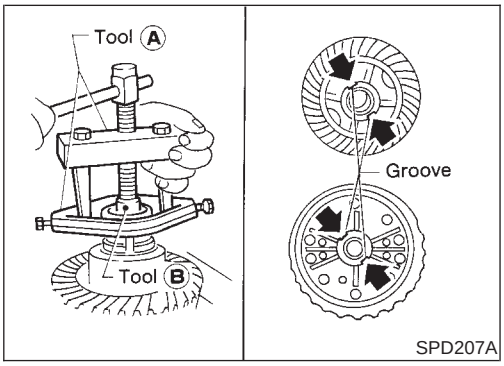

SPD207A

1. Remove side bearing inner cones.
   To prevent damage to bearing, engage puller jaws in groove.
   Tool number:
   A ST33051001 (J22888-20)
   B ST33061000 (J8107-2)

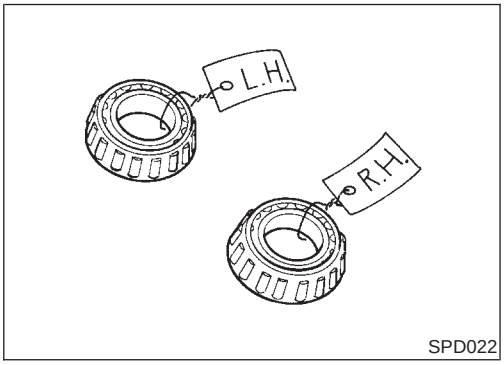

SPD022

Be careful not to confuse the left and right hand parts.
Keep bearing and bearing race for each side together.

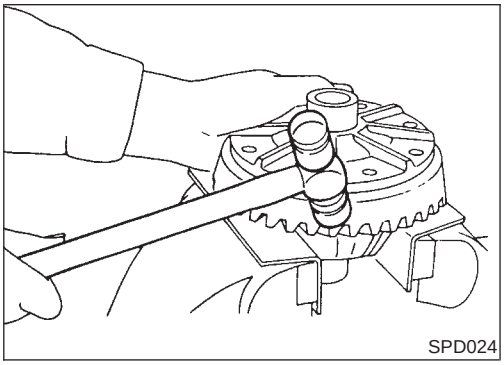
SPD024

2. Loosen drive gear bolts in a criss-cross pattern.
3. Tap drive gear off differential case with a soft hammer.

Tap evenly all around to keep drive gear from binding.

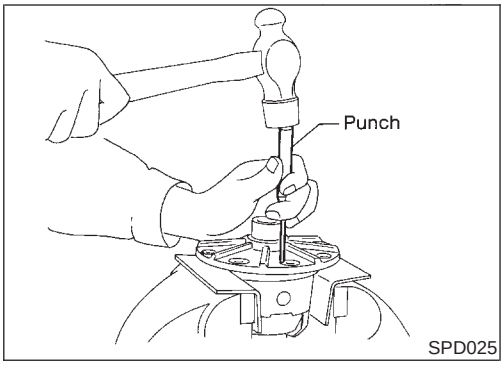

4. Drive out pinion mate shaft lock pin, with punch from drive gear side.

Lock pin is calked at pin hole mouth on differential case.

Inspection

NAPD0034

DRIVE GEAR AND DRIVE PINION

NAPD0034S01

Check gear teeth for scoring, cracking or chipping.
If any damaged part is evident, replace drive gear and drive pinion as a set (hypoid gear set).

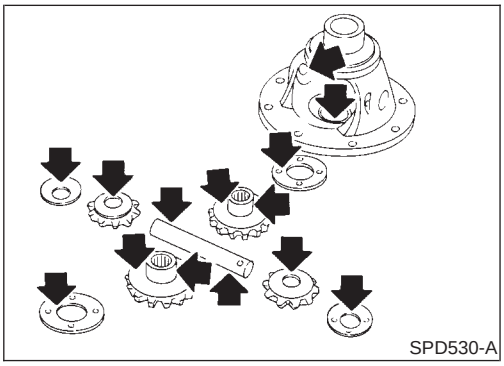

DIFFERENTIAL CASE ASSEMBLY

NAPD0034S02

Check mating surfaces of differential case, side gears, pinion mate gears, pinion mate shaft, and thrust washers.

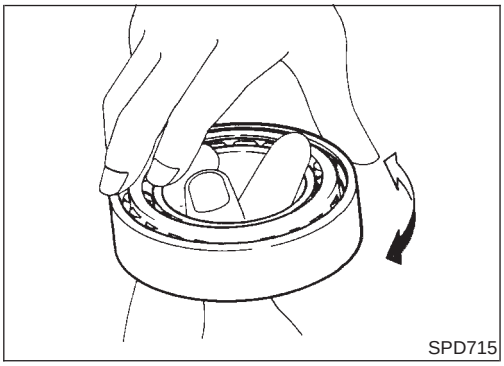

BEARING

NAPD0034S03

1. Thoroughly clean bearing.
2. Check bearings for wear, scratches, pitting or flaking.
   Check tapered roller bearing for smooth rotation. If damaged, replace outer race and inner cone as a set.

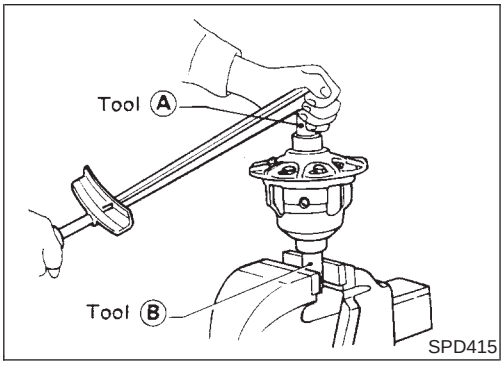

Limited Slip Differential

PREPARATION FOR DISASSEMBLY

NAPD0035

Checking Differential Torque

NAPD0035S01

Measure differential torque with Tool.
If it is not within the specifications, inspect components of limited slip differential.

Differential torque:
40 - 58 N·m 4 - 6 kg-m, 29 - 43 ft-lb)
Tool number: A KV38105210 (—)
Tool number: B KV38105220 (—)

DISASSEMBLY

NAPD0036

SEC. 380

No. of discs and plates (One side)

Model	H233B
Friction disc	2
Friction plate	5
Spring plate	2
Spacer	1

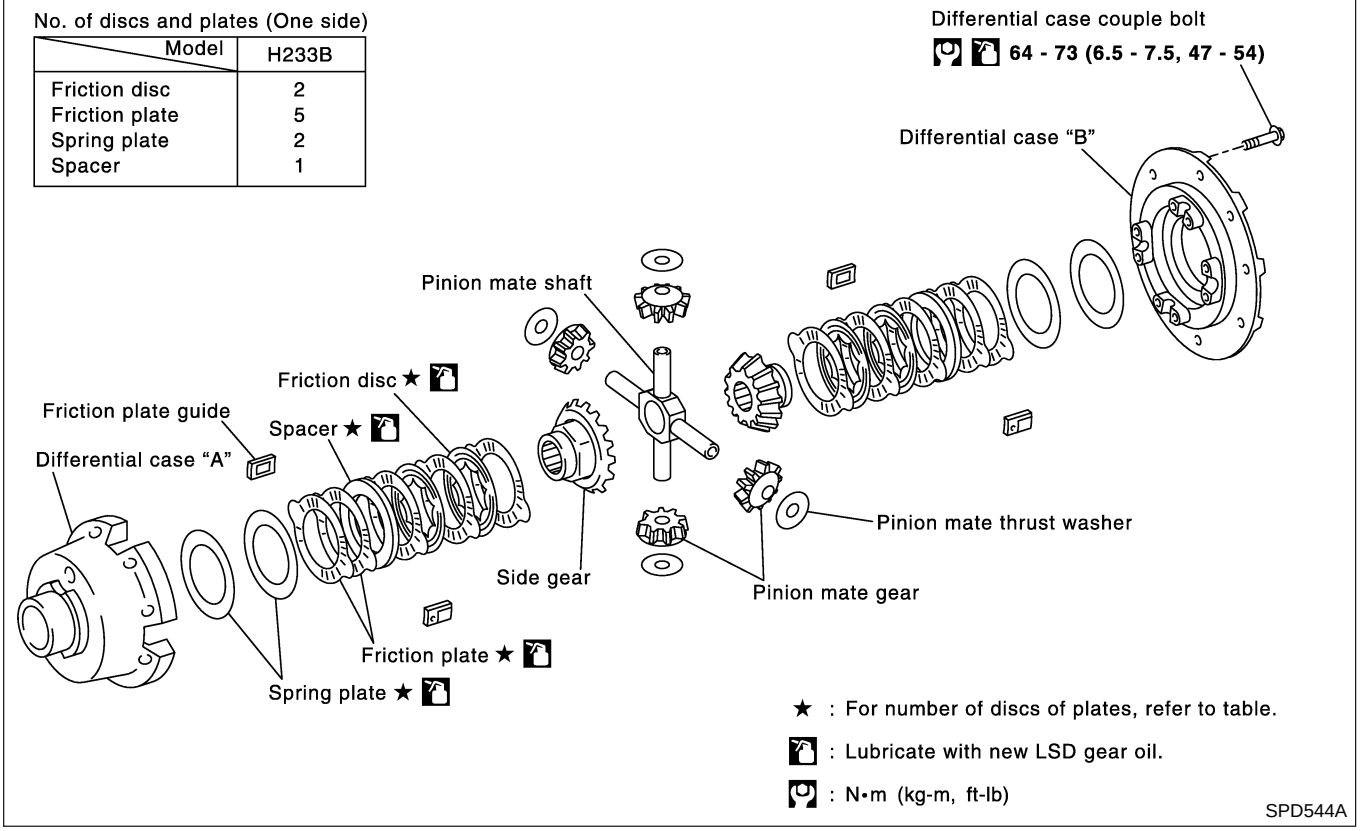

CAUTION:
Do not run engine when one wheel (rear) is off the ground.

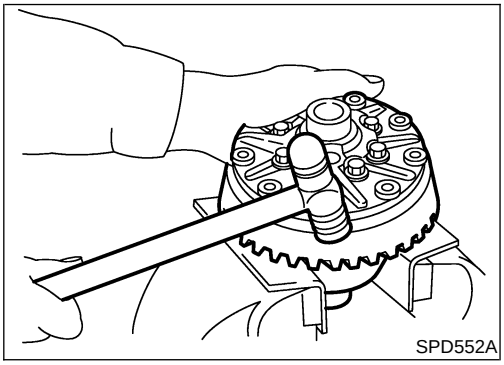

1. Remove side bearing inner cone with Tool.
2. Loosen drive gear bolts in a criss-cross pattern.
3. Tap drive gear off gear case with a soft hammer.

Tap evenly all around to keep drive gear from binding.

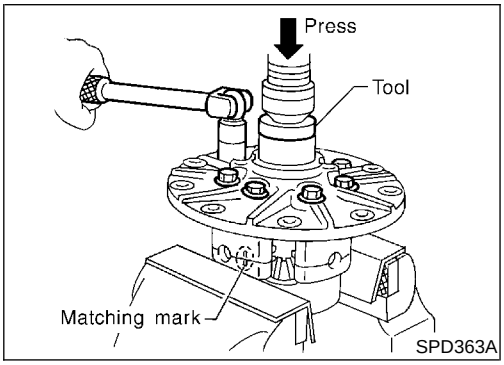

4. Remove couple bolts on differential cases A and B with a press.
   Tool number: ST33081000 (—)
5. Separate differential case A and B.
   Draw out component parts (discs and plates, etc.).

Put marks on component parts so that they can be reinstalled in their original positions from which they were removed.

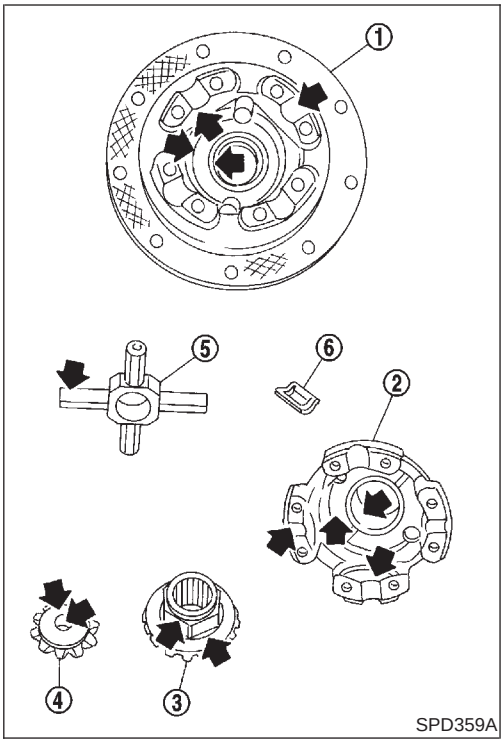

SPD359A

INSPECTION

NAPD0037

Contact Surfaces

NAPD0037S01

1. Clean the disassembled parts in suitable solvent and blow dry with compressed air.
2. If following surfaces are found with burrs or scratches, smooth with oil stone.
   1 Differential case B
   2 Differential case A
   3 Side gear
   4 Pinion mate gear
   5 Pinion mate shaft
   6 Friction plate guide

Disc and Plate

NAPD0037S02

1. Clean the discs, plates and spacer in suitable solvent and blow dry with compressed air.
2. Inspect discs and plates for wear, nicks and burrs.

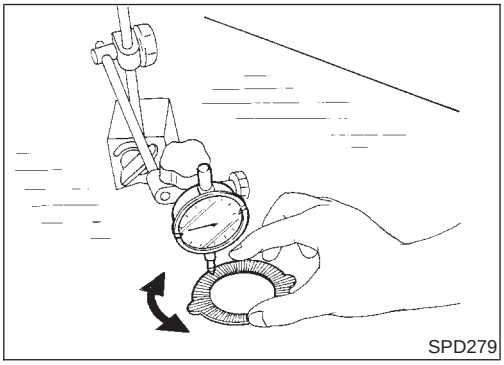
SPD279

3. To test if friction disc or plate is not distorted, place it on a surface plate and rotate it by hand with indicating finger of dial gauge resting against disc or plate surface.

   Maximum allowable warpage:
   0.08 mm (0.0031 in)

   If it exceeds limits, replace with a new plate or disc to eliminate possibility of clutch slippage or sticking.

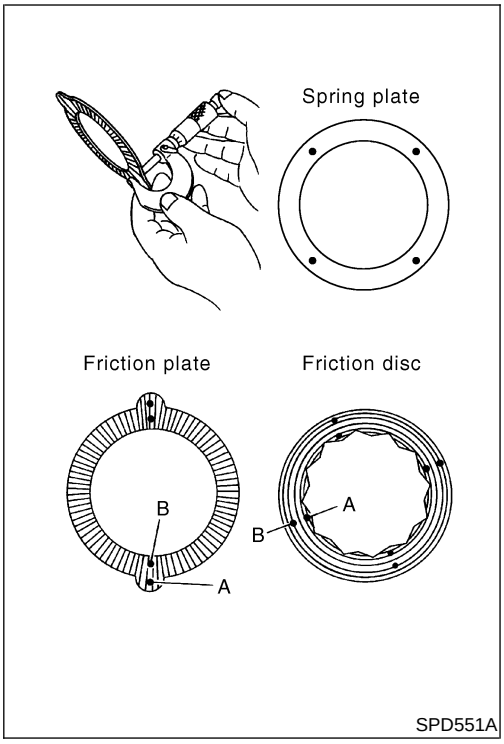

4. Measure thickness of spring plate.

Thickness of spring plate

Standard:

1.5 mm (0.059 in)

Wear limit:

1.4 mm (0.055 in)

5. Measure frictional surfaces and projected portions of friction disc, friction plate, and determine each part's differences to see if the specified wear limit has been exceeded.

If any part has worn beyond the wear limit, and deformed or fatigued, replace it with a new one that is the same thickness as the projected portion.

Wear limit:

0.1 mm (0.004 in) or less

A − B = Wear limit mm (in)

●: Measuring points
A: Projected portion
B: Frictional surface

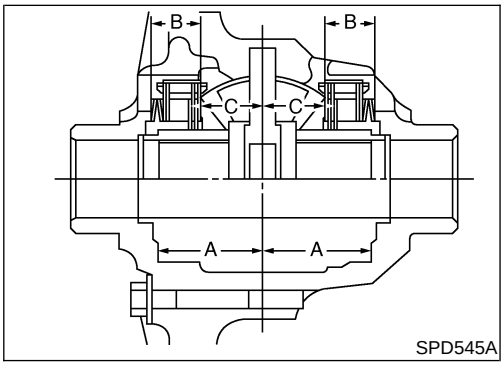

ADJUSTMENT

NAPD0038

Friction Disc and Friction Plate End Play

NAPD0038S01

End play of friction disc and friction plate can be calculated by using following equation and should be adjusted within following range. Adjustment can be made by selecting friction disc or friction plate having three different thicknesses.

End play E: (One side)

0.05 - 0.15 mm (0.0020 - 0.0059 in)

E = A − (B + C)

A: Length of differential case contact surface to differential case inner bottom.
B: Total thickness of friction discs, friction plates, spring plate and spacer in differential case on one side.
C: Length of differential case contact surface to back side of side gear.

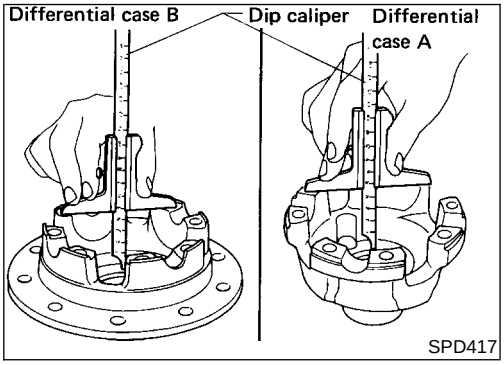

1. Measure values of "A".

Standard length A:

49.50 - 49.55 mm (1.9488 - 1.9508 in)

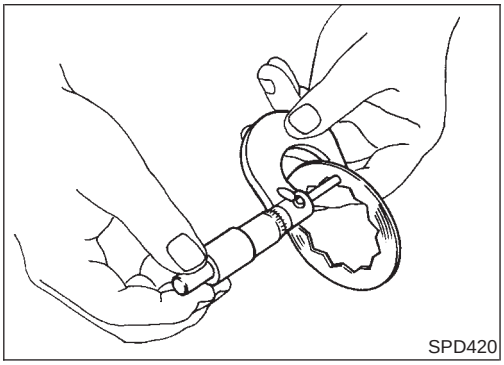

2. Measure thickness of each disc and plate.

Total thickness "B":

18.57 - 20.43 mm (0.7311 - 0.8043 in)

No. of discs and plates (One side)

Friction disc: 2

Friction plate: 5

Spring plate: 2

Spacer: 1

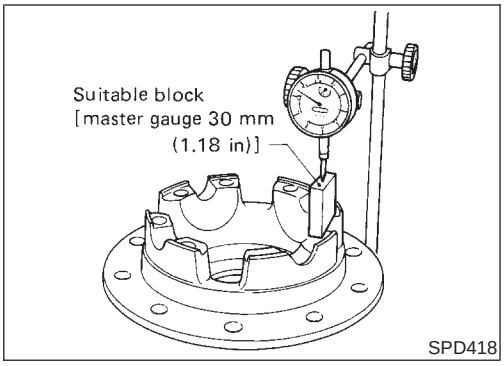

3. Measure values of "C".
a. Attach a dial gauge to the base plate.
b. Place differential case B on the base plate, and install a master gauge on case B.
Then adjust the dial gauge scale to zero with its tip on the master gauge.

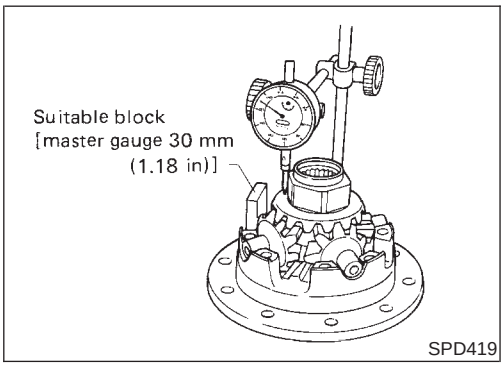

c. Install pinion mate gears, side gears and pinion mate shaft in differential case B.
d. Set dial gauge tip on the rear of side gear, and read the indication.
Example:
E = A − D = A − (B + C) = 0.05 to 0.15 mm
A = 49.52 mm
B = 19.45 mm
C = 29.7 mm
D = B + C
49.15 (D) = 19.45 (B) + 29.7 (C)
E = A − D
0.37 (E) = 49.52 (A) − 49.15 (D)

From the above equation, end play of 0.37 mm exceeds the specified range of 0.05 to 0.15 mm.
Select suitable discs and plates to adjust correctly.

4. Calculate end play of differential case A with the same procedure of differential case B.

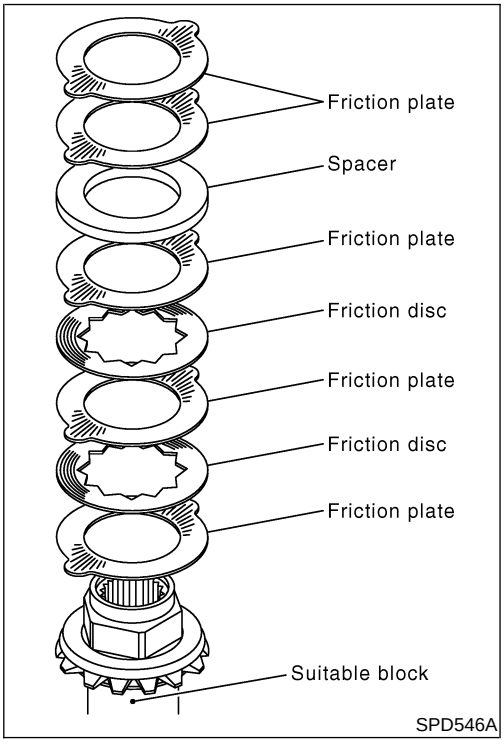

ASSEMBLY

NAPD0039

Prior to assembling discs and plates, properly lubricate them by dipping them in limited slip differential oil.

1. Position specified number of friction plates, friction discs and spacer on rear of side gear.

Always position a friction plate first on rear of side gear.

No. of discs and plates (One side)
Friction disc: 2
Friction plate: 5
Spacer: 1

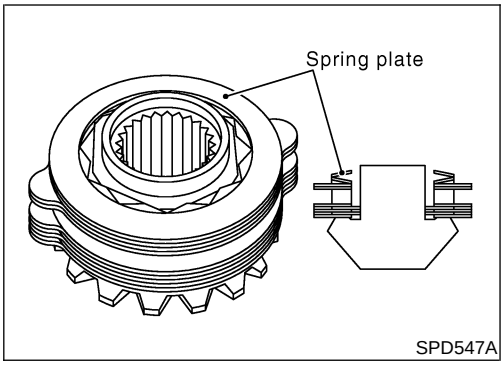

2. Install two spring plates.

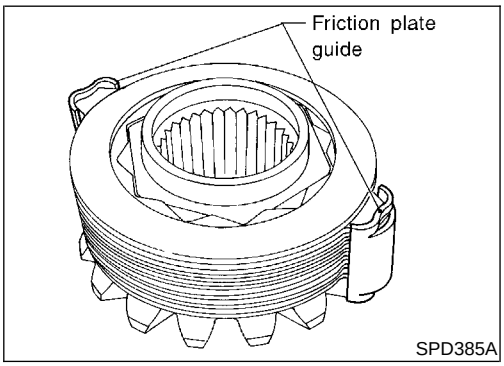

3. Install friction plate guides.

Correctly align the raised portions of friction plates, and apply LSD gear oil to inner surfaces of friction plate guides to prevent them from falling.

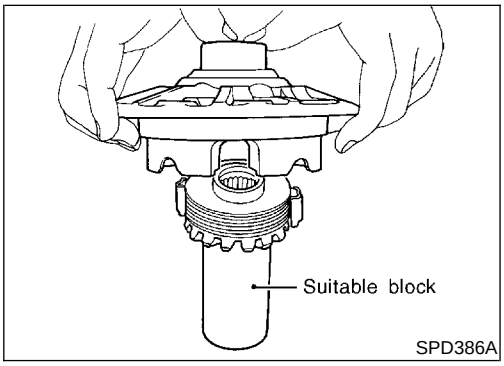

4. Install differential case B over side gear, discs, plates, spacer and friction plate guide assembly.

- **Install differential case B while supporting friction plate guides with your middle finger inserted through oil hole in differential case.**
- **Be careful not to detach spring plate from the hexagonal part of the side gear.**

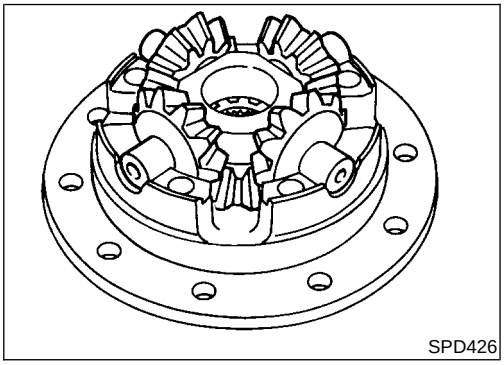

5. Install pinion mate gears and pinion mate thrust washers on pinion mate shaft, then install pinion mate shaft in differential case B.

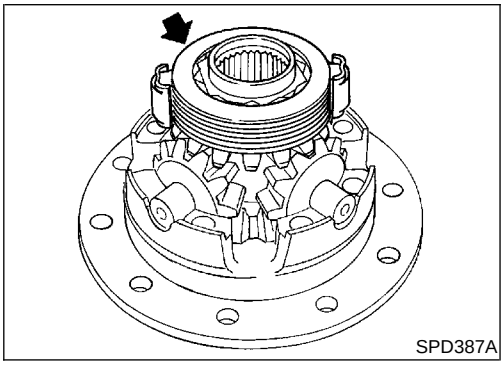

6. Install side gear to pinion mate gears.
7. Install each disc and plate.

Use same procedures as outlined in steps 1. through 4. above.

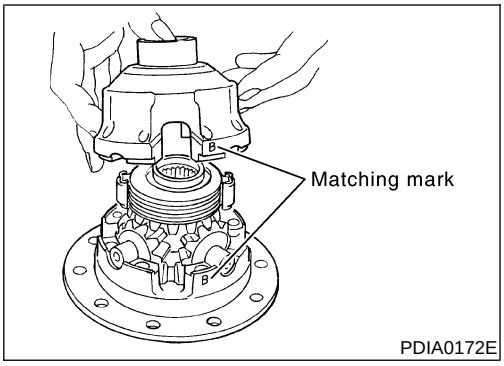

8. Install differential case A.

Position differential cases A and B by correctly aligning marks stamped on cases.

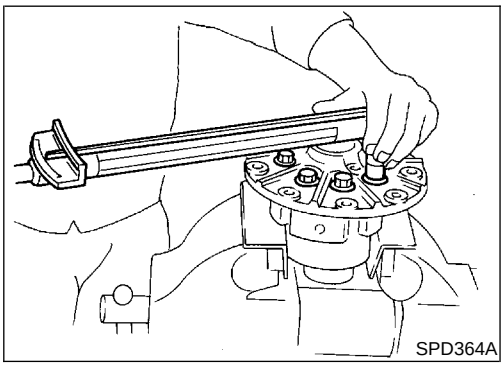

9. Tighten differential case couple bolts.
10. Place drive gear on differential case and tighten drive gear bolts.

Tighten bolts in a criss-cross pattern.

11. Install side bearing inner cone.
12. Check differential torque.

Adjustment

NAPD0040

For quiet and reliable final drive operation, the following five adjustments must be made correctly:

1. Side bearing preload
2. Pinion gear height
3. Side bearing preload
4. Drive gear-to-pinion backlash. Refer to SDS, PD-63.
5. Drive and pinion gear tooth contact pattern

PINION GEAR HEIGHT

NAPD0040S01

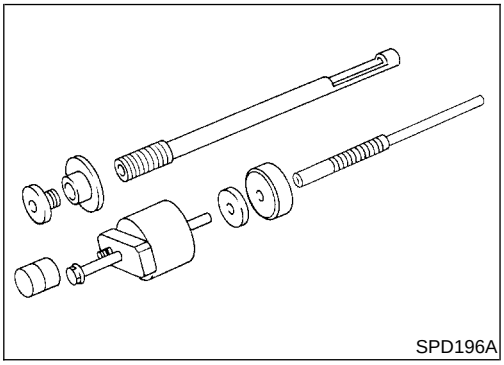

1. Make sure all parts are clean and that the bearings are well lubricated.
2. Assemble the pinion gear bearings into the pinion pre-load shim selector tool, J34309.

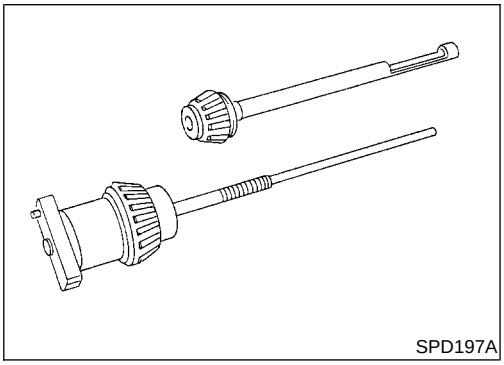

- **Rear Pinion Bearing** — the rear pinion bearing pilot, J34309-8, is used to center the rear pinion bearing only. The rear pinion bearing locking seat, J34309-4, is used to lock the bearing to the assembly.
- **Front Pinion Bearing** — make sure the J34309-3, front pinion bearing seat is secured tightly against the J34309-2 gauge anvil. Then turn the front pinion bearing pilot, J34309-5, to secure the bearing in its proper position.

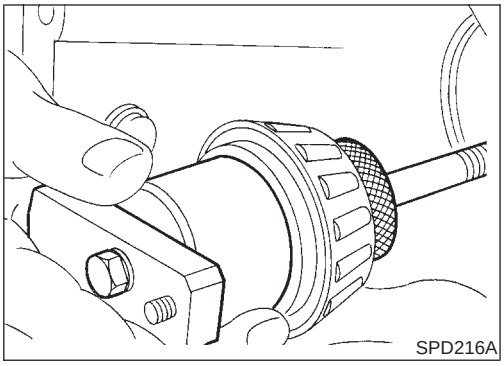
SPD216A

3. Place the pinion preload shim selector tool gauge screw assembly, J34309-1, with the pinion rear bearing inner cone installed, into the final drive housing.

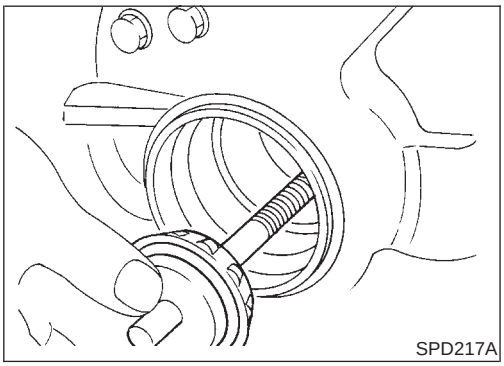
SPD217A

4. Install the J34309-2 gauge anvil with the front pinion bearing into the final drive housing and assemble it to the J34309-1 gauge screw. Make sure that the J34309-16 gauge plate will turn a full 360 degrees, and tighten the two sections by hand to set bearing pre-load.
5. Turn the assembly several times to seat the bearings.

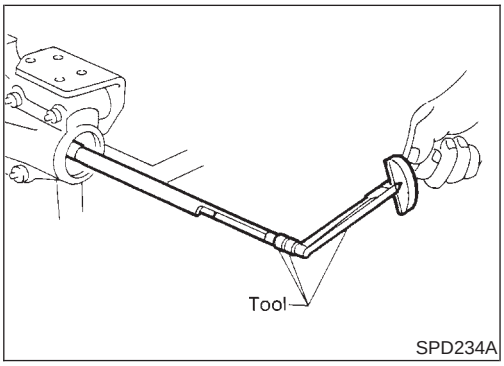

SPD234A

6. Measure the turning torque at the end of the J34309-2 gauge anvil using torque wrench J25765A.

   Turning torque specification:
   0.4 - 0.9 N·m (4 - 9 kg-cm, 3.5 - 7.8 in-lb)

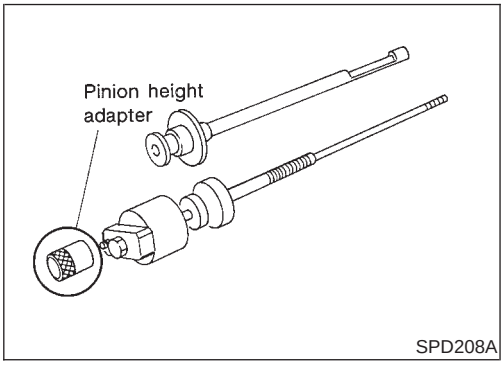

SPD208A

7. Place the J34309-12 "H233B" pinion height adapter onto the gauge plate and tighten it by hand.

CAUTION:
Make sure all machined surfaces are clean.

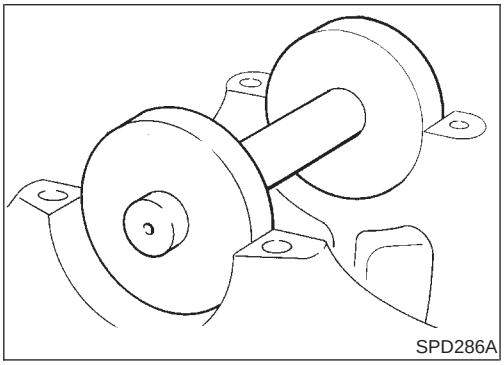
SPD286A

PINION HEIGHT ADJUSTING WASHER SELECTION

8. Position the J25269-18 side bearing discs and the arbor into the side bearing bores.

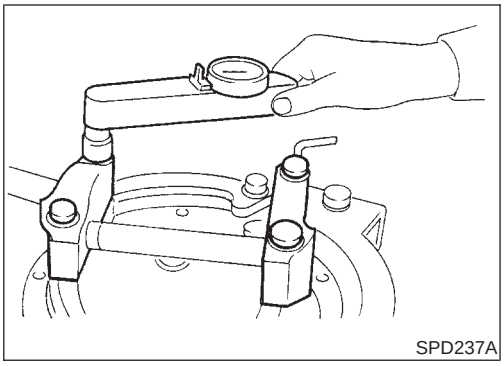
SPD237A

9. Install the bearing caps and torque the bolts.
   Specification:
   93 - 103 N·m (9.5 - 10.5 kg-m, 69 - 76 ft-lb)

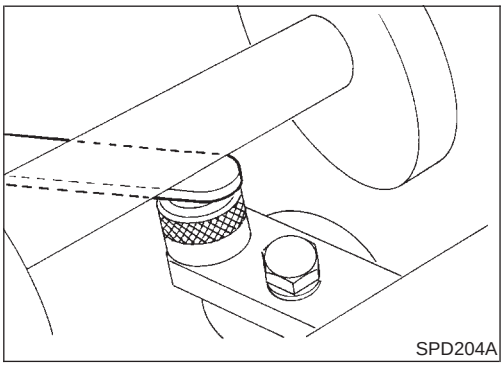
SPD204A

10. Select the correct standard pinion height adjusting washer thickness using a standard gauge of 2.5, 3.0, or 3.5 mm (0.098, 0.118, or 0.138 in) and your J34309-101 feeler gauge. Measure the distance between the J34309-12 "H233B" pinion height adapter and the arbor.

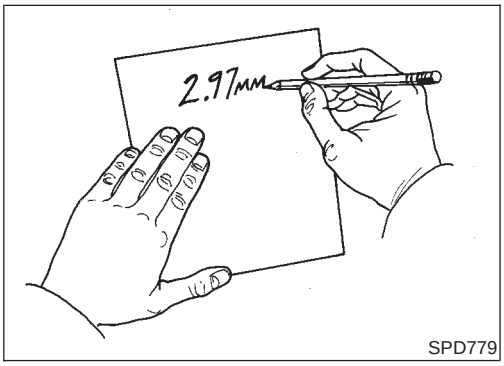

SPD779

11. Write down your exact total measurement.

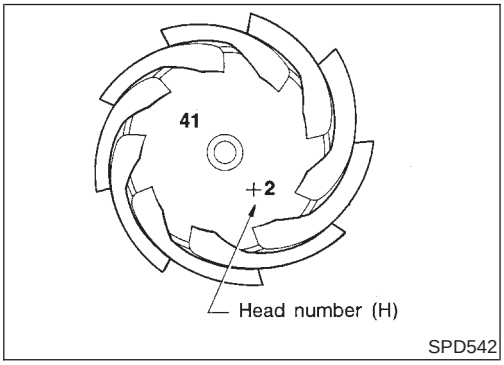

SPD542

12. Correct the pinion height washer size by referring to the "pinion head height number".

There are two numbers painted on the pinion gear. The first one refers to the pinion and drive gear as a matched set and should be the same as the number on the drive gear. The second number is the "pinion head height number", and it refers to the ideal pinion height from standard for the quietest operation. Use the following chart to determine the correct pinion height washer. Refer to SDS, PD-64.

Pinion Head Height Number	Add or Remove from the Selected Standard Pinion Height Washer Thickness Measurement
−6	Add 0.06 mm (0.0024 in)
−5	Add 0.05 mm (0.0020 in)
−4	Add 0.04 mm (0.0016 in)
−3	Add 0.03 mm (0.0012 in)
−2	Add 0.02 mm (0.0008 in)
−1	Add 0.01 mm (0.0004 in)
0	Use the selected washer thickness
+1	Subtract 0.01 mm (0.0004 in)
+2	Subtract 0.02 mm (0.0008 in)
+3	Subtract 0.03 mm (0.0012 in)
+4	Subtract 0.04 mm (0.0016 in)
+5	Subtract 0.05 mm (0.0020 in)
+6	Subtract 0.06 mm (0.0024 in)

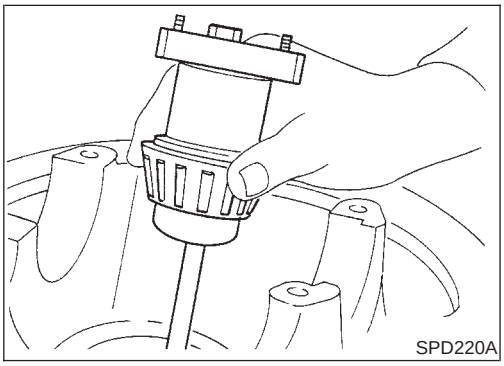
SPD220A

13. Remove the J34309 pinion preload shim selector tool from the final drive housing and disassemble to retrieve the pinion bearings.

TOOTH CONTACT

NAPD0040S02

Gear tooth contact pattern check is necessary to verify correct relationship between drive gear and drive pinion.

Hypoid gear sets which are not positioned properly in relation to one another may be noisy, or have short life or both. With a pattern check, the most desirable contact for low noise level and long life can be assured.

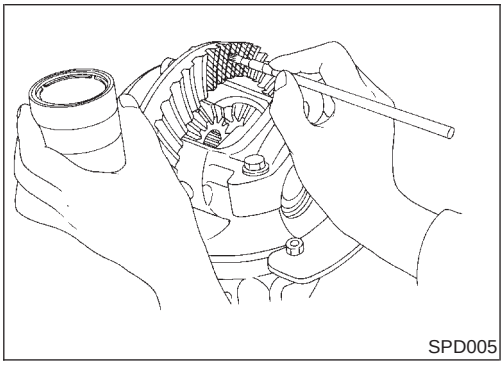
SPD005

1. Thoroughly clean drive gear and drive pinion teeth.
2. Sparingly apply a mixture of powdered ferric oxide and oil or equivalent to 3 or 4 teeth of drive gear drive side.

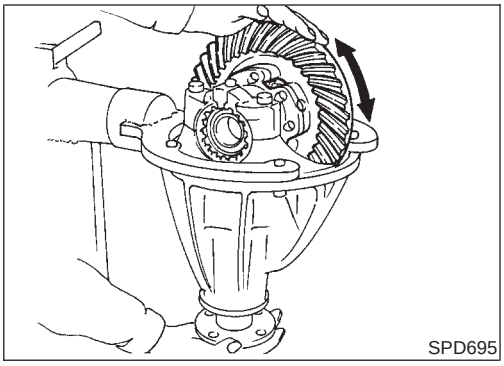
SPD695

3. Hold companion flange steady by hand and rotate the drive gear in both directions.

Usually the pattern will be correct if washers are correctly calculated and the backlash is correct.
However, in rare cases, trial and error processes may be employed to obtain a correct pattern.
The tooth pattern is the best indication of how well a differential has been set up.

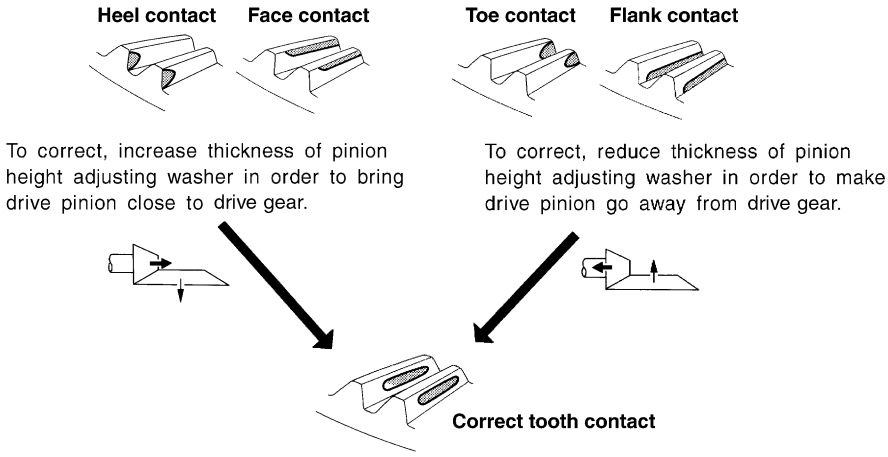

When adjustment is completed, be sure to wipe off completely the ferric oxide and oil or their equivalent.

SDIA1796E

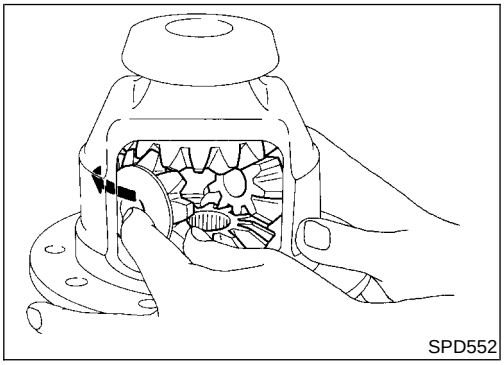
SPD552

Assembly

NAPD0041

DIFFERENTIAL CASE

NAPD0041S01

1. Install side gears, pinion mate gears and thrust washers into differential case.

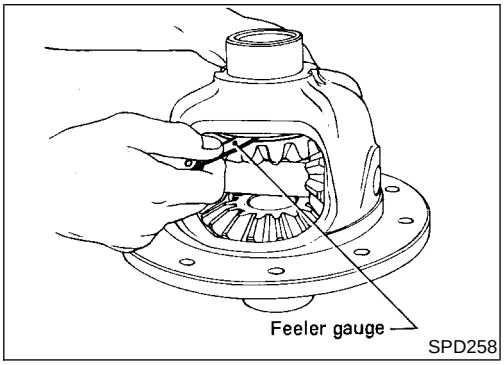

SPD258

2. Fit pinion mate shaft to differential case so that it meets lock pin holes.
3. Adjust backlash between side gear and pinion mate gear by selecting side gear thrust washer.
   Refer to SDS, PD-63.

   Backlash between side gear and pinion mate gear (Clearance between side gear thrust washer and differential case):

   0.10 - 0.20 mm (0.0039 - 0.0079 in)

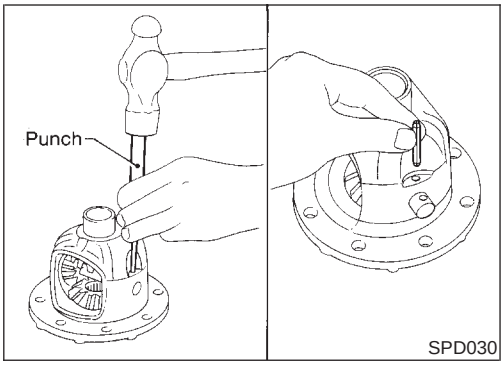

4. Install pinion mate shaft lock pin with a punch.

Make sure lock pin is flush with case.

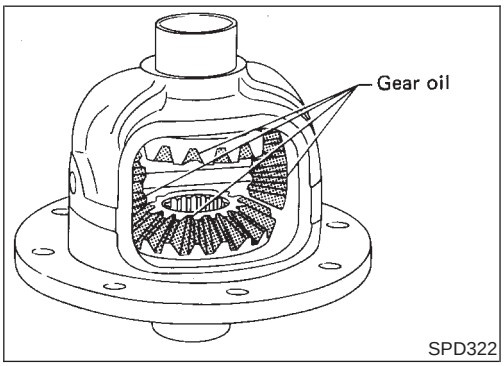

5. Apply gear oil to gear tooth surfaces and thrust surfaces and check to see they turn properly.
6. Install differential case assembly on drive gear.

Tighten bolts in a criss-cross pattern, lightly tapping bolt head with a hammer.

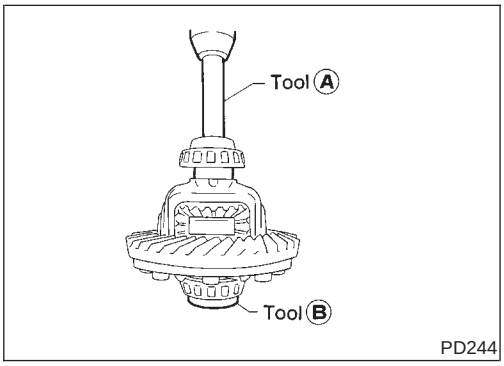

7. Press-fit side bearing inner cones on differential case with Tool.

Tool number:

A ST33190000 (J25523)

B ST33081000 (—)

DIFFERENTIAL CARRIER

NAPD0041S02

1. Press-fit front and rear bearing outer races with Tools.

Tool number:

A ST30611000 (J25742-1)

B ST30621000 (J25742-5)

C ST30613000 (J25742-3)

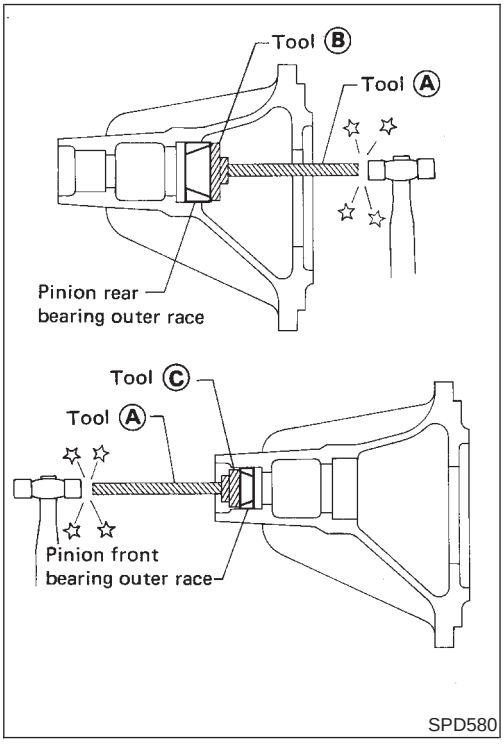

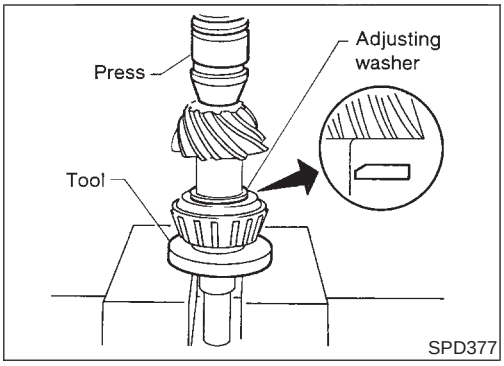

2. Select drive pinion height adjusting washer. Refer to "Adjustment", PD-54.
3. Install drive pinion adjusting washer in drive pinion, and press-fit pinion rear bearing inner cone in it, with press and Tool.

   Tool number:
   ST30901000 (J26010-01)

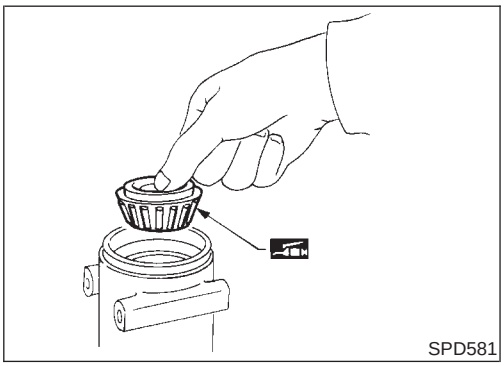

4. Place pinion front bearing inner cone in gear carrier.

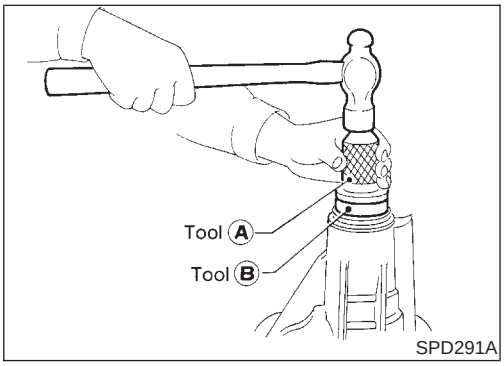

5. Apply multi-purpose grease to cavity at sealing lips of oil seal. Install front oil seal.

   Tool number:
   A ST30720000 (J25405)
   B KV38102510 (—)

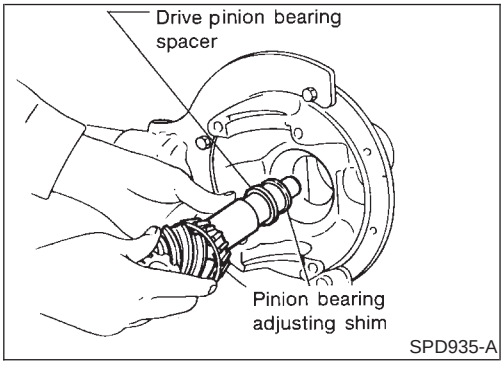

6. Install drive pinion bearing spacer, pinion bearing adjusting shim and drive pinion in gear carrier.

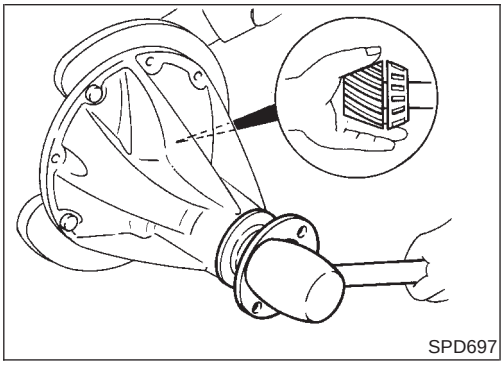

7. Insert companion flange into drive pinion by tapping the companion flange with a soft hammer.

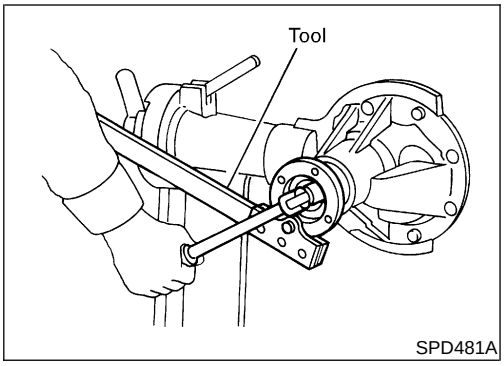

SPD481A

8. Tighten pinion nut to the specified torque.

The threaded portion of drive pinion and pinion nut should be free from oil or grease.

Tool number: KV38108300 (J44195)

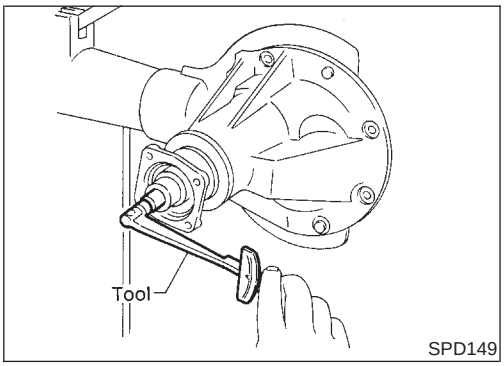

SPD149

9. Turn drive pinion in both directions several times, and measure pinion bearing preload.

Tool number: ST3127S000 (J25765-A)

Pinion bearing preload (Without front oil seal):

0.12 - 0.20 N·m (1.2 - 2.0 kg-cm, 1.0 - 1.7 in-lb)

If preload is out of specification, adjust the thickness of spacer and shim combination by replacing shim and spacer with thinner one.

- Start from the combination of thickest spacer and shim.
- Combine each spacer and shim thickness one by one until the correct specification are achieved.

Drive pinion bearing preload adjusting spacer and shim:

Refer to SDS, PD-65.

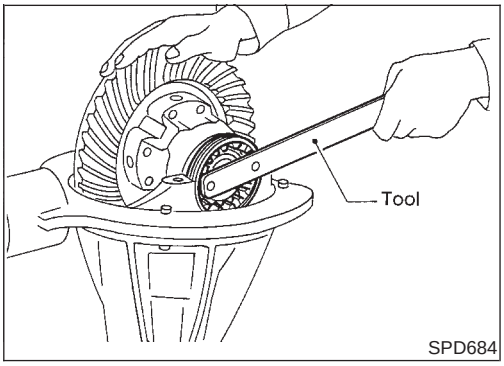

SPD684

10. Install differential case assembly with side bearing outer races into gear carrier.
11. Position side bearing adjusters on gear carrier with threads properly engaged; screw in adjusters lightly at this stage of assembly.

Tool number: ST32580000 (J34312)

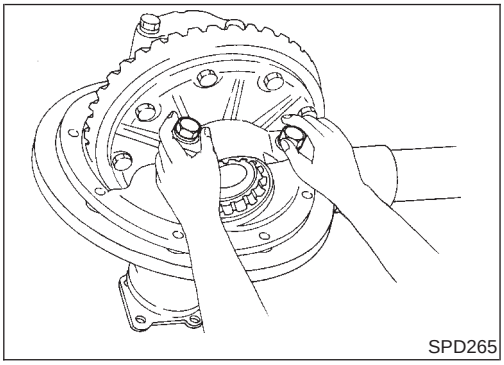
SPD265

12. Align mark on bearing cap with that on gear carrier and install bearing cap on gear carrier.

- Do not tighten at this point to allow further tightening of side bearing adjusters.

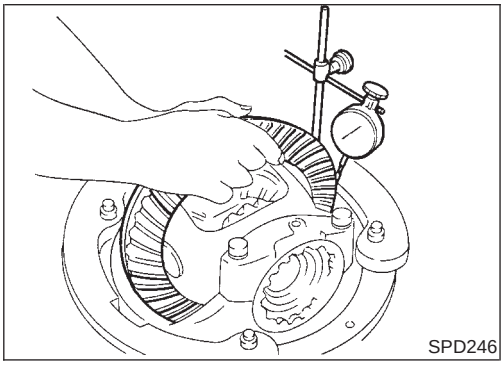
SPD246

13. Tighten both right and left side bearing adjusters alternately and measure drive gear backlash and total preload at the same time. Adjust right and left side bearing adjusters by tightening them alternately so that proper drive gear backlash and total preload can be obtained.

Drive gear-to-drive pinion backlash:

0.13 - 0.18 mm (0.0051 - 0.0071 in)

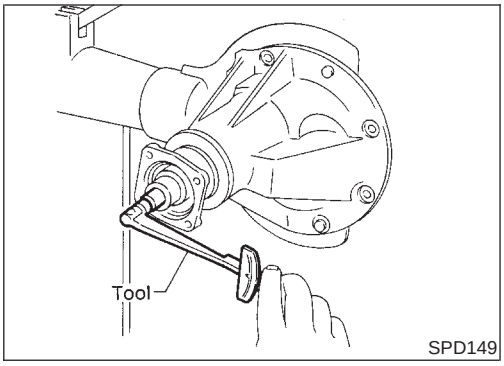

SPD149

- **When checking preload, turn drive pinion in both directions several times to set bearing rollers.**
  Tool number: ST3127S000 (J25765-A)
  Total preload:
  P_1 + [0.3 - 0.4 N·m (3 - 4 kg-cm, 2.6 - 3.5 in-lb)]
  P_1 = Drive pinion preload

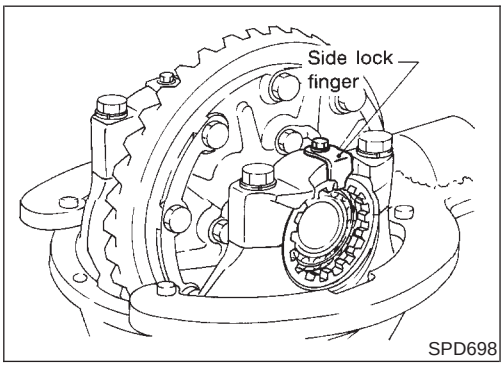

SPD698

14. Tighten side bearing cap bolts.
15. Install side lock finger in place to prevent rotation during operation.

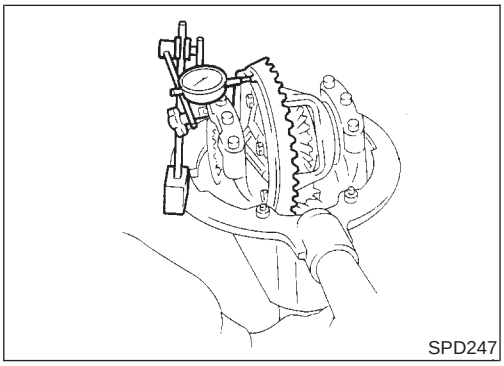
SPD247

16. Check runout of drive gear with a dial gauge.
    Runout limit: 0.08 mm (0.0031 in)
- If backlash varies excessively in different places, the variance may have resulted from foreign matter caught between the drive gear and the differential case.
- If the backlash varies greatly when the runout of the drive gear is within a specified range, the hypoid gear set or differential case should be replaced.

17. Check tooth contact. Refer to "TOOTH CONTACT", PD-57.

Service Data and Specifications (SDS)

H233B

General Specifications

NAPD0042

NAPD0042S01

2WD Model

NAPD0042S0101

Applied model	Standard	Optional
Rear final drive	H233B	
	2-pinion	LSD
Gear ratio	4.363	
Number of teeth (Drive gear/drive pinion)	48/11	
Oil capacity (Approx.) ℓ (US pt, Imp pt)	2.8 (5-7/8, 4-7/8)	

4WD Model

NAPD0042S0102

Applied model	All	
Rear final drive	Standard	Optional
	H233B	
	2-pinion	LSD
Gear ratio	4.363	

Applied model	All
Number of teeth (Drive gear/drive pinion)	48/11
Oil capacity (Approx.) ℓ (US pt, Imp pt)	2.8 (5-7/8, 4-7/8)

Drive Gear Runout

NAPD0042S02

Drive gear runout limit mm (in)	0.08 (0.0031)

Side Gear Adjustment

NAPD0042S03

Side gear backlash (Clearance between side gear and differential case) mm (in)		0.10 - 0.20 (0.0039 - 0.0079)
Available side gear thrust washers	Thickness mm (in)	Part number*
	1.75 (0.0689) 1.80 (0.0709) 1.85 (0.0728)	38424-T5000 38424-T5001 38424-T5002

*: Always check with the Parts Department for the latest parts information.

Differential Torque Adjustment (LSD models)

NAPD0042S04

Differential torque N·m (kg-m, ft-lb)		40 - 58 (4 - 6, 29 - 43)
Number of discs, plates and spacer (One side)	Friction disc	2
	Friction plate	5
	Spring plate	2
	Spacer	1
Wear limit of plate and disc mm (in)		0.1 (0.004)
Allowable warpage of friction disc and plate mm (in)		0.08 (0.0031)
Total thickness mm (in)		18.57 - 20.43 (0.7311 - 0.8043)

Available discs and plates	Plate name	Thickness mm (in)	Part number*
	Friction disc	1.4 (0.055) 1.5 (0.059) 1.6 (0.063)	38433-C6004 (Adjusting type) 38433-C6002 (Standard type) 38433-C6003 (Adjusting type)
	Friction plate	1.4 (0.055) 1.5 (0.059) 1.6 (0.063)	38432-C6002 (Adjusting type) 38432-C6001 (Standard type) 38432-C6003 (Adjusting type)
	Spring plate	1.5 (0.059)	38435-S9200
	Spacer	6.0 (0.236)	38454-S9200

*: Always check with the Parts Department for the latest parts information.

Total Preload Adjustment

NAPD0042S05

Total preload N·m (kg-cm, in-lb)	P_1 + [0.3 - 0.4 (3 - 4, 2.6 - 3.5)]
Drive gear backlash mm (in)	0.13 - 0.18 (0.0051 - 0.0071)
Side bearing adjusting method	Side adjuster

P_1 = Drive pinion preload

Drive Pinion Height Adjustment

NAPD0042S06

	Thickness mm (in)	Part number*
Available pinion height adjust washers	2.58 (0.1016)	38151-01J00
	2.61 (0.1028)	38151-01J01
	2.64 (0.1039)	38151-01J02
	2.67 (0.1051)	38151-01J03
	2.70 (0.1063)	38151-01J04
	2.73 (0.1075)	38151-01J05
	2.76 (0.1087)	38151-01J06
	2.79 (0.1098)	38151-01J07
	2.82 (0.1110)	38151-01J08
	2.85 (0.1122)	38151-01J09
	2.88 (0.1134)	38151-01J10
	2.91 (0.1146)	38151-01J11
	2.94 (0.1157)	38151-01J12
	2.97 (0.1169)	38151-01J13
	3.00 (0.1181)	38151-01J14
	3.03 (0.1193)	38151-01J15
	3.06 (0.1205)	38151-01J16
	3.09 (0.1217)	38151-01J17
	3.12 (0.1228)	38151-01J18
	3.15 (0.1240)	38151-01J19
	3.18 (0.1252)	38151-01J60
	3.21 (0.1264)	38151-01J61
	3.24 (0.1276)	38151-01J62
	3.27 (0.1287)	38151-01J63
	3.30 (0.1299)	38151-01J64
	3.33 (0.1311)	38151-01J65
	3.36 (0.1323)	38151-01J66
	3.39 (0.1335)	38151-01J67
	3.42 (0.1346)	38151-01J68
	3.45 (0.1358)	38151-01J69
	3.48 (0.1370)	38151-01J70
	3.51 (0.1382)	38151-01J71
	3.54 (0.1394)	38151-01J72
	3.57 (0.1406)	38151-01J73
	3.60 (0.1417)	38151-01J74
	3.63 (0.1429)	38151-01J75
	3.66 (0.1441)	38151-01J76

*: Always check with the Parts Department for the latest parts information.

Drive Pinion Preload Adjustment

NAPD0042S07

Drive pinion bearing preload adjusting method		Adjusting shim and spacer
Drive pinion preload without front oil seal N·m (kg-cm, in-lb) [P_1]		1.2 - 2.0 (12 - 20, 10 - 17)
Available front drive pinion bearing adjusting shims	Thickness mm (in)	Part number*
	2.31 (0.0909)	38125-82100
	2.33 (0.0917)	38126-82100
	2.35 (0.0925)	38127-82100
	2.37 (0.0933)	38128-82100
	2.39 (0.0941)	38129-82100
	2.41 (0.0949)	38130-82100
	2.43 (0.0957)	38131-82100
	2.45 (0.0965)	38132-82100
	2.47 (0.0972)	38133-82100
	2.49 (0.0980)	38134-82100
	2.51 (0.0988)	38135-82100
	2.53 (0.0996)	38136-82100
	2.55 (0.1004)	38137-82100
	2.57 (0.1012)	38138-82100
	2.59 (0.1020)	38139-82100
Available drive pinion bearing adjusting spacers	Thickness mm (in)	Part number*
	4.50 (0.1772)	38165-76000
	4.75 (0.1870)	38166-76000
	5.00 (0.1969)	38167-76000
	5.25 (0.2067)	38166-01J00
	5.50 (0.2165)	38166-01J10

*: Always check with the Parts Department for the latest parts information.

NOTES

RESTRAINT SYSTEM

SECTION RS

CONTENTS

SEAT BELTS 3
Precautions 3
SUPPLEMENTAL RESTRAINT SYSTEM (SRS) "AIR BAG" AND "SEAT BELT PRE-TENSIONER" 3
PRECAUTION FOR SEAT BELT SERVICE 3
Front Seat Belt 5
REMOVAL AND INSTALLATION 5
Rear Seat Belt 6
REMOVAL AND INSTALLATION 6
Seat Belt Inspection 8
AFTER A COLLISION 8
PRELIMINARY CHECKS 8
SEAT BELT RETRACTOR ON-VEHICLE CHECK 9
SEAT BELT RETRACTOR OFF-VEHICLE CHECK 9
Tether Anchor Plate 10
REMOVAL AND INSTALLATION 10
SUPPLEMENTAL RESTRAINT SYSTEM (SRS) 11
Precautions 11
SUPPLEMENTAL RESTRAINT SYSTEM (SRS) "AIR BAG" AND "SEAT BELT PRE-TENSIONER" 11
PRECAUTIONS FOR SRS "AIR BAG" AND "SEAT BELT PRE-TENSIONER" SERVICE 11
WIRING DIAGRAMS AND TROUBLE DIAGNOSIS 11
Preparation 12
SPECIAL SERVICE TOOLS 12
COMMERCIAL SERVICE TOOL 13
Description 14
Seat Belt Pre-tensioner with Load Limiter 15
Side Air Bag 15
Side Curtain Air Bag 15
SRS Component Parts Location 16
Diagnosis Sensor Unit 16
REMOVAL AND INSTALLATION 16
Seat Belt Pre-tensioner 17
REMOVAL AND INSTALLATION 17
Satellite Sensor 17
REMOVAL AND INSTALLATION 17
Driver Air Bag Module and Spiral Cable 18
REMOVAL AND INSTALLATION 18
REMOVAL 18
INSTALLATION 20
Front Passenger Air Bag Module 20
REMOVAL 20
INSTALLATION 22
Side Air Bag Module 22
REMOVAL 22
INSTALLATION 23
Side Curtain Air Bag Module 24
REMOVAL AND INSTALLATION 24
Disposal of Air Bag Module and Seat Belt Pre-tensioner 25
CHECKING DEPLOYMENT TOOL 26
DEPLOYMENT PROCEDURES FOR AIR BAG MODULE (OUTSIDE OF VEHICLE) 26
DEPLOYMENT PROCEDURES FOR SIDE CURTAIN AIR BAG MODULE (OUTSIDE OF VEHICLE) 29
ACTIVATION PROCEDURES FOR SEAT BELT PRE-TENSIONER (OUTSIDE OF VEHICLE) 30
DEPLOYMENT OF AIR BAG MODULE AND ACTIVATION OF SEAT BELT PRE-TENSIONER WHILE MOUNTED IN VEHICLE 31
DISPOSING OF AIR BAG MODULE AND SEAT BELT PRE-TENSIONER 31
Trouble Diagnoses Introduction 32
DIAGNOSIS FUNCTION 32
DIAGNOSIS MODE FOR CONSULT-II 32
HOW TO CHANGE SELF-DIAGNOSIS MODE WITH CONSULT-II 33
HOW TO CHANGE SELF-DIAGNOSIS MODE WITHOUT CONSULT-II 33
HOW TO ERASE SELF-DIAGNOSIS RESULTS 33
How to Perform Trouble Diagnoses for Quick and Accurate Repair 35
INFORMATION FROM CUSTOMER 35
PRELIMINARY CHECK 35
WORK FLOW 36
Schematic 37
Wiring Diagram - SRS - 38
SRS Operation Check 41
DIAGNOSTIC PROCEDURE 1 41

CONTENTS (Cont'd)

Trouble Diagnoses with CONSULT-II.....42
DIAGNOSTIC PROCEDURE 2.....42
DIAGNOSTIC PROCEDURE 3.....46
DIAGNOSTIC PROCEDURE 4 (CONTINUED FROM DIAGNOSTIC PROCEDURE 2).....47
DIAGNOSTIC PROCEDURE 5.....48
Trouble Diagnoses without CONSULT-II.....52
DIAGNOSTIC PROCEDURE 6.....52
DIAGNOSTIC PROCEDURE 7.....58
DIAGNOSTIC PROCEDURE 8 (CONTINUED FROM DIAGNOSTIC PROCEDURE 6).....59
Trouble Diagnoses: "AIR BAG" Warning Lamp Does Not Turn Off.....60
DIAGNOSTIC PROCEDURE 9.....60
Trouble Diagnoses: "AIR BAG" Warning Lamp Does Not Turn On.....62
DIAGNOSTIC PROCEDURE 10.....62
Collision Diagnosis.....63
FOR FRONTAL COLLISION.....63
FOR SIDE COLLISION.....65

Precautions

SUPPLEMENTAL RESTRAINT SYSTEM (SRS) “AIR BAG” AND “SEAT BELT PRE-TENSIONER”

NARS0001

The Supplemental Restraint System such as “AIR BAG” and “SEAT BELT PRE-TENSIONER” used along with a seat belt, helps to reduce the risk or severity of injury to the driver and front passenger for certain types of collision. The SRS composition which is available to NISSAN MODEL R50 is as follows:

- For a frontal collision
  The Supplemental Restraint System consists of driver air bag module (located in the center of the steering wheel), front passenger air bag module (located on the instrument panel on passenger side), seat belt pre-tensioners, a diagnosis sensor unit, warning lamp, wiring harness and spiral cable.
- For a side collision
  The Supplemental Restraint System consists of side air bag module (located in the outer side of front seat), side curtain air bag module (locating in the headlining side of front and rear seat), satellite sensor, diagnosis sensor unit (one of components of air bags for a frontal collision), wiring harness, warning lamp (one of components of air bags for a frontal collision).

WARNING:

- **To avoid rendering the SRS inoperative, which could increase the risk of personal injury or death in the event of a collision which would result in air bag inflation, all maintenance must be performed by an authorized NISSAN dealer.**
- **Improper maintenance, including incorrect removal and installation of the SRS, can lead to personal injury caused by unintentional activation of the system.**
- **Do not use electrical test equipment on any circuit related to the SRS unless instructed to in this Service Manual. SRS wiring harnesses can be identified by yellow and/or orange harness connector (and by yellow harness protector or yellow insulation tape before the harness connectors).**

PRECAUTION FOR SEAT BELT SERVICE

NARS0002

CAUTION:

- **Before removing the seat belt pre-tensioner assembly, turn the ignition switch off, disconnect both battery cables and wait at least 3 minutes.**
- **Do not use electrical test equipment for seat belt pre-tensioner connector.**
- **After replacing or reinstalling seat belt pre-tensioner assembly, or reconnecting seat belt pre-tensioner connector, check the system function. Refer to “SRS Operation Check” (RS-41) for details.**
- **Do not use disassemble buckle or seat belt assembly.**
- **Replace anchor bolts if they are deformed or worn out.**
- **Never oil tongue and buckle.**
- **If any component of seat belt assembly is questionable, do not repair. Replace the whole seat belt assembly.**
- **If webbing is cut, frayed, or damaged, replace seat belt assembly.**
- **When replacing seat belt assembly, use a genuine seat belt assembly.**

After A Collision

NARS0002S01

WARNING:

Inspect all seat belt assemblies including retractors and attaching hardware after any collision. NISSAN recommends that all seat belt assemblies in use during a collision be replaced unless the collision was minor and the belts show no damage and continue to operate properly. Failure to do so could result in serious personal injury in an accident. Seat belt assemblies not in use during a collision should also be replaced if either damage or improper operation is noted. Seat belt pre-tensioner should be replaced even if the seat belts are not in use during a frontal collision in which the air bags are deployed.

Replace any seat belt assembly (including anchor bolts) if:

- The seat belt was in use at the time of a collision (except for minor collisions and the belts, retractors and buckles show no damage and continue to operate properly).
- The seat belt was damaged in an accident. (i.e. torn webbing, bent retractor or guide, etc.)
- The seat belt attaching point was damaged in an accident. Inspect the seat belt attaching area for damage or distortion and repair as necessary before installing a new seat belt assembly.
- Anchor bolts are deformed or worn out.
- The seat belt pre-tensioner should be replaced even if the seat belts are not in use during the collision in

which the air bags are deployed.

Front Seat Belt

REMOVAL AND INSTALLATION

=NARS0003

1. Slide the seat all the way forward and tilt the seatback toward the front.
2. Remove adjuster cover. A
3. Remove floor anchor bolt. B
4. Remove shoulder anchor bolt. C
5. Remove center pillar upper and lower garnish. Refer to BT-31, “SIDE AND FLOOR TRIM” for details.
6. Disconnect seat belt pre-tensioner connector.
7. Remove the bolt securing seat belt retractor, then remove seat belt and seat belt retractor.
8. Remove bolts securing seat belt adjuster, then remove seat belt adjuster.

SEC. 769•868•870

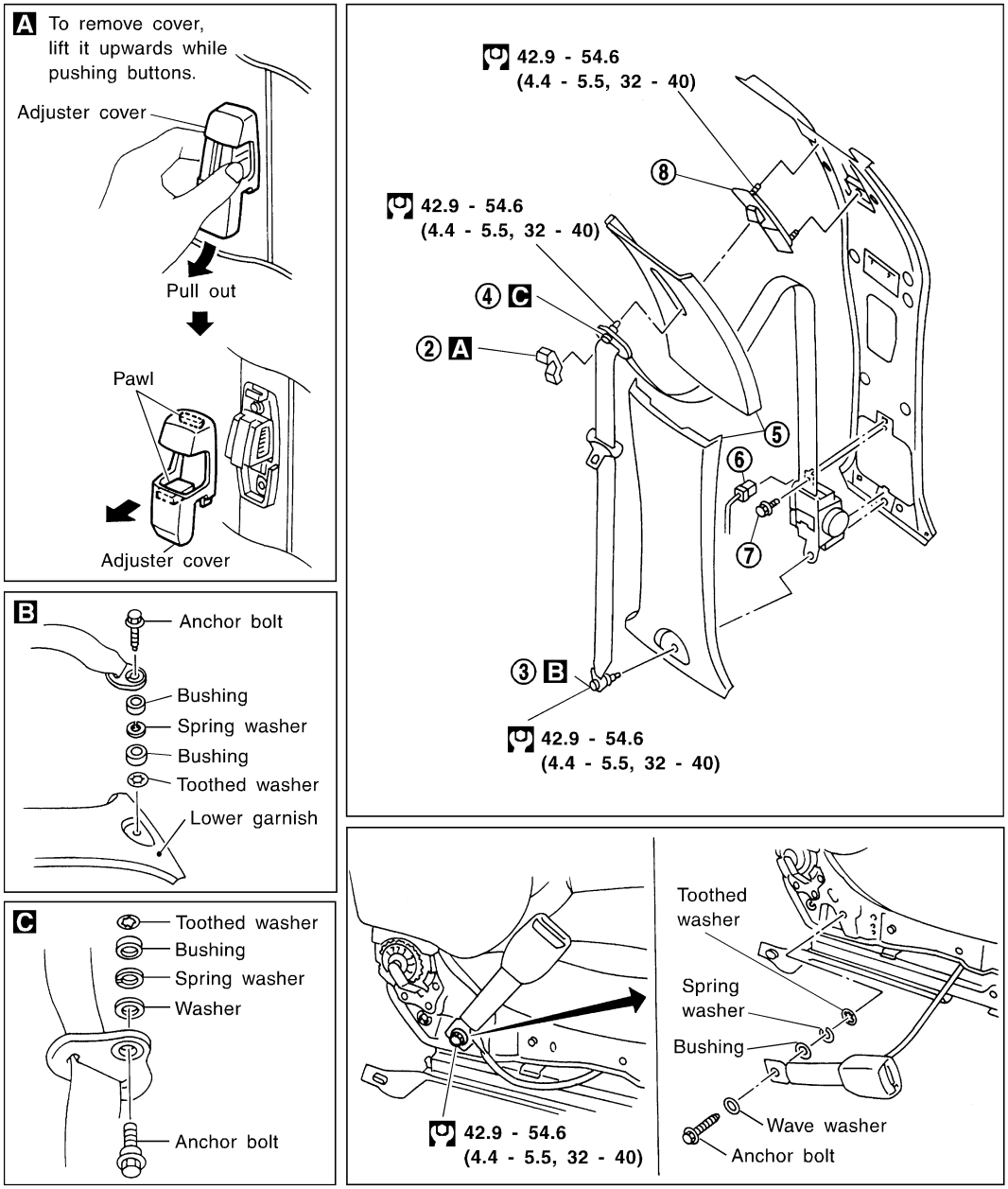

: N•m (kg-m, ft-lb)

SRS873-A

Rear Seat Belt

REMOVAL AND INSTALLATION

=NARS0004

1. Raise up rear seat cushion.
2. Remove outer anchor bolt. A
3. Remove rear side upper and lower garnish. Refer to BT-31, “SIDE AND FLOOR TRIM” for details.
4. Remove anchor through-bolt. B
5. Remove anchor bolt and bolt securing rear seat belt retractor, then remove seat belt and seat belt retractor. C
6. Remove each anchor bolt. D

SEC. 869

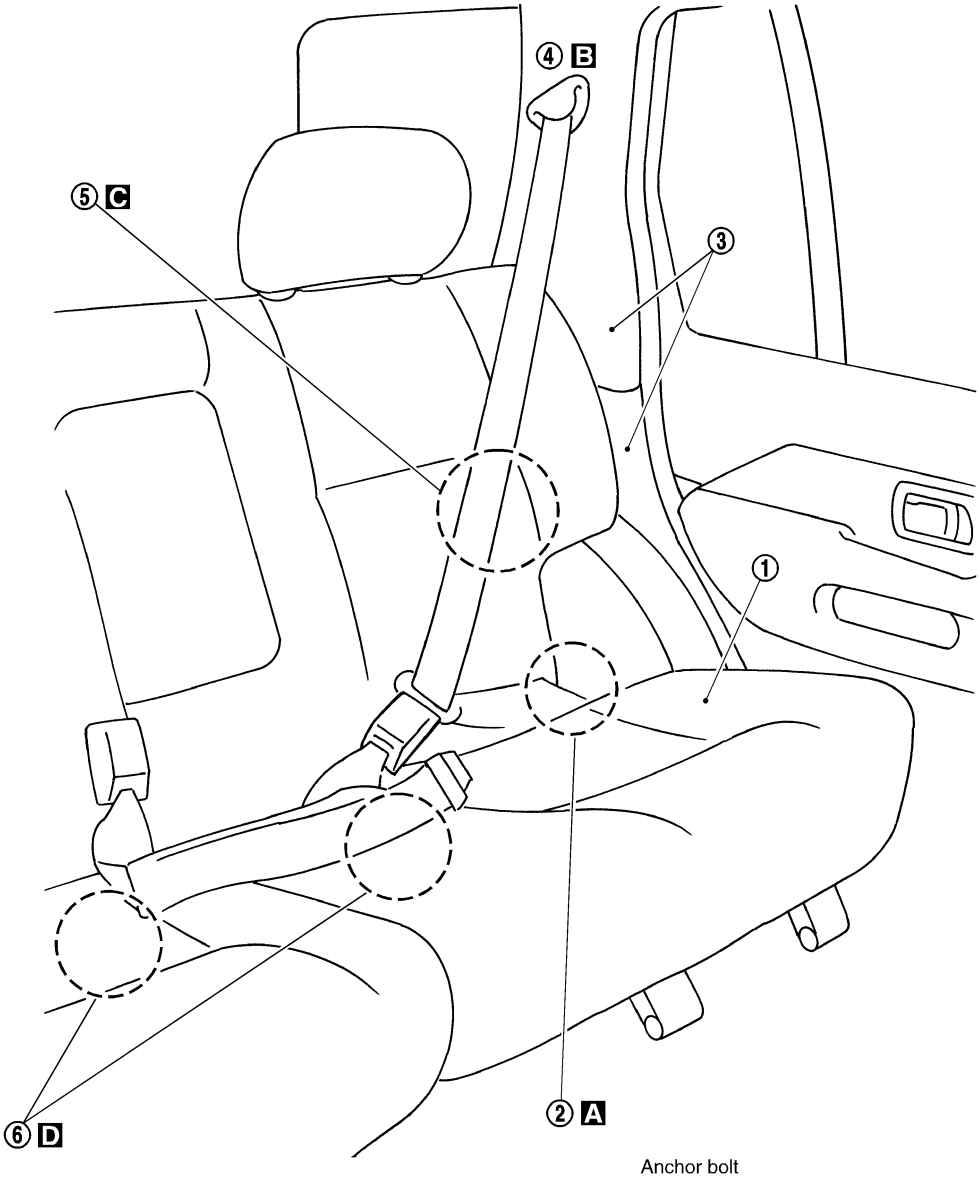

Anchor bolt
42.9 - 54.6 N•m (4.4 - 5.5 kg-m, 32 - 40 ft-lb)

SRS654-A

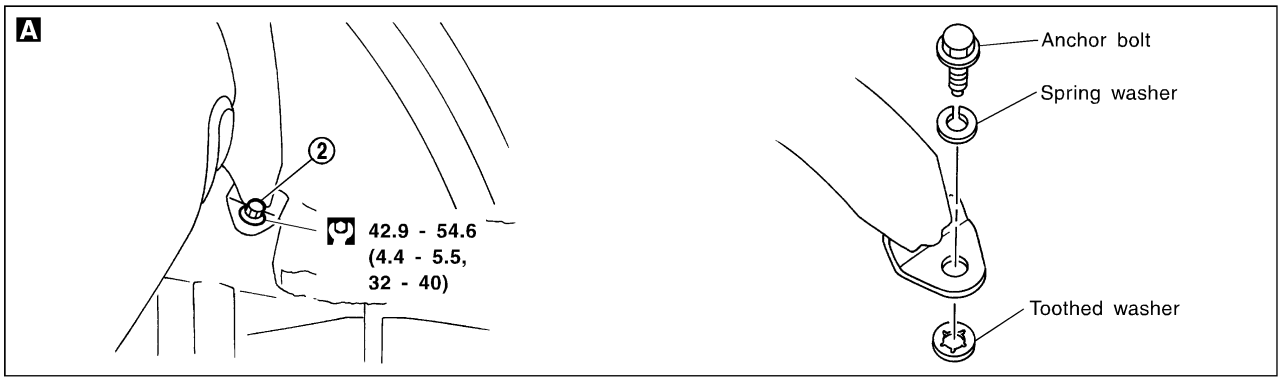

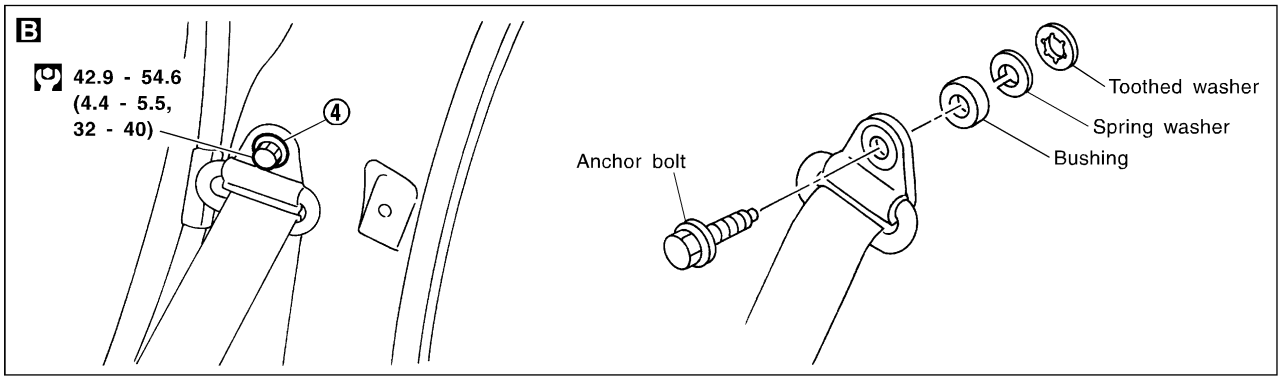

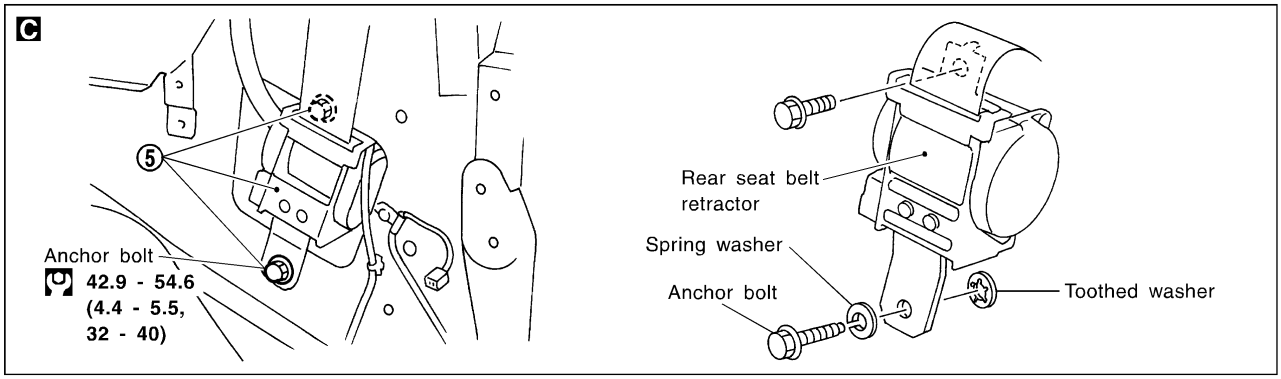

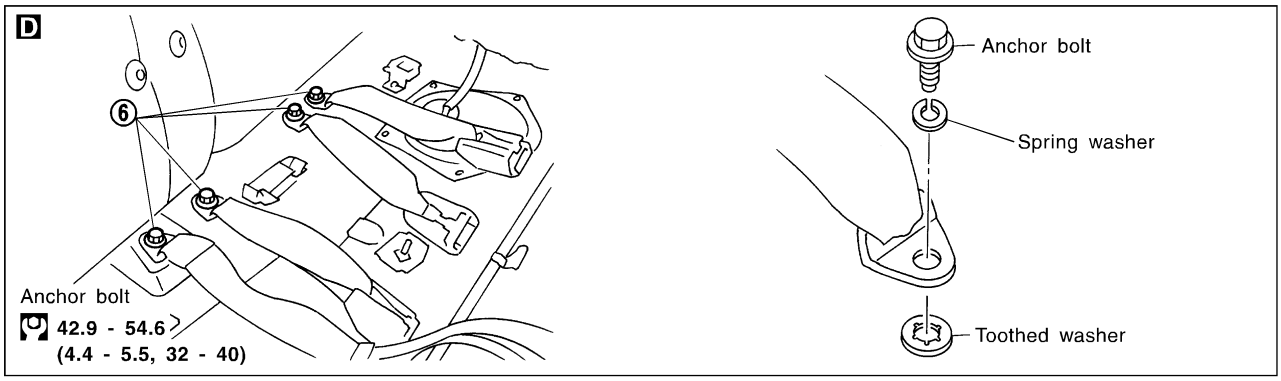

: N•m (kg-m, ft-lb)

SRS781-C

Seat Belt Inspection

=NARS0029

AFTER A COLLISION

NARS0029S01

WARNING:

Inspect all seat belt assemblies including retractors and attaching hardware after any collision. NISSAN recommends that all seat belt assemblies in use during a collision be replaced unless the collision was minor and the belts show no damage and continue to operate properly. Failure to do so could result in serious personal injury in an accident. Seat belt assemblies not in use during a collision should also be replaced if either damage or improper operation is noted. Seat belt pre-tensioner should be replaced even if the seat belts are not in use during a frontal collision in which the air bags are deployed.

Replace any seat belt assembly (including anchor bolts) if:

- The seat belt was in use at the time of a collision (except for minor collisions and the belts, retractors and buckles show no damage and continue to operate properly).
- The seat belt was damaged in an accident. (i.e. torn webbing, bent retractor or guide, etc.)
- The seat belt attaching point was damaged in an accident. Inspect the seat belt attaching area for damage or distortion and repair as necessary before installing a new seat belt assembly.
- Anchor bolts are deformed or worn out.
- The seat belt pre-tensioner should be replaced even if the seat belts are not in use during the collision in which the air bags are deployed.

PRELIMINARY CHECKS

NARS0029S02

1. Check the seat belt warning lamp/chime for proper operation as follows:

a. Switch ignition ON. The seat belt warning lamp should illuminate. Also, the seat belt warning chime should sound for about seven seconds.

b. Fasten driver's seat belt. The seat belt warning lamp should go out and the chime (if sounding) should stop.

2. If the air bag warning lamp is blinking, conduct self-diagnosis using CONSULT-II, and air bag warning lamp. Refer to "SRS Operation Check", RS-41.
3. Check that the seat belt retractor, seat belt anchor and buckle bolts are securely attached.
4. Check the shoulder seat belt guide and shoulder belt height adjuster for front seats. Ensure guide swivels freely and that belt lays flat and does not bind in guide. Ensure height adjuster operates properly and holds securely.
5. Check retractor operation:

a. Fully extend the seat belt webbing and check for twists, tears or other damage.

b. Allow the seat belt to retract. Ensure that belt returns smoothly and completely into the retractor. If the seat belt does not return smoothly, the cause may be an accumulation of dust or dirt. Use the "SEAT BELT TAPE SET" and perform the following steps.
Inspect the front seat belt through-anchor.

i. Pull the seat belt out to a length of 500 mm (19.69 in) or more.

ii. Use a clip or other device to fix the seat belt at the center pillar belt opening.

iii. Pass a thin wire through the through-anchor belt opening. Hold both ends of the wire and pull taut while moving it up and down several times along the belt opening surface to move matter stuck there.

iv. Any dirt that cannot be removed with the wire can be removed by cleaning the opening with a clean cloth.

v. Apply tape at the point where the belt contacts the through-anchor belt opening.

NOTE:

Apply the tape so that there is no looseness or wrinkling.

vi. Remove the clip fixing the seat belt and check that the belt returns smoothly.

c. Fasten the seat belt. Pull firmly on belt and buckle to ensure belt remains latched. Unfasten seat belt. Ensure belt releases freely and buckle button returns to original position.

6. For center (non-retractable) seat belts, check that the seat belt are accessible. Check seat belt webbing for twists, tears or other damage. Fasten the seat belt. Pull firmly on belt and buckle to ensure belt remains latched. Unfasten seat belts. Ensure belt releases freely and buckle button returns to original position.
7. Repeat steps above as necessary to check the other seat belts.

SEAT BELT RETRACTOR ON-VEHICLE CHECK

NARS0029S03

Emergency Locking Retractors (ELR) and Automatic Locking Retractors (ALR)

NARS0029S0301

NOTE:

All seat belt retractors are of the Emergency Locking Retractors (ELR) type. In an emergency (sudden stop) the retractor will lock and prevent the belt from extending any further. All 3-point type seat belt retractors except the driver's seat belt also have an Automatic Locking Retractors (ALR) mode. The ALR mode (also called child restraint mode) is used when installing child seats. The ALR mode is activated when the seat belt is fully extended. When the belt is then retracted partially, the ALR mode automatically locks the seat belt in a specific position so the belt cannot be extended any further. To cancel the ALR mode, allow the seat belt to fully wind back into the retractor.

Check the seat belt retractors using the following test(s) to determine if a retractor assembly is operating properly.

ELR Function Stationary Check

NARS0029S0302

Grasp the shoulder belt and pull forward quickly. The retractor should lock and prevent the belt from extending further.

ALR Function Stationary Check

NARS0029S0304

1. Pull out entire length of seat belt from retractor until a click is heard.
2. Retract the belt partially. A clicking noise should be heard as the belt retracts indicating that the retractor is in the Automatic Locking Retractors (ALR) mode.
3. Grasp the seat belt and try to pull out the retractor. The belt must lock and not extend any further. If NG, replace the retractor assembly.
4. Allow the entire length of the belt to retract to cancel the automatic locking mode.

ELR Function Moving Check

NARS0029S0303

WARNING:

Perform the following test in a safe, open area clear of other vehicles and obstructions (for example, a large, empty parking lot). Road surface must be paved and dry. DO NOT perform the following test on wet or gravel roads or on public streets and highways. This could result in an accident and serious personal injury. The driver and passenger must be prepared to brace themselves in the event the retractor does not lock.

1. Fasten driver's seat belt. Buckle a passenger into the seat for the belt that is to be tested.
2. Proceed to the designated safe area.
3. Drive the vehicle at approximately 16 km/h (10 MPH). Notify any passengers of a pending sudden stop and the driver and passenger must be prepared to brace themselves in the event the retractor does not lock, apply brakes firmly and make a very hard stop.

During stop, seat belts should lock and not be extended. If the seat belt retractor assembly does not lock, perform the retractor off-vehicle check.

SEAT BELT RETRACTOR OFF-VEHICLE CHECK

NARS0029S04

1. Remove the seat belt retractor assembly.
2. Slowly pull out belt while tilting the retractor assembly forward from the mounted position without twisting the retractor assembly as shown in the illustration.

   15 degrees or less tilt: Belt can be pulled out.

   35 degrees or more tilt: Belt locks and cannot be pulled out.

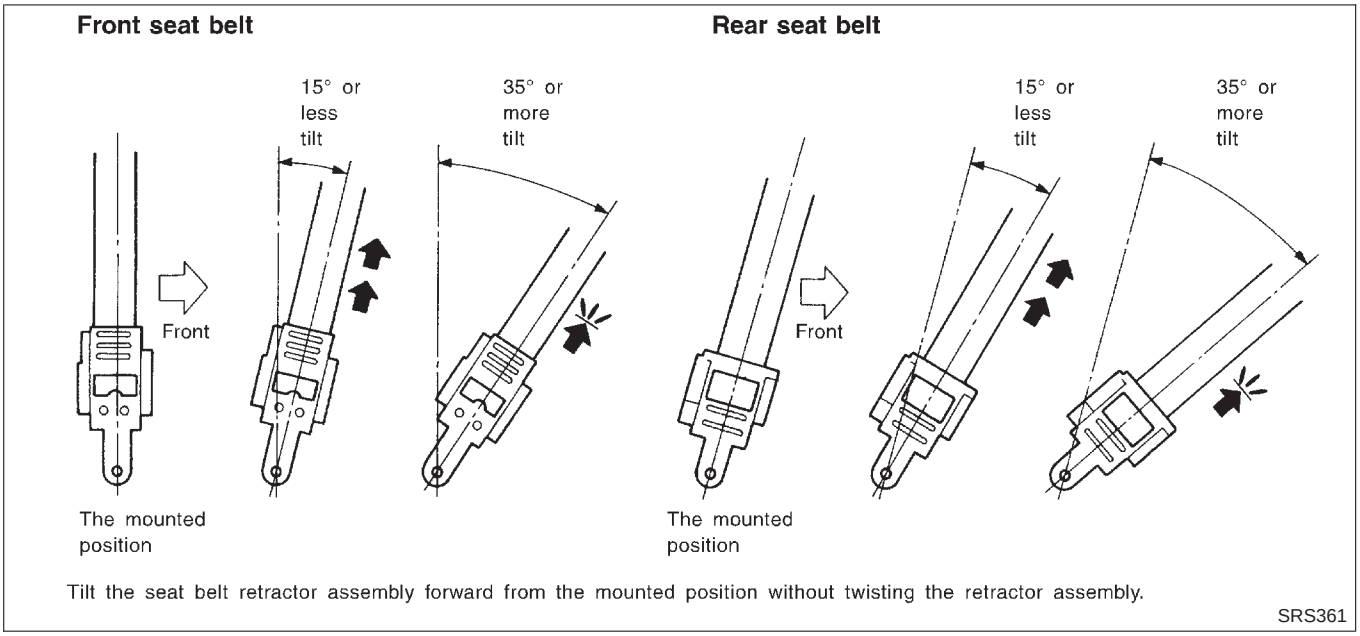

If NG, replace the retractor assembly.

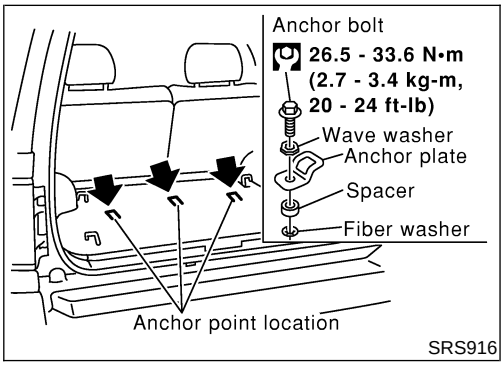

Tether Anchor Plate

REMOVAL AND INSTALLATION

NARS0050

CAUTION:

Replace anchor bolt if they are deformed or worn out.

Precautions

SUPPLEMENTAL RESTRAINT SYSTEM (SRS) “AIR BAG” AND “SEAT BELT PRE-TENSIONER”

NARS0005

The Supplemental Restraint System such as “AIR BAG” and “SEAT BELT PRE-TENSIONER” used along with a seat belt, helps to reduce the risk or severity of injury to the driver and front passenger for certain types of collision. The SRS composition which is available to NISSAN MODEL R50 is as follows:

- For a frontal collision
  The Supplemental Restraint System consists of driver air bag module (located in the center of the steering wheel), front passenger air bag module (located on the instrument panel on passenger side), seat belt pre-tensioners, a diagnosis sensor unit, warning lamp, wiring harness and spiral cable.
- For a side collision
  The Supplemental Restraint System consists of side air bag module (located in the outer side of front seat), side curtain air bag module (locating in the headlining side of front and rear seat), satellite sensor, diagnosis sensor unit (one of components of air bags for a frontal collision), wiring harness, warning lamp (one of components of air bags for a frontal collision).

WARNING:

- **To avoid rendering the SRS inoperative, which could increase the risk of personal injury or death in the event of a collision which would result in air bag inflation, all maintenance must be performed by an authorized NISSAN dealer.**
- **Improper maintenance, including incorrect removal and installation of the SRS, can lead to personal injury caused by unintentional activation of the system.**
- **Do not use electrical test equipment on any circuit related to the SRS unless instructed to in this Service Manual. SRS wiring harnesses can be identified by yellow and/or orange harness connector (and by yellow harness protector or yellow insulation tape before the harness connectors).**

PRECAUTIONS FOR SRS “AIR BAG” AND “SEAT BELT PRE-TENSIONER” SERVICE

NARS0006

- Do not use electrical test equipment to check SRS circuits unless instructed to in this Service Manual.
- Before servicing the SRS, turn ignition switch “OFF”, disconnect both battery cables and wait at least 3 minutes.
  For approximately 3 minutes after the cables are removed, it is still possible for the air bag and seat belt pre-tensioner to deploy or activate. Therefore, do not work on any SRS connectors or wires until at least 3 minutes have passed.
- Diagnosis sensor unit must always be installed with their arrow marks “⇐” pointing towards the front of the vehicle for proper operation. Also check diagnosis sensor unit for cracks, deformities or rust before installation and replace as required.
- The spiral cable must be aligned with the neutral position since its rotations are limited. Do not attempt to turn steering wheel or column after removal of steering gear.
- Handle air bag module carefully. Always place driver and passenger air bag modules with the pad side facing upward and side air bag module standing with the stud bolt side setting bottom.
- Conduct self-diagnosis to check entire SRS for proper function after replacing any components.
- After air bag inflates, the front instrument panel assembly should be replaced if damaged.

WIRING DIAGRAMS AND TROUBLE DIAGNOSIS

NARS0007

When you read wiring diagrams, refer to the following:

- GI-11, “HOW TO READ WIRING DIAGRAMS”
- EL-11, “POWER SUPPLY ROUTING” for power distribution circuit

When you perform trouble diagnosis, refer to the following:

- GI-35, “HOW TO FOLLOW TEST GROUPS IN TROUBLE DIAGNOSES”
- GI-24, “HOW TO PERFORM EFFICIENT DIAGNOSIS FOR AN ELECTRICAL INCIDENT”

Preparation

SPECIAL SERVICE TOOLS

=NARS0008

The actual shapes of Kent-Moore tools may differ from those of special service tools illustrated here.

Tool number (Kent-Moore No.) Tool name	Description	
KV99106400 (J38381) Deployment tool	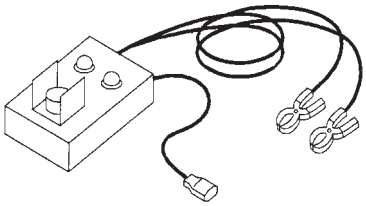 NT357	Disposing of air bag module
KV99105300 (J41246) Air bag module bracket	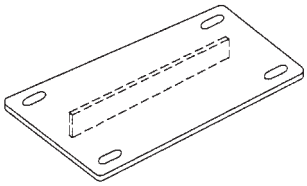 NT354	Anchoring air bag module
HT61961000 and HT62152000 combined (J38219) *Special TORX bit	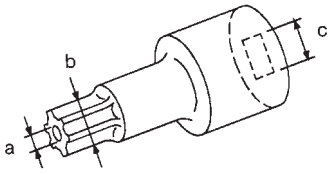 NT361	Use for special bolts [TAMPER RESISTANT TORX (Size T50)] **a: 3.5 (0.138) dia.** **b: 8.5 - 8.6 (0.335 - 0.339) dia.** **c: approx. 10 (0.39) sq.** Unit: mm (in)
KV99109000 (J44230) Deployment tool adapter for side air bags	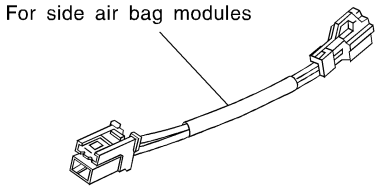 NT837	
KV991065S0 Deployment tool adapters	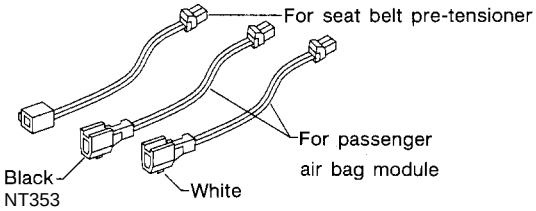 NT353	Adapting deployment harness connector to passenger air bag modules and seat belt pre-tensioners
(J38381-80) Deployment tool adapter for seat belt pre-tensioner (Yellow connector) and side curtain air bag (Yellow and orange connectors)	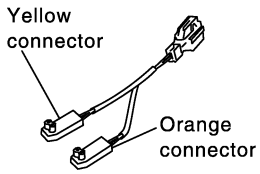 PHIA0184E	

*: Special tool or commercial equivalent

COMMERCIAL SERVICE TOOL

NARS0051

Tool name	Description
Tamper resistant torx socket	Size: T30 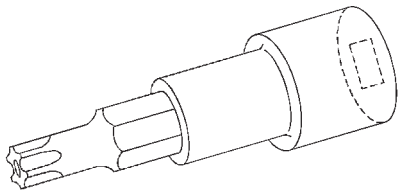 NT757

Description

=NARS0009

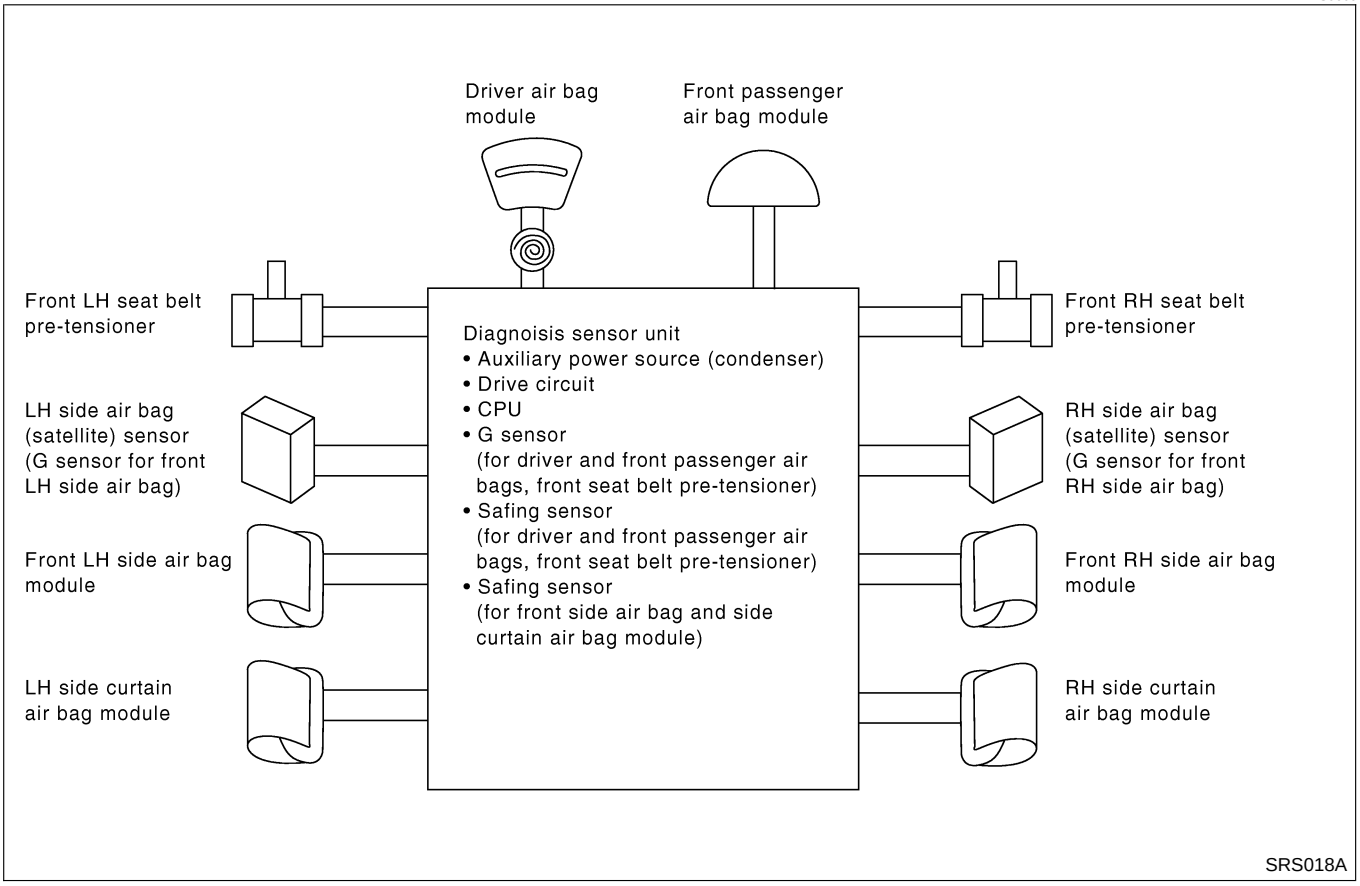

The air bag deploys if the diagnosis sensor unit activates while the ignition switch is in the “ON” or “START” position.
The collision modes for which supplemental restraint systems are activated are different among the SRS systems. For example, the driver air bag module and passenger air bag module are activated in a frontal collision but not in a side collision.
SRS configurations which are activated for some collision modes are as follows;

SRS configuration	Frontal collision	Left side collision	Right side collision
Driver air bag module	X	—	—
Passenger air bag module	X	—	—
Front LH seat belt pre-tensioner	X	—	—
Front RH seat belt pre-tensioner	X	—	—
Front LH side air bag module (LH)	—	X	—
Front RH side air bag module (RH)	—	—	X
LH side curtain air bag module	—	X	—
RH side curtain air bag module	—	—	X

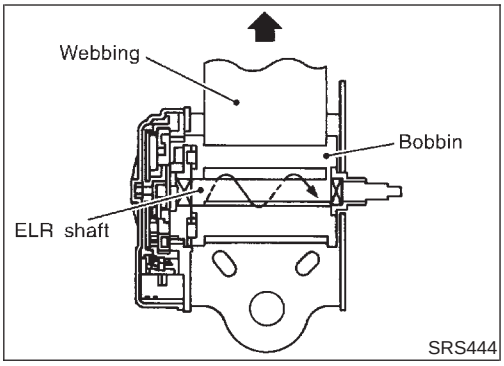

Seat Belt Pre-tensioner with Load Limiter

NARS0032

The seat belt pre-tensioner system with load limiter is installed to both the driver's seat and the front passenger's seat. It operates simultaneously with the SRS air bag system in the event of a frontal collision with an impact exceeding a specified level.

When the frontal collision with an impact exceeding a specified level occurs, seat belt slack resulting from clothing or other factors is immediately taken up by the pre-tensioner. Vehicle passengers are securely restrained.

When passengers in a vehicle are thrown forward in a collision and the restraining force of the seat belt exceeds a specified level, the load limiter permits the specified extension of the seat belt by the twisting of the ELR shaft, and a relaxation of the chest-area seat belt web tension while maintaining force.

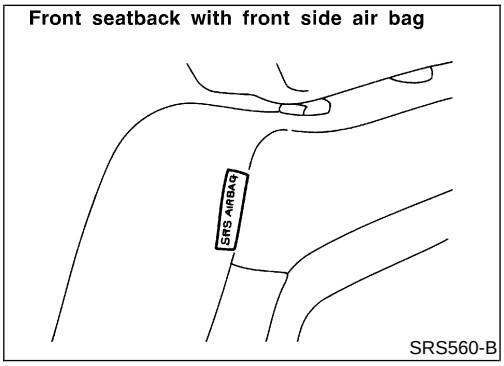

Side Air Bag

NARS0033

Front side air bag is built-in type.

The front seatbacks with built-in type side air bag have the labels shown in figures at left.

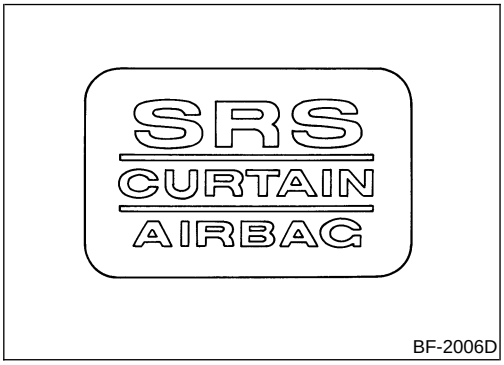

Side Curtain Air Bag

NARS0053

The side curtain air bag have the labels shown in figure at left.

SRS Component Parts Location

NARS0010

SEC. 240•251•253•484•680•868•870

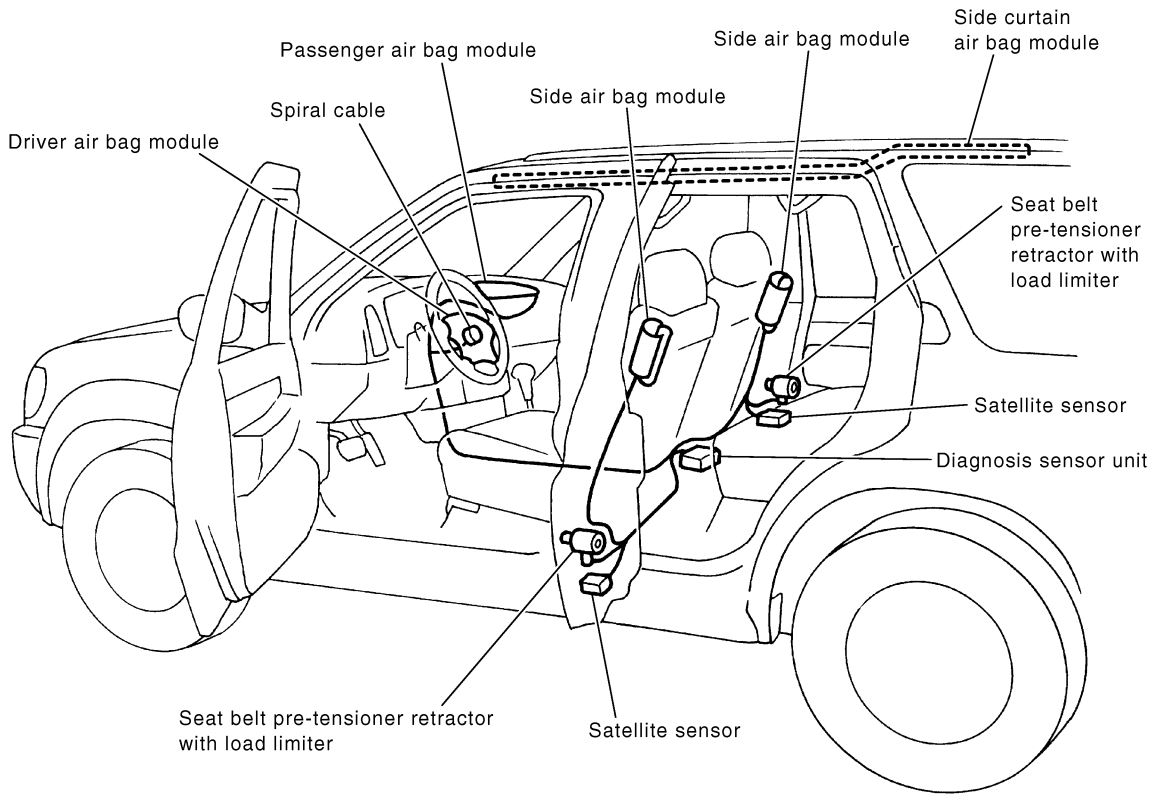

SRS019A

Diagnosis Sensor Unit

REMOVAL AND INSTALLATION

NARS0012

CAUTION:

- **Before servicing SRS, turn the ignition switch off, disconnect both battery cables and wait for at least 3 minutes.**
- **Do not use old bolts after removal; replace with new ones.**
- **Check diagnosis sensor unit for proper installation.**
- **Check diagnosis sensor unit to ensure it is free of deformities, dents, cracks or rust. If they show any visible signs of damage, replace them with new ones.**
- **Check diagnosis sensor unit brackets to ensure they are free of deformities or rust.**
- **Replace diagnosis sensor unit if it has been dropped or sustained an impact.**
- **After replacement of diagnosis sensor unit, perform self-diagnosis for SRS. Refer to “SRS Operation Check” for details (RS-41).**

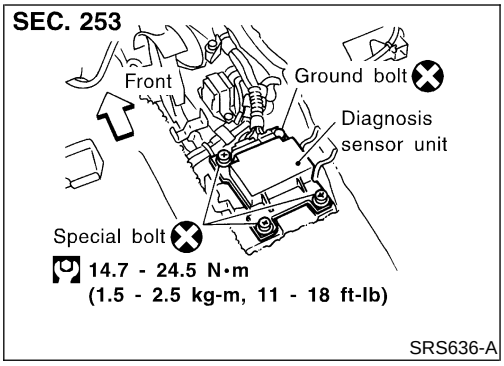

1. Disconnect connectors for driver and passenger air bag modules and seat belt pre-tensioner.
2. Remove console box. Refer to BT-24, "INSTRUMENT PANEL ASSEMBLY".
3. Disconnect diagnosis sensor unit connector.
4. Remove ground bolt and diagnostic sensor unit fixing bolts. Use TAMPER RESISTANT TORX (Size T50) to remove special bolts.
   Then remove the diagnosis sensor unit.

NOTE:
- To install, reverse the removal procedure sequence.

Seat Belt Pre-tensioner

REMOVAL AND INSTALLATION

NARS0034

CAUTION:
- **Before servicing SRS, turn the ignition switch off, disconnect both battery cables and wait at least 3 minutes.**
- **Check seat belt pre-tensioner with load limiter for proper installation.**
- **After replacement of seat belt pre-tensioner, check SRS function and perform self-diagnosis for SRS. Refer to "SRS Operation Check" for details. (RS-41)**
- **Do not attempt to disassemble seat belt pre-tensioner with load limiter.**
- **Replace seat belt pre-tensioner if it has been dropped or sustained an impact.**
- **Do not expose seat belt pre-tensioner to temperatures exceeding 80°C (176°F).**

For removal of seat belt pre-tensioner, refer to "Front Seat Belt" for details. (RS-5)

NOTE:
- **To install, reverse the removal procedure sequence.**

Satellite Sensor

REMOVAL AND INSTALLATION

NARS0035

CAUTION:
- **Before servicing SRS, turn the ignition switch off, disconnect both battery cables and wait at least 3 minutes.**
- **Do not use old bolts coated with bonding agent after removal; replace with new ones.**
- **Check satellite sensor for proper installation.**
- **Check satellite sensor to ensure they are free of deformities, dents, cracks or rust. If it shows any visible signs of damage, replace it with new one.**
- **After replacement of satellite sensor, check SRS function and perform self-diagnosis for SRS. Refer to "SRS Operation Check" for details. (RS-41)**
- **Do not attempt to disassemble satellite sensor.**
- **Replace satellite sensor if it has been dropped or sustained an impact.**

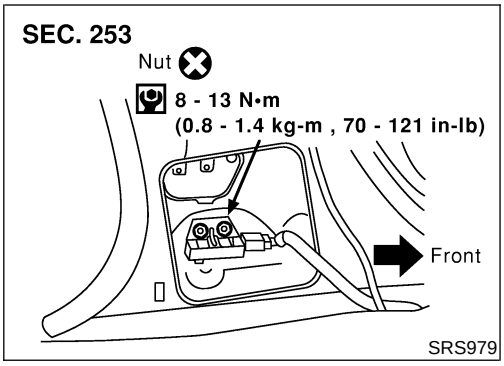

1. Remove seat belt pre-tensioner. Refer to "Front Seat Belt" for details. (RS-5)
2. Disconnect satellite sensor connector.
3. Remove satellite sensor fixing nuts.
   Then remove the satellite sensor.

NOTE:

- To install, reverse the removal procedure sequence.

Driver Air Bag Module and Spiral Cable

REMOVAL AND INSTALLATION

NARS0013

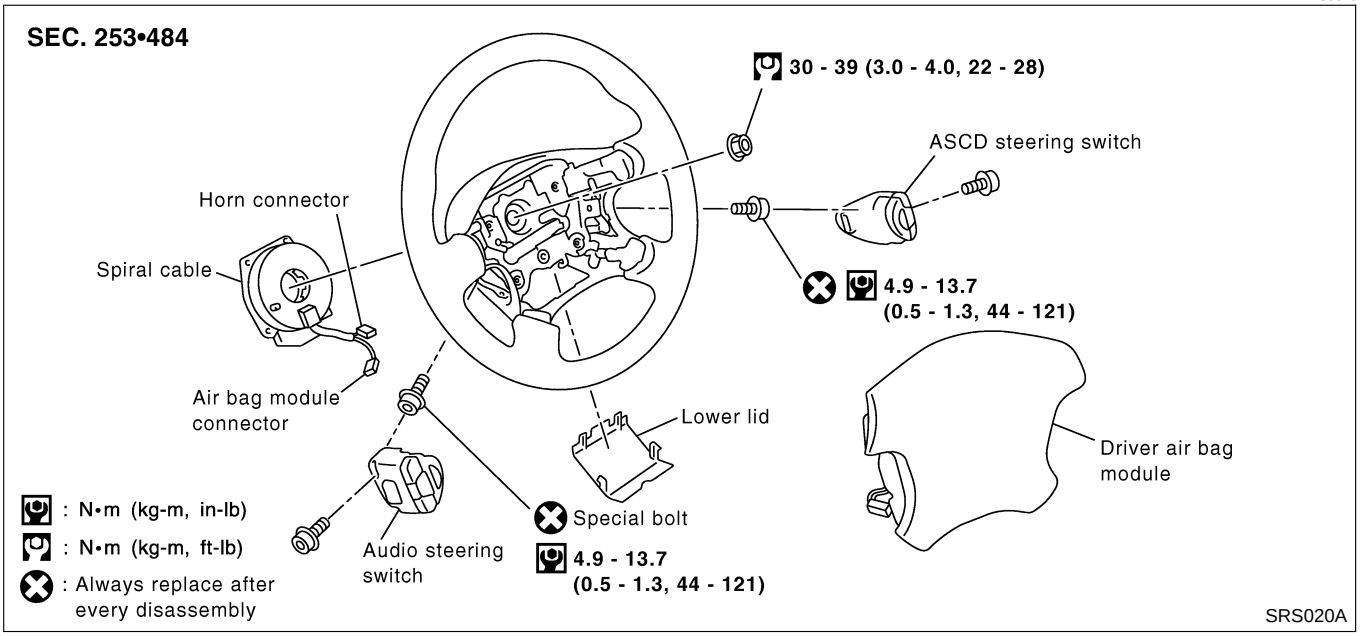

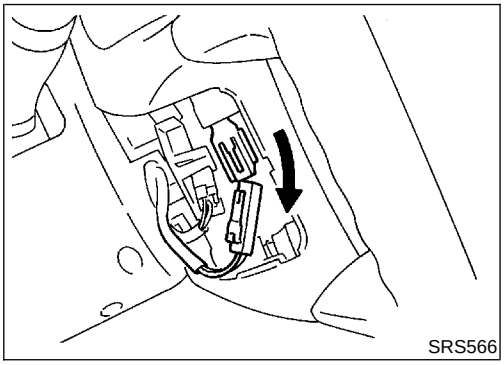

REMOVAL

NARS0014

CAUTION:

- **Before servicing SRS, turn the ignition switch off, disconnect both battery cables and wait at least 3 minutes.**
- **Always work from the side of air bag module.**

1. Remove lower lid from steering wheel, and disconnect air bag module connector.

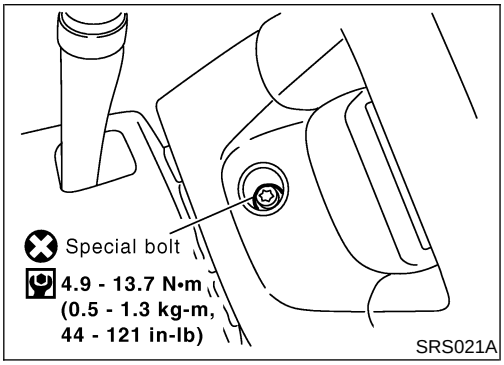

2. Remove audio and ASCD steering switches. Using the TAMPER RESISTANT TORX (Size T30), remove left and right special bolts.
3. Remove air bag module, and then disconnect horn connector.

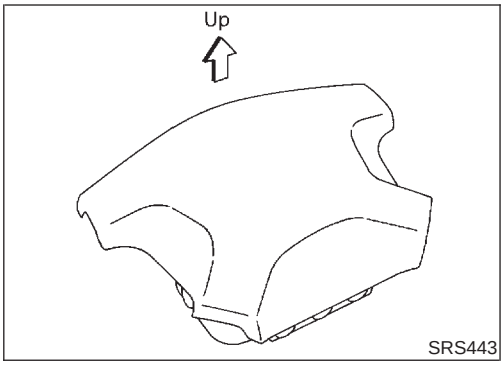

CAUTION:

- **Always place air bag module with pad side facing upward.**
- **Do not attempt to disassemble air bag module.**
- **The special bolts are coated with bonding agent. Do not use old bolts after removal; replace with new ones.**
- **Do not insert any foreign objects (screwdriver, etc.) into air bag module connector.**

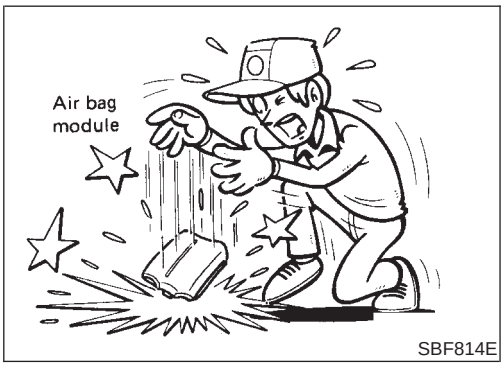

- **Replace air bag module if it has been dropped or sustained an impact.**
- **Do not expose the air bag module to temperatures exceeding 90°C (194°F).**
- **Do not allow oil, grease or water to come in contact with the air bag module.**

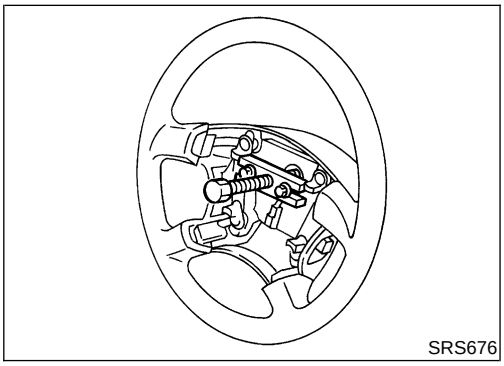

4. Set steering wheel in the neutral position.
5. Remove nuts.
6. Using steering wheel puller, remove steering wheel. Be careful not to over-tighten puller bolt on steering wheel.

CAUTION:

- **Do not tap or bump the steering wheel.**

7. Remove steering column cover.

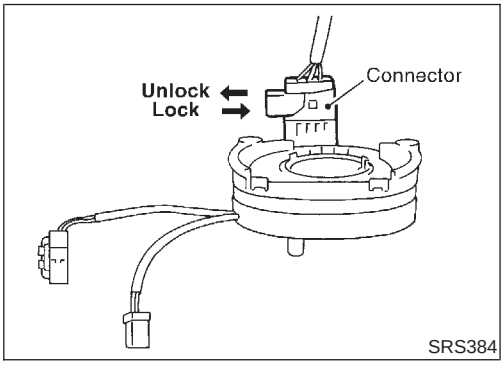

8. Unlock the spiral cable connector. Then disconnect connectors and remove the four screws. The spiral cable can then be removed.

CAUTION:

- **Do not attempt to disassemble spiral cable.**
- **Do not apply lubricant to the spiral cable.**

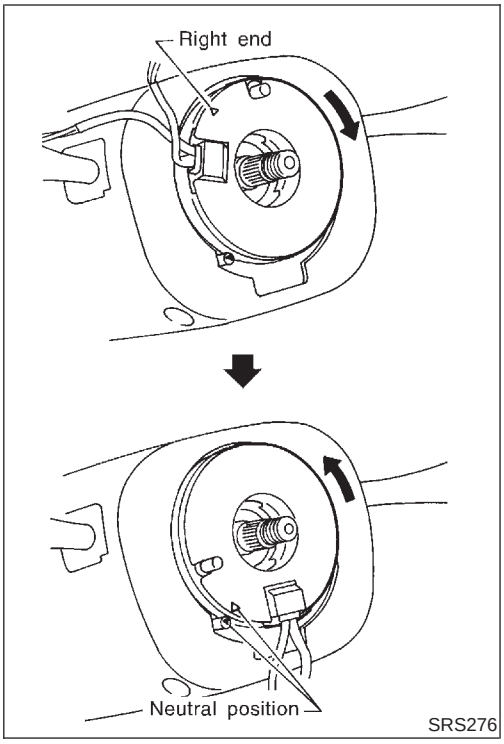

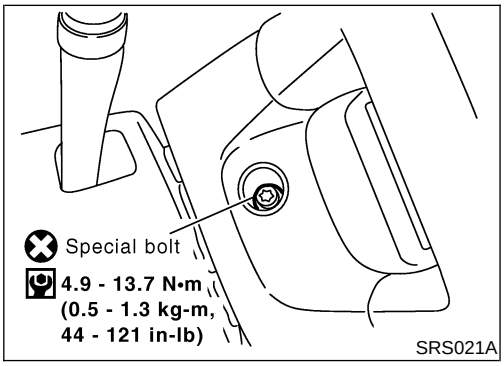

INSTALLATION

NARS0015

1. Set the front wheels in the straight-ahead position.
2. Make sure that the spiral cable is in the neutral position.
   The neutral position is detected by turning left about 2.5 revolutions from the right end position. Align the two marks (⧗).

CAUTION:

- **The spiral cable may snap due to steering operation if the cable is installed in an improper position.**
- **Also, with the steering linkage disconnected, the cable may snap by turning the steering wheel beyond the limited number of turns. The spiral cable can be turned to the left about 2.5 turns from the right end position.**

3. Connect spiral cable connector and tighten with screws. Install steering column cover.
4. Install steering wheel, aligning with spiral cable pin guides, and pull spiral cable through.
5. Connect horn connector and steering switch connector engage spiral cable with pawls in steering wheel. Move air bag module connector away from steering wheel lower lid opening.
6. Tighten nut.
   : 30 - 39 N·m (3.0 - 4.0 kg-m, 22 - 28 ft-lb)
7. Position air bag module and tighten with new special bolts.
8. Connect air bag module connector.
9. Conduct self-diagnosis to ensure entire SRS operates properly. (Use CONSULT-II or warning lamp check.)
   Before performing self-diagnosis, connect both battery cables.
10. Turn steering wheel to the left end and then to the right end fully to make sure that spiral cable is set in the neutral position.
    If air bag warning lamp blinks or stays ON (at the user mode), it shows the spiral cable may be snapped due to its improper position. Perform self-diagnosis again (use CONSULT-II or warning lamp). If a malfunction is detected, replace the spiral cable with a new one.
11. Perform self-diagnosis again to check that no malfunction is detected.

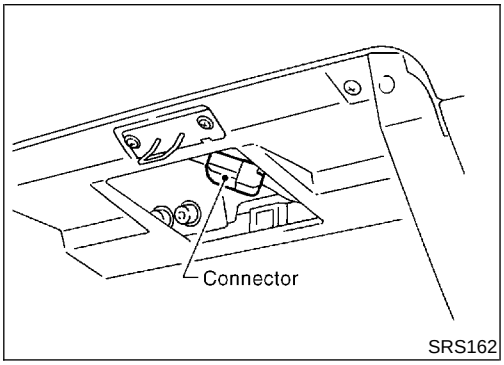

Front Passenger Air Bag Module

REMOVAL

NARS0016

CAUTION:

- **Before servicing SRS, turn the ignition switch OFF, disconnect both battery cables and wait for at least 3 minutes.**
- **Always work from the side of or under air bag module.**

1. Remove glove box assembly. Refer to BT-24, "INSTRUMENT PANEL ASSEMBLY" for details.
2. Disconnect front passenger air bag module connector from air bag harness connector.

3. Remove instrument lower panel on passenger side. Refer to BT-24, "INSTRUMENT PANEL ASSEMBLY" for details.

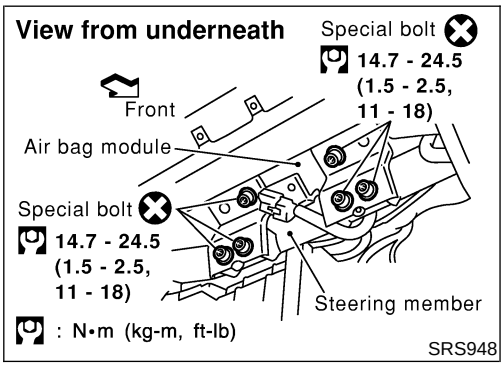

4. Remove front passenger fixing bolts. Use the TAMPER RESISTANT TORX (SIZE T50) to remove special bolts from front passenger air bag module.
5. Take out the air bag module from the instrument panel.

- The air bag module is heavy and should be supported using both hands during removal.

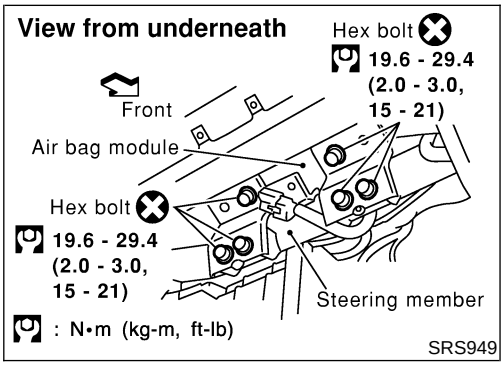

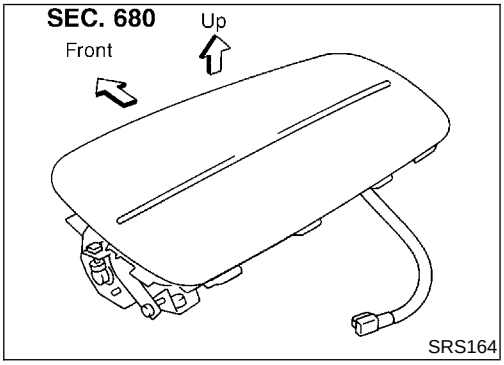

CAUTION:

- **Always place air bag module with pad side facing upward.**
- **Do not attempt to disassemble air bag module.**
- **Do not use old bolts after removal; replace with new bolts.**
- **Do not insert any foreign objects (screwdriver, etc.) into air bag module connector.**

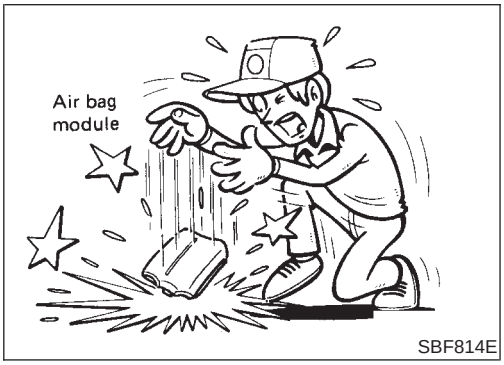

- **Replace air bag module if it has been dropped or sustained an impact.**
- **Do not expose the air bag module to temperatures exceeding 90°C (194°F).**
- **Do not allow oil, grease or water to come in contact with the air bag module.**
- **After air bag inflates, the front instrument panel assembly should be replaced if damaged.**

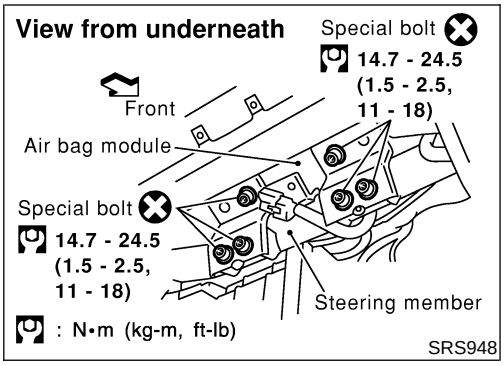

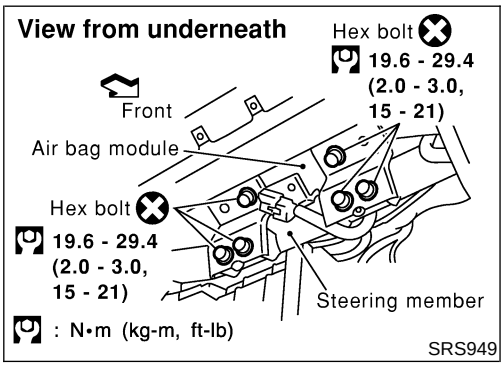

INSTALLATION

NARS0017

CAUTION:

- **Always work from the side of or under air bag module.**

1. Install front passenger air bag module to instrument panel.
   - Ensure harness is not caught between rear of air bag module and steering member.
2. Install front passenger air bag module to steering member.

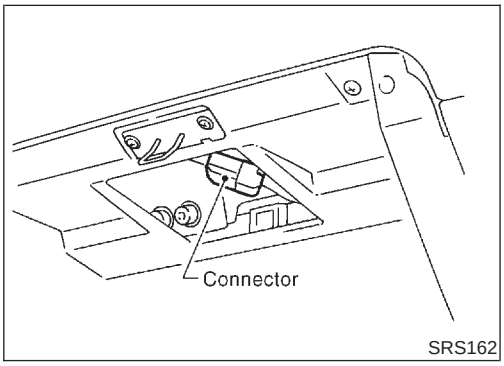

3. Install instrument lower panel on passenger side.
4. Connect air bag module connector to air bag harness connector.
5. Install glove box assembly.
6. Connect both battery cables.
7. Conduct self-diagnosis to ensure entire SRS operates properly. (Use CONSULT-II or warning lamp check.)

Side Air Bag Module

REMOVAL

NARS0036

CAUTION:

- **Before servicing SRS, turn the ignition switch OFF, disconnect both battery cables and wait at least 3 minutes.**
- **Always work from the rear of the air bag module.**

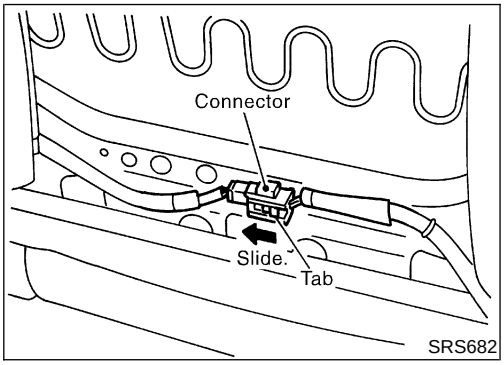

1. Remove seatback board.
   - **When using a clip removal tool to remove the seatback board, take care not to damage the air bag harness.**
2. Disconnect side air bag module connector by sliding tab.

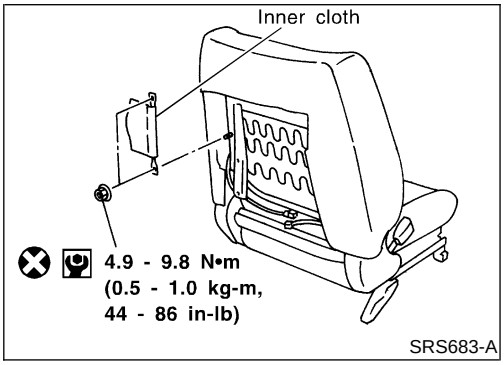

3. Pull up the seatback trim.
4. Remove the nuts securing the inner cloth with seatback frame. Then pull up the inner cloth.
5. Remove seatback trim. Refer to BT-45, "FRONT SEAT" for details.

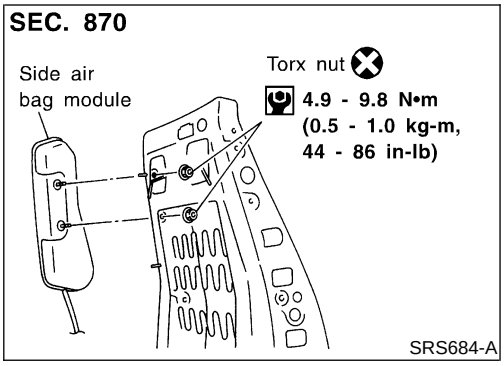

6. Remove the torx nuts coated with bonding agent from the side air bag module.
7. Remove side air bag connector. Side air bag module can then be removed.

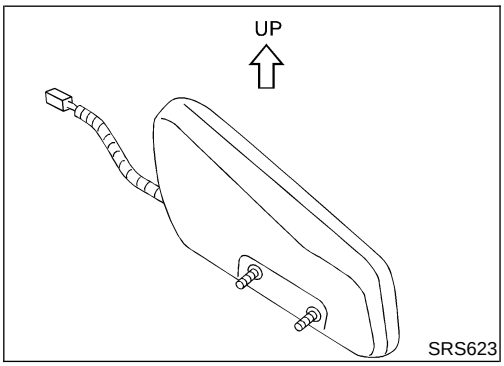

CAUTION:

- **Always place the air bag module standing with the stud bolt side setting bottom.**
- **Do not attempt to disassemble air bag module.**
- **The torx nuts are coated with bonding agent. Do not use old nuts after removal; replace with new coated nuts.**
- **Do not insert any foreign objects (screwdriver, etc.) into air bag module connector.**

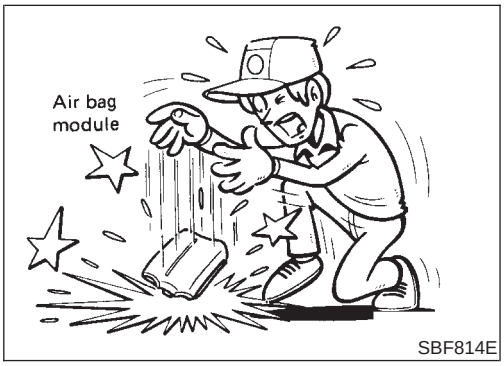

- **Replace air bag module if it has been dropped or sustained an impact.**
- **Do not expose the air bag module to temperatures exceeding 90°C (194°F).**
- **Do not allow oil, grease or water to come in contact with the air bag module.**
- **After air bag inflates, all parts of front seatback (including front seatback frame) should be replaced.**

INSTALLATION

NARS0037

1. Install side air bag module on seatback frame with new torx nuts coated with bonding agent.
2. Install side air bag connector.
3. Install seatback trim. Refer to BT-45, "FRONT SEAT" for details.

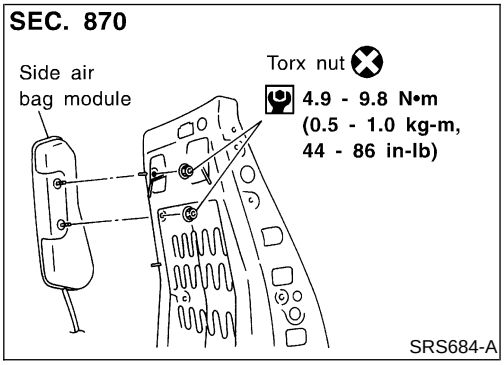

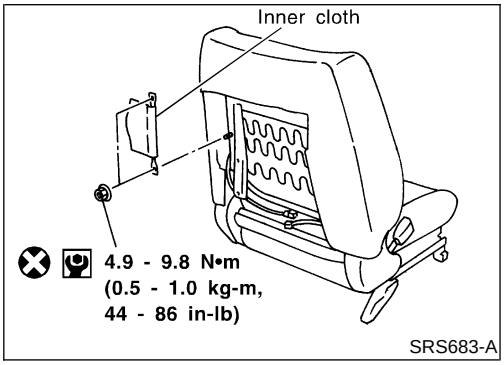

4. Secure the inner cloth which covers the side air bag module with nuts.

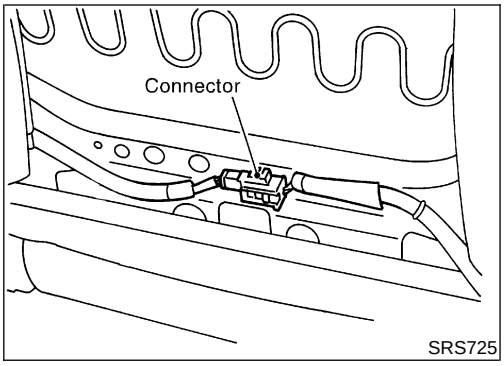

5. Connect side air bag module connector.
6. Install seatback board with new clips.
7. Connect both battery cables.
8. Go to "SRS Operation Check", RS-41 and perform self-diagnosis to ensure entire SRS operates properly. (Use CONSULT-II or air bag warning lamp.)

Side Curtain Air Bag Module

REMOVAL AND INSTALLATION

NARS0052

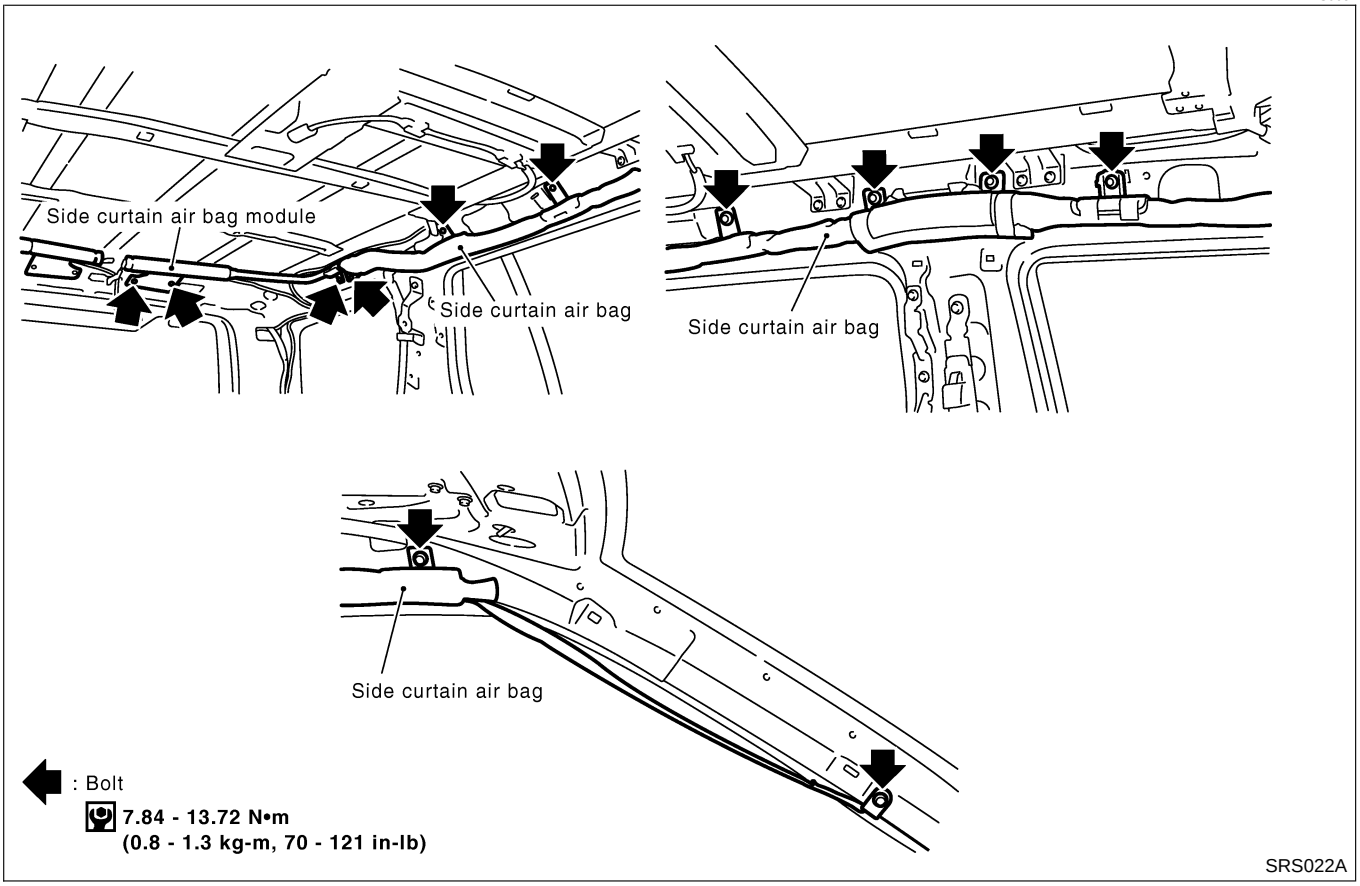

Removal

NARS0052S01

CAUTION:

- **Before servicing SRS, turn the ignition switch OFF, disconnect both battery cables and wait at least 3 minutes.**
- **Always work from the side of the side curtain air bag module.**

1. Remove headliner. Refer to BT-36, "ROOF TRIM" for details.
2. Disconnect side curtain air bag connector.
3. Remove side curtain air bag module fixing bolts, and remove the side curtain air bag module.

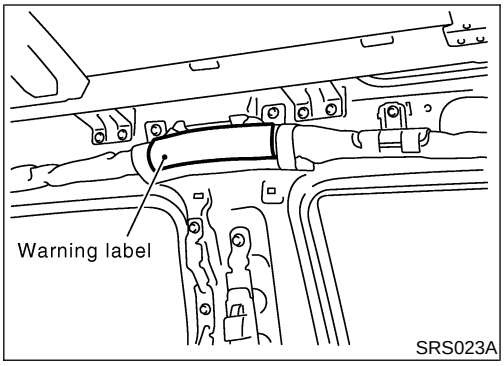

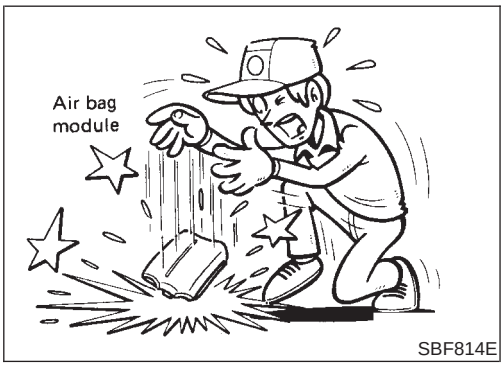

CAUTION:

- **Always place the side curtain air bag module with the warning label facing upward.**
- **Do not attempt to disassemble side curtain air bag module.**
- **Do not insert any foreign objects (screwdriver, etc.) into air bag module connector.**
- **Replace side curtain air bag module if it has been dropped or sustained an impact.**
- **Do not expose the air bag module to temperatures exceeding 90°C (194°F).**
- **Do not allow oil, grease or water to come in contact with the side curtain air bag module.**

Disposal of Air Bag Module and Seat Belt Pre-tensioner

NARS0018

- Before disposing of air bag module and seat belt pre-tensioner, or vehicles equipped with such systems, deploy the systems. If such systems have already been deployed due to an accident, dispose of them as indicated in "DISPOSING OF AIR BAG MODULE AND SEAT BELT PRE-TENSIONER" (RS-31).
- When deploying the air bag module and activating seat belt pre-tensioner, always use the Special Service Tool; Deployment tool KV99106400 (Kent-Moore No. J38381).
- When deploying the air bag module and activating seat belt pre-tensioner, stand at least 5 m (16 ft) away from the deployment component.
- When deploying air bag module and activating seat belt pre-tensioner, a fairly loud noise is made, followed by smoke being released. The smoke is not poisonous, however, be careful not to inhale smoke since it irritates the throat and can cause choking.
- Always activate one air bag module at a time.
- Due to heat, leave air bag module unattended for more than 30 minutes after deployment. Also leave seat belt pre-tensioner unattended for move than 10 minutes after deployment.
- Be sure to wear gloves when handling a deployed air bag module and activated seat belt pre-tensioner.
- Never apply water to the deployed air bag module and activated seat belt pre-tensioner.
- Wash your hands clean after finishing work.
- Place the vehicle outdoors with an open space of at least 6 m (20 ft) on all sides when deploying air bag module and activating seat belt pre-tensioner while mounted in vehicle.
- Use a voltmeter to make sure the vehicle battery is fully charged.
- Do not dispose of the undeployed air bag module and unactivated seat belt pre-tensioner.

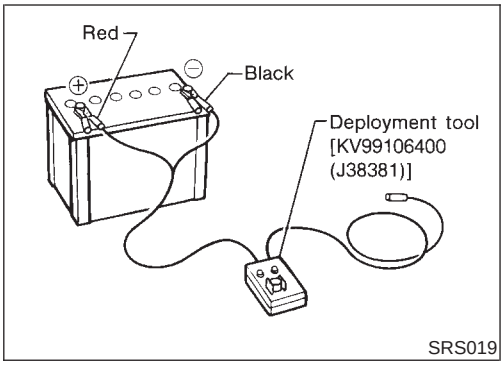

CHECKING DEPLOYMENT TOOL

NARS0018S01

Connecting to Battery

NARS0018S0101

CAUTION:

The battery must show voltage of 9.6V or more.

Remove the battery from the vehicle and place it on dry wood blocks approximately 5 m (16 ft) away from the vehicle.

- Wait 3 minutes after the vehicle battery is disconnected before proceeding.
- Connect red clip of deployment tool to battery positive terminal and black clip to negative terminal.

Make sure the polarity is correct. The right side lamp in the tool, marked "deployment tool power", should glow with a green light. If the right side lamp glows red, reverse the connections to the battery.

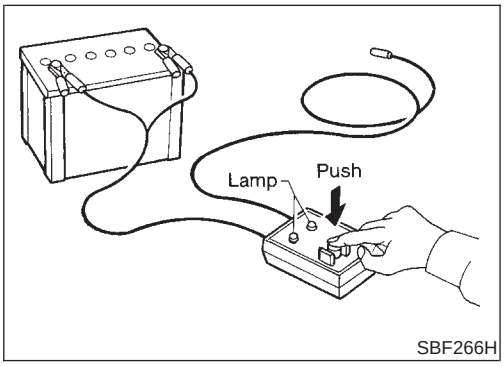

Deployment Tool Check

NARS0018S0102

Press the deployment tool switch to the "ON" position. The left side lamp in the tool, marked "air bag connector voltage" should illuminate. If it does not illuminate, replace the tool.

Air Bag Deployment Tool Lamp Illumination Chart (Battery connected)

NARS0018S0103

Switch operation	Left side lamp, green* "AIR BAG CONNECTOR VOLTAGE"	Right side lamp, green* "DEPLOYMENT TOOL POWER"
OFF	OFF	ON
ON	ON	ON

*: If this lamp glows red, the tool is connected to the battery incorrectly. Reverse the connections and make sure the lamp glows green.

DEPLOYMENT PROCEDURES FOR AIR BAG MODULE (OUTSIDE OF VEHICLE)

NARS0018S02

Unless the vehicle is being scrapped, deploying the air bag in the vehicle is not recommended. This may cause damage to the vehicle interior.

Anchor air bag module bracket [KV99105300 (J41246)] in a vise secured to a firm foundation during deployment.

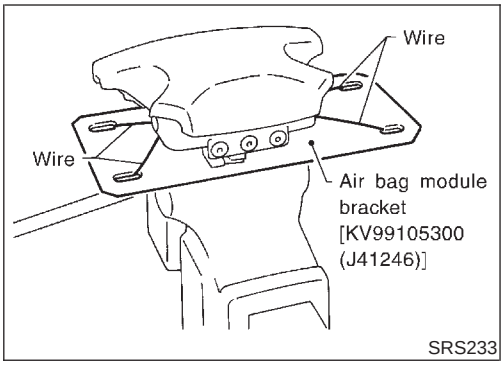

Deployment of Driver Air Bag Module (Outside of vehicle)

NARS0018S0201

1. Using wire, secure air bag module to air bag module bracket [SST: KV99105300 (J41246)] at two places.

CAUTION:
Use wire of at least 1 mm (0.04 in) diameter.

2. Firmly secure air bag module bracket [SST: KV99105300 (J41246)] with air bag module attached, in a vise.

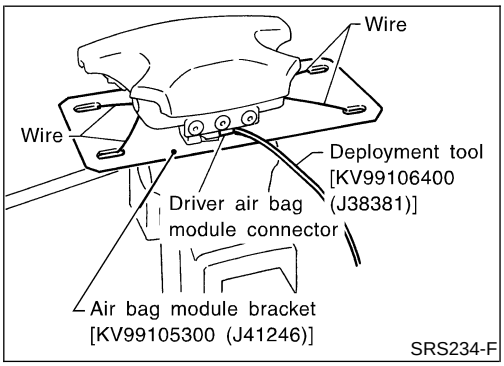

3. Connect deployment tool [SST: KV99106400 (J38381)] to air bag module connector.

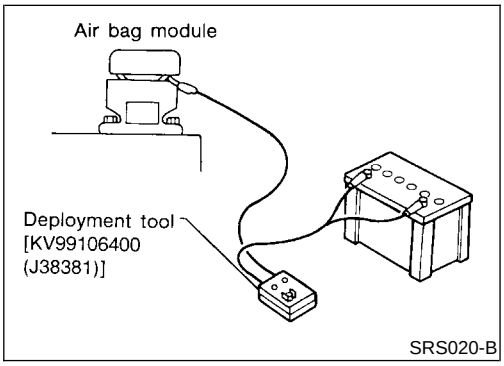

4. Connect red clip of deployment tool to battery positive terminal and black clip to negative terminal.
5. The lamp on the right side of the tool, marked "deployment tool power", should glow green, not red.
6. Press the button on the deployment tool. The left side lamp on the tool, marked "air bag connector voltage", will illuminate and the air bag module will deploy.

CAUTION:
When deploying the air bag module, stand at least 5 m (16 ft) away from the air bag module.

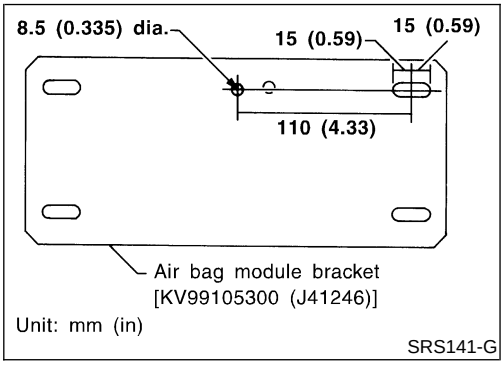

Deployment of Passenger Air Bag Module (Outside of vehicle)

NARS0018S0202

1. Make an 8.5 mm (0.335 in) diameter hole in air bag module bracket [SST: KV99105300 (J41246)] at the position shown in figure at left.

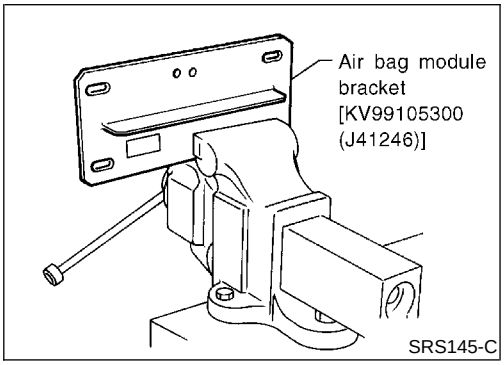

2. Firmly secure air bag module bracket [SST: KV99105300 (J41246)] in a vise.

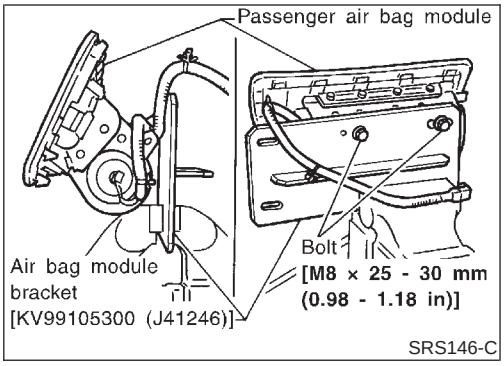

3. Match the two holes in air bag module bracket (held in vise) and passenger air bag module and fix them with two bolts [M8 × 25 - 30 mm (0.98 - 1.18 in)].

CAUTION:

If a gap exists between passenger air bag module and air bag module bracket, use a piece of wood inserted in the gap to stabilize the air bag module.

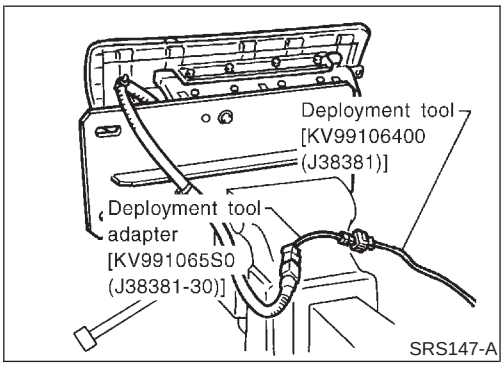

4. Connect deployment tool adapter [SST: KV991065S0 (J38381-30)] to deployment tool [SST: KV99106400 (J38381)] connector and air bag module connector.
5. Connect red clip of deployment tool to battery positive terminal and black clip to negative terminal.
6. The lamp on the right side of the tool, marked "deployment tool power", should glow green, not red.
7. Press the button on the deployment tool. The left side lamp on the tool, marked "air bag connector voltage", will illuminate and the air bag module will deploy.

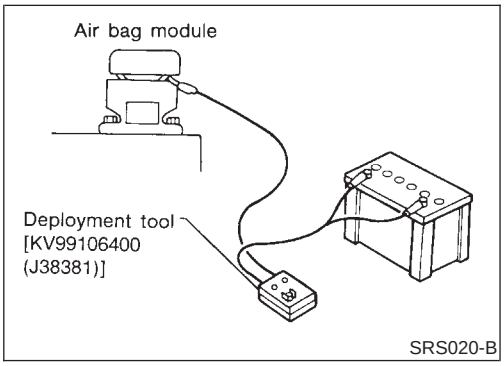

CAUTION:

- **When deploying the air bag module, do not stand on the deploying side.**
- **Stand at least 5 m (16 ft) away from the air bag module.**

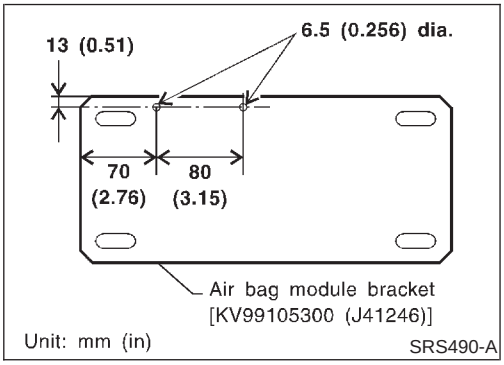

Deployment of Side Air Bag Module (Outside of vehicle)

NARS0018S0203

1. Make 6.5 mm (0.256 in) diameter holes in air bag module bracket [SST: KV99105300 (J41246)] at the position shown in figure at left.

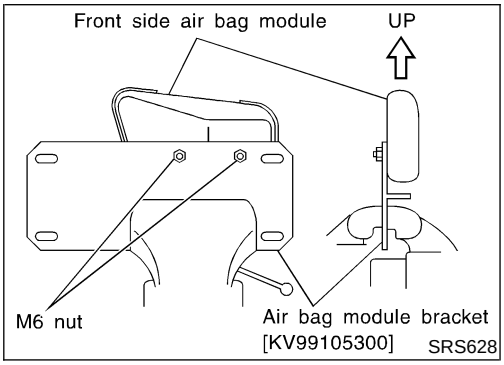

2. Firmly secure air bag module bracket [SST: KV99105300 (J41246)] in a vise.
3. Insert the stud bolts of side air bag module (built-in type) into the two holes in air bag module bracket (held in vise) and fix them with two M6 nuts.

CAUTION:

Side air bag module should be secured to air bag module bracket [SST: KV99105300 (J41246)] in a vise with metal portion facing down.

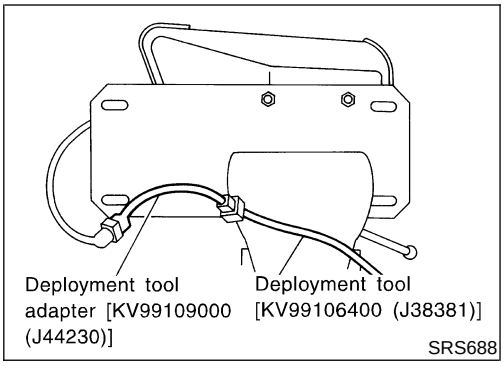

4. Connect deployment tool adapter [SST: KV99109000 (J44230)] to deployment tool [SST: KV99106400 (J38381)] connector and connector on air bag module.

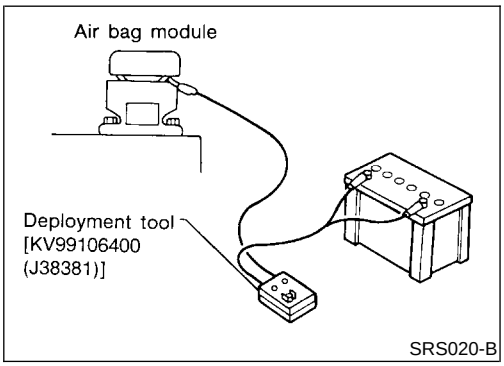

5. Connect red clip of deployment tool to battery positive terminal and black clip to negative terminal.
6. The lamp on the right side of the tool, marked "deployment tool power", should glow green, not red.
7. Press the button on the deployment tool. The left side lamp on the tool, marked "air bag connector voltage", will illuminate and the air bag module will deploy.

CAUTION:
When deploying the air bag module, stand at least 5 m (16 ft) away from the air bag module.

DEPLOYMENT PROCEDURES FOR SIDE CURTAIN AIR BAG MODULE (OUTSIDE OF VEHICLE)

NARS0018S06

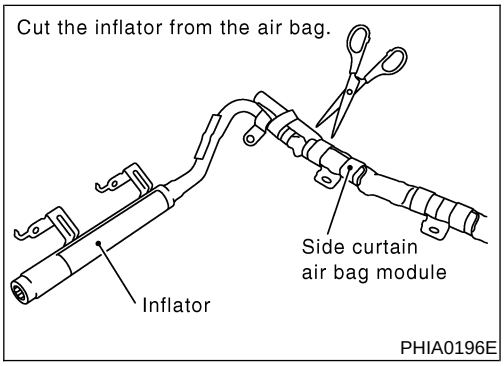

1. Cut the inflator from side curtain air bag module.

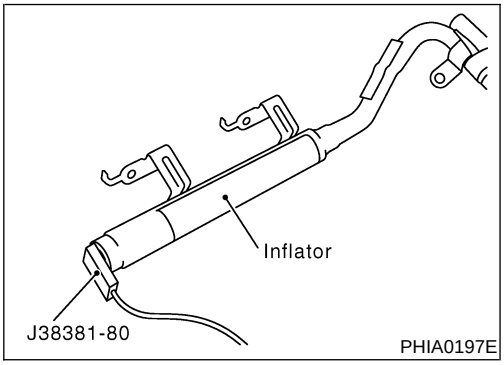

2. Connect deployment tool [SST: KV99106400 (J38381)] and deployment tool adapter (J38381-80) to the inflator.
   LH side curtain air bag module: Yellow connector
   RH side curtain air bag module: Orange connector

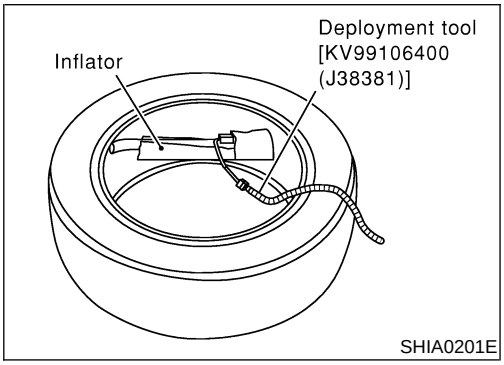

3. Put the inflator connected with the deployment tool [SST: KV99106400 (J38381)] into a tire without a wheel.

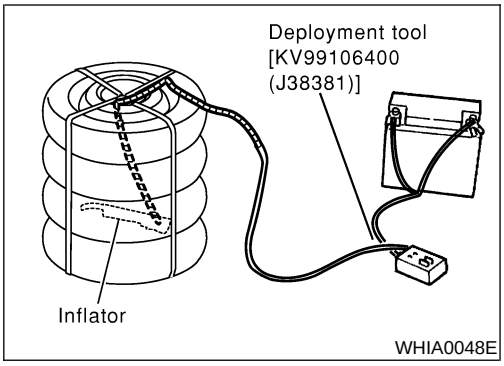

4. Put the tire with the inflator onto another tire without wheel. Add an additional tire without a wheel and then a tire mounted on a wheel on top.

CAUTION:
Tie all tires together with a strap in order keep them standing.

5. Connect red clip of deployment tool to battery positive terminal and black clip to negative terminal.
6. The lamp on the right side of the tool, marked "deployment tool power", should glow green, not red.
7. Press the button on the deployment tool. The left side lamp on the tool, marked "air bag connector voltage", will illuminate and the air bag module will deploy.

CAUTION:
When deploying the side curtain air bag module, stand at least 5 m (16 ft) away from the side curtain air bag module.

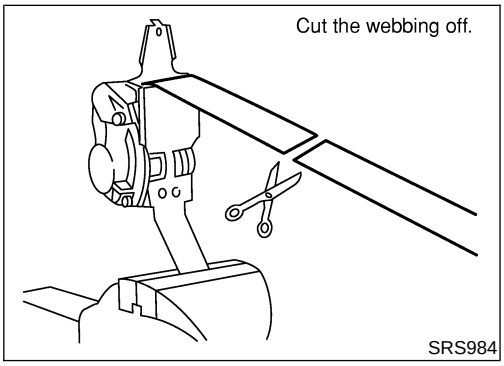

ACTIVATION PROCEDURES FOR SEAT BELT PRE-TENSIONER (OUTSIDE OF VEHICLE)

NARS0018S05

1. Firmly grip pre-tensioner in a vise and cut the webbing off.

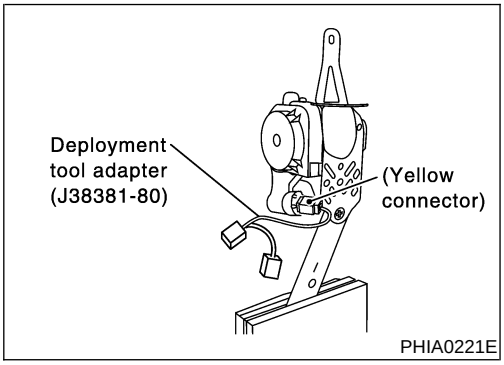

2. Connect deployment tool adapter (J38381-80) to deployment tool [SST: KV99106400 (J38381)] connector and seat belt pre-tensioner.

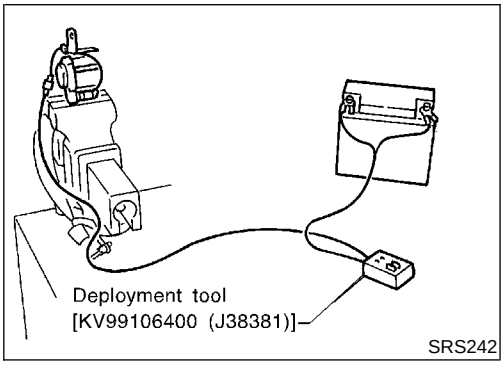

3. Connect red clip of deployment tool to battery positive terminal and black clip to negative terminal.
4. The lamp on the right side of the tool, marked "deployment tool power", should glow green, not red.
5. Press the button on the deployment tool. The left side lamp on the tool, marked "seat belt pre-tensioner connector voltage", will illuminate and the seat belt pre-tensioner will deploy.

CAUTION:
When activating the seat belt pre-tensioner, stand at least 5 m (16 ft) away from the seat belt pre-tensioner.

DEPLOYMENT OF AIR BAG MODULE AND ACTIVATION OF SEAT BELT PRE-TENSIONER WHILE MOUNTED IN VEHICLE

NARS0018S03

When disposing of a vehicle, deploy air bag module and activate seat belt pre-tensioners while they are mounted in vehicle.

CAUTION:

When deploying air bag module or activating seat belt pre-tensioner, ensure vehicle is empty.

1. Disconnect both the vehicle battery cables and wait 3 minutes.
2. Disconnect air bag module and seat belt pre-tensioner connector.
3. Connect deployment tool [SST: KV99106400 (J38381)] to air bag module or seat belt pre-tensioner.
   For front passenger air bag module, attach deployment tool adapter [SST: KV991065S0 (J38381-30)] to the tool connector. For side air bag module, attach deployment tool adapter [SST: KV99109000 (J44230)] to the tool connector. For seat belt pre-tensioner, attach deployment tool adapter (J38381-80) to the tool connector. For side curtain air bag module, attach deployment tool adapter (J38381-80) to the tool connector.

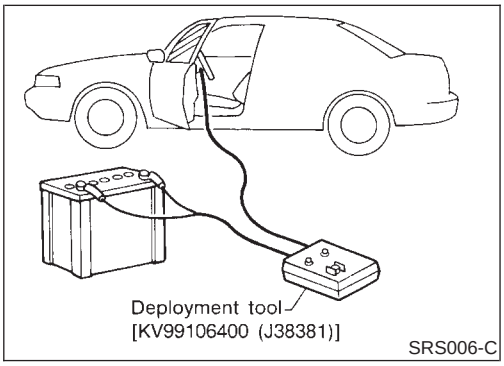

SRS006-C

4. Connect red clip of deployment tool to battery positive terminal and black clip to negative terminal.
5. The lamp on the right side of the tool, marked "deployment tool power", should glow green, not red.
6. Press the button on the deployment tool. The left side lamp on the tool, marked "air bag connector voltage", will illuminate and the air bag module will be deployed or activated.

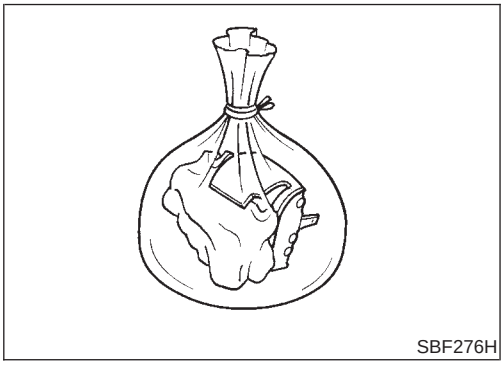
SBF276H

DISPOSING OF AIR BAG MODULE AND SEAT BELT PRE-TENSIONER

NARS0018S04

Deployed air bag module and seat belt pre-tensioner are very hot. Before disposing of air bag module, and seat belt pre-tensioner wait at least 30 minutes, and 10 minutes, respectively. Seal them in a plastic bag before disposal.

CAUTION:

- **Never apply water to a deployed air bag module and activated seat belt pre-tensioner.**
- **Be sure to wear gloves when handling a deployed air bag module and activated seat belt pre-tensioner.**
- **No poisonous gas is produced upon air bag module deployment. However, be careful not to inhale gas since it irritates throat and can cause choking.**
- **Do not attempt to disassemble air bag module and seat belt pre-tensioner.**
- **Air bag module and seat belt pre-tensioner cannot be reused.**
- **Wash your hands clean after finishing work.**

Trouble Diagnoses Introduction

=NARS0040

CAUTION:

- **Do not use electrical test equipment on any circuit related to the SRS unless instructed to in this Service Manual. SRS wiring harnesses can be identified by yellow harness connector (and with yellow harness protector or yellow insulation tape before the harness connectors).**
- **Do not attempt to repair, splice or modify the SRS wiring harness. If the harness is damaged, replace it with a new one.**
- **Keep ground portion clean.**

DIAGNOSIS FUNCTION

NARS0040S01

The SRS self-diagnostic results can be read by using “AIR BAG” warning lamp and/or CONSULT-II. The reading of these results is accomplished using one of two modes — “User mode” and “Diagnosis mode”.
The User mode is exclusively prepared for the customer (driver). This mode warns the driver of a system malfunction through the operation of the “AIR BAG” warning lamp.
The Diagnosis mode allows the technician to locate and inspect the malfunctioning part.
The mode applications for the “AIR BAG” warning lamp and CONSULT-II are as follows:

	User mode	Diagnosis mode	Display type
“AIR BAG” warning lamp	X	X	ON-OFF operation
CONSULT-II	—	X	Monitoring

NOTE:
Seat belt pre-tensioner malfunction is indicated by “AIR BAG” warning lamp.

DIAGNOSIS MODE FOR CONSULT-II

NARS0040S02

- “SELF-DIAG [CURRENT]”
  A current self-diagnostic result (also indicated by the number of warning lamp flashes in the Diagnosis mode) is displayed on the CONSULT-II screen in real time. This refers to a malfunctioning part requiring repairs.
- “SELF-DIAG [PAST]”
  Diagnosis results previously stored in the memory are displayed on the CONSULT-II screen. The stored results are not erased until memory erasing is executed.
- “TROUBLE DIAG RECORD”
  With TROUBLE DIAG RECORD, diagnosis results previously erased by a reset operation can be displayed on the CONSULT-II screen.
- “ECU DISCRIMINATED NO.”
  The diagnosis sensor unit for each vehicle model is assigned with its own, individual classification number. This number will be displayed on the CONSULT-II screen, as shown below. When replacing the diagnosis sensor unit, refer to the part number for the compatibility. After installation, replacement with a correct unit can be checked by confirming this classification number on the CONSULT-II screen.

For NISSAN MODEL R50, the diagnosis sensor unit classification numbers assigned is AA2F (Models with side air bag) and AA2E (Models without side air bag).

HOW TO CHANGE SELF-DIAGNOSIS MODE WITH CONSULT-II

NARS0040S03

From User Mode to Diagnosis Mode

NARS0040S0301

After selecting "AIR BAG" on the "SELECT SYSTEM" screen, User mode automatically changes to Diagnosis mode.

From Diagnosis Mode to User Mode

NARS0040S0302

To return to User mode from Diagnosis mode, touch "BACK" key of CONSULT-II until "SELECT SYSTEM" appears, Diagnosis mode automatically changes to User mode.

HOW TO CHANGE SELF-DIAGNOSIS MODE WITHOUT CONSULT-II

NARS0040S04

From User Mode to Diagnosis Mode

NARS0040S0401

Diagnosis mode activates only when a malfunction is detected, by turning ignition switch as follows:

1) Turn ignition switch "ON".
2) After "AIR BAG" warning lamp lights for 7 seconds, turn ignition switch "OFF" within 1 second.
3) Wait more than 3 seconds.
4) Repeat steps 1 to 3 twice (Perform 3 times in total).
5) Turn ignition switch "ON".

SRS will not enter Diagnosis mode, if no malfunction is detected.

From Diagnosis Mode to User Mode

NARS0040S0402

After a malfunction is repaired, switch the ignition "OFF" for at least one second, then back "ON". Diagnosis mode is returned to User mode.
If switching Diagnosis mode to User mode is required while malfunction is being detected, by turning ignition switch as follows:

1) Turn ignition switch "ON".
2) After "AIR BAG" warning lamp lights for 7 seconds, turn ignition switch "OFF" within 1 second.
3) Wait more than 3 seconds.
4) Repeat steps 1 to 3 twice (Perform 3 times in total).
5) Turn ignition switch "ON".

HOW TO ERASE SELF-DIAGNOSIS RESULTS

NARS0040S05

With CONSULT-II

NARS0040S0501

- "SELF-DIAG [CURRENT]"
  A current self-diagnostic result is displayed on the CONSULT-II screen in real time.

After the malfunction is repaired completely, no malfunction is detected on "SELF-DIAG [CURRENT]".

- "SELF-DIAG [PAST]"
  Return to the "SELF-DIAG [CURRENT]" CONSULT-II screen by pushing "BACK" key of CONSULT-II and select "SELF-DIAG [CURRENT]" in SELECT DIAG MODE. Touch "ERASE" in "SELF-DIAG [CURRENT]" mode.

NOTE:
If the memory of the malfunction in "SELF-DIAG [PAST]" is not erased, the User mode shows the system malfunction by the operation of the warning lamp even if the malfunction is repaired completely.

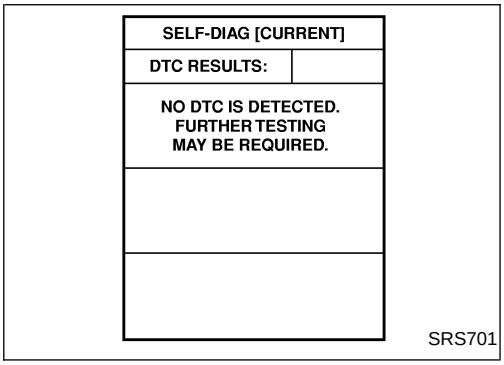

- "TROUBLE DIAG RECORD"
  The memory of "TROUBLE DIAG RECORD" cannot be erased.

Without CONSULT-II

NARS0040S0502

After a malfunction is repaired, switch the ignition "OFF" for at least one second, then back "ON". Diagnosis mode returns to the User mode. At that time, the self-diagnostic result is cleared.

How to Perform Trouble Diagnoses for Quick and Accurate Repair

=NARS0041

A good understanding of the malfunction conditions can make troubleshooting faster and more accurate. In general, each customer feels differently about a malfunction. It is important to fully understand the symptoms or conditions for a customer complaint.

INFORMATION FROM CUSTOMER

NARS0041S01

WHAT ..... Vehicle model
WHEN ..... Date, Frequencies
WHERE ..... Road conditions
HOW ..... Operating conditions, Symptoms

PRELIMINARY CHECK

NARS0041S02

Check that the following parts are in good order.

- Battery [Refer to SC-4, “BATTERY”.]
- Fuse [Refer to EL-11, “Fuse”, “POWER SUPPLY ROUTING”.]
- System component-to-harness connections

WORK FLOW

=NARS0041S03

NOTE:
Seat belt pre-tensioner malfunction is indicated by "AIR BAG" warning lamp.

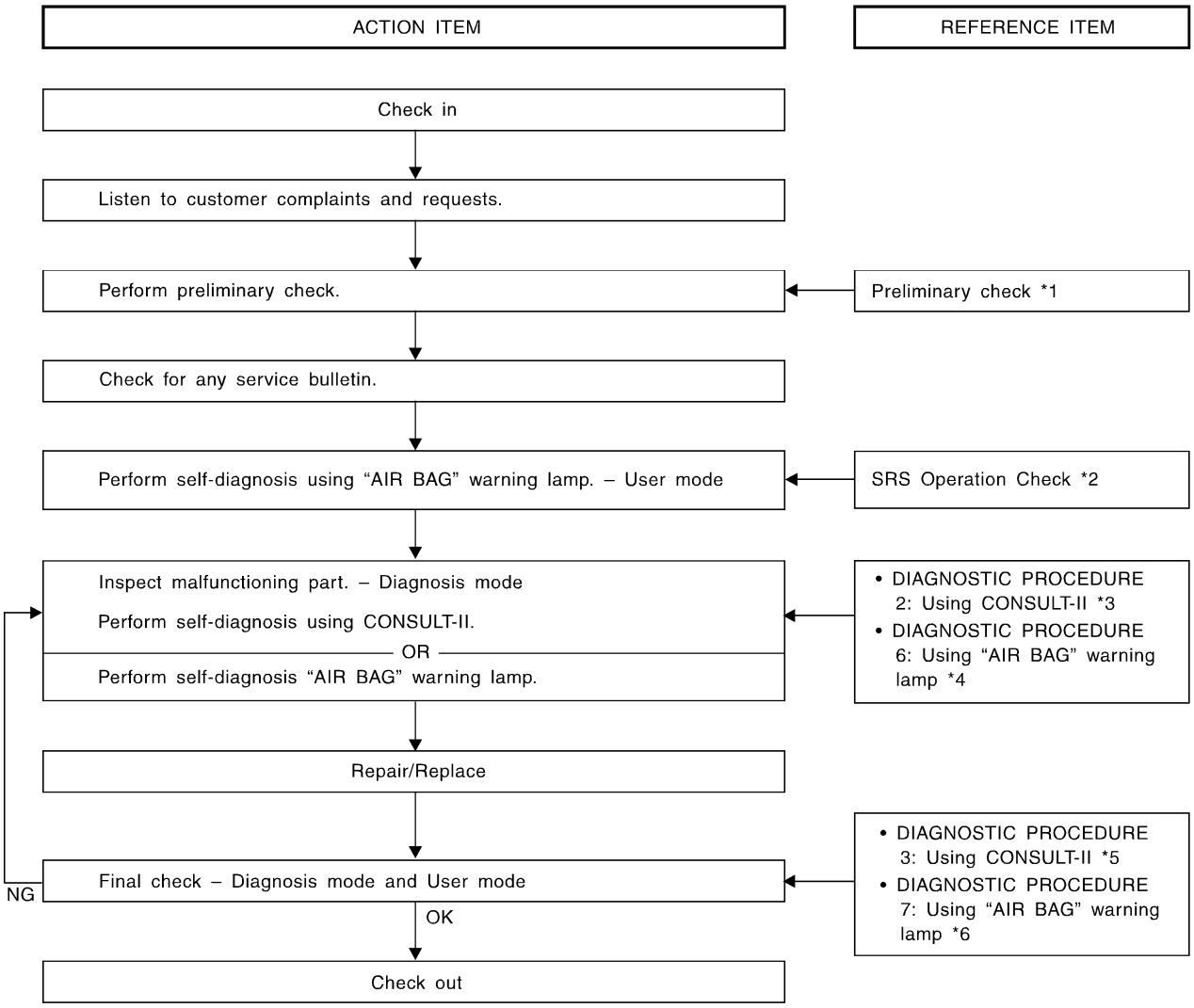

SRS799

*1: RS-35
*2: RS-41
*3: RS-42
*4: RS-52
*5: RS-46
*6: RS-58

Schematic

NARS0042

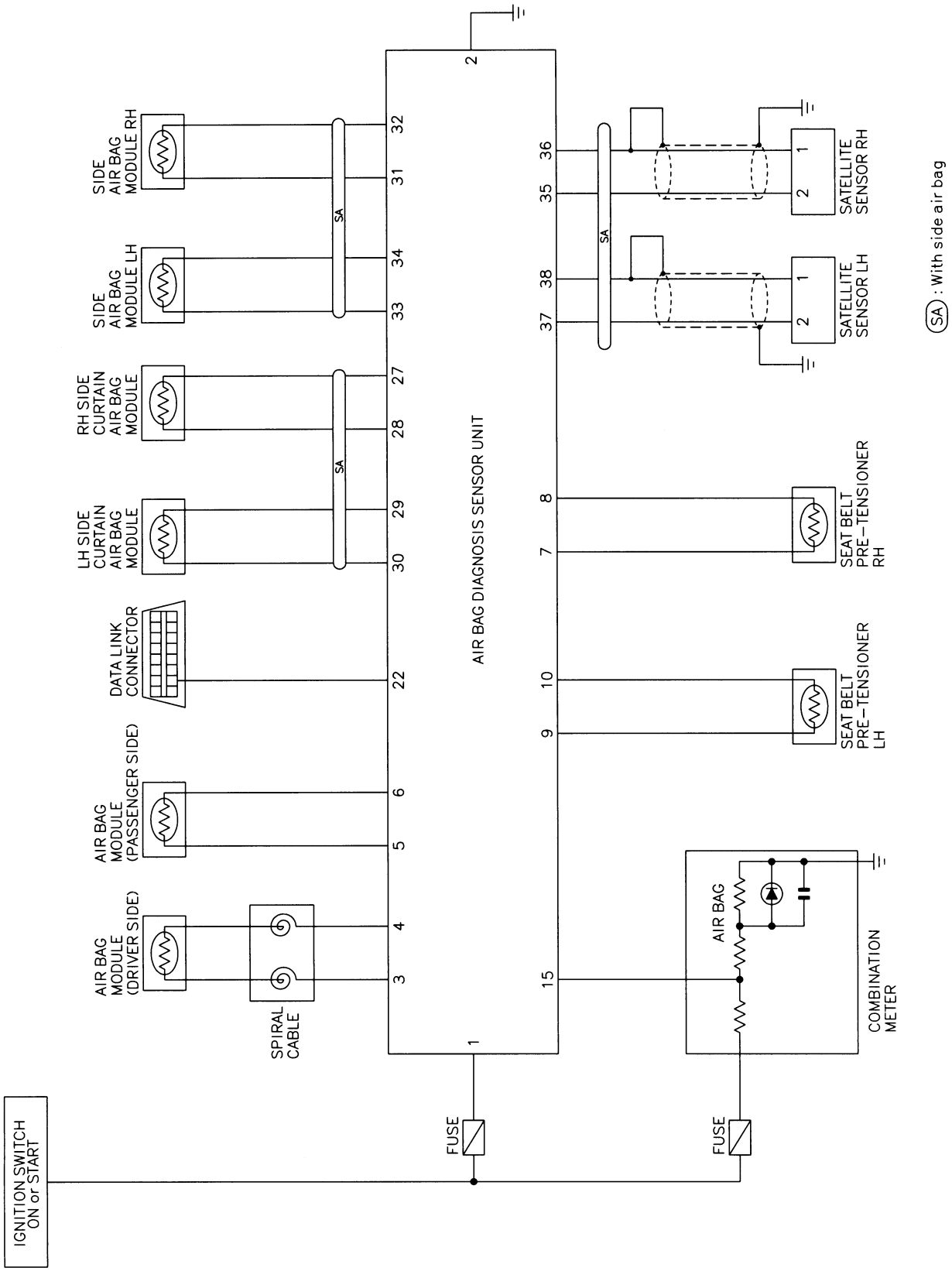

MRS451A

Wiring Diagram — SRS —

NARS0043

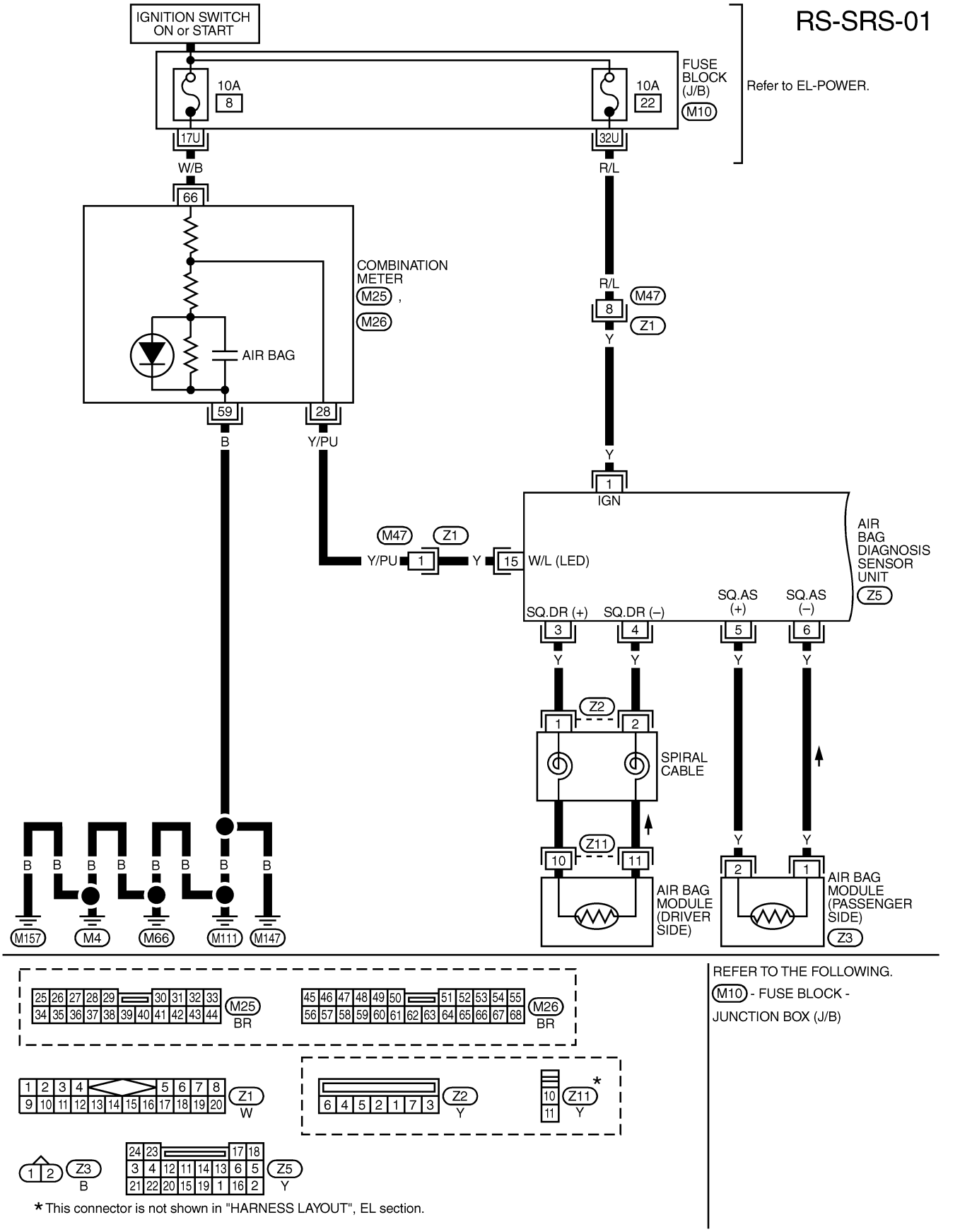

MRS452A

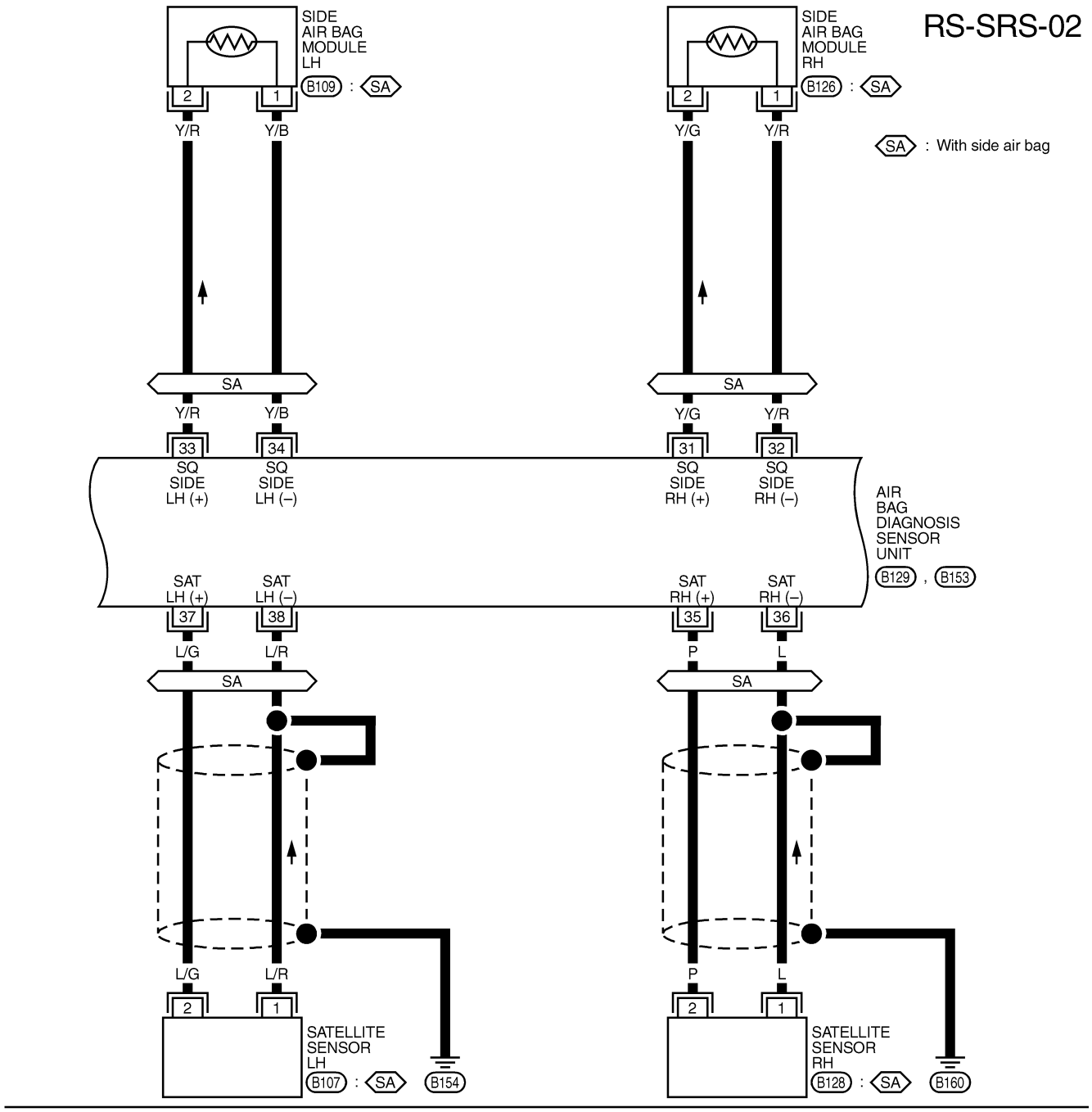
RS-SRS-02
SIDE AIR BAG MODULE LH
B109 : SA
SIDE AIR BAG MODULE RH
B126 : SA
SA : With side air bag
Y/R
Y/B
Y/G
Y/R
SA
SQ SIDE LH (+)
SQ SIDE LH (–)
SQ SIDE RH (+)
SQ SIDE RH (–)
AIR BAG DIAGNOSIS SENSOR UNIT
B129 , B153
SAT LH (+)
SAT LH (–)
SAT RH (+)
SAT RH (–)
L/G
L/R
P
L
SATELLITE SENSOR LH
B107 : SA
B154
SATELLITE SENSOR RH
B128 : SA
B160

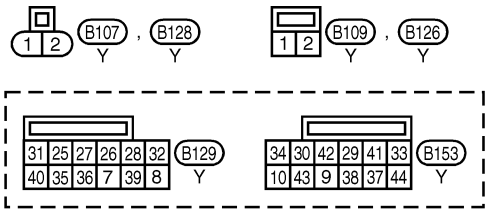
B107 , B128
Y
B109 , B126
Y
B129
Y
B153
Y

MRS453A

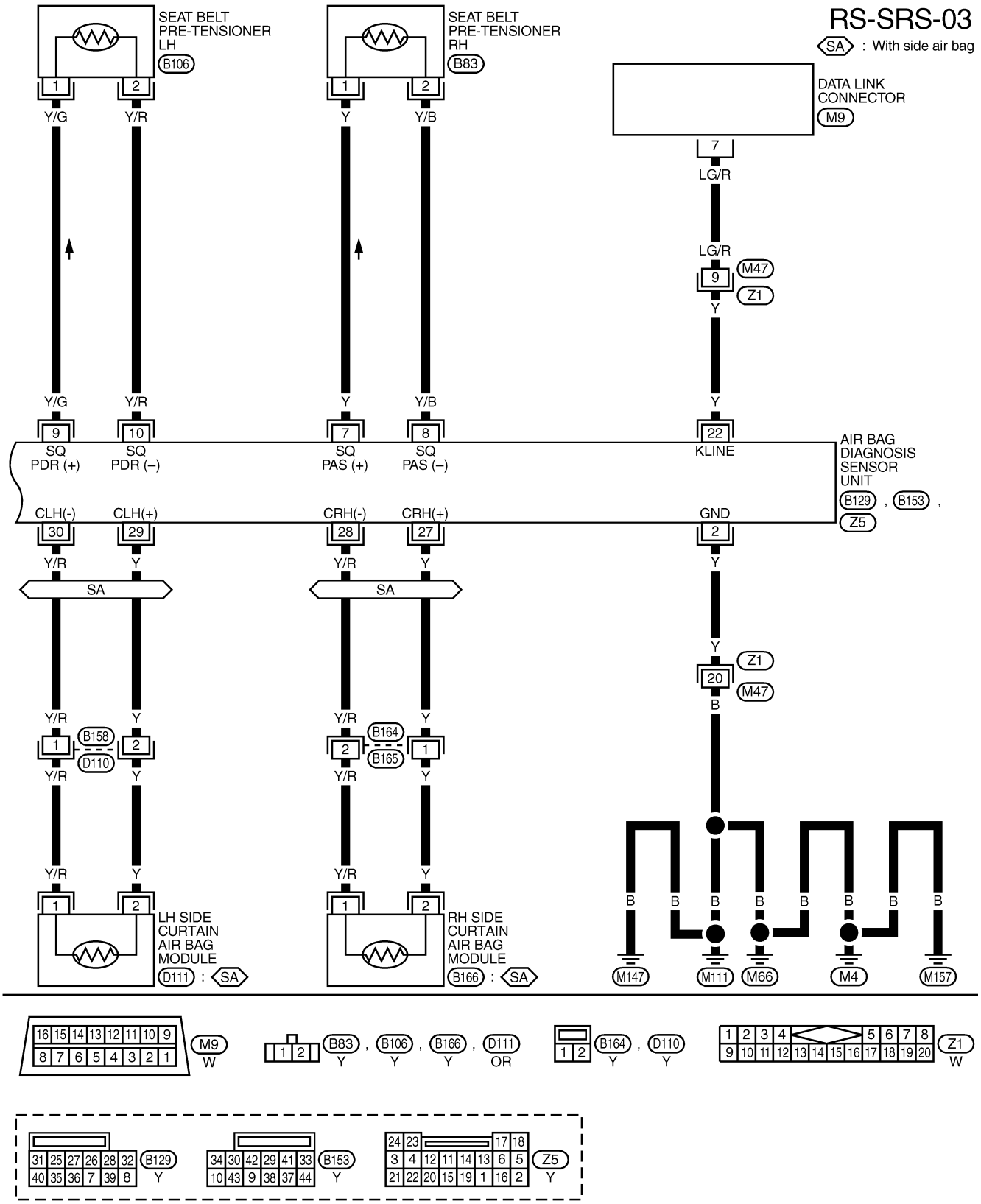
RS-SRS-03
SA : With side air bag
SEAT BELT PRE-TENSIONER LH
B106
SEAT BELT PRE-TENSIONER RH
B83
DATA LINK CONNECTOR
M9
Y/G
Y/R
Y
Y/B
LG/R
M47
Z1
SQ PDR (+)
SQ PDR (–)
SQ PAS (+)
SQ PAS (–)
KLINE
AIR BAG DIAGNOSIS SENSOR UNIT
B129
B153
Z5
CLH(-)
CLH(+)
CRH(-)
CRH(+)
GND
SA
B158
D110
B164
B165
B
LH SIDE CURTAIN AIR BAG MODULE
D111
RH SIDE CURTAIN AIR BAG MODULE
B166
M147
M111
M66
M4
M157
M9
W
B83
B106
B166
D111
OR
B164
D110
Z1
B129
B153
Z5

MRS454A

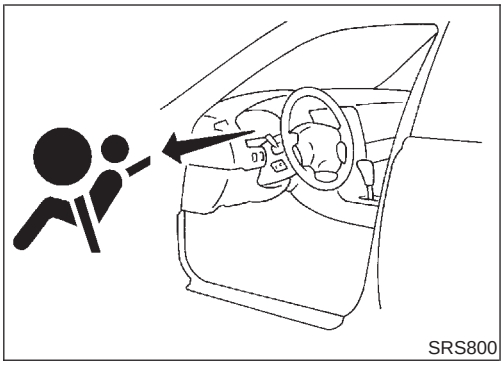

SRS Operation Check

NARS0044

DIAGNOSTIC PROCEDURE 1

NARS0044S01

Checking Air Bag Operation by Using "AIR BAG" Warning Lamp — User Mode

NARS0044S0101

1. After turning ignition switch from "OFF" to "ON", "AIR BAG" warning lamp operates.
2. Compare "AIR BAG" warning lamp operation to the chart below.

"AIR BAG" warning lamp operation — User mode —	SRS condition	Reference item
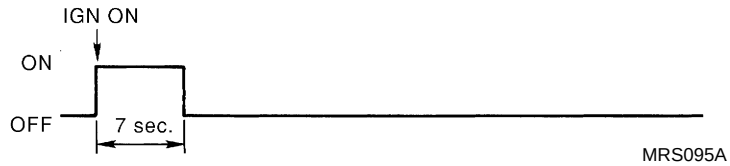 MRS095A	No malfunction is detected. No further action is necessary.	—
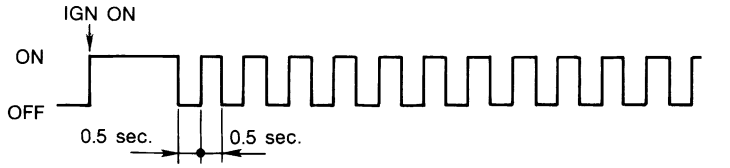 MRS096A	The system is malfunctioning and needs to be repaired as indicated.	Go to DIAGNOSTIC PROCEDURE 2 or 6 (RS-42 or RS-52).
MRS097A	Air bag is deployed. Seat belt pre-tensioner is activated.	Go to COLLISION DIAGNOSIS (RS-63).
	Air bag fuse, diagnosis sensor unit or harness is malfunctioning and needs to be repaired.	Go to DIAGNOSTIC PROCEDURE 9 (RS-60).
MRS098A	One of the following has occurred and needs to be repaired. ● Meter fuse is blown. ● "AIR BAG" warning lamp circuit has open or short. ● Diagnosis sensor unit is malfunctioning.	Go to DIAGNOSTIC PROCEDURE 10 (RS-62).

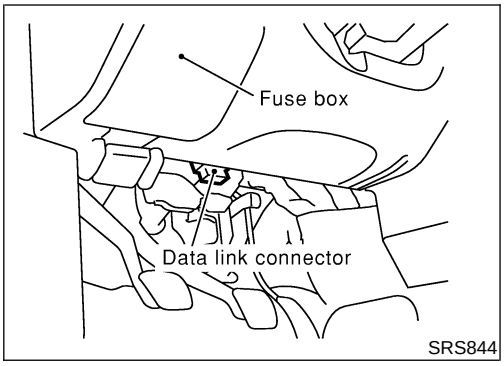

SRS844

Trouble Diagnoses with CONSULT-II

=NARS0045

DIAGNOSTIC PROCEDURE 2

NARS0045S01

Inspecting SRS malfunctioning parts by using CONSULT-II — Diagnosis mode

1. Turn ignition switch “OFF”.
2. Connect CONSULT-II to data link connector.

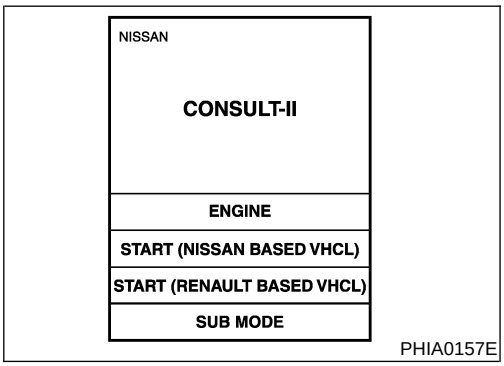

PHIA0157E

3. Turn ignition switch “ON”.
4. Touch “START (NISSAN BASED VHCL)”.

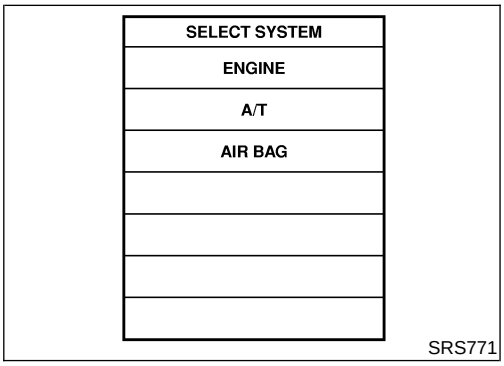

SRS771

5. Touch “AIR BAG”.

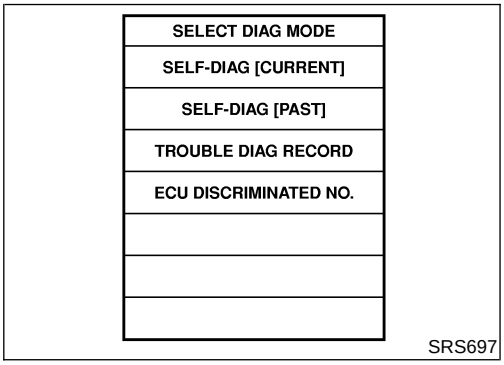

SRS697

6. Touch “SELF-DIAG [CURRENT]”.

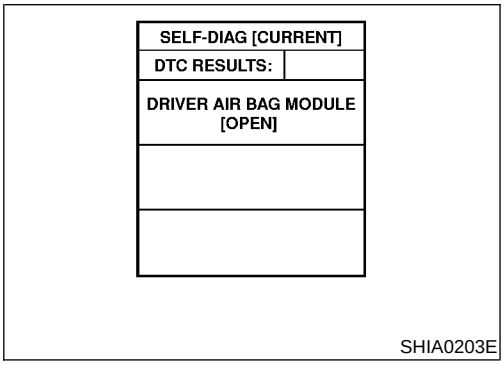

SHIA0203E

7. Diagnostic codes are displayed on “SELF-DIAG [CURRENT]”.

SELF-DIAG [CURRENT]	
DTC RESULTS:	
NO DTC IS DETECTED. FURTHER TESTING MAY BE REQUIRED.	

SRS701

If no malfunction is detected on "SELF-DIAG [CURRENT]" even though malfunction is detected in "SRS Operation Check", check the battery voltage.
If the battery voltage is less than 9V, charge the battery. Then go to DIAGNOSTIC PROCEDURE 3, page RS-46.
If the battery voltage is OK, go to DIAGNOSTIC PROCEDURE 4, page RS-47, to diagnose the following cases:

- Self-diagnostic results "SELF-DIAG [PAST]" (previously stored in the memory) might not be erased after repair.
- The SRS system malfunctions intermittently.

8. Touch "PRINT".
9. Compare diagnostic codes to "CONSULT-II Diagnostic Code Chart", page RS-43.
10. Touch "BACK" key of CONSULT-II until "SELECT SYSTEM" appears in order to return to User mode from Diagnosis mode.
11. Turn ignition switch "OFF", then turn off and disconnect CONSULT-II, and disconnect both battery cables.
12. Repair the system as outlined by the "Repair order" in "CONSULT-II Diagnostic Code Chart", that corresponds to the self-diagnostic result. For replacement procedure of component parts, refer to RS-16.
13. After repairing the system, go to DIAGNOSTIC PROCEDURE 3, page RS-46 for final checking.

CONSULT-II Diagnostic Code Chart ("SELF-DIAG [CURRENT]")

NARS0045S0101

Diagnostic item	Explanation		Repair order **"Recheck SRS at each replacement."**
NO DTC IS DETECTED.	When malfunction is indicated by the "AIR BAG" warning lamp in User mode	• Low battery voltage (Less than 9V)	• Go to DIAGNOSTIC PROCEDURE 3 (RS-46) after charging battery.
		• Self-diagnostic results "SELF-DIAG [PAST]" (previously stored in the memory) might not be erased after repair. • Intermittent malfunction has been detected in the past.	• Go to DIAGNOSTIC PROCEDURE 4 (RS-47).
	• No malfunction is detected.		• Go to DIAGNOSTIC PROCEDURE 3 (RS-46).
DRIVER AIRBAG MODULE [OPEN]	• Driver air bag module circuit is open. (including the spiral cable)		1. Visually check the wiring harness connection. 2. Replace the harness if it has visible damage. 3. Replace driver air bag module. (Before disposal, it must be deployed.) 4. Replace the spiral cable. 5. Replace the diagnosis sensor unit. 6. Replace the related harness.

Diagnostic item	Explanation	Repair order **"Recheck SRS at each replacement."**
DRIVER AIRBAG MODULE [VB-SHORT]	• Driver air bag module circuit is shorted to a power supply circuit. (including the spiral cable)	1. Visually check the wiring harness connection. 2. Replace the harness if it has visible damage. 3. Replace the spiral cable. 4. Replace driver air bag module. (Before disposal, it must be deployed.) 5. Replace the diagnosis sensor unit. 6. Replace the related harness.
DRIVER AIRBAG MODULE [GND-SHORT]	• Driver air bag module circuit is shorted to ground. (including the spiral cable)	
DRIVER AIRBAG MODULE [SHORT]	• Driver air bag module circuit is shorted between lines.	
ASSIST A/B MODULE [VB-SHORT]	• Front passenger air bag module circuit is shorted to some power supply circuit.	1. Visually check the wiring harness connection. 2. Replace the harness if it has visible damage. 3. Replace front passenger air bag module. (Before disposal, it must be deployed.) 4. Replace the diagnosis sensor unit. 5. Replace the related harness.
ASSIST A/B MODULE [OPEN]	• Front passenger air bag module circuit is open.	
ASSIST A/B MODULE [GND-SHORT]	• Front passenger air bag module circuit is shorted to ground.	
ASSIST A/B MODULE [SHORT]	• Front passenger air bag module circuit is shorted between lines.	
SIDE MODULE LH [OPEN]	• Front LH side air bag module circuit is open.	1. Visually check the wiring harness connection. 2. Replace the harness if it has visible damage. 3. Replace the front LH side air bag module. (Before disposal, it must be deployed.) 4. Replace the diagnosis sensor unit. 5. Replace the related harness.
SIDE MODULE LH [VB-SHORT]	• Front LH side air bag module circuit is shorted to a power supply circuit.	
SIDE MODULE LH [GND-SHORT]	• Front LH side air bag module circuit is shorted to ground.	
SIDE MODULE LH [SHORT]	• Front LH side air bag module circuit is shorted between lines.	
SIDE MODULE RH [OPEN]	• Front RH side air bag module circuit is open.	1. Visually check the wiring harness connection. 2. Replace the harness if it has visible damage. 3. Replace the front RH side air bag module. (Before disposal, it must be deployed.) 4. Replace the diagnosis sensor unit. 5. Replace the related harness.
SIDE MODULE RH [VB-SHORT]	• Front RH side air bag module circuit is shorted to a power supply circuit.	
SIDE MODULE RH [GND-SHORT]	• Front RH side air bag module circuit is shorted to ground.	
SIDE MODULE RH [SHORT]	• Front RH side air bag module circuit is shorted between lines.	
SATELLITE SENS LH [UNIT FAIL] SATELLITE SENS LH [COMM FAIL]	• LH side air bag (Satellite) sensor	1. Visually check the wiring harness connection. 2. Replace the harness if it has visible damage. 3. Replace the LH side air bag (satellite) sensor. 4. Replace the diagnosis sensor unit. 5. Replace the related harness.
SATELLITE SENS RH [UNIT FAIL] SATELLITE SENS RH [COMM FAIL]	• RH side air bag (Satellite) sensor	1. Visually check the wiring harness connection. 2. Replace the harness if it has visible damage. 3. Replace the RH side air bag (satellite) sensor. 4. Replace the diagnosis sensor unit. 5. Replace the related harness.

Diagnostic item	Explanation	Repair order **"Recheck SRS at each replacement."**
PRE-TEN FRONT LH [OPEN]	● Front LH seat belt pre-tensioner circuit is open.	1. Visually check the wiring harness connections. 2. Replace the harness if it has visible damage. 3. Replace front LH seat belt. (Before disposal, it must be deactivated.) 4. Replace the diagnosis sensor unit. 5. Replace the related harness.
PRE-TEN FRONT LH [VB-SHORT]	● Front LH seat belt pre-tensioner circuit is shorted to a power supply circuit.	
PRE-TEN FRONT LH [GND-SHORT]	● Front LH seat belt pre-tensioner circuit is shorted to ground.	
PRE-TEN FRONT LH [SHORT]	● Front LH pre-tensioner circuit is shorted between lines.	
PRE-TEN FRONT RH [OPEN]	● Front RH seat belt pre-tensioner circuit is open.	1. Visually check the wiring harness connections. 2. Replace the harness if it has visible damage. 3. Replace front RH seat belt. (Before disposal, it must be deactivated.) 4. Replace the diagnosis sensor unit. 5. Replace the related harness.
PRE-TEN FRONT RH [VB-SHORT]	● Front RH seat belt pre-tensioner circuit is shorted to a power supply circuit.	
PRE-TEN FRONT RH [GND-SHORT]	● Front RH seat belt pre-tensioner circuit is shorted to ground.	
PRE-TEN FRONT RH [SHORT]	● Front RH pre-tensioner circuit is shorted between lines.	
CURTAIN MODULE LH [OPEN]	● LH side curtain air bag module circuit is open.	1. Visually check the wiring harness connection. 2. Replace the harness if it has visible damage. 3. Replace LH side curtain air bag module. (Before disposal, it must be deployed.) 4. Replace the diagnosis sensor unit. 5. Replace the related harness.
CURTAIN MODULE LH [VB-SHORT]	● LH side curtain air bag module circuit is shorted to a power supply circuit.	
CURTAIN MODULE LH [GND-SHORT]	● LH side curtain air bag module circuit is shorted to ground.	
CURTAIN MODULE LH [SHORT]	● LH side curtain air bag module circuit is shorted between lines.	
CURTAIN MODULE RH [OPEN]	● RH side curtain air bag module circuit is open.	1. Visually check the wiring harness connection. 2. Replace the harness if it has visible damage. 3. Replace RH side curtain air bag module. (Before disposal, it must be deployed.) 4. Replace the diagnosis sensor unit. 5. Replace the related harness.
CURTAIN MODULE RH [VB-SHORT]	● RH side curtain air bag module circuit is shorted to a power supply circuit.	
CURTAIN MODULE RH [SHORT]	● RH side curtain air bag module circuit is shorted between lines.	
CURTAIN MODULE RH [GND-SHORT]	● RH side curtain air bag module circuit is shorted to ground.	
CONTROL UNIT	● Diagnosis sensor unit is malfunctioning.	1. Visually check the wiring harness connection. 2. Replace the diagnosis sensor unit.

*** Follow the procedures in numerical order when repairing malfunctioning parts. Confirm whether malfunction is eliminated using the air bag warning lamp or CONSULT-II each time repair is finished. If malfunction is still observed, proceed to the next step. When malfunction is eliminated, further repair work is not required.**

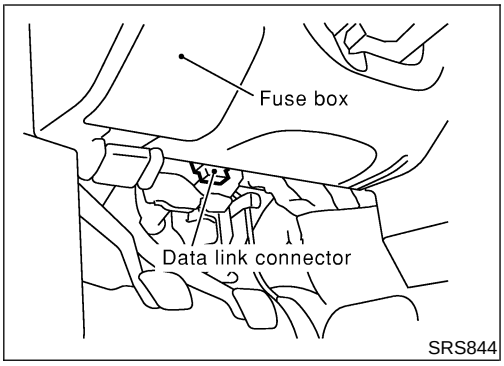

SRS844

DIAGNOSTIC PROCEDURE 3

NARS0045S02

Final checking after repairing SRS by using CONSULT-II — Diagnosis mode

1. After repairing SRS, connect both battery cables.
2. Connect CONSULT-II to Data link connector.
3. Turn ignition switch from "OFF" to "ON".

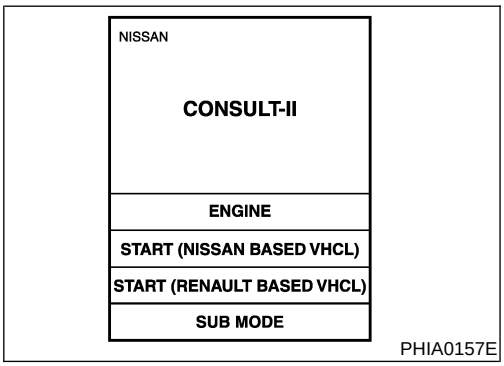

PHIA0157E

4. Touch "START (NISSAN BASED VHCL)".

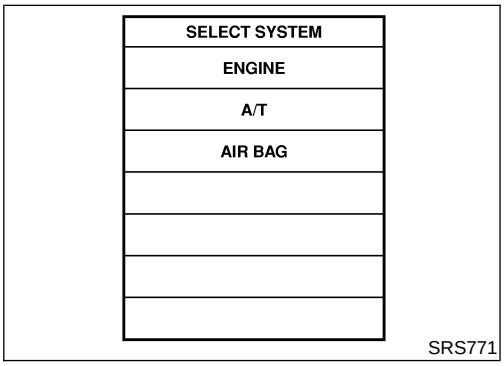

SRS771

5. Touch "AIR BAG".

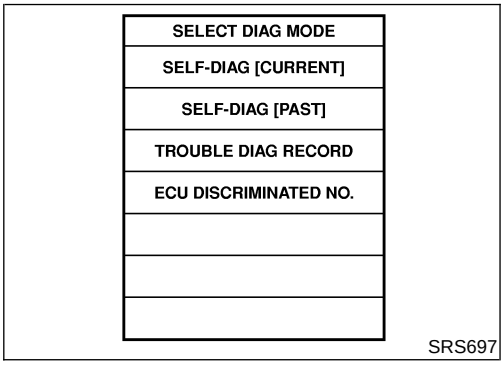

SRS697

6. Touch "SELF-DIAG [CURRENT]".

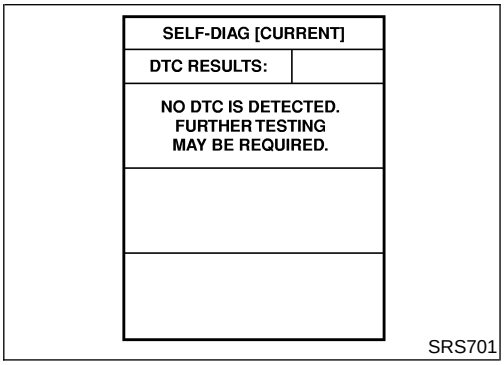

SRS701

7. If no malfunction is detected on "SELF-DIAG [CURRENT]", repair of SRS is completed. Go to step 8.
   If any malfunction is displayed on "SELF-DIAG [CURRENT]", the malfunctioning part is not repaired completely or another malfunctioning part is detected. Go to DIAGNOSTIC PROCEDURE 2, page RS-42, and repair malfunctioning part completely.

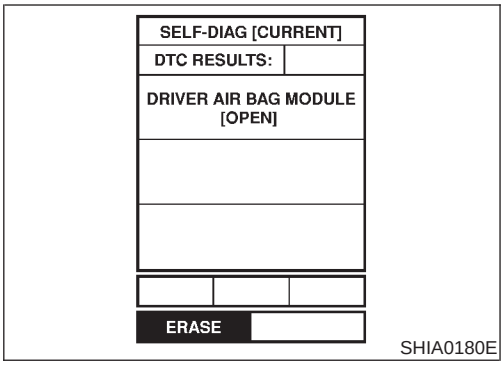

8. Touch "ERASE".

NOTE:
Touch "ERASE" to clear the memory of the malfunction ("SELF-DIAG [PAST]").
If the memory of the malfunction in "SELF-DIAG [PAST]" is not erased, the User mode shows the system malfunction by the operation of the warning lamp even if the malfunction is repaired completely.

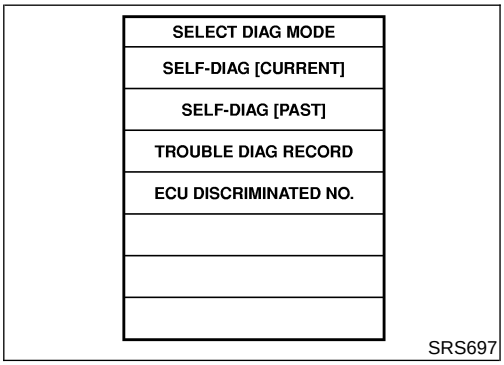

9. Touch "BACK" key of CONSULT-II to "SELECT SYSTEM" screen. Touch "SELF-DIAG [PAST]".

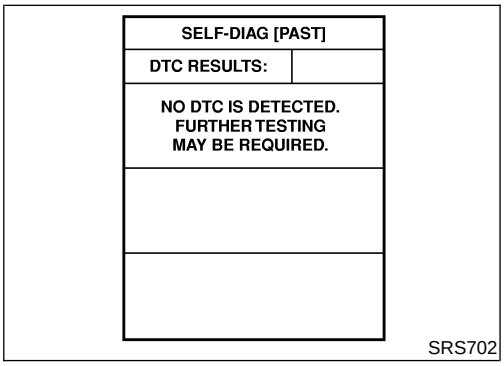

10. Check that no malfunction is detected on "SELF-DIAG [PAST]".
11. Touch "BACK" key of CONSULT-II until "SELECT SYSTEM" appears in order to return to User mode from Diagnosis mode.
12. Turn ignition switch "OFF", then turn off and disconnect CONSULT-II.
13. Go to "SRS Operation Check", page RS-41 to check SRS operation by using "AIR BAG" warning lamp with User mode.

DIAGNOSTIC PROCEDURE 4 (CONTINUED FROM DIAGNOSTIC PROCEDURE 2)

NARS0045S03

Inspecting SRS malfunctioning record

1	CONSIDER POSSIBILITY OF NOT ERASING SELF-DIAGNOSTIC RESULTS AFTER REPAIRING	
Is it the first time for maintenance of SRS?		
	Yes or No	
Yes	▶	Go to DIAGNOSTIC PROCEDURE 5 (RS-48).
No	▶	Self-diagnostic results "SELF-DIAG [PAST]" (previously stored in the memory) might not be erased after repair. Go to DIAGNOSTIC PROCEDURE 3, step 8 (RS-46).

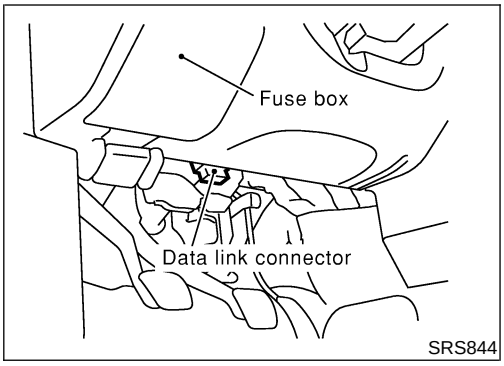

SRS844

DIAGNOSTIC PROCEDURE 5

NARS0045S04

Inspecting SRS intermittent malfunction by using CONSULT-II — Diagnosis mode

1. Turn ignition switch "OFF".
2. Connect CONSULT-II to data link connector.

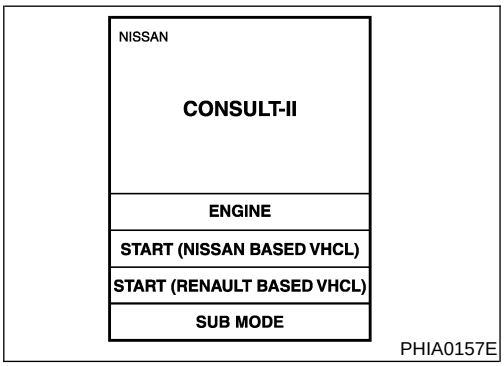

PHIA0157E

3. Turn ignition switch "ON".
4. Touch "START (NISSAN BASED VHCL)".

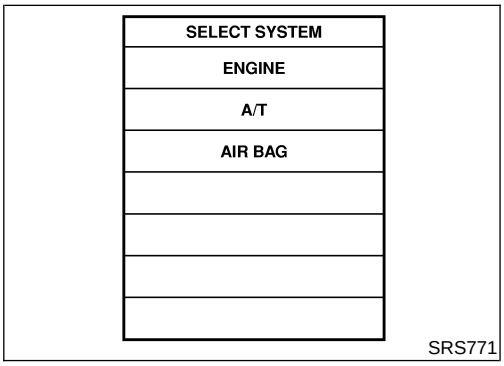

SRS771

5. Touch "AIR BAG".

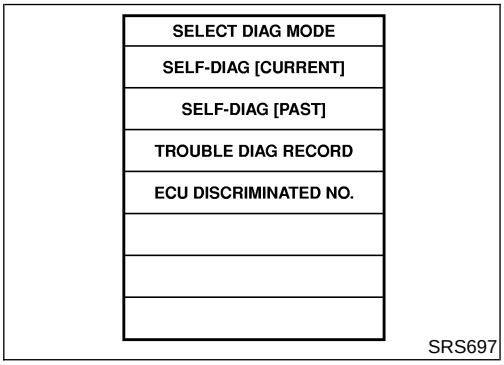

SRS697

6. Touch "SELF-DIAG [PAST]".

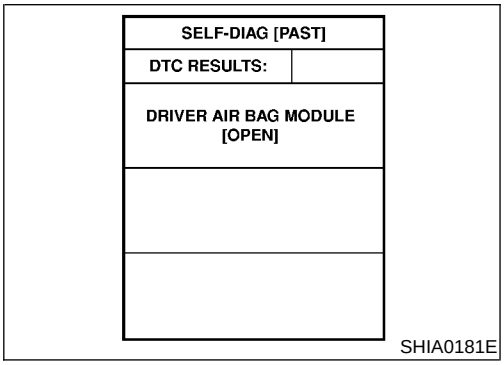

SHIA0181E

7. If diagnostic codes are displayed on "SELF-DIAG [PAST]", go to step 10.

SELF-DIAG [PAST]	
DTC RESULTS:	
NO DTC IS DETECTED. FURTHER TESTING MAY BE REQUIRED.	

SRS702

If no malfunction is detected on "SELF-DIAG [PAST]", touch "BACK" and go back to "SELECT DIAG MODE".

SELECT DIAG MODE
SELF-DIAG [CURRENT]
SELF-DIAG [PAST]
TROUBLE DIAG RECORD
ECU DISCRIMINATED NO.

SRS697

8. Touch "TROUBLE DIAG RECORD".

NOTE:
With "TROUBLE DIAG RECORD", diagnosis results previously erased by a reset operation can be displayed.

TROUBLE DIAG RECORD	
DTC RESULTS:	
DRIVER AIR BAG MODULE [OPEN]	

SHIA0182E

9. Diagnostic code is displayed on "TROUBLE DIAG RECORD".
10. Touch "PRINT".
11. Compare diagnostic codes to "Intermittent Malfunction Diagnostic Code Chart", page RS-50.
12. Touch "BACK" key of CONSULT-II until "SELECT SYSTEM" appears.
13. Turn ignition switch "OFF", then turn off and disconnect CONSULT-II, and disconnect both battery cables.
14. Repair the system as outlined by the "Repair order" in "Intermittent Malfunction Diagnostic Code Chart", that corresponds to the self-diagnostic result. For replacement procedure of component parts, refer to RS-16.
15. Go to DIAGNOSTIC PROCEDURE 3, page RS-46, for final checking.

Intermittent Malfunction Diagnostic Code Chart ("SELF-DIAG [PAST]" or "TROUBLE DIAG RECORD")

NARS0045S0401

Diagnostic item	Explanation		Repair order
NO DTC IS DETECTED.	When malfunction is indicated by the "AIR BAG" warning lamp in User mode	• Low battery voltage (Less than 9V)	• Go to DIAGNOSTIC PROCEDURE 3 (RS-46) after charging battery.
	• No malfunction is detected.		• Go to DIAGNOSTIC PROCEDURE 3 (RS-46).
DRIVER AIRBAG MODULE [OPEN]	• Driver air bag module circuit is open. (including the spiral cable)		1. Visually check the wiring harness connection. 2. Replace the harness if it has visible damage. 3. If the harness check result is OK, replace driver air bag module (Before disposal, it must be deployed.), diagnosis sensor unit and spiral cable.
DRIVER AIRBAG MODULE [VB-SHORT]	• Driver air bag module circuit is shorted to a power supply circuit. (including the spiral cable)		
DRIVER AIRBAG MODULE [GND-SHORT]	• Driver air bag module circuit is shorted to ground. (including the spiral cable)		
DRIVER AIRBAG MODULE [SHORT]	• Driver air bag module circuit is shorted between lines.		
ASSIST A/B MODULE [VB-SHORT]	• Front passenger air bag module circuit is shorted to a power supply circuit.		1. Visually check the wiring harness connection. 2. Replace the harness if it has visible damage. 3. If the harness check result is OK, replace front passenger air bag module (Before disposal, it must be deployed.), and diagnosis sensor unit.
ASSIST A/B MODULE [OPEN]	• Front passenger air bag module circuit is open.		
ASSIST A/B MODULE [GND-SHORT]	• Front passenger air bag module circuit is shorted to ground.		
ASSIST A/B MODULE [SHORT]	• Front passenger air bag module circuit is shorted between lines.		
SIDE MODULE LH [OPEN]	• Front LH side air bag module circuit is open.		1. Visually check the wiring harness connection. 2. Replace the harness if it has visible damage. 3. If the harness check is OK, replace the diagnosis sensor unit and front LH side air bag module. (Before disposing of the front LH side air bag module, it must be deployed.)
SIDE MODULE LH [VB-SHORT]	• Front LH side air bag module circuit is shorted to a power supply circuit.		
SIDE MODULE LH [GND-SHORT]	• Front LH side air bag module circuit is shorted to ground.		
SIDE MODULE LH [SHORT]	• Front LH side air bag module circuit is shorted between lines.		
SIDE MODULE RH [OPEN]	• Front RH side air bag module circuit is open.		1. Visually check the wiring harness connection. 2. Replace the harness if it has visible damage. 3. If the harness check is OK, replace the diagnosis sensor unit and front RH side air bag module. (Before disposing of the front RH side air bag module, it must be deployed.)
SIDE MODULE RH [VB-SHORT]	• Front RH side air bag module circuit is shorted to a power supply circuit.		
SIDE MODULE RH [GND-SHORT]	• Front RH side air bag module circuit is shorted to ground.		
SIDE MODULE RH [SHORT]	• Front RH side air bag module circuit is shorted between lines.		
SATELLITE SENS LH [UNIT FAIL] SATELLITE SENS LH [COMM FAIL]	• LH side air bag (Satellite) sensor		1. Visually check the wiring harness connection. 2. Replace the harness if it has visible damage. 3. If the harness check is OK, replace the diagnosis sensor unit and LH side air bag (Satellite) sensor.

Diagnostic item	Explanation	Repair order
SATELLITE SENS RH [UNIT FAIL] SATELLITE SENS RH [COMM FAIL]	● RH side air bag (Satellite) sensor	1. Visually check the wiring harness connection. 2. Replace the harness if it has visible damage. 3. If the harness check is OK, replace the diagnosis sensor unit and RH side air bag (Satellite) sensor.
PRE-TEN FRONT LH [OPEN]	● Front LH seat belt pre-tensioner circuit is open.	1. Visually check the wiring harness connections. 2. Replace the harness if it has visible damage. 3. If the harness check is OK, replace the diagnosis sensor unit and front LH seat belt. (Before disposing of the front LH seat belt pre-tensioner, it must be deployed.)
PRE-TEN FRONT LH [VB-SHORT]	● Front LH seat belt pre-tensioner circuit is shorted to a power supply circuit.	
PRE-TEN FRONT LH [GND-SHORT]	● Front LH seat belt pre-tensioner circuit is shorted to ground.	
PRE-TEN FRONT LH [SHORT]	● Front LH pre-tensioner circuit is shorted to between lines.	
PRE-TEN FRONT RH [OPEN/VB-SHORT]	● Front RH seat belt pre-tensioner circuit is open.	1. Visually check the wiring harness connections. 2. Replace the harness if it has visible damage. 3. If the harness check is OK, replace the diagnosis sensor unit and front RH seat belt. (Before disposing of the front RH seat belt pre-tensioner, it must be deployed.)
PRE-TEN FRONT RH [VB-SHORT]	● Front RH seat belt pre-tensioner circuit is shorted to a power supply circuit.	
PRE-TEN FRONT RH [SHORT]	● Front RH pre-tensioner circuit is shorted between lines.	
PRE-TEN FRONT RH [GND-SHORT]	● Front RH pre-tensioner circuit is shorted to ground.	
CURTAIN MODULE LH [OPEN]	● LH side curtain air bag module circuit is open.	1. Visually check the wiring harness connection. 2. Replace the harness if it has visible damage. 3. If the harness check is OK, replace the diagnosis sensor unit and LH side curtain air bag module. (Before disposing of the LH side curtain air bag module, it must be deployed.)
CURTAIN MODULE LH [VB-SHORT]	● LH side curtain air bag module circuit is shorted to a power supply circuit.	
CURTAIN MODULE LH [GND-SHORT]	● LH side curtain air bag module circuit is shorted to ground.	
CURTAIN MODULE LH [SHORT]	● LH side curtain air bag module circuit is shorted between lines.	
CURTAIN MODULE RH [OPEN]	● RH side curtain air bag module circuit is open.	1. Visually check the wiring harness connection. 2. Replace the harness if it has visible damage. 3. If the harness check is OK, replace the diagnosis sensor unit and RH side curtain air bag module. (Before disposing of the RH side curtain air bag module, it must be deployed.)
CURTAIN MODULE RH [VB-SHORT]	● RH side curtain air bag module circuit is shorted to a power supply circuit.	
CURTAIN MODULE RH [SHORT]	● RH side curtain air bag module circuit is shorted between lines.	
CURTAIN MODULE RH [GND-SHORT]	● RH side curtain air bag module circuit is shorted to ground.	
CONTROL UNIT	● Diagnosis sensor unit is malfunctioning.	1. Visually check the wiring harness connection. 2. Replace the harness if it has visible damage. 3. If the harness check is OK, replace the diagnosis sensor unit.

* Follow the procedures in numerical order when repairing malfunctioning parts, then make the final system check.

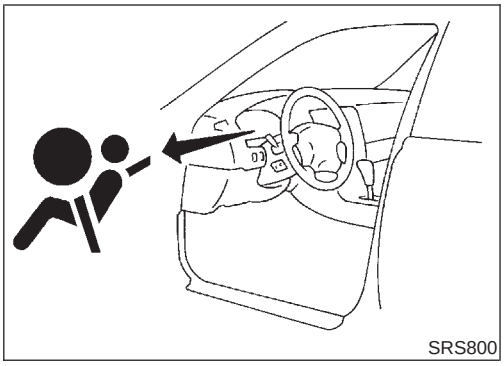

Trouble Diagnoses without CONSULT-II

NARS0046

DIAGNOSTIC PROCEDURE 6

NARS0046S01

Inspecting SRS malfunctioning parts by using "AIR BAG" warning lamp — Diagnosis mode

NOTE:
SRS will not enter Diagnosis mode if no malfunction is detected in User mode.

1. Turn ignition switch "ON".
2. After "AIR BAG" warning lamp lights for 7 seconds, turn ignition switch "OFF" within 1 second.
3. Wait more than 3 seconds.
4. Repeat steps 1 to 3 twice (Perform 3 times in total).
5. Turn ignition switch "ON".
   SRS is now in Diagnosis mode.
6. "AIR BAG" warning lamp operates in Diagnosis mode as follows:

NOTE:
If SRS does not enter Diagnosis mode even though malfunction is detected in User mode, check the battery voltage.
If the battery voltage is less than 9V, charge the battery. Then go to DIAGNOSTIC PROCEDURE 7, page RS-58.
If the battery voltage is OK, replace the diagnosis sensor unit.

No.	"AIR BAG" warning lamp flash pattern — Diagnosis mode —		SRS condition
1	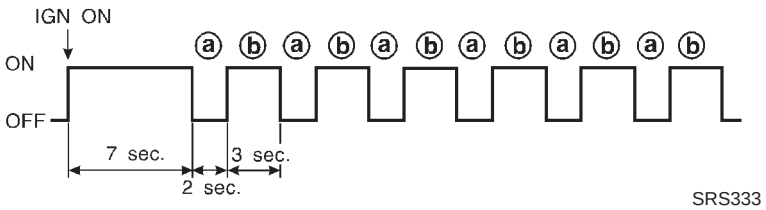	**a** through **b** are repeated.	• Diagnosis results (previously stored in the memory) might not be erased after repair. • Intermittent malfunction has been detected in the past. Go to DIAGNOSTIC PROCEDURE 8 (RS-59).
2	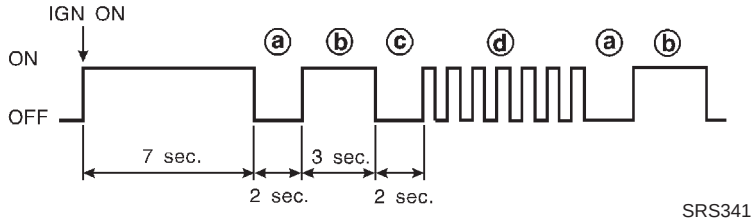	**a** through **d** are repeated. **b** — Driver and passenger air bag and seat belt pre-tensioner marker (For identifying driver air bag, passenger air bag and/or seat belt pre-tensioners malfunctioning) **d** — Indicates malfunctioning part. The number of flash varies with malfunctioning part (0.5 sec. ON and 0.5 sec. OFF is counted as one flash.)	The system is malfunctioning and needs to be repaired.
3	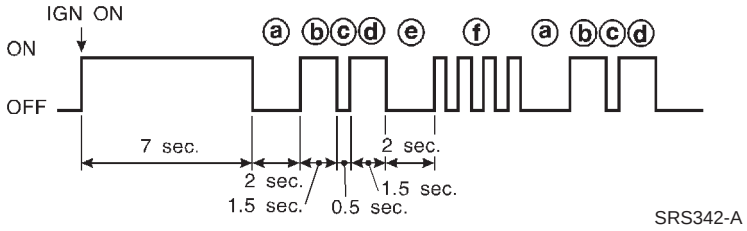	**a** through **f** are repeated. **b**, **c**, **d** — Side air bag marker (For identifying side air bag malfunctioning) **f** — Indicates malfunctioning part. The number of flash varies with malfunctioning part (0.5 sec. ON and 0.5 sec. OFF is counted as one flash.)	

7. Malfunctioning part is indicated by the number of flashes (part **d** or **f**). Compare the number of flashes to "Air Bag Warning Lamp Flash Code Chart", page RS-54, and locate malfunctioning part.
8. Turn ignition switch "OFF", and disconnect both battery cables.
9. Repair the system as outlined by the "Repair order" in "Warning Lamp Flash Code Chart" that corresponds to the flash code. For replacement procedure of component parts, refer to RS-16.
10. After repairing the system, go to DIAGNOSTIC PROCEDURE 7, page RS-58.

Air Bag Warning Lamp Flash Code Chart (Diagnosis mode)

NARS0046S0101

• Diagnosis results (previously stored in the memory) might not be erased after repair. • Intermittent malfunction has been detected in the past.	Flash pattern	
	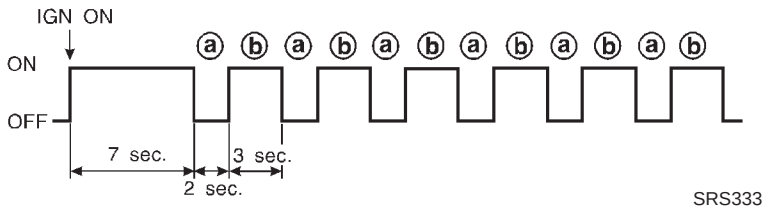	**a** through **b** are repeated.
	Repair order	
	• Go to DIAGNOSTIC PROCEDURE 8 (RS-59).	
Front RH seat belt pre-tensioner circuit is malfunctioning. (**d**: 1 flash)	Flash pattern	
	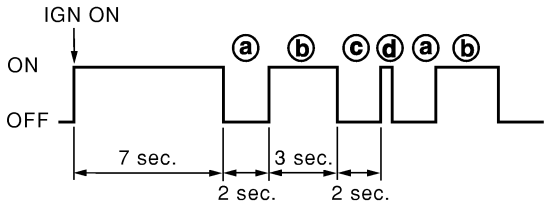	**a** through **d** are repeated. **d** — One flash indicates malfunctioning front RH seat belt pre-tensioner circuit.
	Repair order ("Recheck SRS at each replacement").	
	1. Visually check the wiring harness connections. 2. Replace the harness if it has visible damage. 3. Replace front RH seat belt pre-tensioner. (Before disposal, it must be deactivated.) 4. Replace the diagnosis sensor unit. 5. Replace the related harness.	
Driver air bag module circuit is malfunctioning. (**d**: 2 flashes)	Flash pattern	
	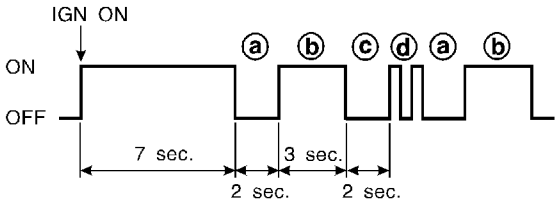	**a** through **d** are repeated. **d** — Two flashes indicate malfunctioning driver's air bag module circuit.
	Repair order ("Recheck SRS at each replacement.")	
	1. Visually check the wiring harness connection. 2. Replace the harness if it has visible damage. 3. Replace the spiral cable. 4. Replace driver air bag module. (Before disposal, it must be deployed.) 5. Replace the diagnosis sensor unit. 6. Replace the related harness.	

Front LH seat belt pre-tensioner circuit is malfunctioning. (**d**: 3 flashes)	Flash pattern	
	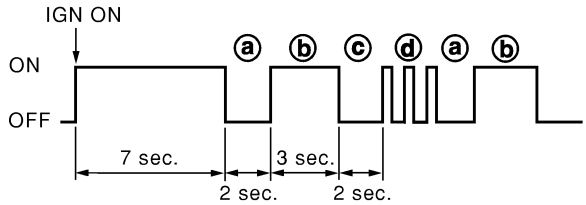 SRS802	**a** through **d** are repeated. **d** — Three flashes indicate malfunctioning front LH seat belt pre-tensioner circuit.
	Repair order ("Recheck SRS at each replacement").	
	1. Visually check the wiring harness connections. 2. Replace the harness if it has visible damage. 3. Replace front LH seat belt pre-tensioner. (Before disposal, it must be deactivated.) 4. Replace the diagnosis sensor unit. 5. Replace the related harness.	
Diagnosis sensor unit is malfunctioning. (**d**: 7 flashes)	Flash pattern	
	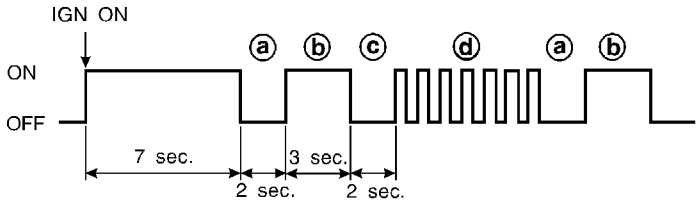 SRS335	**a** through **d** are repeated. **d** — Seven flashes indicate malfunctioning diagnosis sensor unit.
	Repair order ("Recheck SRS at each replacement.")	
	1. Visually check the wiring harness connections. 2. Replace the harness if it has visible damage. 3. Replace the diagnosis sensor unit. 4. Replace the related harness.	
Front passenger air bag module circuit is malfunctioning. (**d**: 8 flashes)	Flash pattern	
	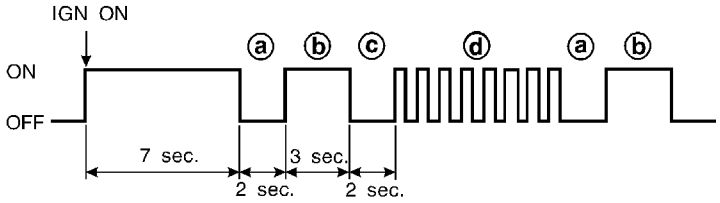 SRS336	**a** through **d** are repeated. **d** — Eight flashes indicate malfunctioning front passenger air bag module circuit.
	Repair order ("Recheck SRS at each replacement.")	
	1. Visually check the wiring harness connection. 2. Replace the harness if it has visible damage. 3. Replace front passenger air bag module. (Before disposal, it must be deployed.) 4. Replace the diagnosis sensor unit. 5. Replace the related harness.	

Front RH side air bag module circuit is malfunctioning. (**f**: 1 flash)	Flash pattern	
	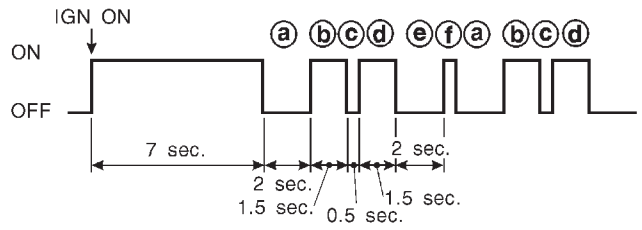	**a** through **f** are repeated. **f** — One flash indicates malfunctioning front RH side air bag module circuit.
	Repair order ("Recheck SRS at each replacement.")	
	1. Visually check the wiring harness connection. 2. Replace the harness if it has visible damage. 3. Replace front RH side air bag module. (Before disposal, it must be deployed.) 4. Replace the diagnosis sensor unit. 5. Replace the related harness.	
Front LH side air bag module circuit is malfunctioning. (**f**: 2 flashes)	Flash pattern	
	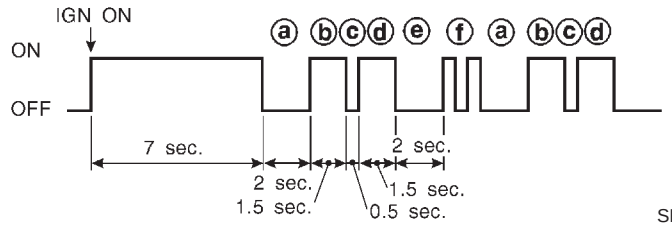	**a** through **f** are repeated. **f** — Two flashes indicate malfunctioning front LH side air bag module circuit.
	Repair order ("Recheck SRS at each replacement.")	
	1. Visually check the wiring harness connection. 2. Replace the harness if it has visible damage. 3. Replace front LH side air bag module. (Before disposal, it must be deployed.) 4. Replace the diagnosis sensor unit. 5. Replace the related harness.	
RH side air bag (Satellite) sensor is malfunctioning. (**f**: 3 flashes)	Flash pattern	
	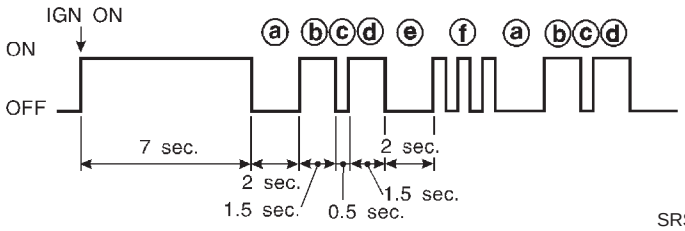	**a** through **f** are repeated. **f** — Three flashes indicate malfunctioning RH side air bag (Satellite) sensor circuit.
	Repair order ("Recheck SRS at each replacement.")	
	1. Visually check the wiring harness connection. 2. Replace the harness if it has visible damage. 3. Replace the RH side air bag (Satellite) sensor. 4. Replace the diagnosis sensor unit. 5. Replace the related harness.	

LH side air bag (Satellite) sensor is malfunctioning. (**f**: 4 flashes)	Flash pattern	
	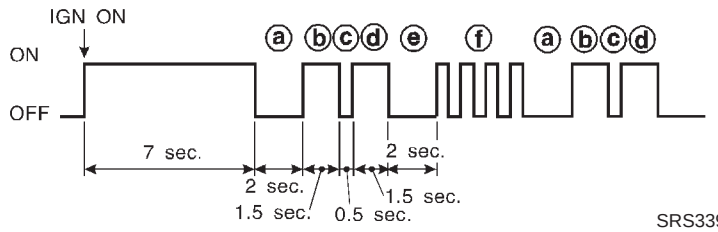 SRS339-A	**a** through **f** are repeated. **f** — Four flashes indicate malfunctioning LH side air bag (Satellite) sensor circuit.
	Repair order ("Recheck SRS at each replacement.")	
	1. Visually check the wiring harness connection. 2. Replace the harness if it has visible damage. 3. Replace the LH side air bag (Satellite) sensor. 4. Replace the diagnosis sensor unit. 5. Replace the related harness.	
Side curtain air bag module (RH) circuit is malfunctioning. (**f**: 5 flashes)	Flash pattern	
	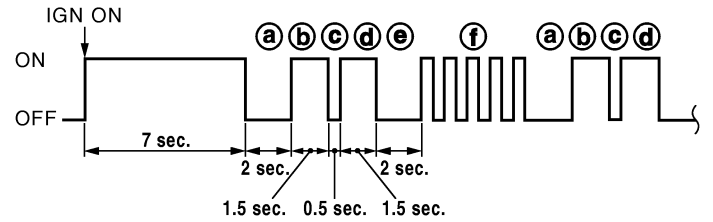 SRS024A	**a** through **f** are repeated. **f** — Five flashes indicate malfunctioning RH side curtain air bag module circuit.
	Repair order ("Recheck SRS at each replacement.")	
	1. Visually check the wiring harness connection. 2. Replace the harness if it has visible damage. 3. Replace RH side curtain air bag module. (Before disposal, it must be deployed.) 4. Replace the diagnosis sensor unit. 5. Replace the related harness.	
LH side curtain air bag module circuit is malfunctioning. (**f**: 6 flashes)	Flash pattern	
	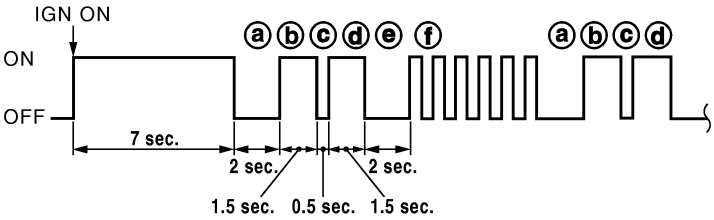 SRS025A	**a** through **f** are repeated. **f** — Six flashes indicate malfunctioning LH side curtain air bag module circuit.
	Repair order ("Recheck SRS at each replacement.")	
	1. Visually check the wiring harness connection. 2. Replace the harness if it has visible damage. 3. Replace LH side curtain air bag module. 4. Replace the diagnosis sensor unit. 5. Replace the related harness.	

*** Follow the procedures in numerical order when repairing malfunctioning parts. Confirm whether malfunction is eliminated using the air bag warning lamp or CONSULT-II each time repair is finished. If malfunction is still observed, proceed to the next step. When malfunction is eliminated, further repair work is not required.**

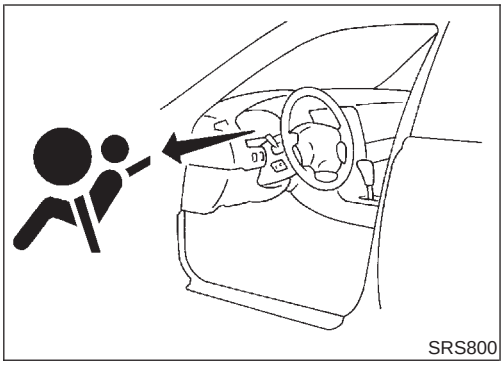

DIAGNOSTIC PROCEDURE 7

NARS0046S02

Final checking after repairing SRS by using "AIR BAG" warning lamp — Diagnosis mode and User mode

1. After repairing SRS connect both battery cables.
2. Turn ignition switch from "OFF" to "ON".
3. "AIR BAG" warning lamp operates in Diagnosis mode as follows:

No.	"AIR BAG" warning lamp flash pattern — Diagnosis mode —		SRS condition
1	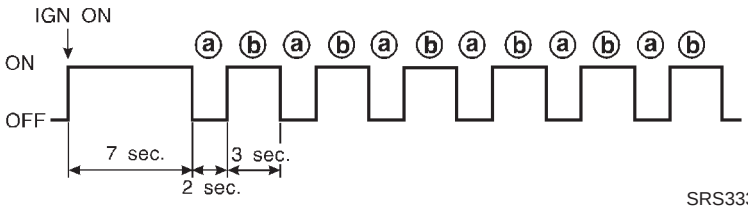	**a** through **b** are repeated.	No malfunction is detected or repair is completed. No further action is necessary.
2	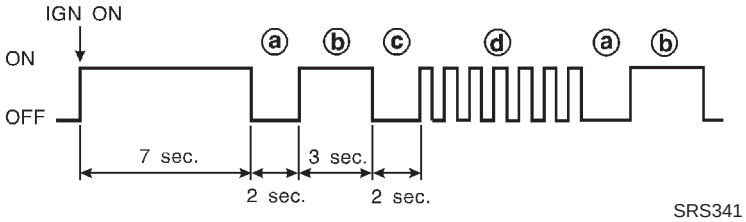	**a** through **d** are repeated. **b** — Driver and passenger air bag and seat belt pre-tensioner marker (For identifying driver air bag, passenger air bag and/or seat belt pre-tensioners malfunctioning) **d** — Indicates malfunctioning part. The number of flashes varies with malfunctioning part (0.5 sec. ON and 0.5 sec. OFF is counted as one flash.)	The system is malfunctioning and needs to be repaired.
3	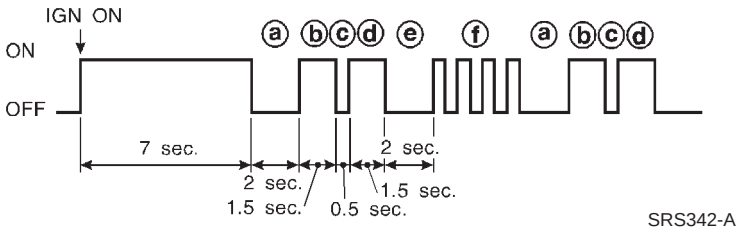	**a** through **f** are repeated. **b**, **c**, **d** — Side air bag marker (For identifying side air bag malfunctioning) **f** — Indicates malfunctioning part. The number of flashes varies with malfunctioning part (0.5 sec. ON and 0.5 sec. OFF is counted as one flash.)	

NOTE:
When diagnosis sensor unit is replaced with new one, "AIR BAG" warning lamp will operate in User mode. Checking "AIR BAG" warning lamp operation in Diagnosis mode is not required. Go to step 6.

4. If "AIR BAG" warning lamp operates as shown in No. 1 in chart above, turn ignition switch "OFF" to reset from Diagnosis mode to User mode and to erase the memory of the malfunction. Then go to step 6.
   If "AIR BAG" warning lamp operates as shown in No. 2 or No. 3 in chart above, the malfunctioning part is not repaired completely, or another malfunctioning part is detected. Go to DIAGNOSTIC PROCEDURE 6, page RS-52, and repair malfunctioning part completely.
5. Turn ignition switch "ON". "AIR BAG" warning lamp operates in User mode. Compare "AIR BAG" warning lamp operation to the chart below.

NOTE:
If switching Diagnosis mode to User mode is required while malfunction is being detected, by turning ignition switch as follows:

1) Turn ignition switch "ON".
2) After "AIR BAG" warning lamp lights for 7 seconds, turn ignition switch "OFF" within 1 second.
3) Wait more than 3 seconds.
4) Repeat steps 1 to 3 twice (Perform 3 times in total).
5) Turn ignition switch "ON".

SRS is now in User mode.

"AIR BAG" warning lamp operation — User mode —	SRS condition	Reference item
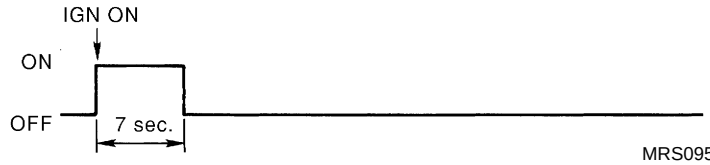 MRS095A	No malfunction is detected. No further action is necessary.	—
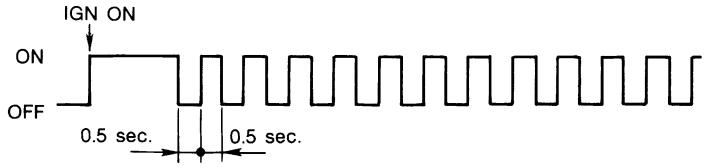 MRS096A	The system is malfunctioning and needs to be repaired as indicated.	Go to DIAGNOSTIC PROCEDURE 6 (RS-52).
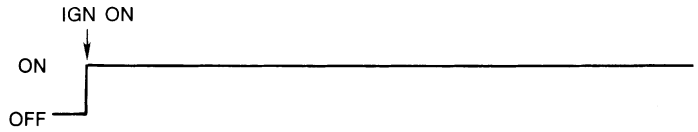 MRS097A	Air bag is deployed. Seat belt pre-tensioner is activated.	Go to COLLISION DIAGNOSIS (RS-63).
	Air bag fuse, diagnosis sensor unit or harness is malfunctioning and needs to be repaired.	Go to DIAGNOSTIC PROCEDURE 9 (RS-60).
MRS098A	One of the following has occurred and needs to be repaired. ● Meter fuse is blown. ● "AIR BAG" warning lamp circuit has open or short. ● Diagnosis sensor unit is malfunctioning.	Go to DIAGNOSTIC PROCEDURE 10 (RS-62).

DIAGNOSTIC PROCEDURE 8 (CONTINUED FROM DIAGNOSTIC PROCEDURE 6)

NARS0046S03

Inspecting SRS malfunctioning record

1	CONSIDER POSSIBILITY OF NOT ERASING SELF-DIAGNOSTIC RESULT AFTER REPAIRING	
Is it the first time for maintenance of SRS? **Yes or No**		
Yes	▶	Go to DIAGNOSTIC PROCEDURE 5 (RS-48). (Further inspection cannot be performed without CONSULT-II.)
No	▶	Diagnosis results (previously stored in the memory) might not be erased after repair. Go to DIAGNOSTIC PROCEDURE 7, step 5 (RS-58).

Trouble Diagnoses: “AIR BAG” Warning Lamp Does Not Turn Off

=NARS0047

DIAGNOSTIC PROCEDURE 9

NARS0047S01

1	SEE THE DEPLOYMENT OF AIR BAG MODULE	
Is air bag module deployed?		
	Yes or No	
Yes	▶	Refer to COLLISION DIAGNOSIS (RS-63).
No	▶	GO TO 2.

2	CHECK AIR BAG FUSE	
Is SRS “Air Bag” fuse OK?		
	OK or NG	
OK	▶	GO TO 4.
NG	▶	GO TO 3.

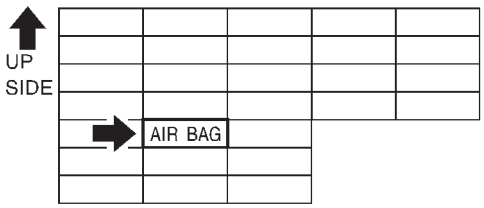

SRS577

3	CHECK AIR BAG FUSE AGAIN	
Replace “AIR BAG” fuse and turn ignition switch ON.		
	Is “AIR BAG” fuse blown again?	
Yes	▶	Repair main harness and/or replace air bag harness.
No	▶	**INSPECTION END**

4	CHECK DIAGNOSIS SENSOR UNIT

Connect CONSULT-II and touch “START”.
- Is “AIR BAG” displayed on CONSULT-II?

SELECT SYSTEM
ENGINE
A/T
AIR BAG

SRS771

Yes or No

Yes	▶	GO TO 5.
No	▶	Visually check the wiring harness connection of diagnosis sensor unit. If the harness connection check result is OK, replace diagnosis sensor unit.

5	CHECK HARNESS CONNECTION

Is harness connection between warning lamp and diagnosis sensor unit OK?

OK or NG

OK	▶	Replace diagnosis sensor unit.
NG	▶	Connect “AIR BAG” warning lamp and diagnosis sensor unit connector properly. If “AIR BAG” warning lamp still does not go off, replace harness.

Trouble Diagnoses: “AIR BAG” Warning Lamp Does Not Turn On

=NARS0048

DIAGNOSTIC PROCEDURE 10

NARS0048S01

1	CHECK “METER” FUSE
Is meter fuse OK?	

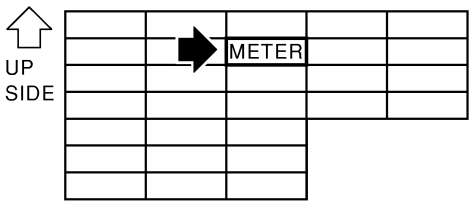

SRS852

OK or NG

OK	▶	GO TO 3.
NG	▶	GO TO 2.

2	CHECK “METER” FUSE AGAIN
Replace meter fuse and turn ignition switch ON.	

Is meter fuse blown again?

Yes	▶	Repair main harness.
No	▶	**INSPECTION END**

3	CHECK HARNESS CONNECTION BETWEEN DIAGNOSIS SENSOR UNIT AND “AIR BAG” WARNING LAMP
Disconnect diagnosis sensor unit connector and turn ignition switch “ON”. ● Does “AIR BAG” warning lamp turn on?	

Yes or No

Yes	▶	Replace diagnosis sensor unit.
No	▶	Check the ground circuit of “AIR BAG” warning lamp.

Collision Diagnosis

=NARS0049

FOR FRONTAL COLLISION

NARS0049S01

To repair the SRS, perform the following steps.

When SRS (except the side air bag) is activated in a collision:

1) Replace the diagnosis sensor unit.
2) Remove the air bag modules (except the side air bag module) and seat belt pre-tensioner assemblies.
3) Check the SRS components using the table shown below:
- Replace any SRS components showing visible signs of damage (dents, cracks and deformation).
4) Install new air bag modules (except the side air bag module) and seat belt pre-tensioner assemblies.
5) Conduct self-diagnosis using CONSULT-II or “AIR BAG” warning lamp. Refer to “SRS Operation Check” for details (RS-41). Ensure entire SRS operation properly.

When SRS is not activated in a collision:

1) Check the SRS components using the table shown below:
- Replace any SRS components showing visible signs of damage (dents, cracks and deformation).
2) Conduct self-diagnosis using CONSULT-II or “AIR BAG” warning lamp. Refer to “SRS Operation Check” for details (RS-41). Ensure entire SRS operation properly.

SRS Inspection (For frontal collision)

NARS0049S0101

Part	SRS is activated	SRS is NOT activated
Air bag module (driver and front passenger side)	REPLACE Install with new bolts.	1. Remove air bag module. Check harness cover and connectors for damage, terminals for deformation, and harness for binding. 2. a. Install driver air bag module into the steering wheel to check fit and alignment with the wheel. b. Install front passenger air bag module into the instrument panel to check fit with the instrument panel. 3. No damage found, reinstall with new bolts. 4. If damaged—REPLACE. Install air bag modules with new bolts. Air bag must be deployed before disposal.
Seat belt pre-tensioner assembly	REPLACE Install seat belt pre-tensioner with new bolts.	1. Remove seat belt pre-tensioners. Check harness cover and connectors for damage, terminals for deformation, and harness for binding. 2. Check belts for damage and anchors for loose mounting. 3. Check retractor for smooth operation. 4. If no damage is found, reinstall seat belt pre-tensioner assembly. 5. If damaged—REPLACE. Install the seat belt pre-tensioners with new bolts coated with bonding agent. Seat belt pre-tensioners must be activated before disposal.
Diagnosis sensor unit	REPLACE Install with new bolts.	1. Check case for dents, cracks or deformation. 2. Check connectors for damage, and terminals for deformation. 3. If no damage is found, reinstall with new bolts and ground bolt. 4. If damaged—REPLACE. Install diagnosis sensor unit with new bolts and ground bolt coated with bonding agent.
Steering wheel	1. Visually check steering wheel for deformation. 2. Check harness (built into steering wheel) and connectors for damage, and terminals for deformation. 3. Install air bag module to check fit or alignment with steering wheel. 4. Check steering wheel for excessive free play. 5. If no damage is found, reinstall with bolts. 6. If damaged—REPLACE.	
Spiral cable	1. Visually check spiral cable and combination switch for damage. 2. Check connectors and protective tape for damage. 3. Check steering wheel for noise, binding or heavy operation. 4. If no damage is found, reinstall with bolts. 5. If damaged—REPLACE.	

Part	SRS is activated	SRS is NOT activated
Harness and Connectors	1. Check connectors for poor connection, damage, and terminals for deformation. 2. Check harness for binding, chafing, cuts, or deformation. 3. If no damage is found, reinstall the harness and connectors. 4. Damaged—REPLACE damaged section of harness. Do not attempt to repair, splice or modify any SRS harness.	
Instrument panel	1. When passenger air bag inflates, check the following points for bending, deformation or cracks. ● Opening portion for passenger air bag 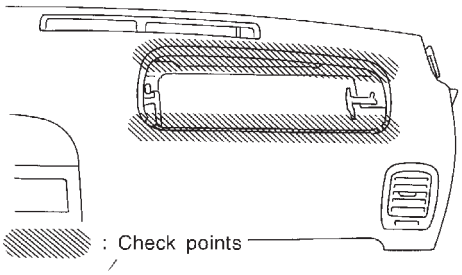 SRS366 ● Passenger air bag module brackets 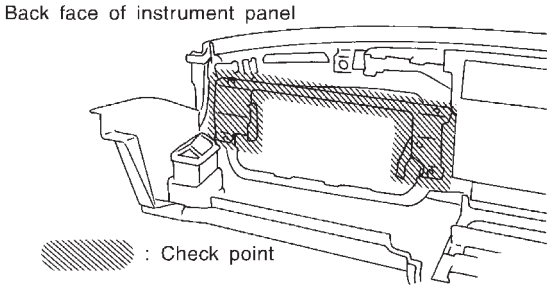 SRS367 ● The portions securing the instrument panel 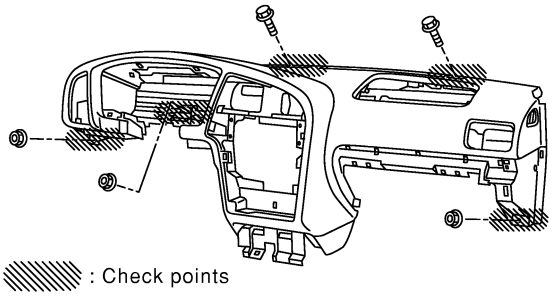 SRS876 2. If no damage is found, reinstall the instrument panel. 3. If damaged—REPLACE the instrument panel with bolts.	

FOR SIDE COLLISION

=NARS0049S02

To repair the SRS for a side collision, perform the following steps.

When the side air bag is activated in the side collision:

1) Replace the following component:
- All parts of front seatback (including front seatback frame) with side air bag module (on the side on which side air bag is activated)
- Side curtain air bag module (on the side on which side curtain air bag is activated)
- Diagnosis sensor unit
- Side air bag (Satellite) sensor (on the side on which side air bag is activated)

2) Check the SRS components and the related parts using the table shown below.
- Replace any SRS components and the related parts showing visible signs of damage (dents, cracks, deformation).

3) Conduct self-diagnosis using CONSULT-II or "AIR BAG" warning lamp. Refer to "SRS Operation Check" for details (RS-41). Ensure entire SRS operation properly.

When SRS is not activated in the side collision:

1) Check the SRS components and the related parts using the table shown below.
- Replace any SRS components and the related parts showing visible signs of damage (dents, cracks, deformation).

2) Conduct self-diagnosis using CONSULT-II or "AIR BAG" warning lamp. Refer to "SRS Operation Check" for details (RS-41). Ensure entire SRS operation properly.

SRS Inspection (For side collision)

NARS0049S0201

Part	Side air bag is activated	SRS is NOT activated
(LH or RH) side curtain air bag module	Replace the side curtain air bag module. (Repair the center pillar inner, etc. before installing new one if damaged.)	1. Check for visible signs of damage (dents, tears, deformation) of the center pillar on the collision side. 2. If damaged—Remove the side curtain air bag module. 3. Check for visible signs of damaged (tears etc.) of the side curtain air bag module. 4. Check harness and connectors for damage, and terminals for deformation. 5. If no damaged is found, reinstall the side curtain air bag module with new bolts. 6. If damaged—REPLACE the side curtain air bag module with new bolts. Air bag must be deployed before disposal.
Front (LH or RH) side air bags module	REPLACE all parts of front seatback with deployed side air bag module.	1. Check for visible signs of damage (dents, tears, deformation) of the seatback on the collision side. 2. If damaged—REPLACE the damaged seat parts with new bolts and remove the front (LH or RH) side air bag module. 3. Check for visible signs of damaged (tears etc.) of the front (LH or RH) side air bag module. 4. Check harness and connectors for damage, and terminals for deformation. 5. If no damaged is found, reinstall the front (LH or RH) side air bag module with new torx nuts coated with bonding agent. 6. If damaged—REPLACE the front (LH or RH) side air bag module with new torx nuts coated with bonding agent. Air bag must be deployed before disposal.
(LH or RH) side air bag (Satellite) sensor	REPLACE the satellite sensor on the collision side with new nuts coated with bonding agent. (Repair the center pillar inner, etc. before installing new one if damaged.)	1. Remove the (LH or RH) side air bag (Satellite) sensor on the collision side. Check harness connectors for damage, terminals for deformation, and harness for binding. 2. Check for visible signs of damage (dents, cracks, deformation) of the LH or RH side air bag (Satellite) sensor. 3. Install the satellite sensor to check fit. 4. If no damage is found, reinstall the (LH or RH) side air bag (Satellite) sensor with new nuts coated with bonding agent. 5. If damaged—REPLACE the (LH or RH) side air bag (Satellite) sensor with new nuts coated with bonding agent.

Part	Side air bag is activated	SRS is NOT activated
Diagnosis sensor unit	REPLACE the diagnosis sensor unit with the new bolts.	1. Check case and bracket for dents, cracks or deformation. 2. Check connectors for damage, and terminals for deformation. 3. If no damage is found, reinstall the diagnosis sensor unit with new special bolts and ground bolt. 4. If damaged—REPLACE. Install the diagnosis sensor unit with new special bolts and ground bolt.
Seat belt pre-tensioner assembly	1. Check if the seat belt can be extended smoothly. If the seat belt cannot be extended smoothly. – Check for deformation of the center pillar inner. – If the center pillar inner has no damage, REPLACE the seat belt pre-tensioner assembly. 2. Remove the seat belt pre-tensioner assembly on the collision side. Check harness cover and connectors for damage, terminals for deformation, and harness for binding. 3. Check for visible signs of damage (dents, cracks, deformation) of the seat belt pre-tensioner assembly. 4. If no damage is found, reinstall the seat belt pre-tensioner assembly. 5. If damaged—REPLACE the seat belt pre-tensioner assembly with new bolts coated with bonding agent. The seat belt pre-tensioner assembly must be activated before disposal.	
Seat with side air bag	REPLACE all parts of front seatback (including front seatback frame)	1. Visually check the seat on the collision side. 2. Remove the seat on the collision side and check the following for damage and deformation. ● Harness, connectors and terminals ● Frame and recliner (for front and rear seat), and also adjuster and slides (for front seat) 3. If no damage is found, reinstall the seat. 4. If damaged—REPLACE the damaged seat parts with new bolts.
Center pillar inner	1. Check the center pillar inner on the collision side for damage (dents, cracks, deformation). 2. If damaged—REPAIR the center pillar inner.	
Trim	1. Check for visible signs of damage (dents, cracks, deformation) of the interior trim on the collision side. 2. If damaged—REPLACE the damaged trim parts.	

STARTING & CHARGING SYSTEM

SECTION SC

CONTENTS

PRECAUTIONS 2
Supplemental Restraint System (SRS) "AIR BAG" and "SEAT BELT PRE-TENSIONER" 2
Precautions for SRS "AIR BAG" and "SEAT BELT PRE-TENSIONER" Service 2
Wiring Diagrams and Trouble Diagnosis 2
PREPARATION 3
Special Service Tool 3
BATTERY 4
How to Handle Battery 4
METHODS OF PREVENTING OVER-DISCHARGE 4
CHECKING ELECTROLYTE LEVEL 4
SPECIFIC GRAVITY CHECK 5
CHARGING THE BATTERY 6
Trouble Diagnoses with Battery/Starting/Charging System Tester 7
DIAGNOSTIC RESULT ITEM CHART 9
STARTING SYSTEM 10
System Description 10
WITH M/T 10
WITH A/T 10
Wiring Diagram - START -/With M/T 11
Wiring Diagram - START -/With A/T 12
Trouble Diagnoses with Battery/Starting/Charging System Tester 13
DIAGNOSTIC RESULT ITEM CHART 14
WORK FLOW 15
DIAGNOSTIC PROCEDURE 1 16
DIAGNOSTIC PROCEDURE 2 18
MINIMUM SPECIFICATION OF CRANKING VOLTAGE REFERENCING COOLANT TEMPERATURE 19
Construction 19
Removal and Installation 19
Pinion/Clutch Check 20
CHARGING SYSTEM 21
System Description 21
Wiring Diagram - CHARGE - 22
Trouble Diagnoses with Battery/Starting/Charging System Tester 23
DIAGNOSTIC RESULT ITEM CHART 25
WORK FLOW 26
DIAGNOSTIC PROCEDURE 1 27
DIAGNOSTIC PROCEDURE 2 28
DIAGNOSTIC PROCEDURE 3 29
MALFUNCTION INDICATOR 30
Construction 30
Removal and Installation 30
SERVICE DATA AND SPECIFICATIONS (SDS) 31
Battery 31
Starter 31
Alternator 31

Supplemental Restraint System (SRS) "AIR BAG" and "SEAT BELT PRE-TENSIONER"

NASC0001

The Supplemental Restraint System such as "AIR BAG" and "SEAT BELT PRE-TENSIONER" used along with a seat belt, helps to reduce the risk or severity of injury to the driver and front passenger for certain types of collision. The SRS composition which is available to NISSAN MODEL R50 is as follows:

- For a frontal collision
  The Supplemental Restraint System consists of driver air bag module (located in the center of the steering wheel), front passenger air bag module (located on the instrument panel on passenger side), seat belt pre-tensioners, a diagnosis sensor unit, warning lamp, wiring harness and spiral cable.
- For a side collision
  The Supplemental Restraint System consists of side air bag module (located in the outer side of front seat), side curtain air bag module (locating in the headliner side of front and rear seat), satellite sensor, diagnosis sensor unit (one of components of air bags for a frontal collision), wiring harness, warning lamp (one of components of air bags for a frontal collision).

WARNING:

- **To avoid rendering the SRS inoperative, which could increase the risk of personal injury or death in the event of a collision which would result in air bag inflation, all maintenance must be performed by an authorized NISSAN dealer.**
- **Improper maintenance, including incorrect removal and installation of the SRS, can lead to personal injury caused by unintentional activation of the system.**
- **Do not use electrical test equipment on any circuit related to the SRS unless instructed to in this Service Manual. SRS wiring harnesses can be identified by yellow and/or orange harness connector (and by yellow harness protector or yellow insulation tape before the harness connectors).**

Precautions for SRS "AIR BAG" and "SEAT BELT PRE-TENSIONER" Service

NASC0025

- Do not use electrical test equipment to check SRS circuits unless instructed to in this Service Manual.
- Before servicing the SRS, turn ignition switch "OFF", disconnect battery ground cable and wait at least 3 minutes.
  For approximately 3 minutes after the cables are removed, it is still possible for the air bag and seat belt pre-tensioner to deploy. Therefore, do not work on any SRS connectors or wires until at least 3 minutes have passed.
- Diagnosis sensor unit must always be installed with their arrow marks "⇐" pointing towards the front of the vehicle for proper operation. Also check diagnosis sensor unit for cracks, deformities or rust before installation and replace as required.
- The spiral cable must be aligned with the neutral position since its rotations are limited. Do not attempt to turn steering wheel or column after removal of steering gear.
- Handle air bag module carefully. Always place driver and passenger air bag modules with the pad side facing upward and side air bag module standing with the stud bolt side setting bottom.
- Conduct self-diagnosis to check entire SRS for proper function after replacing any components.
- After air bag inflates, the front instrument panel assembly should be replaced if damaged.

Wiring Diagrams and Trouble Diagnosis

NASC0002

When you read wiring diagrams, refer to the following:

- GI-11, "HOW TO READ WIRING DIAGRAMS"
- EL-11, "POWER SUPPLY ROUTING" for power distribution circuit

When you perform trouble diagnosis, refer to the following:

- GI-35, "HOW TO FOLLOW TEST GROUPS IN TROUBLE DIAGNOSES"
- GI-24, "HOW TO PERFORM EFFICIENT DIAGNOSIS FOR AN ELECTRICAL INCIDENT"

Special Service Tool

NASC0017

Tool number Tool name	Description
J-44373 Model 620 Battery/Starting/Charging system tester	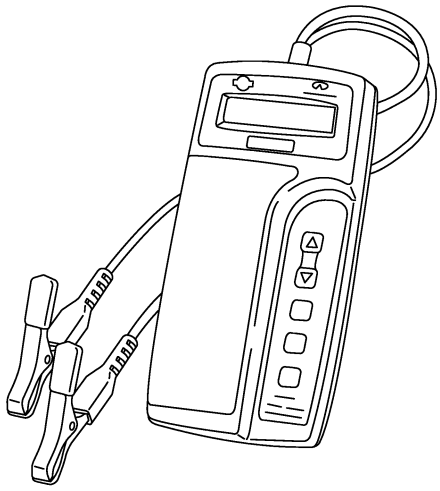 SEL403X

How to Handle Battery

NASC0003

CAUTION:

- **If it becomes necessary to start the engine with a booster battery and jumper cables, use a 12-volt booster battery.**
- **After connecting battery cables, ensure that they are tightly clamped to battery terminals for good contact.**
- **Never add distilled water through the hole used to check specific gravity.**

METHODS OF PREVENTING OVER-DISCHARGE

NASC0003S01

The following precautions must be taken to prevent over-discharging a battery.

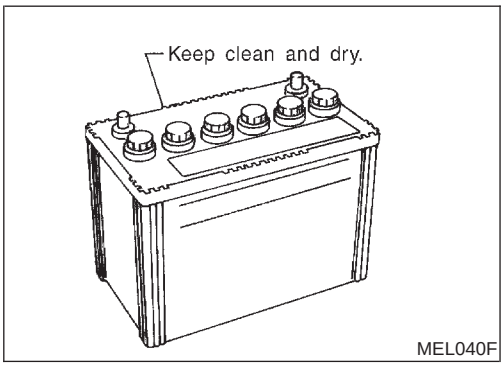

MEL040F

- The battery surface (particularly its top) should always be kept clean and dry.
- The terminal connections should be clean and tight.
- At every routine maintenance, check the electrolyte level. This also applies to batteries designated as “low maintenance” and “maintenance-free”.

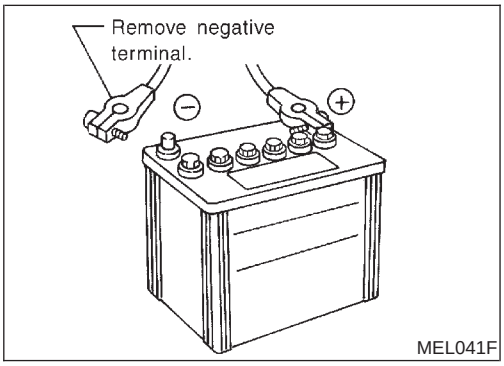

MEL041F

- When the vehicle is not going to be used over a long period of time, disconnect the negative battery terminal. (If the vehicle has an extended storage switch, turn it off.)

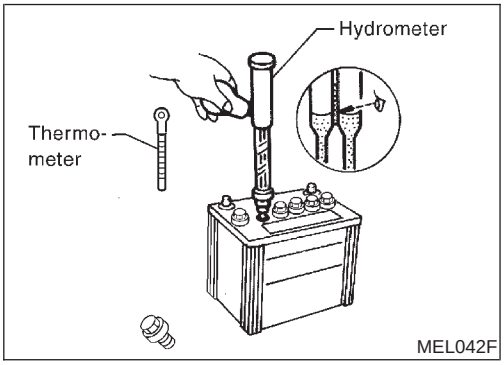

MEL042F

- Check the charge condition of the battery. Periodically check the specific gravity of the electrolyte. Keep a close check on charge condition to prevent over-discharge.

CHECKING ELECTROLYTE LEVEL

NASC0003S02

WARNING:

Do not allow battery fluid to come in contact with skin, eyes, fabrics, or painted surfaces. After touching a battery, do not touch or rub your eyes until you have thoroughly washed your hands. If acid contacts eyes, skin or clothing, immediately flush with water for 15 minutes and seek medical attention.

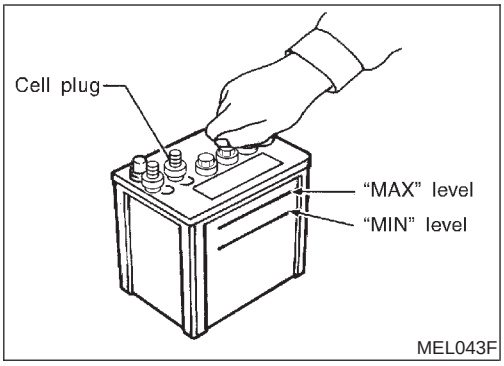

- Remove the cell plug using a suitable tool.
- Add distilled water up to the MAX level.

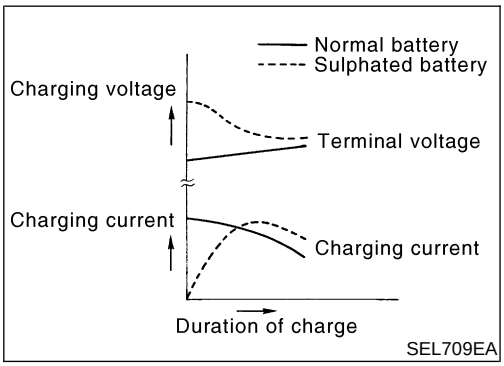

Sulphation

NASC0003S0201

A battery will be completely discharged if it is left unattended for a long time and the specific gravity will become less than 1.100. This may result in sulphation on the cell plates.
To determine if a battery has been "sulphated", note its voltage and current when charging it. As shown in the figure, less current and higher voltage are observed in the initial stage of charging sulphated batteries.
A sulphated battery may sometimes be brought back into service by means of a long, slow charge, 12 hours or more, followed by a battery capacity test.

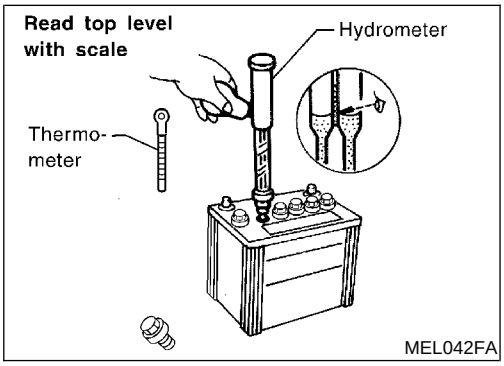

SPECIFIC GRAVITY CHECK

NASC0003S03

1. Read hydrometer and thermometer indications at eye level.

2. Use the chart below to correct your hydrometer reading according to electrolyte temperature.

Hydrometer Temperature Correction

NASC0003S0301

Battery electrolyte temperature °C (°F)	Add to specific gravity reading
71 (160)	0.032
66 (150)	0.028
60 (140)	0.024
54 (130)	0.020
49 (120)	0.016
43 (110)	0.012
38 (100)	0.008
32 (90)	0.004
27 (80)	0
21 (70)	−0.004
16 (60)	−0.008
10 (50)	−0.012

Battery electrolyte temperature °C (°F)	Add to specific gravity reading
4 (40)	−0.016
−1 (30)	−0.020
−7 (20)	−0.024
−12 (10)	−0.028
−18 (0)	−0.032

Corrected specific gravity	Approximate charge condition
1.260 - 1.280	Fully charged
1.230 - 1.250	3/4 charged
1.200 - 1.220	1/2 charged
1.170 - 1.190	1/4 charged
1.140 - 1.160	Almost discharged
1.110 - 1.130	Completely discharged

CHARGING THE BATTERY

NASC0003S04

CAUTION:

- **Do not "quick charge" a fully discharged battery.**
- **Keep the battery away from open flame while it is being charged.**
- **When connecting the charger, connect the leads first, then turn on the charger. Do not turn on the charger first, as this may cause a spark.**
- **If battery electrolyte temperature rises above 55°C (131°F), stop charging. Always charge battery at a temperature below 55°C (131°F).**

Charging Rates

NASC0003S0401

Amps	Time
50	1 hour
25	2 hours
10	5 hours
5	10 hours

Do not charge at more than 50 ampere rate.

NOTE:

The ammeter reading on your battery charger will automatically decrease as the battery charges. This indicates that the voltage of the battery is increasing normally as the state of charge improves. The charging amps indicated above refer to initial charge rate.

- If, after charging, the specific gravity of any two cells varies more than .050, the battery should be replaced.

Trouble Diagnoses with Battery/Starting/Charging System Tester

NASC0018

CAUTION:

When working with batteries, always wear appropriate eye protection.

NOTE:

- To ensure a complete and thorough diagnosis, the battery, starter and alternator test segments must be done as a set from start to finish.
- If battery surface charge is detected while testing, the tester will prompt you to turn on the headlamps to remove the surface charge.
- If necessary, the tester will prompt you to determine if the battery temperature is above or below 0°C (32°F). Choose the appropriate selection by pressing the up or down arrow button, then press “ENTER” to make the selection.

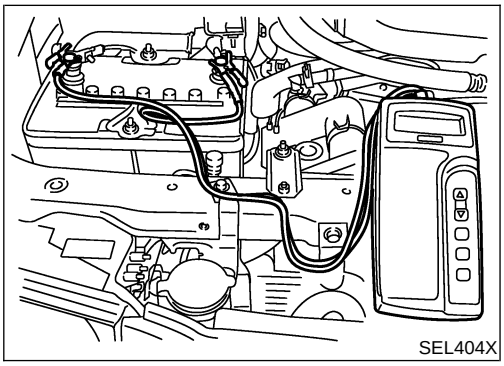
SEL404X

1. Turn off all loads on the vehicle electrical system. Clean or repair as necessary.
2. Visually inspect the battery, battery terminals and cable ends with ignition switch in “OFF” position.

NOTE:

The contact surface between the battery terminals, cable ends and tester leads must be clean for a valid test. A poor connection will prevent testing and a “CHECK CONNECTION” message will appear during the test procedures. If this occurs, clean the battery post and terminals, reconnect them and restart the test.

3. Connect the red tester lead clamp to the positive battery terminal, and the black to the negative terminal.

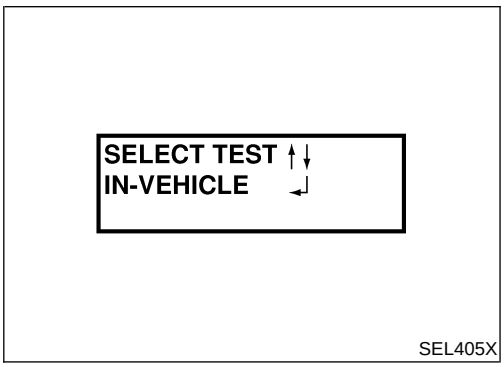

SEL405X

4. The tester will turn on automatically. Using the arrow keys, select “IN VEHICLE” on the tester and then press the “ENTER” key.

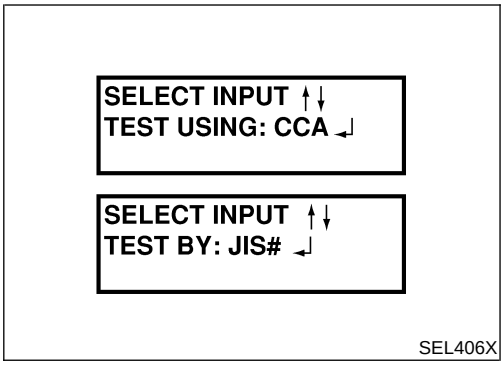

5. Locate the battery type and rating stamped or written on the top case of the battery to be tested.

NOTE:
The battery type and rating will have either of the following.

CCA: Cold Cranking Amps (490 CCA, 550 CCA, etc.)
JIS: Japanese Industrial Standard.
Battery is stamped with a number such as:
80D26L: 80 (rank of output), D (physical size-depth), 26 (width in cm). The last character L (post configuration) is not input into the tester.
The tester requires the rating for the battery be entered exactly as it is written or stamped on the battery. Do not attempt a CCA conversion for JIS stamped batteries. JIS must be input directly.

6. Using the arrow and "ENTER" keys alternately, select the battery type and rating.

NOTE:
The tester lists five choices; CCA, JIS, IEC, DIN, and EN. Only use CCA or JIS.

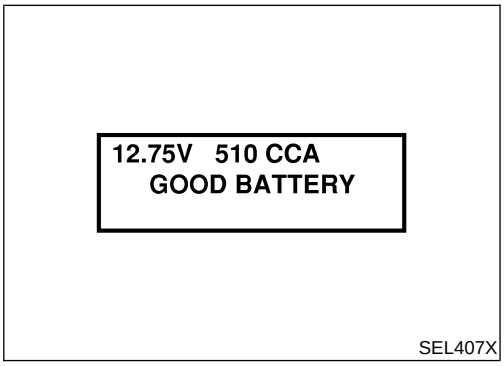

7. Press "ENTER" to begin the test. Diagnosis results are displayed on the tester. Refer to "DIAGNOSTIC RESULT ITEM CHART" on the next page.

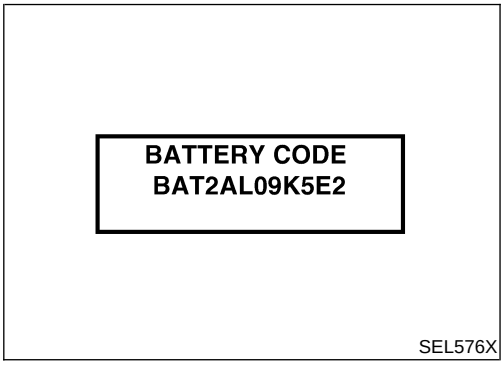

8. Press "ENTER", then test output code is displayed. Record the test output code on the repair order.
9. Toggle back to the "DIAGNOSTIC SCREEN" for test results.

NOTE:

- If necessary, the tester will ask the user to determine if the battery has just been charged. Choose the appropriate selection by pressing the up or down arrow button and then press the "ENTER" button to make the selection.
- When testing a battery installed in a vehicle that has recently been driven, select "BEFORE CHANGE".
- If the battery has just been slow charged due to a "CHARGE & RETEST" decision by the tester, and the tester asks the user "BEFORE CHARGE/AFTER CHARGE", select "AFTER CHARGE".

DIAGNOSTIC RESULT ITEM CHART

NASC0018S01

Diagnostic item	Service procedure
GOOD BATTERY	Battery is OK, go to "Trouble Diagnoses", "STARTING SYSTEM". Refer to SC-13.
REPLACE BATTERY	Replace battery. Before replacing battery, clean the battery cable clamps and battery posts. Perform battery test again with Battery/Starting/Charging system tester. If second test result is "Replace Battery", then do so. Perform battery test again to confirm repair.
BAD CELL-REPLACE	Replace the battery. Perform battery test again with Battery/Starting/Charging system tester to confirm repair.
GOOD-RECHARGE	Perform the slow battery charging procedure. (Initial rate of charge is 10A for 12 hours.) Perform battery test again with Battery/Starting/Charging system tester.
CHARGE & RETEST	Perform the slow battery charging. (Initial rate of charge is 10A for 12 hours.) Perform battery test again with Battery/Starting/Charging system tester to confirm repair. **NOTE:** **If the tester asks the user "BEFORE CHARGE/AFTER CHARGE", select "AFTER CHARGE".**

System Description

NASC0004

WITH M/T

NASC0004S02

Power is supplied at all times

- to ignition switch terminal 1
- through 40A fusible link (letter **e**, located in the fuse and fusible link box).

With the ignition switch in the START position, power is supplied

- through terminal 5 of the ignition switch
- to clutch interlock relay terminal 3.

With the ignition switch in the ON or START position, power is supplied

- through 10A fuse [No. 16, located in the fuse block (J/B)]
- to clutch interlock relay terminal 1.

If clutch pedal is depressed, ground is supplied

- to clutch interlock relay terminal 2
- through clutch interlock switch
- from body grounds M111, M147, M66, M4 and M157.

The clutch interlock relay is energized and power is supplied

- from terminal 5 of the clutch interlock relay
- to terminal 2 of the starter motor windings.

The starter motor plunger closes and provides a closed circuit between the battery and the starter motor. The starter motor is grounded to the cylinder block. With power and ground supplied, cranking occurs and the engine starts.

WITH A/T

NASC0004S01

Power is supplied at all times

- to ignition switch terminal 1
- through 40A fusible link (letter **e**, located in the fuse and fusible link box).

With the ignition switch in the ON or START position, power is supplied

- through 10A fuse [No. 18, located in the fuse block (J/B)]
- to park/neutral position relay terminal 1.

Also, with the ignition switch in the START position, power is supplied

- from ignition switch terminal 5
- to park/neutral position relay terminal 3.

With the selector lever in the P or N position, ground is supplied

- to park/neutral position relay terminal 2 through the park/neutral position switch
- from body grounds B55 and B75.

Then park/neutral position relay is energized and power is supplied

- from park/neutral position relay terminal 5
- to terminal 2 of the starter motor windings.

The starter motor plunger closes and provides a closed circuit between the battery and starter motor. The starter motor is grounded to the engine block. With power and ground supplied, cranking occurs and the engine starts.

Wiring Diagram — START —/With M/T

NASC0005

SC-START-01

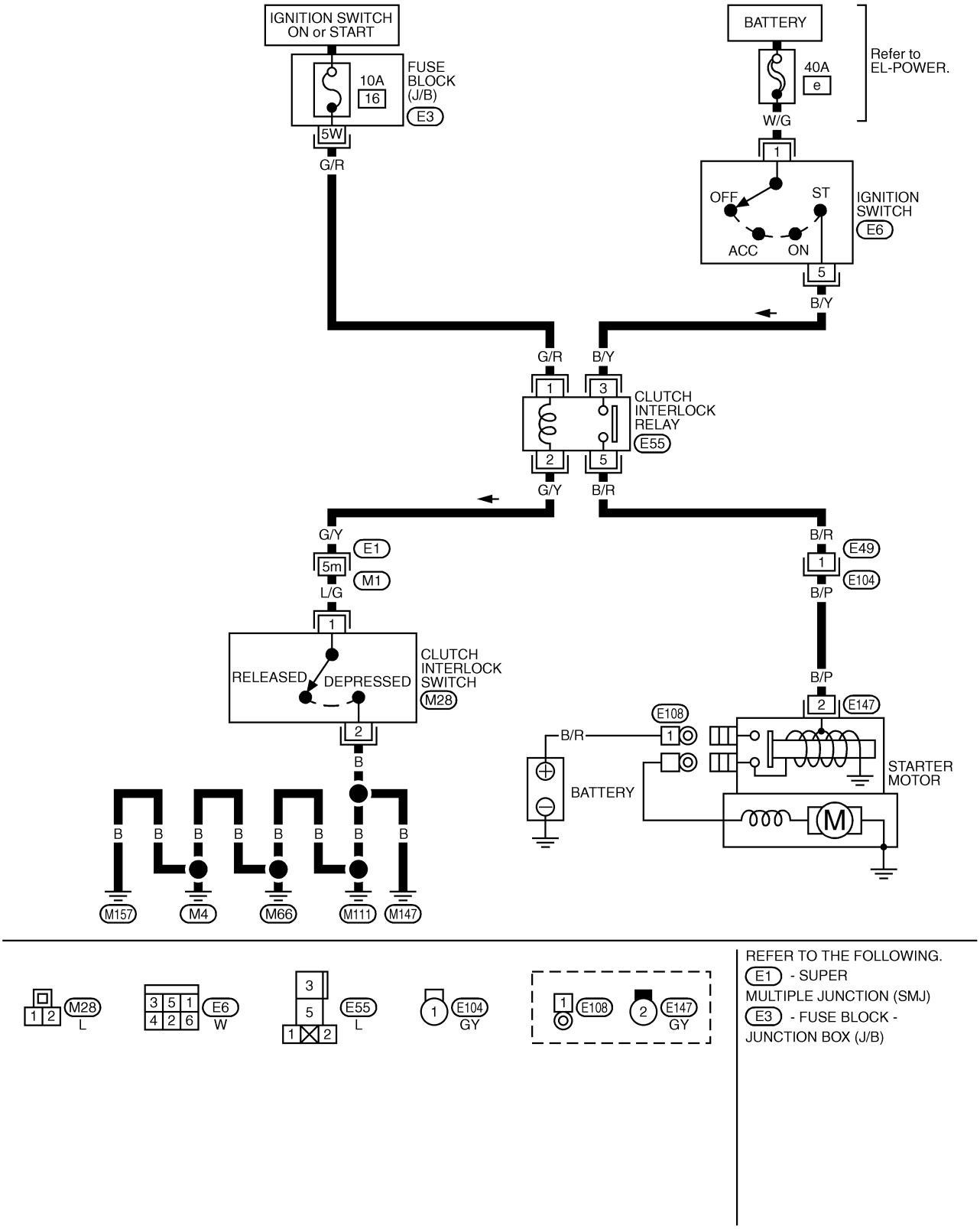

REFER TO THE FOLLOWING.
E1 - SUPER MULTIPLE JUNCTION (SMJ)
E3 - FUSE BLOCK - JUNCTION BOX (J/B)

MEL929R

Wiring Diagram — START —/With A/T

NASC0021

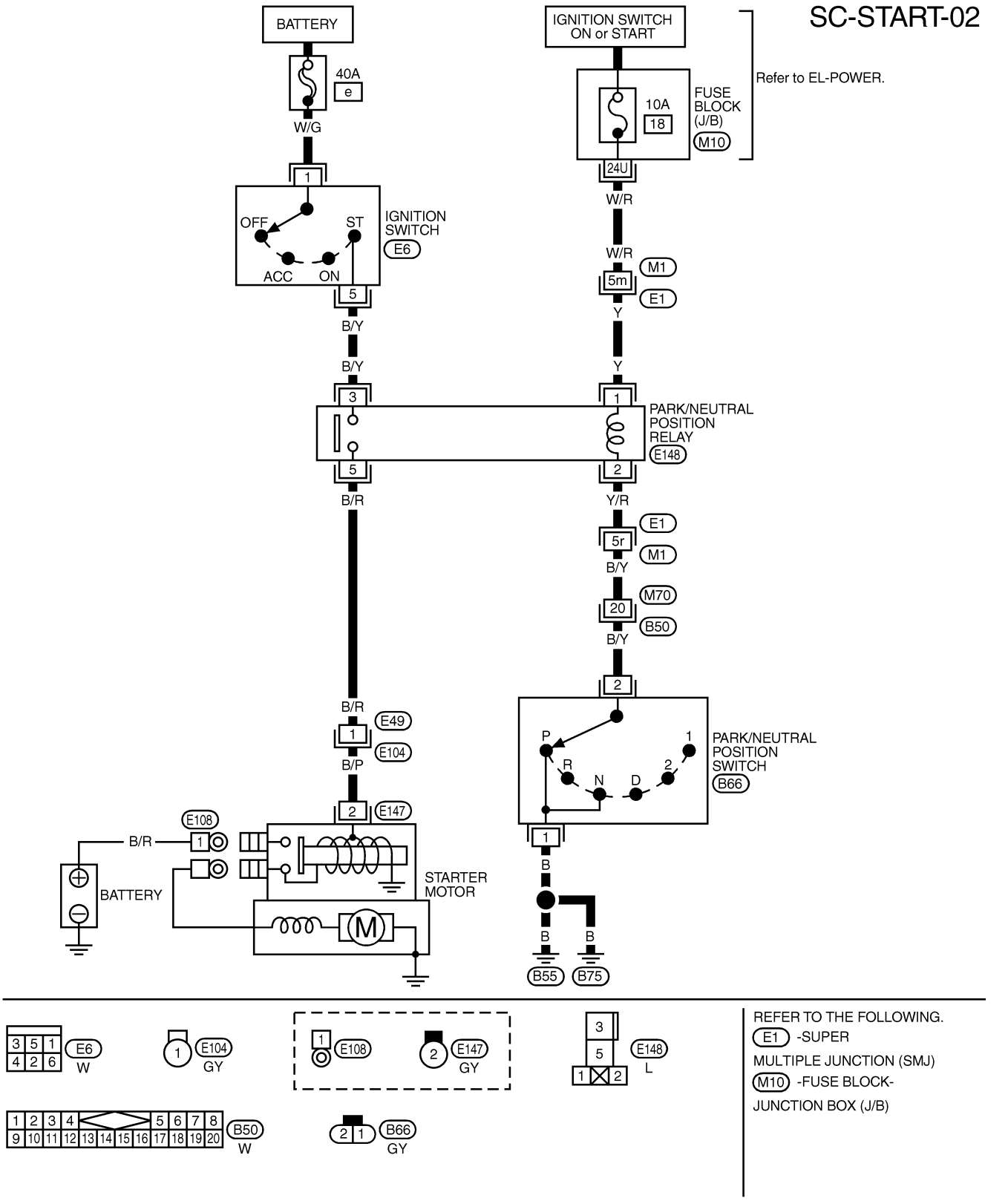

MEL124Q

Trouble Diagnoses with Battery/Starting/Charging System Tester

NASC0019

NOTE:
To ensure a complete and thorough diagnosis, the battery, starter and alternator test segments must be done as a set from start to finish.

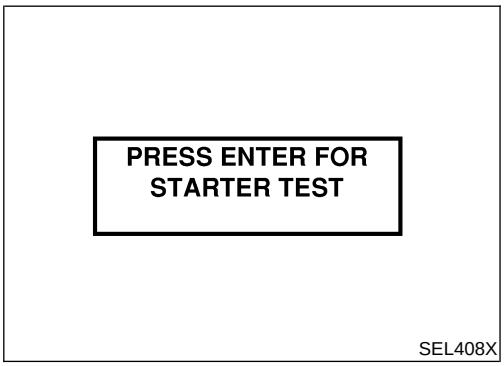

1. Turn off all loads on the vehicle electrical system.
2. Perform battery test with Battery/Starting/Charging system tester. Refer to SC-7.
3. Press “ENTER” to begin the starting system test.

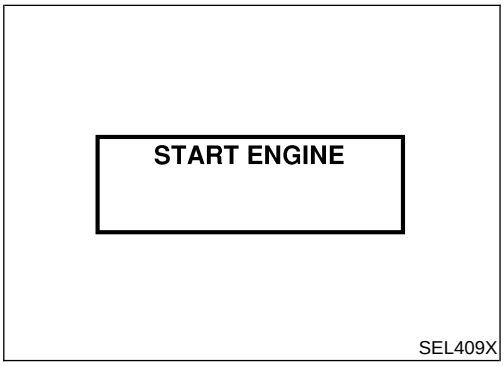

4. Start the engine.

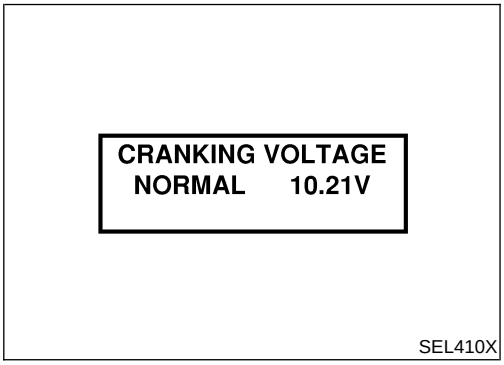

5. Diagnosis result is displayed on the tester. Refer to “DIAGNOSTIC RESULT ITEM CHART” on the next page.

NOTE:
- If the starter performs normally but the engine does not start, perform engine diagnosis.
- For intermittent “NO CRANK” or “NO STARTER OPERATION” incidents, go to DIAGNOSTIC PROCEDURE 2.

DIAGNOSTIC RESULT ITEM CHART

NASC0019S01

Diagnostic item	Service procedure
CRANKING VOLTAGE NORMAL	Go to "WORK FLOW", SC-15.
CRANKING VOLTAGE LOW	Go to "WORK FLOW", SC-15.
CHARGE BATTERY	Perform the slow battery charging procedure. (Initial rate of charge is 10A for 12 hours.) Perform battery test again with Battery/Starting/Charging system tester. Refer to SC-7.
REPLACE BATTERY	Before replacing battery, clean the battery cable clamps and battery posts. Perform battery test again with Battery/Starting/Charging system tester. Refer to SC-7. If second test result is "REPLACE BATTERY", then do so. Perform battery test again to confirm repair.

WORK FLOW

NASC0019S02

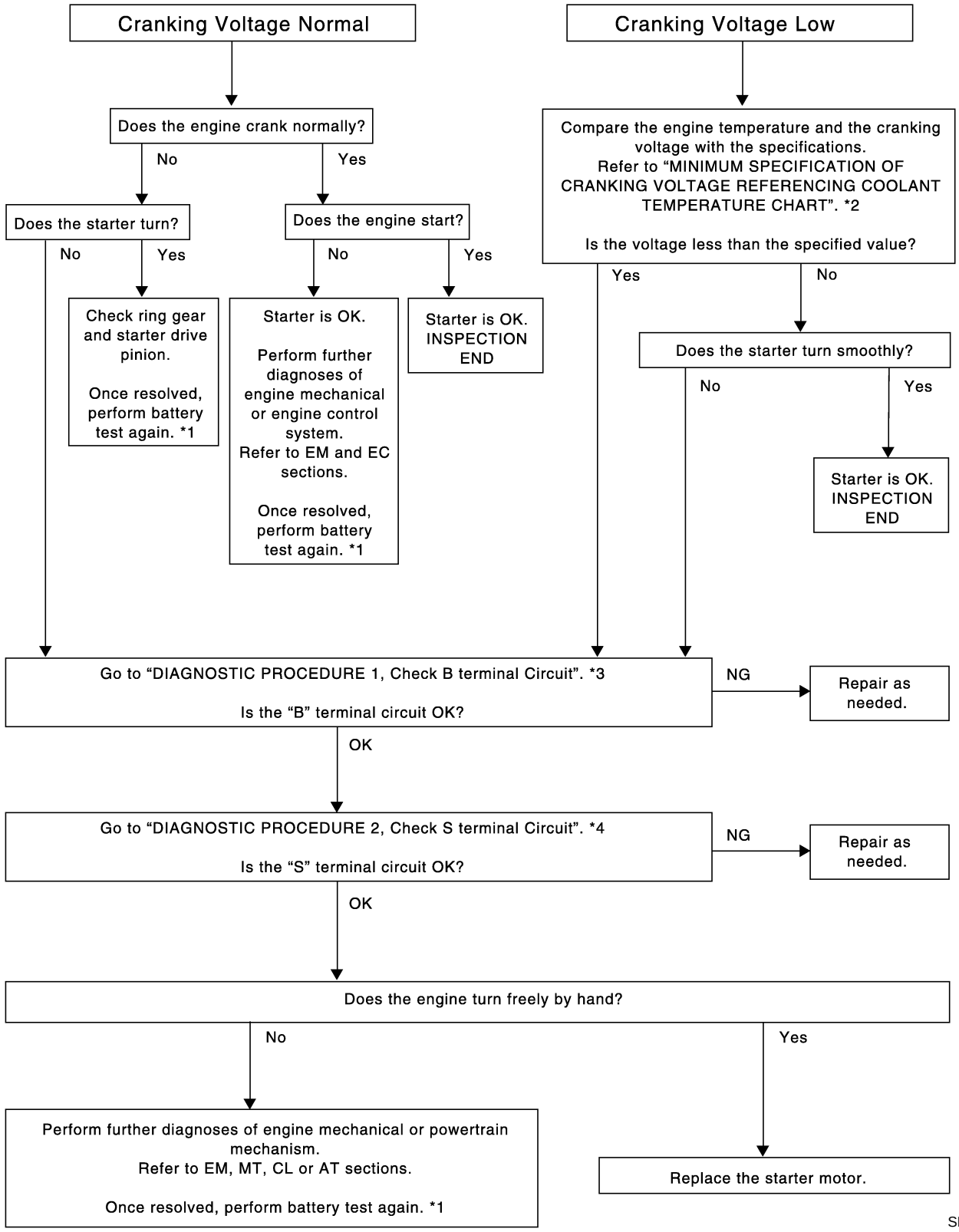

SEL411XA

*1 SC-7
*2 SC-19
*3 SC-16
*4 SC-18

DIAGNOSTIC PROCEDURE 1
Check "B" Terminal Circuit

NASC0019S03

NASC0019S0301

1	CHECK POWER SUPPLY FOR STARTER MOTOR "B" TERMINAL

1. Remove the fuel pump fuse.
2. Crank or start the engine (where possible) until the fuel pressure is released.
3. Turn the ignition switch OFF.
4. Check that the starter motor B terminal E108 terminal 1 (B/R) connection is clean and tight.
5. Check voltage between starter motor B terminal E108 terminal 1 (B/R) and ground using a digital circuit tester.

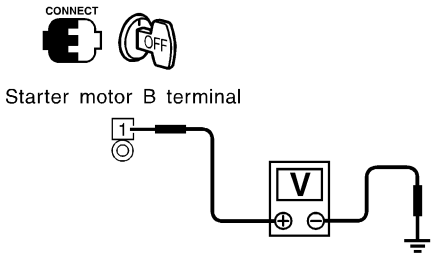

Battery voltage should exist.

SEL961XA

OK or NG

OK	▶	GO TO 2.
NG	▶	Check harness between the battery and the starter motor for open circuit.

2	CHECK BATTERY CABLE CONNECTION QUALITY (VOLTAGE DROP TEST)

1. Check voltage between starter motor B terminal E108 terminal 1 (B/R) and battery positive terminal using a digital circuit tester.

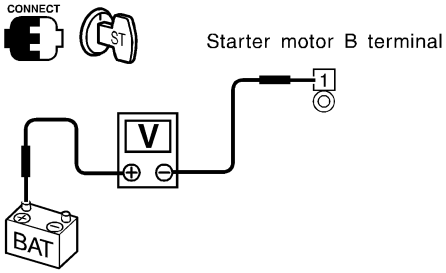

When the ignition switch is in START position,
Voltage: Less than 0.5V

SEL962XA

OK or NG

OK	▶	GO TO 3.
NG	▶	Check harness between the battery and the starter motor for poor continuity.

3	CHECK STARTER MOTOR GROUND CIRCUIT (VOLTAGE DROP TEST)

1. Check voltage between starter motor case and battery negative terminal using a digital circuit tester.

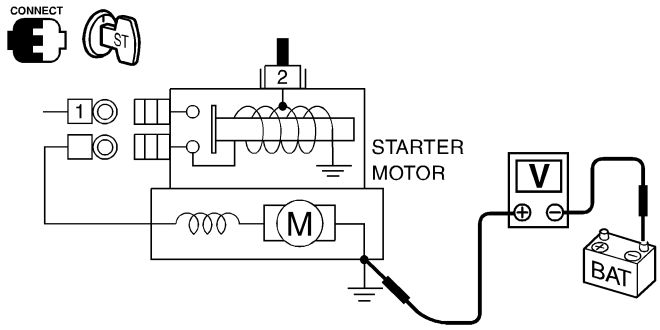

When the ignition switch is in START position,
Voltage: Less than 0.2V

SEL666YB

OK or NG

OK	▶	Starter motor "B" terminal circuit is OK. Further inspection necessary. Refer to "WORK FLOW", SC-15.
NG	▶	Check the starter motor case and ground for poor continuity.

DIAGNOSTIC PROCEDURE 2
Check "S" Terminal Circuit

=NASC0019S04

NASC0019S0401

1	CHECK POWER SUPPLY FOR STARTER MOTOR "S" TERMINAL

1. Remove the fuel pump fuse.
2. Crank or start the engine (where possible) until the fuel pressure is released.
3. Turn the ignition switch OFF.
4. Disconnect starter motor terminal 2 connector.
5. Check voltage between starter motor connector E147 terminal 2 (B/P) and ground using a digital circuit tester.

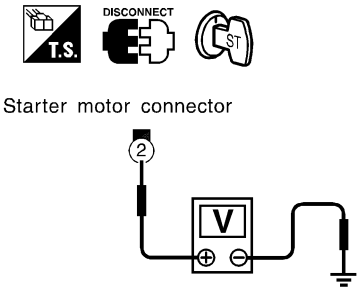

When the ignition switch is in START position,
Battery voltage should exist.

SEL948X

OK or NG

OK	▶	GO TO 2.
NG	▶	**Check the following.** ● 40A fusible link (letter **e**, located in fuse and fusible link box) ● Clutch interlock relay or park/neutral position relay ● Harness for open or short

2	CHECK "S" TERMINAL CONNECTION QUALITY (VOLTAGE DROP TEST)

1. Connect starter motor terminal 2 connector.
2. Check voltage between starter motor connector E147 terminal 2 (B/P) and battery positive terminal using a digital circuit tester.

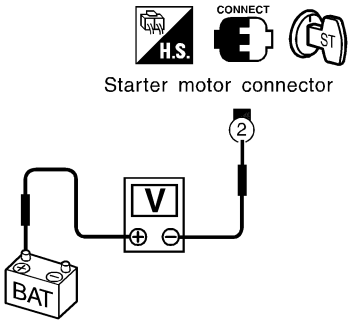

When the ignition switch is in START position,
Voltage: Less than 1V

SEL949X

OK or NG

OK	▶	Starter motor "S" terminal circuit is OK. Further inspection necessary. Refer to "WORK FLOW", SC-15.
NG	▶	Check harness between the battery and the starter motor "S" terminal for poor continuity.

MINIMUM SPECIFICATION OF CRANKING VOLTAGE REFERENCING COOLANT TEMPERATURE

=NASC0019S05

Engine coolant temperature	Voltage V
−30°C to −20°C (−22°F to −4°F)	8.6
−19°C to −10°C (−2°F to 14°F)	9.1
−9°C to 0°C (16°F to 32°F)	9.5
More than 1°C (More than 34°F)	9.9

Construction

NASC0006

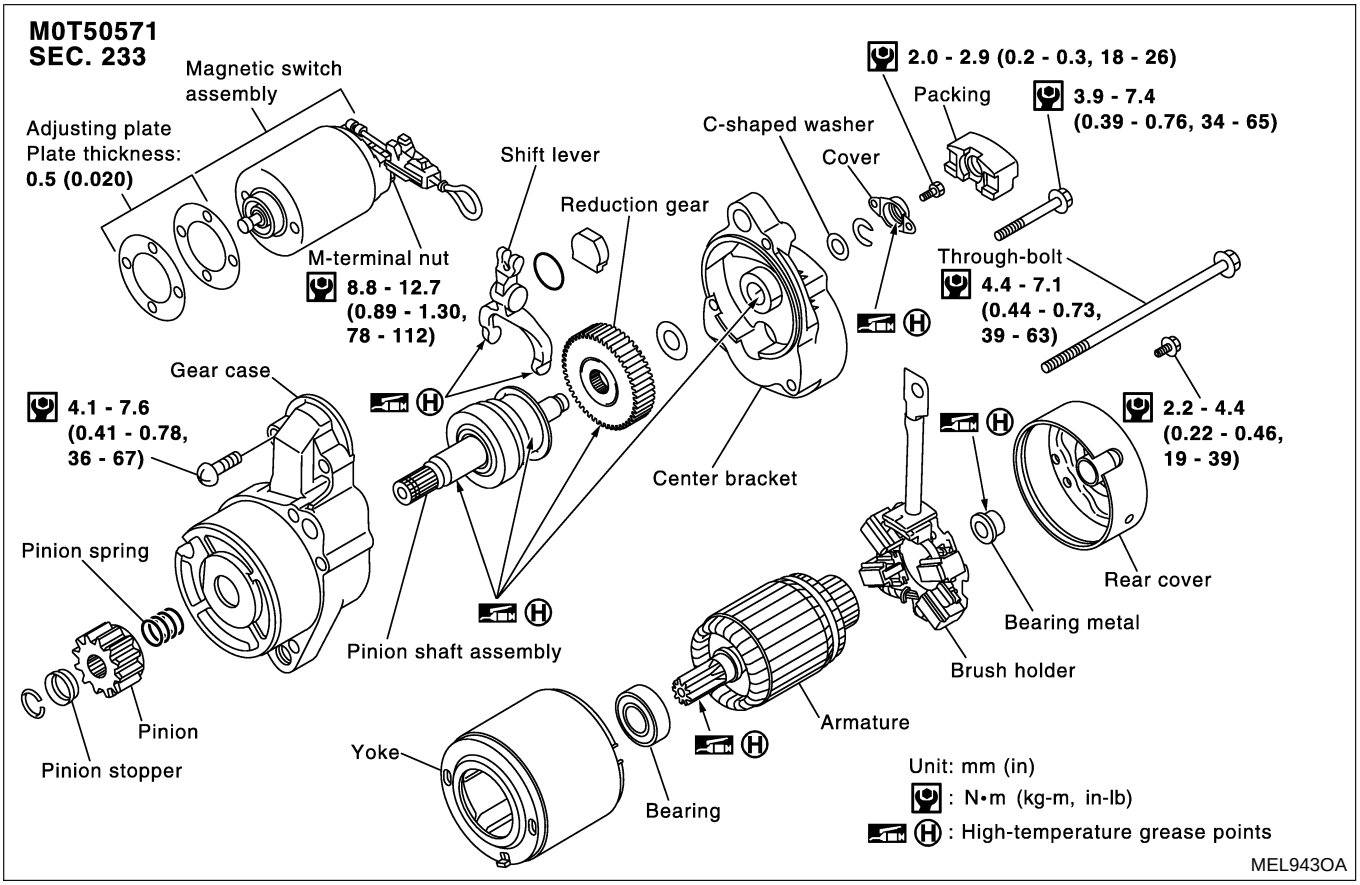

Removal and Installation

NASC0007

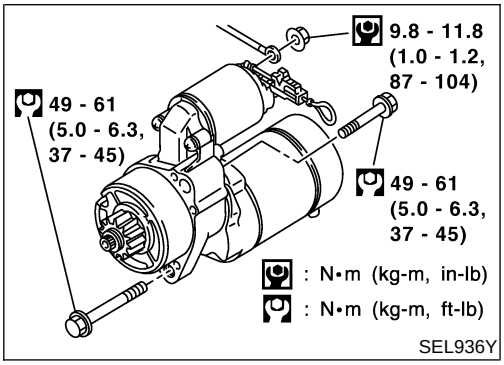

Pinion/Clutch Check

NASC0008

1. Inspect pinion teeth.
- Replace pinion if teeth are worn or damaged. (Also check condition of ring gear teeth.)
2. Inspect reduction gear teeth.
- Replace reduction gear if teeth are worn or damaged. (Also check condition of armature shaft gear teeth.)
3. Check to see if pinion locks in one direction and rotates smoothly in the opposite direction.
- If it locks or rotates in both directions, or unusual resistance is evident, replace.

System Description

NASC0009

The alternator provides DC voltage to operate the vehicle's electrical system and to keep the battery charged. The voltage output is controlled by the IC regulator.
Power is supplied at all times to alternator terminal S through:

- 120A fusible link (letter **a**, located in the fuse and fusible link box), and
- 7.5A fuse (No. 65, located in the fuse and fusible link box).

Terminal B supplies power to charge the battery and operate the vehicle's electrical system. Output voltage is controlled by the IC regulator at terminal S detecting the input voltage. The charging circuit is protected by the 120A fusible link.
Terminal E of the alternator supplies ground through body ground E101.
With the ignition switch in the ON or START position, power is supplied

- through 10A fuse [No. 8, located in the fuse block (J/B)]
- to combination meter terminal 66 for the charge warning lamp.

Ground is supplied to combination meter terminal 68 through alternator terminal 1 (L). With power and ground supplied, the charge warning lamp will illuminate. When the alternator is providing sufficient voltage with the engine running, the ground is opened and the charge warning lamp will go off.
If the charge warning lamp illuminates with the engine running, a malfunction is indicated.

Wiring Diagram — CHARGE —

NASC0010

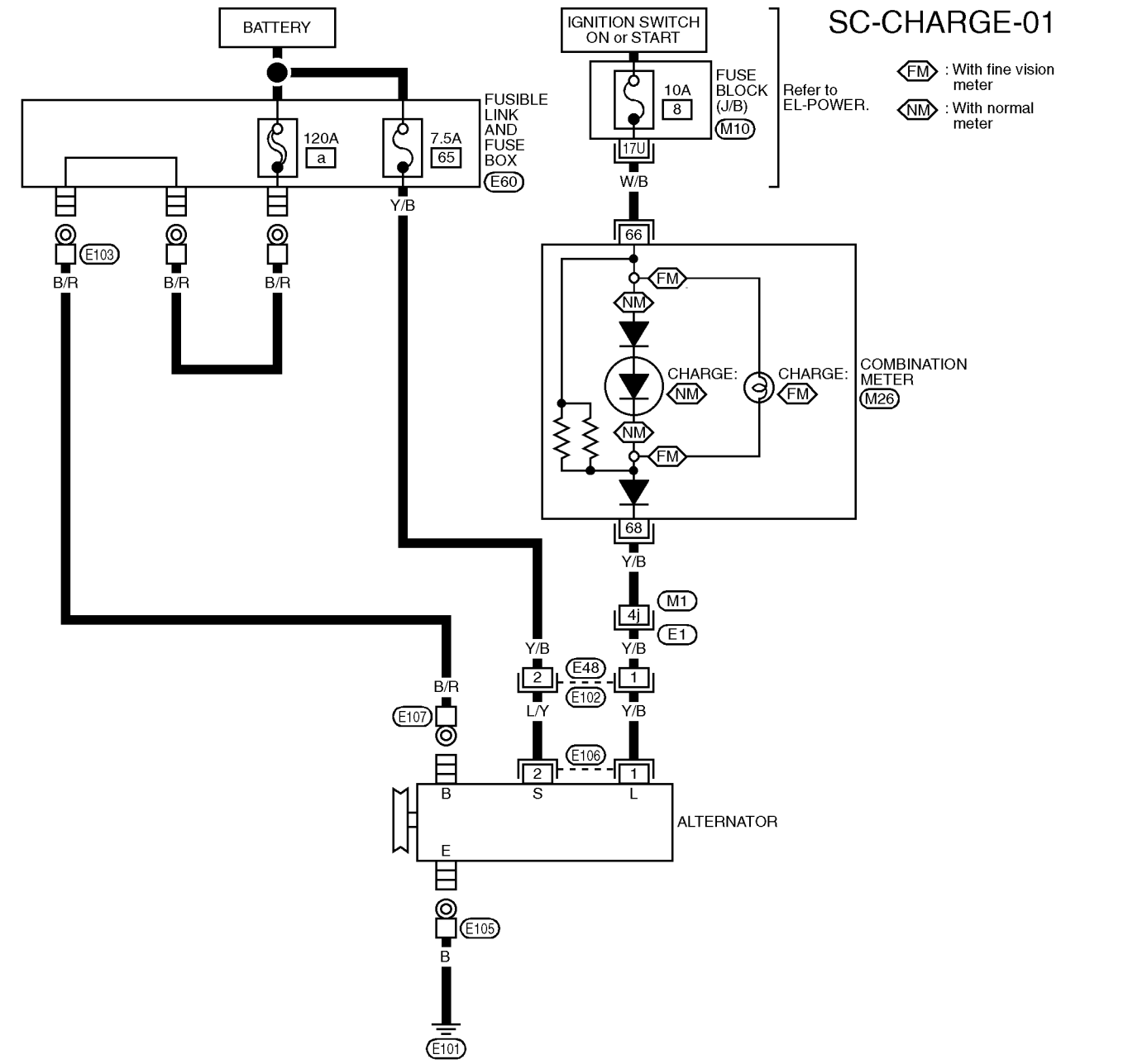

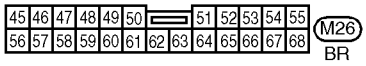

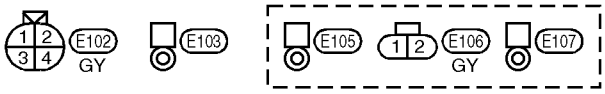

REFER TO THE FOLLOWING.
E1 -SUPER MULTIPLE JUNCTION (SMJ)
M10 -FUSE BLOCK-JUNCTION BOX (J/B)
E60 -FUSIBLE LINK AND FUSE BOX

MEL959R

Trouble Diagnoses with Battery/Starting/Charging System Tester

NASC0020

NOTE:
To ensure a complete and thorough diagnosis, the battery, starter and alternator test segments must be done as a set from start to finish.

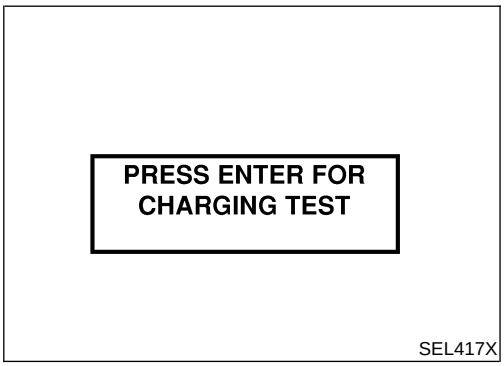

1. Turn off all loads on the vehicle electrical system.
2. Perform battery and starting system test with Battery/Starting/Charging system tester.
3. Press “ENTER” to begin the charging system test.
4. Start engine.

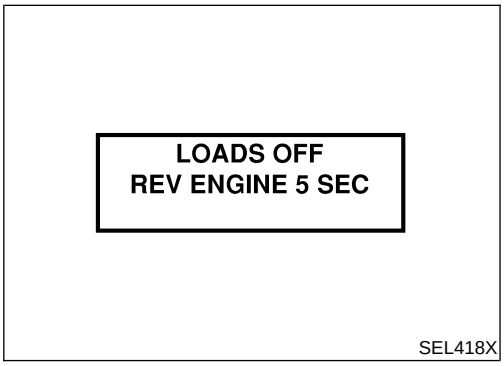

5. Press “ENTER” until “LOADS OFF REV ENGINE 5 SEC” is displayed.
6. Raise and hold the engine speed at 1,500 to 2,000 rpm for about 5 seconds, then return to the engine to idle.
   Once the increase in engine rpm is detected, press “ENTER” to continue.

NOTE:
- If after 30 seconds an increase in engine idle speed is not detected, “RPM NOT DETECTED” will display.
- Some engines may have a higher idle initially after starting, particularly when the engine is cold. The tester may detect this without any other action being taken. If this occurs, continue on with the testing process. The final results will not be affected.

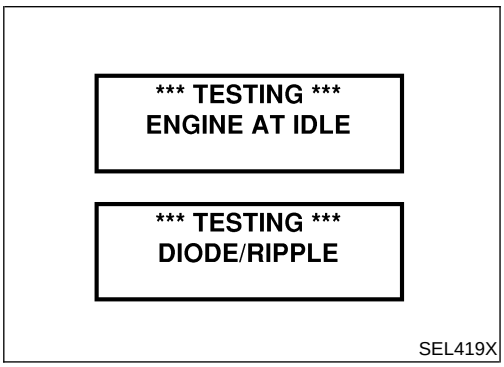

7. The tester now checks the engine at idle and performs the DIODE/RIPPLE check.
8. When complete, the tester will prompt you to turn on the following electrical loads.

- Heater fun set to highest. Do not run the A/C or windshield defroster.
- Headlamp high beam
- Rear window defogger

NOTE:
Do not run the windshield wipers or any other cyclical loads.

TURN LOADS ON
ENTER TO CONT...

SEL420X

9. Press "ENTER" to continue.

LOADS ON
REV ENGINE 5 SEC

SEL421X

10. Raise and hold the engine speed at 1,500 to 2,000 rpm for about 5 seconds, then return the engine to idle. Once the increase in engine rpm is detected, press "ENTER" to continue.

NOTE:
If after 30 seconds an increase in engine idle speed is not detected, "RPM NOT DETECTED" will be displayed. Press "ENTER" to restart the test.

CHARGING SYSTEM
NORMAL

SEL422X

11. Diagnostic result is displayed on the tester. Refer to the following "DIAGNOSTIC RESULT ITEM CHART" on the next page.

CHARGING CODE
ALTSTD7HJ934

SEL577X

12. Press "ENTER" then test output code is displayed. Record the test output code on the repair order.
13. Toggle back to the "DIAGNOSTIC SCREEN" for test results.

DIAGNOSTIC RESULT ITEM CHART

NASC0020S01

Diagnostic item	Service procedure
CHARGING SYSTEM NORMAL	Charging system is normal and will also show DIODE RIPPLE test result.
NO CHARGING VOLTAGE	Go to "WORK FLOW", SC-26.
LOW CHARGING VOLTAGE	Go to "WORK FLOW", SC-26.
HIGH CHARGING VOLTAGE	Go to "WORK FLOW", SC-26.
DIODE RIPPLE NORMAL	Diode ripple is OK and will also show CHARGING VOLTAGE test result.
EXCESS RIPPLE DETECTED	Replace the alternator. Perform "DIODE RIPPLE" test again using Battery/Starting/Charging system tester to confirm repair.
DIODE RIPPLE NOT DETECTED	Go to "WORK FLOW", SC-26.

WORK FLOW

NASC0020S02

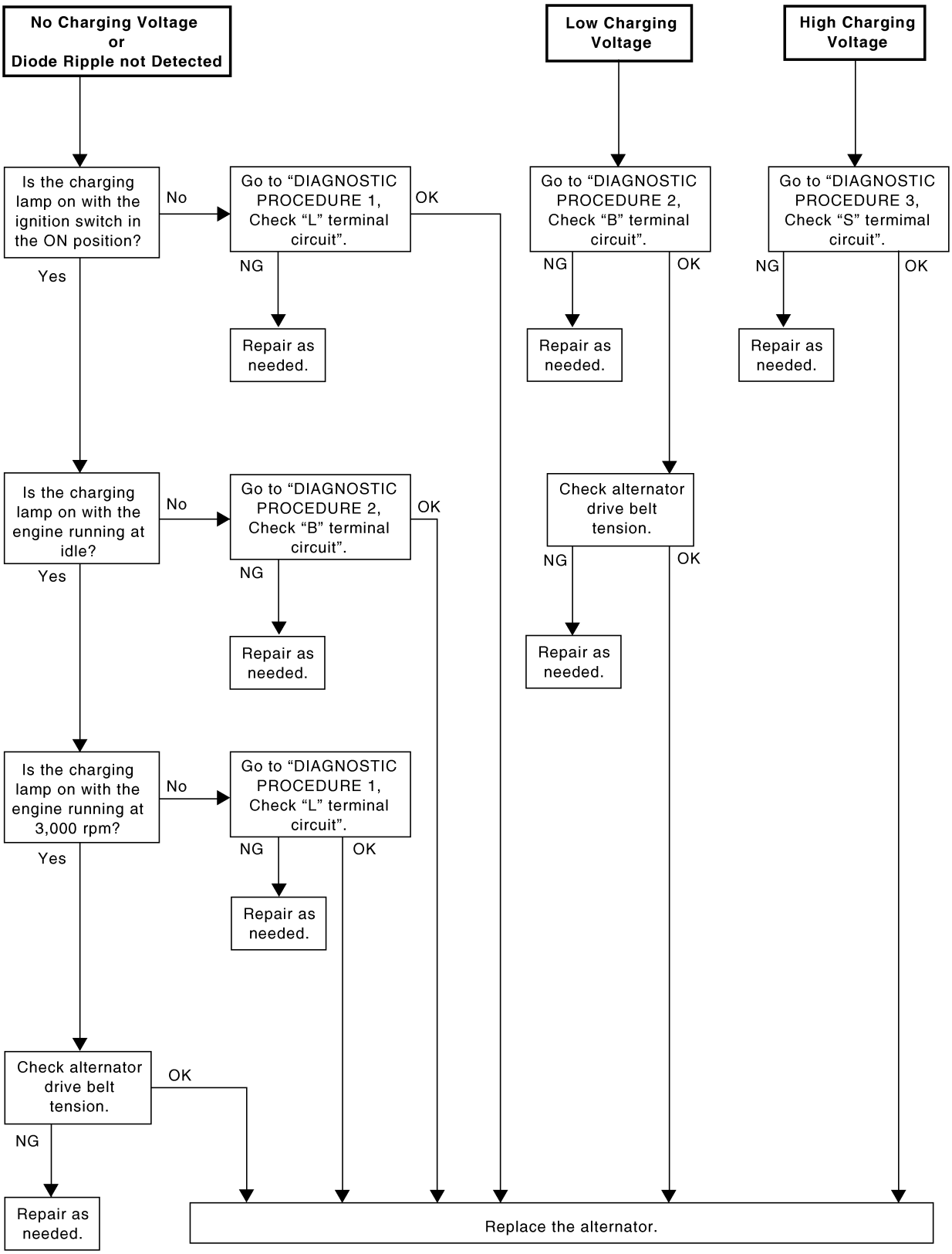

SEL423X

DIAGNOSTIC PROCEDURE 1
Check "L" Terminal Circuit

NASC0020S03

NASC0020S0301

1	CHECK "L" TERMINAL CONNECTION	
Check to see if "L" terminal is clean and tight.		
OK or NG		
OK	▶	GO TO 2.
NG	▶	Repair "L" terminal connection. Confirm repair by performing complete Battery/Starting/Charging system test.

2	CHECK "L" TERMINAL CIRCUIT	
1. Disconnect E106 connector from alternator. 2. Apply ground to alternator connector E106 terminal 1 (Y/B) with the ignition switch in the ON position.		
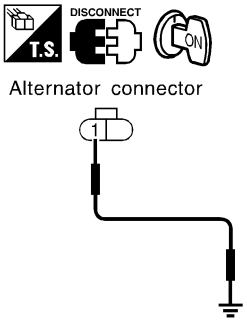 **CHARGE lamp should light up.** SEL424XA		
OK or NG		
OK	▶	Replace the alternator. Confirm repair by performing complete Battery/Starting/Charging system test.
NG	▶	**Check the following.** ● 10A fuse [No. 8, located in fuse block (J/B)] ● CHARGE lamp ● Harness for open or short between combination meter and fuse ● Harness for open or short between combination meter and alternator

DIAGNOSTIC PROCEDURE 2
Check "B" Terminal Circuit

=NASC0020S04

NASC0020S0401

1	CHECK "B" TERMINAL CONNECTION	
Check to see if "B" terminal is clean and tight.		
	OK or NG	
OK	▶	GO TO 2. Confirm repair by performing complete Battery/Starting/Charging system test.
NG	▶	Repair "B" terminal connection.

2	CHECK ALTERNATOR "B" TERMINAL CIRCUIT	
Check voltage between alternator B terminal E107 (B/R) and ground using a digital circuit tester.		
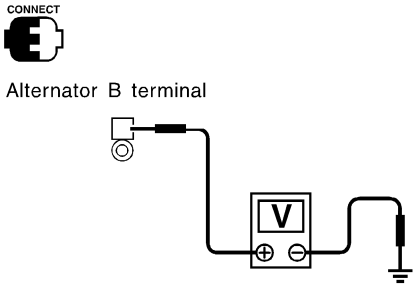 **Battery voltage should exist.** SEL967XA		
	OK or NG	
OK	▶	GO TO 3.
NG	▶	**Check the following.** ● 120A fusible link (letter **a**, located in fuse and fusible link box) ● Harness for open or short between alternator and fusible link

3	CHECK "B" TERMINAL CONNECTION QUALITY (VOLTAGE DROP TEST)	
Check voltage between alternator B terminal E107 (B/R) and battery positive terminal using a digital circuit tester.		
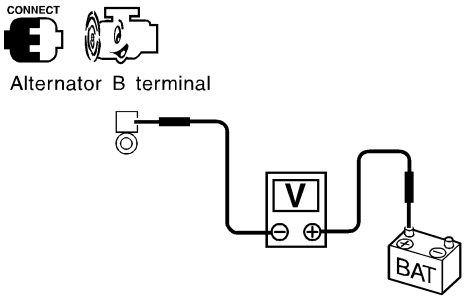 When the engine running at idle and warm, **Voltage: Less than 0.2V** SEL968XA		
	OK or NG	
OK	▶	Replace the alternator. Confirm repair by performing complete Battery/Starting/Charging system test.
NG	▶	Check harness between the battery and the alternator for poor continuity.

DIAGNOSTIC PROCEDURE 3
Check "S" Terminal Circuit

=NASC0020S05

NASC0020S0501

1	CHECK "S" TERMINAL CONNECTION	
Check to see if "S" terminal is clean and tight.		
OK or NG		
OK	▶	GO TO 2.
NG	▶	Repair "S" terminal connection. Confirm repair by performing complete Battery/Starting/Charging system test.

2	CHECK ALTERNATOR "S" TERMINAL CIRCUIT	
Check voltage between alternator connector E106 terminal 2 (L/Y) and ground using a digital circuit tester.		
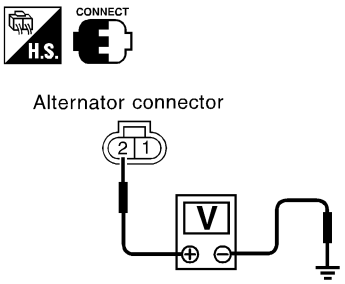 **Battery voltage should exist.** SEL427XA		
OK or NG		
OK	▶	GO TO 3.
NG	▶	**Check the following.** ● 7.5A fuse (No. 65, located in fuse and fusible link box) ● Harness for open or short between alternator and fuse

3	CHECK "S" TERMINAL CONNECTION QUALITY (VOLTAGE DROP TEST)	
Check voltage between alternator connector E106 terminal 2 (L/Y) and battery positive terminal using a digital circuit tester.		
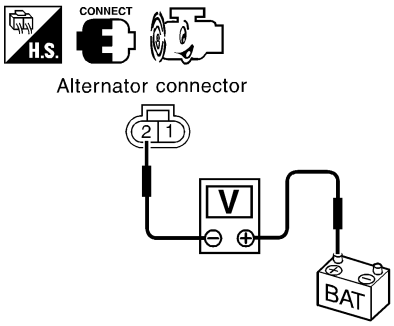 When the engine running at idle and warm, **Voltage: Less than 0.2 V** SEL428XA		
OK or NG		
OK	▶	Replace the alternator. Confirm repair by performing complete Battery/Starting/Charging system test.
NG	▶	Check harness between the battery and the alternator for poor continuity.

MALFUNCTION INDICATOR

=NASC0020S06

The IC regulator warning function activates to illuminate "CHARGE" warning lamp, if any of the following symptoms occur while alternator is operating:

- Excessive voltage is produced.
- No voltage is produced.

Construction

NASC0012

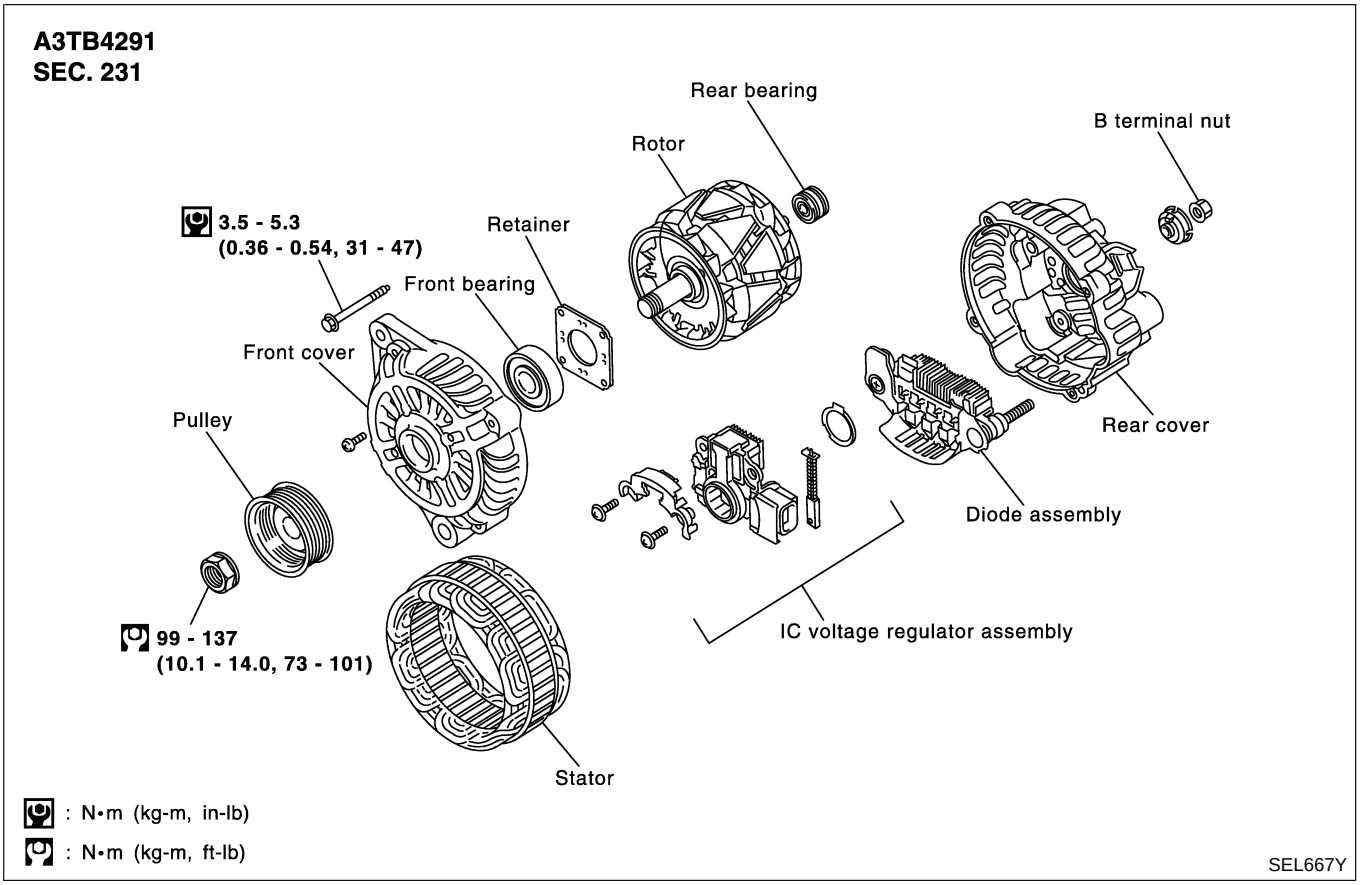

Removal and Installation

NASC0013

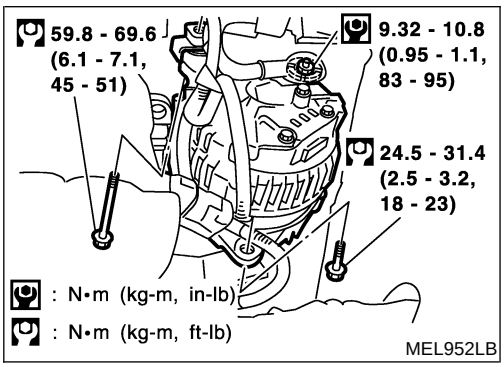

Battery

NASC0022

Type	80D23R
Capacity	12V-52AH
Cold cranking current (For reference value)	582A

Starter

NASC0023

Type		M0T50571
		MITSUBISHI make
		Reduction gear type
System voltage		12V
No-load	Terminal voltage	11.0V
	Current	Less than 90A
	Revolution	More than 2,700 rpm
Minimum diameter of commutator		28.8 mm (1.134 in)
Minimum length of brush		7.0 mm (0.276 in)
Brush spring tension		15.0 - 20.4 N (1.53 - 2.08 kg, 3.37 - 4.59 lb)
Clearance between bearing metal and armature shaft		Less than 0.2 mm (0.008 in)
Movement "ℓ" in height of pinion assembly		0.5 - 2.0 mm (0.020 - 0.079 in)

Alternator

NASC0024

Type	A3TB4291
	MITSUBISHI make
Nominal rating	12V-110A
Ground polarity	Negative
Minimum revolution under no-load (When 13.5V is applied)	Less than 1,300 rpm
Hot output current (When 13.5V is applied)	More than 35A/1,300 rpm More than 91A/2,500 rpm More than 110A/5,000 rpm
Regulated output voltage	14.1 - 14.7V
Minimum length of brush	More than 5.00 mm (0.197 in)
Brush spring pressure	4.8 - 6.0 N (490 - 610 g, 17.28 - 21.51 oz)
Slip ring minimum outer diameter	More than 22.1 mm (0.870 in)
Rotor (Field coil) resistance	1.7 - 2.1Ω

NOTES

STEERING SYSTEM

SECTION ST

CONTENTS

PRECAUTIONS 2
Supplemental Restraint System (SRS) "AIR BAG" and "SEAT BELT PRE-TENSIONER"....2
Precautions for SRS "AIR BAG" and "SEAT BELT PRE-TENSIONER" Service....2
Precautions for Steering System....2
PREPARATION 3
Special Service Tools 3
Commercial Service Tools 4
NOISE, VIBRATION AND HARSHNESS (NVH) TROUBLESHOOTING 6
NVH Troubleshooting Chart....6
ON-VEHICLE SERVICE 7
Checking Steering Wheel Play....7
Checking Neutral Position on Steering Wheel....7
PRE-CHECKING....7
CHECKING 7
Front Wheel Turning Angle....7
Checking Gear Housing Movement 8
Adjusting Rack Retainer....8
Checking and Adjusting Drive Belts 8
Checking Fluid Level 8
Checking Fluid Leakage....8
Bleeding Hydraulic System....9
Checking Steering Wheel Turning Force 9
Checking Hydraulic System....10
STEERING WHEEL AND STEERING COLUMN 11
Components....11
Removal and Installation 11
STEERING WHEEL 11
STEERING COLUMN 12
Disassembly and Assembly....13
Inspection....14
TILT MECHANISM 14
STEERING TRANSFER GEAR 15
Removal....15
Installation....16
Inspection....16
POWER STEERING GEAR AND LINKAGE 17
Components....17
Removal and Installation 18
Disassembly....19
Inspection....20
BOOT 20
RACK 20
PINION ASSEMBLY 20
GEAR HOUSING CYLINDER....20
TIE-ROD OUTER AND INNER SOCKETS....21
Assembly 21
Adjustment 24
POWER STEERING OIL PUMP....27
Components....27
Pre-disassembly Inspection....27
Disassembly....28
Inspection....29
Assembly 29
SERVICE DATA AND SPECIFICATIONS (SDS) 32
General Specifications....32
Steering Wheel 32
Steering Column 32
Steering Transfer Gear 32
Steering Gear and Linkage 33
Power Steering 33

Supplemental Restraint System (SRS) "AIR BAG" and "SEAT BELT PRE-TENSIONER"

NAST0047

The Supplemental Restraint System such as "AIR BAG" and "SEAT BELT PRE-TENSIONER" used along with a seat belt, helps to reduce the risk or severity of injury to the driver and front passenger for certain types of collision. The SRS composition which is available to NISSAN MODEL R50 is as follows:

- For a frontal collision
  The Supplemental Restraint System consists of driver air bag module (located in the center of the steering wheel), front passenger air bag module (located on the instrument panel on passenger side), seat belt pre-tensioners, a diagnosis sensor unit, warning lamp, wiring harness and spiral cable.
- For a side collision
  The Supplemental Restraint System consists of side air bag module (located in the outer side of front seat), side curtain air bag module (locating in the headliner side of front and rear seat), satellite sensor, diagnosis sensor unit (one of components of air bags for a frontal collision), wiring harness, warning lamp (one of components of air bags for a frontal collision).

WARNING:

- **To avoid rendering the SRS inoperative, which could increase the risk of personal injury or death in the event of a collision which would result in air bag inflation, all maintenance must be performed by an authorized NISSAN dealer.**
- **Improper maintenance, including incorrect removal and installation of the SRS, can lead to personal injury caused by unintentional activation of the system.**
- **Do not use electrical test equipment on any circuit related to the SRS unless instructed to in this Service Manual. SRS wiring harnesses can be identified by yellow and/or orange harness connector (and by yellow harness protector or yellow insulation tape before the harness connectors).**

Precautions for SRS "AIR BAG" and "SEAT BELT PRE-TENSIONER" Service

NAST0048

- Do not use electrical test equipment to check SRS circuits unless instructed to in this Service Manual.
- Before servicing the SRS, turn ignition switch "OFF", disconnect battery ground cable and wait at least 3 minutes.
  For approximately 3 minutes after the cables are removed, it is still possible for the air bag and seat belt pre-tensioner to deploy. Therefore, do not work on any SRS connectors or wires until at least 3 minutes have passed.
- Diagnosis sensor unit must always be installed with their arrow marks "⇐" pointing towards the front of the vehicle for proper operation. Also check diagnosis sensor unit for cracks, deformities or rust before installation and replace as required.
- The spiral cable must be aligned with the neutral position since its rotations are limited. Do not attempt to turn steering wheel or column after removal of steering gear.
- Handle air bag module carefully. Always place driver and passenger air bag modules with the pad side facing upward and side air bag module standing with the stud bolt side setting bottom.
- Conduct self-diagnosis to check entire SRS for proper function after replacing any components.
- After air bag inflates, the front instrument panel assembly should be replaced if damaged.

Precautions for Steering System

NAST0046

- **Before disassembly, thoroughly clean the outside of the unit.**
- **Disassembly should be done in a clean work area. It is important to prevent the internal parts from becoming contaminated by dirt or other foreign matter.**
- **Place disassembled parts in order, on a parts rack, for easier and proper assembly.**
- **Use nylon cloths or paper towels to clean the parts; common shop rags can leave lint that might interfere with their operation.**
- **Before inspection or reassembly, carefully clean all parts with a general purpose, non-flammable solvent.**
- **Before assembly, apply a coat of recommended power steering fluid* to hydraulic parts. Vaseline may be applied to O-rings and seals. Do not use any grease.**
- **Replace all gaskets, seals and O-rings. Avoid damaging O-rings, seals and gaskets during installation. Perform functional tests whenever designated.**
  ***: Genuine Nissan PSF II or equivalent. Refer to MA-12, "Fluids and Lubricants".**

Special Service Tools

NAST0003

The actual shapes of Kent-Moore tools may differ from those of special service tools illustrated here.

Tool number (Kent-Moore No.) Tool name	Description	
KV48100700 (J26364) Torque adapter	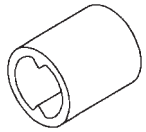 NT169	Measuring pinion rotating torque
ST35300000 (—) Drift	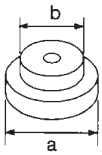 NT073	Installing power steering oil pump oil seal **a: 59 mm (2.32 in) dia.** **b: 45 mm (1.77 in) dia.**
ST27180001 (J25726-A) Steering wheel puller	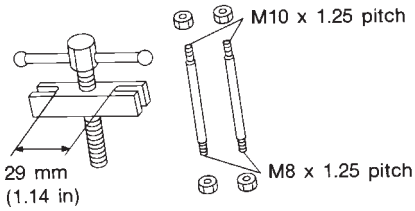 NT544	Removing steering wheel
ST29020001 (J24319-01) Ball joint remover	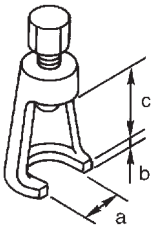 NT694	Removing ball joint **a: 34 mm (1.34 in)** **b: 6.5 mm (0.256 in)** **c: 61.5 mm (2.421 in)**
KV48103500 (J26357 and J26357-10) Pressure gauge	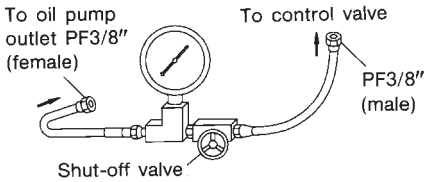 NT547	Measuring oil pressure
KV48102500 (—) Pressure gauge adapter	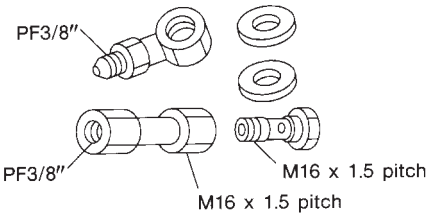 NT542	Measuring oil pressure

Special Service Tools (Cont'd)

Tool number (Kent-Moore No.) Tool name	Description	
ST3127S000 (See J25765-A) 1 GG91030000 (J25765-A) Torque wrench 2 HT62940000 (—) Socket adapter 3 HT62900000 (—) Socket adapter	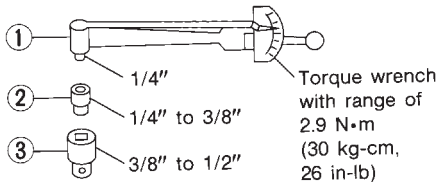 NT541	Measuring turning torque
KV48104400 (—) Rack seal ring reformer	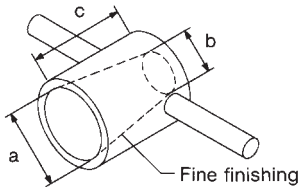 NT550	Reforming teflon ring **a: 50 mm (1.97 in) dia.** **b: 36 mm (1.42 in) dia.** **c: 100 mm (3.94 in)**
KV48103400 (—) Torque adapter	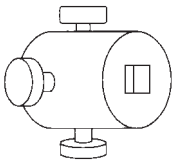 NT236	Measuring steering transfer gear rotating torque
KV48104200 (—) Rear cover wrench	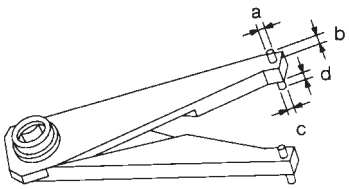 NT540	Removing and installing gear housing end cover **a: 4 mm (0.16 in) dia.** **b: 5 mm (0.20 in)** **c: 3 mm (0.12 in) dia.** **d: 5 mm (0.20 in)**

Commercial Service Tools

NAST0004

Tool name	Description	
Rear oil seal drift	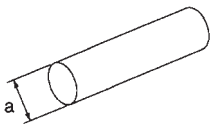 NT063	Installing rear oil seal **a: 28 mm (1.10 in) dia.**

Tool name	Description	
Pinion oil seal drift	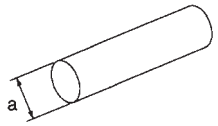 NT063	Installing pinion oil seal **a: 40 mm (1.57 in) dia.**
Oil pump attachment	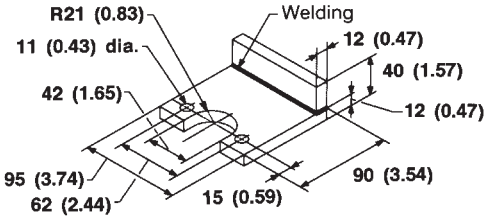 NT179	Disassembling and assembling oil pump Unit: mm (in)

NVH Troubleshooting Chart

NAST0043S01

Use the chart below to help you find the cause of the symptom. If necessary, repair or replace these parts.

Reference page			ST-8	ST-9	ST-21	ST-21	ST-21	ST-8	ST-7	ST-9	MA-14	—	ST-13	ST-8	ST-13	ST-13	ST-17	PD-4	PD-4	AX-3	AX-3	SU-4	SU-4	SU-4	BR-7
Possible cause and SUSPECTED PARTS			Fluid level	Air in hydraulic system	Tie-rod ball joint swinging force	Tie-rod ball joint rotating torque	Tie-rod ball joint end play	Steering gear fluid leakage	Steering wheel play	Steering gear rack sliding force	Drive belt looseness	Improper steering wheel	Improper installation or looseness or tilt lock lever	Mounting rubber deterioration	Steering column deformation or damage	Improper installation or looseness of steering column	Steering linkage looseness	PROPELLER SHAFT	DIFFERENTIAL	DRIVE SHAFT	AXLE	SUSPENSION	TIRES	ROAD WHEEL	BRAKES
Symp-tom	STEERING	Noise	×	×	×	×	×	×	×	×	×							×	×	×	×	×	×	×	×
		Shake										×	×	×				×		×	×	×	×	×	×
		Vibration										×	×	×	×	×		×		×	×	×	×		
		Shimmy										×	×	×			×				×	×	×	×	×
		Judder												×			×				×	×	×	×	×

×: Applicable

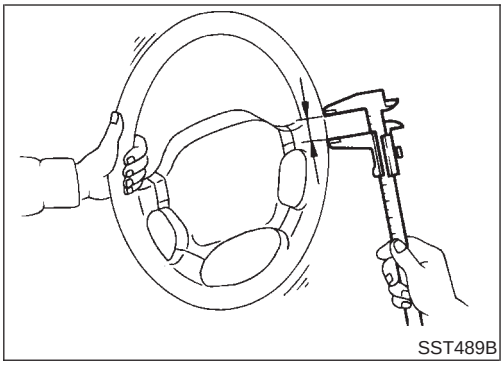
SST489B

Checking Steering Wheel Play

NAST0005

1. With wheels in a straight-ahead position, check steering wheel play.

   Steering wheel play:
   35 mm (1.38 in) or less

2. If it is not within specification, check the following for loose or worn components.

   Steering gear assembly
   Steering column
   Front suspension and axle

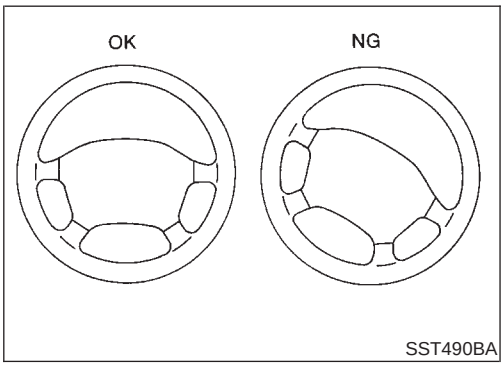

SST490BA

Checking Neutral Position on Steering Wheel

NAST0006

PRE-CHECKING

NAST0006S01

- Make sure that wheel alignment is correct.

  Wheel alignment:
  Refer to SU-34, “Wheel Alignment”.

- Verify that the steering gear is centered before removing the steering wheel.

CHECKING

NAST0006S02

1. Check that the steering wheel is in the neutral position when driving straight ahead.
2. If it is not in the neutral position, remove the steering wheel and reinstall it correctly.
3. If the neutral position is between two teeth, loosen tie-rod lock nuts. Turn the tie-rods by the same amount in opposite directions on both left and right sides.

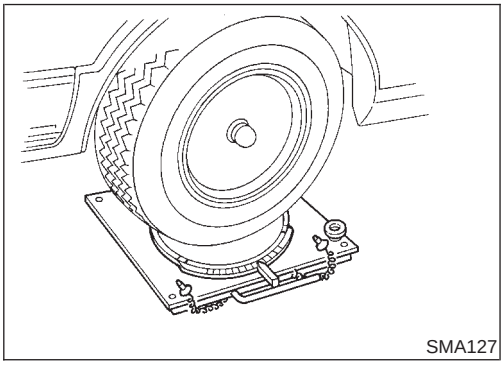
SMA127

Front Wheel Turning Angle

NAST0007

1. Rotate steering wheel all the way right and left; measure turning angle.

   Turning angle of full turns:
   Refer to SU-34, “Wheel Alignment”.

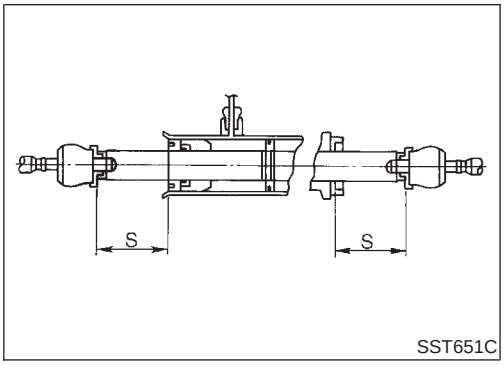

SST651C

2. If it is not within specification, check rack stroke.

   Rack stroke “S”:
   Refer to SDS (ST-33).

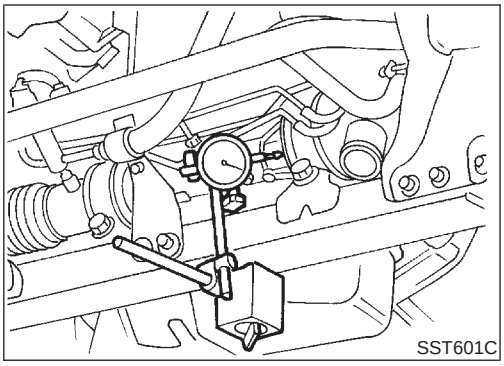
SST601C

Checking Gear Housing Movement

NAST0008

1. Check the movement of steering gear housing during stationary steering on a dry paved surface.

- Apply a force of 49 N (5 kg, 11 lb) to steering wheel to check the gear housing movement.
  Turn off ignition key while checking.

  Movement of gear housing:
  ±2 mm (±0.08 in) or less

2. If movement exceeds the limit, replace mount insulator after confirming proper installation of gear housing clamps.

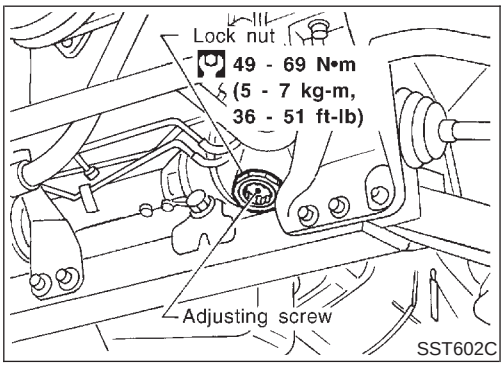

SST602C

Adjusting Rack Retainer

NAST0009

- Perform this driving test on a flat road.

a) Check whether vehicle moves in a straight line when steering wheel is released.

b) Check whether steering wheel returns to neutral position when steering wheel is released from a slightly turned (approx. 20°) position.

- If any abnormality is found, correct it by resetting adjusting screw.

Checking and Adjusting Drive Belts

NAST0010

Refer to MA-14, “Checking Drive Belts”.

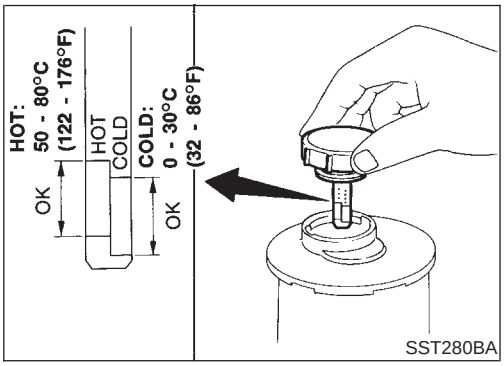

SST280BA

Checking Fluid Level

NAST0011

Check fluid level.
Use the correct range of the dipstick depending on the fluid temperature. Use the “HOT” range at 50 to 80°C (122 to 176°F), or the “COLD” range at 0 to 30°C (32 to 86°F).

CAUTION:

- **Do not overfill.**
- **Recommended fluid is Genuine Nissan PSF II or equivalent. Refer to MA-12, “Fluids and Lubricants”.**

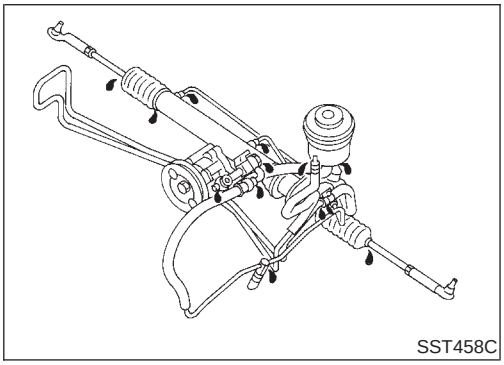
SST458C

Checking Fluid Leakage

NAST0012

Check the lines for improper attachment and for leaks, cracks, damage, loose connections, chafing and deterioration.

1. Run engine between idle speed and 1,000 rpm.

Make sure temperature of fluid in reservoir tank rises to 50 to 80°C (122 to 176°F).

2. Turn steering wheel right-to-left several times.
3. Hold steering wheel at each “lock” position for five seconds and carefully check for fluid leakage.

CAUTION:

Do not hold the steering wheel in a locked position for more than 15 seconds.

4. If fluid leakage at connectors is noticed, loosen flare nut and then retighten.

Do not overtighten connector as this can damage O-ring, washer and connector.

5. Check rack boots for accumulation of power steering fluid.

Bleeding Hydraulic System

NAST0013

1. Raise front end of vehicle until wheels are clear of the ground.
2. Add fluid into reservoir tank to specified level. Then, quickly turn steering wheel fully to right and left and lightly touch steering stoppers.
   Repeat steering wheel operation until fluid level no longer decreases.
3. Start engine.
   Repeat step 2 above.

- Incomplete air bleeding will cause the following to occur. When this happens, bleed air again.

a) Air bubbles in reservoir tank

b) Clicking noise in oil pump

c) Excessive buzzing in oil pump

Fluid noise may occur in the valve or oil pump. This is common when the vehicle is stationary or while turning steering wheel slowly. This does not affect performance or durability of the system.

Checking Steering Wheel Turning Force

NAST0014

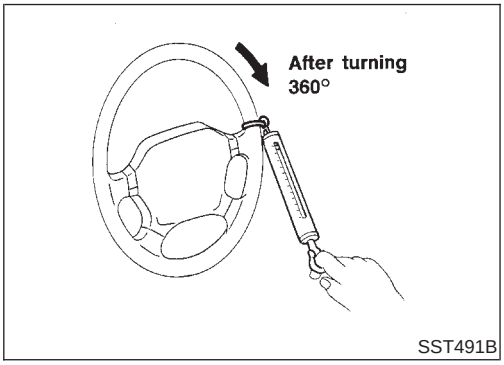

SST491B

1. Park vehicle on a level, dry surface and set parking brake.
2. Start engine.
3. Bring power steering fluid up to adequate operating temperature. [Make sure temperature of fluid is approximately 50 to 80°C (122 to 176°F).]

Tires need to be inflated to normal pressure.

4. Check steering wheel turning force when steering wheel has been turned 360° from the neutral position.

   Steering wheel turning force:

   39 N (4 kg, 9 lb) or less

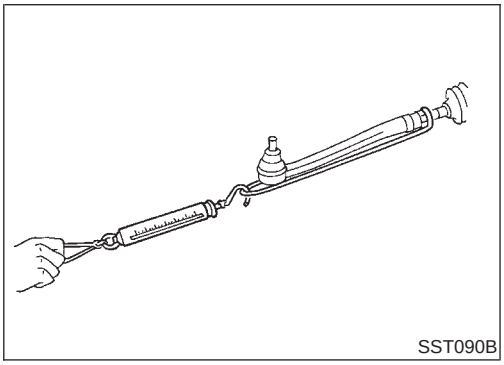

SST090B

5. If steering wheel turning force is out of specification, check rack sliding force.

a. Disconnect steering column lower joint and knuckle arms from the gear.

b. Start and run engine at idle to make sure steering fluid has reached normal operating temperature.

c. Pull tie-rod slowly to move it from neutral position to ±11.5 mm (±0.453 in) at speed of 3.5 mm (0.138 in)/s. Check that rack sliding force is within specification.

   Rack sliding force:

   167 - 254 N (17.0 - 25.9 kg, 37 - 57 lb)

6. If rack sliding force is not within specification, overhaul steering gear assembly.
7. If rack sliding force is OK, inspect steering column. Refer to "Inspection", "STEERING WHEEL AND STEERING COLUMN", ST-14.

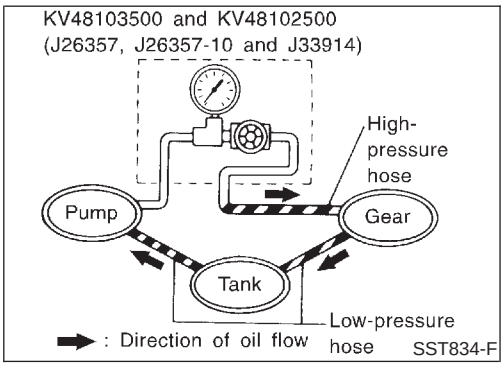

Checking Hydraulic System

NAST0015

Before starting, check belt tension, driving pulley and tire pressure.

1. Set Tool. Open shut-off valve. Then bleed air.
   Refer to "Bleeding Hydraulic System", ST-9.
2. Run engine, at idle speed or 1,000 rpm.

Make sure fluid temperature in reservoir tank rises to 50 to 80°C (122 to 176°F).

WARNING:

Warm up engine with shut-off valve fully opened. If engine is started with shut-off valve closed, fluid pressure in the power steering pump increase to maximum. This will raise fluid temperature abnormally.

3. Check pressure with steering wheel fully turned to left and right positions with engine idling at 1,000 rpm.

CAUTION:

Do not hold the steering wheel in a locked position for more than 15 seconds.

Power steering pump maximum operating pressure:
8,630 - 9,219 kPa
(88 - 94 kg/cm^2, 1,251 - 1,337 psi)

- If pressure reaches maximum operating pressure, system is OK.
- If pressure increases above maximum operating pressure, check power steering pump flow control valve. Refer to ST-28.

4. If power steering pressure is below the maximum operating pressure, slowly close shut-off valve and check pressure again.

CAUTION:

Do not close shut-off valve for more than 15 seconds.

- If pressure increases to maximum operating pressure, gear should be damaged. Refer to "Removal and Installation", ST-18.
- If pressure remains below maximum operating pressure, pump should be damaged. Refer to "Disassembly", ST-28.

5. After checking hydraulic system, remove Tool and add fluid as necessary. Then completely bleed air out of system. Refer to ST-9.

Components

NAST0016

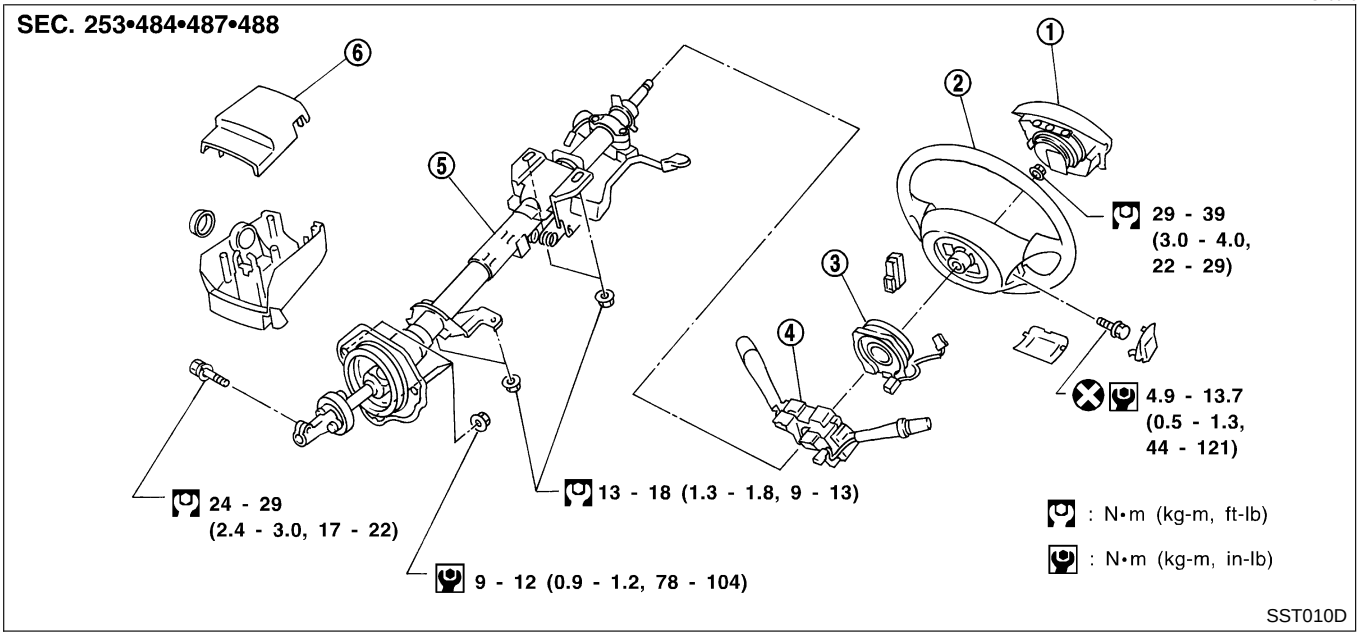

1. Air bag module
2. Steering wheel
3. Spiral cable
4. Combination switch
5. Steering column assembly
6. Column cover

CAUTION:

- **The rotation of the spiral cable (SRS "AIR BAG" component part) is limited. If the steering gear must be removed, set the front wheels in the straight-ahead direction. Do not rotate the steering column while the steering gear is removed.**
- **Remove the steering wheel before removing the steering lower joint to avoid damaging the SRS spiral cable.**

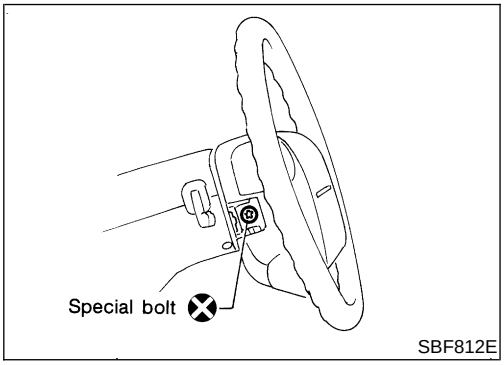

Removal and Installation

NAST0017

STEERING WHEEL

NAST0017S01

1. Remove air bag module and spiral cable. Refer to RS-18, "Removal — Air Bag Module and Spiral Cable".

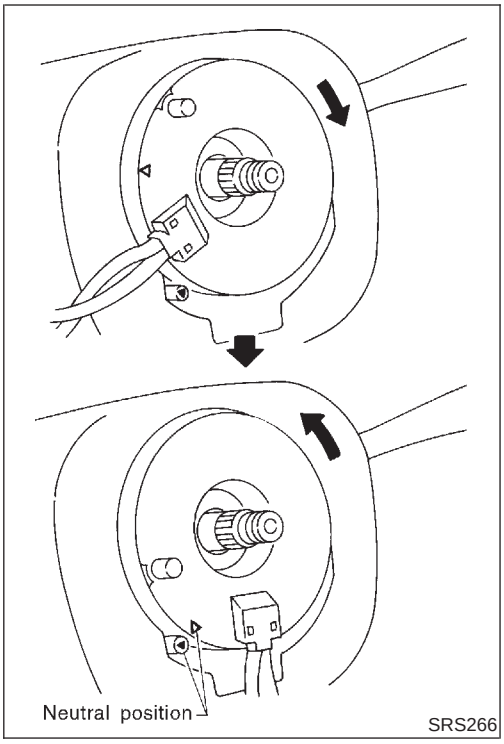

2. Align spiral cable correctly when installing steering wheel.
a. Set the front wheels in the straight-ahead position.
b. Make sure that the spiral cable is in the neutral position. The neutral position is detected by turning left about 2.5 revolutions from the right end position. Align the two marks (⧗).

CAUTION:

- **The spiral cable may snap due to steering operation if the cable is installed in an improper position.**
- **Also, with the steering linkage disconnected, the cable may snap by turning the steering wheel beyond the limited number of turns. The spiral cable can be turned to the left about 2.5 turns from the right end position.**

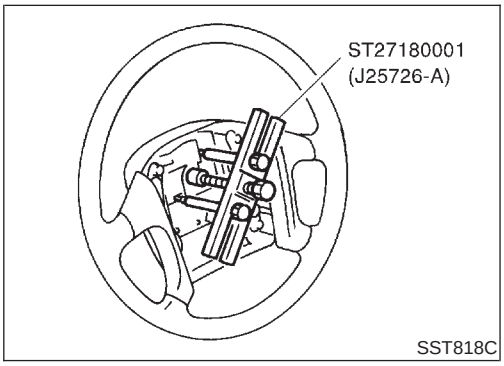

3. Remove steering wheel with Tool.

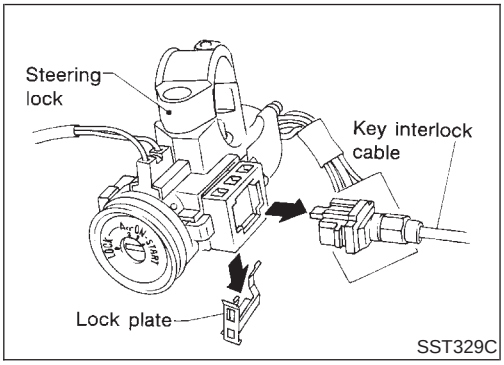

4. Remove key interlock cable.

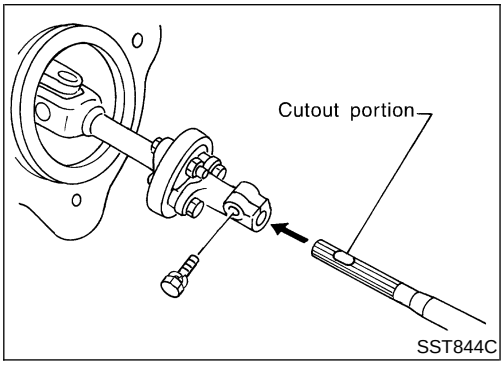

STEERING COLUMN

NAST0017S02

- When installing steering column, fingertighten all lower bracket and clamp retaining bolts; then tighten them securely. Do not apply undue stress to steering column.
- When attaching coupling joint, be sure tightening bolt faces cutout portion.

Disassembly and Assembly

NAST0018

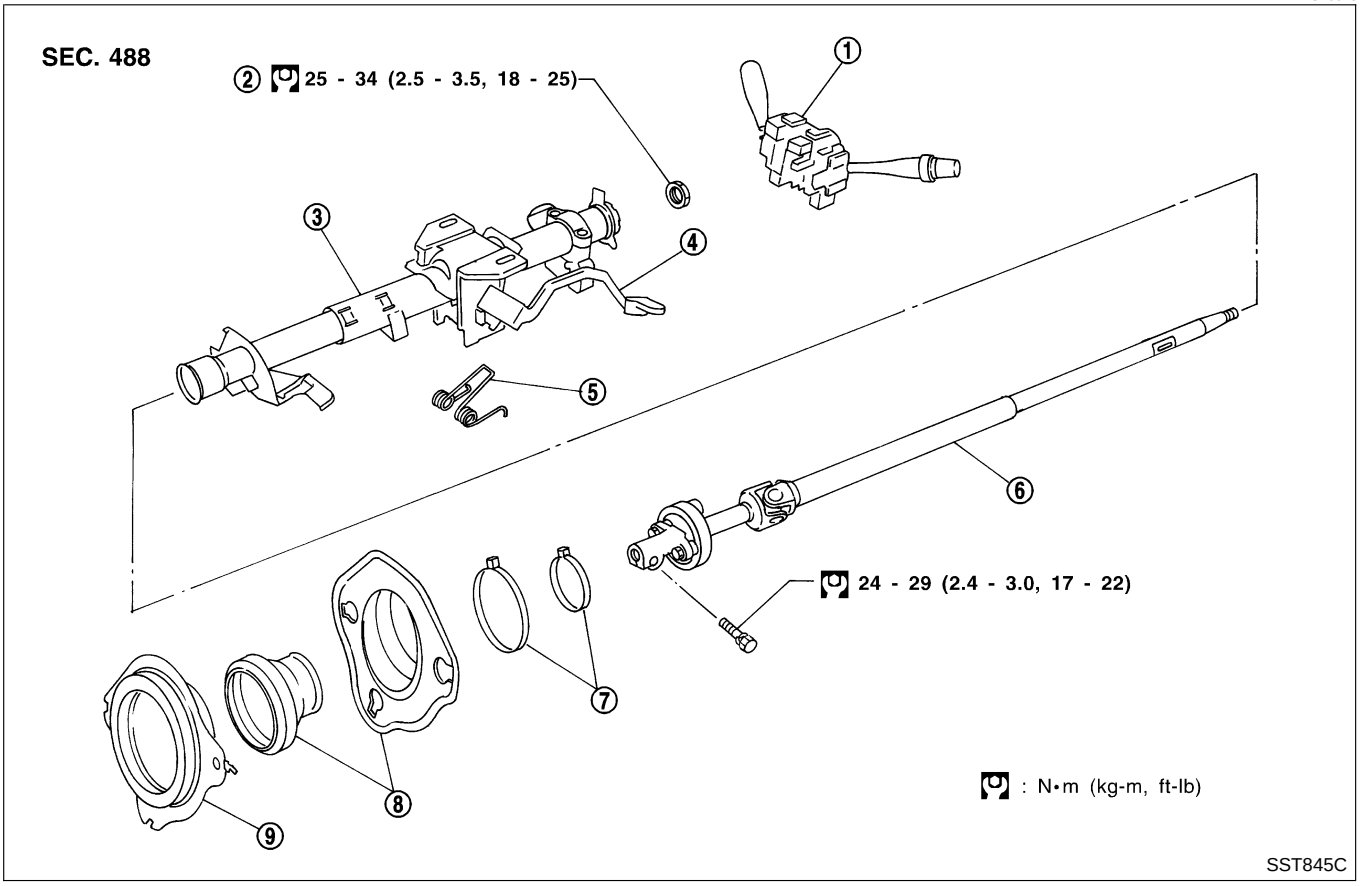

1. Combination switch
2. Lock nut
3. Jacket tube assembly
4. Tilt lever
5. Tilt spring
6. Steering column shaft assembly
7. Band
8. Jacket tube bracket insulator assembly
9. Hole cover

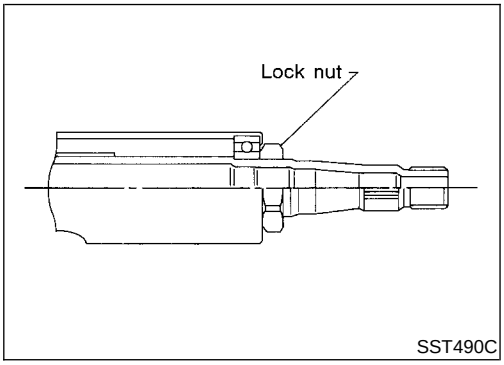

- When disassembling and assembling, unlock steering lock with key.
- Install lock nut on steering column shaft and tighten the nut to specification.

  : 25 - 34 N·m (2.5 - 3.5 kg-m, 18 - 25 ft-lb)

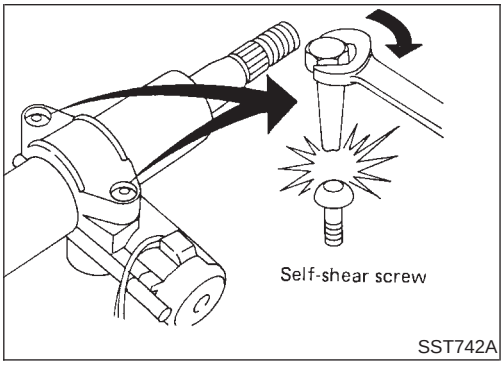

- Steering lock

a) Break self-shear type screws with a drill or other appropriate tool.

b) Install new self-shear type screws and then cut off self-shear type screw heads.

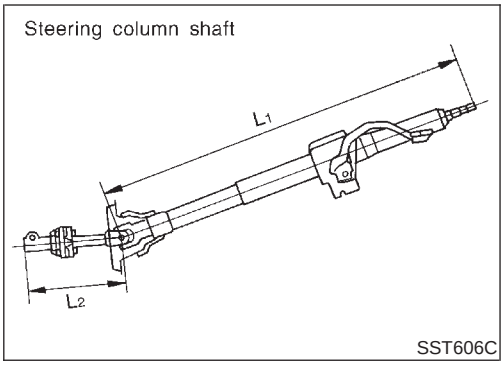

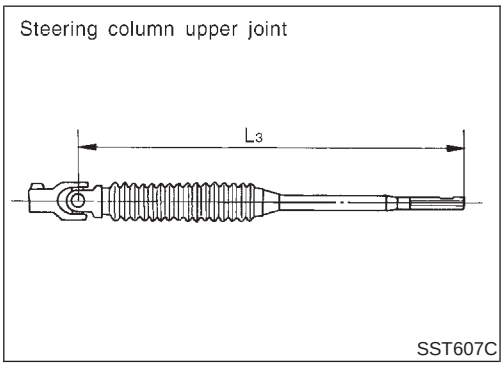

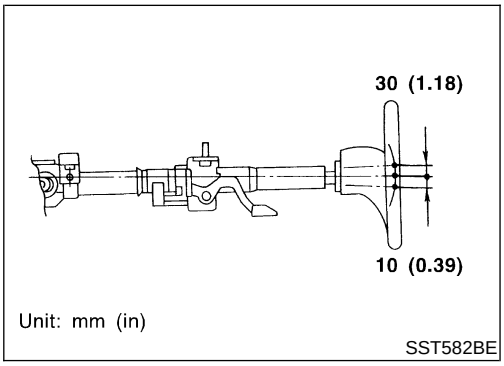

Inspection

NAST0019

- When steering wheel does not turn smoothly, check the steering column as follows and replace damaged parts.

a) Check column bearings for damage and unevenness. Lubricate with recommended multi-purpose grease or replace steering column as an assembly, if necessary.

b) Check steering column lower shaft for deformation and breakage. Replace if necessary.

- When the vehicle comes into a light collision, check length "L_1", "L_2" and "L_3".

Steering column length "L_1":
716.7 - 718.7 mm (28.22 - 28.30 in)
Steering column lower shaft length "L_2":
178 - 180 mm (7.01 - 7.09 in)
Steering column upper joint length "L_3":
430.7 - 432.7 mm (16.96 - 17.04 in)

If out of the specifications, replace steering column upper joint or steering column as an assembly.

TILT MECHANISM

NAST0019S01

After installing steering column, check tilt mechanism operation.

Removal

NAST0021

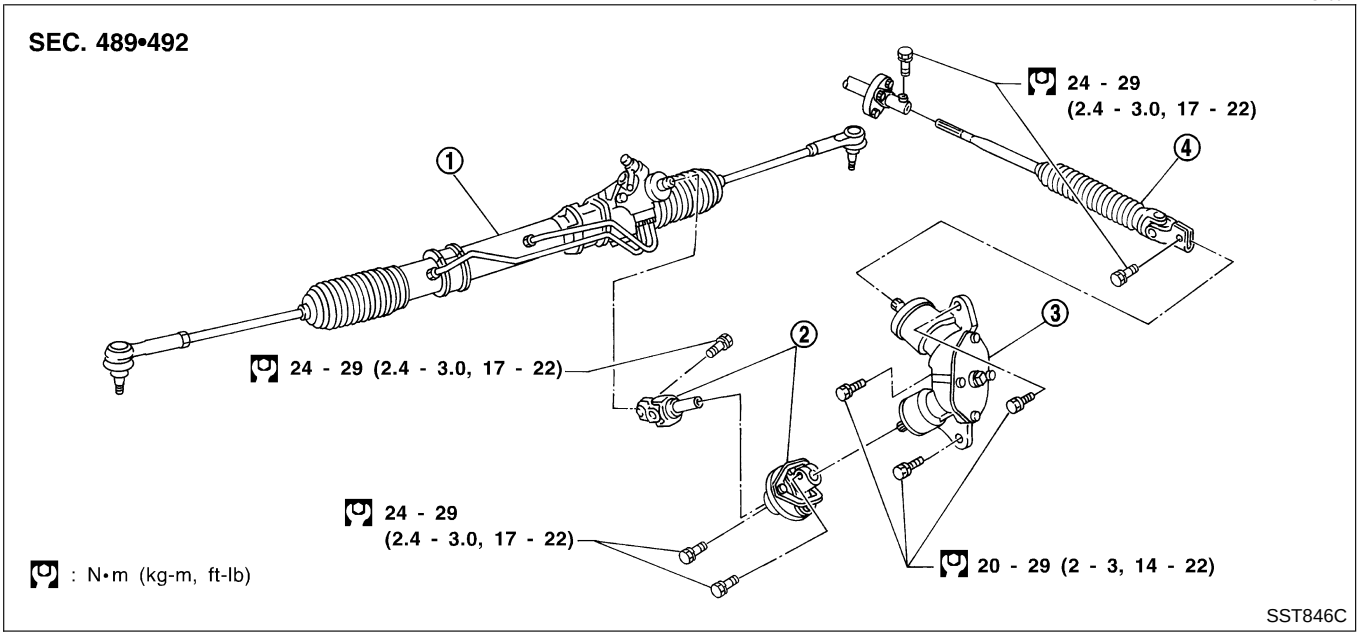

1. Power steering gear assembly
2. Steering column lower joint
3. Transfer gear assembly
4. Steering column upper joint

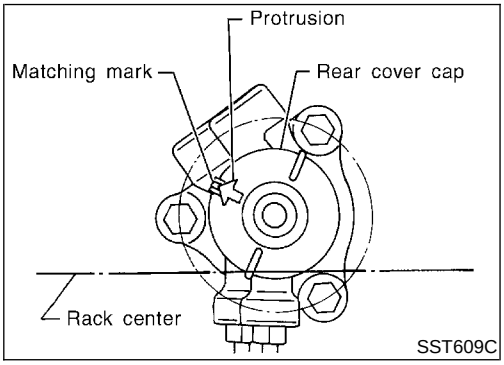

1. Set wheels in the straight-ahead position.
2. Straight-forward position is indicated by a protrusion on the power steering gear rear cover cap and matching mark on the rear housing.

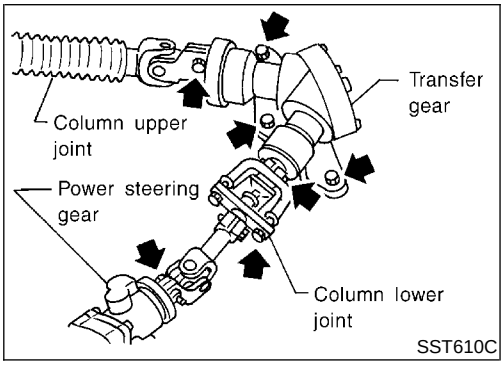

3. Remove steering column upper and lower joint from transfer gear.
4. Remove transfer gear assembly.

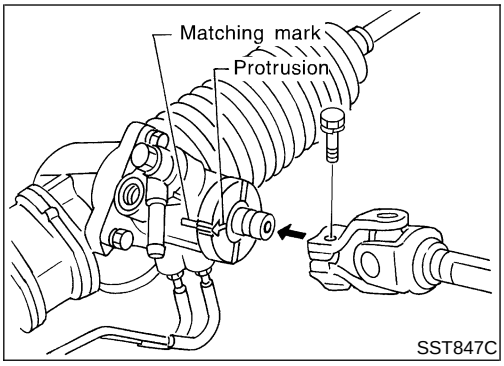

Installation

NAST0022

1. Set wheels in the straight-ahead position.
2. Install transfer gear assembly.
3. Install column lower joint while aligning groove with protrusions on the steering gear rear cover cap.
4. Tighten bolt while aligning groove on steering gear. Before tightening bolt, ensure it is inserted correctly.

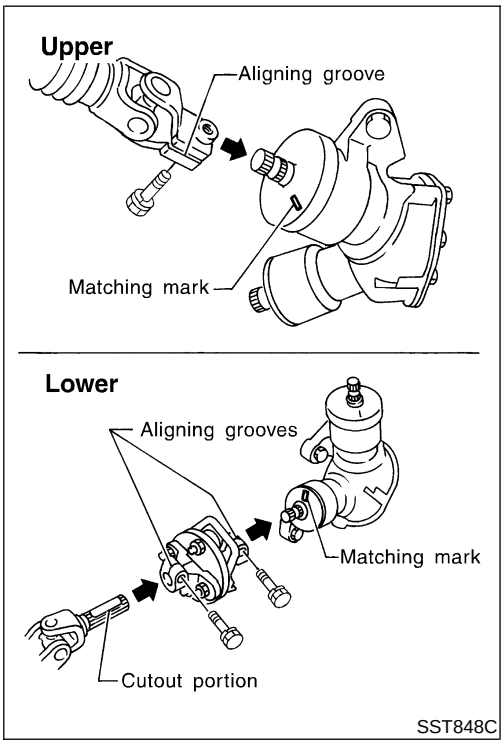

5. When attaching steering column upper and lower joint to transfer gear, it must be positioned as shown in figure at left.

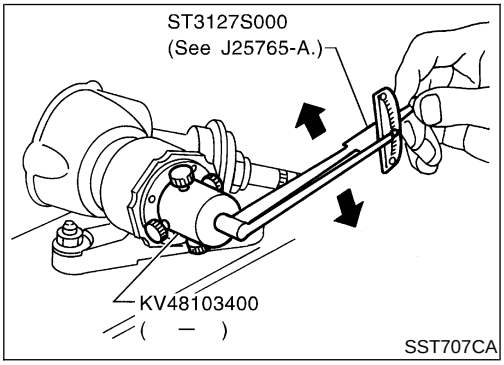

Inspection

NAST0024

Do not disassemble steering transfer gear assembly.

- Check that steering transfer gear assembly operates smoothly. Also check for grease leakage, deformation and damage. Replace steering transfer gear assembly if necessary.
- Check rotating torque at input shaft in 360° and in both directions.

  Rotating torque:

  0.25 - 0.69 N·m (2.5 - 7.0 kg-cm, 2.2 - 6.1 in-lb)

  If rotating torque is out of specification, replace steering transfer gear assembly.

Components

NAST0026

SEC. 492

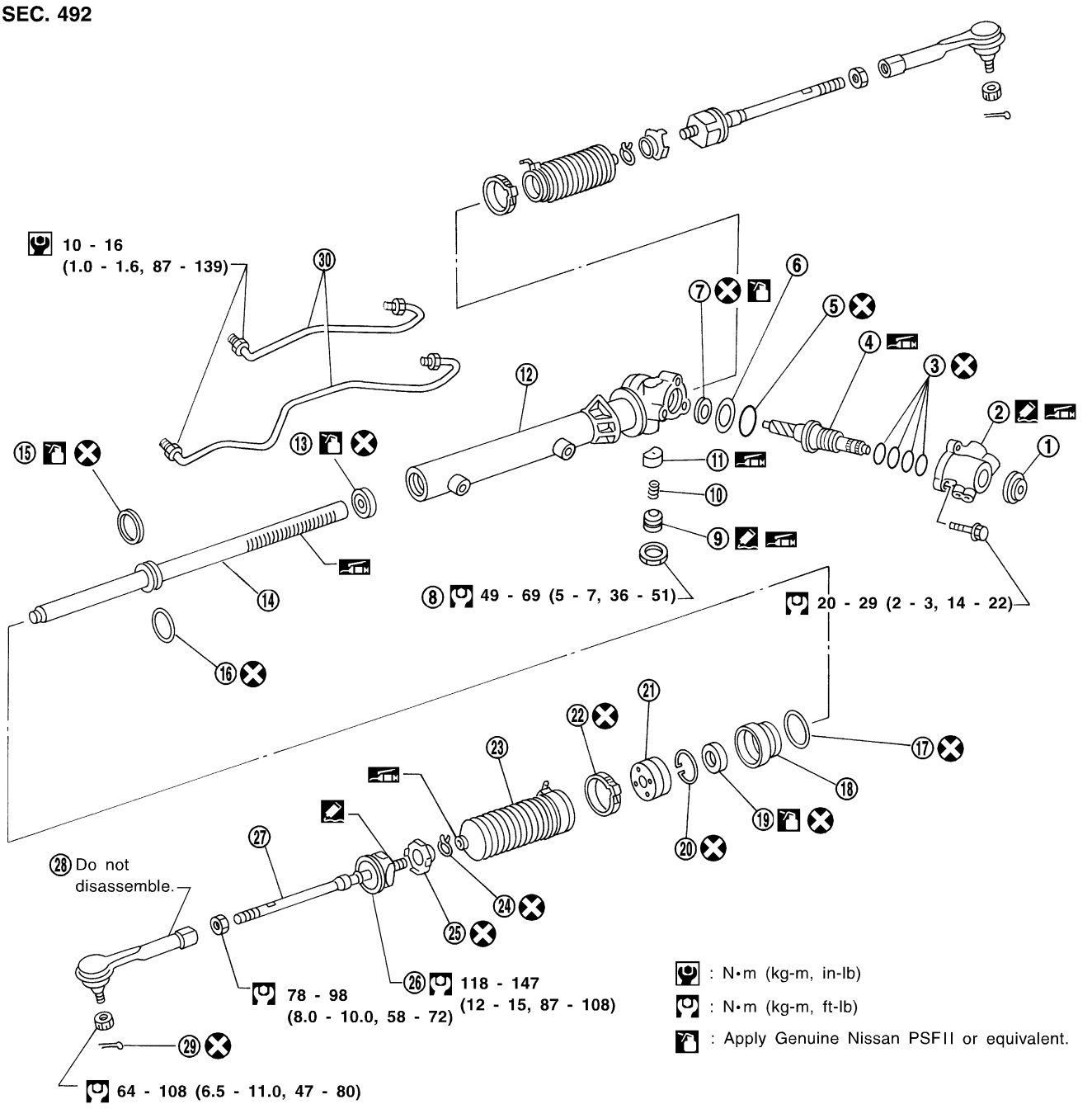

SST618CB

1. Rear cover cap
2. Rear housing assembly
3. Pinion seal ring
4. Pinion assembly
5. O-ring
6. Shim
7. Pinion oil seal
8. Lock nut
9. Adjusting screw
10. Spring
11. Retainer
12. Gear housing assembly
13. Rack oil seal
14. Rack assembly
15. Rack seal ring
16. O-ring
17. O-ring
18. Rack bushing
19. Rack oil seal
20. Snap ring
21. End cover assembly
22. Boot clamp
23. Dust boot
24. Boot clamp
25. Lock plate
26. Tie-rod inner socket
27. Tie-rod
28. Tie-rod outer socket
29. Cotter pin
30. Cylinder tube

Removal and Installation

NAST0027

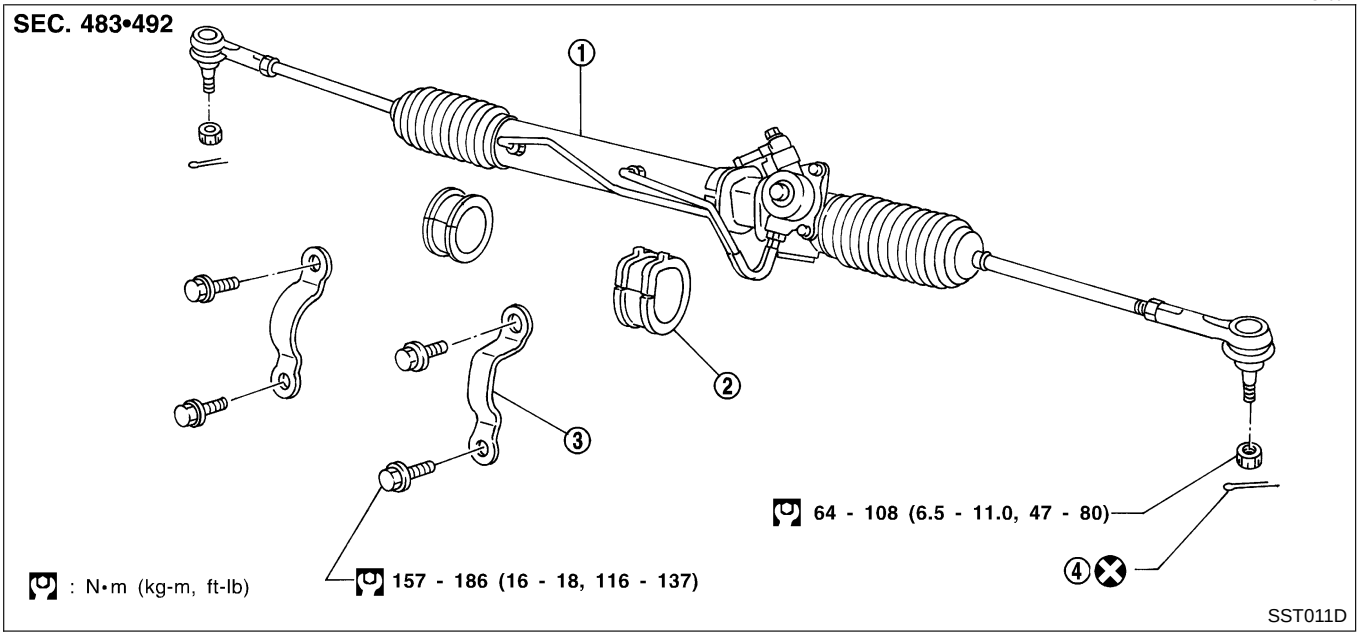

1. Gear and linkage assembly
2. Rack mounting insulator
3. Gear housing mounting bracket
4. Cotter pin

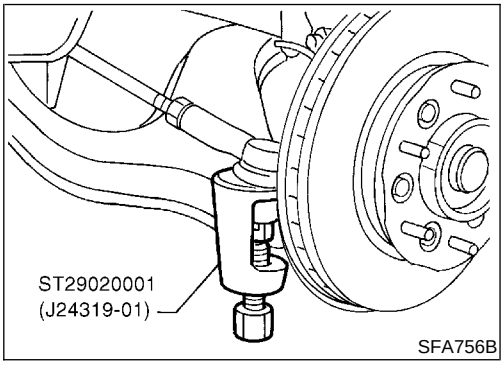

CAUTION:

- **The rotation of the spiral cable (SRS "AIR BAG" component part) is limited. If the steering gear must be removed, set the front wheels in the straight-ahead direction. Do not rotate the steering column while the steering gear is removed.**
- **Remove the steering wheel before removing the steering lower joint to avoid damaging the SRS spiral cable.**
- Detach tie-rod outer sockets from knuckle arms with Tool.

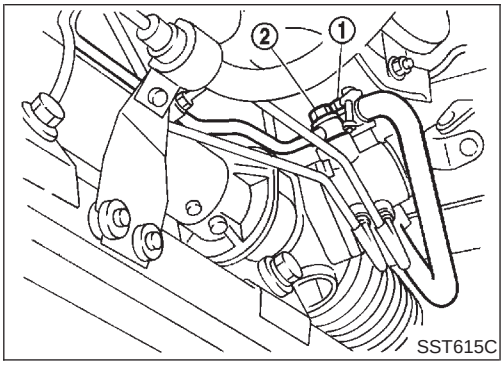

- Install pipe connector.
- Observe specified tightening torque when tightening high-pressure and low-pressure pipe connectors. Excessive tightening will damage threads of connector or O-ring.

  Connector tightening torque:

  Low-pressure side "1"

  30 - 35 N·m (3.1 - 3.6 kg-m, 22 - 26 ft-lb)

  High-pressure side "2"

  30 - 35 N·m (3.1 - 3.6 kg-m, 22 - 26 ft-lb)
- The O-ring in low-pressure pipe connector is larger than that

in high-pressure connector. Take care to install the proper O-ring.

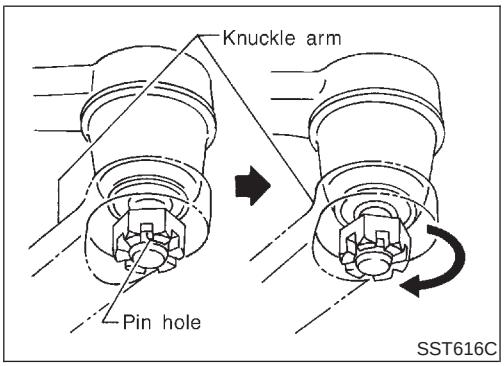

- Initially, tighten nut on tie-rod outer socket and knuckle arm to 64 to 69 N·m (6.5 to 7.0 kg-m, 47 to 51 ft-lb). Then tighten further to align nut groove with first pin hole so that cotter pin can be installed.

CAUTION:
Tightening torque must not exceed 108 N·m (11.0 kg-m, 80 ft-lb).

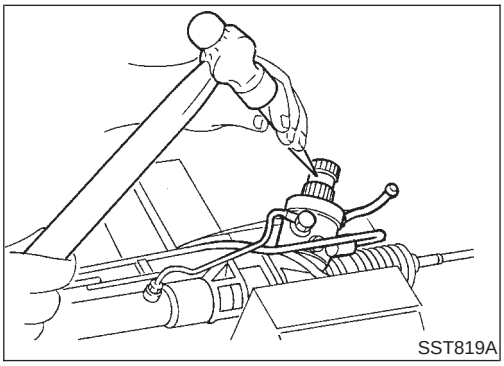

- Before removing steering column lower joint from gear, set gear in neutral (wheels in straight-ahead position). After removing steering column lower joint, put matching mark on pinion shaft and pinion housing to record neutral position.
- To install, set left and right dust boots to equal deflection. Attach steering column lower joint by aligning matching marks of pinion shaft and pinion housing.

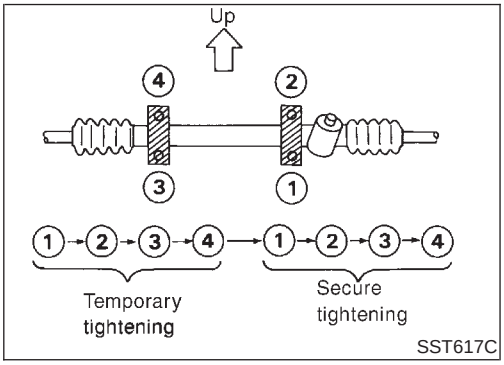

- Tighten gear housing mounting bracket bolts in the order shown.

Secure tightening torque:
157 - 186 N·m (16 - 18 kg-m, 116 - 137 ft-lb)

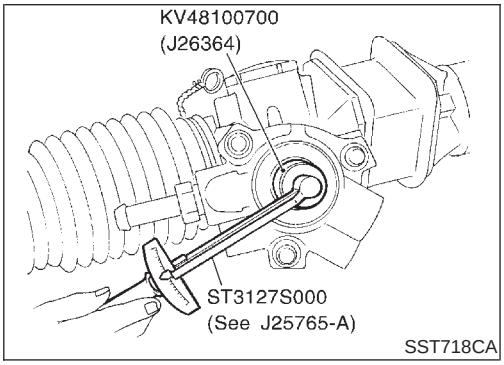

Disassembly

NAST0028

1. Prior to disassembling, measure pinion rotating torque. Record the pinion rotating torque as a reference.

- **Before measuring, disconnect cylinder tube and drain fluid.**
- **Use soft jaws when holding steering gear housing. Handle gear housing carefully, as it is made of aluminum. Do not grip cylinder in a vise.**

2. Remove pinion gear.

Be careful not to damage pinion gear when removing pinion seal ring.

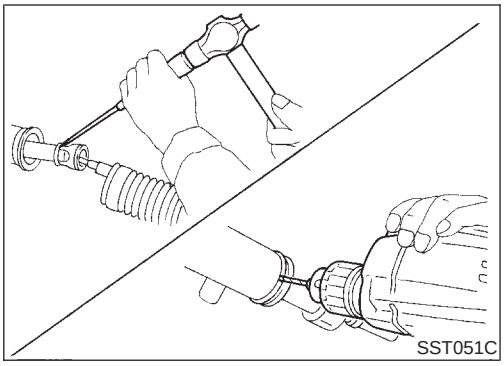

3. Remove tie-rod outer sockets and boots.
4. Loosen tie-rod inner socket by prying up staked portion, and remove socket.
5. Remove retainer.
6. Remove pinion assembly.
7. Use a 2 to 2.5 mm (0.079 to 0.098 in) diameter drill to completely remove staked portion of gear housing end.

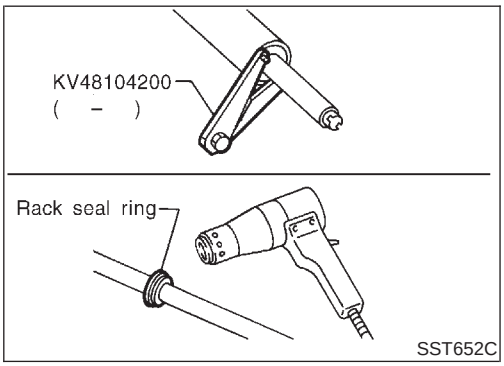

8. Remove gear housing end cover assembly with a suitable tool.
9. Draw out rack assembly.
10. Remove rack seal ring.

- Using a heat gun, heat rack seal to approximately 40°C (104°F).
- Remove rack seal ring.

Be careful not to damage rack.

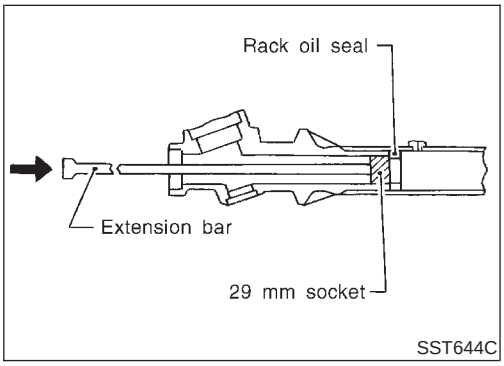

11. Remove rack bushing and rack oil seal using tape wrapped socket and extension bar.

Do not scratch inner surfaces of pinion housing.

Inspection

NAST0029

Thoroughly clean all parts in cleaning solvent or Genuine Nissan PSF II or equivalent. Blow dry with compressed air, if available.

BOOT

NAST0029S01

- Check condition of boot. If cracked excessively, replace it.
- Check boots for accumulation of power steering fluid.

RACK

NAST0029S02

Thoroughly examine rack gear. If damaged, cracked and worn, replace it.

PINION ASSEMBLY

NAST0029S03

- Thoroughly examine pinion gear. If pinion gear is damaged, cracked and worn, replace it.
- Check that all bearings roll freely. Ensure that balls, rollers and races are not cracked, pitted and worn.

GEAR HOUSING CYLINDER

NAST0029S04

Check gear housing cylinder bore for scratches and other damage. Replace if necessary.

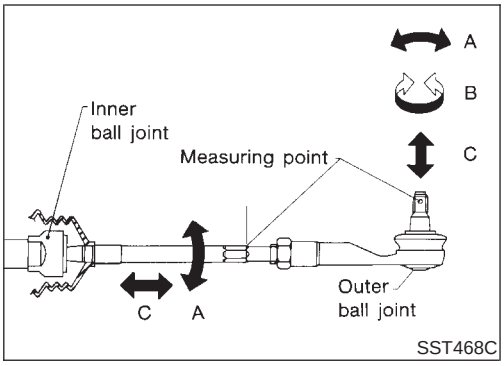

TIE-ROD OUTER AND INNER SOCKETS

NAST0029S05

- Check ball joints for swinging force.

  Tie-rod outer and inner ball joints swinging force "A":
  Refer to SDS, ST-33.
- Check ball joint for rotating torque.

  Tie-rod outer ball joint rotating torque "B":
  Refer to SDS, ST-33.
- Check ball joints for axial end play.

  Tie-rod outer and inner ball joints axial end play "C":
  Refer to SDS, ST-33.
- Check condition of dust cover. If cracked excessively, replace outer tie-rod.

Assembly

NAST0030

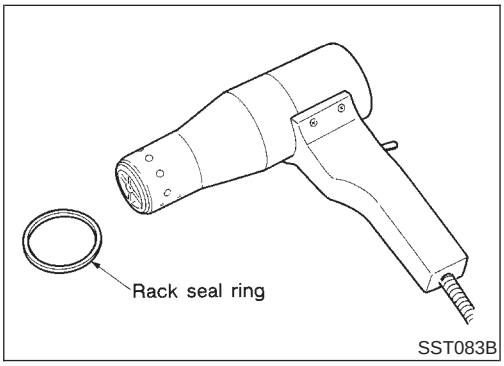

1. Using a heat gun, heat new teflon rack seal ring to approximately 40°C (104°F). Then place it onto rack.

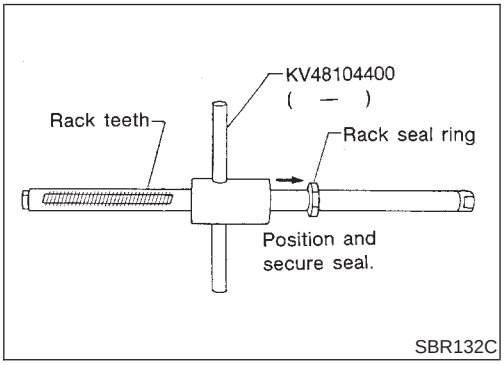

2. Using Tool, compress rack seal ring securely on rack.

Always insert Tool from the rack gear side.

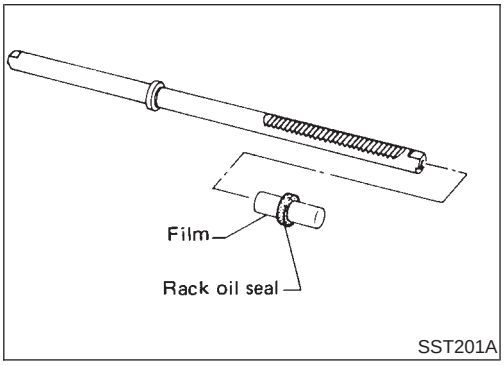

3. Insert new rack oil seal.

- **Place plastic film into rack oil seal to prevent damage by rack teeth.**
- **Do not forget to remove plastic film after rack oil seal is positioned properly.**
- **Make sure lips of rack oil seal face each other.**

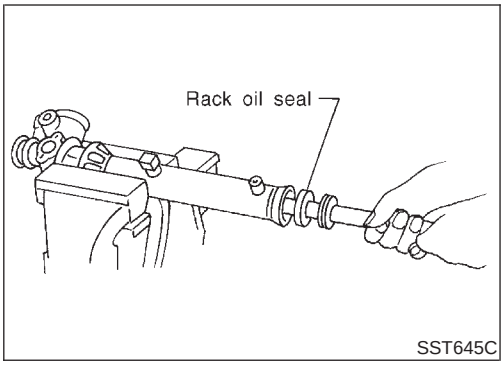

4. Install rack oil seal and rack bushing with rack assembly.

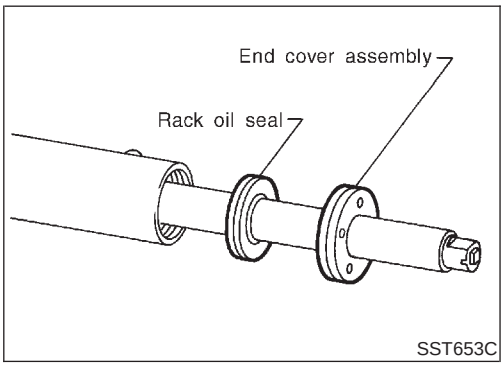

5. Insert rack oil seal and end cover assembly to rack. Then tighten end cover assembly.

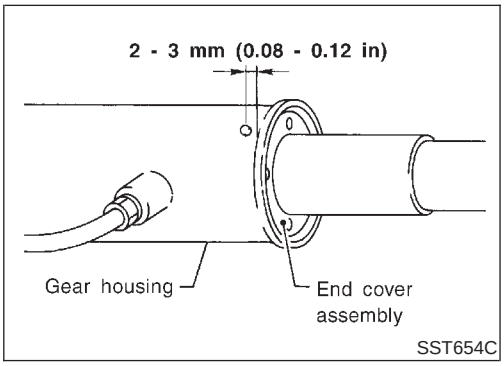

6. Fasten cylinder end cover assembly to gear housing by staking.

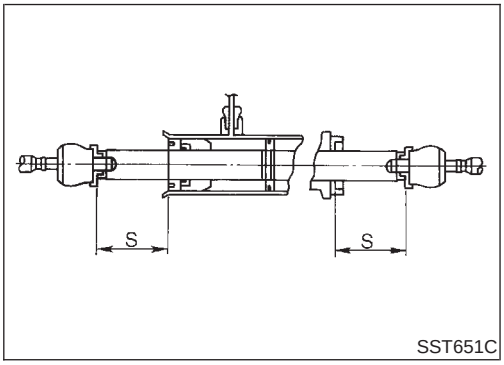

7. Set rack gear in the neutral position.

   Rack stroke "S":

   Refer to SDS, ST-33.

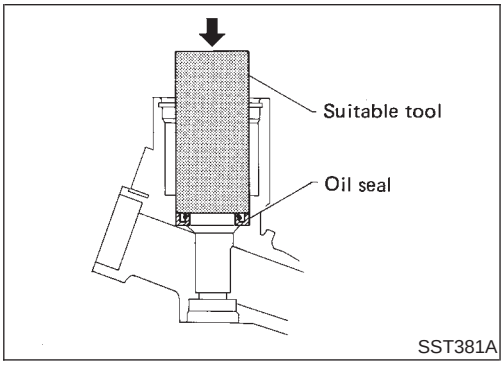

8. Coat seal lip of new pinion oil seal with multi-purpose grease. Install it into pinion housing of gear with a suitable tool.

Make sure lip of oil seal faces up when installed.

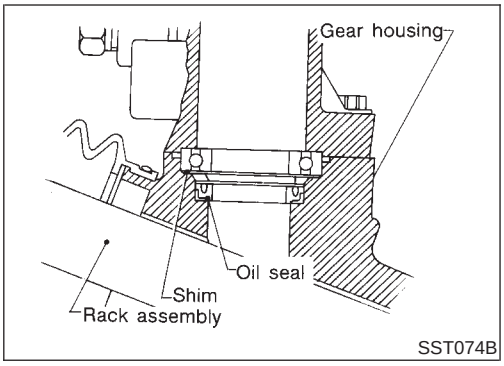

9. Install pinion bearing adjusting shim(s).
- Whenever pinion assembly, gear housing and rear housing are disassembled, replace shim(s) with new ones. Always use the same number of shim(s) when replacing.

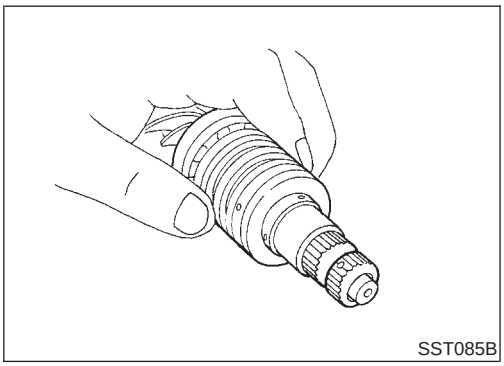

10. Install new pinion seal ring (made of Teflon) on pinion gear assembly.
- Using a heat gun, heat pinion seal ring to approximately 40°C (104°F) before installing it onto pinion gear assembly.
- Make sure pinion seal ring is properly settled in valve groove.

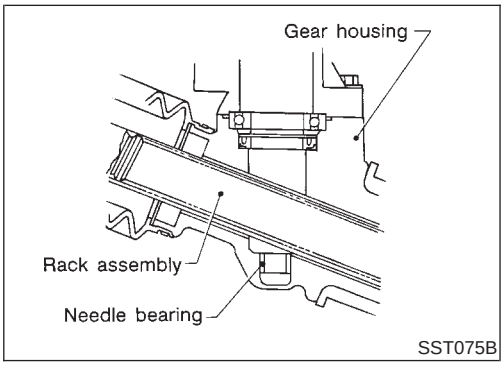

11. Apply a coat of multi-purpose grease to needle bearing roller and oil seal lip.

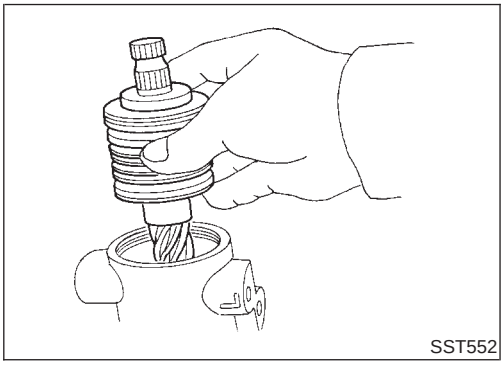

12. Install pinion assembly to rear housing.

Be careful not to damage pinion oil seal.

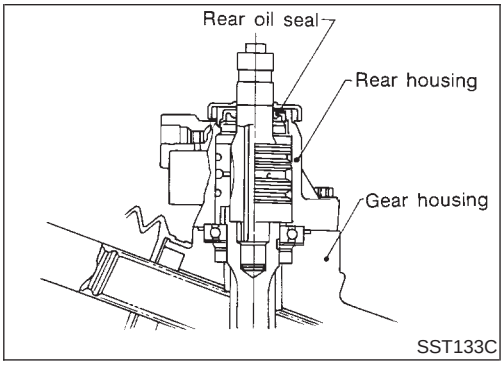

13. Apply a coat of multi-purpose grease to new rear oil seal lip before installing rear housing.

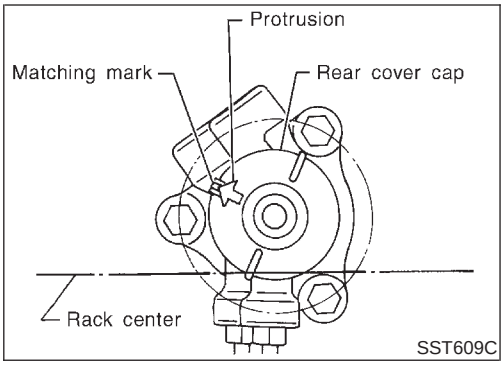

14. Ensure that the rack is centered. Install rear cover cap so that its protrusion is positioned as shown in figure.

Be careful not to damage worm ring and oil seal.

15. Install retainer, spring and adjusting screw temporarily.

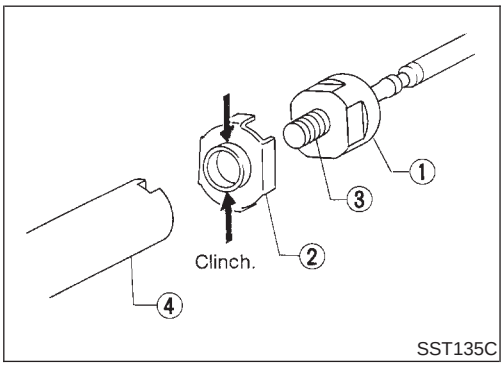

16. Install new lock plate.
- Attach lock plate 2 to side rod inner socket 1.
- Apply locking sealant to inner socket threads 3.
  Screw inner socket into rack 4 and tighten to specified torque.
- Clinch two places of lock plate at rack's groove.

CAUTION:
To prevent scratching the boot, remove burrs from lock plate.

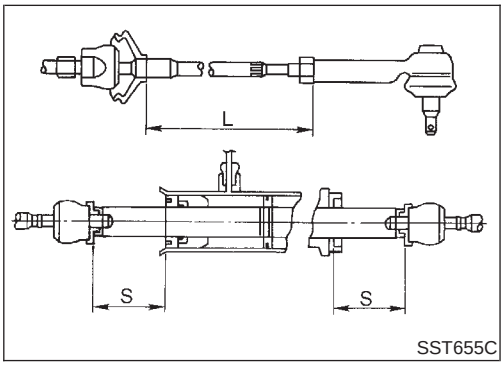

17. Tighten outer socket lock nut.

Tie-rod length "L":
Refer to SDS, ST-33.

18. Measure rack stroke.

Rack stroke "S":
Refer to SDS, ST-33.

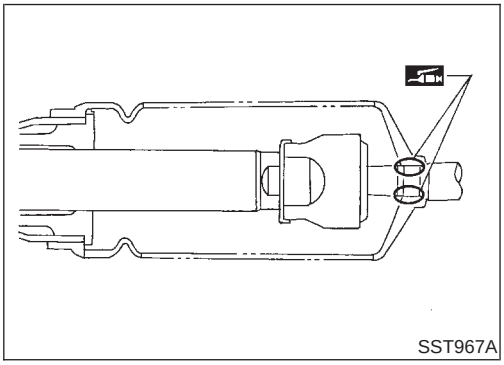

19. Before installing boot, coat the contact surfaces between boot and tie-rod with grease.

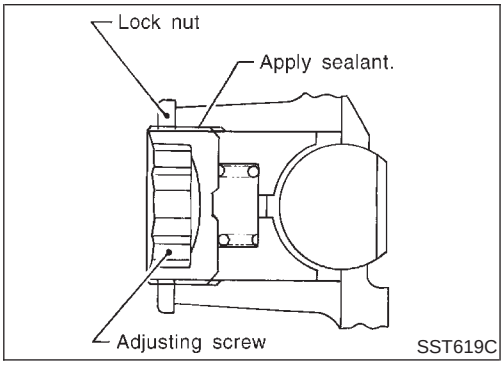

Adjustment

NAST0031

Adjust pinion rotating torque as follows:

1. Set rack to the neutral position without fluid in the gear.
2. Coat the adjusting screw with locking sealant and screw it in.
3. Lightly tighten lock nut.
4. Tighten adjusting screw to a torque of 4.9 to 5.9 N·m (50 to 60 kg-cm, 43 to 52 in-lb).
5. Loosen adjusting screw, then retighten it to 0.2 N·m (2 kg-cm, 1.7 in-lb).

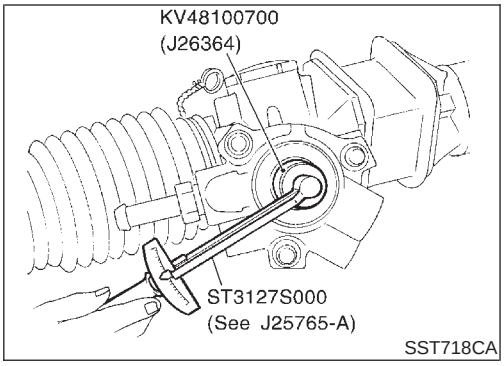

6. Move rack over its entire stroke several times.
7. Measure pinion rotating torque within the range of 180° from neutral position.
   Stop the gear at the point of maximum torque.
8. Loosen adjusting screw, then retighten it to 4.9 to 5.9 N·m (50 to 60 kg-cm, 43 to 52 in-lb).
9. Loosen adjusting screw by 10° to 20°.

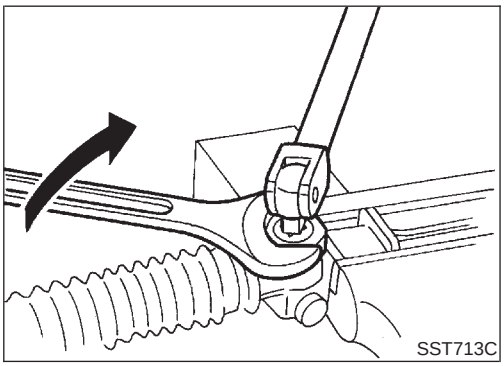

10. Prevent adjusting screw from turning, and tighten lock nut to specified torque.

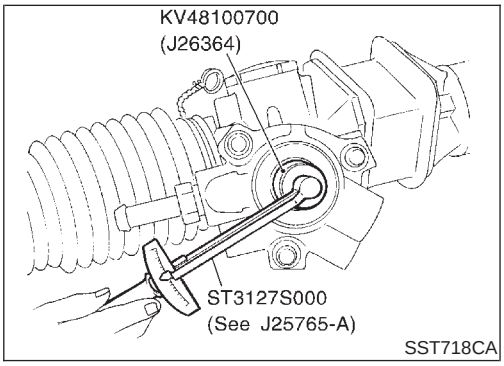

11. Measure pinion rotating torque.
    Lock to lock:
    Average rotating torque
    0.78 - 1.47 N·m (8.0 - 15.0 kg-cm, 6.9 - 13.0 in-lb)
    Within ±100° from the neutral position:
    Maximum torque variation
    0.4 N·m (4 kg-cm, 3.5 in-lb)
    Outside the above range:
    Maximum force variation
    0.6 N·m (6 kg-cm, 5.2 in-lb)

- If pinion rotating torque is not within specifications, readjust it starting from step 4. If pinion rotating torque is still out of specifications after readjustment, replace steering gear assembly.

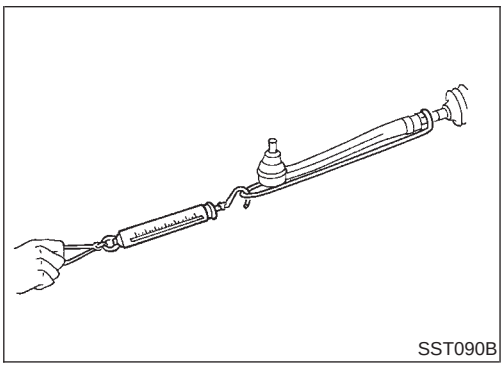

12. Check rack sliding force on vehicle as follows:
    a. Install steering gear onto vehicle, but do not connect tie-rod to knuckle arm.
    b. Connect all piping and fill with steering fluid.
    c. Start engine and bleed air completely.
    d. Disconnect steering column lower joint from the gear.
    e. Keep engine at idle and make sure steering fluid has reached normal operating temperature.
    f. Pull tie-rod slowly to move it from neutral position to ±11.5 mm (±0.453 in) at speed of 3.5 mm (0.138 in)/s. Check that rack sliding force is within specification.

Rack sliding force:

167 - 254 N (17.0 - 25.9 kg, 37 - 57 lb)

- If rack sliding force is not within specification, readjust by repeating adjustment procedure from the beginning.
- If rack sliding force is still out of specification after readjustment, gear assembly needs to be replaced.

Components

NAST0032

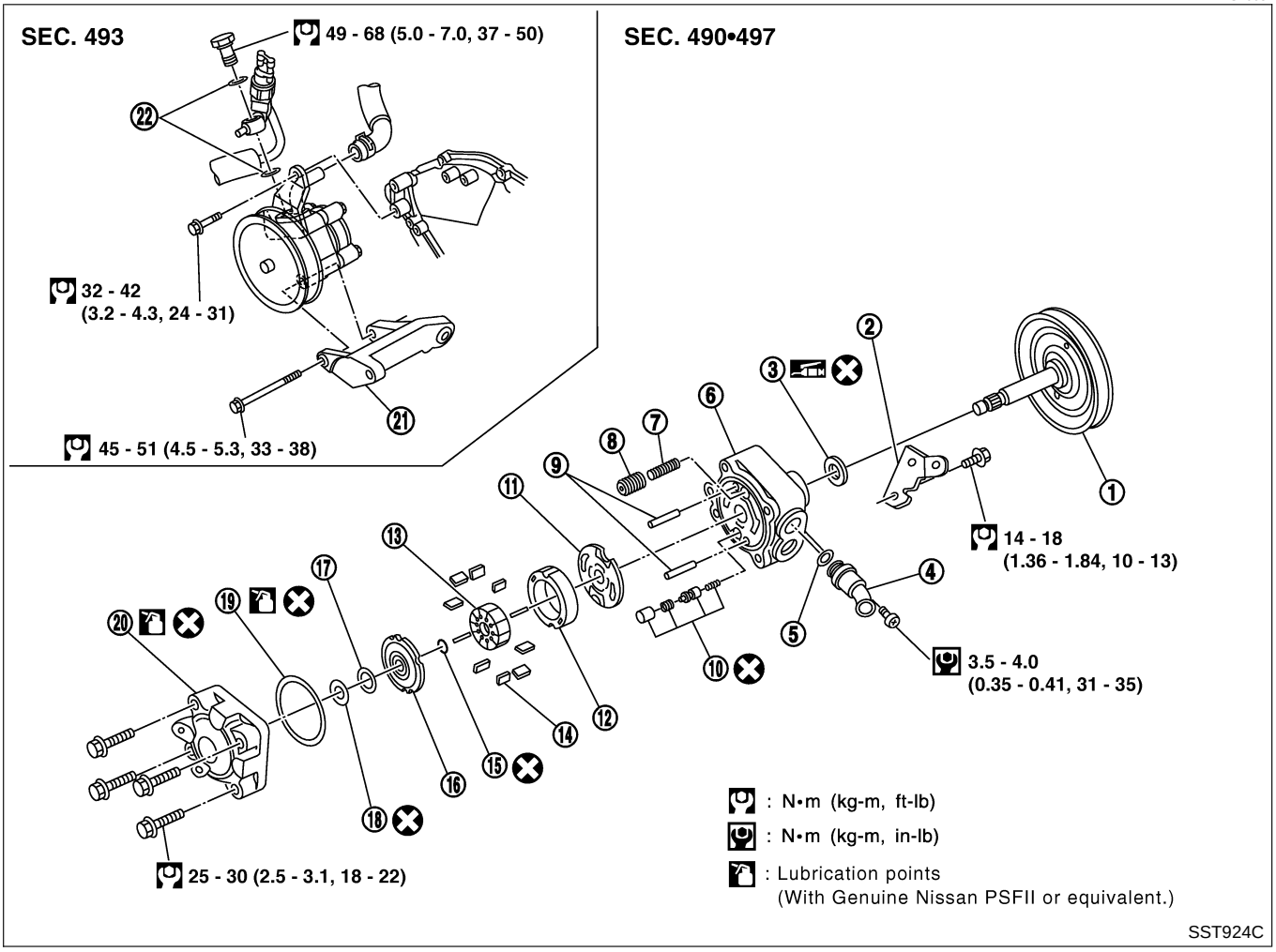

1. Pulley and drive shaft
2. Front bracket
3. Oil seal
4. Suction pipe
5. O-ring
6. Casing
7. Flow control valve spring
8. Flow control A valve
9. Dowel pin
10. Flow control B valve assembly
11. Side plate (Front)
12. Cam ring
13. Rotor
14. Vane
15. Snap ring
16. Side plate (Rear)
17. Side plate inner seal
18. Side plate outer seal
19. O-ring
20. Rear cover
21. Power steering pump bracket
22. Copper washer

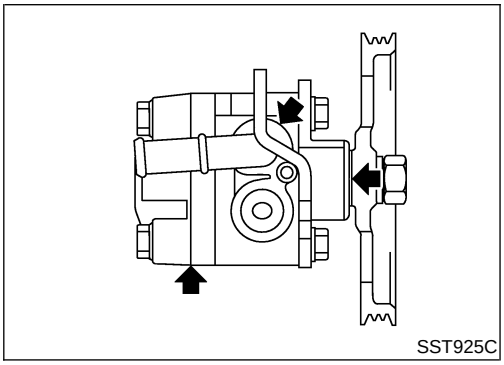

Pre-disassembly Inspection

NAST0033

Disassemble the power steering oil pump only if the following items are found.

- Oil leak from any point shown in the figure.
- Deformed or damaged pulley.
- Poor performance.

Disassembly

NAST0034

CAUTION:

- **Parts which can be disassembled are strictly limited. Never disassemble parts other than those specified.**
- **Disassemble in as clean a place as possible.**
- **Clean your hands before disassembly.**
- **Do not use rags; use nylon cloths or paper towels.**
- **Follow the procedures and cautions in the Service Manual.**
- **When disassembling and reassembling, do not let foreign matter enter or contact the parts.**

1. Fix power steering pump to vise.

CAUTION:

When fixing the pump to vise, use an aluminum plate or such to avoid damaging the fitting plane of the steering pump.

2. Remove the front bracket mounting bolt, and remove the front bracket from the casing.
3. Remove the cover body mounting bolt, and remove the rear cover from the casing.
4. Remove the O-ring from the casing.

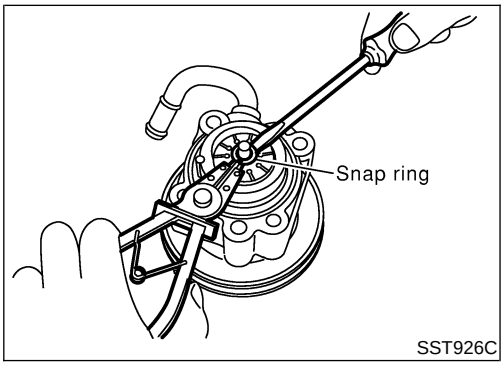

5. Remove side plate (rear side) from cam ring, then remove side plate inner/outer seals from side plate (rear side).
6. Remove rotor snap ring using snap ring pliers, and remove pulley from casing.

CAUTION:

Do not damage pulley shaft when removing rotor snap ring.

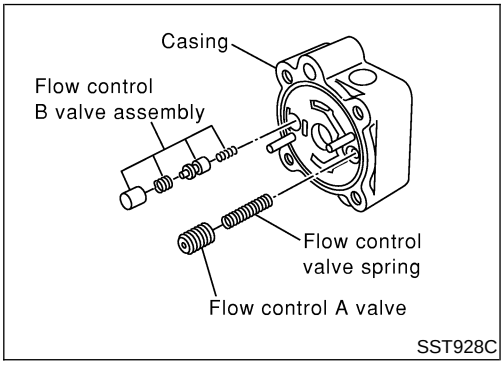

7. Remove the followings from casing.

- Cam ring
- Rotor
- Vane
- Side plate (front side)
- Flow control A valve
- Flow control valve spring
- Flow control B valve assembly

CAUTION:

Be careful not to drop flow control valve.

8. Remove suction pipe mounting bolt, and remove suction pipe from casing.
9. Remove suction pipe O-ring from suction pipe.
10. Remove drive shaft oil seal from casing with a screwdriver.

CAUTION:

Do not damage casing surface with the screwdriver.

Inspection

NAST0035

- If pulley is cracked or deformed, replace it.
- If an oil leak is found around drive shaft oil seal, replace the seal.
- Check the casing and the inside of the rear cover for damage. If damages are found in the rear cover, replace the rear cover. If the casing is damaged, replace the power steering pump as an assembly.
- Check the cam ring for damage. If damage is found, replace the cam ring, rotor and vane as a set.
- Check the side plates (front and rear) for damage. If damage is found, replace the side plates as a set (front and rear).

Assembly

NAST0036

1. Apply grease to the lip of the drive shaft oil seal, and attach the casing.

CAUTION:

The drive shaft oil seal cannot be reused. Always replace after every disassembly.

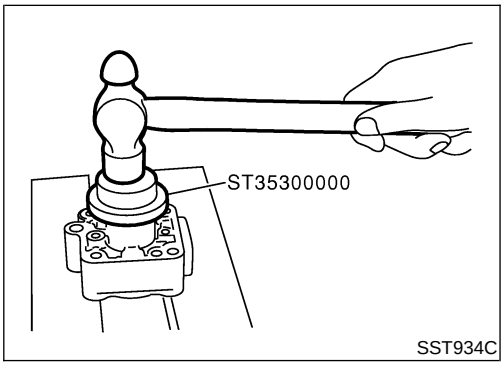

SST934C

2. When removing the dowel pin, if it is difficult to insert with your hands, insert into the casing by tapping lightly with a hammer or similar tool.
3. Attach the flow control A valve, flow control valve spring, and the flow control B valve assembly to the locations indicated in the drawing left.

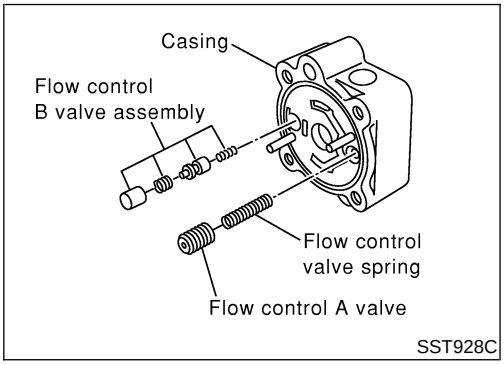

SST928C

4. Match the dowel pin A on the flow control A valve side with the notch B of the side plate (front), and attach the side plate (front) to the casing.

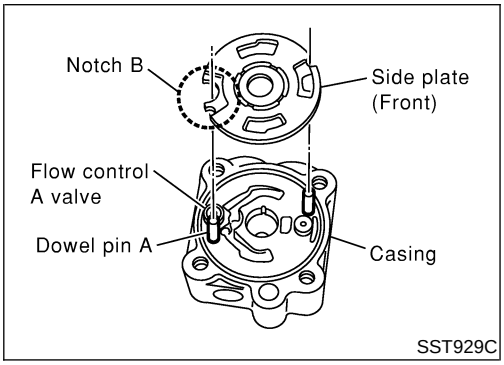

SST929C

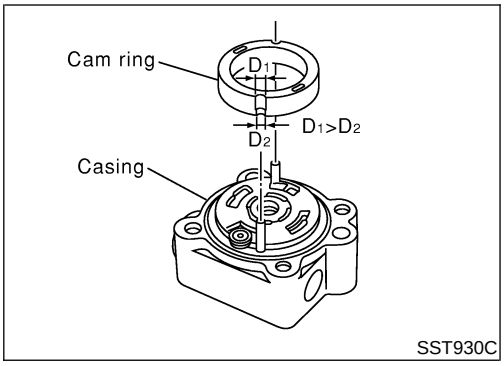

5. Face the cam ring side with fewer pores towards the casing, and attach the cam ring on top of the side plate (front).
6. Attach the pulley to the casing.

CAUTION:
Attach with care so as not to damage the drive shaft oil seal.

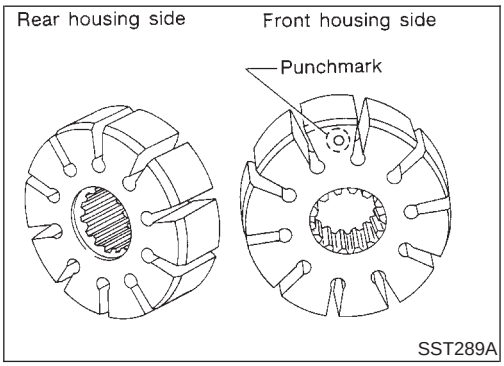

7. Face the side of the rotor with the punch mark towards the casing, and attach the rotor to the drive shaft.

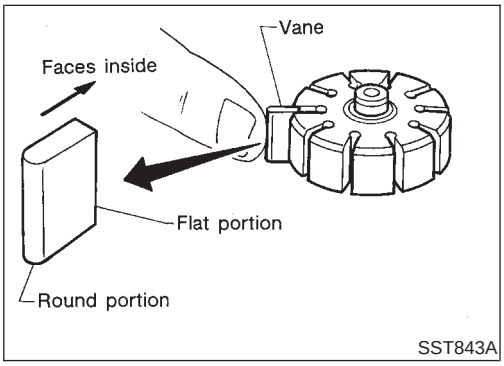

8. Attach the vane to the rotor so that the vane's arc touches the cam ring.

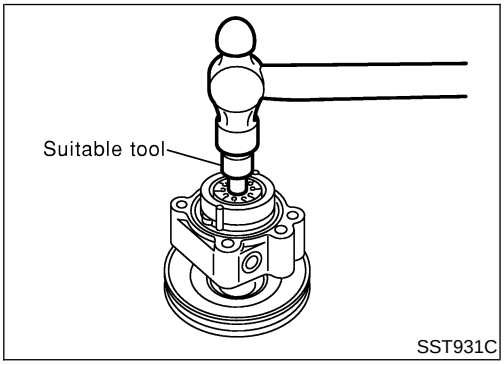

9. Use a hammer or suitable tool to insert the rotor snap ring into the drive shaft channel.

CAUTION:
- **The rotor snap ring cannot be reused. Always replace after every disassembly.**
- **Insert with care so as not to damage the rotor or the drive shaft.**
- **If the rotor is damaged, replace the power steering as an assembly.**

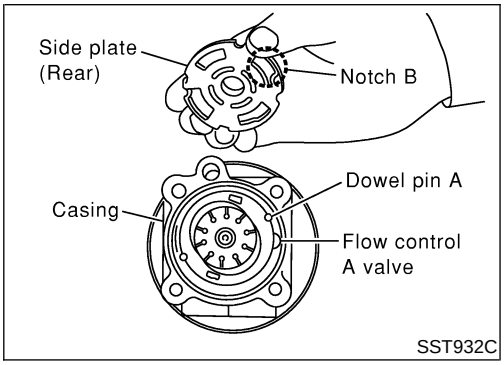

10. Match the dowel pin A on the flow control A valve side with the notch B of the side plate (rear), and attach the side plate (rear) to the cam ring.
11. Apply Genuine Nissan PSF II or equivalent to O-ring and attach to the casing.

CAUTION:
The O-ring cannot be reused. Always replace after every disassembly.

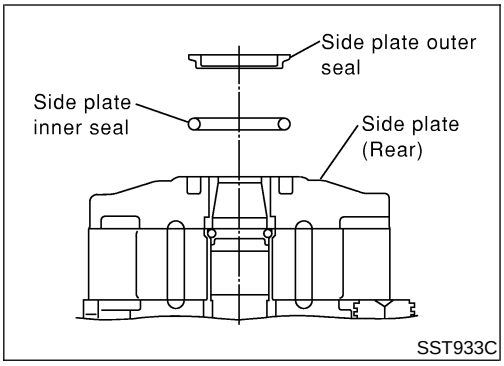

12. Attach a side plate inner seal and side plate outer seal with Genuine Nissan PSF II or equivalent applied, to the side plate (rear).

CAUTION:

The side plate inner seal and outer seal cannot be reused. Always replace after every disassembly.

13. Set the power steering pump on the vice.

CAUTION:

When securing to the vise, use an aluminum plate or other material to protect the installation surface of the power steering pump from damage.

14. Attach the rear cover to the casing, and secure the bolts (4 bolts) in a diagonal order to the specified torque.
15. Attach the front bracket to the casing, and secure the bolts (2 bolts) to the specified torque.
16. Attach the suction pipe O-ring to the grooves of the suction pipe, and attach the suction pipe to the casing with attachment bolts.

CAUTION:

The suction pipe O-ring cannot be reused. Always replace after every disassembly.

General Specifications

NAST0037

Applied model	All
Steering model	Power steering
Steering gear type	PR32K
Steering overall gear ratio	17.2
Turns of steering wheel (Lock to lock)	3.09
Steering column type	Collapsible, tilt

Steering Wheel

NAST0038

Unit: mm (in)

Steering wheel axial play	0 (0)
Steering wheel play	35 (1.38) or less
Movement of gear housing	±2 (±0.08) or less

Steering Column

NAST0039

Unit: mm (in)

Steering column length "L_1"	716.7 - 718.7 (28.22 - 28.30)
Steering column lower shaft length "L_2"	178 - 180 (7.01 - 7.09)
Steering column upper joint length "L_3"	430.7 - 432.7 (16.96 - 17.04)

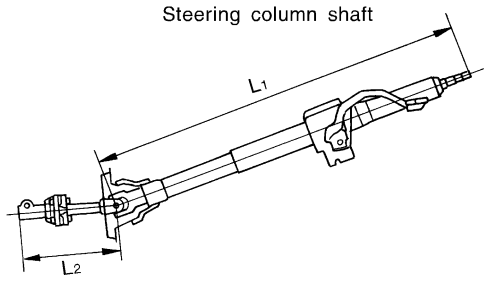

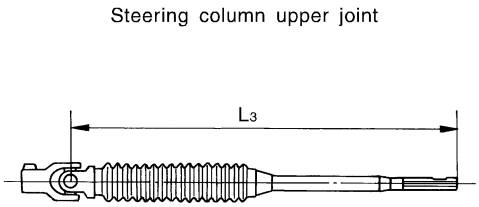

SST739C

Steering Transfer Gear

NAST0041

Rotating torque	0.25 - 0.69 N·m (2.5 - 7.0 kg-cm, 2.2 - 6.1 in-lb)

Steering Gear and Linkage

NAST0040

Applied model		All
Steering gear type		PR32K
Tie-rod outer ball joint	Swinging force at cotter pin hole: “A”	4.9 - 47.1 N (0.5 - 4.8 kg, 1.1 - 10.6 lb)
	Rotating torque: “B”	0.3 - 2.9 N·m (3 - 30 kg-cm, 2.6 - 26.0 in-lb)
	Axial end play: “C”	0.1 mm (0.004 in) or less
Tie-rod inner ball joint	Swinging force*: “A”	3.9 - 32.4 N (0.4 - 3.3 kg, 0.9 - 7.3 lb)
	Axial end play: “C”	0.3 mm (0.012 in) or less
Tie-rod standard length “L”		200 mm (7.87 in)
Rack stroke “S”		72.0 mm (2.835 in)
Pinion gear preload without gear fluid	Lock to lock Average rotating torque	0.78 - 1.47 N·m (8.0 - 15.0 kg-cm, 6.9 - 13.0 in-lb)
	Within ±100° from the neutral position Maximum torque variation	0.4 N·m (4 kg-cm, 3.5 in-lb)
	Outside the above range Maximum torque variation	0.6 N·m (6 kg-cm, 5.2 in-lb)

*: Measuring point [ℓ: 240 mm (9.45 in)]

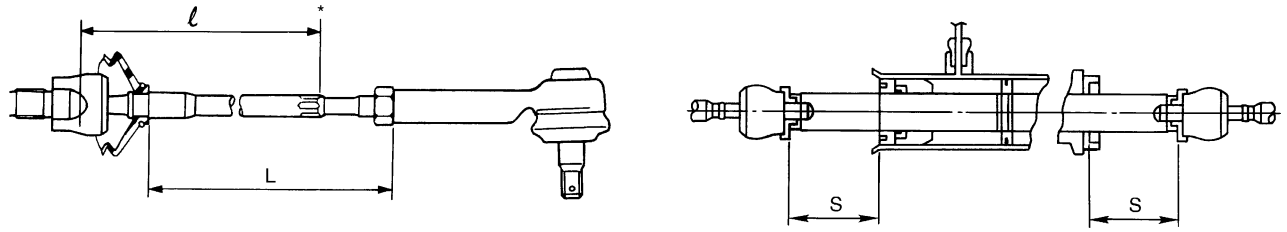

SST740C

Power Steering

NAST0042

Steering gear type		PR32K
Rack sliding force Under normal operating oil pressure		167 - 254 N (17.0 - 25.9 kg, 37 - 57 lb)
Retainer adjustment (Adjustment screw)	Initial tightening torque	4.9 - 5.9 N·m (50 - 60 kg-cm, 43 - 52 in-lb)
	Retightening torque after loosening	0.2 N·m (2 kg-cm, 1.7 in-lb)
	Tightening torque after gear has settled	4.9 - 5.9 N·m (50 - 60 kg-cm, 43 - 52 in-lb)
	Returning angle	10° - 20°
Steering wheel turning force (Measured at one full turn from the neutral position)		39 N (4 kg, 9 lb) or less
Fluid capacity (Approximate)		0.9ℓ (1 US qt, 3/4 Imp qt)
Oil pump maximum pressure		8,630 - 9,219 kPa (88 - 94 kg/cm^2, 1,251 - 1,337 psi)

NOTES

FRONT & REAR SUSPENSION

SECTION SU

CONTENTS

FRONT SUSPENSION 3
Precautions 3
PRECAUTIONS 3
Preparation 3
SPECIAL SERVICE TOOLS 3
COMMERCIAL SERVICE TOOLS 3
Noise, Vibration and Harshness (NVH) Troubleshooting 4
NVH TROUBLESHOOTING CHART 4
Components 5
2WD 5
4WD 6
On-vehicle Service 7
FRONT SUSPENSION PARTS 7
FRONT WHEEL ALIGNMENT 8
Coil Spring and Strut Assembly 10
COMPONENTS 10
REMOVAL 12
DISASSEMBLY 12
INSPECTION 12
ASSEMBLY 13
Stabilizer Bar 13
REMOVAL AND INSTALLATION 13
INSPECTION 14
Transverse Link and Lower Ball Joint 14
REMOVAL AND INSTALLATION 14
INSPECTION 15
Low Tire Pressure Warning System 16
SYSTEM COMPONENTS 16
SYSTEM DESCRIPTION 16
Trouble Diagnoses 18
WIRING DIAGRAM 18
LOW TIRE PRESSURE WARNING CONTROL UNIT INPUT/OUTPUT SIGNAL STANDARD 20
ID REGISTRATION PROCEDURE 20
SELF-DIAGNOSIS 23
HOW TO PERFORM TROUBLE DIAGNOSIS FOR QUICK AND ACCURATE REPAIR 25
PRELIMINARY CHECK 26
MALFUNCTION CODE/SYMPTOM CHART 27
Trouble Diagnoses for Self-diagnostic Items 27
INSPECTION 1: TRANSMITTER OR TIRE PRESSURE WARNING CONTROL UNIT 27
INSPECTION 2: TRANSMITTER-1 28
INSPECTION 3: TRANSMITTER-2 29
INSPECTION 4: LOW TIRE PRESSURE WARNING CONTROL UNIT 29
Trouble Diagnoses for Symptoms 30
INSPECTION 1: WARNING LAMP DOES NOT COME ON WHEN IGNITION SWITCH IS TURNED ON. 30
INSPECTION 2: WARNING LAMP STAYS ON WHEN IGNITION SWITCH IS TURNED ON. 31
INSPECTION 3: WARNING LAMP BLINKS WHEN IGNITION SWITCH IS TURNED ON. 33
INSPECTION 4: TAIL LAMP BLINKS WHEN IGNITION SWITCH IS TURNED ON. 34
INSPECTION 5: ID REGISTRATION CANNOT BE COMPLETED. 34
Service Data and Specifications (SDS) 34
GENERAL SPECIFICATIONS (FRONT) 34
WHEEL ALIGNMENT (UNLADEN*1) 34
LOWER BALL JOINT 35
WHEELARCH HEIGHT (UNLADEN*) 35
WHEEL RUNOUT AVERAGE* 36
REAR SUSPENSION 37
Precautions 37
PRECAUTIONS 37
Preparation 37
COMMERCIAL SERVICE TOOLS 37
Noise, Vibration and Harshness (NVH) Troubleshooting 37
Components 38
On-vehicle Service 38
REAR SUSPENSION PARTS 38
Removal and Installation 39
Coil Spring and Shock Absorber 40
COMPONENTS 40
REMOVAL AND INSTALLATION 41
INSPECTION 41
Upper Link, Lower Link and Panhard Rod 41
INSPECTION 41

CONTENTS (Cont'd)

BUSHING REPLACEMENT.....41
INSTALLATION.....42
Stabilizer Bar 42
REMOVAL AND INSTALLATION.....42
Low Tire Pressure Warning System.....42
Service Data and Specifications (SDS).....43
GENERAL SPECIFICATIONS (REAR).....43

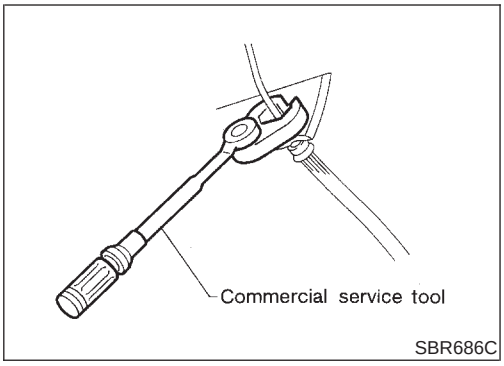

Precautions

PRECAUTIONS

NASU0001

- **When installing rubber parts, final tightening must be carried out under unladen condition* with tires on ground. *Fuel, radiator coolant and engine oil full. Spare tire, jack, hand tools and mats in designated positions.**
- **Use flare nut wrench when removing and installing brake tubes.**
- **After installing removed suspension parts, check wheel alignment and adjust if necessary.**
- **Always torque brake lines when installing.**

Preparation

SPECIAL SERVICE TOOLS

NASU0002

The actual shapes of Kent-Moore tools may differ from those of special service tools illustrated here.

Tool number (Kent-Moore No.) Tool name	Description	
ST29020001 (J24319-01) Ball joint remover	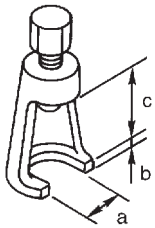 NT694	Removing tie-rod outer end and lower ball joint **a: 34 mm (1.34 in)** **b: 6.5 mm (0.256 in)** **c: 61.5 mm (2.421 in)**

COMMERCIAL SERVICE TOOLS

NASU0003

Tool name	Description	
1 Flare nut crowfoot 2 Torque wrench	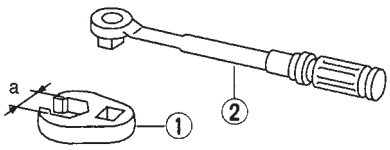 NT360	Removing and installing each brake piping **a: 10 mm (0.39 in)**
Spring compressor	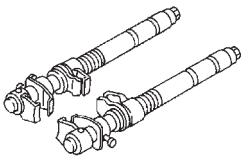 NT717	Removing and installing coil spring

Noise, Vibration and Harshness (NVH) Troubleshooting

=NASU0035

NVH TROUBLESHOOTING CHART

NASU0035S01

Use the chart below to help you find the cause of the symptom. If necessary, repair or replace these parts.

		Reference page	SU-5, 38	SU-10, 40	—	—	—	SU-10, 40	SU-8	SU-13, 42	SU-8	—	—	—	—	—	—	PD-4	PD-4	AX-3	AX-3	Refer to SUSPENSION in this chart.	Refer to TIRES in this chart.	Refer to ROAD WHEEL in this chart.	BR-7	ST-6
		Possible Cause and SUSPECTED PARTS	Improper installation, looseness	Shock absorber deformation, damage or deflection	Bushing or mounting deterioration	Parts interference	Spring fatigue	Suspension looseness	Incorrect wheel alignment	Stabilizer bar fatigue	Out-of-round	Imbalance	Incorrect air pressure	Uneven tire wear	Deformation or damage	Non-uniformity	Incorrect tire size	PROPELLER SHAFT	DIFFERENTIAL	DRIVE SHAFT	AXLE	SUSPENSION	TIRES	ROAD WHEEL	BRAKES	STEERING
Symptom	SUSPENSION	Noise	×	×	×	×	×	×										×	×	×	×		×	×	×	×
		Shake	×	×	×	×		×										×		×	×		×	×	×	×
		Vibration	×	×	×	×	×											×		×	×		×			×
		Shimmy	×	×	×	×			×												×		×	×	×	×
		Judder	×	×	×																×		×	×	×	×
		Poor quality ride or handling	×	×	×	×	×		×	×											×		×	×		
	TIRES	Noise	×								×	×	×	×	×	×		×	×	×	×	×		×	×	×
		Shake	×								×	×	×	×	×		×	×		×	×	×		×	×	×
		Vibration											×				×	×		×	×	×				×
		Shimmy	×								×	×	×	×	×	×	×				×	×		×	×	×
		Judder	×								×	×	×	×	×		×				×	×		×	×	×
		Poor quality ride or handling	×								×	×	×	×	×		×				×	×		×		
	ROAD WHEEL	Noise	×								×	×			×			×	×	×	×	×	×		×	×
		Shake	×								×	×			×			×		×	×	×	×		×	×
		Shimmy, Judder	×								×	×			×						×	×	×		×	×
		Poor quality ride or handling	×								×	×			×						×	×	×			

×: Applicable

Components

NASU0004

2WD

NASU0004S01

SEC. 400•401

When installing rubber parts, final tightening must be carried out under unladen condition* with tires on ground.

*** Fuel, radiator coolant and engine oil full.**
Spare tire, jack, hand tools and mats in designated positions.

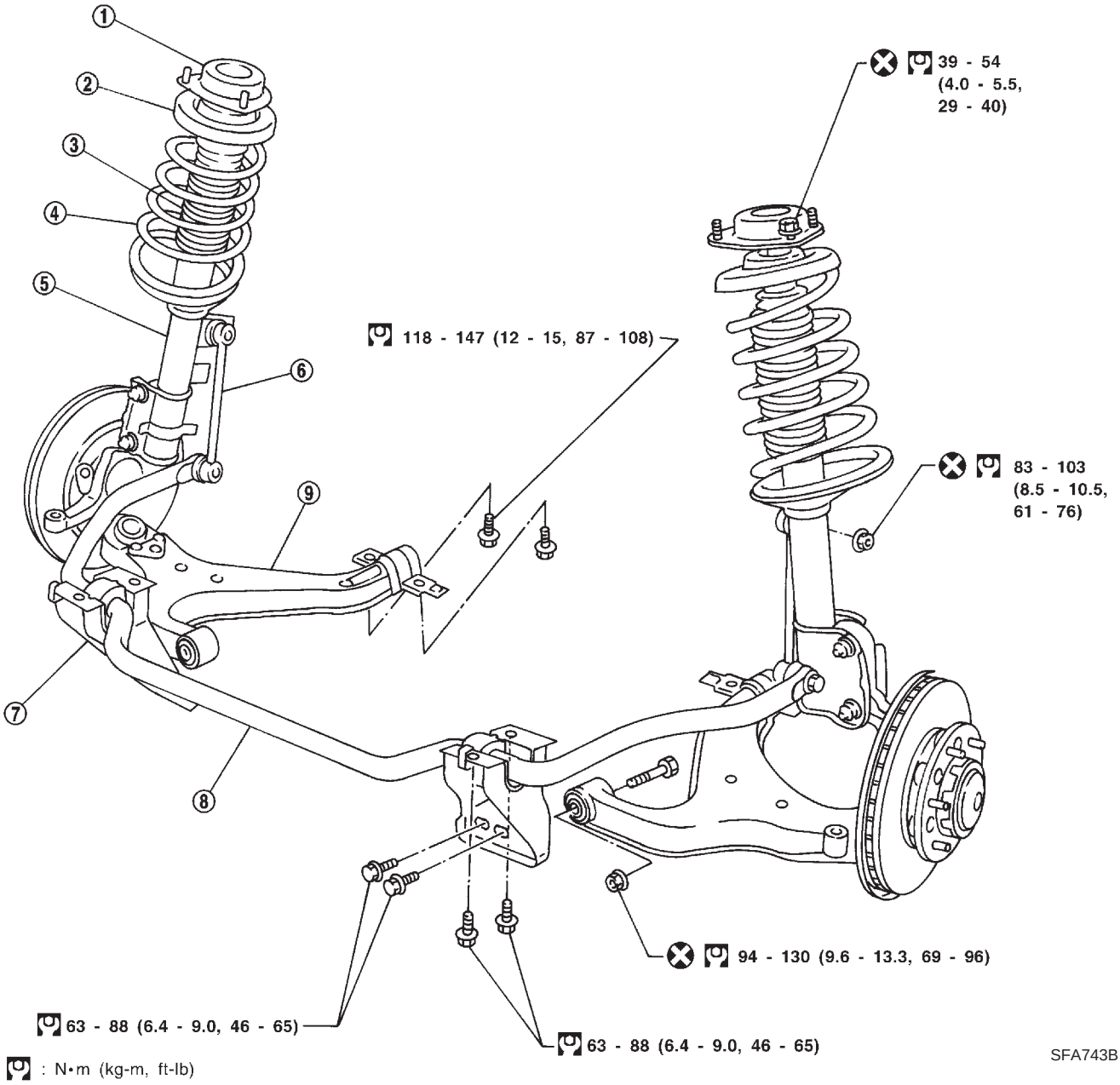

SFA743B

1. Strut mounting insulator
2. Spring upper seat
3. Bound bumper
4. Coil spring
5. Strut assembly
6. Stabilizer connecting rod
7. Bracket
8. Stabilizer bar
9. Transverse link

4WD

NASU0004S02

SEC. 391•400•401

When installing rubber parts, final tightening must be carried out under unladen condition* with tires on ground.

*** Fuel, radiator coolant and engine oil full.**

Spare tire, jack, hand tools and mats in designated positions.

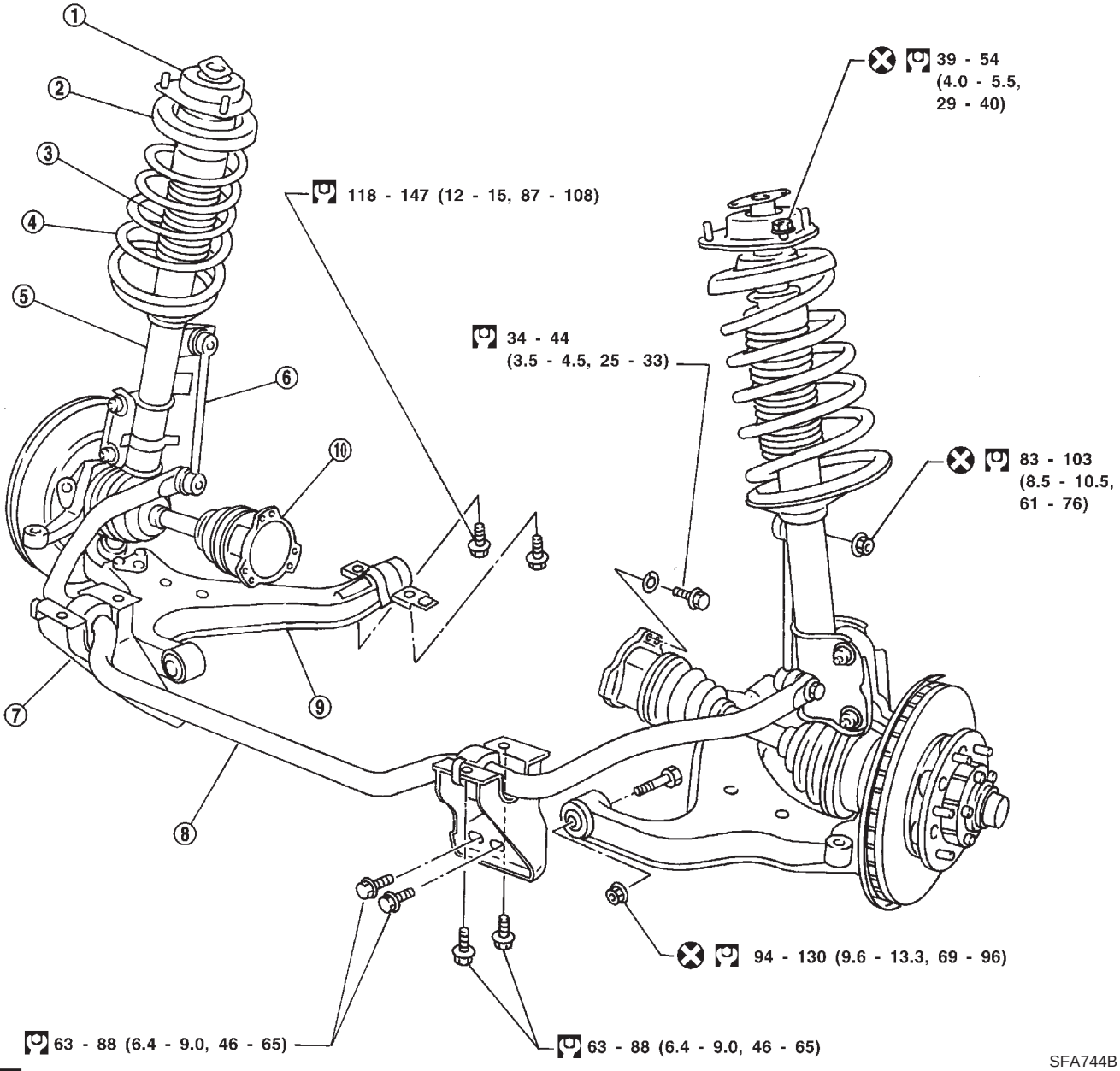

SFA744B

: N•m (kg-m, ft-lb)

1. Strut mounting insulator
2. Spring upper seat
3. Bound bumper
4. Coil spring
5. Strut assembly
6. Stabilizer connecting rod
7. Bracket
8. Stabilizer bar
9. Transverse link
10. Drive shaft

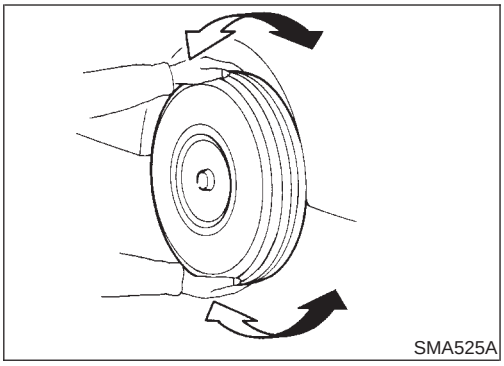

On-vehicle Service

FRONT SUSPENSION PARTS

NASU0005

Check front axle and front suspension parts for excessive play, cracks, wear and other damage.

1. Shake each front wheel to check for excessive play.
2. Retighten all axle and suspensions nuts and bolts to the specified torque.

   Tightening torque:

   Refer to “Components”, SU-10.

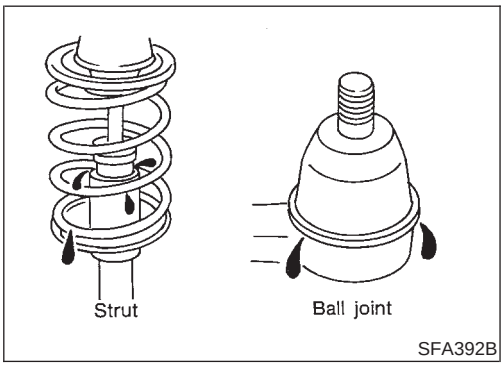

3. Check strut (shock absorber) for oil leakage and other damage.
4. Check suspension ball joint for grease leakage and ball joint dust cover for cracks and other damage.
   If ball joint dust cover is cracked or damaged, replace ball joint assembly.
5. Check suspension ball joint end play.

a. Jack up front of vehicle and set the stands.
b. Clamp dial indicator onto transverse link and place indicator tip on lower edge of brake caliper.
c. Make sure front wheels are straight and brake pedal is depressed.

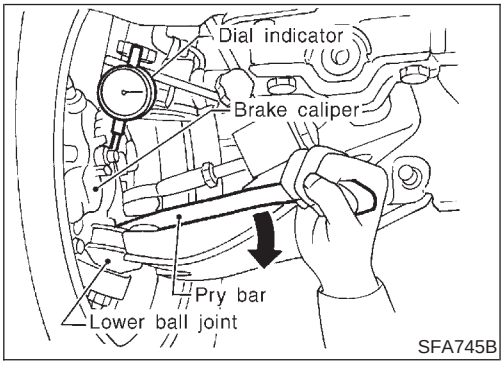

d. Place a pry bar between transverse link and knuckle.
e. While raising and releasing pry bar, observe maximum dial indicator value.

   Vertical end play:

   0 mm (0 in)

   If ball joint vertical end play exists, remove lower ball joint assembly and recheck the ball joint. Refer to “Tranverse Link and Lower Ball Joint”, SU-14.

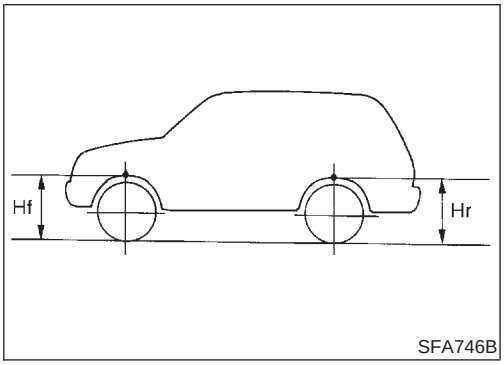

6. Check spring height from top of wheelarch to ground using the following procedure.

a. Park vehicle on a level surface with vehicle unladen*.
   *: Fuel, radiator coolant and engine oil full. Spare tire, jack, hand tools and mats in designated positions.
b. Check tires for proper inflation and wear (tread wear indicator must not be showing).
c. Bounce vehicle up and down several times and measure dimensions Hf and Hr. Refer to SDS, SU-35.
   Spring height is not adjustable. If out of specification, check for worn springs and suspension parts.

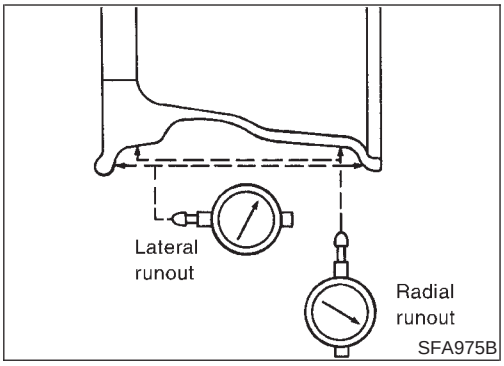

FRONT WHEEL ALIGNMENT

NASU0006

Before checking front wheel alignment, be sure to make a preliminary inspection (Unladen*).
*: Fuel, radiator coolant and engine oil full. Spare tire, jack, hand tools and mats in designated positions.

Preliminary Inspection

NASU0006S01

1. Check tires for wear and improper inflation.
2. Check wheels for deformation, cracks and other damage.
   If deformed, remove wheel and check wheel runout.

NOTE:
Measure both the inner and outer sides for the radial runout and lateral runout, and confirm the figures are within the standards.

Wheel runout (Dial indicator value):
Refer to SDS, SU-36.

3. Check front wheel bearings for looseness.
4. Check front suspension for looseness.
5. Check steering linkage for looseness.
6. Check that front shock absorbers work properly.
7. Check vehicle posture (Unladen).

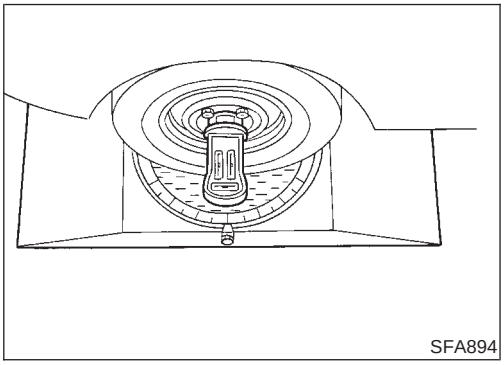

Camber, Caster and Kingpin Inclination

NASU0006S02

Camber, caster and kingpin inclination are preset at factory and cannot be adjusted.

1. Measure camber, caster and kingpin inclination of both right and left wheels with a suitable alignment gauge.

   Camber, Caster and Kingpin inclination:
   Refer to SDS, SU-34.

2. If camber, caster or kingpin inclination is not within specification, inspect front suspension parts. Replace damaged or worn out parts.

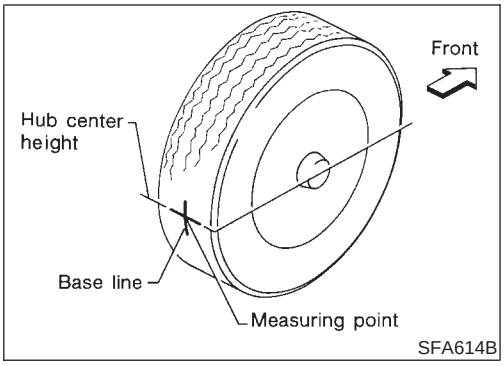

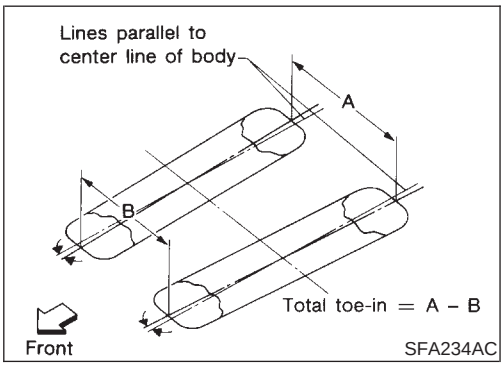

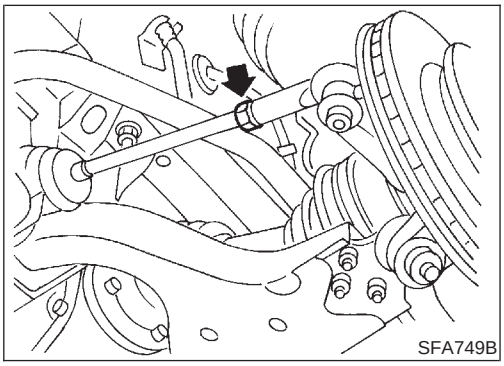

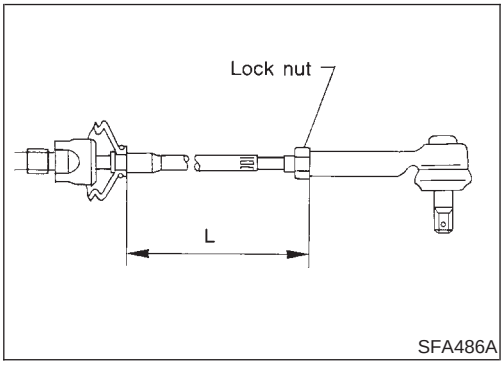

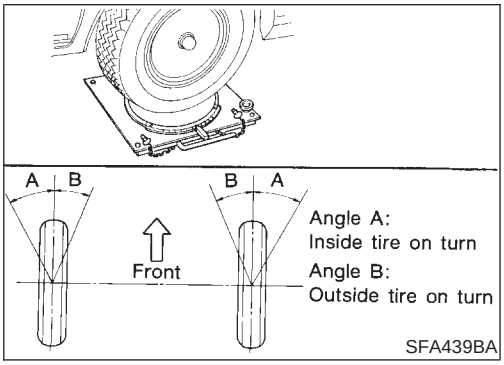

Toe-in

NASU0006S03

Measure toe-in using the following procedure.

WARNING:

- **Always perform the following procedure on a flat surface.**
- **Make sure that no person is in front of the vehicle before pushing it.**

1. Bounce front of vehicle up and down to stabilize the posture.
2. Push the vehicle straight ahead about 5 m (16 ft).
3. Put a mark on base line of the tread (rear side) of both tires at the same height of hub center. This mark is a measuring point.
4. Measure distance "A" (rear side).
5. Push the vehicle slowly ahead to rotate the wheels 180 degrees (1/2 turn).

If the wheels have rotated more than 180 degrees (1/2 turn), try the above procedure again from the beginning. Never push vehicle backward.

6. Measure distance "B" (front side).

   Total toe-in:

   Refer to SDS, SU-34.

7. Adjust toe-in by varying the length of steering tie-rods.

a. Loosen lock nuts.

b. Adjust toe-in by screwing tie-rods in and out.

   Make sure both tie-rods are the same length.

   Standard length "L":

   Refer to ST-33, "Steering Gear and Linkage".

c. Tighten lock nuts to specified torque.

   Lock nut tightening torque:

   Refer to ST-18, "POWER STEERING GEAR AND LINKAGE".

Front Wheel Turning Angle

NASU0006S04

Turning angle is set by stroke length of steering gear rack and cannot be adjusted.

1. Set wheels in straight-ahead position. Then move vehicle forward until front wheels rest on turning radius gauge properly.
2. Rotate steering wheel all the way right and left; measure turning angle.

Do not hold the steering wheel on full lock for more than 15 seconds.

Wheel turning angle (Full turn):

Refer to SDS, SU-34.

Coil Spring and Strut Assembly

COMPONENTS

2WD

NASU0007

NASU0007S01

SEC. 400•401

When installing rubber parts, final tightening must be carried out under unladen condition* with tires on ground.

*** Fuel, radiator coolant and engine oil full.**
Spare tire, jack, hand tools and mats in designated positions.

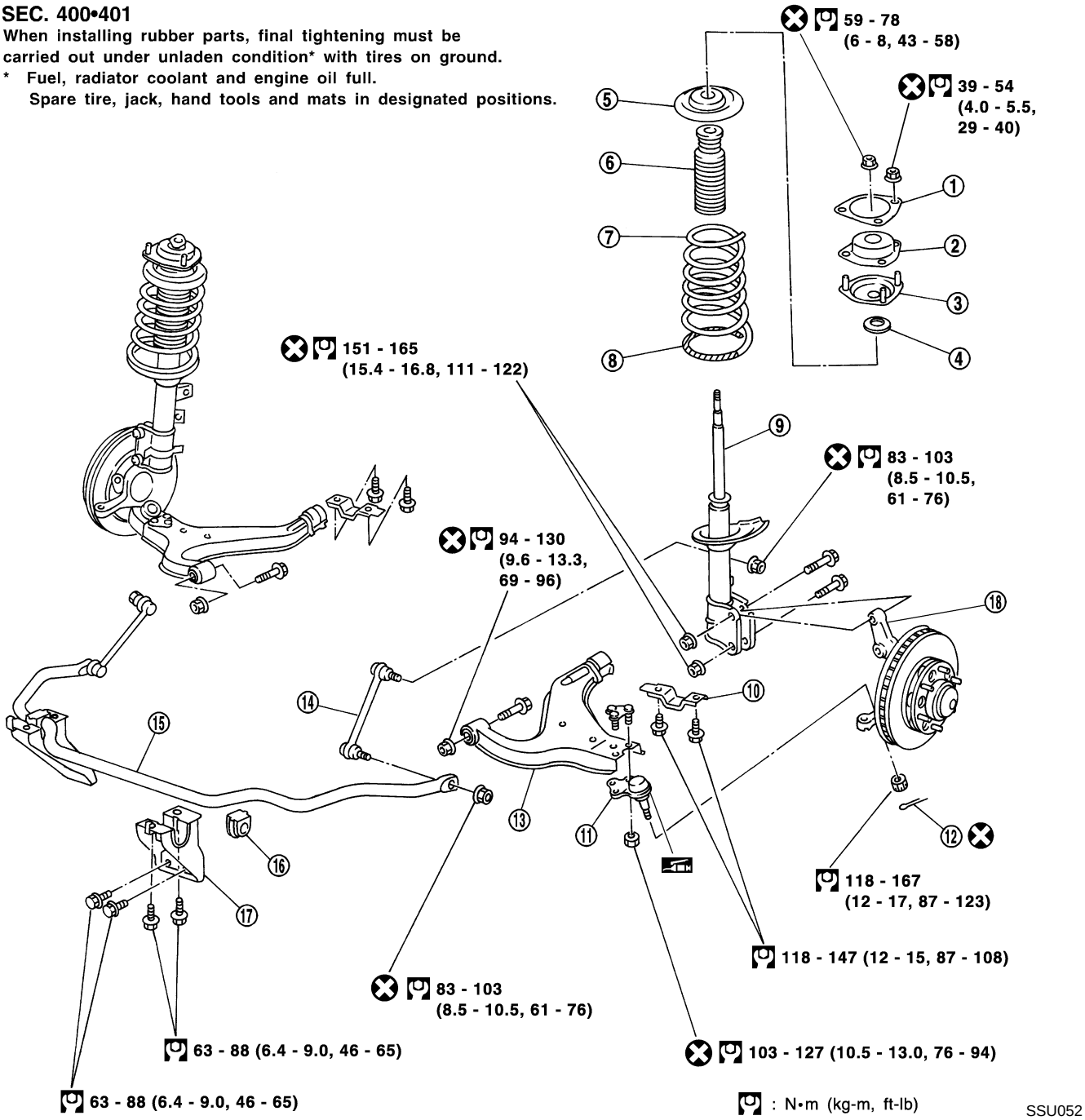

1. Spacer
2. Strut mounting insulator
3. Bracket
4. Strut mounting bearing
5. Spring upper seat
6. Bound bumper
7. Coil spring
8. (Polyurethane tube)
9. Strut assembly
10. Bracket
11. Lower ball joint assembly
12. Cotter pin
13. Transverse link
14. Stabilizer connecting rod
15. Stabilizer bar
16. Bushing
17. Bracket
18. Knuckle spindle

4WD

NASU0007S02

SEC. 391•400•401

When installing rubber parts, final tightening must be carried out under unladen condition* with tires on ground.

*** Fuel, radiator coolant and engine oil full.**
Spare tire, jack, hand tools and mats in designated positions.

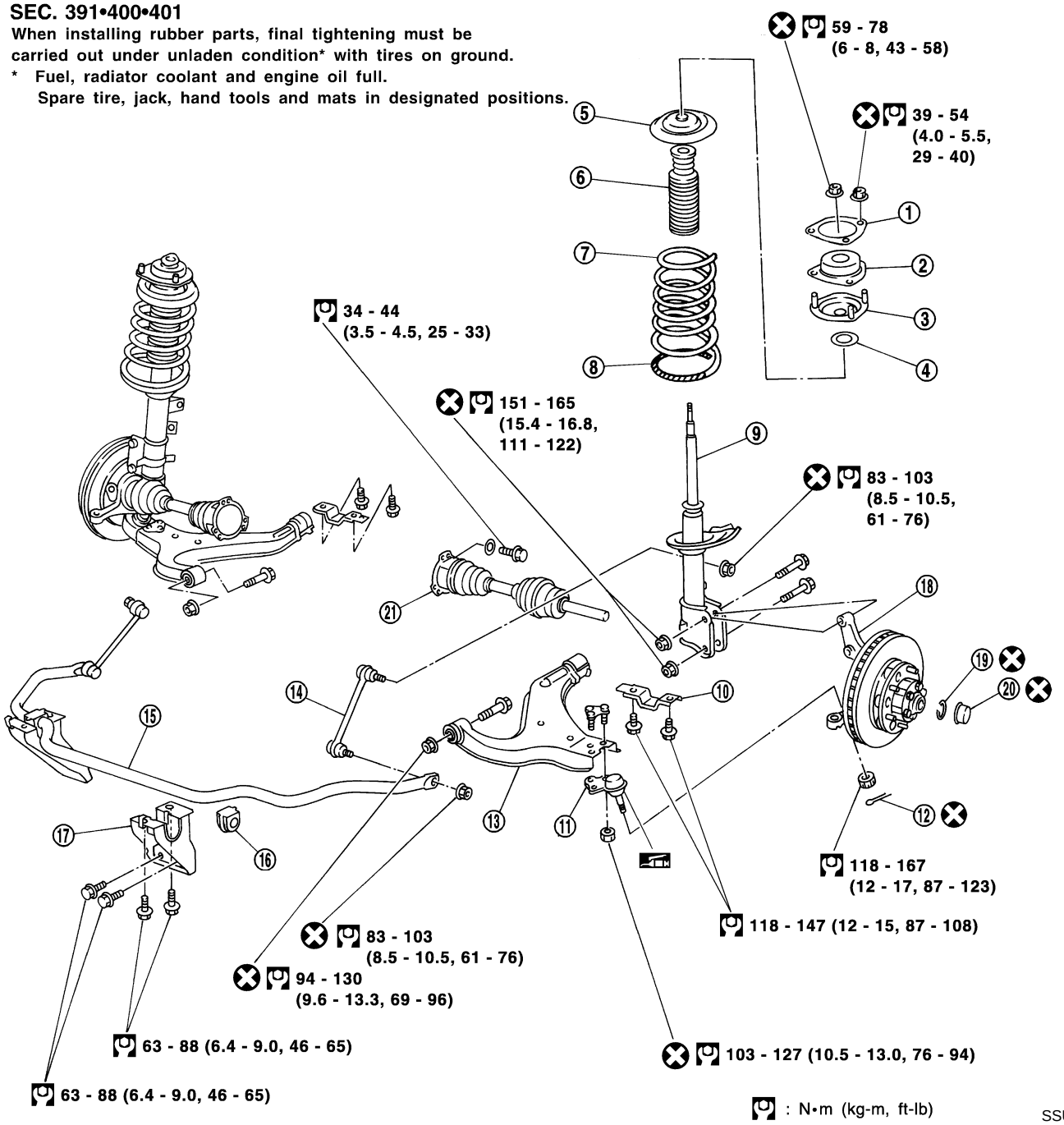

1. Spacer
2. Strut mounting insulator
3. Bracket
4. Strut mounting bearing
5. Spring upper seat
6. Bound bumper
7. Coil spring
8. (Polyurethane tube)
9. Strut assembly
10. Bracket
11. Lower ball joint assembly
12. Cotter pin
13. Transverse link
14. Stabilizer connecting rod
15. Stabilizer bar
16. Bushing
17. Bracket
18. Knuckle spindle
19. Snap ring
20. Hub cap
21. Drive shaft

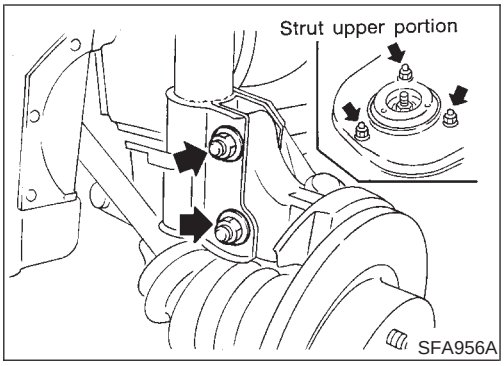

REMOVAL

NASU0008

1. Remove stabilizer connecting rod.
2. Remove strut assembly fixing bolts and nuts (to hood-ledge).

Do not remove piston rod lock nut on vehicle.

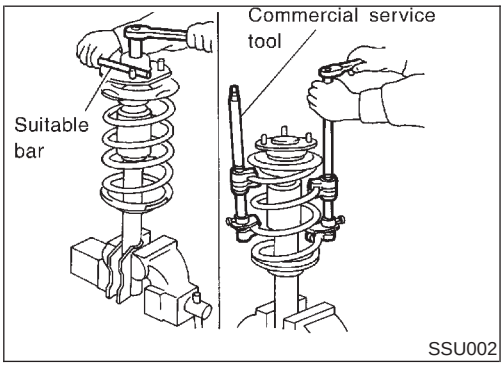

DISASSEMBLY

NASU0009

1. Set strut assembly on vise, then **loosen** piston rod lock nut.

WARNING:

Do not remove piston rod lock nut at this time.

2. Compress spring with tool so that the strut mounting insulator can be turned by hand.

WARNING:

Make sure that the pawls of the two spring compressors are firmly hooked on the spring. The spring compressors must be tightened alternately so as not to tilt the spring.

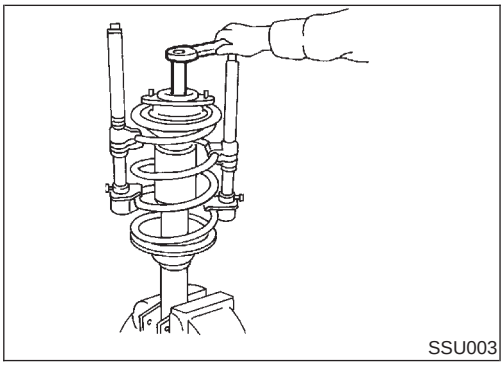

3. Remove piston rod lock nut.

INSPECTION

NASU0010

Strut Assembly

NASU0010S01

- Check for smooth operation through a full stroke, both compression and extension.
- Check for oil leakage on welded and gland packing portion.
- Check piston rod for cracks, deformation and other damage.
- Replace if necessary.

Strut Mounting Insulator and Rubber Parts

NASU0010S02

- Check cemented rubber-to-metal portion for separation and cracks. Check rubber parts for deterioration.
- Replace if necessary.

Strut Mounting Bearing

NASU0010S03

- Check thrust bearing parts for abnormal noise and excessive rattle in axial direction.
- Replace if necessary.

Coil Spring

NASU0010S04

- Check for cracks, deformation and other damage. Replace if necessary.

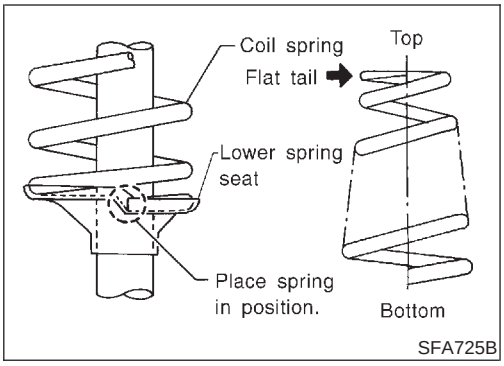

ASSEMBLY

NASU0011

- When installing coil spring on strut, it must be positioned as shown in the figure at left.

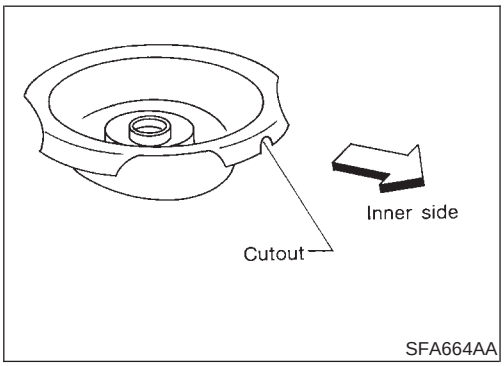

- Install upper spring seat with its cutout facing the inner side of vehicle.

Stabilizer Bar

REMOVAL AND INSTALLATION

NASU0012

- Remove stabilizer bar and connecting rod.

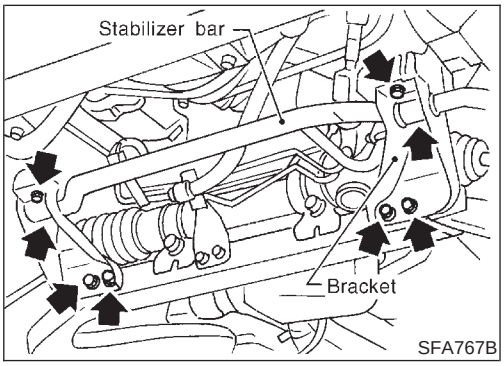

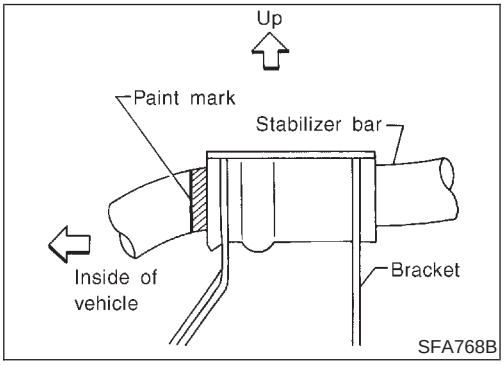

- When installing stabilizer, make sure that paint mark and bracket face in their correct directions.

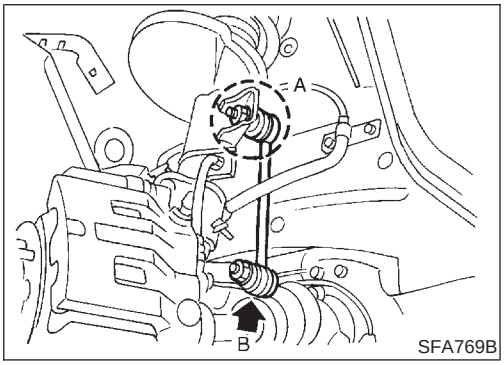

- When removing and installing stabilizer bar fix portion A.

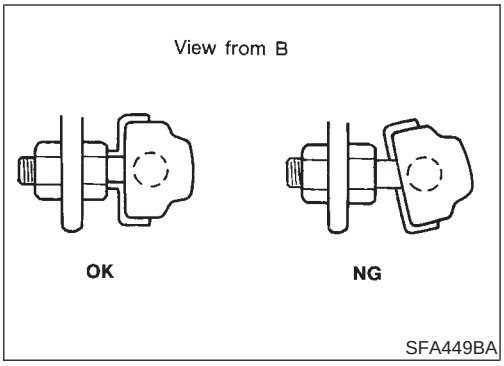

- Install stabilizer bar with ball joint socket properly placed.

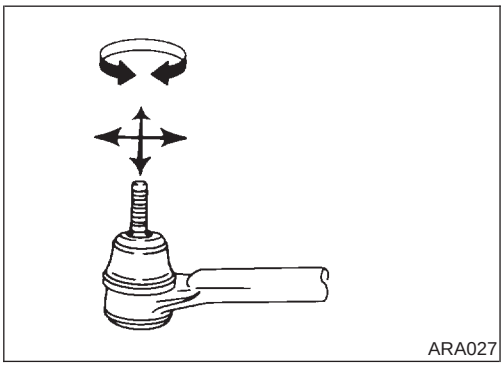

INSPECTION

NASU0013

- Check stabilizer for deformation and cracks. Replace if necessary.
- Check rubber bushings for deterioration and cracks. Replace if necessary.
- Check ball joint can rotate in all directions. If movement is not smooth and free, replace stabilizer bar connecting rod.

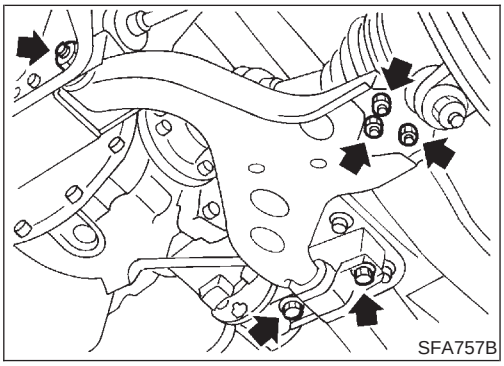

Transverse Link and Lower Ball Joint

REMOVAL AND INSTALLATION

NASU0014

1. Separate drive shaft from knuckle. — 4WD —
   Refer to AX-12, "Drive Shaft".
2. Separate lower ball joint stud from knuckle.
3. Remove lower ball joint assembly from transverse link.
4. Remove transverse link.
5. During installation, final tightening must be carried out at curb weight with tires on ground.
6. After installation, check wheel alignment.
   Refer to "FRONT WHEEL ALIGNMENT", "On-vehicle Service", SU-8.

INSPECTION

=NASU0015

Transverse Link

NASU0015S01

- Check transverse link for damage, cracks and deformation. Replace it if necessary.
- Check rubber bushing for damage, cracks and deformation. Replace transverse link if necessary.

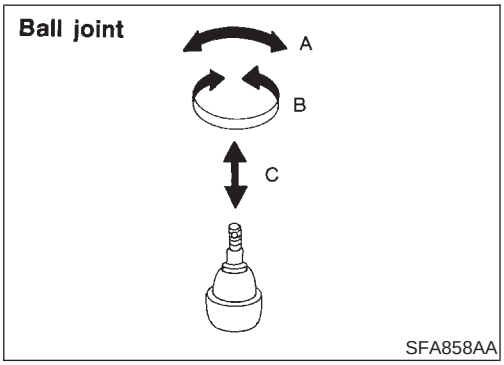

Lower Ball Joint

NASU0015S02

- Check ball joint for excessive play. Replace lower ball joint assembly if any of the following exists:

– Ball stud is worn.
– Joint is hard to swing.
– Play in axial direction is excessive.

Before checking, turn ball joint at least 10 revolutions so that ball joint is properly broken in.

Swinging force "A":
(measuring point: cotter pin hole of ball stud)
Refer to SDS, SU-35.
Turning torque "B":
Refer to SDS, SU-35.
Vertical end play "C":
Refer to SDS, SU-35.

Check dust cover for damage. Replace it and cover clamp if necessary.

Low Tire Pressure Warning System

SYSTEM COMPONENTS

NASU0037

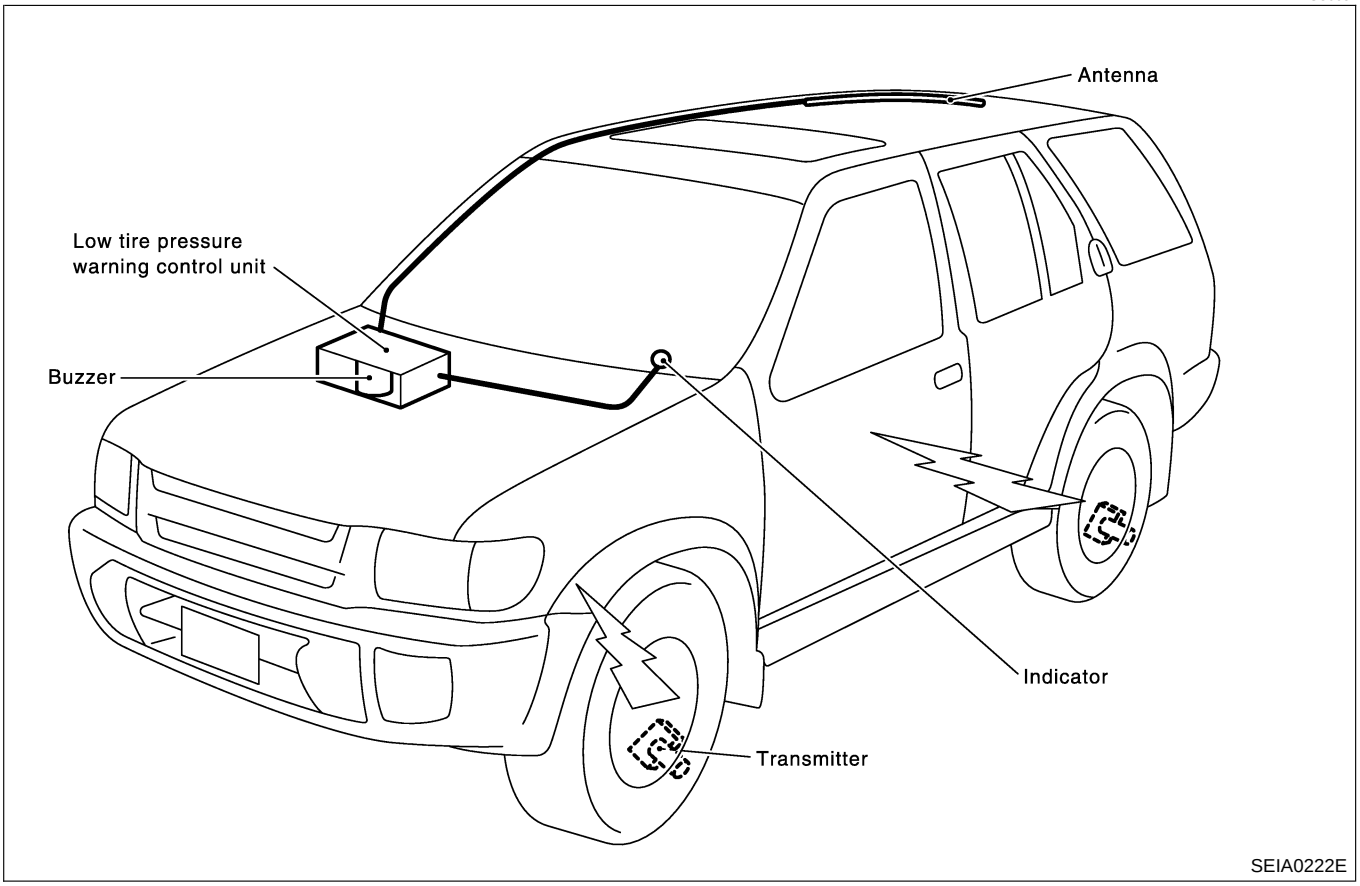

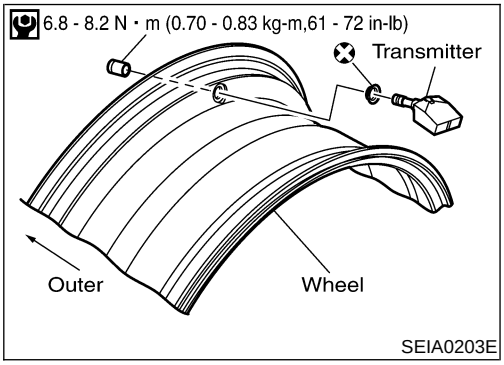

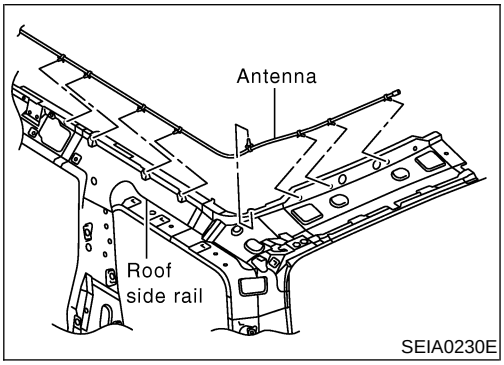

SYSTEM DESCRIPTION

NASU0038

Transmitter

NASU0038S01

A sensor-transmitter integrated with a valve is installed on a wheel, and transmits a detected air pressure signal in the form of a radio wave.

Antenna

NASU0038S02

Receives the radio wave signal transmitted by the transmitter.

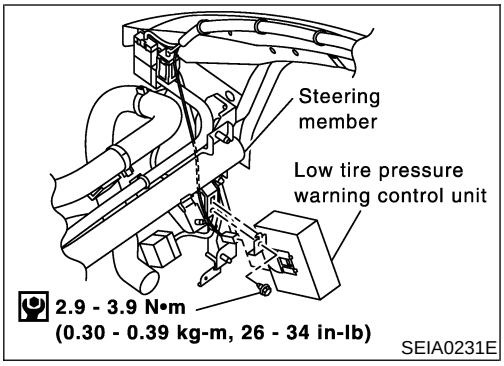

Low Tire Pressure Warning Control Unit

NASU0038S03

Reads the radio wave signal received by the antenna, and controls the warning lamp and the buzzer operations as shown below. It also has a judgement function to detect a system malfunction.

Condition	Warning lamp	Buzzer
Less than 170 kPa (1.7 kg/cm^2, 24 psi) [Flat tire]	ON	Sounds for 10 sec.
System malfunction	ON	OFF

Trouble Diagnoses

WIRING DIAGRAM

NASU0039

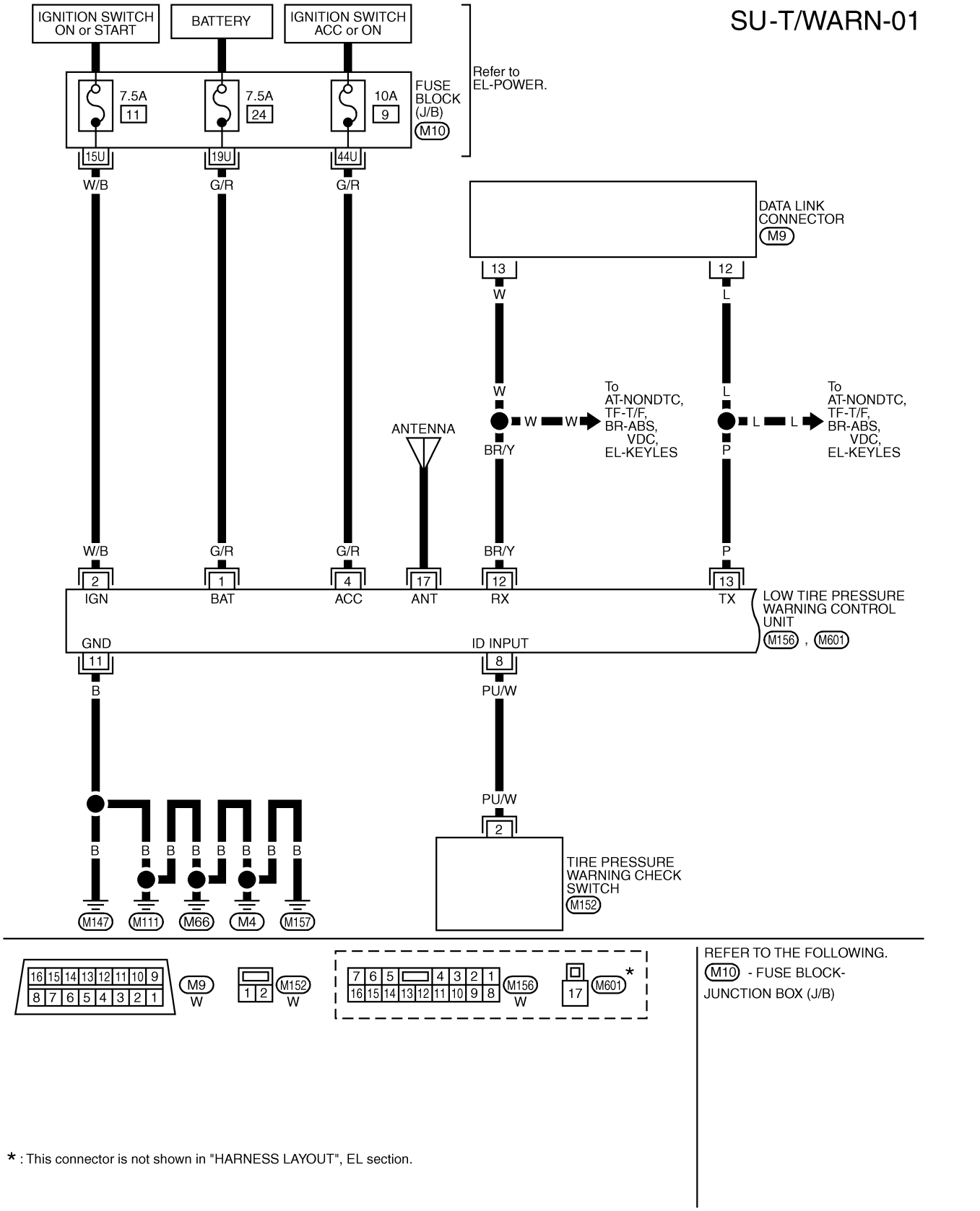

REFER TO THE FOLLOWING.
M10 - FUSE BLOCK-JUNCTION BOX (J/B)

* : This connector is not shown in "HARNESS LAYOUT", EL section.

MSU003

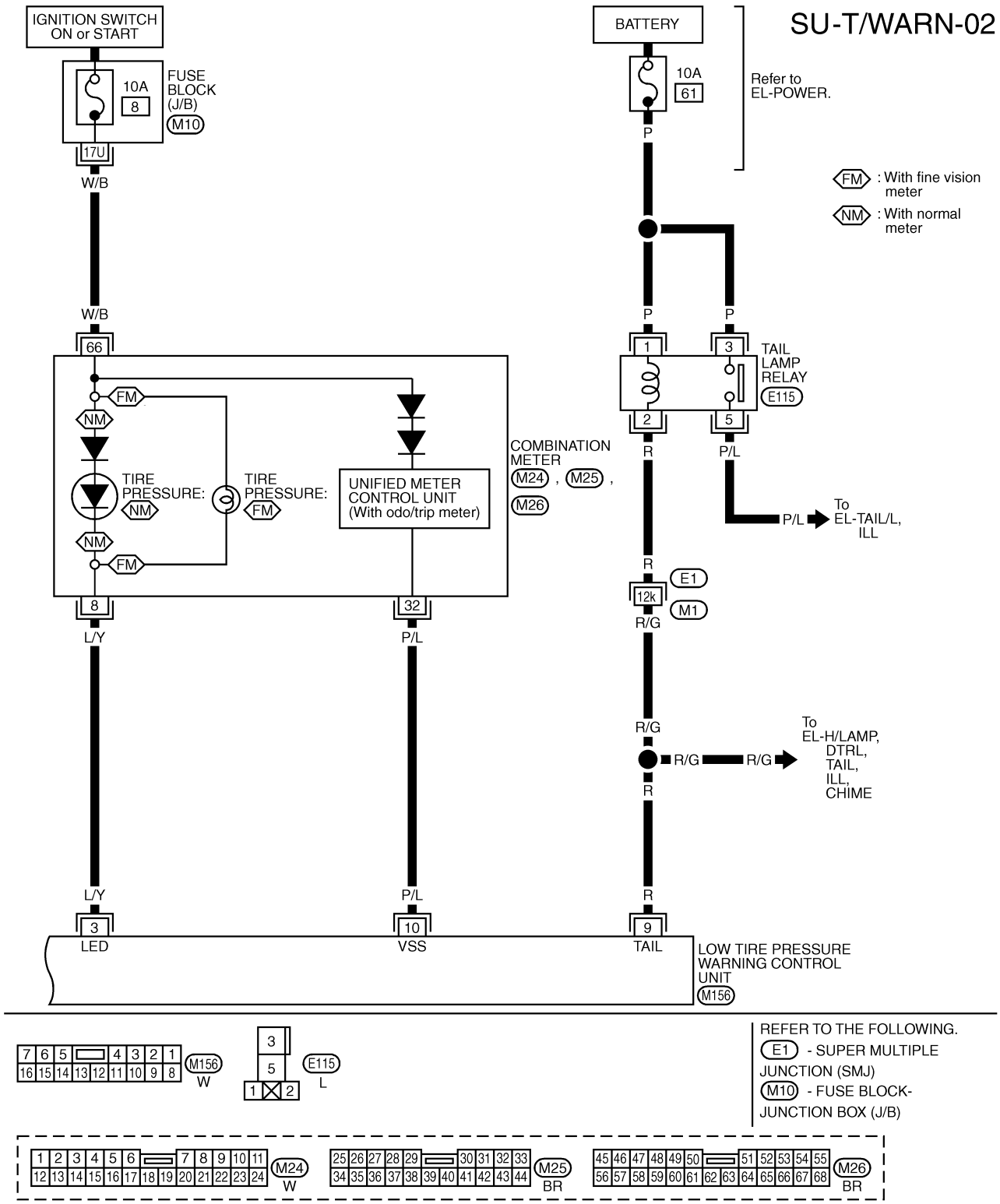
SU-T/WARN-02
IGNITION SWITCH ON or START
FUSE BLOCK (J/B) M10
10A 8
17U
W/B
BATTERY
10A 61
P
Refer to EL-POWER.
FM : With fine vision meter
NM : With normal meter
W/B
66
P
P
1
3
TAIL LAMP RELAY E115
2
5
R
P/L
P/L
To EL-TAIL/L, ILL
FM
NM
TIRE PRESSURE: NM
TIRE PRESSURE: FM
UNIFIED METER CONTROL UNIT (With odo/trip meter)
COMBINATION METER M24 , M25 , M26
NM
FM
R
E1
12k
M1
R/G
8
32
L/Y
P/L
R/G
R/G
R/G
To EL-H/LAMP, DTRL, TAIL, ILL, CHIME
R
L/Y
P/L
R
3
10
9
LED
VSS
TAIL
LOW TIRE PRESSURE WARNING CONTROL UNIT M156
M156 W
E115 L
REFER TO THE FOLLOWING.
E1 - SUPER MULTIPLE JUNCTION (SMJ)
M10 - FUSE BLOCK-JUNCTION BOX (J/B)
M24 W
M25 BR
M26 BR

MSU004

LOW TIRE PRESSURE WARNING CONTROL UNIT INPUT/OUTPUT SIGNAL STANDARD

NASU0040

Standards using a circuit tester and oscilloscope

Measurement terminal		Measuring point	Standard value	
+	−			
1	Ground	Battery power supply	Always	Battery voltage (Approx. 12V)
2		Ignition switch ON or START	Ignition switch ON	Battery voltage (Approx. 12V)
3		Tire pressure warning lamp	Tire pressure warning lamp turns ON	Approx. 0V
			Tire pressure warning lamp turns OFF	Battery voltage (Approx. 12V)
4		Ignition switch ON or ACC	Ignition switch ON	Battery voltage (Approx. 12V)
8		Tire pressure warning check switch	Always	Approx. 5V
9		Tail lamp relay	Lighting switch in 1st position	Approx. 0V
			Lighting switch OFF	Approx. 12V
10		Vehicle speed signal (8-pulse)	Speed meter operated [When vehicle speed is approx. 40 km/h (25 MPH)]	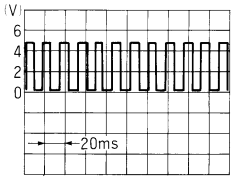 ELF1084D
11		GND	—	Approx. 0V
12		Data link connector (RX)	—	—
13		Data link connector (TX)	—	—
17		Antenna	—	—

ID REGISTRATION PROCEDURE

NASU0041

ID Registration with Transmitter Activation Tool

NASU0041S01

1. Turn ignition switch "OFF".
2. Connect CONSULT-II to data link connector.
3. Start engine.
4. Touch "START", "AIR PRESSURE MONITOR", "WORK SUPPORT" and "ID REGIST".

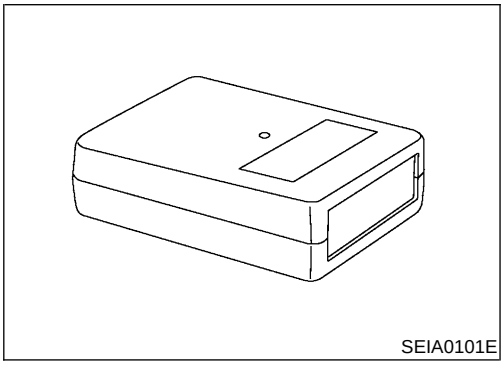

5. With the transmitter activation tool (J-45295) pushed against the front-left transmitter, press the button then keep 5 seconds.

6. Register the IDs in order from FR LH, FR RH, RR RH, to RR LH. When ID registration of each wheel has been completed, a buzzer sounds and tail lamps blinks.

Activation tire position		Buzzer	Tail lamp	CONSULT-II
1	FR LH	Once	2 times flashing	"YET" ↓ "DONE"
2	FR RH	2 times		
3	RR RH	3 times		
4	RR LH	4 times		

7. After completing all ID registrations, press "END" to complete the procedure.

NOTE:
Be sure to register the IDs in order from FR LH, FR RH, RR RH, to RR LH, or the self-diagnostic results display will not function properly.

ID Registration without Transmitter Activation Tool

NASU0041S02

1. Turn ignition switch "OFF".
2. Connect CONSULT-II to data link connector.
3. Start engine.
4. Touch "START", "AIR PRESSURE MONITOR", "WORK" SUPPORT" and "ID REGIST".
5. Adjust the tire pressure to the values shown in the table below for ID registration, and drive the vehicle at 32 km/h (20 MPH) or more for a few minutes.

Tire position	Tire pressure kPa (kg/cm^2, psi)
Front-Left	250 (2.5, 36)
Front-Right	230 (2.3, 33)
Rear-Right	210 (2.1, 30)
Rear-Left	190 (1.9, 27)

6. After completing all ID registrations, press "END" to complete the procedure.

Activation tire position	CONSULT-II
Front LH	"YET" ↓ "DONE"
Front RH	
Rear LH	
Rear RH	

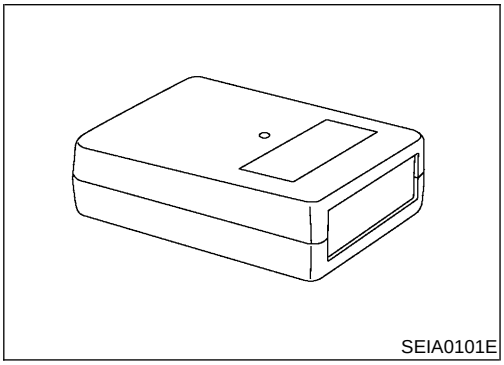

Transmitter Wake Up Operation

NASU0041S03

With Transmitter Activation Tool

NASU0041S0301

1. With the transmitter activation tool (J-45295) pushed against the front left transmitter, press the button for 5 seconds.

- When ignition switch is ON, then warning lamp blinks as in the follow diagram and transmitter wakes up.

2. Register the IDs in order from FR LH, FR RH, RR RH or RR LH. When wake up of each wheel has been completed, a tail lamp blinks.

Need to activate tire position	Warning lamp	Tail lamp
Front LH	Once (0.3 sec.)	2 times flashing
Front RH	2 times blinking	
Rear LH	3 times blinking	
Rear RH	4 times blinking	
All tires	Once (2.0 sec.)	

3. After completing wake up of all transmitters, make sure tire pressure warning lamp goes out.

SELF-DIAGNOSIS

=NASU0042

Description

NASU0042S01

During driving, the low tire pressure warning system receives the signal transmitted from the transmitter installed in each wheel, and gives alarms when the tire pressure becomes low. The control unit of this system has pressure judgement and trouble diagnosis functions.

Function

NASU0042S02

When the low tire pressure warning system detects low inflation pressure or another unusual symptom, the warning lamps in the combination meter comes on. To start the self-diagnostic results mode, ground the self-diagnostic (check) terminal. The malfunction location is indicated by the tail lamp flashing and the buzzer sounds.

CONSULT-II

NASU0042S03

CONSULT-II Application to Low Tire Pressure Warning System

NASU0042S0301

ITEM	SELF-DIAGNOSTIC RESULTS	DATA MONITOR
Front - Left transmitter	×	×
Front - Right transmitter	×	×
Rear - Left transmitter	×	×
Rear - Right transmitter	×	×
Warning lamp	—	×
Vehicle speed	—	×
Buzzer (in control unit)	—	×

×: Applicable

—: Not applicable

Self-Diagnostic Results Mode

=NASU0042S0302

Diagnostic item	Diagnostic item is detected when …
FLAT - TIRE - FL FLAT - TIRE - FR FLAT - TIRE - RR FLAT - TIRE - RL	Front-left tire pressure drops to 200 kPa (2.0 kg/cm^2, 28 psi) or less Front-right tire pressure drops to 200 kPa (2.0 kg/cm^2, 28 psi) or less Rear-right tire pressure drops to 200 kPa (2.0 kg/cm^2, 28 psi) or less Rear-left tire pressure drops to 200 kPa (2.0 kg/cm^2 , 28 psi) or less
[NO-DATA] - FL [NO-DATA] - FR [NO-DATA] - RR [NO-DATA] - RL	Data from front-left transmitter cannot be received. Data from front-right transmitter cannot be received. Data from rear-right transmitter cannot be received. Data from rear-left transmitter cannot be received.
[CHECKSUM- ERR] - FL [CHECKSUM- ERR] - FR [CHECKSUM- ERR] - RR [CHECKSUM- ERR] - RL	Checksum data from front-left transmitter is malfunctioning. Checksum data from front-right transmitter is malfunctioning. Checksum data from rear-right transmitter is malfunctioning. Checksum data from rear-left transmitter is malfunctioning.
[PRESSDATA- ERR] - FL [PRESSDATA- ERR] - FR [PRESSDATA- ERR] - RR [PRESSDATA- ERR] - RL	Air pressure data from front-left transmitter is malfunctioning. Air pressure data from front-right transmitter is malfunctioning. Air pressure data from rear-right transmitter is malfunctioning. Air pressure data from rear-left transmitter is malfunctioning.
[CODE- ERR] - FL [CODE- ERR] - FR [CODE- ERR] - RR [CODE- ERR] - RL	Function code data from front-left transmitter is malfunctioning. Function code data from front-right transmitter is malfunctioning. Function code data from rear-right transmitter is malfunctioning. Function code data from rear-left transmitter is malfunctioning.
[BATT - VOLT - LOW] - FL [BATT - VOLT - LOW] - FR [BATT - VOLT - LOW] - RR [BATT - VOLT - LOW] - RL	Battery voltage of front-left transmitter drops. Battery voltage of front-right transmitter drops. Battery voltage of rear-right transmitter drops. Battery voltage of rear-left transmitter drops.
RECEIVER - ID - NO - REG	No ID registration has been made to the low tire pressure warning control unit.

NOTE:

Before performing the self-diagnosis, be sure to register the ID. Or, the actual malfunction location may be different from that displayed on CONSULT-II.

Data Monitor Mode

NASU0042S0303

MONITOR	CONDITION	SPECIFICATION
VHCL SPEED SE	Drive vehicle.	Vehicle speed (km/h or MPH)
AIR PRESS FL AIR PRESS FR AIR PRESS RR AIR PRESS RL	● Drive vehicle for a few minutes. or ● Ignition switch ON and activation tool is transmitting activate signals.	Tire pressure (kPa or Psi)
ID REGST FL ID REGST FR ID REGST RR ID REGST RL	Ignition switch ON	Registration ID: DONE No registration ID: YET
WARNING LAMP		Warning lamp on: ON Warning lamp off: OFF
BUZZER		Buzzer in low tire pressure warning control unit on: ON Buzzer in low tire pressure warning control unit off: OFF

NOTE:

Before performing the self-diagnosis, be sure to register the ID. Or, the actual malfunction location may be different from that displayed on CONSULT-II.

HOW TO PERFORM TROUBLE DIAGNOSIS FOR QUICK AND ACCURATE REPAIR

=NASU0043

Introduction

NASU0043S01

- Before troubleshooting, verify customer complaints.
- If a vehicle problem is hard to reproduce, harnesses, harness connectors or terminals may often be malfunctioning. Hold and shake these parts by hand to make sure they are securely connected.
- When using a circuit tester to measure voltage or resistance of each circuit, be careful not to expand connector terminals.

Work Flow

NASU0043S02

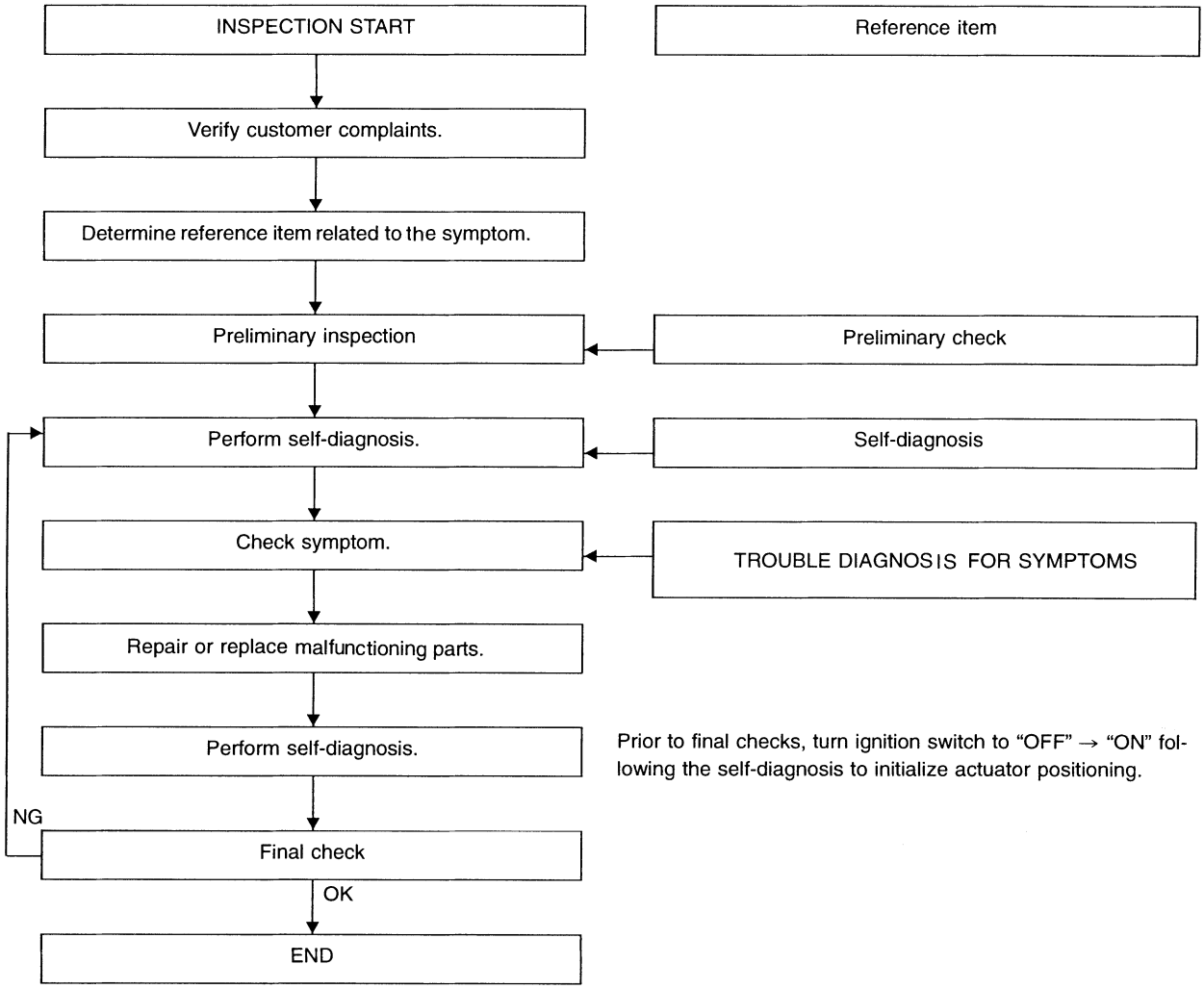

SEIA0100E

PRELIMINARY CHECK

=NASU0044

BASIC INSPECTION

1	CHECK ALL TIRES PRESSURES	
● Check all tires pressures. **Tire pressure:** **210 kPa (2.1 kg/cm^2, 30 psi)**		
OK or NG		
OK	▶	GO TO 2.
NG	▶	Adjust tire pressure to specified value.

2	CHECK WARNING LAMP ACTIVATION	
● Check warning lamp activation. ● Does warning lamp activate for 1 second when ignition switch is turned "ON"?		
YES or NO		
YES	▶	Warning lamp turns off: GO TO 3.
NO	▶	Check fuse and combination meter. Then repair or replace malfunctioning parts.

3	CHECK CONNECTOR	
1. Disconnect low tire pressure warning control unit connector M156. 2. Check terminals for damage or loose connection.		
OK or NG		
OK	▶	GO TO 4.
NG	▶	Repair or replace damaged parts.

4	CHECK TRANSMITTER ACTIVATION TOOL	
● Check transmitter tool battery.		
OK or NG		
OK	▶	Carry out self-diagnosis.
NG	▶	Replace transmitter activation tool battery.

MALFUNCTION CODE/SYMPTOM CHART

=NASU0045

Code/Symptom	Malfunction part	Reference page
15 16 17 18	Front-left tire pressure drops to 200 kPa (2.0 kg/cm^2, 28 psi) or less Front-right tire pressure drops to 200 kPa (2.0 kg/cm^2, 28 psi) or less Rear-right tire pressure drops to 200 kPa (2.0 kg/cm^2, 28 psi) or less Rear-left tire pressure drops to 200 kPa (2.0 kg/cm^2, 28 psi) or less	—
21 22 23 24	Transmitter no data (front - left) Transmitter no data (front - right) Transmitter no data (rear - right) Transmitter no data (rear - left)	SU-27
31 32 33 34	Transmitter checksum error (front - left) Transmitter checksum error (front - right) Transmitter checksum error (rear - right) Transmitter checksum error (rear - left)	SU-28
35 36 37 38	Transmitter pressure data error (front - left) Transmitter pressure data error (front - right) Transmitter pressure data error (rear - right) Transmitter pressure data error (rear - left)	SU-29
41 42 43 44	Transmitter function code error (front - left) Transmitter function code error (front - right) Transmitter function code error (rear - right) Transmitter function code error (rear - left)	SU-28
45 46 47 48	Transmitter battery voltage low (front - left) Transmitter battery voltage low (front - right) Transmitter battery voltage low (rear - right) Transmitter battery voltage low (rear - left)	SU-28
51	Low tire pressure warning control unit	SU-29
Warning lamp does not come on when ignition switch is turned on.	Fuse or combination meter Low tire pressure warning control unit connector or circuit Low tire pressure warning control unit	SU-30
Warning lamp stays on when ignition switch is turned on.	Fuse or combination meter Low tire pressure warning control unit connector or circuit Low tire pressure warning control unit	SU-31
Warning lamp blinks when ignition switch is turned on.	Low tire pressure warning control unit harness connector or circuit Low tire pressure warning control unit	SU-33
Tail lamp blinks when ignition switch is turned on.	Low tire pressure warning control unit harness connector or circuit Low tire pressure warning control unit	SU-34
ID registration cannot be operated.	Transmitter Antenna harness connector or circuit Antenna	SU-34

Trouble Diagnoses for Self-diagnostic Items

INSPECTION 1: TRANSMITTER OR TIRE PRESSURE WARNING CONTROL UNIT

NASU0046

Malfunction Code No. 21, 22, 23 or 24

NASU0046S01

1	CHECK CONTROL UNIT	
● Drive for several minutes. Check all tires' pressure with CONSULT-II "DATA MONITOR ITEM".		
Are all tires' pressure displayed 0 kPa?		
YES	▶	GO TO 2.
NO	▶	GO TO 3.

2	CHECK ANTENNA CONNECTOR	
● Check antenna and feeder connector M601 for damage or loose connections.		
OK or NG		
OK	▶	Replace control unit, then GO TO 3.
NG	▶	Repair or replace antenna or feeder connector.

3	ID REGISTRATION	
● Carry out ID registration of all transmitters.		
Is there a tire that cannot register ID?		
YES	▶	Replace transmitter of the tire, GO TO 5.
NO	▶	GO TO 4.

4	VEHICLE DRIVING	
● Drive at a speed of 40 km/h (25 MPH) or more for several minutes without stopping. Check all tires' pressure with CONSULT-II "DATA MONITOR ITEM" within 15 minutes after vehicle speed becomes 17 km/h (11 MPH).		
Does "DATA MONITOR ITEM" display tire pressure as normal without any warning lamp?		
YES	▶	INSPECTION END.
NO	▶	GO TO 5.

5	ID REGISTRATION AND VEHICLE DRIVING	
1. Carry out ID registration of all transmitters. 2. Drive at a speed of 40 km/h (25 MPH) or more for 3 minutes, and then drive the vehicle at any speed for 10 minutes. Then check all tires' pressure with CONSULT-II "DATA MONITOR ITEM" within 5 minutes.		
Does "DATA MONITOR ITEM" display tire pressure as normal without any warning lamp?		
YES	▶	INSPECTION END.
NG	▶	GO TO the inspection applicable to DTC.

INSPECTION 2: TRANSMITTER-1

NASU0056

Malfunction Code No. 31, 32, 33, 34, 41, 42, 43, 44, 45, 46, 47 or 48

NASU0056S01

1	ID REGISTRATION (CORRECTION OF TRANSMITTER LOCATION)	
1. Carry out ID registration of all transmitters. 2. Drive at a speed of 40 km/h (25 MPH) or more for 3 minutes, and then drive the vehicle at any speed for 10 minutes.		
	▶	GO TO 2.

2	REPLACE TRANSMITTER	
1. Check warning lamp for blink again, replace malfunctioning transmitter. 2. Carry out ID registration of all transmitters.		
Can ID registration of all transmitters be completed?		
YES	▶	GO TO 3.
NO	▶	GO TO Inspection 1.

3	VEHICLE DRIVING	
● Drive at a speed of 40 km/h (25 MPH) or more for 3 minutes, and then drive the vehicle at any speed for 10 minutes. Then check all tires' pressure with CONSULT-II "DATA MONITOR ITEM" within 5 minutes.		
Does "DATA MONITOR ITEM" display tire pressure as normal without any warning lamp?		
YES	▶	INSPECTION END.
NO	▶	Replace malfunctioning transmitter, and perform "Step 3" again.

INSPECTION 3: TRANSMITTER-2
Malfunction Code No. 35, 36, 37 or 38

NASU0057

NASU0057S01

1	CHECK ALL TIRES' PRESSURE	
● Check all tires' pressure. **Tire pressure:** **210 kPa (2.1 kg/m^2, 30 psi)**		
Are there any tires' whose pressure is "64 psi" or more?		
YES	▶	Adjust tire pressure to specified value.
NO	▶	GO TO 2.

2	VEHICLE DRIVING	
1. Carry out ID registration of all transmitters. 2. Drive at a speed of 40 km/h (25 MPH) or more for several minutes without stopping. Check all tires' pressure with CONSULT-II "DATA MONITOR ITEM" within 15 minutes after vehicle speed becomes 17 km/h (11 MPH).		
Replace transmitter with new one if "DATA MONITOR ITEM" displays 64 psi or more.		
	▶	Then GO TO 3.

3	ID REGISTRATION AND VEHICLE	
1. Carry out ID registration of all transmitters. 2. Drive at a speed of 40 km/h (25 MPH) or more for 3 minutes, and then drive the vehicle at any speed for 10 minutes. Then check all tires' pressure with CONSULT-II "DATA MONITOR ITEM" within 5 minutes.		
Does "DATA MONITOR ITEM" display tire pressure as normal without any warning lamp?		
YES	▶	INSPECTION END.
NO	▶	GO TO the inspection applicable to DTC.

INSPECTION 4: LOW TIRE PRESSURE WARNING CONTROL UNIT
Malfunction Code No. 51

NASU0048

NASU0048S01

1	SELF-DIAGNOSIS	
● Carry out self-diagnosis.		
Does warning lamp still activate again?		
YES	▶	Replace low tire pressure warning control unit.
NO	▶	INSPECTION END.

Trouble Diagnoses for Symptoms

INSPECTION 1: WARNING LAMP DOES NOT COME ON WHEN IGNITION SWITCH IS TURNED ON.

NASU0049

DIAGNOSTIC PROCEDURE

1	CHECK COMBINATION METER OPERATION	
● Check combination meter operation.		
OK or NG		
OK	▶	GO TO 2.
NG	▶	Check combination meter.

2	CHECK WARNING LAMP	
1. Disconnect low tire pressure warning control unit connector M156. 2. Apply ground to low tire pressure warning control unit connector M156 terminal 3 (L/Y).		
Does the warning lamp activate?		
OK	▶	Replace low tire pressure warning control unit.
NG	▶	GO TO 3.

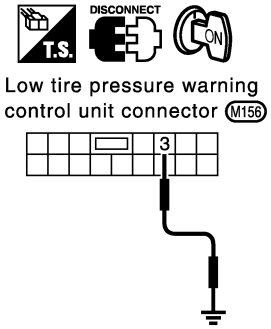

SEIA0232E

3	CHECK COMBINATION METER CIRCUIT	
● Check continuity between low tire pressure warning control unit connector M156 terminal 3 (L/Y) and combination meter connector M24 terminal 8 (L/Y). **3 (L/Y) - 8 (L/Y):** **Continuity should exist.**		
OK or NG		
OK	▶	Check combination meter.
NG	▶	Check harness for open or short between low tire pressure warning control unit and combination meter.

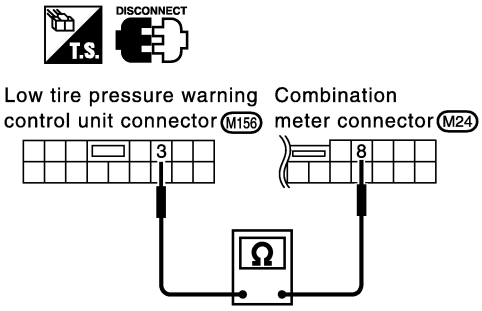

SEIA0233E

INSPECTION 2: WARNING LAMP STAYS ON WHEN IGNITION SWITCH IS TURNED ON.

NASU0050

DIAGNOSTIC PROCEDURE

1	CHECK CONNECTOR	
1. Disconnect low tire pressure warning control unit connector M156. 2. Check terminal for damage or loose connections.		
OK or NG		
OK	▶	GO TO 2.
NG	▶	Repair or replace damaged parts.

2	CHECK CIRCUIT	
1. Disconnect combination meter connector M24 and low tire pressure warning control unit connector M156. 2. Check continuity between tire pressure warning control unit connector M156 terminal 3 (L/Y) and combination meter connector M24 terminal 8 (L/Y). **3 (L/Y) - 8 (L/Y):** **Continuity should exist.**		
OK or NG		
OK	▶	GO TO 3.
NG	▶	Check harness for open or short between low tire pressure warning control unit and combination meter.

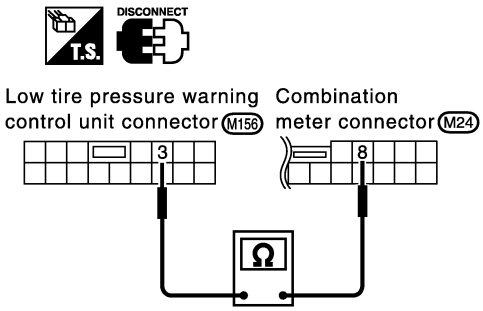

SEIA0233E

3	CHECK POWER SUPPLY CIRCUIT 1	
● Check voltage between low tire pressure warning control unit connector M156 terminal 1 (G/R) and ground. **1 (G/R) - Ground:** **Battery voltage (Approx. 12V)**		
OK or NG		
OK	▶	GO TO 4.
NG	▶	Check low tire pressure warning control unit power supply circuit for open or short.

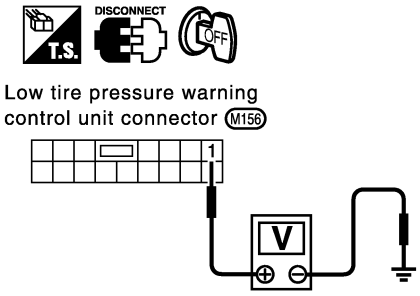

SEIA0234E

4	CHECK POWER SUPPLY CIRCUIT 2

1. Turn ignition switch ON.
2. Check voltage between low tire pressure warning control unit connector M156 terminal 2 (W/B) and ground.
   2 (W/B) - Ground:
   Battery voltage (Approx. 12V)

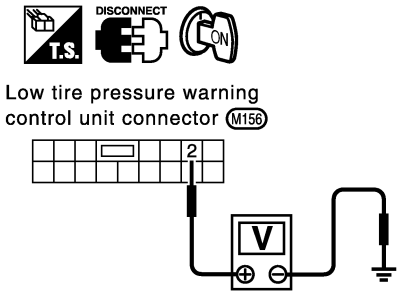

SEIA0235E

OK or NG

OK	▶	GO TO 5.
NG	▶	Check low tire pressure warning control unit power supply circuit for open or short.

5	CHECK GROUND CIRCUIT

1. Check continuity between low tire pressure warning control unit connector M156 terminal 11 (B) and ground.
   11 (B) - Ground:
   Continuity should exist.

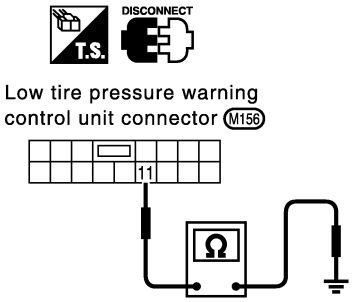

SEIA0236E

OK or NG

OK	▶	Replace low tire pressure warning control unit.
NG	▶	Repair or replace low tire pressure warning control unit ground circuit.

INSPECTION 3: WARNING LAMP BLINKS WHEN IGNITION SWITCH IS TURNED ON.

NASU0051

DIAGNOSTIC PROCEDURE

1	CHECK WARNING LAMP

If warning lamp blinks as below, the system is normal.
- This mode shows transmitter status is in OFF-mode.

Mode A

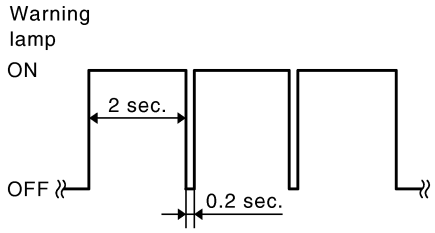

SEIA0347E

OK or NG

OK	▶	Carry out transmitter wake up operation.
NG	▶	GO TO 2.

2	CHECK CIRCUIT

1. Disconnect low tire pressure warning control unit connector M156.
2. Check continuity between low tire pressure warning control unit connector M156 terminal 8 (PU/W) and ground.
   8 (PU/W) - Ground:
   Continuity should not exist.

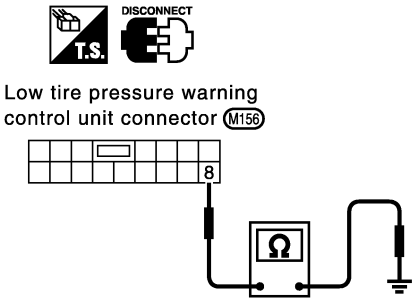

SEIA0237E

OK or NG

OK	▶	Replace low tire pressure warning control unit.
NG	▶	Repair or replace harness connector.

INSPECTION 4: TAIL LAMP BLINKS WHEN IGNITION SWITCH IS TURNED ON.

NASU0052

DIAGNOSTIC PROCEDURE

1	CHECK GROUND CIRCUIT

1. Disconnect low tire pressure warning control unit connector M156.
2. Check continuity between low tire pressure warning control unit connector M156 terminal 11 (B) and ground.

11 (B) - Ground:
Continuity should exist.

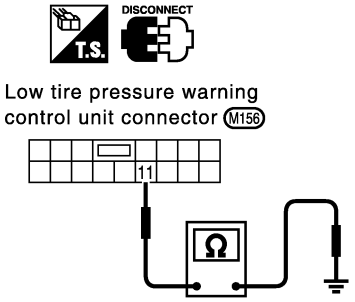

SEIA0236E

OK or NG

OK	▶	Replace low tire pressure warning control unit.
NG	▶	Repair or replace low tire pressure warning control unit ground circuit.

INSPECTION 5: ID REGISTRATION CANNOT BE COMPLETED.

NASU0053

DIAGNOSTIC PROCEDURE

1	ID REGISTRATION (ALL)

- Carry out ID registration of all transmitters.

Can ID registration of all transmitters be completed?

YES	▶	INSPECTION END.
NO	▶	Go To Inspection 1: Transmitter or Low Tire Pressure Warning Control Unit.

Service Data and Specifications (SDS)

GENERAL SPECIFICATIONS (FRONT)

NASU0016

Suspension type	Independent macpherson strut with coil spring
Strut type	Double-acting hydraulic
Stabilizer bar	Standard equipment

WHEEL ALIGNMENT (UNLADEN*1)

NASU0017

Unit: Degree minute (Decimal degree)

Applied model		All
Camber	Minimum	−0°35′ (−0.58°)
	Nominal	0°10′ (0.17°)
	Maximum	0°55′ (0.92°)
	Left and right difference	45′ (0.75°) or less
Caster	Minimum	2°15′ (2.25°)
	Nominal	3°00′ (3.00°)
	Maximum	3°45′ (3.75°)
	Left and right difference	45′ (0.75°) or less

Applied model				All
Kingpin inclination			Minimum	13°35′ (13.58°)
			Nominal	14°20′ (14.33°)
			Maximum	15°05′ (15.08°)
Total toe-in	Distance (A - B)		Minimum	1 mm (0.04 in)
			Nominal	2 mm (0.08 in)
			Maximum	3 mm (0.12 in)
	Angle (left plus right)		Minimum	5′ (0.08°)
			Nominal	10′ (0.17°)
			Maximum	15′ (0.25°)
Wheel turning angle	Full turn*2	Inside	Minimum	30°00′ (30.00°)
			Nominal	33°00′ (33.00°)
			Maximum	34°00′ (34.00°)
		Outside	Minimum	28°00′ (28.00°)
			Nominal	31°00′ (31.00°)
			Maximum	32°00′ (32.00°)

*1: Fuel, radiator coolant and engine oil full. Spare tire, jack, hand tools and mats in designated positions.

*2: On power steering models, wheel turning force (at circumference of steering wheel) of 98 to 147 N (10 to 15 kg, 22 to 33 lb) with engine idle.

LOWER BALL JOINT

NASU0018

Swinging force "A" (Measuring point: cotter pin hole of ball stud)	7.8 - 76.5 N (0.8 - 7.8 kg, 1.8 - 17.2 lb)
Turning torque "B"	0.5 - 4.9 N·m (5 - 50 kg-cm, 4.3 - 43.4 in-lb)
Vertical end play "C"	0 mm (0 in)

WHEELARCH HEIGHT (UNLADEN*)

NASU0019

Unit: mm (in)

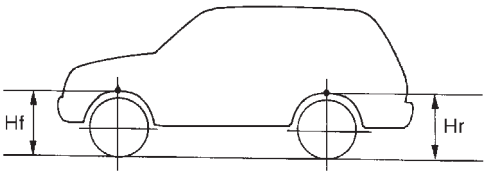

SFA746B

Applied model	2WD		4WD	
	P245/70 R16 tire P245/65 R17 tire	P255/65 R16 tire (With over fender)	P245/70 R16 tire P245/65 R17 tire	P255/65 R16 tire (With over fender)
Front (Hf)	840 (33.07)	840 (33.07)	837 (32.95)	824 (32.44)
Rear (Hr)	867 (34.13)	817 (32.17)	867 (34.13)	817 (32.17)

*: Fuel, radiator coolant and engine oil full. Spare tire, jack, hand tools and mats in designated positions.

WHEEL RUNOUT AVERAGE*

NASU0020

Unit: mm (in)

Wheel type	Aluminum	Steel
Radial runout limit	0.3 (0.012)	0.8 (0.031)
Lateral runout limit	0.3 (0.012)	0.8 (0.031)

*: Wheel runout average = (Outside runout value + Inside runout value) x 0.5

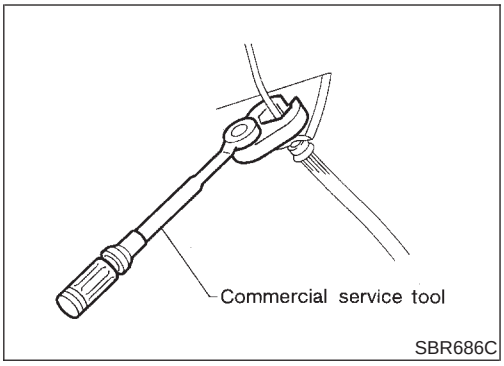

Precautions

PRECAUTIONS

NASU0021

- **When installing rubber parts, final tightening must be carried out under unladen condition* with tires on ground. *Fuel, radiator coolant and engine oil full. Spare tire, jack, hand tools and mats in designated positions.**
- **Use flare nut wrench when removing and installing brake tubes.**
- **After installing removed suspension parts, check wheel alignment and adjust if necessary.**
- **Always torque brake lines when installing.**

Preparation

COMMERCIAL SERVICE TOOLS

NASU0023

Tool name	Description	
1 Flare nut crowfoot 2 Torque wrench	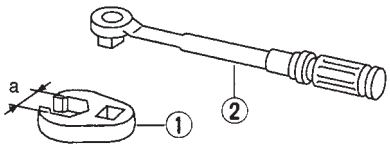 NT360	Removing and installing each brake piping **a: 10 mm (0.39 in)**

Noise, Vibration and Harshness (NVH) Troubleshooting

NASU0036

Refer to “Noise, Vibration and Harshness (NVH) Troubleshooting”, “FRONT SUSPENSION”, SU-4.

Components

NASU0024

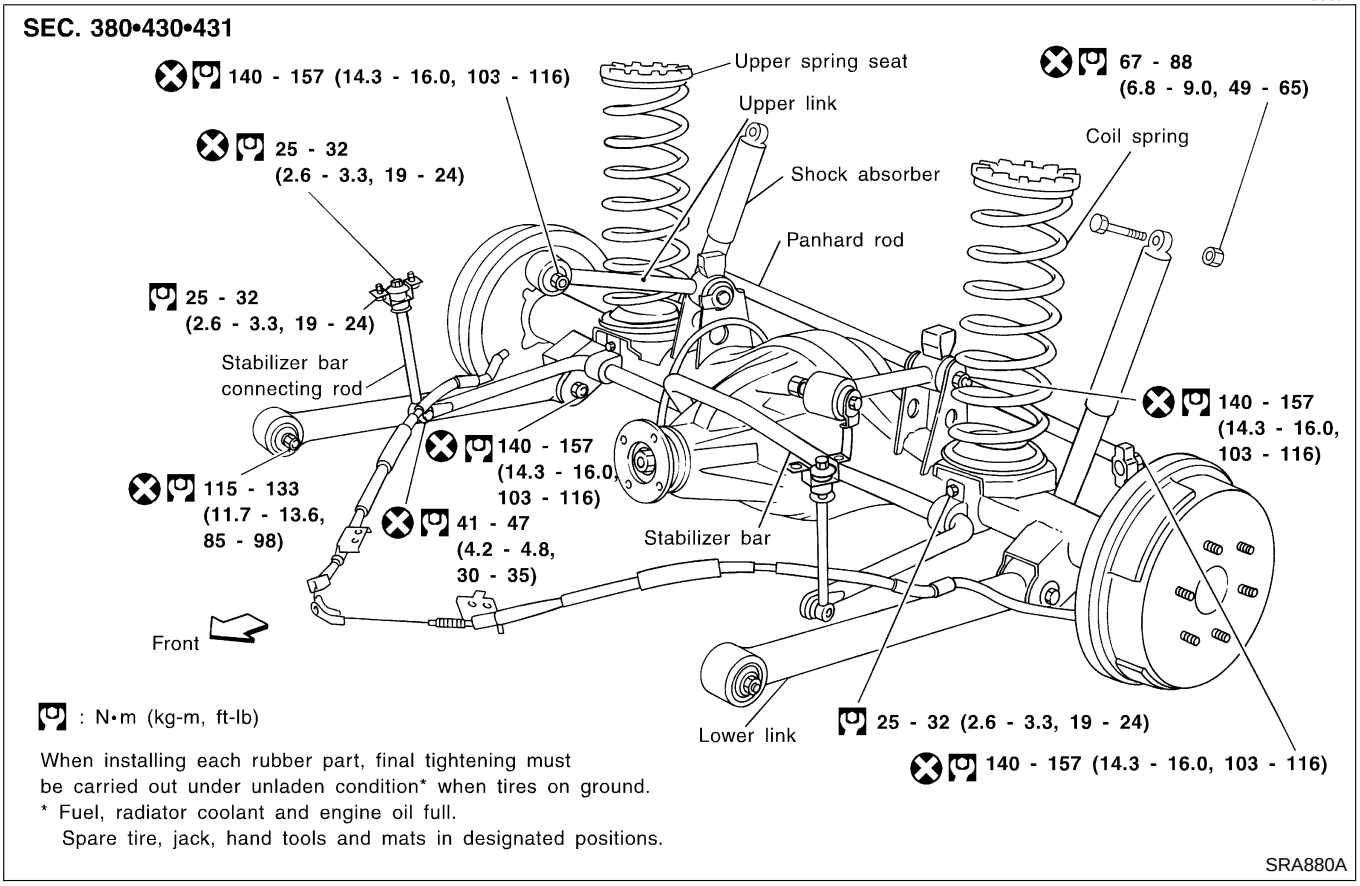

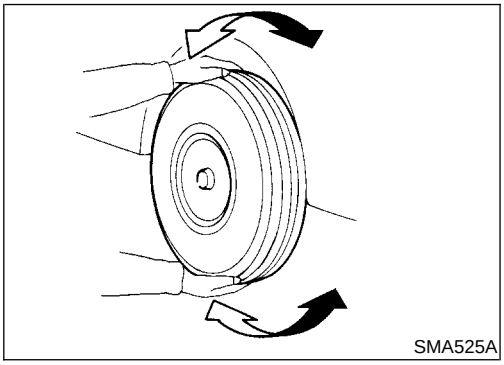

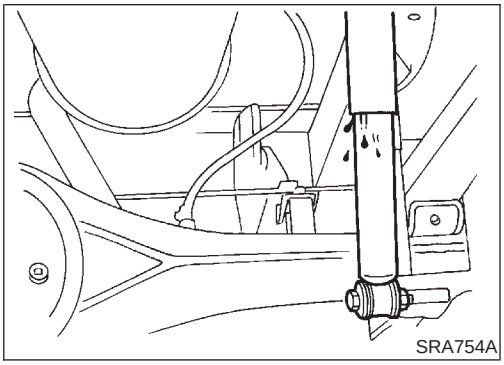

On-vehicle Service

REAR SUSPENSION PARTS

NASU0025

Check rear axle and rear suspension parts for excessive play, wear and damage.

1. Shake each rear wheel to check for excessive play.
2. Retighten all nuts and bolts to the specified torque.

   Tightening torque: Refer to “Coil Spring and Shock Absorber”, SU-40.

3. Check shock absorber for oil leakage and other damage.
4. Check shock absorber bushing for excessive wear and other damage.
5. Check wheelarch height. Refer to “On-vehicle Service”, “FRONT SUSPENSION”, SU-7.

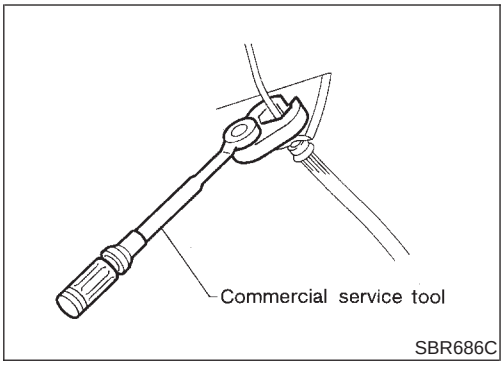

SBR686C

Removal and Installation

NASU0026

1. Support axle and suspension components with a suitable jack and block.
2. Disconnect brake hydraulic line and parking brake cables at back plates.

CAUTION:

- **Use flare nut wrench when removing and installing brake tubes.**
- **Before removing the rear suspension assembly, disconnect the ABS wheel sensor from the assembly. Then move it away from the rear suspension assembly. Failure to do so may result in damage to the sensor wires and the sensor becoming inoperative.**

3. Remove stabilizer bar from body.
4. Remove upper links and lower links from body.
5. Remove panhard rod from body.
6. Disconnect rear end of propeller shaft. Refer to PD-8, “Removal and Installation”.
7. Remove upper end nuts of shock absorber.

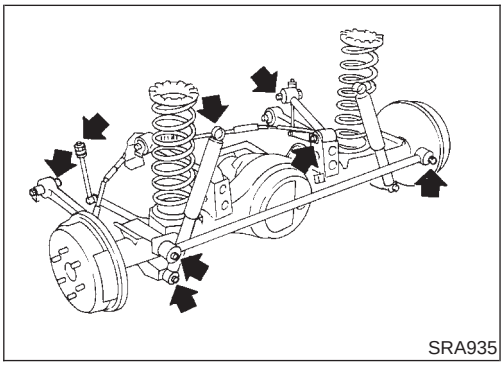
SRA935

Final tightening for rubber parts requires to be carried out under unladen condition with tires on ground.

Coil Spring and Shock Absorber

COMPONENTS

NASU0027

SEC. 380•430•431

When installing rubber parts, final tightening must be carried out under unladen condition* with tires on ground.

*** Fuel, radiator coolant and engine oil full. Spare tire, jack, hand tools and mats in designated positions.**

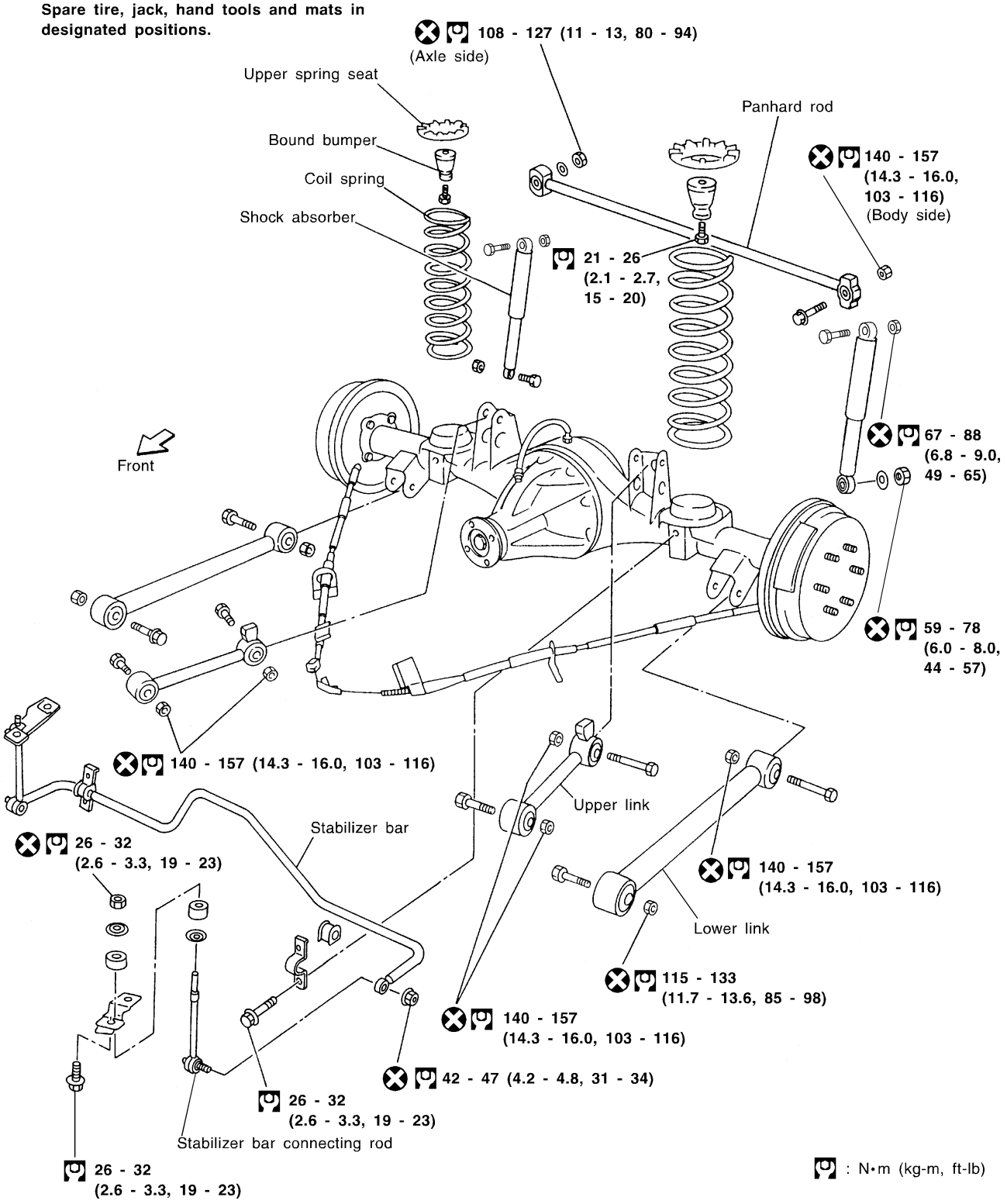

SSU054

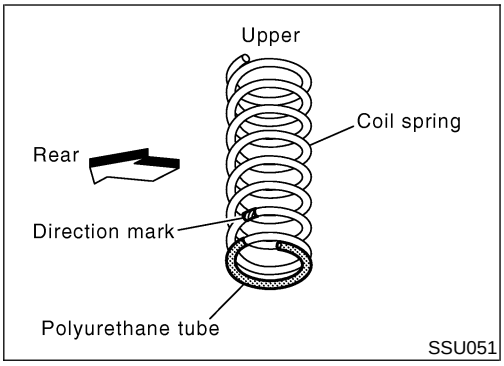

REMOVAL AND INSTALLATION

NASU0028

Refer to "Removal and Installation", "REAR SUSPENSION", SU-39.

When installing coil spring, pay attention to its direction.
Be sure spring rubber seat is not twisted and has not slipped off when installing coil spring.

INSPECTION

NASU0029

- Check coil spring for yield, deformation and cracks.
- Check shock absorber for oil leakage, cracks and deformation.
- Check all rubber parts for wear, cracks and deformation. Replace if necessary.

Upper Link, Lower Link and Panhard Rod

INSPECTION

NASU0030

Check for cracks, distortion and other damage. Replace if necessary.

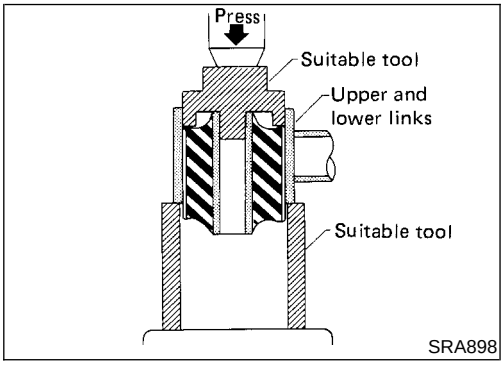

BUSHING REPLACEMENT

NASU0031

Check for cracks and other damage. Replace with suitable tool if necessary.

- Remove bushing with suitable tool.

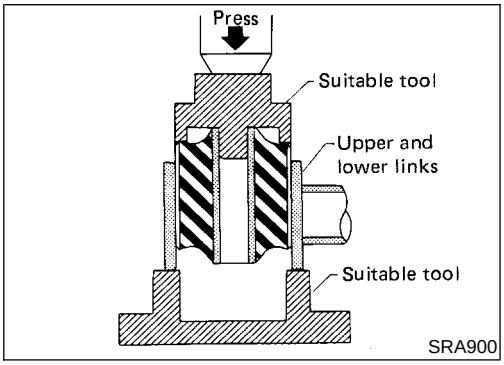

When installing bushing, apply a coat of 1% soapy water to outer wall of bushing.
Always install new bushing.
Do not tap end face of bushing directly with a hammer.

INSTALLATION

NASU0032

When installing each link, pay attention to direction of nuts and bolts.
When installing each rubber part, final tightening must be carried out under unladen condition with tires on ground.

Stabilizer Bar

REMOVAL AND INSTALLATION

NASU0033

- When removing and installing stabilizer bar, fix portion A.

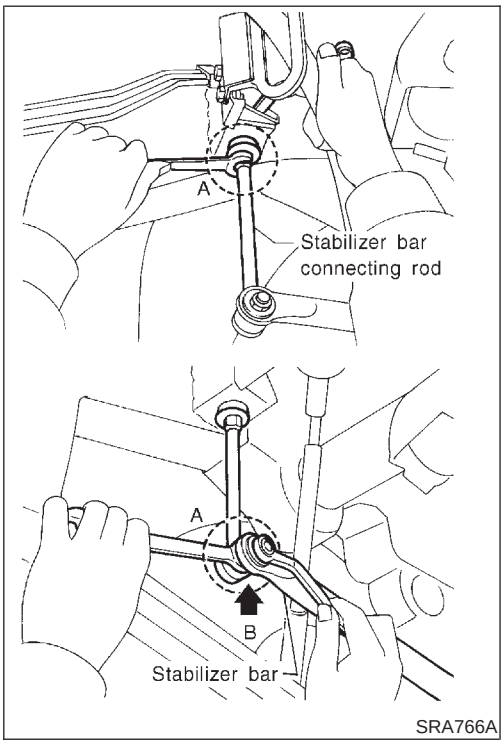

SRA766A

- Install stabilizer bar with ball joint socket properly placed.

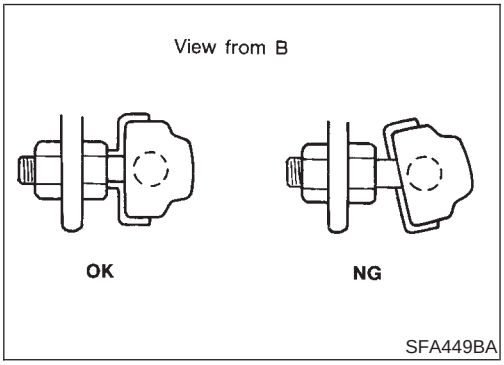

SFA449BA

Low Tire Pressure Warning System

NASU0055

Refer to "Tire Pressure Warning System", "FRONT SUSPENSION"

Service Data and Specifications (SDS)

GENERAL SPECIFICATIONS (REAR)

NASU0034

Suspension type	5-link type rigid with coil spring
Shock absorber type	Double-acting hydraulic
Stabilizer	Standard equipment

NOTES

TRANSFER

SECTION TF

CONTENTS

PREPARATION 4
Special Service Tools 4
Commercial Service Tools 9

TX10A

NOISE, VIBRATION AND HARSHNESS (NVH) TROUBLESHOOTING 10
NVH Troubleshooting Chart....10
TRANSFER 10
DESCRIPTION 11
Cross-sectional View 11
ON-VEHICLE SERVICE 12
Replacing Oil Seal 12
CENTER CASE OIL SEAL....12
SHIFT SHAFT OIL SEAL 13
REAR OIL SEAL 13
Position Switch Check 14
REMOVAL AND INSTALLATION 15
Removal....15
Installation....15
M/T MODEL 15
A/T MODEL 15
OVERHAUL 16
Transfer Gear Control....16
Case Components....17
Gear Components 18
Shift Control Components 19
DISASSEMBLY....20
REPAIR FOR COMPONENT PARTS 24
Mainshaft 24
DISASSEMBLY....24
INSPECTION....25
ASSEMBLY 25
Front Drive Shaft 26
DISASSEMBLY....26
INSPECTION....26
ASSEMBLY 26
Counter Gear 26
DISASSEMBLY....26
INSPECTION....27
ASSEMBLY 27
Main Gear 27
DISASSEMBLY....27
INSPECTION....28
ASSEMBLY 28
Front Case 28
REMOVAL....28
INSTALLATION....29
Front Case Cover 29
REMOVAL....29
INSTALLATION....29
Bearing Retainer....29
REMOVAL....29
INSTALLATION....29
Center Case....30
REMOVAL....30
INSTALLATION....30
Rear Case....30
REMOVAL....30
INSTALLATION....30
Shift Control Components 31
INSPECTION....31
ASSEMBLY....32
SERVICE DATA AND SPECIFICATIONS (SDS) 39
General Specifications....39
Gear End Play 39
Available Snap Ring 39
MAINSHAFT FRONT BEARING 39
MAINSHAFT REAR BEARING 39
MAIN GEAR BEARING....39
Available Shim 40
COUNTER GEAR REAR BEARING....40

ATX14A

PRECAUTIONS 41
Supplemental Restraint System (SRS) "AIR BAG" and "SEAT BELT PRE-TENSIONER"....41
Precautions....41
Service Notice....42

CONTENTS (Cont'd)

Wiring Diagrams and Trouble Diagnosis.....42
ALL-MODE 4WD SYSTEM 43
Cross-sectional View 43
Control System 44
ALL-MODE 4WD TRANSFER BASIC CONTROL.....45
HYDRAULIC CONTROL CIRCUITS.....45
OUTLINE 45
CONTROL SYSTEM DIAGRAM 46
INDICATIONS OF 4WD WARNING LAMP.....46
CAN Communication (With VDC).....47
SYSTEM DESCRIPTION 47
Location of Electrical Parts.....48
Description of Electrical Parts 49
TRANSFER MOTOR 49
WAIT DETECTION SWITCH 49
2-4WD SHIFT SOLENOID VALVE 50
LINE PRESSURE SWITCH.....50
Circuit Diagram for Quick Pinpoint Check.....51
Wiring Diagram - TF -.....52
ON BOARD DIAGNOSTIC SYSTEM DESCRIPTION.....61
Trouble Diagnosis without CONSULT-II 61
DESCRIPTION 61
SELF-DIAGNOSTIC PROCEDURE.....62
INDICATIONS OF 4WD WARNING LAMP.....63
Trouble Diagnosis with CONSULT-II 64
CONSULT-II FUNCTION.....64
SELF-DIAGNOSIS 64
SELF-DIAGNOSTIC ITEMS 66
DATA MONITOR.....67
DATA MONITOR ITEMS.....69
REFERENCE VALUE IN DATA MONITOR MODE 71
WORK SUPPORT.....73
CLUTCH FORCE RELEASE LIMIT ADJUSTMENT 74
TROUBLE DIAGNOSIS - INTRODUCTION.....76
Introduction 76
DESCRIPTION 76
DIAGNOSTIC WORKSHEET.....76
Work Flow.....78
HOW TO PERFORM TROUBLE DIAGNOSES FOR QUICK AND ACCURATE REPAIR.....78
TROUBLE DIAGNOSIS - BASIC INSPECTION.....79
Listen to Customer Complaints 79
Transfer Fluid Check 79
Road Test.....79
PREPARATION FOR ROAD TEST 79
1. CHECK BEFORE ENGINE IS STARTED 80
2. CHECK AT IDLE 81
3. CRUISE TEST 85
TROUBLE DIAGNOSIS - GENERAL DESCRIPTION.....88
Transfer Control Unit Terminals and Reference Value 88
REMOVAL AND INSTALLATION OF TRANSFER CONTROL UNIT 88
INSPECTION OF TRANSFER CONTROL UNIT.....88
TRANSFER CONTROL UNIT INSPECTION TABLE 89
DTC U1000 CAN COMMUNICATION LINE (WITH VDC).....95
Description 95
On Board Diagnosis Logic.....95
Possible Cause.....95
DTC Confirmation Procedure 95
WITH CONSULT-II 95
WITH GST 95
Diagnostic Procedure 96
VEHICLE SPEED SENSOR (FRONT REVOLUTION SENSOR) (WITHOUT VDC) 97
Diagnostic Procedure 97
4WD SOLENOID VALVE.....100
Diagnostic Procedure 100
2-4WD SHIFT SOLENOID VALVE AND 4WD SHIFT SWITCH.....102
Diagnostic Procedure 102
TRANSFER MOTOR AND TRANSFER MOTOR RELAY 106
Diagnostic Procedure 106
TRANSFER FLUID TEMPERATURE SENSOR.....109
Diagnostic Procedure 109
ATP SWITCH, WAIT DETECTION SWITCH AND NEUTRAL-4LO SWITCH.....112
Diagnostic Procedure 112
CLUTCH PRESSURE SWITCH 116
Diagnostic Procedure 116
LINE PRESSURE SWITCH.....119
Diagnostic Procedure 119
ABS OPERATION SIGNAL (WITHOUT VDC) 122
Diagnostic Procedure 122
DATA ERASE/DISPLAY 124
Diagnostic Procedure 124
SHIFT ACTUATOR.....125
Diagnostic Procedure 125
SHIFT ACTUATOR POSITION SWITCH 128
Diagnostic Procedure 128
SHIFT ACTUATOR CIRCUIT 130
Diagnostic Procedure 130
TROUBLE DIAGNOSES FOR SYMPTOMS.....134
Symptom 1. 4WD Shift Indicator Lamp Does Not Turn ON 134
Symptom 2. 4WD Warning Lamp Does Not Turn ON.....136
Symptom 3. 4WD Shift Indicator Lamp Does Not Turn OFF 138
Symptom 4. ATP Warning Lamp Does Not Turn ON.....138
Symptom 5. 4LO Indicator Lamp Does Not Turn ON.....140

CONTENTS (Cont'd)

Symptom 6. 4WD Shift Indicator Lamp Does Not Indicate "4H" 142
Symptom 7. 4WD Shift Indicator Lamp Repeats Flickering 143
Symptom 8. Tight Corner Braking Symptom 144
Symptom 9. 4WD System Does Not Operate 145
COMPONENT INSPECTION 147
4WD Shift Switch 147
2-4WD Shift Solenoid Valve and Transfer Fluid Temperature Sensor 147
4WD Solenoid Valve, Clutch Pressure Switch and Line Pressure Switch 147
Front Revolution Sensor 148
Transfer Dropping Resistor 148
ATP Switch, Neutral-4LO Switch and Wait Detection Switch 148
Transfer Motor 149
Transfer Motor Relay 149
Transfer Sub-harness 149
FRONT REVOLUTION SENSOR SUB-HARNESS CONNECTOR 149
TRANSFER SWITCH ASSEMBLY SUB-HARNESS CONNECTOR 150
TRANSFER TERMINAL CORD ASSEMBLY SUB-HARNESS CONNECTOR 150
Transfer Shift Relay (High & low) 150
Actuator & Actuator Position Switch 151
ACTUATOR 151
ACTUATOR POSITION SWITCH 151
ON-VEHICLE SERVICE 152
Replacing Oil Seal 152
FRONT CASE OIL SEAL 152
SHIFT SHAFT OIL SEAL 153
REAR OIL SEAL 153
Transfer Motor 154
REMOVAL 154
INSTALLATION 154
Transfer Oil Filter 154
REMOVAL 154
INSTALLATION 154
REMOVAL AND INSTALLATION 155
Removal 155
Installation 155
OVERHAUL 156
Transfer Gear Control 156
Transfer Components 157
DISASSEMBLY 159
Rear Case 159
DISASSEMBLY 159
Center Case 159
DISASSEMBLY 159
Front Case 169
DISASSEMBLY 169
REPAIR FOR COMPONENT PARTS 173
Front Case 173
INSPECTION 173
Center Case 174
INSPECTION 174
ASSEMBLY 177
Front Case 177
ASSEMBLY 177
Center Case 181
ASSEMBLY 181
Final Assembly 189
SERVICE DATA AND SPECIFICATIONS (SDS) 192
General Specifications 192
Inner Gear and Outer Gear 192
SUB-OIL PUMP 192
MAIN OIL PUMP 192
Control Valve 192
VALVE 192
SPRING 192
Clutch 193
DRIVE PLATE 193
DRIVEN PLATE 193
RETURN SPRING 193
RETAINING PLATE 193
Seal Ring (Mainshaft side) 194
Bearing Race (Thrust needle bearing side) 194
Snap Ring (Sun gear side) 194

Special Service Tools

NATF0093

The actual shapes of Kent-Moore tools may differ from those of special service tools illustrated here.

Tool number (Kent-Moore No.) Tool name	Description	
KV38108300 (J44195) Companion flange wrench	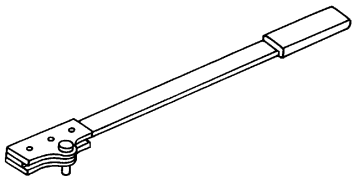 NT771	Removing companion flange nut Installing companion flange nut
ST30021000 (J22912-01) Puller	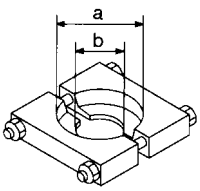 NT411	Removing low gear Removing counter gear front bearing (Use with ST36710010) Removing L & H hub **a: 110 mm (4.33 in) dia.** **b: 68 mm (2.68 in) dia.**
ST30031000 (J22912-01) Puller	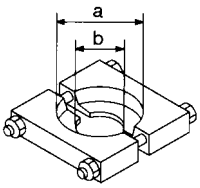 NT411	Removing counter gear rear bearing (Use with ST36710010) **a: 90 mm (3.54 in) dia.** **b: 50 mm (1.97 in) dia.**
ST33290001 (J25810-A) Puller	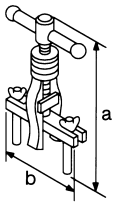 NT414	Removing center case oil seal Removing rear oil seal **a: 250 mm (9.84 in)** **b: 160 mm (6.30 in)**
ST33051001 (J22888) Puller	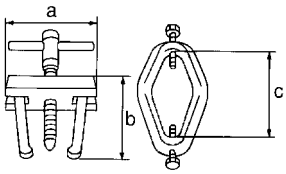 NT657	Removing companion flange **a: 135 mm (5.31 in)** **b: 100 mm (3.94 in)** **c: 130 mm (5.12 in)**
ST30720000 1 (J25273) 2 (J25405) Drift	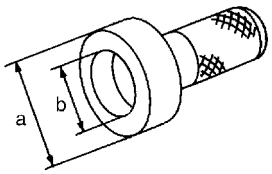 NT658	1 Installing center case oil seal 2 Installing rear oil seal **a: 77 mm (3.03 in) dia.** **b: 55.5 mm (2.185 in) dia.**

Tool number (Kent-Moore No.) Tool name	Description	
ST36710010 (—) Drift	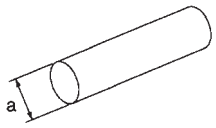 NT063	Removing counter gear front bearing (Use with ST30021000) Removing counter gear rear bearing (Use with ST30031000) **a: 34.5 mm (1.358 in) dia.**
ST33061000 (J8107-2) Drift	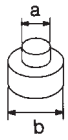 NT116	Removing main gear bearing **a: 28.5 mm (1.122 in) dia.** **b: 38 mm (1.50 in) dia.**
ST30613000 1 (J25742-3) 2 (J34339) Drift	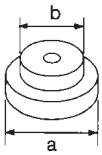 NT073	1 Installing main gear bearing 2 Installing front case cover oil seal **a: 72 mm (2.83 in) dia.** **b: 48 mm (1.89 in) dia.**
(J35864) Drift	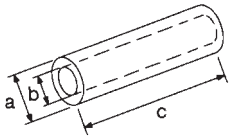 NT117	Installing shift shaft oil seal **a: 26 mm (1.02 in) dia.** **b: 20 mm (0.79 in) dia.** **c: 150 mm (5.91 in)**
(J26092) Drift	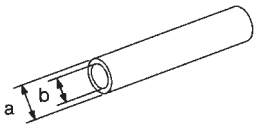 NT065	Seating counter gear assembly **a: 44.5 mm (1.752 in) dia.** **b: 38.5 mm (1.516 in) dia.**
(J34291) Shim setting gauge set	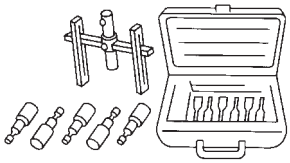 NT101	Selecting counter gear rear bearing shim
(J34291-20) Plunger-shim setting gauge	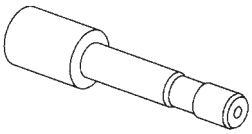 NT118	Selecting counter gear rear bearing shim
KV40100621 (J26091) Drift	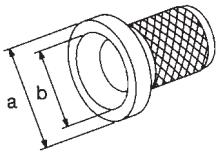 NT086	Installing front drive shaft bearing **a: 76 mm (2.99 in) dia.** **b: 69 mm (2.72 in) dia.**

Special Service Tools (Cont'd)

Tool number (Kent-Moore No.) Tool name	Description	
ST30032000 (—) Base	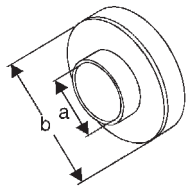 NT660	Installing front drive shaft bearing **a: 38 mm (1.50 in) dia.** **b: 80 mm (3.15 in) dia.**
ST33052000 (—) Adapter	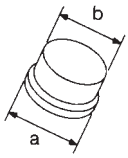 NT431	Removing front drive shaft bearing **a: 28 mm (1.10 in) dia.** **b: 22 mm (0.87 in) dia.**
ST35271000 (J26091) Drift	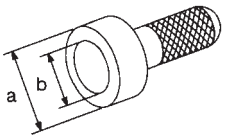 NT115	Installing rear oil seal Removing and installing press flange snap ring **a: 72 mm (2.83 in) dia.** **b: 63 mm (2.48 in) dia.**
ST27863000 (—) Support ring	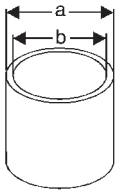 NT661	Removing and installing press flange snap ring **a: 74.5 mm (2.933 in) dia.** **b: 62.5 mm (2.461 in) dia.**
KV40104710 (—) Support ring	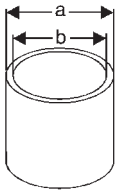 NT661	Removing and installing press flange snap ring **a: 76.3 mm (3.004 in) dia.** **b: 67.9 mm (2.673 in) dia.**
ST35291000 (—) Remover	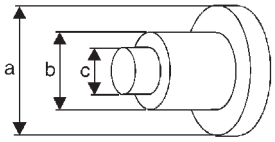 NT662	Removing mainshaft rear bearing **a: 40 mm (1.57 in) dia.** **b: 29.5 mm (1.161 in) dia.** **c: 22.5 mm (0.886 in) dia.**

Tool number (Kent-Moore No.) Tool name	Description	
ST30090010 (—) Remover	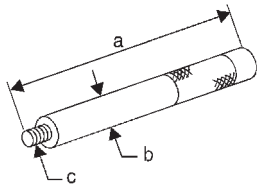 NT663	Removing mainshaft rear bearing **a: 165 mm (6.50 in)** **b: 25 mm (0.98 in) dia.** **c: M16 x P2.0**
KV38100500 (—) Drift	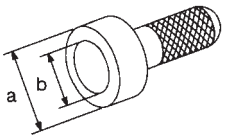 NT115	Installing front drive shaft oil seal **a: 80 mm (3.15 in) dia.** **b: 60 mm (2.36 in) dia.**
KV40100621 (J25273) Drift	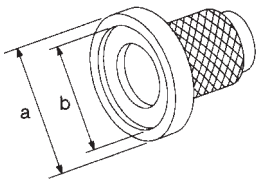 NT104	Installing mainshaft rear bearing **a: 76 mm (2.99 in) dia.** **b: 69 mm (2.72 in) dia.**
KV32101100 (—) Pin punch	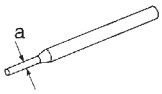 NT410	Removing and installing L-H fork, 2-4 fork **a: 6 mm (0.24 in) dia.**
ST3306S001 (J22888-D) Differential side bearing puller set 1: ST33051001 (—) Puller 2: ST33061000 (J8107-2) Adapter	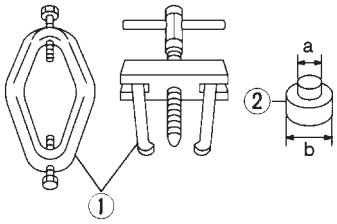 NT072	Installing mainshaft rear bearing Removing sun gear assembly **a: 28.5 mm (1.122 in) dia.** **b: 38 mm (1.50 in) dia.**
ST30911000 (—) Puller	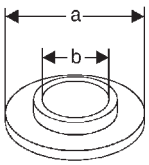 NT664	Installing mainshaft and planetary carrier assembly **a: 98 mm (3.86 in) dia.** **b: 40.5 mm (1.594 in) dia.**

Special Service Tools (Cont'd)

Tool number (Kent-Moore No.) Tool name	Description	
KV381054S0 (—) Outer race puller	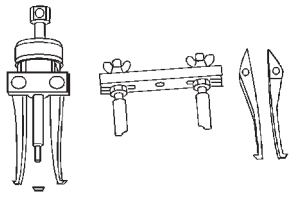 NT665	Removing rear oil seal
KV40105230 (—) Adapter	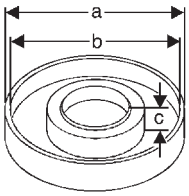 NT666	Installing planetary carrier assembly **a: 92 mm (3.62 in) dia.** **b: 86 mm (3.39 in) dia.** **c: 12 mm (0.47 in)**
KV40105310 (—) Support ring	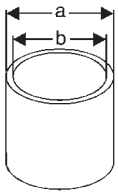 NT661	Installing planetary carrier assembly **a: 89.1 mm (3.508 in) dia.** **b: 80.7 mm (3.177 in) dia.**
KV40105500 (—) Support	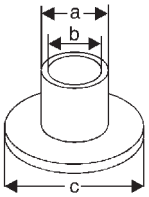 NT667	Installing planetary carrier assembly **a: 69 mm (2.72 in) dia.** **b: 52 mm (2.05 in) dia.** **c: 120 mm (4.72 in) dia.**
KV38100200 (—) Drift	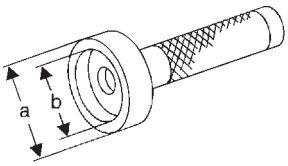 NT673	Installing transfer cover oil seal **a: 65 mm (2.56 in) dia.** **b: 49 mm (1.93 in) dia.**
KV31103300 (—) Drift	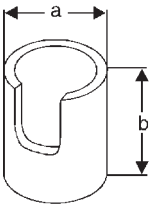 NT668	Removing and installing press flange snap ring **a: 76.3 mm (3.004 in) dia.** **b: 130 mm (5.12 in)**

Tool number (Kent-Moore No.) Tool name	Description	
KV31103400 (—) Clutch piston attachment 1 Shaft-drift 2 Guide-cylinder	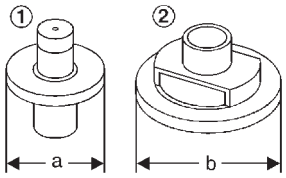 NT669	Installing clutch piston **a: 88.5 mm (3.484 in) dia.** **b: 158 mm (6.22 in) dia.**
(J35864) Drift	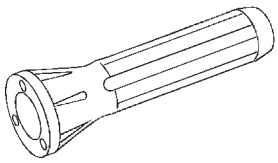 NT671	Installing oil seal

Commercial Service Tools

NATF0094

Tool name	Description	
Puller	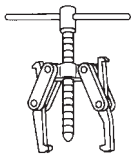 NT077	Removing front drive shaft front bearing Removing front drive shaft rear bearing Removing main gear bearing
Drift	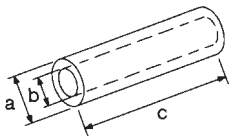 NT117	1 Installing mainshaft rear bearing 2 Installing L & H hub 1 **a: 50 mm (1.97 in) dia.** **b: 42 mm (1.65 in) dia.** **c: 180 mm (7.09 in)** 2 **a: 60 mm (2.36 in) dia.** **b: 50 mm (1.97 in) dia.** **c: 60 mm (2.36 in)**
Power tool	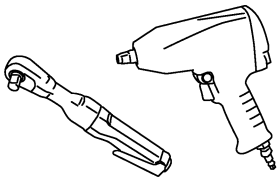 PBIC0190E	Loosening nuts and bolts

NVH Troubleshooting Chart

NATF0095S01

Use the chart below to help you find the cause of the symptom. The numbers indicate the order of inspection. If necessary, repair or replace these parts.

TRANSFER

NATF0095S0101

Reference page			Refer to MA-22, "Checking Transfer Fluid".		TF-17	TF-17	TF-17, 19	TF-19	TF-18	TF-18
SUSPECTED PARTS (Possible cause)		FLUID (Level low)	FLUID (Wrong)	FLUID (Level too high)	LIQUID GASKET (Damaged)	OIL SEAL (Worn or damaged)	CHECK SPRING AND CHECK BALL (Worn or damaged)	SHIFT FORK (Worn)	GEAR (Worn or damaged)	BEARING (Worn or damaged)
Symptom	Noise	1	2						3	3
	Fluid leakage		3	1	2	2				
	Hard to shift or will not shift		1	1						
	Jumps out of gear						1	2	2	

Cross-sectional View

NATF0096

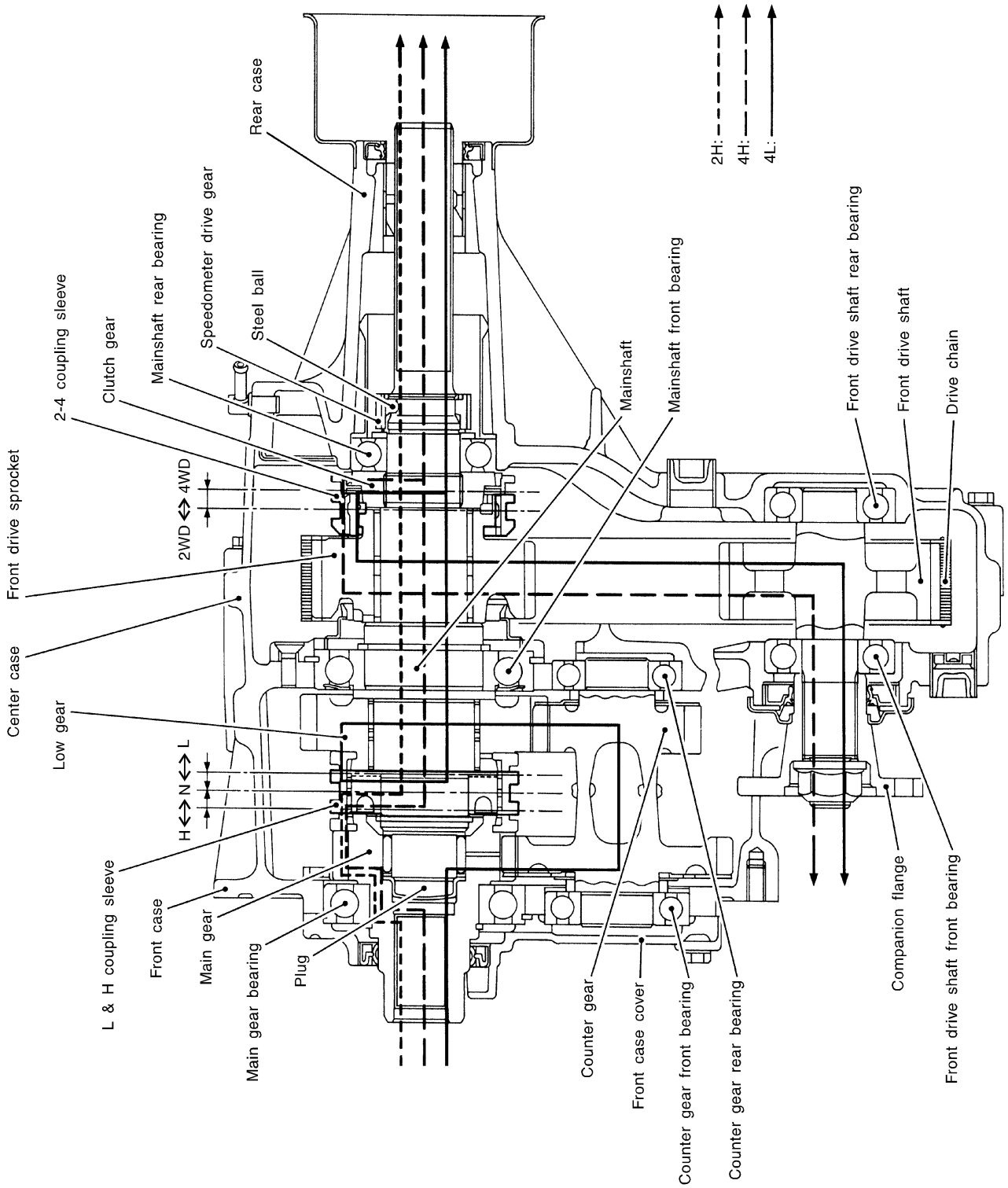

SMT164E

Replacing Oil Seal

NATF0097

CENTER CASE OIL SEAL

NATF0097S01

1. Remove exhaust front tube and heat insulator. Refer to “Removal”, TF-15.
2. Remove front propeller shaft. Refer to PD-8, “Removal and Installation”.
3. Remove companion flange nut.

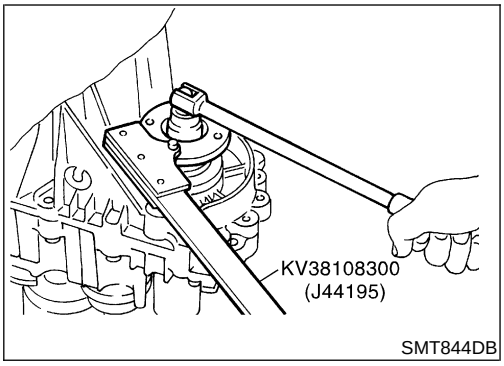

SMT844DB

4. Remove companion flange.

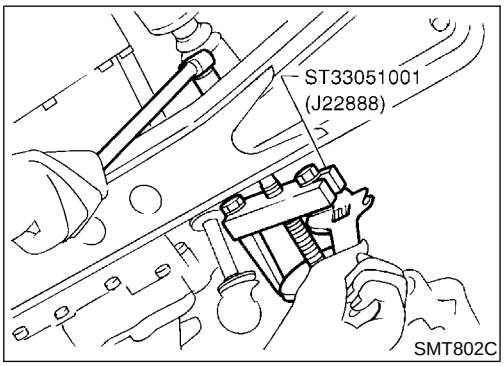

SMT802C

5. Remove center case oil seal.

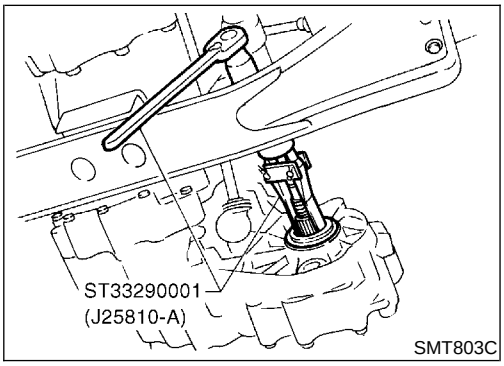

SMT803C

6. Install center case oil seal.
- **Before installing, apply multi-purpose grease to seal lip.**
7. Install companion flange.

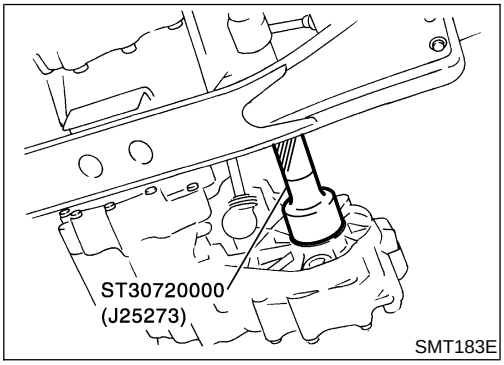

SMT183E

8. Tighten nut to the specified torque.
9. Install front propeller shaft.
10. Install exhaust front tube and heat insulator.

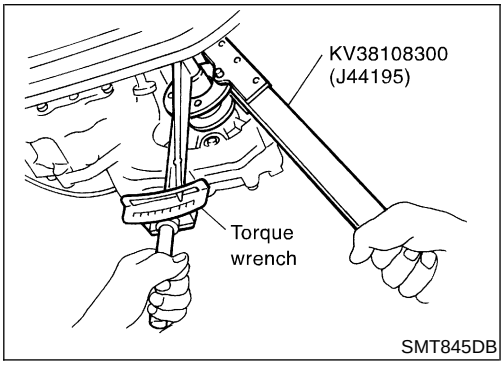

SMT845DB

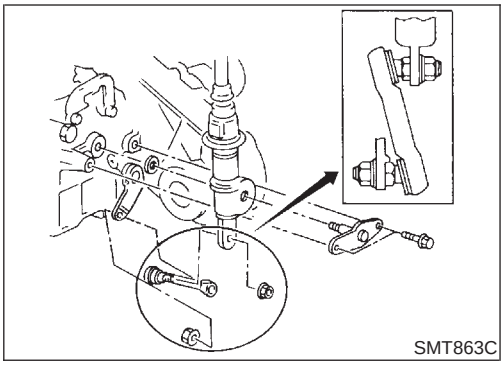

SHIFT SHAFT OIL SEAL

NATF0097S02

1. Remove front propeller shaft. Refer to PD-8, "Removal and Installation".
2. Remove companion flange. Refer to center case oil seal, TF-12.
3. Remove transfer control lever from transfer outer shift lever. Then remove outer shift lever.

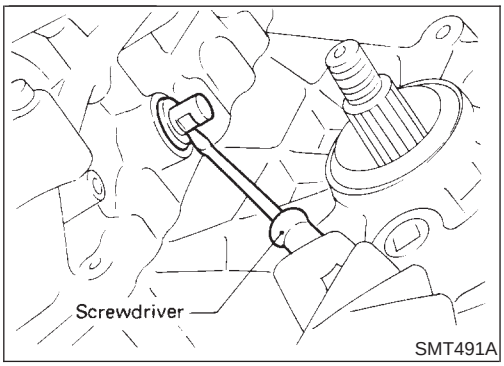

4. Remove shift shaft oil seal.
- **Be careful not to damage cross shaft.**

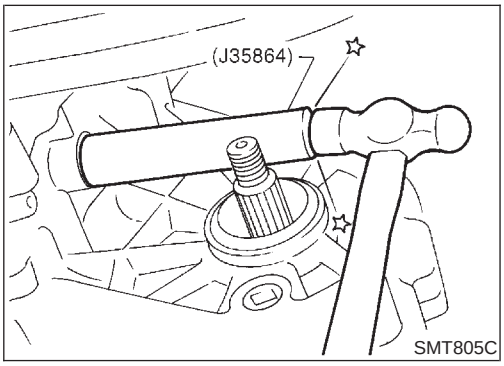

5. Install shift shaft oil seal.
- **Before installing, apply multi-purpose grease to seal lip.**
6. Install outer shift lever. Then install transfer control lever to transfer outer shift lever.
7. Install companion flange. Refer to center case oil seal, TF-12.
8. Install front propeller shaft.

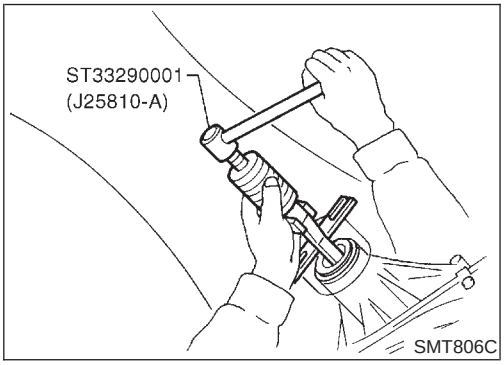

REAR OIL SEAL

NATF0097S03

1. Remove rear propeller shaft. Refer to PD-8, "Removal and Installation".
2. Remove rear oil seal.

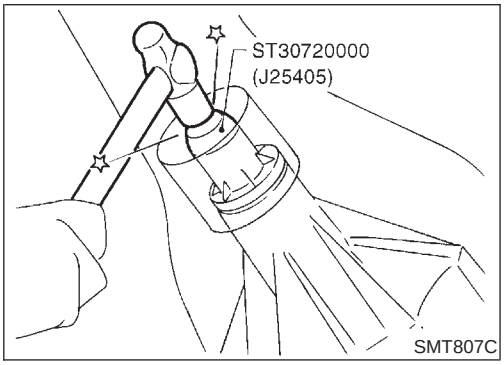

3. Install rear oil seal.
- **Before installing apply multi-purpose grease to seal lip.**
4. Install rear propeller shaft.

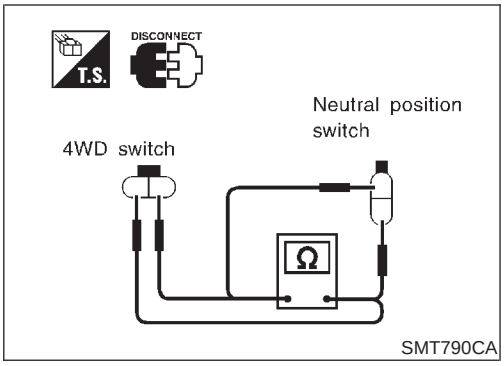

Position Switch Check

NATF0098

Switch	Gear position	Continuity
4WD switch	4WD	Yes
	Except 4WD	No
Neutral position switch	Neutral	No
	Except neutral	Yes

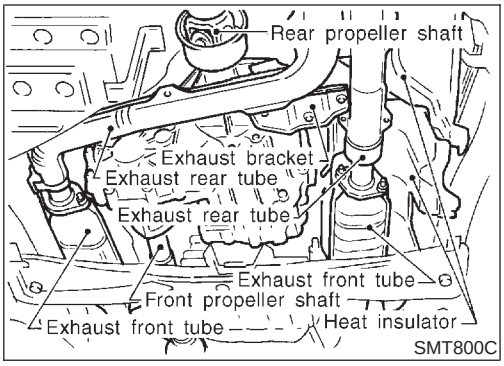

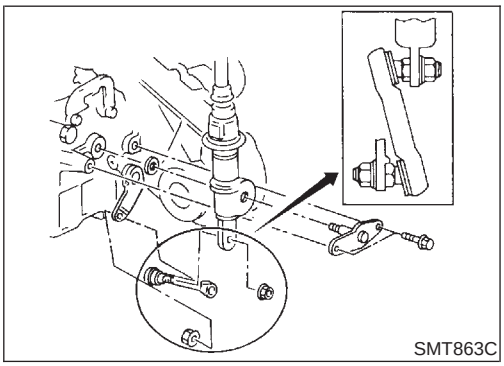

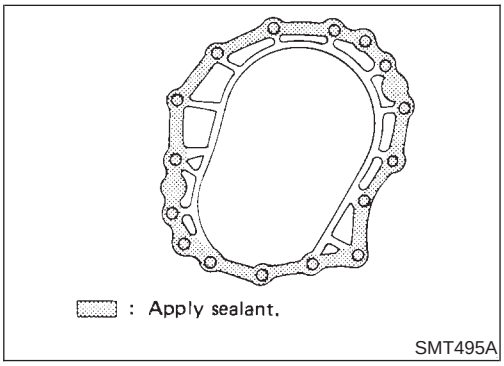

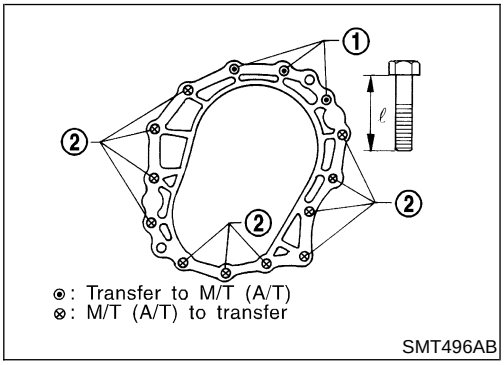

Removal

NATF0099

1. Drain fluid from transfer and oil from transmission.
2. Remove exhaust front and rear tubes. Refer to FE-9, “Removal and Installation”.
3. Remove front and rear propeller shaft. Refer to PD-8, “Removal and Installation”.
4. Insert plug into rear oil seal after removing propeller shaft.

- **Be careful not to damage spline, sleeve yoke and rear oil seal, when removing propeller shaft.**

5. Disconnect neutral position and 4WD switch harness connectors.
6. Remove transfer control lever from transfer outer shift lever.
7. Remove transfer from transmission.

WARNING:
Support transfer while removing it.

Installation

NATF0100

- Apply recommended sealant to mating surface to transmission. (M/T model only)

Recommended sealant:
Genuine Anaerobic Liquid Gasket or equivalent
Refer to TF-17.

- Tighten bolts securing transfer.

M/T MODEL

NATF0100S01

Bolt No.	Tightening torque N·m (kg-m, ft-lb)	ℓ mm (in)
1	32 - 42 (3.2 - 4.3, 24 - 31)	60 (2.36)
2	32 - 42 (3.2 - 4.3, 24 - 31)	45 (1.77)

A/T MODEL

NATF0100S02

Bolt No.	Tightening torque N·m (kg-m, ft-lb)	ℓ mm (in)
1	32 - 42 (3.2 - 4.3, 24 - 31)	45 (1.77)
2	32 - 42 (3.2 - 4.3, 24 - 31)	45 (1.77)

Transfer Gear Control

NATF0101

SEC. 333

: N•m (kg-m, in-lb)
: N•m (kg-m, ft-lb)
1 : Fill multi-purpose grease up.
2 : Apply multi-purpose grease.
*1 : Securely bend pawls during assembly. Be careful not to damage boot.
*2 : Do not touch boot with a sharp-pointed or a hard tool as it breaks easily.
: Always replace after every disassembly.

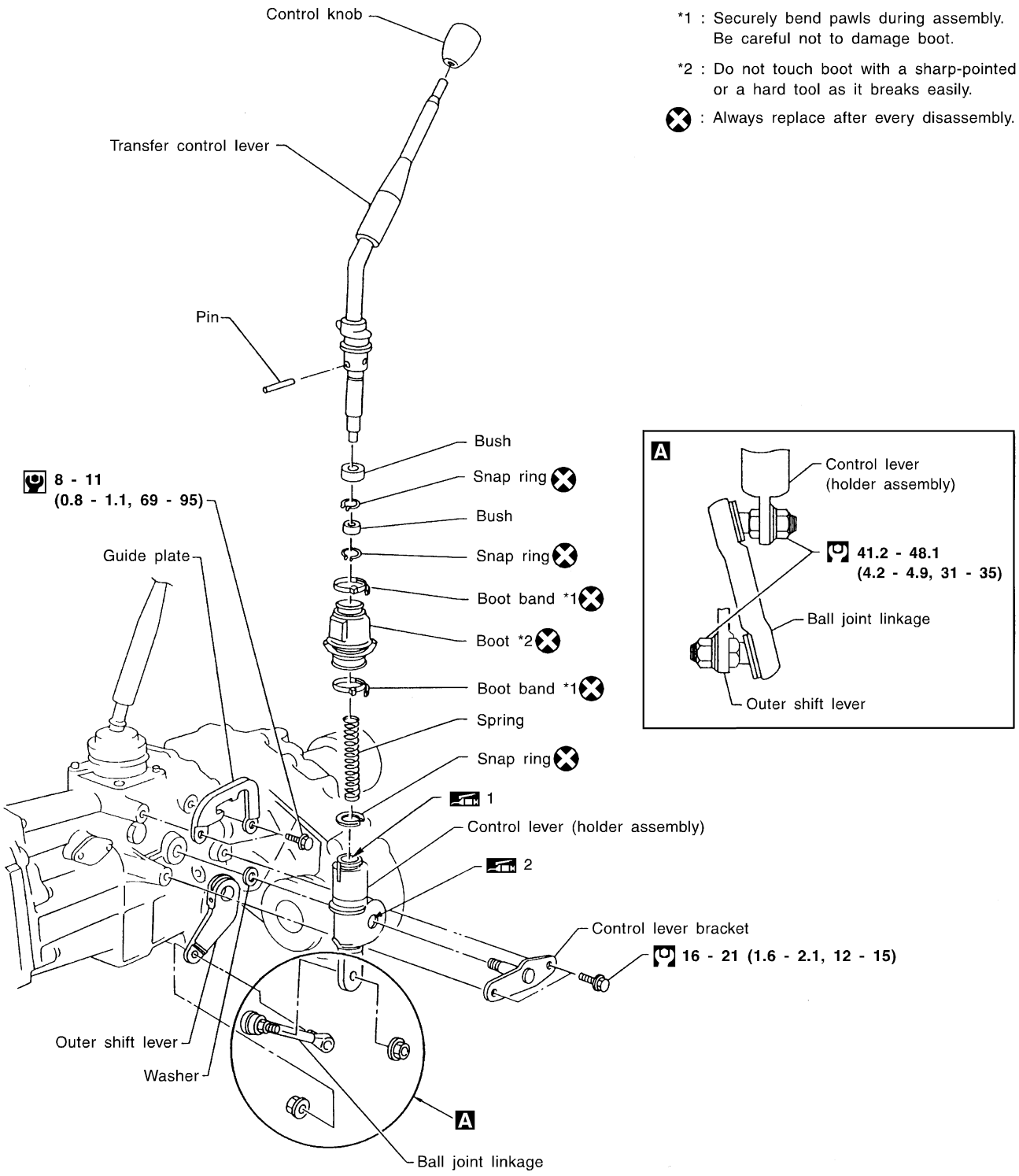

SMT184E

Case Components

NATF0102

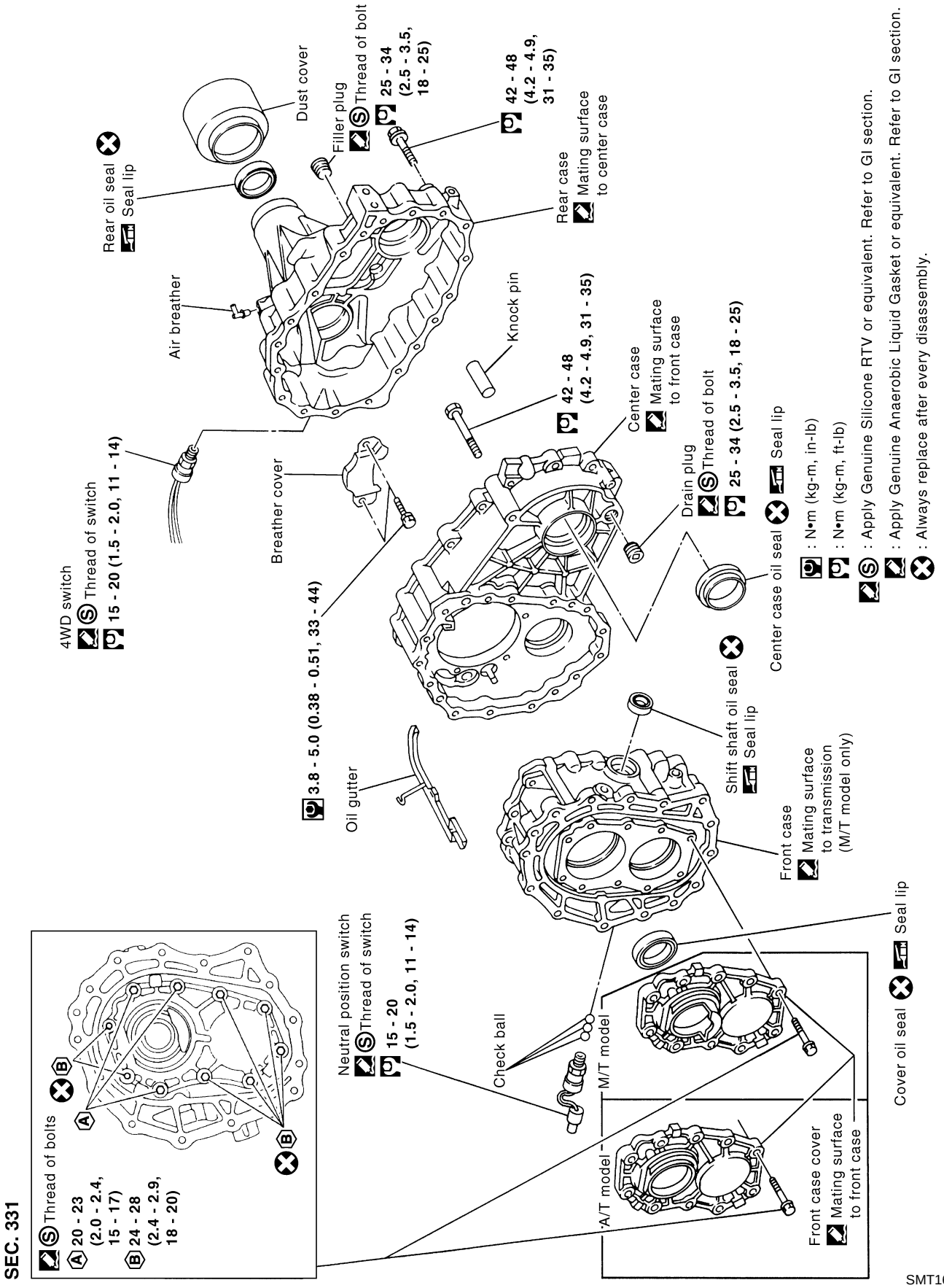

SMT165EB

Gear Components

NATF0103

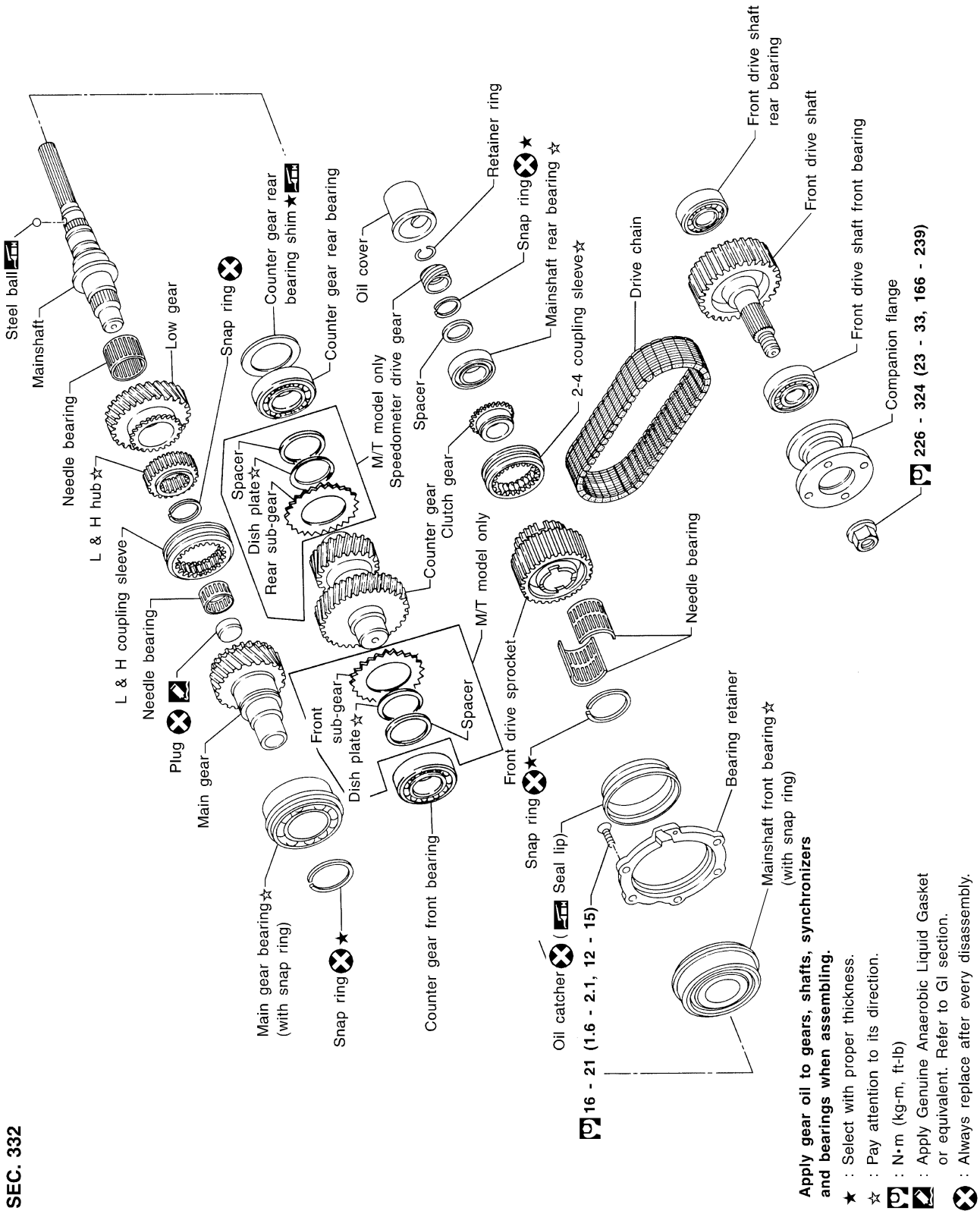

SEC. 332

SMT185E

Shift Control Components

NATF0104

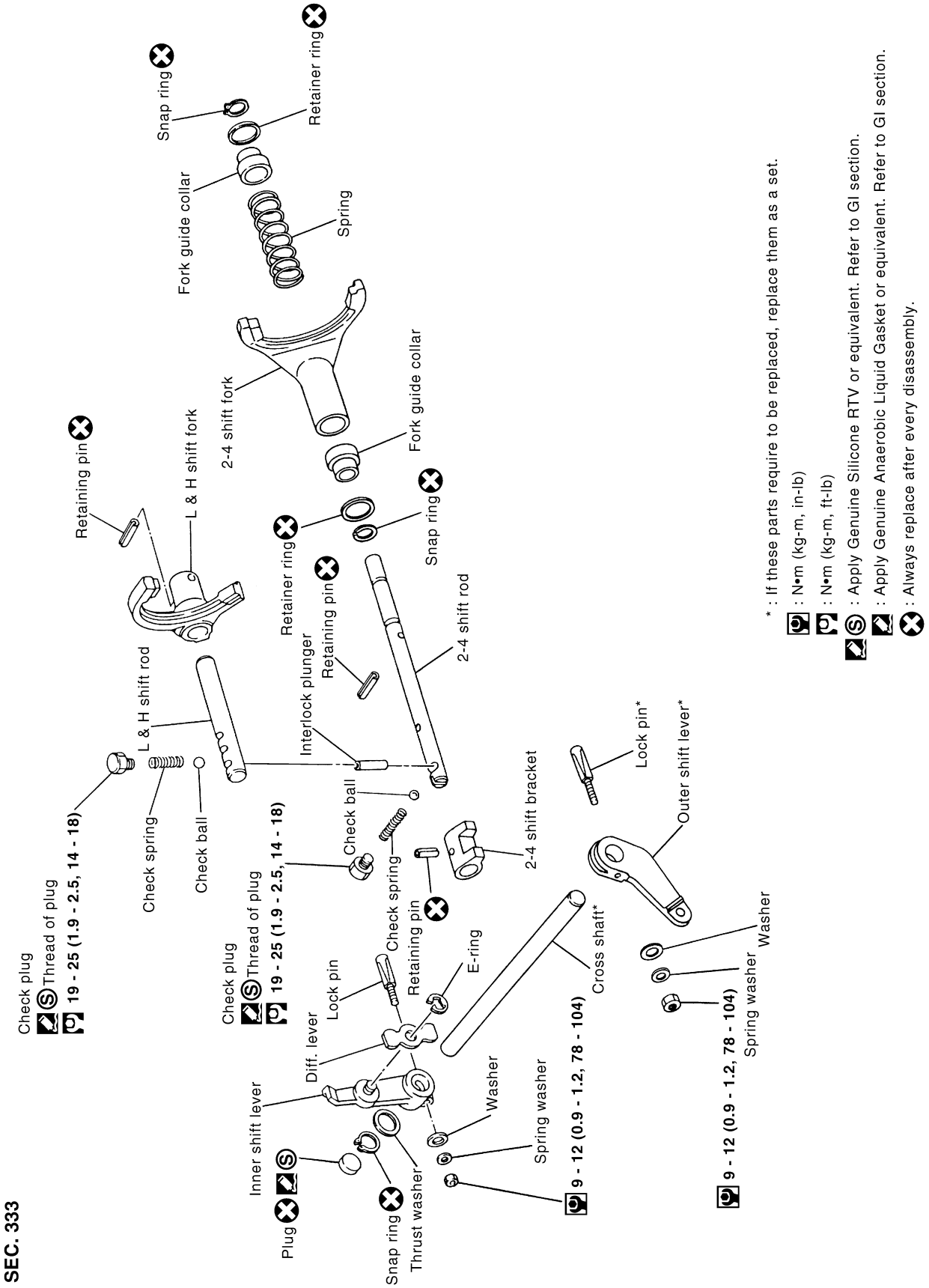

SEC. 333

SMT186EA

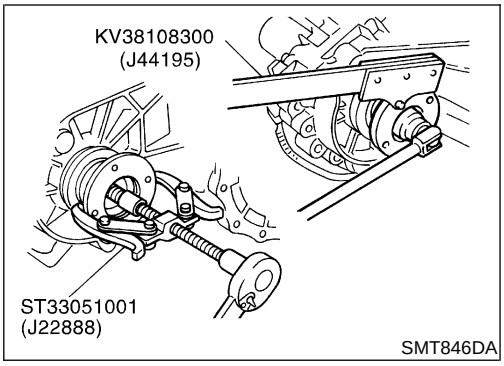

1. Remove nut of companion flange.
2. Remove companion flange.

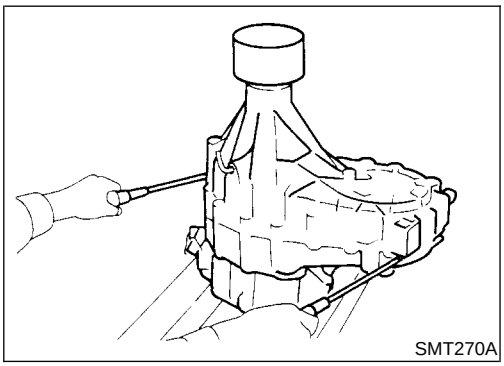

3. Remove 4WD switch.
4. Remove rear case.

- **Be careful not to damage the mating surface.**

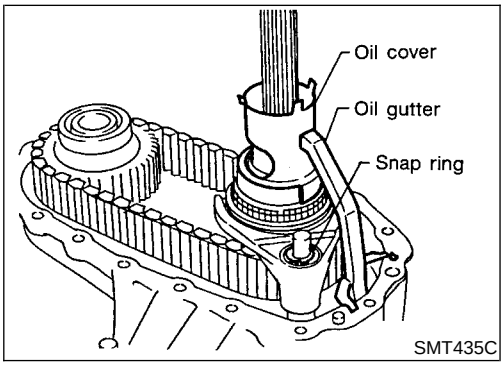

5. Remove oil cover and oil gutter.
6. Remove snap ring and retainer ring from 2-4 shift rod.

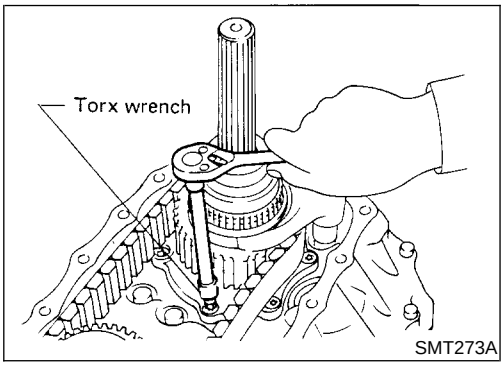

7. Remove bolts securing bearing retainer.

- **This step is necessary to remove mainshaft from center case.**

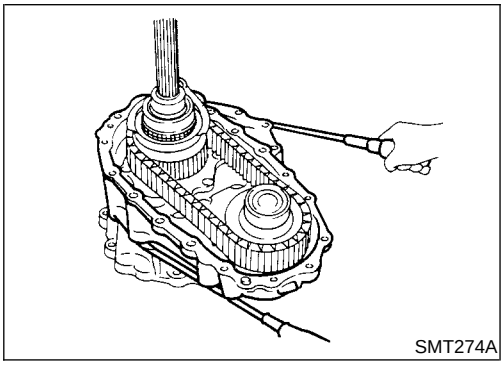

8. Remove bolts securing center case to front case and then separate center case and front case.

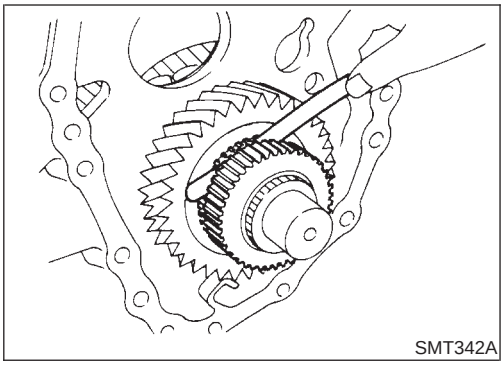
SMT342A

9. Measure end play of low gear.

Standard:

0.2 - 0.35 mm (0.0079 - 0.0138 in)

- **If end play is beyond the maximum value, check low gear and L & H hub for wear.**

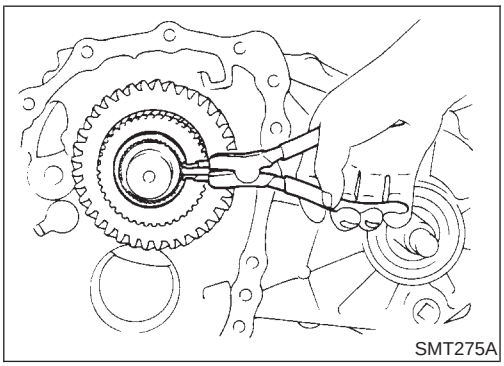
SMT275A

10. Disassemble center case assembly.

a. Remove snap ring from mainshaft.

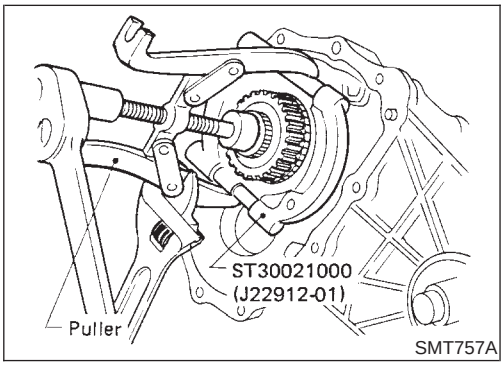

SMT757A

b. Pull out low gear with L & H hub.

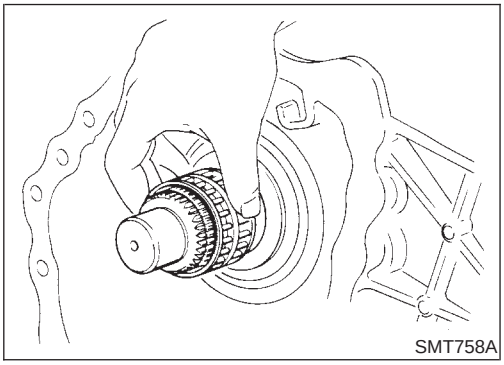
SMT758A

c. Remove needle bearing of low gear.

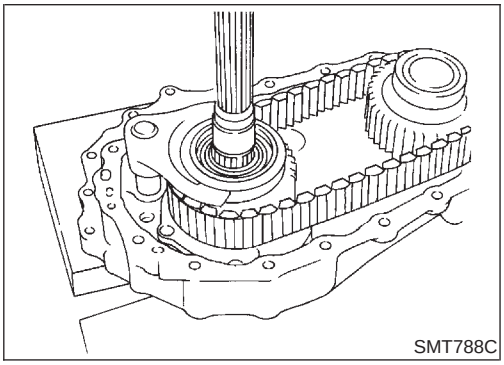
SMT788C

d. Make sure of the direction of the drive chain before removing it. (It must be reinstalled in the same direction.)

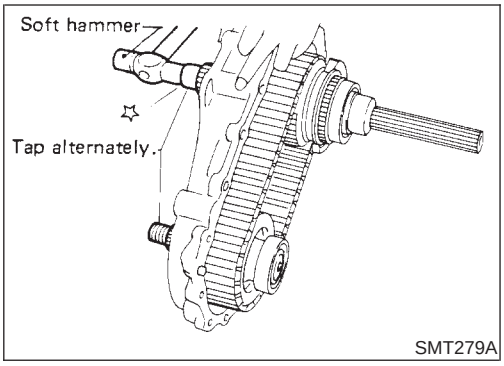

SMT279A

e. Remove mainshaft, front drive and drive chain as a set by tapping front end of mainshaft and front drive shaft alternately.

- **Be careful not to bend drive chain.**

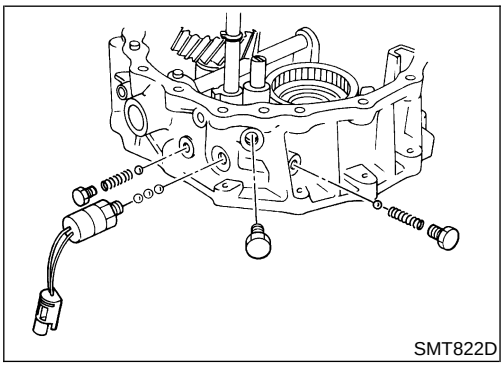
SMT822D

11. Disassemble front case assembly.

a. Remove neutral position switch, plugs, check springs and check balls.

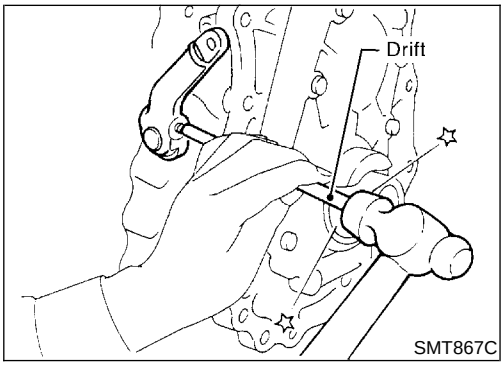

SMT867C

b. Remove outer shift lever.

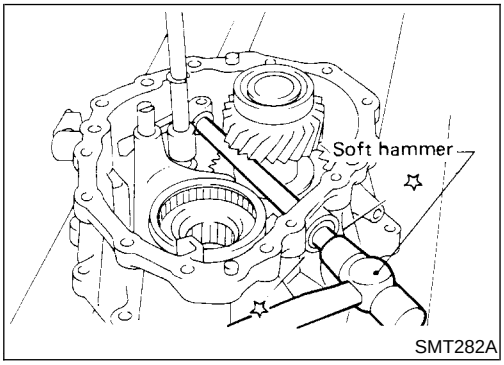

SMT282A

c. Remove lock pin of inner shift lever and drive out cross shaft with plug.

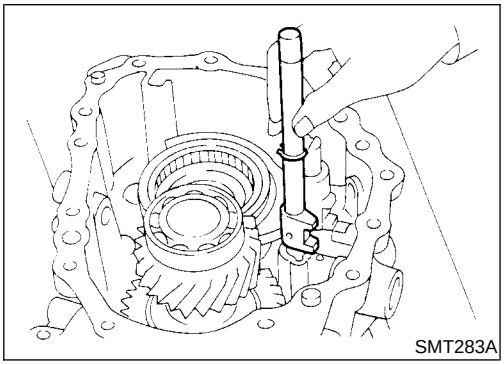
SMT283A

d. Remove 2-4 shift rod.

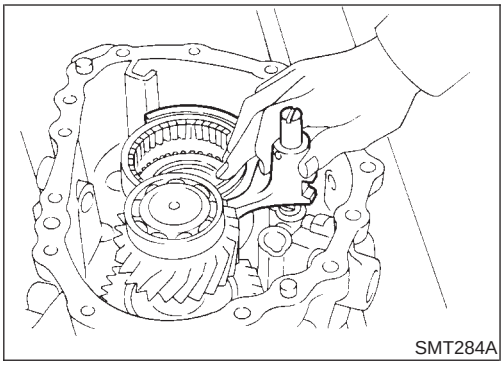
SMT284A

e. Remove L & H shift rod and fork assembly with coupling sleeve.

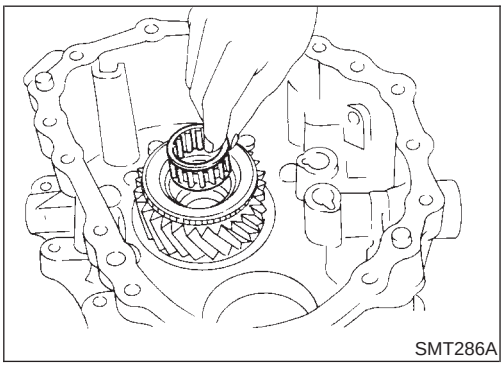
SMT286A

f. Remove needle bearing from main gear.

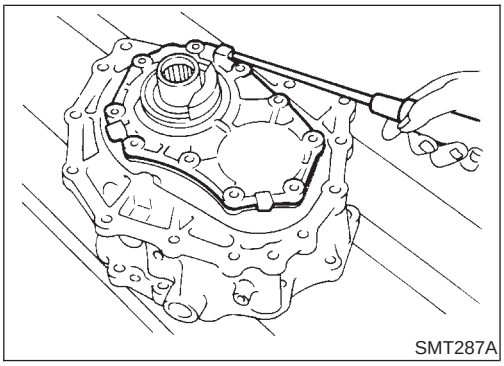
SMT287A

g. Remove bolts securing front case cover and then remove case.

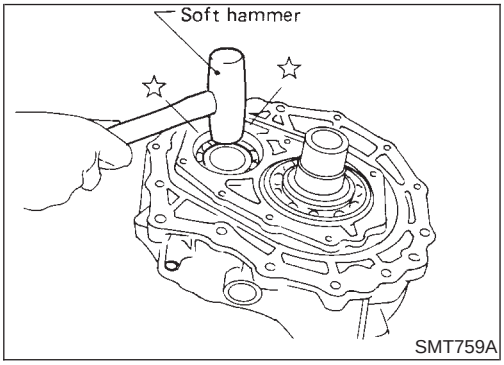

SMT759A

h. Remove counter gear by tapping lightly.

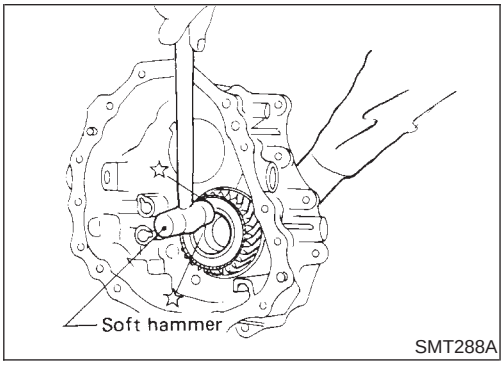

SMT288A

i. Remove main gear by tapping lightly.

Mainshaft

DISASSEMBLY

NATF0106

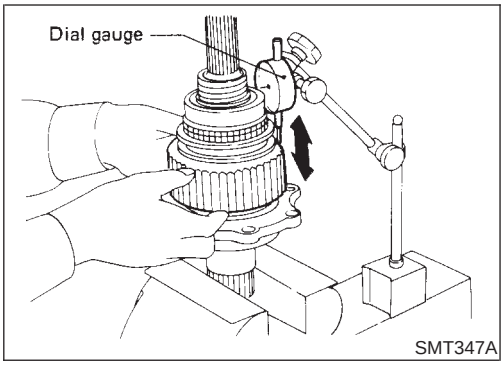

SMT347A

1. Check end play of front drive sprocket.

   Standard:

   0.2 - 0.35 mm (0.0079 - 0.0138 in)

- **If end play is beyond the maximum value, check front drive sprocket and clutch gear for wear.**

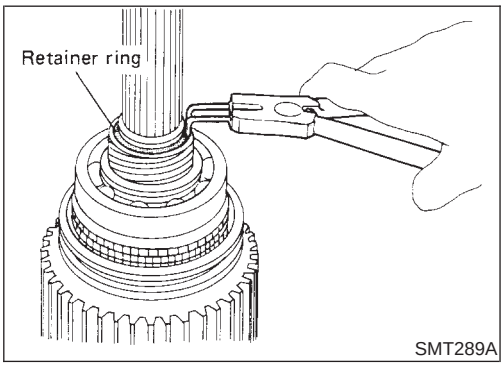

SMT289A

2. Remove retainer ring, speedometer drive gear and steel ball.

- **Be careful not to lose the steel ball.**

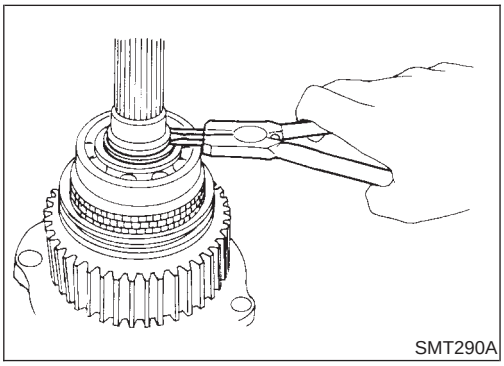
SMT290A

3. Remove snap ring and spacer.

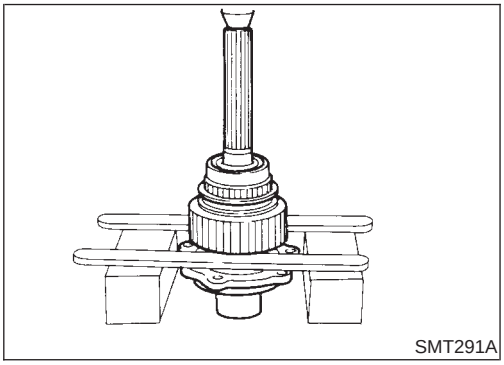
SMT291A

4. Press out front drive sprocket with mainshaft rear bearing and clutch gear together.
5. Remove needle bearing.

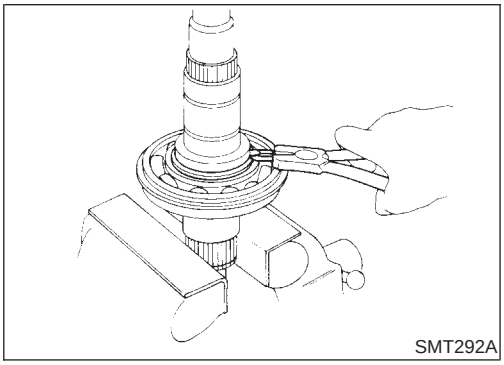
SMT292A

6. Remove bearing retainer and then remove snap ring.

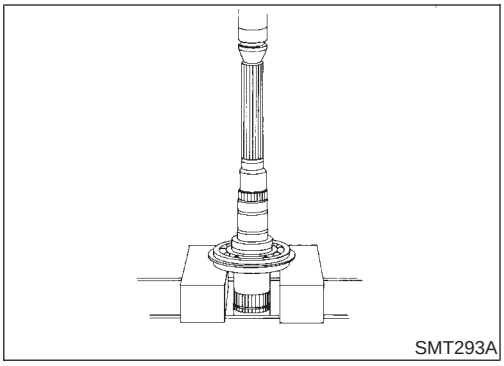
SMT293A

7. Press out mainshaft front bearing from mainshaft.

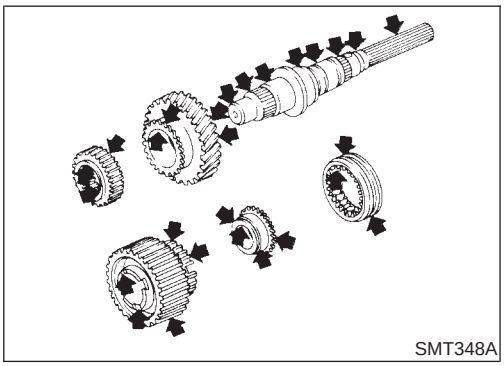
SMT348A

INSPECTION

NATF0107

Gear and Shaft

NATF0107S01

- Check gears for excessive wear, chips or cracks.
- Check shaft for cracks, wear or bending.
- Check coupling sleeve for wear or damage.

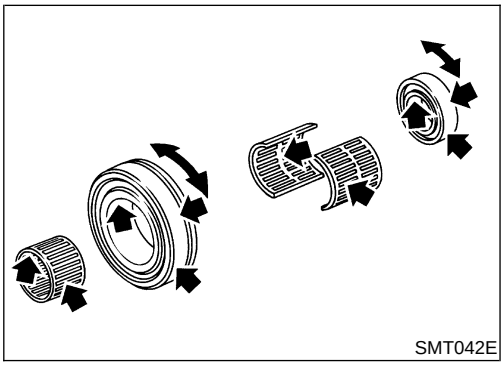
SMT042E

Bearing

NATF0107S02

- Make sure bearings roll freely and are free from noise, crack, pitting or wear.

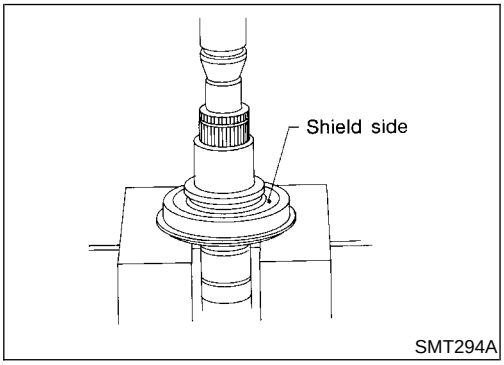

SMT294A

ASSEMBLY

NATF0108

1. Press mainshaft front bearing onto mainshaft.
- **Pay special attention to its direction.**

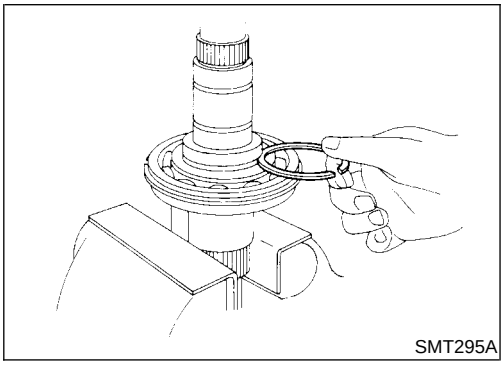
SMT295A

2. Select snap ring with proper thickness and install it.

   Allowable clearance between snap ring and groove:
   0 - 0.15 mm (0 - 0.0059 in)
   Available snap ring for mainshaft front bearing:
   Refer to SDS, TF-39.
3. Regarding to further procedures, refer to "ASSEMBLY", TF-32.

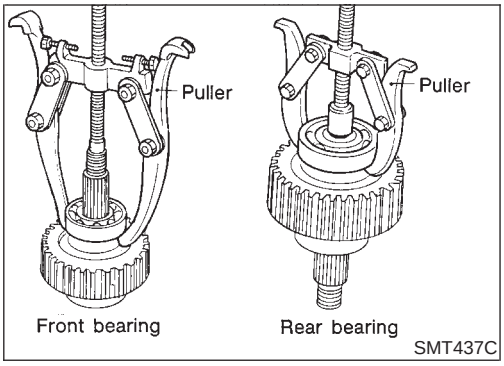

Front Drive Shaft

DISASSEMBLY

NATF0109

- Front drive shaft front bearing and rear bearing

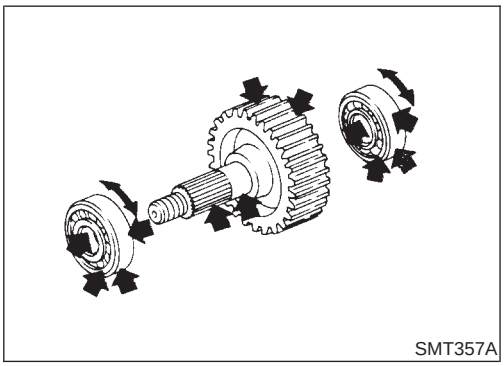

INSPECTION

NATF0110

Sprocket and Shaft

NATF0110S01

- Check sprocket for excessive wear, chips or cracks.
- Check shaft for cracks or wear.

Bearing

NATF0110S02

- Make sure bearings roll freely and are free from noise, crack, pitting or wear.

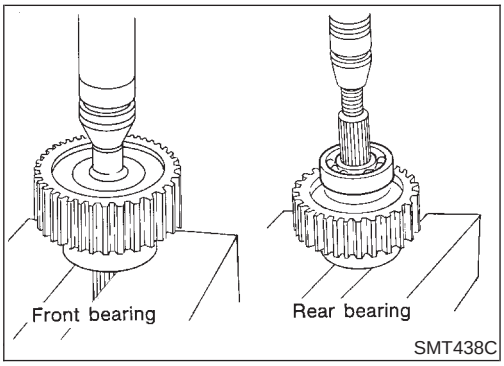

ASSEMBLY

NATF0111

- Press front drive shaft front bearing and rear bearing.

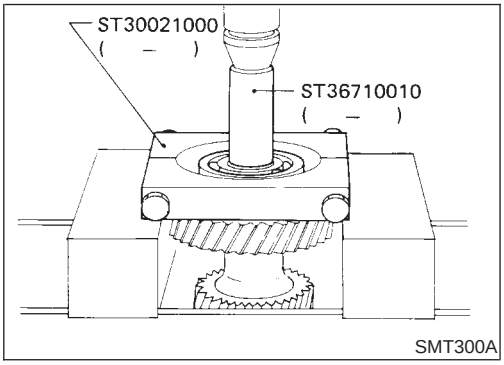

Counter Gear

DISASSEMBLY

NATF0112

1. Press out counter gear front bearing.

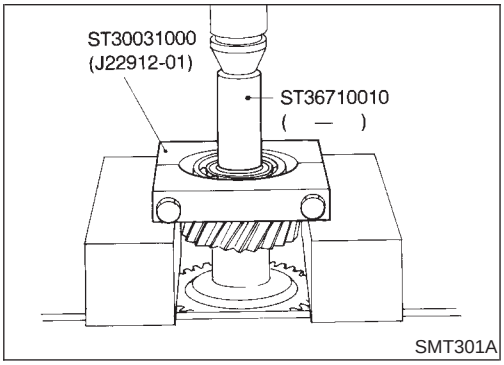

2. Press out counter gear rear bearing.
- Remove rear sub-gear, spacer and dish plate (M/T model only).

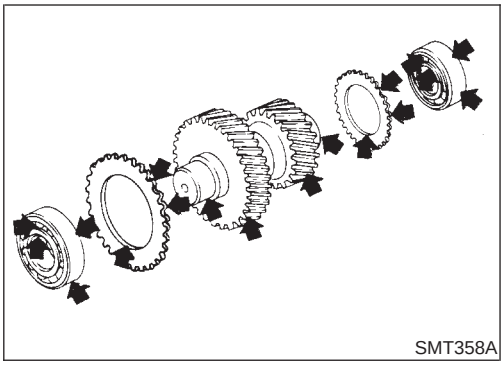
SMT358A

INSPECTION

NATF0113

Gear and Shaft

NATF0113S01

- Check gears for excessive wear, chips or cracks.
- Check shaft for cracks or wear.

Bearing

NATF0113S02

- Make sure bearings roll freely and are free from noise, crack, pitting or wear.

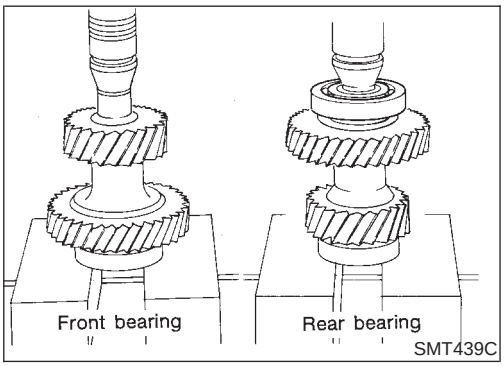

SMT439C

ASSEMBLY

NATF0114

1. Press on counter gear front bearing.
2. Install rear sub-gear, dish plate and spacer.
- Press on counter gear rear bearing (M/T model only).

Main Gear

DISASSEMBLY

NATF0115

Main Gear Bearing

NATF0115S01

1. Remove snap ring.

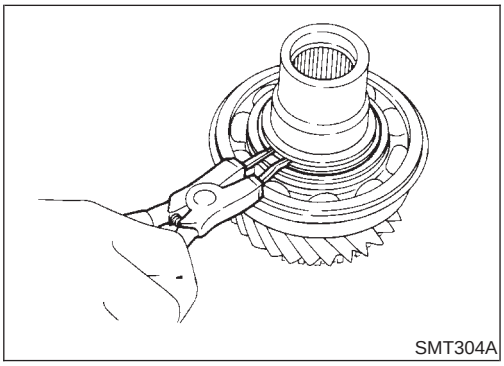
SMT304A

2. Pull out main gear bearing.

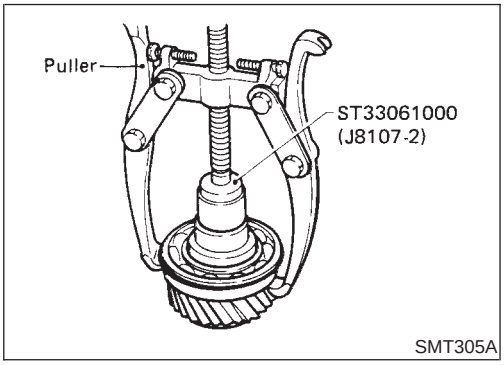

SMT305A

Plug

NATF0115S02

- **Always replace it with new one whenever it is removed.**

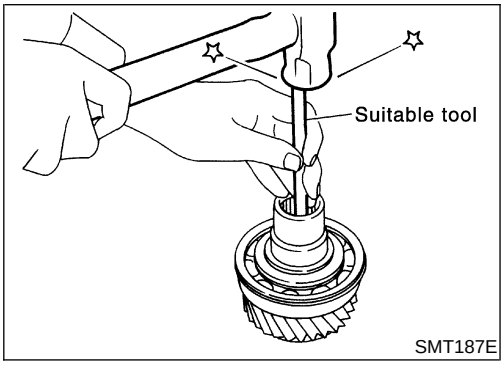

SMT187E

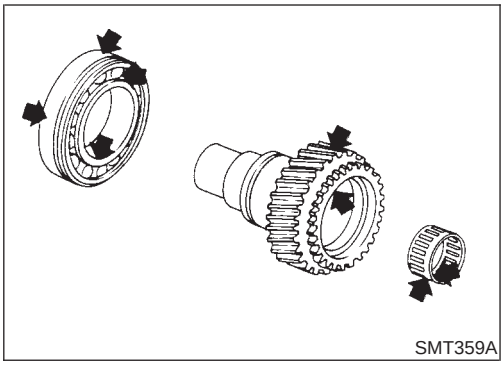
SMT359A

INSPECTION

NATF0116

Gear and Shaft

NATF0116S01

- Check gears for excessive wear, chips or cracks.
- Check shaft for cracks or wear.

Bearing

NATF0116S02

- Make sure bearings roll freely and are free from noise, crack, pitting or wear.

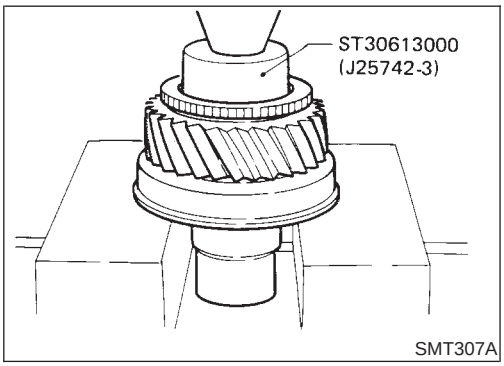

SMT307A

ASSEMBLY

NATF0117

Main Gear Bearing

NATF0117S01

1. Press on main gear bearing.

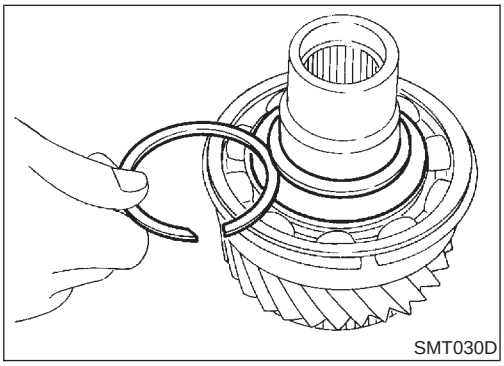
SMT030D

2. Select snap ring with proper thickness and install it.

   Allowable clearance between snap ring and groove:
   0 - 0.15 mm (0 - 0.0059 in)
   Available snap ring for main gear bearing:
   Refer to SDS, TF-39.

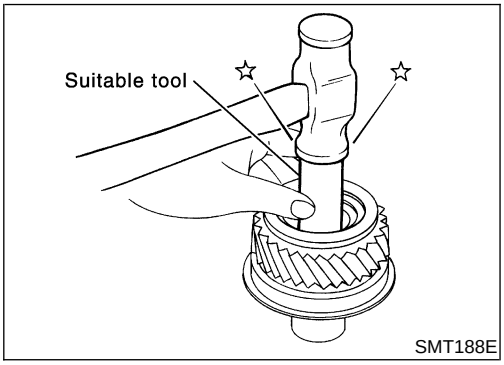

SMT188E

Plug

NATF0117S02

- Apply sealant to plug and install it.

  Sealant:
  Refer to Gear Components, TF-18.

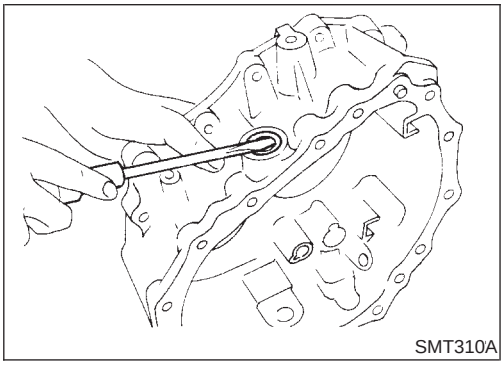
SMT310A

Front Case

REMOVAL

NATF0118

Shift Shaft Oil Seal

NATF0118S01

- Use a screwdriver to pry out old seal.
- Be careful not to damage case.
- Always replace with a new one whenever it has been removed.

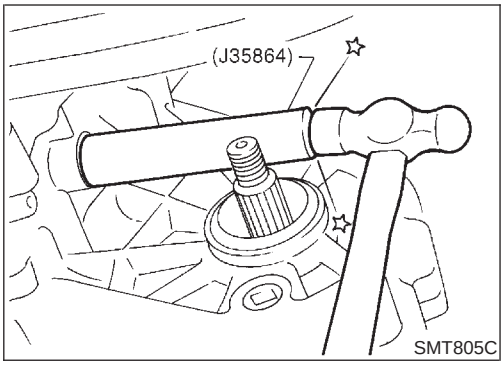

INSTALLATION

NATF0119

Shift Shaft Oil Seal

NATF0119S01

- Install new shift shaft oil seal until flush with case.
- Before installing, apply multi-purpose grease to seal lip.

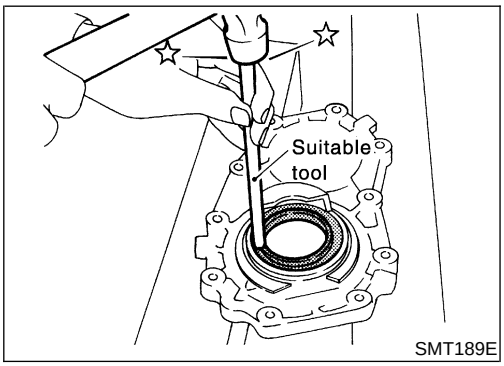

Front Case Cover

REMOVAL

NATF0120

Cover Oil Seal

NATF0120S01

- Drive out old seal from inside of front case cover.
- Be careful not to damage front case cover.

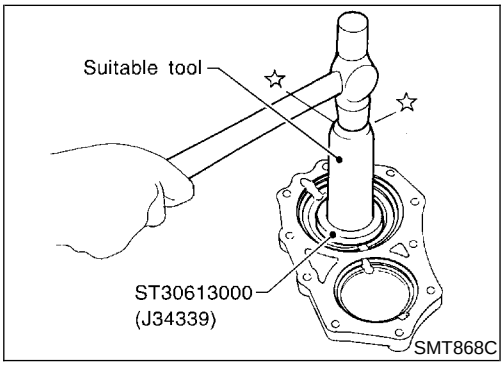

INSTALLATION

NATF0121

Cover Oil Seal

NATF0121S01

- Install new front case cover oil seal until it stops.
- Before installing, apply multi-purpose grease to seal lip.

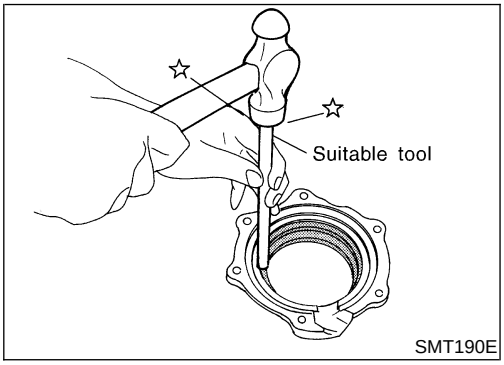

Bearing Retainer

REMOVAL

NATF0122

Oil Catcher

NATF0122S01

- Drive out oil catcher from inside of bearing retainer.
- Be careful not to damage bearing retainer.

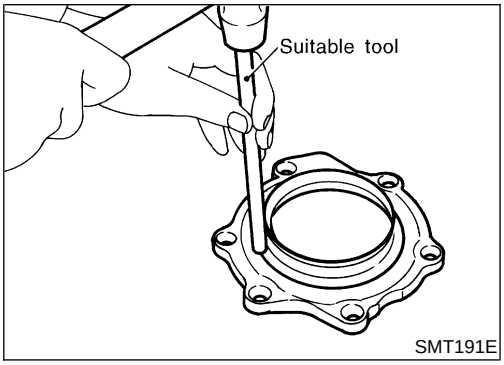

INSTALLATION

NATF0123

Oil Catcher

NATF0123S01

- Install oil catcher until it stops.
- Be careful not to damage or distort oil catcher or bearing retainer.
- Before installing, apply multi-purpose grease to seal lip.

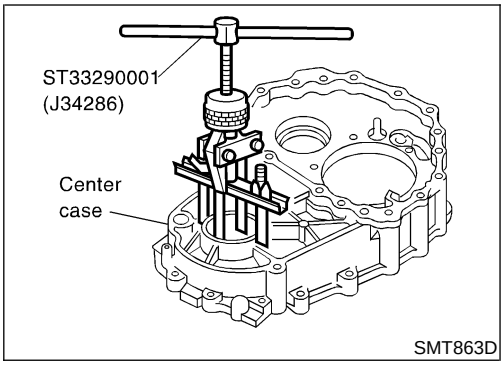

Center Case

REMOVAL

NATF0124

Center Case Oil Seal

NATF0124S01

- Remove center case oil seal.

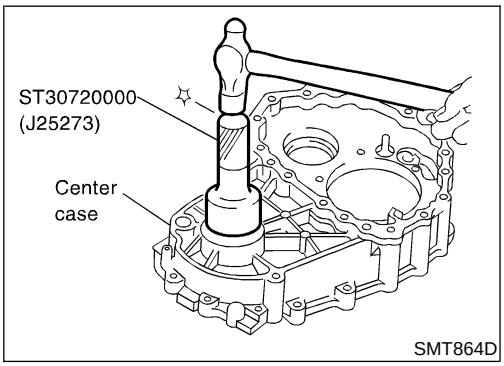

INSTALLATION

NATF0125

Center Case Oil Seal

NATF0125S01

- Install center case oil seal.

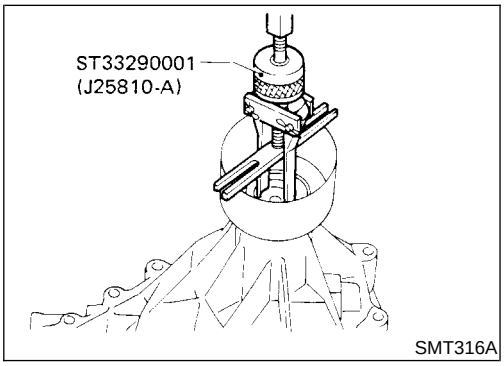

Rear Case

REMOVAL

NATF0126

Rear Oil Seal

NATF0126S01

- Pull out rear oil seal.

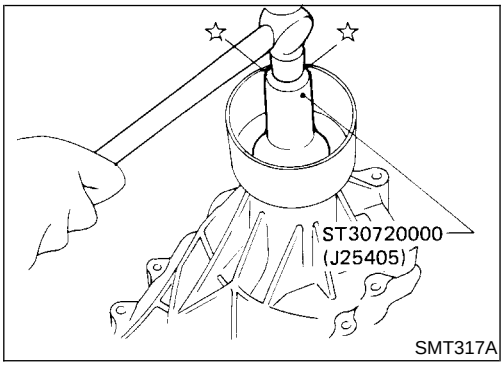

INSTALLATION

NATF0127

Rear Oil Seal

NATF0127S01

- Install new rear oil seal until it stops.
- Before installing, apply multi-purpose grease to seal lip.

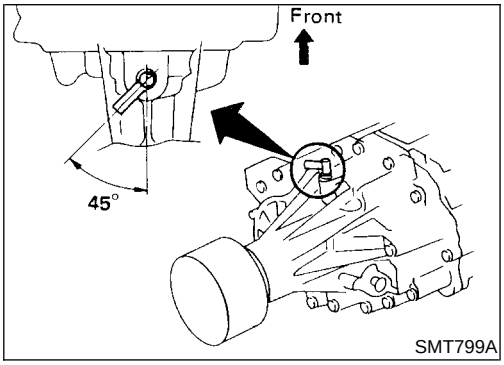

Air Breather

NATF0127S02

- Install as shown in illustration.

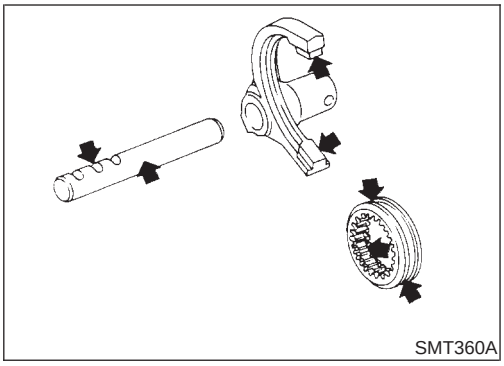
SMT360A

Shift Control Components

INSPECTION

NATF0128

- Check contact surface and sliding surface for wear, scratches, projections or other faulty conditions.

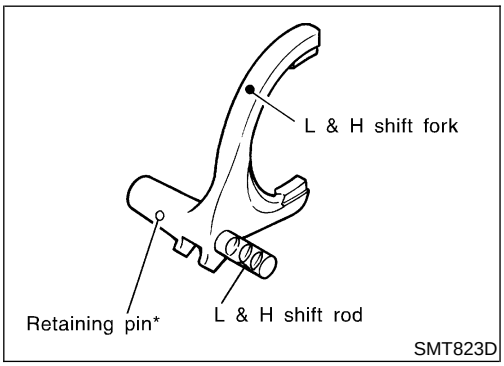

SMT823D

L & H Shift Rod & Fork

NATF0128S01

- Assemble as shown in illustration.
  * Retaining pin is the same size as the one for 2-4 shift rod.
  Tool number: KV32101100 (—)

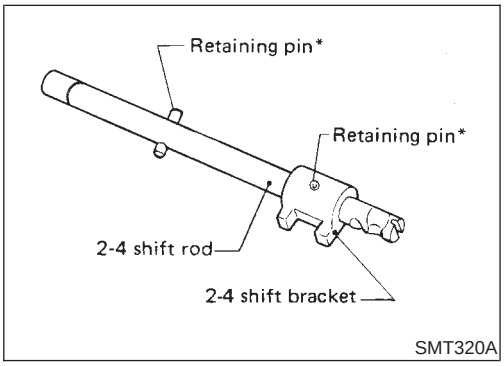

SMT320A

2-4 Shift Rod & Fork

NATF0128S02

- Assemble as shown in illustration.
  * Retaining pins are the same size.
  Tool number: KV32101100 (—)

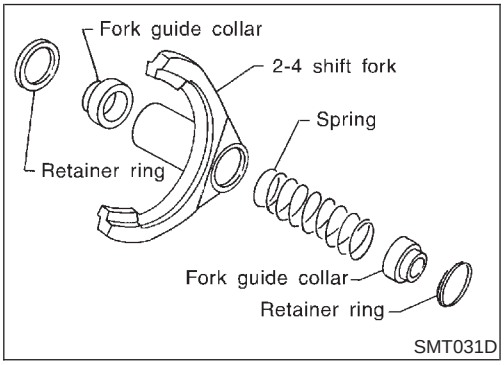

SMT031D

- **Pay special attention to the direction of fork guide collar.**

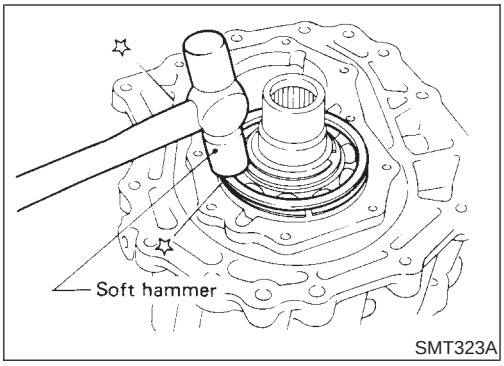

1. Assemble front case.

a. Install main gear assembly by tapping lightly.

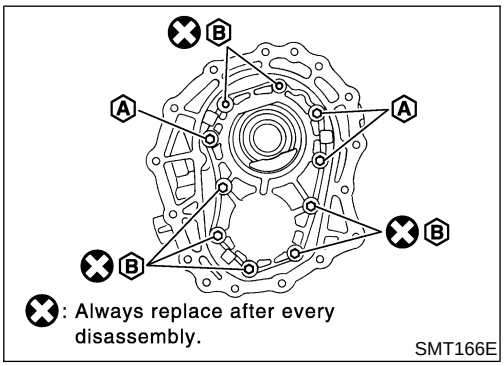

b. Apply sealant to the mating surface of front case cover and install it on front case.

- **These ten bolts should be coated with sealant.**
- **Tightening torque**

  A: 20 - 23 N·m (2.0 - 2.4 kg-m, 15 - 17 ft-lb)

  B: 24 - 28 N·m (2.4 - 2.9 kg-m, 18 - 20 ft-lb)

  (Always replace after every disassembly.)

  Sealant:

  Refer to Case Components, TF-17.

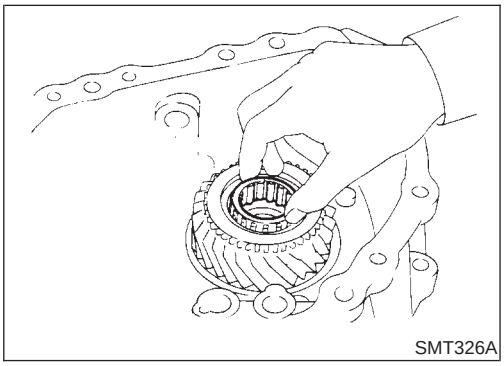

c. Apply gear oil to needle bearing and install it into main gear.

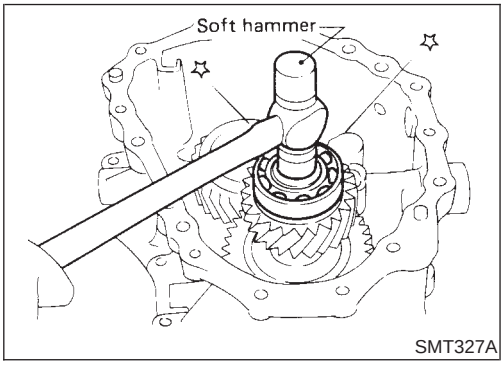

d. Install counter gear assembly by tapping lightly.

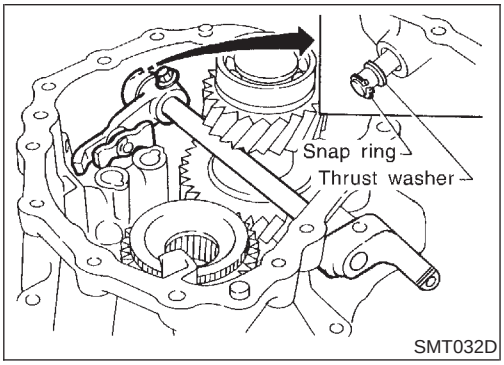

e. Install cross shaft and inner shift lever.

- **When replacing cross shaft, outer shift lever or lock pin of outer shift lever, replace them as a set.**

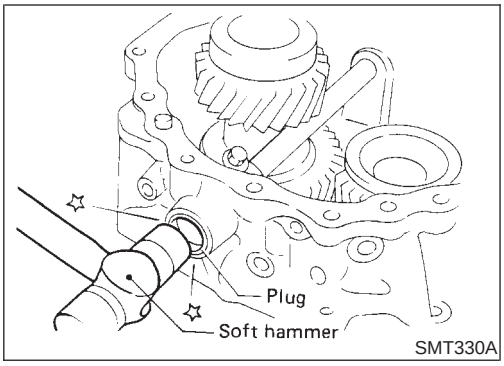

SMT330A

f. Apply sealant to plug and install it into front case.

Sealant:

Refer to Case Components, TF-17.

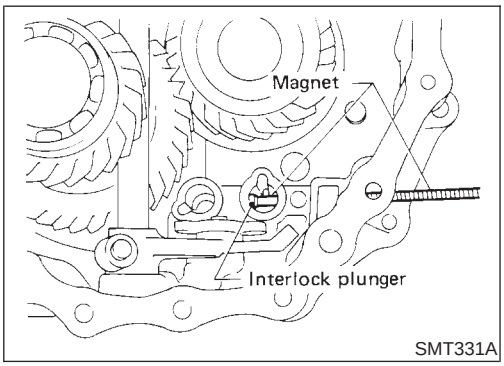

SMT331A

g. Insert interlock plunger into front case.

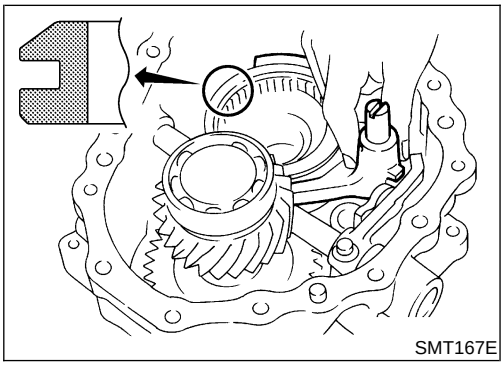
SMT167E

h. Install L & H shift rod and fork assembly with coupling sleeve.

CAUTION:

L & H coupling sleeve have directional property. (A/T vehicle only)

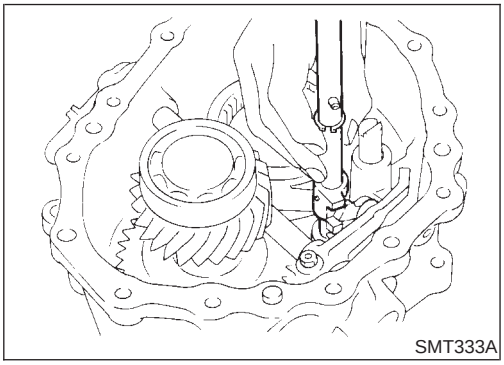
SMT333A

i. Install 2-4 shift rod.

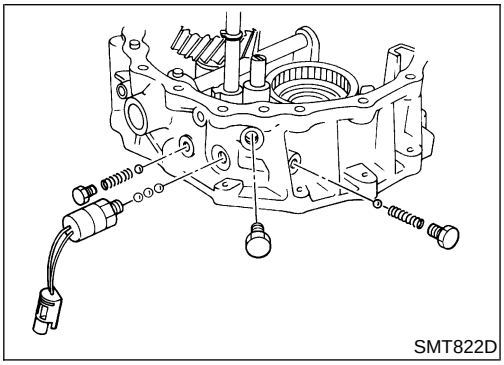
SMT822D

j. Install neutral position switch, check balls, check springs and plugs.

- **Apply sealant to switches and plugs.**

Sealant:

Refer to Case Components, TF-17.

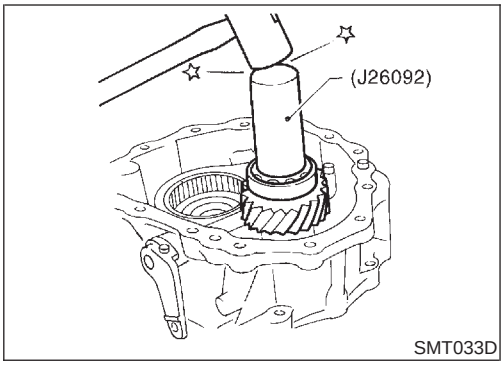

2. Select counter gear rear bearing shim.

a. Seat counter gear assembly.

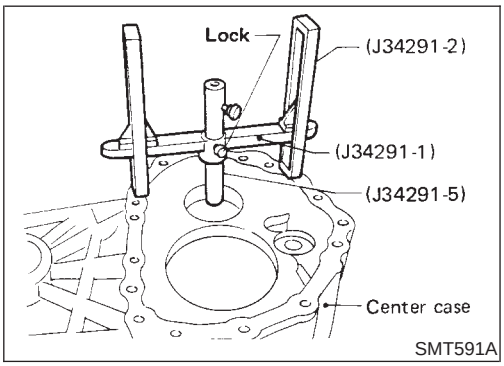

b. Place J34291-1 (bridge), J34291-2 (legs) and J34291-5 (gauging cylinder) on machined surface of center case and allow gauging cylinder to rest on top outer portion of counter gear rear bearing. Lock gauging cylinder in place.

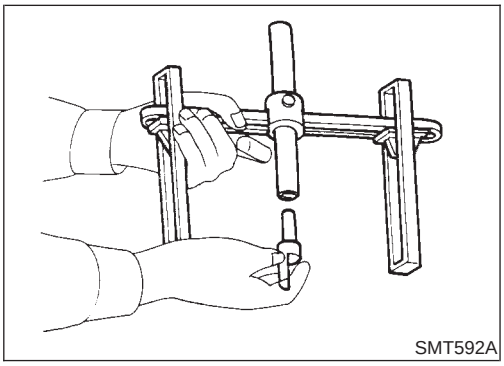

c. Insert J34291-20 (gauging plunger) into J34291-5 (gauging cylinder).

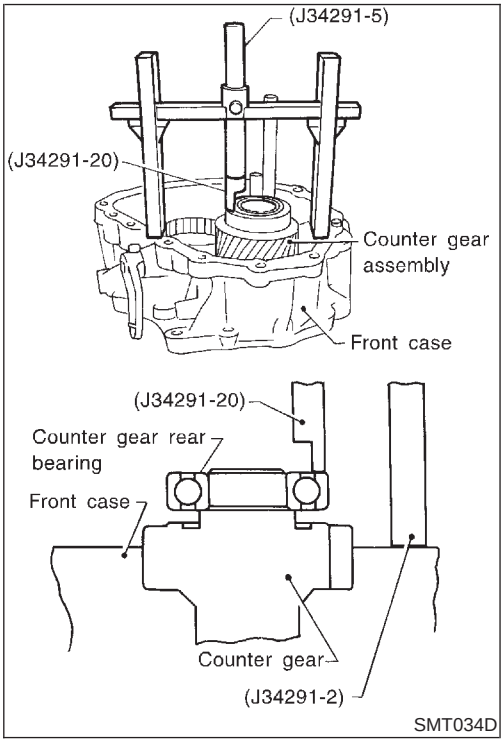

d. Place bridge, legs, gauging cylinder and gauging plunger onto machined surface of front case assembly, and allow gauging plunger to drop until it contacts counter gear rear bearing mating surface.

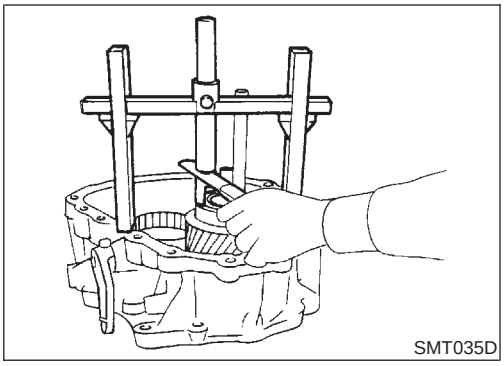
SMT035D

e. Lock gauging plunger in place and use feeler gauge to measure gap between gauging cylinder and gauging plunger.
f. Use measured distance and following chart to select correct shim.

Counter gear end play:
0 - 0.2 mm (0 - 0.008 in)
Counter gear rear bearing shim:
Refer to SDS, TF-40.

g. Select counter gear rear bearing shim.

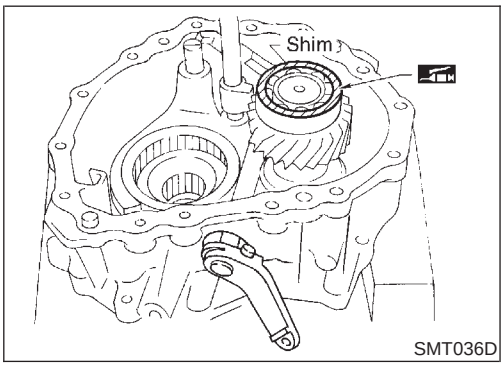

SMT036D

3. Place suitable shim on counter gear rear bearing with grease.
4. Apply ATF to each part in front case.

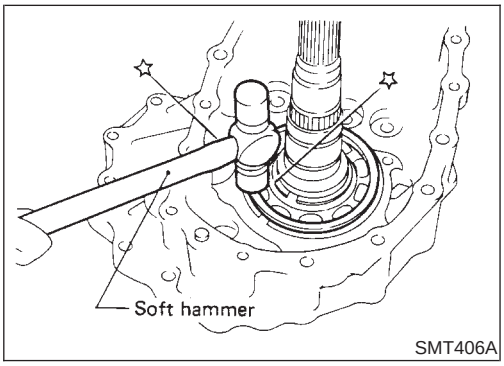

SMT406A

5. Assemble center case assembly.
a. Install mainshaft on center case by tapping lightly.
- **Apply ATF to mainshaft front bearing.**

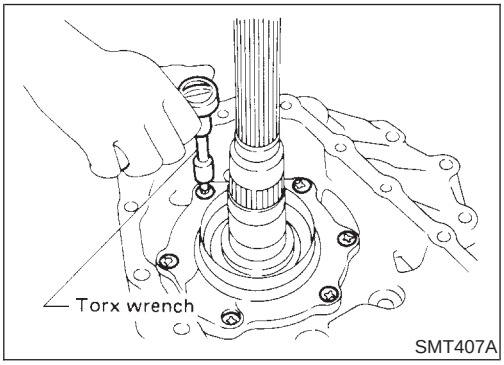

SMT407A

b. Install bearing retainer.

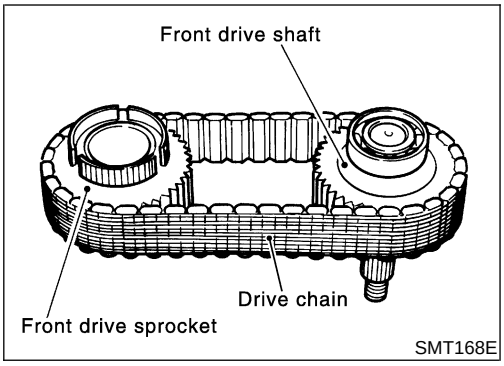

SMT168E

c. Put drive chain onto the front drive sprocket and front drive shaft, and then put them in center case.

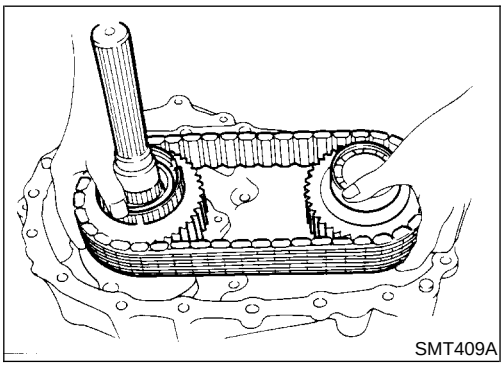
SMT409A

d. Install front drive shaft by tapping lightly.

- **Make sure shafts are lined up in the case.**

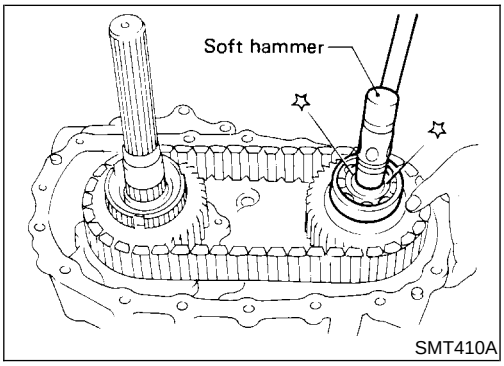

SMT410A

e. Apply ATF to needle bearings and install them into front drive sprocket.

- **These needle bearings can be installed more easily if front drive sprocket is rotated while installing them.**

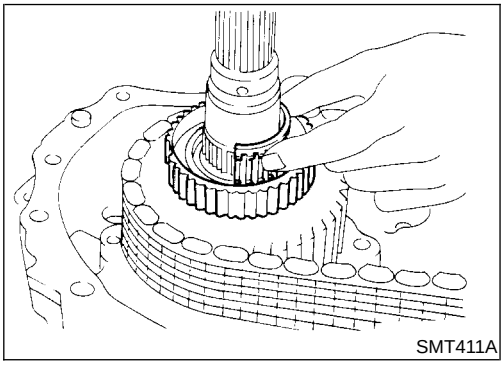
SMT411A

f. Install 2-4 coupling sleeve with 2-4 shift fork.

- **Pay special attention to direction of coupling sleeve.**

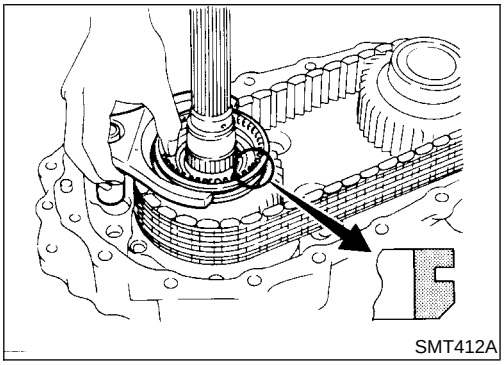
SMT412A

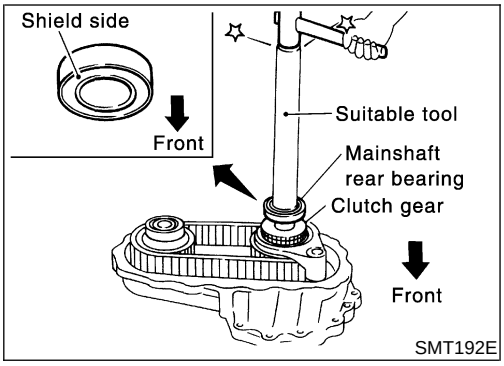

g. Install clutch gear and mainshaft rear bearing.
- **Place wooden block under mainshaft in order to protect mainshaft front bearing.**

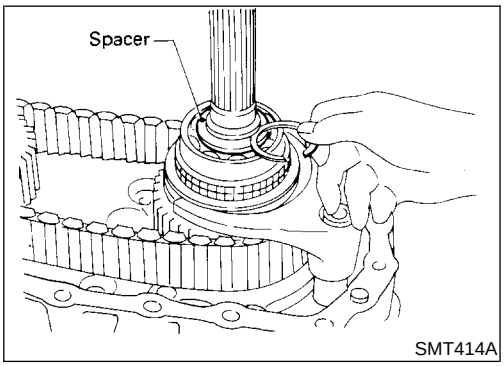

h. Install spacer.
i. Select snap ring with proper thickness and install it.

Allowable clearance between snap ring and groove:
0 - 0.15 mm (0 - 0.0059 in)
Available snap ring for mainshaft rear bearing:
Refer to SDS, TF-39.

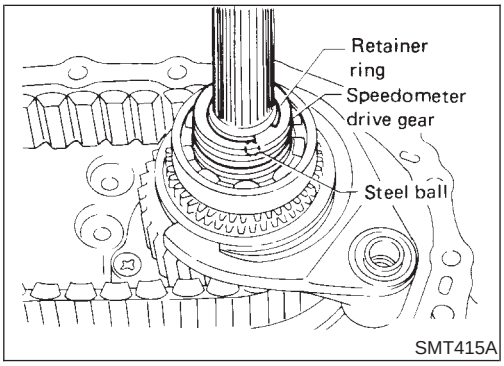

j. Install steel ball, speedometer drive gear and retainer ring.
- **Steel ball is the smallest of check balls for this unit.**

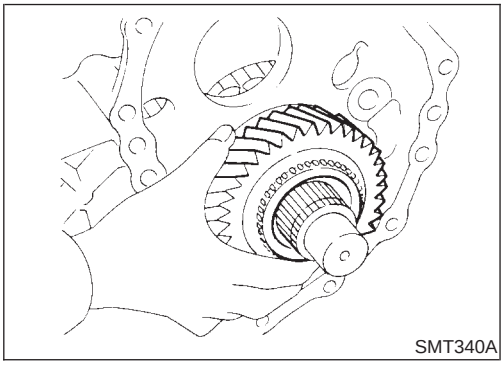

k. Install low gear and its bearing to mainshaft.
- **Apply ATF to needle bearing.**

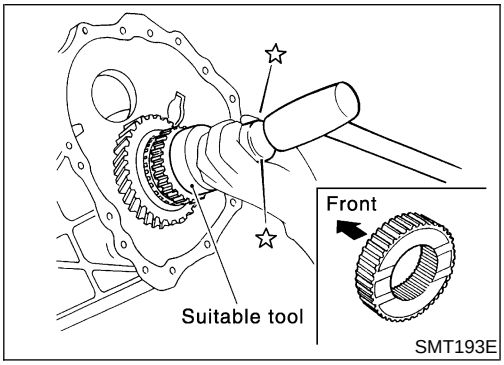

l. Install L & H hub and snap ring to mainshaft.
- **Pay special attention to direction of L & H hub.**

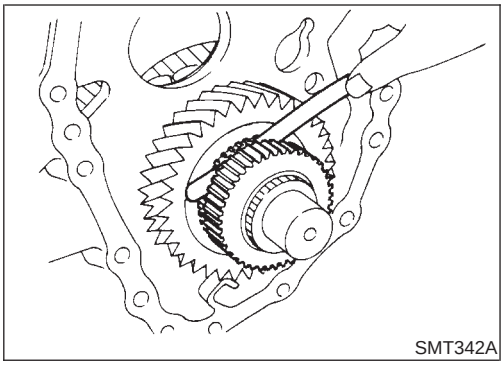
SMT342A

m. Measure end play of low gear.

Standard:

0.2 - 0.35 mm (0.0079 - 0.0138 in)

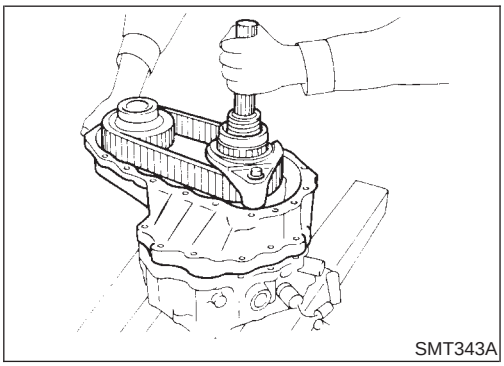
SMT343A

6. Apply sealant to mating surface and put center case assembly onto front case and tighten bolts.

Sealant:

Refer to Case Components, TF-17.

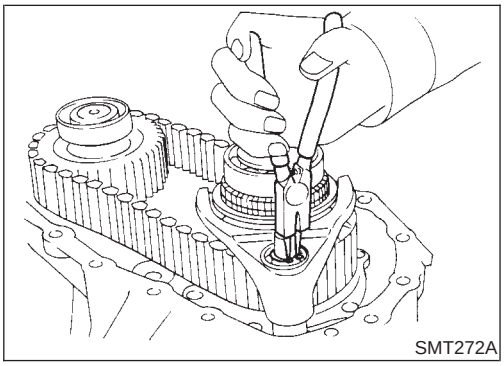
SMT272A

7. Install snap ring to 2-4 shift rod.

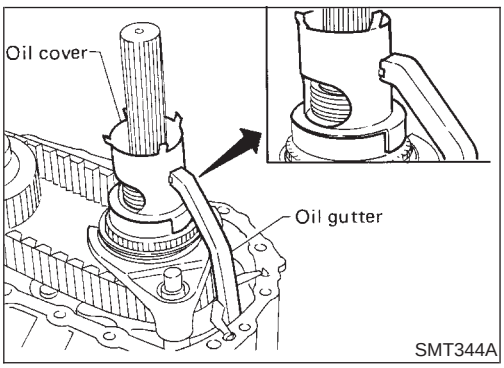

SMT344A

8. Install oil gutter and oil cover.
9. Apply ATF to each part in center case.

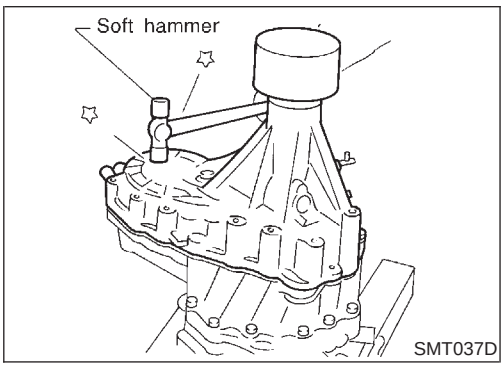

SMT037D

10. Apply sealant to mating surface and install rear case on center case.
11. Install 4WD switch.

- **Apply sealant to thread of switch.**

Sealant:

Refer to Case Components, TF-17.

General Specifications

NATF0130

Transfer model			TX10A
Gear ratio	High		1.000
	Low		2.020
Number of teeth	Main gear		29
	Low gear		37
	Counter gear	High	38
		Low	24
	Front drive sprocket		41
	Front drive shaft		41
Fluid capacity ℓ (US qt, Imp qt)*			2.2 (2-3/8, 2)

*: Refer to MA-12, “Fluids and Lubricants”.

Gear End Play

NATF0131

Unit: mm (in)

Front drive sprocket	0.2 - 0.35 (0.0079 - 0.0138)
Low gear	0.2 - 0.35 (0.0079 - 0.0138)
Counter gear	0 - 0.2 (0 - 0.008)

Available Snap Ring

NATF0132

MAINSHAFT FRONT BEARING

NATF0132S01

Allowable clearance	0 - 0.15 mm (0 - 0.0059 in)
Thickness mm (in)	Part number*
3.10 (0.1220)	33138-73P10
3.19 (0.1256)	33138-73P11
3.28 (0.1291)	33138-73P12

*: Always check with the Parts Department for the latest parts information.

MAINSHAFT REAR BEARING

NATF0132S02

Allowable clearance	0 - 0.15 mm (0 - 0.0059 in)
Thickness mm (in)	Part number*
1.80 (0.0709)	33138-73P20
1.89 (0.0744)	33138-73P21
1.98 (0.0780)	33138-73P22
2.07 (0.0815)	33138-73P23
2.16 (0.0850)	33138-73P24

*: Always check with the Parts Department for the latest parts information.

MAIN GEAR BEARING

NATF0132S03

Allowable clearance	0 - 0.15 mm (0 - 0.0059 in)
Thickness mm (in)	Part number*
2.60 (0.1024)	33114-73P00
2.69 (0.1059)	33114-73P01
2.78 (0.1094)	33114-73P02

*: Always check with the Parts Department for the latest parts information.

Available Shim

NATF0133

COUNTER GEAR REAR BEARING

NATF0133S01

Allowable clearance	0 - 0.2 mm (0 - 0.008 in)
Thickness mm (in)	Part number*
0.1 (0.004)	33112-C6900
0.2 (0.008)	33112-C6901
0.3 (0.012)	33112-C6902
0.4 (0.016)	33112-C6903
0.5 (0.020)	33112-33G00
0.6 (0.024)	33112-33G01

*: Always check with the Parts Department for the latest parts information.

Supplemental Restraint System (SRS) "AIR BAG" and "SEAT BELT PRE-TENSIONER"

NATF0001

The Supplemental Restraint System such as "AIR BAG" and "SEAT BELT PRE-TENSIONER" used along with a seat belt, helps to reduce the risk or severity of injury to the driver and front passenger for certain types of collision. The SRS system composition which is available to NISSAN MODEL PATHFINDER is as follows:

- For a frontal collision
  The Supplemental Restraint System consists of driver air bag module (located in the center of the steering wheel), front passenger air bag module (located on the instrument panel on passenger side), seat belt pre-tensioners, a diagnosis sensor unit, warning lamp, wiring harness and spiral cable.
- For a side collision
  The Supplemental Restraint System consists of side air bag module (located in the outer side of front seat), satellite sensor, diagnosis sensor unit (one of components of air bags for a frontal collision), wiring harness, warning lamp (one of components of air bags for a frontal collision).

Information necessary to service the system safely is included in the **RS** section of this Service Manual.

WARNING:

- **To avoid rendering the SRS inoperative, which could increase the risk of personal injury or death in the event of a collision which would result in air bag inflation, all maintenance must be performed by an authorized NISSAN dealer.**
- **Improper maintenance, including incorrect removal and installation of the SRS, can lead to personal injury caused by unintentional activation of the system. For removal of Spiral Cable and Air Bag Module, see the RS section.**
- **Do not use electrical test equipment on any circuit related to the SRS unless instructed to in this Service Manual. SRS wiring harnesses can be identified with yellow harness connector (and with yellow harness protector or yellow insulation tape before the harness connectors).**

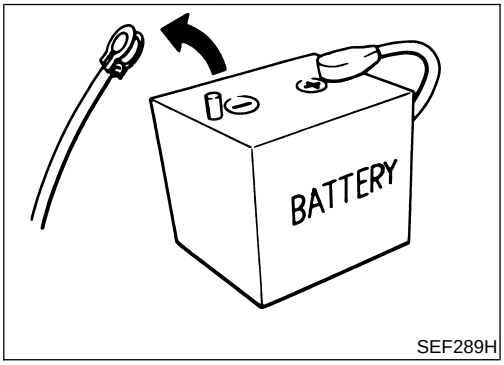

SEF289H

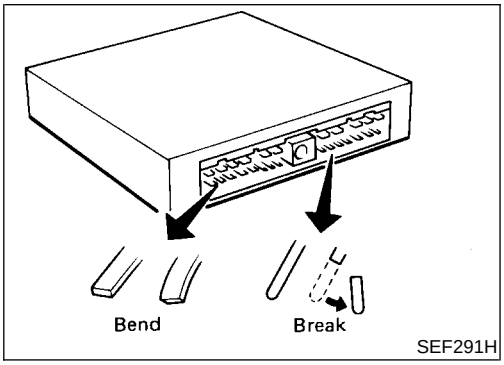

SEF291H

Precautions

NATF0092

- **Before connecting or disconnecting the Transfer control unit harness connector, turn ignition switch OFF and disconnect negative battery terminal. Failure to do so may damage the Transfer control unit. Because battery voltage is applied to Transfer control unit even if ignition switch is turned off.**
- **When connecting or disconnecting pin connectors into or from Transfer control unit, take care not to damage pin terminals (bend or break).**
  Make sure that there are not any bends or breaks on Transfer control unit pin terminal, when connecting pin connectors.

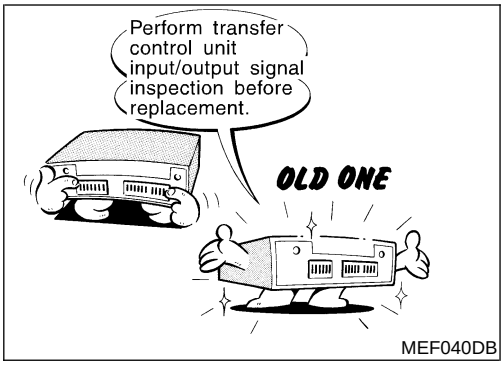

- **Before replacing Transfer control unit, perform Transfer control unit input/output signal inspection and make sure whether Transfer control unit functions properly or not. (See page TF-89.)**

Service Notice

NATF0002

1) Before proceeding with disassembly, thoroughly clean the outside of the all-mode 4WD transfer. It is important to prevent the internal parts from becoming contaminated by dirt or other foreign matter.
2) Disassembly should be done in a clean work area.
3) Use lint-free cloth or towels for wiping parts clean. Common shop rags can leave fibers that could interfere with the operation of the all-mode 4WD transfer.
4) Place disassembled parts in order for easier and proper assembly.
5) All parts should be carefully cleaned with a general purpose, non-flammable solvent before inspection or reassembly.
6) Gaskets, seals and O-rings should be replaced any time the all-mode 4WD transfer is disassembled.
7) It is very important to perform functional tests whenever they are indicated.
8) The valve body contains precision parts and requires extreme care when parts are removed and serviced. Place removed parts in a parts rack in order to replace them in correct positions and sequences. Care will also prevent springs and small parts from becoming scattered or lost.
9) Properly installed valves, sleeves, plugs, etc. will slide along bores in valve body under their own weight.
10) Before assembly, apply a coat of recommended ATF to all parts. Apply petroleum jelly to protect O-rings and seals, and to hold bearings and washers in place during assembly. Do not use grease.
11) Extreme care should be taken to avoid damage to O-rings, seals and gaskets when assembling.
12) After overhaul, refill the transfer with new ATF.
13) When the all-mode 4WD transfer drain plug is removed, only some of the fluid is drained. Old all-mode 4WD transfer fluid will remain in torque converter and ATF cooling system. Always follow the procedures, MA-24, "Changing All-mode 4WD Transfer Fluid".

Wiring Diagrams and Trouble Diagnosis

NATF0003

When you read wiring diagrams, refer to the following:

- GI-11, "HOW TO READ WIRING DIAGRAMS"
- EL-11, "POWER SUPPLY ROUTING"

When you perform trouble diagnosis, refer to the following:

- GI-35, "HOW TO FOLLOW TEST GROUPS IN TROUBLE DIAGNOSIS"
- GI-24, "HOW TO PERFORM EFFICIENT DIAGNOSIS FOR AN ELECTRICAL INCIDENT"

Cross-sectional View

NATF0006

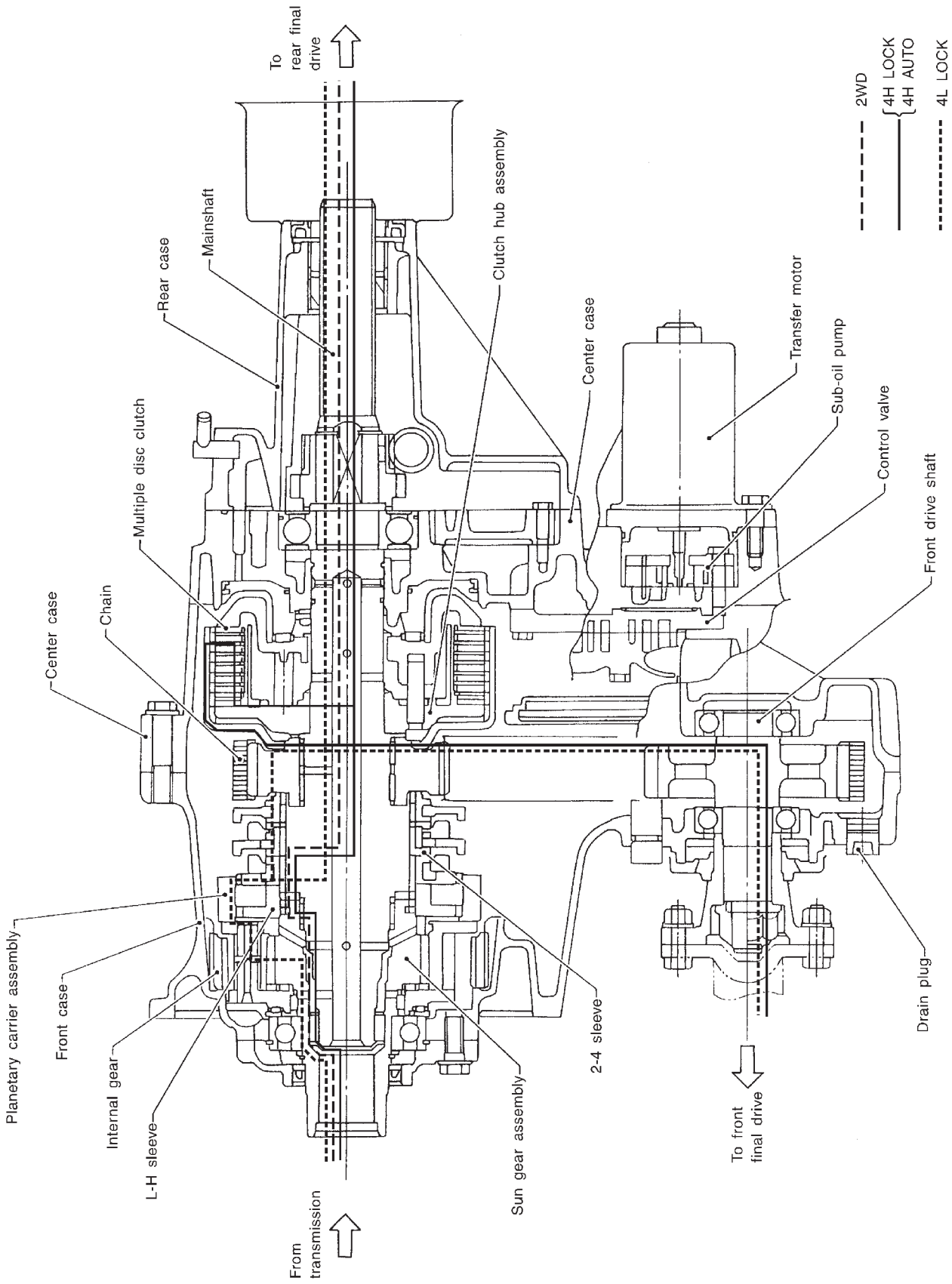

SMT953CA

Control System

NATF0007

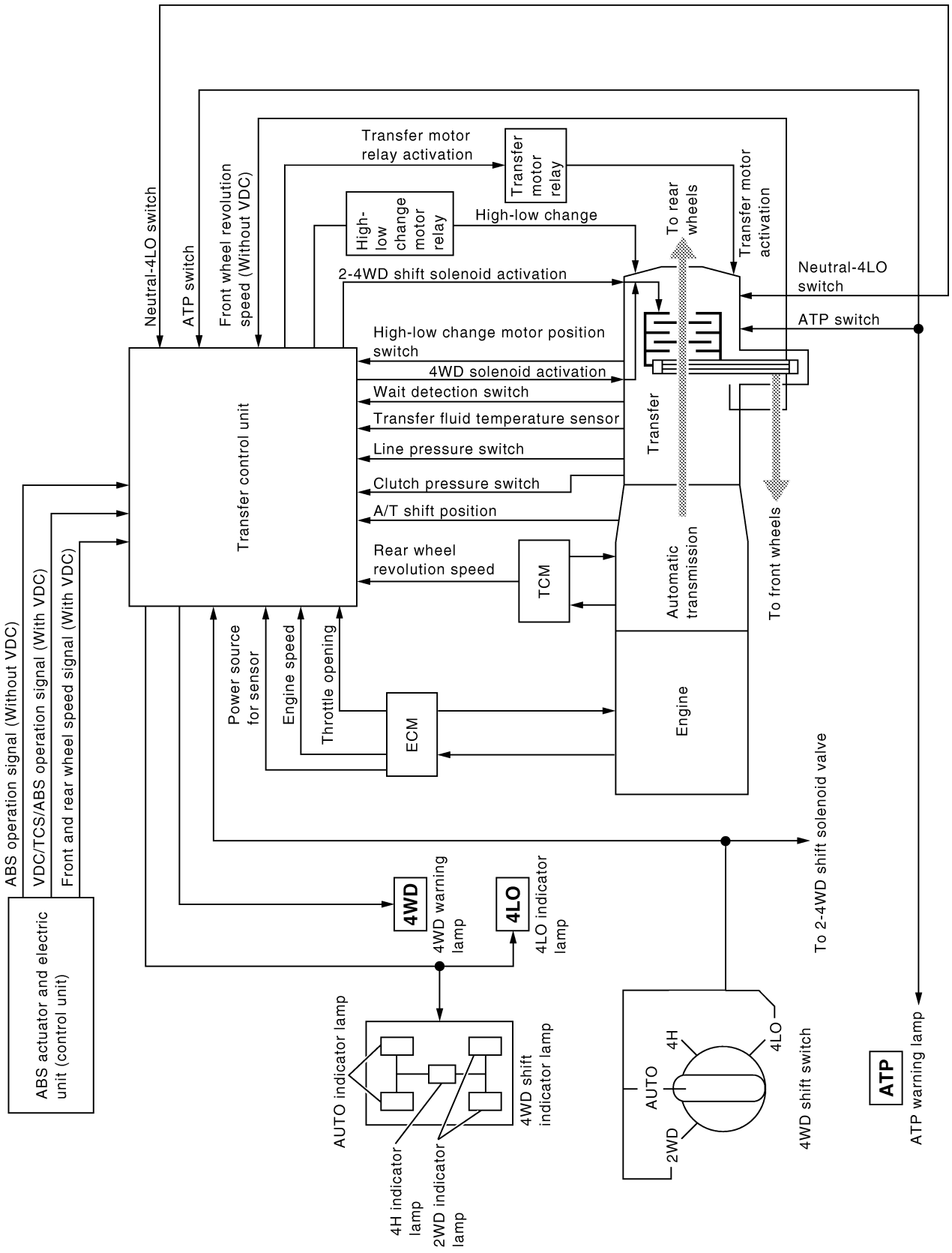

SMT210E

ALL-MODE 4WD TRANSFER BASIC CONTROL

NATF0007S01

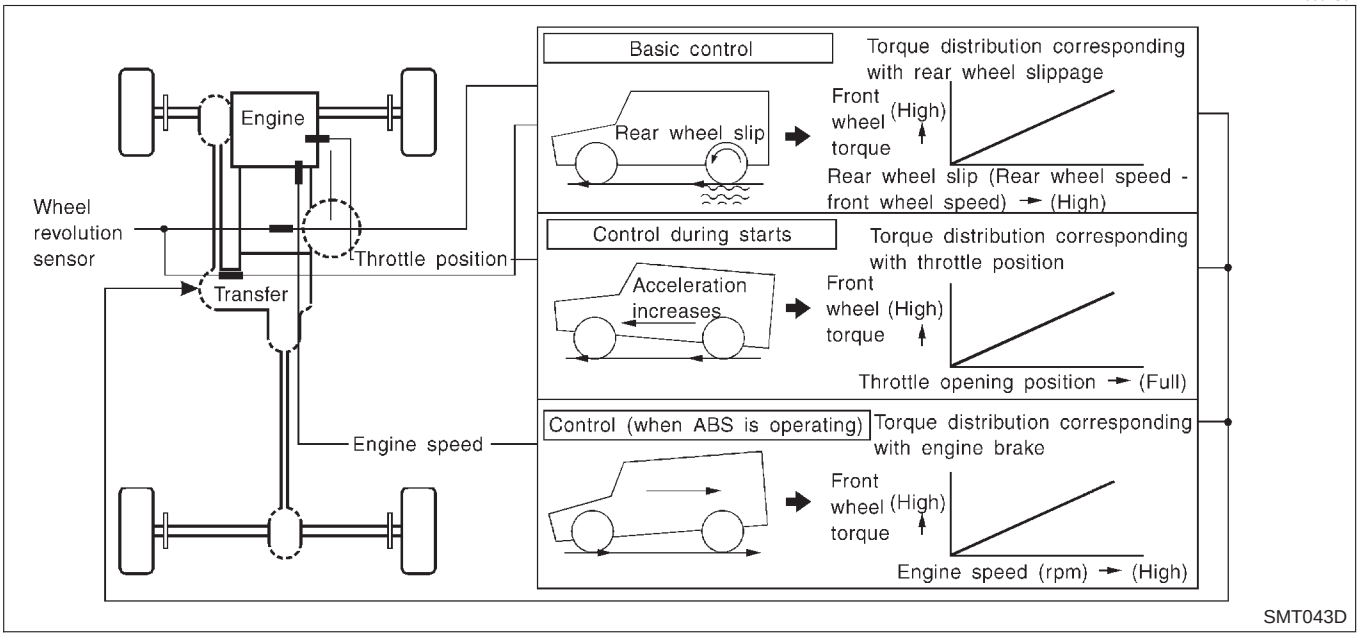

HYDRAULIC CONTROL CIRCUITS

NATF0007S02

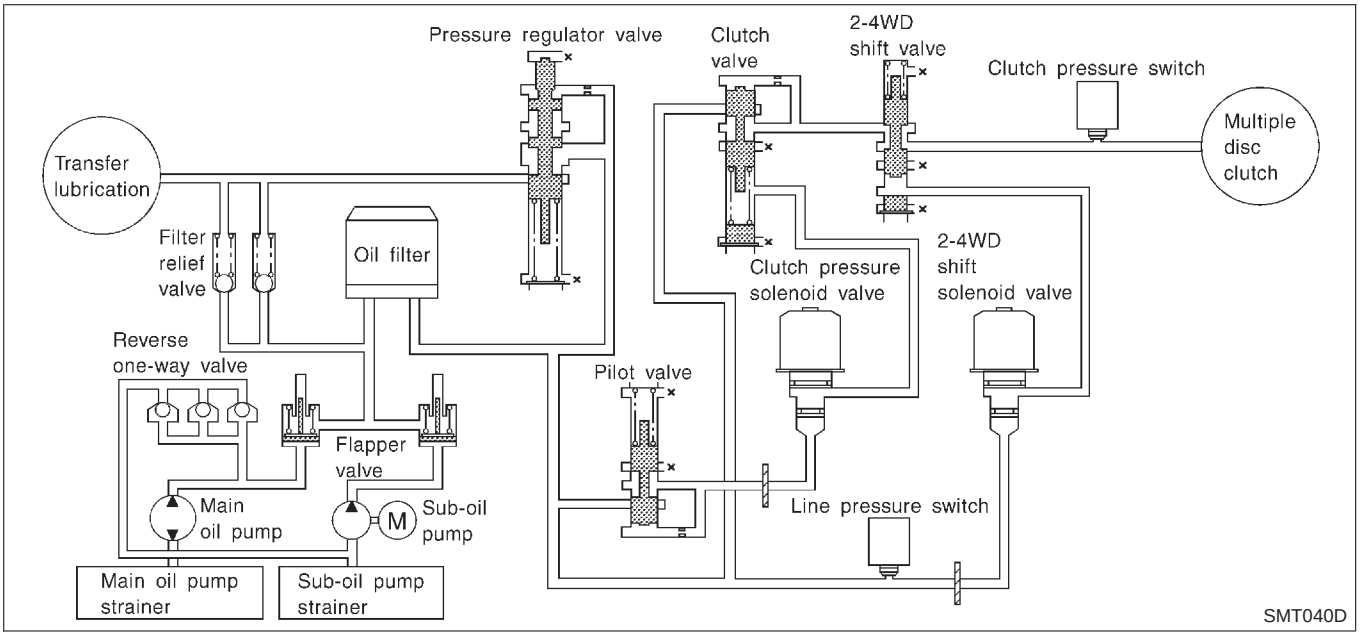

OUTLINE

NATF0007S03

All-mode 4WD transfer is controlled by the transfer control unit and sensors.

If a malfunction occurs in the all-mode 4WD system, the 4WD warning lamp lights up to indicate the system malfunction. There are two ways to identify the cause of the malfunction.

1) Performing the self-diagnosis. (The 4WD warning lamp will indicate what kind of malfunction has occurred by flickering.)
2) Performing diagnosis using CONSULT-II.

CONTROL SYSTEM DIAGRAM

NATF0007S04

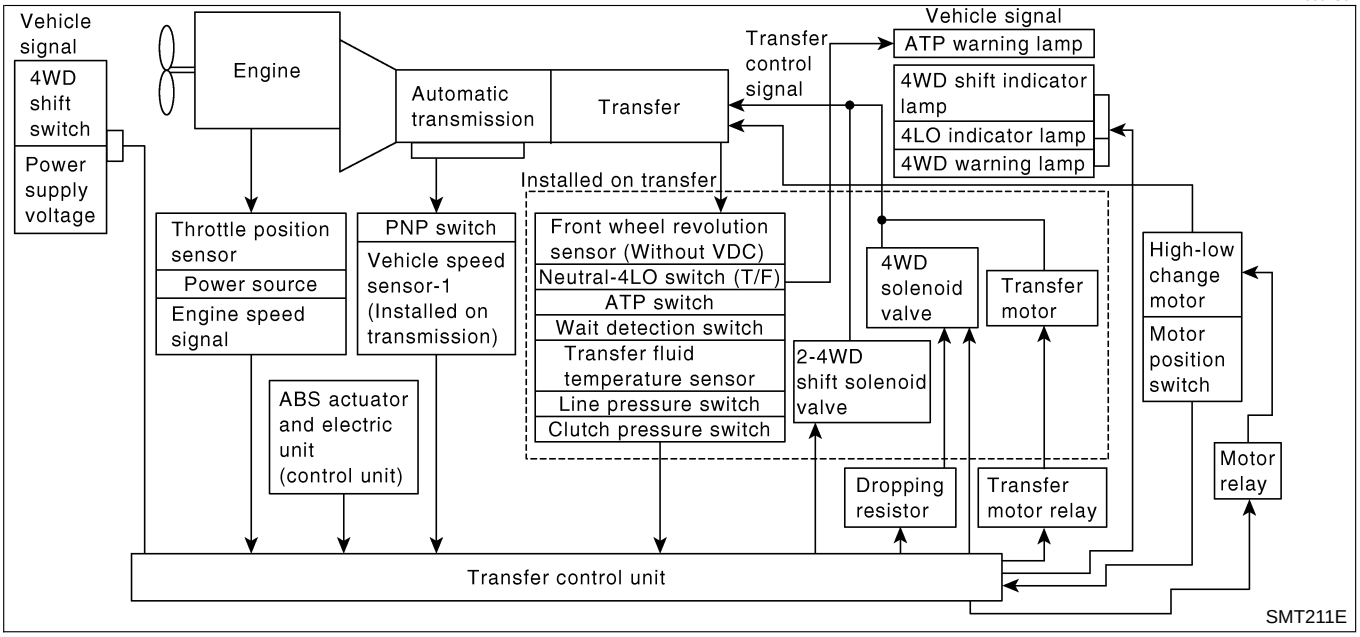

INDICATIONS OF 4WD WARNING LAMP

NATF0007S05

Condition	Content	4WD warning lamp
During self-diagnosis	Indicates the malfunction position by number of flickers.	Flickers at malfunction mode.
Lamp check*	Checks the lamp by turning ON during engine starting. After engine starts, it turns OFF if there are no malfunctions.	ON
Malfunction in 4WD system*	Turns ON to indicate malfunction. When ignition switch is turned to "OFF" or the malfunction is corrected, it turns OFF.	ON
When vehicle is driven with different diameters of front and rear tires	Flickers once every 2 seconds. Turns OFF when ignition switch is "OFF".	Flickers once every 2 seconds.
High fluid temperature in transfer unit	When fluid temperature is high or fluid temperature sensor circuit is shorted, it flickers twice every second. It turns OFF when fluid temperature becomes normal.	Flickers twice a second.
Other than above (System is normal.)	Lamp is OFF.	OFF

*: When 4WD warning lamp is ON, all the 4WD shift indicator lamps turn OFF.

CAN Communication (With VDC)

=NATF0134

SYSTEM DESCRIPTION

NATF0134S01

CAN (Controller Area Network) is a serial communication line for real time application. It is an on-vehicle multiplex communication line with high data communication speed and excellent error detection ability. Many electronic control units are equipped onto a vehicle, and each control unit shares information and links with other control units during operation (not independent). In CAN communication, control units are connected with 2 communication lines (CAN H line, CAN L line). These allow a high rate of information transmission with less wiring. Each control unit transmits/receives data but selectively reads required data only.
For details, refer to EL-409, “CAN Communication Unit”.

Location of Electrical Parts

NATF0008

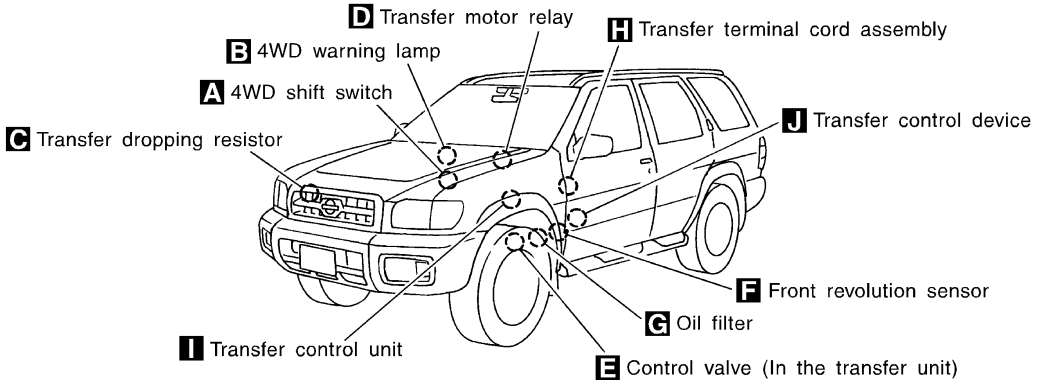

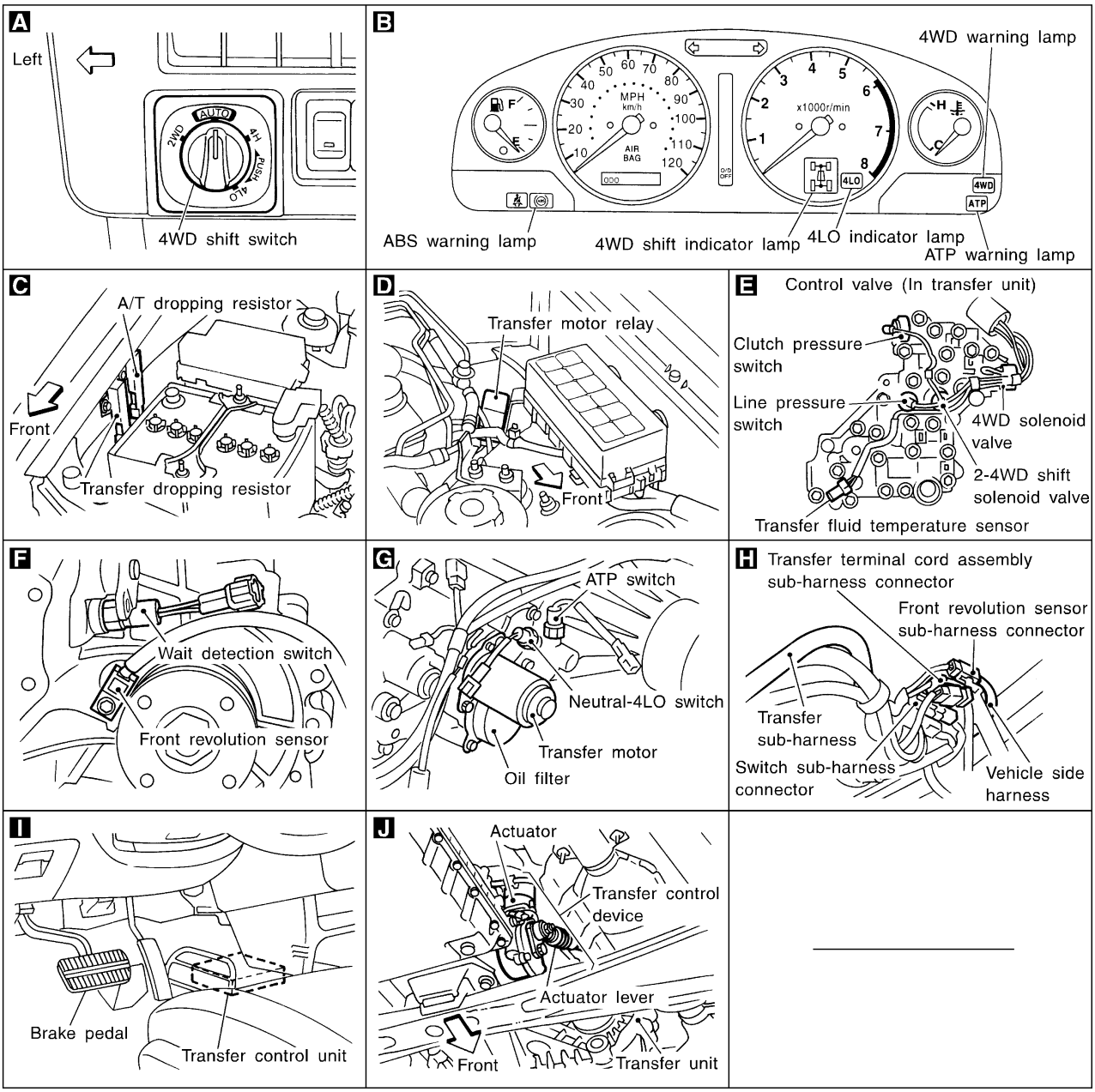

SMT171E

Description of Electrical Parts

NATF0067

TRANSFER MOTOR

NATF0067S01

1. The transfer motor drives the sub-oil pump to provide proper lubrication and oil pressure control when the vehicle is at standstill, during low-speed operations or is being driven in reverse.
2. The main oil pump is operated by the driving force of the mainshaft. In other words, sufficient oil pressure buildup does not occur when the vehicle is at standstill or during low-speed operations. While the vehicle is being driven in reverse, the main oil pump rotates in the reverse direction. Therefore the main oil pump does not discharge oil pressure. During any of the above vehicle operations, the transfer motor drives the sub-oil pump to compensate for insufficient oil pressure.
3. The transfer motor operates as follows:

1) The motor relay turns OFF in the 2WD mode.
2) The motor relay operates as described in the table below in modes other than the 2WD mode.

Table 1

PNP switch “R” position	VFF (Vehicle speed)	A/T position	Motor relay drive command
ON	—	R	ON
OFF	0 km/h	Positions other than the “P” or “N” positions	ON
	—	“P” or “N” position (See Table 2.)	—
	0 < VFF ≦ 30 km/h	—	ON
	30 < VFF < 35 km/h	—	HOLD
	35 km/h ≦ VFF	—	OFF

Table 2

A/T position	N-4L SW	4WD mode	Throttle position		
			0 - 0.07/8	0.07/8 - 1/8	1/8 - MAX
N	OFF	LOCK (4H)	ON	ON	ON
		Positions other than the LOCK position (2WD or AUTO)	See NOTE.	HOLD	ON
	ON	—	See NOTE.	HOLD	ON
P	—	—	See NOTE.	HOLD	ON

NOTE:
OFF (after 2.5 seconds have elapsed.)

4. 4WD shift switch, PNP switch, Neutral-4LO switch, vehicle speed sensor and throttle position sensor are used in conjunction with the transfer motor.

WAIT DETECTION SWITCH

NATF0067S02

1. The wait detection switch releases the “booming” torque produced in the propeller shaft. After the release of the “booming” torque, the wait detection switch helps provide the 4WD lock gear (clutch drum) shifts. A difference may occur between the operation (“4LO” to “4H” shift only) of the 4WD shift switch and actual drive mode. At this point, the wait detection switch senses an actual drive mode.
2. The wait detection switch operates as follows:
   4WD lock gear (clutch drum) locked: ON
   4WD lock gear (clutch drum) released: OFF
3. The wait detection switch senses an actual drive mode and the 4WD shift indicator lamp indicates the vehicle drive mode.

2-4WD SHIFT SOLENOID VALVE

NATF0067S03

The 2-4WD shift solenoid valve operates to apply oil pressure to the wet, multiplate clutch, depending on the drive mode. The driving force is transmitted to the front wheels through the clutch so the vehicle is set in the 4WD mode. Setting the vehicle in the 2WD mode requires no pressure buildup. In other words, pressure force applied to the wet, multiplate clutch becomes zero.

LINE PRESSURE SWITCH

NATF0067S04

1. With the transfer system design, control of the oil pressure provides the transmission of drive torque to the front wheels. The main pressure to control the oil pressure is referred to as the line pressure.
   The line pressure switch determines whether or not adequate line pressure has built up under different operating conditions.
2. The line pressure switch turns ON when line pressure is produced.
3. The line pressure switch senses line pressure abnormalities and turns the 4WD warning lamp ON.

Circuit Diagram for Quick Pinpoint Check

NATF0009

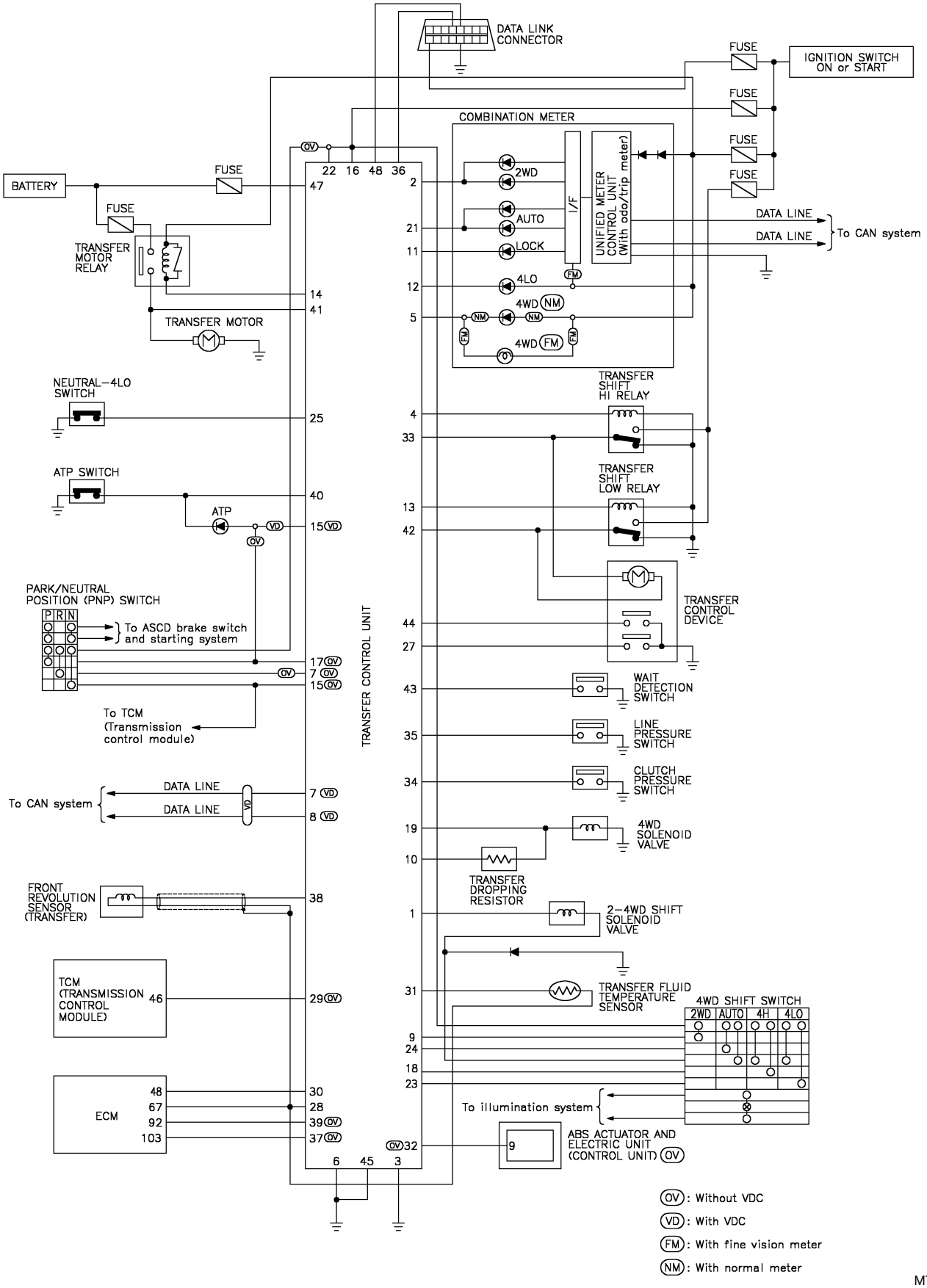

Wiring Diagram — TF —

NATF0010

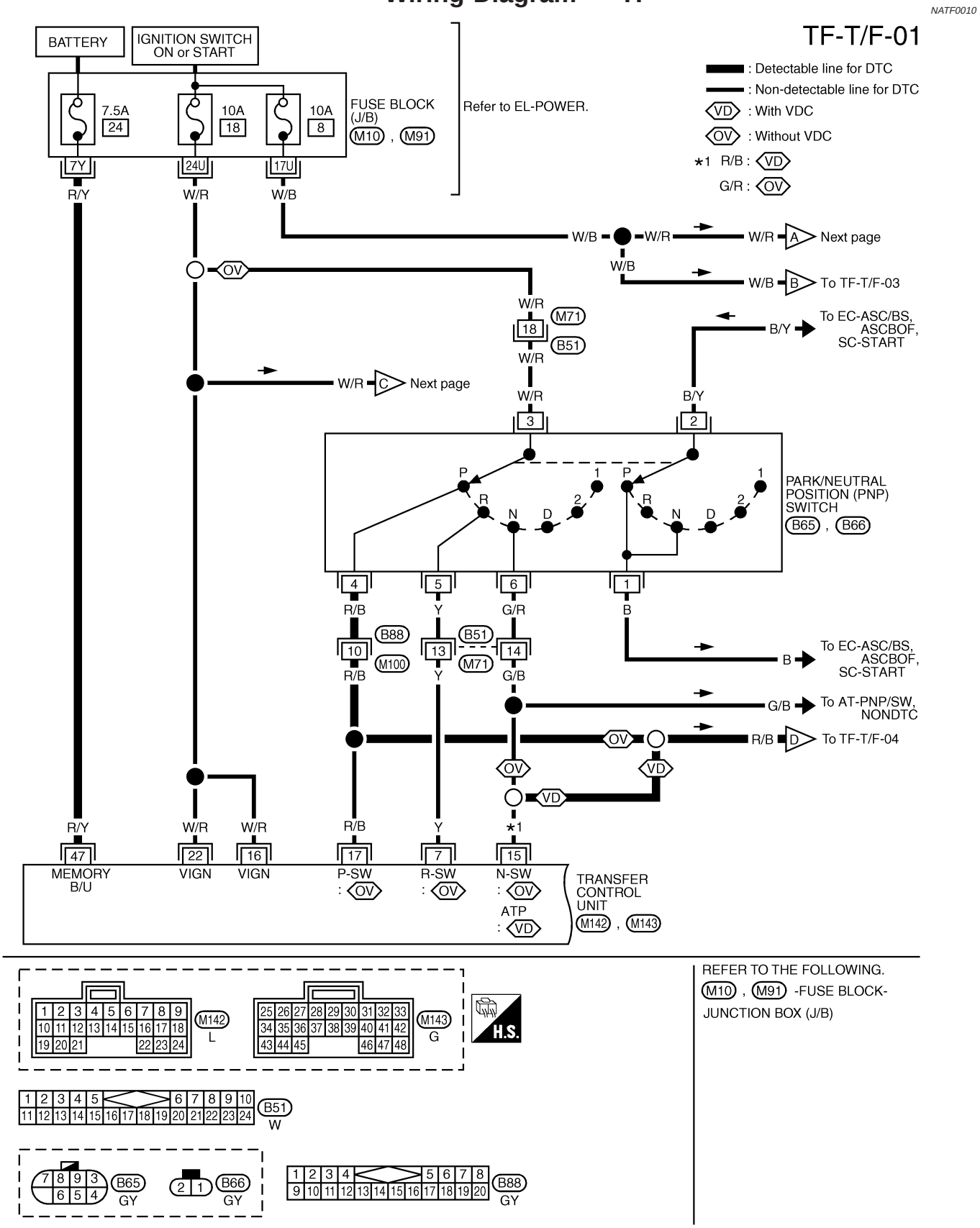

REFER TO THE FOLLOWING.
M10 , M91 -FUSE BLOCK-JUNCTION BOX (J/B)

MTF261A

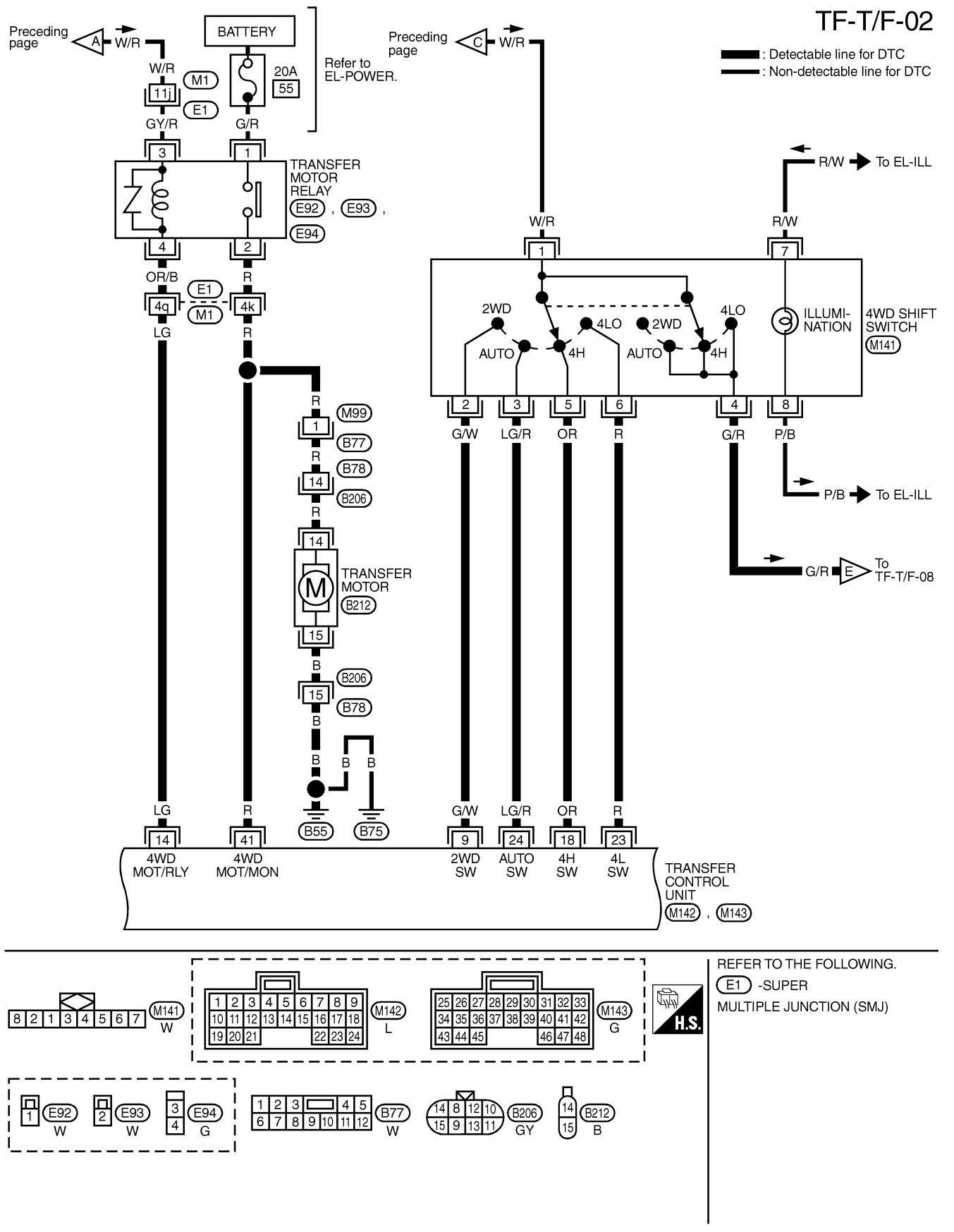
TF-T/F-02
: Detectable line for DTC
: Non-detectable line for DTC
Preceding page
A
W/R
BATTERY
20A
55
Refer to EL-POWER.
M1
11j
E1
GY/R
G/R
TRANSFER MOTOR RELAY
E92
E93
E94
OR/B
R
4q
4k
LG
M99
B77
B78
B206
TRANSFER MOTOR
B212
B
B55
B75
Preceding page
C
R/W
To EL-ILL
2WD
4LO
AUTO
4H
ILLUMI-NATION
4WD SHIFT SWITCH
M141
G/W
LG/R
OR
P/B
To EL-ILL
G/R
E
To TF-T/F-08
4WD MOT/RLY
4WD MOT/MON
2WD SW
AUTO SW
4H SW
4L SW
TRANSFER CONTROL UNIT
M142
M143
M141
W
M142
L
M143
G
H.S.
REFER TO THE FOLLOWING.
E1 -SUPER MULTIPLE JUNCTION (SMJ)
E92
E93
E94
B77
B206
B212
MTF173A

Wiring Diagram — TF — (Cont'd)

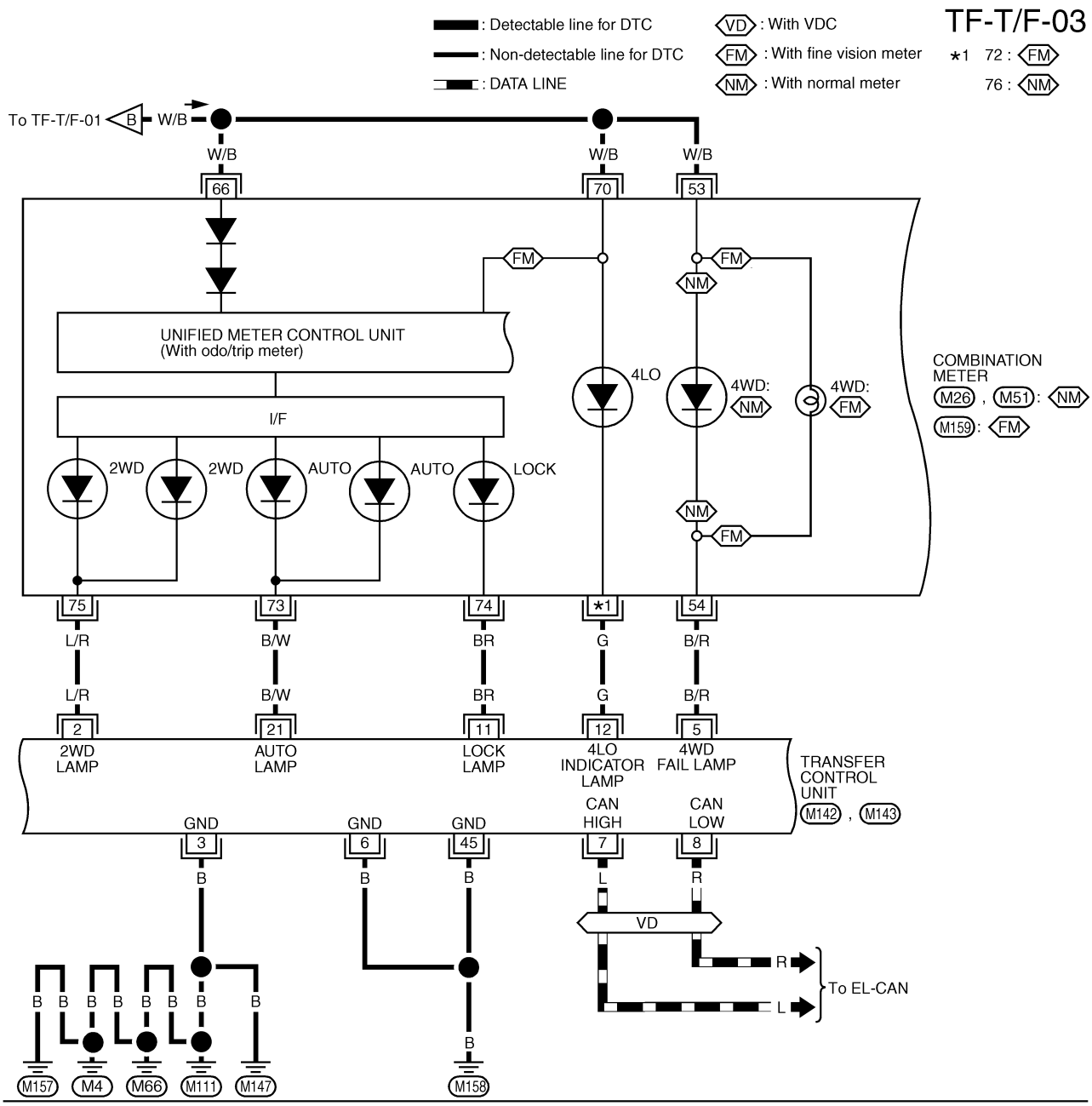

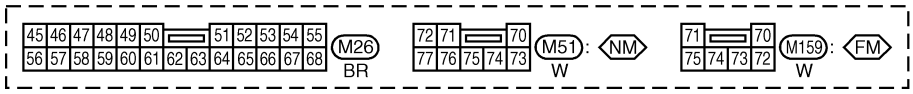

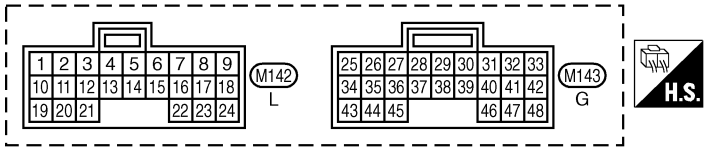

MTF262A

TF-T/F-04

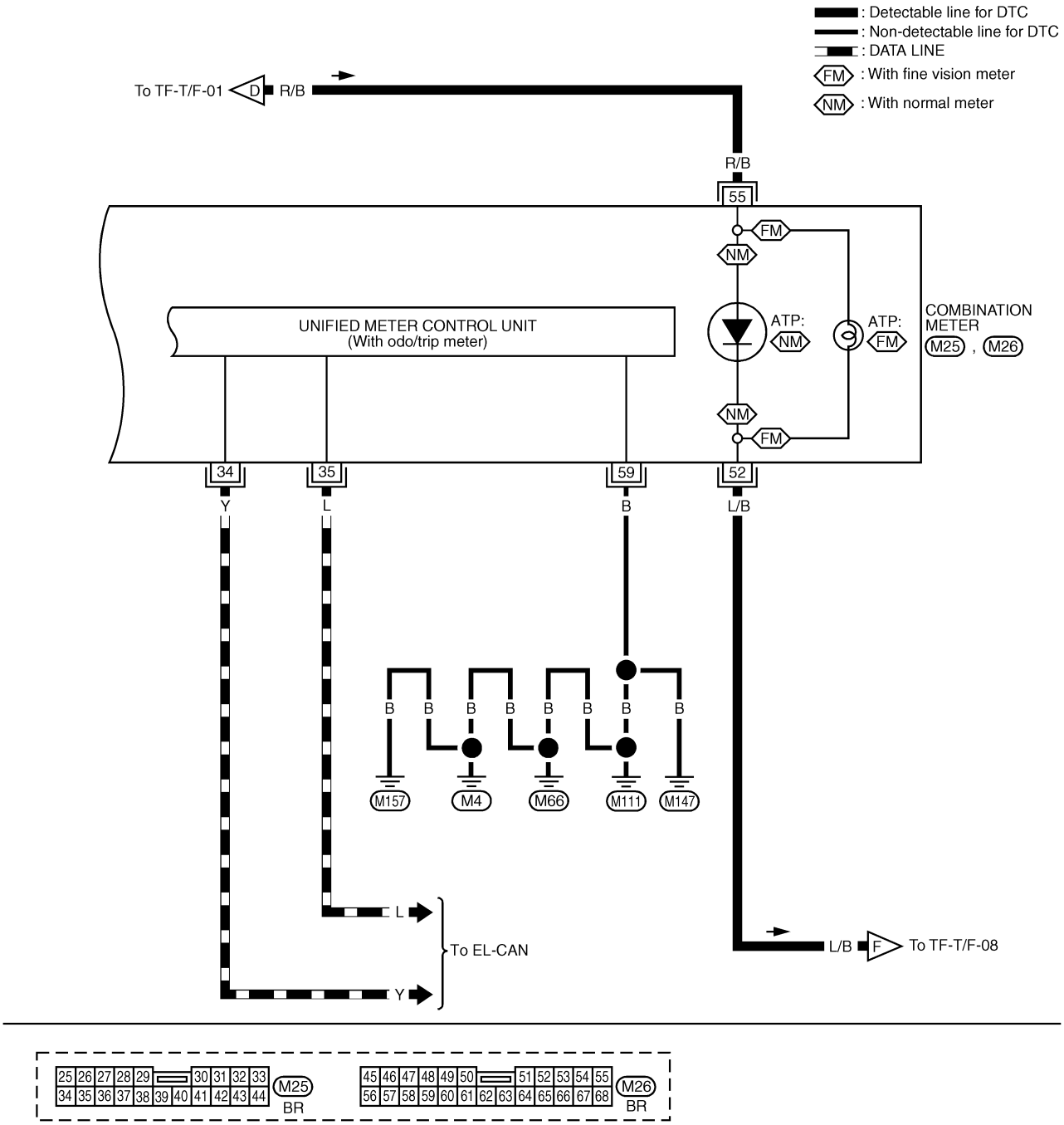

MTF264A

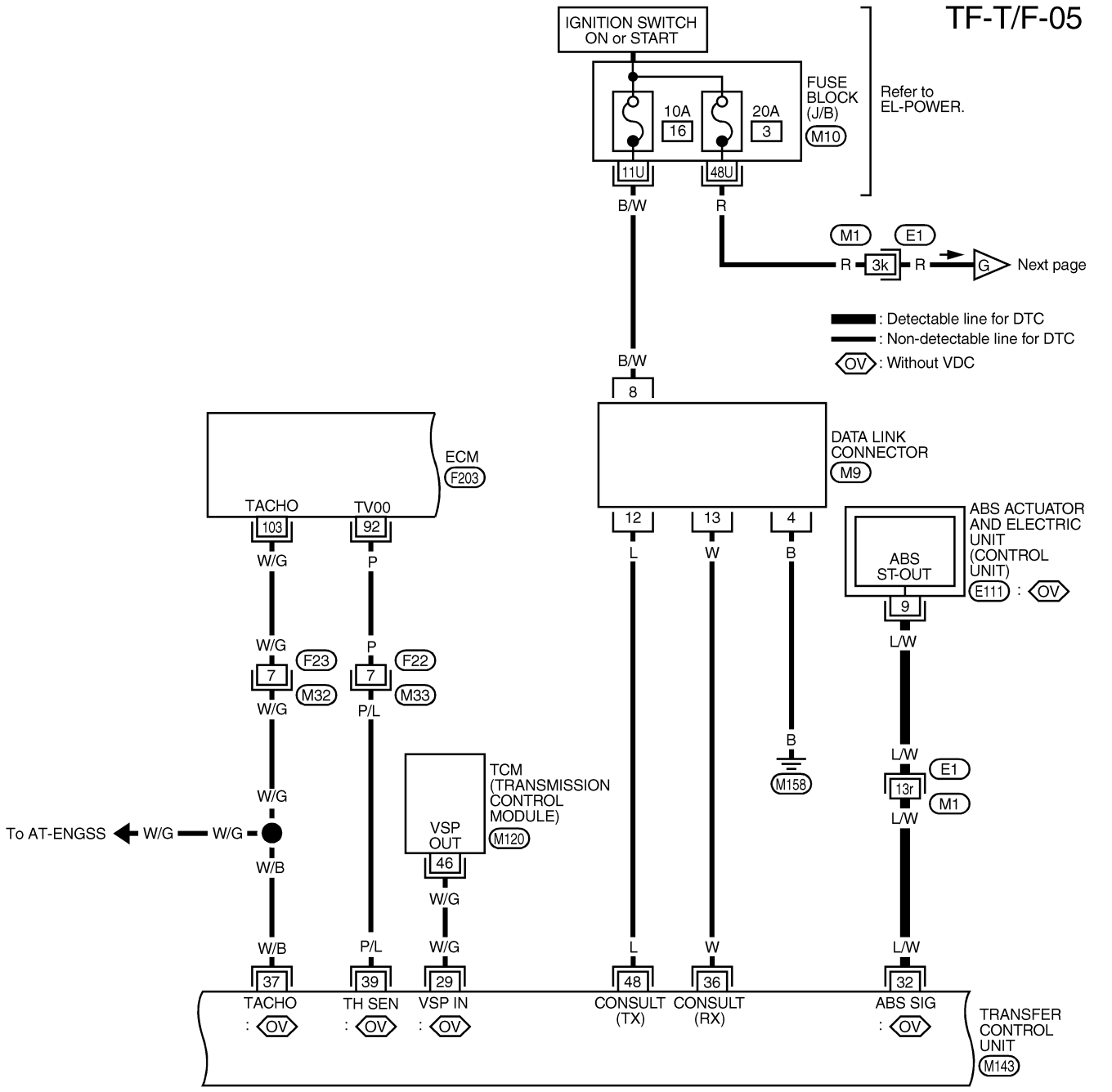
TF-T/F-05
IGNITION SWITCH ON or START
FUSE BLOCK (J/B)
M10
10A
16
20A
3
11U
48U
B/W
R
Refer to EL-POWER.
M1
E1
R
3k
R
G
Next page
: Detectable line for DTC
: Non-detectable line for DTC
OV : Without VDC
B/W
8
DATA LINK CONNECTOR
M9
ECM
F203
TACHO
TV00
103
92
W/G
P
12
13
4
L
W
B
ABS ACTUATOR AND ELECTRIC UNIT (CONTROL UNIT)
ABS ST-OUT
E111 : OV
9
L/W
W/G
F23
7
M32
P
F22
7
M33
P/L
B
M158
L/W
E1
13r
M1
L/W
TCM (TRANSMISSION CONTROL MODULE)
VSP OUT
M120
46
To AT-ENGSS
W/G
W/G
W/B
W/G
W/B
P/L
W/G
L
W
L/W
37
39
29
48
36
32
TACHO : OV
TH SEN : OV
VSP IN : OV
CONSULT (TX)
CONSULT (RX)
ABS SIG : OV
TRANSFER CONTROL UNIT
M143
M9
W
M32
BR
M33
GY
M120
GY
H.S.
M143
G
H.S.
E111
GY
REFER TO THE FOLLOWING.
E1 -SUPER MULTIPLE JUNCTION (SMJ)
M10 -FUSE BLOCK-JUNCTION BOX (J/B)
F203 -ELECTRICAL UNITS
MTF176A

TF-T/F-06

: Detectable line for DTC
: Non-detectable line for DTC

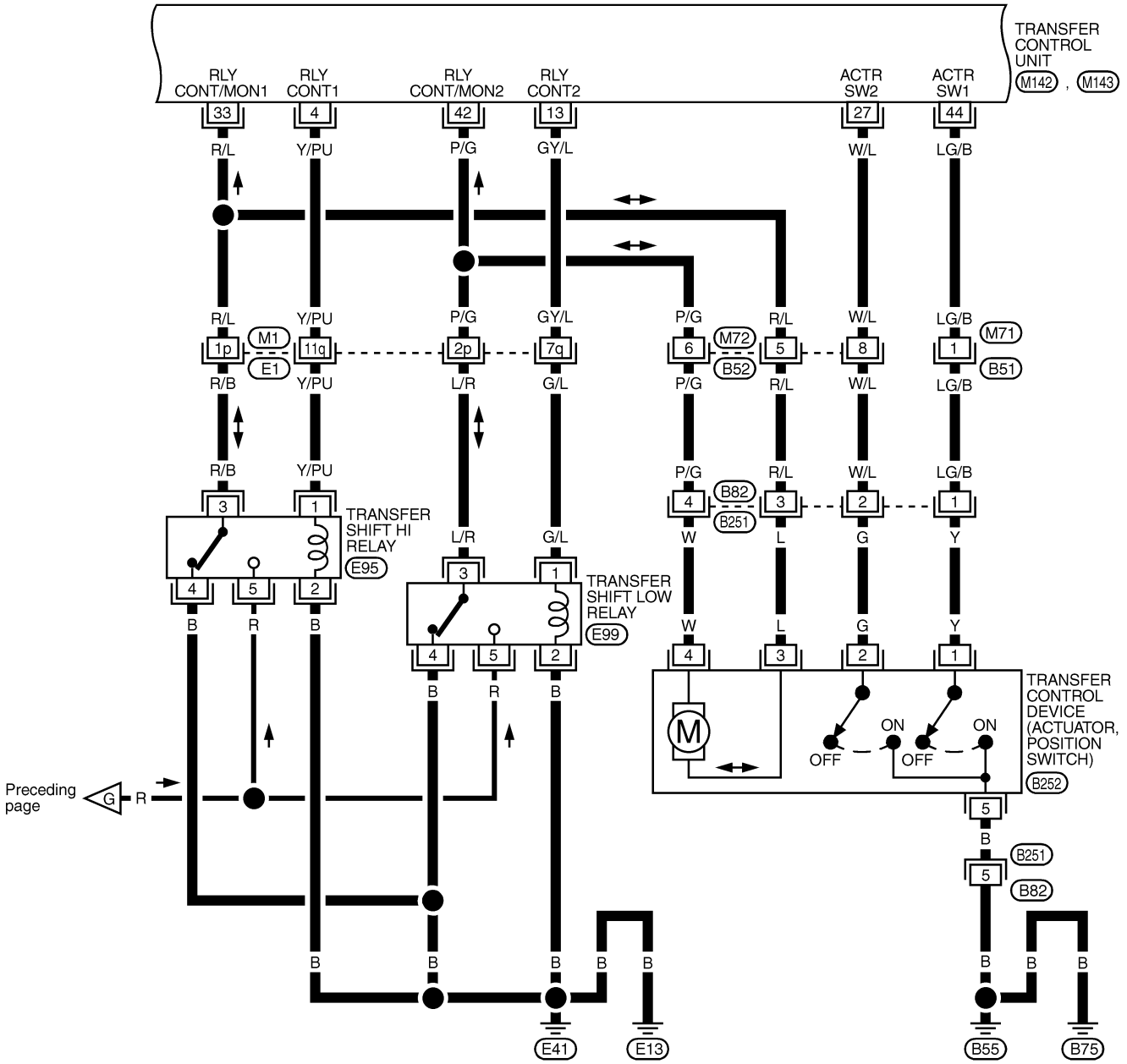

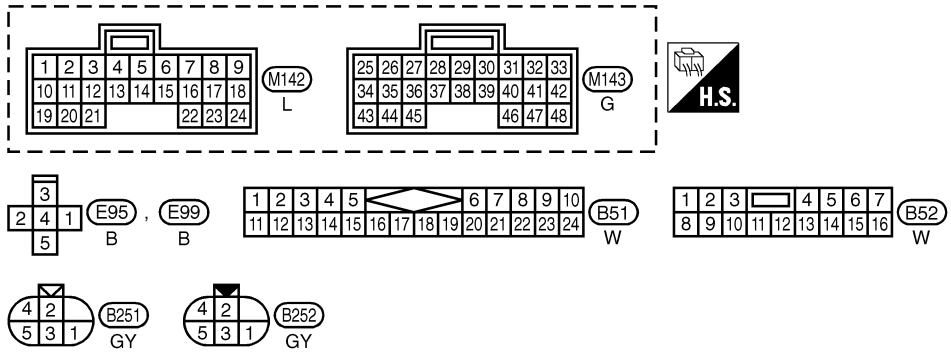

REFER TO THE FOLLOWING.
E1 -SUPER MULTIPLE JUNCTION (SMJ)

MTF177A

: Detectable line for DTC
: Non-detectable line for DTC

TF-T/F-07

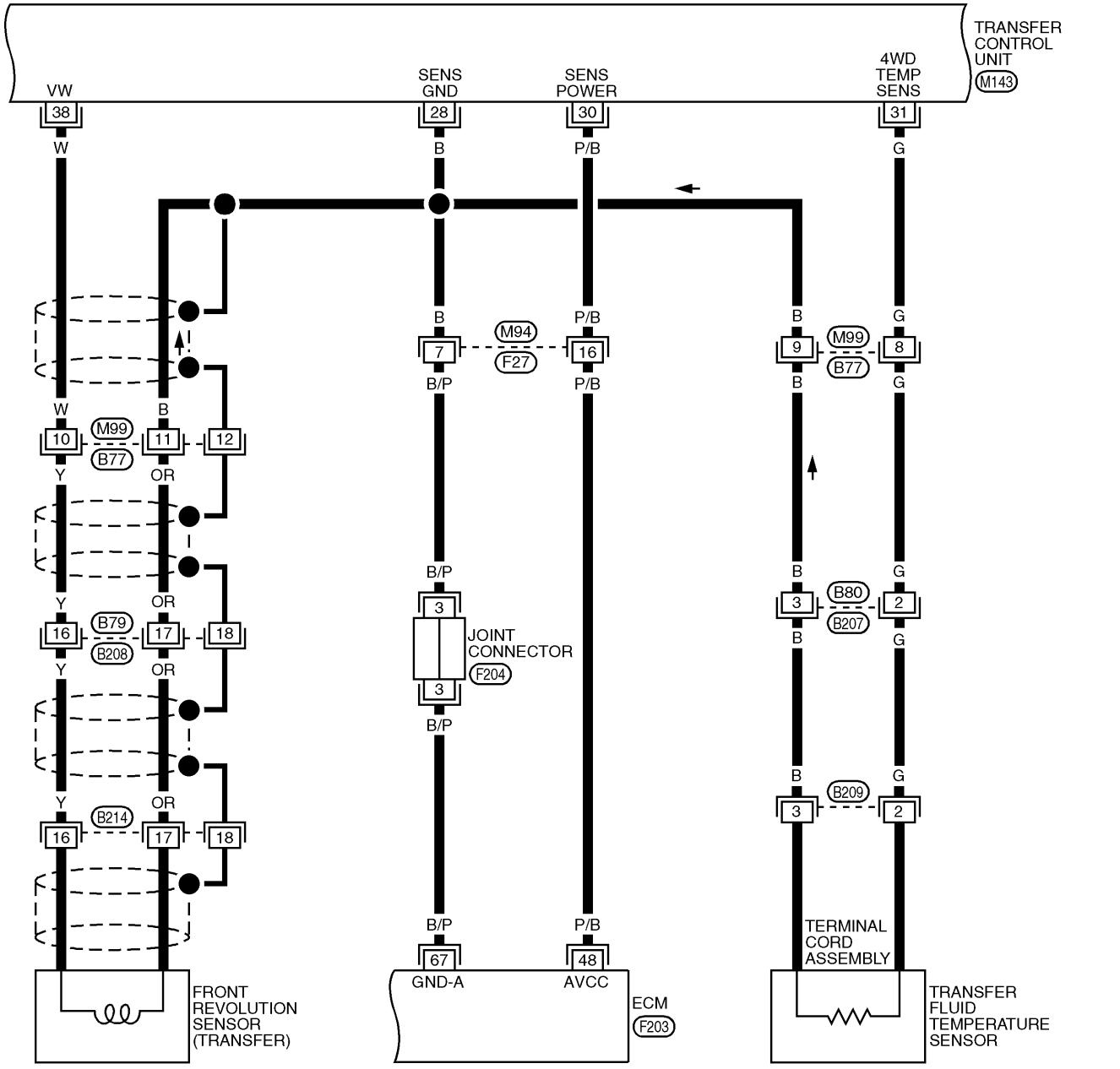

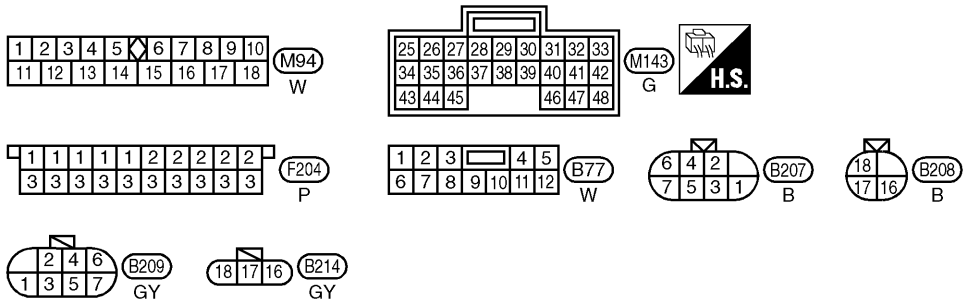

REFER TO THE FOLLOWING.
F203 -ELECTRICAL UNITS

MTF178A

: Detectable line for DTC
: Non-detectable line for DTC

TF-T/F-08

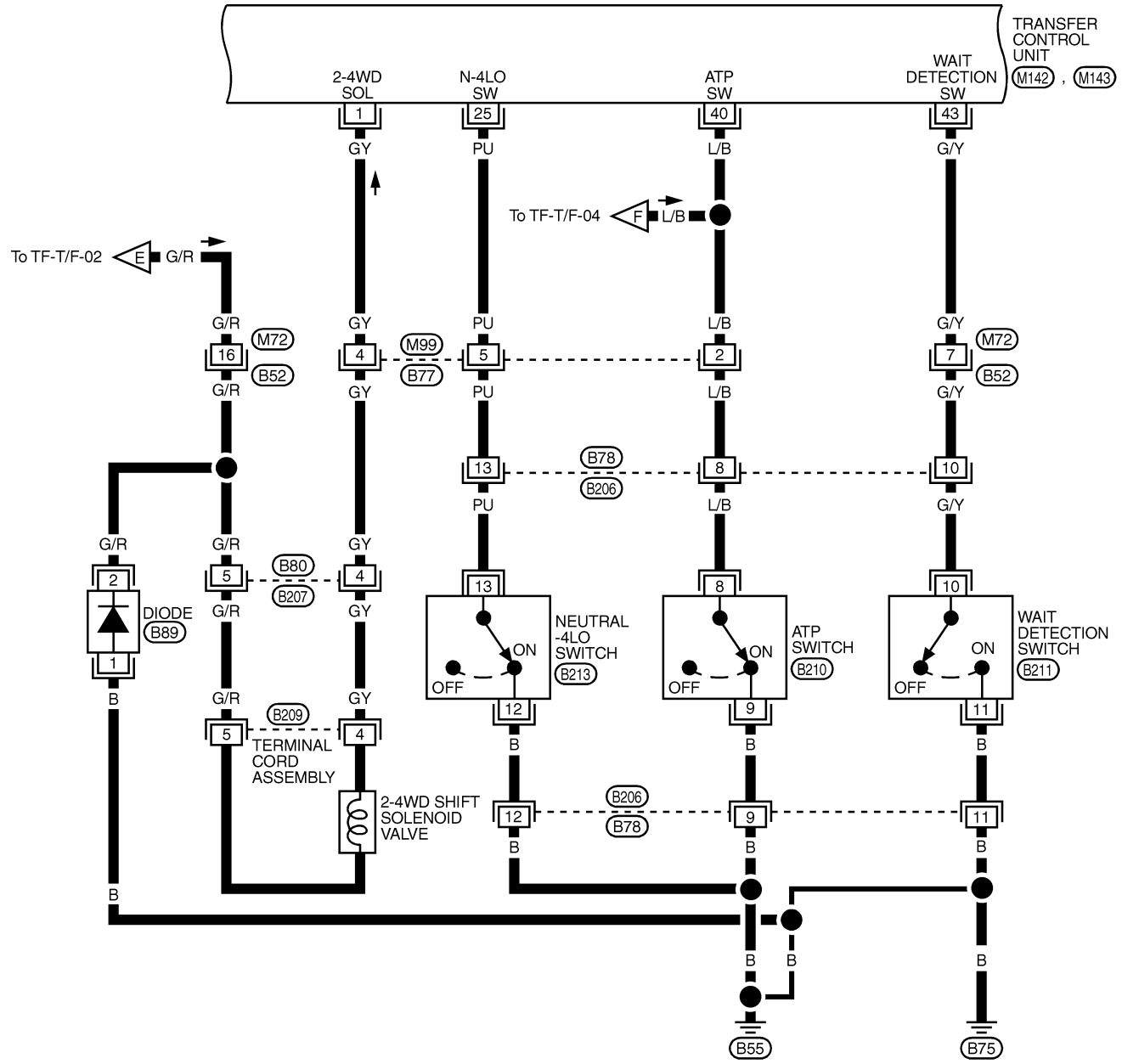

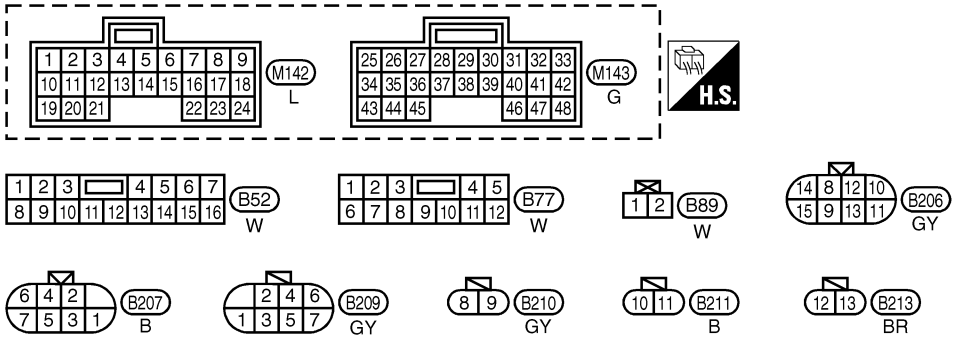

MTF179A

TF-T/F-09

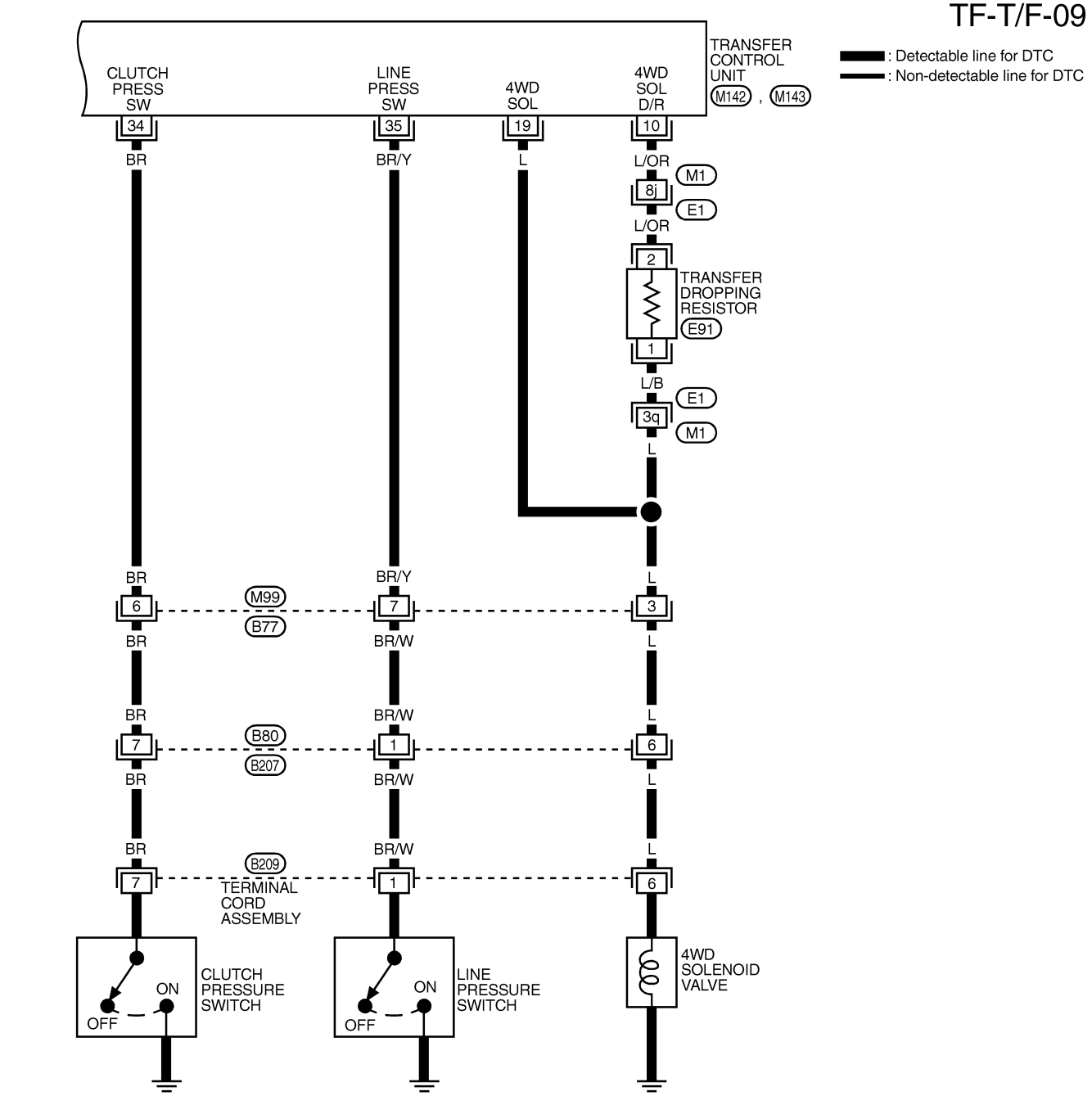

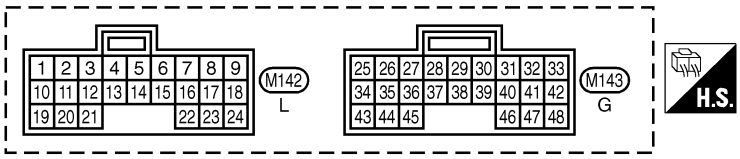

REFER TO THE FOLLOWING.
E1 -SUPER MULTIPLE JUNCTION (SMJ)

MTF180A

Trouble Diagnosis without CONSULT-II

NATF0011

DESCRIPTION

NATF0011S01

If the engine starts when there is something wrong with the all-mode 4WD system, the 4WD warning lamp turns ON or flickers in the combination meter. When the system functions properly, the warning lamp turns ON when the ignition switch is turned to “ON”, and it turns OFF after engine starts.
To locate the cause of a problem, start the self-diagnosis function. The 4WD warning lamp in the combination meter will indicate the problem area by flickering according to the self-diagnostic results. As for the details of the 4WD warning lamp flickering patterns, refer to TF-63.

SELF-DIAGNOSTIC PROCEDURE

NATF0011S02

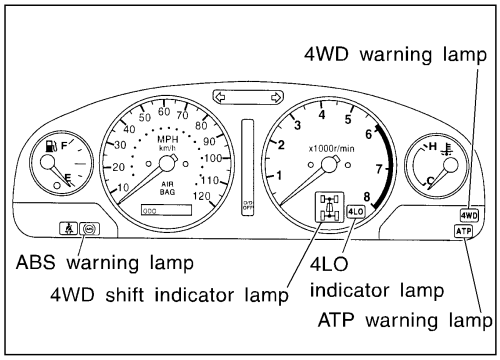

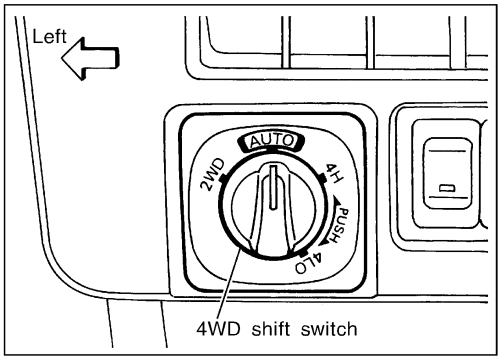

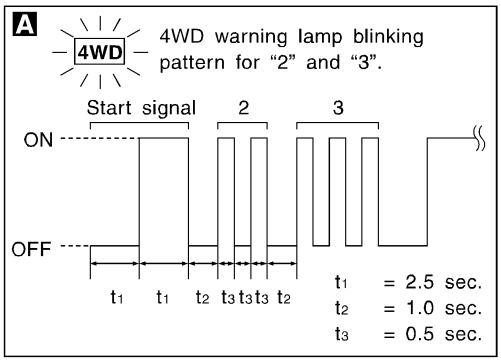

SELF-DIAGNOSIS START

↓

Warm up engine.

↓

Turn ignition switch "ON" and "OFF" at least twice, and then turn ignition switch "OFF".

↓

Move A/T selector lever to "P" position.

↓

Turn 4WD shift switch to "AUTO" position.

↓

Turn ignition switch to "ON" position. (Do not start engine.)

↓

Is 4WD warning lamp ON? → No → Go to SYMPTOM 2. *1

↓ Yes

Move A/T selector lever to "R" position.

↓

Turn 4WD shift switch to "2WD", "AUTO" and "2WD" in order.

↓

Move A/T selector lever to "D" position.

↓

Turn 4WD shift switch to "4H", "AUTO" and "4H" in order.

↓

Move A/T selector lever to "N" position.

↓

Turn 4WD shift switch to "AUTO" position.

↓

Move A/T selector lever to "P" position.

↓

A

Read the flickering of 4WD warning lamp.
Refer to *2.

↓

INSPECTION END

SMT993D

*1: TF-136

*2: TF-63

INDICATIONS OF 4WD WARNING LAMP

NATF0011S03

Flickering pattern or flickering condition	Malfunction	Check items
1	Front revolution sensor circuit is shorted or open.	Revolution sensor (front) circuit, TF-97.
2	Rear revolution sensor circuit is shorted or open.	Revolution sensor (rear) [Refer to AT-114, "DTC P0720 Vehicle Speed Sensor·A/T (Revolution sensor)".]
3	4WD solenoid valve circuit is shorted or open.	4WD solenoid valve circuit, TF-100.
4	2-4WD shift solenoid valve circuit is shorted or 2WD switch of 4WD shift switch is shorted.	2-4WD shift solenoid valve circuit or 4WD shift switch circuit, TF-102.
5	Transfer motor relay circuit is shorted or open.	Transfer motor relay circuit, TF-106.
6	If unexpected signal is detected because of ABS wheel sensor malfunction or communications error between the vehicles	Refer to ABS wheel sensor signal circuit diagnosis.
7	When malfunction in CAN communication system is detected	Refer to CAN communication system diagnosis.
8	Power supply voltage of throttle position sensor is improper. Or A/D converter of transfer control unit functions improperly.	Throttle position sensor (Refer to AT-179, "DTC P1705 Throttle Position Sensor".)
9	Transfer fluid temperature sensor circuit is open.	Transfer fluid temperature sensor circuit, TF-109.
10	Neutral-4LO switch circuit is shorted or open.	Neutral-4LO switch circuit, TF-112.
11	2-4WD shift solenoid valve circuit, 2WD switch of 4WD shift switch circuit or clutch pressure switch circuit is shorted or open.	2-4WD shift solenoid valve circuit, 4WD shift switch circuit or clutch pressure switch circuit, TF-102, 116.
12	Line pressure switch circuit is shorted or open.	Line pressure switch circuit, TF-119.
13	Engine speed signal circuit is shorted or open.	Engine speed signal (Refer to AT-119, "DTC P0725 Engine Speed Signal".)
14	Throttle position sensor circuit is shorted or open.	Throttle position sensor (Refer to AT-179, "DTC P1705 Throttle Position Sensor".)
15	Malfunction in power supply circuit of transfer control unit.	Power supply of transfer control unit
16	4WD shift switch circuit is shorted.	4WD shift switch circuit, TF-102.
17	ABS operation signal circuit is shorted.	ABS operation signal circuit, TF-122.
18	ATP switch, wait detection switch or neutral-4LO switch circuit is shorted or open.	ATP switch, wait detection switch or neutral-4LO switch circuit*, TF-112.
19	Transfer control device actuator motor is malfunctioning. (Malfunctions are detected when actuator motor fails to operate while shifting from "4H" to "4LO" or vice versa.)	Actuator motor and motor circuit, TF-151, 125.
20	Transfer control device actuator motor arm position sensing switch is malfunctioning.	Actuator motor arm position sensing switch and sensing switch circuit, TF-151, 128.
21	Transfer control device actuator circuit is shorted or open. (Malfunctions are detected when motor relay circuit is open/shorted or relay monitor circuit is open/shorted.)	Actuator motor, actuator motor arm position sensing switch and their associated circuits, TF-150, 151 and 130.
22	If VDC operation signal is being input because of VDC malfunction or communication error between the vehicles	Refer to VDC/TCS/ABS diagnosis.

Flickering pattern or flickering condition	Malfunction	Check items
23	If TCS operation signal is being input because of TCS malfunction or communication error between the vehicles	Refer to VDC/TCS/ABS diagnosis.
24	If unexpected signal is input because of A/T PNP switch circuit or communication error between the vehicles	Refer to A/T trouble diagnosis.
Repeats flickering every 2 to 5 sec.	Circuits that the self-diagnosis covers have no malfunction.	—
Repeats flickering every 0.25 sec.	● Power supply failure of memory back-up. ● Battery is disconnected for a long time. ● Battery performance is poor.	Data erase/display circuit, TF-124.
No flickering	PNP switch or 4WD shift switch circuit is shorted or open.	PNP switch (Refer to AT-102, "DTC P0705 Park/Neutral Position Switch".) or 4WD shift switch circuit, TF-102.

*: If revolution sensor malfunction is simultaneously detected, check revolution sensor first.

Trouble Diagnosis with CONSULT-II

NATF0012

CONSULT-II FUNCTION

NATF0012S10

Diagnostic test mode	Function
Work support	● This mode enables a technician to adjust some devices faster and more accurately by following the indications on the CONSULT-II unit.
Self-diagnostic results	● Self-diagnostic results can be read and erased quickly.
Data monitor	● Input/Output data in the AWD control unit can be read.
CAN diagnostic support monitor	● The results of transmit/receive diagnosis of CAN communication can be read.
Active test	● Diagnostic Test Mode in which CONSULT-II drives some actuators apart from the AWD control unit and also shifts some parameters in a specified range.
ECU part number	● AWD control unit part number can be read.

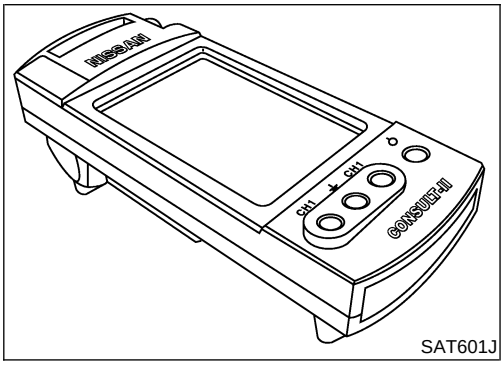

SAT601J

SELF-DIAGNOSIS

NATF0012S01

CONSULT-II Setting Procedure

NATF0012S0101

- For details, refer to the "CONSULT-II Operation Manual".

1. Turn ignition switch to "OFF" position.

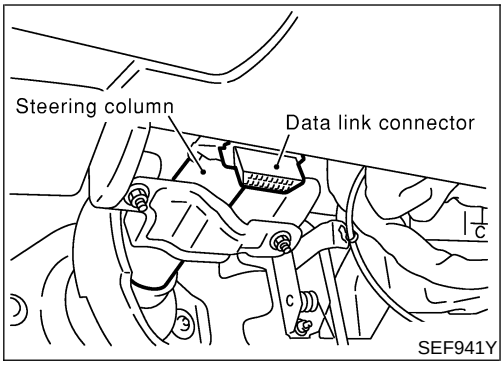

2. Connect CONSULT-II and CONSULT-II CONVERTER to data link connector which is located in instrument lower panel on driver side.

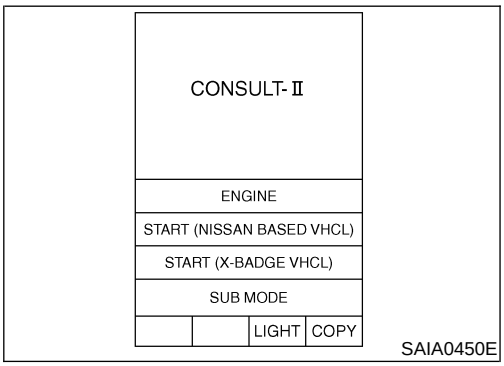

3. Start engine.
4. On CONSULT-II screen, touch "START (NISSAN BASED VHCL)".

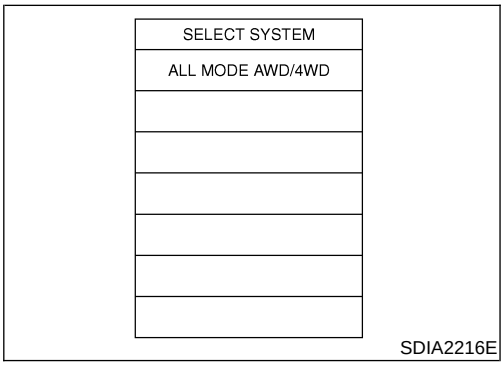

5. Touch "ALL MODE AWD/4WD" on SELECT SYSTEM screen. If "ALL MODE AWD/4WD" is not displayed, go to GI-41, "CONSULT-II Data Link Connector (DLC) Circuit".

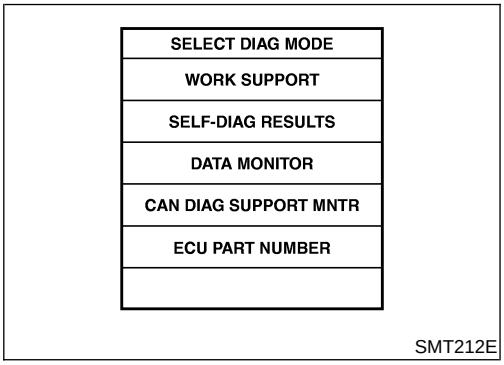

6. Touch "SELF-DIAG RESULTS" on SELECT DIAG MODE screen.

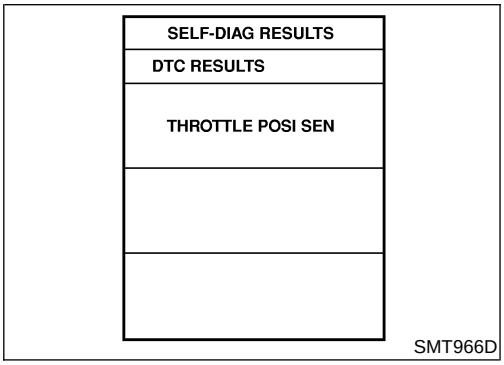

7. Self-diagnostic results are displayed.

SELF-DIAGNOSTIC ITEMS

NATF0012S02

Detected items (Screen terms for CONSULT-II, "SELF-DIAG RESULT" mode)	Malfunction is detected when...	Check items
Revolution sensor (front) (Note 3) (VHCL SPEED SEN·FR)	• Front revolution sensor (installed on T/F) signal is not input due to open circuit. • Improper signal is input while driving.	Revolution sensor (front) circuit, TF-97.
Revolution sensor (rear) (VHCL SPEED SEN·RR)	• Signal from vehicle speed sensor 1 (installed on A/T) is not input due to open circuit. • Improper signal is input while driving.	Revolution sensor (rear) [Refer to AT-114, "DTC P0720 Vehicle Speed Sensor·A/T (Revolution sensor)".]
4WD solenoid valve (DUTY SOLENOID)	• Proper voltage is not applied to solenoid valve due to open or short circuit.	4WD solenoid valve, TF-100.
2-4WD shift solenoid valve (2-4WD SOLENOID)		2-4WD shift solenoid valve or 4WD shift switch circuit, TF-102.
Transfer motor relay (MOTOR RELAY)	• Motor does not operate properly due to open or short circuit in transfer motor or motor relay.	Transfer motor relay circuit, TF-106.
Transfer fluid temperature sensor (FLUID TEMP SENSOR)	• Signal voltage from fluid temperature sensor is abnormally high (T/F fluid temperature is abnormally low) while driving.	Transfer fluid temperature sensor circuit, TF-109.
Neutral-4LO switch (N POSI SW TF)	• Improper signal is input while driving.	Neutral-4LO switch, TF-112.
Clutch pressure (CLUTCH PRESSURE)	• Improper signal is input due to open or short circuit. • Malfunction occurs in clutch pressure hydraulic circuit.	Clutch pressure switch circuit (*1), TF-116.
Line pressure (LINE PRESSURE)	• Improper signal is input due to open or short circuit. • Malfunction occurs in line pressure hydraulic circuit.	Line pressure switch circuit (*1), TF-119.
Engine speed signal (Note 1) (ENGINE SPEED SIG)	• Engine speed is abnormally low while driving.	Engine speed signal (Refer to AT-119, "DTC P0725 Engine Speed Signal".)
Throttle position sensor (THRTL POSI SEN)	• Signal voltage from throttle position sensor is abnormally high. • Signal voltage from throttle position sensor is abnormally low when closed throttle position switch is OFF.	Throttle position sensor (Refer to AT-179, "DTC P1705 Throttle Position Sensor".)
Transfer control unit (ADC) C/U (ADC)/THRTL SEN	• Power supply voltage for throttle position sensor is improper or A/D converter system of transfer control unit is malfunctioning.	Throttle position sensor (Refer to AT-179, "DTC P1705 Throttle Position Sensor".)
Battery voltage (Note 1) (BATTERY VOLTAGE)	• Power supply voltage for transfer control unit is abnormally low while driving.	Power supply circuit (Refer to AT-99, "Wiring Diagram — AT — MAIN".)
4WD shift switch (4WD MODE SW)	• More than two switch inputs are simultaneously detected due to short circuit of 4WD shift switch.	4WD shift switch circuit, TF-102.
ABS operation signal (Note 4) (ABS OPER SIGNAL)	• When a malfunction signal due to disconnection or shorting is detected. • When a defect signal is entered from the ABS control unit.	ABS operation signal circuit, TF-122.
Wait detection switch (Note 2) (WAIT DETECT SWITCH)	• Improper signal is input due to open or short circuit.	ATP switch, wait detection switch and neutral-4LO switch circuits (*2), TF-112.
Shift actuator abnormal (SHIFT ACT)	Transfer control device actuator motor is malfunctioning. (Malfunctions are detected when actuator motor fails to operate while shifting from "4H" to "4LO" or vice versa.)	Actuator motor and motor circuit, TF-151, 125.

Detected items (Screen terms for CONSULT-II, "SELF-DIAG RESULT" mode)	Malfunction is detected when...	Check items
Shift actuator position switch abnormal (SHIFT ACT P/S)	Transfer control device actuator motor arm position sensing switch is malfunctioning.	Actuator motor arm position sensing switch and sensing switch circuit, TF-151, 128.
Shift actuator circuit abnormal (SHIFT ACT CIR)	Transfer control device actuator circuit is shorted or open. (Malfunctions are detected when motor relay circuit is open/shorted or relay monitor circuit is open/shorted.)	Actuator motor, actuator motor arm position sensing switch and their associated circuits, TF-150, 151 and 130.
Memory power supply stop	● Due to removal of battery which cuts off power supply to transfer control unit, self-diagnosis memory function is suspended.	Data erase/display circuit, TF-124.
Transfer control unit (RAM) [CONTROL UNIT (RAM)]	● Malfunction is detected in the memory (RAM) system of transfer control unit.	
Transfer control unit (ROM) [CONTROL UNIT (ROM)]	● Malfunction is detected in the memory (ROM) system of transfer control unit.	
Transfer control unit (EEPROM) [CONTROL UNIT (EEPROM)]	● Malfunction is detected in the memory (EEPROM) system of transfer control unit.	
Longitudinal G-sensor	Displayed, but do not use.	
ABS VHL SPD SEN	● ABS vehicle speed sensor signal is not input due to an open circuit. ● An unexpected signal is input when vehicle is being driven.	Refer to ABS vehicle speed sensor diagnosis.
STEERING ANGLE SENSOR	Displayed, but do not use.	
VDC OPER SIG	If VDC operation signal is being input because of VDC malfunction or communication error between the vehicles	Refer to VDC/TCS/ABS diagnosis.
TCS OPER SIG	If TCS operation signal is being input because of TCS malfunction or communication error between the vehicles	Refer to VDC/TCS/ABS diagnosis.
CAN COMM	Malfunction is detected in CAN communication.	CAN communication circuit
A/T POSITION SIGNAL	When AT PNP switch circuit is malfunction or communication error between the vehicles	Refer to AT PNP switch circuit diagnosis.

Note 1: When a malfunction occurs, it is only displayed and not stored in the memory.

Note 2: When the wait detection switch has been properly fixed, malfunction information is erased from the memory.

Note 3: If 4WD shift switch is left between 4H and 4LO for a while, this indication may be displayed.

(*1): If the malfunction is detected only while driving in reverse, check the continuity of "R" position on A/T PNP switch. When there is nothing wrong with the electrical system, check the hydraulic system.

(*2): If a revolution sensor malfunction is detected at the same time, check the revolution sensor circuit first.

Note 4: When this malfunction is detected with the ABS warning lamp off, first check for disconnection or shorting in the harness between the transfer control unit and the ABS control unit.

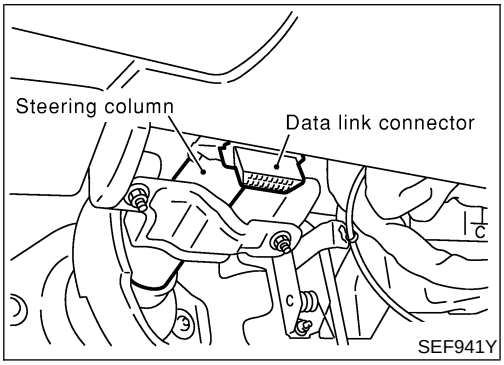

DATA MONITOR

NATF0012S03

CONSULT-II Setting Procedure

NATF0012S0301

- For details, refer to the "CONSULT-II Operation Manual".

1. Turn ignition switch to "OFF" position.
2. Connect CONSULT-II and CONSULT-II CONVERTER to data link connector, which is located in instrument lower panel on driver side.
3. Turn ignition switch to "ON" position.
4. Touch "START (NISSAN BASED VHCL)".

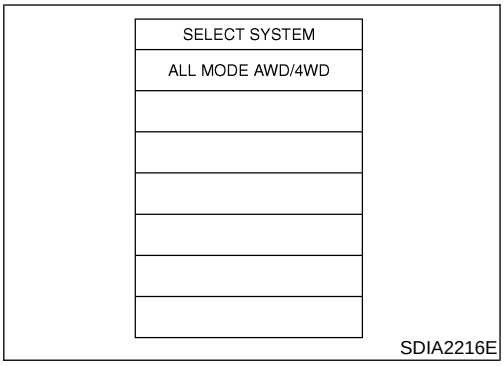

5. Touch "ALL MODE AWD/4WD".
   If "ALL MODE AWD/4WD" is not displayed, go to GI-41, "CONSULT-II Data Link Connector (DLC) Circuit".

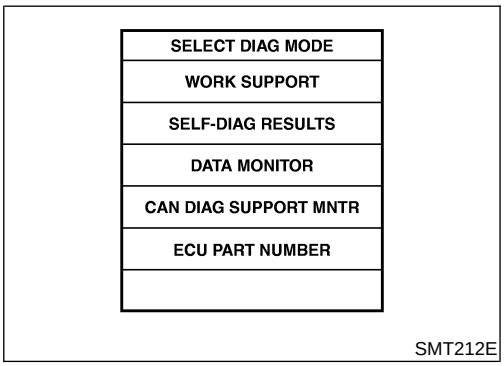

6. Touch "DATA MONITOR".

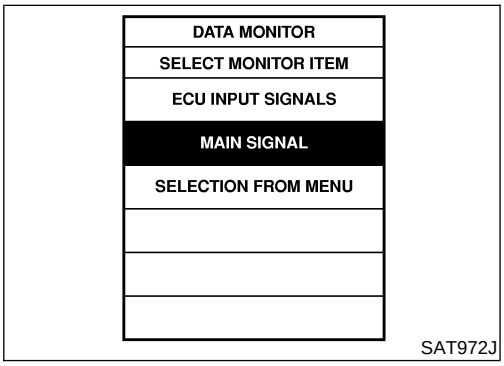

7. Touch "ECU INPUT SIGNALS" or "MAIN SIGNALS".
8. Select "Numerical Display", "Bar Chart Display" or "Line Graph Display".
9. Touch "SETTING" to set record conditions.

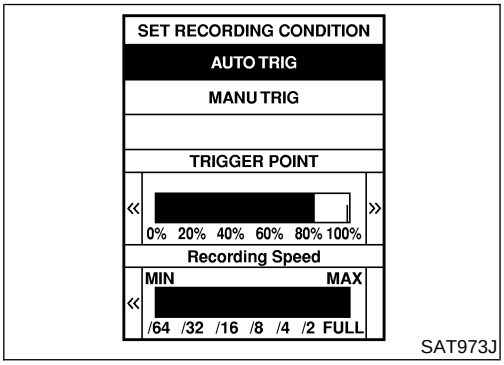

10. Touch "AUTO TRIG" or "MANU TRIG".
11. Return to "SELECT MONITOR ITEM" on "DATA MONITOR" screen and touch "START".

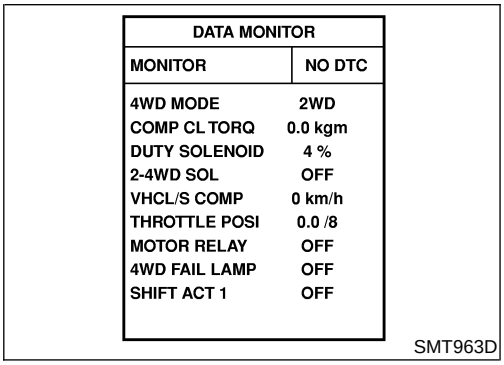

12. Monitored data are displayed.

DATA MONITOR ITEMS

NATF0012S04

○: Standard ▼: Option

Item [Unit]	Monitor item selection			Remarks
	ECU INPUT SIGNALS	MAIN SIGNALS	SELECTION FROM MENU	
Revolution sensor-front [km/h (MPH)]	○		▼	Revolution sensor installed on T/F
Revolution sensor-rear [km/h (MPH)]	○		▼	Vehicle speed sensor·A/T
Engine speed [rpm]	○		▼	
Throttle position sensor [V]	○		▼	
Transfer fluid temperature sensor [V]	○		▼	
Battery voltage [V]	○		▼	
2WD switch [ON-OFF]	○		▼	2WD switch of 4WD shift switch
AUTO switch [ON-OFF]	○		▼	AUTO switch of 4WD shift switch
Lock switch [ON-OFF]	○		▼	4H switch of 4WD shift switch
4L switch [ON-OFF]	○		▼	4LO switch of 4WD shift switch
N position switch TF [ON-OFF]	○		▼	N position switch of transfer
Line pressure switch [ON-OFF]	○		▼	Line pressure switch
Clutch pressure switch [ON-OFF]	○		▼	Clutch pressure switch
ATP switch [ON-OFF]	○		▼	
N position switch [ON-OFF]	○		▼	"N" position on A/T PNP switch
R position switch [ON-OFF]	○		▼	"R" position on A/T PNP switch
P position switch [ON-OFF]	○		▼	"P" position on A/T PNP switch
Closed throttle position switch [ON/OFF]	○		▼	Displayed, but do not use.
ABS operation switch [ON-OFF]	○		▼	ABS operation switch
Wait detection switch [ON-OFF]	○		▼	
Throttle opening		○	▼	Throttle opening recognized by transfer control unit
4WD-mode		○	▼	4WD-mode recognized by transfer control unit (2WD, AUTO, 4H & 4LO)
Vehicle speed comp [km/h (MPH)]		○	▼	Vehicle speed recognized by transfer control unit
*Control torque [N·m (kg-m, ft-lb)]		○	▼	Calculated torque recognized by transfer control unit
Duty solenoid valve [%] (Transfer 4WD solenoid valve)		○	▼	
2-4WD shift solenoid valve [ON-OFF]		○	▼	Control signal outputs of transfer control unit
Transfer motor relay [ON-OFF]		○	▼	
Shift activating 1 [ON-OFF]		○	▼	
Shift activating 2 [ON-OFF]		○	▼	

Item [Unit]	Monitor item selection			Remarks
	ECU INPUT SIGNALS	MAIN SIGNALS	SELECTION FROM MENU	
2-4WD shift solenoid valve monitor [ON-OFF]			▼	Check signal (re-input signal) of transfer control unit control signal output is displayed. If circuit is shorted or open, ON/OFF state does not change.
Transfer motor relay monitor [ON-OFF]			▼	
Shift activating monitor 1 [ON-OFF]			▼	
Shift activating monitor 2 [ON-OFF]			▼	
4WD fail lamp [ON-OFF]		○	▼	Transfer control unit control signal output for 4WD warning lamp (left)
Shift position switch 1 [ON-OFF]	○		▼	
Shift position switch 2 [ON-OFF]	○		▼	
2WD indicator lamp [ON-OFF]			▼	Transfer control unit control signal output for 4WD shift indicator lamp (rear)
AUTO indicator lamp [ON-OFF]			▼	Transfer control unit control signal output for 4WD shift indicator lamp (front & rear)
LOCK indicator lamp [ON-OFF]			▼	Transfer control unit control signal output for 4WD shift indicator lamp (center)
4LO indicator lamp [ON-OFF]			▼	Transfer control unit control signal output for 4WD shift indicator lamp (right)
Offset at starting			▼	Appears on monitor but does not function.
Clutch limit [N·m (kg-m, ft-lb)]			▼	Clutch force release limit value set in WORK SUPPORT
Voltage [V]			▼	Value measured by voltage probe is displayed.
Frequency [Hz]			▼	Value measured by pulse probe is displayed. If measurement is impossible, "#" sign is displayed. "#" sign is also displayed at the final data value until the measurement result is obtained.
DUTY-HI			▼	Duty cycle value for measurement probe is displayed.
DUTY-LOW			▼	
PLS WIDTH-HI			▼	Measured pulse width of measurement probe is displayed.
PLS WIDTH-LOW			▼	
VHCL SPEED SEN-FR [km/h]	○		▼	Indicates average vehicle speed of ABS front left/right wheel.
VHCL SPEED SEN-RR [km/h]	○		▼	Indicates average vehicle speed of ABS rear left/right wheel.
LONGITUDINAL G-SENSOR [G]	○		▼	Displayed, but do not use.
TF VHCL SPD-FR [km/h]	○		▼	Displayed, but do not use.
AT VHCL SPD-RR	○		▼	Indicates A/T rear vehicle speed.
A/T actual gear position	○		▼	A/T actual gear position is displayed.
VDC OPER SIG [ON-OFF]	○		▼	VDC operation signal is displayed.
TCS OPER SIG [ON-OFF]	○		▼	TCS operation signal is displayed.

Item [Unit]	Monitor item selection			Remarks
	ECU INPUT SIGNALS	MAIN SIGNALS	SELECTION FROM MENU	
ATP LAMP [ON-OFF]			▼	C/U control signal output of ATP lamp is displayed.

*: This item is indicated as "COMP CL TORQ".

REFERENCE VALUE IN DATA MONITOR MODE

NATF0012S09

Indicated items (Screen terms for CONSULT-II, "DATA MONITOR" mode)	Display	Conditions
Throttle position sensor (THRTL POS SEN)	Approx. 0.5 - 4.0V	Throttle valve fully closed to fully open
Transfer fluid temperature sensor (FLUID TEMP SE)	Approx. 1.5 - 0.5V	Transfer fluid temperature approx. 20 - 80°C (68 - 176°F)
Closed throttle position switch (CLOSED THL/SW) (Without VDC)	OFF	Displayed, but do not use.
ABS operation switch (ABS OPER SW)	OFF	ABS is not operating.
	ON	ABS is operating.
2WD position (2WD SW)	ON	4WD shift switch is in "2WD".
	OFF	Except the above condition
Lock position (LOCK SWITCH)	ON	4WD shift switch is in "4H".
	OFF	Except the above condition

Indicated items	Display			
Neutral-4LO switch (N POSI SW TF) ATP switch (ATP SWITCH) Wait detection switch (WAIT DETCT SW)	4WD shift switch position	2WD, AUTO, 4H	(N)	4LO
	ATP switch	OFF	ON	OFF
	Neutral-4LO switch	OFF	ON	
	Wait detection switch	OFF	ON	
		See Note.		
	Note: When shifting from "4LO" to "2WD", "AUTO", "4H", it turns ON when "Wait" function is operating (and it turns OFF when "Wait" function is canceled).			

Indicated items	Throttle valve	4WD shift switch	A/T selector lever	Motor relay	Remarks
Transfer motor relay (MOTOR RELAY)	Fully closed	2WD	—	OFF	
		AUTO, 4LO	P, N	OFF	ON for approx. 2 sec. after shifting to "P" and "N"
			Others	ON	
		4H	P	OFF	ON for approx. 2 sec. after shifting to "P"
			Others	ON	

Indicated items	Display	Conditions
Line pressure switch (LINE PRES SW)	OFF	The vehicle has been left at room temperature for 5 minutes and more with ignition switch in "OFF" position.
	ON	Ignition switch in "ON", and 4WD shift switch in "AUTO" or "4H" and A/T selector lever in "D".

Indicated items (Screen terms for CONSULT-II, "DATA MONITOR" mode)	Display	Conditions	
Clutch pressure switch (CL PRES SW)	OFF	Ignition switch in "ON", and 4WD shift switch in "2WD". ("Wait" function is not operating.)	
	ON	Ignition switch in "ON", and 4WD shift switch in "AUTO" or "4H" and A/T selector lever in "D". ("Wait" function is not operating.)	
Control torque (COMP CL TORQ)	0 kg-m	4WD shift switch ("Wait" function is not operating.)	In "2WD" position
	39 - 1,079 N·m (4 - 110 kg-m, 29 - 796 ft-lb)		In "AUTO" position
	1,079 N·m (110 kg-m, 796 ft-lb)		In "4H" or "4LO" position
4WD solenoid (DUTY SOLENOID)	4%		In "2WD" position
	94 - 4%		In "AUTO" position
	4%		In "4H" or "4LO" position
2-4WD shift solenoid valve (2-4WD SOL)	OFF	4WD shift switch	In "2WD" position
	ON ("Wait" function is not operating.)		In "AUTO" position
	OFF ("Wait" function is operating.)		
	ON ("Wait" function is not operating.)		In "4H" position
	OFF ("Wait" function is operating.)		
	ON		In "4LO" position
Battery voltage	Approx. 12V	Key switch "ON" and engine at rest	
	Approx. 13 - 14V	During idling	
AUTO switch	OFF	4WD shift switch in other than "AUTO" position	
	ON	4WD shift switch in "AUTO" position	
4L switch	OFF	4WD shift switch in other than "4LO" position	
	ON	4WD shift switch in "4LO" position	
N position switch	OFF	A/T selector lever in other than "N" position	
	ON	A/T selector lever in "N" position	
R position swtich	OFF	A/T selector lever in other than "R" position	
	ON	A/T selector lever in "R" position	
P position switch	OFF	A/T selector lever in other than "P" position	
	ON	A/T selector lever in "P" position	
Throttle opening	0.0/8 - 8.0/8	Throttle fully closed (0.0/8) or throttle fully open (8.0/8)	
4WD-mode	2WD	4WD shift switch	In "2WD" position
	AUTO		In "AUTO" position
	LOCK		In "4H" position
	4L		In "4LO" position

Indicated items (Screen terms for CONSULT-II, "DATA MONITOR" mode)	Display	Conditions
Front wheel speed	0 - 255 km/h (0 - 158 MPH)	0 km/h (vehicle at standstill)
Rear wheel speed	0 - 255 km/h (0 - 158 MPH)	0 km/h (vehicle at standstill)
Shift ACTR operating 1, Shift activating monitor 1	OFF	During normal operation
	ON	During shifts from "4H" to "4LO" position
Shift ACTR operating 2, Shift activating monitor 2	OFF	During normal operation
	ON	During shifts from "4LO" to "4H" position
4WD fail lamp	OFF	During normal operation
	ON	During 2-second period (after key switch turned to "ON") or when system is out of order
Shift ACTR position sensing switch 1	OFF	4WD shift switch is in a position other than "4LO".
	ON	4WD shift switch in "4LO" position
Shift ACTR position sensing switch 2	OFF	4WD shift switch in "4LO" position
	ON	4WD shift switch is in a position other than "4LO".
2WD indicator lamp	OFF	Engine at rest or system out of order
	ON	Except the above condition
AUTO indicator lamp	OFF	Engine at rest during 2WD-mode operation or system out of order
	ON	4WD shift switch in "4LO" or "4H" or "AUTO" position
LOCK indicator lamp	OFF	Engine at rest and 4WD shift switch in "AUTO" position during 2WD-mode operation or system out of order
	ON	4WD shift switch in "4H" or "4LO" position
4LO indicator lamp	OFF	Engine at rest and 4WD shift switch in "AUTO" position during 2WD-mode operation or system out of order
	ON	4WD shift switch in "4LO" position
VDC operation signal (VDC OPER SIG)	OFF	VDC is not operating.
	ON	VDC is operating.
TCS operation signal (TCS OPER SIG)	OFF	TCS is not operating.
	ON	TCS is operating.

WORK SUPPORT

NATF0012S06

Purpose

NATF0012S0601

When there is no problem with transfer and 4WD system, following symptoms in "AUTO" mode may be claimed by a customer.

- Tight corner braking symptom after accelerator (throttle) opening (Note 1)
- Vibration when accelerating on a low μ road (snow-covered or icy road) (Note 2)
  It is possible to deal with these symptoms by changing "CLUTCH FORCE RELEASE LIMIT VALUE". However, be careful when changing the values because it may adversely affect driving performance.

NOTE:

1) When the accelerator is slightly open (approx. 1/8) or fully closed after being opened. The tight corner braking symptom

during idle creep driving with accelerator fully closed cannot be solved by this method. Refer to SYMPTOM 8, TF-144.

2) A slight shock is felt at a few hertz as if it were being pushed lightly from behind.

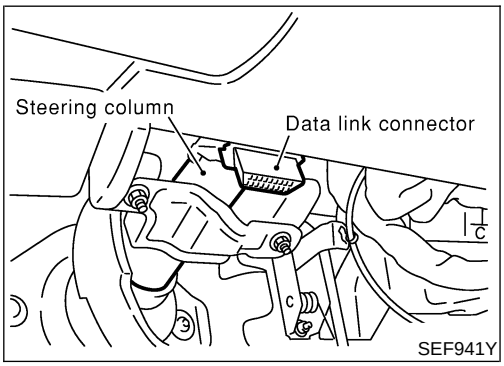

SEF941Y

CONSULT-II Setting Procedure

NATF0012S0602

- For details, refer to the "CONSULT-II Operation Manual".

1. Turn ignition switch to "OFF" position.
2. Connect CONSULT-II and CONSULT-II CONVERTER to data link connector, which is located in instrument lower panel on driver side.
3. Turn ignition switch to "ON" position.
4. Touch "START (NISSAN BASED VHCL)".
5. Touch "ALL MODE AWD/4WD".
   If "ALL MODE AWD/4WD" is not displayed, go to GI-41, "CONSULT-II Data Link Connector (DLC) Circuit".
6. Touch "WORK SUPPORT".

SELECT DIAG MODE
WORK SUPPORT
SELF-DIAG RESULTS
DATA MONITOR
CAN DIAG SUPPORT MNTR
ECU PART NUMBER

SMT212E

7. Select WORK ITEM by touching "CLUTCH/F RLS LIM ADJ".

NOTE:
"START TORQ OFFSET ADJ" is displayed, but the transfer does not have this function.

SELECT WORK ITEM
START TORQ OFFSET ADJ
CLUTCH/F RLS LIM ADJ

SMT967D

CLUTCH FORCE RELEASE LIMIT ADJUSTMENT

NATF0012S07

1.2 kg-m: Tight corner braking symptom is alleviated. However, vibration may occur when accelerating on a low μ road (icy road, etc.).
0.3 kg-m: Initial set value
0.2 kg-m: Do not set to this value because the tight corner braking symptom will get worse.

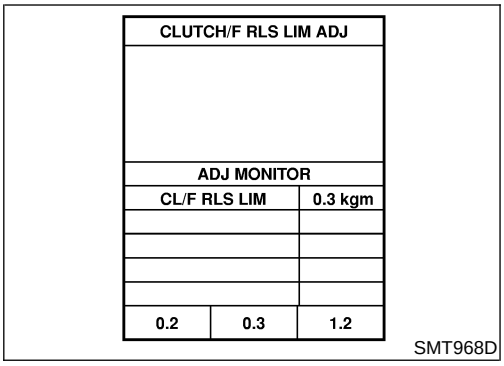

1. Current CLUTCH FORCE RELEASE LIMIT value "0.3 kg-m" appears under "CONDITION SETTING" on CONSULT-II display.
2. Touch "1.2" on the display.

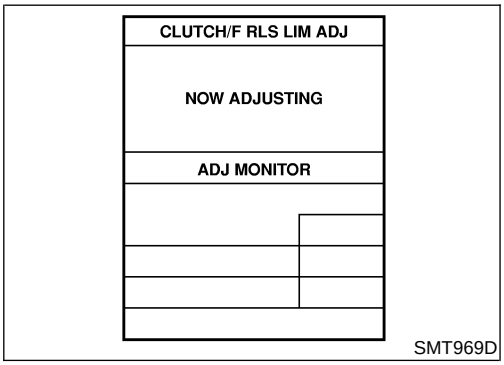

3. Display changes to "NOW ADJUSTING" in a short time.

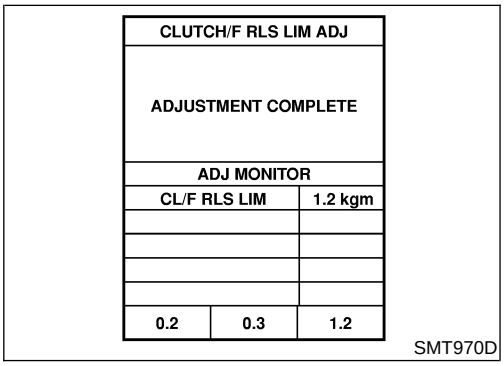

4. When clutch force release limit value is set to "1.2 kg-m", current value "0.3 kg-m" shown on display will be replaced by "1.2 kg-m" and "ADJUSTING COMPLETE" will appear at the same time. Clutch force release limit value setting is now complete.

Introduction

NATF0013

DESCRIPTION

NATF0013S01

When a malfunction (indicated by the 4WD warning lamp illumination) occurs, collect information first from the customer about how the malfunction occurs. Then, proceed with the diagnosis presuming it is the cause. Also inspect the electrical system, paying close attention to other possibilities such as fluid level and leaks.
All-mode 4WD transfer is controlled by transfer control unit and sensors.
If a malfunction occurs in the all-mode 4WD system, the 4WD warning lamp lights up to inform of the system malfunction. There are two ways to identify the cause of the malfunction.

1) Performing the self-diagnosis. (The 4WD warning lamp will indicate what kind of malfunction has occurred by flickering.)
2) Performing diagnosis using CONSULT-II.

DIAGNOSTIC WORKSHEET

NATF0013S02

Information from Customer

NATF0013S0201

KEY POINTS

WHAT ..... Vehicle model

WHEN..... Date, Frequencies

WHERE..... Road conditions

HOW..... Operating conditions, Symptoms

Information sheet from customer		
Customer name MR/MS	Model & Year	VIN
Transfer model ATX14A	Engine	Mileage
Incident Date	Manuf. Date	In Service Date
Frequency	☐ Continuous ☐ Intermittent (times a day)	
Symptoms	☐ 4WD shift indicator lamp does not turn on.	
	☐ 4WD warning lamp does not turn on.	
	☐ 4WD shift indicator lamp does not turn off.	
	☐ ATP warning lamp does not turn on.	
	☐ 4LO indicator lamp does not turn on.	
	☐ 4WD shift indicator lamp does not indicate “4H”.	
	☐ 4WD shift indicator lamp repeats flicking.	
	☐ Tight corner braking symptom occurs.	
	☐ 4WD system does not operate.	
	☐ Others.	
4WD warning lamp	☐ Continuously lit	☐ Not lit

Diagnostic Worksheet

NATF0013S0202

1.	☐ Listen to customer complaints.	TF-79
2.	☐ Check transfer fluid.	TF-79
	☐ Leakage ☐ Fluid condition ☐ Fluid level	
3.	☐ Road testing	TF-79
	☐ 1. Check before engine is started. ☐ 2. Check at idle. ☐ 3. Cruise test	
4.	☐ Perform self-diagnosis NG items (with CONSULT-II and without CONSULT-II).	TF-64, TF-61
5.	☐ Check component. Repair or replace the damaged parts.	TF-147
6.	☐ Perform final check. Perform road test (1 through 3).	TF-79

Work Flow

=NATF0014

HOW TO PERFORM TROUBLE DIAGNOSES FOR QUICK AND ACCURATE REPAIR

NATF0014S01

A good understanding of the malfunction conditions can make troubleshooting faster and more accurate.
In general, each customer feels differently about a problem. It is important to fully understand the symptoms or conditions for a customer complaint.
Make good use of the two sheets provided, “Information from Customer” (Refer to TF-76.) and “Diagnostic Worksheet” (Refer to TF-77.), to perform the best troubleshooting possible.

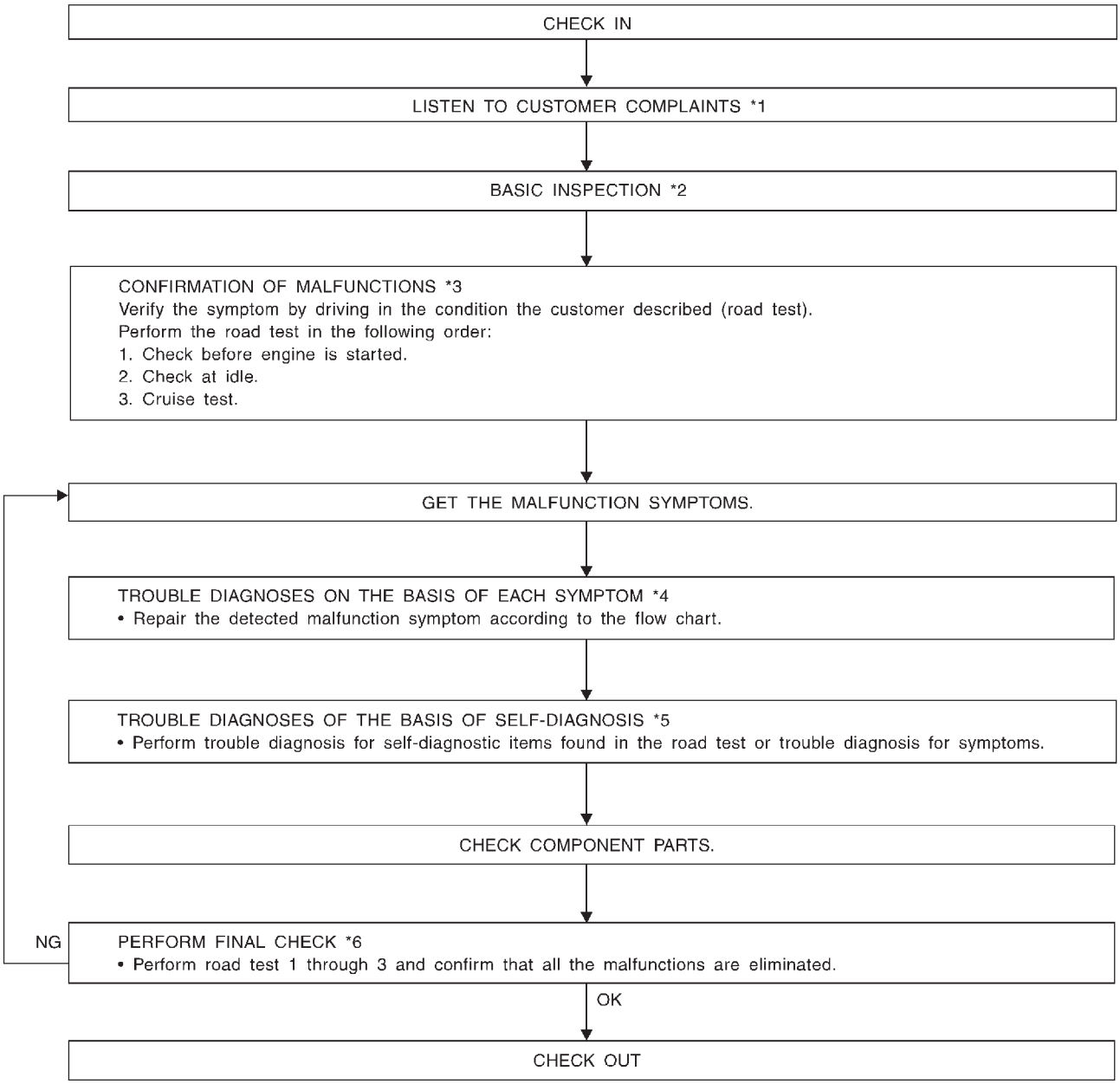

MTF013A

*1: TF-79
*2: TF-79
*3: TF-79
*4: TF-134 - TF-145
*5: TF-97 - TF-130
*6: TF-79

Listen to Customer Complaints

NATF0015

- Each customer feels differently about a problem. It is important to fully understand the symptoms or conditions for a customer complaint.
- Listen to the customer about how and when the malfunction occurs, and make good use of it when performing the road test.

Transfer Fluid Check

NATF0016

- Check fluid for leaks and fluid level. Refer to MA-24, “Checking All-mode 4WD Transfer Fluid”.

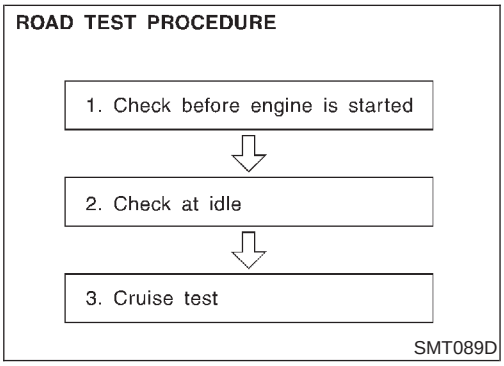

Road Test

NATF0017

PREPARATION FOR ROAD TEST

NATF0017S01

- The purpose of the test is to determine overall performance of transfer and analyze causes of problems.
- The road test consists of the following three parts:
- When a malfunction is found in any part of transfer, perform the road test to locate the malfunction area and repair the malfunction parts.

1. Check before engine is started
2. Check at idle
3. Cruise test

- Perform road test and place checks for NG items on the diagnostic worksheet. Refer to TF-77.

1. CHECK BEFORE ENGINE IS STARTED

=NATF0017S02

1	CHECK 4WD SHIFT INDICATOR LAMP

1. Park vehicle on flat surface.
2. Turn ignition switch to "OFF" position.
3. Move A/T selector lever to "P" position.
4. Set 4WD shift switch to "4H" position.

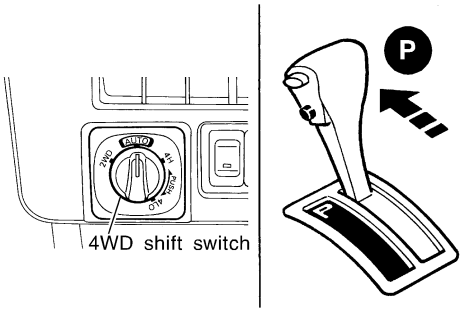

SMT849D

5. Set 4WD shift switch to "2WD" position.
6. Turn ignition switch to "ON" position. (Do not start engine.)
7. Does 4WD shift indicator lamp turn ON for approx. 1 second?

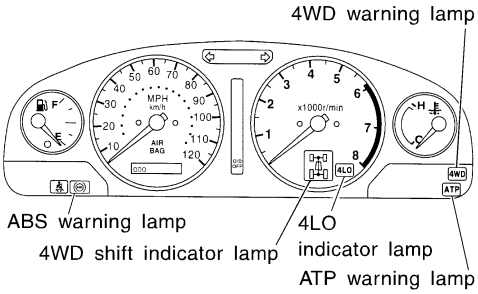

SMT994D

Yes or No

Yes	▶	GO TO 2.
No	▶	Go to Symptom 1. Refer to TF-134.

2	CHECK 4WD WARNING LAMP

Is 4WD warning lamp turned ON?

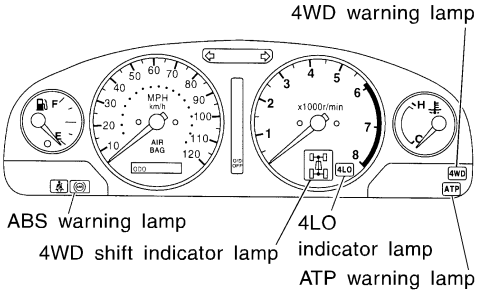

SMT994D

Yes or No

Yes	▶	1. Turn ignition switch to "OFF" position. 2. Perform self-diagnosis. Refer to "Trouble Diagnosis without CONSULT-II", TF-61. 3. Go to "2. CHECK AT IDLE". Refer to TF-81.
No	▶	Go to Symptom 2. Refer to TF-136.

2. CHECK AT IDLE

=NATF0017S03

1	CHECK 4WD SHIFT INDICATOR LAMP

1. Park vehicle on flat surface.
2. Turn ignition switch to "OFF" position.
3. Move A/T selector lever to "P" or "N" position.
4. Set 4WD shift switch to "4H" position.
5. Set 4WD shift switch to "2WD" position.
6. Start engine.
7. Is 4WD shift indicator lamp turned OFF?

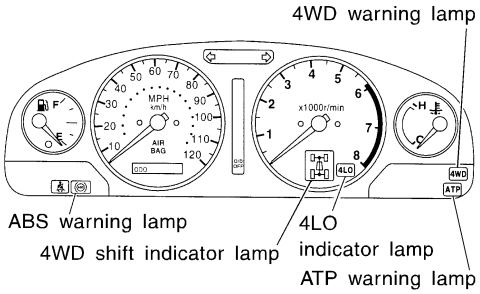

SMT994D

Yes or No

Yes	▶	Go to "ATP SWITCH, WAIT DETECTION SWITCH AND NEUTRAL-4LO SWITCH". Refer to TF-112.
No	▶	GO TO 2.

2	CHECK 4WD WARNING LAMP

Is 4WD warning lamp turned OFF?

Yes or No

Yes	▶	GO TO 3.
No	▶	Perform self-diagnosis. Refer to "Trouble Diagnosis without CONSULT-II", TF-61.

3	CHECK 4WD SHIFT INDICATOR LAMP

1. Set 4WD shift switch to "2WD", "AUTO", "4H", "4LO", "4H" and "2WD" in order. (Stay at each switch position for at least 1 second.)
2. Does 4WD shift indicator lamp change properly and does buzzer sound?

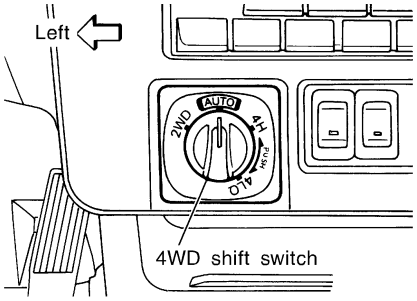

SMT851D

4WD shift switch operation	4WD shift indicator lamp	4WD warning lamp	Buzzer sound
2WD		4WD OFF	
			"Pip"
AUTO		4WD OFF	
			"Pip"
4H		4WD OFF	
4LO		4WD OFF	
4H		4WD OFF	
			"Pip"
AUTO		4WD OFF	
			"Pip"
2WD		4WD OFF	

SMT971D

Yes or No

Yes	▶	GO TO 4.
No	▶	Go to "2-4WD SHIFT SOLENOID VALVE AND 4WD SHIFT SWITCH". Refer to TF-102.

4	CHECK 4WD WARNING LAMP

Is 4WD warning lamp turned ON?

Yes or No

Yes	▶	Perform self-diagnosis. (Refer to "Trouble Diagnosis without CONSULT-II", TF-61.)
No	▶	GO TO 5.

5	CHECK 4WD SHIFT INDICATOR LAMP

1. Move A/T selector lever to "P" position.
2. Set 4WD shift switch from "4H" to "4LO".

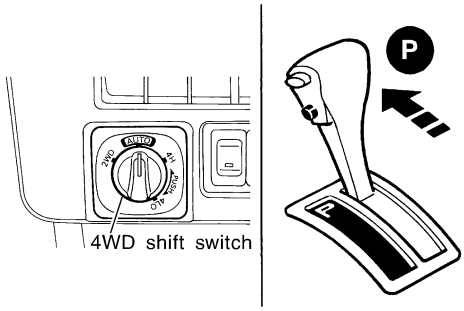

SMT849D

3. While shifting from "4H" to "4LO", does 4WD shift indicator lamp turn OFF and ATP warning lamp turn ON?

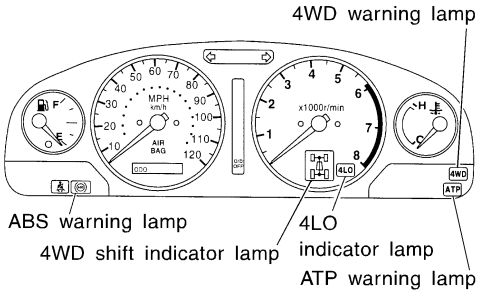

SMT994D

Yes or No

Yes	▶	GO TO 6.
No	▶	Go to Symptoms 3 and 4. Refer to TF-138.

6	CHECK 4WD SHIFT INDICATOR LAMP

Does 4WD shift indicator lamp indicate 4LO indicator lamp turn ON when 4WD shift switch is set in "4LO"?

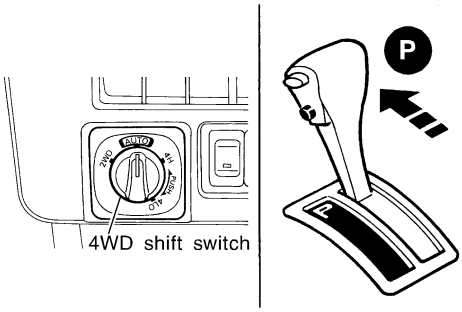

SMT849D

4WD shift switch operation	4WD shift indicator lamp	4WD warning lamp
4LO		4WD OFF

4LO indicator lamp

SMT770D

Yes or No

Yes	▶	GO TO 7.
No	▶	Go to Symptom 5. Refer to TF-140.

7	CHECK 4WD SHIFT INDICATOR LAMP (*1)

1. Set 4WD shift switch from "4LO" to "4H".
2. Does 4LO indicator lamp flicker? (*1)

*1: While "Wait" function is operating, 4LO indicator lamp flashes.

Yes or No

Yes	▶	Go to Symptoms 6 and 7. Refer to TF-142 and TF-143.
No	▶	Go to "3. CRUISE TEST". Refer to TF-85.

3. CRUISE TEST

=NATF0017S04

1	INSPECTION START

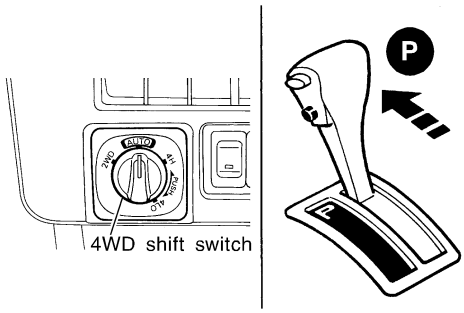

SMT849D

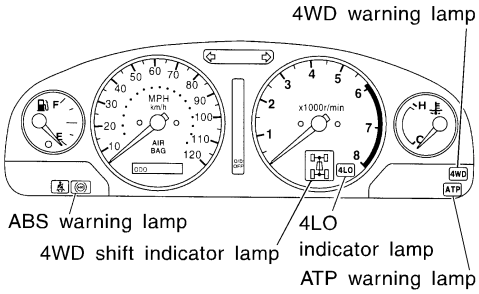

SMT994D

WITH CONSULT-II	▶	GO TO 2.
WITHOUT CONSULT-II	▶	GO TO 3.

2	CHECK INPUT SIGNAL

With CONSULT-II

1. Warm up engine to normal operating temperature.
2. Park vehicle on flat surface.
3. Move A/T selector lever to "P" position.
4. Set 4WD shift switch to "4H" position.
5. Set 4WD shift switch to "AUTO" position.
6. Start engine.
7. Drive for at least 30 seconds at a speed higher than 20 km/h (12 MPH).
   (Drive vehicle until "FLUID TEMP SE" exceeds 0.9V.)
8. Park vehicle on flat surface.
9. Move A/T selector lever to "P" position.
10. Set 4WD shift switch to "2WD" position.
11. Leave vehicle for at least 80 seconds with "FLUID TEMP SE" at 0.9V or less.

DATA MONITOR	
MONITOR	NO DTC
VHCL/S SEN-FR	0 km/h
VHCL/S SEN-RR	0 km/h
ENGINE SPEED	775 rpm
THRTL POS SEN	0.5 V
FLUID TEMP SE	0.86 V
BATTERY VOLT	14.1 V
2WD SWITCH	ON
AUTO SWITCH	OFF
LOCK SWITCH	OFF

SMT972D

12. Is 4WD warning lamp turned ON?

Yes or No

Yes	▶	Perform self-diagnosis. Refer to "Trouble Diagnosis with CONSULT-II", TF-64.
No	▶	GO TO 4.

3	CHECK INPUT SIGNAL

Without CONSULT-II

1. Warm up engine to normal operating temperature.
2. Park vehicle on flat surface.
3. Move A/T selector lever to "P" position.
4. Set 4WD shift switch to "4H" position.
5. Set 4WD shift switch to "AUTO" position.
6. Start engine.
7. Drive vehicle for at least 30 seconds at a speed higher than 20 km/h (12 MPH).
8. Park vehicle on flat surface.
9. Move A/T selector lever to "P" position.
10. Set 4WD shift switch to "2WD" position.
11. Is 4WD warning lamp turned ON?

Yes or No

Yes	▶	Perform self-diagnosis. Refer to "Trouble Diagnosis without CONSULT-II", TF-61.
No	▶	GO TO 4.

4	(1) CHECK TIGHT CORNER BRAKING SYMPTOM

1. Set 4WD shift switch to "AUTO" position.
2. Drive vehicle at speed lower than 20 km/h (12 MPH) with steering wheel fully turned.
3. Does tight corner braking symptom occur?

Yes or No

Yes	▶	GO TO 5.
No	▶	GO TO 6.

5	CONFIRM SYMPTOM AGAIN	
Confirm symptom and self-diagnosis again. Refer to "Trouble Diagnosis without CONSULT-II", TF-61 and "Trouble Diagnosis with CONSULT-II", TF-64.		
OK or NG		
OK	▶	GO TO 6.
NG	▶	Go to Symptoms 8 and 9. Refer to TF-144, 145.

6	(2) CHECK TIGHT CORNER BRAKING SYMPTOM	
1. Set 4WD shift switch to "4H" position. 2. Drive vehicle at speed lower than 20 km/h (12 MPH) with steering wheel fully turned. 3. Does tight corner braking symptom occur?		
Yes or No		
Yes	▶	**INSPECTION END**
No	▶	GO TO 7.

7	CONFIRM SYMPTOM AGAIN	
Confirm symptom and self-diagnosis again. Refer to "Trouble Diagnosis without CONSULT-II", TF-61 and "Trouble Diagnosis with CONSULT-II", TF-64.		
OK or NG		
OK	▶	**INSPECTION END**
NG	▶	Go to Symptoms 8 and 9. Refer to TF-144, 145.

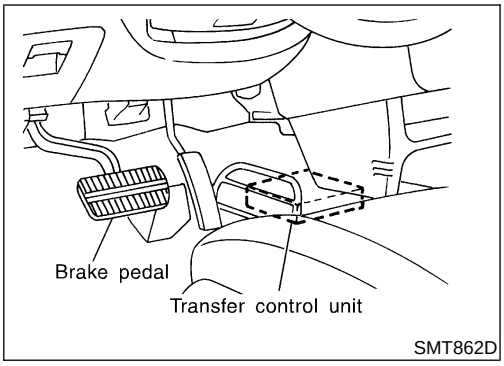

Transfer Control Unit Terminals and Reference Value

NATF0018

REMOVAL AND INSTALLATION OF TRANSFER CONTROL UNIT

NATF0018S03

Removal

NATF0018S0301

1. Turn ignition switch OFF and disconnect negative battery terminal.
2. Remove console box.
3. Remove cluster lid C.
4. Remove audio assembly and A/C control unit.
5. Remove instrument lower panel on driver side.
6. Remove glove box.
7. Remove instrument lower panel on passenger side.
8. Remove instrument lower center panel.
9. Remove transfer control unit.

- For steps 2 through 8 above, refer to BT-24, “Instrument Panel Assembly”.

Installation

NATF0018S0302

- Installation is in the reverse order of removal.

When installing transfer control unit, tighten transfer control unit lock nut.

Tightening torque:

: 4.3 - 5.8 N·m (0.44 - 0.59 kg-m, 38 - 51 in-lb)

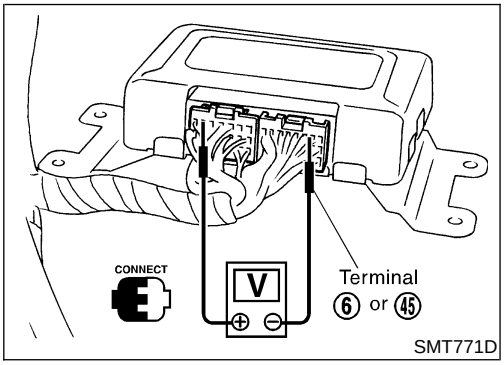

INSPECTION OF TRANSFER CONTROL UNIT

NATF0018S01

- Measure voltage between each terminal and terminal 6 or 45 by following “TRANSFER CONTROL UNIT INSPECTION TABLE”, TF-89.

- Pin connector terminal layout

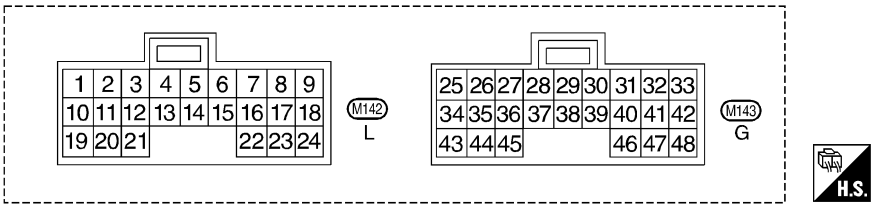

SMT772D

TRANSFER CONTROL UNIT INSPECTION TABLE

NATF0018S02

(Data are reference values.)

Terminal No.	Item	Condition		Judgement standard
1	2-4WD shift solenoid valve	ON &	4WD shift switch is set to "2WD" position.	Less than 1V
			4WD shift switch is set to any position other than "2WD".	Battery voltage
2	4WD shift indicator lamp (2WD)		Lamp lights while system is operating properly.	Less than 1V
		ON &	2WD indicator lamp does not come on.	Battery voltage
3	Ground		—	—
4	Transfer shift relay (High)		While actuator is operating (4H → 4LO)	Battery voltage
			Actuator does not operate.	Less than 1V
5	4WD warning lamp		Lamp comes ON. (when engine is stopped.) (Fail-safe condition appears on display, engine is stopped, actuator position detection switch is inoperative, oil temperature is too high and/or tires of different size are installed.)	Less than 1V
			Except above	Battery voltage
6	Ground	—	—	—
7 (With VDC)	CAN H	—	—	—
7 (Without VDC)	PNP switch (R position)	ON &	A/T selector lever is set to "reverse" position.	Battery voltage
			A/T selector lever is set to any position other than "reverse".	Less than 1V
8 (With VDC)	CAN L	—	—	—
8 (Without VDC)	—	—	—	—

Transfer Control Unit Terminals and Reference Value (Cont'd)

Terminal No.	Item	Condition		Judgement standard
9	4WD shift switch (2WD)	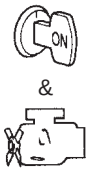	4WD shift switch is set to "2WD" position.	Battery voltage
			4WD shift switch is set to any position other than "2WD".	Less than 1V
10	Transfer dropping resistor		4WD shift switch is set to "AUTO" position.	Approx. 4 - 14V
			4WD shift switch is set to any position other than "2WD".	Less than 1V
11	4WD shift indicator lamp (4H)		"4H" indicator lamp comes ON.	Less than 1V
			4WD shift switch is set to any position other than "4H".	Battery voltage
12	4WD shift indicator lamp (4LO)		"4LO" indicator lamp comes ON.	Approx. 0V
			4WD shift switch is set to any position other than "4LO".	Battery voltage
13	Transfer shift relay (Low)	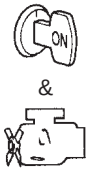	While actuator is operating (4LO → 4H)	Battery voltage
			Actuator does not operate.	Approx. 0V
14	Transfer motor relay		Transfer motor relay is ON.	Battery voltage
			Transfer motor relay is OFF.	Less than 1V
15 (With VDC)	ATP lamp		AT selector lever is set to "P" position.	Battery voltage
			AT selector lever is set to any position other than "P".	Approx. 0V
15 (Without VDC)	PNP switch (N position)		A/T selector lever is set to "N" position.	Battery voltage
			A/T selector lever is set to any position other than "N" position.	Less than 1V
16	Power supply	—	Ignition key is set to "ON" position.	Battery voltage
			Ignition key is set to "OFF" position.	Approx. 0V
17 (With VDC)	Do not use.			
17 (Without VDC)	PNP switch (P position)	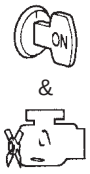	A/T selector lever is set to "P" position.	Battery voltage
			A/T selector lever is set to any position other than "P".	Less than 1V
18	4WD shift switch (4H)		4WD shift switch is set to "4H" position.	Battery voltage
			4WD shift switch is set to any position other than "4H".	Less than 1V
19	4WD solenoid valve		4WD shift switch is set to "AUTO" position.	Approx. 1.5 - 3V
			4WD shift switch is set to any position other than "2WD".	Less than 1V
20	—	—	—	—

Terminal No.	Item	Condition		Judgement standard
21	4WD shift indicator lamp (AUTO)		"AUTO" indicator lamp comes ON.	Approx. 0V
			4WD shift switch is set to any position other than "AUTO".	Battery voltage
22	Power supply	—	Ignition key is set to "ON" position.	Battery voltage
			Ignition key is set to "OFF" position.	Approx. 0V
23	4WD shift switch (4LO)	ON &	4WD shift switch is set to "4LO" position.	Battery voltage
			4WD shift switch is set to any position other than "4LO".	Less than 1V
24	4WD shift switch (AUTO)		4WD shift switch is set to "AUTO" position.	Battery voltage
			4WD shift switch is set to any position other than "AUTO".	Less than 1V
25	Neutral-4LO switch		Transfer is set to "4LO" position.	Approx. 0V
			Transfer is set to any position other than "4LO".	Power supply
27	Transfer 4H actuator switch		4WD shift switch is set to "4H" position.	Less than 1V
			4WD shift switch is set to any position other than "4H".	Battery voltage
28	Throttle position sensor (Ground)		Throttle valve is closed.	Less than 1V
			Throttle valve is fully open.	
29	TCM signal (Vehicle speed signal)	ON &	When moving at 20 km/h (12 MPH), use the CONSULT-II pulse frequency measuring function.*1 **CAUTION:** **Connect the diagnosis data link cable to the vehicle diagnosis connector.** *1: A circuit tester cannot be used to test this item.	Approximately 225 Hz
30	Throttle position sensor (Power supply for throttle position sensor)	ON &	Ignition key is set to "ON" position.	Approx. 4.5 - 5.5V
			Ignition key is set to "OFF" position.	Approx. 0V
31	Transfer fluid temperature sensor	ON &	At 20°C (68°F)	Approx. 1.5V
			At 80°C (176°F)	Approx. 0.5V
32 (With VDC)	Do not use.			

Transfer Control Unit Terminals and Reference Value (Cont'd)

Terminal No.	Item	Condition		Judgement standard
32 (Without VDC)	ABS signal		When moving, use the CONSULT-II pulse frequency measuirng function.*2 **CAUTION:** **Connect the diagnosis data link cable to the vehicle diagnosis connector.** *2: A circuit tester cannot be used to test this item.	Refer to the illustration (SMT973D) at the end of this section.
33	Transfer shift relay (High)	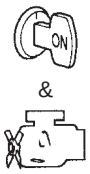	While actuator is operating from "4H" to "4LO"	Battery voltage
			Actuator does not operate.	Approx. 0V
34	Clutch pressure switch		4WD shift switch is set to "AUTO" or "4H", then A/T selector lever is set to "D" position. (wait detection system: OFF)	Battery voltage
			4WD shift switch is set to "2WD", "AUTO" or "4H", then A/T selector lever is set to "D" position. (wait detection system: ON)	Approx. 0V
35	Line pressure switch		4WD shift switch is set to "2WD", "AUTO" or "4H", then A/T selector lever is set to "D" position.	Battery voltage
			—	Approx. 0V
36	CONSULT-II (RX)	—	—	—
37 (With VDC)	Do not use.			
37 (Without VDC)	Tachometer		—	Refer to EC-141, "ECM Inspection Table".
38 (With VDC)	Front revolution sensor	Sensor is installed, but do not use. (Wheel speed is sent from VDC C/U via CAN communication.)		
38 (Without VDC)	Front revolution sensor		4WD shift switch is set to "4H" position. A/T selector lever is set to "D" position.	Approx. 1V [30 km/h (19 MPH)] Voltage rises in response to vehicle speed.
39 (With VDC)	Do not use.			

Terminal No.	Item	Condition		Judgement standard
39 (Without VDC)	ECM (Throttle position sensor)	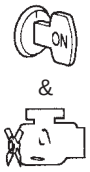	Throttle valve is fully open.	Approx. 0.5V
			Throttle valve is closed.	Approx. 4.2V
40	ATP switch		A/T selector lever is set to "P" position.	Battery voltage
			A/T selector lever is set to any position other than "P".	Less than 1V
41	Transfer motor relay monitor		Transfer motor relay is ON.	Battery voltage
			Transfer motor relay is OFF.	Less than 1V
42	Transfer shift relay (LOW)		While actuator is operating from "4LO" to "4H" position	Battery voltage
			Actuator does not operate.	Approx. 0V
43	Wait detection switch		4WD shift switch is set to any position other than "4LO".	Battery voltage
			4WD shift switch is set to "4LO" position.*3	Less than 1V
44	Transfer 4LO actuator switch		4WD shift switch is set to any position other than "4LO". (Actuator: High position)	Battery voltage
			4WD shift switch is set to "4LO" position. (Actuator: Low position)	Less than 1V
45	Ground	—	—	—
46	—	—	—	—
47	Power supply (memory back up)	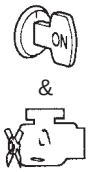	—	Battery voltage
48	CONSULT-II (TX)	—	—	—

*3: While wait detection system is operating, terminal 43 exists battery voltage.

ABS signal judgement standard (Without VDC)

① Forward waveform when engine is running or stopped.

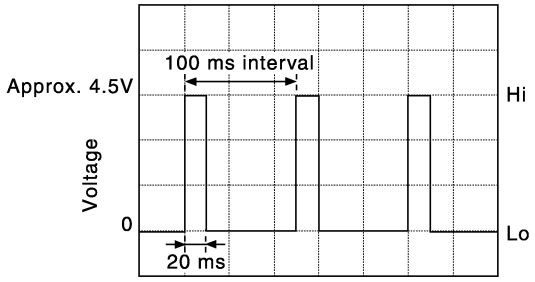

② ABS waveform during operation

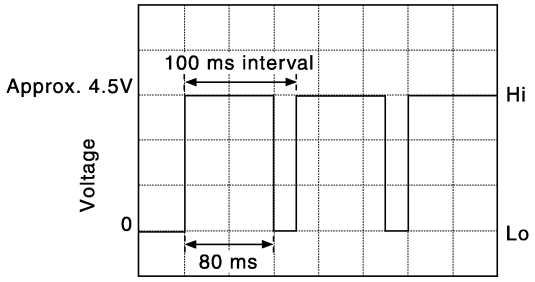

③ If the ABS control unit malfunctions, the terminal voltage is fixed at Hi (approximately 4.5V).

Caution:
In motion, (forward to turning) changes the Hi (ON) time from 20 to 40 to 60 ms.

SMT172E

Description

NATF0135

CAN (Controller Area Network) is a serial communication line for real time application. It is an on-vehicle multiplex communication line with high data communication speed and excellent error detection ability. Many electronic control units are equipped onto a vehicle, and each control unit shares information and links with other control units during operation (not independent). In CAN communication, control units are connected with 2 communication lines (CAN H line, CAN L line) allowing a high rate of information transmission with less wiring. Each control unit transmits/receives data but selectively reads required data only.

On Board Diagnosis Logic

NATF0136

- This is an OBD-II self-diagnostic item.
- Diagnostic trouble code “CAN COMM CIRCUIT” with CONSULT-II or U1000 without CONSULT-II is detected when TCM cannot communicate to other control unit.

Possible Cause

NATF0137

Harness or connectors
(CAN communication line is open or shorted.)

DTC Confirmation Procedure

NATF0138

NOTE:
If “DTC Confirmation Procedure” has been previously conducted, always turn ignition switch “OFF” and wait at least 10 seconds before conducting the next test.

After the repair, perform the following procedure to confirm the malfunction is eliminated.

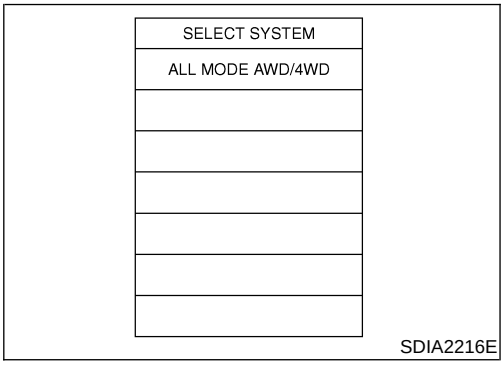

WITH CONSULT-II

NATF0138S01

1. Turn ignition switch to “ON” position. (Do not start engine.)
2. Select “DATA MONITOR” mode for “ALL MODE AWD/4WD” with CONSULT-II.
3. Start engine and wait for at least 6 seconds.
4. If DTC is detected, go to TF-96, “Diagnostic Procedure”.

WITH GST

NATF0138S02

Follow the procedure “WITH CONSULT-II”.

Diagnostic Procedure

NATF0139

1	CHECK CAN COMMUNICATION CIRCUIT

With CONSULT-II

1. Turn ignition switch to “ON” position. (Do not start engine.)
2. Select “DATA MONITOR” mode for “ALL MODE AWD/4WD” with CONSULT-II.
3. The “CAN COMM CIRCUIT” is detected.

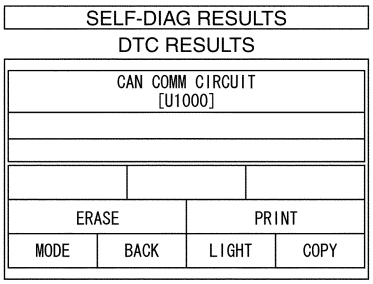

PCIA0061E

Yes or No

Yes	▶	Go to EL-409, “CAN Communication Unit”.
No	▶	INSPECTION END

Diagnostic Procedure

NATF0019

1	FRONT REVOLUTION SENSOR	
Refer to “Front Revolution Sensor”, “COMPONENT INSPECTION”, TF-148.		
OK or NG		
OK	▶	GO TO 3.
NG	▶	GO TO 2.

2	CHECK CONTINUITY	
Check the following. ● Continuity of transfer sub-harness Refer to “Transfer Sub-harness”, “COMPONENT INSPECTION”, TF-149.		
OK or NG		
OK	▶	Repair or replace front revolution sensor.
NG	▶	Repair or replace front revolution sensor and transfer sub-harness.

3	CHECK INPUT SIGNAL	
WITH CONSULT-II	▶	GO TO 4.
WITHOUT CONSULT-II	▶	GO TO 5.

4	CHECK INPUT SIGNAL

With CONSULT-II

1. Start engine.
2. Select "ECU INPUT SIGNALS" in Data Monitor.
3. Read out the value of "VEHICLE SPEED SENSOR (FRONT)" while driving.

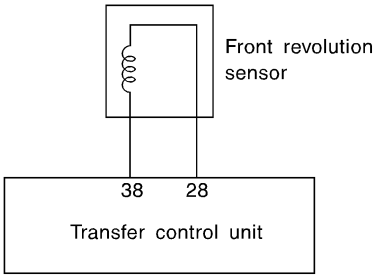

SMT773D

DATA MONITOR	
MONITOR	NO DTC
VHCL/S SEN-FR	0 km/h
VHCL/S SEN-RR	0 km/h
ENGINE SPEED	775 rpm
THRTL POS SEN	0.5 V
FLUID TEMP SE	0.86 V
BATTERY VOLT	14.1 V
2WD SWITCH	ON
AUTO SWITCH	OFF
LOCK SWITCH	OFF

SMT974D

4. Check if the value changes according to accelerating and decelerating the vehicle.

OK or NG

OK	▶	GO TO 6.
NG	▶	GO TO 7.

5	CHECK INPUT SIGNAL

Without CONSULT-II

1. Start engine.
2. Check voltage between transfer control unit harness connector terminals 38 and 28. (Measure it in AC range.)

Voltage:
0 km/h (0 MPH): 0V
30 km/h (19 MPH): More than 1V
(Voltage rises gradually in response to vehicle speed.)

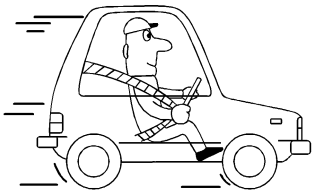

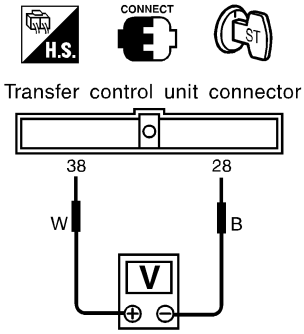

SMT774D

OK or NG

OK	▶	GO TO 6.
NG	▶	GO TO 7.

6	PERFORM SELF-DIAGNOSIS AGAIN

After driving for a while, perform self-diagnosis again.
Refer to "Trouble Diagnosis without CONSULT-II", TF-61.

OK or NG

OK	▶	**INSPECTION END**
NG	▶	1. Perform transfer control unit input/output signal inspection. Refer to "TRANSFER CONTROL UNIT INSPECTION TABLE", "TROUBLE DIAGNOSIS — GENERAL DESCRIPTION", TF-89. 2. If NG, recheck transfer control unit pin terminals for damage or loose connection with harness connector.

7	CHECK HARNESS CONTINUITY BETWEEN TRANSFER CONTROL UNIT AND FRONT REVOLUTION SENSOR SUB-HARNESS CONNECTOR

OK or NG

OK	▶	GO TO 6.
NG	▶	Repair or replace sub-harness connector between transfer control unit and front revolution sensor.

Diagnostic Procedure

NATF0020

1	CHECK 4WD SOLENOID VALVE

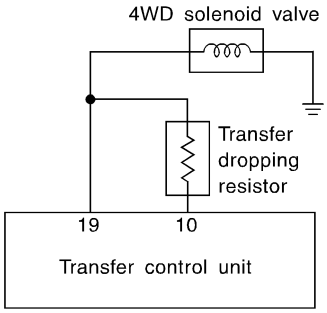

SMT775D

Refer to “4WD Solenoid Valve, Clutch Pressure Switch and Line Pressure Switch”, “COMPONENT INSPECTION”, TF-147.

OK or NG

OK	▶	GO TO 2.
NG	▶	**Check the following. If OK, repair or replace 4WD solenoid valve.** ● Continuity of transfer sub-harness Refer to “TRANSFER TERMINAL CORD ASSEMBLY SUB-HARNESS CONNECTOR”, “COMPONENT INSPECTION”, TF-150.

2	CHECK POWER SOURCE CIRCUIT

1. Turn ignition switch to “OFF” position.
2. Disconnect transfer control unit harness connector.
3. Check resistance between transfer terminal cord assembly sub-harness connector terminal 6 and transfer control unit harness connector terminal 10.

   Resistance: 11.2 - 12.8Ω

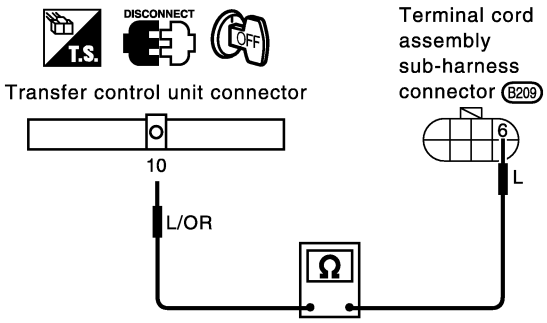

SMT150E

OK or NG

OK	▶	GO TO 3.
NG	▶	**Check the following.** ● Transfer dropping resistor Refer to “Transfer Dropping Resistor”, “COMPONENT INSPECTION”, TF-148. ● Continuity between transfer terminal cord assembly sub-harness connector terminal 6 and transfer control unit harness connector terminal 10.

3	CHECK POWER SOURCE CIRCUIT

1. Turn ignition switch to "OFF" position.
2. Check continuity between transfer terminal cord assembly sub-harness connector terminal 6 and transfer control unit harness connector terminal 19.
   Continuity should exist.

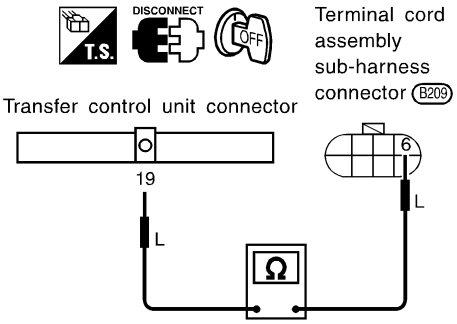

SMT777D

OK or NG

OK	▶	GO TO 4.
NG	▶	Repair or replace harness between transfer terminal cord assembly sub-harness connector terminal 6 and transfer control unit harness connector terminal 19.

4	PERFORM SELF-DIAGNOSIS

After driving for a while, perform self-diagnosis.
Refer to "Trouble Diagnosis without CONSULT-II", TF-61 and "Trouble Diagnosis with CONSULT-II", TF-64.

OK or NG

OK	▶	**INSPECTION END**
NG	▶	1. Perform transfer control unit input/output signal inspection. Refer to "TRANSFER CONTROL UNIT INSPECTION TABLE", TF-89. 2. If NG, recheck transfer control unit pin terminals for damage or loose connection with harness connector.

Diagnostic Procedure

NATF0021

1	CHECK 2-4WD SHIFT SOLENOID VALVE AND 4WD SHIFT SWITCH

Refer to “2-4WD Shift Solenoid Valve and Transfer Fluid Temperature Sensor”, “COMPONENT INSPECTION”, TF-147.

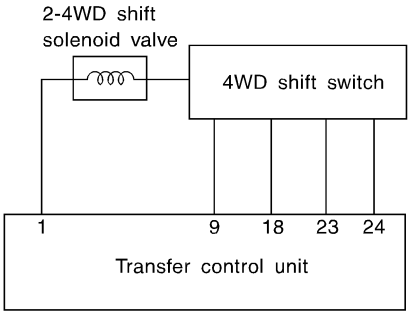

SMT778D

OK or NG

OK	▶	GO TO 2.
NG	▶	**Check the following. If OK, repair or replace 2-4WD shift solenoid valve and 4WD shift switch.** ● Continuity of transfer sub-harness Refer to “TRANSFER TERMINAL CORD ASSEMBLY SUB-HARNESS CONNECTOR”, “COMPONENT INSPECTION”, TF-150.

2	CHECK INPUT SIGNAL

With CONSULT-II

1. Select "ECU INPUT SIGNALS" in Data Monitor.
2. Read out ON/OFF status of "2WD SW" and "LOCK SWITCH".

DATA MONITOR	
MONITOR	NO DTC
VHCL/S SEN-FR	0 km/h
VHCL/S SEN-RR	0 km/h
ENGINE SPEED	775 rpm
THRTL POS SEN	0.5 V
FLUID TEMP SE	0.86 V
BATTERY VOLT	14.1 V
2WD SWITCH	ON
AUTO SWITCH	OFF
LOCK SWITCH	OFF

SMT974D

OK or NG

OK ▶	1. Perform transfer control unit input/output signal inspection. Refer to "TRANSFER CONTROL UNIT INSPECTION TABLE", "TROUBLE DIAGNOSIS — GENERAL DESCRIPTION", TF-89. 2. If NG, recheck transfer control unit pin terminals for damage or loose connection with harness connector.
NG ▶	GO TO 3.

3	CHECK 4WD SHIFT SWITCH POWER SOURCE

1. Disconnect 4WD shift switch harness connector.
2. Turn ignition switch to "ON" position.
3. Check voltage between 4WD shift switch harness connector terminal 1 and body ground.

Voltage: Battery voltage

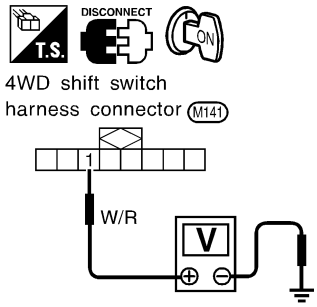

SMT852D

OK or NG

OK	▶	GO TO 4.
NG	▶	**Check the following.** ● No. 18 fuse (10A) ● Continuity between ignition switch and 4WD shift switch

4	CHECK HARNESS CONTINUITY

1. Turn ignition switch to "OFF" position.
2. Check continuity between the following terminals:

- **Transfer control unit 9 and 4WD shift switch 2 (2WD)**
- **Transfer control unit 18 and 4WD shift switch 5 (4H)**
- **Transfer control unit 24 and 4WD shift switch 3 (AUTO)**
- **Transfer control unit 23 and 4WD shift switch 6 (4LO)**
- **Transfer control unit 1 and Transfer terminal cord assembly sub-harness connector 4**
- **4WD shift switch 4 and Transfer terminal cord assembly sub-harness connector 5**
  Continuity should exist.

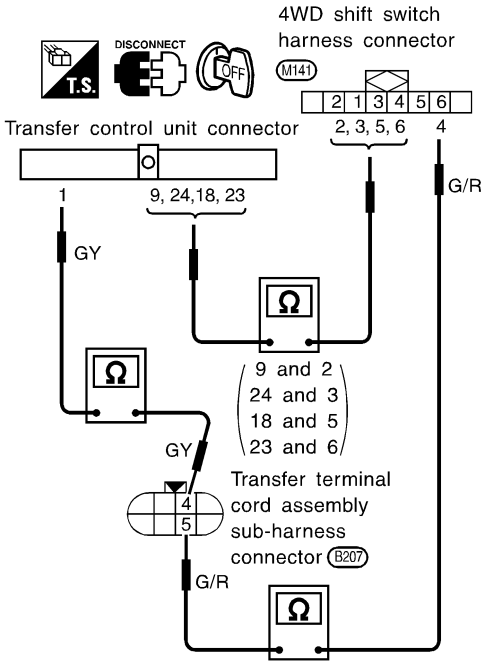

SMT853D

OK or NG

OK	▶	GO TO 5.
NG	▶	Repair harness or connector.

5	PERFORM SELF-DIAGNOSIS AGAIN

After driving for a while, perform self-diagnosis again.
Refer to "Trouble Diagnosis without CONSULT-II", TF-61.

OK or NG

OK	▶	**INSPECTION END**
NG	▶	1. Perform transfer control unit input/output signal inspection. Refer to "TRANSFER CONTROL UNIT INSPECTION TABLE", "TROUBLE DIAGNOSIS — GENERAL DESCRIPTION", TF-89. 2. If NG, recheck transfer control unit pin terminals for damage or loose connection with harness connector.

Diagnostic Procedure

NATF0022

1	CHECK TRANSFER MOTOR AND TRANSFER MOTOR RELAY

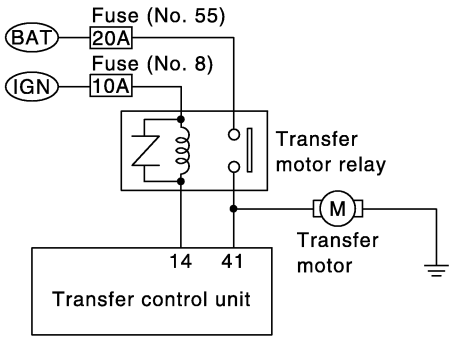

SMT151E

Refer to “Transfer Motor” and “Transfer Motor Relay”, “COMPONENT INSPECTION”, TF-149.

OK or NG

OK	▶	GO TO 2.
NG	▶	Repair or replace transfer motor and transfer motor relay.

2	CHECK CONTINUITY

Check the following.
- Continuity of transfer sub-harness
  Refer to “TRANSFER SWITCH ASSEMBLY SUB-HARNESS CONNECTOR”, “COMPONENT INSPECTION”, TF-150.

OK or NG

OK	▶	GO TO 3.
NG	▶	Repair or replace transfer sub-harness.

3	CHECK INPUT SIGNAL

With CONSULT-II
1. Select “MAIN SIGNALS” in Data Monitor.
2. Read out ON/OFF status of “MOTOR RELAY”.

DATA MONITOR	
MONITOR	NO DTC
4WD MODE	2WD
COMP CL TORQ	0.0 kgm
DUTY SOLENOID	4 %
2-4WD SOL	OFF
VHCL/S COMP	0 km/h
THROTTLE POSI	0.0 /8
MOTOR RELAY	OFF
4WD FAIL LAMP	OFF
SHIFT ACT 1	OFF

SMT975D

3. When the value is different from standard value although ON/OFF switching occurs, check the following items.
- PNP switch, throttle position sensor and closed throttle position switch circuits
  Refer to AT-102, “DTC P0705 Park/Neutral Position Switch”, AT-179, “DTC P1705 Throttle Position Sensor”.

OK or NG

OK	▶	GO TO 4.
NG	▶	1. Perform transfer control unit input/output signal inspection. Refer to “TRANSFER CONTROL UNIT INSPECTION TABLE”, “TROUBLE DIAGNOSIS — GENERAL DESCRIPTION”, TF-89. 2. If NG, recheck transfer control unit pin terminals for damage or loose connection with harness connector.

4	CHECK TRANSFER MOTOR RELAY POWER SOURCE

1. Disconnect transfer motor relay harness connector.
2. Turn ignition switch to "ON" position.
3. Check voltage between transfer motor relay harness connector terminals 1, 3 and body ground.

Voltage: Battery voltage

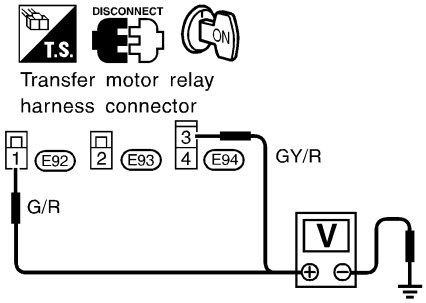

SMT854DA

OK or NG

OK	▶	GO TO 5.
NG	▶	**Check the following.** ● No. 55 fuse (20A) ● No. 8 fuse (10A) ● Harness continuity between fuse and transfer motor relay

5	CHECK HARNESS CONTINUITY

1. Turn ignition switch to "OFF" position.
2. Check continuity between the following terminals.

- **Transfer control unit 41 and Transfer motor 14**
- **Transfer control unit 41 and Transfer motor relay 2**
- **Transfer control unit 14 and Transfer motor relay 4**
- **Transfer motor 15 and body ground**
  Continuity should exist.

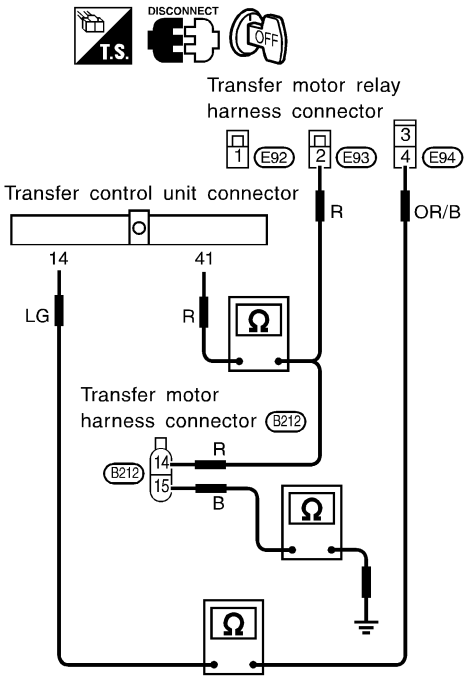

SMT855DA

OK or NG

OK	▶	GO TO 6.
NG	▶	Repair or replace harness or connector.

6	PERFORM SELF-DIAGNOSIS AGAIN

After driving for a while, perform self-diagnosis again.
Refer to "Trouble Diagnosis without CONSULT-II", TF-61 and "Trouble Diagnosis with CONSULT-II", TF-64.

OK or NG

OK	▶	**INSPECTION END**
NG	▶	1. Perform transfer control unit input/output signal inspection. Refer to "TRANSFER CONTROL UNIT INSPECTION TABLE", "TROUBLE DIAGNOSIS — GENERAL DESCRIPTION", TF-89. 2. If NG, recheck transfer control unit pin terminals for damage or loose connection with harness connector.

Diagnostic Procedure

NATF0023

1	CHECK TRANSFER FLUID TEMPERATURE SENSOR	
Refer to “2-4WD Shift Solenoid Valve and Transfer Fluid Temperature Sensor”, “COMPONENT INSPECTION”, TF-147.		
OK or NG		
OK	▶	GO TO 2.
NG	▶	Repair or replace fluid temperature sensor.

2	CHECK CONTINUITY	
Check the following. ● Continuity of transfer sub-harness Refer to “TRANSFER TERMINAL CORD ASSEMBLY SUB-HARNESS CONNECTOR”, “COMPONENT INSPECTION”, TF-150.		
OK or NG		
OK	▶	GO TO 3.
NG	▶	Repair or replace transfer sub-harness.

3	CHECK INPUT SIGNAL	
WITH CONSULT-II	▶	GO TO 4.
WITHOUT CONSULT-II	▶	GO TO 5.

4	CHECK INPUT SIGNAL

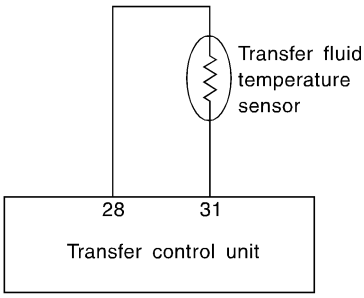

SMT784D

With CONSULT-II

1. Start engine.
2. Select "ECU INPUT SIGNALS" in Data Monitor.
3. Read out the value of "FLUID TEMP SE".

Voltage:

20°C (68°F): Approx. 1.5V
80°C (176°F): Approx. 0.5V

DATA MONITOR	
MONITOR	NO DTC
VHCL/S SEN-FR	0 km/h
VHCL/S SEN-RR	0 km/h
ENGINE SPEED	775 rpm
THRTL POS SEN	0.5 V
FLUID TEMP SE	0.86 V
BATTERY VOLT	14.1 V
2WD SWITCH	ON
AUTO SWITCH	OFF
LOCK SWITCH	OFF

SMT974D

OK or NG

OK	▶	GO TO 6.
NG	▶	**Check the following.** ● Continuity between transfer control unit and transfer terminal cord assembly sub-harness connector

5	CHECK INPUT SIGNAL

Without CONSULT-II

1. Turn ignition switch to "ON" position.
2. Check voltage between transfer control unit harness connector terminals 28 and 31.

Voltage:

20°C (68°F): Approx. 1.5V
80°C (176°F): Approx. 0.5V

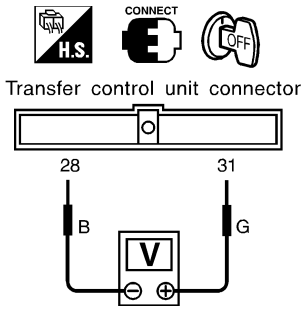

SMT785D

OK or NG

OK	▶	GO TO 6.
NG	▶	**Check the following.** ● Continuity between transfer control unit and transfer terminal cord assembly sub-harness connector

6	PERFORM SELF-DIAGNOSIS AGAIN

After driving for a while, perform self-diagnosis again.
Refer to "Trouble Diagnosis without CONSULT-II", TF-61.

OK or NG

OK	▶	**INSPECTION END**
NG	▶	1. Perform transfer control unit input/output signal inspection. Refer to "TRANSFER CONTROL UNIT INSPECTION TABLE", "TROUBLE DIAGNOSIS — GENERAL DESCRIPTION", TF-89. 2. If NG, recheck transfer control unit pin terminals for damage or loose connection with harness connector.

Diagnostic Procedure

NATF0024

1	CHECK ATP SWITCH, WAIT DETECTION SWITCH AND NEUTRAL-4LO SWITCH

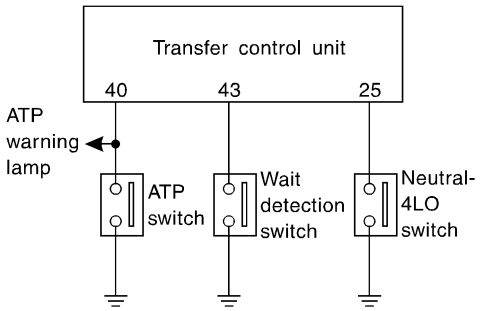

SMT786D

Refer to “ATP Switch, Neutral-4LO Switch and Wait Detection Switch”, “COMPONENT INSPECTION”, TF-148.

OK or NG

OK	▶	GO TO 3.
NG	▶	GO TO 2.

2	CHECK CONTINUITY OF TRANSFER SUB-HARNESS

Check the following.
- Continuity of transfer sub-harness
  Refer to “TRANSFER SWITCH ASSEMBLY SUB-HARNESS CONNECTOR”, “COMPONENT INSPECTION”, TF-150.

OK or NG

OK	▶	Repair or replace ATP switch, wait detection switch or neutral-4LO switch.
NG	▶	Repair or replace transfer sub-harness.

3	CHECK INPUT SIGNAL

WITH CONSULT-II	▶	GO TO 4.
WITHOUT CONSULT-II	▶	GO TO 5.

4	CHECK INPUT SIGNAL

With CONSULT-II

1. Select "ECU INPUT SIGNALS" in Data Monitor.
2. Read out the ON/OFF status of "ATP SW", "NEUTRAL SW" and "WAIT DETCT SW".

DATA MONITOR	
MONITOR	NO DTC
ATP SWITCH	OFF
N POSI SW AT	OFF
R POSI SW AT	OFF
P POSI SW AT	ON
CLOSED THL/SW	ON
ABS OPER SW	OFF
WAIT DETCT SW	OFF
SHIFT POS SW1	OFF
SHIFT POS SW2	ON

SMT976D

OK or NG

OK	▶	GO TO 6.
NG	▶	**Check the following.** ● Harness continuity between transfer switch assembly sub-harness connector and transfer control unit ● Continuity between transfer switch assembly sub-harness connector and body ground

5	CHECK INPUT SIGNAL

Without CONSULT-II

1. Turn ignition switch to "OFF" position.
2. Operate 4WD shift switch and check continuity between the following terminals.

Continuity:

Terminal 40 (ATP switch) and body ground
- **"4H" position: No continuity should exist.**
- **Between "4H" and "4LO": Continuity should exist.**
- **"4LO" position: No continuity should exist.**

Terminal 25 (Neutral-4LO switch) and body ground
- **"4H" position: No continuity should exist.**
- **"4LO" position: Continuity should exist.**

Terminal 43 (Wait detection switch) and body ground
- **"4H" position: No continuity should exist. (*1)**
- **"4LO" position: Continuity should exist.**

*1: After setting from "4LO" to "4H", continuity exists while "Wait" function is operating in "4H" position. (No continuity exists when "Wait" function is canceled.)

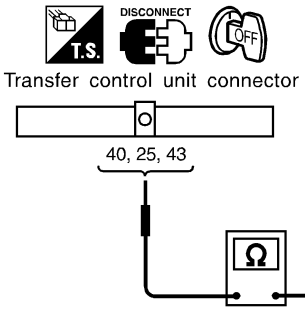

SMT787D

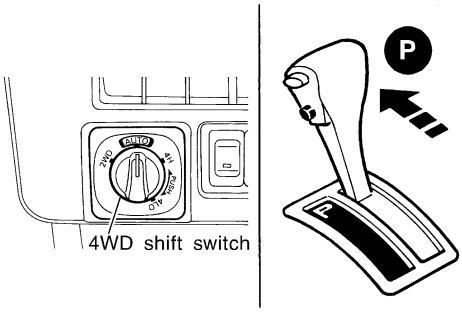

SMT849D

OK or NG

OK	▶	GO TO 6.
NG	▶	**Check the following.** ● Harness continuity between transfer switch assembly sub-harness connector and transfer control unit ● Continuity between transfer switch assembly sub-harness connector and body ground

6	PERFORM SELF-DIAGNOSIS AGAIN
After driving for a while, perform self-diagnosis again. Refer to "Trouble Diagnosis without CONSULT-II", TF-61.	
OK or NG	
OK ▶	**INSPECTION END**
NG ▶	1. Perform transfer control unit input/output signal inspection. Refer to "TRANSFER CONTROL UNIT INSPECTION TABLE", "TROUBLE DIAGNOSIS — GENERAL DESCRIPTION", TF-89. 2. If NG, recheck transfer control unit pin terminals for damage or loose connection with harness connector.

Diagnostic Procedure

NATF0025

1	CHECK MALFUNCTION	
Is this malfunction detected only while driving in reverse? **Yes or No**		
Yes	▶	**CHECK A/T PNP SWITCH "R" POSITION.** Refer to AT-102, "DTC P0705 Park/Neutral Position Switch".
No	▶	GO TO 2.

2	CHECK OTHER MALFUNCTION	
Are other malfunctions also detected by self-diagnosis and CONSULT-II? Refer to "Trouble Diagnosis without CONSULT-II", TF-61 and "Trouble Diagnosis with CONSULT-II", TF-64. **Yes or No**		
Yes	▶	**CHECK FOR OTHER MALFUNCTIONS.** (When other malfunctions are eliminated, clutch pressure switch malfunction display may disappear.)
No	▶	GO TO 3.

3	CHECK 2-4WD SHIFT SOLENOID VALVE AND 4WD SHIFT SWITCH CIRCUITS	
Check 2-4WD shift solenoid valve and 4WD shift switch circuits. **OK or NG**		
OK	▶	GO TO 4.
NG	▶	Check, repair or replace faulty parts.

4	CHECK INPUT SIGNAL	
WITH CONSULT-II	▶	GO TO 5.
WITHOUT CONSULT-II	▶	GO TO 6.

5	CHECK INPUT SIGNAL

With CONSULT-II

1. Turn ignition switch to "ON" position.
2. Select "ECU INPUT SIGNALS" in Data Monitor.
3. Read out ON/OFF status of "CL PRES SW".

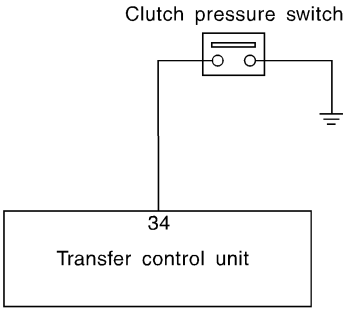

SMT788D

DATA MONITOR	
MONITOR	NO DTC
4L SWITCH	OFF
N POSI SW TF	OFF
LINE PRES SW	OFF
CL PRES SW	OFF
ATP SWITCH	OFF
N POSI SW AT	OFF
R POSI SW AT	OFF
P POSI SW AT	ON
CLOSED THL/SW	ON

SMT977D

OK or NG

OK	▶	GO TO 7.
NG	▶	**Check the following.** ● Continuity between transfer control unit and transfer terminal cord assembly sub-harness connector ● Transfer sub-harness ● Clutch pressure switch Refer to "4WD Solenoid Valve, Clutch Pressure Switch and Line Pressure Switch", "COMPONENT INSPECTION", TF-147.

6	CHECK INPUT SIGNAL

Without CONSULT-II

1. Turn ignition switch to "ON" position and set 4WD shift switch to "4H" position.
2. Check voltage between transfer control unit harness connector terminal 34 and body ground.

When 4WD shift switch is in "2WD":
Battery voltage should exist.
When 4WD shift switch is in "AUTO" or "4H" and A/T selector lever is in "D":
"Wait" operating: Battery voltage should exist.
"Wait" not operating: Approx. 0 volts should exist.

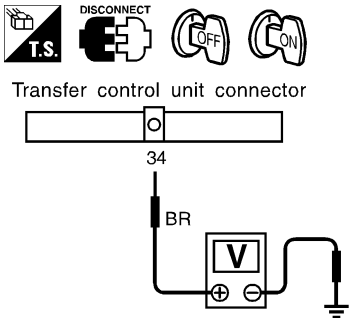

SMT789D

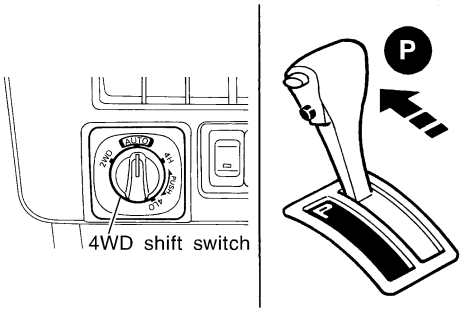

SMT849D

OK or NG

OK	▶	GO TO 7.
NG	▶	**Check the following.** ● Continuity between transfer control unit and transfer terminal cord assembly sub-harness connector ● Transfer sub-harness ● Clutch pressure switch Refer to "4WD Solenoid Valve, Clutch Pressure Switch and Line Pressure Switch", "COMPONENT INSPECTION", TF-147.

7	PERFORM SELF-DIAGNOSIS AGAIN

1. Check hydraulic parts.
2. After driving for a while, perform self-diagnosis again. Refer to "Trouble Diagnosis without CONSULT-II", TF-61.

OK or NG

OK	▶	**INSPECTION END**
NG	▶	1. Perform transfer control unit input/output signal inspection. Refer to "TRANSFER CONTROL UNIT INSPECTION TABLE", TF-89. 2. If NG, recheck transfer control unit pin terminals for damage or loose connection with harness connector.

Diagnostic Procedure

NATF0026

1	CHECK MALFUNCTION	
Is this malfunction detected only while driving in reverse?		
	Yes or No	
Yes	▶	**CHECK A/T PNP SWITCH "R" POSITION.** Refer to AT-102, "DTC P0705 Park/Neutral Position Switch".
No	▶	GO TO 2.

2	CHECK OTHER MALFUNCTIONS	
Are other malfunctions also detected by self-diagnosis and CONSULT-II? Refer to "Trouble Diagnosis without CONSULT-II", TF-61 and "Trouble Diagnosis with CONSULT-II", TF-64.		
	Yes or No	
Yes	▶	**CHECK FOR OTHER MALFUNCTIONS.** (When other malfunctions are eliminated, line pressure switch malfunction display may disappear.)
No	▶	GO TO 3.

3	CHECK INPUT SIGNAL	
WITH CONSULT-II	▶	GO TO 4.
WITHOUT CONSULT-II	▶	GO TO 5.

4	CHECK INPUT SIGNAL

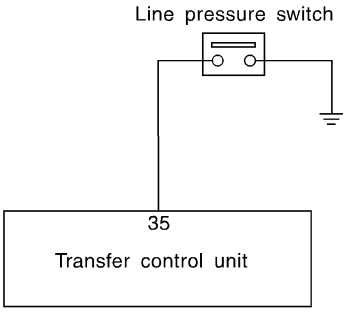

SMT790D

With CONSULT-II

1. Select "ECU INPUT SIGNALS" in Data Monitor.
2. Read out the ON/OFF status of "LINE PRES SW".

DATA MONITOR	
MONITOR	NO DTC
4L SWITCH	OFF
N POSI SW TF	OFF
LINE PRES SW	OFF
CL PRES SW	OFF
ATP SWITCH	OFF
N POSI SW AT	OFF
R POSI SW AT	OFF
P POSI SW AT	ON
CLOSED THL/SW	ON

SMT977D

OK or NG

OK	▶	GO TO 6.
NG	▶	**Check the following.** ● Continuity between transfer control unit and transfer terminal cord assembly sub-harness connector ● Transfer sub-harness ● Line pressure switch Refer to "4WD Solenoid Valve, Clutch Pressure Switch and Line Pressure Switch", "COMPONENT INSPECTION", TF-147.

5	CHECK INPUT SIGNAL

Without CONSULT-II

1. Turn ignition switch to "OFF" position.
2. Disconnect transfer control unit harness connector.
3. Check continuity between transfer control unit harness connector terminal 35 and body ground.

After the vehicle has been left for at least 5 minutes in a room temperature with ignition switch "OFF":
No continuity should exist.
With ignition switch in "ON", 4WD shift switch in "AUTO" or "4H" and A/T selector lever in "D":
Continuity should exist.

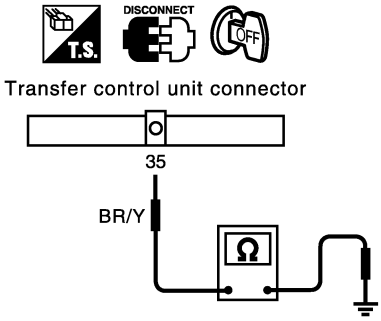

SMT152E

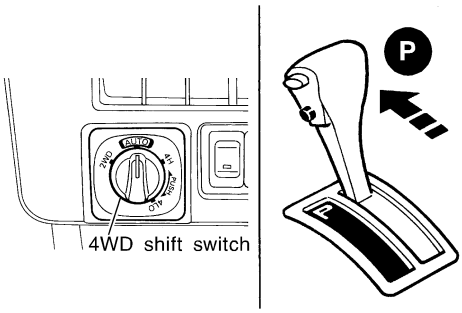

SMT849D

OK or NG

OK	▶	GO TO 6.
NG	▶	**Check the following.** ● Continuity between transfer control unit and transfer terminal cord assembly sub-harness connector ● Transfer sub-harness ● Line pressure switch Refer to "4WD Solenoid Valve, Clutch Pressure Switch and Line Pressure Switch", "COMPONENT INSPECTION", TF-147.

6	PERFORM SELF-DIAGNOSIS AGAIN

1. Check hydraulic parts.
2. After driving for a while, perform self-diagnosis again. Refer to "Trouble Diagnosis without CONSULT-II", TF-61.

OK or NG

OK	▶	**INSPECTION END**
NG	▶	1. Perform transfer control unit input/output signal inspection. Refer to TF-89. 2. If NG, recheck transfer control unit pin terminals for damage or loose connection with harness connector.

Diagnostic Procedure

NATF0027

1	CHECK INPUT SIGNAL
WITHOUT CONSULT-II ▶	GO TO 2.

2	CHECK INPUT SIGNAL

Without CONSULT-II

1. Turn ignition switch to “OFF” position.
2. Disconnect ABS actuator and electric unit (control unit) harness connector.
3. Disconnect ABS actuator and electric unit (control unit) and transfer control unit harness connectors.
4. Check continuity between transfer control unit harness connector terminal 32 and ABS actuator and electric unit (control unit) harness connector terminal 9.
   Continuity should exist.
5. Check continuity between transfer control unit harness connector terminal 32, ABS actuator and electric unit (control unit) harness connector terminal 9 and body ground.
   Continuity should not exist.

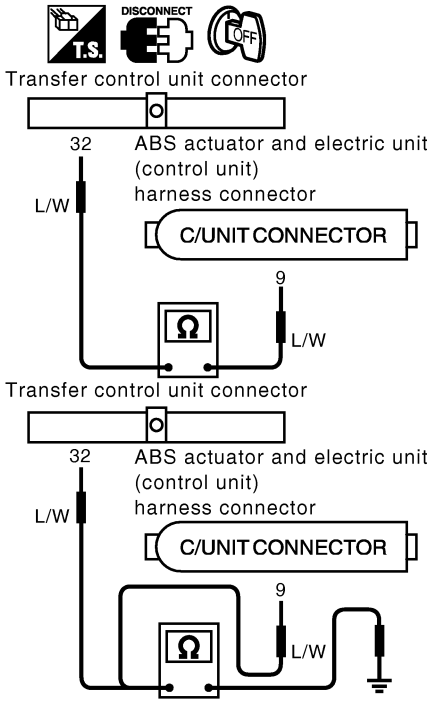

SMT793DC

OK or NG

OK ▶	GO TO 3.
NG ▶	Repair or replace harness or connector between ABS actuator and electric unit (control unit) and transfer control unit.

3	CHECK COMMUNICATION LINE

Check communication line between ABS actuator and electric unit (control unit) and transfer control unit.
(Refer to BR-144, “8. Vehicle vibrates excessively when ABS is operating”.)

OK or NG

OK ▶	GO TO 4.
NG ▶	Check, repair or replace faulty parts.

4	PERFORM SELF-DIAGNOSIS AGAIN
After driving for a while, perform self-diagnosis again. Refer to "Trouble Diagnosis without CONSULT-II", TF-61.	
OK or NG	
OK ▶	**INSPECTION END**
NG ▶	1. Perform transfer control unit input/output signal inspection. Refer to "TRANSFER CONTROL UNIT INSPECTION TABLE", "TROUBLE DIAGNOSIS — GENERAL DESCRIPTION", TF-89. 2. If NG, recheck transfer control unit pin terminals for damage or loose connection with harness connector.

Diagnostic Procedure

NATF0028

1	CHECK TRANSFER CONTROL UNIT POWER SOURCE

1. Turn ignition switch to “OFF” position and perform self-diagnosis again.
   Refer to “Trouble Diagnosis without CONSULT-II”, TF-61 and “Trouble Diagnosis with CONSULT-II”, TF-64.
2. Turn ignition switch to “OFF” position.
3. Disconnect transfer control unit harness connector.
4. Check voltage between transfer control unit harness connector terminal 47 and body ground.
   Voltage: Battery voltage

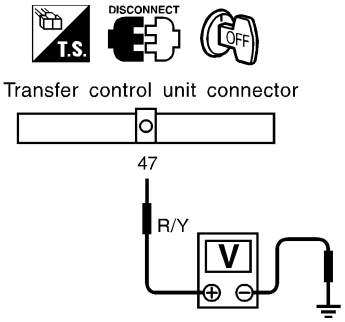

SMT794D

OK or NG

OK	▶	GO TO 2.
NG	▶	**Check the following.** ● No. 24 fuse (7.5A) ● Harness continuity between fuse and transfer control unit

2	PERFORM SELF-DIAGNOSIS AGAIN

After driving for a while, perform self-diagnosis again.
Refer to “Trouble Diagnosis without CONSULT-II”, TF-61 and “Trouble Diagnosis with CONSULT-II”, TF-64.

OK or NG

OK	▶	**INSPECTION END**
NG	▶	1. Perform transfer control unit input/output signal inspection. Refer to “TRANSFER CONTROL UNIT INSPECTION TABLE”, “TROUBLE DIAGNOSIS — GENERAL DESCRIPTION”, TF-89. 2. If NG, recheck transfer control unit pin terminals for damage or loose connection with harness connector.

Diagnostic Procedure

NATF0064

1	SHIFT ACTUATOR	
Refer to “Actuator & Actuator Position Switch”, “COMPONENT INSPECTION”, TF-151.		
OK or NG		
OK	▶	GO TO 3.
NG	▶	GO TO 2.

2	CHECK POWER SOURCE	

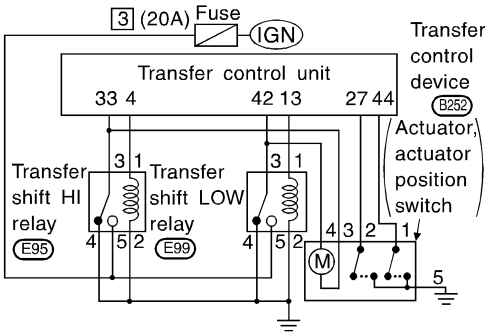

SMT825DA

1. Disconnect transfer control device terminal.
2. Turn ignition switch to “ON”. (Do not start engine.)
3. Check voltage between transfer control device harness connector 3 (or 4) and body ground while 4WD shift switch is set from 4H to 4LO (or from 4LO to 4H).
   Voltage: Battery voltage

OK or NG		
OK	▶	Repair or replace actuator.
NG	▶	1. Recheck the following. ● Continuity between ignition switch and transfer HI & LOW relays ● Ignition switch and No. 3 fuse (20A) ● Continuity between transfer shift HI & LOW relays and transfer control device 2. If NG, repair or replace damaged part.

3	CHECK INPUT SIGNAL	
WITH CONSULT-II	▶	GO TO 4.
WITHOUT CONSULT-II	▶	GO TO 5.

4	CHECK INPUT SIGNAL

With CONSULT-II

1. Start engine (idling).
2. Select "SELF-DIAG RESULTS" in Select Diag Mode.
3. Read out self-diagnostic result.

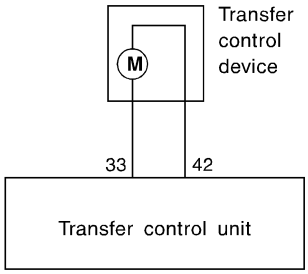

SMT826D

SELF-DIAG RESULTS
DTC RESULTS
NO DTC IS DETECTED. FURTHER TESTING MAY BE REQUIRED.

SMT978D

OK or NG

OK	▶	GO TO 7.
NG	▶	GO TO 6.

5	CHECK INPUT SIGNAL

Without CONSULT-II

1. Start engine (idling).
2. Check voltage between transfer control unit harness connector terminal 33 (or 42) and body ground while 4WD shift switch is set from 4H to 4LO (or from 4LO to 4H).

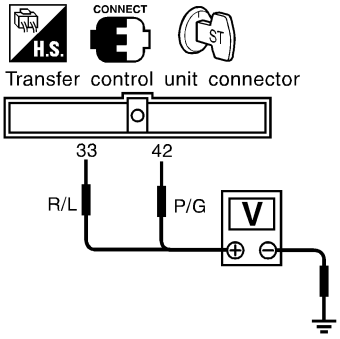

SMT828D

3. Result

Terminal No.	Condition	Voltage
33	While actuator is operating from 4H to 4LO.	Battery voltage
	Actuator does not operate.	Approx. 0V
42	While actuator is operating from 4LO to 4H.	Battery voltage
	Actuator does not operate.	Approx. 0V

MTBL0202

OK or NG

OK	▶	GO TO 7.
NG	▶	GO TO 6.

6	CHECK HARNESS CONTINUITY BETWEEN TRANSFER CONTROL UNIT AND TRANSFER CONTROL DEVICE

OK or NG

OK	▶	GO TO 7.
NG	▶	Repair and replace harness connector between transfer control unit and transfer control device.

7	PERFORM SELF-DIAGNOSIS AGAIN

After driving for a while, perform self-diagnosis again.
Refer to "Trouble Diagnosis without CONSULT-II", TF-61.

OK or NG

OK	▶	INSPECTION END
NG	▶	1. Perform transfer control unit/output signal inspection. Refer to "TRANSFER CONTROL UNIT INSPECTION TABLE", "TROUBLE DIAGNOSIS — GENERAL DESCRIPTION", TF-89. 2. If NG, recheck transfer control unit pin terminals for damage or loose connection with harness connector.

Diagnostic Procedure

NATF0065

1	SHIFT ACTUATOR POSITION SWITCH	
Refer to “Actuator & Actuator Position Switch”, “COMPONENT INSPECTION”, TF-151.		
OK or NG		
OK	▶	GO TO 3.
NG	▶	GO TO 2.

2	CHECK POSITION SWITCH	
1. Recheck continuity of shift actuator position switch. Refer to “Actuator & Actuator Position Switch”, “COMPONENT INSPECTION”, TF-151. **Continuity should exist.**		
OK or NG		
OK	▶	GO TO 3.
NG	▶	Repair or replace position switch.

3	CHECK INPUT SIGNAL	
WITH CONSULT-II	▶	GO TO 4.
WITHOUT CONSULT-II	▶	GO TO 5.

4 CHECK INPUT SIGNAL

With CONSULT-II

1. Start engine (idling).
2. Select “SELF-DIAG RESULTS” in Select Diag Mode.
3. Read out self-diagnostic result.

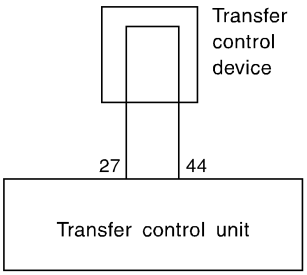

SMT829DA

SELF-DIAG RESULTS
DTC RESULTS
NO DTC IS DETECTED. FURTHER TESTING MAY BE REQUIRED.

SMT978D

OK or NG

OK	▶	GO TO 7.
NG	▶	GO TO 6.

5	CHECK INPUT SIGNAL

Without CONSULT-II

1. Start engine (idling).
2. Check voltage transfer control unit harness connector terminal 27 (or 44) and body ground while 4WD shift switch is set from 4H to 4LO (or from 4LO to 4H).

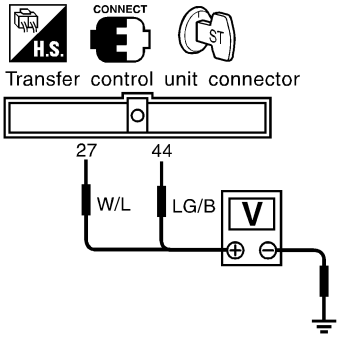

SMT830D

3. Result

Terminal No.	Condition	Voltage
27	4WD shift switch is set to 4H.	Less than 1V
	4WD shift switch is set except 4H.	Battery voltage
44	4WD shift switch is set to 4LO.	Less than 1V
	4WD shift switch is set except 4LO.	Battery voltage

MTBL0203

OK or NG

OK	▶	GO TO 7.
NG	▶	GO TO 6.

6	CHECK HARNESS CONTINUITY BETWEEN TRANSFER CONTROL UNIT AND TRANSFER CONTROL DEVICE

OK or NG

OK	▶	GO TO 7.
NG	▶	Repair and replace harness connector between transfer control unit and transfer control device.

7	PERFORM SELF-DIAGNOSIS AGAIN

After driving for a while, perform self-diagnosis again.
Refer to "Trouble Diagnosis without CONSULT-II", TF-61.

OK or NG

OK	▶	INSPECTION END
NG	▶	1. Perform transfer control unit/output signal inspection. Refer to "TRANSFER CONTROL UNIT INSPECTION TABLE", "TROUBLE DIAGNOSIS — GENERAL DESCRIPTION", TF-89. 2. If NG, recheck transfer control unit pin terminals for damage or loose connection with harness connector.

Diagnostic Procedure

NATF0066

1	SHIFT ACTUATOR CIRCUIT	
Refer to “Transfer Shift Relay (High & Low)”, “COMPONENT INSPECTION” and “Actuator & Actuator Position Switch”, “COMPONENT INSPECTION”, TF-150, 151.		
OK or NG		
OK	▶	GO TO 2.
NG	▶	Repair or replace transfer shift relay and actuator and actuator position switch.

2 CHECK POWER SOURCE OF TRANSFER SHIFT (HI & LOW) RELAY

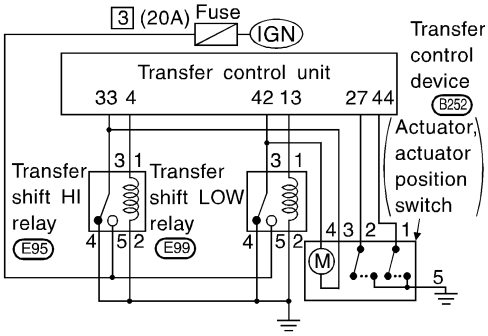

SMT825DA

1. Disconnect transfer control device terminal.
2. Turn ignition switch to “ON” (Do not start engine).
3. Check voltage between transfer shift HI and LOW relay terminal 5 and body ground.
   Voltage: Battery voltage

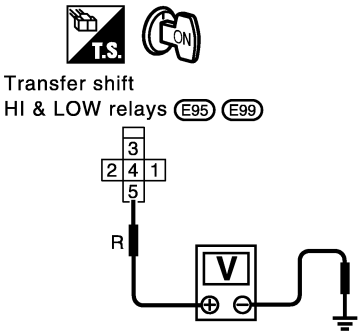

SMT153E

OK or NG		
OK	▶	GO TO 3.
NG	▶	**Check the following.** ● Continuity between ignition switch and transfer shift HI & LOW relays ● Check ground circuit between transfer shift HI & LOW relays and body ground. ● Ignition switch and No. 3 fuse (20A)

3	CHECK POWER SOURCE OF TRANSFER CONTROL DEVICE

1. Disconnect transfer control device terminal.
2. Turn ignition switch to "ON". (Do not start engine.)
3. Turn 4WD shift switch from "4H" to "4LO" (or from "4LO" to "4H").
4. Check voltage between transfer control device terminal 3 (or 4) and body ground.

Voltage: Battery voltage

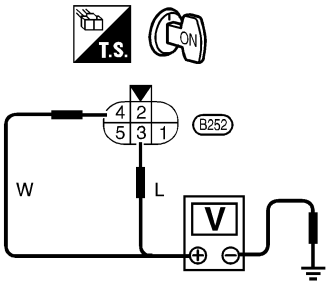

SMT832D

OK or NG

OK	▶	GO TO 4.
NG	▶	**Check the following.** ● Harness and connector from transfer shift HI and LOW relays to transfer control device harness terminal ● Ground circuit between transfer control device and body ground.

4	CHECK INPUT SIGNAL	
WITH CONSULT-II	▶	GO TO 5.
WITHOUT CONSULT-II	▶	GO TO 6.

5	CHECK INPUT SIGNAL

With CONSULT-II

1. Start engine (idling).
2. Select "SELF-DIAG RESULTS" in Select Diag Mode.
3. Read out self-diagnostic result.

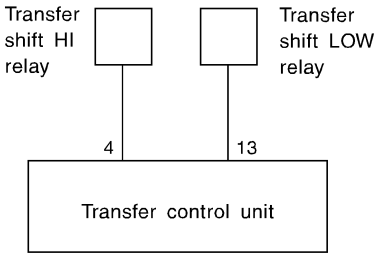

SMT835D

SELF-DIAG RESULTS
DTC RESULTS
NO DTC IS DETECTED. FURTHER TESTING MAY BE REQUIRED.

SMT978D

OK or NG

OK	▶	GO TO 8.
NG	▶	GO TO 7.

6	CHECK INPUT SIGNAL

Without CONSULT-II

1. Start engine (idling).
2. Check voltage between transfer control unit harness connector terminal 4 (or 13) and body ground while 4WD shift switch is set from 4H to 4LO (or from 4LO to 4H).

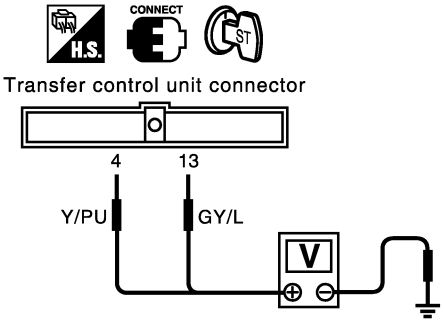

SMT154E

3. Result

Terminal No.	Condition	Voltage
4	While actuator is operating from 4H to 4LO.	Battery voltage
	Actuator does not operate.	Less than 1V
13	While actuator is operating from 4LO to 4H.	Battery voltage
	Actuator does not operate.	Approx. 0V

MTBL0516

OK or NG

OK	▶	GO TO 8.
NG	▶	GO TO 7.

7	CHECK HARNESS CONTINUITY BETWEEN TRANSFER CONTROL UNIT AND TRANSFER CONTROL DEVICE

OK or NG

OK	▶	GO TO 8.
NG	▶	Repair and replace harness connector between transfer control unit and transfer control device.

8	PERFORM SELF-DIAGNOSIS AGAIN

After driving for a while, perform self-diagnosis again.
Refer to "Trouble Diagnosis without CONSULT-II", TF-61.

OK or NG

OK	▶	INSPECTION END
NG	▶	1. Perform transfer control unit/output signal inspection. Refer to "TRANSFER CONTROL UNIT INSPECTION TABLE", "TROUBLE DIAGNOSIS — GENERAL DESCRIPTION", TF-89. 2. If NG, recheck transfer control unit pin terminals for damage or loose connection with harness connector.

Symptom 1. 4WD Shift Indicator Lamp Does Not Turn ON

NATF0029

SYMPTOM: Although ignition switch is turned “ON”, all the 4WD shift indicator lamps do not turn ON for 1 second.

1	CHECK TRANSFER CONTROL UNIT POWER SOURCE

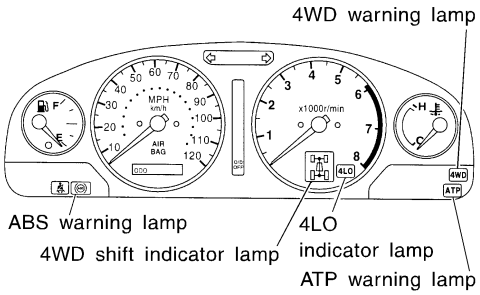

SMT994D

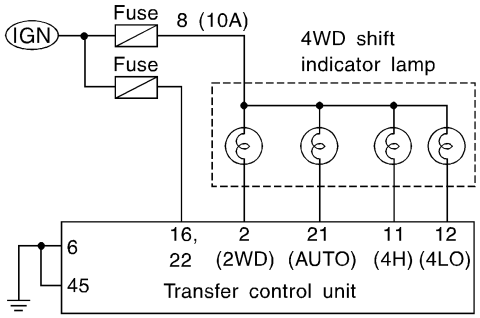

SMT860D

1. Turn ignition switch to “OFF” position and disconnect transfer control unit harness connector.
2. Turn ignition switch to “ON” position. (Do not start engine.)
3. Check voltage between transfer control unit harness connector terminals 16, 22 and body ground.

   Voltage: Battery voltage

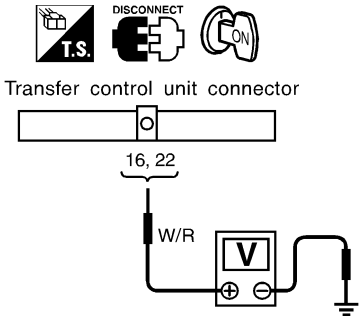

SMT796D

OK or NG

OK	▶	GO TO 2.
NG	▶	**Check the following.** ● Continuity between ignition switch and transfer control unit ● Ignition switch and No. 18 fuse (10A)

2	CHECK TRANSFER CONTROL UNIT GROUND CIRCUIT

1. Turn ignition switch to "OFF" position.
2. Disconnect transfer control unit harness connector.
3. Measure resistance between transfer control unit harness connector terminals 6, 45 and body ground.

Resistance: 0Ω

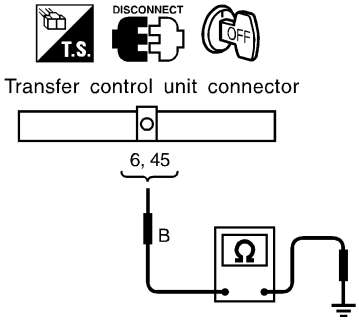

SMT797D

OK or NG

OK	▶	GO TO 3.
NG	▶	Check continuity between transfer control unit and body ground.

3	CHECK PROCEDURES FROM THE BEGINNING AGAIN

Check again.

OK or NG

OK	▶	**INSPECTION END**
NG	▶	1. Perform transfer control unit input/output signal inspection. Refer to "TRANSFER CONTROL UNIT INSPECTION TABLE", "TROUBLE DIAGNOSIS — GENERAL DESCRIPTION", TF-89. 2. If NG, recheck transfer control unit pin terminals for damage or loose connection with harness connector.

Symptom 2. 4WD Warning Lamp Does Not Turn ON

=NATF0030

SYMPTOM: Although ignition switch is turned “ON”, 4WD warning lamp does not turn ON.

1	CHECK TRANSFER CONTROL UNIT POWER SOURCE

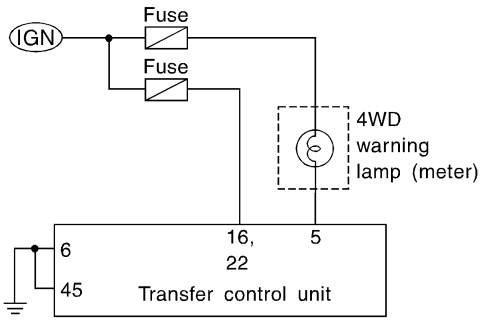

SMT799D

1. Turn ignition switch to “OFF” position and disconnect transfer control unit harness connector.
2. Turn ignition switch to “ON” position.
   (Do not start engine.)
3. Check voltage between transfer control unit harness connector terminals 16, 22 and body ground.
   Voltage: Battery voltage

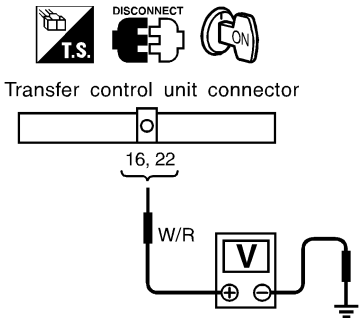

SMT800D

OK or NG

OK	▶	GO TO 2.
NG	▶	**Check the following.** ● Continuity between ignition switch and transfer control unit ● Ignition switch and No. 18 fuse (10A)

2	CHECK TRANSFER CONTROL UNIT GROUND CIRCUIT

1. Turn ignition switch to "OFF" position.
2. Disconnect transfer control unit harness connector.
3. Measure resistance between transfer control unit harness connector terminals 6, 45 and body ground.

Resistance: 0Ω

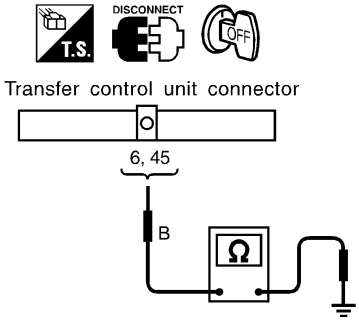

SMT803D

OK or NG

OK	▶	GO TO 3.
NG	▶	Check continuity between transfer control unit and body ground.

3	CHECK 4WD WARNING LAMP CIRCUIT

Check the following.
- 4WD warning lamp
- Continuity between ignition switch and 4WD warning lamp
- Continuity between 4WD warning lamp and transfer control unit

OK or NG

OK	▶	GO TO 4.
NG	▶	• Repair or replace harness or connector. • Replace 4WD warning lamp.

4	CHECK PROCEDURES FROM THE BEGINNING AGAIN

Check again.

OK or NG

OK	▶	**INSPECTION END**
NG	▶	1. Perform transfer control unit input/output signal inspection. Refer to "TRANSFER CONTROL UNIT INSPECTION TABLE", "TROUBLE DIAGNOSIS — GENERAL DESCRIPTION", TF-89. 2. If NG, recheck transfer control unit pin terminals for damage or loose connection with harness connector.

Symptom 3. 4WD Shift Indicator Lamp Does Not Turn OFF

NATF0031

SYMPTOM: When 4WD shift switch is set from “4H” to “4LO”, all the 4WD shift indicator lamps do not turn OFF.

1	CHECK ATP SWITCH CIRCUIT	

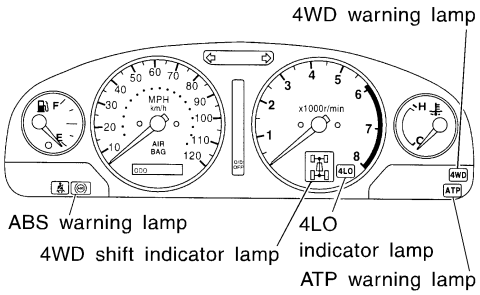

SMT994D

Check ATP switch circuit.
Refer to “Diagnostic Procedure”, “ATP SWITCH, WAIT DETECTION SWITCH AND NEUTRAL-4LO SWITCH”, TF-148.

OK or NG

OK	▶	GO TO 2.
NG	▶	Check, repair or replace faulty parts.

2	CHECK PROCEDURE FROM THE BEGINNING AGAIN	

Check again.

OK or NG

OK	▶	**INSPECTION END**
NG	▶	Recheck each connector’s pin terminals for damage or loose connection.

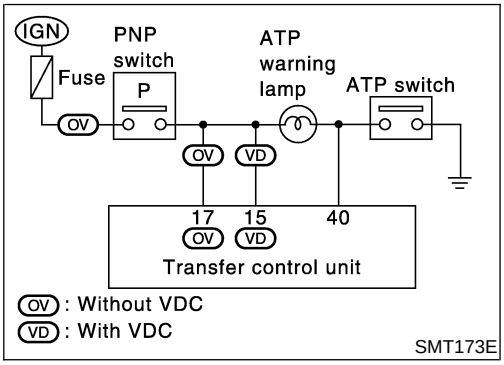

SMT173E

Symptom 4. ATP Warning Lamp Does Not Turn ON

NATF0032

SYMPTOM: When 4WD shift switch is set from “4H” to “4LO” with A/T selector lever in “P” position, ATP warning lamp does not turn ON.

1	CHECK ATP SWITCH CIRCUIT	

Check ATP switch circuit.
Refer to “Diagnostic Procedure”, “ATP SWITCH, WAIT DETECTION SWITCH AND NEUTRAL-4LO SWITCH”, TF-148.

OK or NG

OK	▶	GO TO 2.
NG	▶	Check, repair or replace faulty parts.

2	CHECK FOLLOWING ITEMS	
Check the following. ● ATP warning lamp ● Continuity between "TFCU" terminal 15 and ATP warning lamp (With VDC) ● Continuity between PNP ("P" position) switch terminal 7 and ATP warning lamp (Without VDC) ● Continuity between ATP warning lamp and ATP switch		
OK or NG		
OK	▶	GO TO 4. (With VDC)/GO TO 3. (Without VDC)
NG	▶	Repair or replace ATP warning lamp, harness or connector.

3	CHECK PNP SWITCH CIRCUIT (Without VDC)	
Check PNP switch circuit. Refer to AT-102, "DTC P0705 Park/Neutral Position Switch".		
OK or NG		
OK	▶	GO TO 4.
NG	▶	Check, repair or replace faulty parts.

4	CHECK PROCEDURES FROM THE BEGINNING AGAIN	
Check again.		
OK or NG		
OK	▶	**INSPECTION END**
NG	▶	Recheck each connector's pin terminals for damage or loose connection.

Symptom 5. 4LO Indicator Lamp Does Not Turn ON

=NATF0033

SYMPTOM: When 4WD shift switch is set from “4H” to “4LO” position, 4LO indicator lamp does not turn ON.

1	CHECK TRANSFER CONTROL UNIT POWER SUPPLY CIRCUIT

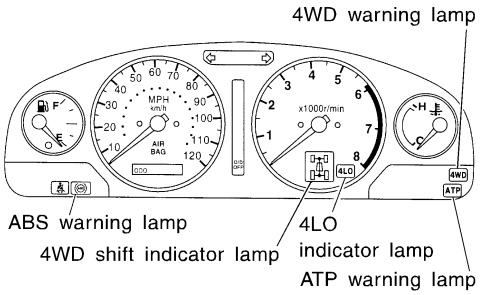

SMT994D

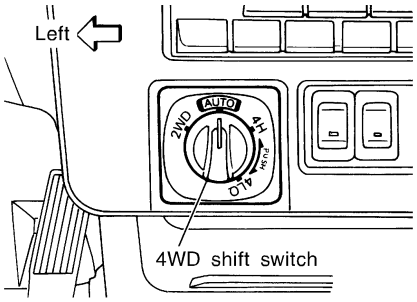

SMT851D

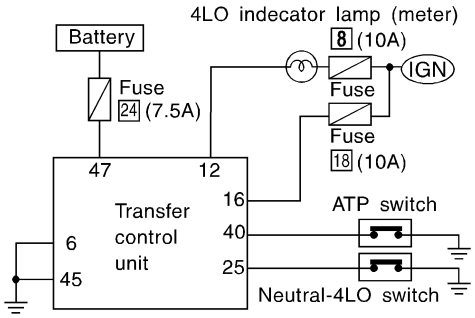

SMT979D

1. Disconnect battery negative terminal (−), then transfer control unit connector.
2. Connect battery negative terminal (−) and turn ignition switch “ON” (with engine stopped).
3. Check voltage across transfer control unit body-side connector terminals 47, 16 and body ground.
   Voltage: Battery voltage

OK or NG

OK	▶	GO TO 2.
NG	▶	**Check the following.** ● Continuity between battery and transfer control unit ● Ignition switch (Refer to EL-11, “Power Supply Routing”.) ● No. 24 fuse (7.5A), No. 8 fuse (10A) and No. 18 fuse (10A)

2	CHECK TRANSFER CONTROL UNIT GROUND CIRCUIT	
1. Turn ignition switch "OFF", and disconnect transfer control unit connector. 2. Check for continuity between transfer control unit body-side connector terminals 6, 45 and body ground. **Continuity should exist.**		
OK or NG		
OK	▶	GO TO 3.
NG	▶	**Check the following.** ● Continuity between transfer control unit and body ground

3	CHECK 4LO INDICATOR LAMP CIRCUIT	
Disconnect battery negative terminal (−) and check the following items: 1. Check condition of 4LO indicator lamp. 2. Check continuity between battery and 4LO indicator lamp. 3. Check continuity between 4LO indicator lamp and transfer control unit connector terminal 12. 4. Check condition of ATP switch. 5. Check condition of neutral-4LO switch. 6. Check continuity between neutral-4LO switch ground terminal 6 and body ground.		
OK or NG		
OK	▶	GO TO 4.
NG	▶	**Check the following.** ● 4LO indicator lamp ● Neutral-4LO switch Refer to "ATP Switch, Neutral-4LO Switch and Wait Detection Switch", "COMPONENT INSPECTION", TF-148.

4	CHECK PROCEDURES FROM THE BEGINNING	
Check again.		
OK or NG		
OK	▶	**INSPECTION END**
NG	▶	1. Perform transfer control unit input/output signal inspection. Refer to "TRANSFER CONTROL UNIT INSPECTION TABLE", "TROUBLE DIAGNOSIS — GENERAL DESCRIPTION", TF-89. 2. If NG, recheck transfer control unit pin terminals for damage or loose connection with harness connector.

Symptom 6. 4WD Shift Indicator Lamp Does Not Indicate “4H”

NATF0034

SYMPTOM: When 4WD shift switch is set to “4H”, 4WD shift indicator lamp does not indicate “4H”.

1	CHECk 4WD WARNING LAMP	
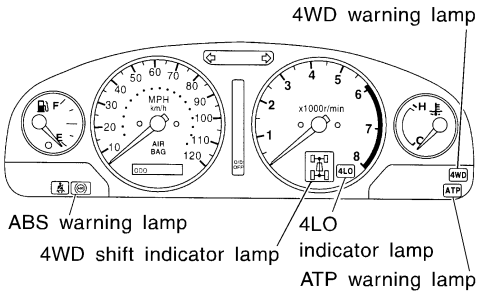 SMT994D Is 4WD warning lamp turned ON?		
Yes or No		
Yes	▶	Refer to “Trouble Diagnosis without CONSULT-II”, TF-61.
No	▶	GO TO 2.

2	CHECK FOLLOWING ITEMS	
Check the following. ● Neutral-4LO switch circuit. Refer to TF-112. ● Wait detection switch circuit. Refer to TF-112. ● ATP switch circuit. Refer to TF-112.		
OK or NG		
OK	▶	GO TO 3.
NG	▶	Check, repair or replace faulty parts.

3	CHECK PROCEDURES FROM THE BEGINNING AGAIN	
Check again.		
OK or NG		
OK	▶	**INSPECTION END**
NG	▶	Recheck each connector’s pin terminals for damage or loose connection.

Symptom 7. 4WD Shift Indicator Lamp Repeats Flickering

=NATF0035

SYMPTOM: 4WD shift indicator lamp keeps flickering.

1	CHECK 4WD SHIFT INDICATOR LAMP

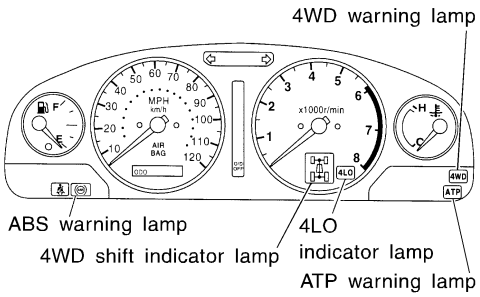

SMT994D

1. Set 4WD shift switch to “2WD” position.
2. Move vehicle forward and backward. Or drive straight increasing or decreasing speed under 20 km/h (12 MPH).
3. Does 4WD shift indicator lamp keep flickering?

Yes or No

Yes	▶	GO TO 2.
No	▶	**INSPECTION END**

2	CHECK TIGHT CORNER BRAKING SYMPTOM

Drive vehicle at speed under 20 km/h (12 MPH), turning steering wheel to the limit. Does tight corner braking symptom occur?

Yes or No

Yes	▶	GO TO 3.
No	▶	GO TO 4.

3	CHECK 4WD SHIFT INDICATOR LAMP

Does the 4WD shift indicator lamp keep flickering when the front wheels are jacked up?

Yes or No

Yes	▶	Check transfer unit operating system.
No	▶	Check tires.

4	CHECK 4WD WARNING LAMP

Does 4WD warning lamp flicker? (4WD shift indicator lamp is turned OFF.)

Yes or No

Yes	▶	Perform self-diagnoses. Refer to “Trouble Diagnosis without CONSULT-II”, TF-61.
No	▶	GO TO 5.

5	CHECK 4WD SHIFT INDICATOR LAMP

Does 4WD shift indicator lamp keep flickering?

Yes or No

Yes	▶	Check again.
No	▶	**INSPECTION END**

Symptom 8. Tight Corner Braking Symptom

NATF0036

SYMPTOM: Tight corner braking symptom occurs. (Hydraulic system failure)

1	CHECK INPUT SIGNAL

With CONSULT-II

1. Select “ECU INPUT SIGNALS” in Data Monitor.
2. Read out the ON/OFF status of “CLUTCH PRES SW”.

DATA MONITOR	
MONITOR	NO DTC
4L SWITCH	OFF
N POSI SW TF	OFF
LINE PRES SW	OFF
CL PRES SW	OFF
ATP SWITCH	OFF
N POSI SW AT	OFF
R POSI SW AT	OFF
P POSI SW AT	ON
CLOSED THL/SW	ON

SMT977D

Without CONSULT-II

Check voltage between transfer control unit harness connector terminal 34 and body ground.
Refer to “TRANSFER CONTROL UNIT INSPECTION TABLE”, “TROUBLE DIAGNOSIS — GENERAL DESCRIPTION”, TF-89.

OK or NG

OK	▶	**Disassemble transfer unit and check the following.** ● Control valve assembly ● 4WD solenoid valve ● 2-4WD shift solenoid valve ● Clutch piston ● Clutch assembly
NG	▶	GO TO 2.

2	CHECK CLUTCH PRESSURE SWITCH CIRCUIT

Check clutch pressure switch circuit.
Refer to “Diagnostic Procedure”, “CLUTCH PRESSURE SWITCH”, TF-116.

OK or NG

OK	▶	GO TO 3.
NG	▶	Check, repair or replace faulty parts.

3	CHECK PROCEDURES FROM THE BEGINNING AGAIN

Check again.

OK or NG

OK	▶	**INSPECTION END**
NG	▶	Recheck each connector’s pin terminals for damage or loose connection.

Symptom 9. 4WD System Does Not Operate

=NATF0037

SYMPTOM: The vehicle cannot be put into 4WD mode. (Hydraulic system failure)

1	CHECK INPUT SIGNAL

With CONSULT-II

1. Select “ECU INPUT SIGNALS” in Data Monitor.
2. Read out the ON/OFF status of “CLUTCH PRES SW”.

DATA MONITOR	
MONITOR	NO DTC
4L SWITCH	OFF
N POSI SW TF	OFF
LINE PRES SW	OFF
CL PRES SW	OFF
ATP SWITCH	OFF
N POSI SW AT	OFF
R POSI SW AT	OFF
P POSI SW AT	ON
CLOSED THL/SW	ON

SMT977D

Without CONSULT-II

Check voltage between transfer control unit harness connector terminal 34 and body ground.
Refer to “TRANSFER CONTROL UNIT INSPECTION TABLE”, “TROUBLE DIAGNOSIS — GENERAL DESCRIPTION”, TF-89.

OK or NG

OK	▶	1. Check transfer fluid level. 2. Disassemble transfer unit and check the following. ● Transfer motor ● Main oil pump assembly ● Sub-oil pump assembly ● Oil strainer ● Control valve assembly ● 2-4WD shift solenoid valve ● Oil filter element ● Lip seal ● Strainer O-ring ● Main oil pump drive gear ● Seal ring ● D-ring ● Clutch piston ● Clutch assembly
NG	▶	GO TO 2.

2	CHECK CLUTCH PRESSURE CIRCUIT

Check clutch pressure switch circuit.
Refer to “Diagnostic Procedure”, “CLUTCH PRESSURE SWITCH”, TF-116.

OK or NG

OK	▶	GO TO 3.
NG	▶	Check, repair or replace faulty parts.

3	CHECK PROCEDURES FROM THE BEGINNING	
Check again.		
	OK or NG	
OK	▶	**INSPECTION END**
NG	▶	Recheck each connector's pin terminals for damage or loose connection.

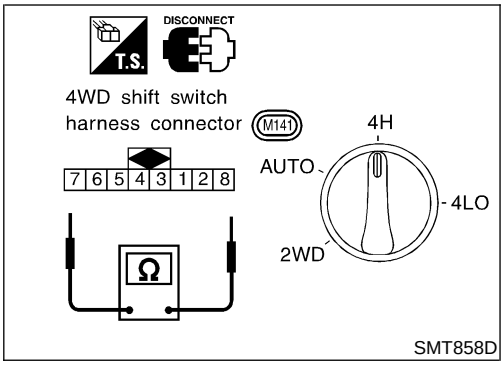

4WD Shift Switch

NATF0038S01

Check continuity between each terminal.

Terminals	Switch position	Continuity
1 - 2	2WD	Yes
	Except 2WD	No
1 - 3, 1 - 4	AUTO	Yes
	Except AUTO	No
1 - 4, 1 - 5	4H	Yes
	Except 4H	No
1 - 4, 1 - 6	4LO	Yes
	Except 4LO	No

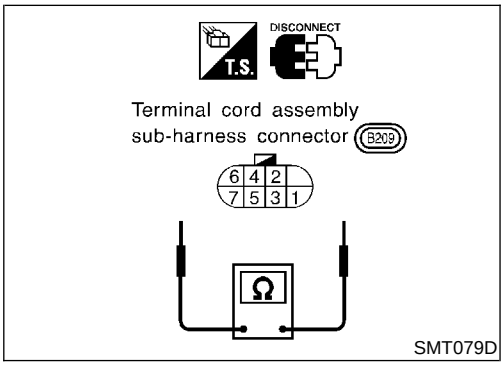

2-4WD Shift Solenoid Valve and Transfer Fluid Temperature Sensor

NATF0038S02

Measure resistance between terminals of transfer terminal cord assembly sub-harness connector located on rear-right of transfer unit.

Component parts	Terminals	Resistance
2-4WD shift solenoid valve	4 - 5	Approx. 20°C (68°F): Approx. 22.8 - 25.2Ω
Transfer fluid temperature sensor	2 - 3	Approx. 20°C (68°F): Approx. 2.5 kΩ Approx. 80°C (176°F): Approx. 0.3 kΩ

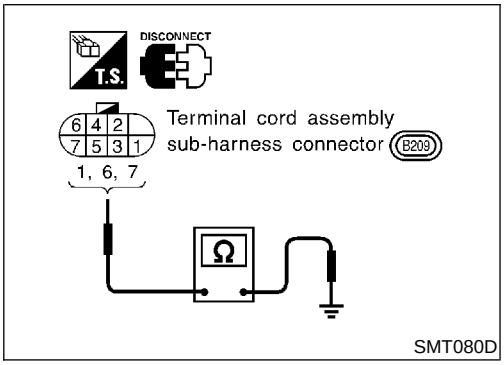

4WD Solenoid Valve, Clutch Pressure Switch and Line Pressure Switch

NATF0038S03

Measure resistance between terminals of transfer terminal cord assembly sub-harness connector located on rear-right of transfer unit.

Component parts	Terminals		Remarks
4WD solenoid valve	6	Ground terminal	Approx. 20°C (68°F): Approx. 3.0 - 3.4Ω
Clutch pressure switch	7		In room temperature ● 2-4WD shift solenoid valve "OFF": No continuity ● 2-4WD shift solenoid valve and transfer motor "ON": Continuity exists
Line pressure switch	1		In room temperature ● Turn ignition switch to "OFF" position and leave vehicle for more than 5 minutes. (OFF): No continuity ● Transfer motor "ON": Continuity exists

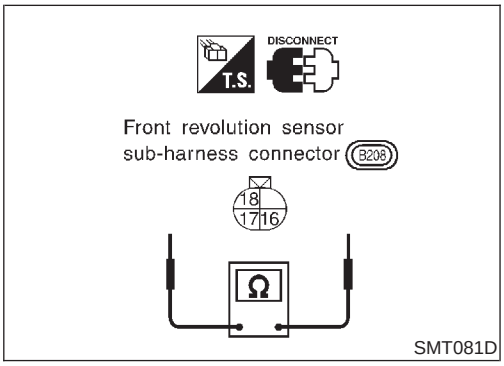

Front Revolution Sensor

NATF0038S04

Measure resistance between terminals of front revolution sensor sub-harness connector located on rear-right of transfer unit.

Terminals	Resistance
16 - 17	500 - 650Ω
18 - 17	No continuity
18 - 16	No continuity

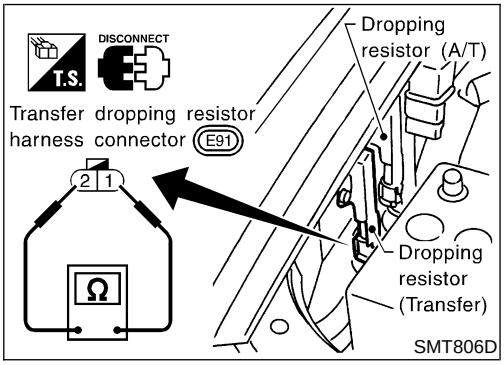

Transfer Dropping Resistor

NATF0038S07

Check resistance between terminals.

Resistance: 11.2 - 12.8 Ω

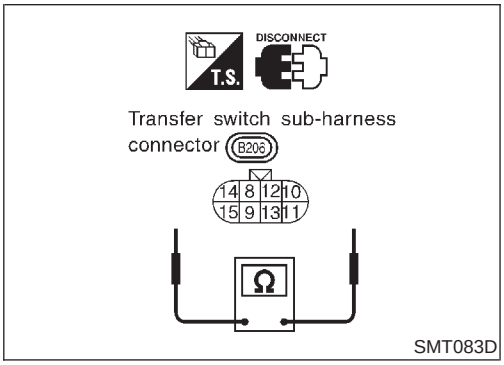

ATP Switch, Neutral-4LO Switch and Wait Detection Switch

NATF0038S06

Measure resistance between terminals of transfer switch assembly sub-harness connector located on rear-right of transfer unit.

Switch	Terminals	4WD shift switch position		
		4H	(N)	4LO
ATP switch	8 - 9	No continuity	Continuity	No continuity
Neutral-4LO switch	12 - 13	No continuity	Continuity	
Wait detection switch	10 - 11	No continuity		Continuity
		(Note) ← -		

NOTE:
When shifting from "4LO" to "4H", continuity exists while "Wait" function is operating. (No continuity exists when "Wait" function is canceled.)

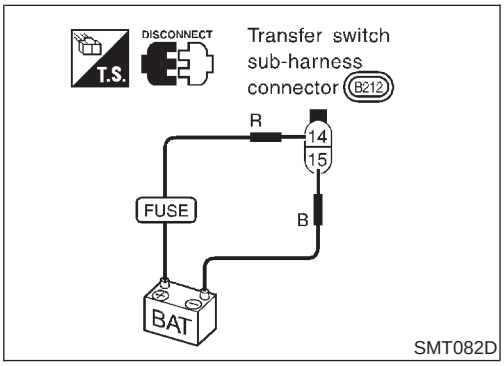

SMT082D

Transfer Motor

NATF0038S05

Apply battery voltage directly to transfer motor assembly sub-harness connector located on rear-right of transfer unit. (Positive: Terminal 14, Negative: Terminal 15)
Transfer motor should operate.

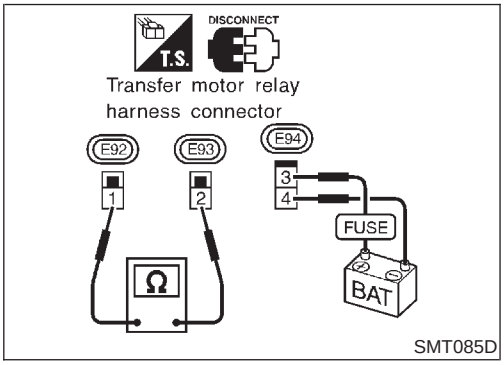

SMT085D

Transfer Motor Relay

NATF0038S08

1. Apply battery voltage directly to terminals 3 and 4.
2. Check continuity between terminals 1 and 2.

Condition	Continuity (1 - 2)
Battery voltage is applied	Yes
No voltage is applied	No

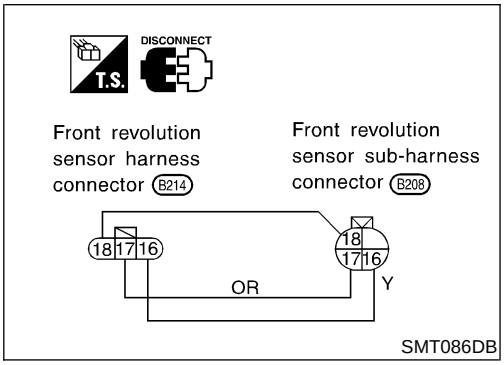

SMT086DB

Transfer Sub-harness

NATF0038S09

FRONT REVOLUTION SENSOR SUB-HARNESS CONNECTOR

NATF0038S0901

Check continuity between terminals shown in the figure.

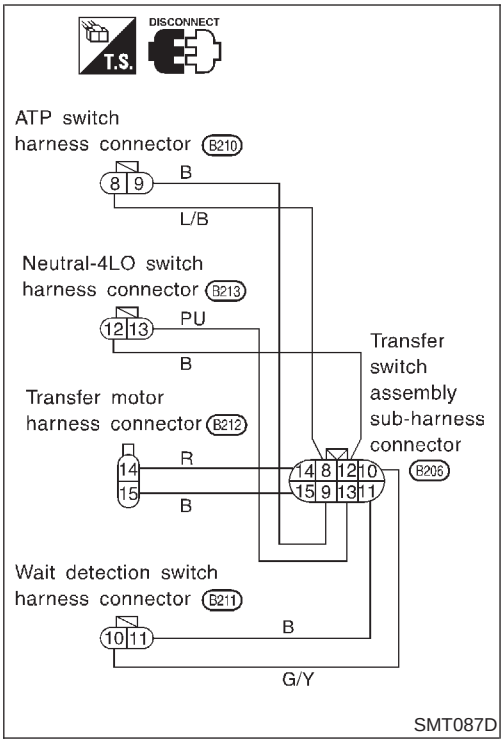

TRANSFER SWITCH ASSEMBLY SUB-HARNESS CONNECTOR

NATF0038S0902

Check continuity between terminals shown in the figure.

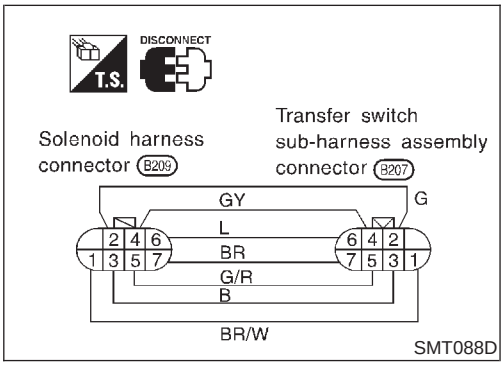

TRANSFER TERMINAL CORD ASSEMBLY SUB-HARNESS CONNECTOR

NATF0038S0903

Check continuity between terminals shown in the figure.

Terminals on solenoid valve

Terminals	Components
6	4WD solenoid valve
4, 5	2-4WD shift solenoid valve
2, 3	Transfer fluid temperature sensor
7	Clutch pressure switch
1	Line pressure switch

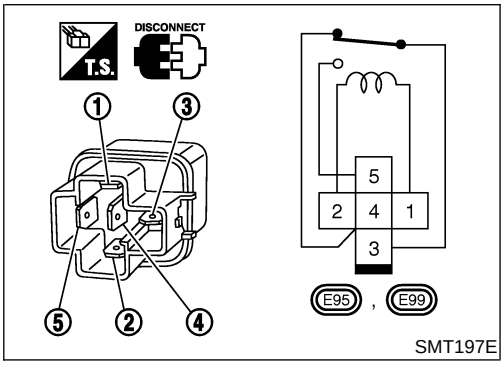

Transfer Shift Relay (High & low)

NATF0038S10

Check continuity between terminals 3 and 4.

Condition	Continuity
12V direct current supply between terminals 1 and 2	No
No current supply	Yes

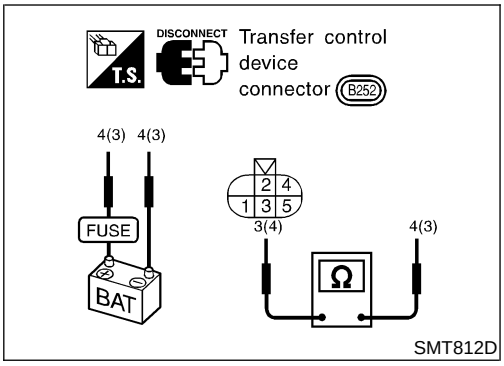

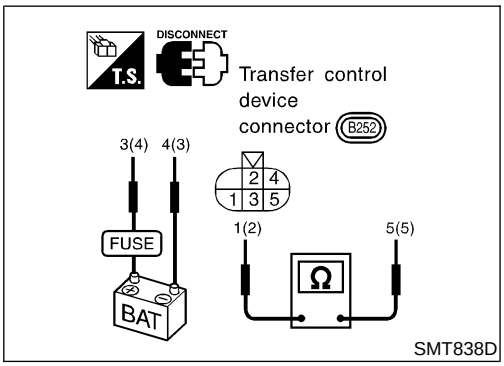

Actuator & Actuator Position Switch

NATF0038S11

ACTUATOR

NATF0038S1101

Operation & resistance check

- Apply battery voltage directly to actuator assembly.

Operating check	Battery positive terminal	Battery negative terminal
1	4	3
2	3	4
Check	Approx. 0.2Ω (When the motor is not operated.)	

ACTUATOR POSITION SWITCH

NATF0038S1102

Continuity check

Continuity check	Battery positive terminal	Battery negative terminal	Continuity
1	4	3	1 - 5
2	3	4	2 - 5

Replacing Oil Seal

NATF0068

FRONT CASE OIL SEAL

NATF0068S01

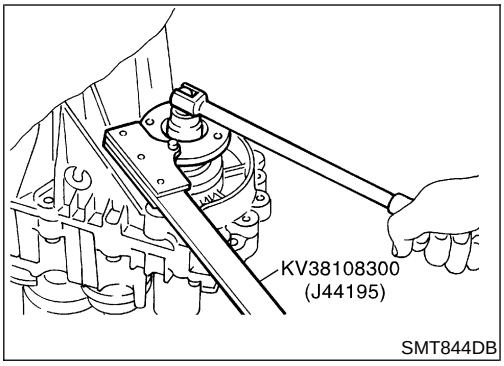

SMT844DB

1. Drain transfer fluid.
2. Remove exhaust front tube and heat insulator. Refer to “Removal”, TF-155.
3. Remove front propeller shaft. Refer to PD-8, “Removal and Installation”.
4. Remove companion flange lock nut.

- **Do not reuse lock nut.**

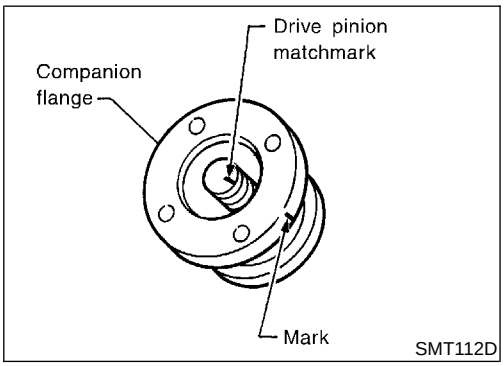

SMT112D

5. Put a matchmark on top of drive pinion thread. The mark should be in line with the mark on the companion flange.

- **Always mark top of drive pinion screw using paint.**

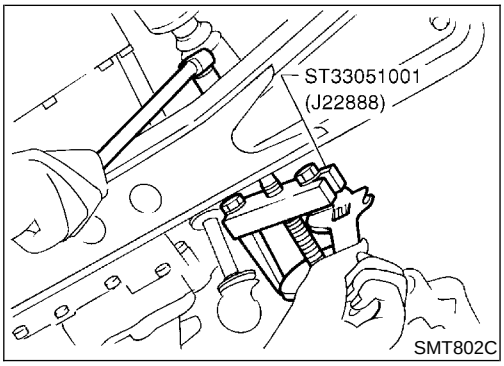

SMT802C

6. Remove companion flange.

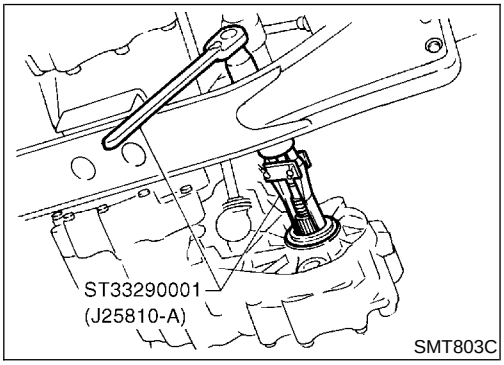

SMT803C

7. Remove front case oil seal.

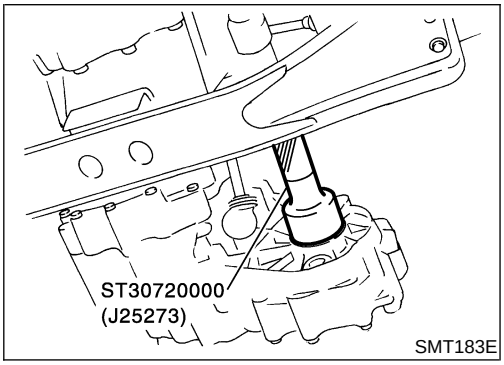

SMT183E

8. Install front case oil seal.

- **Before installing, apply multi-purpose grease to seal lip.**

9. Install companion flange.

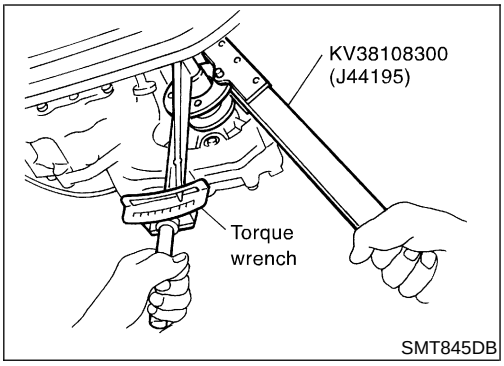

10. Tighten nut to the specified torque.
    Refer to TF-157.
11. Install front propeller shaft.
12. Install exhaust front tube and heat insulator.

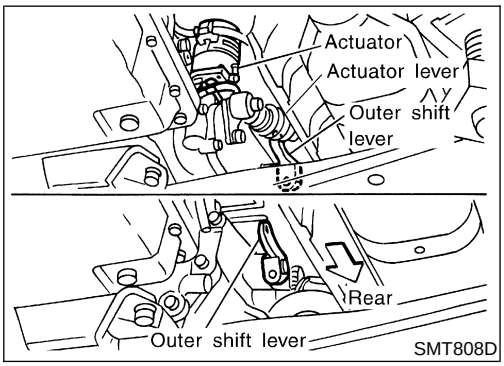

SHIFT SHAFT OIL SEAL

NATF0068S02

1. Remove front propeller shaft. Refer to PD-8, "Removal and Installation".
2. Remove companion flange. Refer to "FRONT CASE OIL SEAL", TF-152.
3. Remove actuator lever from transfer outer shift lever. Then remove outer shift lever.

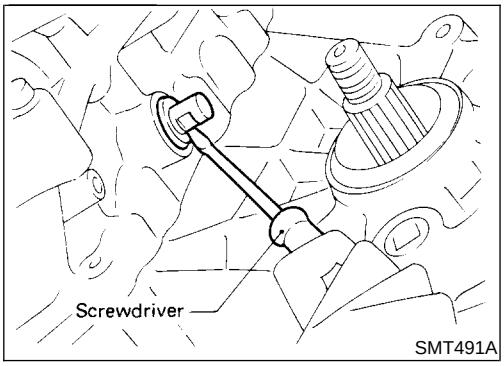

4. Remove shift shaft oil seal.
- **Be careful not to damage cross shaft.**

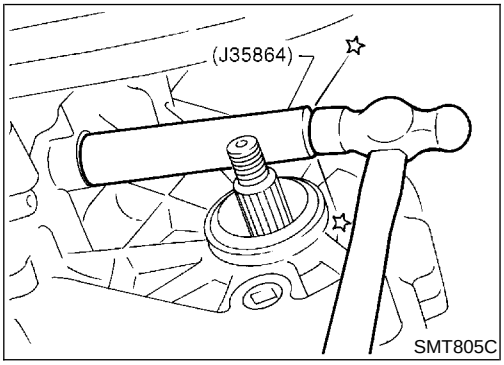

5. Install shift shaft oil seal.
- **Before installing, apply multi-purpose grease to seal lip.**
6. Install transfer control linkage.
7. Install companion flange. Refer to "FRONT CASE OIL SEAL", TF-152.
8. Install front propeller shaft.

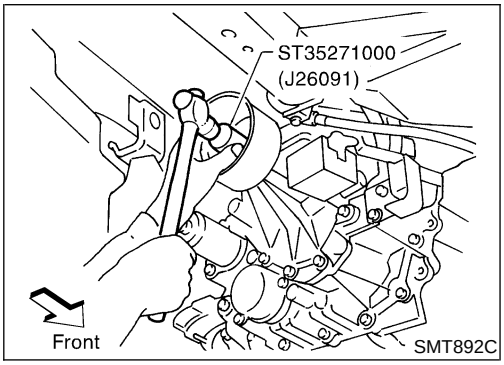

REAR OIL SEAL

NATF0068S03

1. Remove rear propeller shaft. Refer to PD-8, "Removal and Installation".
2. Remove rear oil seal.
3. Install rear oil seal.
- **Before installing, apply multi-purpose grease to seal lip.**
4. Install rear propeller shaft.

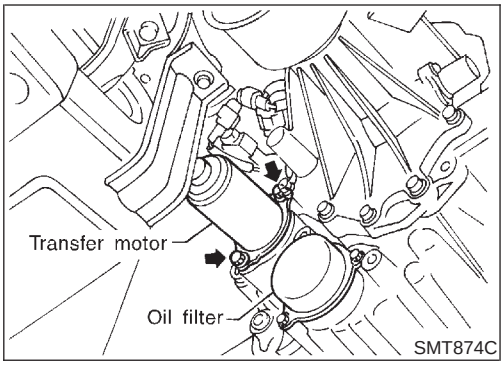

Transfer Motor

REMOVAL

NATF0069

1. Disconnect transfer motor harness connector.
2. Remove breather pipe from transfer motor.
3. Remove bolts to detach transfer motor.

- **After removing transfer motor, be sure to replace O-ring with new one.**

INSTALLATION

NATF0070

1. Apply petroleum jelly or ATF to O-ring.
2. Align width across flat-notch with oil pump groove, and install transfer motor.
3. Tighten bolts.

   : 41 - 48 N·m (4.2 - 4.9 kg-m, 30 - 35 ft-lb)
4. Install breather pipe to transfer motor.
5. Connect transfer motor harness connector.

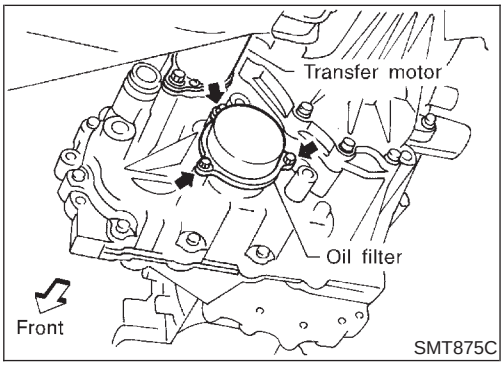

Transfer Oil Filter

REMOVAL

NATF0071

- Remove bolts to detach oil filter.
- **When removing oil filter from transfer, avoid damaging it. Be sure to loosen bolts evenly.**
- **When removing oil filter, be sure to replace O-ring with new one.**

INSTALLATION

NATF0072

1. Apply petroleum jelly or ATF to O-ring.
2. Tighten bolts evenly to install oil filter.

   : 7 - 9 N·m (0.7 - 0.9 kg-m, 61 - 78 in-lb)

- **Be sure not to damage oil filter.**

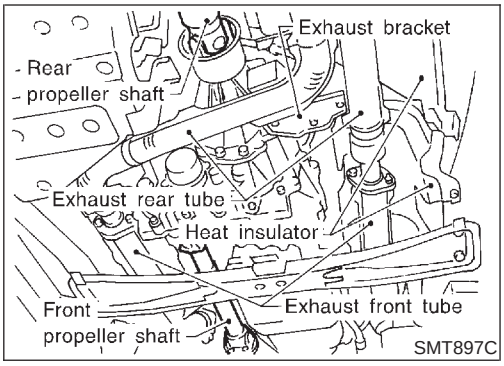

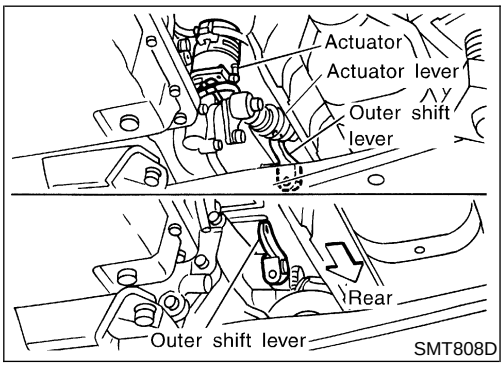

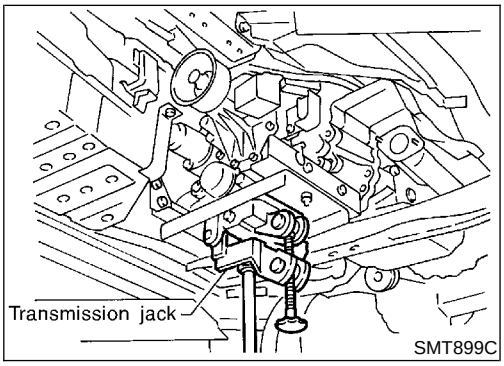

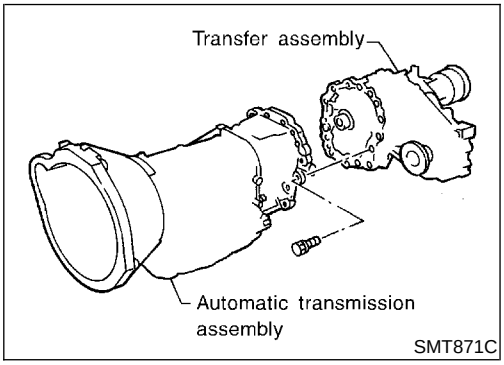

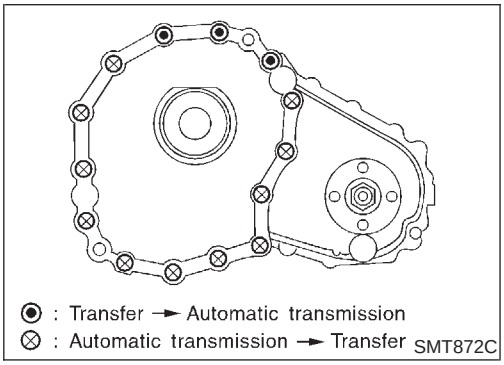

Removal

NATF0073

1. Remove exhaust front and rear tubes. Refer to FE-9, “EXHAUST SYSTEM”.
2. Remove front and rear propeller shaft. Refer to PD-8, “Removal and Installation”.
3. Insert plug into rear oil seal after removing propeller shaft.

- **Be careful not to damage spline, sleeve yoke and rear oil seal, when removing propeller shaft.**

4. Disconnect neutral-4LO switch, front revolution sensor, ATP switch, transfer motor and 4WD shift switch harness connectors.
5. Remove center console and A/T control device.
6. Remove floor panel for transfer.
7. Remove upper side fixing bolt for A/T and TF.
8. Remove actuator lever from transfer outer shift lever and remove sub-oil pump from transfer.
9. Remove remaining fixing bolt for AT and TF.
10. Remove transfer from transmission.

WARNING:
Support transfer while removing it.

Installation

NATF0074

- Tighten bolts securing transfer.

Bolt length:
45 mm (1.77 in)
Tightening torque:
: 31 - 42 N·m (3.2 - 4.3 kg-m, 23 - 31 ft-lb)

Transfer Gear Control

NATF0075

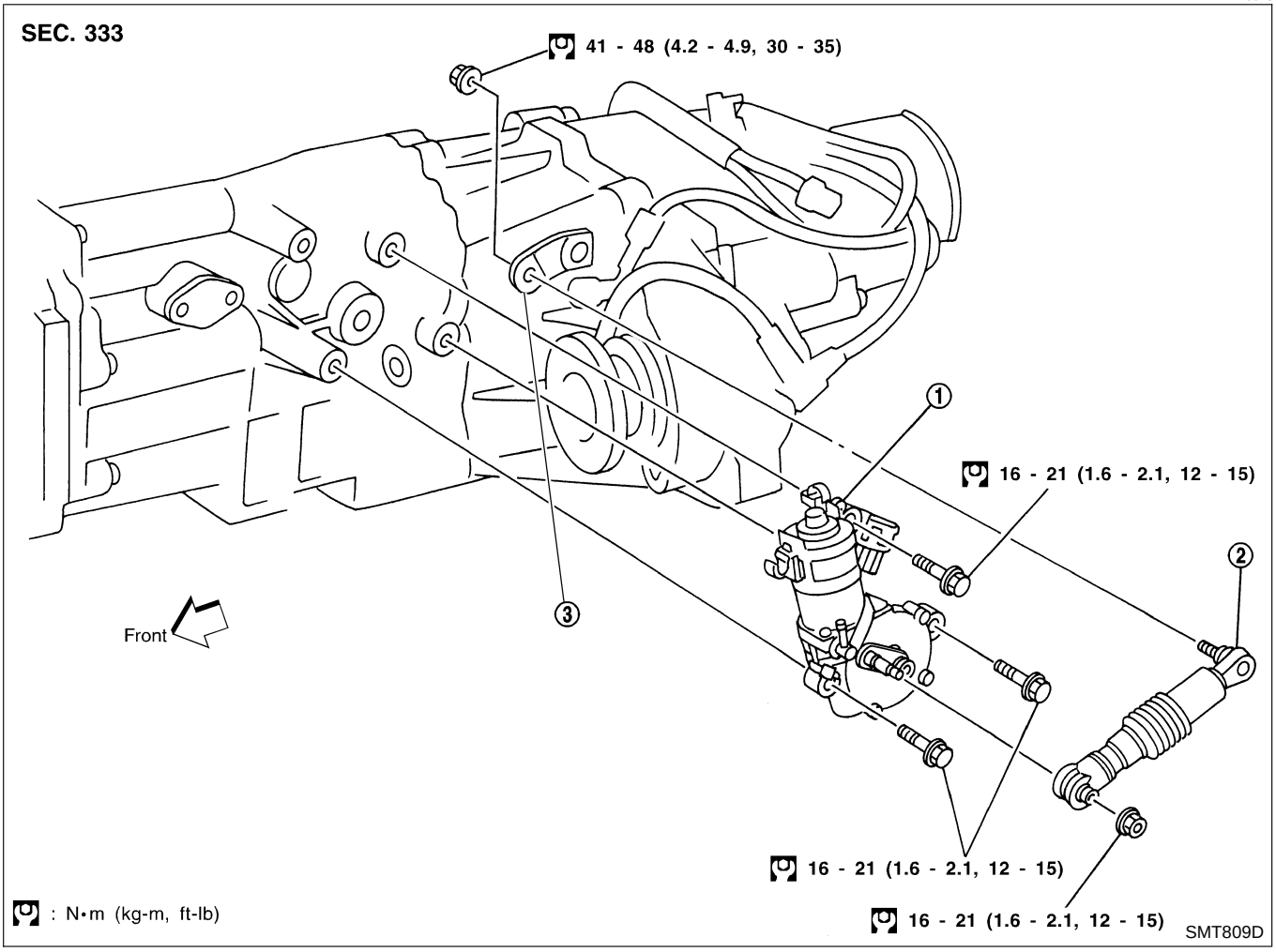

1. Actuator
2. Actuator lever
3. Outer shift lever

Transfer Components

NATF0076

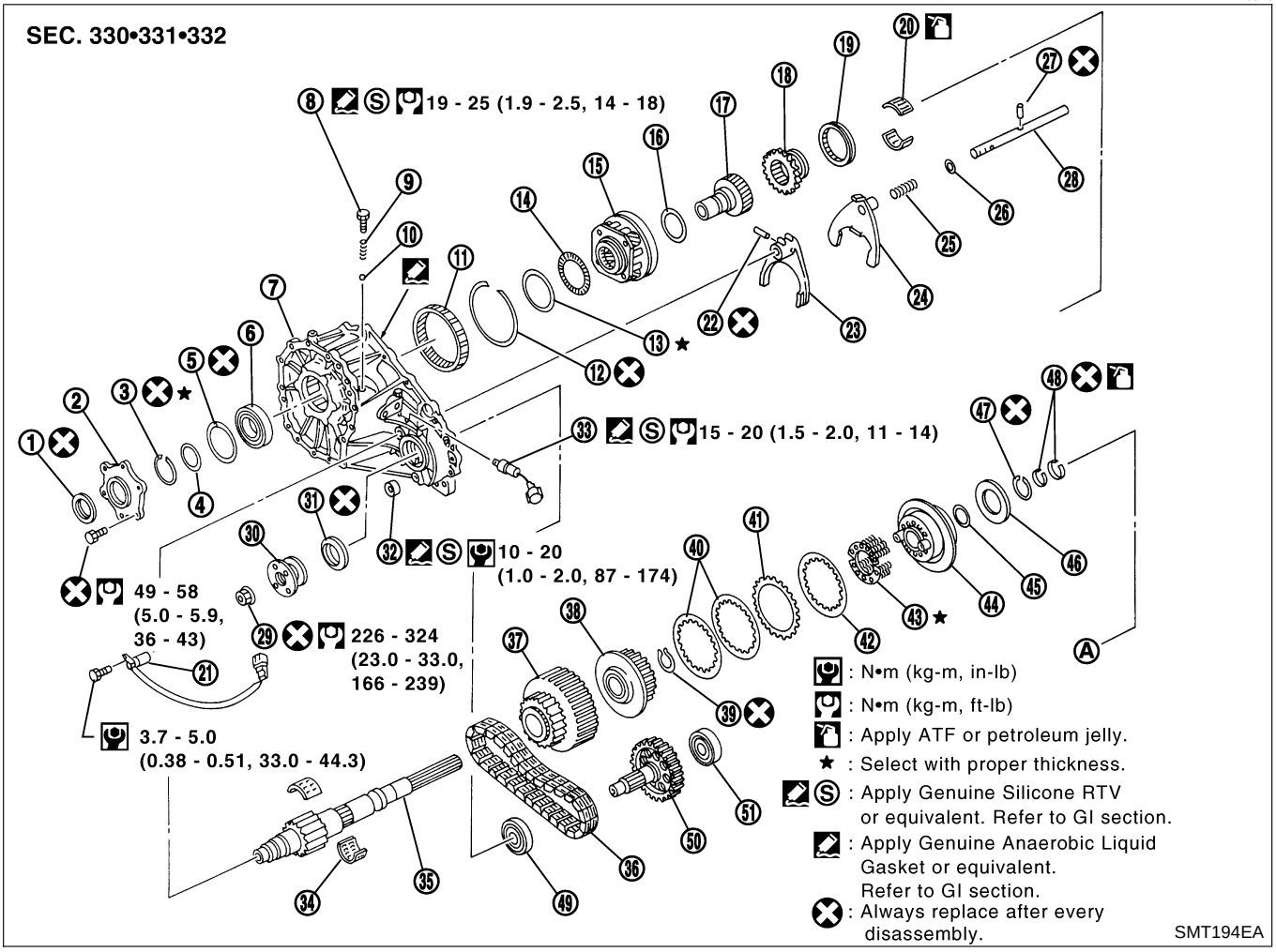

1. Oil seal
2. Transfer cover
3. Snap ring
4. Washer
5. Snap ring
6. Main gear bearing
7. Front case
8. Check plug
9. Check spring
10. Check ball
11. Internal gear
12. Snap ring
13. Bearing race
14. Thrust needle bearing
15. Planetary carrier
16. Thrust needle bearing
17. Sun gear
18. L-H sleeve
19. 2-4 sleeve
20. Radial needle bearing
21. Front revolution sensor
22. Retaining pin
23. L-H fork
24. 2-4 fork
25. Shift fork spring
26. Fork guide
27. Retaining pin
28. Shift rod
29. Self-lock nut
30. Companion flange
31. Oil seal
32. Drain plug
33. Wait detection switch
34. Needle bearing
35. Mainshaft
36. Drive chain
37. Clutch drum
38. Clutch hub
39. Snap ring
40. Driven plate
41. Drive plate
42. Retaining plate
43. Return spring assembly
44. Press flange
45. Washer
46. Thrust needle bearing
47. Snap ring
48. Seal ring
49. Front bearing
50. Front drive shaft
51. Rear bearing

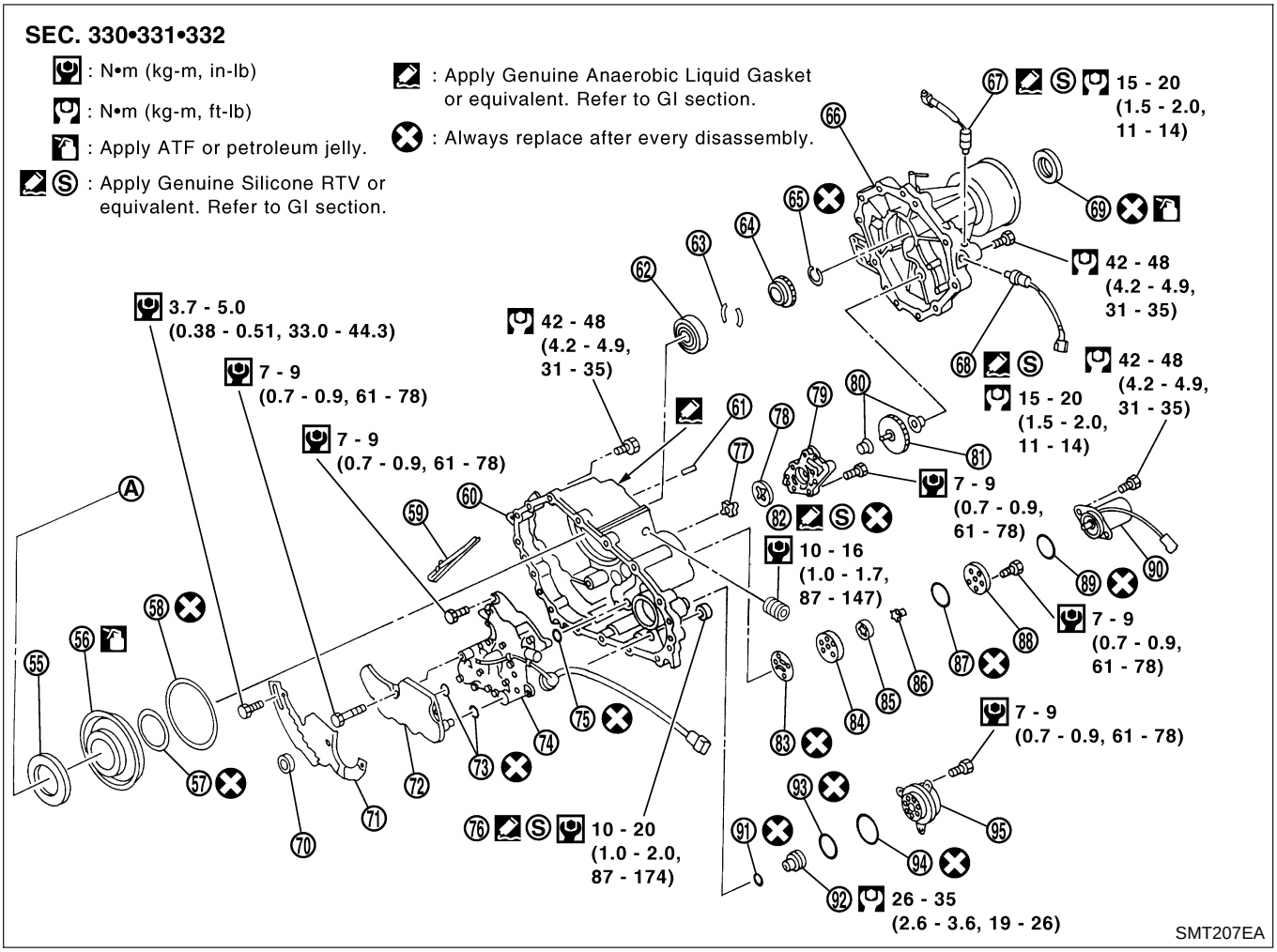

55. Thrust needle bearing race
56. Clutch piston
57. D-ring
58. Lip seal
59. Oil gutter
60. Center case
61. Stem bleeder
62. Mainshaft rear bearing
63. Thrust washer
64. Speedometer drive gear
65. Snap ring
66. Rear case
67. ATP switch
68. Neutral-4LO switch
69. Oil seal
70. Magnet
71. Baffle plate
72. Oil strainer
73. O-ring
74. Control valve assembly
75. Lip seal (7 pieces)
76. Filler plug
77. Inner gear
78. Outer gear
79. Oil pump housing
80. Bushing
81. Oil pump shaft
82. Oil pressure check plug
83. Oil pump gasket
84. Sub-oil pump housing
85. Outer gear
86. Inner gear
87. O-ring
88. Sub-oil pump cover
89. O-ring
90. Transfer motor
91. O-ring
92. Oil filter stud
93. O-ring
94. O-ring
95. Oil filter

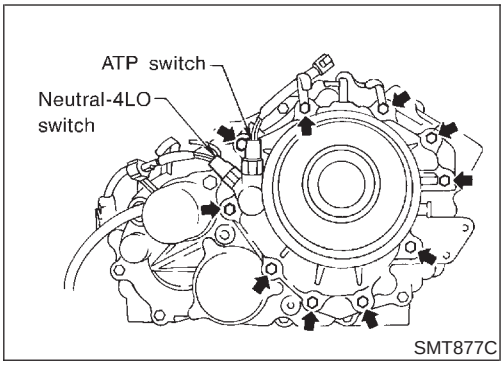

Rear Case

DISASSEMBLY

NATF0077

1. Remove neutral-4LO switch and ATP switch.
2. Remove bolts.

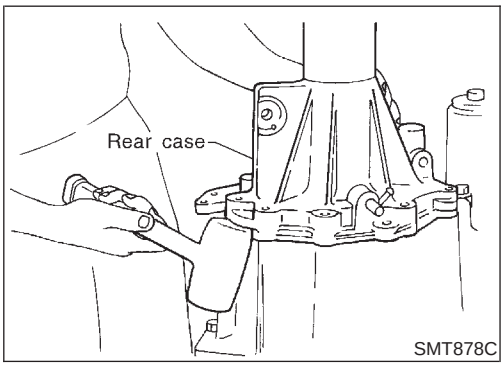

3. Remove rear case from center case by tapping it lightly with a plastic hammer.

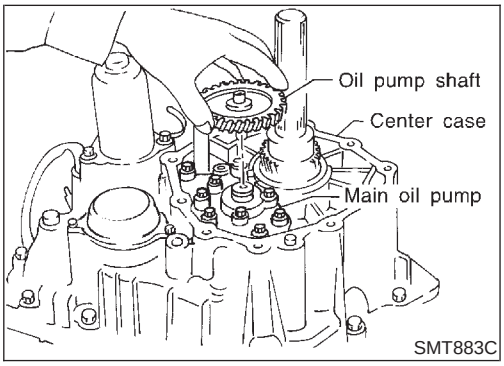

Center Case

DISASSEMBLY

NATF0078

1. Remove oil pump shaft from main oil pump.

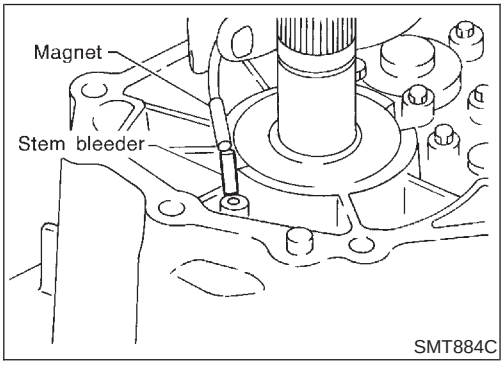

2. Remove stem bleeder from bleeder hole.

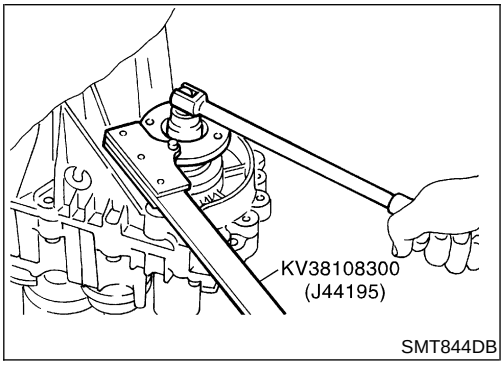

3. Remove lock nut from companion flange.

- **Do not reuse lock nut.**

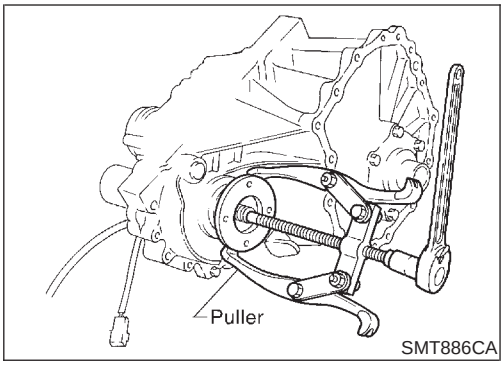

4. Remove companion flange.

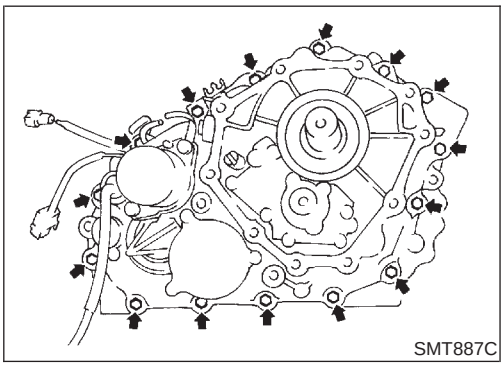

5. Remove bolts.

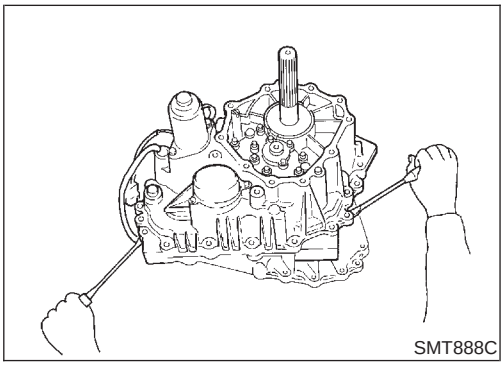

6. Insert screwdrivers as shown in the figure, and separate center case from front case. Then, remove center case by levering it up with a tire lever or the like.
- Be careful not to damage the mating surface.

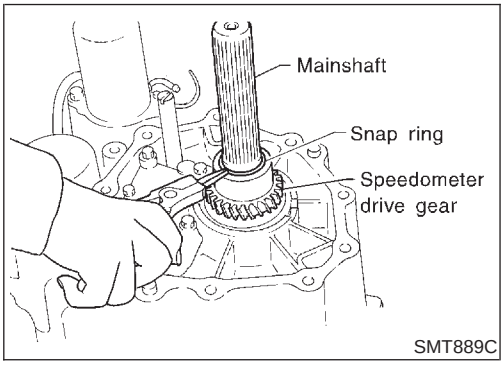

7. Remove snap ring from mainshaft.
- **Do not reuse snap ring.**

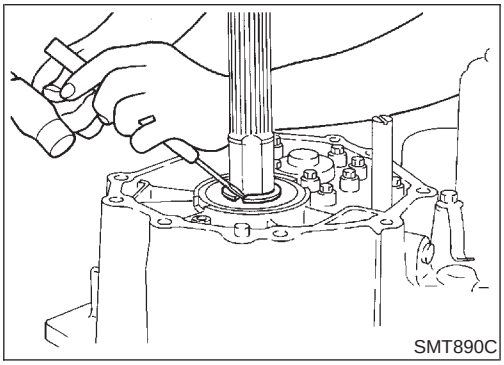

8. Remove C-rings from mainshaft bearing.

Front Drive Shaft and Drive Chain

NATF0078S01

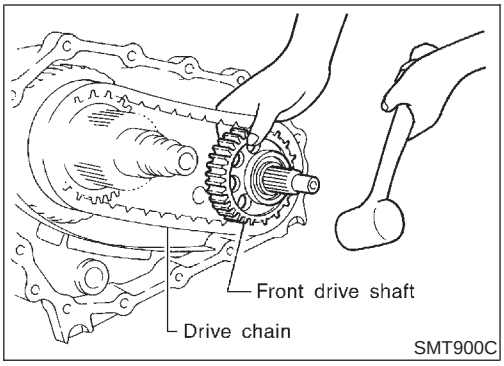

1. Remove oil gutter from center case.
2. With front drive shaft held by one hand as shown in the figure, tap center case with a plastic hammer to remove it with drive chain.

- **Do not tap drive chain with a plastic hammer.**

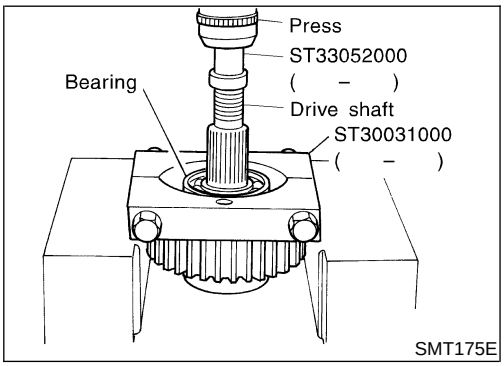

3. Set a puller (ST30031000) and an adapter (ST33052000). Remove front drive shaft front bearing.

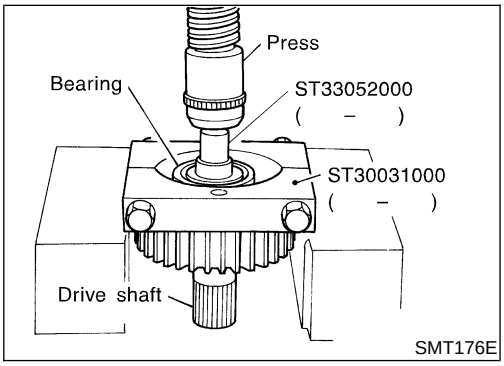

4. Set the puller (ST30031000) and the adapter (ST33052000). Remove front drive shaft rear bearing.

Mainshaft and Clutch Drum

NATF0078S02

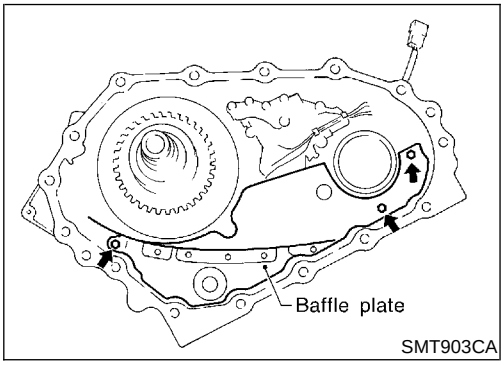

1. Remove mounting bolts to detach baffle plate.

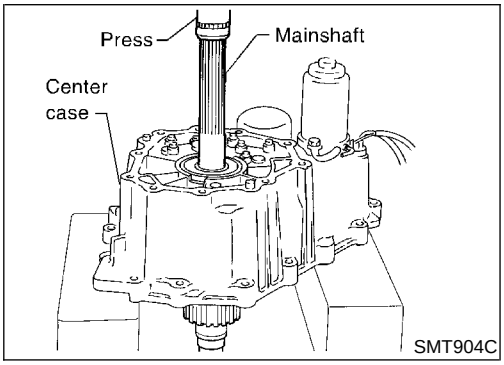

2. Set center case to press stand. Remove mainshaft from center case.

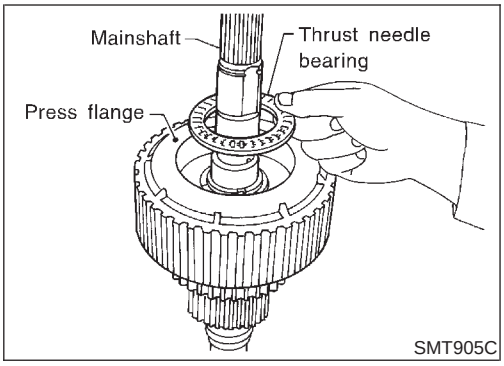

3. Remove thrust needle bearing from press flange.

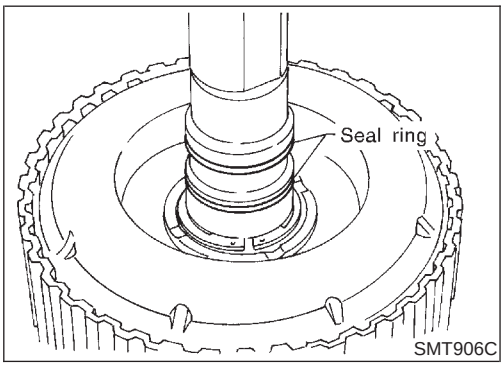

4. Remove seal ring from mainshaft.
- **Do not reuse seal ring.**

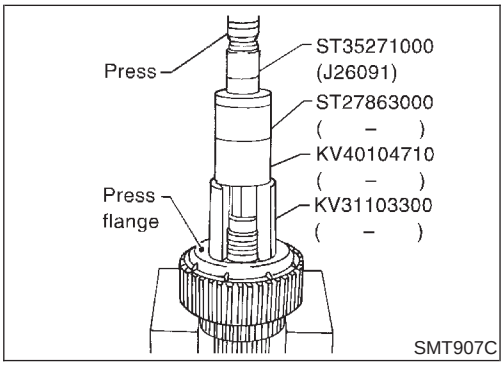

5. Set a drift (KV31103300), a support ring (KV40104710), a support ring (ST27863000) and a drift (ST35271000) to press flange as shown in the figure. Press drift until snap ring is out of place.

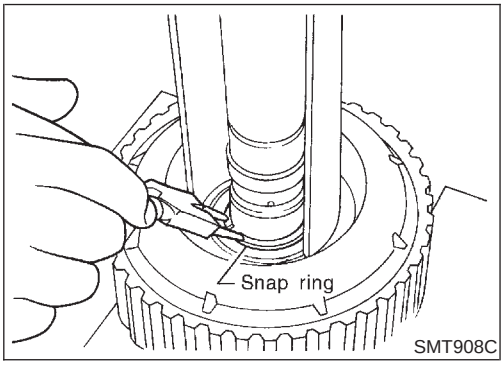

6. Remove snap ring from mainshaft.
- **Do not reuse snap ring.**

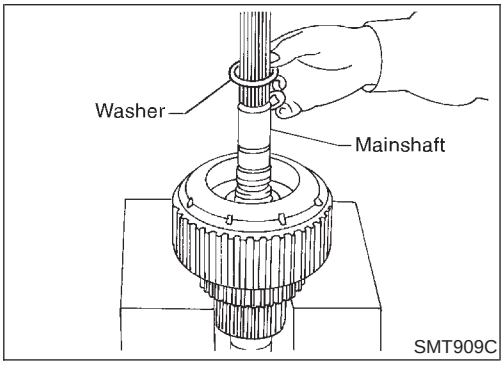

7. Remove washer.

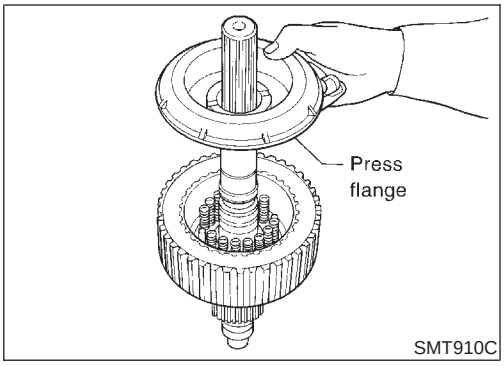

8. Remove press flange from mainshaft.

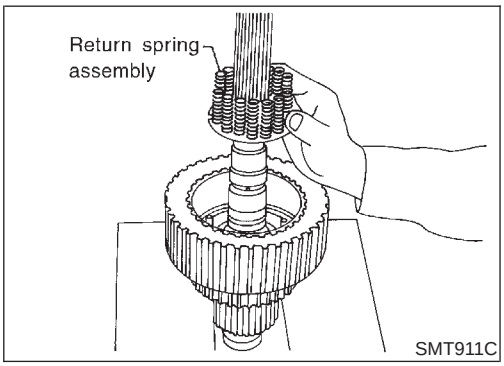

9. Remove return spring assembly from clutch hub.

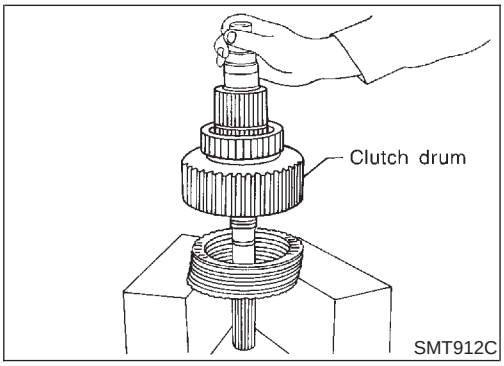

10. Remove each plate from clutch drum.

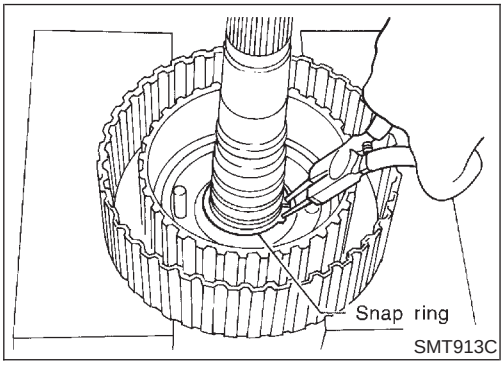

11. Remove snap ring from mainshaft.
- **Do not reuse snap ring.**

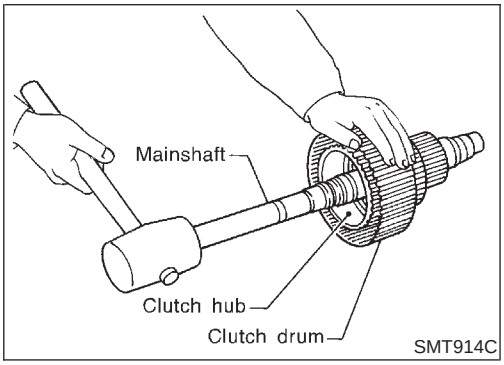

12. Tap mainshaft with a plastic hammer to remove it from clutch drum and clutch hub.
13. Remove needle bearing from mainshaft.

Clutch Piston

NATF0078S03

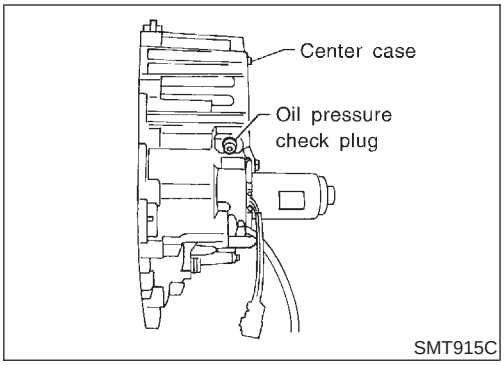

1. Remove oil pressure check plug from oil pressure check port.

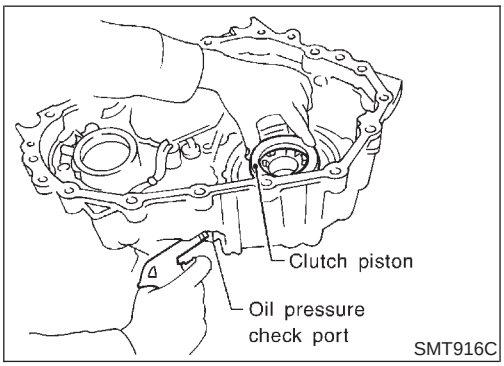

2. Apply air gradually from oil pressure check port, and remove clutch piston from center case.

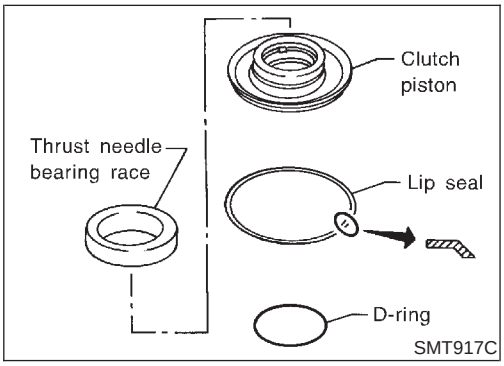

3. Remove lip seal and D-ring from clutch piston.

- **Do not reuse lip seal and D-ring.**

4. Remove thrust needle bearing race from clutch piston by hooking a screwdriver edge into 4 notches of thrust needle bearing race.

Control Valve

NATF0078S04

CAUTION:

- **Do not reuse any part that has been dropped or damaged.**
- **Make sure valve is assembled in the proper direction.**
- **Do not use a magnet because residual magnetism stays during disassembly.**

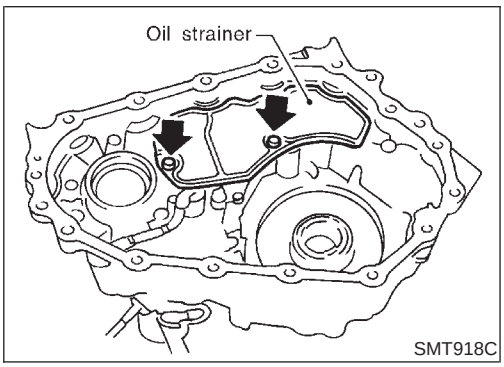

1. Remove bolts, and detach oil strainer.

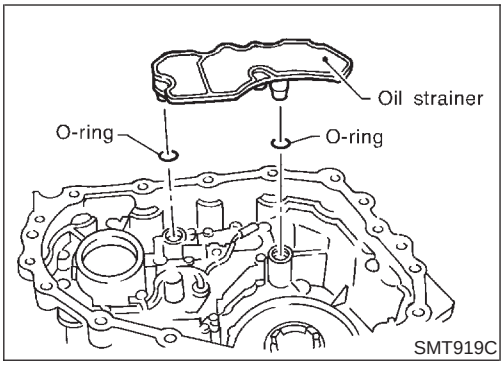

2. Remove O-rings from oil strainer.
- **Do not reuse O-rings.**

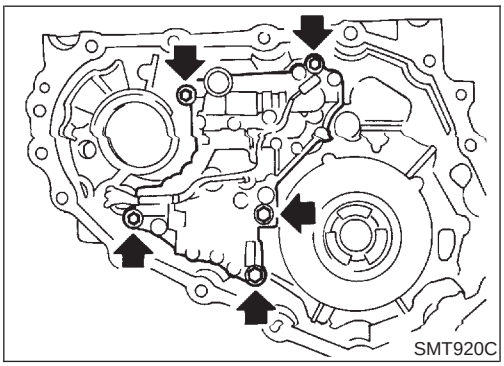

3. Remove bolts for control valve.

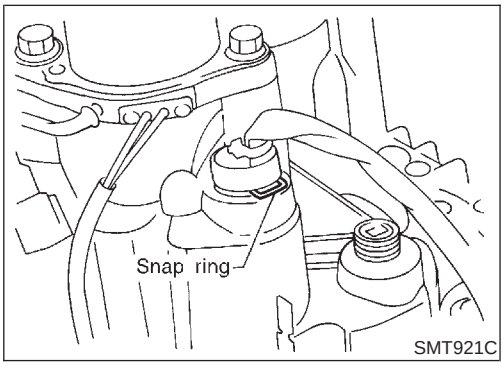

4. Remove snap ring. Then push terminal assembly into center case to remove control valve assembly.

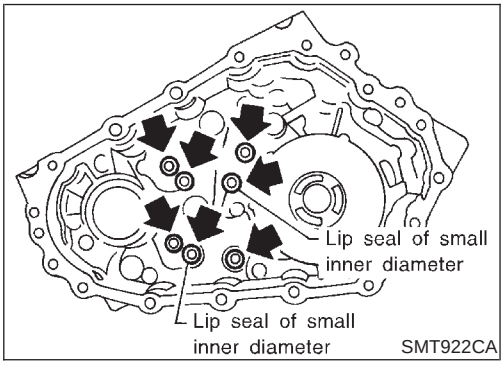

5. Remove lip seals from center case.
- **Do not reuse lip seals.**
- **There are two kinds of lip seals (lip seal of large inner diameter: 5 pieces, lip seal of small inner diameter: 2 pieces). Confirm the position before disassembly.**

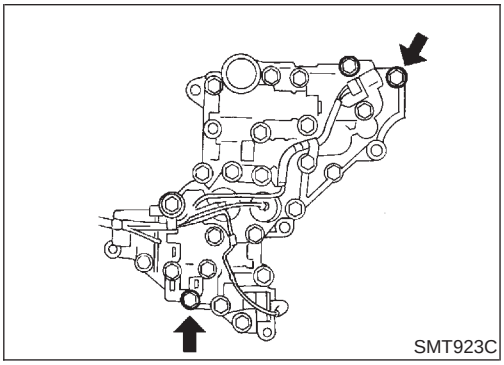

6. Remove all bolts except for two.

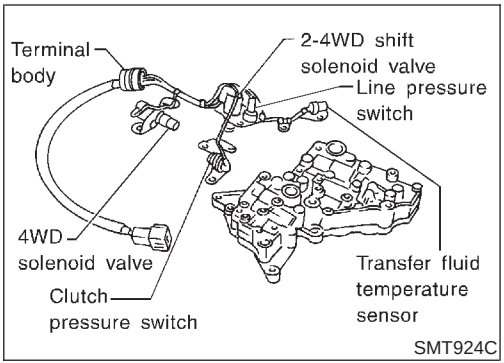

7. Remove 4WD solenoid valve, clutch pressure switch, 2-4WD shift solenoid valve, line pressure switch, and transfer fluid temperature sensor from control valve assembly.
8. Remove O-rings from each solenoid valve, switch and terminal body.

- **Do not reuse O-rings.**

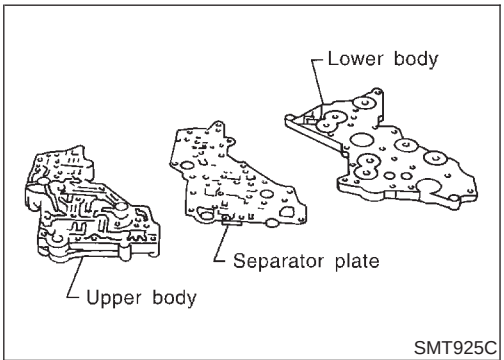

9. Place control valve with lower body facing up, remove two mounting bolts, and then remove lower body and separator plate from upper body.

CAUTION:

- **Be careful not to drop relief balls. Detach lower body carefully.**
- **Do not reuse separator plate.**

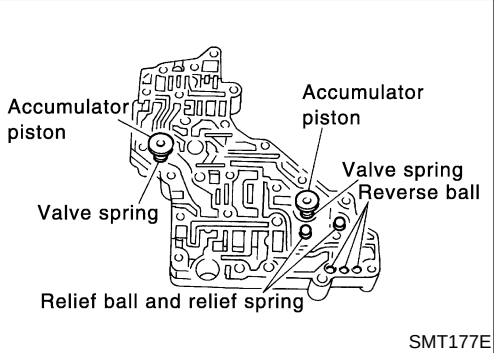

10. Make sure reverse balls, relief balls and relief springs, accumulator pistons and valve springs are securely installed as shown in the figure, and remove them.

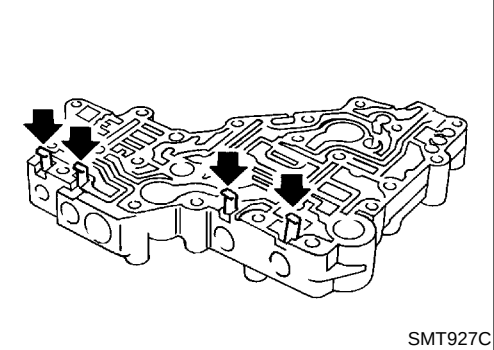

11. Remove retainer plates.

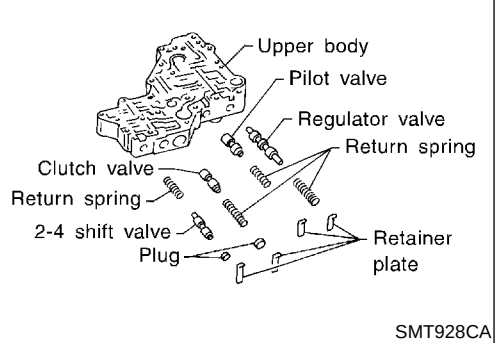

12. Remove each control valve, spring and plug.

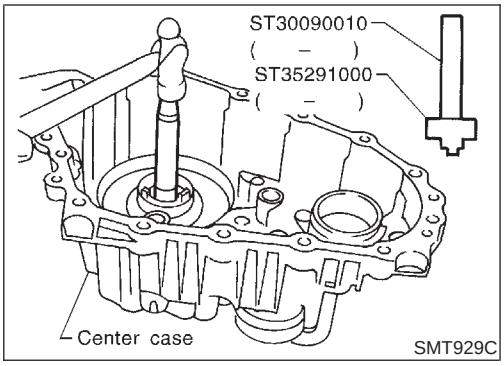

Mainshaft Rear Bearing

NATF0078S05

1. Remove mainshaft rear bearing from center case using a remover (ST35291000) and a remover (ST30090010).

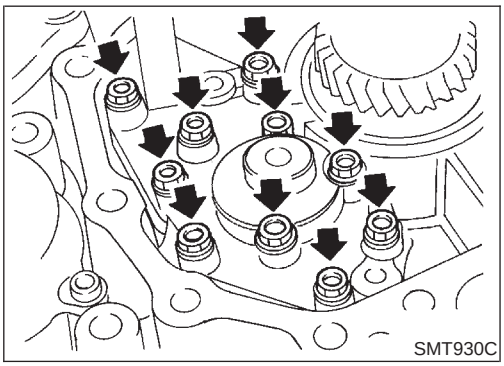

Main Oil Pump

NATF0078S06

1. Remove bolts as shown in figure to detach main oil pump.

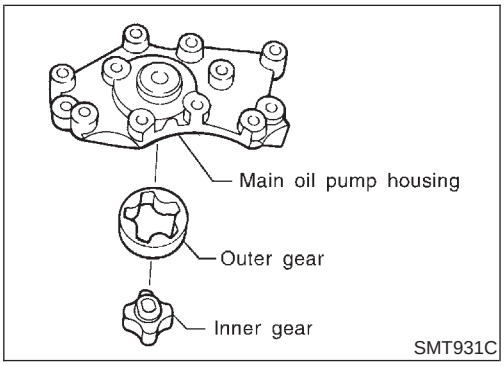

2. Remove outer gear and inner gear.

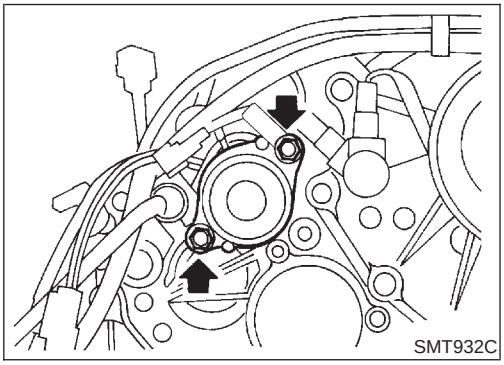

Sub-oil Pump

NATF0078S07

1. Remove bolts to detach transfer motor from center case. Then remove O-ring from the transfer motor.

- **Do not reuse O-ring.**

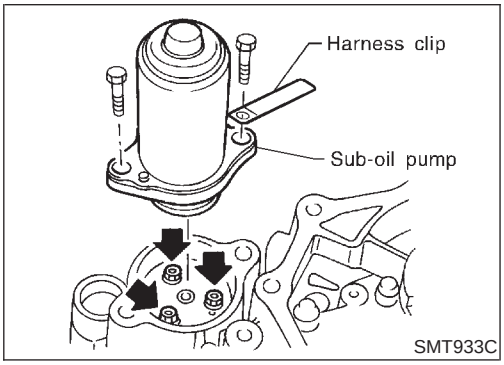

2. Remove sub-oil pump mounting bolts.

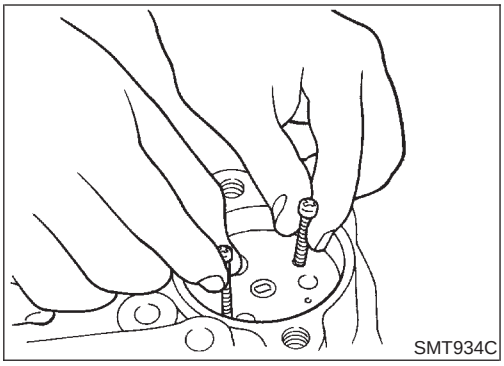

3. Thread two bolts (M4 x 0.8) into the holes of sub-oil pump as shown in the figure, and pull out to remove sub-oil pump.

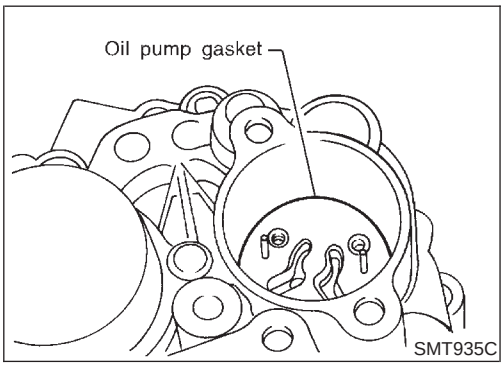

4. Remove oil pump gasket.
- **Do not reuse gasket.**

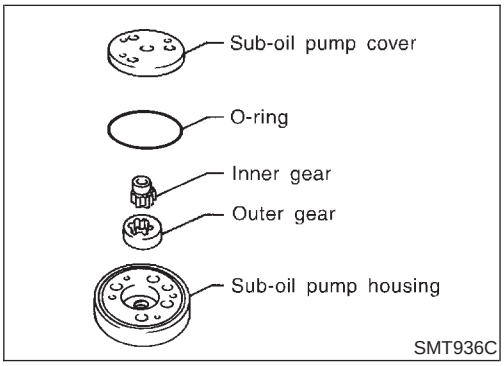

5. Remove sub-oil pump cover, outer gear, inner gear and O-ring from sub-oil pump housing.
- **Do not reuse O-ring.**

Oil Filter

NATF0078S08

1. Remove bolts for oil filter.

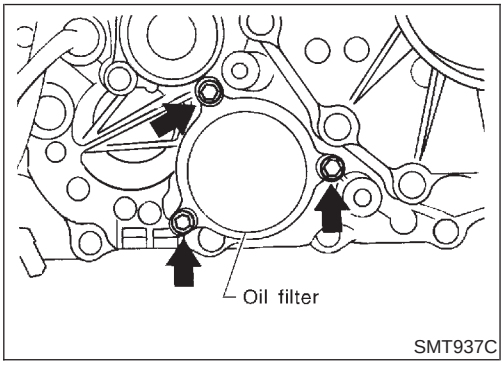

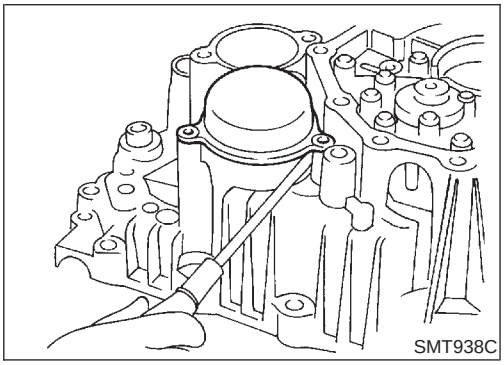

2. Insert a screwdriver as shown in the figure to remove oil filter.

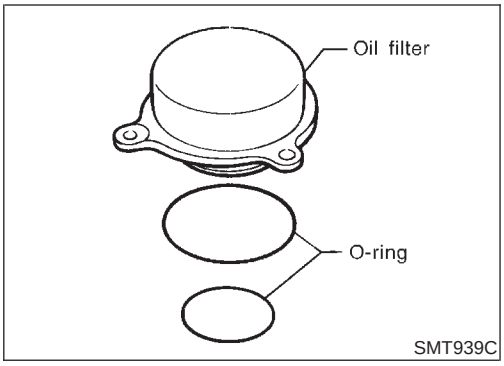

3. Remove O-rings from oil filter.
- **Do not reuse O-rings.**

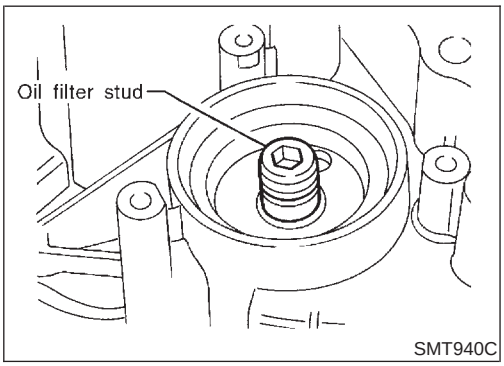

4. Remove oil filter stud.

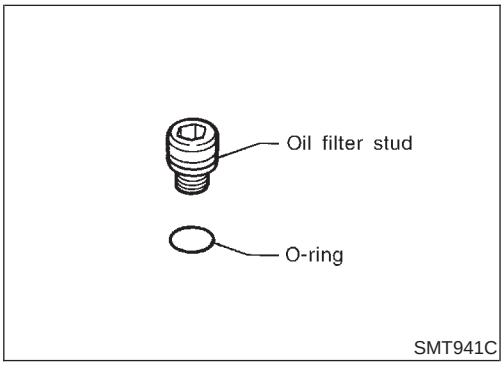

5. Remove O-ring from oil filter stud.
- **Do not reuse O-ring.**

Front Case

DISASSEMBLY

NATF0079

1. Remove rear case from center case. Refer to TF-159.
2. Remove front case from center case.

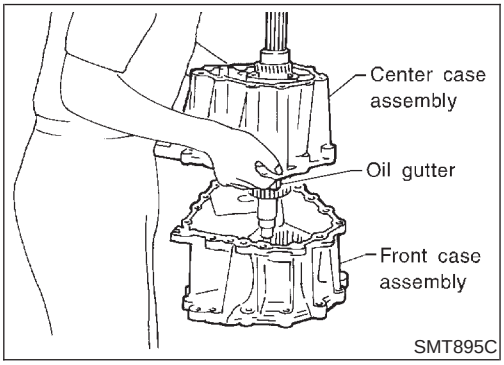

Shift Rod Components

NATF0079S01

1. Remove check plug, then check spring and check ball.
2. Remove wait detection switch.

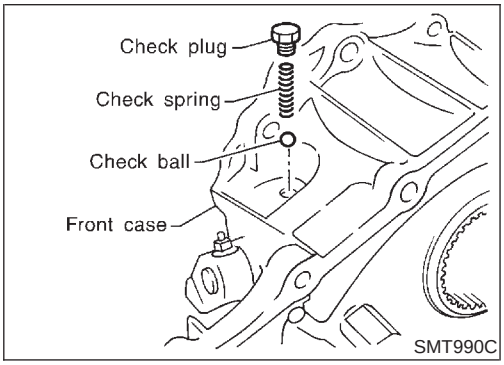

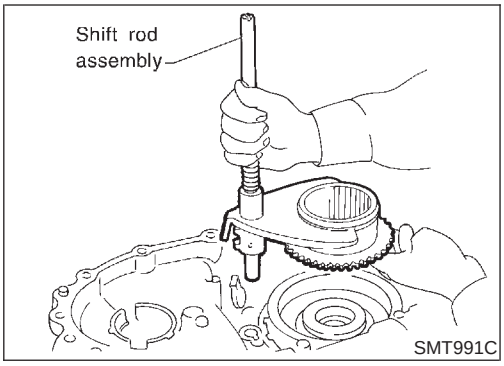

3. Remove shift rod components together with 2-4 sleeve and L-H sleeve.

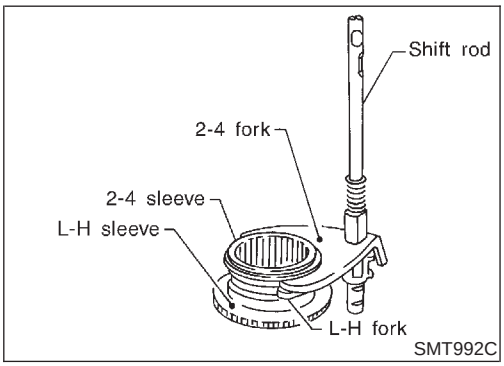

4. Remove 2-4 sleeve and L-H sleeve from 2-4 fork and L-H fork respectively.

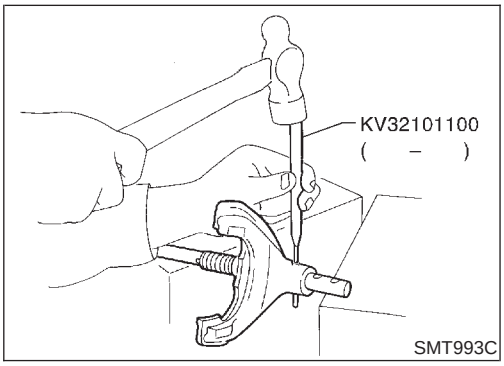

5. Drive out retaining pin from shift rod.
- **Do not reuse retaining pin.**

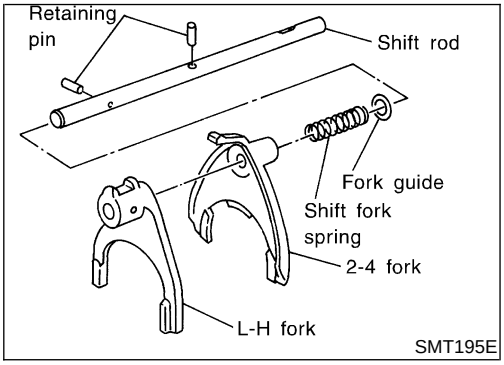

6. Remove L-H fork, 2-4 fork, shift fork spring and fork guide from shift rod.

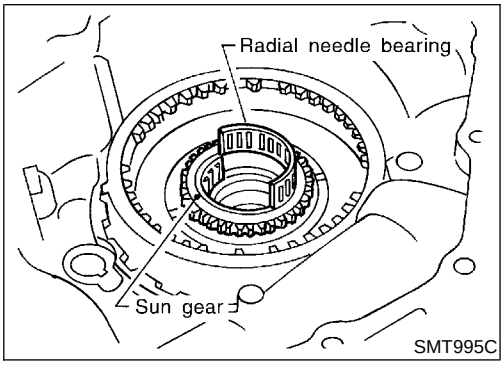

Planetary Carrier, Sun Gear and Internal Gear

NATF0079S02

1. Remove radial needle bearing from sun gear.

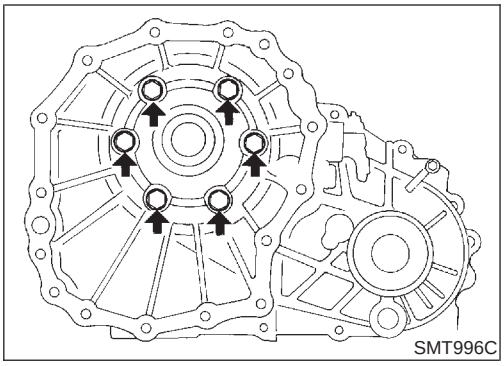
SMT996C

2. Remove bolts to detach transfer cover.
- **Do not reuse bolts.**

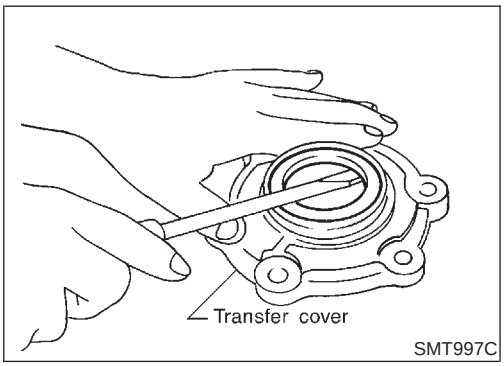

SMT997C

3. Remove oil seal from transfer cover.
- **Do not reuse oil seal.**

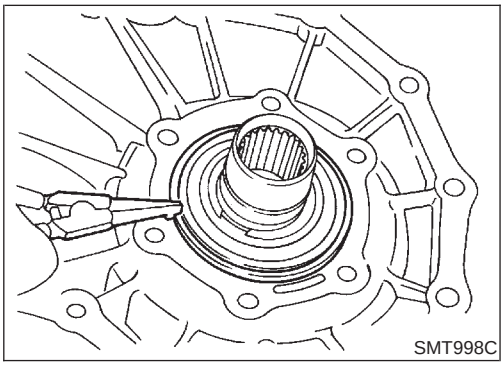
SMT998C

4. Remove snap ring from main gear bearing.
- **Do not reuse snap ring.**

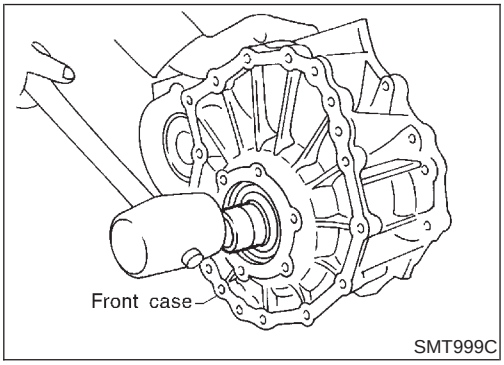

SMT999C

5. Remove sun gear by tapping it lightly.

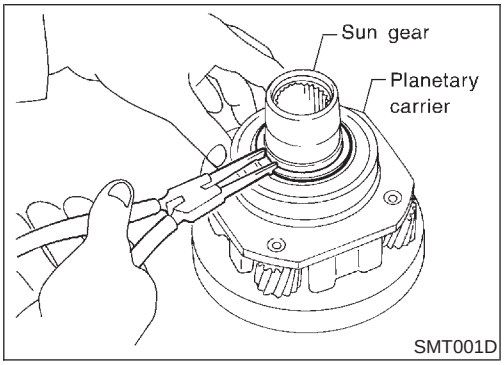

SMT001D

6. Remove snap ring from sun gear.
- **Do not reuse snap ring as it is a selective part.**
7. Remove washer from sun gear.

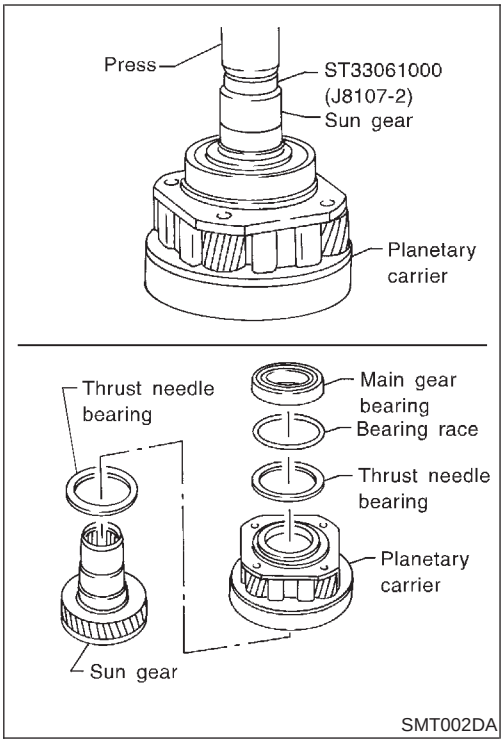

8. Set an adapter to sun gear as shown in the figure. Remove sun gear from planetary carrier. Remove main gear bearing, bearing race and thrust needle bearing (front and rear of planetary carrier) from sun gear.

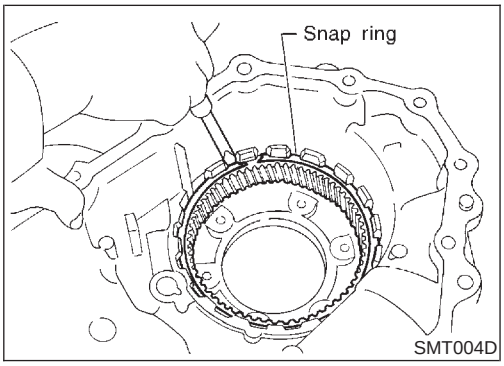

9. Remove snap ring, and remove internal gear.
- **Do not reuse snap ring.**

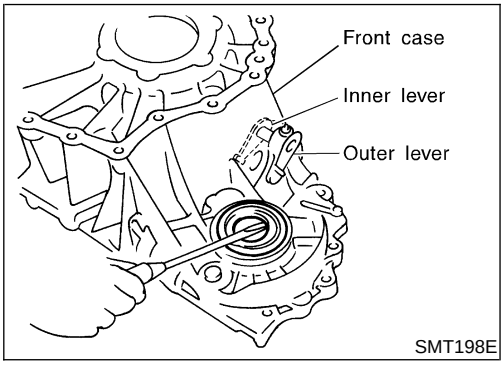

10. Remove front oil seal.
- **Do not reuse oil seal.**
11. Loosen nut of outer lever assembly to pull out cotter pin, and remove outer lever.
12. Remove inner lever assembly.

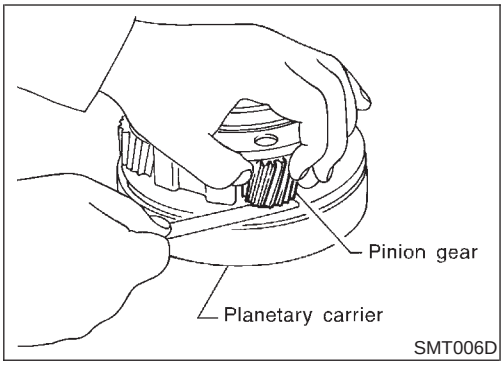

SMT006D

Front Case

INSPECTION

NATF0080

Planetary Carrier

NATF0080S01

- Measure end play of each pinion gear, and make sure the measurement is within specification shown below. If out of specification, replace planetary carrier with new one.

  Pinion gear end play:

  0.1 - 0.7 mm (0.004 - 0.028 in)

- Check working face of each gear, bearing and others for damage, burrs, partial wear, dents and other abnormality. If any is found, replace planetary carrier with new one.

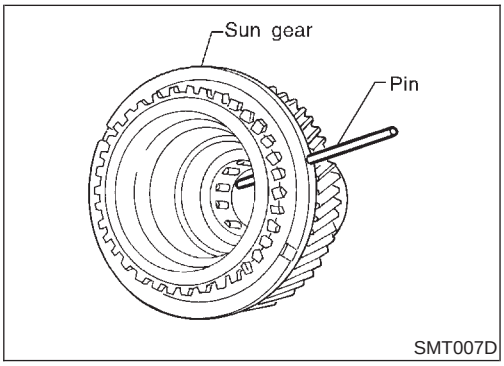

SMT007D

Sun Gear

NATF0080S02

- Check if oil passage of sun gear is clogged. For this, try to pass a 3.6 mm (0.142 in) dia. wire through oil passage as shown in the figure.
- Check sliding/contact surface of each gear, bearing and others for damage, burrs, partial wear, dents, and other abnormality. If any is found, replace sun gear with new one.

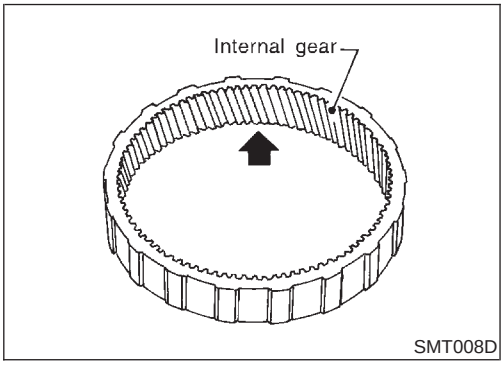

SMT008D

Internal Gear

NATF0080S03

- Check internal gear teeth for damage, partial wear, dents and other abnormality. If any is found, replace internal gear with new one.

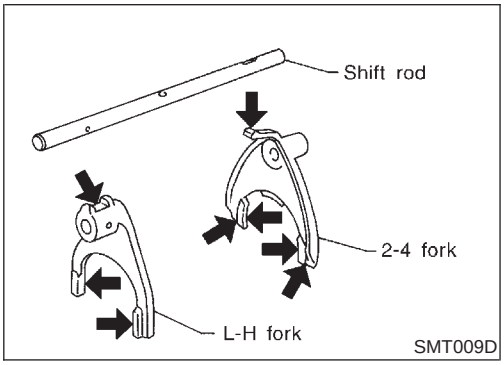

SMT009D

Shift Rod Components

NATF0080S04

- Check working face of shift rod and fork for wear, partial wear, bending and other abnormality. If any is found, replace with new one.

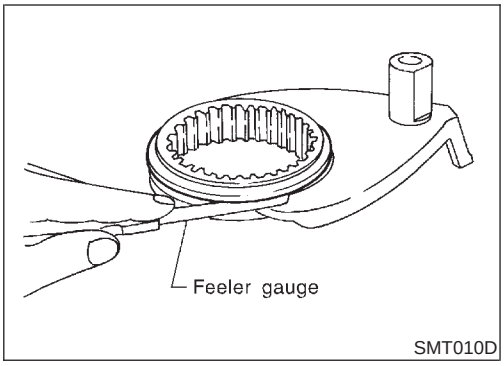

- Measure clearance between shift fork and sleeve. If it is out of specification, replace it with new one.

  Standard value:

  Less than 0.36 mm (0.0142 in)

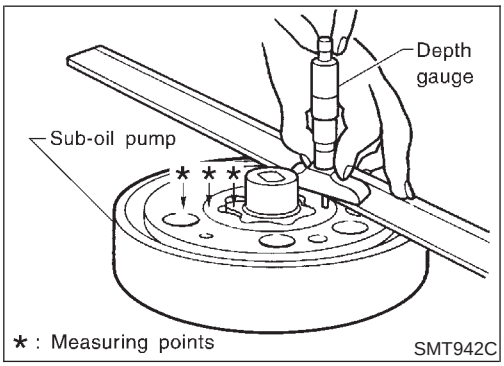

Center Case

INSPECTION

NATF0081

Sub-oil Pump

NATF0081S01

1. Check inner and outer circumference, tooth face, and side-face of inner and outer gears for damage or abnormal wear.
2. Measure side clearance between oil pump housing edge and inner gear/outer gear.
3. Make sure side clearance is within specification. If the measurement is out of specification, replace inner and outer gears together with new ones as a set.

   Specification:

   0.015 - 0.035 mm (0.0006 - 0.0014 in)

   For inner gear and outer gear, refer to SDS, TF-192.

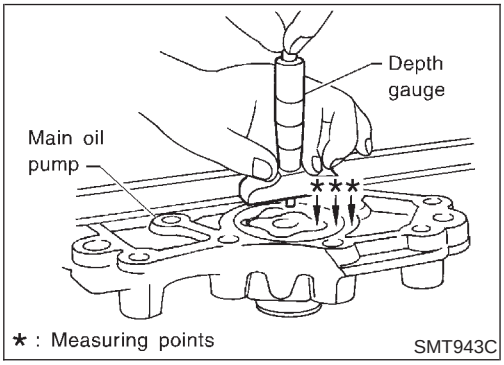

Main Oil Pump

NATF0081S02

1. Check inner and outer circumference, tooth face, and side-face of inner and outer gears for damage or abnormal wear.
2. Measure side clearance between oil pump housing edge and inner gear/outer gear.
3. Make sure side clearance is within specification. If the measurement is out of specification, replace inner and outer gears with new ones as a set.

   Specification:

   0.015 - 0.035 mm (0.0006 - 0.0014 in)

   For inner gear and outer gear, refer to SDS, TF-192.

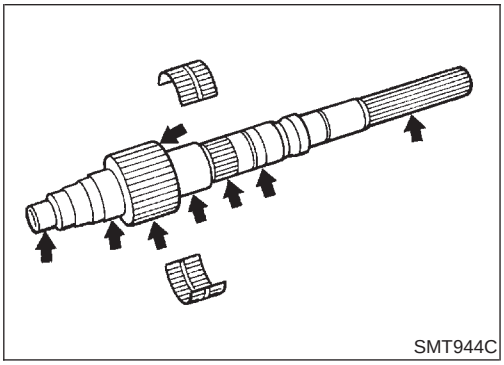

Mainshaft

NATF0081S03

- Check surfaces which contact sun gear, clutch drum, clutch hub, press flange, clutch piston, each bearing, etc. for damage, peel, partial wear, dents, bending, or other abnormal damage. If any is found, replace with new one.

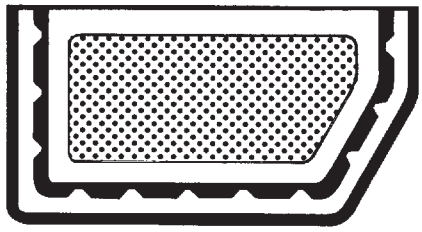

SMT945C

Control Valve

NATF0081S04

- Check oil filter screen for damage. If any is found, replace with new one.

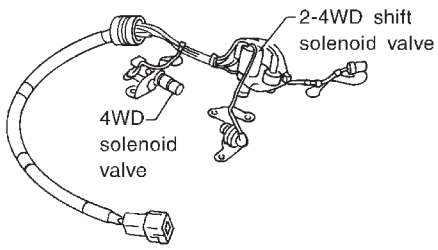

SMT946CA

- Check resistance between terminals of 4WD solenoid valve, 2-4WD shift solenoid valve and transfer fluid temperature sensor.

  Resistance:

  Refer to "COMPONENT INSPECTION", TF-147.

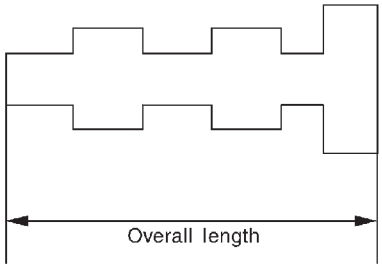

SMT947C

- Check sliding faces of control valves and plugs for abnormality. If any is found, replace the control valve assembly with new one.

CAUTION:

Replace control valve body together with clutch return spring as a set.

Control valve:

Refer to SDS, TF-192.

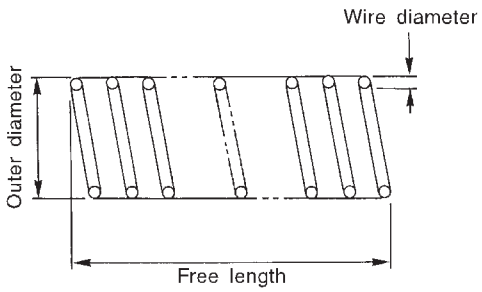

SMT948C

- Check each control valve spring for damage or distortion, and also check its free length, outer diameter and wire diameter. If any damage or fatigue is found, replace control valve body with new one.
- **Replace control valve body together with clutch return spring as a set.**

  Inspection standard:

  Refer to SDS, TF-192.

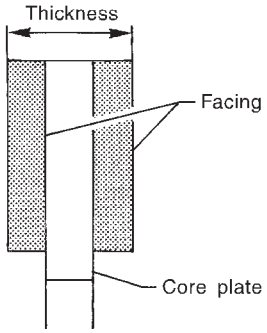

SMT949C

Clutch

NATF0081S05

- Check drive plate facings and driven plate for damage, cracks or other abnormality. If any, replace with new one.
- Check the thickness of drive plate facings and driven plate.

  Inspection standard:

  Refer to SDS, TF-193.

CAUTION:

- **Measure facing thickness at 3 points to take an average.**
- **Check all the drive and driven plates.**
- **Check return spring for damage or deformation.**

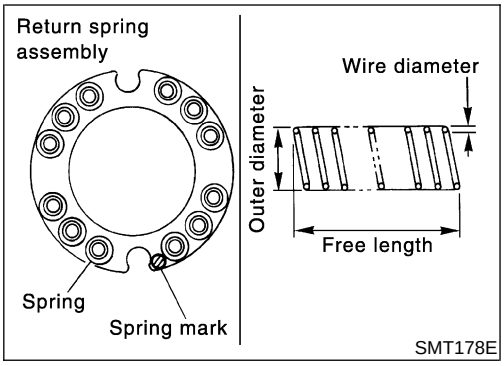

- Check stamped mark shown in the figure. Then, check that free length, outer diameter and wire diameter are within specifications. If any abnormality is found, replace with new return spring assembly of the same stamped number.

  Inspection standard:

  Refer to SDS, TF-193.

Front Case

ASSEMBLY

NATF0082

Planetary Carrier, Sun Gear and Internal Gear

NATF0082S01

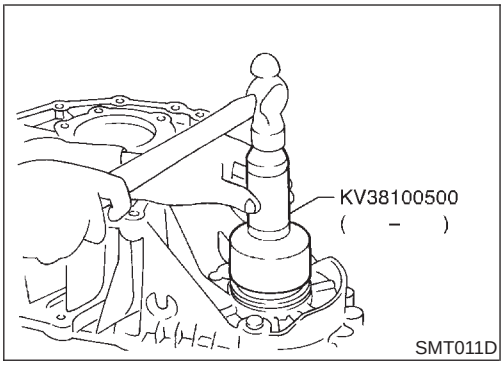

SMT011D

1. Apply ATF to oil seal periphery, and install oil seal so that it is flush with the end face of front case.
- **Do not reuse oil seal.**

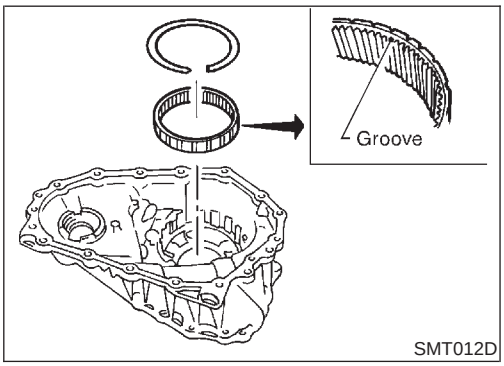

SMT012D

2. Install internal gear with its groove facing snap ring into front case. Then secure it with snap ring.
- **Do not reuse snap ring.**

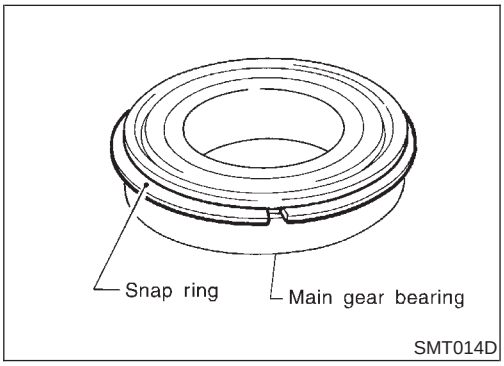

SMT014D

3. Install snap ring to main gear bearing.
- **Do not reuse snap ring.**

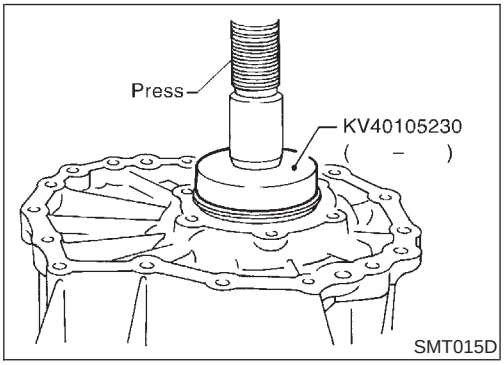

SMT015D

4. Set main gear bearing to front case, then press it.

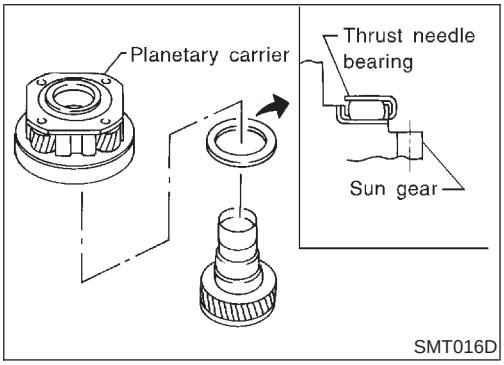

SMT016D

5. Install thrust needle bearing to sun gear.
6. Install sun gear to planetary carrier.

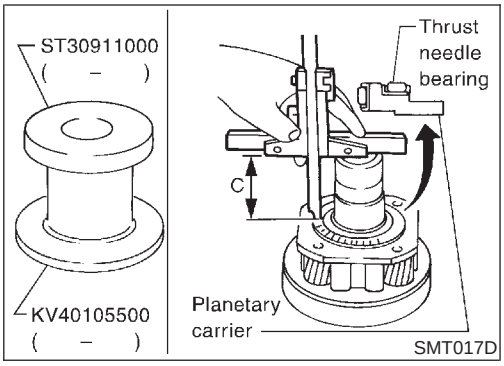

7. Set a support (KV40105500) to bushing replacer puller (ST30911000) as shown in the figure, and place planetary carrier on it.
8. Install thrust needle bearing to planetary carrier with its roller facing front case.
9. Measure "C" from the end of sun gear to the roller surface of thrust needle bearing.

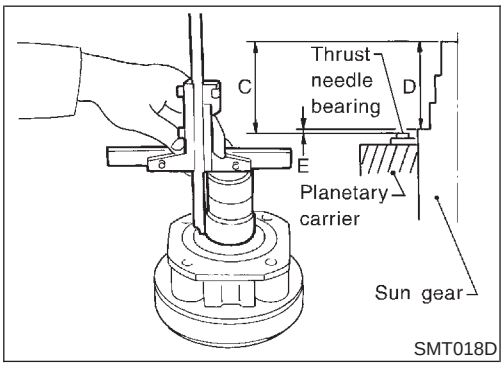

10. Measure "D" from the end of sun gear to the main gear bearing contact surface.
11. Calculate end play "E" using "C" and "D" obtained in steps 10 and 11. Select bearing race so that the end play becomes the standard value.

    Calculation formula:

    End play "E" = "C" – "D"

    Standard end play:

    0.1 - 0.25 mm (0.0039 - 0.0098 in)

    Bearing race:

    Refer to SDS, TF-194.

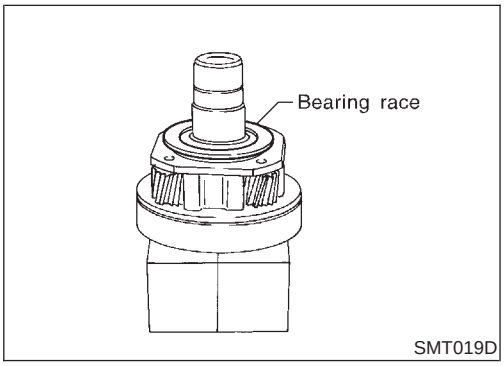

12. Set planetary carrier to press in the status described in step 8. Then install the selected bearing race to planetary carrier.

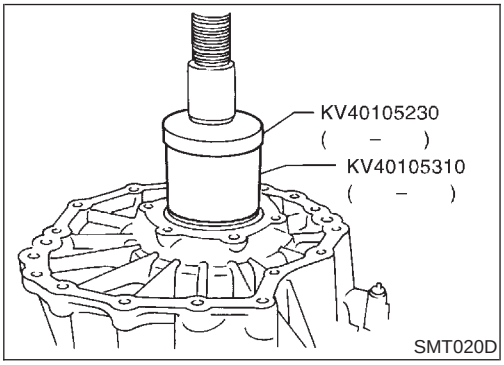

13. Install front case to planetary carrier. Set a support ring (KV40105310) and an adapter B (KV40105230) to main gear bearing inner race, then press it.

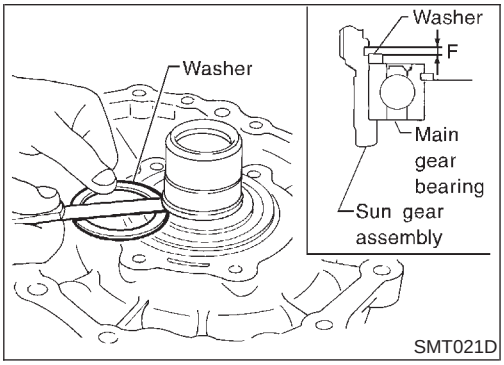

14. Install washer to sun gear assembly, and select proper snap ring so that end play "F" of sun gear is within specifications.

    Standard end play "F":

    0 - 0.15 mm (0 - 0.0059 in)

    Snap ring: Refer to SDS, TF-194.

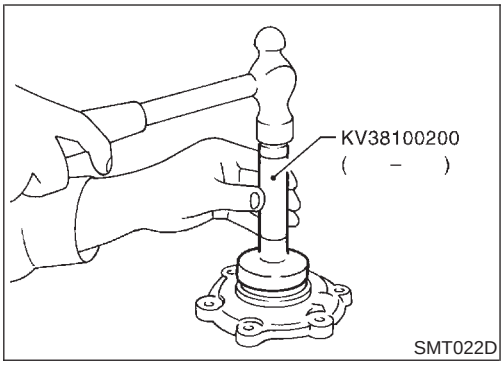

15. Install the selected snap ring.
- **Do not reuse snap rings.**
16. Apply ATF to the periphery of new transfer cover oil seal, and attach it at 1.5 mm (0.059 in) from the transfer cover and face.
- **Do not reuse oil seal.**

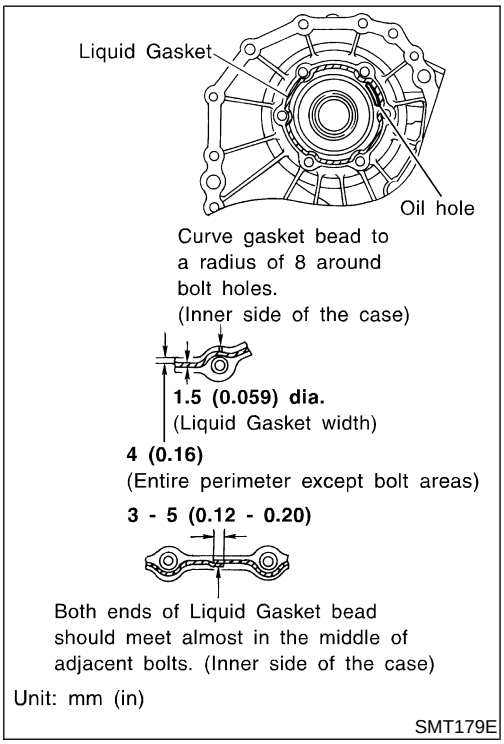

17. Apply Genuine Anaerobic Liquid Gasket or equivalent to transfer cover mounting surface of front case as shown in the figure.
Refer to TF-157.

CAUTION:
- **Remove all foreign materials such as water, oil, and grease from mating surfaces of front case and transfer cover.**
- **Prevent Liquid Gasket from entering into oil holes of front case.**

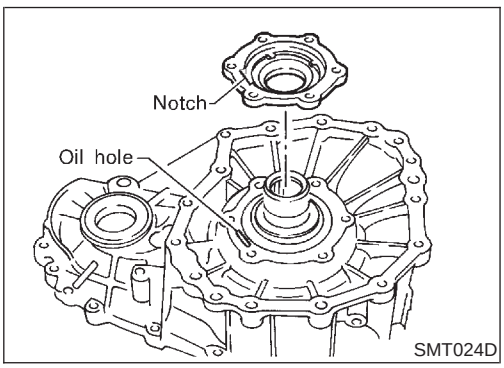

18. Align oil hole of front case with notch of transfer cover, and tighten bolts.
: 49 - 58 N·m (5.0 - 5.9 kg-m, 36 - 43 ft-lb)
- **Do not reuse bolts.**

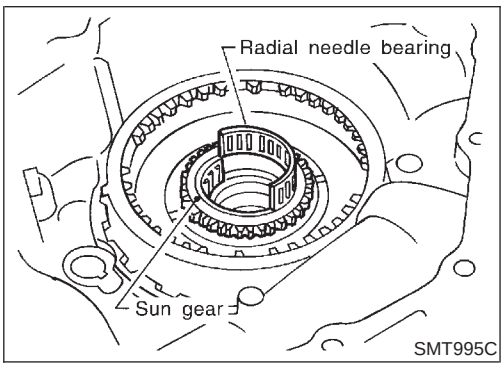

19. Apply petroleum jelly to radial needle bearing, and install it inside sun gear.
20. Install shift rod assembly to front case assembly. Refer to "Shift Rod Assembly", TF-180.

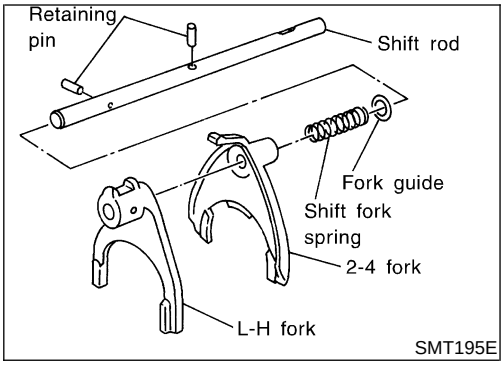

Shift Rod Assembly

NATF0082S02

1. Install fork guide, shift fork spring, 2-4 fork, and L-H fork to shift rod, and secure them with retaining pins.

- **Do not reuse retaining pins.**

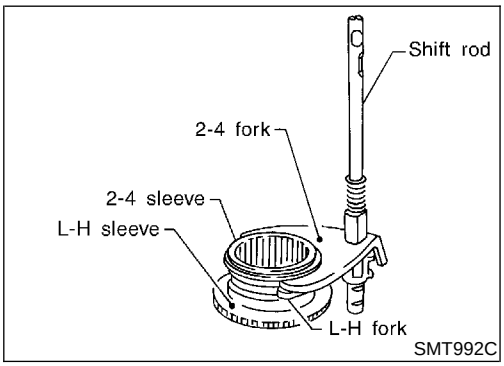

2. Install 2-4 sleeve and L-H sleeve to each fork.

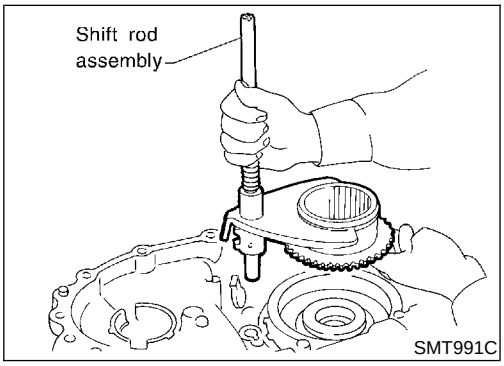

3. While aligning L-H sleeve with planetary carrier, install shift rod assembly to front case.

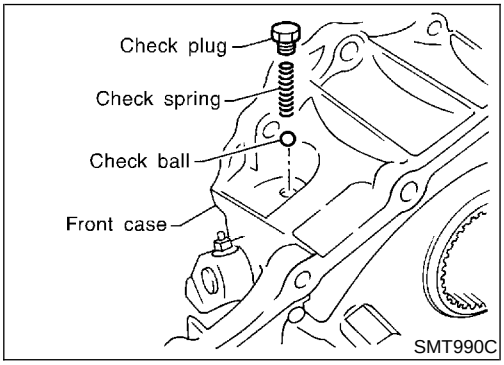

4. Remove all the liquid gasket on check plug and front case, and install check ball and check spring to front case. Apply Genuine Silicone RTV or equivalent* to check plug, install it to front case, and tighten it to specified torque.
   *: Refer to TF-157.
   : 19 - 25 N·m (1.9 - 2.5 kg-m, 14 - 18 ft-lb)
5. Remove all the liquid gasket on the switch fitting and inner side of front case, and with wait detection switch threaded one pitch into the hole, apply Genuine Silicone RTV or equivalent* to the thread, install it, and tighten it to specified torque.
   : 15 - 20 N·m (1.5 - 2.0 kg-m, 11 - 14 ft-lb)

- **Wait detection switch harness connector is black.**

6. Install center case assembly to front case assembly. Refer to "Final Assembly", TF-189.
7. Install rear case assembly to center case. Refer to "Final Assembly", TF-189.

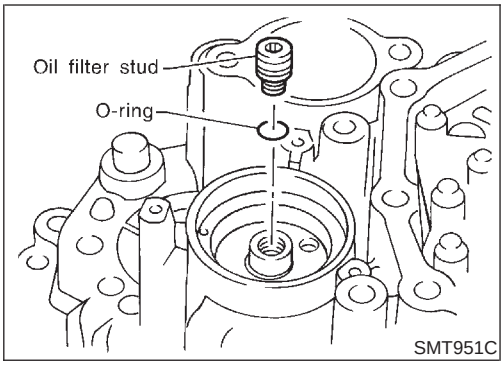

Center Case

ASSEMBLY

NATF0083

Oil Filter

NATF0083S01

1. Apply ATF or petroleum jelly to new O-ring, and install it to oil filter stud.

- **Do not reuse O-rings.**

2. Install oil filter stud to center case, and tighten it.

: 26 - 35 N·m (2.6 - 3.6 kg-m, 20 - 26 ft-lb)

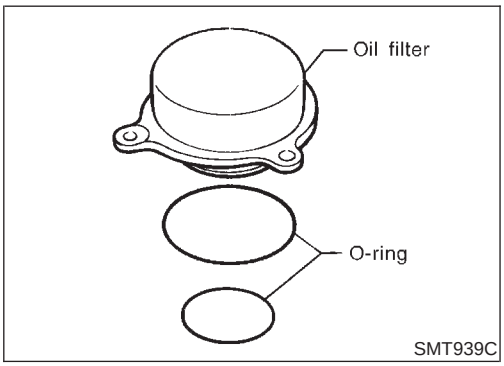

3. Apply ATF or petroleum jelly to two new O-rings, and install them to oil filter.

- **Do not reuse O-rings.**

4. Install oil filter to center case and tighten bolts.

: 7 - 9 N·m (0.7 - 0.9 kg-m, 61 - 78 in-lb)

- **Do not knock oil filter with a tool such as a hammer.**

Sub-oil Pump

NATF0083S02

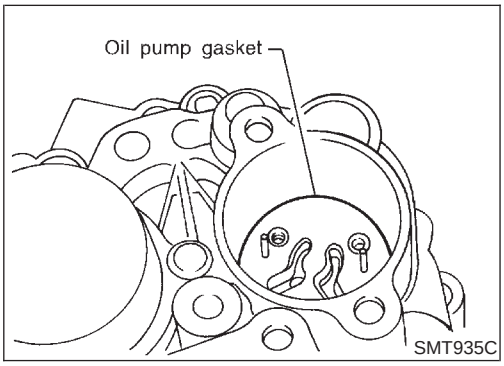

1. Install new oil pump gasket to center case by aligning it with dowel pin inside the center case.

- **Do not reuse gaskets.**

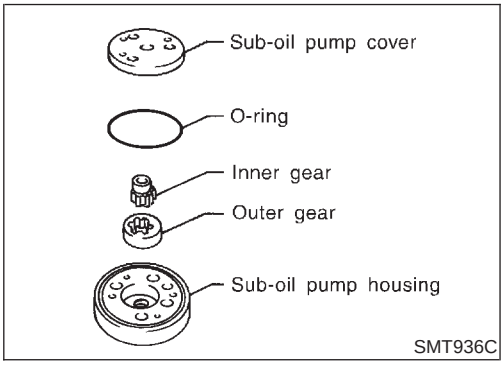

2. Install outer gear* and inner gear to sub-oil pump housing, and measure side clearance. Refer to “Sub-oil Pump”, “INSPECTION”, TF-174.
3. Set new O-ring to sub-oil pump housing, and install sub-oil pump cover.

- **Do not reuse O-rings.**

* Identification mark “▼” is placed on the side of sub-oil pump cover.

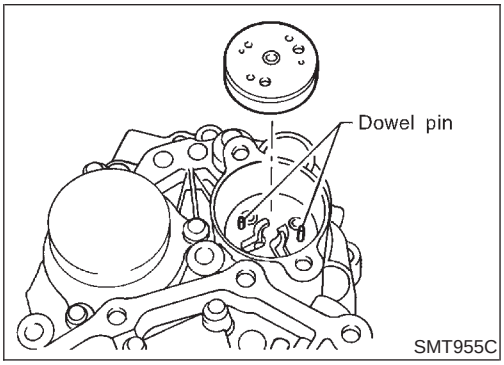

4. Align dowel pin hole and mounting bolt hole of sub-oil pump assembly with center case. Then tighten bolts.

: 7 - 9 N·m (0.7 - 0.9 kg-m, 61 - 78 in-lb)

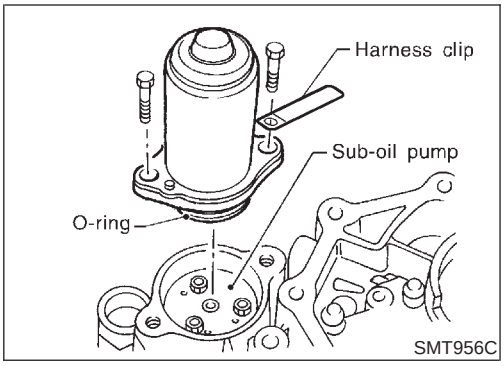

5. Apply ATF or petroleum jelly to new O-ring and install it to transfer motor.
6. Fit double-flat end of transfer motor shaft into slot of sub-oil pump assembly. Then tighten bolts.
   : 42 - 48 N·m (4.2 - 4.9 kg-m, 31 - 35 ft-lb)

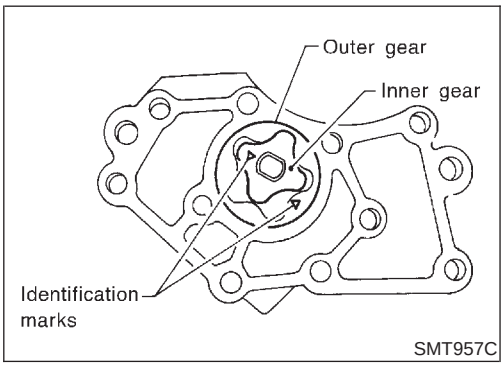

Main Oil Pump

NATF0083S03

1. Install inner gear and outer gear in the main oil pump housing with their identification marks facing toward center case mounting surface side. Then, measure the side clearance. Refer to "Main Oil Pump", "Center Case", TF-174.

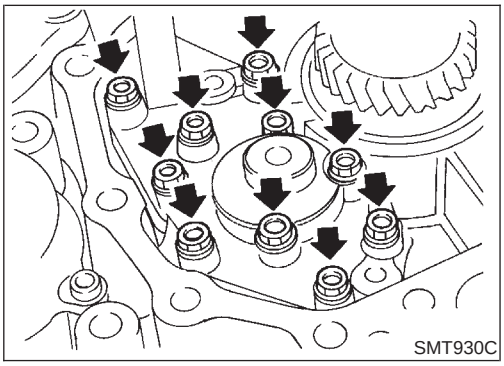

2. Install main oil pump assembly to center case assembly, and tighten bolts.
   : 7 - 9 N·m (0.7 - 0.9 kg-m, 61 - 78 in-lb)
3. Install oil pump shaft to main oil pump, then install rear case assembly to center case.
   Refer to "Final Assembly", TF-189.

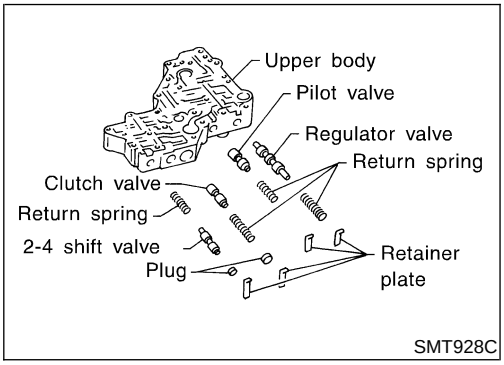

Control Valve

NATF0083S04

1. Clean upper body, control valves and springs with cleaning agent, and apply air blow.
2. Dip control valves in ATF, and apply ATF to the valve-mounting area of upper body.
3. Install each control valve, spring, and plug to upper body, and fix it with retainer plates.

CAUTION:

- **To insert control valves into upper body, place upper body on a level surface in order to prevent flaw or damage.**
- **Make sure each control valve is smoothly inserted.**

4. Install reverse balls, relief balls and relief springs, accumulator pistons and valve springs to upper body.

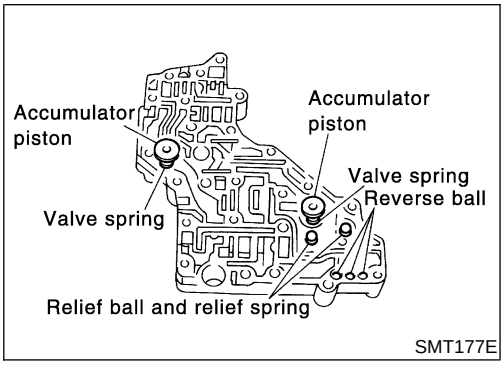

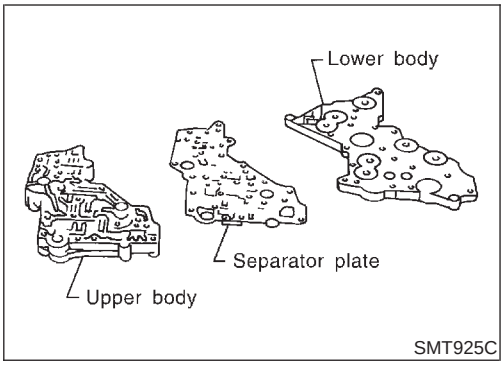

5. Install lower body and separator plate to upper body.
- **Do not reuse separator plates.**

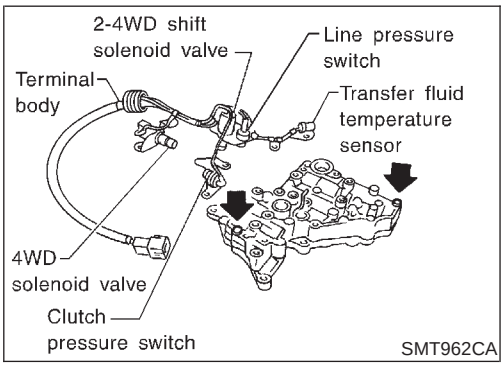

6. With lower body down, tighten two bolts in the position shown in the figure.
7. Apply ATF or petroleum jelly to new O-ring, and install it to 2-4WD shift solenoid valve, terminal body, line pressure switch and 4WD solenoid valve. Install them to control valve assembly.
- **Do not reuse O-rings.**

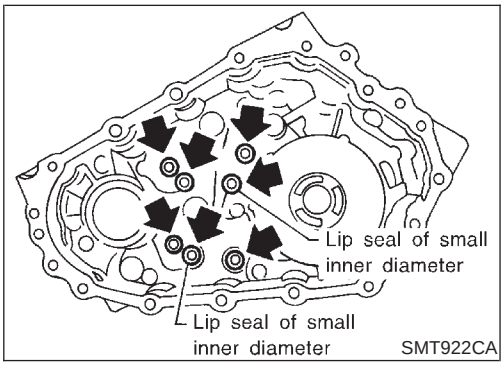

8. Apply ATF or petroleum jelly to lip seals, and install them to center case.
- **Do not reuse lip seals.**
- **There are 2 kinds of lip seals (lip seal of large inner diameter: 5 pieces, lip seal of small inner diameter: 2 pieces). Confirm the position before installation.**

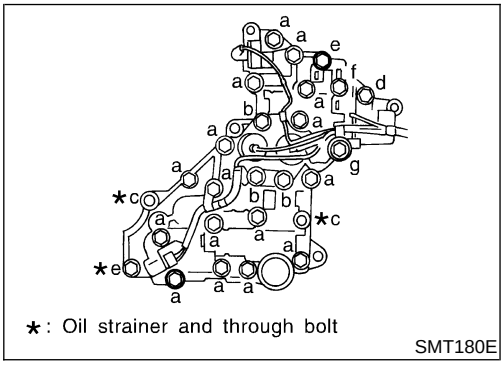

9. Install bolts as shown in the figure, and tighten them to specified torque.

Bolt symbol	a	b	*c	d	e	f	g
Length under head mm (in)	38 (1.50)	43.5 (1.713)	62 (2.44)	19 (0.75)	47 (1.85)	40 (1.57)	52 (2.05)
Q'ty	16	3	2	1	2	1	1
Tightening torque N·m (kg-m, in-lb)	6.9 - 8.8 (0.70 - 0.90, 61.1 - 77.9)						

*: Tighten with oil strainer.

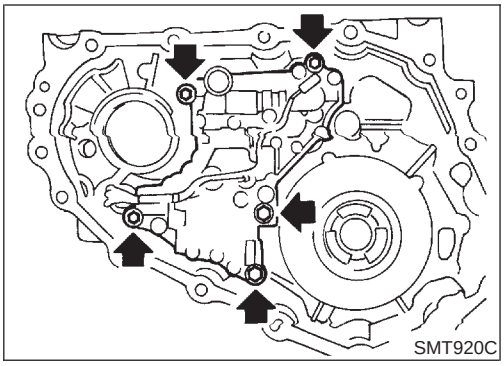

10. Install control valve assembly to center case, and tighten bolts.
    : 6.9 - 8.8 N·m (0.70 - 0.90 kg-m, 61.1 - 77.9 in-lb)

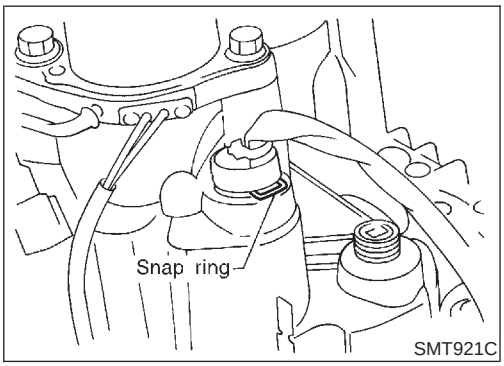

11. Remove terminal from center case installation hole, and secure terminal body with snap ring.

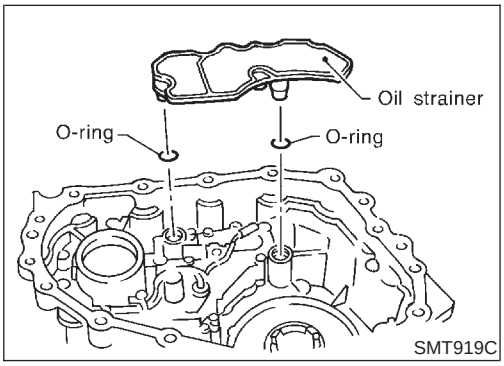

12. Apply ATF or petroleum jelly to O-rings, and install them to oil strainer.

CAUTION:
Do not reuse O-rings.

13. Install oil strainer to control valve assembly.
14. Install mainshaft and clutch drum to center case. Refer to "Mainshaft and Clutch Drum", TF-185.
15. Install front case assembly and rear case assembly. Refer to "Final Assembly", TF-189.

Clutch Piston

NATF0083S05

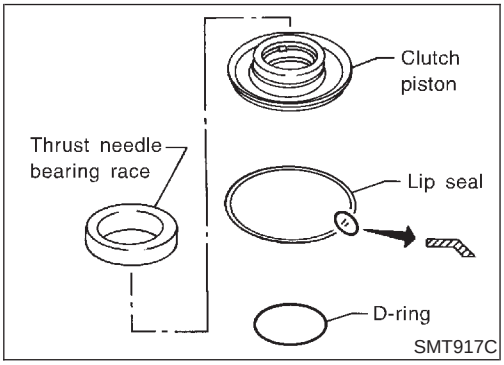

1. Apply ATF to D-ring and lip seal, and install them to clutch piston.
- Do not reuse lip seal and D-ring.

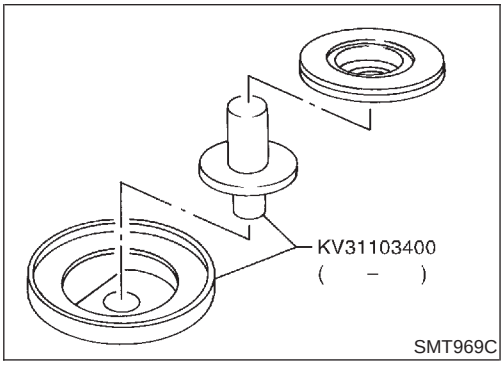

2. Set clutch piston to a clutch piston attachment (KV31103400).

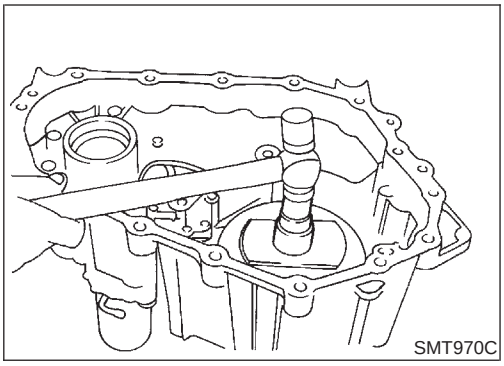
SMT970C

3. Set the clutch piston attachment to center case, and install clutch piston, tap it lightly.
4. Install slide needle bearing race to clutch piston.

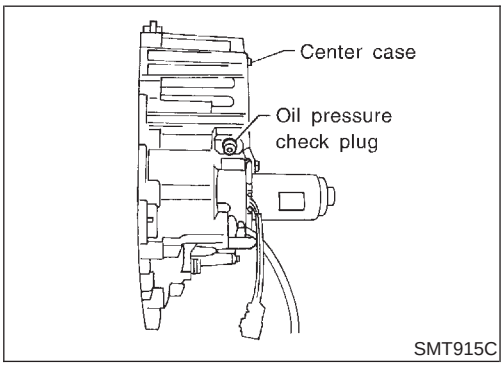

SMT915C

5. Remove all the liquid gasket from oil pressure check port and inside center case. With oil pressure check plug threaded in 1 or 2 pitches, apply Genuine Silicone RTV or equivalent to the thread of plug, and tighten.
   Refer to TF-157.
   : 10 - 17 N·m (1.0 - 1.7 kg-m, 87 - 148 in-lb)
6. Install mainshaft and clutch drum. Refer to "Mainshaft and Clutch Drum", TF-185.

Mainshaft and Clutch Drum

NATF0083S06

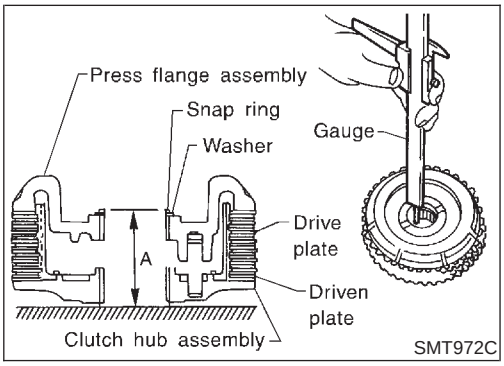

SMT972C

1. Install drive plates, driven plates and press flange to clutch hub.
2. Place clutch hub on a surface plate and measure dimension "A" between snap ring mounting surface of press flange and clutch drum sliding face of clutch hub.

CAUTION:
Measure at least 2 points, and take an average.

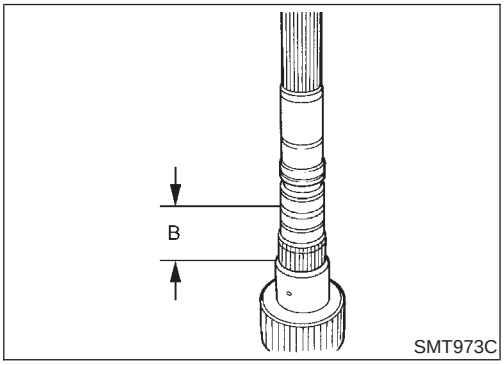

SMT973C

3. Measure dimension "B" between the gear end of mainshaft and the snap ring mounting portion.
4. Calculate end play using dimension "A" and dimension "B" (obtained in steps 2 and 3), and select proper retaining plate so that the end play is within specifications.
   Calculation formula:
   End play = B − A − Retaining plate thickness
   Standard end play:
   0.2 - 0.5 mm (0.008 - 0.020 in)
   Retaining plate:
   Refer to SDS, TF-193.

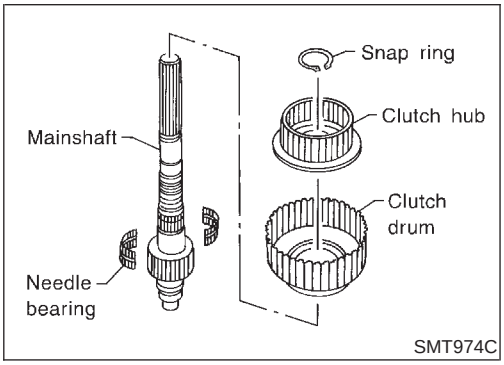

SMT974C

5. Install clutch drum, needle bearing and clutch hub to mainshaft, and secure them with snap ring.

- **Do not reuse snap ring.**

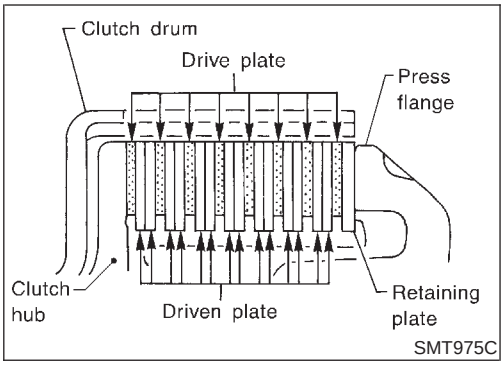

6. Install each clutch to clutch drum.

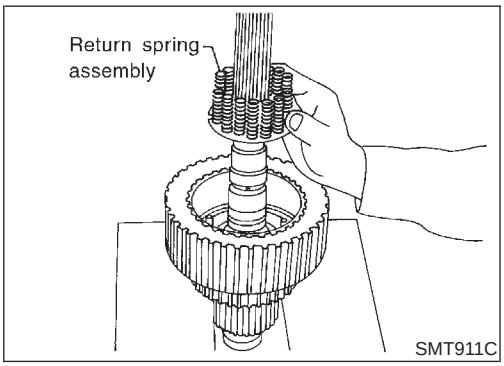

7. Align the notch of return spring assembly with the pin of clutch hub, and install it.

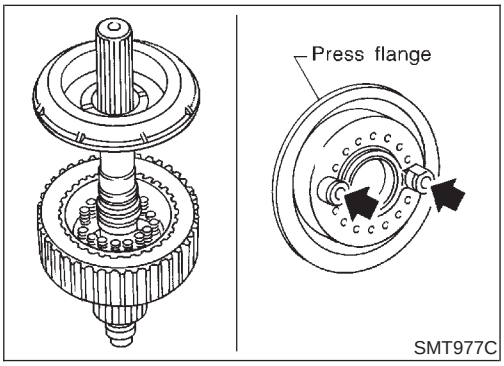

8. Install press flange (with the holes indicated by arrows aligned with pins of clutch hub).

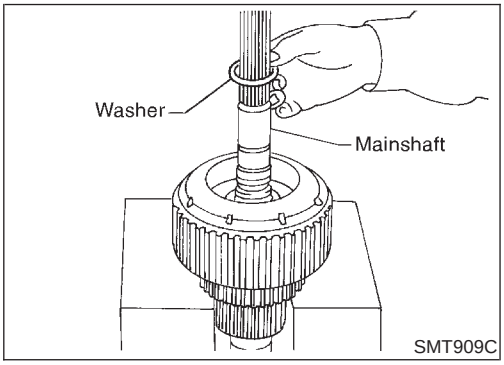

9. Install washer.

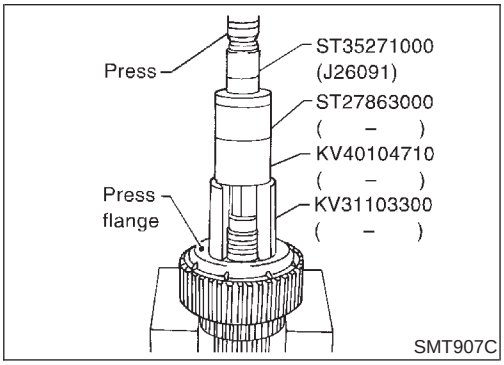

10. Pass mainshaft through snap ring. Set a drift (KV31103300), a support ring (KV40104710), a support ring (ST27863000) and a drift (ST35271000) to press flange at the position shown in the figure, and press snap ring until it fits into snap ring groove on mainshaft.

- **Do not reuse snap ring.**

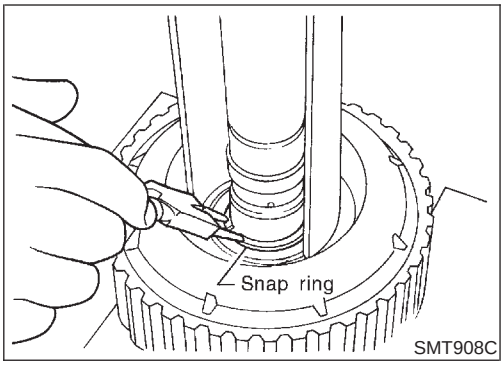

11. Fix snap ring to mainshaft.

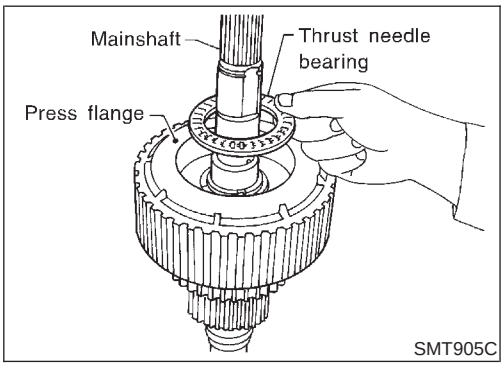

12. Install thrust needle bearing to press flange.

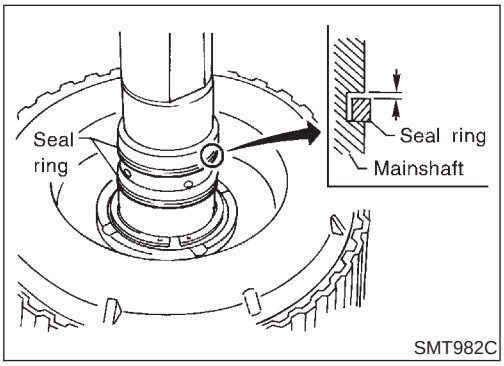

13. Apply petroleum jelly to new seal rings, and install them to mainshaft. Measure clearance between seal ring and groove using feeler gauge.

    Standard clearance:

    0.05 - 0.30 mm (0.0020 - 0.0118 in)

    Limit clearance:

    0.30 mm (0.0118 in)

- Pass seal ring from mainshaft rear end to install it.

    Seal ring dimension:

    Refer to SDS, TF-194.

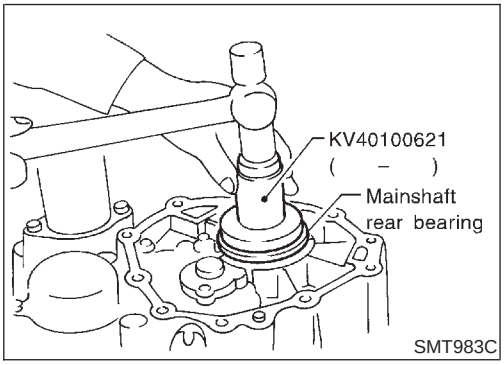

14. Install mainshaft rear bearing to center case.

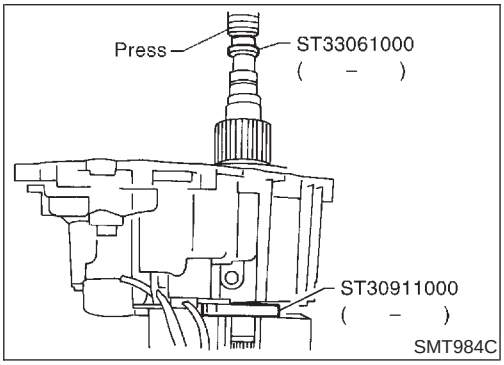

15. Place puller (ST30911000) to mainshaft rear bearing inner race, and set it to press stand.
16. Place adapter (ST33061000) to the tip of mainshaft, and press mainshaft into center case.

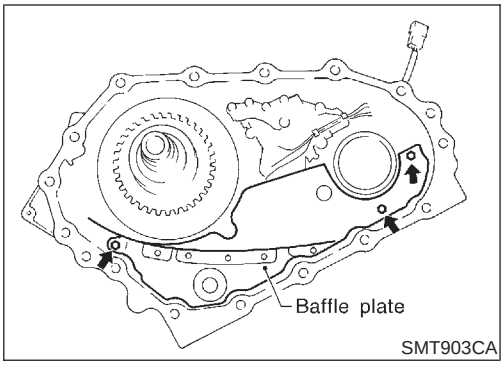

17. Install baffle plate to center case, and tighten bolts.
    : 3.7 - 5.0 N·m (0.38 - 0.51 kg-m, 33.0 - 44.3 in-lb)
18. Install front drive shaft and drive chain. Refer to "Front Drive Shaft and Drive Chain" below.
19. Install front case assembly and rear case assembly. Refer to "Final Assembly", TF-189.

Front Drive Shaft and Drive Chain

NATF0083S07

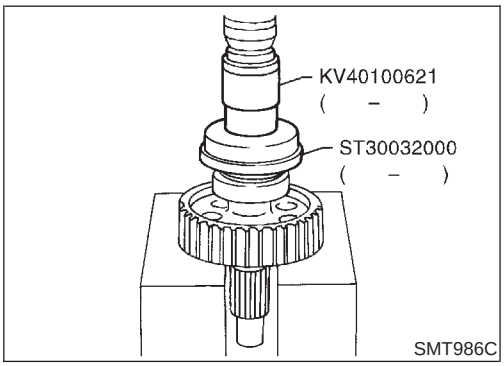

1. Place a base (ST30032000) to front drive shaft rear bearing inner race, and press it using a drift (KV40100621).

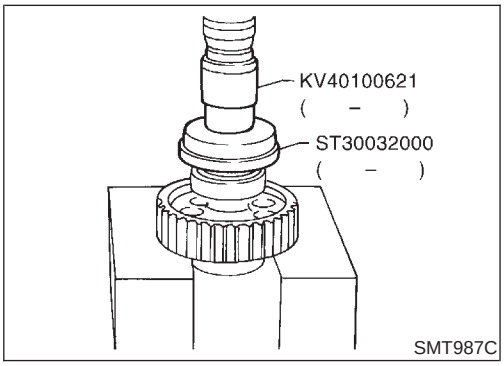

2. Place base (ST30032000) to front drive shaft front bearing inner race, and press it using the drift (KV40100621).

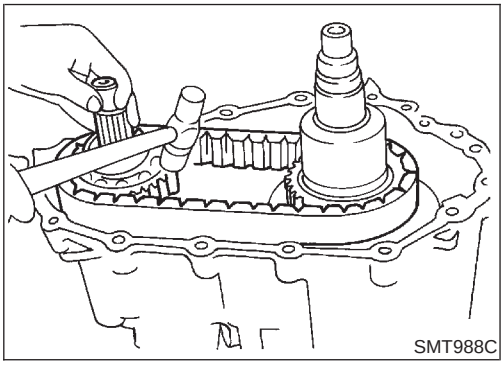

3. Install drive chain temporarily to front drive shaft and drive gear of clutch drum.
4. Tap front drive shaft with a plastic hammer while keeping it upright and press-fit front drive shaft rear bearing.

- **Be careful not to tap drive chain with a hammer.**

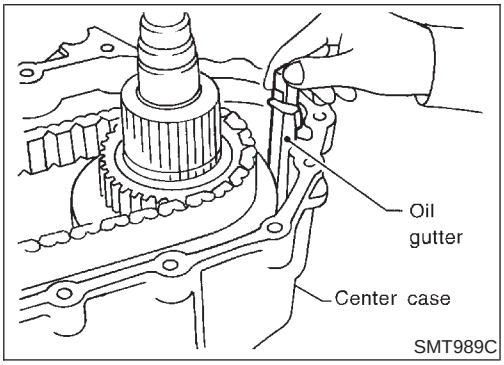

5. Align claw of oil gutter with center case, and install it.
6. Install front case assembly and rear case assembly. Refer to "Final Assembly", TF-189.

Final Assembly

NATF0084

1. Install C-rings to mainshaft rear bearing.

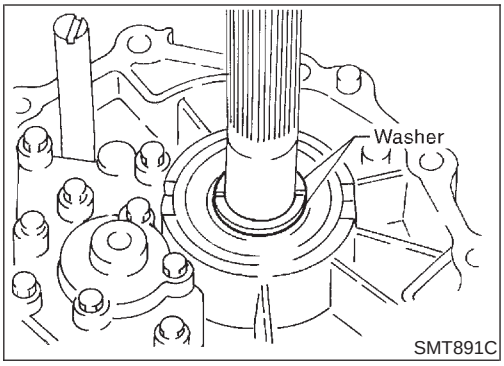

2. Check speedometer drive gear teeth for abnormal wear. Set speedometer drive gear properly on mainshaft, and secure it with snap ring.

- **Do not reuse snap ring.**

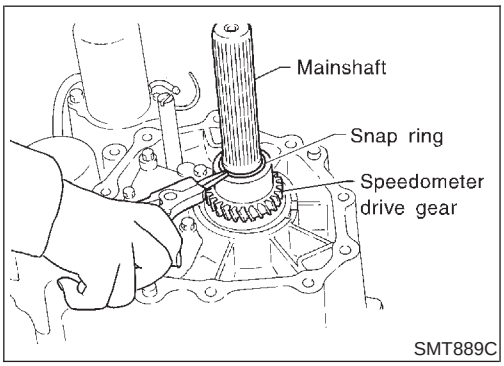

3. Apply Genuine Anaerobic Liquid Gasket or equivalent to the entire center case mounting surface of front case as shown in the figure.
   Refer to TF-157.

CAUTION:
Remove all foreign materials such as water, oil and grease from center case and front case mating surfaces.

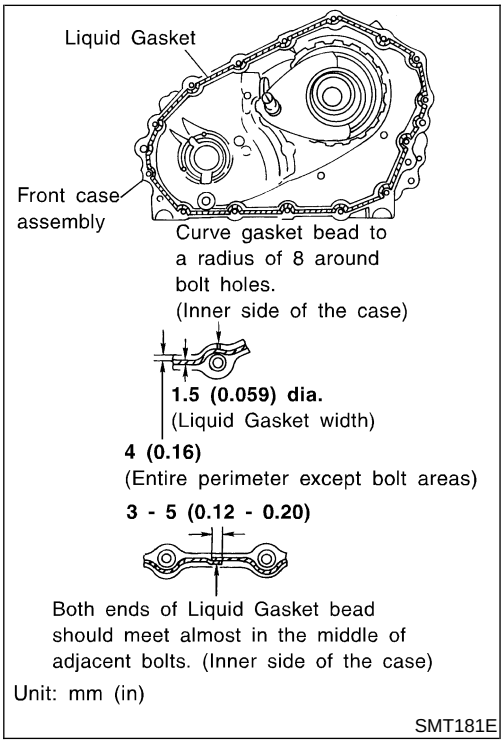

4. Make sure the two claws of oil gutter are securely attached to slots in center case.

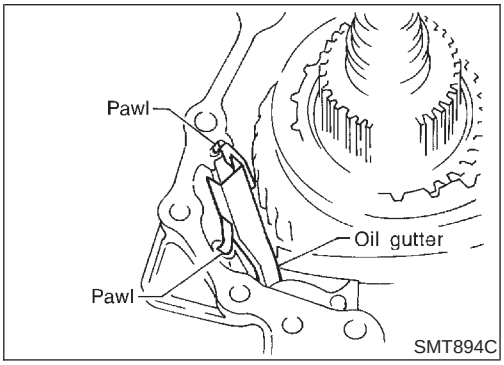

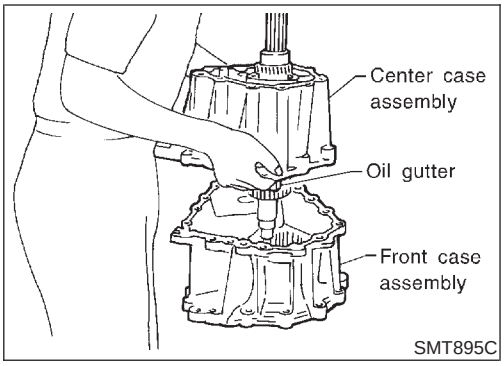

5. With the claws of oil gutter held by a finger, install center case assembly to front case assembly.

CAUTION:
Pay careful attention so that mainshaft end does not damage radial needle bearing in sun gear assembly.

6. Tap center case lightly with a rubber hammer or the like and press-fit front drive shaft bearing into front case.

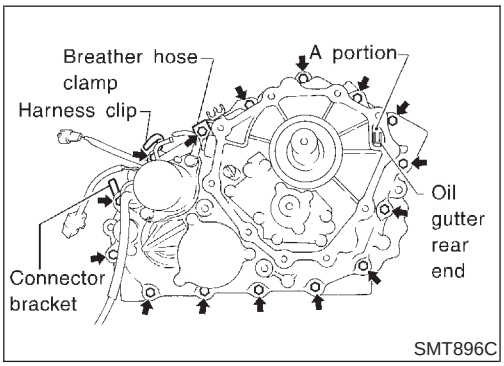

7. Make sure oil gutter rear end protrudes from point "A" in the figure.
8. Tighten bolts to specified torque.

   : 42 - 48 N·m (4.2 - 4.9 kg-m, 31 - 35 ft-lb)

- **Be sure to install air breather hose clamp, connector bracket and harness clip.**

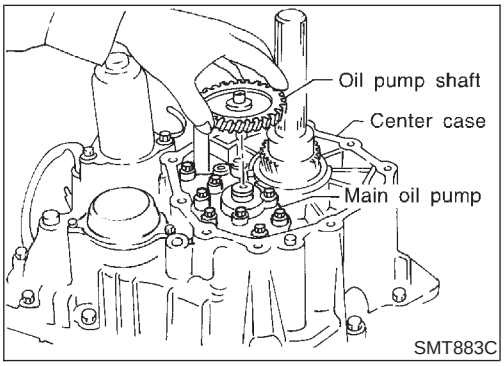

9. Fit double-flat end of oil pump shaft into slot of main oil pump and install it.

NOTE:
When oil pump shaft is rotated slightly, it drops into position where both parts fit.

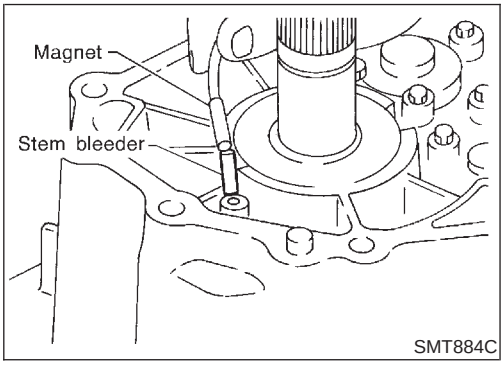

10. Install stem bleeder to center case.

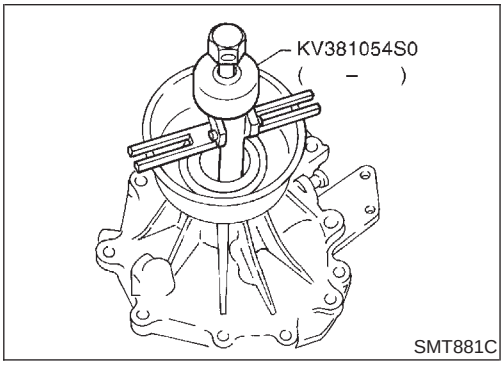

11. Remove rear oil seal.

- **Do not reuse oil seal.**

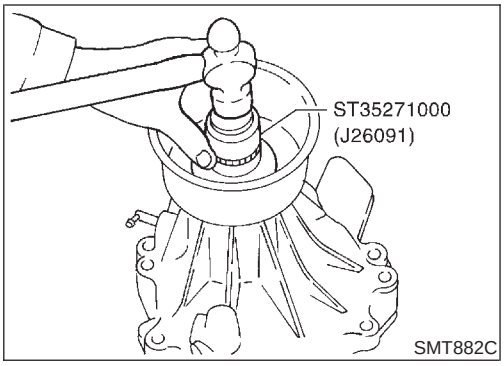

12. Apply ATF to the circumference of new rear oil seal, and tap it using a drift as shown in the figure so that it is aligned with case tip face.
- **Apply multi-purpose grease to oil seal lip.**

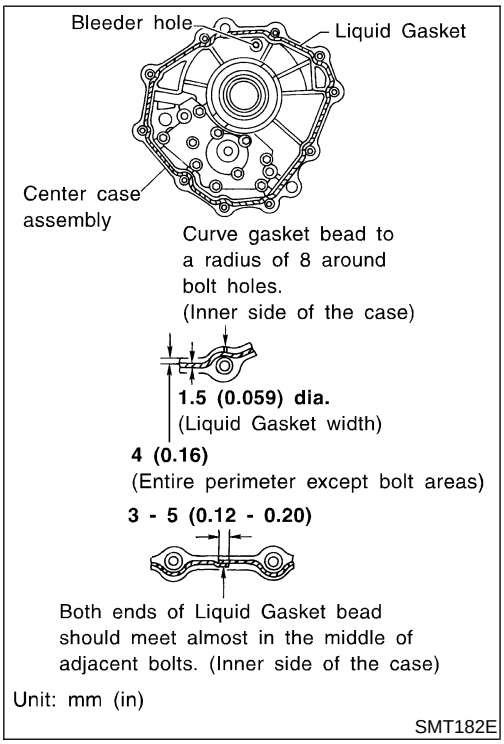

13. Apply Genuine Anaerobic Liquid Gasket or equivalent to entire rear case mounting surface of center case as shown in the figure.
Refer to TF-157.

CAUTION:
- **Remove all foreign materials such as water, oil, and grease from center case and rear case mating surfaces.**
- **Be careful not to allow Liquid Gasket to clog bleeder hole.**

14. Install rear case to center case, and tighten bolts to specified torque.
: 42 - 48 N·m (4.2 - 4.9 kg-m, 31 - 35 ft-lb)
- **Be sure to attach harness clips.**

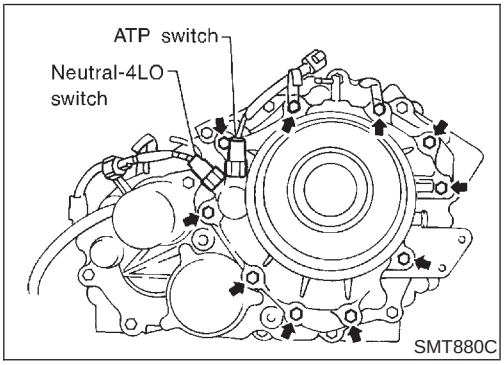

15. Remove all the gasket fluid from switch mounting area and inside rear case, with ATP switch and neutral-4LO switch threaded in 1 to 2 pitches, apply Genuine Silicone RTV or equivalent to the thread of the switches and tighten it to specified torque.
: 15 - 20 N·m (1.5 - 2.0 kg-m, 11 - 14 ft-lb)
16. Install rear case assembly to center case assembly.

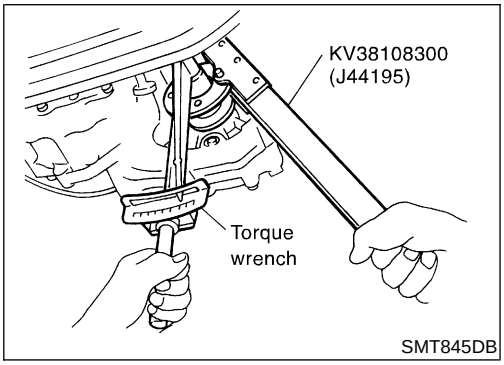

17. Install companion flange to front drive shaft, and tighten lock nut.
: 226 - 324 N·m (23.0 - 33.0 kg-m, 166 - 239 ft-lb)
- Do not reuse lock nut.

General Specifications

NATF0085

Transfer model			ATX14A
Gear ratio	High		1.000
	Low		2.596
Number of teeth	Planetary gear	Sun gear	57
		Internal gear	91
	Front drive sprocket		35
	Front drive shaft		35
Fluid capacity ℓ (US qt, Imp qt)*			3.0 (3-1/8, 2-5/8)

*: Refer to MA-12, “Fluids and Lubricants”.

Inner Gear and Outer Gear

NATF0086

SUB-OIL PUMP

NATF0086S01

Allowable clearance	0.015 - 0.035 mm (0.0006 - 0.0014 in)	
Gear thickness mm (in)	Part No.*	
	Inner gear	Outer gear
9.27 - 9.28 (0.3650 - 0.3654)	31346 0W462	31347 0W462
9.28 - 9.29 (0.3654 - 0.3657)	31346 0W461	31347 0W461
9.29 - 9.30 (0.3657 - 0.3661)	31346 0W460	31347 0W460

*: Always check with the Parts Department for the latest parts information.

MAIN OIL PUMP

NATF0086S02

Allowable clearance	0.015 - 0.035 mm (0.0006 - 0.0014 in)	
Gear thickness mm (in)	Part No.*	
	Inner gear	Outer gear
14.67 - 14.68 (0.5776 - 0.5780)	31346 0W412	31347 0W412
14.68 - 14.69 (0.5780 - 0.5783)	31346 0W411	31347 0W411
14.69 - 14.70 (0.5783 - 0.5787)	31346 0W410	31347 0W410

*: Always check with the Parts Department for the latest parts information.

Control Valve

NATF0087

VALVE

NATF0087S01

Mounting position	Part name	Part No.*	Outer dia. mm (in)	Overall length mm (in)
L1	2-4 shift valve	31772 21X00	8.0 (0.315)	38.5 (1.516)
L2	Clutch valve	31772 80X11	10.0 (0.394)	40.0 (1.575)
L4	Pilot valve	31772 80X11	10.0 (0.394)	40.0 (1.575)
L5	Regulator valve	31741 0W410	12.0 (0.472)	68.0 (2.677)

*: Always check with the Parts Department for the latest parts information.

SPRING

NATF0087S02

Mounting position	Part name	Part No.*	Free length mm (in)	Outer dia. mm (in)	Wire dia. mm (in)	Winding direction
L1	2-4 shift valve spring	31742 0W400	31.85 (1.2539)	7.0 (0.276)	0.6 (0.024)	Clockwise

Mounting position	Part name	Part No.*	Free length mm (in)	Outer dia. mm (in)	Wire dia. mm (in)	Winding direction
L2	Clutch valve spring	31742 0W405	40.6 (1.598)	9.0 (0.354)	0.8 (0.031)	Clockwise
L4	Pilot valve spring	31742 0W410	28.1 (1.106)	9.0 (0.354)	1.2 (0.047)	Clockwise
L5	Regulator valve spring	31742 0W415	39.7 (1.563)	11.0 (0.433)	1.3 (0.051)	Clockwise

*: Always check with the Parts Department for the latest parts information.

Clutch

NATF0088

DRIVE PLATE

NATF0088S01

Part No.*	Quantity	Initial thickness mm (in)	Limit value mm (in)
31532 0W410	8	2.0 (0.079)	1.8 (0.071)

*: Always check with the Parts Department for the latest parts information.

DRIVEN PLATE

NATF0088S04

Part No.*	Quantity	Initial thickness mm (in)	Limit value mm (in)
31536 0W410	14	2.0 (0.079)	0 (0) (steel plate)

*: Always check with the Parts Department for the latest parts information.

RETURN SPRING

NATF0088S02

Stamped mark	Part No.*	Free length mm (in)	Outer dia. mm (in)	Wire dia. mm (in)	Winding direction
1	31521 0W401	37.3 (1.496)	12.0 (0.472)	1.8 (0.071)	Clockwise
2	31521 0W402	37.8 (1.488)			
3	31521 0W403	38.4 (1.512)			
4	31521 0W404	38.9 (1.531)			
5	31521 0W405	39.4 (1.551)			
6	31521 0W406	40.0 (1.575)			
7	31521 0W407	36.8 (1.449)			
8	31521 0W408	40.5 (1.594)			

*: Always check with the Parts Department for the latest parts information.

RETAINING PLATE

NATF0088S03

Standard end play	0.2 - 0.5 mm (0.008 - 0.020 in)	
Measured value mm (in)	Part No.*	Thickness mm (in)
2.30 - 2.50 (0.0906 - 0.0984)	31537 0W410	2.1 (0.083)
2.50 - 2.70 (0.0984 - 0.1063)	31537 0W411	2.3 (0.091)
2.70 - 2.90 (0.1063 - 0.1142)	31537 0W412	2.5 (0.098)
2.90 - 3.10 (0.1142 - 0.1220)	31537 0W413	2.7 (0.106)
3.10 - 3.30 (0.1220 - 0.1299)	31537 0W414	2.9 (0.114)
3.30 - 3.50 (0.1299 - 0.1378)	31537 0W415	3.1 (0.122)
3.50 - 3.70 (0.1378 - 0.1457)	31537 0W416	3.3 (0.130)
3.70 - 3.90 (0.1457 - 0.1535)	31537 0W417	3.5 (0.138)
3.90 - 4.10 (0.1535 - 0.1614)	31537 0W418	3.7 (0.146)
4.10 - 4.30 (0.1614 - 0.1693)	31537 0W419	3.9 (0.154)

Clutch (Cont'd)

Standard end play	0.2 - 0.5 mm (0.008 - 0.020 in)	
Measured value mm (in)	Part No.*	Thickness mm (in)
4.30 - 4.50 (0.1693 - 0.1772)	31537 0W420	4.1 (0.161)
4.50 - 4.70 (0.1772 - 0.1850)	31537 0W421	4.3 (0.169)
4.70 - 4.90 (0.1850 - 0.1929)	31537 0W422	4.5 (0.177)
4.90 - 5.10 (0.1929 - 0.2008)	31537 0W423	4.7 (0.185)

*: Always check with the Parts Department for the latest parts information.

Seal Ring (Mainshaft side)

NATF0089

Standard clearance Limit clearance	0.05 - 0.30 mm (0.0020 - 0.0118 in) 0.30 mm (0.0118 in)		
Part No.*	Outer dia. mm (in)	Inner dia. mm (in)	Thickness mm (in)
31525 0W410	40.8 (1.606)	36.9 (1.453)	1.97 (0.0776)

*: Always check with the Parts Department for the latest parts information.

Bearing Race (Thrust needle bearing side)

NATF0090

Standard end play	0.1 - 0.25 mm (0.0039 - 0.0098 in)	
End play (Dimension "E") mm (in)	Part No.*	Thickness mm (in)
1.785 - 1.800 (0.0703 - 0.0709)	31439 0W410	1.6 (0.063)
1.800 - 1.900 (0.0709 - 0.0748)	31439 0W411	1.7 (0.067)
1.900 - 2.000 (0.0748 - 0.0787)	31439 0W412	1.8 (0.071)
2.000 - 2.100 (0.0787 - 0.0827)	31439 0W413	1.9 (0.075)
2.100 - 2.200 (0.0827 - 0.0866)	31439 0W414	2.0 (0.079)
2.200 - 2.270 (0.0866 - 0.0894)	31439 0W415	2.1 (0.083)

*: Always check with the Parts Department for the latest parts information.

Snap Ring (Sun gear side)

NATF0091

Standard end play	0 - 0.15 mm (0 - 0.0059 in)	
End play (Dimension "F") mm (in)	Part No.*	Thickness mm (in)
2.40 - 2.50 (0.0945 - 0.0984)	33112 0W411	2.4 (0.094)
2.50 - 2.60 (0.0984 - 0.1024)	33112 0W412	2.5 (0.098)
2.60 - 2.70 (0.1024 - 0.1063)	33112 0W413	2.6 (0.102)

*: Always check with the Parts Department for the latest parts information.