Kawasaki

EN500
VULCAN 500 LTD

Motorcycle Service Manual

Downloaded free from http://www.vulcanrider.se/

Quick Reference Guide

General Information	1
Fuel System	2
Cooling System	3
Engine Top End	4
Clutch	5
Engine Lubrication System	6
Engine Removal/Installation	7
Crankshaft/Transmission	8
Wheels/Tires	9
Final Drive	10
Brakes	11
Suspension	12
Steering	13
Frame	14
Electrical System	15
Appendix	16

This quick reference guide will assist you in locating a desired topic or procedure.

- Bend the pages back to match the black tab of the desired chapter number with the black tab on the edge at each table of contents page.
- Refer to the sectional table of contents for the exact pages to locate the specific topic required.

LIST OF ABBREVIATIONS

A	ampere(s)	lb	pound(s)
ABDC	after bottom dead center	m	meter(s)
AC	alternating current	min	minute(s)
ATDC	after top dead center	N	newton(s)
BBDC	before bottom dead center	Pa	pascal(s)
BDC	bottom dead center	PS	horsepower
BTDC	before top dead center	psi	pound(s) per square inch
°C	degree(s) Celsius	r	revolution
DC	direct current	rpm	revolution(s) per minute
F	farad(s)	TDC	top dead center
°F	degree(s) Fahrenheit	TIR	total indicator reading
ft	foot, feet	V	volt(s)
g	gram(s)	W	watt(s)
h	hour(s)	Ω	ohm(s)
L	liter(s)		

Read OWNER’S MANUAL before operating.

EMISSION CONTROL INFORMATION

To protect the environment in which we all live, Kawasaki has incorporated crankcase emission (1) and exhaust emission (2) control systems in compliance with applicable regulations of the United States Environmental Protection Agency and California Air Resources Board. Additionally, Kawasaki has incorporated an evaporative emission control system (3) in compliance with applicable regulations of the California Air Resources Board on vehicles sold in California only.

1. Crankcase Emission Control System

This system eliminates the release of crankcase vapors into the atmosphere. Instead, the vapors are routed through an oil separator to the intake side of the engine. While the engine is operating, the vapors are drawn into combustion chamber, where they are burned along with the fuel and air supplied by the carburetion system.

2. Exhaust Emission Control System

This system reduces the amount of pollutants discharged into the atmosphere by the exhaust of this motorcycle. The fuel and ignition systems of this motorcycle have been carefully designed and constructed to ensure an efficient engine with low exhaust pollutant levels.

3. Evaporative Emission Control System

Vapors caused by fuel evaporation in the fuel system are not vented into the atmosphere. Instead, fuel vapors are routed into the running engine to be burned, or stored in a canister when the engine is stopped. Liquid fuel is caught by a vapor separator and returned to the fuel tank.

The Clean Air Act, which is the Federal law covering motor vehicle pollution, contains what is commonly referred to as the Act's "tampering provisions."

"Sec. 203(a) The following acts and the causing thereof are prohibited...

(3)(A) for any person to remove or render inoperative any device or element of design installed on or in a motor vehicle or motor vehicle engine in compliance with regulations under this title prior to its sale and delivery to the ultimate purchaser, or for any manufacturer or dealer knowingly to remove or render inoperative any such device or element of design after such sale and delivery to the ultimate purchaser.

(3)(B) for any person engaged in the business of repairing, servicing, selling, leasing, or trading motor vehicles or motor vehicle engines, or who operates a fleet of motor vehicles knowingly to remove or render inoperative any device or element of design installed on or in a motor vehicle or motor vehicle engine in compliance with regulations under this title following its sale and delivery to the ultimate purchaser..."

NOTE

○ *The phrase "remove or render inoperative any device or element of design" has been generally interpreted as follows:*

1. *Tampering does not include the temporary removal or rendering inoperative of devices or elements of design in order to perform maintenance.*
2. *Tampering could include:*
   - a. *Maladjustment of vehicle components such that the emission standards are exceeded.*
   - b. *Use of replacement parts or accessories which adversely affect the performance or durability of the motorcycle.*
   - c. *Addition of components or accessories that result in the vehicle exceeding the standards.*
   - d. *Permanently removing, disconnecting, or rendering inoperative any component or element of design of the emission control systems.*

WE RECOMMEND THAT ALL DEALERS OBSERVE THESE PROVISIONS OF FEDERAL LAW, THE VIOLATION OF WHICH IS PUNISHABLE BY CIVIL PENALTIES NOT EXCEEDING $10,000 PER VIOLATION.

TAMPERING WITH NOISE CONTROL SYSTEM PROHIBITED

Federal law prohibits the following acts or the causing thereof: (1) The removal or rendering inoperative by any person other than for purposes of maintenance, repair, or replacement, of any device or element of design incorporated into any new vehicle for the purpose of noise control prior to its sale or delivery to the ultimate purchaser or while it is in use, or (2) the use of the vehicle after such device or element of design has been removed or rendered inoperative by any person.

Among those acts presumed to constitute tampering are the acts listed below:

- Replacement of the original exhaust system or muffler with a component not in compliance with Federal regulations.
- Removal of the muffler(s) or any internal portion of the muffler(s).
- Removal of the air box or air box cover.
- Modifications to the muffler(s) or air intake system by cutting, drilling, or other means if such modifications result in increased noise levels.

Foreword

This manual is designed primarily for use by trained mechanics in a properly equipped shop. However, it contains enough detail and basic information to make it useful to the owner who desires to perform his own basic maintenance and repair work. A basic knowledge of mechanics, the proper use of tools, and workshop procedures must be understood in order to carry out maintenance and repair satisfactorily. Whenever the owner has insufficient experience or doubts his ability to do the work, all adjustments, maintenance, and repair should be carried out only by qualified mechanics.

In order to perform the work efficiently and to avoid costly mistakes, read the text, thoroughly familiarize yourself with the procedures before starting work, and then do the work carefully in a clean area. Whenever special tools or equipment are specified, do not use makeshift tools or equipment. Precision measurements can only be made if the proper instruments are used, and the use of substitute tools may adversely affect safe operation.

For the duration of the warranty period, we recommend that all repairs and scheduled maintenance be performed in accordance with this service manual. Any owner maintenance or repair procedure not performed in accordance with this manual may void the warranty.

To get the longest life out of your vehicle:

- Follow the Periodic Maintenance Chart in the Service Manual.
- Be alert for problems and non-scheduled maintenance.
- Use proper tools and genuine Kawasaki Motorcycle parts. Special tools, gauges, and testers that are necessary when servicing Kawasaki motorcycles are introduced by the Service Manual. Genuine parts provided as spare parts are listed in the Parts Catalog.
- Follow the procedures in this manual carefully. Don't take shortcuts.
- Remember to keep complete records of maintenance and repair with dates and any new parts installed.

How to Use This Manual

In this manual, the product is divided into its major systems and these systems make up the manual's chapters.

The Quick Reference Guide shows you all of the product's system and assists in locating their chapters. Each chapter in turn has its own comprehensive Table of Contents.

For example, if you want ignition coil information, use the Quick Reference Guide to locate the Electrical System chapter. Then, use the Table of Contents on the first page of the chapter to find the ignition coil section.

Whenever you see these WARNING and CAUTION symbols, heed their instructions! Always follow safe operating and maintenance practices.

⚠ WARNING

This warning symbol identifies special instructions or procedures which, if not correctly followed, could result in personal injury, or loss of life.

CAUTION

This caution symbol identifies special instructions or procedures which, if not strictly observed, could result in damage to or destruction of equipment.

This manual contains four more symbols (in addition to WARNING and CAUTION) which will help you distinguish different types of information.

NOTE

○ *This note symbol indicates points of particular interest for more efficient and convenient operation.*

- Indicates a procedural step or work to be done.

○ Indicates a procedural sub-step or how to do the work of the procedural step it follows. It also precedes the text of a NOTE.

★ Indicates a conditional step or what action to take based on the results of the test or inspection in the procedural step or sub-step it follows.

In most chapters an exploded view illustration of the system components follows the Table of Contents. In these illustrations you will find the instructions indicating which parts require specified tightening torque, oil, grease or a locking agent during assembly.

General Information

Table of Contents

Before Servicing 1-2
Model Identification 1-5
General Specifications (EN500-C1 ~ C6F Models) 1-6
General Specifications (EN500C7F Model ~) 1-9
Periodic Maintenance Chart 1-12
Torque and Locking Agent 1-16
Unit Conversion Table 1-21

1-2 GENERAL INFORMATION

Before Servicing

Before starting to perform an inspection service or carry out a disassembly and reassembly operation on a motorcycle, read the precautions given below. To facilitate actual operations, notes, illustrations, photographs, cautions, and detailed descriptions have been included in each chapter wherever necessary. This section explains the items that require particular attention during the removal and reinstallation or disassembly and reassembly of general parts.

Especially note the following

(1) Dirt

Before removal and disassembly, clean the motorcycle. Any dirt entering the engine will shorten the life of the motorcycle. For the same reason, before installing a new part, clean off any dust or metal filings.

(2) Battery Ground

Disconnect the ground (–) cable from the battery before performing any disassembly operations on the motorcycle. This prevents the engine from accidentally turning over while work is being carried out, sparks from being generated while disconnecting the cables from electrical parts, as well as damage to the electrical parts themselves. For reinstallation, first connect the positive cable to the positive (+) terminal of the battery

(3) Installation, Assembly

Generally, installation or assembly is the reverse of removal or disassembly. However, if installation or assembly sequence is given in this Service Manual, follow it. Note parts locations and cable, wire, and hose routing during removal or disassembly so they can be installed or assembled in the same way. It is preferable to mark and record the locations and routing whenever possible.

(4) Tightening Sequence

When installing bolts, nuts, or screws for which a tightening sequence is given in this Service Manual, make sure to follow the sequence. When installing a part with several bolts, nuts, or screws, start them all in their holes and tighten them to a snug fit, thus ensuring that the part has been installed in its proper location. Then, tighten them to the specified torque in the tightening sequence and method indicated. If tightening sequence instructions are not given, tighten them evenly in a cross pattern. Conversely, to remove a part, first loosen all the bolts, nuts, or screws that are retaining the part a 1/4-turn before removing them.

(5) Torque

When torque values are given in this Service Manual, use them. Either too little or too much torque may lead to serious damage. Use a good quality, reliable torque wrench.

(6) Force

Common sense should dictate how much force is necessary in assembly and disassembly. If a part seems especially difficult to remove or install, stop and examine what may be causing the problem. Whenever tapping is necessary, tap lightly using a wooden or plastic-faced mallet. Use an impact driver for screws (particularly for the removing screws held by non-permanent locking agent) in order to avoid damaging the screw heads.

(7) Edges

Watch for sharp edges, as they could cause injury through careless handling, especially during major engine disassembly and assembly. Use a clean piece of thick cloth when lifting the engine or turning it over.

(8) High-Flash Point Solvent

A high-flash point solvent is recommended to reduce fire danger. A commercial solvent commonly available in North America is standard solvent (generic name). Always follow manufacturer and container directions regarding the use of any solvent.

(9) Gasket, O-ring

Replace a gasket or an O-ring with a new part when disassembling. Remove any foreign matter from the mating surface of the gasket or O-ring to ensure a perfectly smooth surface to prevent oil or compression leaks.

Before Servicing

(10)Liquid Gasket, Locking Agent

Clean and prepare surfaces where liquid gasket or non-permanent locking agent will be used. Apply them sparingly. Excessive amount may block engine oil passages and cause serious damage.

(11)Press

When using a press or driver to install a part such as a wheel bearing, apply a small amount of oil to the area where the two parts come in contact to ensure a smooth fit.

(12)Ball Bearing and Needle Bearing

Do not remove a ball bearing or a needle bearing unless it is absolutely necessary. Replace any ball or needle bearings that were removed with new ones. Install bearings with the manufacturer and size marks facing out, applying pressure evenly with a suitable driver. Apply force only to the end of the race that contacts the press fit portion, and press it evenly over the base component.

(13)Oil Seal and Grease Seal

Replace any oil or grease seals that were removed with new ones, as removal generally damages seals. Oil or grease seals should be pressed into place using a suitable driver, applying a force uniformly to the end of seal until the face of the seal is even with the end of the hole, unless instructed otherwise. When pressing in an oil or grease seal which has manufacturer's marks, press it in with the marks facing out.

(14)Circlip, Retaining Ring, and Cotter Pin

When installing circlips and retaining rings, take care to compress or expand them only enough to install them and no more. Install the circlip with its chamfered side facing load side as well.

Replace any circlips, retaining rings, and cotter pins that were removed with new ones, as removal weakens and deforms them. If old ones are reused, they could become detached while the motorcycle is driven, leading to a major problem.

(15)Lubrication

Engine wear is generally at its maximum while the engine is warming up and before all the sliding surfaces have an adequate lubricative film. During assembly, make sure to apply oil to any sliding surface or bearing that has been cleaned. Old grease or dirty oil could have lost its lubricative quality and may contain foreign particles that act as abrasives; therefore, make sure to wipe it off and apply fresh grease or oil. Some oils and greases in particular should be used only in certain applications and may be harmful if used in an application for which they are not intended.

(16)Direction of Engine Rotation

To rotate the crankshaft manually, make sure to do so in the direction of positive rotation. Positive rotation is counterclockwise as viewed from the left side of the engine. To carry out proper adjustment, it is furthermore necessary to rotate the engine in the direction of positive rotation as well.

(17)Replacement Parts

When there is a replacement instruction, replace these parts with new ones every time they are removed.

Replacement parts will be damaged or lose their original function once they are removed. Therefore, always replace these parts with new ones every time they are removed. Although the previously mentioned gasket, O-ring, ball bearing, needle bearing, grease seal, oil seal, circlip, and cotter pin have not been so designated in their respective text, they are replacement parts.

(18)Electrical Leads

All the electrical leads are either one-color or two-color. A two-color lead is identified first by the primary color and then the stripe color. For example, a yellow lead with thin red stripes is referred to as a "yellow/red" lead; it would be a "red/yellow" lead if the colors were reversed. Unless instructed otherwise, electrical leads must be connected to leads of the same color.

Two-Color Electrical

Lead(cross-section)	Color Indicated on the Lead	Color Indicated on the Wiring Diagram
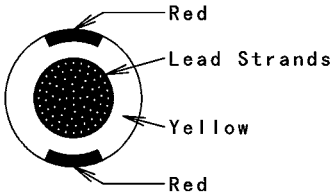	Yellow/Red	Y/R

GB02069BWI C

(19)Inspection

When parts have been disassembled, visually inspect these parts for the following conditions or other damage. If there is any doubt as to the condition of them, replace them with new ones.

Abrasion	Crack	Hardening	Warp
Bent	Dent	Scratch	Wear
Color change	Deterioration	Seizure	

(20)Specifications

Specification terms are defined as follows:

“Standards” show dimensions or performances which brand-new parts or systems have.

“Service Limits” indicate the usable limits. If the measurement shows excessive wear or deteriorated performance, replace the damaged parts.

Model Identification

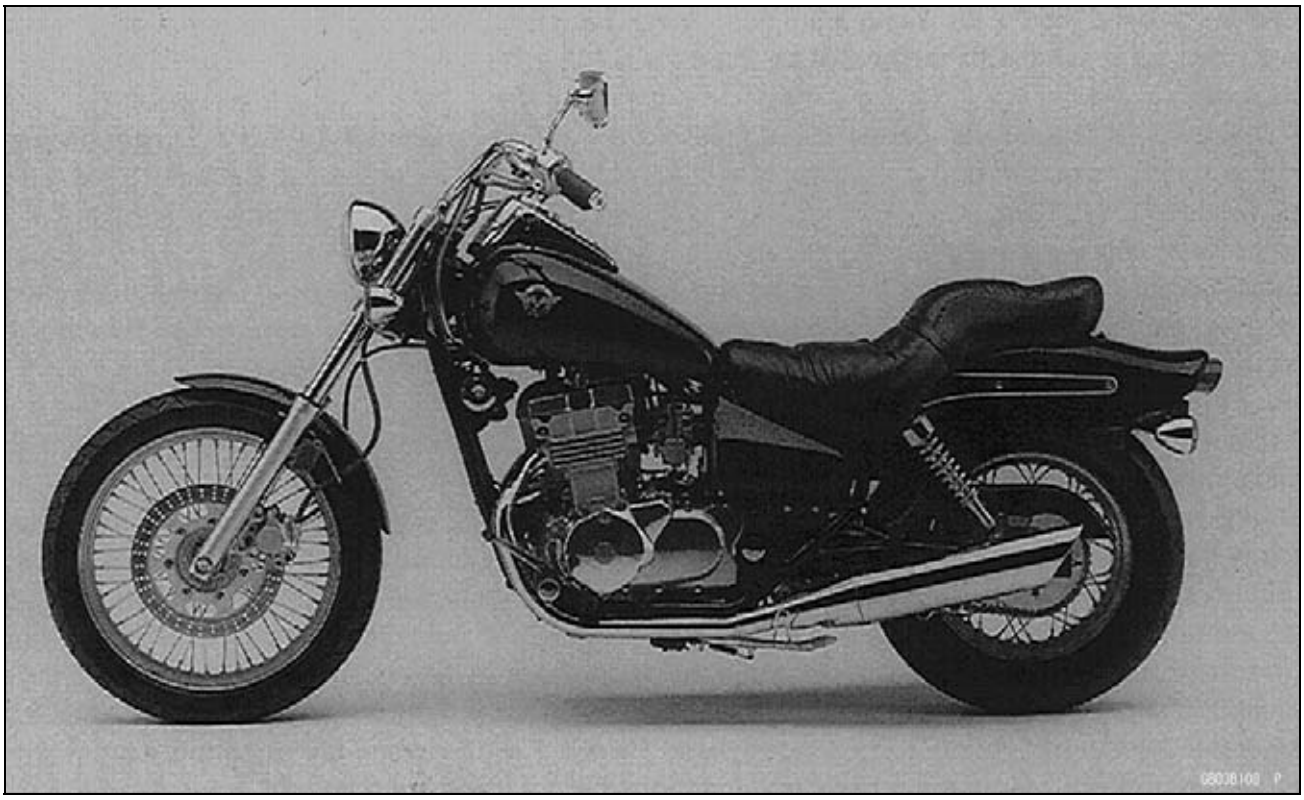

General Specifications (EN500-C1 ~ C6F Models)

Items	EN500-C1 ~ C5	EN500-C6 ~ C6F
Dimensions		
Overall Length	2 320 mm (91.3 in.)	←
Overall Width	830 mm (32.7 in.)	←
Overall Height	1 125 mm (44.3 in.)	←
Wheelbase	1 595 mm (62.8 in.)	←
Road Clearance	120 mm (4.92 in.)	←
Seat Height	715 mm (31.5 in.)	←
Dry Weight	199 kg (438 lb) (CAL) 199.5 kg (440 lb)	←
Curb Weight:		
Front	95 kg (209 lb)	←
Rear	119 kg (262 lb) (CAL) 119.5 (263 lb)	←
Fuel Tank Capacity	15.0 L (3.9 US gal)	←
Performance		
Minimum Turning Radius	2.8 m (9.2 ft)	←
Engine		
Type	4-stroke, DOHC, 2-cylinder	←
Cooling System	Liquid-cooled	←
Bore And Stroke	74.0 × 58.0 mm (2.9 × 2.3 in.)	←
Displacement	498 cm³ (30.4 cu in.)	←
Compression Ratio	10.2	←
Maximum Horsepower	34 kW (46 PS) @8 000 r/min (rpm), (CH, DE) 25 kw (34 PS) @7 000 r/min (rpm), (FR) 33 kw (45 PS) @8 000 r/min (rpm) (US) –	←
Maximum Torque	45 N·m (4.6 kgf·m, 33 ft·lb) @6 000 r/min (rpm), (CH, DE) 39 N·m (4.0 kgf·m, 29 ft·lb) @4 200 r/min (rpm), (US) –	←
Carburetion System	Carburetors, Keihin CVK32 × 2	←
Starting System	Electric starter	←
Ignition System	Battery and coil (transistorized)	←
Timing Advance	Electronically advanced	←
Ignition Timing	From 10° BTDC @1 300 r/min (rpm) to 35° BTDC @8 000 r/min (rpm)	←
Spark Plugs	NGK DR9EA or ND X27ESR-U or NGK DR8EA or ND X24ESR-U	←
Cylinder Numbering Method	Left to right, 1-2	←
Firing Order	1-2	←
Valve Timing:		
Inlet:		
Open	27° BTDC	←
Close	47° ABDC	←
Duration	254°	←
Exhaust:		
Open	52° BBDC	←
Close	22° ATDC	←

General Specifications (EN500-C1 ~ C6F Models)

Items	EN500-C1 ~ C5	EN500-C6 ~ C6F
Duration	254°	←
Lubrication System	Forced lubrication (wet sump)	←
Engine Oil:		
Grade	SE, SF or SG class	API SE, SF or SG API SH or SJ with JASO MA
Viscosity	SAE10W-40, 10W-50, 20W-40, or 20W-50	SAE10W-40
Capacity	3.4 L (3.59 US qt)	←
Drive Train		
Primary Reduction System:		
Type	Chain	←
Reduction Ratio	2.652 (61/23)	←
Clutch Type	Wet multi disc	←
Transmission		
Type	6-speed constant mesh, return shift	←
Gear Ratios:		
1st	2.571 (36/14)	←
2nd	1.722 (31/18)	←
3rd	1.333 (28/21)	←
4th	1.125 (27/24)	←
5th	0.961 (25/26)	←
6th	0.851 (23/27)	←
Final drive system		
Type	Chain drive	←
Reduction Ratio	2.625 (42/16)	←
Overall Drive Ratio	5.930 @ Top gear	←
Frame		
Type	Tubular, double cradle	←
Caster (Rake Angle)	33°	←
Trail	151 mm (5.9 in.)	←
Rim Size:		
Front	19 MC × MT 2.15	←
Rear	15 MC × MT 3.00	←
Front Tire:		
Type	Tube	←
Size	100/90-19 57S	← (C6 ~ C7) 100/90-19 M/C 57S (C8 ~)
Rear Tire:		
Type	Tube	←
Size	140/90-15 M/C 70S	←
Front Suspension:		
Type	Telescopic fork	←
Wheel Travel	150 mm (5.9 in.)	←

General Specifications (EN500-C1 ~ C6F Models)

Items	EN500-C1 ~ C5	EN500-C6 ~ C6F
Rear Suspension:		
Type	Swing arm	←
Wheel Travel	100 mm (3.9 in.)	←
Brake Type:		
Front	Single disc	←
Rear	Drum	←
Electrical Equipment		
Battery	12 V 12 Ah	←
Headlight:		
Type	Semi-sealed beam	←
Bulb	12 V 60/55 W (quartz-halogen)	←
Tail/brake Light	12 V 8/27 W (AT, CH, EUR, DE, FR, GR, IT, KR, NL, NO, ES, SE, GB) 12 V 5/21 W	12 V 5/21 W
Alternator:		
Type	Three-phase AC	←
Rated Output	17 A @6 000 r/min (rpm), 14 V	←

Specifications subject to change without notice, and may not apply to every country.

AT: Austria Model
CA: Canada Model
CAL: California Model
CH: Switzerland Model
DE: Germany Model
ES: Spain Model
EUR: Europe Model
FR: France Model
GB: United Kingdom Model
GR: Greece Model
IT: Italy Model
KR: Korea Model
NL: Netherlands Model
NO: Norway Model
SE: Sweden Model
US: United States Model

General Specifications (EN500C7F Model ~)

Items	EN500C7F ~
Dimensions	
Overall Length	2 320 mm (91.3 in.)
Overall Width	830 mm (32.7 in.)
Overall Height	1 125 mm (44.3 in.)
Wheelbase	1 595 mm (62.8 in.)
Road Clearance	120 mm (4.92 in.)
Seat Height	715 mm (31.5 in.)
Dry Weight	199 kg (438 lb) (CAL) 199.5 kg (440 lb)
Curb Weight:	
Front	95 kg (209 lb)
Rear	119 kg (262 lb) (CAL) 119.5 (263 lb)
Fuel Tank Capacity	15.0 L (3.9 US gal)
Performance	
Minimum Turning Radius	2.8 m (9.2 ft)
Engine	
Type	4-stroke, DOHC, 2-cylinder
Cooling System	Liquid-cooled
Bore And Stroke	74.0 × 58.0 mm (2.9 × 2.3 in.)
Displacement	498 cm³ (30.4 cu in.)
Compression Ratio	10.2
Maximum Horsepower	34 kW (46 PS) @8 000 r/min (rpm), (US) –
Maximum Torque	45 N·m (4.6 kgf·m, 33 ft·lb) @6 000 r/min (rpm),
Carburetion System	Carburetors, Keihin CVK32 × 2
Starting System	Electric starter
Ignition System	Battery and coil (transistorized)
Timing Advance	Electronically advanced
Ignition Timing	From 10° BTDC @1 300 r/min (rpm) to 35° BTDC @8 000 r/min (rpm)
Spark Plugs	NGK DR9EA or ND X27ESR-U or NGK DR8EA or ND X24ESR-U
Cylinder Numbering Method	Left to right, 1-2
Firing Order	1-2
Valve Timing:	
Inlet:	
Open	27° BTDC
Close	47° ABDC
Duration	254°
Exhaust:	
Open	52° BBDC
Close	22° ATDC
Duration	254°

General Specifications (EN500C7F Model ~)

Items	EN500C7F ~
Lubrication System	Forced lubrication (wet sump)
Engine Oil:	
Grade	API SE, SF or SG class
	API SH, SJ or SL with JASO MA
Viscosity	SAE10W-40
Capacity	3.4 L (3.59 US qt)
Drive Train	
Primary Reduction System:	
Type	Chain
Reduction Ratio	2.652 (61/23)
Clutch Type	Wet multi disc
Transmission	
Type	6-speed constant mesh, return shift
Gear Ratios:	
1st	2.571 (36/14)
2nd	1.722 (31/18)
3rd	1.333 (28/21)
4th	1.125 (27/24)
5th	0.961 (25/26)
6th	0.851 (23/27)
Final drive system	
Type	Chain drive
Reduction Ratio	2.625 (42/16)
Overall Drive Ratio	5.930 @ Top gear
Frame	
Type	Tubular, double cradle
Caster (Rake Angle)	33°
Trail	151 mm (5.9 in.)
Rim Size:	
Front	19 MC × MT 2.15
Rear	15 MC × MT 3.00
Front Tire:	
Type	Tube
Size	100/90-19 M/C 57S
Rear Tire:	
Type	Tube
Size	140/90-15 M/C 70S
Front Suspension:	
Type	Telescopic fork
Wheel Travel	150 mm (5.9 in.)
Rear Suspension:	
Type	Swing arm
Wheel Travel	100 mm (3.9 in.)

General Specifications (EN500C7F Model ~)

Items	EN500C7F ~
Brake Type:	
Front	Single disc
Rear	Drum
Electrical Equipment	
Battery	12 V 12 Ah
Headlight:	
Type	Semi-sealed beam
Bulb	12 V 60/55 W (quartz-halogen)
Tail/brake Light	12 V 5/21 W
Alternator:	
Type	Three-phase AC
Rated Output	17 A @6 000 r/min (rpm), 14 V

Specifications subject to change without notice, and may not apply to every country.
CA: Canada Model
CAL: California Model
US: United States Model

Periodic Maintenance Chart

The scheduled maintenance must be done in accordance with this chart to keep the motorcycle in good running condition. **The initial maintenance is vitally important and must not be neglected.** (Other than United States and Canada Models)

FREQUENCY	Whichever comes first ➡							* ODOMETER READING × 1 000 km (× 1 000 mile)
OPERATION	⬇ Every	1 (0.6)	6 (4.0)	12 (7.5)	18 (12)	24 (15)	30 (20)	36 (24)
Carburetor synchronization - inspect †				●		●		●
Idle speed - adjust †		●		●		●		●
Throttle grip play - inspect †		●		●		●		●
Spark plug - clean and gap †			●	●	●	●	●	●
Valve clearance - inspect †						●		
Air suction valve - inspect †			●	●	●	●	●	●
Air cleaner element - clean † #				●		●		●
Fuel hose, connections - inspect †			●	●	●	●	●	●
Battery electrolyte level - inspect †	6 month		●	●	●	●	●	●
Brake play - inspect †		●	●	●	●	●	●	●
Brake light switch - inspect †		●	●	●	●	●	●	●
Brake lining or pad wear - inspect †#			●	●	●	●	●	●
Brake fluid level - inspect †	month	●	●	●	●	●	●	●
Brake fluid - change †	2 years					●		
Brake hose, connections - inspect †			●	●	●	●	●	●
Brake master cylinder cup and dust seal - replace	4 years							
Caliper fluid seal and dust seal - replace	4 years							
Brake cable - replace	2 years					●		
Clutch - adjust		●	●	●	●	●	●	●
Steering - inspect †		●	●	●	●	●	●	●
Drive chain wear - inspect †#			●	●	●	●	●	●
Drive chain - lubricate #	600 km		●	●	●	●	●	●
Drive chain slack - inspect †#	1000 km	●	●	●	●	●	●	●
Spoke tightness and rim runout - inspect †		●	●	●	●	●	●	●
Nut, bolts, and fasteners tightness - inspect †		●		●		●		●
Tire wear - inspect †			●	●	●	●	●	●
Engine oil - change #	6 month	●	●	●	●	●	●	●
Oil filter - replace		●		●		●		●
General lubrication - perform #				●		●		●
Front fork oil - change	2 years					●		
Front fork oil leak - inspect †				●		●		●

Periodic Maintenance Chart

FREQUENCY	Whichever comes first ➡							* ODOMETER READING × 1 000 km (× 1 000 mile)
	⬇	1	6	12	18	24	30	36
OPERATION	Every	(0.6)	(4.0)	(7.5)	(12)	(15)	(20)	(24)
Swingarm pivot - lubricate				●		●		●
Radiator hoses, connections - inspect †		●						
Coolant - change	2 years					●		
Coolant filter - clean	year			●		●		●
Steering stem bearing - lubricate	2 years					●		
Rear shock absorber oil leak - inspect †				●		●		●

#: Service more frequently when operating in severe conditions dusty, wet, muddy, high speed, or frequent starting/stopping.
†: Replace, add, adjust, clean, or torque if necessary.
*: For higher odometer readings, repeat at the frequency interval established here.

Periodic Maintenance Chart

(United States and Canada Models)

FREQUENCY / OPERATION	Whichever comes first ➡ ⬇ Every	* ODOMETER READING × 1 000 km (× 1 000 mile)						
		0.8 (0.5)	5 (3.1)	10 (6.2)	15 (9.3)	20 (12)	25 (16)	30 (20)
Carburetor synchronization - inspect †		●	●	●	●	●	●	●
Idle speed - adjust †		●	●	●	●	●	●	●
Throttle grip play - inspect †		●		●		●		●
Spark plug - clean and gap †			●	●	●	●	●	●
Valve clearance - inspect †		●		●		●		●
Air suction valve - inspect †			●	●	●	●	●	●
Air cleaner element - clean		●		●		●		●
Air cleaner element - replace	5 cleaning					●		
Fuel system - inspect				●		●		●
Fuel hose, connections - inspect †			●	●	●	●	●	●
Evaporative emission control system (CAL) - inspect		●	●	●	●	●	●	●
Radiator Hoses, connections - inspect †	year	●		●		●		●
Drive chain - lubricate #	600 km							
Drive chain slack - inspect †#	1 000 km							
Spoke tightness and rim runout - inspect †		●	●	●	●	●	●	●
Rim runout - inspect †		●	●	●	●	●	●	●
Fuel hose-replace	4 years							
Brake hose-replace	4 years							
Battery electrolyte level - inspect †	month	●	●	●	●	●	●	●
Brake play - inspect †		●	●	●	●	●	●	●
Brake light switch - inspect †		●	●	●	●	●	●	●
Brake lining or pad wear - inspect †			●	●	●	●	●	●
Brake fluid level - inspect †	month	●	●	●	●	●	●	●
Brake fluid - change †	2 years					●		
Brake hose, connections - inspect †			●	●	●	●	●	●
Brake master cylinder cup and dust seal - replace	2 years							
Caliper fluid seal and dust seal - replace	2 years							
Brake cable - replace	2 years							
Brake camshaft - lubricate	2 years					●		
Clutch - adjust		●	●	●	●	●	●	●
Steering - inspect †		●	●	●	●	●	●	●
Drive chain wear - inspect †#			●	●	●	●	●	●
Nut, bolts, and fasteners tightness - inspect †		●		●		●		●
Tire wear - inspect †			●	●	●	●	●	●

Periodic Maintenance Chart

FREQUENCY OPERATION	Whichever comes first ➡ ⬇ Every	* ODOMETER READING × 1 000 km (× 1 000 mile) 0.8 (0.5)	5 (3.1)	10 (6.2)	15 (9.3)	20 (12)	25 (16)	30 (20)
Engine oil - change	year	●		●		●		●
Oil filter - replace		●		●		●		●
General lubrication - perform #			●	●	●	●	●	●
Front fork oil - change								●
Swingarm pivot - lubricate				●		●		●
Coolant - change	2 years							●
Coolant filter - clean	year			●		●		●
Steering stem bearing - lubricate	2 years					●		

#: Service more frequently when operating in severe conditions dusty, wet, muddy, high speed, or frequent starting/stopping.
†: Replace, add, adjust, clean, or torque if necessary.
*: For higher odometer readings, repeat at the frequency interval established here.
CAL: California Model

Torque and Locking Agent

Tighten all bolts and nuts to the proper torque using an accurate torque wrench. An insufficiently tightened bolt or nut may become damaged or fall off, possibly resulting in damage to the motorcycle and injury to the rider. A bolt or nut which is overtightened may become damaged, strip an internal thread, or break and then fall out. The following table lists the tightening torque for the major bolts and nuts, and the parts requiring use of a non-permanent locking agent or liquid gasket.

When checking the tightening torque of the bolts and nuts, first loosen the bolt or nut by half a turn and then tighten it to the specified torque.

Letters used in the “Remarks” column mean:

L: Apply a non-permanent locking agent to the threads.
Lh: Left-hand threads.
LG: Apply liquid gasket to the threads.
S: Tighten the fasteners following the specified sequence.
SS: Apply silicone sealant to the threads.

Fastener	Torque			Remarks
	N·m	kgf·m	ft·lb	
Fuel System				
Fuel Tap Mounting Bolts	4.9	0.5	43 in·lb	with black washer
	2.5	0.25	22 in·lb	with white washer
Cooling System				
Radiator Hose Clamp Screws	2.5	0.25	22 in·lb	
Radiator Fan Switch	18	1.8	13	
Thermostat Housing Bolts	11	1.1	95 in·lb	
Water Temperature Switch	7.8	0.8	69 in·lb	SS
Water Pump Cover Bolts	11	1.1	95 in·lb	
Water Pump Shaft	25	2.5	18	Lh
Water Pump Impeller	9.8	1.0	87 in·lb	Lh
Water Pipe Screws	4.9	0.5	43 in·lb	
Coolant Passage Blank Caps	9.8	1.0	87 in·lb	L
Coolant Drain Plug	11	1.1	95 in·lb	
Engine Top End				
Air Suction Valve Cap Bolts	11	1.1	95 in·lb	
Cylinder Head Cover Bolts	9.8	1.0	87 in·lb	
Camshaft Cap Bolts	12	1.2	104 in·lb	S
Rocker Shafts	39	4.0	29	
Valve Adjuster Locknuts	25	2.5	18	
Camshaft Sprocket Bolts	15	1.5	11	L
Cylinder Head Bolts (M10)	51	5.2	38	S
Cylinder Head Bolts (M6)	9.8	1.0	87 in·lb	S
Cam Chain Tensioner Mounting Bolts	11	1.1	95 in·lb	
Cam Chain Tensioner Cap Bolt	4.9	0.5	43 in·lb	
Main Oil Pipe Upper Banjo Bolts M8	12	1.2	104 in·lb	
Main Oil Pipe Lower Banjo Bolt M10	20	2.0	14.5	
Oil Pipe Bolts (in the cylinder head)	11	1.1	95 in·lb	
Oil Pipe Mounting Bolt	11	1.1	95 in·lb	

Torque and Locking Agent

Fastener	Torque			Remarks
	N·m	kgf·m	ft·lb	
Clutch				
Oil Filler Plug	1.5	0.15	13 in·lb	
Clutch Hub Nut	132	13.5	98	
Clutch Spring Bolts	9.3	0.95	82 in·lb	
Clutch Cable Holder Bolt	11	1.1	95 in·lb	
Clutch Cover Bolts	11	1.1	95 in·lb	
Clutch Cover Damper Plate Bolts	9.8	1.0	87 in·lb	L
Engine Lubrication System				
Oil Passage Plug	18	1.8	13	
Oil Filter Mounting Stud	25	2.5	18	L (planted side)
Oil Filter (Cartridge Type)	17	1.75	12.5	
Oil Pipe for Balancer Shaft Banjo Bolt	20	2.0	14.5	
Oil Pipe for Drive Shaft Upper Banjo Bolt M6	7.8	0.80	69 in·lb	
Oil Pipe for Drive Shaft Lower Banjo Bolt M8	12	1.2	104 in·lb	
Oil Pipe for Output Shaft Upper Banjo Bolt M6	7.8	0.80	69 in·lb	
Oil Pipe for Output Shaft Lower Banjo Bolt M8	12	1.2	104 in·lb	
Oil Pipe for Output Shaft Mounting Bolt	11	1.1	95 in·lb	L
Oil Pump Outer Oil Pipe Bolt	11	1.1	95 in·lb	L
Oil Pump Mounting Bolts	11	1.1	95 in·lb	L
Relief Valve	15	1.5	11	L
Oil Pressure Switch	15	1.5	11	SS
Engine Oil Drain Plug	29	3.0	22	
Oil Pan Mounting Bolts	11	1.1	95 in·lb	
Breather Body Bolt	5.9	0.6	52 in·lb	
Engine Removal/Installation				
Engine Mounting Nuts	44	4.5	33	
Engine Mounting Bracket Nuts	25	2.5	18	
Engine Mounting Bracket Bolts	25	2.5	18	
Crankshaft/Transmission				
Crankcase Bolts (M8)	27	2.8	20	S
Crankcase Bolts (M6)	12	1.2	104 in·lb	S
Upper Primary Chain Guide Mounting Nut	11	1.1	95 in·lb	L
Lower Primary Chain Guide Mounting Bolt	11	1.1	95 in·lb	L
Connecting Rod Big End Cap Nuts	36	3.7	27	
Return Spring Pin	20	2.0	14.5	L
Gear Positioning Lever Pivot Stud	–	–	–	L (planted side)
Gear Positioning Lever Nut	11	1.1	95 in·lb	
Shift Lever Clamp Bolts	11	1.1	95 in·lb	
Shift Linkage Rod Lock Nuts	11	1.1	95 in·lb	Lh (1)
Shift Pedal Mounting Bolt	8.8	0.9	78 in·lb	
Shift Drum Bearing Holder Bolts	11	1.1	95 in·lb	L

Torque and Locking Agent

Fastener	Torque			Remarks
	N·m	kgf·m	ft·lb	
Shift Drum Cam Pin Plate Screw	–	–	–	L
Shift Rod Stopper Bolt	11	1.1	95 in·lb	
External Shift Mechanism Cover Bolts	11	1.1	95 in·lb	
Neutral Switch	15	1.5	11	
Wheels/Tires				
Front Axle Nut	88	9.0	65	
Front Axle Clamp Allen Bolt	34	3.5	25	
Rear Axle Nut	88	9.0	65	
Spoke Nipples	5.2	0.53	46 in·lb	
Torque Link Nuts	34	3.5	25	
Final Drive				
Engine Sprocket Nut	127	13	94	
Rear Sprocket Nuts	74	7.5	54	
	59	6.0	43	(Self Locknut)
Rear Coupling Studs	–	–	–	L (planted side)
Drive Chain Guide Bolts	11	1.1	95 in·lb	
Brakes				
Brake Hose Banjo Bolts	25	2.5	18	
Reservoir Cap Screws	1.5	0.15	13 in·lb	
Brake Lever Pivot Bolt	1.0	0.1	9 in·lb	
Brake Lever Pivot Locknut	5.9	0.6	52 in·lb	
Master Cylinder Clamp Bolts	11	1.1	95 in·lb	S
Front Brake Light Switch Mounting Screw	1.2	0.12	10 in·lb	
Caliper Mounting Bolts	34	3.5	25	
Caliper Bleed Valves	7.8	0.8	69 in·lb	
Brake Disc Mounting Bolts	27	2.8	20	L
Brake Pedal Mounting Bolt	25	2.5	18	
Torque Link Nuts	34	3.5	25	
Brake Cam Lever Bolt	19	1.9	14	
Suspension				
Front Fork Top Plug	23	2.3	16.5	
Front Fork Upper Clamp Allen Bolts	20	2.0	14.5	
Front Fork Lower Clamp Allen Bolts	29	3.0	22	
Front Fork Bottom Allen Bolt	29	3.0	22	L
Rear Shock Absorber Upper Mounting Bolt	25	2.5	18	
Rear Shock Absorber Lower Mounting Bolt	34	3.5	25	
Swingarm Pivot Nut	88	9.0	65	
Steering				
Handlebar Mounting Nuts	34	3.5	25	
Steering Stem Head Bolt	44	4.5	33	

Torque and Locking Agent

Fastener	Torque			Remarks
	N·m	kgf·m	ft·lb	
Steering Stem Nut	Hand -Tighten (about 4.9)	Hand -Tighten (about 0.5)	Hand -Tighten (about 43 in·lb)	
Frame				
Side Stand Mounting Bolt	44	4.5	33	
Footpeg Holder Bolts (M10)	34	3.5	25	
Footpeg Holder Bolts (M12)	54	5.5	39	
Muffler Bracket Bolts (M8)	25	2.5	18	
Muffler Bracket Bolts (M10)	34	3.5	25	
Electrical System				
Front Brake Light Switch Mounting Screw	1.2	0.12	10 in·lb	
Crankshaft Sensor Mounting Allen Bolts	8.3	0.85	74 in·lb	L
Timing Inspection Plug	2.5	0.25	22 in·lb	
Alternator Rotor Bolt Plug	1.5	0.15	13 in·lb	
Alternator Cover Bolts	11	1.1	95 in·lb	
Alternator Cover Allen Bolt	13	1.3	113 in·lb	
Alternator Lead Clamp Screws	2.9	0.30	26 in·lb	
Spark Plug	14	1.4	10	
Alternator Stator Allen Bolts	12	1.2	104 in·lb	
Alternator Rotor Bolt	69	7.0	51	
Starter Motor Mounting Bolts	11	1.1	95 in·lb	
Starter Chain Guide Screws	4.9	0.5	43 in·lb	L
Starter Motor Through Bolts	6.9	0.7	65 in·lb	
Starter Motor Terminal Nut	6.9	0.7	65 in·lb	
Starter Motor Cable Clamp Nut	4.9	0.5	43 in·lb	
Starter Clutch Allen Bolts	34	3.5	25	L
Side Stand Switch Mounting Screw	3.9	0.4	35 in·lb	L
Oil Pressure Switch	15	1.5	11	
Neutral Switch	15	1.5	11	
Tail Light Mounting Nuts	5.9	0.6	52 in·lb	

Torque and Locking Agent

The table relating tightening torque to thread diameter, lists the basic torque for the bolts and nuts. Use this table for only the bolts and nuts which do not require a specific torque value. All of the values are for use with dry solvent-cleaned threads.

General Fasteners

Threads Diameter (mm)	Torque		
	N·m	kgf·m	ft·lb
5	3.4 ~ 4.9	0.35 ~ 0.50	30 ~ 43 in·lb
6	5.9 ~ 7.8	0.60 ~ 0.80	52 ~ 69 in·lb
8	14 ~ 19	1.4 ~ 1.9	10.0 ~ 13.5
10	25 ~ 34	2.6 ~ 3.5	19.0 ~ 25
12	44 ~ 61	4.5 ~ 6.2	33 ~ 45
14	73 ~ 98	7.4 ~ 10.0	54 ~ 72
16	115 ~ 155	11.5 ~ 16.0	83 ~ 115
18	165 ~ 225	17.0 ~ 23.0	125 ~ 165
20	225 ~ 325	23 ~ 33	165 ~ 240

Unit Conversion Table

Prefixes for Units

Prefix	Symbol	Power
mega	M	× 1 000 000
kilo	k	× 1 000
centi	c	× 0.01
milli	m	× 0.001
micro	μ	× 0.000001

Units of Mass

kg	×	2.205	=	lb
g	×	0.03527	=	oz

Units of Volume

L	×	0.2642	=	gal (US)
L	×	0.2200	=	gal (imp)
L	×	1.057	=	qt (US)
L	×	0.8799	=	qt (imp)
L	×	2.113	=	pint (US)
L	×	1.816	=	pint (imp)
mL	×	0.03381	=	oz (US)
mL	×	0.02816	=	oz (imp)
mL	×	0.06102	=	cu in

Units of Force

N	×	0.1020	=	kg
N	×	0.2248	=	lb
kg	×	9.807	=	N
kg	×	2.205	=	lb

Units of Length

km	×	0.6214	=	mile
m	×	3.281	=	ft
mm	×	0.03937	=	in

Units of Torque

N·m	×	0.1020	=	kg·m
N·m	×	0.7376	=	ft·lb
N·m	×	8.851	=	in·lb
kgf·m	×	9.807	=	N·m
kgf·m	×	7.233	=	ft·lb
kgf·m	×	86.80	=	in·lb

Units of Pressure

kPa	×	0.01020	=	kg/cm²
kPa	×	0.1450	=	psi
kPa	×	0.7501	=	cmHg
kg/cm²	×	98.07	=	kPa
kg/cm²	×	14.22	=	psi
cmHg	×	1.333	=	kPa

Units of Speed

km/h	×	0.6214	=	mph

Units of Power

kW	×	1.360	=	PS
kW	×	1.341	=	HP
PS	×	0.7355	=	kW
PS	×	0.9863	=	HP

Units of Temperature

$$\frac{9(°C+40)}{5} - 40 = °F \qquad \frac{5(°F+40)}{9} - 40 = °C$$

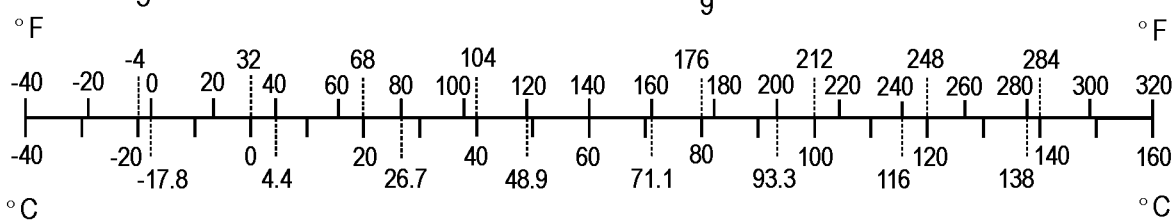

Fuel System

Table of Contents

Exploded View 2-2
Specifications 2-4
Special Tools 2-5
Throttle Grip and Cable 2-6
Throttle Grip Free Play Inspection 2-6
Throttle Cable Adjustment 2-6
Throttle Cable Inspection 2-7
Throttle Cable Lubrication 2-7
Carburetors 2-8
Idle Speed Inspection 2-8
Idle Speed Adjustment 2-8
High Altitude Performance Adjustment (United States Model) 2-8
Vacuum Synchronization Inspection 2-8
Synchronization Adjustment 2-9
Service Fuel Level Inspection 2-9
Service Fuel Level Adjustment 2-10
Fuel System Cleanliness Inspection 2-11
Carburetor Removal 2-11
Carburetor installation 2-12
Carburetor Disassembly/Assembly 2-12
Carburetor Separation/Assembly. 2-14
Carburetor Cleaning 2-14
Carburetor Inspection 2-15
Coolant Filter Cleaning (AT, DE, FR, IT, NL, CH, GB, KR, Models) 2-16
Air Cleaner 2-17
Air Cleaner Housing Removal 2-17
Air Cleaner Housing Installation... 2-17
Air Cleaner Element Removal/Installation 2-17
Air Cleaner Element Cleaning and Inspection 2-18
Oil Draining 2-18
Fuel Tank 2-19
Fuel Tank Removal 2-19
Fuel Tank Installation 2-20
Fuel Tap Removal 2-20
Fuel Tap Installation 2-20
Fuel Tank and Tap Cleaning 2-20
Fuel Tap Inspection 2-21
Fuel Tank and Cap Inspection 2-21
Evaporative Emission Control System (California Model only) 2-22
Parts Removal/Installation 2-22
Hose Inspection 2-22
Separator Inspection 2-22
Separator Operation Test 2-23
Canister Inspection 2-23

Exploded View

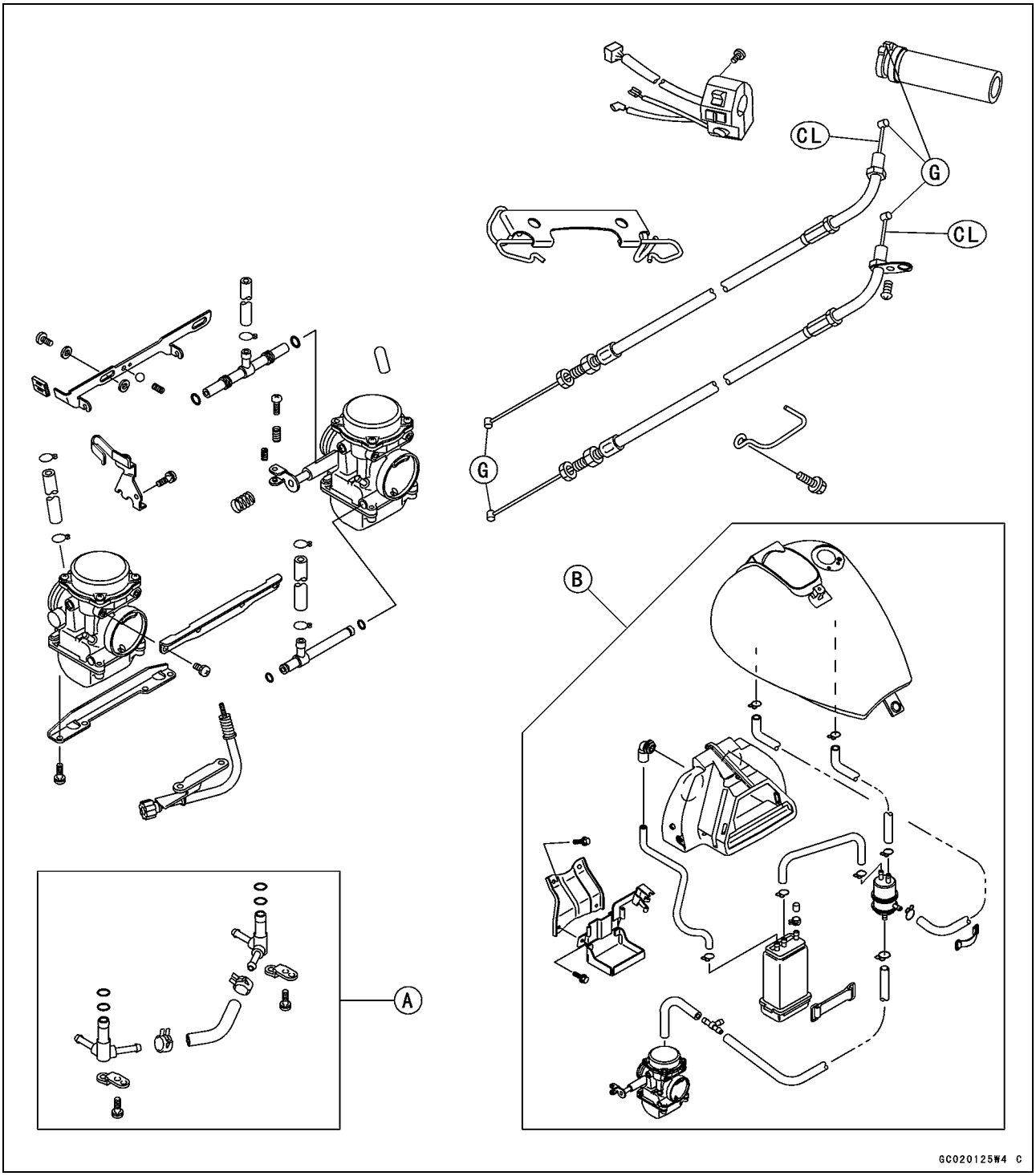

A: Austria, Germany, France, Italy, Korea, Netherlands, Switzerland and United Kingdom Models Europe Models (EN500-C6 ~)
B: California Model
CL: Apply cable lubricant.
G: Apply grease.

Exploded View

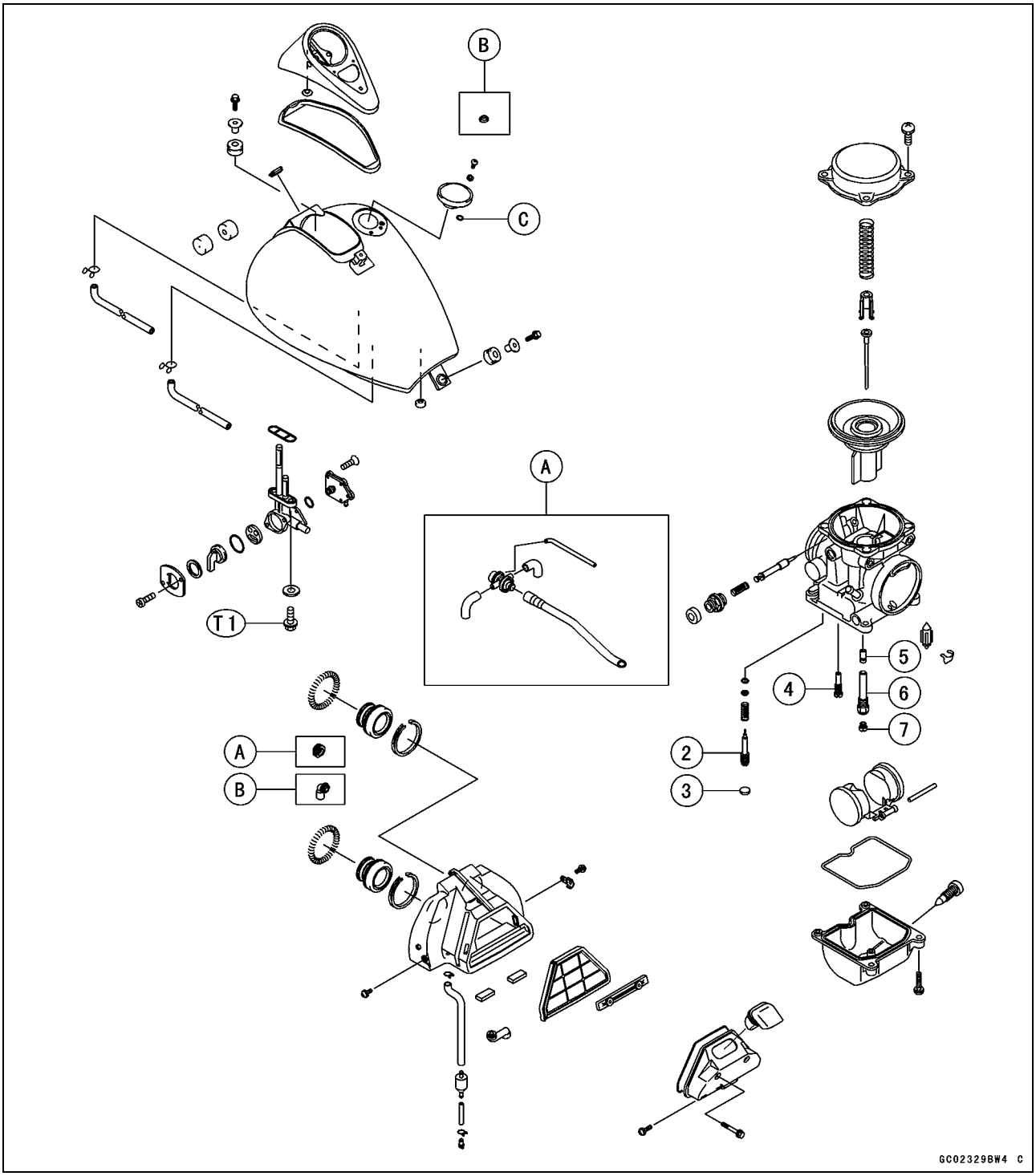

1. Jet Needle
2. Pilot Screw
3. Plug (United States, Canada and Switzerland Models)
4. Pilot Jet
5. Needle Jet
6. Needle Jet Holder
7. Main Jet

T1: 2.5 N·m (0.25 kgf·m, 22 in·lb) (with white washer)
4.9 N·m (0.5 kgf·m, 43 in·lb) (with black washer)

A: United States, Switzerland, Austria, Korea and California Models
Canada and Germany Models (EN500 -C2 ~)
Europe and France Models (EN500-C6 ~)

B: California Model

C: EN500-C1 ~ EN500C7F Models

Specifications

Item	Standard	
	EN500-C1 ~ C4	EN500-C5 ~
Throttle Grip and Cables		
Throttle Grip Free Play	2 ~ 3 mm (0.08 ~ 0.12 in.)	←
Carburetor specifications		
Make/Type	Keihin/CVK32	←
Main Jet	#102	←
Main Air Jet	#100	←
Jet Needle	N2WE, C1: (AT, CH, US, CAL) C2 ~ C4: (AT, CH, US, CAL, CA, DE) N2WD, C1: (FR, GB, IT, NL, DE, EUR, GR, SE, NO, ES, CA) C2 ~ C4: (FR, GB, IT, NL, EUR, GR, SE, NO, ES, KR, ML)	N2WE (US, CAL, CA, DE, FR, EUR)
Pilot Jet	#35	←
Pilot Air Jet	#150	←
Pilot Screw	2 1/8 (turns out)	←
Starter Jet	#48	←
Service Fuel Level	0.5 ±1 mm (0.02 ±0.04 in.)	←
	(above the bottom edge of carburetor body)	←
Float Height	17.0 ±2.0 mm (0.67 ±0.08 in.)	←
Idle Speed	1 300 ±50 r/min (rpm)	←
Air Cleaner Element Oil		
Grade	SE, SF, or SG class	←
Viscosity	SAE30	←

AT: Austria Model
CA: Canada Model
CAL: California Model
CH: Switzerland Model
DE: Germany Model
ES: Spain Model
EUR: Europe Model
FR: France Model
GB: United Kingdom Model
GR: Greece Model
IT: Italy Model
KR: Korea Model
NL: Netherlands Model
NO: Norway Model
SE: Sweden Model
US: United States Model
ML: Malaysia Model

Special Tools

Fuel Level Gauge:
57001-1017

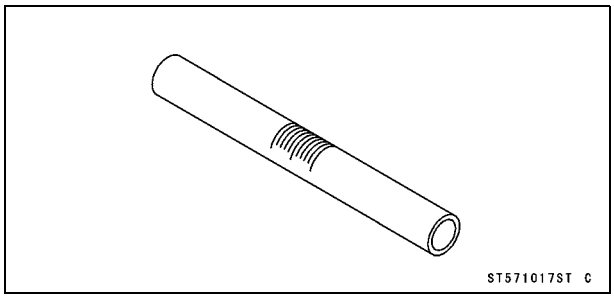

Vacuum Gauge:
57001-1369

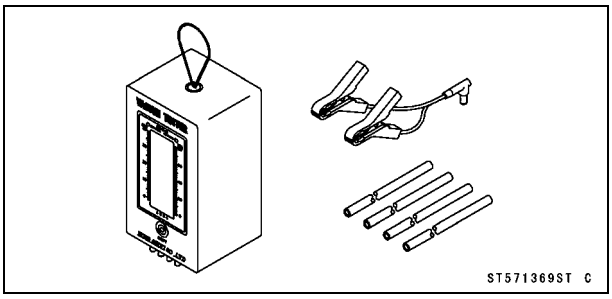

Pilot Screw Adjuster, C:
57001-1292

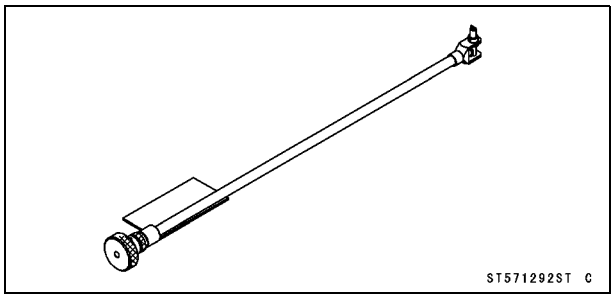

Throttle Grip and Cable

Throttle Grip Free Play Inspection

- Check the throttle grip free play [A].

★If the free play is incorrect, adjust the throttle cable.

Throttle Grip Free Play
Standard: 2 ~ 3 mm (0.08 ~ 0.12 in.)

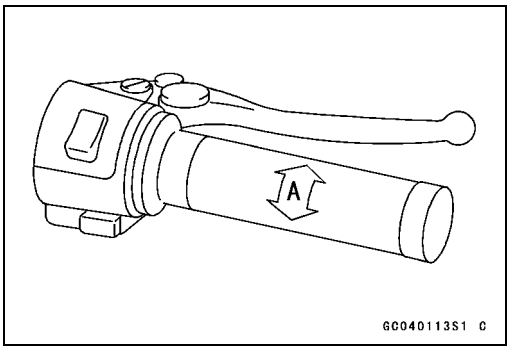

- Check that the throttle grip moves smoothly from full open to close, and the throttle closes quickly and completely in all steering positions by the return spring.

★If the throttle grip does not return properly, check the throttle cable routing, grip free play, and cable damage. Then lubricate the throttle cable.

- Run the engine at the idle speed, and turn the handlebar all the way to the right and left to ensure that the idle speed does not change.

★If the idle speed increase, check the throttle cable free play and the cable routing.

Throttle Cable Adjustment

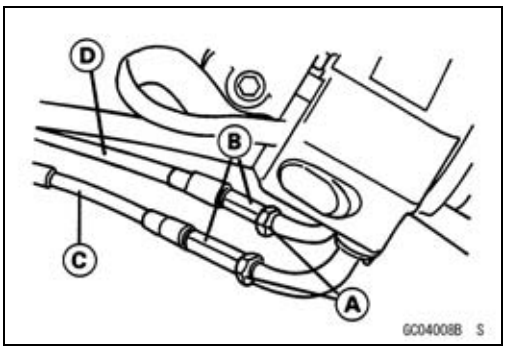

- Loosen the locknuts [A], and screw both throttle cable adjusters [B] in fully at the upper end of the throttle cables so as to give the throttle grip plenty of play.
- Turn out the decelerator cable [C] adjuster until there is no clearance between the cable bracket and the stopper when the throttle grip is completely closed. Tighten the locknut.
- Turn the accelerator cable [D] adjuster until the proper amount of throttle grip free play is obtained. Tighten the locknut.

★If the throttle cables can not be adjusted by using the cable adjusters at the upper end of the throttle cables, use the cable adjusters at the lower ends of the throttle cables.

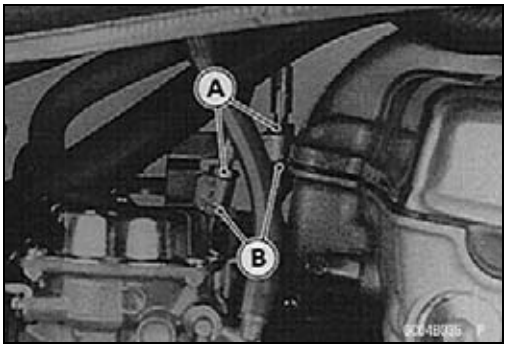

- First give the throttle grip plenty of play by turning the adjusters at the grip in fully. Tighten the locknuts.
- Turn out both upper nuts [A] and turn in both lower nuts [B] as far as they will go so as to give the throttle grip plenty of play.
- With the throttle grip completely closed, turn out the lower nut and turn in the upper nut of the decelerator cable until the inner cable just becomes tight.
- Turn out the lower nut and turn in the upper nut of the accelerator cable until the correct free play is obtained.
- Check that the throttle linkage lever stops against the idle adjusting screw with the throttle grip closed.
- Start the engine.
- Turn the handlebar from side to side while idling the engine.

★If idle speed varies, the throttle cable may be poorly routed or it may be damaged.

- Correct any problem before operating the motorcycle.

⚠ WARNING

Operation with an incorrectly routed or improperly adjusted cables could result in an unsafe riding condition.

Throttle Grip and Cable

Throttle Cable Inspection

- Remove both ends of the throttle cables.
- With the cable disconnected at both ends, the cable should move freely [A] within the cable housing.

★If cable movement is not free after lubricating, if the cable is frayed [B], or if the cable housing is kinked [C], replace the cable.

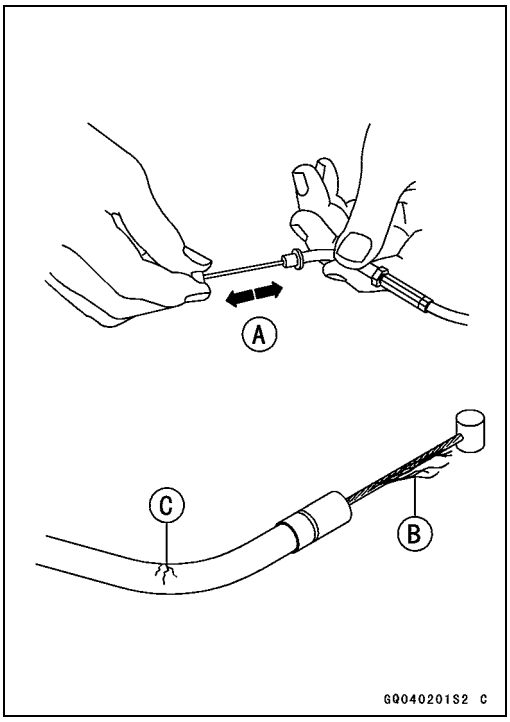

Throttle Cable Lubrication

Whenever the throttle cables are removed, lubricate the throttle cables as follows:

- Apply a thin coating of grease to the throttle cable lower ends [A].

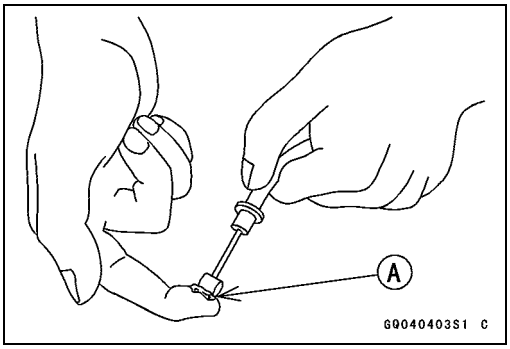

- Lubricate the throttle cable with a penetrating rust inhibiter.

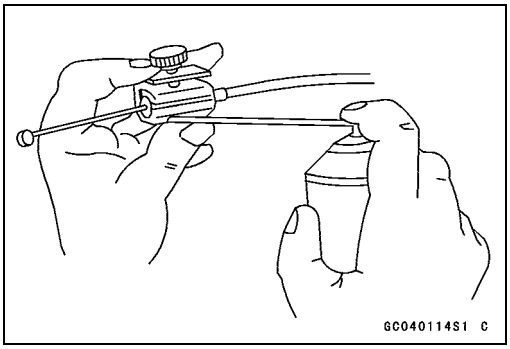

Carburetors

Idle Speed Inspection

- Start the engine and warm it up thoroughly.
- With the engine idling, turn the handlebar to both sides.

★If handlebar movement changes the idle speed, the throttle cable may be improperly adjusted or incorrectly routed, or it may be damaged. Be sure to correct any of these conditions before riding.

⚠ WARNING

Operation with improperly adjusted, incorrectly routed, or damaged cables could result in an unsafe riding condition.

- Check idle speed.

★If the idle speed is out of the specified range, adjust it.

Idle Speed
1 300 ±50 r/min (rpm)

Idle Speed Adjustment

- Start the engine and warm it up thoroughly.
- Turn the adjusting screw [A] until idle speed is correct.

○Open and close the throttle a few times to make sure that the idle speed is within the specified range. Readjust if necessary.

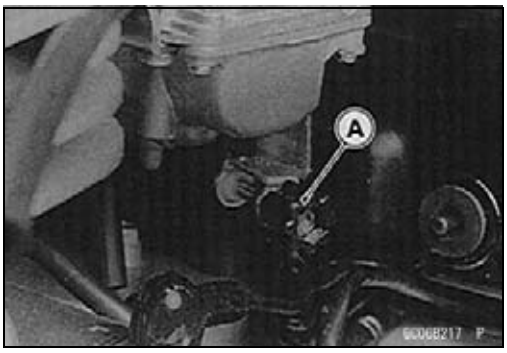

High Altitude Performance Adjustment (United States Model)

○To improve the EMISSION CONTROL PERFORMANCE of vehicle operated above **4 000 feet,** Kawasaki recommends the following Environmental Protection Agency (EPA) approved modification.

- Change the main jet and pilot jet for high altitude use.

High Altitude Carburetor Specifications

Main Jet:	**#100**
Pilot Jet:	**#32**

Vacuum Synchronization Inspection

- Situate the motorcycle so that it is perpendicular to the ground.
- Warm up the engine.
- Check idle speed and adjust if necessary.
- Pull the vacuum hoses off, and attach vacuum gauge [A] to the vacuum hose fittings [B] on the carburetors.

Special Tool - Vacuum Gauge: 57001-1369

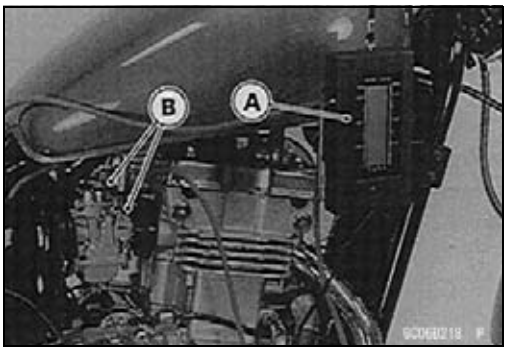

Carburetors

- Start the engine and let it idle to measure the carburetor intake vacuum.

★If the intake vacuum difference between the two cylinders exceeds the limit, adjust the synchronization.

Engine Vacuum Synchronization
Less than 2.7 kPa (2 cmHg) difference between both cylinders

Synchronization Adjustment

- Turn the adjusting screw [A] to synchronize the carburetor.

★If the carburetor synchronization cannot be obtained by using the adjusting screw, check for dirt or blockage, and then check the pilot screw settings.

Special Tool - Pilot Screw Adjuster, C: 57001-1292

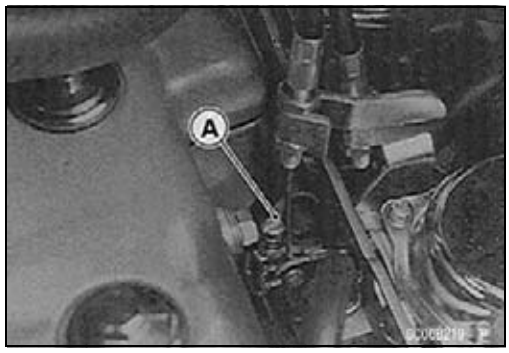

NOTE

○*Do not turn the pilot screws carelessly during carburetor synchronization. You may cause poor running at low engine speed.*

- Check idle speed and adjust if necessary.

Service Fuel Level Inspection

⚠ WARNING

Gasoline is extremely flammable and can be explosive under certain conditions. Turn the ignition switch OFF. Do not smoke. Make sure the area is well-ventilated and free from any source of flame or sparks; this includes any appliance with a pilot light

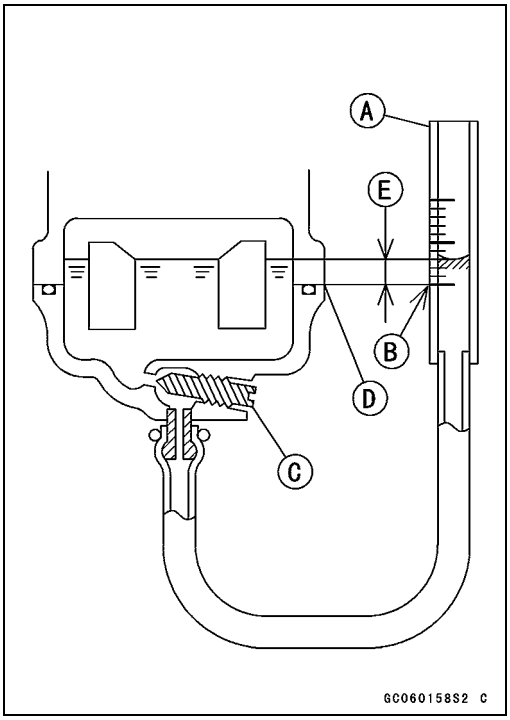

- Situate the motorcycle so that it is perpendicular to the ground.
- Connect a suitable rubber hose (5 mm inside diameter and about 300 mm long) to the fitting at the bottom of each carburetor float bowl.
- Connect fuel level gauge [A] to the rubber hose.

Special Tool - Fuel Level Gauge: 57001-1017

- Hold the gauge vertically against the side of the carburetor body so that the “middle” line [B] is several millimeters higher than the bottom edge [D] of the carburetor body.
- Turn the fuel tap to the PRI position to feed fuel to the carburetor, then turn out the carburetor drain plug [C] a few turns.
- Wait until the fuel level [E] in the gauge settles.

- Keeping the gauge vertical, slowly lower the gauge until the “middle” line is even with the bottom edge of the carburetor body.

NOTE

○*Do not lower the “middle” line below the bottom edge of the carburetor body. If the gauge is lowered and then raised again, the fuel level measured shows somewhat higher than the actual fuel level. If the gauge is lowered too far, dump the fuel out of it into a suitable container and start the procedure over again.*

- Read the fuel level in the gauge and compare it to the specification.
- Screw in the carburetor drain plug.

Service Fuel Level
0.5 ±1 mm (0.02 ±0.04 in.) above the bottom edge of carburetor body

- Turn the fuel tap to the ON position and remove the fuel level gauge.
- Inspect the fuel level in another carburetor in the same manner.

★If the fuel level is incorrect, adjust it (see Service Fuel Level Adjustment).

Service Fuel Level Adjustment

⚠ WARNING

Gasoline is extremely flammable and can be explosive under certain conditions. Turn the ignition switch OFF. Do not smoke. Make sure the area is well-ventilated and free from any source of flame or sparks; this includes any appliance with a pilot light.

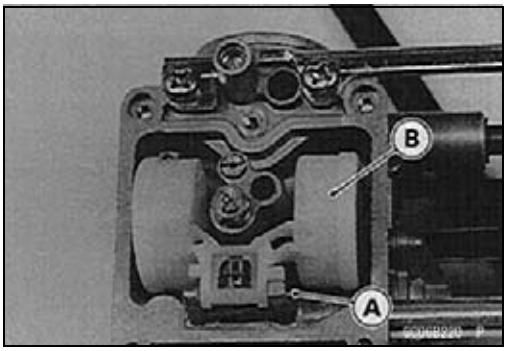

- Remove the carburetor, and drain the fuel into a suitable container.
- Remove the float bowl by taking out the screws with lockwashers.
- Slide out the pivot pin [A] and remove the float [B].

- Bend the tang [A] on the float arm very slightly to change the float height. Increasing the float height lowers the fuel level and decreasing the float height raises the fuel level.

Float Height
17.0 ±2.0 mm (0.67 ±0.08 in.)

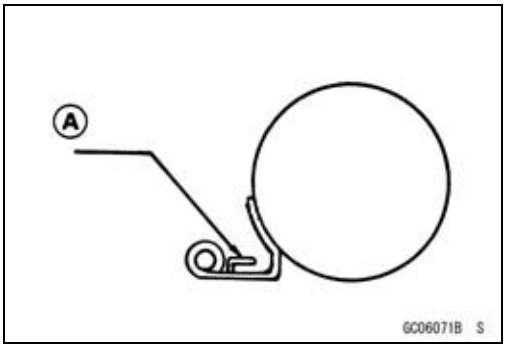

Carburetors

NOTE

○*Do not push the needle rod [A] in during the float height measurement [B].*

- Assemble the carburetor, and recheck the fuel level.

★If the fuel level cannot be adjusted by this method, the float or the float valve [C] is damaged.

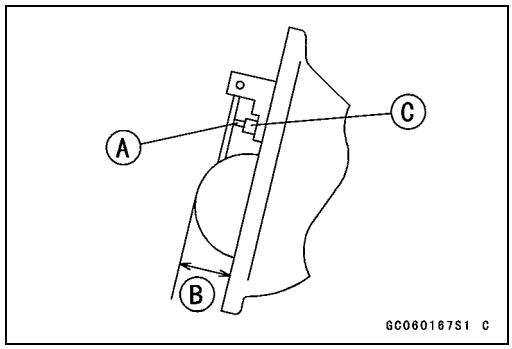

Fuel System Cleanliness Inspection

⚠ WARNING

Gasoline is extremely flammable and can be explosive under certain conditions. Turn the ignition switch OFF. Do not smoke. Make sure the area is well-ventilated and free from any source of flame or sparks; this includes any appliance with a pilot light.

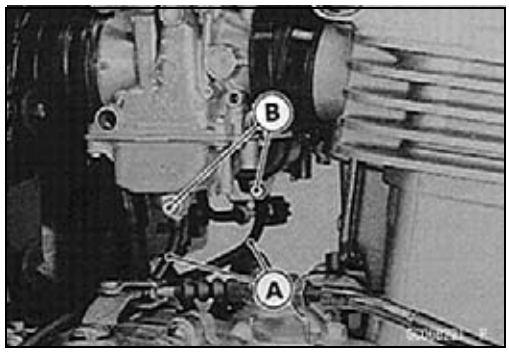

- Connect a suitable hose [A] to the fitting at the bottom of each carburetor float bowl.
- Run the lower ends of the hoses into a suitable container.
- Turn the fuel tap to the PRI position.
- Turn out each drain plug [B] a few turns and drain the float bowls.
- Check to see if water or dirt comes out.

★If any water or dirt appears during the above inspection, clean the fuel system (see Carburetor Cleaning and Fuel Tank Cleaning).

- Tighten the drain plugs and turn the fuel tap to the ON position.

Carburetor Removal

⚠ WARNING

Gasoline is extremely flammable and can be explosive under certain conditions. Turn the ignition switch OFF. Do not smoke. Make sure the area is well-ventilated and tee from any source of flame or sparks; this includes any appliance with a pilot light.

- Remove:
  Side Covers (see Right and Left Side Cover Removal in the Frame chapter)
  Seat (see Seat Removal/Installation in the Frame chapter)
  Fuel Tank (see Fuel Tank Removal)

Carburetors

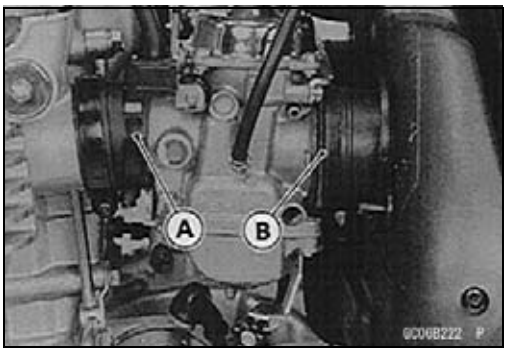

- Loosen the carburetor clamps [A] and slide back the spring bands [B].
- Remove the carburetor from the end of the air cleaner duct, and then pull it out of the carburetor holder.
- Remove the carburetor to the left side.
- Slip the throttle cable lower ends out of the cable bracket.
- After removing the carburetors, stuff pieces of lint-free, clean cloths into the carburetor holders and the intake ducts to keep dirt out of the engine and air cleaner.

⚠ WARNING

If dirt or dust is allowed to pass through into the carburetors, the throttle may become stuck, possibly causing an accident.

CAUTION

If dirt gets through into the engine, excessive engine wear and possible engine damage will occur.

Carburetor installation

- Installation is the reverse of removal.
- Check fuel leakage from the carburetors.

⚠ WARNING

Fuel spilled from the carburetors is hazardous.

- Adjust the following items if necessary.
  Idle Speed
  Vacuum Synchronization
  Throttle Cables

Carburetor Disassembly/Assembly

- Read the WARNINGS in the Carburetor Removal.
- For the United States and Switzerland models, remove the pilot screw plug as follows:
  - ○Punch a hole in the plug and pry it out with an awl or other suitable tool.
- Turn in the pilot screw and count the number of turns until it seats fully but not tightly, and then remove the screw. This is to set the screw to its original position when assembling.
- After installing the upper chamber cover, check that the vacuum piston slides up and down smoothly without binding in the carburetor bore.

CAUTION

During carburetor disassembly, be careful not to damage the diaphragm. Never use a sharp edge to remove the diaphragm.

Carburetors

- Turn in the pilot screw [A] fully but not tightly, and then back it out the same number of turns counted during disassembly.
- For the United States and Switzerland models, install the pilot screw plug as follows:

○Install a new plug [B] in the pilot screw hole [C], and apply a small amount of a bonding agent [D] to the circumference of the plug to fix the plug.

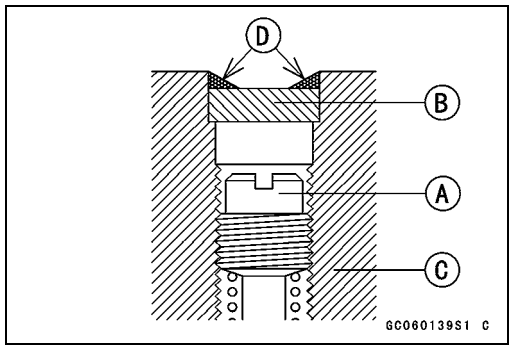

CAUTION
Do not apply too much bond on the plug to keep the pilot screw itself from being fixed.

- Turn the carburetor body upside-down, and drop the needle jet [A] into place so that the smaller diameter end [B] of the jet goes in first.

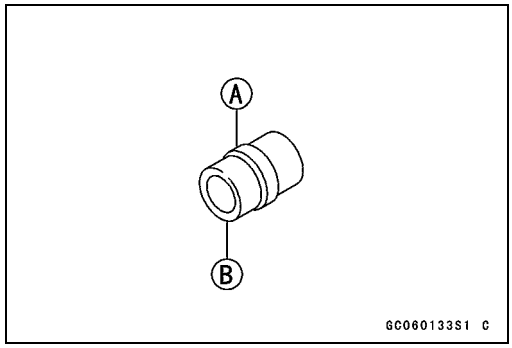

- Carefully screw in the needle jet holder. It will seat against the needle jet, pushing the end of the jet into the carburetor bore.

CAUTION
Do not force the needle jet holder [A] and main jet [B] or overtighten them. The needle jet or the carburetor body could be damaged requiring replacement.

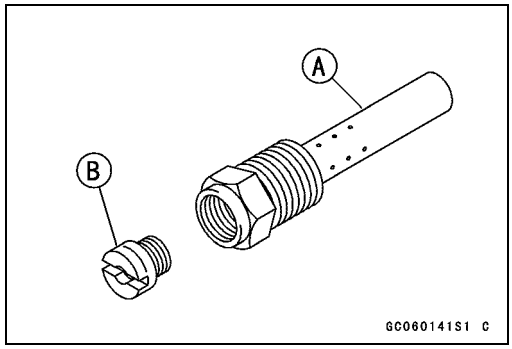

- Slip the jet needle through the hole in the center of the vacuum piston, and put the spring seat [A] on the top of the needle. Turn the seat so that it does not block the hole [B] at the bottom of the vacuum piston.

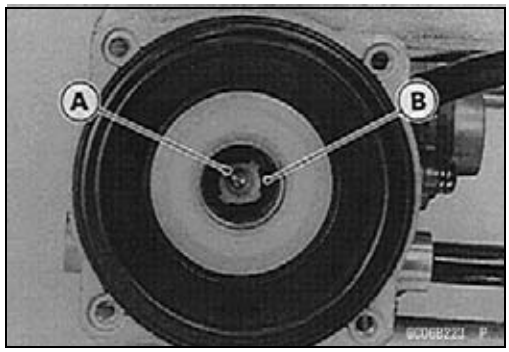

Carburetors

Carburetor Separation/Assembly

- Read the WARNINGS in the Carburetor Removal.
- The center lines of the carburetor bores must be parallel both horizontally and vertically. If they are not, loosen the mounting screws and align the carburetors on a flat surface. Retighten the mounting screws.
- After assembling the choke mechanism, check to see that the choke plunger lever slides from side to side smoothly without abnormal friction.

CAUTION

Fuel mixture trouble could result if the choke plunger does not seat properly in its rest position after the choke lever is returned.

- Visually synchronize the throttle (butterfly) valves.

○Check to see that the throttle valves open and close smoothly without binding when turning the pulley.

○Visually check the clearance [A] between the throttle valve and the carburetor bore in each carburetor.

★If there is a difference between the throttle valves, turn the balance adjusting screw [B] to obtain the same clearance.

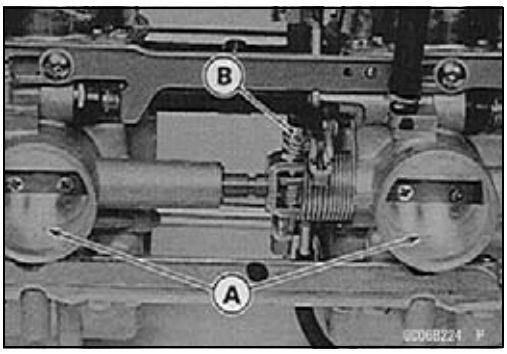

Carburetor Cleaning

⚠ WARNING

Clean the carburetors in a well-ventilated area, and take care that there is no spark or flame anywhere near the working area; this includes any appliance with a pilot light. Because of the danger of highly flammable liquids, do not use gasoline or low flash -point solvents to clean the carburetors.

Carburetors

CAUTION

Do not use compressed air on an assembled carburetor, or the floats may be crushed by the pressure, and the vacuum piston diaphragms may be damaged.
Remove as many rubber or plastic parts from the carburetor as possible before cleaning the carburetor with a cleaning solution. This will prevent damage to or deterioration of the parts.
The carburetor body has plastic parts that cannot be removed. Do not use a strong carburetor cleaning solution which could attack these parts; instead, use a mild, high-flash point cleaning solution safe for plastic parts.
Do not use wire or any other hard instrument to clean carburetor parts, especially jets, as they may be damaged.

- Disassemble the carburetors.
- Immerse all the metal parts in a carburetor cleaning solution.
- Rinse the parts in water.
- When the parts are clean, dry them with compressed air.
- Blow through the air and fuel passages with compressed air.
- Assemble the carburetors.

Carburetor Inspection

⚠ WARNING

Gasoline is extremely flammable and can be explosive under certain conditions. Turn the ignition switch OFF. Do not smoke. Make sure the area is well-ventilated and free from any source of flame or sparks; this includes any appliance with a pilot light.

- Remove the carburetors.
- Before disassembling the carburetors, check the fuel level (see Fuel Level Inspection).

★If the fuel level is incorrect, inspect the rest of the carburetor before correcting it.

- Move the choke plunger lever from side to side to check that the choke plungers move smoothly without abnormal friction.

★If the choke plungers do not work properly, replace the carburetors.

- Turn the throttle cable bracket to check that the throttle butterfly valves [A] move smoothly and return with spring tension.

★If the throttle valves do not move smoothly, replace the carburetors.

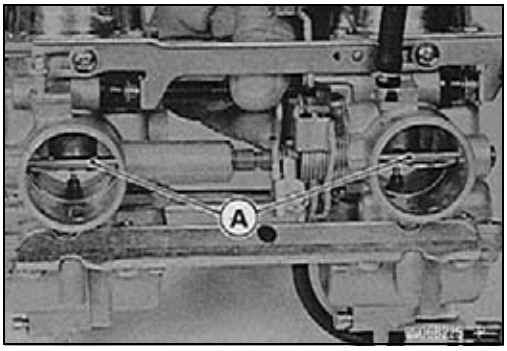

Carburetors

- Disassemble the carburetors.
- Clean the carburetors.
- Check that the O-rings on the float bowl and drain plug and the diaphragm on the vacuum piston are in good condition.

★If any of the O-rings or diaphragms are not in good condition, replace them.

- Check the plastic tip [A] of the float valve needle [B]. It should be smooth, without any grooves, scratches, or tears.

★If the plastic tip is damaged [C], replace the needle.

- Push in the rod [D] in the other end of the float valve needle, and then release it [E].

★If it does not spring out, replace the needle.

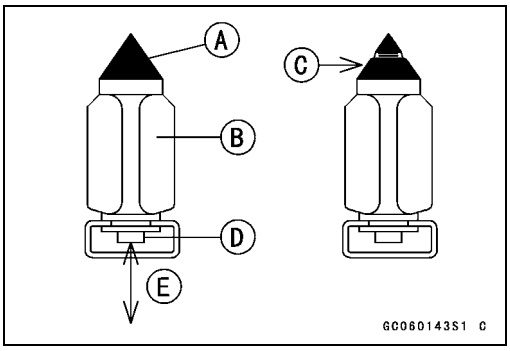

- Check the tapered portion [A] of the pilot screw [B] for wear or damage.

★If the pilot screw is worn or damaged on the tapered portion, it will prevent the engine from idling smoothly. Replace it.

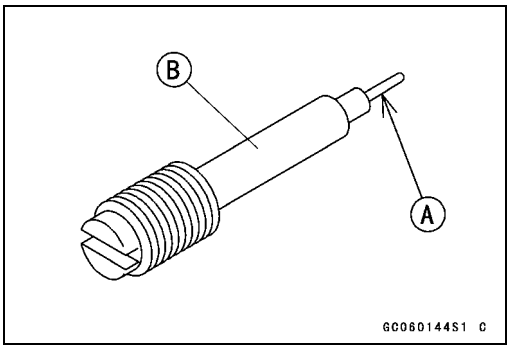

- Check that the vacuum piston [A] moves smoothly in the carburetor body. The surface of the piston must not be excessively worn.

★If the vacuum piston does not move smoothly, or if it is very loose in the carburetor body, replace the carburetor.

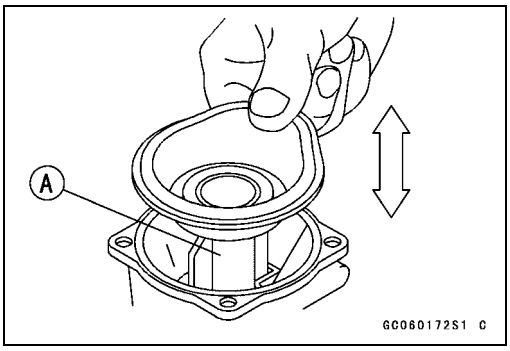

Coolant Filter Cleaning (AT, DE, FR, IT, NL, CH, GB, KR, Models)

Before winter season starts, clean the filter of carburetor system.

- Remove the fuel tank (see Fuel Tank Removal).
- Drain the coolant (see Coolant Draining in the Cooling System chapter).
- Remove the filter [A] from the cooling hoses [B] of carburetor system.
- Blow off dirt and sediment on the filter with compressed air.

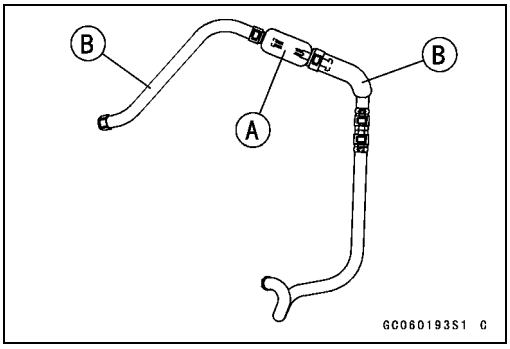

AT: Austria Model	NL: Netherlands Model
DE: Germany Model	CH: Switzerland Model
FR: France Model	GB: United Kingdom Model
IT: Italy Model	KR: Korea Model

Air Cleaner

Air Cleaner Housing Removal

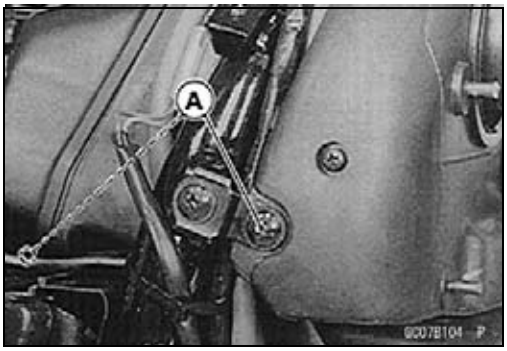

- Remove:
  Side Covers (see Right and Left Side Cover Removal in the Frame chapter)
  Seat (see Seat Removal in the Frame chapter)
  Fuel Tank (see Fuel Tank Removal)
  Air Suction Valve Vacuum Hose (AT, KR, CH and US Models),
  (EN500-C2 ~ CA, DE Models)
  Carburetor
  Tool Cover
  Housing Mounting Screws [A]

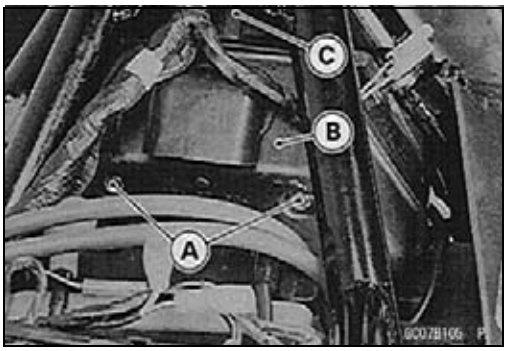

- Pull the housing forward.
- Unscrew the surge tank bolts [A] and separate the surge tank [B] from the housing [C].
- Remove the housing.

Air Cleaner Housing Installation

- Installation is the reverse of removal.
- Be sure to fit the following hoses.
  Engine Breather Hose
  Air Cleaner Drain Hose
  Air Suction Valve Vacuum Hose (AT, KR, CH and US Models)
  (EN500-C2 ~ CA, DE Models)
  Canister Return Hose

Air Cleaner Element Removal/Installation

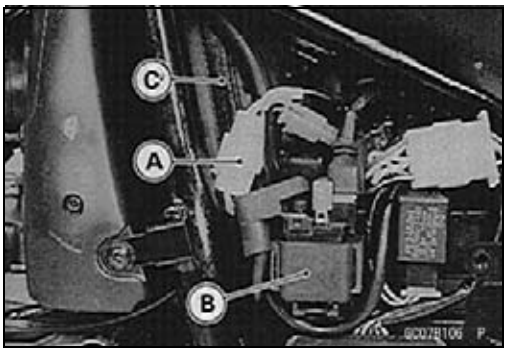

- Remove the left side cover (see Left Side Cover Removal in the Frame chapter).
- Disconnect the alternator connector [A] and remove the starter relay [B].
- Pull out the air cleaner element holder [C] and remove the element.
- Push a clean, lint-free towel into the air cleaner housing to keep dirt or other foreign material from entering.

⚠ WARNING

If dirt or dust is allowed to pass through into the carburetors, the butterfly valves may become stuck, possibly causing an accident.

CAUTION

If dirt gets through into the engine, excessive engine wear and possible engine damage will occur.

Air Cleaner

Air Cleaner Element Cleaning and Inspection

NOTE

○*In dusty areas, the element should be cleaned more frequently than the recommended interval.*
○*After riding through rain or on muddy roads, the element should be cleaned immediately.*

⚠ WARNING

Clean the element in a well-ventilated area, and take care that there are no sparks or fame anywhere near the working area.; this includes any appliance with a pilot light.
Because of the danger of highly flammable liquids, do not use gasoline or a low flash-point solvent to clean the element.

- Remove the air cleaner element (see Air Cleaner Element Removal).
- Clean the element [A] in a bath of a high-flash point solvent.
- Squeeze it dry in a clean towel.
- After cleaning, saturate the element with SE, SF, or SG, class SAE30 oil, squeeze out the excess, then wrap it in a clean rag and squeeze it as dry as possible. Be careful not to tear the element.

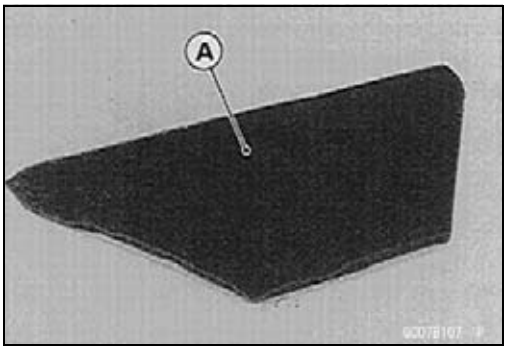

- Visually check the element for tears or breaks. Also check the sponge gasket [A], the plastic holders [B] and wire screen [C].

★If the element or gasket has any tears or breaks, replace the element.
★If the holders and screen are distorted, replace them.
★If the sponge gasket comes loose, stick it back on with an adhesive sealant.

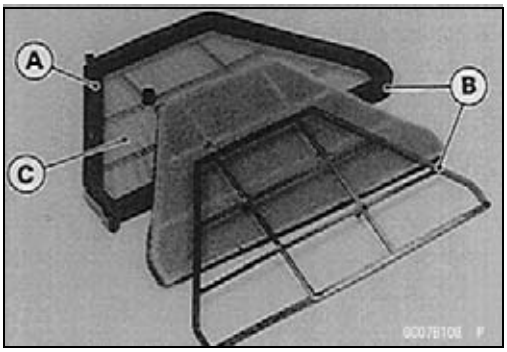

Oil Draining

A drain hose is connected to the bottom of the air cleaner housing to drain water or oil accumulated in the housing.

- Visually check the catch tank [A] of the drain hose if the water or oil accumulates in the tank.

★If any water or oil accumulates in the tank, drain it by taking off the drain plug [B] at the lower end of the drain hose.

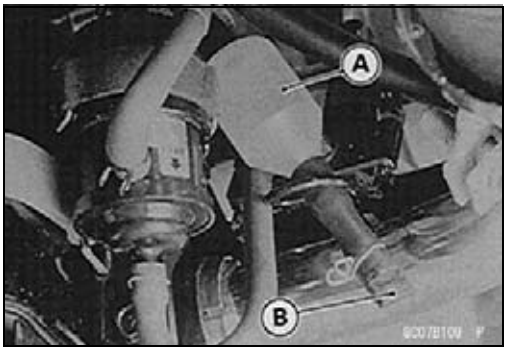

⚠ WARNING

Be sure to reinstall the plug in the drain hose after draining. Oil on tires will make them slippery and can cause an accident and injury.

Fuel Tank

Fuel Tank Removal

⚠ WARNING

Gasoline is extremely flammable and can be explosive under certain conditions. Turn the ignition switch OFF. Do not smoke. Make sure the area is well-ventilated and free from any source of flame or sparks; this includes any appliance with a pilot light.

CAUTION

For California model, if gasoline, solvent, water or any other liquid enters the canister, the canister's vapor absorbing capacity is greatly reduced. If the canister does become contaminated, replace it with a new one.

- Remove the seat.
- Turn the fuel tap [A] to the ON or RES position.
- Pull the hoses [B] off the tap.

○For California vehicles, the breather and fuel return hoses must be disconnected from the tank fittings before tank removal. Plug the fuel return fitting. This prevents gasoline from flowing into the canister.

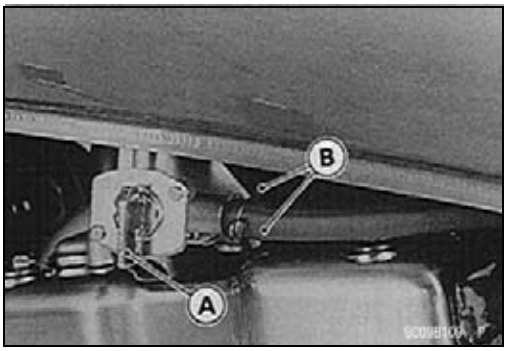

- Unscrew the mounting bolt [A] and remove the meter instruments [B] (see Meter Instruments Removal in the Electrical System chapter).

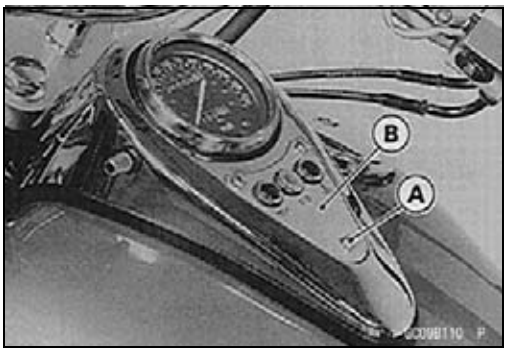

- Remove the fuel tank mounting bolts [A].
- Remove the fuel tank.
- Drain the fuel tank.

○Put a suitable container under the fuel tank.

○Turn the fuel tap to the PRI position to drain the fuel into the container.

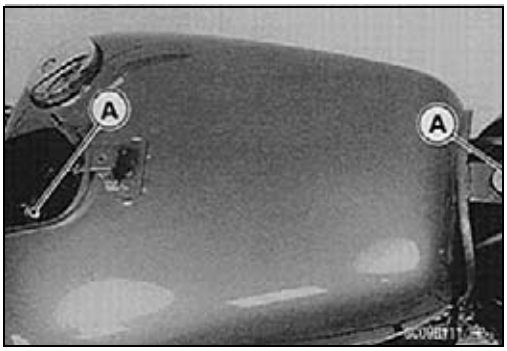

Fuel Tank

Fuel Tank Installation

- Read the WARNING in the Fuel Tank Removal section.
- Check the rubber dampers [A] on the frame top-tube.

★If the dampers are damaged or deteriorated, replace them.

- Route the hoses and leads correctly (see Cable, Wire and Hose Routing in the Appendix chapter).
- Be sure the hoses are clamped to the fuel tap and fuel tank to prevent leaks.

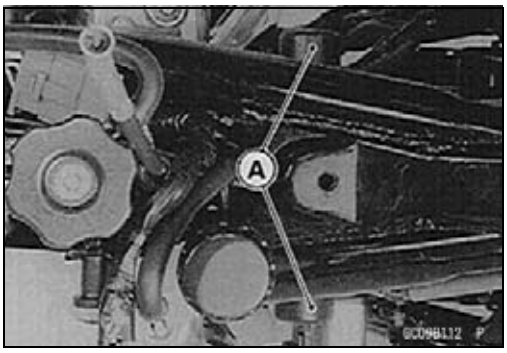

Fuel Tap Removal

- Remove the fuel tank and drain it.
- Remove the bolts [A] with nylon flat washers and take out the fuel tap [B].

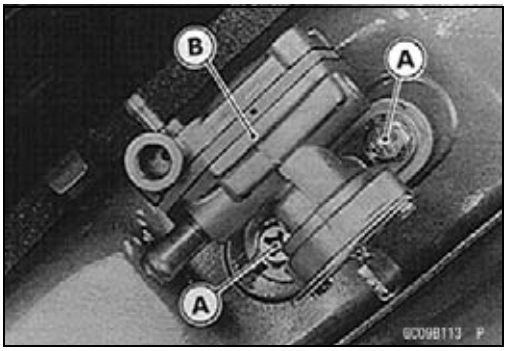

Fuel Tap Installation

- Fuel tap installation is the reverse of removal. Note the following.
- Be sure the O-ring is in good condition to prevent leaks.
- Be sure to clamp the fuel hose to the tap to prevent leaks.
- Be sure the nylon washers are in good condition to prevent leaks.

Torque - Fuel Tap Mounting Bolts:
2.5 N·m (0.25 kgf·m, 22 in·lb)
(with white washer)
4.9 N·m (0.5 kgf·m, 43 in·lb)
(with black washer)

○Do not use steel washers in place of the nylon washers, because they will not seal the bolts properly and fuel will leak.

Fuel Tank and Tap Cleaning

- Remove the fuel tank and drain it.
- Pour some high-flash point solvent into the fuel tank and shake the tank to remove dirt and fuel deposits.

⚠ WARNING

Clean the tank in a well-ventilated area, and take care that there are no sparks or flame anywhere near the working area; this includes any appliance with a pilot light. Because of the danger of highly flammable liquids, do not use gasoline or low flash -point solvents to clean the tank.

- Pour the solvent out of the tank.
- Remove the fuel tap from the tank by taking out the bolts with nylon washers.
- Clean the fuel tap filter screens in a high-flash point solvent.

Fuel Tank

- Pour high-flash point solvent through the tap in all lever position.
- Dry the tank and tap with compressed air.
- Install the tap in the tank.
- Install the fuel tank.

Fuel Tap Inspection

- Remove the fuel tap.
- Check the fuel tap filter screens [A] for any breaks or deterioration.

★If the fuel tap screens have any breaks or are deteriorated, they may allow dirt to reach the carburetor, causing poor running. Replace the fuel tap.

★If the fuel tap leaks, or allows fuel to flow when it is at ON or RES without engine running, replace the damaged gasket [B] or O-ring [C].

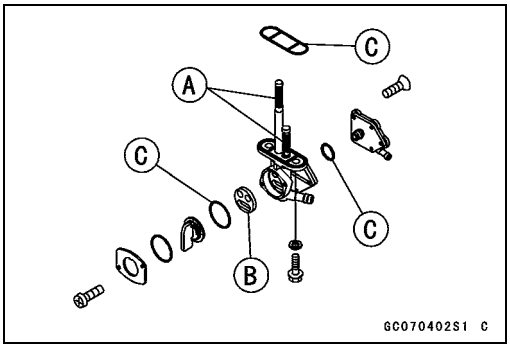

Fuel Tank and Cap Inspection

- Open the tank cap.
- Visually inspect the gaskets [A] on the tank cap for any damage.

★Replace the gaskets if they are damaged.

- Remove the breather and fuel return pipe and check to see if the pipes in the tank do not clogged up. Check the tank cap breather also.

★If they are clogged, remove the tank and drain it, and then blow the breather free with compressed air (California vehicle only).

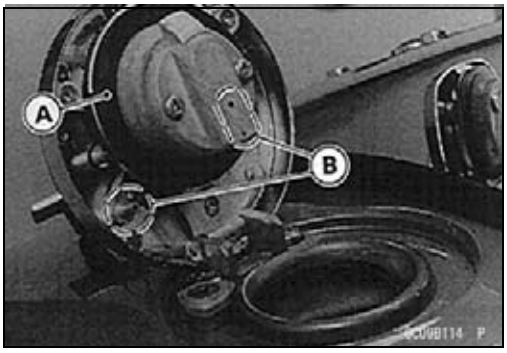

CAUTION
Do not apply compressed air to the air vent holes [B] in the tank cap. This could cause damage and clogging of the labyrinth in the cap.

Evaporative Emission Control System (California Model only)

The Evaporative Emission Control System routes fuel vapors from the fuel system into the running engine or stores the vapors in a canister when the engine is stopped. Although no adjustments are required, a thorough visual inspection must be made at the intervals specified by the Periodic Maintenance Chart.

Parts Removal/Installation

⚠ WARNING

Gasoline is extremely flammable and can be explosive under certain condition. Turn the ignition switch OFF. Do not smoke. Make sure the area is well-ventilated and free from any source of flame or sparks; this includes any appliance with a pilot light.

CAUTION

If gasoline, solvent, water or any other liquid enters the canister, the canister's vapor absorbing capacity is greatly reduced. If the canister does become contaminated, replace it with a new one.

- To prevent the gasoline from flowing into the canister or out of the canister, hold the separator perpendicular to the ground.
- Connect the hoses according to the diagram of the system. Make sure they do not get pinched or kinked.

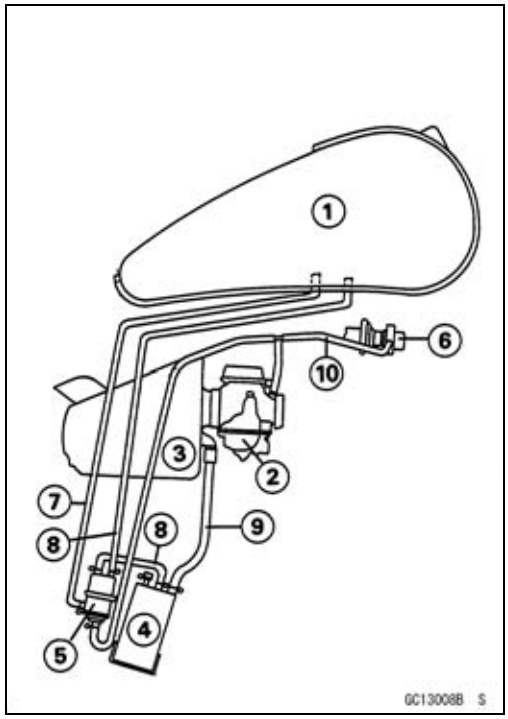

1. Fuel Tank
2. Carburetor
3. Air Cleaner
4. Canister
5. Separator
6. Vacuum Switch Valve
7. Red Color Hose
8. Blue Color Hose
9. Green Color Hose
10. White Color Hose

Hose Inspection

- Check that the hoses are securely connected.
- Replace any kinked, deteriorated or damaged hoses.

Separator Inspection

- Disconnect the hoses from the liquid/vapor separator, and remove the separator from the motorcycle.
- Visually inspect the separator for cracks and other damage.

★If the separator has any cracks or is badly damaged, replace it with a new one.

Evaporative Emission Control System (California Model only)

Separator Operation Test

⚠ WARNING

Gasoline is extremely flammable and can be explosive under certain conditions. Turn the ignition switch OFF. Do not smoke. Make sure the area is well-ventilated and free from any source of flame or sparks; this includes any appliance with a pilot light.

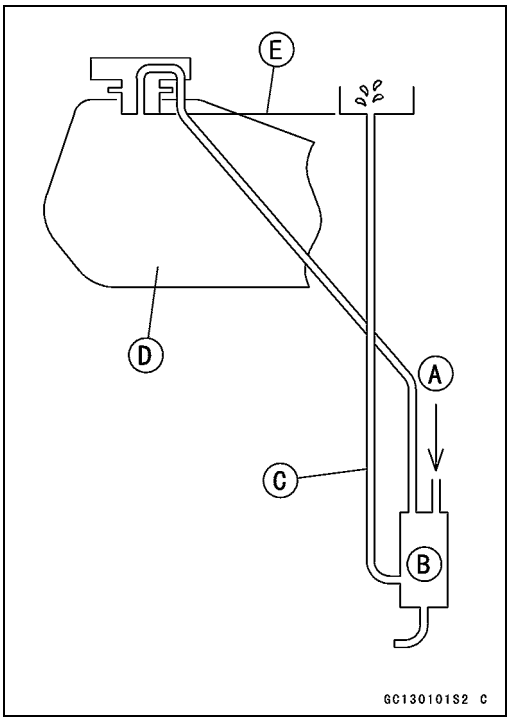

- Connect the hoses to the separator, and install the separator on the motorcycle.
- Disconnect the breather hose from the separator, and inject about 20 mL of gasoline [A] into the separator [B] through the hose fitting.
- Disconnect the fuel return hose [C] from the fuel tank [D].
- Run the open end of the return hose into the container, and hold it level with the tank top [E].
- Start the engine, and let it idle.

★If the gasoline in the separator comes out of the hose, the separator works well. If it does not, replace the separator with a new one.

Canister Inspection

- Remove the canister and disconnect the hoses from the canister.
- Visually inspect the canister for cracks and other damage.

★If the canister has any cracks or bad damage, replace it with a new one.

NOTE

○*The canister is designed to work well through the motorcycle's life without any maintenance if it is used under normal conditions.*

Cooling System

Table of Contents

Exploded View 3-2
Specifications 3-3
  Cooling System 3-3
Special Tool and Sealant 3-4
Coolant 3-5
  Coolant Deterioration 3-5
  Coolant Level Inspection 3-5
  Coolant Draining 3-5
  Coolant Filling 3-7
  Visual Leak Inspection 3-7
  Cooling System Pressure Testing 3-8
  Flushing 3-8
  Coolant Filter Cleaning 3-8
Water Pump 3-9
  Water Pump Removal 3-9
  Water Pump Installation 3-9
  Water Pump Housing Disassembly 3-10
  Water Pump Housing Assembly 3-10
  Impeller Assembly 3-10
  Pump Impeller Inspection 3-11
  Mechanical Seal Inspection 3-11
Radiator, Radiator Fan 3-12
  Radiator Fan Removal 3-12
  Radiator Fan Installation 3-12
  Radiator Removal 3-12
  Radiator Installation 3-13
  Radiator Inspection 3-13
  Filler Neck Inspection 3-14
  Radiator Cap Inspection 3-14
  Radiator Hose, Reserve Tank Hose Inspection 3-14
  Radiator Hose, Pipe, Air Vent Hose, Reserve Tank Hose Installation 3-14
Thermostat 3-15
  Thermostat Removal 3-15
  Thermostat Installation 3-15
  Thermostat Inspection 3-15
Radiator Fan Switch, Water Temperature Switch 3-17
  Radiator Fan Switch Removal 3-17
  Water Temperature Switch Removal 3-17
  Radiator Fan Switch, Water Temperature Switch Installation 3-17
  Radiator Fan Switch, Water Temperature Switch Inspection 3-17

Exploded View

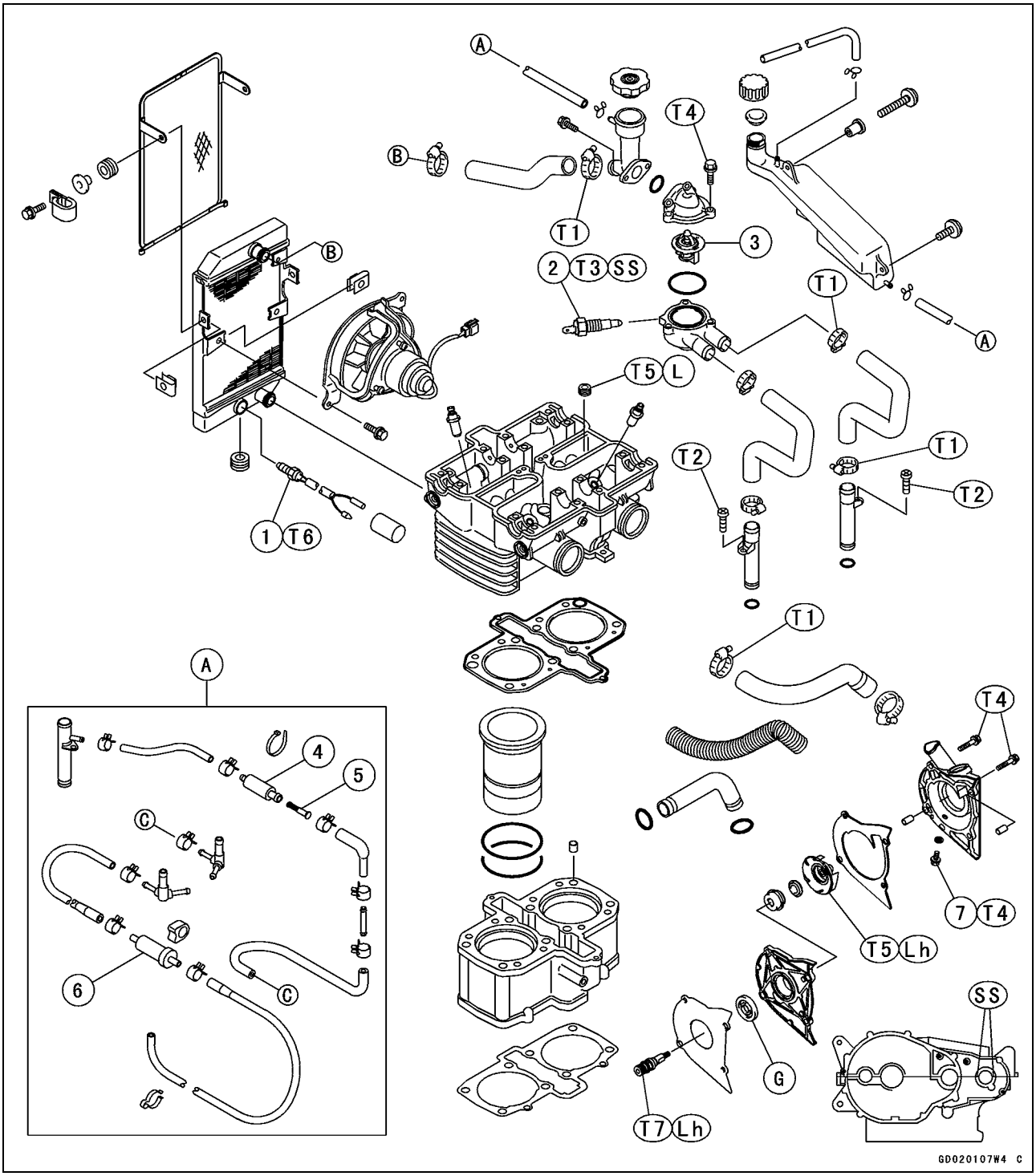

1. Fan Switch
2. Water Temperature Switch
3. Thermostat
4. Coolant Filter Body
5. Coolant Filter
6. Temperature Control Valve
7. Coolant Drain Plug

T1: 2.5 N·m (0.25 kgf·m, 22 in·lb)
T2: 4.9 N·m (0.5 kgf·m, 43 in·lb)
T3: 7.8 N·m (0.8 kgf·m, 69 in·lb)
T4: 11 N·m (1.1 kgf·m, 95 in·lb)
T5: 9.8 N·m (1.0 kgf·m, 87 in·lb)
T6: 18 N·m (1.8 kgf·m, 13 ft·lb)
T7: 25 N·m (2.5 kgf·m, 18 ft·lb)
A: Austria, Germany, France, Italy, Korea, Netherlands, Switzerland and U.K. Models Europe Model (EN500-C6 ~)
G: Apply high temperature grease.
L: Apply a non-permanent locking agent.
Lh: Left-hand threads.
S: Follow the specific tightening sequence.
SS: Apply silicone sealant.

Specifications

Item	Standard
Coolant Provided When Shipping	
Type	Permanent type antifreeze (soft water and ethylene glycol plus corrosion and rust inhibitor chemicals for aluminum engine and radiator)
Color	Green
Mixed Ratio	Soft water 50%, coolant 50%
Freezing Point	–35°C (–31°F)
Total Amount	1.3 L (1.37 US qt) (up to “FULL” mark)
Radiator cap	
Relief Pressure	93 ~ 123 kPa (0.95 ~ 1.25 kg/cm², 14 ~ 18 psi)
Thermostat	
Valve Opening Temperature	69.5 ~ 72.5°C (157.1 ~ 162.5°F)
Valve Full Opening Lift	not less than 8 mm (0.31 in.) @85°C (185°F)

Cooling System

The water cooling system is a pressurized forced circulation type. When the engine load varies, this system controls the engine temperature within narrow limits where the engine operates most efficiently. In this way the engine performs stably in various riding conditions, and possesses high durability.

1. Water pump: driven by balancer shaft
2. Cylinder jacket
3. Cylinder head
4. Water temperature sensor
5. Bypass hole (Air bleeder hole)
6. Thermostat
   When the engine is cold, the thermostat is closed so that the coolant flow is restricted through the bypass hole, causing the engine to warm up more quickly.
7. To reserve tank
8. Radiator cap
9. Radiator
10. Fan
11. Radiator fan switch
    If the coolant or engine oil temperature goes up beyond the predetermined level, the radiator fan switch conducts to operate the fan relay. The fan relay closes its contacts, completes the fan motor circuit, and the cooling fan turns to speed up the cooling action of the radiator. When the coolant or oil cools down, the fan switch cuts the relay current, and the fan stops. This electric cooling fan system saves engine power.

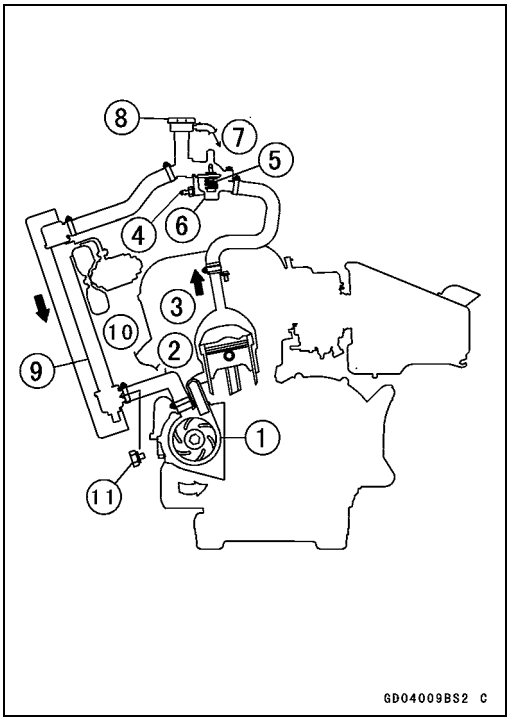

Special Tool and Sealant

Bearing Driver Set:
57001-1129

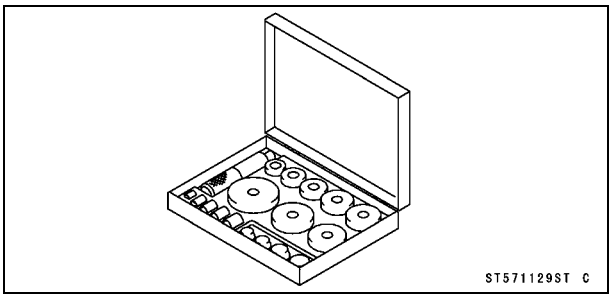

Kawasaki Bond (Silicone Sealant):
56019-120

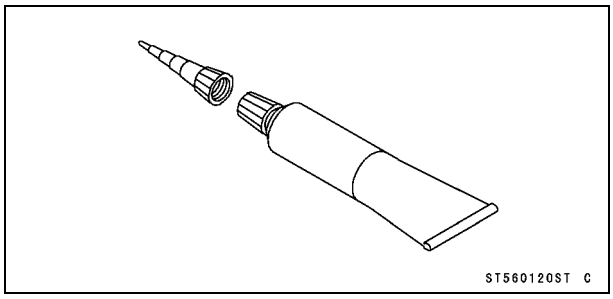

Coolant

Coolant Deterioration

- Visually inspect the coolant in the reserve tank.

○If whitish cotton-like wafts are observed, aluminum parts in the cooling system are corroded. If the coolant is brown, iron or steel parts are rusting. In either case flush the cooling system.

○If the coolant gives off an abnormal smell, check for a cooling system leak. It may be caused by exhaust gas leaking into the cooling system.

Coolant Level Inspection

- Situate the motorcycle so that it is perpendicular to the ground.
- Check the level through the coolant level gauge on the reserve tank. The coolant level should be between the "F" (Full) [A] and the "L" (Low) [B] level lines.

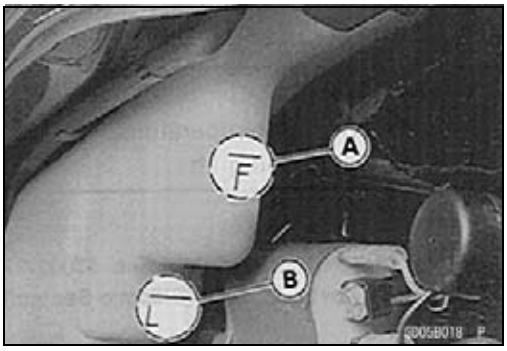

NOTE

○*Check the level when the engine is cold (room or ambient temperature).*

★If the coolant level is lower than the "L" (Low) level line, add coolant to the "F" (Full) level line.

CAUTION

For refilling, add the specified mixture of coolant and soft water. Adding water alone dilutes the coolant and degrades its anticorrosion properties. The diluted coolant can attack the aluminum engine parts. In an emergency, soft water alone can be added. But the diluted coolant must be returned to the correct mixture ratio within a few days. If coolant must be added often, or the reserve tank has run completely dry, there is probably leakage in the cooling system. Check the system for leaks (see Visual Leak Inspection, and Cooling System Pressure Testing).

Coolant Draining

The coolant should be changed periodically to ensure long engine life.

CAUTION

Use coolant containing corrosion inhibitors made specifically for aluminum engines and radiators in accordance with the instructions of the manufacturers (see Coolant Filling).

Coolant

⚠ WARNING

To avoid burns do not remove the radiator cap or try to change the coolant when the engine is still hot. Wait until it cools down.
Coolant on tires will make them slippery and can cause an accident and injury. Immediately wipe up or wash away any coolant that spills on the frame, engine, or other painted parts.
Since coolant is harmful to the human body, do not use for drinking.

- Situate the motorcycle so that it is perpendicular to the ground.
- Place a container under the water pump [A].
- Remove the drain plug [B].
- Remove the meter instruments (see Meter Instruments Removal in the Electrical System chapter).

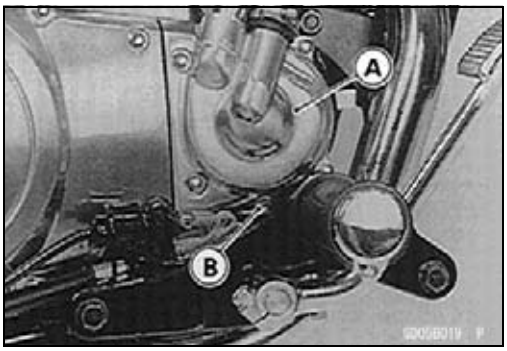

- Remove the radiator cap [A] in two steps. First turn the cap counterclockwise to the first stop and wait there for a few seconds. Then push down and turn it further in the same direction and remove the cap.

○The coolant will drain from the radiator and engine.

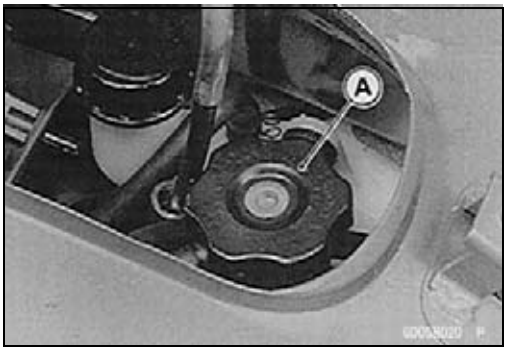

- Remove the fuel tank (see Fuel Tank Removal in the Fuel System chapter).
- Pull off the air vent hose [A], unscrew the bolts [B] and remove the reserve tank [C] with the lower hose attached.
- Unscrew the cap [D] and pour the coolant into a container.
- Inspect the old coolant for color and smell (mentioned above).

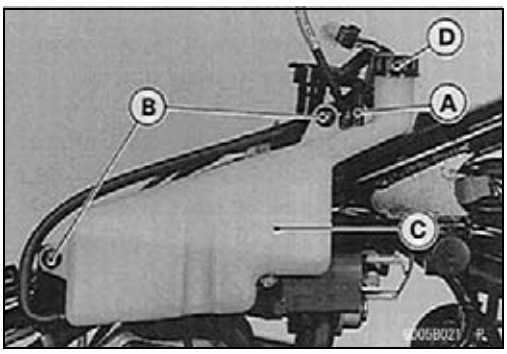

Coolant

Coolant Filling

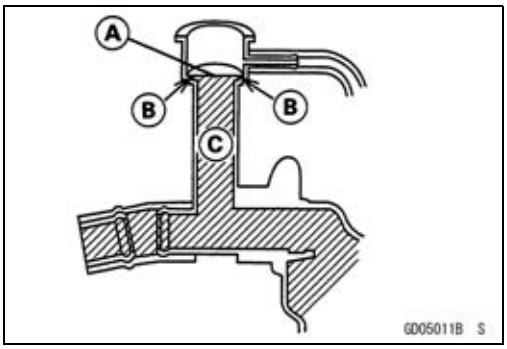

- Install the drain plug. Always replace the gasket with a new one, if it is damaged.
- Tighten the drain plug.

Torque - Coolant Drain Plug: 11 N·m (1.1 kgf·m, 95 in·lb)

- Fill [A] the radiator up to the bottom of the radiator filler neck [B] with coolant [C], and install the cap turning it clockwise about 1/4 turn.

NOTE

○*Pour in the coolant slowly so that it can expel the air from the engine and radiator.*

○*The radiator cap must be installed in two steps. First turn the cap clockwise to the first stop. Then push down on it and turn it the rest of the way.*

- Fill the reserve tank up to the "F" level line with coolant, and install the cap.
- Check the cooling system for leaks.
- Start the engine, warm it up thoroughly, and then stop it.
- Check the coolant level in the reserve tank after the engine cools down.

★If the coolant level is low, add coolant up to the "F" level line.

CAUTION

Soft or distilled water must be used with the antifreeze (see below for antifreeze) in the cooling system.
If hard water is used in the system, it causes scales accumulation in the water passages, and considerably reduces the efficiency of the cooling system.

NOTE

○*Choose a suitable mixture ratio by referring to the coolant manufacturer's directions.*

Water and Coolant Mixture Ratio (Recommended)

Soft Water	**:**	**50%**
Coolant	**:**	**50%**
Freezing Point	**:**	**–35°C (–31°F)**
Total Amount	**:**	**1.3 L (1.37 US at) (up to "Full" mark)**

Visual Leak Inspection

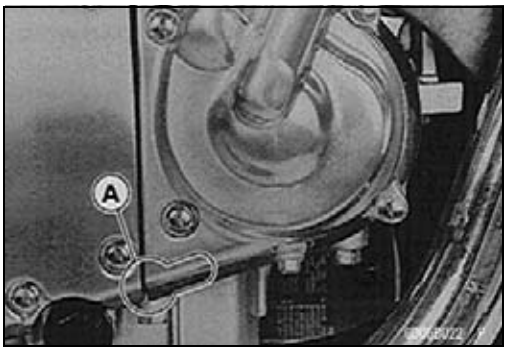

Any time the system slowly loses water, inspect for leaks.

- Check the water pump body drainage outlet passage [A] for coolant leaks.

★If the mechanical seal is damaged, the coolant leaks through the seal and drains through the passage. Replace the mechanical seal.

★If there are no apparent leaks, pressure test the system.

Coolant

Cooling System Pressure Testing

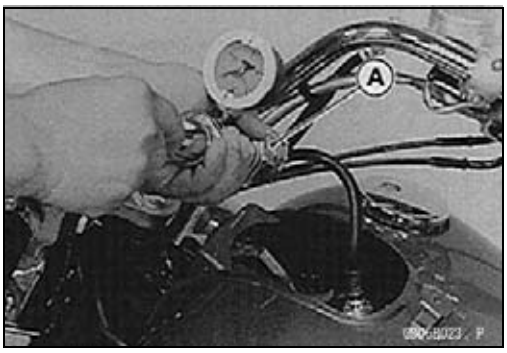

CAUTION

During pressure testing, do not exceed the pressure for which the system is designed. The maximum pressure is 123 kPa (1.25 kgf/cm², 18 psi).

- Remove the meter instruments (see Meter Instruments Removal in the Electrical System chapter).
- Remove the radiator cap, and install a cooling system pressure tester [A] on the radiator filler neck.

NOTE

○*Wet the cap sealing surfaces with water or coolant to prevent pressure leaks.*

- Build up pressure in the system carefully until the pressure reaches 123 kPa (1.25 kgf/cm², 18 psi).
- Watch the gauge for at least 6 seconds. If the pressure holds steady, the system is all right.

★If the pressure drops and no external source is found, check for internal leaks. Droplets in the engine oil indicate internal leakage. Check the cylinder head gasket and the cylinder liner O-rings.

- Remove the pressure tester, replenish the coolant, and install the radiator cap.

Flushing

Over a period of time, the cooling system accumulates rust, scale, and lime in the water jacket and radiator. When this accumulation is suspected or observed, flush the cooling system. If this accumulation is not removed, it will clog up the water passages and considerably reduce the efficiency of the cooling system.

- Drain the cooling system.
- Fill the cooling system with fresh water mixed with a flushing compound.

CAUTION

Avoid the use of a flushing compound which is harmful to the aluminum engine and radiator. Carefully follow the instructions supplied by the manufacturer of the cleaning product.

- Warm up the engine, and run it at normal operating temperature for about ten minutes.
- Stop the engine, and drain the cooling system.
- Fill the system with fresh water.
- Warm up the engine and drain the system.
- Repeat the previous two steps once more.
- Fill the system with a permanent type coolant and bleed the air from the system (see Coolant Filling).

Coolant Filter Cleaning

- Refer to the section of carburetor in Fuel System for the cleaning procedures.

Water Pump

Water Pump Removal

- Remove the right footpeg assembly mounting bolts [A] and let the assembly hang down.
- Drain the coolant.
- Loosen the clamp and remove the radiator hose [B] from the water pump cover [C].
- Remove the four cover bolts [D].
- With the water pipe [E] attached, remove the water pump cover.

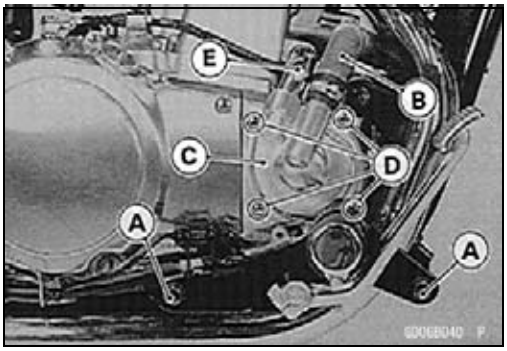

- Install the right footpeg assembly.

NOTE

○*The impeller and water pump shaft have a left-handed thread, therefore they must be turned clockwise [A] to remove.*

- Shift the transmission into 1st gear.
- While applying the rear brake, remove the impeller [B].

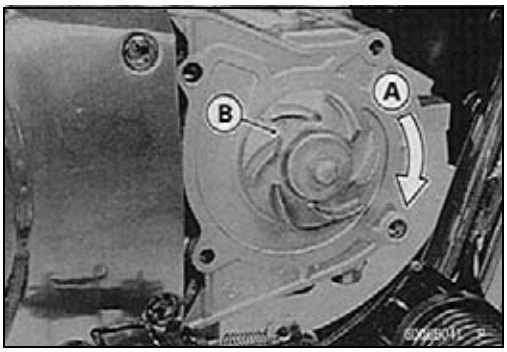

- Pull the water pump housing [A] and gasket out of the right crankcase.
- Turn the water pump shaft [B] clockwise, and remove it.

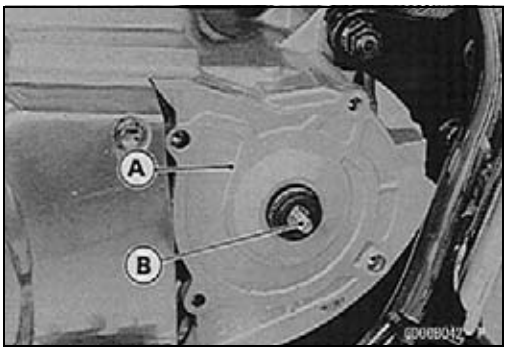

Water Pump Installation

- When installing the water pump shaft or impeller, shift the transmission into 1st gear and apply the rear brake.
- Apply silicone sealant to the area [A] where the mating surface of the crankcase contacts the water pump housing gasket.

  Sealant - Kawasaki Bond (Silicone Sealant): 56019-120

- Apply high temperature grease to the lips of the water pump housing oil seal.
- Turn the water pump shaft or impeller counterclockwise, and tighten them.

  Torque - Water Pump Shaft: 25 N·m (2.5 kgf·m, 18 ft·lb)
  Water Pump Impeller: 9.8 N·m (1.0 kgf·m, 87 in·lb)

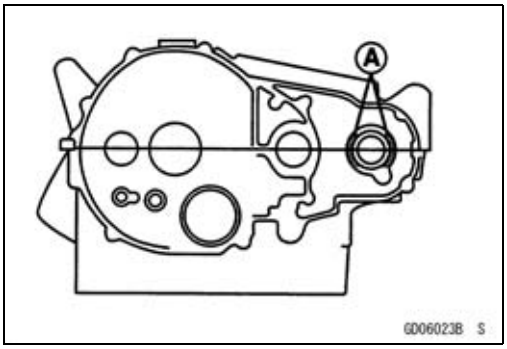

Water Pump

- Be sure to install the water pipe O-rings [A], and apply high temperature grease to them.
- Install the water pump cover with the water pipe, being careful of the two knock pins [B].

Torque - Water Pump Cover Bolts: 11 N·m (1.1 kgf·m, 95 in·lb)

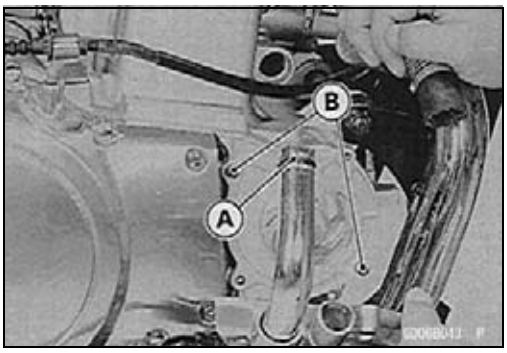

Water Pump Housing Disassembly

CAUTION
Be careful not to damage the sealing surface of the mechanical seal.

- Take the oil seal [A] out of the housing [B] with a hook [C].

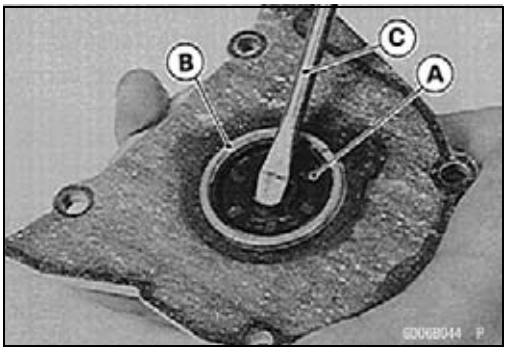

- Press the mechanical seal [A] out of the housing with a bearing driver [B].

Special Tool - Bearing Driver Set: 57001-1129

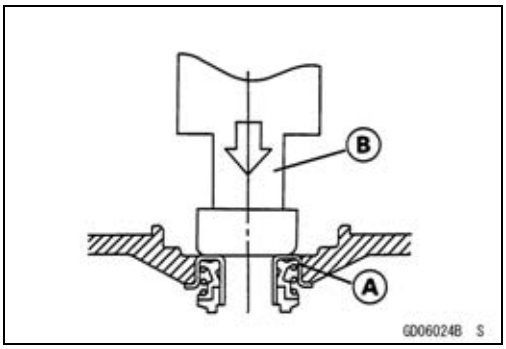

Water Pump Housing Assembly

- Apply a high temperature grease [A] to the oil seal [B].
- Press the oil seal into the housing with a bearing driver until it stops at the bottom surface of the housing [C].
- Press the mechanical seal into the housing with a bearing driver [D] until its flange [E] touches the surface [F] of the housing.

Special Tool - Bearing Driver Set: 57001-1129

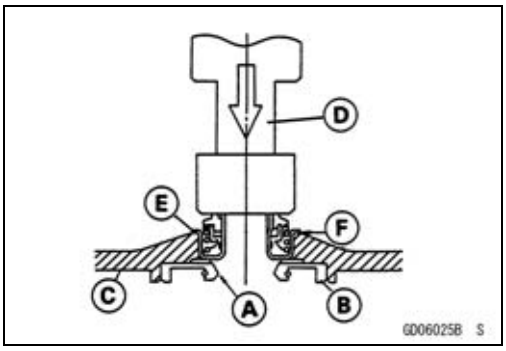

Impeller Assembly

- Clean the sliding surface of the mechanical seal with a high-flash point solvent, and apply a little coolant to the sliding surface to give the mechanical seal initial lubrication.
- Apply coolant to the surfaces [A] of the rubber seal [B] and sealing seat [C], and install the rubber seal and sealing seat into the impeller by pressing them by hand until the seat stops at the bottom of the hole.

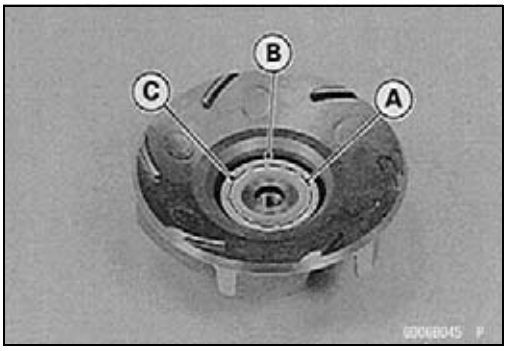

Water Pump

Pump Impeller Inspection

● Visually check the impeller [A].

★If the surface is corroded, or if the blades are damaged, replace the impeller.

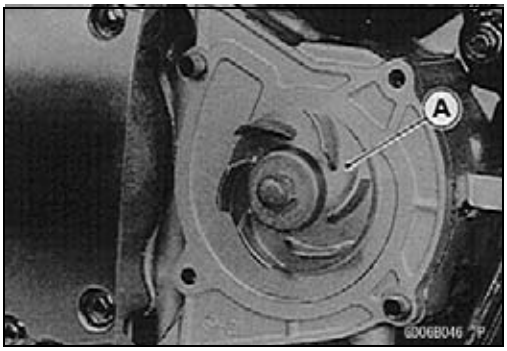

Mechanical Seal Inspection

● Visually inspect the mechanical seal.

★If any one of the parts is damaged, replace the mechanical seal as a unit.

○The sealing seat and rubber seal may be removed easily by hand.

[A] Impeller Sealing Seat Surface
[B] Rubber Seal
[C] Mechanical Seal Diaphragm

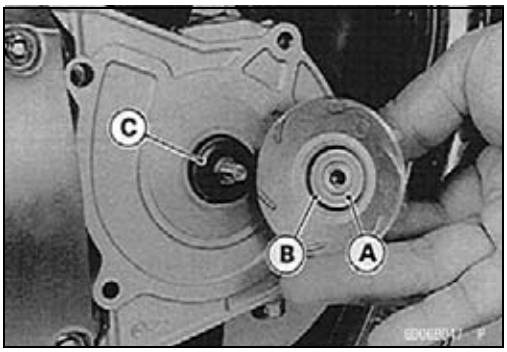

Radiator, Radiator Fan

Radiator Fan Removal

⚠ WARNING

The radiator fan and fan switch are connected directly to the battery.
The radiator fan may start even if the ignition switch is off. Never touch the radiator fan until the radiator fan connector is disconnected. Touching the fan before the connector is disconnected could cause injury from the fan blades.

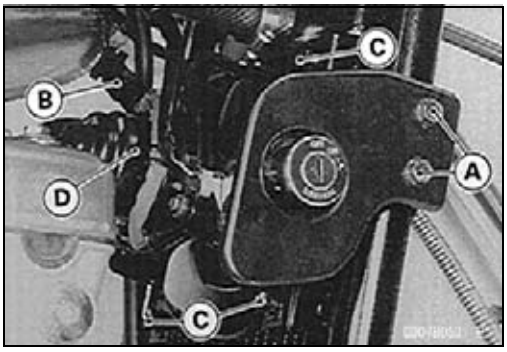

- Take off the bolts [A] and let the ignition switch hang.
- Disconnect the fan connector [B].
- Unscrew the fan mounting bolts [C] and remove the radiator fan [D].

Radiator Fan Installation

- Radiator fan installation is the reverse of removal.

Radiator Removal

- Read the WARNING in the fan removal section.
- Drain the coolant.
- Remove:
  Ignition Switch [A]
  Radiator Fan Connector [B]
  Radiator Hose [C]

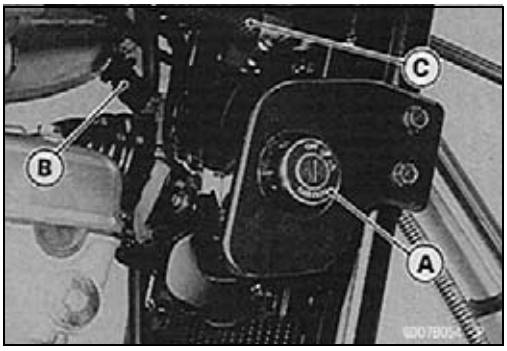

Radiator Hose [A]

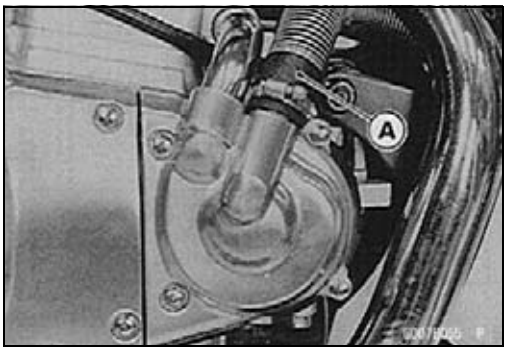

Horn [A]
Fan Switch Leads [B]

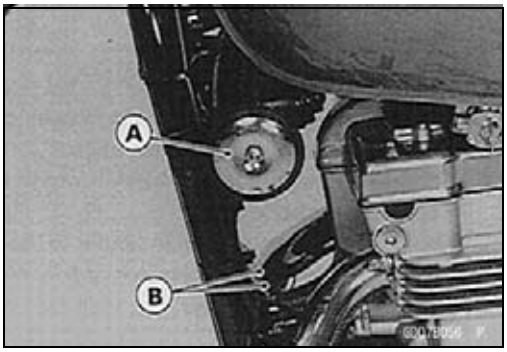

Radiator, Radiator Fan

- Unscrew the radiator mounting bolts [A].

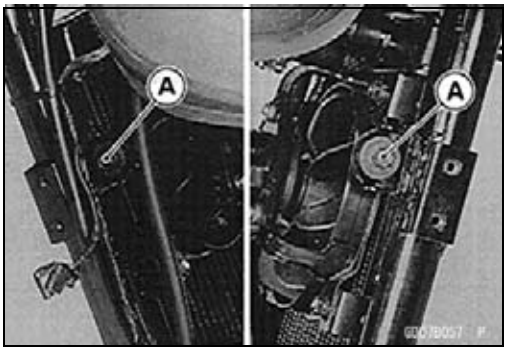

- Remove the radiator [A] with the core guard and fan [B] taking care not to damage the radiator core.
- Separate the radiator fan from the radiator.

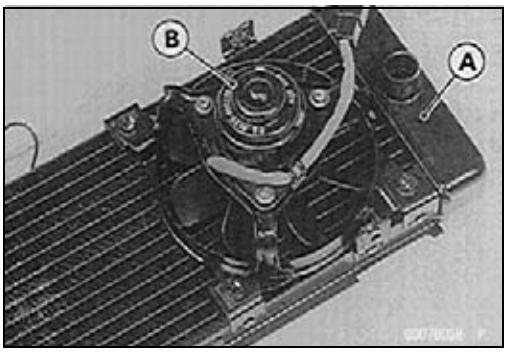

Radiator Installation

- Radiator installation is the reverse of removal.

Radiator Inspection

- Check the radiator core.

★If there are obstructions to air flow, remove them.

★If the corrugated fins [A] are deformed, carefully straighten then with the blade of a thin screw driver.

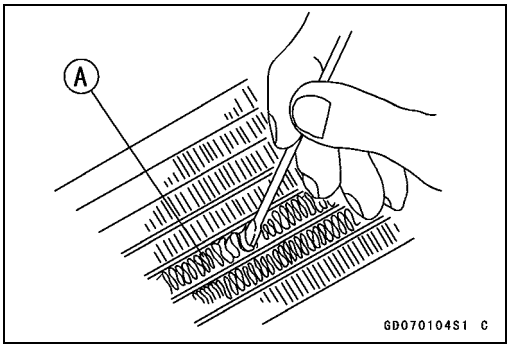

CAUTION
Do not tear the radiator tubes while straightening the fins.

★If the air passages of the radiator core are blocked more than 20% by unremovable obstructions or irreparable deformed fins, replace the radiator with a new one.

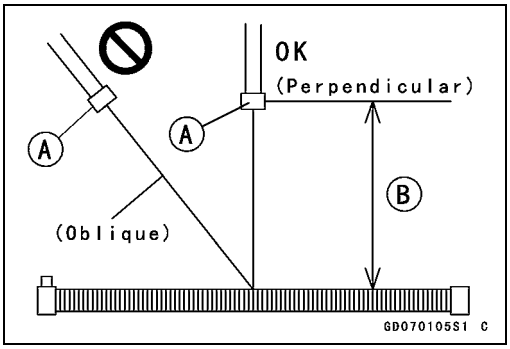

CAUTION
When cleaning the radiator with steam cleaner, be careful of the following to prevent radiator damage. 1) Keep the steam gun [A] away more than 0.5 m (20 in.) [B] from the radiator core. 2) Hold the steam gun perpendicular to the core surface. 3) Run the steam gun horizontally following the core fin direction. Running it vertically may damage the fin.

Radiator, Radiator Fan

Filler Neck Inspection

- Check the radiator filler neck for signs of damage.
- Check the condition of the top [A] and bottom sealing seats [B] in the filler neck. They must be smooth and clean for the radiator cap to function properly.

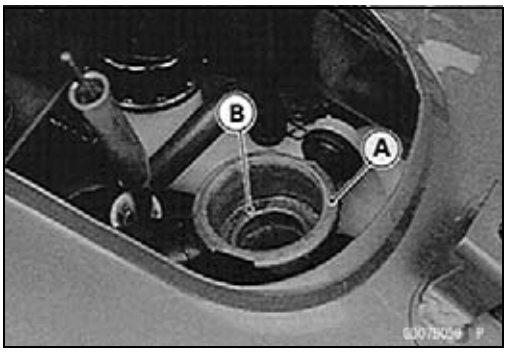

Radiator Cap Inspection

- Check the condition of the valve spring [C], and the top [A] and bottom [B] valve seals of the radiator cap.

★If any one of them shows visible damage, replace the cap with a new one.

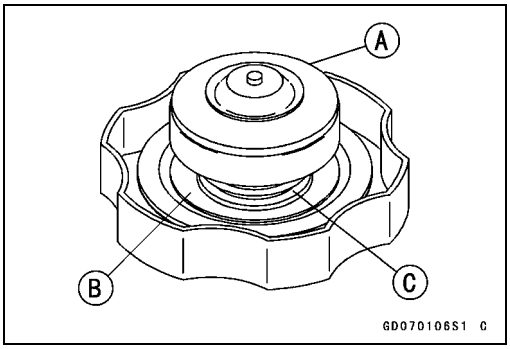

- Install the cap [A] on a cooling system pressure tester [B].

NOTE

○*Wet the cap sealing surfaces with water or coolant to prevent pressure leaks.*

- Watching the pressure gauge, slowly pump the pressure tester to build up the pressure. The relief valve must open within the relief pressure range as shown below. The gauge hand must remain at least 6 seconds between the lowest relief pressure and the valve opened pressure.

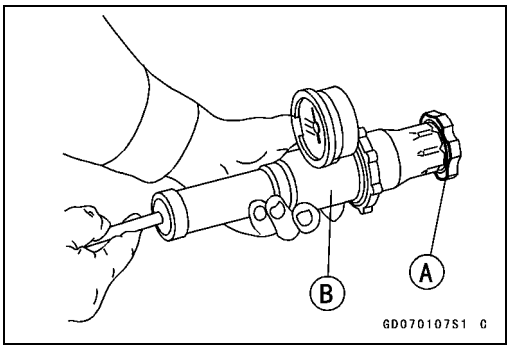

Radiator Cap Relief Pressure
Standard: 93 ~ 123 kPa (0.95 ~ 1.25 kgf/cm², 14 ~ 18 psi)

★If the cap cannot hold the specified pressure, or if it holds too much pressure, replace it with a new one.

Radiator Hose, Reserve Tank Hose Inspection

- In accordance with the Periodic Maintenance Chart, visually inspect the hoses for signs of deterioration. Squeeze the hose. A hose should not be hard and brittle, nor should it be soft or swollen.
- Replace any damaged hose.

Radiator Hose, Pipe, Air Vent Hose, Reserve Tank Hose Installation

- Install the radiator hoses. Avoid sharp bending, kinking, flattening, or twisting.
- Tighten the hose clamps securely.

Torque - Radiator Hose Clamp Screws: 2.5 N·m (0.25 kgf·m, 22 in·lb)

- Route the air vent hose, radiator hoses, pipes and reserve tank hose (see Cable, Wire and Hose Routing in the Appendix chapter).

Thermostat

Thermostat Removal

- Remove:
  Coolant (Draining)
  Seat (see Seat Removal in the Frame chapter)
  Fuel Tank (see Fuel Tank Removal in the Fuel System chapter)
- Unscrew the thermostat housing bolts [A].
- Separate the housing [B] from the housing cover [C].

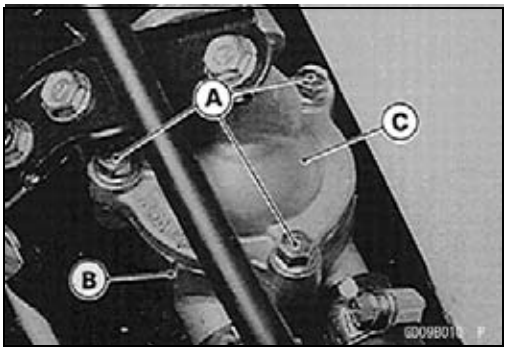

- Pull out the thermostat [A].

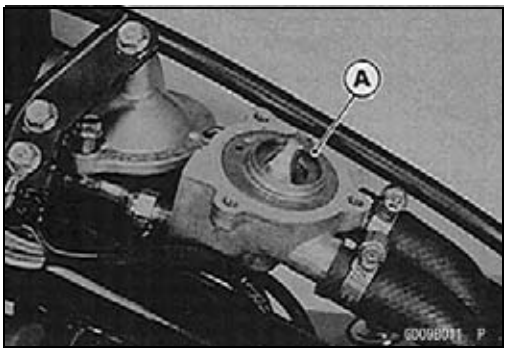

Thermostat Installation

- Be sure to install the O-ring on the thermostat housing cover.
- Fill the radiator with coolant.

Thermostat Inspection

- Remove the thermostat, and inspect the thermostat valve [A] at room temperature.

★If the valve is open, replace the valve with a new one.

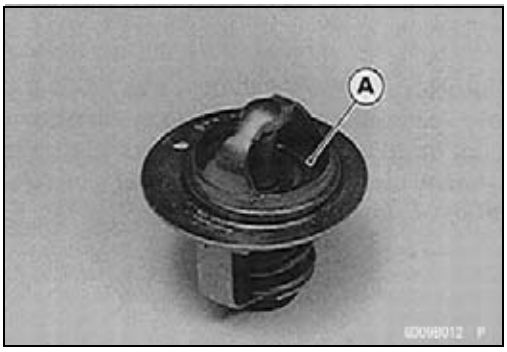

Thermostat

- To check valve opening temperature, suspend the thermostat [A] in a container of water and raise the temperature of the water.

○The thermostat must be completely submerged and must not touch the container sides or bottom. Suspend an accurate thermometer [B] in the water so that the heat sensitive portions [C] are located in almost the same depth. It must not touch the container, either.

★If the measurement is out of the specified range, replace the thermostat with a new one.

Thermostat Valve Opening Temperature
69.5 ~ 72.5°C (157.1 ~ 162.5°F)

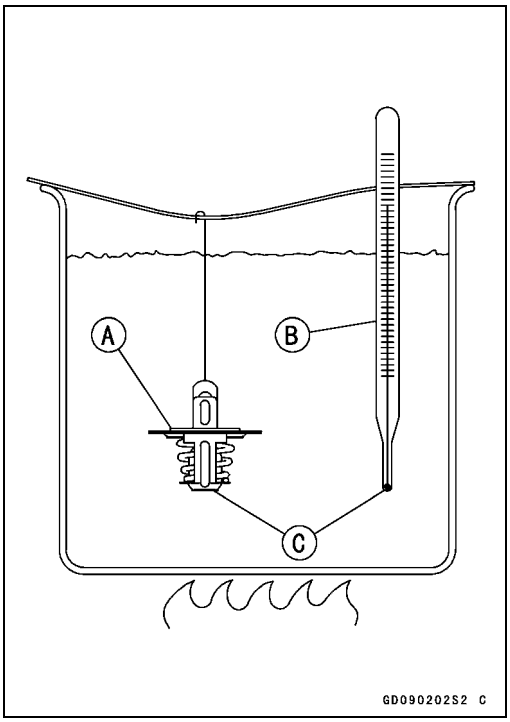

Radiator Fan Switch, Water Temperature Switch

Radiator Fan Switch Removal

- Disconnect the fan switch leads [A].
- Pull out the cover [B].
- Remove the radiator fan switch [C].

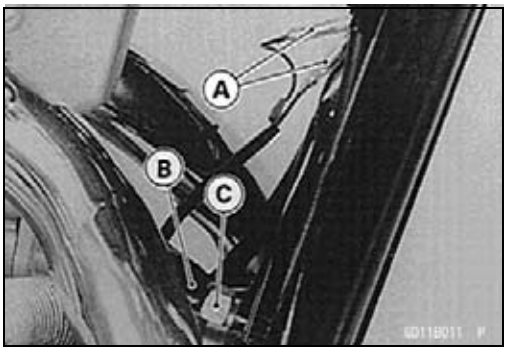

CAUTION

The fan switch or the water temperature switch should never be allowed to fall on a hard surface. Such a shock to these parts can damage them.

Water Temperature Switch Removal

- Drain the coolant (see Coolant Draining).
- Remove the fuel tank (see Fuel Tank Removal in the Fuel System chapter).
- Unscrew the thermostat housing mounting bolts [A] and flange bolts [B].

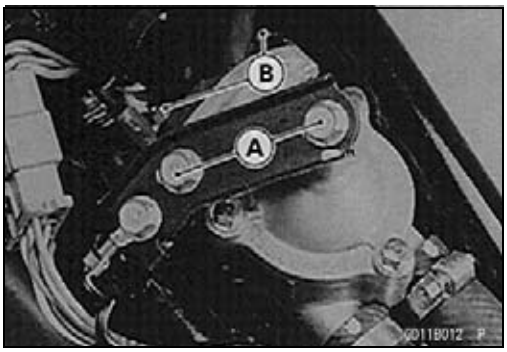

- Pull the thermostat housing toward the rear.
- Disconnect the switch lead connector [A].
- Remove the switch [B].

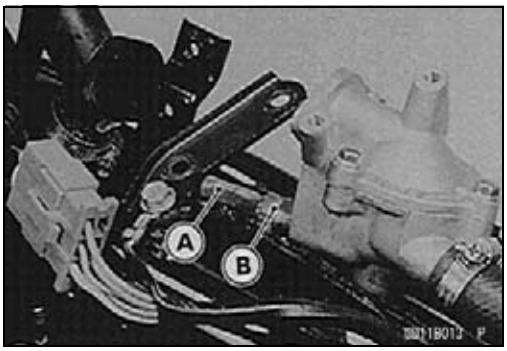

Radiator Fan Switch, Water Temperature Switch Installation

- Apply silicone sealant to the threads before mounting the water temperature switch.

  Sealant - Kawasaki Bond (Silicone Sealant): 56019-120

○Do not apply silicone sealant to the radiator fan switch on the radiator.

- Tighten the water temperature switch and the fan switch.

  Torque - Water Temperature Switch: 7.8 N·m (0.80 kgf·m, 69 in·lb)
  Radiator Fan Switch: 18 N·m (1.8 kgf·m, 13 ft·lb)

Radiator Fan Switch, Water Temperature Switch Inspection

- Refer to Radiator Fan Switch, Water Temperature Switch Inspection in the Electrical System chapter for these inspections.

Engine Top End

Table of Contents

Exploded View 4-2
Specifications 4-4
Special Tools and Sealant 4-7
Clean Air System (US, CH, AT, KR, C2 ~ CA, DE & C6 ~ EUR, FR)..... 4-9
Air Suction Valve Installation..... 4-9
Vacuum Switch Valve Installation 4-9
Air Suction Valve Inspection 4-9
Clean Air System Hose Inspection..... 4-9
Vacuum Switch Valve Test 4-10
Clean Air System Hose Inspection..... 4-10
Cylinder Head Cover 4-11
Cylinder Head Cover Removal 4-11
Cylinder Head Cover Installation . 4-11
Camshaft Chain Tensioner 4-12
Camshaft Chain Tensioner Removal..... 4-12
Camshaft Chain Tensioner Installation..... 4-12
Camshaft, Camshaft Chain 4-13
Camshaft Removal 4-13
Camshaft Installation 4-13
Camshaft and Sprocket Assembly..... 4-14
Camshaft, Camshaft Cap Wear Inspection..... 4-15
Camshaft Chain Guide Wear Inspection..... 4-15
Rocker Shaft, Rocker Arm..... 4-16
Rocker Shaft, Rocker Arm Removal..... 4-16
Rocker Shaft, Rocker Arm Installation..... 4-16
Oil Pipe..... 4-17
Cylinder Head Oil Pipe Removal . 4-17
Cylinder Head Oil Pipe Installation..... 4-17
Main Oil Pipe Removal 4-17
Main Oil Pipe Installation 4-17
Cylinder Head..... 4-18
Compression Measurement..... 4-18
Cylinder Head Removal 4-19
Cylinder Head Installation 4-19
Cylinder Head Warp Inspection ... 4-20
Cylinder Head Cleaning 4-20
Valves 4-22
Valve Clearance Inspection 4-22
Valve Clearance Adjustment..... 4-23
Valve Removal 4-23
Valve Installation 4-23
Valve Guide Removal 4-24
Valve Guide Installation 4-24
Valve Seat Inspection 4-24
Measuring Valve-to-Guide Clearance (Wobble method) Inspection..... 4-25
Valve Seat Repair 4-25
Cylinder, Piston..... 4-30
Cylinder Removal..... 4-30
Cylinder Installation..... 4-30
Piston Removal..... 4-30
Piston Installation..... 4-31
Piston Ring, Piston Ring Groove Wear Inspection 4-32
Piston Ring End Gap Inspection .. 4-32
Cylinder Inside Diameter Measurement 4-32
Piston Diameter Measurement 4-33
Boring, Honing 4-33
Carburetor Holder..... 4-34
Carburetor Holder Installation..... 4-34
Exhaust Pipe, Muffler 4-35
Exhaust Pipe, Muffler Removal.... 4-35
Exhaust Pipe, Muffler Installation. 4-36

Exploded View

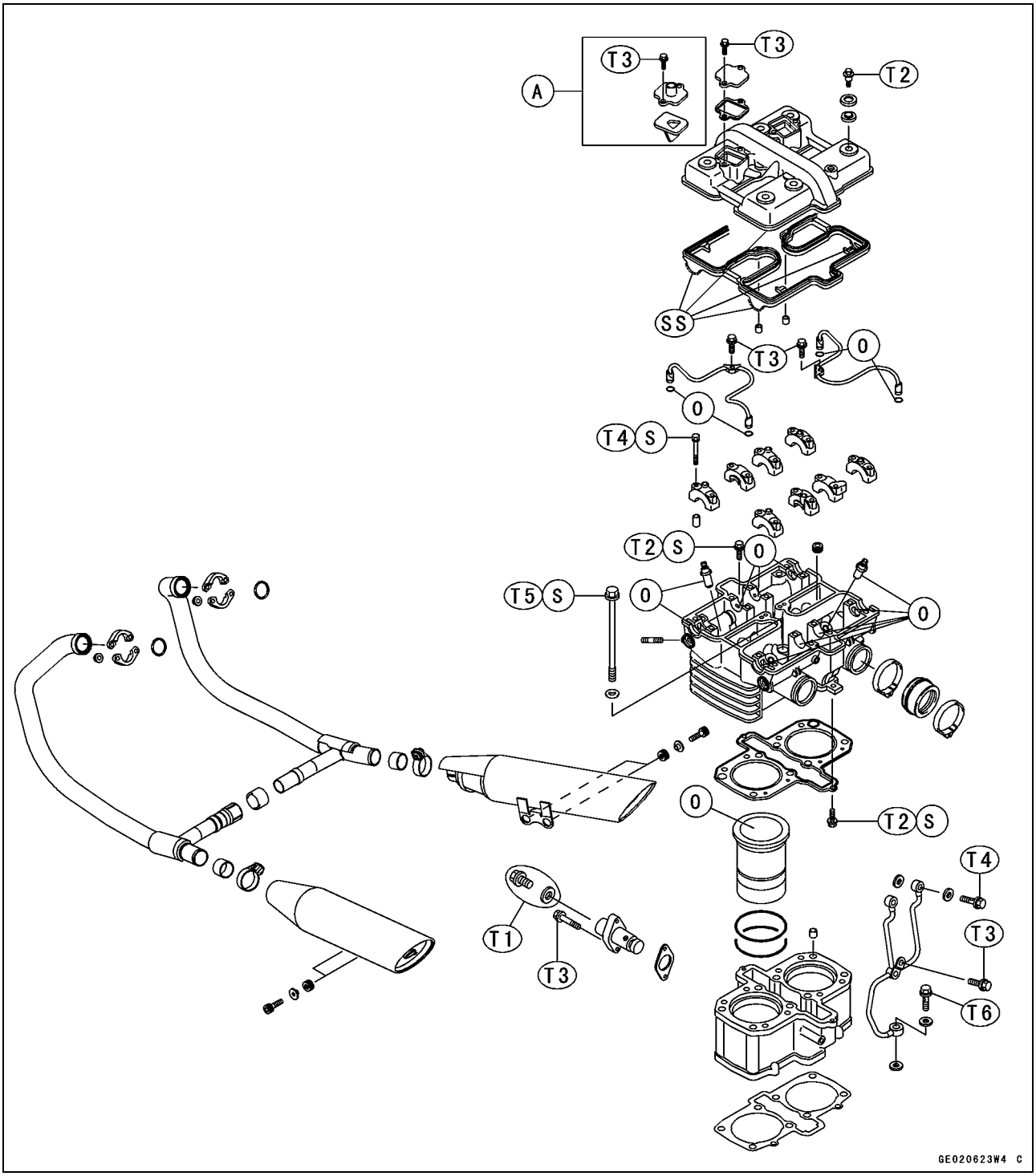

T1: 4.9 N·m (0.5 kgf·m, 43 in·lb)
T2: 9.8 N·m (1.0 kgf·m, 87 in·lb)
T3: 11 N·m (1.1 kgf·m, 95 in·lb)
T4: 12 N·m (1.2 kgf·m, 104 in·lb))
T5: 51 N·m (5.2 kgf·m, 38 ft·lb)
T6: 20 N·m (2.0 kgf·m, 14.5 ft·lb)
A: United States, Switzerland, Austria, Korea and California Models Canada and Germany Models (EN500-C2 ~)
Europe and France Models (EN500-C6 ~)
O: Apply engine oil.
S: Follow the specific tightening sequence.
SS: Apply silicone sealant.

Exploded View

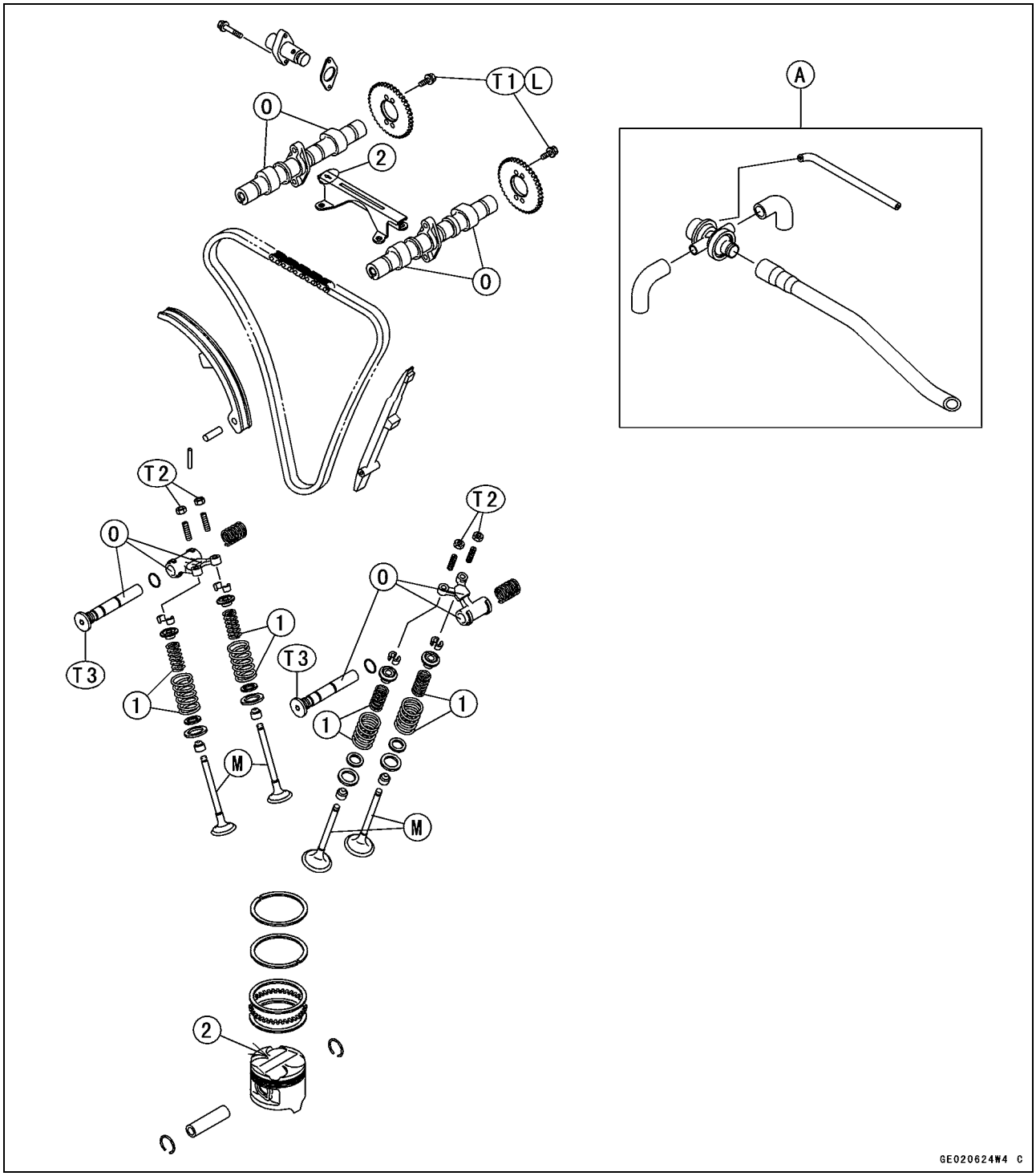

1. Closed coil end is downwards.
2. Arrow mark must point toward the front (EN500-C1 ~ C9 Model).
   Circle mark must point toward the front (EN500-C10 ~).

T1: 15 N·m (1.5 kgf·m, 11 ft·lb)
T2: 25 N·m (2.5 kgf·m, 18 ft·lb)
T3: 39 N·m (4.0 kgf·m, 29 ft·lb)

A: United States, Switzerland, Austria, Korea and California Models Canada and Germany Models (EN500-C2 ~)
   Europe and France Models (EN500-C6 ~)
L: Apply a non-permanent locking agent.
M: Apply a thin coat of a molybdenum disulfide grease.
O: Apply engine oil.

Specifications

Item	Standard	Service Limit
Clean Air System		
(AT, CH, KR, US and EN500-C2 ~ CA, DE)		
Vacuum Switch Valve Closing Pressure:	57 ~ 65 kPa	
Open → Close	(430 ~ 490 mmHg)	– – –
Cylinder Head		
	(usable range)	
Cylinder Compression	961 ~ 1 471 kPa @410 r/min (rpm) (9.8 ~ 15.0 kgf/cm², 139 ~ 213 psi)	
Cylinder Head Warp	– – –	0.05 mm (0.002 in.)
Camshaft		
Cam Height:		
Inlet	35.419 ~ 35.527 mm (1.39 ~ 1.40 in.)	35.32 mm (1.39 in.)
Exhaust	35.419 ~ 35.527 mm (1.39 ~ 1.40 in.)	35.32 mm (1.39 in.)
Camshaft Journal, Camshaft Cap Clearance	0.030 ~ 0.071 mm (0.0012 ~ 0.0028 in.)	0.16 mm (0.006 in.)
Camshaft Journal Diameter	24.950 ~ 24.970 mm (0.982 ~ 0.983 in.)	24.92 mm (0.98 in.)
Camshaft Bearing Inside Diameter	25.000 ~ 25.021 mm (0.984 ~ 0.985 in.)	25.08 mm (0.99 in.)
Camshaft Runout	not more than 0.03 mm (0.0012 in.) TIR	0.1 mm (0.04 in.) TIR
Rocker Arm Inside Diameter	12.500 ~ 12.518 mm (0.492 ~ 0.493 in.)	12.55 mm (0.494 in.)
Rocker Shaft Diameter	12.466 ~ 12.484 mm (0.4908 ~ 0.4915 in.)	12.44 mm (0.489 in.)
Valves		
Valve Clearance (When Cold):		
Inlet	0.13 ~ 0.18 mm (0.0051 ~ 0.0070 in.)	– – –
Exhaust	0.18 ~ 0.23 mm (0.0070 ~ 0.0091 in.)	– – –
Valve Head Thickness:		
Inlet	0.5 mm (0.02 in.)	0.25 mm (0.01 in.)
Exhaust	1 mm (0.04 in.)	0.7 mm (0.028 in.)
Valve Stem Bend	Less than 0.01 mm (0.0004 in.) TIR	0.05 mm (0.002 in.) TIR
Valve Stem Diameter:		
Inlet	5.475 ~ 5.490 mm (0.2156 ~ 0.2161 in.)	5.46 mm (0.215 in.)
Exhaust	5.455 ~ 5.470 mm (0.2148 ~ 0.2154 in.)	5.44 mm (0.214 in.)

Specifications

Item	Standard	Service Limit
Valve Guide Inside Diameter:		
Inlet	5.500 ~ 5.512 mm (0.2165 ~ 0.2170 in.)	5.58 mm
Exhaust	5.500 ~ 5.512 mm (0.2165 ~ 0.2170 in.)	5.58 mm
Valve/Valve Guide Clearance (Wobble Method):		
Inlet	0.02 ~ 0.08 mm (0.0008 ~ 0.0032 in.)	0.22 mm (0.009 in.)
Exhaust	0.07 ~ 0.14 mm (0.0028 ~ 0.0056 in.)	0.27 mm (0.011 in.)
Valve Seating Surface:		
Outside Diameter:		
Inlet	28.3 ~ 28.5 mm (1.114 ~ 1.122 in.)	– – –
Exhaust	24.0 ~ 24.2 mm (0.945 ~ 0.953 in.)	– – –
Width:		
Inlet	0.5 ~ 1.0 mm (0.020 ~ 0.039 in.)	– – –
Exhaust	0.5 ~ 1.0 mm (0.020 ~ 0.039 in.)	– – –
Valve Spring Free Length:		
Inner	36.3 mm (1.43 in.)	35 mm (1.38 in.)
Outer	40.4 mm (1.59 in.)	39 mm (1.54 in.)
Valve Seat Cutting Angle:		
Inlet, Exhaust	32°, 45°, 60°	– – –
Cylinder Piston		
Cylinder Inside Diameter	74.000 ~ 74.012 mm (2.913 ~ 2.914 in.)	74.11 mm (2.918 in.)
Piston Diameter	73.942 ~ 73.957 mm (2.911 ~ 2.912 in.)	73.79 mm (2.91 in.)
Piston/Cylinder Clearance	0.043 ~ 0.070 mm (0.0017 ~ 0.0028 in.)	– – –
Oversize Piston And Rings	+0.5 mm (0.020 in.)	– – –
Piston Ring/Groove Clearance:		
Top	0.03 ~ 0.07 mm (0.0012 ~ 0.0028 in.)	0.17 mm (0.0067 in.)
Second	0.02 ~ 0.06 mm (0.0008 ~ 0.0024 in.)	0.16 mm (0.0064 in.)
Piston Ring Groove Width:		
Top	0.82 ~ 0.84 mm (0.0324 ~0.0331 in.)	0.92 mm (0.036 in.)
Second	1.01 ~ 1.03 mm (0.0398 ~ 0.0406 in.)	1.11 mm (0.044 in.)
Oil	2.01 ~ 2.03 mm (0.0791 ~ 0.0749 in.)	2.11 mm (0.083 in.)

Specifications

Item	Standard	Service Limit
Piston Ring Thickness:		
Top	0.77 ~ 0.79 mm (0.0303 ~ 0.0311 in.)	0.7 mm (0.028 in.)
Second	0.97 ~ 0.99 mm (0.0382 ~ 0.0390 in.)	0.9 mm (0.035 in.)
Piston Ring End Gap:		
Top	0.2 ~ 0.35 mm (0.0079 ~ 0.0138 in.)	0.7 mm (0.028 in.)
Second	0.2 ~ 0.35 mm (0.0079 ~ 0.0138 in.)	0.7 mm (0.028 in.)
Oil	0.2 ~ 0.7 mm (0.0079 ~ 0.0275 in.)	1.0 mm (0.039 in.)

AT: Austria Model
CA: Canada Model
CH: Switzerland Model
DE: Germany Model
KR: Korea Model
US: United States Model

Special Tools and Sealant

Piston Ring Pliers:
57001-115

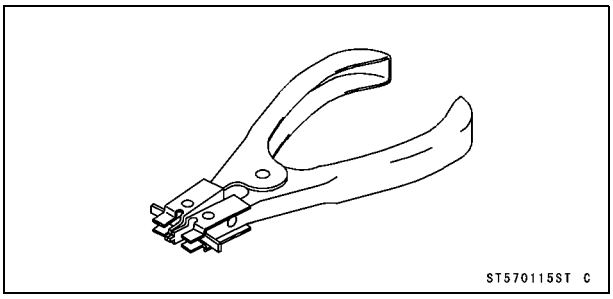

Compression Gauge, 20 kgf/cm²:
57001-221

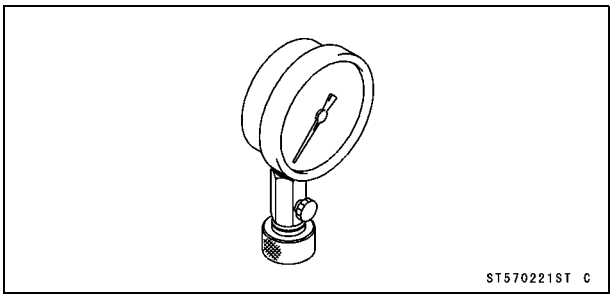

Valve Spring Compressor Assembly:
57001-241

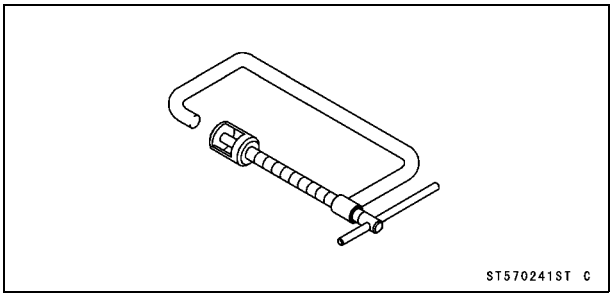

Piston Pin Puller Assembly:
57001-910

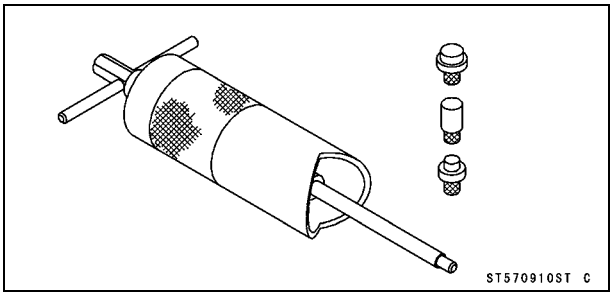

Valve Guide Reamer, ϕ5.5:
57001-1020

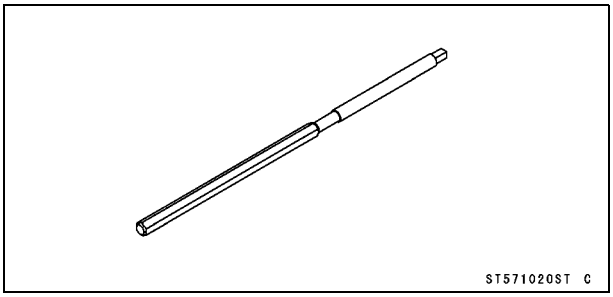

Valve Guide Arbor, ϕ5.5:
57001-1021

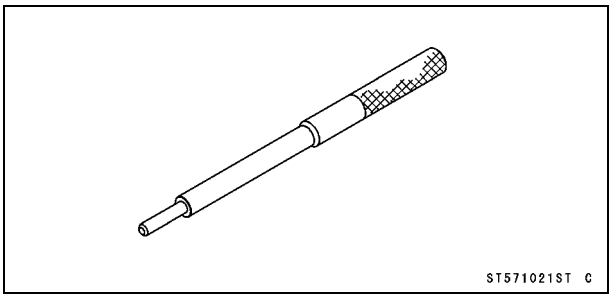

Valve Seat Cutter, 45° - ϕ24.5:
57001-1113

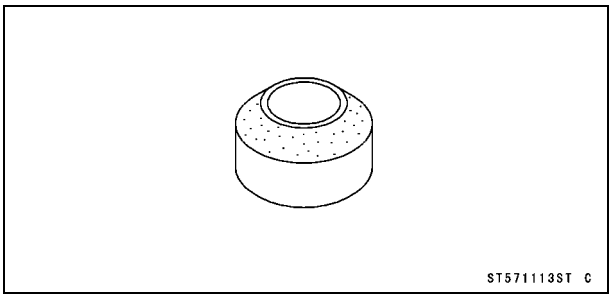

Valve Seat Cutter, 32° - ϕ25:
57001-1118

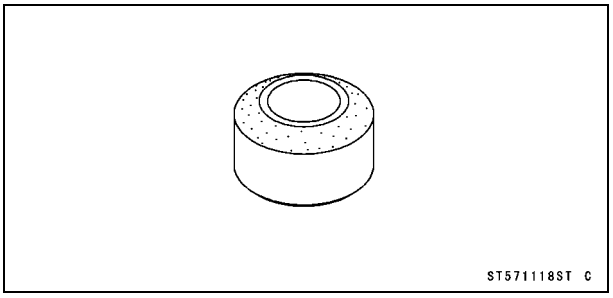

Valve Seat Cutter, 32° - ϕ30:
57001-1120

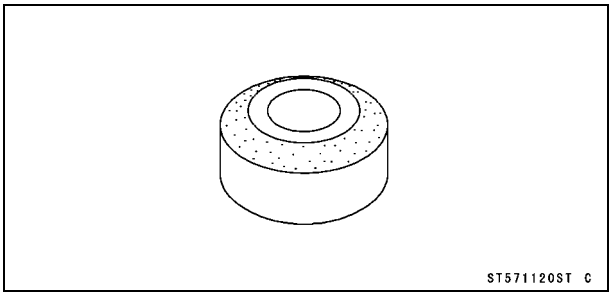

Valve Seat Cutter, 60° - ϕ30:
57001-1123

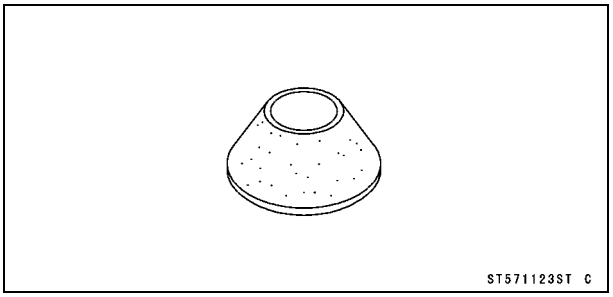

Special Tools and Sealant

Valve Seat Cutter Holder, ϕ5.5:
57001-1125

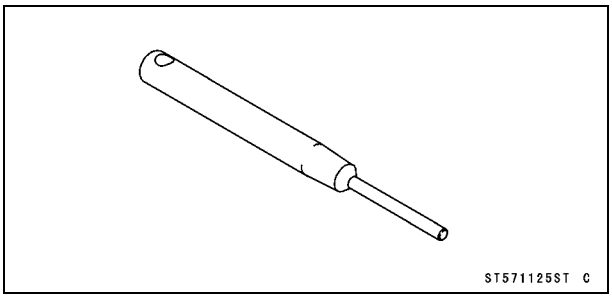

Valve Seat Cutter Holder Bar:
57001-1128

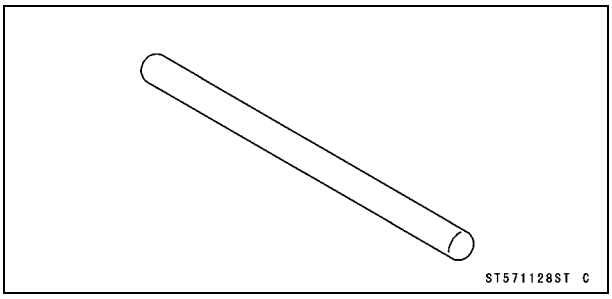

Compression Gauge Adapter, M12 × 1.25:
57001-1183

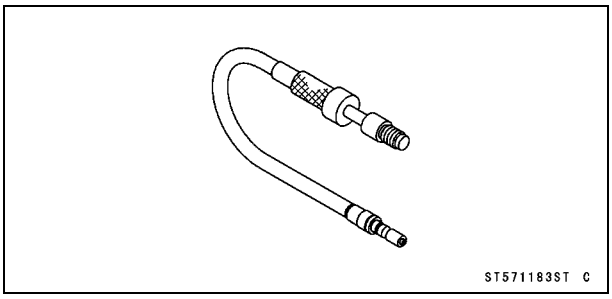

Valve Seat Cutter, 45° - ϕ30:
57001-1187

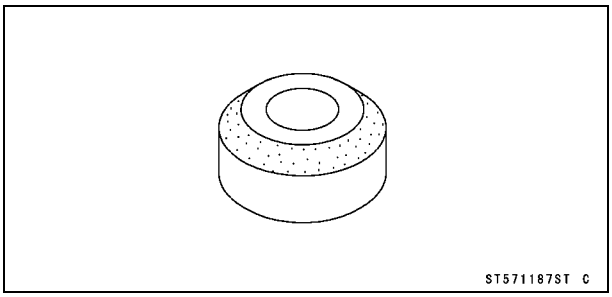

Valve Spring Compressor Adapter, ϕ22:
57001-1202

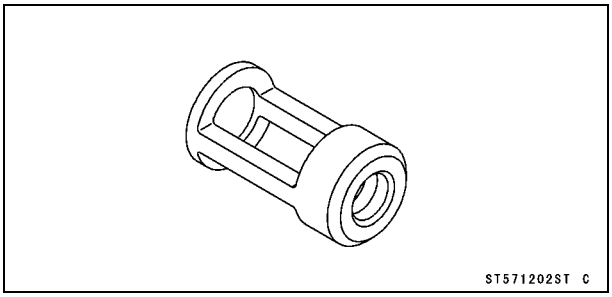

Fork Oil Level Gauge:
57001-1290

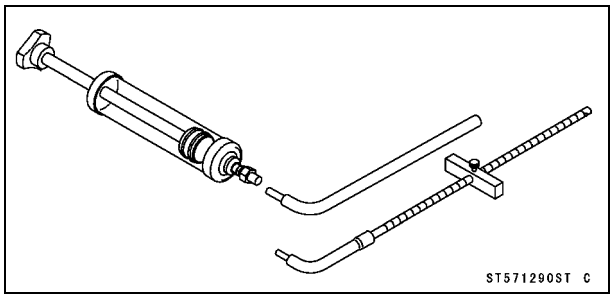

Valve Seat Cutter, 60° - ϕ25:
57001-1328

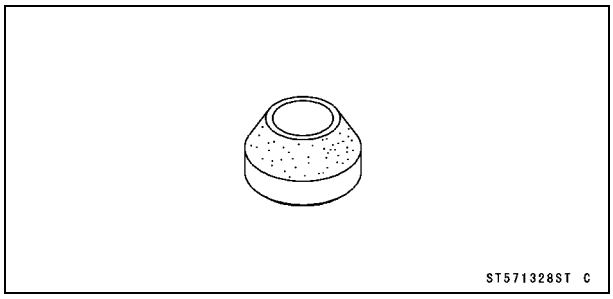

Vacuum Gauge:
57001-1369

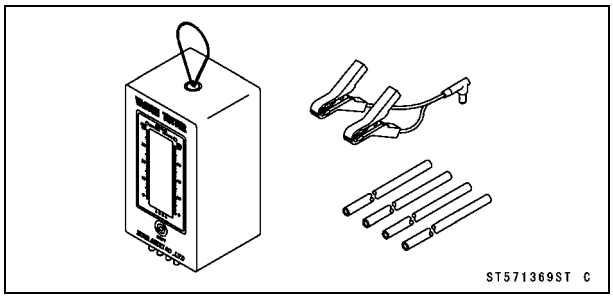

Filler Cap Driver:
57001-1454

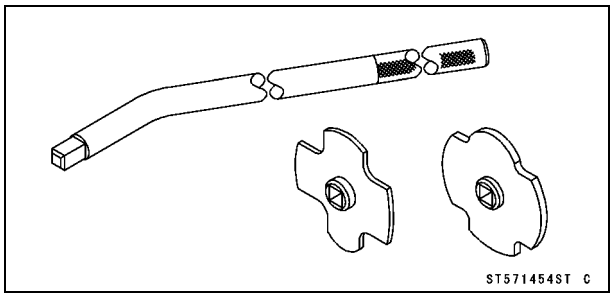

Kawasaki Bond (Silicone Sealant):
56019-120

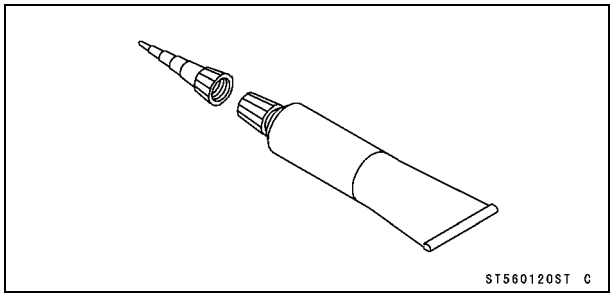

Clean Air System (US, CH, AT, KR, C2 ~ CA, DE & C6 ~ EUR, FR)

Air Suction Valve Installation

- Install the valve assembly [A] between the cylinder head cover and the cap.
- Tighten the cap bolts.

Torque - Air Suction Valve Cover Bolts: 11 N·m (1.1 kgf·m, 95 in·lb)

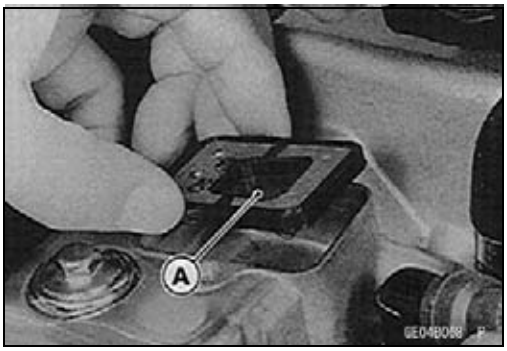

Vacuum Switch Valve Installation

- Install the switch valve so that the air hole [A] faces downwards.

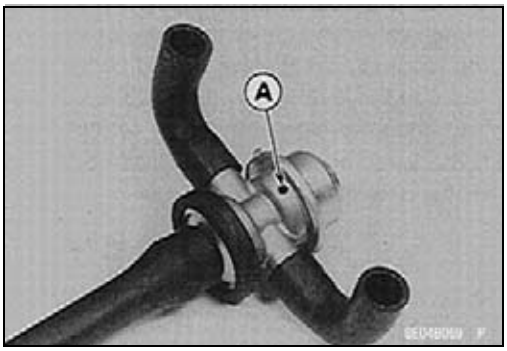

Air Suction Valve Inspection

The air suction valve is essentially a check valve which allows fresh air to flow from the air cleaner into the exhaust port. Any air that has passed the air suction valve is prevented from returning to the air cleaner.

- Remove the air suction valves.
- Visually inspect the reeds [A] for cracks, folds, warps, heat damage, or other damage.

★If there is any doubt as to the condition of the reed, replace the air suction valve as an assembly.

- Check the reed contact areas [B] of the valve holder for grooves, scratches, any signs of separation from the holder, or heat damage.

★If there is any doubt as to the condition of the reed contact areas, replace the air suction valve as an assembly.

- If any carbon or other foreign particles have accumulated between the reed and the reed contact area, wash the valve assembly clean with a high-flash point solvent.

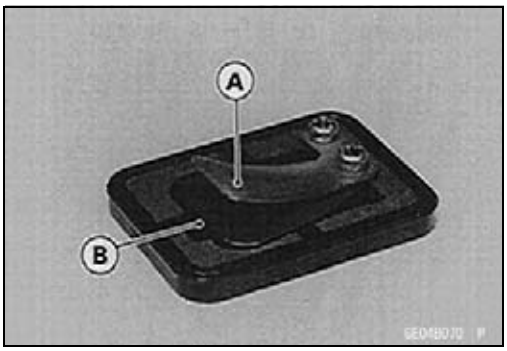

CAUTION
Do not scrape off the deposits with a scraper as this could damage the rubber, requiring replacement of the suction valve assembly.

Clean Air System Hose Inspection

- Be certain that all the hoses are routed without being flattened or kinked, and are connected correctly to the air cleaner housing, silencer, vacuum switch valve, carburetors, and air suction valve covers.

★If they are not, correct them. Replace them if they are damaged.

Clean Air System (US, CH, AT, KR, C2 ~ CA, DE & C6 ~ EUR, FR)

Vacuum Switch Valve Test

Using the vacuum gauge and a syringe, inspect the vacuum switch operation as follows.

- Remove the vacuum switch valve.
- Connect the vacuum gauge [A] and syringe [B] or fork oil level gauge to the vacuum hoses as shown.
  Air Flow [C]

Special Tools - Vacuum Gauge: 57001-1369
Fork Oil Level Gauge: 57001-1290

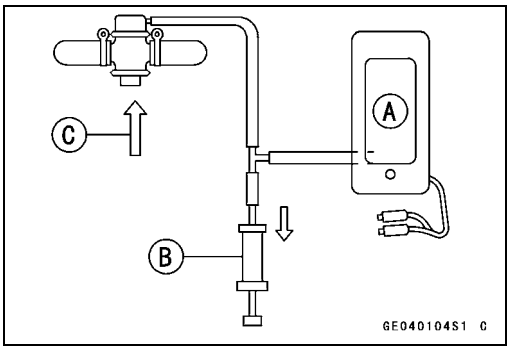

- Gradually raise the vacuum (lower the pressure) applied to the vacuum switch valve, and check the valve operation. When the vacuum is low, the vacuum switch valve should permit air to flow. When the vacuum raises to valve closing pressure, it should stop air flow.
  Spring [A]
  Diaphragm [B]
  Valve [C]
  Low Vacuum [D]
  Secondary Air Flow [E]

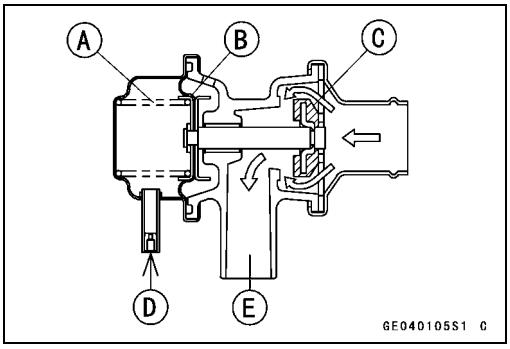

★If the vacuum switch valve does not operate as described, replace it with a new one.

NOTE

○*To check air flow through the vacuum switch valve, just blow through the air cleaner hose.*

Vacuum Switch Valve Closing Pressure (open → close)
Standard: 57 ~ 65 kPa (0.58 ~ 0.66 kgf/cm², 8.3 ~ 9.4 psi)

High Vacuum [A]
Secondary air cannot flow [B]

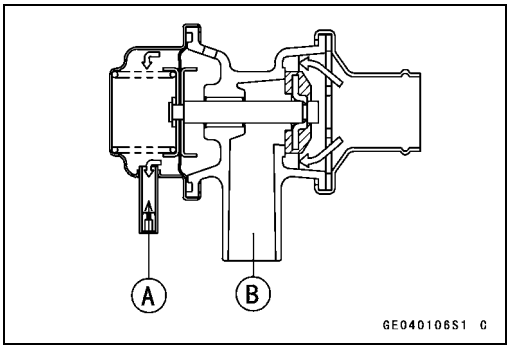

Clean Air System Hose Inspection

- Be certain that all the hoses are routed without being flattened or kinked, and are connected correctly to the air cleaner housing, vacuum switch valve, and air suction valve covers.

★If they are not, correct them. Replace them if they are damaged.

Cylinder Head Cover

Cylinder Head Cover Removal

- Drain the coolant (see Coolant Draining in the Cooling System chapter).
- Remove:
  Seat (see Seat Removal in the Frame chapter)
  Fuel Tank (see Fuel Tank Removal in the Fuel System chapter)
  Ignition Switch [A]
  Radiator Fan [B]
  Ignition Coils [C] with Spark Plug Caps

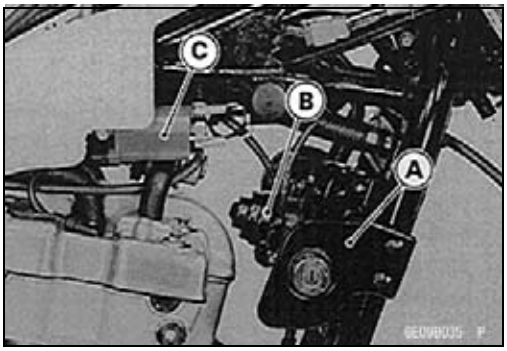

Air Suction Valves with Hoses (AT, KR, CH, US and EN500-C2 ~ CA, DE Models)
Water Pipes [A] with Hoses [B]

- Unscrew the cylinder head cover bolts [C] and remove the cylinder head cover.

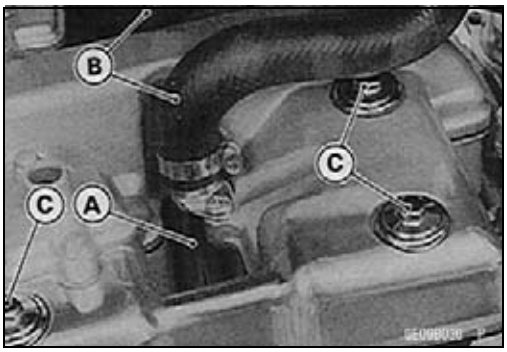

Cylinder Head Cover Installation

- Replace the head cover gasket [A] with a new one, if it is damaged.
- Stick the gasket to the cover with a liquid gasket [B] for installation convenience.
- Be sure to install the knock pins [C].
- Apply silicone sealant [D] as shown.

  Sealant - Kawasaki Bond (Silicone Sealant): 56019-120

- Tighten the cover bolts [E].

  Torque - Cylinder Head Cover Bolts: 9.8 N·m (1.0 kgf·m, 87 in·lb)

- Install the removed parts in reverse of removal.

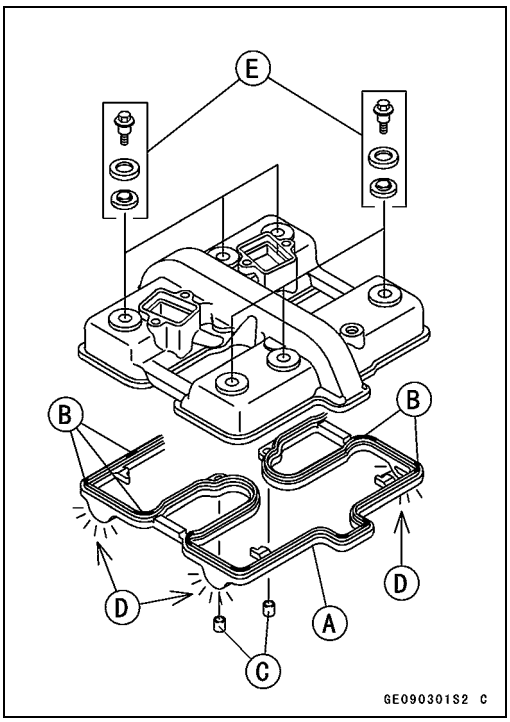

Camshaft Chain Tensioner

Camshaft Chain Tensioner Removal

CAUTION

This is a non-return type cam chain tensioner. The push rod does not return to its original position once it moves out to take up cam chain slack. Observe all the rules listed below:
When removing the tensioner, do not take out the mounting bolts only halfway. Retightening the mounting bolts from this position could damage the tensioner and the camshaft chain. Once the bolts are loosened, the tensioner must be removed and reset as described in "Chain Tensioner Installation".
Do not turn over the crankshaft while the tensioner is removed. This could upset the cam chain timing, and damage the valves.

- Loosen the cap bolt [A] before tensioner removal for later disassembly convenience.
- Unscrew the mounting bolts [B] and remove the camshaft chain tensioner [C].

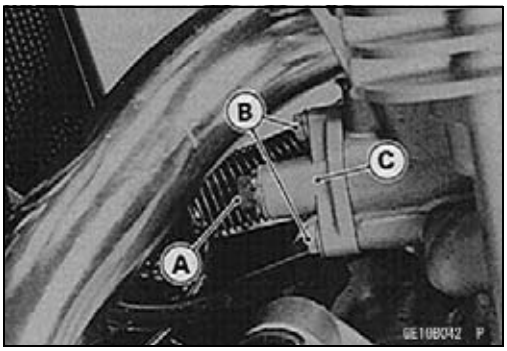

Camshaft Chain Tensioner Installation

- Release the stopper [A] and push the rod [B] into the tensioner body [C].

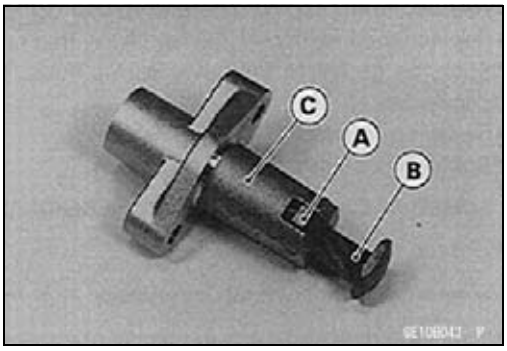

- Tighten the mounting bolts.

  Torque - Camshaft Chain Tensioner Mounting Bolts: 11 N·m (1.1 kgf·m, 95 in·lb)

- Install the spring [A], washer [B], and tighten the cap bolt [C].

  Torque - Camshaft Chain Tensioner Cap Bolt: 4.9 N·m (0.5 kgf·m, 43 in·lb)

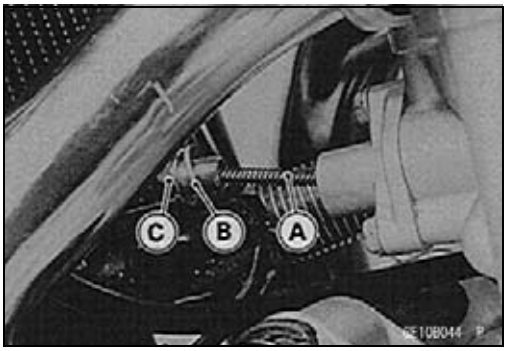

Camshaft, Camshaft Chain

Camshaft Removal

- Remove the cylinder head cover.
- Position the crankshaft at #2 piston TDC.

○Using a wrench on the crankshaft rotation bolt turn the crankshaft clockwise until the "C" mark line [A] on the rotor is aligned with the notch [B] in the edge of the upper hole in the alternator cover.

Special Tool - Filler Cap Driver: 57001-1454

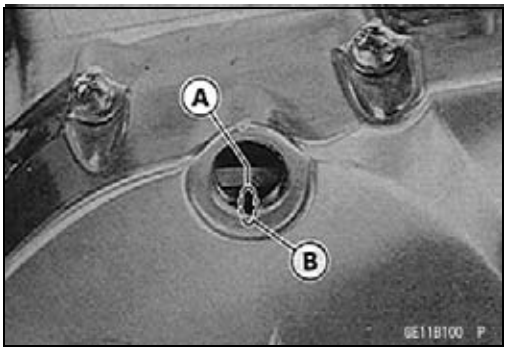

- Remove:
  Cam Chain Tensioner (see Cam Chain Tensioner Removal).
  Cylinder Head Oil Pipes [A]
  Top Chain Guide [B]
  Camshaft Caps [C]
  Camshafts [D]
- Stuff a clean cloth into the chain tunnel to keep any parts from dropping into the crankcase.

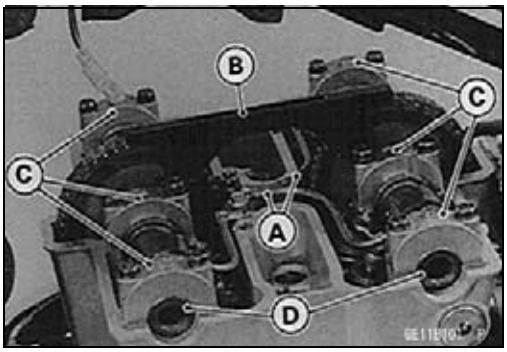

CAUTION

The crankshaft may be turned while the camshafts are removed. Always pull the chain taut while turning the crankshaft. This avoids kinking the chain on the lower (crankshaft) sprocket. A kinked chain could damage both the chain and the sprocket.

Camshaft Installation

- Apply engine oil to all cam parts and journals.
- If the camshaft(s) and/or cylinder head are replaced with new ones, apply a thin coat of a molybdenum disulfide grease on the new cam part surfaces.

NOTE

○*The Exhaust camshaft has an EX mark [A] and the inlet camshaft has an IN mark [B]. Be careful not to mix up these shafts.*

○*Be sure to operate from the engine left side.*

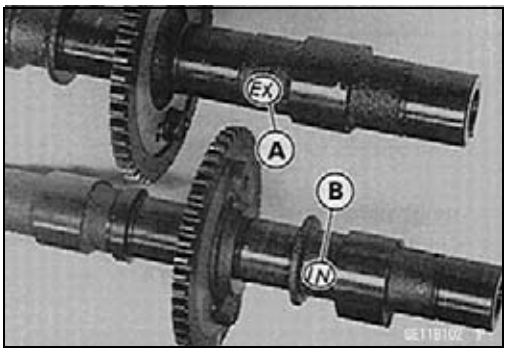

- Position the crankshaft at #2 piston TDC (see Camshaft Removal).

CAUTION

The crankshaft may be turned while the camshafts are removed. Always pull the chain taut while turning the crankshaft. This avoids kinking the chain on the lower (crankshaft) sprocket. A kinked chain could damage both the chain and the sprocket.

Camshaft, Camshaft Chain

- Engage the camshaft chain with the camshaft sprockets.
  - ○Pull the tension side [A] (inlet side) of the chain taut to install the chain.
  - ○The timing marks [B] on the inlet sprocket [C] must be aligned with the cylinder head upper surface [D].
- Pull the chain taut and fit it onto the camshaft sprocket.
- Starting with the punch mark [E] on the top of the inlet sprocket, count to the 24th pin. Feed the inlet camshaft through the chain and align the 24th pin with the punch mark [F] on the exhaust camshaft sprocket [G].

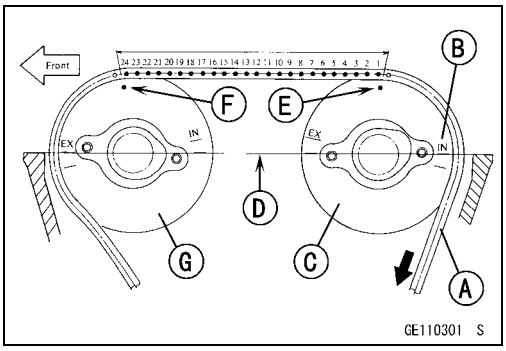

- Be sure to install the knock pins.
- Install the camshaft caps and top chain guide in the correct locations as shown. Location alphabets are marked on the cylinder head and each cap.

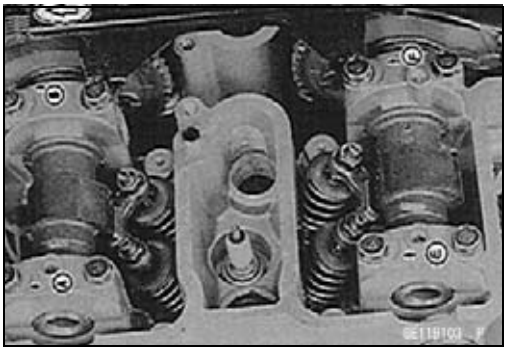

CAUTION

The camshaft caps are machined with the cylinder head. So, if a cap is installed in a wrong location, the camshaft may seize because of improper oil clearance in the bearings.

- First tighten down the two camshaft cap bolts (#1 and #2 bolts in the figure) evenly to seat the camshafts in place, then tighten all bolts following the specified tightening sequence.

  Torque - Camshaft Cap Bolts: 12 N·m (1.2 kgf·m, 104 in·lb)

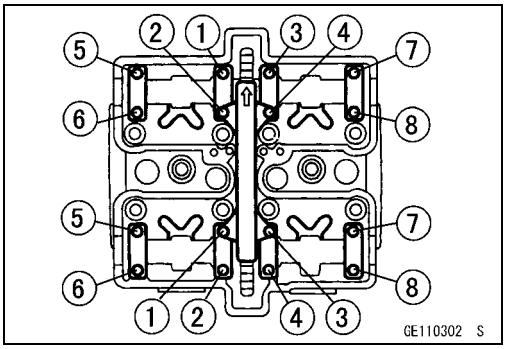

- Install the head oil pipes.

  Torque - Oil Pipe Bolts: 11 N·m (1.1 kgf·m, 95 in·lb)
- Install the cam chain tensioner (see Cam Tensioner Installation).
- Check the chain timing.

Camshaft and Sprocket Assembly

○The inlet and exhaust sprockets are identical.

- Install the sprockets so that the marked [A] ("IN" and "EX") side faces to the left side.

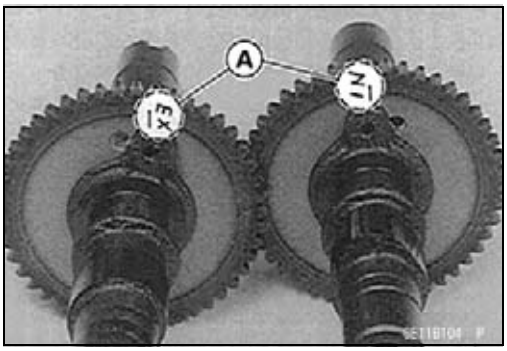

CAUTION

Inlet sprocket must use "I" marked bolt holes.
Exhaust sprocket must use "E" marked bolt holes.

- Apply a non-permanent locking agent to the camshaft sprocket bolts and tighten them.

  Torque - Camshaft Sprocket Bolts: 15 N·m (1.5 kgf·m, 11 ft·lb)

★If a new camshaft is to be used, apply a thin coat of a molybdenum disulfide grease to the cam surfaces.

Camshaft, Camshaft Chain

Camshaft, Camshaft Cap Wear Inspection

The journal wear is measured using plastigage (press gauge), which is inserted into the clearance to be measured. The plastigage indicates the clearance by the amount it is compressed and widened when the parts are assembled.

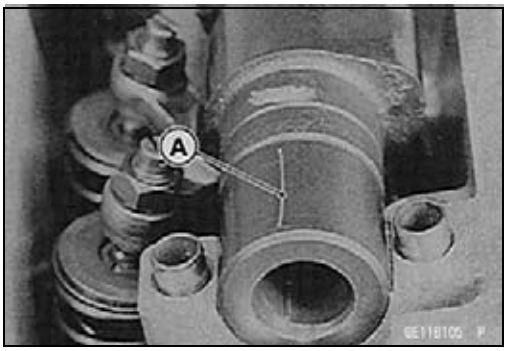

- Cut strips of plastigage to journal width. Place a strip on each journal parallel to the camshaft with the camshaft installed in the correct position and so that the plastigage will be compressed between the journal and camshaft cap.
  [A] Plastigage Strip

- Install the camshaft caps, tightening the bolts in the correct sequence.

  Torque - Camshaft Cap Bolts: 12 N·m (1.2 kgf·m, 104 in·lb)

NOTE

○*Do not turn the camshaft when the plastigage is between the journal and camshaft cap.*

- Remove the camshaft caps again, and measure the plastigage width [A] to determine the clearance between each journal and camshaft cap. Measure the widest portion of the plastigage.

★If any clearance exceeds the service limit, measure the camshaft journal diameter and the camshaft bearing inside diameter.

★If any of the measurements is beyond the service limit, replace the worn part and check the clearance again.

Camshaft Journal, Camshaft Cap Clearance

Standard:	**0.030 ~ 0.071 mm (0.0012 ~ 0.0028 in.)**
Service Limit:	**0.16 mm (0.006 in.)**

Camshaft Chain Guide Wear Inspection

- Visually inspect the rubber [A] on the guides.

★If the rubber is damaged or cut, replace the guides.

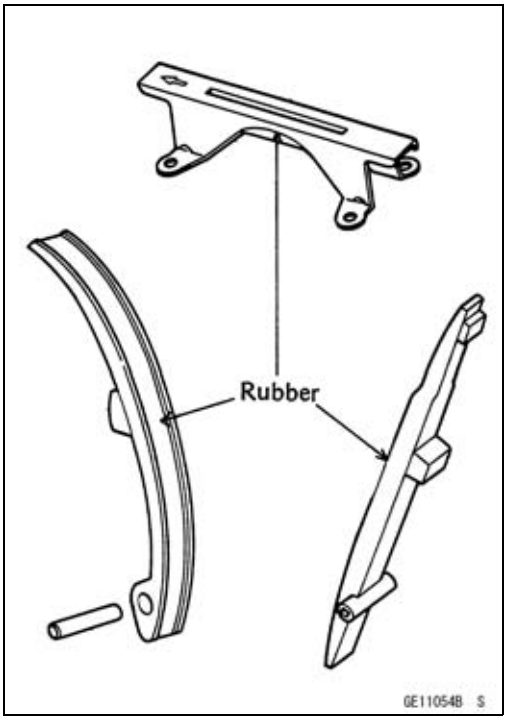

Rocker Shaft, Rocker Arm

Rocker Shaft, Rocker Arm Removal

- Remove the camshafts (see Camshaft Removal).
- Unscrew the rocker shafts [A] and remove the rocker arms [B] and springs [C].

○Mark and record the rocker arm locations so that the rocker arm can be reinstalled in their original positions.

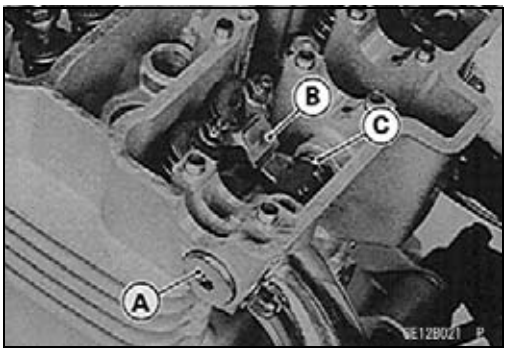

Rocker Shaft, Rocker Arm Installation

- Blow the rocker arm oil passage [A] clean with compressed air.
- Apply engine oil to all the rocker arms and the rocker shafts.

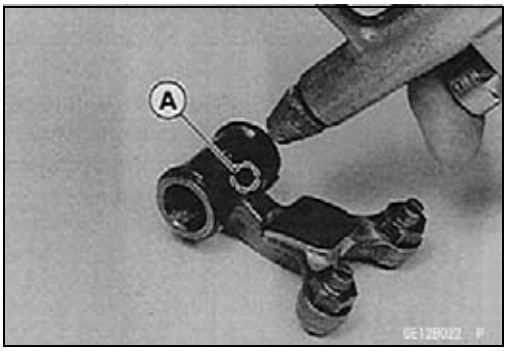

- Install the retainer spring [A] on each rocker arm so that the spring is placed to the camshaft chain side.
- Check that the O-rings are in good condition and install the O-rings onto the rocker shafts.
- Insert the shaft running it through the cylinder head, rocker arms and springs.
- Tighten the rocker shafts.

Torque - Rocker Shafts: 39 N·m (4.0 kgf·m, 29 ft·lb)

Install the camshaft (see Camshaft Installation).

- Check the chain timing.

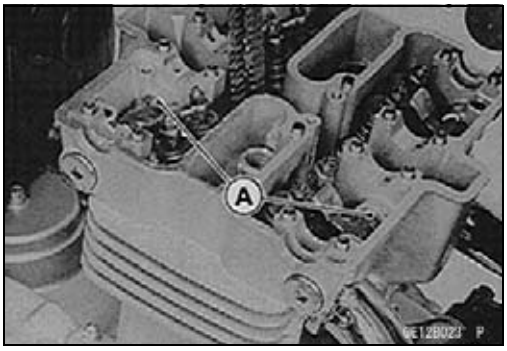

Oil Pipe

Cylinder Head Oil Pipe Removal

- Remove the oil pipe mounting bolts [A] and pull the oil pipes [B] and O-rings out of the cylinder head.

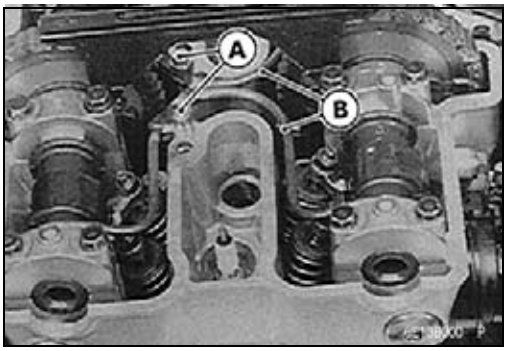

Cylinder Head Oil Pipe Installation

- Flush out the oil pipes with a high-flash point solvent.
- Check that the O-rings are in good condition.

★If they are damaged, replace them with new ones.

- Apply a small amount of oil to the O-rings.
- Fix the oil pipes properly into the cylinder head oil passage holes by pushing both ends at the same time.
- Install the oil pipe mounting bolts.

Main Oil Pipe Removal

- Remove:
  Carburetor (see Carburetor Removal in the Fuel System chapter)
  Starter Motor (see Starter Motor Removal in the Electrical System chapter)
- Unscrew the banjo bolts [A] and mounting bolt [B].
- Remove the oil pipe [C].

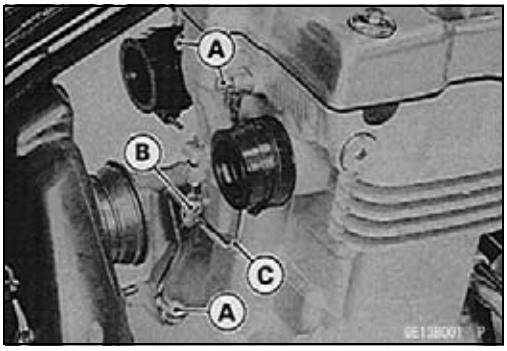

Main Oil Pipe Installation

- Flush out the oil pipes with a high-flash point solvent.
- Discard the used gaskets and install new gaskets on each side of the pipe fittings.
- Tighten the banjo bolts and mounting bolt to a snug fit, and then tighten them to the specified torque.

Torque - Main Oil Pipe Upper Banjo Bolts: 12 N·m (1.2 kgf·m, 104 in·lb)
Main Oil Pipe Lower Banjo Bolt: 20 N·m (2.0 kgf·m, 14.5 ft·lb)
Main Oil Pipe Mounting Bolt: 11 N·m (1.1 kgf·m, 95 in·lb)

Cylinder Head

Compression Measurement

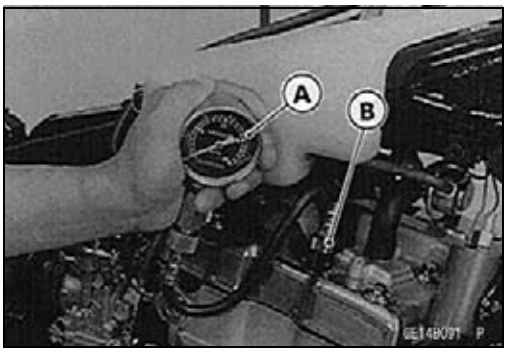

- Remove the seat (see Seat Removal in the Frame chapter).
- Thoroughly warm up the engine so that the engine oil between the piston and cylinder wall will help seal compression as it does during normal running.
- Stop the engine, remove the fuel tank, ignition coil and spark plugs, and attach the compression gauge firmly into the spark plug hole.

Special Tools - Compression Gauge, 20 kgf/cm² [A]: 57001-221
Compression Gauge Adapter, M12 × 1.25 [B]: 57001-1183

- Measure the cylinder compression.
- Using the starter motor, turn the engine over with the throttle fully open until the compression gauge stops rising; the compression is the highest reading obtainable.

NOTE

○*Be sure the battery is fully charged.*
○*Be sure no air leaks out of the cylinder head gasket.*

Cylinder Compression (Usable Range)
961 ~ 1 471 kPa (9.8 ~ 15.0 kgf/cm², 139 ~ 213 psi) @410 r/min (rpm)

- Repeat the measurement for the other cylinder.

★If cylinder compression is higher than the usable range, check the following:

1. Carbon build-up on the piston head and cylinder head. - clean off any carbon on the piston head and cylinder head.
2. Cylinder head gasket, cylinder base gasket - use only the proper gaskets for the cylinder head and base. The use of gaskets of the incorrect thickness will change the compression.
3. Valve stem oil seals and piston rings - rapid carbon accumulation in the combustion chambers may be caused by damaged valve stem oil seals and/or damaged piston oil rings. This may be indicated by white exhaust smoke.

★If cylinder compression is lower than the usable range, check the following:

1. Gas leakage around the cylinder head - replace the damaged gasket and check the cylinder head for warping.
2. Condition of the valve seating.
3. Valve clearance - if a valve requires an unusually large adjustment to obtain proper clearance, the valve may be bent, and not seating completely.
4. Piston/cylinder clearance, piston seizure.
5. Piston ring, piston ring groove.

Cylinder Head

Cylinder Head Removal

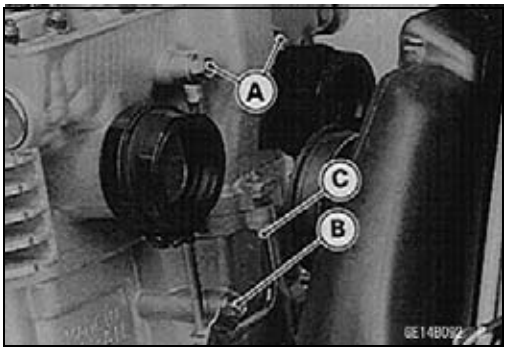

- Remove:
  Cylinder Head Cover (see Cylinder Head Cover Removal)
  Exhaust Pipes and Mufflers (see Exhaust Pipe, Muffler Removal)
  Cam Chain Tensioner (see Chain Tensioner Removal)
  Camshafts (see Camshaft Removal)
  Carburetors (see Carburetor Removal in the Fuel System chapter)
- Remove the main oil pipe banjo bolts [A].
- Loosen the main oil pipe mounting bolt [B].
- Remove the rear 6 mm cylinder head bolt [C].

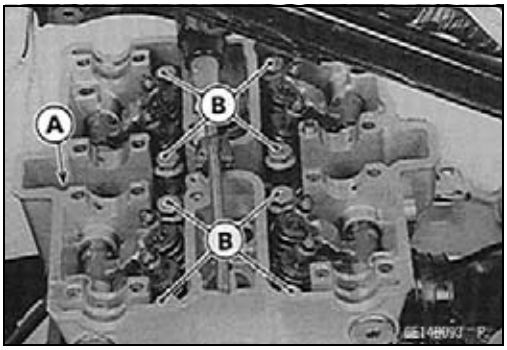

- Remove the front 6 mm cylinder head bolt [A] first, then remove the 10 mm cylinder head bolts [B]. This prevents excessive stress on the small bolts.

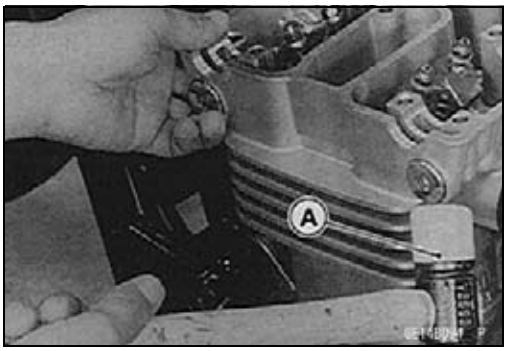

- Tap in the places shown with a mallet [A] to remove the cylinder head.

Cylinder Head Installation

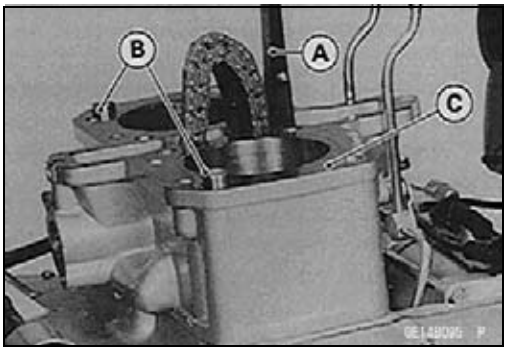

- Install the rear chain guide [A], knock pins [B] and gasket [C].

Cylinder Head

- Install a new cylinder head gasket with “UP” [A] marked side positioning to the right.

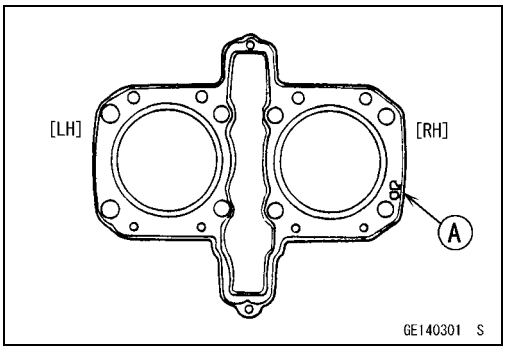

NOTE

○*The camshaft caps are machined with the cylinder head so if a new cylinder head is installed, use the caps that are supplied with the new head.*

- Tighten the 10 mm cylinder head bolts following the tightening sequence. Tighten them first to about one half of the specified torque.

Torque - Cylinder Head Bolts 10 mm: 51 N·m (5.2 kgf·m, 38 ft·lb)
Cylinder Head Bolts 6 mm: 9.8 N·m (1.0 kgf·m, 87 in·lb)

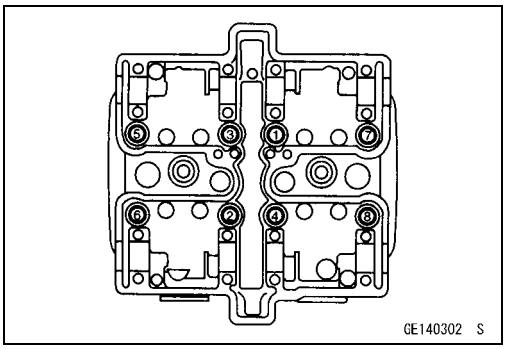

- Tighten the 6 mm cylinder bolts.
- Install the camshafts, camshaft caps and top chain guide.
- Install the head oil pipes.

Cylinder Head Warp Inspection

- Clean the cylinder head (see Cylinder Head Cleaning).
- Lay a straightedge [A] across the lower surface of the head at several different points, and measure warp by inserting a thickness gauge [B] between the straightedge and the head.

★If warp exceeds the service limit, repair the mating surface. Replace the cylinder head if the mating surface is badly damaged.

Cylinder Head Warp
Service Limit: 0.05 mm (0.002 in.)

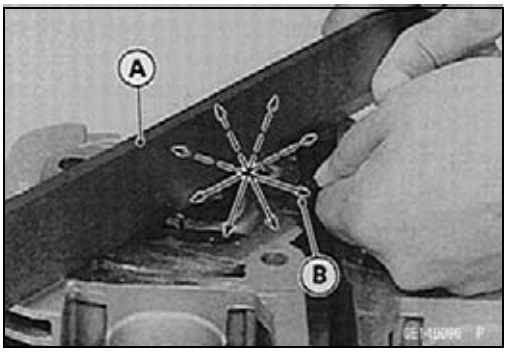

Cylinder Head Cleaning

- Remove the cylinder head (see Cylinder Head Removal).
- Remove the valves (see Valve Removal).
- Wash the head with a high-flash point solvent.
- Scrape [A] the carbon out of the combustion chamber and exhaust port with a suitable tool.

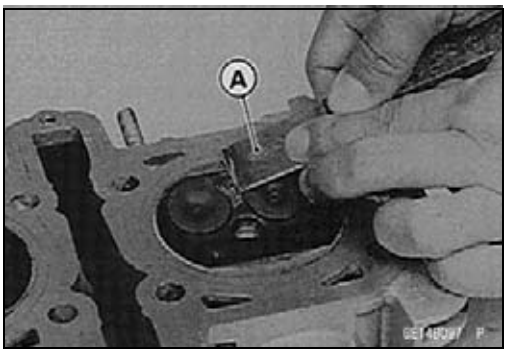

Cylinder Head

- Using compressed air, blow out any particles which may obstruct the oil passage [A] in the cylinder head.
- Install the valves (see Valve Installation).

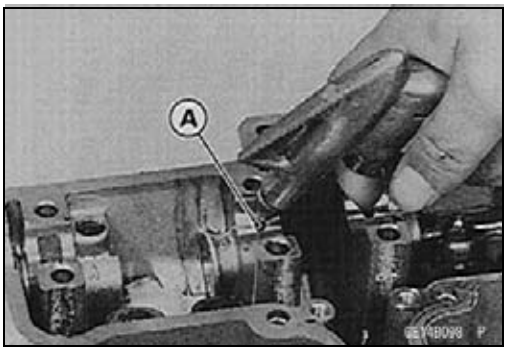

Valves

Valve Clearance Inspection

NOTE

○*Valve clearance must be checked and adjusted when the engine is cold (room temperature).*

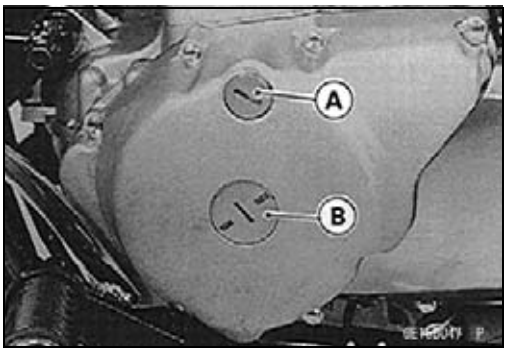

- Remove the cylinder head cover (see Cylinder Head Cover Removal).
- Remove the cylinder head oil pipes (see Cylinder Head Oil Pipe Removal).
- Unscrew the upper [A] and lower [B] caps on the alternator cover.

Special Tool - Filler Cap Driver: 57001-1454

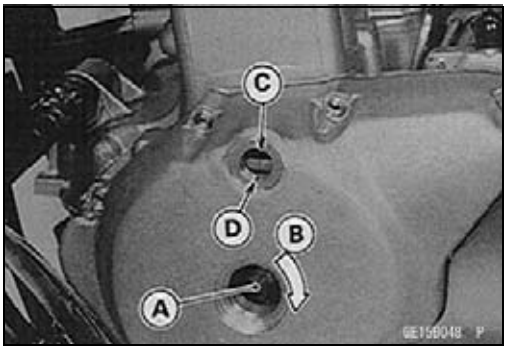

- Check the valve clearance when the pistons are at TDC.

○The pistons are numbered beginning with the engine left side.

- Using a wrench on the crankshaft rotation bolt [A], turn the crankshaft clockwise [B] until the “C” mark [C] on the rotor is aligned with the notch [D] in the edge of the upper hole in the alternator cover for #2 piston and “T” mark for #1 piston.

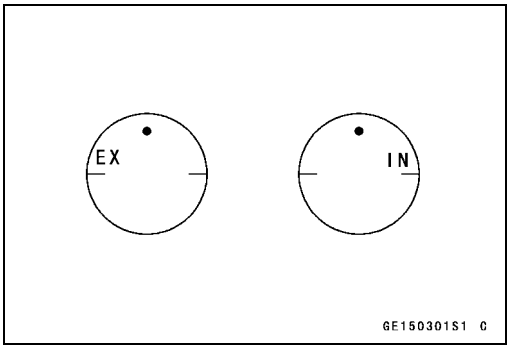

○Measure the valve clearance of the valves for which the cam lobe is pointing away from the rocker arm.

- Each piston has two inlet and two exhaust valves. Measure these two inlet or exhaust valves at the same crankshaft position.

Valve Clearance Measuring Position

#2 Piston TDC at End of Compression Stroke →

Inlet valve clearances of #2 piston, and

Exhaust valve clearances of #2 piston

NOTE

○*Check the valve clearance using this method only. Checking the clearance at any other cam position may result in improper valve clearance.*

#1 Piston TDC at End of Compression Stroke →

Inlet valve clearances of #1 piston, and

Exhaust valve clearances of #1 piston

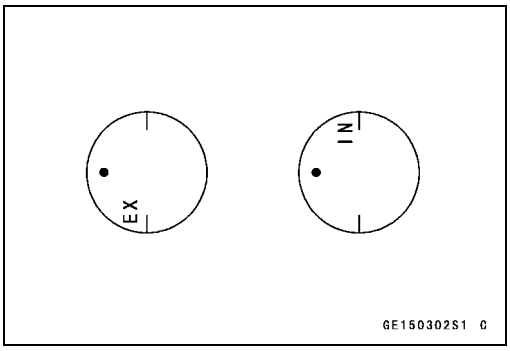

Valves

- Measure the clearance of each valve by inserting a thickness gauge [A] between the adjusting screw [B] and the valve stem.

Valve Clearance (when cold)
Inlet: 0.13 ~ 0.18 mm (0.0051 ~ 0.0070 in.)
Exhaust: 0.18 ~ 0.23 mm (0.0070 ~ 0.0091 in.)

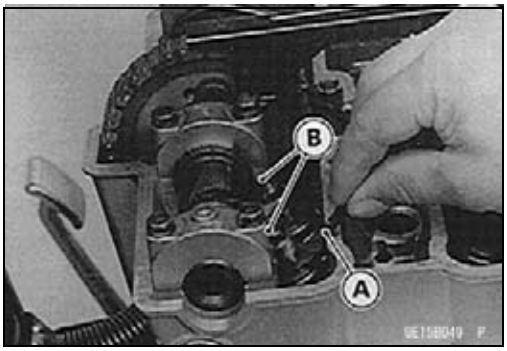

Valve Clearance Adjustment

★If the valve clearance is incorrect, loosen the locknut [A] and turn the adjusting screw [B] until the correct clearance is obtained.
- Tighten the locknut.

Torque - Valve Adjuster Locknuts: 25 N·m (2.5 kgf·m, 18 ft·lb)

- Install the two caps on the alternator cover.

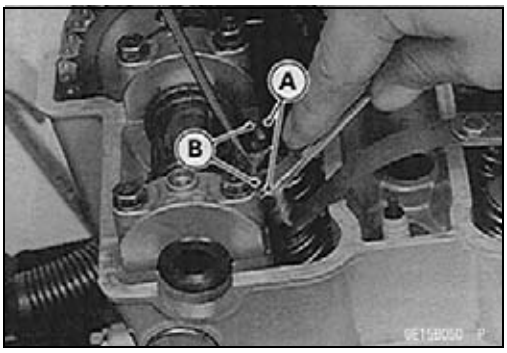

Valve Removal

- Remove the cylinder head (see Cylinder Head Removal).
- Use a valve spring compressor assembly to press down the valve spring retainer, and remove the split keepers.

Special Tools - Valve Spring Compressor Assembly [A]: 57001-241
Valve Spring Compressor Adapter, ϕ22 [B]: 57001-1202

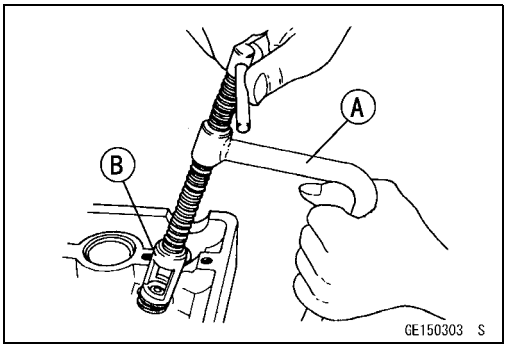

Valve Installation

- Check to see that the valve [A] moves smoothly up and down in the guide.
- Check to see that the valve seats properly in the valve seat. If it does not, repair the valve seat.
- Replace the oil seal [B] with a new one.
- Apply a thin coat of molybdenum disulfide grease to the valve stem before valve installation.
- Be sure to install the inner [C] and outer [D] spring seats under the inner [E] and outer [F] springs.

○Install the springs so that the closed coil [G] end is facing toward the valve seat (downwards).

- Install the spring retainer [H], press it down with the valve spring compressor assembly, and fit the split keeper [I] into place.

Special Tools - Valve Spring Compressor Assembly: 57001-241
Valve Spring Compressor Adapter, ϕ 22: 57001-1202

- Install the other removed parts.

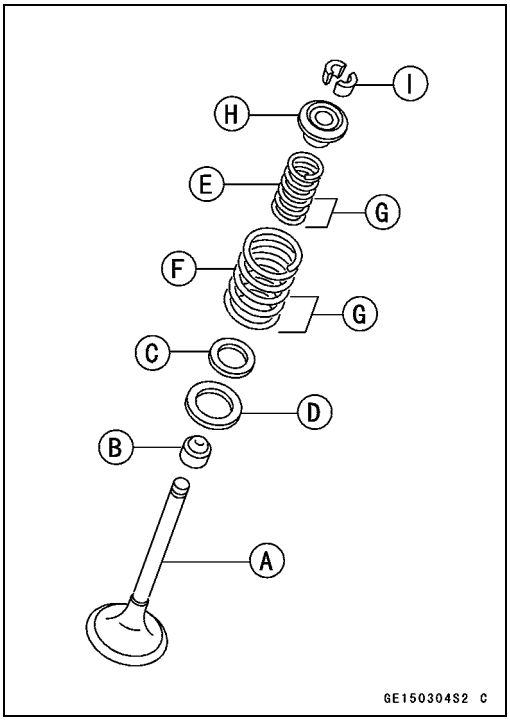

Valve Guide Removal

- Remove:
  Valve (see Valve Removal)
  Oil Seal
  Spring Seats
- Heat the area around the valve guide to about 120 ~ 150°C (248 ~ 302°F), and hammer lightly on the valve guide arbor [A] to remove the guide from the top of the head.

Special Tool - Valve Guide Arbor, ϕ5.5: 57001-1021

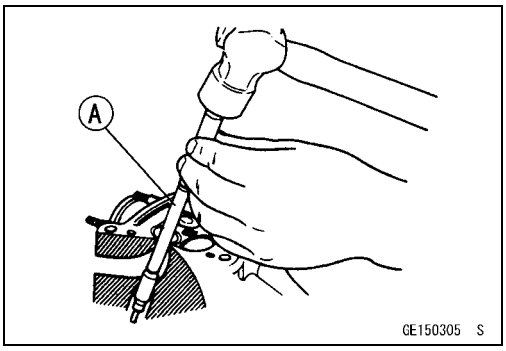

Valve Guide Installation

- Apply oil to the valve guide outer surface before installation.
- Heat the area around the valve guide hole to about 120 ~ 150°C (248 ~ 302°F).
- Drive the valve guide in from the top of the head using the valve guide arbor. The flange stops the guide from going in too far.

Special Tool - Valve Guide Arbor, ϕ5.5: 57001-1021

Ream the valve guide with a valve guide reamer [A] even if the oil guide is reused.

Special Tool - Valve Guide Reamer, ϕ5.5: 57001-1020

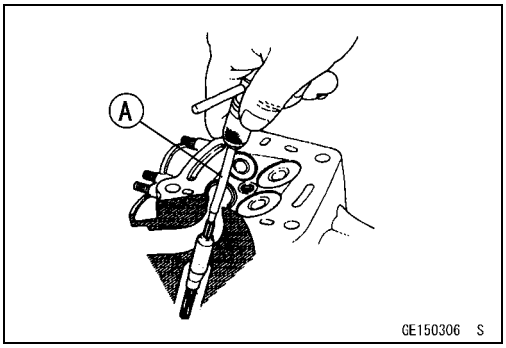

Valve Seat Inspection

- Remove the valve (see Valve Removal).
- Check the valve seating surface [A] between the valve [B] and valve seat [C].

○Coat the valve seat with machinist's dye.
○Push the valve into the guide.
○Rotate the valve against the seat with a lapping tool.
○Pull the valve out, and check the seating pattern on the valve head. It must be the correct width and even all the way around.

- Measure the outside diameter [D] of the seating pattern on the valve seat.

★If the outside diameter of the valve seating pattern is too large or too small, repair the seat (see Valve Seat Repair).

Valve Seating Surface Outside Diameter

Inlet:	**28.3 ~ 28.5 mm (1.114 ~ 1.122 in.)**
Exhaust:	**24.0 ~ 24.2 mm (0.945 ~ 0.953 in.)**

NOTE

○*The valve stem and guide must be in good condition, or this check will not be valid.*

★If the valve seating pattern is not correct, repair the seat (see Valve Seat Repair).

- Measure the seat width [E] of the portion where there is no build-up carbon (white portion) of the valve seat with a vernier caliper.
  Good [F]

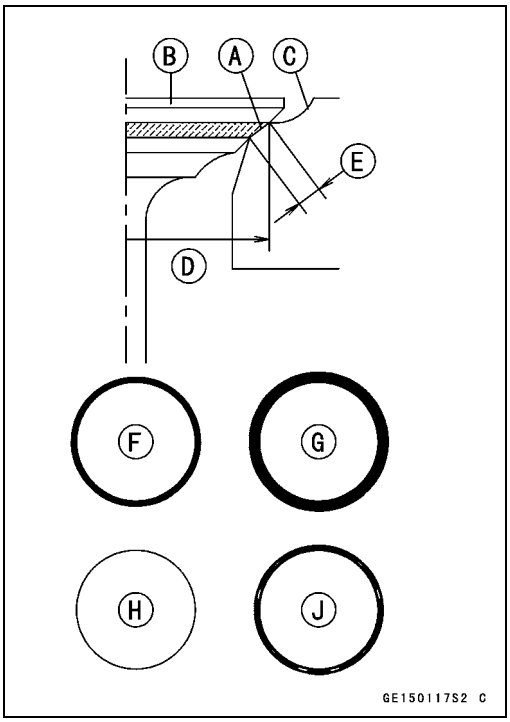

Valves

★If the width is too wide [G], too narrow [H] or uneven [J], repair the seat (see Valve Seat Repair).

Valve Seating Surface Width

Inlet:	**0.5 ~ 1.0 mm (0.0020 ~ 0.039 in.)**
Exhaust:	**0.5 ~ 1.0 mm (0.0020 ~ 0.039 in.)**

Measuring Valve-to-Guide Clearance (Wobble method) Inspection

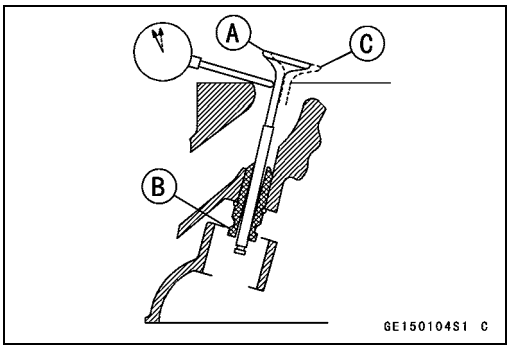

If a small bore gauge is not available, inspect the valve guide wear by measuring the valve to valve guide clearance with the wobble method, as indicated below.

- Insert a new valve [A] into the guide [B] and set a dial gauge against the stem perpendicular to it as close as possible to the cylinder head mating surface.
- Move the stem back and forth [C] to measure valve/valve guide clearance.
- Repeat the measurement in a direction at a right angle to the first.

★If the reading exceeds the service limit, replace the guide.

NOTE

○*The reading is not actual valve/valve guide clearance because the measuring point is above the guide.*

Valve/Valve Guide Clearance (Wobble Method)

Standard:	
Inlet	**0.02 ~ 0.08 mm (0.0008 ~ 0.0032 in.)**
Exhaust	**0.07 ~ 0.14 mm (0.0028 ~ 0.0056 in.)**
Service Limit:	
Inlet	**0.22 mm (0.009 in.)**
Exhaust	**0.27 mm (0.011 in.)**

Valve Seat Repair

- Repair the valve seat with the valve seat cutters.

Special Tools -

Inlet Valve		
Seat Cutter	**45°-ϕ30.0**	**57001-1187**
Seat Cutter	**32°-ϕ30.0**	**57001-1120**
Seat Cutter	**60°-ϕ30.0**	**57001-1123**
Exhaust Valve		
Seat Cutter	**45°-ϕ24.5**	**57001-1113**
Seat Cutter	**32°-ϕ25.0**	**57001-1118**
Seat Cutter	**60°-ϕ25.0**	**57001-1328**
Valve Seat Cutter Holder - ϕ5.5		**57001-1125**
Valve Seat Cutter Holders Bar		**57001-1128**

★If the manufacturer's instructions are not available, use the following procedure.

Valves

Seat Cutter Operating Cares

1. This valve seat cutter is developed to grind the valve for repair. Therefore the cutter must not be used for other purposes than seat repair.
2. Do not drop or shock the valve seat cutter, or the diamond particles may fall off.
3. Do not fail to apply engine oil to the valve seat cutter before grinding the seat surface. Also wash off ground particles sticking to the cutter with washing oil.

NOTE

○*Do not use a wire brush to remove the metal particles from the cutter. It will take off the diamond particles.*

4. Setting the valve seat cutter holder [A] in position, operate the cutter [B] in one hand [C]. Do not apply too much force to the diamond portion.

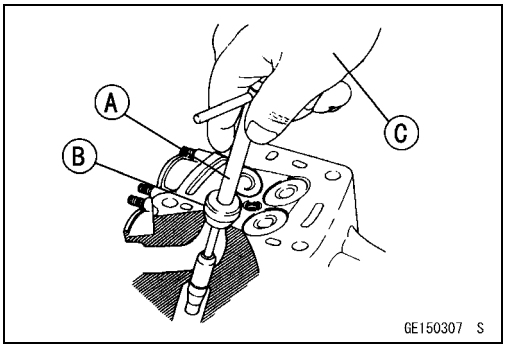

NOTE

○*Prior to grinding, apply engine oil to the cutter and during the operation, wash off any ground particles sticking to the cutter with washing oil.*

5. After use, wash the cutter with washing oil and apply a thin layer of engine oil before storing.

Marks Stamped on the Cutter

- The marks stamped on the back of the cutter [A] represent the following.

60° ..... Cutter angle [B]
30ϕ ..... Outer diameter of cutter [C]

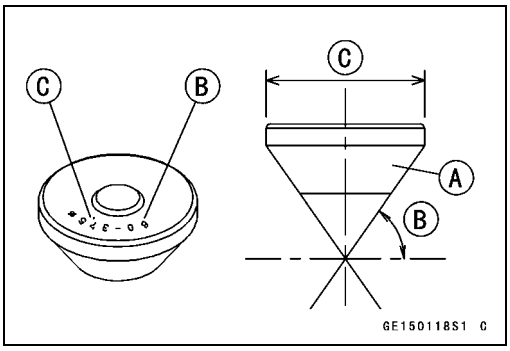

Operating Procedures

- Clean the seat area carefully.
- Coat the seat with machinist's dye.
- Fit a 45° cutter to the holder and slide it into the valve guide.
- Press down lightly on the handle and turn it right or left. Grind the seating surface only until it is smooth.

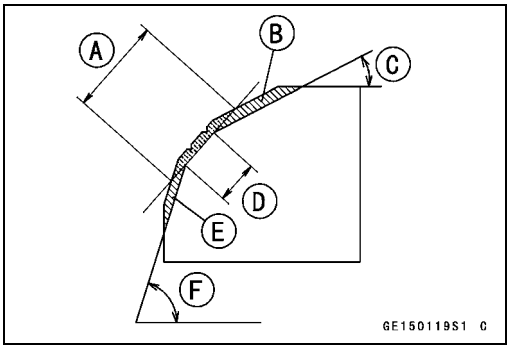

CAUTION

Do not grind the seat too much. Overgrinding will reduce valve clearance by sinking the valve into the head. If the valve sinks too far into the head, it will be impossible to adjust the clearance, and the cylinder head must be replaced.

Widened Width [A] of engagement by machining with 45° cutter
Ground Volume [B] by 32° Cutter
32° [C]
Correct Width [D]
Ground Volume [E] by 60° Cutter
60° [F]

Valves

- Measure the outside diameter (O.D.) of the seating surface with a vernier caliper.

★If the outside diameter of the seating surface is too small, repeat the 45° grind [A] until the diameter is within the specified range.

Original Seating Surface [B]

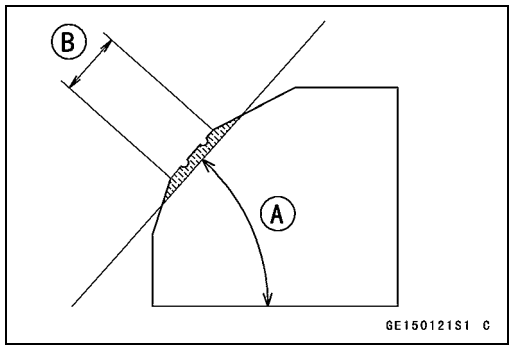

NOTE

○*Remove all pittings of flaws from 45° ground surface.*

○*After grinding with 45° cutter, apply thin coat of machinist's dye to seating surface. This makes seating surface distinct and 32° and 60° grinding operation easier.*

○*When the valve guide is replaced, be sure to grind with 45° cutter for centering and good contact.*

- If the outside diameter of the seating surface is too large, make the 32° grind described below.
- If the outside diameter [A] of the seating surface is within the specified range, measure the seat width as described below.
- Grind the seat at a 32° angle [B] until the seat O.D. is within the specified range.

○To make the 32° grind, fit a 32° cutter to the holder, and slide it into the valve guide.

○Turn the holder one turn at a time while pressing down very lightly. Check the seat after each turn.

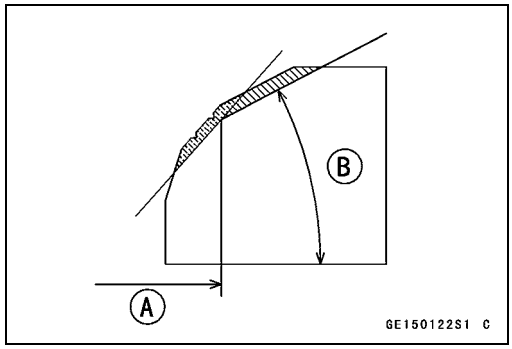

CAUTION
The 32° cutter removes material very quickly. Check the seat outside diameter frequently to prevent overgrinding.

○After making the 32° grind, return to the seat O.D. measurement step above.

- To measure the seat width, use a vernier caliper to measure the width of the 45° angle portion of the seat at several places around the seat.

★If the seat width is too narrow, repeat the 45° grind until the seat is slightly too wide, and then return to the seat O.D. measurement step above.

★If the seat width is too wide, make the 60° [A] grind described below.

★If the seat width is within the specified range, lap the valve to the seat as described below.

- Grind the seat at a 60° angle until the seat width is within the specified range.

○To make the 60° grind, fit a 60° cutter to the holder, and slide it into the valve guide.

○Turn the holder, while pressing down lightly.

○After making the 60° grind, return to the seat width measurement step above.

Correct Width [B]

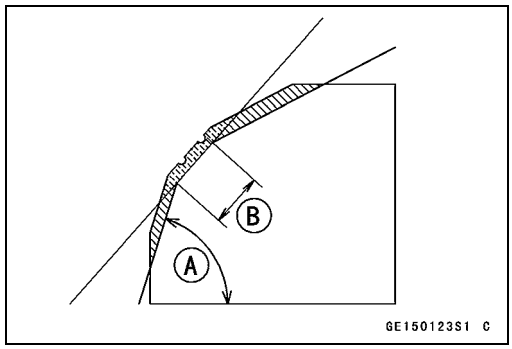

Valves

- Lap the valve to the seat, once the seat width and O.D. are within the ranges specified above.

○Put a little coarse grinding compound on the face of the valve in a number of places around the valve head.

○Spin the valve against the seat until the grinding compound produces a smooth, matched surface on both the seat and the valve.

○Repeat the process with a fine grinding compound.

[A] Lapper
[B] Valve Seat
[C] Valve

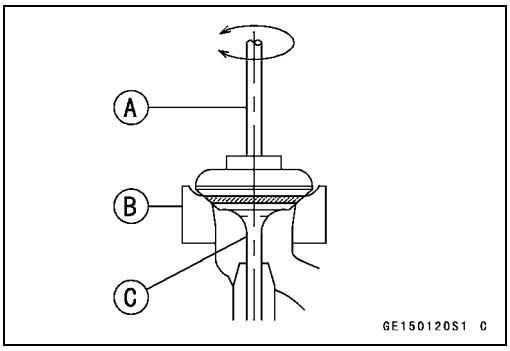

- The seating area should be marked about in the middle of the valve face.

★If the seat area is not in the right place on the valve, check to be sure the valve is the correct part. If it is, it may have been refaced too much; replace it.

- Be sure to remove all grinding compound before assembly.
- When the engine is assembled, be sure to adjust the valve clearance (see Valve Clearance Adjustment).

Valves

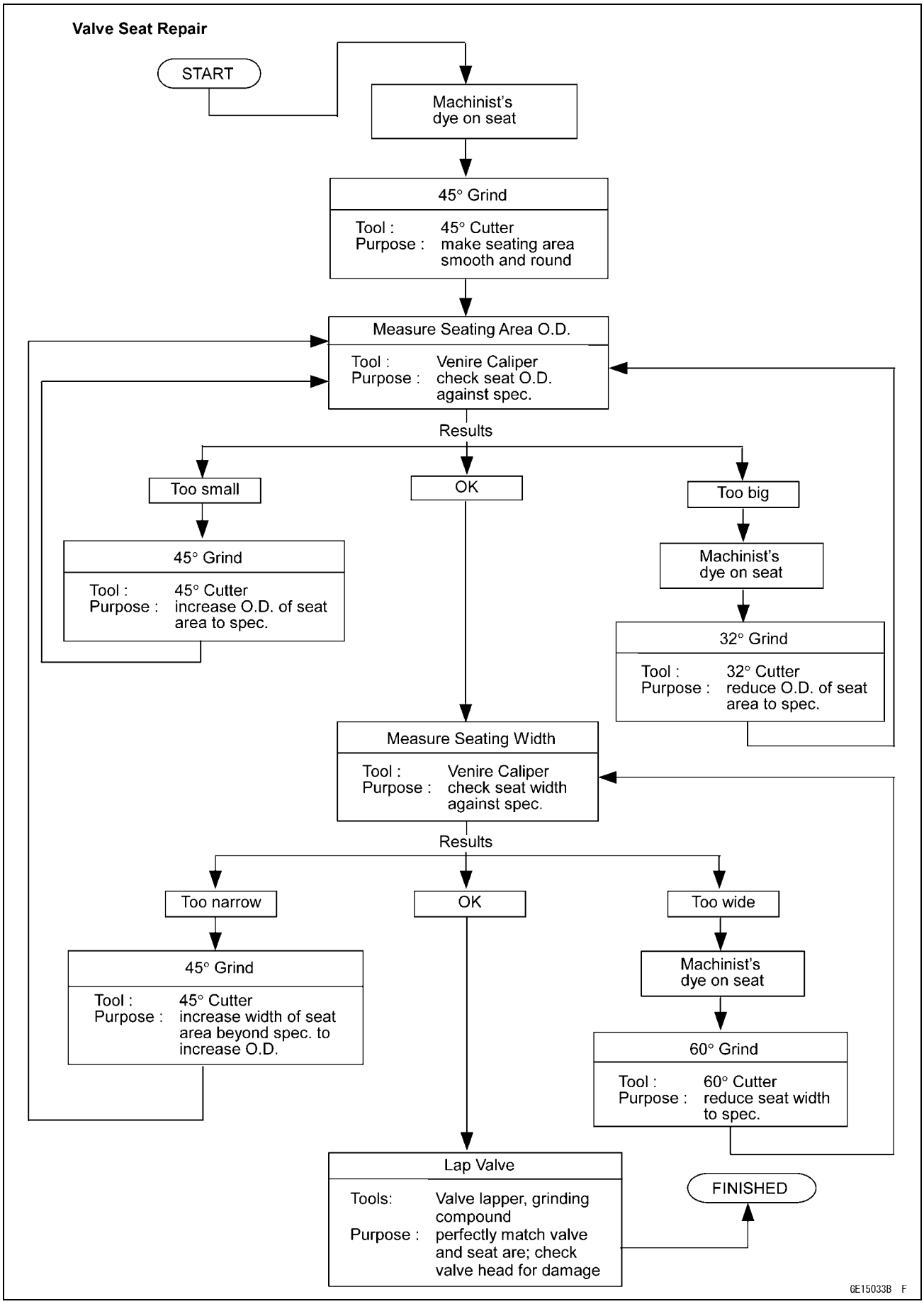
Valve Seat Repair
START
Machinist's dye on seat
45° Grind
Tool : 45° Cutter
Purpose : make seating area smooth and round
Measure Seating Area O.D.
Tool : Venire Caliper
Purpose : check seat O.D. against spec.
Results
Too small
OK
Too big
45° Grind
Tool : 45° Cutter
Purpose : increase O.D. of seat area to spec.
Machinist's dye on seat
32° Grind
Tool : 32° Cutter
Purpose : reduce O.D. of seat area to spec.
Measure Seating Width
Tool : Venire Caliper
Purpose : check seat width against spec.
Results
Too narrow
OK
Too wide
45° Grind
Tool : 45° Cutter
Purpose : increase width of seat area beyond spec. to increase O.D.
Machinist's dye on seat
60° Grind
Tool : 60° Cutter
Purpose : reduce seat width to spec.
Lap Valve
Tools: Valve lapper, grinding compound
Purpose : perfectly match valve and seat are; check valve head for damage
FINISHED
GE15033B F

Cylinder, Piston

Cylinder Removal

- Remove the cylinder head (see Cylinder Head Removal).
- Remove the main oil pipe mounting bolt.
- Pull out the water pipe with water pump cover (see Water Pump Removal in the Cooling System chapter).
- Take out the cylinder block so as not to damage the main oil pipe.

Cylinder Installation

- Install:
  Dowel Pins [A]
  New Cylinder Base Gasket [B]
- Apply engine oil to the cylinder bore.
- Prepare two auxiliary head bolts with their heads cut.
- Install the two bolts [C] diagonally in the crankcase.
- Position the crankshaft so that all the piston heads are almost level.
- Install the cylinder block.

○Insert the piston rings with your thumbs.

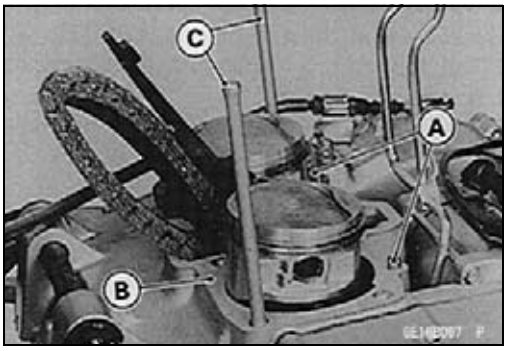

Piston Removal

- Remove the cylinder (see Cylinder Removal).
- Wrap a clean cloth [A] around the base of each piston to secure it in position for removal and so that no parts and dirt will fall into the crankcase.
- Remove the piston pin snap rings [B] from the outside of each piston.

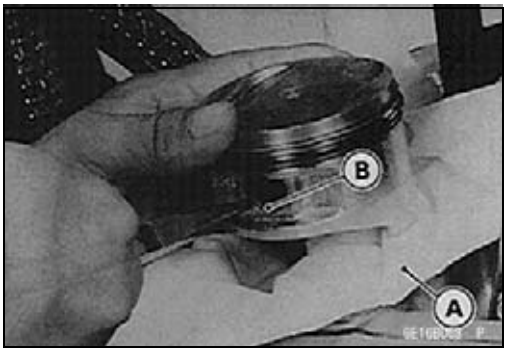

- Remove the piston by pushing its piston pin puller out the side from which the snap ring was removed. Use a piston pin puller, if the pin is tight.

  Special Tool - Piston Pin Puller Assembly [A]: 570001-910

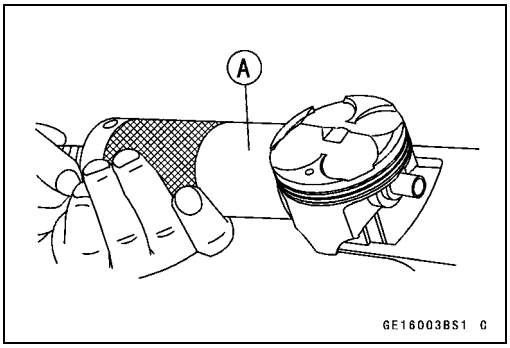

- Remove the top and second rings with piston ring pliers.

  Special Tool - Piston Ring Pliers: 57001-115

- If the special tool is not available, carefully spread the ring opening with your thumbs and then push up on the opposite side of the ring [A] to remove it.
- Remove the 3-piece oil ring with your thumbs in the same manner.

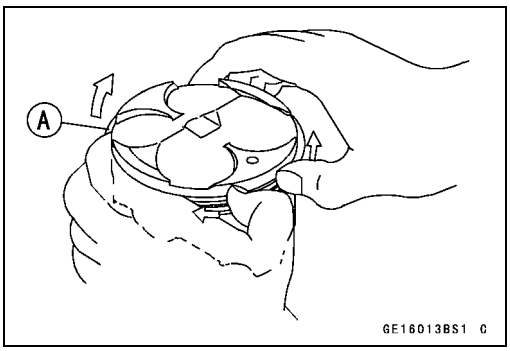

Cylinder, Piston

Piston Installation

- Install the oil ring expander [A] in the piston oil ring groove so that the expander ends [B] butt together, never overlap.
- Install the upper and lower steel rails. There is no UP or DOWN to the rails. They can be installed either way.

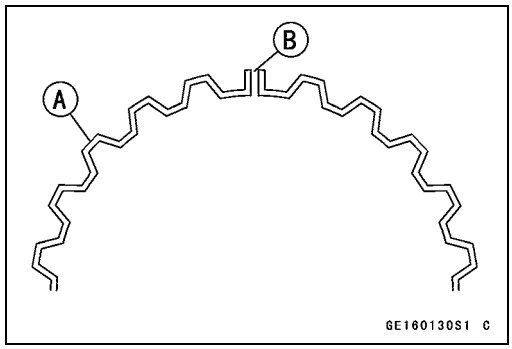

- Install the top ring [A] so that the “N” mark [B] faces up.
- Install the second ring [C] so that the “N” mark [D] faces up.

NOTE

○*If new piston or cylinder is used, check piston to cylinder clearance (see Specifications), and use new piston rings.*

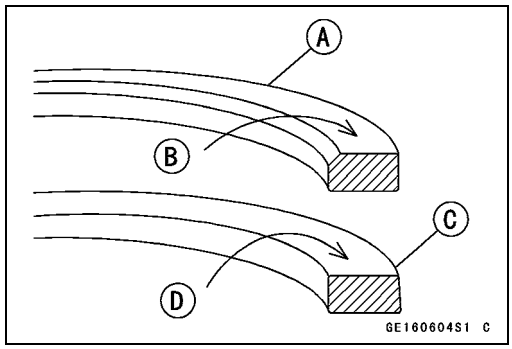

- Position each piston ring so that the openings in the top ring and oil ring steel rails are facing forwards, and the second ring and oil ring expander openings face the rear. The openings of the oil ring steel rails must be about 30° ~ 40° of angle from the opening of the top ring.

[A] Top Ring
[B] Second Ring
[C] Oil Ring Steel Rails
[D] Oil Ring Expander
[E] Arrow

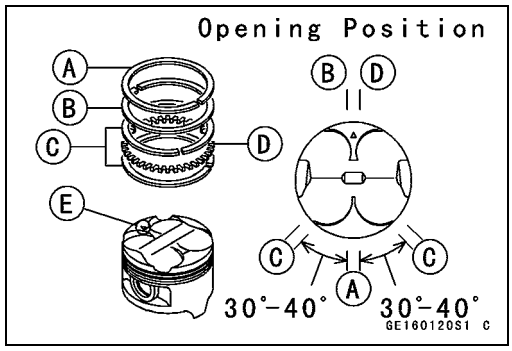

- The arrow on the top of the piston must point toward the front of the engine (EN500-C1 ~ C9 Models).
- The circle mark on the top of the piston must point toward the front of the engine (EN500-C10 ~).
- When installing a piston pin snap ring, compress it only enough to install it and no more.

CAUTION

Do not reuse snap rings, as removal weakens and deforms them. They could fall out and score the cylinder wall.

Cylinder, Piston

Piston Ring, Piston Ring Groove Wear Inspection

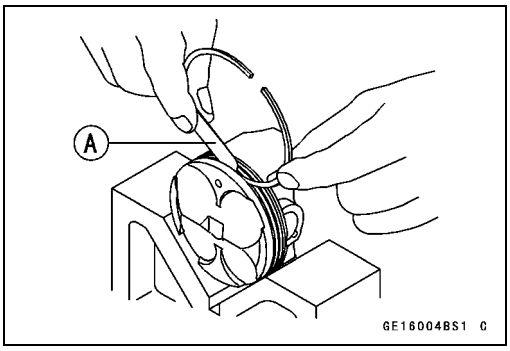

- Check for uneven groove wear by inspecting the ring seating.

★The rings should fit perfectly parallel to the groove surfaces. If not, the piston must be replaced.

- With the piston rings in their grooves, make several measurements with a thickness gauge [A] to determine piston ring/groove clearance.

Piston Ring/Groove Clearance

Standard:

Top	**0.03 ~ 0.07 mm (0.0012 ~ 0.0028 in.)**
Second	**0.02 ~ 0.06 mm (0.0008 ~ 0.0024 in.)**

Service Limit:

Top	**0.17 mm (0.0067 in.)**
Second	**0.16 mm (0.0064 in.)**

Piston Ring End Gap Inspection

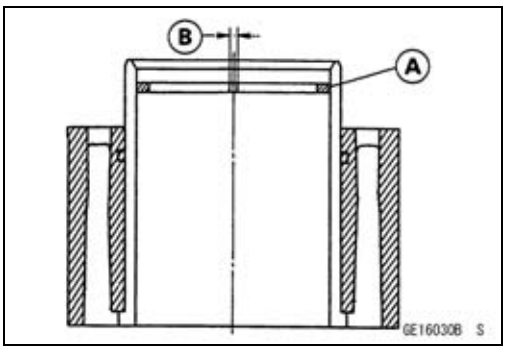

- Place the piston ring [A] inside the cylinder, using the piston to locate the ring squarely in place. Set it close to the bottom of the cylinder, where cylinder wear is low.
- Measure the gap [B] between the ends of the ring with a thickness gauge.

Piston Ring End Gap

Standard:

Top	**0.2 ~ 0.35 mm (0.0079 ~ 0.0138 in.)**
Second	**0.2 ~ 0.35 mm (0.0079 ~ 0.0138 in.)**
Oil	**0.2 ~ 0.7 mm (0.0079 ~ 0.0275 in.)**

Service Limit:

Top	**0.7 mm (0.028 in.)**
Second	**0.7 mm (0.028 in.)**
Oil	**1.0 mm (0.039 in.)**

Cylinder Inside Diameter Measurement

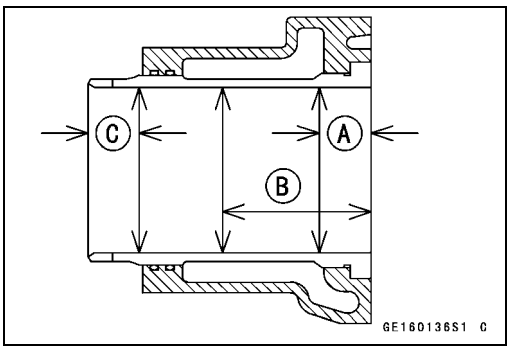

- Since there is a difference in cylinder wear in different directions, take a side-to-side and a front-to-back measurement at each of the 3 locations (total of 6 measurements) shown in the figure.

★If any of the cylinder inside diameter measurements exceeds the service limit, the cylinder will have to be bored to oversize and then honed.

[A] 10 mm
[B] 60 mm
[C] 20 mm

Cylinder Inside Diameter

Standard:	**74.000 ~ 74.012 mm (2.913 ~ 2.914 in.)**
Service Limit:	**74.11 mm (2.918 in.)**

Cylinder, Piston

Piston Diameter Measurement

- Measure the outside diameter [A] of each piston 5 mm (0.20 in.) [B] up from the bottom of the piston at a right angle to the direction of the piston pin.

★If the measurement is under the service limit, replace the piston.

Piston Diameter

Standard:	**73.942 ~ 73.957 mm (2.911 ~ 2.912 in.)**
Service Limit:	**73.79 mm (2.91 in.)**

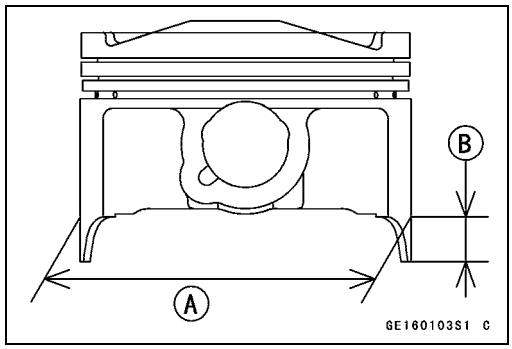

Boring, Honing

When boring and honing a cylinder, note the following:

○There is one oversize piston available. Oversize pistons require oversize rings. Oversize pistons and rings available are **0.5 mm (0.020 in.)** larger than standard.

○Before boring a cylinder, first measure the exact diameter of the oversize piston, and then, according to the standard clearance in the Service Data Section, determine the rebore diameter. However, if the amount of boring necessary would make the inside diameter greater than **0.5 mm (0.020 in.)** oversize, the cylinder block must be replaced.

○Cylinder inside diameter must not vary more than **0.01 mm (0.0004 in.)** at any point.

○Be wary of measurements taken immediately after boring since the heat affects cylinder diameter.

○In the case of a rebored cylinder and oversize piston, the service limit for the cylinder is the diameter that the cylinder was bored to plus **0.1 mm (0.0039 in.)** and the service limit for the piston is the oversize piston original diameter minus **0.15 mm (0.0059 in.)** If the exact figure for the rebored diameter is unknown, it can be roughly determined by measuring the diameter at the base of the cylinder.

○Never separate the liner from the cylinder, because the top surface of cylinder and liner is machined at the factory as an assembly.

Carburetor Holder

Carburetor Holder Installation

- Install the carburetor holders. The projection [A] faces upwards.

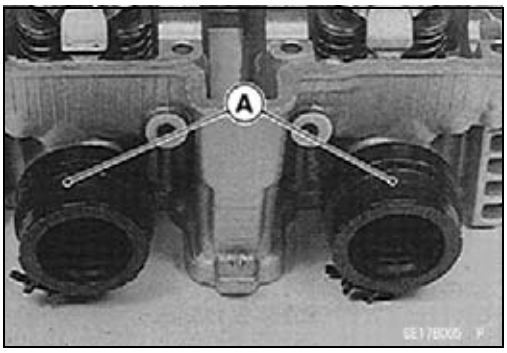

- Install the holder clamps [A] as shown being careful of the screw position and the screw head [B] direction.

⚠ WARNING

Install the clamp screws horizontally. Otherwise the screws could come in contact with the vacuum adjusting screws, resulting in an unsafe riding condition.

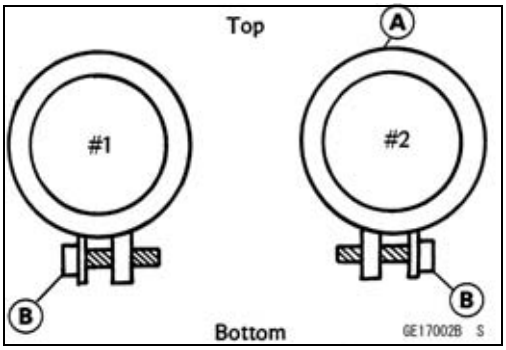

Exhaust Pipe, Muffler

Exhaust Pipe, Muffler Removal

- Loosen the muffler clamp bolts [A] on both sides.
- Unscrew the muffler mounting bolts [B] on both sides, and remove the muffler [C].

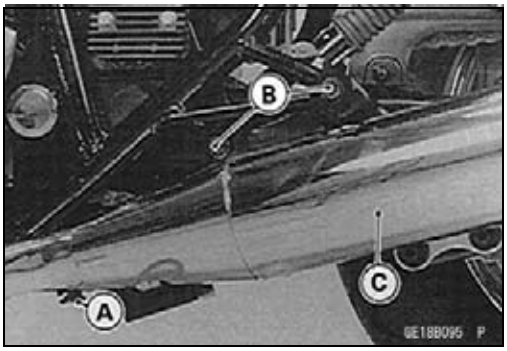

- Loosen the exhaust pipe clamp bolt [A] under the engine.

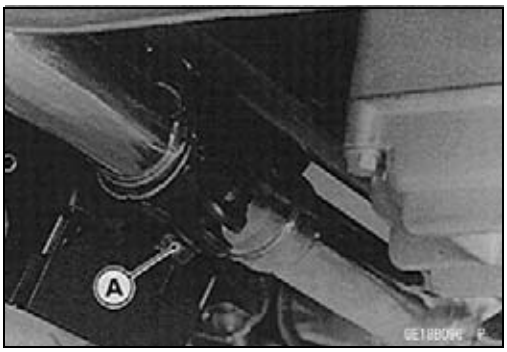

- Loosen the exhaust pipe holder nuts [A] on the left side.
- Remove the exhaust pipe holder, nuts and holders on the right side.

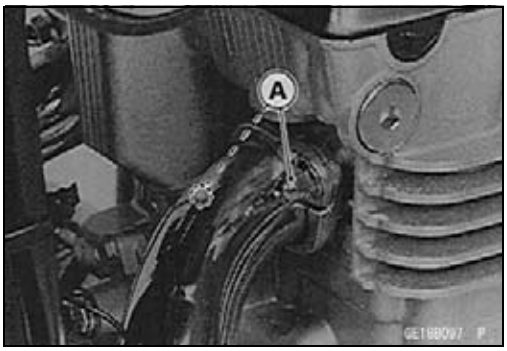

- Separate the right exhaust pipe [A] from the left exhaust pipe [B].

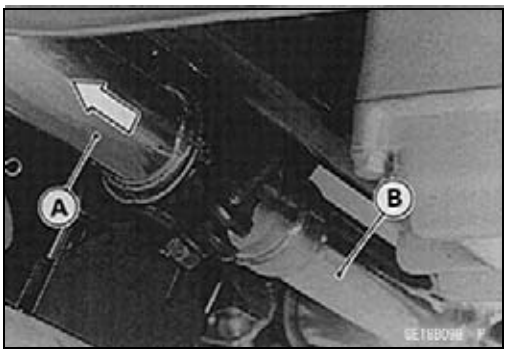

- Remove the exhaust pipe holder nuts, holders, and remove the left exhaust pipe.

Exhaust Pipe, Muffler

Exhaust Pipe, Muffler Installation

- Check the gaskets for signs of damage.

★If necessary, replace the gaskets with new ones.

- Exhaust pipe and muffler installation is the reverse of removal.
- Connect the exhaust pipes while pushing toward the frame center until the flange [A] of the left pipe [B] overlaps with the clamp portion [C] of the right pipe [D].

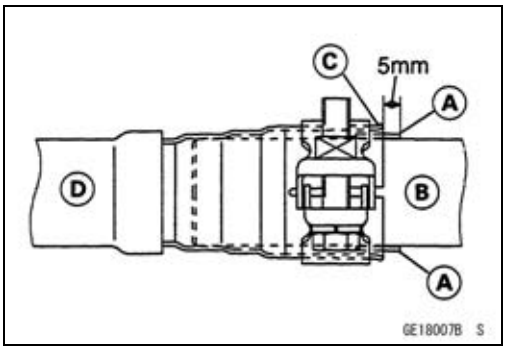

- Install the exhaust pipe clamp [A] as shown being careful of the bolt head [B] position.

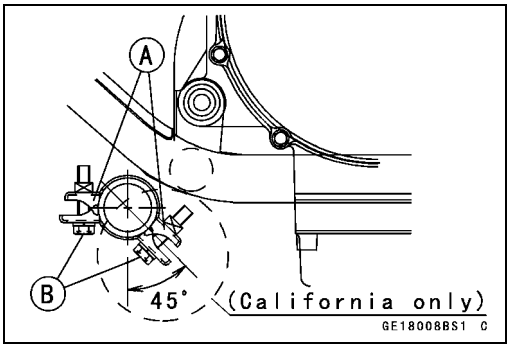

- For EN500-C8 Model ~, as shown in the figure.
  Exhaust pipe clamp [A]
  Bolt head [B]

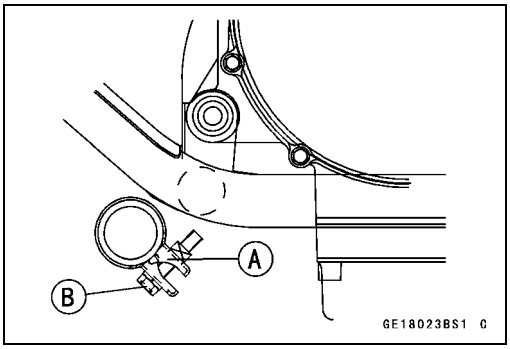

- Insert the muffler gasket [A] until it is bottomed [B].

○Install the gasket so that its chamfer side faces the front.

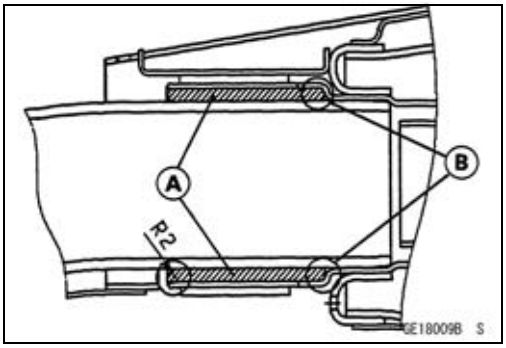

- Tighten the muffler clamp [A] with its stopper [B] touching the cover [C].
- Thoroughly warm up the engine, wait until the engine cools down, and then retighten the clamp bolt.

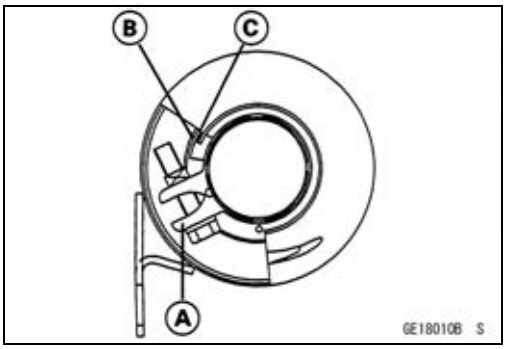

Clutch

Table of Contents

Exploded View 5-2
Specifications 5-4
Special Tool and Sealant 5-5
Clutch Lever and Cable 5-6
Clutch Lever Free Play Inspection 5-6
Clutch Lever Free Play Adjustment 5-6
Clutch Lever Installation 5-7
Cable Lubrication 5-7
Right Engine Cover 5-8
Clutch Cover Removal 5-8
Clutch Cover Installation 5-8
Clutch Release Removal 5-8
Clutch Release Installation 5-9
Clutch 5-10
Clutch Removal 5-10
Clutch Installation 5-10
Clutch Plate Wear, Damage Inspection 5-11
Clutch Plate Warp Inspection 5-11
Clutch Spring Free Length Measurement 5-12
Clutch Housing Finger Inspection 5-12
Clutch Hub Spline Inspection 5-12

Exploded View

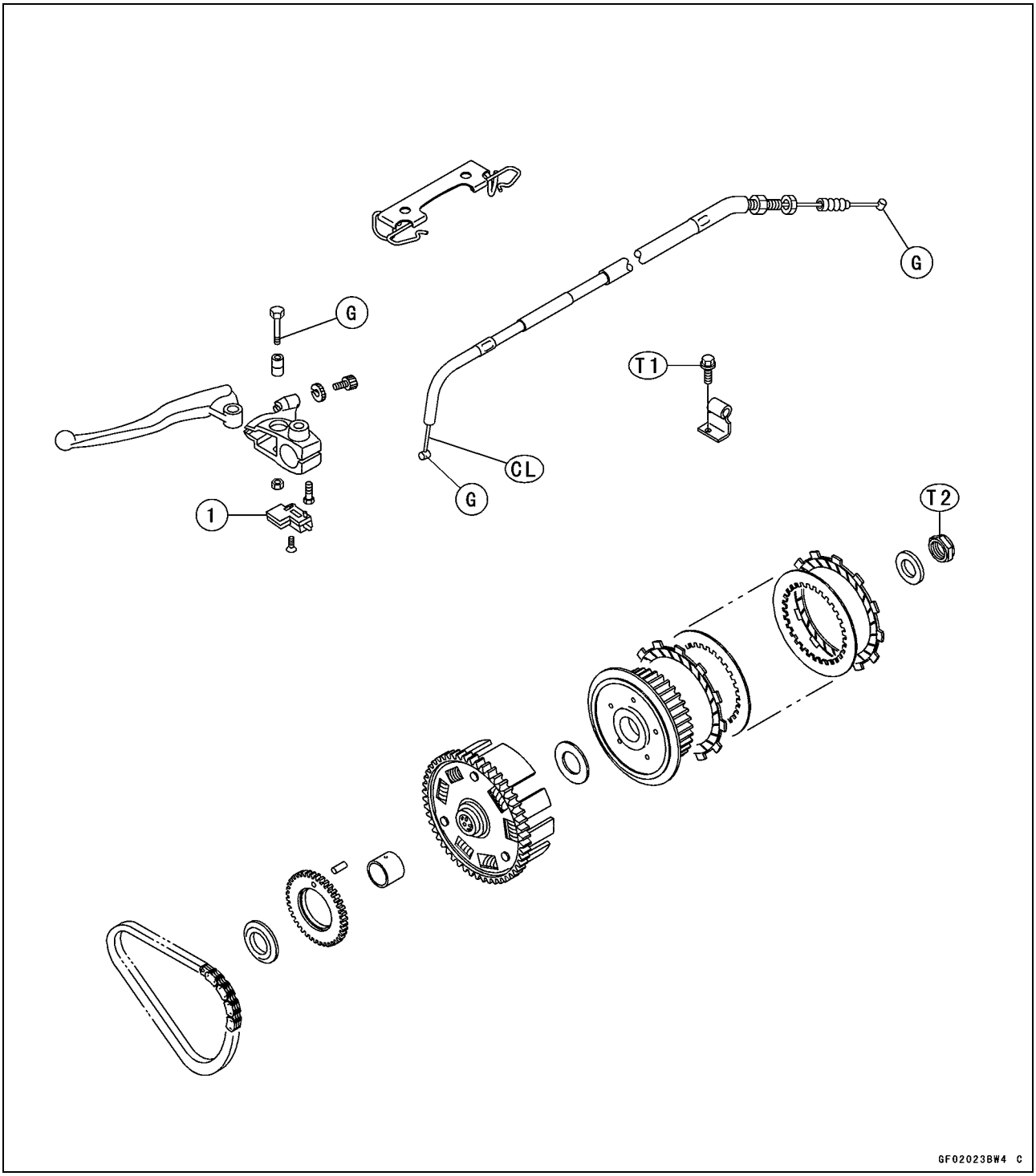

1. Starter Lockout Switch
T1: 11 N·m (1.1 kgf·m, 95 in·lb)
T2: 132 N·m (13.5 kgf·m, 98 ft·lb)
CL: Apply cable lubricant.
G: Apply high temperature grease.

Exploded View

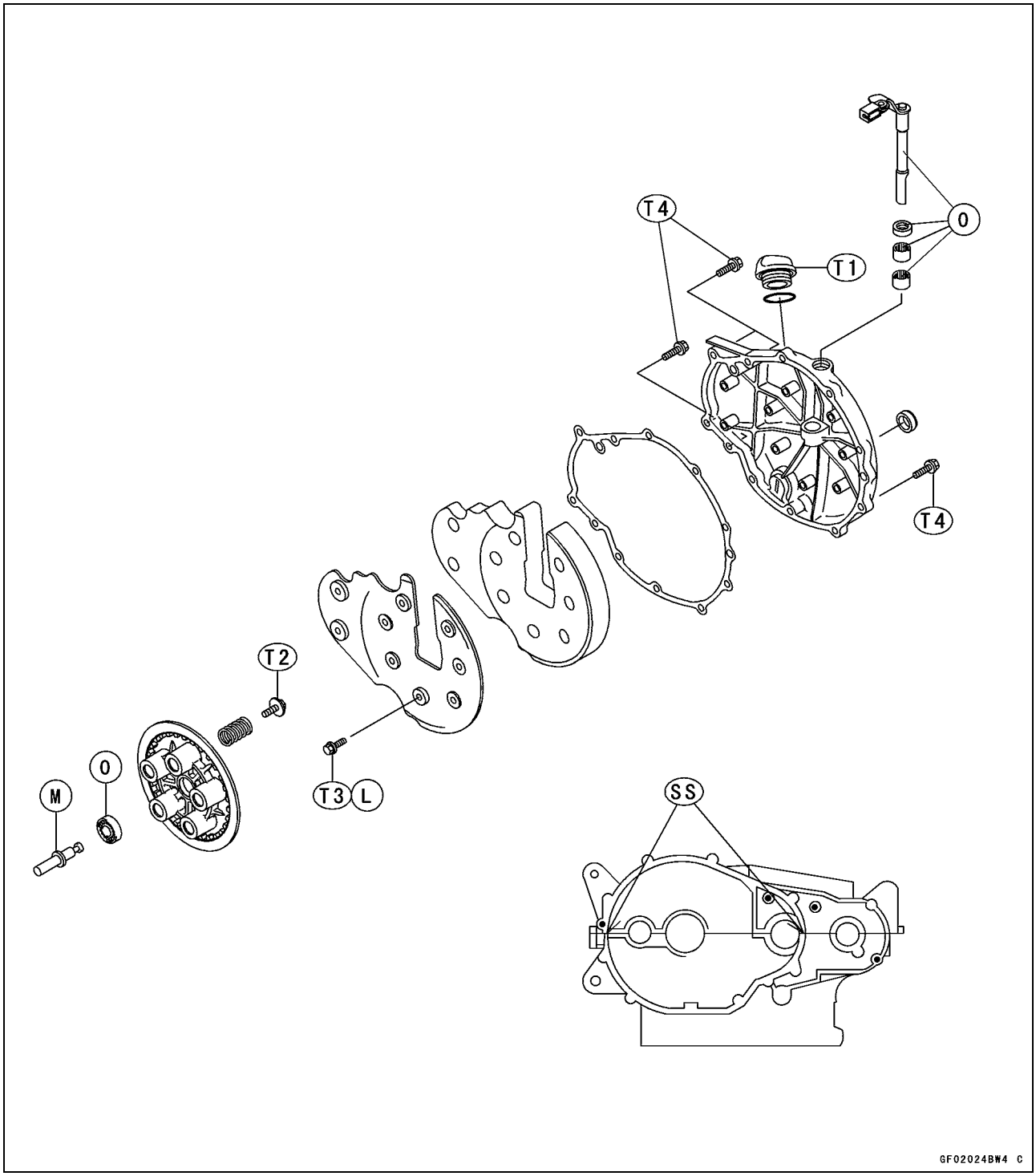

T1: 1.5 N·m (0.15 kgf·m, 13 in·lb)
T2: 9.3 N·m (0.95 kgf·m, 82 in·lb)
T3: 9.8 N·m (1.0 kgf·m, 87 in·lb)
T4: 11 N·m (1.1 kgf·m, 95 in·lb)

L: Apply a non-permanent locking agent.
M: Apply molybdenum disulfide grease.
O: Apply engine oil.
SS: Apply silicone sealant.

5-4 CLUTCH

Specifications

Item	Standard	Service Limit
Clutch Lever		
Clutch Lever Free Play	2 ~ 3 mm (0.08 ~ 0.12 in.)	– – –
Clutch		
Clutch Spring Free Length	34.2 mm (1.346 in.)	33.1 mm (1.303 in.)
Friction Plate Thickness	2.9 ~ 3.1 mm (0.1142 ~ 0.1220 in.)	2.75 mm (0.108 in.)
Friction And Steel Plate Warp	Less than 0.2 mm (0.0079 in.)	0.3 mm (0.0118 in.)

Special Tool and Sealant

Clutch Holder:
57001-1243

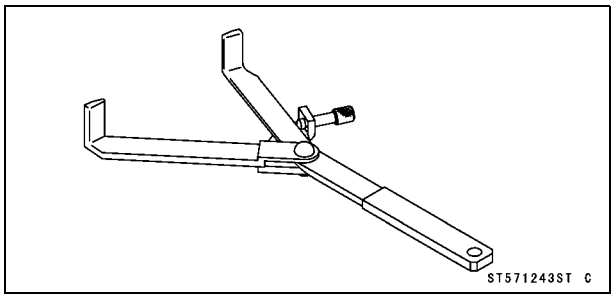

Kawasaki Bond (Silicone Sealant):
56019-120

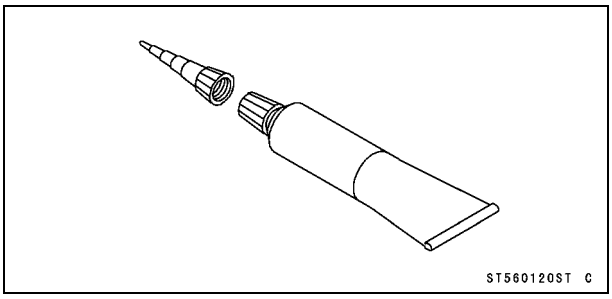

Clutch Lever and Cable

Due to friction plate wear and clutch cable stretch over a long period of use, the clutch must be adjusted in accordance with the Periodic Maintenance Chart.

⚠ WARNING

To avoid a serious burn, never touch the engine or exhaust pipe during clutch adjustment.

Clutch Lever Free Play Inspection

- Pull the clutch lever just enough to take up the free play [A].
- Measure the gap between the lever and the lever holder.

★If the gap is too wide, the clutch may not release fully. If the gap is too narrow, the clutch may not engage fully. In either case, adjust the clutch.

Clutch Lever Free Play
Standard: 2 ~ 3 mm (0.08 ~ 0.12 in.)

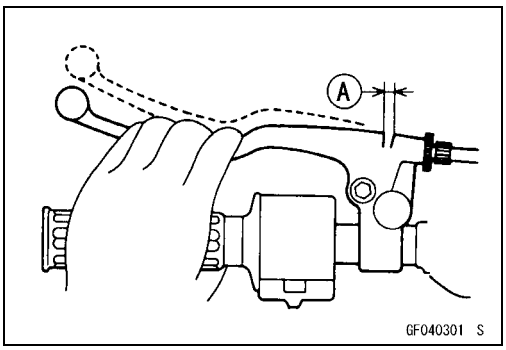

Clutch Lever Free Play Adjustment

- Slide back the dust cover [A].
- Loosen both adjuster nuts [B] at the right hand crankcase as far as they will go.

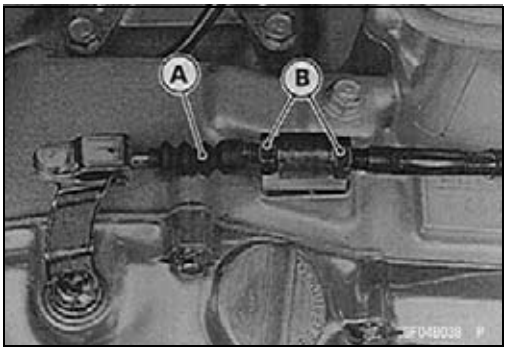

- Loosen the knurled locknut [A] at the clutch lever.
- Turn the adjuster [B] so that 5 ~ 6 mm (0.20 ~ 0.24 in.) [C] of threads are visible.

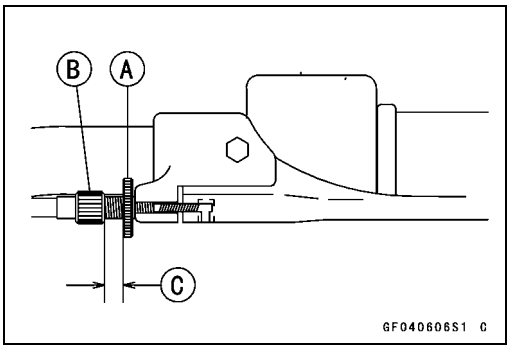

- Pull the clutch cable [A] tight and tighten the adjuster nuts against the bracket.

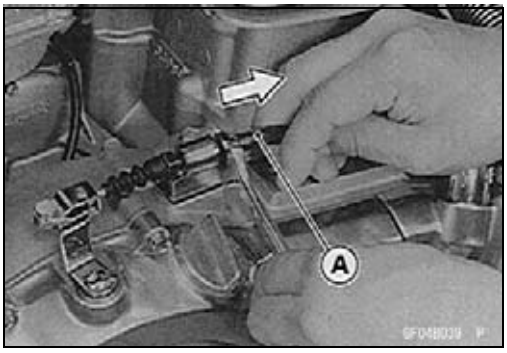

Clutch Lever and Cable

- Slip the rubber dust cover back into place.
- Turn the adjuster [B] at the clutch lever until the free play [C] is correct.
- Tighten the knurled locknut [A] at the clutch lever.

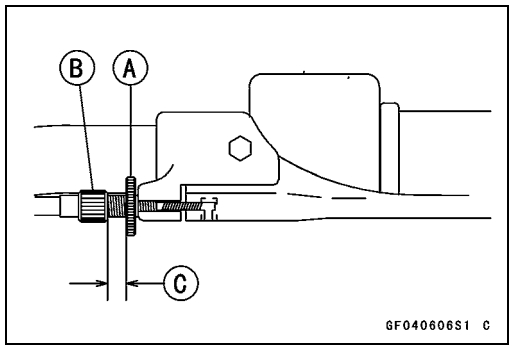

⚠ WARNING

Be sure that the outer cable end at the clutch lever is fully seated in the adjuster at the clutch lever, or it could slip into the place later, creating enough cable play to prevent clutch disengagement.

- After the adjustment is made, start the engine and check that the clutch does not sip and that it releases properly.

Clutch Lever Installation

- Install the clutch lever so that the mating surface [A] of the lever holder is aligned with the punch mark [B] on the handlebar.

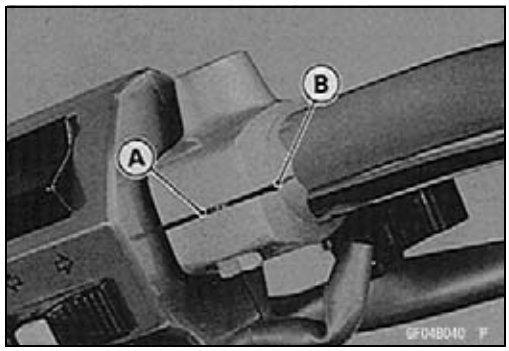

Cable Lubrication

Whenever the clutch cable is removed, lubricate the clutch cable as follows.

- Apply a thin coating of grease to the cable upper and lower ends.
- Lubricate the cable with a penetrating rust inhibitor.

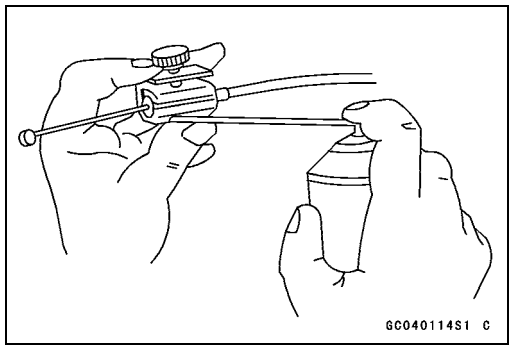

Right Engine Cover

Clutch Cover Removal

- Drain the engine oil (see Engine Oil Change in the Engine Lubrication System chapter).
- Remove:
  Clutch Cable
  Right Footpeg Assembly
  Clutch Cover Bolts [A]
  Cable Guide [B]
- Turn the release lever [C] toward the front as shown, and remove the clutch cover.

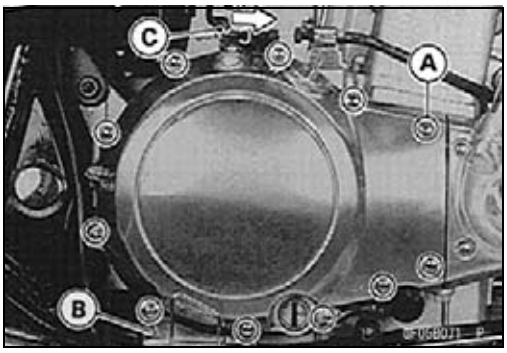

Clutch Cover Installation

- Apply silicone sealant to the area [A] where the mating surface of the crankcase touches the clutch cover gasket.

  Sealant - Kawasaki Bond (Silicone Sealant): 56019-120

- Install the knock pins [B], and replace the cover gasket with a new one.
- Tighten the cover bolts.

  Torque - Clutch Cover Bolts: 11 N·m (1.1 kgf·m, 95 in·lb)

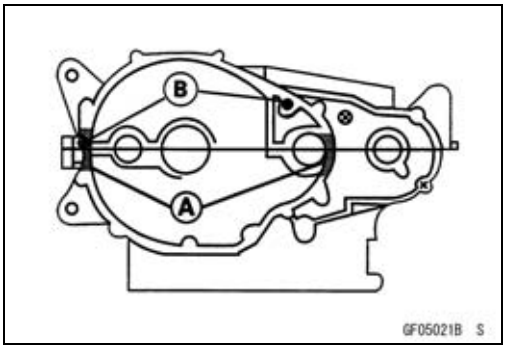

Clutch Release Removal

NOTE

○*Do not pull out the clutch release shaft for clutch cover removal.*

CAUTION

Clutch release shaft removal damages the oil seal in the clutch cover necessitating the oil seal replacement.

- Slide the dust cover at the clutch cable lower end out of place.
- Loosen the nuts, and slide the lower end of the clutch cable to give the cable plenty of play.
- Loosen the knurled locknut [B] at the clutch lever, and screw in the adjuster [C].
- Line up the slots [A] in the clutch lever, knurled locknut, and adjuster, and then free the cable from the lever.

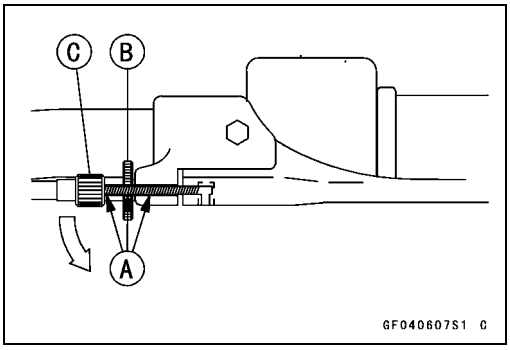

- Free the clutch inner cable tip from the clutch release lever [A].
- Turn the release lever toward the rear [B] as shown in the figure.
- Pull the lever and shaft assembly out of the clutch cover.

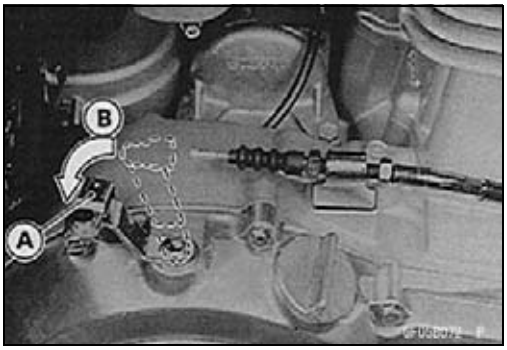

Right Engine Cover

Clutch Release Installation

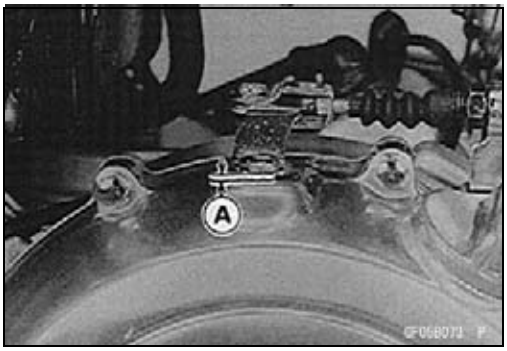

CAUTION
Always install a new oil seal when the clutch release shaft is removed.

- Apply high temperature grease to the oil seal lips in the clutch cover.
- Apply oil to the bearings in the hole of the clutch cover.
- Apply oil to the release shaft.
- Turning the release lever toward the rear, insert the release shaft straight into the hole of the clutch cover.

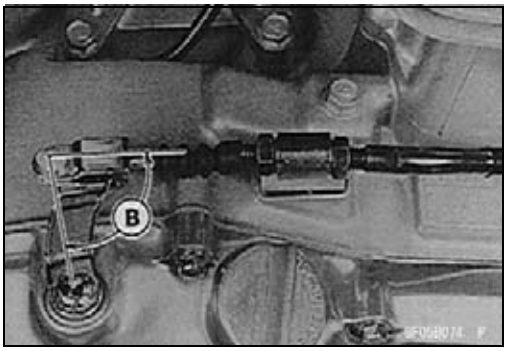

CAUTION
When inserting the release shaft, be careful not to remove the spring of the oil seal.

- Install the clutch inner cable tip in the release lever.
- Turn the release lever clockwise until it becomes hard to turn.

○The release lever should have proper clearance and angle as shown.
[A] 1 ~ 3 mm (0.04 ~ 0.12 in.)
[B] 80° ~ 90°

Clutch

Clutch Removal

- Drain the engine oil (see Engine Oil Change in the Engine Lubrication System chapter).
- Remove the clutch cover (see Clutch Cover Removal).
- Remove the clutch spring bolts [A], washers [B] and springs.
- Remove the clutch spring plate [C] with the thrust ball bearing [D] and pusher [E].
- Remove the friction plates and steel plates.

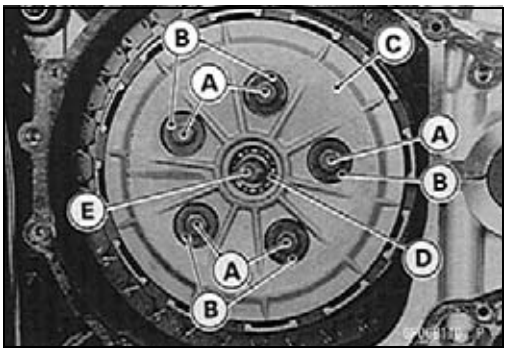

- When loosening the clutch hub self-locking nut [A], use the clutch holder [B] to keep the clutch hub from turning as shown.

  Special Tool - Clutch Holder: 57001-1243

- Remove the clutch hub self-locking nut and washer.

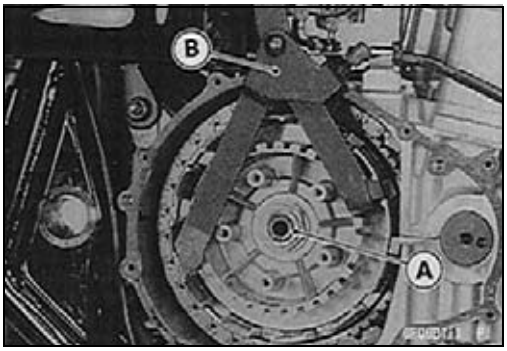

- Pull out the clutch hub [A] and thrust washer [B].

NOTE

○*The clutch housing can not be removed without major disassembly work (see Clutch Housing/Primary Chain Removal in the Crankshaft/Transmission chapter).*

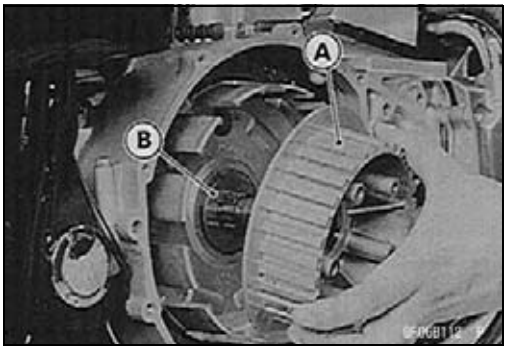

Clutch Installation

- Install the thrust washer and clutch hub.
- Install the washer.
- Discard the used clutch hub self-locking nut, and install a new self-locking nut with the projected side facing outward.
- Install the clutch holder to keep the clutch hub from turning and tighten the clutch hub self-locking nut.

  Special Tool - Clutch Holder: 57001-1243

  Torque - Clutch Hub Nut: 132 N·m (13.5 kgf·m, 98 ft·lb)

- Install the friction plates and steel plates, starting with a friction plate and alternating them.

Clutch

○The grooves [A] on the friction plate surfaces are cut tangentially and radially, install the friction plates so that the grooves run toward the center in the direction of the clutch housing rotation (counterclockwise viewed from the engine right side).

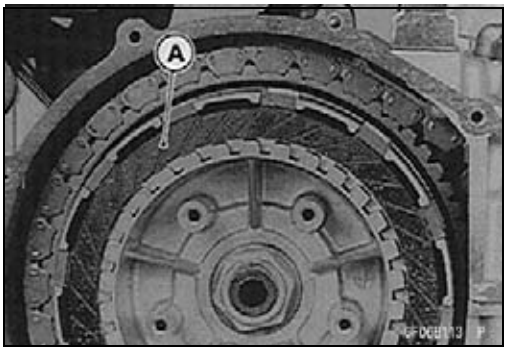

CAUTION
If new dry steel plates and friction plates are installed, apply engine oil to the surfaces of each plate to avoid clutch plate seizure.

- Apply engine oil to the thrust ball bearing.
- Apply molybdenum disulfide grease to the rubbing portion of clutch spring plate pusher.
- Tighten the clutch spring bolts.

Torque - Clutch Spring Bolts: 9.3 N·m (0.95 kgf·m, 82 in·lb)

Clutch Plate Wear, Damage Inspection

- Visually inspect the friction and steel plates for signs of seizure, overheating (discoloration), or uneven wear.

★If any plates show signs of damage, replace the friction plates and steel plates as a set.

- Measure the thickness of the friction plate [A] at several points.

★If any of the measurements is less than the service limit, replace the friction plate.

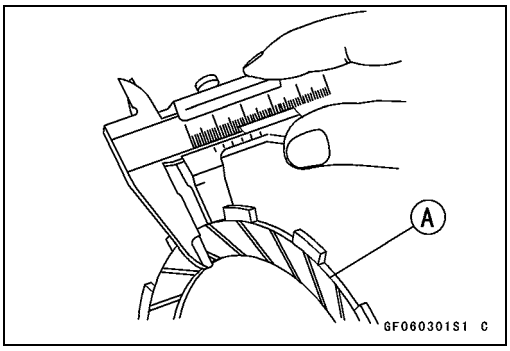

Friction Plate Thickness

Standard:	**2.9 ~ 3.1 mm (0.1142 ~ 0.1220 in.)**
Service Limit:	**2.75 mm (0.108 in.)**

Clutch Plate Warp Inspection

- Place each friction plate or steel plate on a surface plate, and measure the gap between the surface plate [A] and each friction plate or steel plate [B] with a thickness gauge [C]. The gap is the amount of friction or steel plate warp.

★If any plate is warped over the service limit, replace it with a new one.

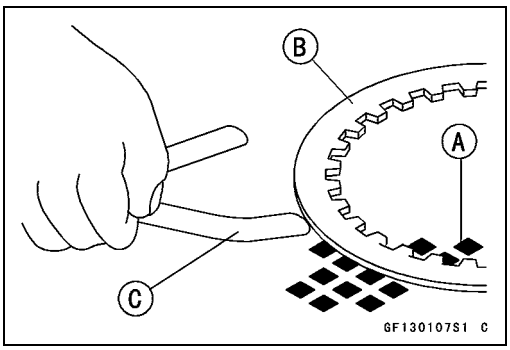

Friction and Steel Plate Warp

Standard:	**less than 0.2 mm (0.008 in.)**
Service Limit:	**0.3 mm (0.012 in.)**

Clutch

Clutch Spring Free Length Measurement

- Measure the free length of the clutch spring [A].

★If any spring is shorter than the service limit, it must be replaced.

Clutch Spring Free Length

Standard:	**34.2 mm (1.346 in.)**
Service Limit:	**33.1 mm (1.303 in.)**

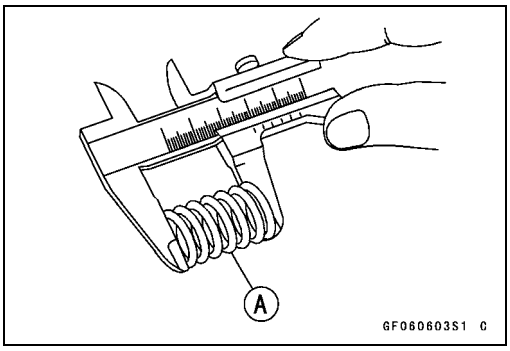

Clutch Housing Finger Inspection

- Visually inspect the fingers [A] of the clutch housing where the tangs [B] of the friction plates hit them.

★If they are badly worn or if there are grooves cut where the tangs hit, replace the housing. Also, replace the friction plates if their tangs are damaged.

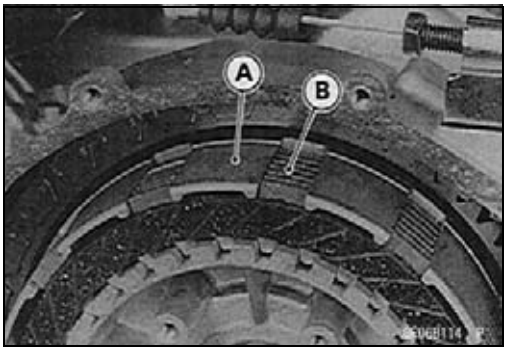

Clutch Hub Spline Inspection

- Visually inspect where the teeth on the steel plates wear against the splines [A] of the clutch hub.

★If there are notches worn into the splines, replace the clutch hub. Also, replace the steel plates if their teeth are damaged.

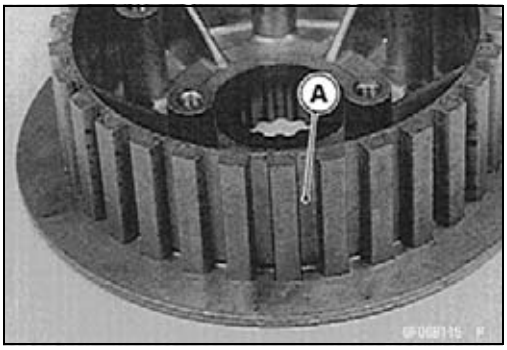

Engine Lubrication System

Table of Contents

Exploded View 6-2
Engine Oil Flow Chart 6-4
Specifications 6-5
Special Tools and Sealant 6-6
Engine Oil and Oil Filter 6-7
- Engine Oil Level Inspection 6-7
- Engine Oil Change 6-8
- Oil Filter Change 6-9

Oil Pan and Relief Valve 6-10
- Oil Pan Removal 6-10
- Oil Pan Installation 6-10
- Relief Valve Removal 6-10
- Relief Valve Installation 6-10
- Relief Valve Inspection 6-11

Oil Pump 6-12
- Oil Pump Removal 6-12
- Oil Pump Installation 6-13
- Oil Pump Disassembly 6-13
- Oil Pump Assembly 6-13
- Oil Screen Cleaning and Inspection 6-14

Oil Pressure Measurement 6-15
- Oil Pressure Measurement 6-15

Exploded View

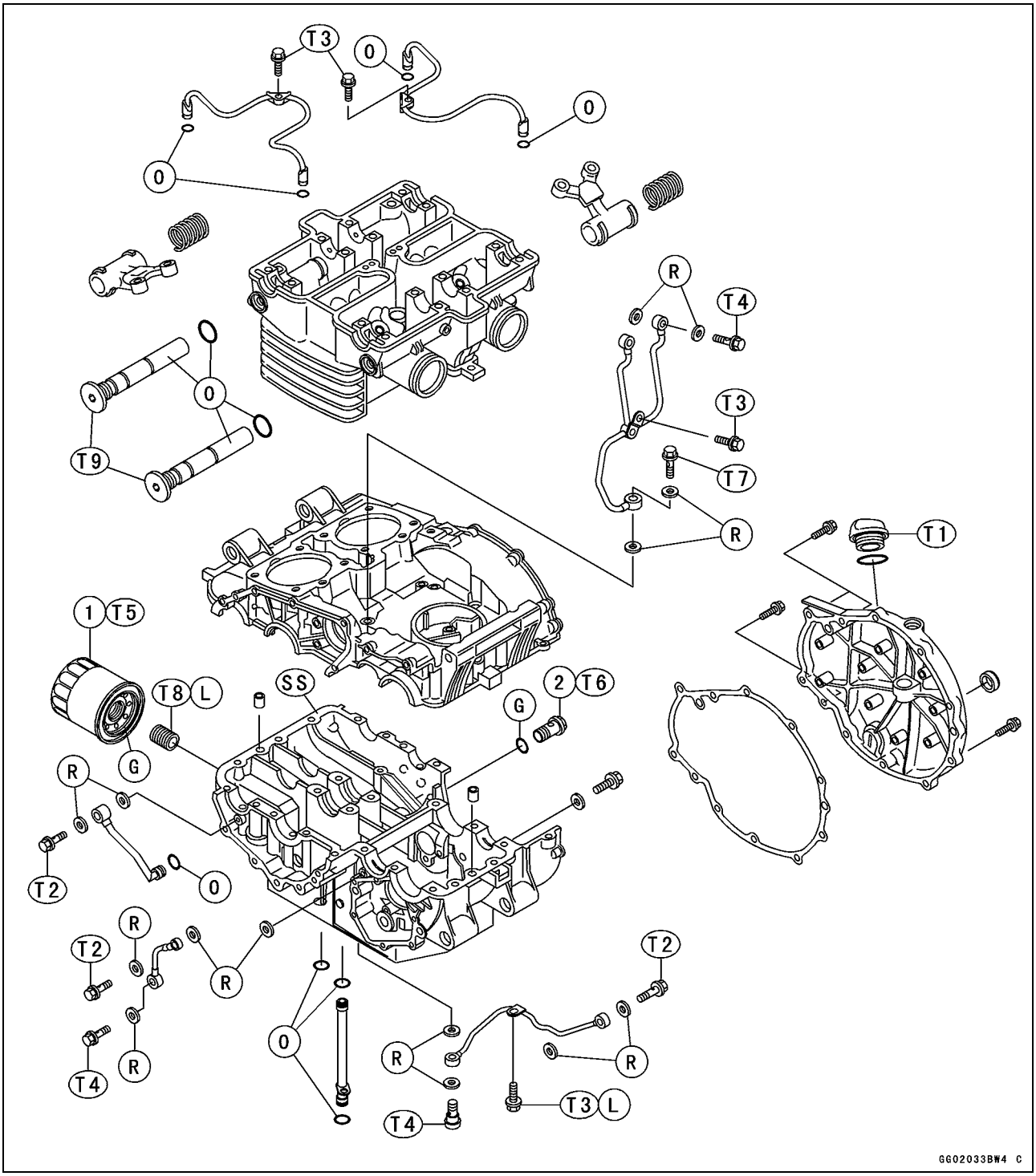

1. Oil Filter
2. Oil Passage Plug

T1: 1.5 N·m (0.15 kgf·m, 13 in·lb)
T2: 7.8 N·m (0.80 kgf·m, 69 in·lb)
T3: 11 N·m (1.1 kgf·m, 95 in·lb)
T4: 12 N·m (1.2 kgf·m, 104 in·lb)
T5: 17 N·m (1.75 kgf·m, 12.5 ft·lb)
T6: 18 N·m (1.8 kgf·m, 13 ft·lb)
T7: 20 N·m (2.0 kgf·m, 14.5 ft·lb)
T8: 25 N·m (2.5 kgf·m, 18 ft·lb)
T9: 39 N·m (4.0 kgf·m, 29 ft·lb)
G: Apply high temperature grease.
L: Apply a non-permanent locking agent.
O: Apply engine oil.
SS: Apply silicone sealant.
R: Replacement parts

Exploded View

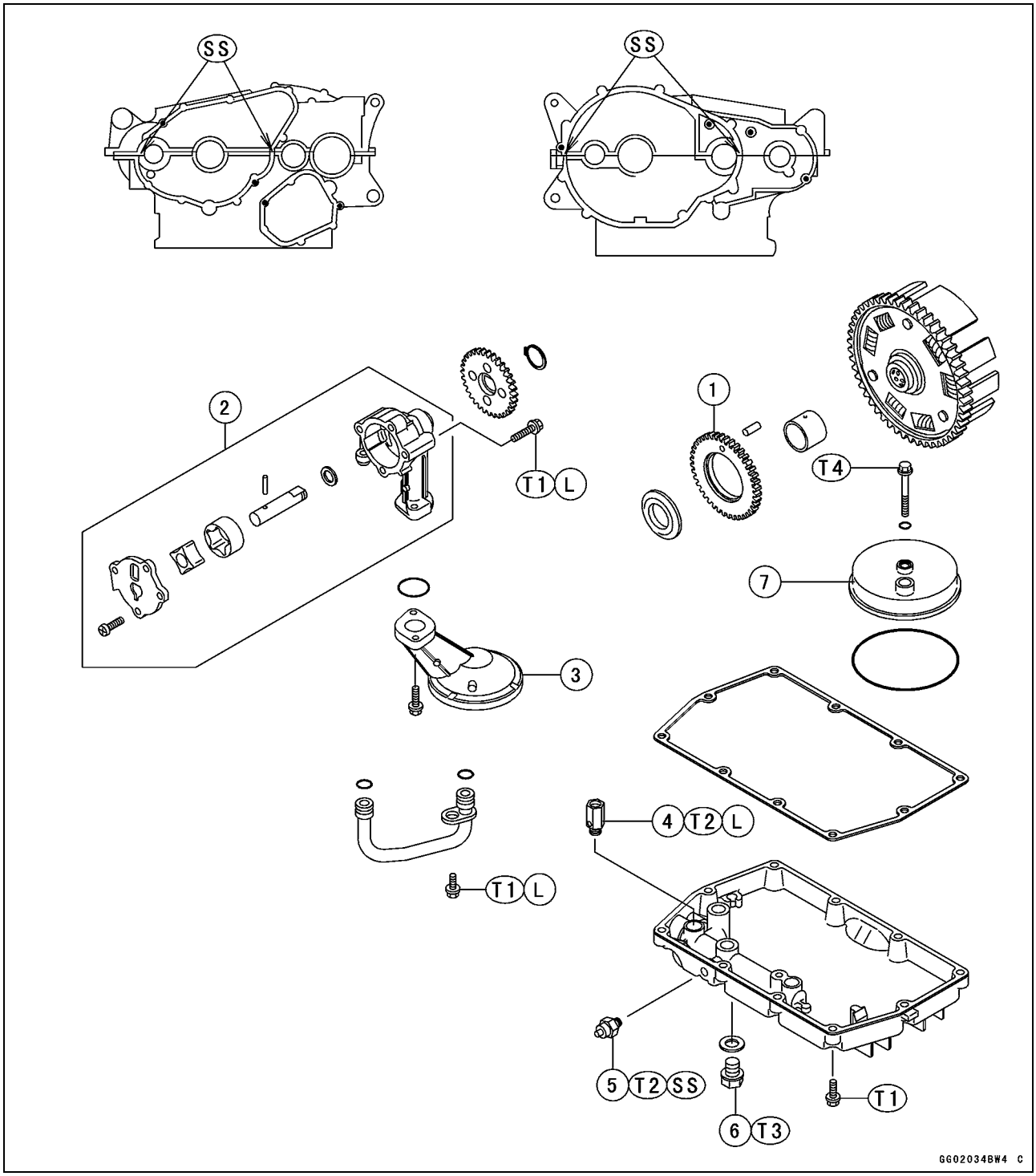

1. Oil Pump Drive Gear
2. Oil Pump
3. Oil Screen
4. Oil Pressure Relief Valve
5. Oil Pressure Switch
6. Engine Oil Drain Plug
7. Breather Body

T1: 11 N·m (1.1 kgf·m, 95 in·lb)
T2: 15 N·m (1.5 kgf·m, 11 ft·lb)
T3: 29 N·m (3.0 kgf·m, 22 ft·lb)
T4: 5.9 N·m (0.6 kgf·m, 52 in·lb)
L: Apply a non-permanent locking agent.
SS: Apply silicone sealant.

Engine Oil Flow Chart

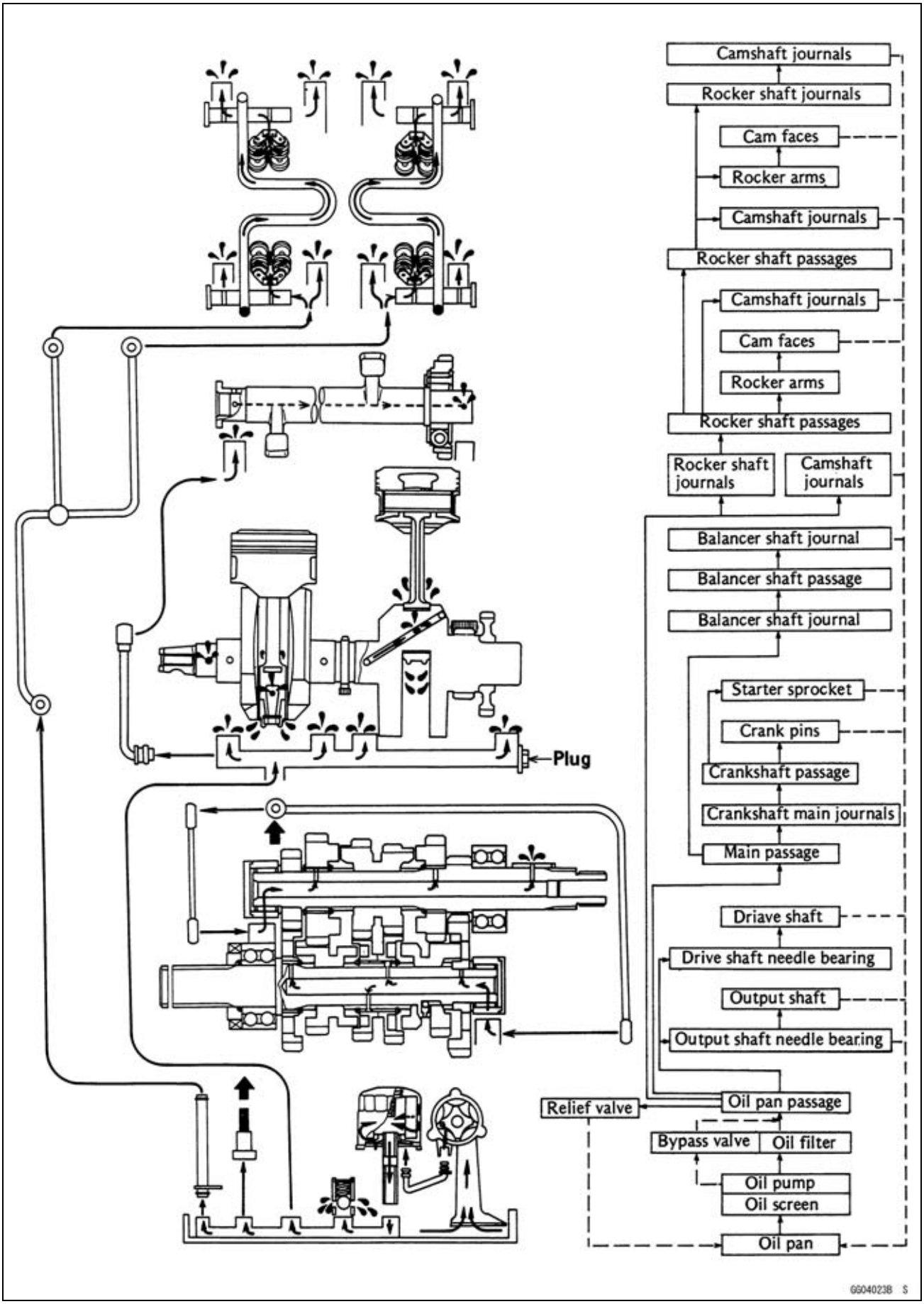

Specifications

Item	Standard
Engine Oil and Oil Filter	
Engine Oil:	
Grade:	
EN500-C1 ~ C5	SE, SF or SG class
EN500-C6 ~ C6F	API SE, SF or SG API SH or SJ with JASO MA
EN500C7F ~	API SE, SF or SG API SH, SJ or SL with JASO MA
Viscosity:	
EN500-C1 ~ C5	SAE 10W-40, 10W-50, 20W-40, or 20W-50
EN500-C6 ~	SAE10W-40
Capacity	2.8 L (2.96 us qt.) (when filter is not removed)
	3.0 L (3.17 us qt.) (when filter is removed)
	3.4 L (3.59 us qt.) (when engine is completely dry)
Level	Between upper and lower levels
Oil Pan and Relief Valve	
Relief Valve Opening Pressure	430 ~ 590 kPa (4.4 ~ 6.0 kgf/cm², 63 ~ 85 psi)
Oil Pressure @4 000 r/min (rpm), Oil Temperature 90°C (194°F)	275 ~ 335 kPa (2.8 ~ 3.4 kgf/cm², 40 ~ 48 psi)

Special Tools and Sealant

Oil Pressure Gauge, 10 kgf/cm²:
57001-164

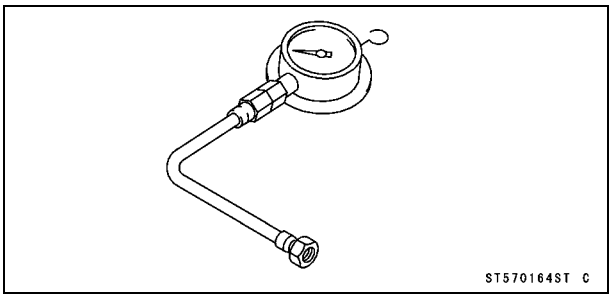

Oil Pressure Gauge Adapter, M18 × 1.5:
57001-1278

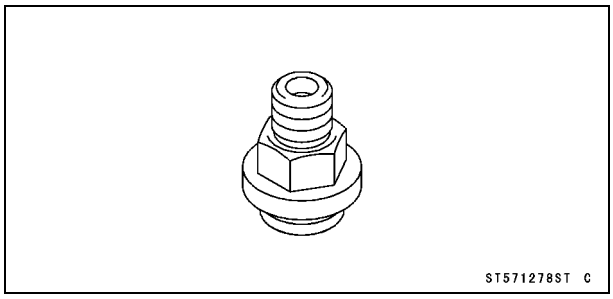

Oil Filter Wrench:
57001-1249

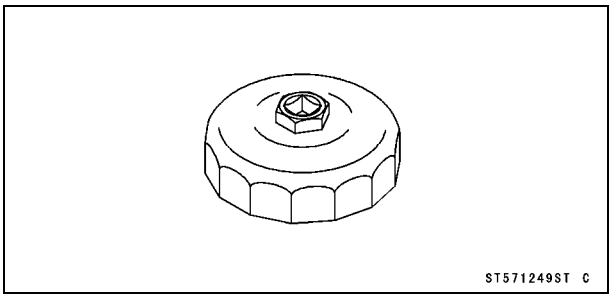

Kawasaki Bond (Silicone Sealant):
56019-120

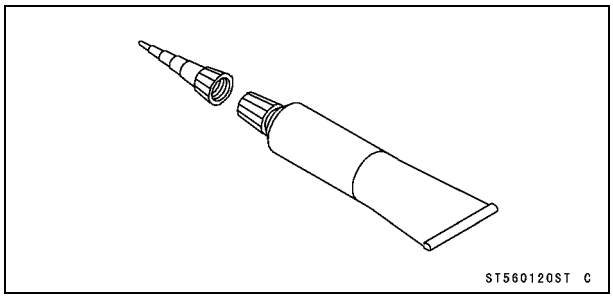

Engine Oil and Oil Filter

⚠ WARNING

Motorcycle operation with insufficient, deteriorated, or contaminated engine oil will cause accelerated wear and may result in engine or transmission seizure, accident, and injury.

Engine Oil Level Inspection

- If the oil has just been changed, start the engine and run it for several minutes at idle speed. This fills the oil filter with oil. Stop the engine, then wait several minutes until the oil settles.

CAUTION

Racing the engine before the oil reaches every part can cause engine seizure.

- If the motorcycle has just been used, wait several minutes for all the oil to drain down.

- Situate the motorcycle so that it is perpendicular to the ground, and check the engine oil level through the oil level gauge.

★The oil level should come up between the upper [A] and lower [B] level lines.

★If the oil level is too high, remove the excess oil, using a syringe or some other suitable device.

★If the oil level is too low, add the correct amount of oil through the oil filler opening. Use the same type and make of oil that is already in the engine.

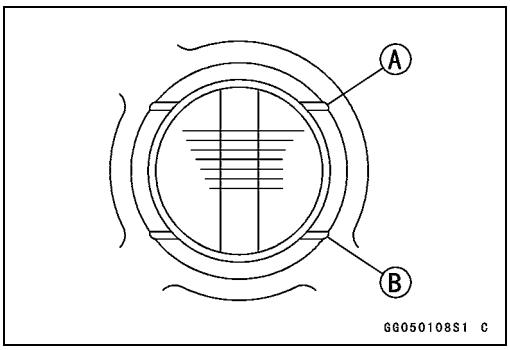

NOTE

○*If the engine oil type and make are unknown, use any brand of the specified oil to top up the level in preference to running the engine with the oil level low. Then at your earliest convenience, change the oil completely.*

CAUTION

If the engine oil gets extremely low or if the oil pump or oil passages clog up or otherwise do not function properly, the oil pressure warning light will light. If this light stays on when the engine is running above idle speed, stop the engine immediately and find the cause.

Engine Oil and Oil Filter

Engine Oil Change

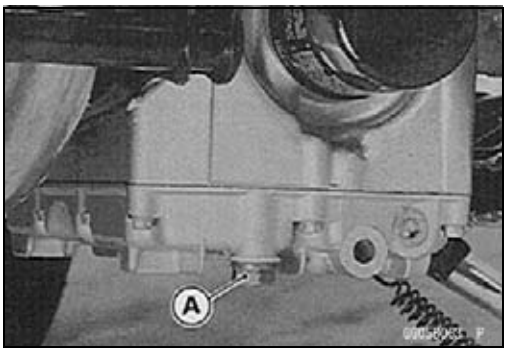

- Warm up the engine so that the oil will pick up any sediment and drain easily. Then stop the engine.
- Support the motorcycle perpendicular to the ground, and place an oil pan beneath the engine.
- Remove the engine drain plug [A], and let the oil drain completely.
- If the oil filter is to be changed, replace it with a new one.
- Check the gasket at the drain plug for damage.

★Replace the gasket with a new one if it is damaged.

- After the oil has completely drained out, install the drain plug with the gasket, and tighten it.

Torque - Engine Oil Drain Plug: 29 N·m (3.0 kgf·m, 22 ft·lb)

- Fill the engine with a good quality motor oil specified in the table.
- Check the oil level.

Engine Oil

Grade:

EN500-C1 ~ C5	**SE, SF, or SG**
EN500-C6 ~C6F	**API SE, SF or SG, API SH or SJ with JASO MA**
EN500C7F ~	**API SE, SF or SG, API SH, SJ or SL with JASO MA**

Viscosity:

EN500-C1 ~ C5	**SAE 10W-40, 10W-50, 20W-40, or 20W-50**
EN500-C6 ~	**SAE 10W-40**
Capacity:	**2.8 L (2.96 us qt.) (when filter is not removed)**
	3.0 L (3.17 us qt.) (when filter is removed)
	3.4 L (3.59 us qt.) (when engine is completely dry)

NOTE

○*Although 10W-40 engine oil is the recommended oil for most conditions, the oil viscosity may need to be changed to accommodate atmospheric conditions in your riding area.*

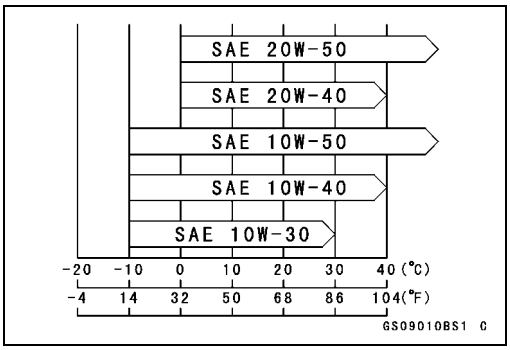

Engine Oil and Oil Filter

Oil Filter Change

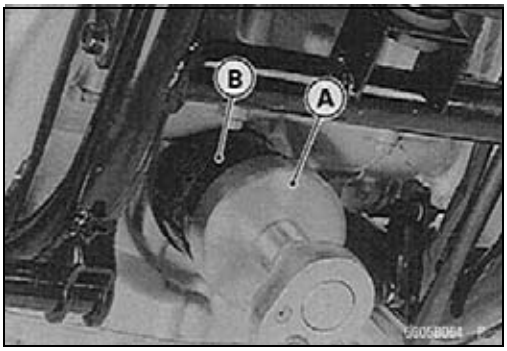

- Support the motorcycle perpendicular to the ground.
- Drain the engine oil (see Engine Oil Change).
- Using an oil filter wrench [A] on the oil filter [B], unscrew it.

  Special Tool - Oil Filter Wrench: 57001-1249

- Replace the oil filter with a new one.
- Apply engine oil to the gasket before screwing on.
- Tighten the oil filter with an oil filter wrench or tighten it with hands about 3/4 turns after gasket touches the mounting surface of the engine.

  Torque - Oil Filter: 17 N·m (1.75 kgf·m, 12.5 ft·lb)

- Pour in the specified type and amount of oil (see Engine Oil Change).
- Thoroughly warm up the engine and check for oil leakage.

Oil Pan and Relief Valve

Oil Pan Removal

- Drain the engine oil (see Engine Oil Change).
- Disconnect the oil pressure switch lead.
- Remove the oil pan mounting bolts [A] and the oil pan from the crankcase.

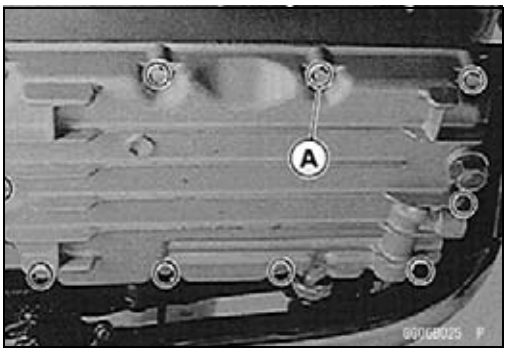

Oil Pan Installation

- Check that the O-rings for the outlet side [A] and inlet side [B] are in good condition.

★If they are damaged, replace them with new ones.

○The O-rings between the oil pan and the lower case oil passage must be installed so that flat side faces the lower case oil passage.

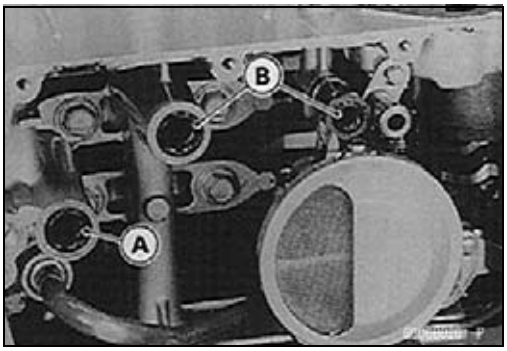

- Apply a small amount of oil to the O-rings.
- Install the oil pan and tighten its mounting bolts.

Torque - Oil Pan Mounting Bolts: 11 N·m (1.1 kgf·m, 95 ft·lb)

- Connect the oil pressure switch lead.
- Fill the engine with the specified oil.

Relief Valve Removal

- Remove the oil pan (see Oil Pan Removal).
- Remove the relief valve [A] from the oil passage on the oil pan.

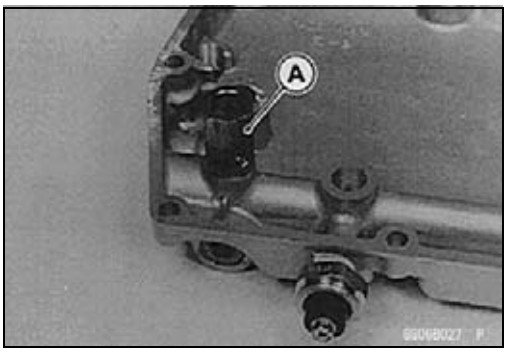

Relief Valve Installation

- Apply a non-permanent locking agent to the threads of the relief valve, and tighten it.

Torque - Relief Valve: 15 N·m (1.5 kgf·m, 11 ft·lb)

CAUTION
Do not over apply a non-permanent locking agent to the threads. This may block the oil passage.

- Install the oil pan.

Oil Pan and Relief Valve

Relief Valve Inspection

- Remove the relief valve.
- Check to see if the steel ball inside the valve slides smoothly when pushing it in with a wooden or other soft rod, and see if it comes back to its seat by valve spring pressure.

NOTE

○*Inspect the valve in its assembled state. Disassembly and assembly may change the valve performance.*

★If any rough spots are found during above inspection, wash the valve clean in a high-flash point solvent and blow out any foreign particles that may be in the valve with compressed air.
[A] Valve
[B] Spring

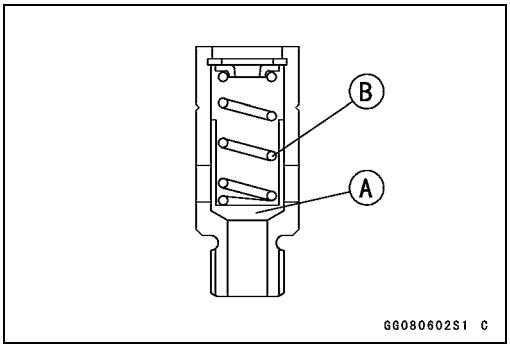

⚠ WARNING

Clean the parts in a well-ventilated area, and take care that there is no spark or flame anywhere near the working area. Because of the danger of highly flammable liquids, do not use gasoline or low flash -point solvents.

★If cleaning does not solve the problem, replace the relief valve as an assembly. The relief valve is precision made with no allowance for replacement of individual parts.

Oil Pump

Oil Pump Removal

- Drain the coolant (see Coolant Draining in the Cooling System chapter).
- Drain the engine oil (see Engine Oil Change).
- Remove the engine (see Engine Removal in the Engine Removal/Installation chapter).
- Remove:
  Water Pump (see Water Pump Removal in the Cooling System chapter)
  Clutch Cover (see Clutch Cover Removal in the Clutch chapter)
  Alternator Cover with Gear Change Link and Pedal (see Alternator Rotor/Starter Clutch Removal in the Electrical System chapter)
  Chain Guide
  Starter Motor (see Starter Motor Removal in the Electrical System chapter)
  Upper Case Mounting Bolts

- Turn the engine upside down and remove the following:
  Oil Pan (see Oil Pan Removal)
  Oil Screen Bolts [A]
  Oil Screen [B]

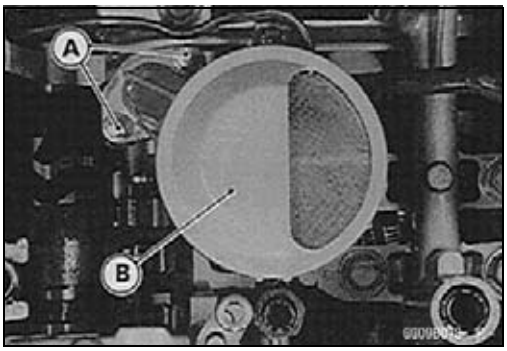

  Oil Pump Outer Oil Pipe Bolt [A]
  Oil Pump Outer Oil Pipe [B]
  Lower Case Mounting Bolts
  Lower Case

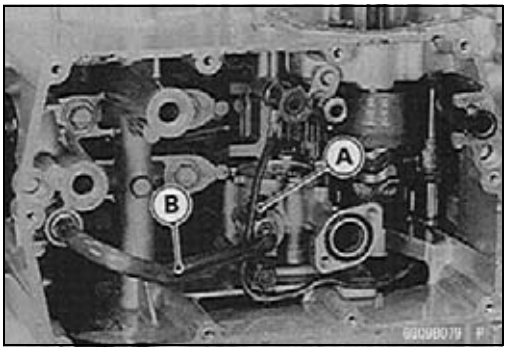

- Remove the circlip [A] that holds the oil pump gear [B] on the oil pump shaft [C].
- Remove the oil pump gear.
- Take off the oil pump mounting screws [D].
- Remove the oil pump from the lower case.

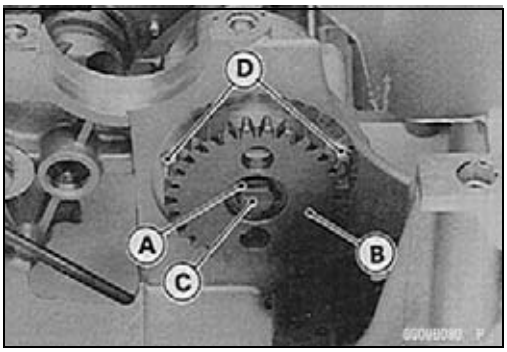

Oil Pump

Oil Pump Installation

- Fill the pump with engine oil turning the pump shaft before installation.
- Apply a non-permanent locking agent to the threads of the oil pump mounting bolts and tighten them.

  Torque - Oil Pump Mounting Bolts: 11 N·m (1.1 kgf·m, 95 in·lb)

- Install the oil pump gear [A] so that the projection [B] side faces inward.
- Install a new circlip.

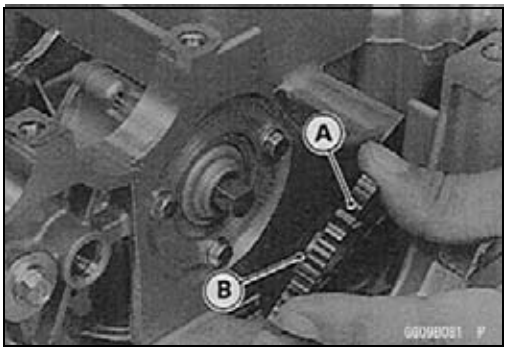

- Be sure to install the oil pump and outer oil pipe O-rings [A], and apply engine oil to them.
- Install the oil pump outer oil pipe [B] and oil screen.

○Apply a non-permanent locking agent to the oil pipe bolt and tighten it.

Torque - Oil Pump Outer Oil Pipe Bolt: 11 N·m (1.1 kgf·m, 95 in·lb)

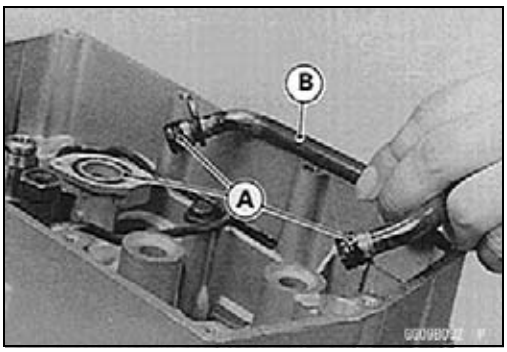

Oil Pump Disassembly

- Remove the oil pump from the lower case.
- Take off the oil pump cover screws.
- Remove the oil pump cover.
- Drop the rotors [A] out of the oil pump body [B].

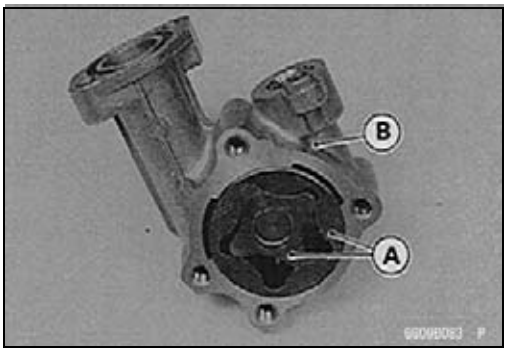

- Pull the pin [A] out of the pump shaft.
- Pull the oil pump shaft [B] out of the body.
- Remove the washer.

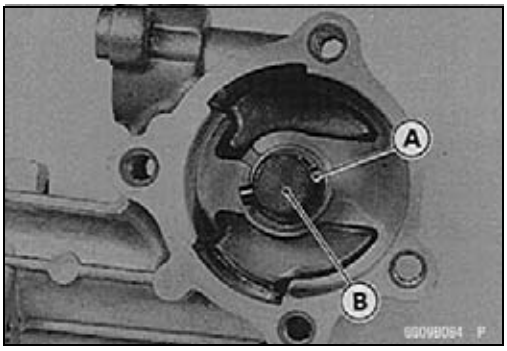

Oil Pump Assembly

- Assembly of the oil pump is the reverse of disassembly.
- Before installing the oil pump, be sure the shaft and rotors turn freely.

Oil Pump

Oil Screen Cleaning and Inspection

- Clean the oil pump screen with high-flash point solvent and remove any particles stuck to it.

⚠ WARNING

Clean the screen in a well-ventilated area, and take care that there is no spark or flame anywhere near the working area. Because of the danger of highly flammable liquids, do not use gasoline or low flash point solvents.

NOTE

○*While cleaning the screen, check for any metal particles that might indicate internal engine damage.*

- Check the screen carefully for any damage: holes and broken wires.

★If the screen is damaged, replace the oil screen assembly.

Oil Pressure Measurement

Oil Pressure Measurement

NOTE

○*Measure the oil pressure after the engine is warmed up.*

- Remove:
  Right Footpeg Assembly (Hanging it)
  Oil Passage Plug

⚠ WARNING

If the oil passage plug is removed while the engine is warm, hot engine oil will drain through the oil passage; take care against burns.

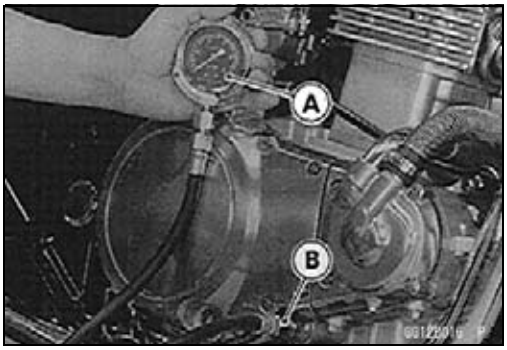

- Attach the oil pressure gauge [A] and adapter [B] to the oil passage hole.

  Special Tools - Oil Pressure Gauge, 10 kg/cm²: 57001-164
  Oil Pressure Gauge Adapter, M18 × 1.5: 57001-1278

- Run the engine at the specified speed, and read the oil pressure gauge.

★If the oil pressure is significantly below the specification, inspect the oil pump and relief valve.

★If the oil pump and relief valve are not at fault, inspect the rest of the lubrication system.

Oil Pressure
275 ~ 335 kPa (2.8 ~ 3.4 kg/cm², 40 ~ 48 psi) @4 000 r/min (rpm), 90°C (194°F) of oil temperature

- Stop the engine.
- Remove the oil pressure gauge and adapter.
- Install the oil passage plug and tighten it.

  Torque - Oil Passage Plug: 18 N·m (1.8 kgf·m, 13 ft·lb)

- Install the right footpeg assembly.

NOTE

○*When binding the brake switch lead with the plastic clamp, make sure it does not touch the exhaust pipe.*

⚠ WARNING

To avoid a serious burn, never touch the hot exhaust pipe.

Engine Removal/Installation

Table of Contents

Exploded View 7-2
Special Tool 7-3
Engine Removal/Installation 7-4
Engine Removal 7-4
Engine Installation 7-5

Exploded View

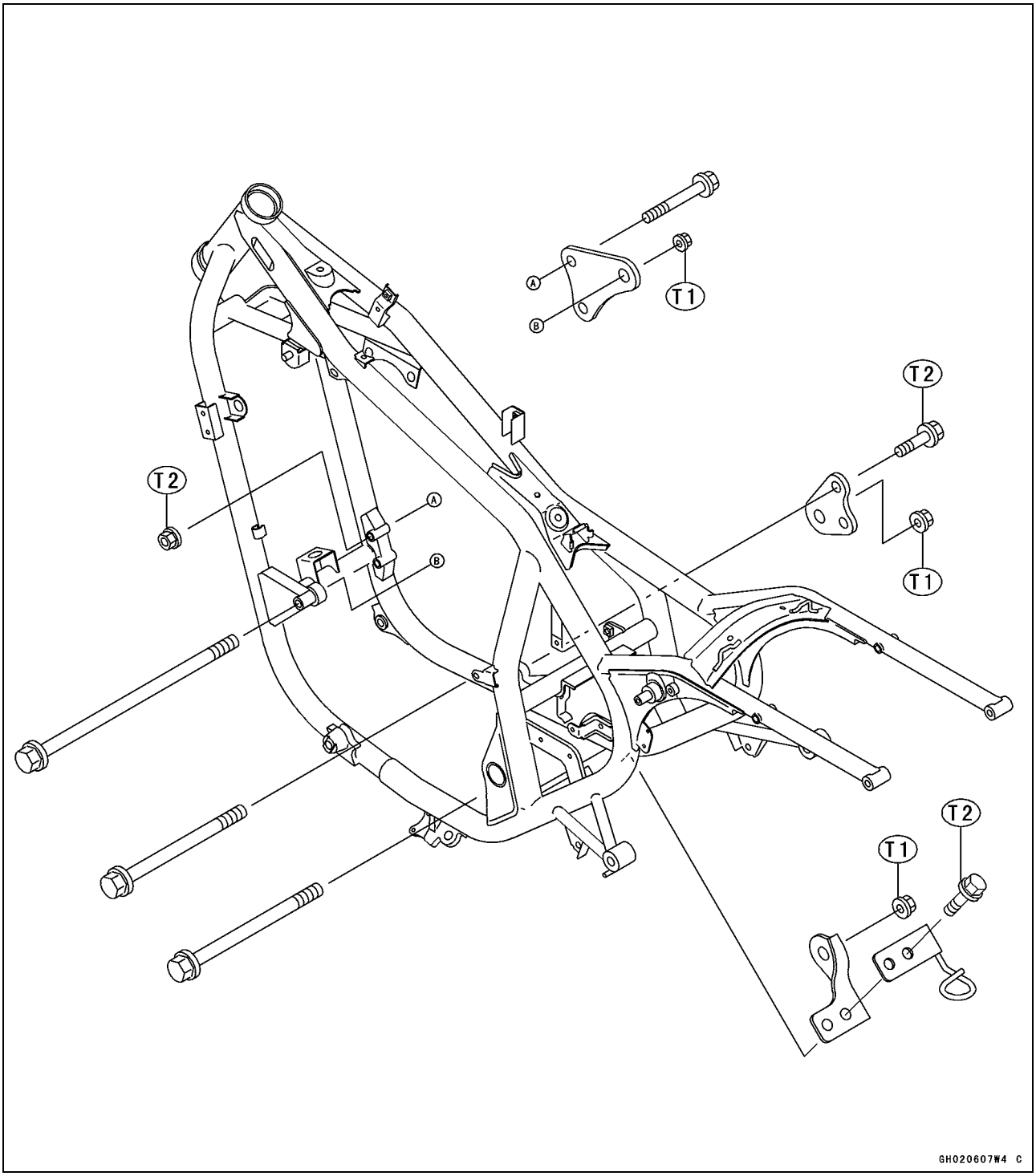

T1: 44 N·m (4.5 kgf·m, 33 ft·lb)
T2: 25 N·m (2.5 kgf·m, 18 ft·lb)

Special Tool

Jack:
57001-1238

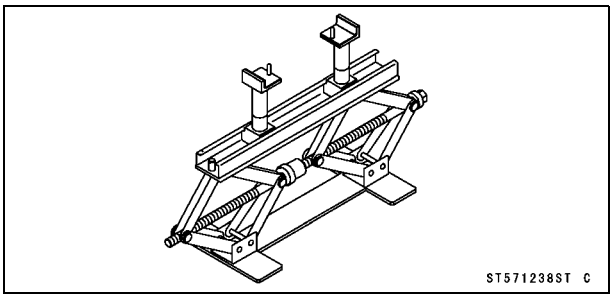

Engine Removal/Installation

Engine Removal

- Raise the rear wheel off the ground.

  Special Tool - Jack: 57001-1238

- Drain the engine oil (see Engine Oil Change in the Engine Lubrication System chapter).
- Drain the coolant (see Coolant Draining in the Cooling System chapter).
- Remove:
  Left and Right Side Covers (see Left and Right Side Cover Removal in the Frame chapter)
  Seat (see Seat Removal in the Frame chapter)
  Fuel Tank (see Fuel Tank Removal in the Fuel System chapter)

  Ignition Switch [A]
  Radiator Fan [B]
  Radiator Hoses [C]
  Reservoir Tank [D]
  Ignition Coils [E]
  Vacuum Switch Valve [F] with Hoses (US, KR, AT and CH Models)
  Mufflers and Exhaust Pipes [G] (see Exhaust Pipe, Muffler Removal in the Engine Top End chapter)
  Carburetors [H] (see Carburetor Removal in the Fuel System chapter)
  Air Cleaner Housing [I] (see Air Cleaner Housing Removal in the Fuel System chapter)
  Clutch Cable Lower End [J] (see Clutch Release Removal in the Clutch chapter)
  Right Footpeg [K] and Rear Brake Assembly (see Brake Pedal Removal in the Brake chapter)
  Shift Pedal [L] (see External Shift Mechanism Remove in the Crankshaft/Transmission chapter)
  Engine Sprocket Cover [M] (see Engine Sprocket Removal in the Final Drive chapter)

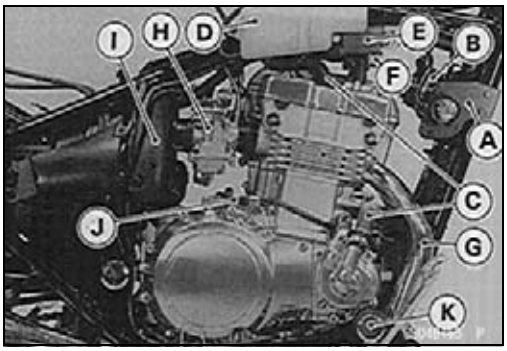

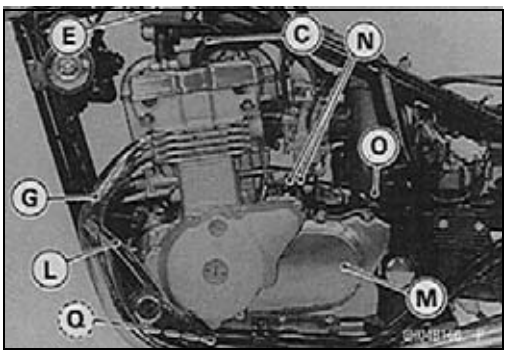

- Disconnect the following leads or connectors.
  Starter Motor Cables [N]
  Alternator Lead Connectors [O]
  Neutral Switch Connector [P]
  Oil Pressure Switch Lead [Q]

- Remove:
  Engine Sprocket [R] (see Engine Sprocket Removal in the Final Drive chapter)
  Drive Chain [S] (see Drive Chain Removal in the Final Drive chapter)

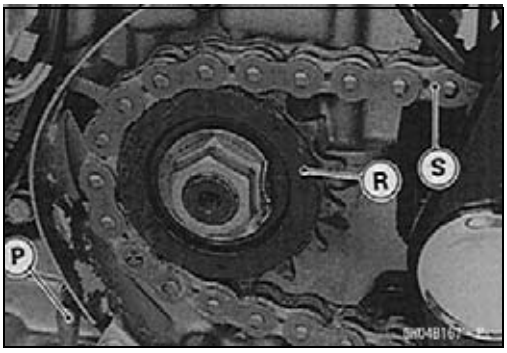

Engine Removal/Installation

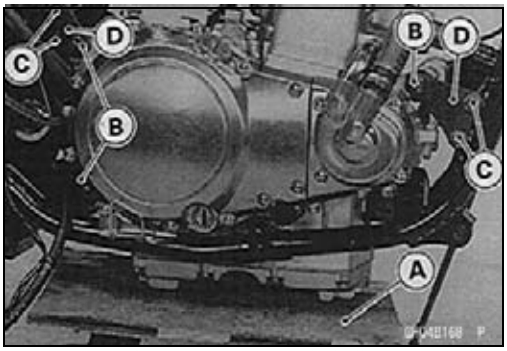

- Support the engine with a stand [A].
- Remove the engine mounting nuts [B].
- Remove the engine bracket bolts [C] and nuts.
- Remove the engine brackets [D].
- Remove the engine mounting bolts.
- Remove the engine to the right.

Engine Installation

- Install the engine mounting brackets temporarily.
- Insert the engine mounting bolts from left side.
- Tighten the engine mounting nuts.

  Torque - Engine Mounting Nuts: 44 N·m (4.5 kgf·m, 33 ft·lb)

- Tighten the engine mounting bracket bolts and nuts.

  Torque - Engine Mounting Bracket Nuts: 25 N·m (2.5 kgf·m, 18 ft·lb)
  Engine Mounting Bracket Bolts: 25 N·m (2.5 kgf·m, 18 ft·lb)

- Install the removed parts.
- Fill the engine with engine oil (see Engine Oil Change in the Engine Lubrication System chapter).
- Fill the engine with coolant (see Coolant Filling in the Cooling System chapter).
- Adjust the following.
  Throttle Cable (see Throttle Cable Adjustment in the Fuel System chapter)
  Clutch cable (see Clutch Lever Free Play Adjustment in the Clutch chapter)
  Drive Chain (see Drive Chain Slack Adjustment in the Final Drive chapter)
  Rear Brake (see Brake Pedal Free Play Adjustment in the Brakes chapter)

Crankshaft/Transmission

Table of Contents

Exploded View 8-2
Specifications 8-4
Special Tools and Sealant 8-7
Crankcase Splitting 8-8
  Crankcase Splitting 8-8
  Crankcase Assembly 8-9
Clutch Housing/Primary Chain 8-11
  Clutch Housing/Primary Chain Removal 8-11
  Clutch Housing/Primary Chain Installation 8-11
  Primary Chain Guide Wear 8-12
Crankshaft/Connecting Rods 8-13
  Crankshaft Removal 8-13
  Crankshaft Installation 8-13
  Connecting Rod Removal 8-13
  Connecting Rod Installation 8-13
  Crankshaft/Connecting Rod Cleaning 8-14
  Connecting Rod Bend/Twist Inspection 8-14
  Connecting Rod Big End Side Clearance Inspection 8-15
  Connecting Rod Big End Bearing Insert/Crankpin Clearance Inspection 8-15
  Crankshaft Runout Inspection 8-17
  Crankshaft Main Bearing Insert/Journal Clearance Inspection 8-17
  Crankshaft Side Clearance Inspection 8-19
Balancer 8-20
  Balancer Removal 8-20
  Balancer Installation 8-20
  Balancer Shaft Bearing Insert/Journal Clearance Inspection 8-20
Transmission 8-23
  External Shift Mechanism Removal 8-23
  External Shift Mechanism Installation 8-23
  External Shift Mechanism Inspection 8-24
  Transmission Shaft Removal 8-24
  Transmission Shaft Installation 8-25
  Transmission Shaft Disassembly 8-25
  Drive Shaft Assembly 8-26
  Output Shaft Assembly 8-27
  Shift Drum and Fork Removal 8-28
  Shift Drum and Fork Installation 8-29
  Shift Drum Disassembly 8-30
  Shift Drum Assembly 8-30
  Ball and Needle Bearing Wear Inspection 8-31
  Shift Pedal, Shift Pedal Linkage Removal 8-31
  Shift Pedal, Shift Pedal Linkage Installation 8-31

Exploded View

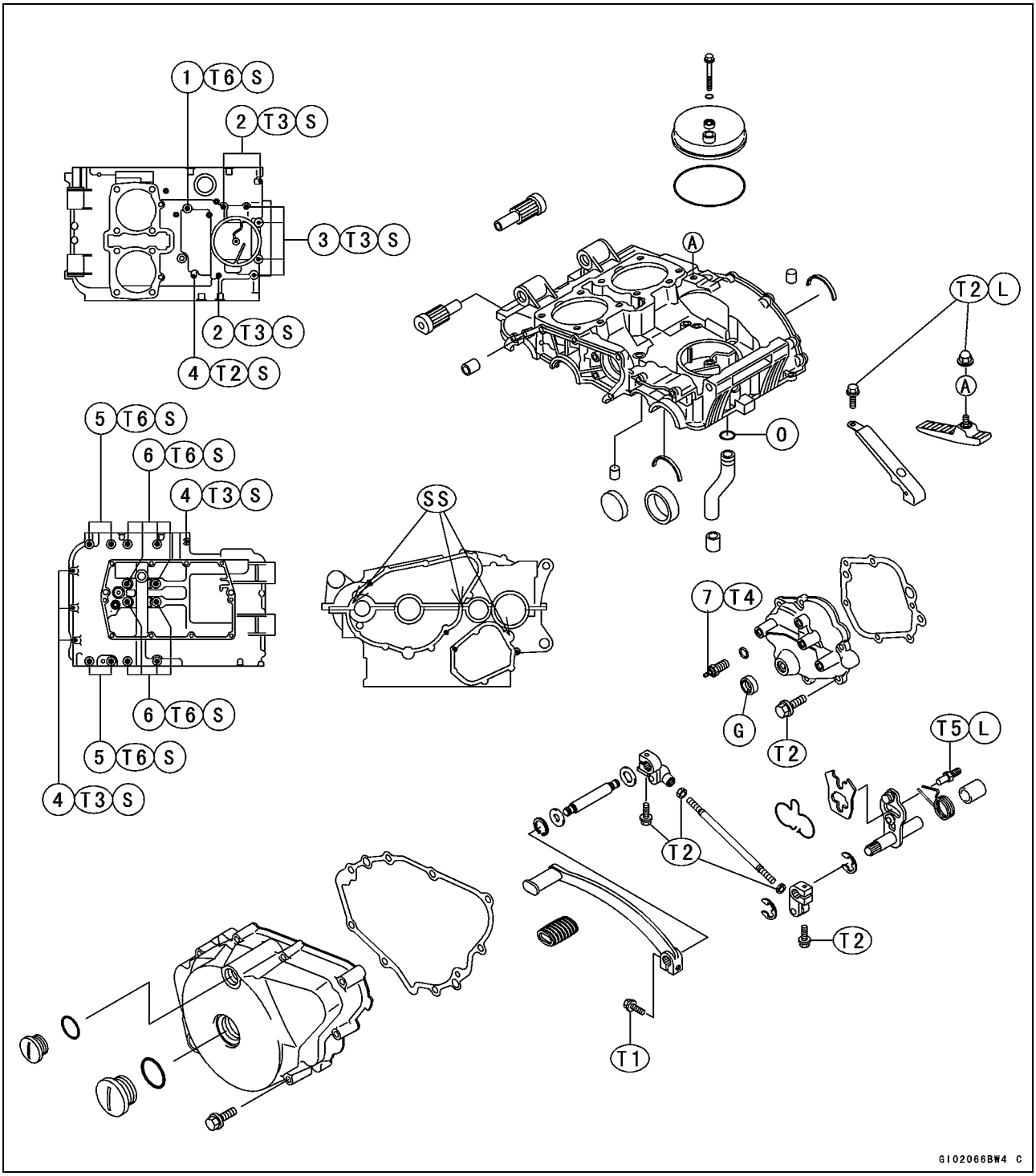

1. 8 mm Bolt (L 55 mm)
2. 6 mm Bolts (L 60 mm)
3. 6 mm Bolts (L 80 mm)
4. 6 mm Bolts (L 40 mm)
5. 8 mm Bolts (L 80 mm)
6. 8 mm Bolts (L 40 mm)
7. Neutral Switch

T1: 8.8 N·m (0.9 kgf·m, 78 in·lb)
T2: 11 N·m (1.1 kgf·m, 95 in·lb)
T3: 12 N·m (1.2 kgf·m, 104 in·lb)
T4: 15 N·m (1.5 kgf·m, 11 ft·lb)
T5: 20 N·m (2.0 kgf·m, 14.5 ft·lb)
T6: 27 N·m (2.8 kgf·m, 20 ft·lb)
G: Apply high temperature grease.
L: Apply a non-permanent locking agent.
O: Apply engine oil.
S: Follow the specific tightening sequence.
SS: Apply silicone sealant.

Exploded View

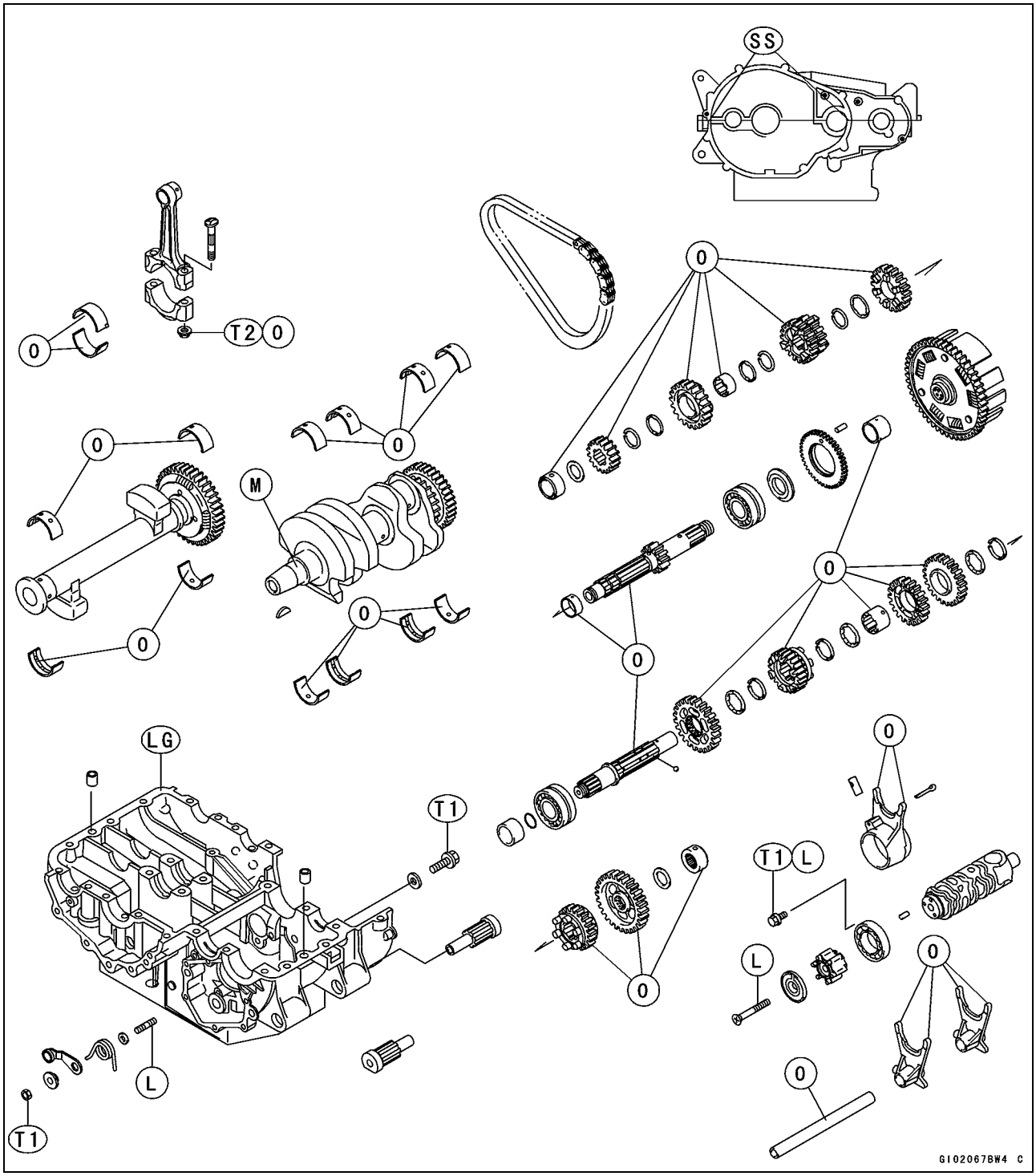

T1: 11 N·m (1.1 kgf·m, 95 in·lb)
T2: 36 N·m (3.7 kgf·m, 27 ft·lb)
L: Apply a non-permanent locking agent.
LG: Apply liquid gasket - silver.
M: Apply a thin coat of molybdenum disulfide grease.
O: Apply engine oil.
SS: Apply silicone sealant.

Specifications

Item		Standard	Service Limit
Crankshaft, Connecting Rods			
Connecting Rod Bend		– – –	0.2/100 mm (0.008/3.94 in.)
Connecting Rod Twist		– – –	0.2/100 mm (0.008/3.94 in.)
Connecting Rod Big End Side Clearance		0.13 ~ 0.38 mm (0.0051 ~ 0.0150 in.)	0.50 mm (0.02 in.)
Connecting Rod Big End Bearing Insert/Crankpin Clearance		0.043 ~ 0.073 mm (0.0017 ~ 0.0029 in.)	0.10 mm (0.04 in.)
Crankpin diameter:		37.984 ~ 38.000 mm (1.4954 ~ 1.4961 in.)	37.97 mm (1.495 in.)
Marking	None	37.984 ~ 37.994 mm (1.4954 ~ 1.4958 in.)	– – –
	○	37.995 ~ 38.000 mm (1.4959 ~ 1.4961 in.)	– – –
Connecting Rod Big End Bore Diameter:		41.000 ~ 41.016 mm (1.6142 ~ 1.6148 in.)	– – –
Marking	None	41.000 ~ 41.008 mm (1.6142 ~ 1.6145 in.)	– – –
	○	41.009 ~ 41.016 mm (1.6145 ~ 1.6148 in.)	– – –
Connecting rod big end bearing insert thickness:			
	Brown	1.474 ~ 1.479 mm (0.0580 ~ 0.0582 in.)	– – –
	Black	1.479 ~ 1.484 mm (0.0582 ~ 0.0584 in.)	– – –
	Blue	1.484 ~ 1.489 mm (0.0584 ~ 0.0586 in.)	– – –

Connecting Rod Big End Bearing Insert Selection:

Con-rod Big End Bore Diameter	Crankpin Diameter	Bearing Insert	
Marking	Marking	Size Color	Part Number
○	○	Black	92028-1349
None	None	Blue	92028-1348
○	None		
None	○	Brown	92028-1350

Crankshaft Runout	less than 0.02 mm (0.0008 in.) TIR	0.05 mm (0.0020 in.) TIR
Crankshaft Side Clearance	0.05 ~ 0.25 mm (0.0020 ~ 0.0098 in.)	0.40 mm (0.016 in.)
Crankshaft Main Bearing Insert/Journal Clearance	0.020 ~ 0.044 mm (0.0008 ~ 0.0017 in.)	0.08 mm (0.0032 in.)
Crankshaft Main Journal Diameter:	35.984 ~ 36.000 (1.4167 ~ 1.4173 in.)	35.96 mm (1.4157 in.)

Specifications

Item		Standard	Service Limit
Marking	None	35.984 ~ 35.992 mm (1.4167 ~ 1.4170 in.)	– – –
	1	35.993 ~ 36.000 mm (1.4170 ~ 1.4173 in.)	– – –
Crankcase Main Bearing Bore Diameter:		39.000 ~ 39.016 mm (1.5354 ~ 1.5361 in.)	– – –
Marking	○	39.000 ~ 39.008 mm (1.5354 ~ 1.5357 in.)	– – –
	None	39.009 ~ 39.016 mm (1.5358 ~ 1.5361 in.)	– – –
Crankshaft main bearing insert thickness:			
	Brown	1.490 ~ 1.494 mm (0.0587 ~ 0.0588 in.)	– – –
	Black	1.494 ~ 1.498 mm (0.0588 ~ 0.0590 in.)	– – –
	Blue	1.498 ~ 1.502 mm (0.0590 ~ 0.0591 in.)	– – –

Crankshaft Main Bearing Insert Selection:

Crankcase Main Bearing Bore	Crankshaft Main Journal Diameter	Bearing Insert*		
Diameter Marking	Marking	Size Color	Part Number	Journal Nos.
○	1	Brown	92028-1102	2, 3
			92028-1274	1, 4
None	None	Blue	92028-1100	2, 3
○	None		92028-1272	1, 4
None	1	Black	92028-1101	2, 3
			92028-1273	1, 4

*The bearing inserts for Nos. 2 and 3 journals have oil grooves.

Balancer Shaft			
Balancer Shaft Bearing Insert/Journal Clearance		0.020 ~ 0.050 mm (0.0008 ~ 0.0020 in.)	0.09 mm (0.0035 in.)
Balancer Shaft Journal Diameter:		27.987 ~ 28.000 mm (1.1018 ~ 1.1024 in.)	27.96 mm (1.1008 in.)
Marking	None	27.987 ~ 27.993 mm (1.1018 ~ 1.1021 in.)	– – –
	○	27.994 ~ 28.000 mm (1.1021 ~ 1.1024 in.)	– – –
Crankcase bearing bore diameter:		31.008 ~ 31.024 mm (1.2208 ~ 1.2214 in.)	– – –
Marking	○	31.008 ~ 31.016 mm (1.2208 ~ 1.2211 in.)	– – –
	None	31.017 ~ 31.024 mm (1.2211 ~ 1.2214 in.)	– – –
Balancer Shaft Bearing Insert Thickness:			

Specifications

Item	Standard	Service Limit
Brown	1.495 ~ 1.499 mm (0.0589 ~ 0.0590 in.)	– – –
Black	1.499 ~ 1.503 mm (0.0590 ~ 0.0592 in.)	– – –
Blue	1.503 ~ 1.507 mm (0.0592 ~ 0.0593 in.)	– – –

Balancer Shaft Bearing Insert Selection:

Crankcase Bearing Bore Diameter Marking	Balancer shaft Journal Diameter Marking	Bearing Insert		
		Size Color	Part Number	
			L.H.	R.H.
○	○	Brown	92028-1497	92028-1692
○	None	Blue	92028-1495	92028-1690
None	○			
None	None	Black	92028-1496	92028-1691

Transmission		
Gear Shift Fork Groove Width	5.05 ~ 5.15 mm (0.1988 ~ 0.2028 in.)	5.3 mm (0.2087 in.)
Shift Fork Ear Thickness	4.9 ~ 5.0 mm (0.1929 ~ 0.1969 in.)	4.8 mm (0.1890 in.)
Shift Fork Guide Pin Diameter	7.95 ~ 8.00 mm (0.3130 ~ 0.3150 in.)	7.8 mm (0.3071 in.)
Shift Drum Groove Width	8.05 ~ 8.20 mm (0.3169 ~ 0.3228 in.)	8.3 mm (0.3268 in.)

Special Tools and Sealant

Bearing Puller:
57001-135

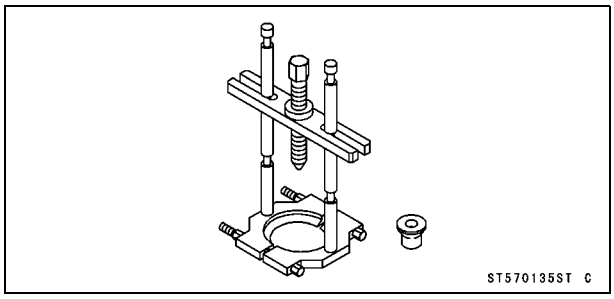

Outside Circlip Pliers:
57001-144

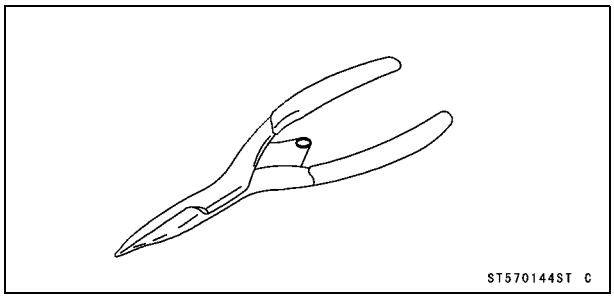

Bearing Puller Adapter:
57001-317

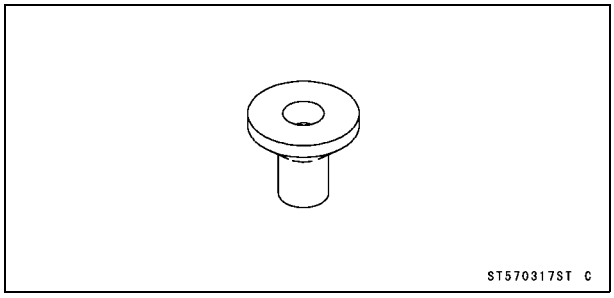

Bearing Driver, ϕ32:
57001-382

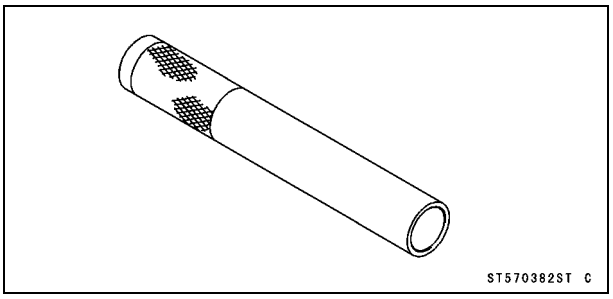

Kawasaki Bond (Liquid Gasket - Silver):
92104-002

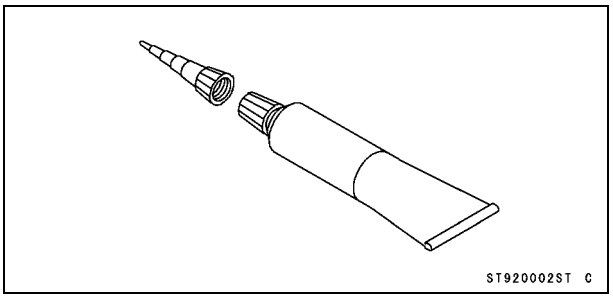

Crankcase Splitting

Crankcase Splitting

- Remove the engine (see Engine Removal in the Engine Removal/Installation chapter).
- Set the engine on a clean surface and hold the engine steady while parts are being removed.
- Remove:
  Shift Lever (see External Shift Mechanism Removal)
  Starter Motor (see Starter Motor Removal in the Electrical System chapter)
  Water Pump (see Water Pump Removal in the Cooling System chapter)
  Clutch Cover (see Clutch Cover Removal in the Clutch chapter)
- Remove the following parts only if the crankshaft is to be removed.
  Cylinder Head, Cylinder and Pistons (see Cylinder Head, Cylinder, Piston Removal in the Engine Top End chapter)
  Starter Clutch Sprocket (see Alternator Rotor, Starter Clutch Removal in the Electrical System chapter)
  Clutch (see Clutch Removal in the Clutch chapter)

- Remove the 6 mm upper crankcase-half bolts [A] first, and then the 8 mm bolt [B].

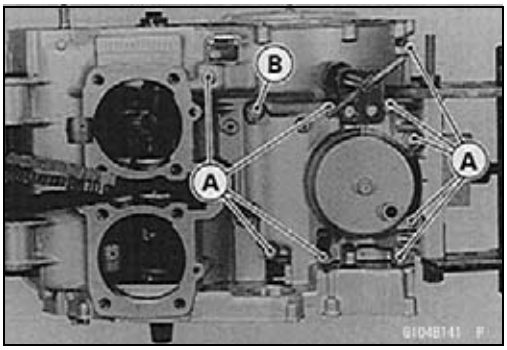

- Turn the engine upside down and remove the following parts:
  Oil Pan (see Oil Pan Removal in the Engine Lubrication System chapter)
  Oil Pump Outer Pipe (see Oil Pump Removal in the Engine Lubrication System chapter)
  Main Oil Pipe Connecting Pipe
- Remove the 6 mm lower crankcase-half bolts [A] first, and then the 8 mm bolts [B] in the reverse order of installation sequence (see Crankcase Assembly).

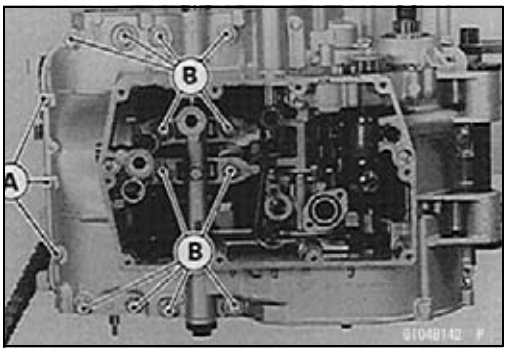

- Pull the breather return pipe out of the crankcase and leave it in place temporarily.
- Pry the points [A] indicated in the figure to split the crankcase halves apart, and remove the lower crankcase half. There are two knock pins at the front and rear of the cases.

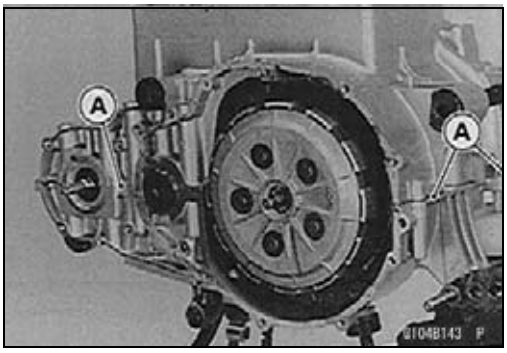

Crankcase Splitting

Crankcase Assembly

CAUTION

The upper crankcase half and the lower crankcase half are machined at the factory in the assembled state, so the crankcase halves must be replaced together as a set.

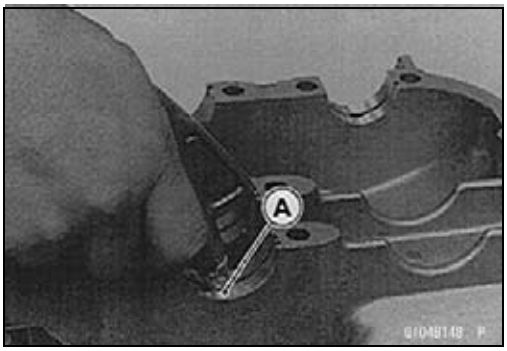

- Using compressed air, blow out the oil passages [A] in the crankcase halves.
- With a high-flash point solvent, clean off the mating surfaces of the crankcase halves and wipe dry.
- Before fitting the lower case on the upper case, check the following.

○Check to see that the following parts are in place on the upper crankcase half.
  Knock Pins [A]
  Crankshaft Assembly [B]
  Balancer Shaft Assembly [C]
  Drive Shaft Assembly and Clutch Housing [D]
  Output Shaft Assembly [E]
○Check to see that the shift drum and transmission gears are in the neutral position.

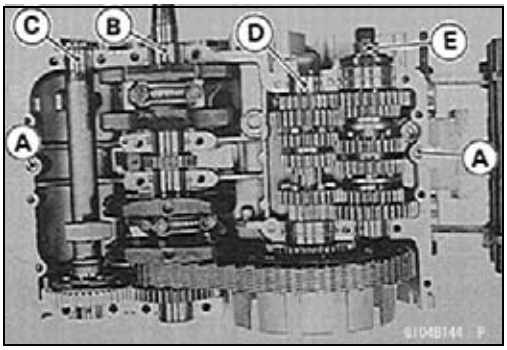

- Apply liquid gasket to the mating surface of the lower crankcase half.

  Sealant - Kawasaki Bond (Liquid Gasket - Silver): 92104 -002

CAUTION

Do not apply liquid gasket around the crankshaft main bearing inserts and balancer shaft inserts.

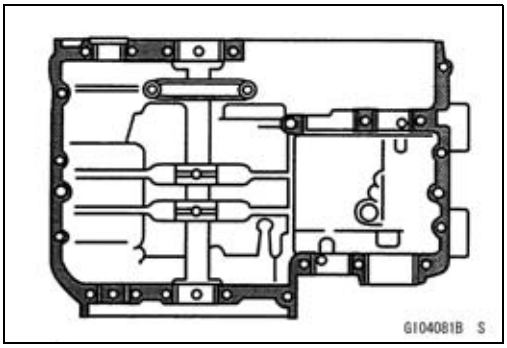

- Fit the lower crankcase half on the upper crankcase half observing the following.

○Set the shift forks so that the ears [A] of each fork fit into the grooves [B] of the gears.

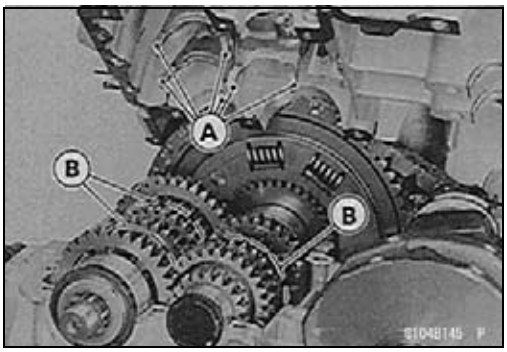

Crankcase Splitting

- Tighten the lower crankcase-half bolts using the following 3 steps:

○Tighten all lower crankcase-half bolts to a snug fit.

○Following the sequence numbers on the lower crankcase half, torque the 8 mm bolts first to about one half of the specification, and finally to the specification in the same sequence.

Torque Value for 8 mm Bolts

First:	**14 N·m (1.4 kgf·m, 10.0 ft·lb)**
Final:	**27 N·m (2.8 kgf·m, 20 ft·lb)**

○Tighten the 6 mm bolts.

Torque - Crankcase 6 mm Bolts: 12 N·m (1.2 kgf·m, 104 in·lb)

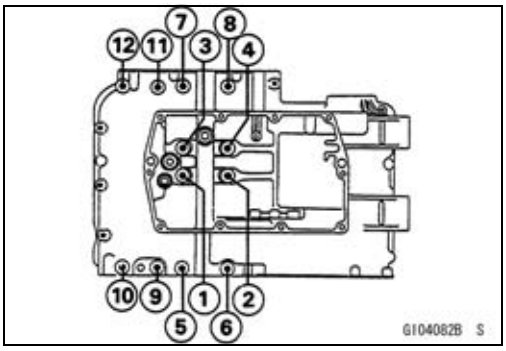

- Check that the O-ring [A] of the breather return pipe is in good condition.

★If it is damaged, replace it with a new one.

- Apply a small amount of oil to the O-ring.
- Fit the breather return pipe [B] into the passage in the upper crankcase half.

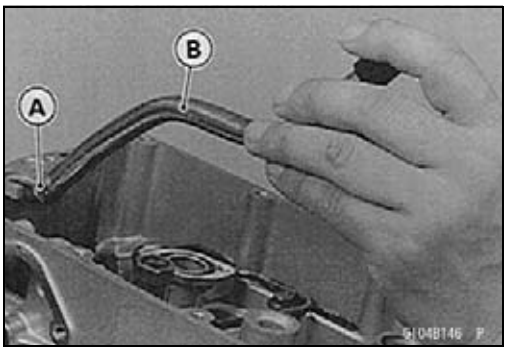

- Install the main oil pipe connecting pipe [A] and oil pump outer pipe [B].

○Check that the O-rings are in good condition.

★If they are damaged, replace them with new ones.

○Apply a small amount of oil to the O-rings. The positioning hole in the connecting pipe must fit to the boss on the lower case.

○Apply a non-permanent locking agent to the threads of the oil outer pipe mounting bolt.

- Install the oil screen.
- Install the oil pan (see Oil Pan Installation in the Engine Lubrication chapter).

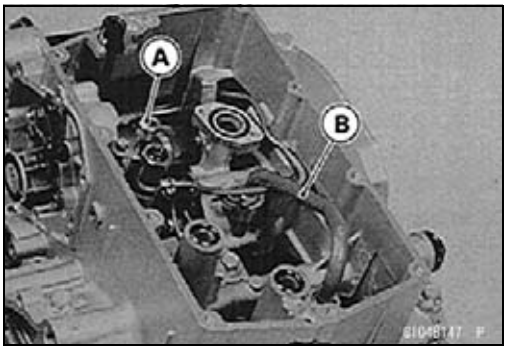

- Turn the engine over so it is upright.
- Put the 8 mm bolts [A], and the 6 mm bolts [B] into the upper crankcase half as shown in the figure, torque the 8 mm bolt first, then the other bolts in the sequence shown.

Torque - Crankcase 8 mm Bolts: 27 N·m (2.8 kgf·m, 20 ft·lb)
Crankcase 6 mm Bolts: 12 N·m (1.2 kgf·m, 104 in·lb)

- After tightening all crankcase bolts, check the following items:

○Drive shaft and output shaft turn freely.

○While spinning the output shaft, gears shift smoothly from the 1st to 6th gear, and 6th to 1st.

○When the output shaft stays still, the gear can not be shifted to 2nd gear or other higher gear positions.

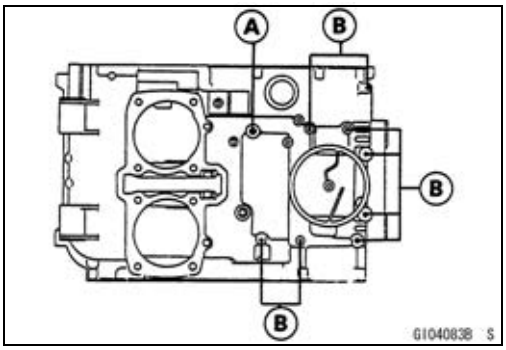

Clutch Housing/Primary Chain

Clutch Housing/Primary Chain Removal

- Remove the engine.
- Remove:
  Cylinder Head, Cylinder and Pistons (see Cylinder Head, Cylinder, Piston Removal in the Engine Top End chapter)
  Starter Clutch Sprocket (see Alternator Rotor, Starter Clutch Removal in the Electrical System chapter)
  Clutch (except the Clutch Housing)
- Split the crankcase.
- Lift up the transmission drive shaft assembly [A], and pull the shaft out of the clutch housing [B].

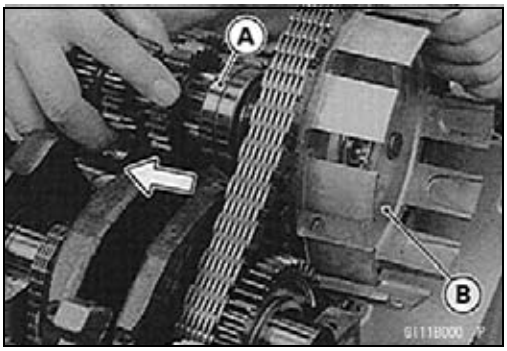

- Place the clutch housing on the balancer drive gear [A], slack off the primary chain [B] as much as possible and slip the primary chain off the clutch housing sprocket [C].

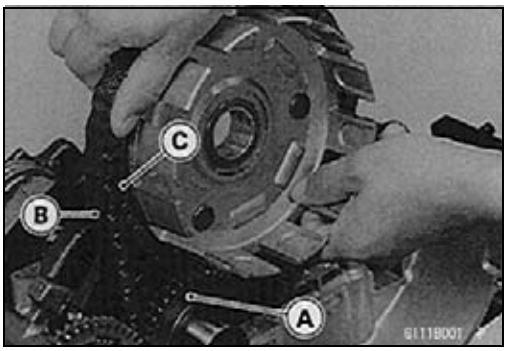

- Remove the clutch housing [A].
- Pull off the oil pump drive gear [B] from the clutch housing.
- Lift up the crankshaft, and remove the primary chain.

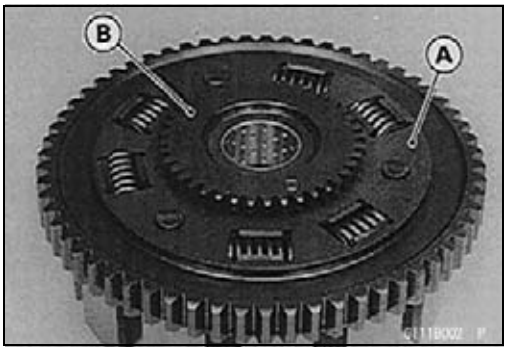

Clutch Housing/Primary Chain Installation

- Install the primary chain on the sprocket of the crankshaft.
- Install the oil pump drive gear fitting its pin [A] to the groove [B] of the clutch housing sprocket.

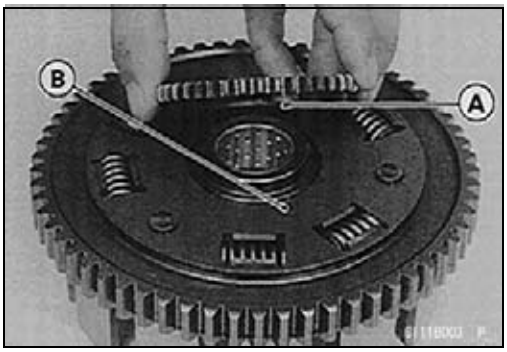

Clutch Housing/Primary Chain

- Install the spacer [A] onto the drive shaft [B], facing the chamfered side [C] to the ball bearing [D].
- Install the clutch housing in the reverse order of removal.

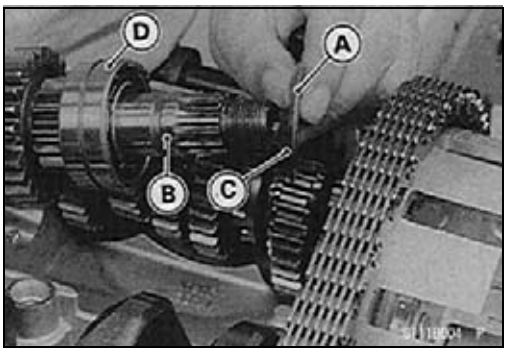

Primary Chain Guide Wear

- Visually inspect the rubber on the guides.
- If the rubber is cut or damaged in any way, replace the guide.

Crankshaft/Connecting Rods

Crankshaft Removal

- Split the crankcase (see Crankcase Splitting).
- Remove the clutch housing and the primary chain.
- Remove the crankshaft with the camshaft chain and primary chain.

Crankshaft Installation

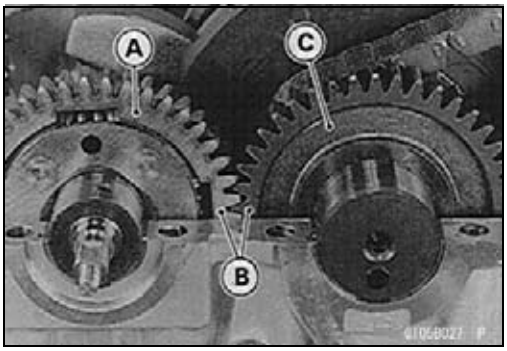

CAUTION

If the crankshaft, bearing inserts or crankcase halves are replaced with new ones, select the bearing inserts and check clearance with plastigage before assembling engine to be sure the correct bearing inserts are installed.

- Apply engine oil to the crankshaft bearing inserts.
- Install the camshaft and primary chains on the crankshaft.
- Align the timing mark on the balancer gear [A] with the timing mark [B] on the balancer drive gear [C] of the crankshaft.
- Assemble the crankcase (see Crankcase Assembly).

Connecting Rod Removal

- Remove the crankshaft (see Crankshaft Removal).

NOTE

○*Mark and record locations of the connecting rods and their big end caps so that they can be reassembled in their original positions.*

- Remove the connecting rod big end cap nuts, and take off the rod and cap with the bearing inserts from the crankshaft.

CAUTION

To prevent damage to the crankpin surfaces, do not allow the big end cap bolts to bump against them.

Connecting Rod Installation

CAUTION

The connecting rod and the connecting rod big end cap are machined at the factory in the assembled state, so they must be replaced together as a set. To minimize vibration, the connecting rods should have the same weight mark. The weight mark is indicated by a capital letter, and is stamped on the connecting rod big end. If the connecting rods, bearing inserts, or crankshaft are replaced with new ones, select the bearing insert and check clearance with plastigage before assembling engine to be sure the correct bearing inserts are installed.

Crankshaft/Connecting Rods

Big End Cap [A]
Connecting Rod [B]
Weight Mark, Alphabet [C]
Diameter Mark [D]

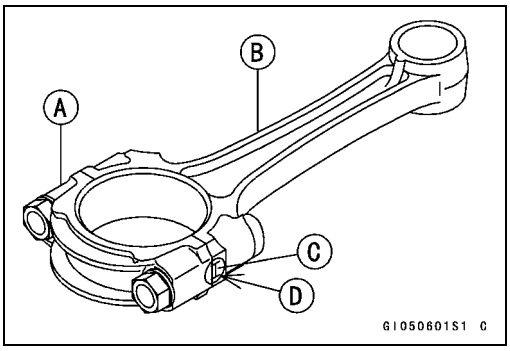

- Apply engine oil to the inner surface of the upper and lower bearing inserts [A].
- Apply a small amount of engine oil to the threads [B] and seating surface [C] of the connecting rod big end cap nuts.
- Tighten the cap nuts.

  Torque - Connecting Rod Big End Cap Nuts: 36 N·m (3.7 kgf·m, 27 ft·lb)
- Install the crankshaft (see Crankshaft Installation).

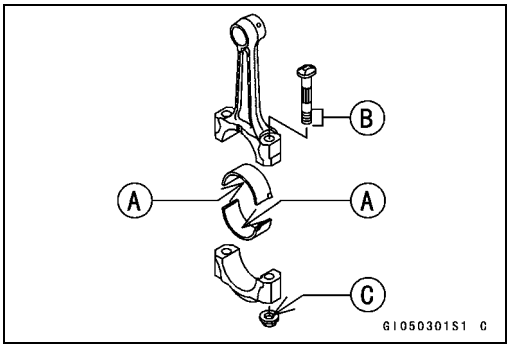

Crankshaft/Connecting Rod Cleaning

- After removing the connecting rods from the crankshaft clean them with a high-flash point solvent.
- Blow the crankshaft oil passages with compressed air to remove any foreign particles or residue that may have accumulated in the passages.

Connecting Rod Bend/Twist Inspection

- Measure the connecting rod bend.

○Remove the connecting rod big end bearing inserts, and reinstall the connecting rod big end cap.
○Select an arbor [A] of the same diameter as the connecting rod big end, and insert the arbor through the connecting rod big end.
○Select an arbor of the same diameter as the piston pin and at least 100 mm (3.94 in.) long, and insert the arbor [B] through the connecting rod small end.
○On a surface plate, set the big-end arbor on V blocks [C].
○With the connecting rod held vertical, use a height gauge to measure the difference in the height of the arbor above the surface plate over a 100 mm (3.94 in.) length to determine the amount of connecting rod bend.
★If connecting rod bend exceeds the service limit, the connecting rod must be replaced.

Connecting Rod Bend
Service Limit: 0.2/100 mm (0.008/3.94 in.)

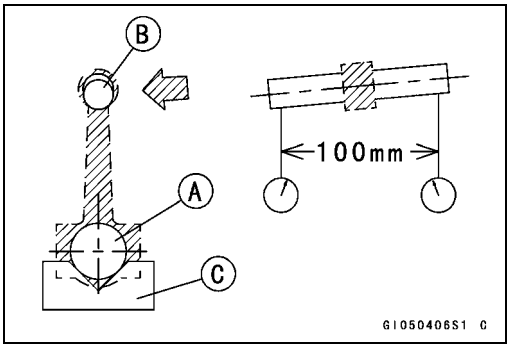

Crankshaft/Connecting Rods

● Measure the connecting rod twist.

○With the big-end arbor [A] still on V blocks [C], hold the connecting rod horizontal and measure the difference in the height of the arbor [B] above the surface plate over a 100 mm (3.94 in.) length of the arbor to determine the amount of connecting rod twist.

★If the connecting rod twist exceeds the service limit, the connecting rod must be replaced.

Connecting Rod Twist
Service Limit: 0.2/100 mm (0.008/3.94 in.)

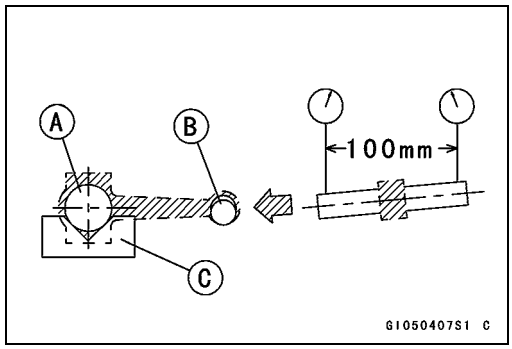

Connecting Rod Big End Side Clearance Inspection

● Measure the connecting rod big end side clearance.

○Insert a thickness gauge [A] between the big end [B] and either crank web [C] to determine the clearance.

Connecting Rod Big End Side Clearance
Standard: 0.13 ~ 0.38 mm (0.0051 ~ 0.0150 in.)
Service Limit: 0.50 mm (0.02 in.)

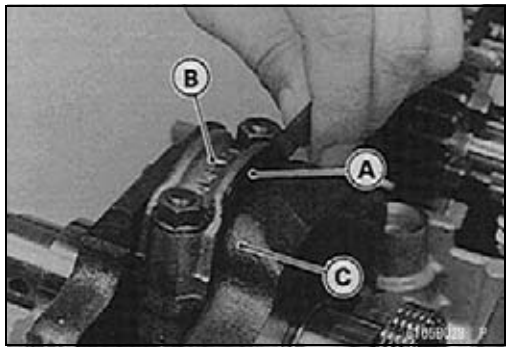

★If the clearance exceeds the service limit, replace the connecting rod with a new one and then check the clearance again. If the clearance is too large after connecting rod replacement, the crankshaft must be replaced.

Connecting Rod Big End Bearing Insert/Crankpin Clearance Inspection

● Measure the bearing insert/crankpin clearance using a plastigage.

○Remove the connecting rod big end caps and wipe each bearing insert and crankpin surface clean of oil.

○Cut strips of plastigage to bearing insert width, and place a strip on the crankpin for each connecting rod parallel to the crankshaft so that the plastigage will be compressed between the crankpin and the bearing insert.

○Install the connecting rod big end caps and tighten the big end cap nuts to the specified torque.

Torque - Connecting Rod Big End Cap Nuts: 36 N·m (3.7 kgf·m, 27 ft·lb)

NOTE

○*Do not move the connecting rod and crankshaft during clearance measurement.*

Crankshaft/Connecting Rods

○Remove the connecting rod big end caps, and measure the plastigage width [A] to determine the bearing insert/crankpin [B] clearance.

Connecting Rod Big End Bearing Insert/Crankpin Clearance

Standard: 0.043 ~ 0.073 mm (0.0017 ~ 0.0029 in.)

Service Limit: 0.10 mm (0.04 in.)

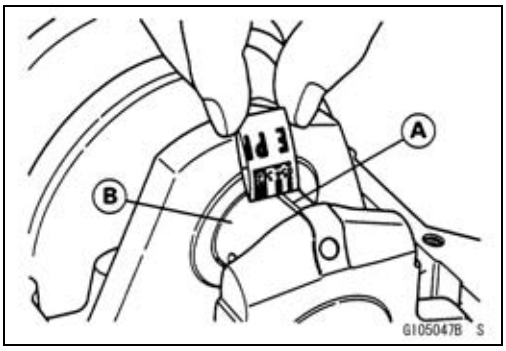

★If the clearance is within the standard, no bearing insert replacement is required.

★If the clearance is between 0.066 mm (0.0026 in.) and the service limit 0.10 mm (0.04 in.), replace the bearing inserts [A] with inserts painted blue [B] Check insert/crankpin clearance with a plastigage. The clearance may exceed the standard slightly, but it must not be less than the minimum in order to avoid bearing seizure.

★If the clearance exceeds the service limit, measure the diameter of the crankpins.

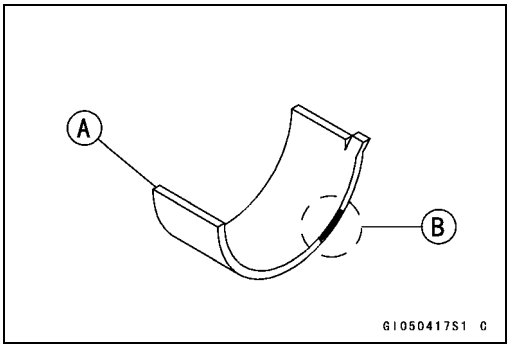

Crankpin Diameter

Standard: 37.984 ~ 38.000 mm (1.4954 ~ 1.4961 in.)

Service Limit: 37.97 mm (1.495 in.)

★If any crankpin has worn past the service limit, replace the crankshaft with a new one.

★If the measured crankpin diameters are not less than the service limit, but do not coincide with the original diameter markings on the crankshaft, write new marks on it.

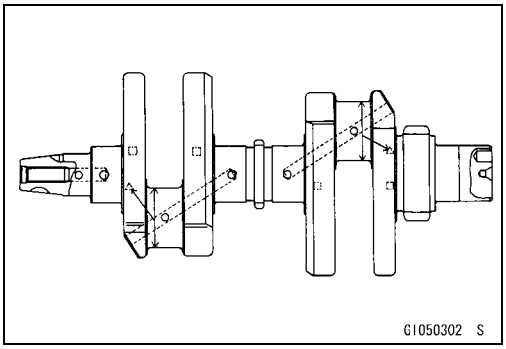

Crankpin Diameter Marks

None: 37.984 ~ 37.994 mm (1.4954 ~ 1.4958 in.)

○: 37.995 ~ 38.000 mm (1.4959 ~ 1.4961 in.)

Δ: Crankpin Diameter Marks, "○" mark or no mark.

- Put the connecting rod big end caps on the rods and tighten the nuts to the specified torque.

Torque - Connecting Rod Big End Cap Nuts: 36 N·m (3.7 kgf·m, 27 ft·lb)

- Measure the bore diameter, and mark each connecting rod big end in accordance with the bore diameter.

Crankshaft/Connecting Rods

NOTE

○*The mark already on the big end should almost coincide with the measurement.*

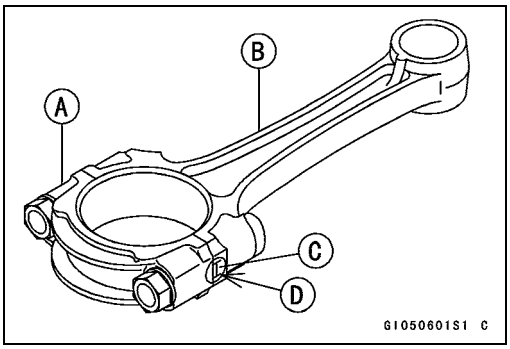

Connecting Rod Big End Bore Diameter Marks
None: 41.000 ~ 41.008 mm (1.6142 ~ 1.6145 in.)
○: 41.009 ~ 41.016 mm (1.6145 ~ 1.6148 in.)

[A] Big End Cap
[B] Connecting Rod
[C] Weight Mark
[D] Diameter Mark (Around Weight Mark): "○" or no mark

- Select the proper bearing insert in accordance with the combination of the connecting rod and crankshaft coding.
- Install the new insert in the connecting rod and check insert/journal clearance with a plastigage.

Connecting Rod Big End Bearing Insert Selection

Con-rod Bore Diameter Mark	Crankpin Diameter Mark	Bearing Insert	
		Size Color	Part Number
○	○	Black	92028-1349
None	None		
○	None	Blue	92028-1348
None	○	Brown	92028-1350

Crankshaft Runout Inspection

- Measure the crankshaft runout.

○Set the crankshaft in a flywheel alignment jig or on V blocks.
○Set a dial gauge against the points indicated.
○Turn the crankshaft slowly to measure the runout. The difference between the highest and lowest dial gauge readings (TIR) is the amount of runout.
★If the measurement exceeds the service limit, replace the crankshaft.

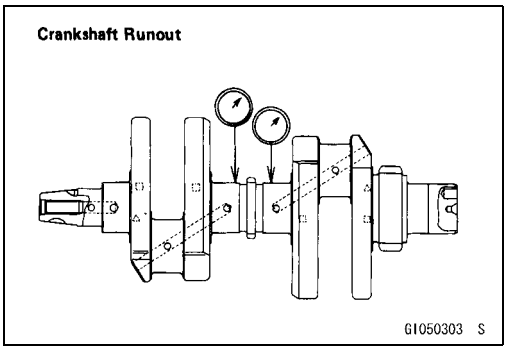

Crankshaft Runout
Service Limit: 0.05 mm (0.0020 in.) TIR

Crankshaft Main Bearing Insert/Journal Clearance Inspection

- Measure the bearing insert/journal clearance using a plastigage.

○Split the crankcase and wipe each bearing insert and journal surface clean of oil.
○Cut strips of plastigage to bearing insert width, and place a strip on each journal parallel to the crankshaft so that the plastigage will be compressed between the journal and the bearing insert.
○Install the lower crankcase half, and tighten the case bolts to the specified torque.

Torque - Crankcase 8 mm Bolts: 27 N·m (2.8 kgf·m, 20 ft·lb)
Crankcase 6 mm Bolts: 12 N·m (1.2 kgf·m, 104 in·lb)

Crankshaft/Connecting Rods

NOTE

○*Do not turn the crankshaft during clearance measurement.*

○Remove the lower crankcase half and measure the plastigage width [A] to determine the bearing insert/journal [B] clearance.

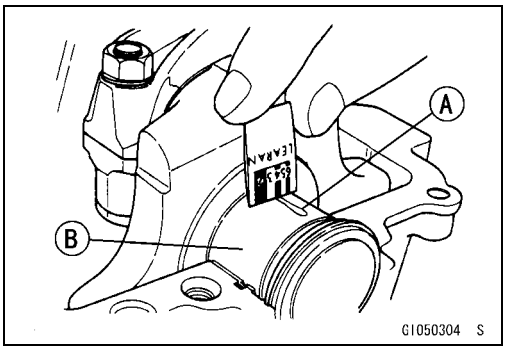

Crankshaft Main Bearing Insert/Journal Clearance

Standard: 0.020 ~ 0.044 mm (0.0008 ~ 0.0017 in.)

Service Limit: 0.08 mm (0.0032 in.)

★If the clearance is within the standard, no bearing insert replacement is required.

★If the clearance is between 0.044 mm (0.0017 in.) and the service limit 0.08 mm (0.0032 in.), replace the bearing inserts [A] with inserts painted blue [B] Check insert/journal clearance with a plastigage. The clearance may exceed the standard slightly, but it must not be less than the minimum in order to avoid bearing seizure.

★If the clearance exceeds the service limit, measure the diameter of the crankshaft main journal.

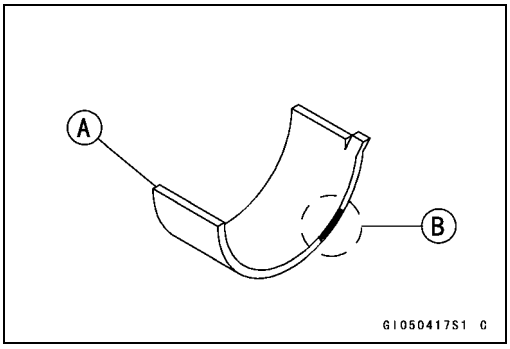

Crankshaft Main Journal Diameter

Standard: 35.984 ~ 36.000 mm (1.4167 ~ 1.4173 in.)

Service Limit: 35.96 mm (1.4157 in.)

★If any journal has worn past the service limit, replace the crankshaft with a new one.

★If the measured journal diameters are not less than the service limit, but do not coincide with the original diameter markings on the crankshaft, write a new mark on it.

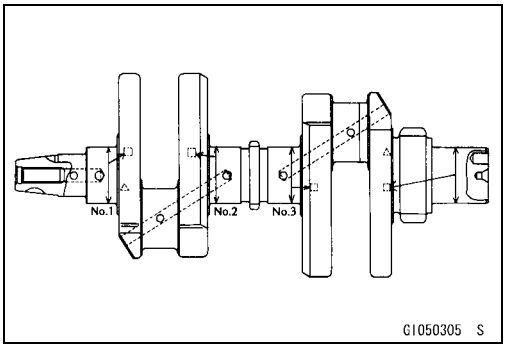

Crankshaft Main Journal Diameter Marks

None: 35.984 ~ 35.992 mm (1.4167 ~ 1.4170 in.)

1: 35.993 ~ 36.000 mm (1.4170 ~ 1.4173 in.)

□: Crankshaft Main Journal Diameter Marks, “1” mark or no mark.

● Put the lower crankcase half on the upper crankcase half without bearing inserts, and tighten the case bolts to the specified torque and sequence (see Crankcase Assembly).

● Measure the crankcase main bearing bore diameter, and mark the upper crankcase half in accordance with the bore diameter.

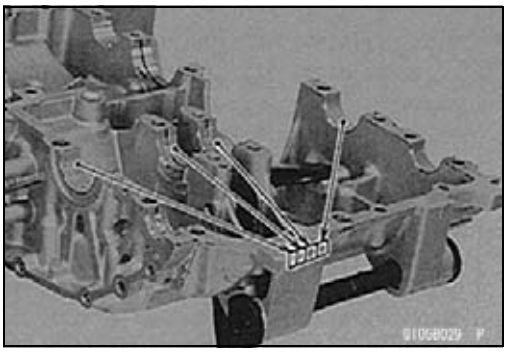

NOTE

○*The mark already on the upper crankcase half should almost coincide with the measurement.*

Crankcase Main Bearing Bore Diameter Marks

○: 39.000 ~ 39.008 mm (1.5354 ~ 1.5357 in.)

None: 39.009 ~ 39.016 mm (1.5358 ~ 1.5361 in.)

□□□□: Crankcase Main Bearing Bore Diameter Marks, “○” mark or no mark.

Crankshaft/Connecting Rods

- Select the proper bearing insert in accordance with the combination of the crankcase and the crankshaft coding.
- Install the new inserts in the crankcase halves and check insert/journal clearance with a plastigage.

Crankshaft Main Bearing Insert Selection

Crankcase Main Bearing Bore Diameter Mark	Crankshaft Main Journal Diameter Mark	Bearing Insert*		
		Size Color	Part Number	Journal Nos
○	1	Brown	92028-1102	2, 3
			92028-1274	1, 4
None	None	Blue	92028-1100	2, 3
			92028-1272	1, 4
○	None	Black	92028-1101	2, 3
None	1		92028-1273	1, 4

*The bearing inserts for Nos. 2 and 3 journals have oil grooves.

Crankshaft Side Clearance Inspection

- Measure the crankshaft side clearance.

○Install the lower crankcase half on the upper crankcase half, and turn the crankcase upside down.

○Insert a thickness gauge [A] between the upper crankcase [B] and the crank web [C] at the No. 2 and No.3 journals to determine clearance.

★If the clearance exceeds the service limit, replace the crankcase halves as set.

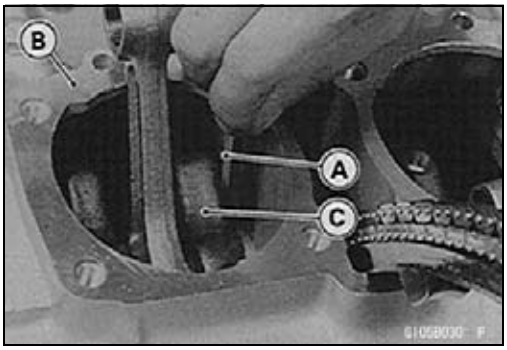

CAUTION
The upper crankcase half and lower crankcase half are machined at the factory in the assembled state, so they must be replaced as a set.

Crankshaft Side Clearance

Standard: **0.05 ~ 0.25 mm (0.0020 ~ 0.0098 in.)**

Service Limit: **0.40 mm (0.016 in.)**

Balancer

Balancer Removal

- Split the crankcase (see Crankcase Splitting).
- Pull the balancer shaft with the balancer gear out of the crankcase.

Balancer Installation

- Apply oil to the inside of the balancer shaft bearing insert.
- Align the timing mark [A] on the balancer gear [B] with the timing mark on the balancer drive gear [C] of the crankshaft.
- Assemble the crankcase (see Crankcase Assembly).

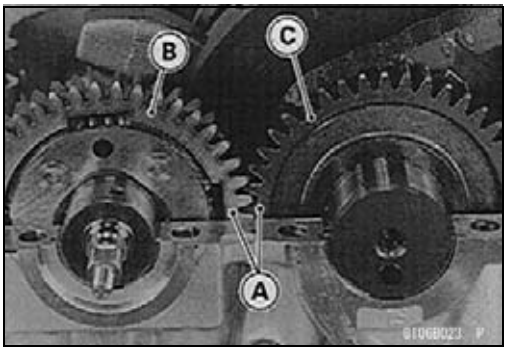

Balancer Shaft Bearing Insert/Journal Clearance Inspection

- Measure the bearing insert/journal clearance using a plastigage.

○Split the crankcase and wipe each bearing insert and journal surface clean of oil.

○Cut strips of plastigage to bearing insert width, and place a strip on each journal parallel to the balancer shaft so that the plastigage will be compressed between the journal and the bearing insert.

○Install the lower crankcase half, and tighten the case bolts to the specified torque.

Torque - Crankcase 8 mm Bolts: 27 N·m (2.8 kgf·m, 20 ft·lb)
Crankcase 6 mm Bolts: 12 N·m (1.2 kgf·m, 104 in·lb)

NOTE

○*Do not turn the balancer shaft during clearance measurement.*

○Remove the lower crankcase half and measure the plastigage width [A] to determine the bearing insert/journal [B] clearance.

Balancer Shaft Bearing Insert/Journal Clearance
Standard: 0.020 ~ 0.050 mm (0.0008 ~ 0.0020 in.)
Service Limit: 0.09 mm (0.0035 in.)

★If the clearance is within the standard, no bearing insert replacement is required.

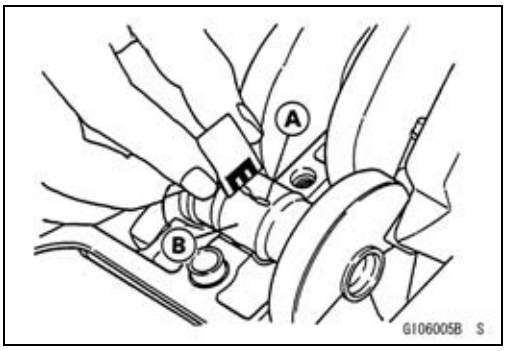

Balancer

★If the clearance is between 0.050 mm (0.0020 in.) and the service limit 0.09 mm (0.0035 in.), replace the bearing inserts [A] with inserts painted blue [B]. Check insert/journal clearance with a plastigage. The clearance may exceed the standard slightly, but it must not be less than the minimum in order to avoid bearing seizure.

★If the clearance exceeds the service limit, measure the diameter of the balancer shaft journal.

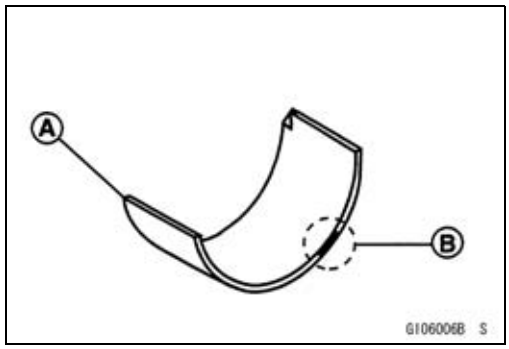

Balancer Shaft Journal Diameter

Standard: 27.987 ~ 28.000 mm (1.1018 ~ 1.1024 in.)

Service Limit: 27.96 mm (1.1008 in.)

★If either journal has worn past the service limit, replace the balancer shaft with a new one.

★If the measured journal diameters are not less than the service limit, but do not coincide with the original diameter markings on the balancer shaft, write new marks on it.

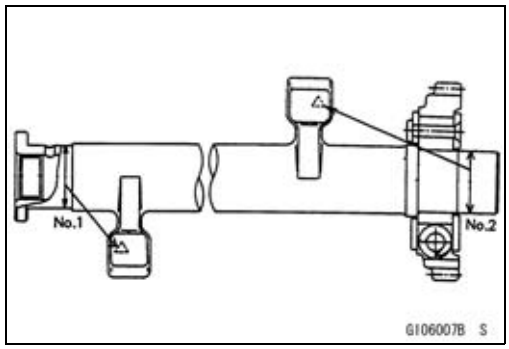

Balancer Shaft Diameter Marks

None: 27.987 ~ 27.993 mm (1.1018 ~ 1.1021 in.)

○: 27.994 ~ 28.000 mm (1.1021 ~ 1.1024 in.)

Δ: Balancer Shaft Journal Diameter Marks, "○" mark or no mark.

- Put the lower crankcase half on the upper crankcase half without bearing inserts, and tighten the case bolts to the specified torque and sequence (see Crankcase Assembly).
- Measure the crankcase bearing bore diameter for the balancer shaft, and mark the upper crankcase half in accordance with the bore diameter.

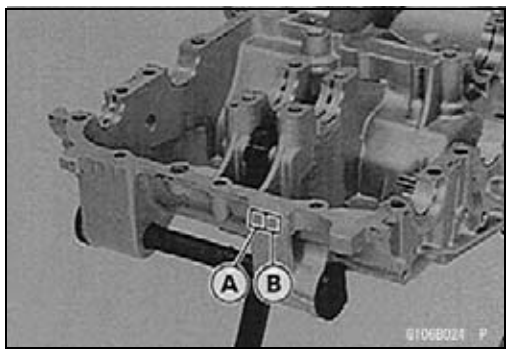

NOTE

○*The mark already on the upper crankcase half should almost coincide with the measurement.*

Crankcase Bearing Bore Diameter Marks

○: 31.008 ~ 31.016 mm (1.2208 ~ 1.211 in.)

None: 31.017 ~ 31.024 mm (1.2211 ~ 1.2214 in.)

□□: Crankcase Bearing Bore Diameter Marks, "○" mark or no mark.

[A] No. 1 Journal
[B] No. 2 Journal

- Select the proper bearing insert in accordance with the combination of the crankcase and the balancer shaft coding.
- Install the new inserts in the crankcase and check insert/journal clearance with a plastigage.

Balancer

Balancer Shaft Bearing Insert Selection

Crankcase Bearing Bore Diameter Marking	Balancer Shaft Journal Diameter Marking	Bearing Inset		
		Size Color	Part Number	
			L.H.	R.H.
○	○	Brown	92028-1497	92028-1692
None	None	Blue	92028-1495	92028-1690
○	None	Black	92028-1496	92028-1691
None	○			

Transmission

External Shift Mechanism Removal

- Remove:
  Engine Sprocket (see Engine Sprocket Removal in the Final Drive chapter)
  Chain Guard [A]
  Neutral Switch Lead Connector [B]
  Shift Lever [C]

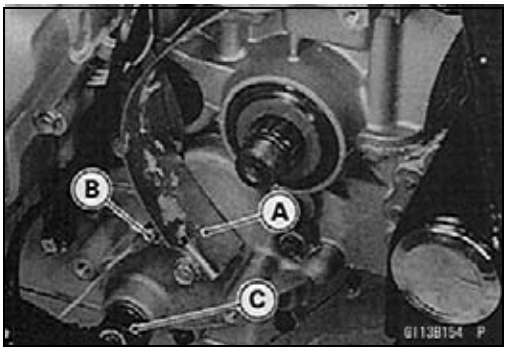

- Place an oil pan beneath the external shift mechanism cover [A].
- Remove the external shift mechanism cover bolts [B].

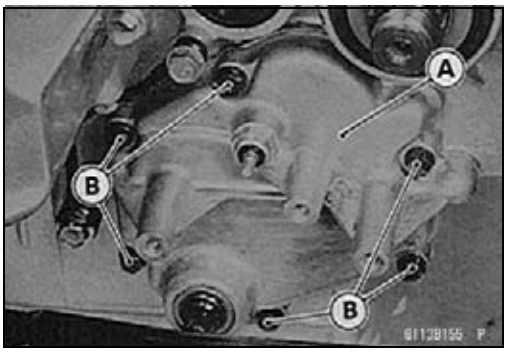

- Pull the cover.
- Remove the cover with the shift shaft assembly while pushing the shift mechanism arm [A].

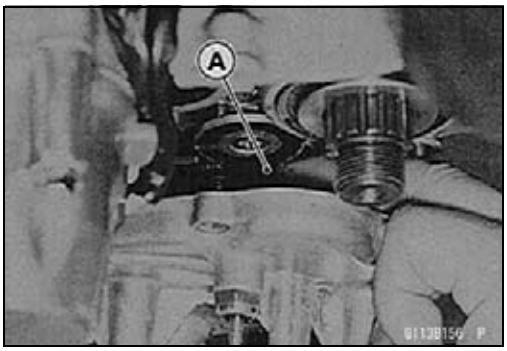

- Remove the nut [A] and take off the gear positioning lever [B]. The lever has a collar [C], spring [D], and washer.

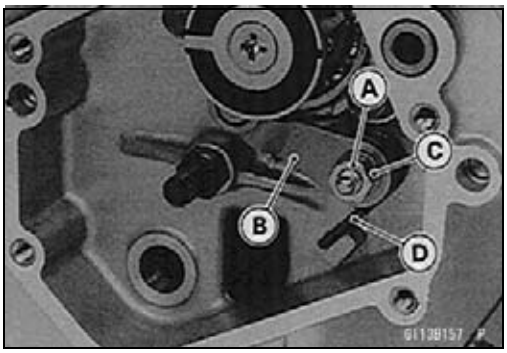

External Shift Mechanism Installation

○The small diameter side of the collar in the gear positioning lever must face toward the crankcase.

- Tighten the positioning lever nut [A]

  Torque - Gear Positioning Lever Nut: 11 N·m (1.1 kgf·m, 95 in·lb)

- Check that the return spring pin [B] is not loose.

★If it is loose, remove it, apply a non-permanent locking agent to the threads, and tighten it.

  Torque - Return Spring Pin: 20 N·m (2.0 kgf·m, 14.5 ft·lb)

- Apply silicone sealant to the area [C].
- Replace the cover gasket with a new one.

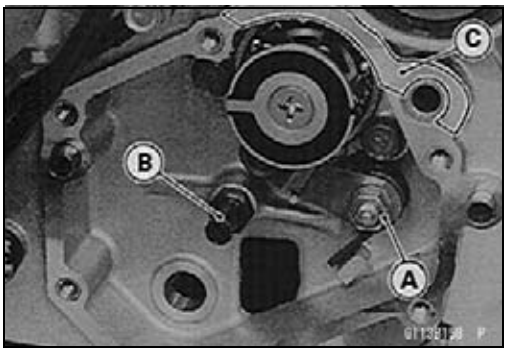

Transmission

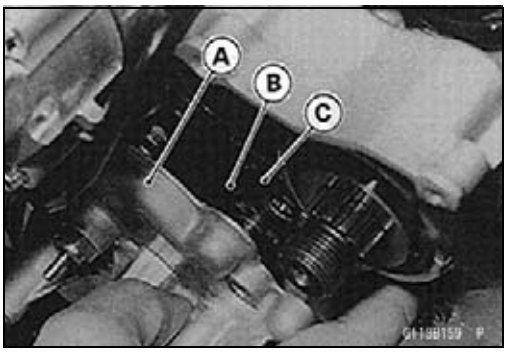

- Apply high temperature grease to the seal lips.
- Insert the shift shaft into the cover [A], and then fit the shift mechanism arm [B] to the shift drum [C].
- Tighten the cover bolts.

Torque - External Shift Mechanism Cover Bolts: 11 N·m (1.1 kgf·m. 95 in·lb)

- Check:
  Engine Oil Level (see Engine Oil Level Inspection in the Engine Lubrication System chapter)
  Drive Chain Slack (see Drive Chain Slack Inspection in the Final Drive chapter)

External Shift Mechanism Inspection

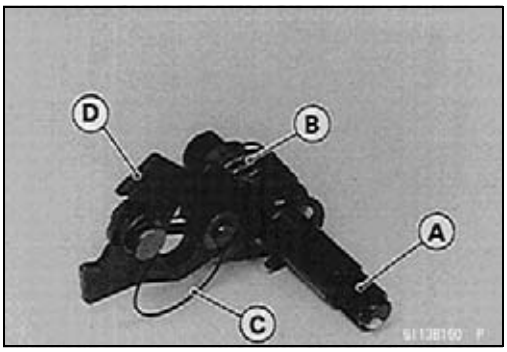

- Examine the shift shaft for any damage.

○Check the shift shaft for bending or damage to the splines [A].

★If the shaft is bent, straighten or replace it. If the splines are damaged, replace the shaft.

○Check the return spring [B] and arm spring [C] for breaks or distortion.

★If the springs are damaged in any way, replace them.

○Check the shift mechanism arm [D] for distortion.

★If the shift mechanism arm is damaged in any way, replace the arm.

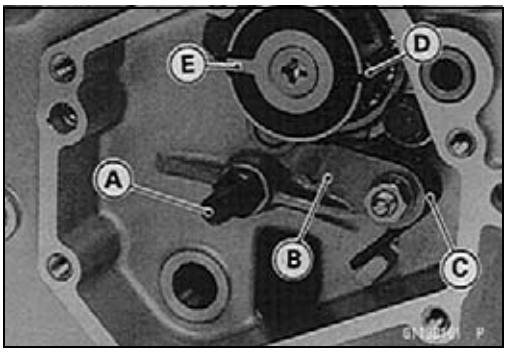

- Check that the return spring pin [A] is not loose.

★If it is loose, unscrew it, apply a non-permanent locking agent to the threads, and tighten it.

Torque - Return Spring Pin: 20 N·m (2.0 kgf·m, 14.5 ft·lb)

- Check the gear positioning levers [B], and their springs [C] for break or distortion.

★If the levers or springs are damaged in any way, replace them.

- Visually inspect the shift drum cam [D] and pin plate [E].

★If they are badly worn or if they show any damage, replace them.

Transmission Shaft Removal

- Remove the engine (see Engine Removal in the Engine Removal/Installation chapter).
- Split the crankcase (see Crankcase Splitting).
- Take out the output shaft assembly.
- Lift up the drive shaft assembly, and pull the shaft assembly out of the clutch housing. Leave the clutch housing and primary chain in place.

Transmission

Transmission Shaft Installation

- With a high-flash point solvent, clean off the outer circumferences of the transmission ball bearings and needle bearings, and their bearing housings, and wipe dry.
- Check to see that the set rings [A] and set pins [B] are in place in the transmission bearing housings.

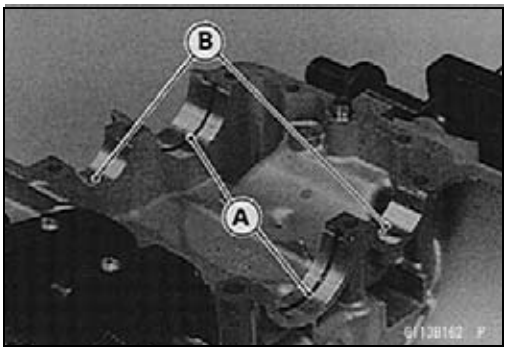

- Lift up the clutch housing and primary chain, insert the drive shaft assembly into the clutch housing, and install the drive shaft assembly in the upper crankcase half.
- Install the output shaft assembly in the upper crankcase half.

○The bearing set pins and rings must match properly with the holes or grooves in the bearing outer races. When they match properly, there is no clearance [A] between the crankcase and the bearing outer races.

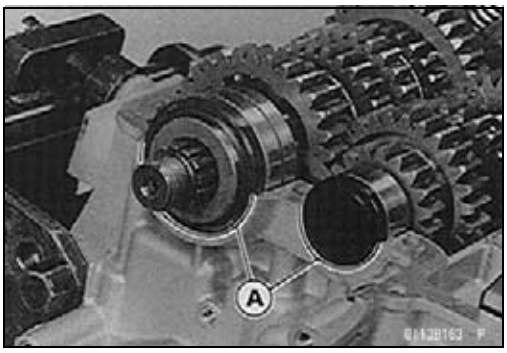

- Assemble the crankcase.
- Install the engine.

Transmission Shaft Disassembly

- Remove the transmission shaft.
- Using the outside circlip pliers to remove the circlips, disassemble the transmission shafts.

Special Tool - Outside Circlip Pliers: 57001-144

- The 5th gear [A] on the output shaft has three steel balls assembled into it for the positive neutral finder mechanism. To remove this gear from the shaft, quickly spin [B] the shaft in a vertical position while holding the 3rd gear [C], and pull off the 5th gear upwards.

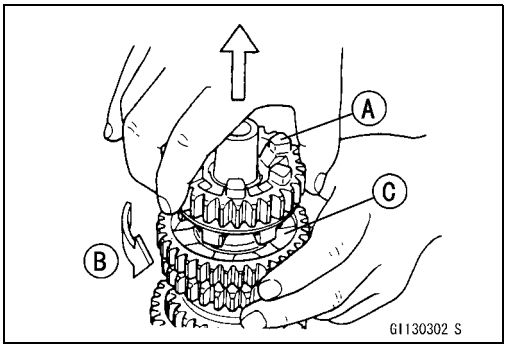

- The ball bearings and collar are press-fit on the transmission shafts. To remove the bearings [A], use a press or the bearing puller [B] and bearing puller adapter [C].

Special Tools - Bearing Puller: 57001-135
Bearing Puller Adapter: 57001-317

○The output shaft ball bearing, O-ring and collar ought to be removed together.

○No need for the bearing puller adapter at output shaft.

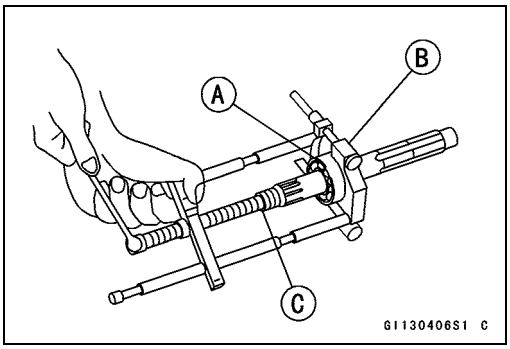

Transmission

Drive Shaft Assembly

- Apply engine oil liberally to the drive shaft, gears, bearings and bushing.
- Install the drive shaft ball bearing using the bearing driver [A].

  Special Tool - Bearing Driver, ϕ32: 57001-382

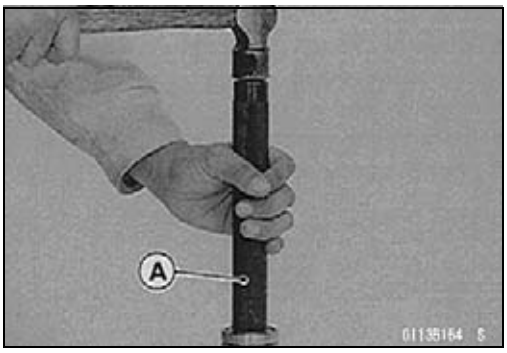

- Replace any circlips that were removed with new ones.

○Always install circlips [A] so that the opening is aligned with a spline groove [B], and install toothed washers [C] so that the teeth [D] are not aligned with the circlip opening [E]. To install a circlip without damage, fit the circlip onto the shaft expanding it just enough to install it, and use a suitable gear to push the circlip into place.

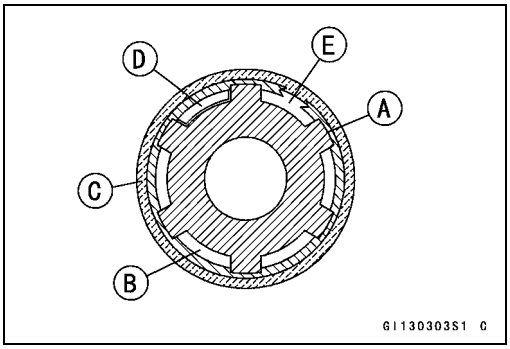

- When assembling the drive shaft 6th gear bushing [A] onto the shaft, align its oil hole [B] with the hole in the shaft.

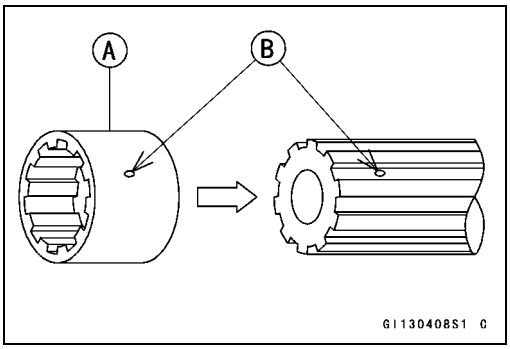

- The drive shaft gears can be identified by size: the smallest diameter gear is 1st gear, and the largest is 6th. Be sure that all parts are put back in the correct sequence, facing the proper direction, and all circlips and washers are properly in place.
- Proper sequence starting with 1st gear (part of drive shaft) is: 1st gear, 5th gear (face the flat side of the gear to the right), washer, circlip, 3rd/4th gear (face 3rd gear side to the right), circlip, toothed washer, bushing (align the oil hole with the hole in the shaft), 6th gear (face the dogs to the right), toothed washer, circlip, 2nd gear, spacer, needle bearing, needle bearing outer race, and plug.

○The toothed washer before the bushing has slightly smaller teeth than the last one.

- Install the spacer onto the drive shaft, facing the chamfered side to the ball bearing.
- Check that each gear spins or slides freely on the drive shaft without binding.

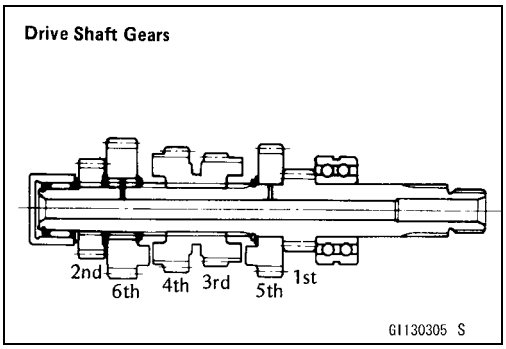

Transmission

Output Shaft Assembly

- Assembly is the reverse of disassembly. Note the following.
- Apply engine oil liberally to the output shaft, gears, bearings, bushing and O-ring.
- Install the output shaft ball bearing, O-ring and collar using the bearing driver.

Special Tool - Bearing Driver, ϕ32: 57001-382

○The ball bearing, O-ring and collar ought to be installed individually.

- Replace any circlips that were removed with new ones.

○Always install circlips so that the opening is aligned with a spline groove. To install a circlip without damage, fit the circlip onto the shaft expanding it only enough to install it, and use a suitable gear to push the circlip into place.
[A] Circlip
[B] Toothed Washer

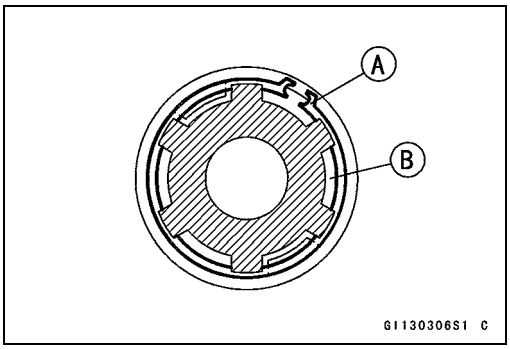

- When assembling the output shaft 3rd/4th gear bushing [A] to the shaft, align its oil holes [B] with the holes in the shaft.

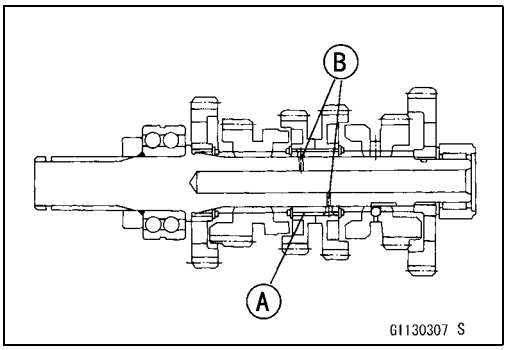

CAUTION
When installing the 5th gear and steel balls on the output shaft, do not apply grease to the balls to hold them in place. This will cause the positive neutral finder mechanism to malfunction.

- Fit the steel balls into the 5th gear holes in the output shaft as shown.
Gear (5th) [A]
Shaft [B]
Steel Balls [C]

○Check the effect of ball-locking that the 5th gear [A] does not come out of the output shaft when moving it up and down by hand.

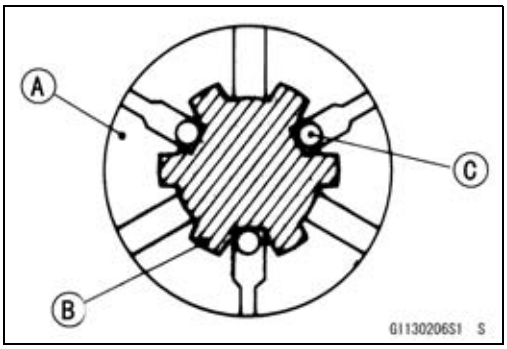

Transmission

- The output shaft gears can be identified by size: the largest diameter gear is 1st gear, and the smallest is 6th. Be sure that all parts are put back in the correct sequence and facing the proper direction, and that all circlips and washers are properly in place.
- Proper sequence starting with 2nd gear is: 2nd gear (face the flat side of the gear to the left), toothed washer, circlip, 6th gear (face the fork groove side to the right), circlip, toothed washer, bushing (align the oil holes with the holes in the shaft), 4th gear (face the side with the dog recesses to the left), 3rd gear (face the side with the dog recesses to the right), toothed washer, circlip, 5th gear (face the fork groove side to the left) with steel balls (3), 1st gear (face the flat side of the gear to the right), spacer, needle bearing, and needle bearing outer race.
- Press the oil seal [A] onto the collar [B] so it is flush with the end of collar.
- Check that each gear spins or slides freely on the output shaft without binding.

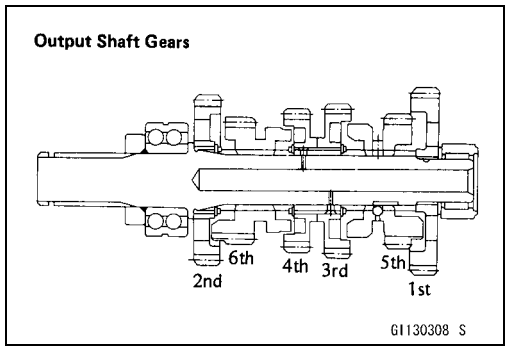

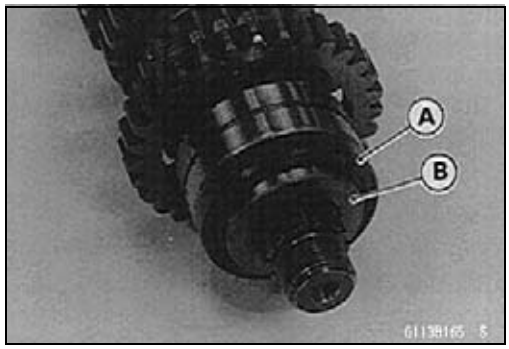

Shift Drum and Fork Removal

- Remove:
  Lower Crankcase Half (see Crankcase Splitting)
  External Shift Mechanism (see External Shift Mechanism Removal)
- Pull out the shift rod [A], and remove the two shift forks [B] in the lower crankcase half.

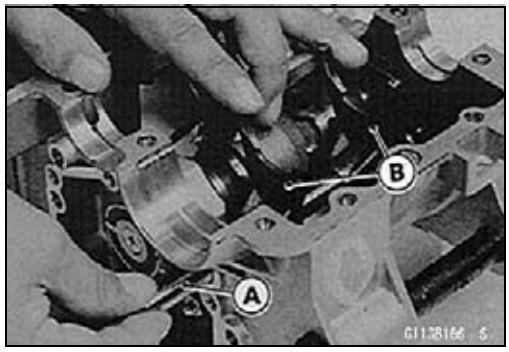

- Remove the cotter pin [A], and pull out the 3rd/4th shift fork guide pin [B].

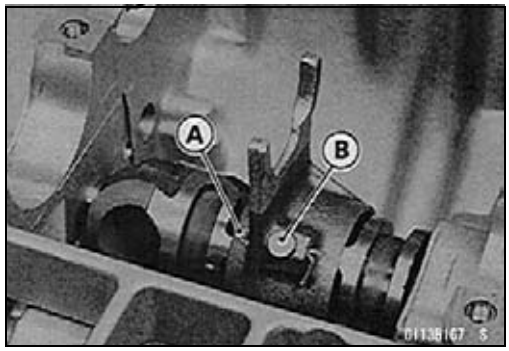

- Remove the bolts [A] holding the shift drum ball bearing [B].
- Pull out the shift drum [C] slightly, and remove the 3rd/4th shift fork. Pull the shift drum free from the crankcase.

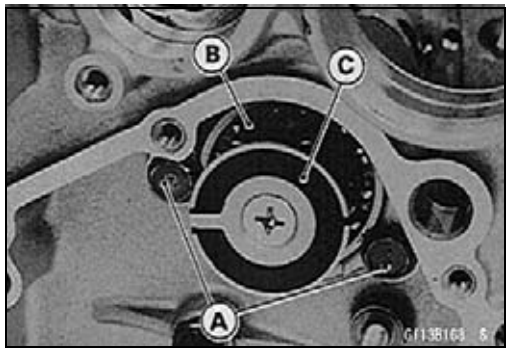

Transmission

Shift Drum and Fork Installation

- Insert the shift drum [A] into the crankcase part way, install the 3rd/4th shift fork [B] with the longer side [C] facing the neutral switch, i.e., the longer side goes onto the drum first.

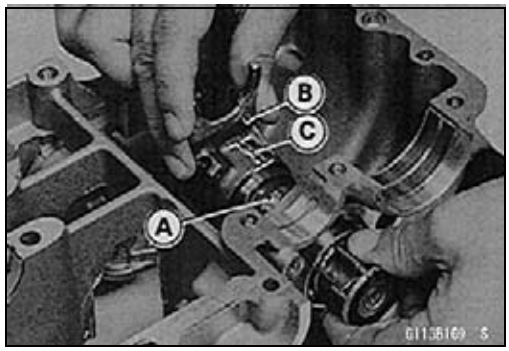

- Push the shift drum in the rest of the way.
- Apply a non-permanent locking agent to the threads of the holding bolts, and tighten them.

  Torque - Shift Drum Bearing Holding Bolts: 11 N·m (1.1 kgf·m, 95 in·lb)

- Put the shift fork guide pin [A] with the pin hole upward into the 3rd/4th shift fork. The guide pin rides in the middle groove of the three shift drum grooves.
- Insert a new cotter pin through the 3rd/4th shift fork and guide pin from the shorter side of the shift fork, and spread the cotter pin longer side.

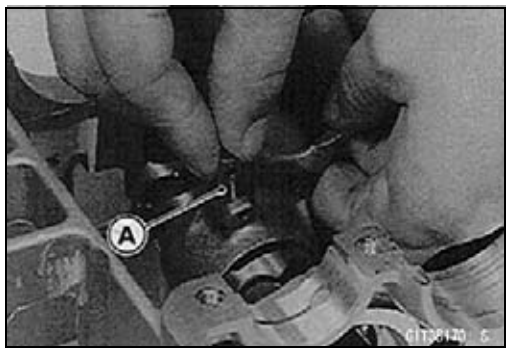

- Install the washer, spring, gear positioning lever, collar and nut.
- Set the shift drum in the neutral position, that is, fit the gear positioning lever [A] into the detent [B] on the shift drum cam [C].

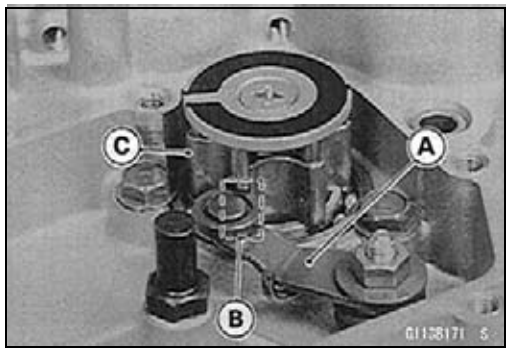

- Install the shift shaft.
- Apply a little engine oil to the shift rod and shift fork ears. Insert the shift rod [A], running it through the shift forks [B], fitting each shift fork guide pin into the shift drum groove. The shift forks are identical, and must be installed with their longer sides [C] facing toward the external shift mechanism.

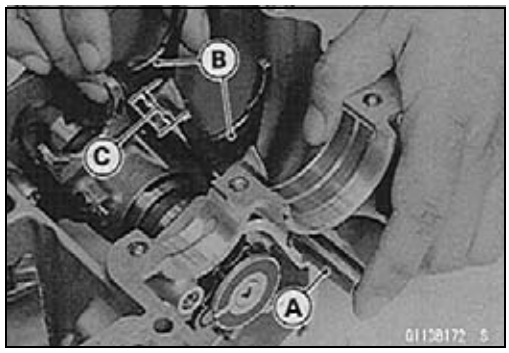

Transmission

Shift Drum Disassembly

- Remove the screw [A] and the pin plate [B].
- Pull out the shift drum cam [C].
- Take off the ball bearing [D].
- Pull off the dowel pin [E].

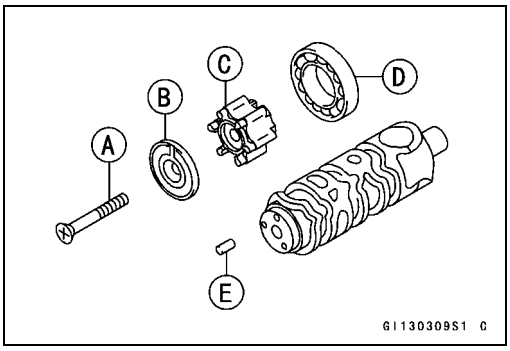

Shift Drum Assembly

- Set the dowel pin into larger hole of the two which is the farthest hole [A] from the center.

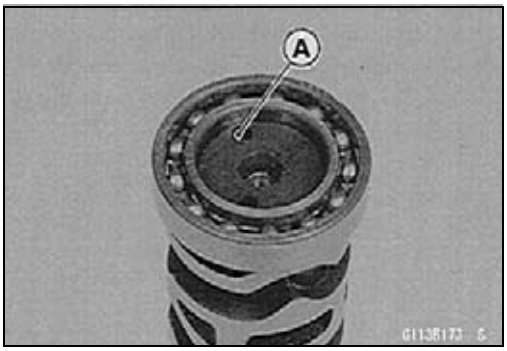

- Install the shift drum cam aligning its groove [A] with the dowel pin [B].

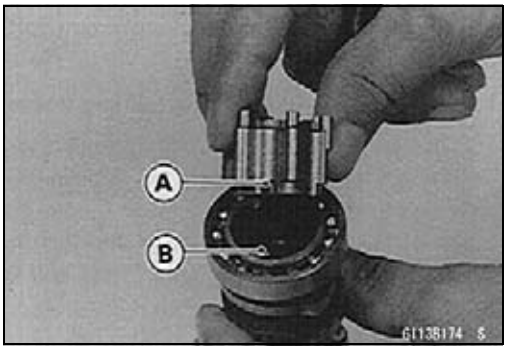

- There are six points on the shift drum cam. The highest point [A] must be fitted into the back of the pin plate [B]. If these parts are assembled in the wrong position, the neutral indicator light will not light when the gears are in neutral.
- Apply a non-permanent locking agent to the threads of the pin plate screw.
- Tighten the pin plate screw.

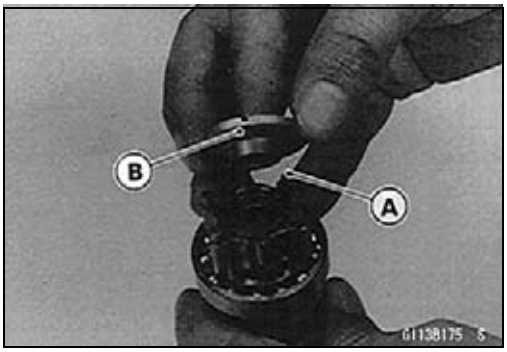

Transmission

Ball and Needle Bearing Wear Inspection

- Check the following ball bearings: shift drum LH, drive shaft RH, and output shaft LH.

○Since the ball bearings are made to extremely close tolerances, the wear must be judged by feel rather than measurement. Clean each bearing in a high-flash point solvent, dry it (do not spin the bearing while it is dry), and oil it with engine oil.

○Spin the bearing by hand to check its condition.

★If the bearing is noisy, does not spin smoothly, or has any rough spots, replace it.

- Check the following needle bearings: drive shaft LH and output shaft RH.

○The rollers in a needle bearing normally wear very little, and wear is difficult to measure. Instead of measuring, inspect the bearing for abrasion, color change, or other damage.

★If there is any doubt as to the condition of a needle bearing, replace it.

Shift Pedal, Shift Pedal Linkage Removal

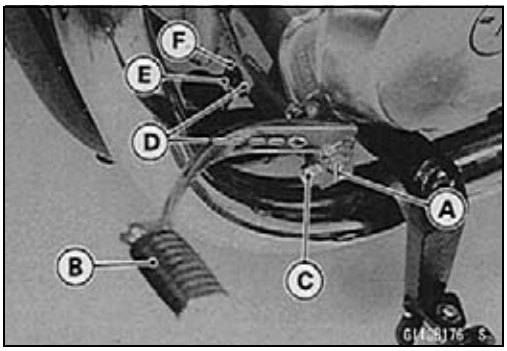

- Loosen the left footpeg mounting bolt and let the footpeg hang down.
- Mark [A] the position of the shift pedal [B] on the sift shaft so that it can be installed later in the same position.
- Remove:
  Shift Pedal Mounting Bolt [C]
  Shift Pedal
  Shift Shaft
  Spacer [D]
  Front Shift Lever Clamp Bolts [E]
  Front Shift Lever [F]
  Clip
  Rear Shift Lever Clamp Bolts
  Rear Shift Lever

Shift Pedal, Shift Pedal Linkage Installation

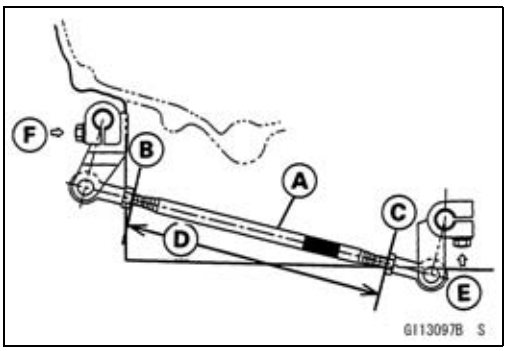

- Turn the shift linkage rod [A] so that the distance from the front locknut end [B] to the rear locknut end [C] is 157.5 mm (6.2 in.) [D].

  Torque - Shift Linkage Rod Locknuts: 11 N·m (1.1 kgf·m, 95 in·lb)

- Install the rear shift lever so that the shift lever bolt positions vertically [E].
- Install the front shift lever so that the shift lever bolt positions horizontally [F].
- Tighten the shift lever clamp bolts.

  Torque - Shift Lever Clamp Bolts: 11 N·m (1.1 kgf·m, 95 in·lb)

Transmission

- Install the shift pedal.
- At this time, the center of the shift pedal [A] is about 89 mm (3.5 in.) [B] higher than the center of the footpeg [C].

  Torque - Shift Pedal Mounting Bolt: 8.8 N·m (0.9 kgf·m, 78 in·lb)
- If necessary, adjust the pedal position from the standard position to suit you.

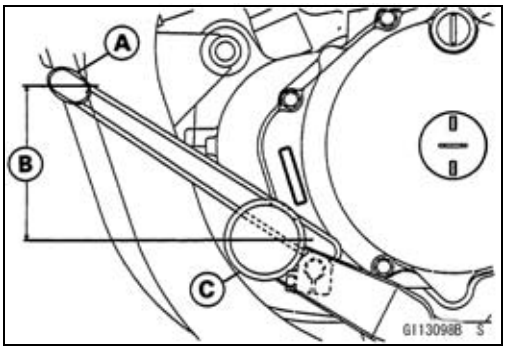

Wheels/Tires

Table of Contents

Exploded View 9-2
Specifications 9-3
Special Tools 9-4
Wheels (Rims) 9-5
Front Wheel Removal 9-5
Front Wheel Installation 9-5
Rear Wheel Removal 9-5
Rear Wheel Installation 9-6
Wheel Inspection 9-7
Spoke Inspection 9-7
Rim Inspection 9-8
Axle Inspection 9-8
Balance Inspection 9-8
Balance Adjustment 9-9
Tires 9-10
Air Pressure Inspection/Adjustment 9-10
Tire Inspection 9-10
Tire Removal 9-10
Tire Installation 9-11
Hub Bearing 9-13
Hub Bearing Removal 9-13
Hub Bearing Installation 9-13
Hub Bearing Inspection 9-14
Speedometer Gear 9-15
Disassembly and Assembly 9-15
Lubrication 9-15

Exploded View

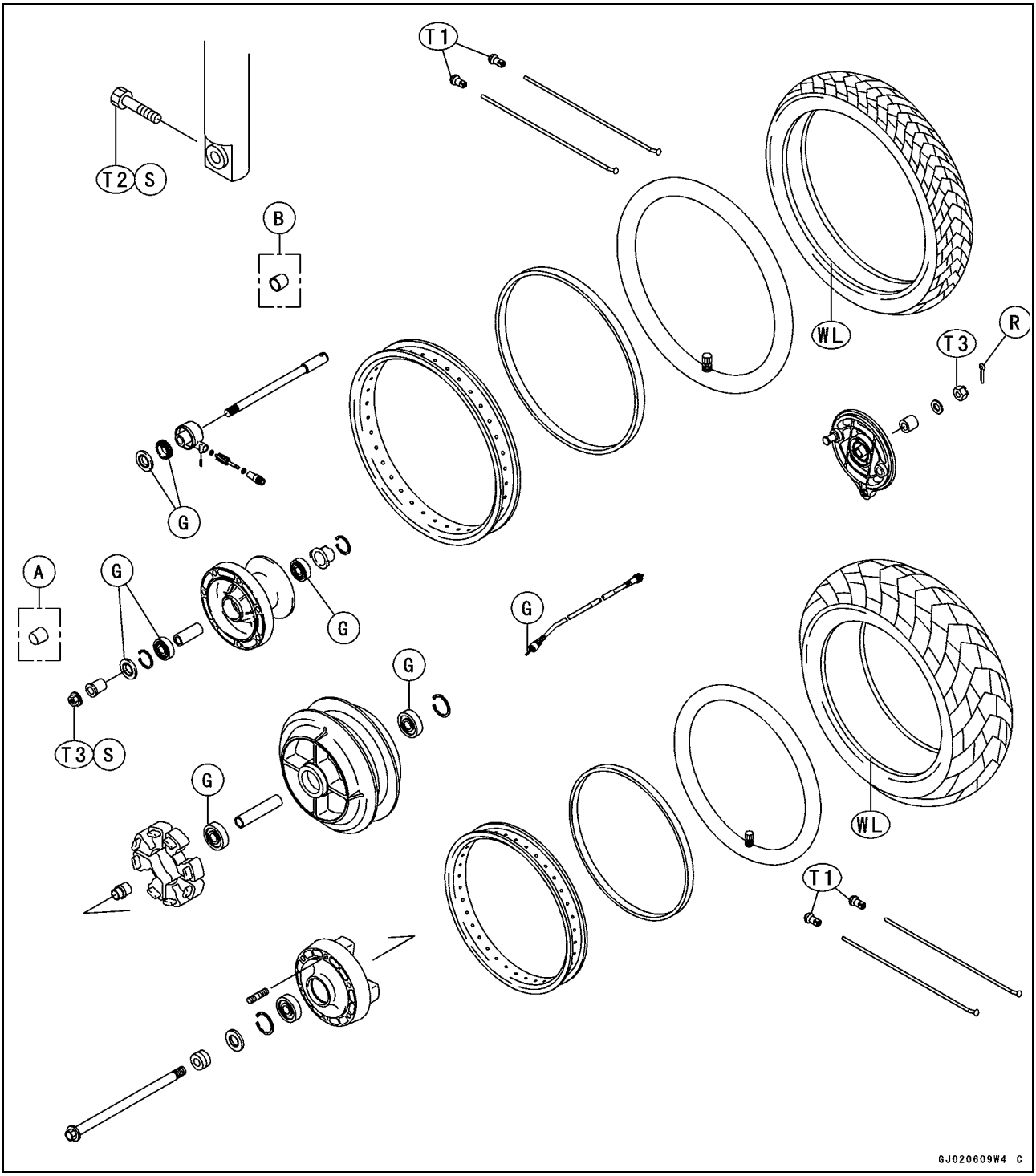

T1: 5.2 N·m (0.53 kgf·m, 46 in·lb)
T2: 34 N·m (3.5 kgf·m, 25 ft·lb)
T3: 88 N·m (9.0 kgf·m, 65 ft·lb)
A: Germany Model Europe and France Models (EN500-C6 ~)
B: Germany, Europe and France Models
G: Apply grease.
R: Replacement Parts
S: Follow the specific tightening sequence.
WL: Apply soap and water solution or rubber lubricant.

Specifications

Item	Standard	Service Limit
Wheels (Rims)		
Rim Size:		
Front	19 MC × MT 2.15	– – –
Rear	15 MC × MT 3.00	– – –
Rim Runout:		
Radial	1.0 mm (0.04 in.)	2.0 mm (0.08 in.)
Axial	0.8 mm (0.03 in.)	2.0 mm (0.08 in.)
Axle Runout/100 mm (3.94 in.)	less than 0.05 mm (0.020 in.)	0.2 mm (0.008 in.)
Wheel Balance	less than 10 g	– – –
Balance Weights	10 g, 20 g, 30 g	– – –
Tires		
Air Pressure (when cold):		
Front:		
Up to 97.5 kg (215 lb) load	200 kPa (2.00 kgf/cm², 28 psi)	– – –
Over 97.5 kg (215 lb) load	225 kPa (2.25 kgf/cm², 32 psi)	– – –
Rear:		
Up to 97.5 kg (215 lb) load	200 kPa (2.00 kgf/cm², 28 psi)	– – –
Over 97.5 kg (215 lb) load	225 kPa (2.25 kgf/cm², 32 psi)	– – –
Tread Depth:		
Front	BRIDGESTONE: 4.8 mm (0.189 in.) DUNLOP: 4.5 mm (0.177 in.)	1 mm (0.04 in.)
Rear	BRIDGESTONE: 7.2 mm (0.283 in.) DUNLOP: 7.3 mm (0.287 in.)	Up to 130 km/h (80 mph): 2 mm (0.08 in.) Over 130 km/h (80 mph): 3 mm (0.12 in.)
Standard Tires:		
Front:		
Make, Type	BRIDGESTONE, EXEDRA G701 (tube) DUNLOP, D404F (tube)	– – – – – –
Size	100/90-19 57S 100/90-19 M/C 57S (C8 ~)	– – –
Rear:		
Make, Type	BRIDGESTONE, EXEDRA G702 (tube) DUNLOP, D404 (tube)	– – – – – –
Size	140/90-15 M/C 70S	– – –

⚠ WARNING

Use the same manufacture's tires on both front and rear wheels.

Special Tools

Inside Circlip Pliers:
57001-143

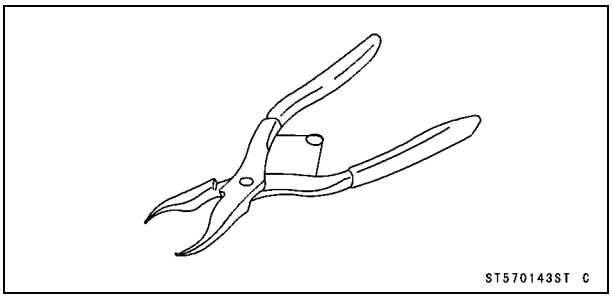

Rim Protector:
57001-1063

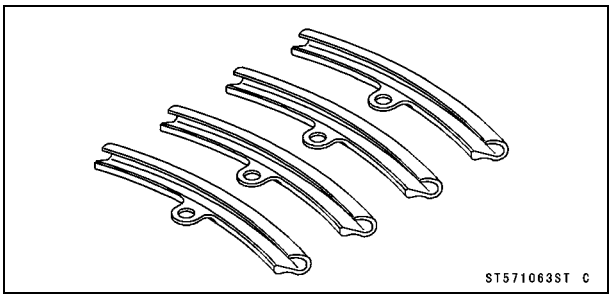

Bead Breaker Assembly:
57001-1072

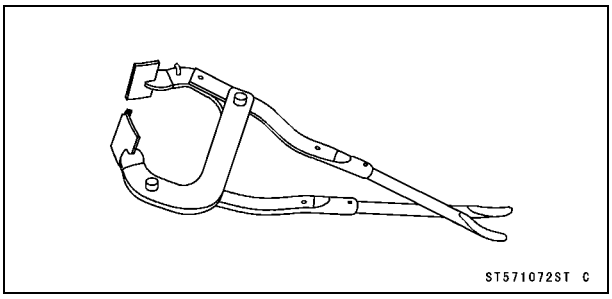

Bearing Driver Set:
57001-1129

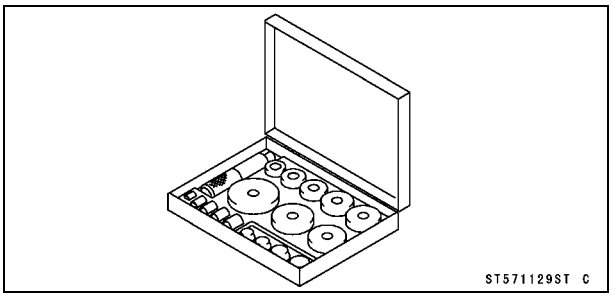

Jack:
57001-1238

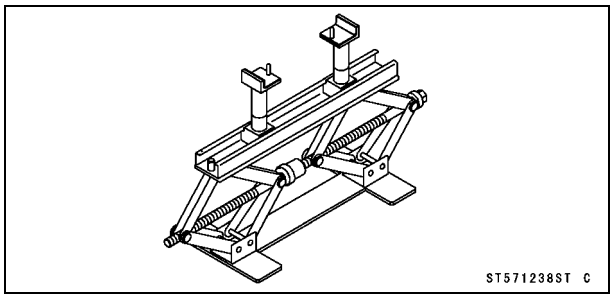

Bearing Remover Shaft, ϕ9:
57001-1265

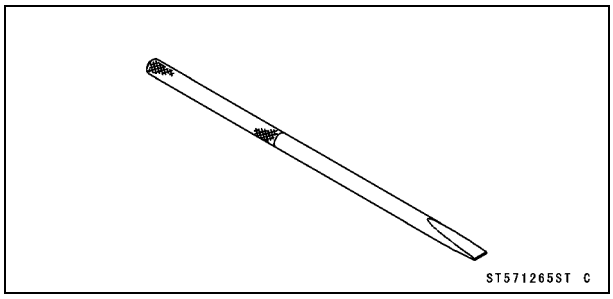

Bearing Remover Head, ϕ15 × ϕ17:
57001-1267

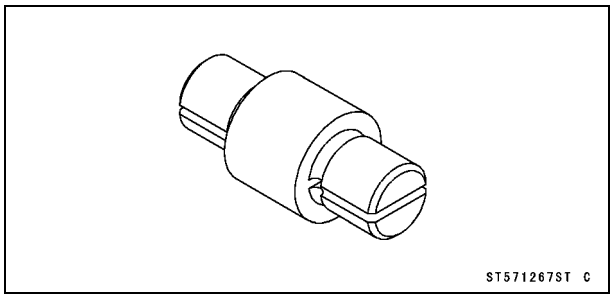

Wheels (Rims)

Front Wheel Removal

- Remove the speedometer cable lower end.
- Loosen the front axle nut [A].
- Raise the front wheel off the ground.

Special Tool - Jack: 57001-1238

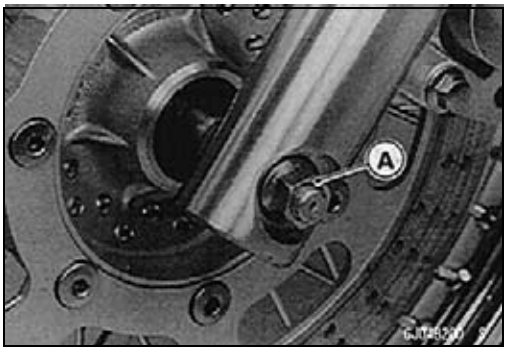

- Loosen the axle clamp bolt [A].
- Pull out the axle [B] to the right, and remove the front wheel, speedometer gear housing, and collars.

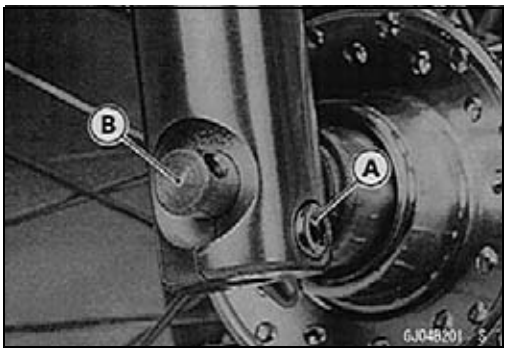

CAUTION

Do not lay the front wheel on the ground with the disc facing down. This can damage or warp the disc. Place blocks under the wheel so that the disc does not touch the ground.

Front Wheel Installation

- Install the speedometer gear housing so that its projections [A] fit into the gear drive notches [B] in the wheel hub.
- Fit the collar on the right hand side of the hub.

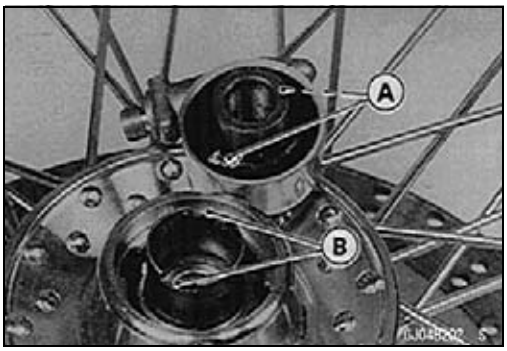

- Fit the speedometer gear housing stop [A] to the fork leg stop [B].
- Tighten the axle nut and axle clamp bolt.

Torque - Front Axle Nut: 88 N·m (9.0 kgf·m, 65 ft·lb)
Front Axle Clamp Bolt: 34 N·m (3.5 kgf·m, 25 ft·lb)

- Install the speedometer cable lower end.
- Check the front brake.

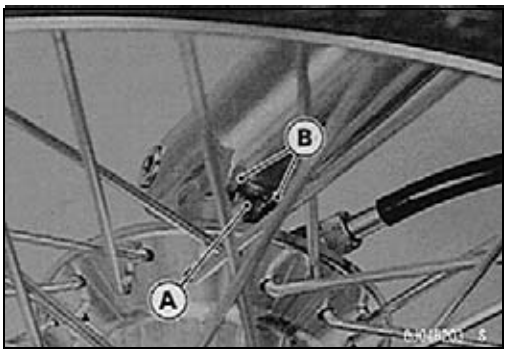

⚠ WARNING

Do not attempt to drive the motorcycle until a full brake lever is obtained by pumping the brake lever until the pads are against the disc. The brake will not function on the first application of the lever if this is not done.

Rear Wheel Removal

- Remove:
  Left Muffler (see Exhaust Pipe, Muffler Removal in the Engine Top End chapter)
- Raise the rear wheel off the ground.

Special Tool - Jack: 57001-1238

Wheels (Rims)

- Remove:
  Clip [A], Torque Link Nut [B] and Bolt
  Adjusting Nut [C] and Brake Rod [D]
  Cotter Pin [E] and Axle Nut [F]

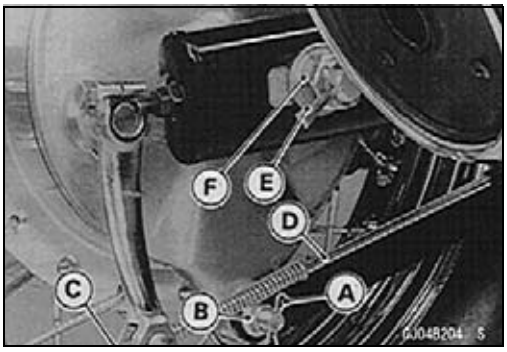

  Screws [A] and Chain Cover [B]
  Axle [C]
- Remove the drive chain [D] from the rear sprocket toward the left.
- Remove the rear wheel.

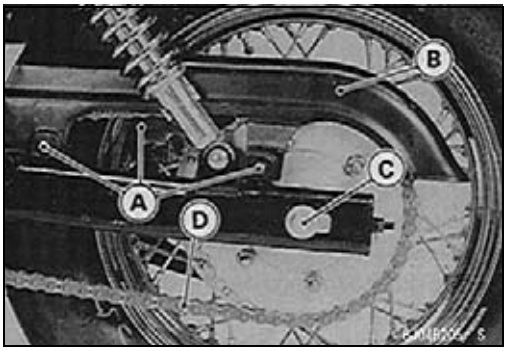

Rear Wheel Installation
- Engage the drive chain with the rear sprocket.
- Insert the axle from the left side of the wheel.
- To prevent a soft, or “spongy feeling” brake, center the brake panel assembly in the brake drum as follows:

○Tighten the axle nut lightly.
○Install the torque link bolt and nut.
○Spin the wheel, and apply the rear brake, and then tighten the axle nut to the specified torque.

Torque - Rear Axle Nut: 88 N·m (9.0 kgf·m, 65 ft·lb)

- Adjust the drive chain slack (see Drive Chain Slack Adjustment in the Final Drive chapter).
- Install the removed parts.

Torque - Torque Link Nuts: 34 N·m (3.5 kgf·m, 25 ft·lb)

- Insert a new cotter pin [A] to the rear axle.

NOTE

○*When inserting the cotter pin, if the slots in the nut do not align with the cotter pin hole in the axle, tighten the nut clockwise [B] up to next alignment.*
○*It should be within 30 degree.*
○*Loosen once and tighten again when the slot goes past the nearest hole.*

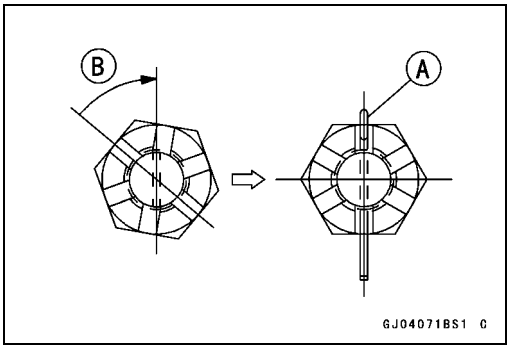

Wheels (Rims)

- Bend the cotter pin [A] over the nut.
- Check the rear brake (see Brake Pedal Position Inspection in the Brakes chapter).

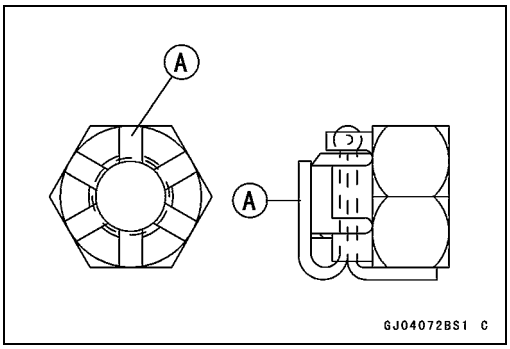

Wheel Inspection

- Raise the front/rear wheel off the ground.

  Special Tool - Jack: 57001-1238

- Spin the wheel lightly, and check for roughness or binding.

★If roughness or binding is found, replace the hub bearings.

Spoke Inspection

- Check that all the spokes are tightened evenly.

★If spoke tightness is uneven or loose, tighten the spoke nipples evenly.

Torque - Spoke Nipples: 5.2 N·m (0.53 kgf·m, 46 in·lb)

- Check the rim runout.

⚠ WARNING

If any spoke breaks, it should be replaced immediately. A missing spoke paces an additional load on the other spokes, which will eventually cause other spokes to break.

Wheels (Rims)

Rim Inspection

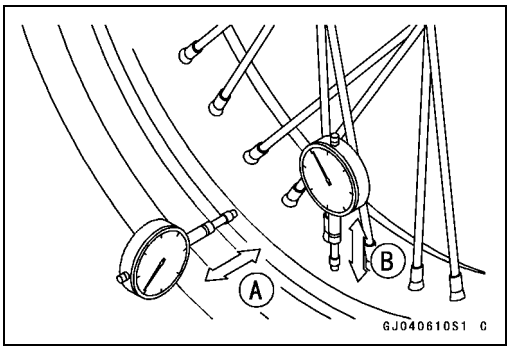

- Raise the front/rear wheel off the ground.

  Special Tool - Jack: 57001-1238
- Inspect the rim for small cracks, dents, bending, or warping.

★If there is any damage to the rim, it must be replaced.

- Remove the wheel, and support it with the tire by the axle.
- Measure the rim runout, axial [A] and radial [B], with a dial gauge.

★If the rim runout exceeds the service limit, check the hub bearings. Replace them if they are damaged.

★If the problem is not due to he bearings, correct the rim warp (runout). A certain amount of rim warp can be corrected by recentering the rim. Loosen some spokes and tighten parts of the rim. If the rim is badly bent, however, it must be replaced.

Rim Runout (with tire installed)

Standard:	
Radial	**1.0 mm (0.04 in.)**
Axial	**0.8 mm (0.03 in.)**
Service Limit:	
Radial	**2.0 mm (0.08 in.)**
Axial	**2.0 mm (0.08 in.)**

Axle Inspection

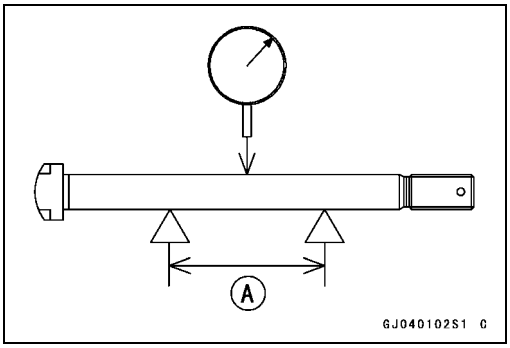

- Visually inspect the front and rear axle for damages.

★If the axle is damaged or bent, replace it.

- Measure the axle runout with a dial gauge.

★If axle runout exceeds the service limit, replace the axle.

Axle Runout/100 mm (3.94 in.)

Standard:	**less than 0.05 mm (0.002 in.)**
Service Limit:	**0.2 mm (0.08 in.)**

Balance Inspection

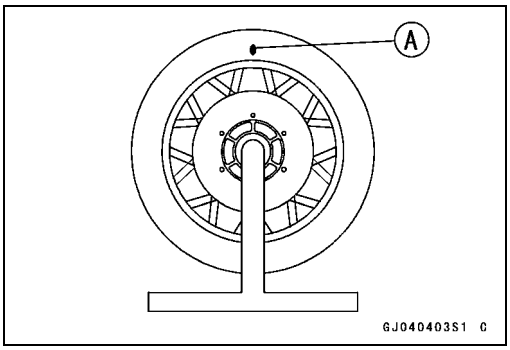

- Remove the wheel.
- Support the wheel so that it can be spun freely.
- Spin the wheel lightly, and mark [A] the wheel at the top when the wheel stops.

○Repeat this procedure several times. If the wheel stops of its own accord in various positions, it is well balanced.

★If the wheel always stops in one position, adjust the wheel balance.

Wheels (Rims)

Balance Adjustment

- If the wheel always stops in one position, provisionally attach a balance weight [A] to the spoke.

○Attach a balance weight loosely to the spoke under the marking.

- Rotate the wheel 1/4 turn [B], and see whether or not the wheel stops in this position. If it does, the correct balance weight is being used.

★If the wheel rotates and the weight goes up, replace the weight with the next heavier size.

★If the wheel rotates and the weight goes down, replace the weight with the next lighter size.

- Repeat these steps until the wheel remains at rest after being rotated 1/4 turn.
- Rotate the wheel another 1/4 turn and then another 1/4 turn to see if the wheel is correctly balanced.
- Repeat the entire procedure as many times as necessary to achieve correct wheel balance.
- Permanently install the balance weight.
- Install the balance weight firmly to the spoke.

○Clamp on the balance weight firmly using pliers [A].

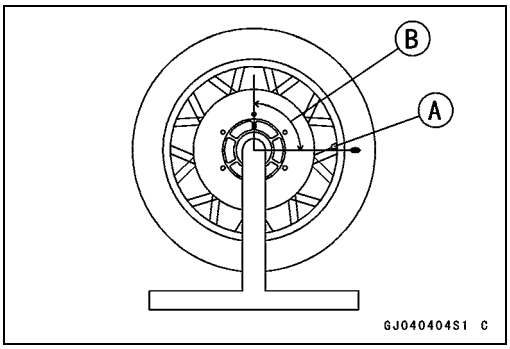

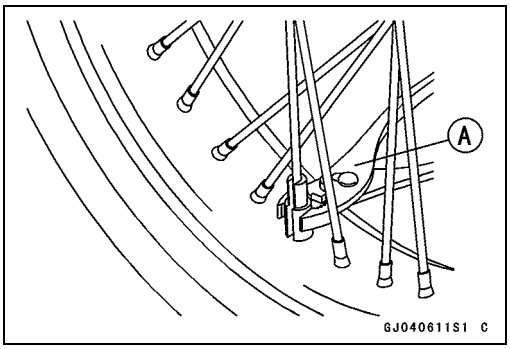

Balance Weight

Part Number	Weight (grams)
41075-1007	10
14075-1008	20
41075-1009	30
(EN500-C10 ~)	
41075-0011	10
41075-0012	20
41075-0013	30

Tires

Air Pressure Inspection/Adjustment

- Measure the tire air pressure with an air pressure gauge [A] when the tires are cold.

★Adjust the tire air pressure according to the specifications if necessary.

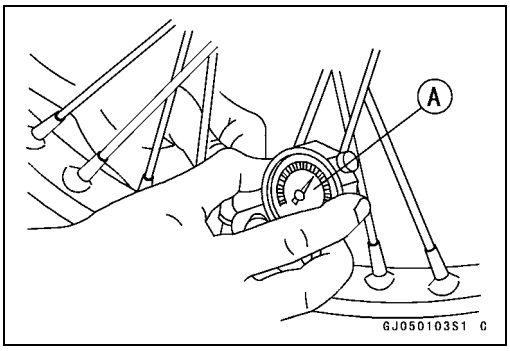

Air Pressure (when cold)

Front and Rear	Up to 97.5 kg (215 lb) load	200 kPa (2.00 kgf/cm², 28 psi)
	Over to 97.5 kg (215 lb) load	225 kPa (2.25 kgf/cm², 32 psi)

Tire Inspection

- Remove any imbedded stones or other foreign particles from the tread.
- Visually inspect the tire for cracks and cuts, replacing the tire in case of damage. Swelling or high spots indicate internal damage, requiring tire replacement.
- Measure the tread depth at the center of the tread with a depth gauge [A]. Since the tire may wear unevenly, take measurement at several places.

★If any measurement is less than the service limit, replace the tire.

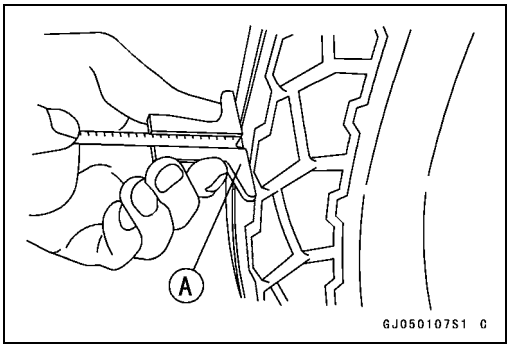

Tread Depth

Standard:

Front	**BRIDGESTONE: 4.8 mm (0.189 in.)** **DUNLOP: 4.5 mm (0.177 in.)**
Rear	**BRIDGESTONE: 7.2 mm (0.283 in.)** **DUNLOP: 7.3 mm (0.287 in.)**

Service Limit:

Front	**1 mm (0.04 in.)**
Rear	**2 mm (0.08 in.) [Up to 130 km/h (80 mph)]**
	3 mm (0.12 in.) [Over 130 km/h (80 mph)]

⚠ WARNING

To ensure safe handling and stability, use only the recommended standard tires for replacement, inflated to the standard pressure.

NOTE

○*Check and balance the wheel when a tire is replaced with a new one.*

Tire Removal

CAUTION

Do not lay the front wheel on the ground with the disc facing down. This can damage or warp the disc. Place blocks under the wheel so that the disc does not touch the ground.

Tires

- Remove the wheel.
- To maintain wheel balance, mark [A] the valve stem position on the tire with chalk so that the tire can be reinstalled in the same position.
- Take out the valve core [B] to let out the air.
- Remove the valve stem nut.

○When handling the rim, be careful not to damage the rim flanges.

- Lubricate the tire beads and rim flanges on both sides with a soap and water solution or rubber lubricant. This helps the tire beads slip off the rim flanges.

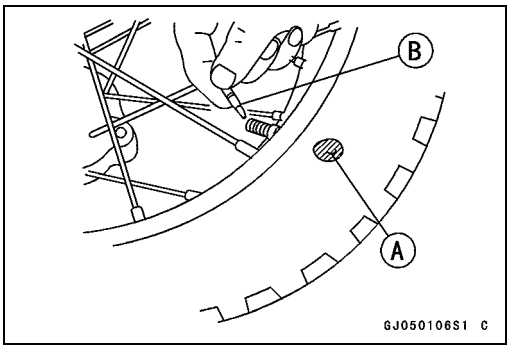

CAUTION
Never lubricate with engine oil or petroleum distillates because they will deteriorate the tire.

- Break the beads away from both sides of the rim with the bead breaker [A].

  Special Tool - Bead Breaker Assembly: 57001-1072

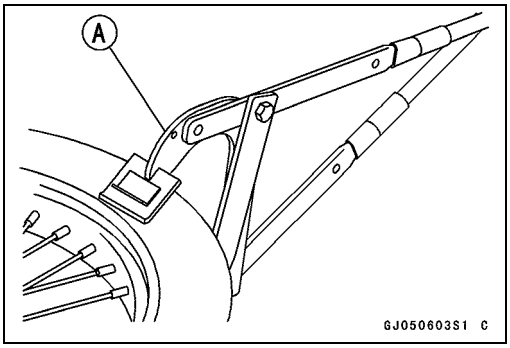

- Step on the side of the tire opposite valve stem, and pry the tire off the rim with the tire iron [B] of the bead breaker protecting the rim with rim protectors [A].

  Special Tools - Rim Protector: 57001-1063
  Bead Breaker Assembly: 57001-1072

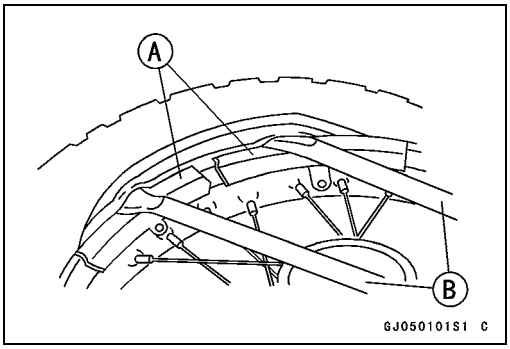

CAUTION
Take care not to insert the tire irons so deeply that the tube gets damaged.

- Remove the tube when one side of the tire is pried off.
- Pry the tire off the rim.

Tire Installation

- Check the tire rotation mark [A] on the front/rear tire and install it on the rim accordingly.

NOTE

○*The direction of the tire rotation is shown by an arrow on the tire sidewall.*

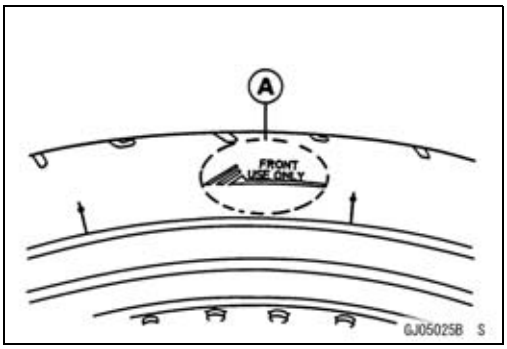

- Put just enough air in the tube to keep it from getting caught between the tire and rim, and insert it into the tire at this point, even if the tire is completely removed from the rim. Insert the valve stem into the rim and screw the nut on the stem loosely.

Tires

- If the tire is completely removed, pry one side back onto the rim.

- Position the tire on the rim so that the valve [A] is at the tire balance mark [B] (the chalk mark made during removal or the yellow paint mark on a new tire).
- Pry the other side of the tire onto the rim, starting at the side opposite the valve.

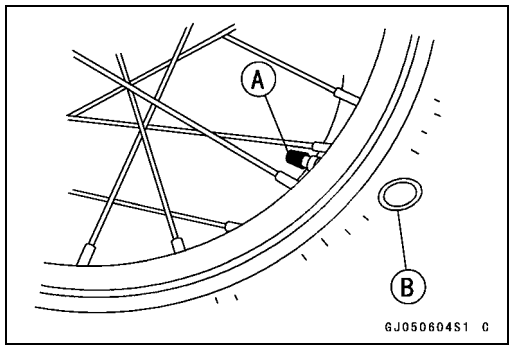

CAUTION
Take care not to insert the tire irons so deeply that the tube gets damaged.

- Check and adjust the air pressure after installing.
- Tighten valve stem nut securely.

Hub Bearing

Hub Bearing Removal

● Remove the wheel, and take out the following.

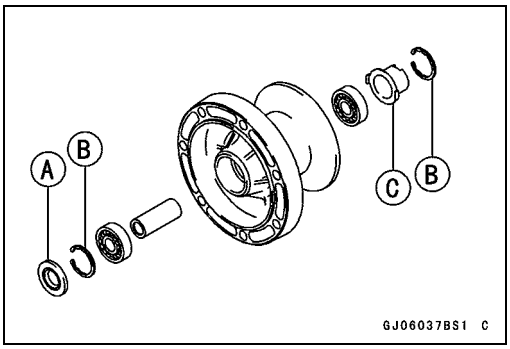

CAUTION

Do not lay the wheel on the ground with the disc facing down. This can damage or warp the disc. Place blocks under the wheel so that the disc does not touch the ground.

Front

Grease Seal [A]
Circlips [B]
Speedometer Gear Drive [C]

Special Tool - Inside Circlip Pliers: 57001-143

Rear

Coupling [A]
Collar [B]
Brake Panel
Circlip [C]

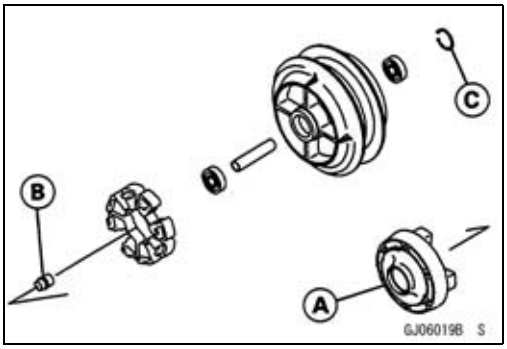

● Take the bearings [A] out of the hub, using the bearing remover.

Special Tools - Bearing Remove Shaft: 57001-1265 [B]
Bearing Remover Head, ϕ15 × ϕ17: 57001 -1267 [C]

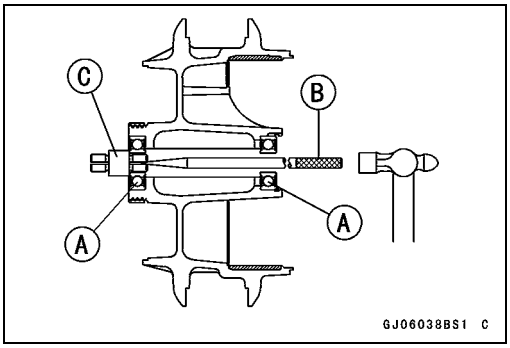

Hub Bearing Installation

● Before installing the hub bearings, blow any dirt or foreign particles out of the hub with compressed air to prevent contamination of the bearings.
● Replace the bearings with new ones.
● Install the front bearings in the following sequence.
○Press in the left side bearing [A] until it is bottomed.

Special Tool - Bearing Driver Set: 57001-1129

○Insert the collar [B] in the hub [C].
○Press in the right side bearing [D] until it is bottomed.
● Press in the rear bearings until they are bottomed.

Special Tool - Bearing Driver Set: 57001-1129

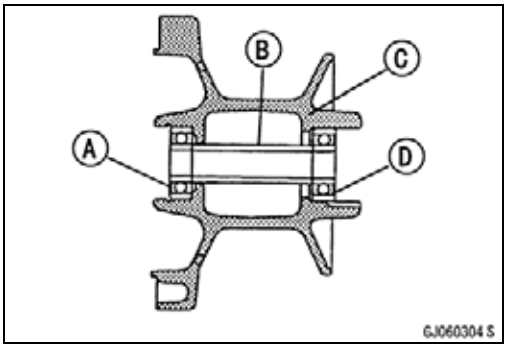

NOTE

○*Install the bearings so that the marked side or sealed side faces out.*

● Replace the circlips with new ones.

Special Tool - Inside Circlip Pliers: 57001-143

Hub Bearing

- Replace the grease seals with new ones.
- Press in the grease seal [A] so that the seal surface is flush [B] with the end of the hole.

○Apply high temperature grease to the grease seal lips.

Special Tool - Bearing Driver Set: 57001-1129 [C]

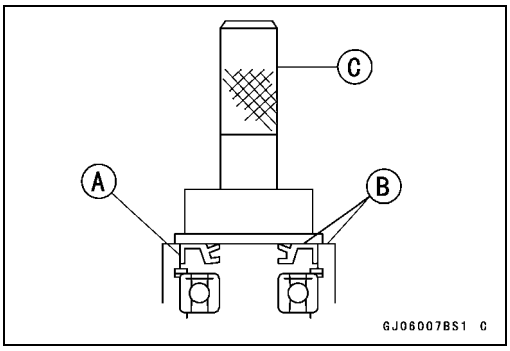

Hub Bearing Inspection

NOTE

○*It is not necessary to remove any bearings for inspection. If any bearings are removed, they will need to be replaced with new ones.*

- Turn each bearing in the hub back and forth [A] while checking for plays, roughness, or binding.

★If it is noisy, does not spin smoothly, or has any rough spots, it must be replaced.

- Examine the bearing seal [B] for tears or leakage.

★If the seal is torn or is leaking, replace the bearing.

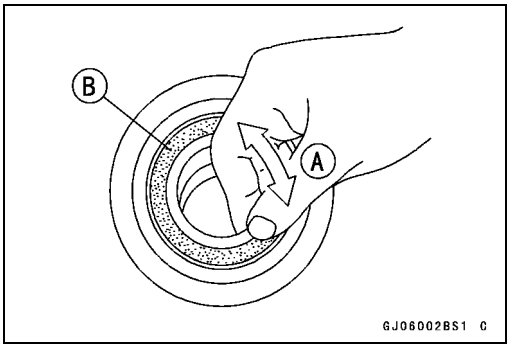

Speedometer Gear

Disassembly and Assembly

NOTE

○*It is recommended that the assembly be replaced rather than attempting to repair the components.*

- Install the speedometer gear so that it fits in the speedometer gear drive notches (see Front Wheel Installation).

Lubrication

- Clean and grease [A] the speedometer gear housing [B] in accordance with the Periodic Maintenance Chart.

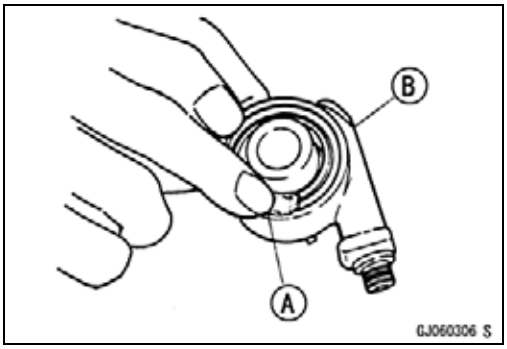

Final Drive

Table of Contents

Exploded View 10-2
Specifications 10-3
Special Tools 10-4
Drive Chain 10-5
- Drive Chain Slack Inspection 10-5
- Drive Chain Slack Adjustment 10-5
- Wheel Alignment Inspection/Adjustment 10-6
- Drive Chain Wear Inspection 10-6
- Drive Chain Lubrication 10-7
- Drive Chain Removal 10-8
- Drive Chain Installation 10-8
- Drive Chain Replacement (EN500-C9 ~) 10-8

Sprocket, Coupling 10-12
- Engine Sprocket Removal 10-12
- Engine Sprocket Installation 10-12
- Rear Sprocket Removal 10-13
- Rear Sprocket Installation 10-13
- Sprocket Wear Inspection 10-13
- Rear Sprocket Warp Inspection 10-13
- Coupling Bearing Removal 10-14
- Coupling Bearing Installation 10-14
- Coupling Installation 10-14
- Coupling Bearing Inspection and Lubrication 10-15

Exploded View

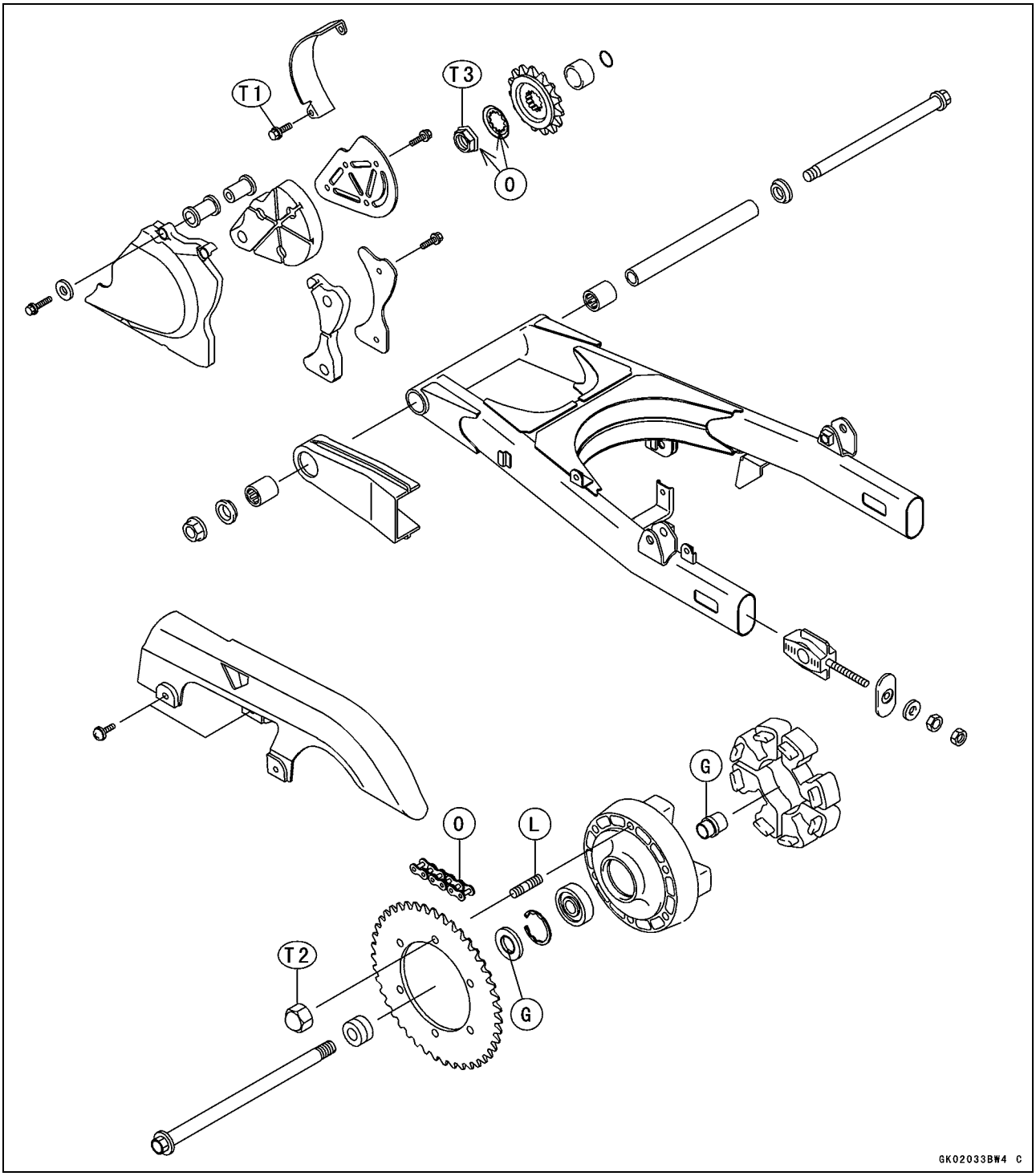

T1: 11 N·m (1.1 kgf·m, 95 in·lb)
T2: 74 N·m (7.5 kgf·m, 54 ft·lb)
59 N·m (6.0 kgf·m, 43 ft·lb) (Self Locknut)
T3: 127 N·m (13 kgf·m, 94 ft·lb)

G: Apply grease.
L: Apply non-permanent locking agent.
O: Apply oil.

Specifications

Item	Standard	Service Limit
Drive Chain		
Chain Slack	25 ~ 35 mm (0.98 ~ 1.38 in.)	– – –
20-link Length	317.5 ~ 318.2 mm (12.50 ~ 12.53 in.)	323 mm (12.7 in.)
Standard Chain		
Make	Enuma	– – –
Type	EK520SX-O, Endless	– – –
	RK520SMOZ9 (ML)	– – –
	EK520MVXL, Endless (EN500-C9 ~)	– – –
Link	110 links	– – –
Sprockets		
Rear Sprocket Warp	Less than 0.5 mm (0.020 in.)	0.6 mm (0.024 in.)

ML: Malaysia Model

Special Tools

Inside Circlip Pliers:
57001-143

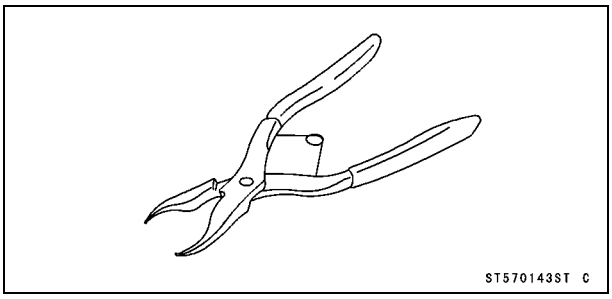

Jack:
57001-1238

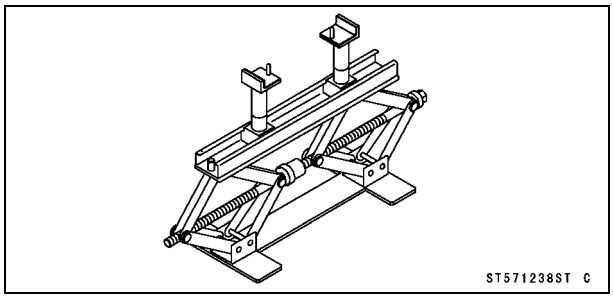

Bearing Driver Set:
57001-1129

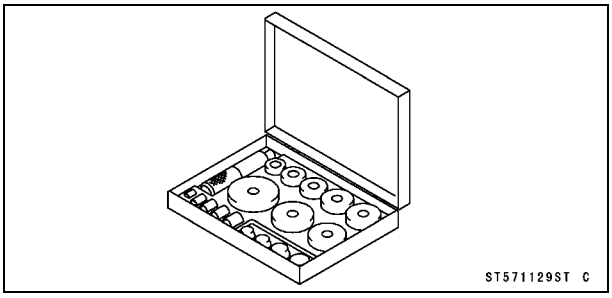

Drive Chain

Drive Chain Slack Inspection

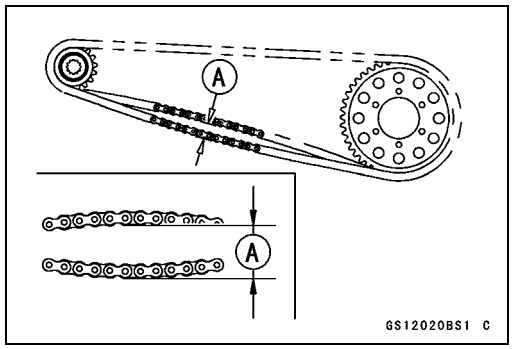

NOTE

○*Check the slack with the motorcycle setting on its side stand.*

○*Clean the chain if it is dirty, and lubricate it if it appears dry.*

- Check the wheel alignment (see Wheel Alignment Inspection).
- Rotate the rear wheel to find the position where the chain is tightest.
- Measure the vertical movement (chain slack) [A] midway between the sprockets.

★If the chain slack exceeds the standard, adjust it.

Chain Slack
Standard: 25 ~ 35 mm (0.98 ~ 1.38 in.)

Drive Chain Slack Adjustment

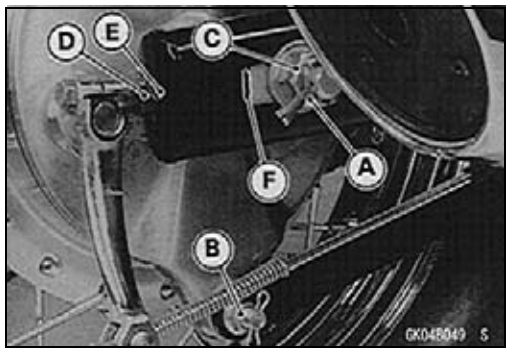

- Remove:
  Cotter Pin [A]
- Loosen:
  Rear Torque Link Nut [B]
  Axle Nut [C]
  Chain Adjuster Locknuts [D] (both sides)
- Turn the chain adjusting nuts [E] forward or rearward until the drive chain has the correct amount of chain slack. To keep the chain and wheel properly aligned, the right rear end [F] of the hole should align with the same graduation that the left rear end aligns with.

⚠ WARNING

Misalignment of the wheel will result in abnormal wear and may result in an unsafe riding condition.

- Tighten both chain adjuster locknuts securely.
- Tighten the axle nut (see Rear Wheel Installation section in the Wheels/Tires chapter).

Torque - Rear Axle Nut: 88 N·m (9.0 kgf·m, 65 ft·lb)

- Turn the wheel, measure the chain slack again at the tightest position, and readjust if necessary.
- Tighten the torque link nut.

Torque - Torque Link Nut: 34 N·m (3.5 kgf·m, 25 ft·lb)

- Install a new cotter pin [A] to the rear axle.

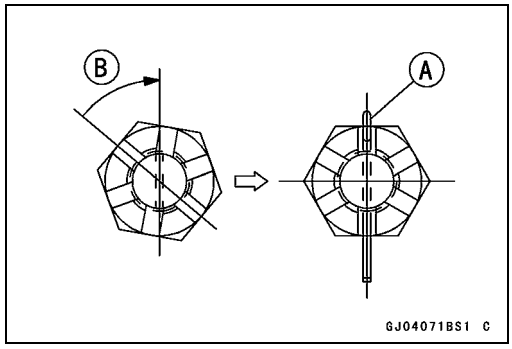

NOTE

○*When inserting the cotter pin, if the slots in the nut do not align with the cotter pin hole in the axle, tighten the nut clockwise [B] up to next alignment.*

○*It should be within 30 degree.*

○*Loosen once and tighten again when the slot goes past the nearest hole.*

Drive Chain

- Bend the cotter pin [A] over the nut.
- Check the rear brake.

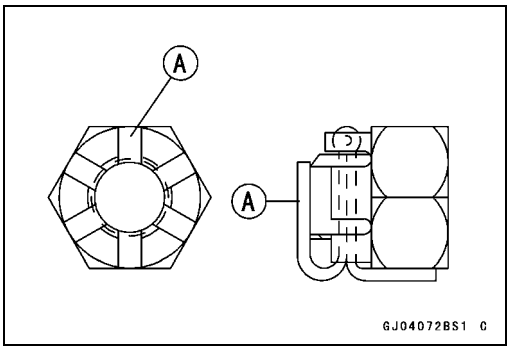

Wheel Alignment Inspection/Adjustment

- Check that the right rear end [A] of the hole should align with the same graduation [B] that the left rear end aligns with.

★If they do not, adjust the chain slack and align the wheel alignment (see Slack Adjustment).

NOTE

○*Wheel alignment can also be checked using the straightedge or string method.*

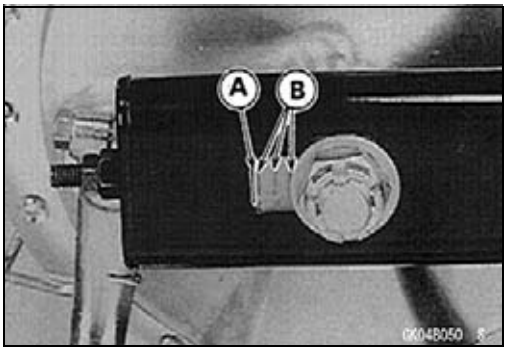

⚠ WARNING

Misalignment of the wheel will result in abnormal wear, and may result in an unsafe riding condition.

Drive Chain Wear Inspection

- Remove:
  Chain Cover
- Rotate the rear wheel to inspect the drive chain for damaged rollers, loose pins and links.

★If there is any irregularity, replace the drive chain.

★Lubricate the drive chain if it appears dry.

- Stretch the chain taut by hanging a 98 N (10 kgf, 20 lb) weight [A] on the chain.
- Measure the length of 20 links [B] on the straight part [C] of the chain from the pin center of the 1st pin to the pin center of the 21st pin. Since the chain may wear unevenly, take measurements at several places.

★If any measurements exceed the service limit, replace the chain. Also, replace the front and rear sprockets when the drive chain is replaced.

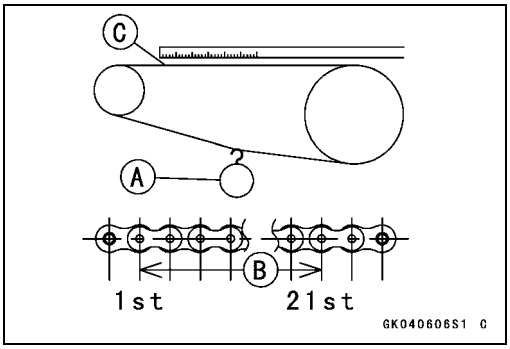

Drive Chain 20-link Length

Standard:	**317.5 ~ 318.2 mm (12.50 ~ 12.53 in.)**
Service Limit:	**323 mm (12.7 in.)**

Drive Chain

⚠ WARNING

If the drive chain wear exceeds the service limit, replace the chain or an unsafe riding condition may result. A chain that breaks or jumps off the sprockets could snag on the engine sprocket or lock the rear wheel, severely damaging the motorcycle and causing it to go out of control.
For safety, use only the standard chain. It is an endless type and should not be cut for installation.

Standard Chain

Make:	**Enuma**
Type:	**EK520SX-0, Endless**
	RK520SMOZ9 (ML)
	EK520MVXL, Endless (EN500-C9 ~)
Link:	**110 Links**

Drive Chain Lubrication

- If a special lubricant is not available, a heavy oil such as SAE 90 is preferred to a lighter oil because it will stay on the chain longer and provide better lubrication.
- If the chain appears especially dirty, clean it before lubrication.

CAUTION

The O-rings between the side plates seal in the lubricant between the pin and the bushing. To avoid damaging the O-rings and resultant loss of lubricant, observe the following rules:
Use only kerosene or diesel oil for cleaning an O-ring drive chain.
Any other cleaning solution such as gasoline or trichloroethylene will cause deterioration and swelling of the O-ring.
Blow the chain dry with compressed air immediately after cleaning.
Complete cleaning and drying the chain within 10 minutes.

- Apply oil to the sides of the rollers so that oil will penetrate to the rollers and bushings. Apply the oil to the O-rings so that the O-rings will be coated with oil.
- Wipe off any excess oil.
  Oil Applied Areas [A]
  O-ring [B]

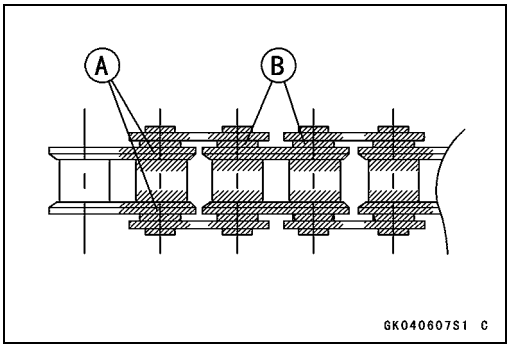

Drive Chain

Drive Chain Removal

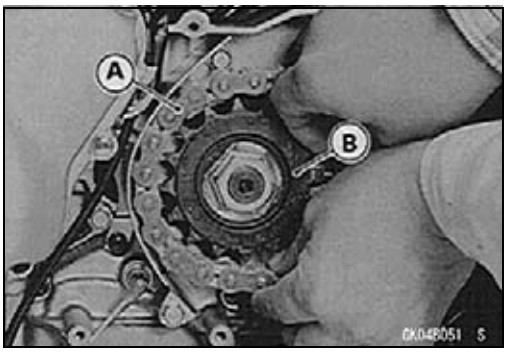

- Remove:
  Rear Wheel (see Rear Wheel Removal in the Wheels/Tires chapter)
  Swingarm (see Swingarm Removal in the Suspension chapter)
  Engine Sprocket Cover (see Engine Sprocket Cover Removal)
- Disengage the drive chain [A] from the engine sprocket [B], and take it off the chassis.

Drive Chain Installation

- Engage the drive chain with the engine sprocket.
- Install:
  Swingarm (see Swingarm Installation in the Suspension chapter)
  Rear Wheel (see Rear Wheel Installation in the Wheels/Tires chapter)
  Engine Sprocket Cover (see Engine Sprocket Cover Installation)
- Adjust the chain slack after installing the chain (see Slack Adjustment).

Drive Chain Replacement (EN500-C9 ~)

CAUTION
For safety, if the drive chain shall be replaced, replace it using a recommended tool.

Recommended Tool - Type: EK JOINT Tool #50
Brand: ENUMA

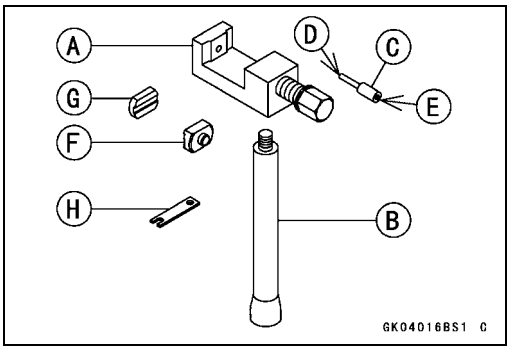

Body [A]
Handlebar [B]
Cutting and Rivetting Pin [C]
For Cutting [D]
For Riveting [E]
Plate Holder (A) [F]
Plate Holder (B) [G]
Gauge [H]

- Remove:
  Chain Cover (see Drive Chain Removal)
  Engine Sprocket Cover (see Engine Sprocket Removal)

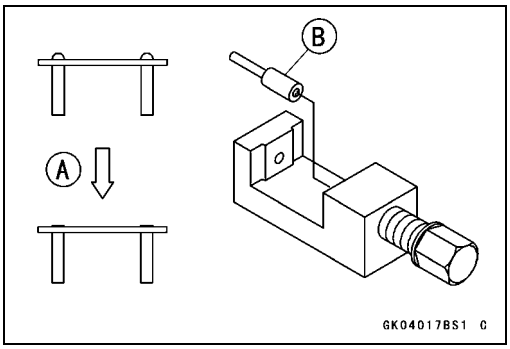

- Grind [A] the pin head to make it flat.
- Set the cutting and rivetting pin [B] as shown.

Drive Chain

- Screw the pin holder until it touches the link pin.
- Be sure that the cutting pin hits center of the link pin.

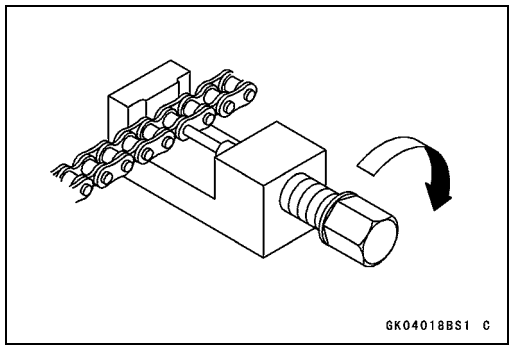

- Screw the handlebar [A] into the body.
- Turn the pin holder with the wrench [B] clockwise to extract the link pin.

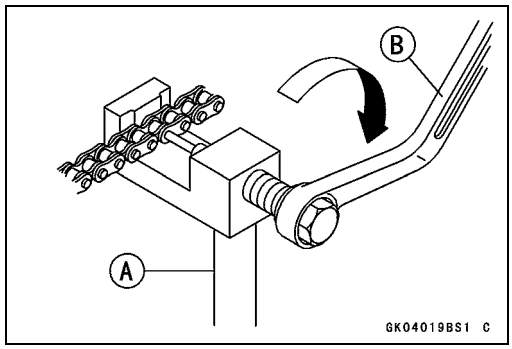

- Replace the link pin, link plate and grease seals.
- Apply grease to the link pins [A] and grease to the seals [B] [C].
- Engage the drive chain on the engine and rear sprockets.
- Insert the link pins in the drive chain ends.
- Install the grease seals [C].
- Install the link plate so that the mark [D] faces out.
- Push the link plate by hand or plier to fix it.
- In case of grease seal chain, be sure to set the grease seals correctly.

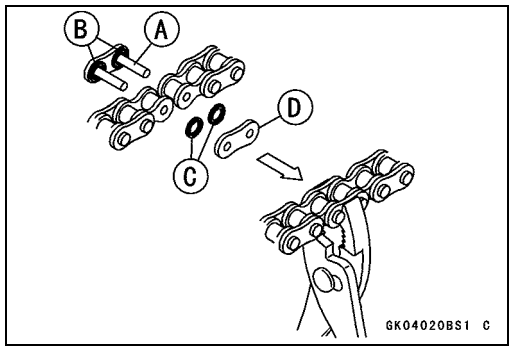

- Set the plate holder [A] and plate holder [B] on the body.

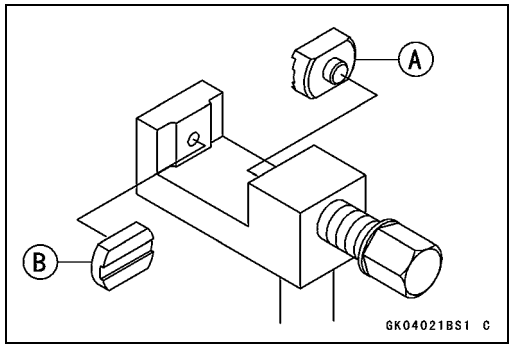

- Fit the plate holder [A] to link plate.
- Turn the pin holder by hand until plate holder [B] touches the other link plate.

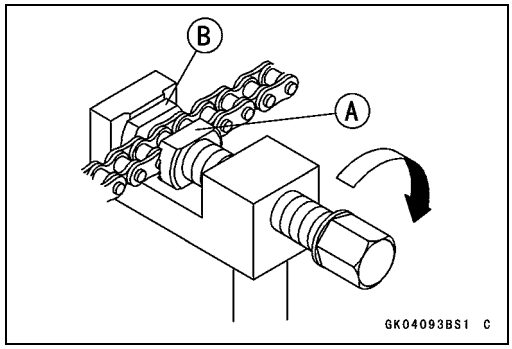

Drive Chain

- Turn the pin holder [A] by wrench clockwise until two pins of link come into groove of the plate holders [B].
- Take off the plate holder.

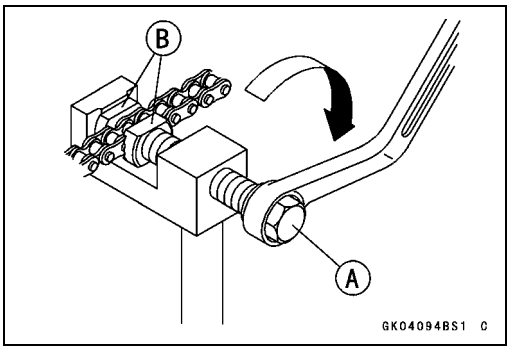

- Set the plate holder [A] and the cutting and rivetting pin [B] as shown.

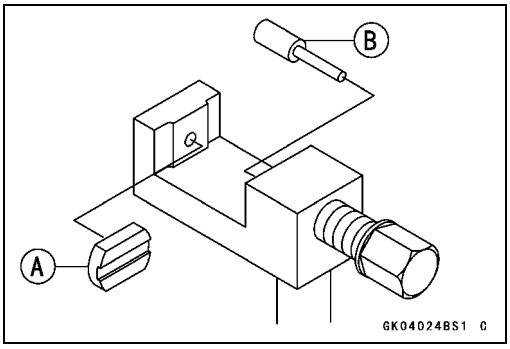

- Turn the pin holder until the rivetting pin touches link pin.

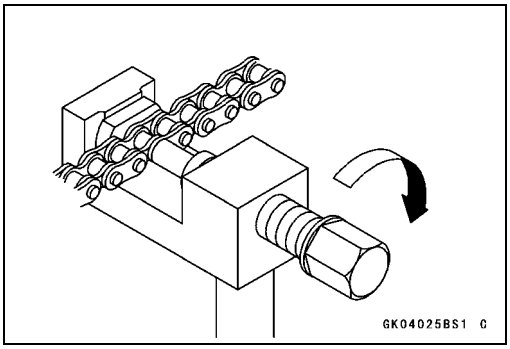

- Turn the wrench clockwise until the tip of rivetting pin hits of link pin.
- Rivet it.
- Some work for the other link pin.

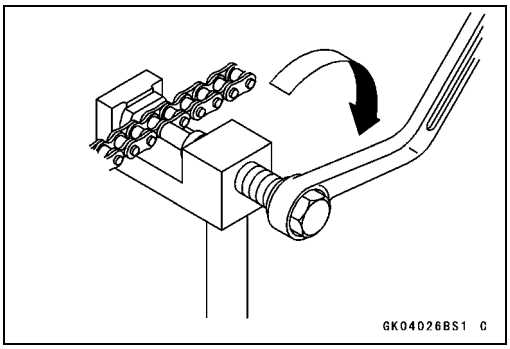

Drive Chain

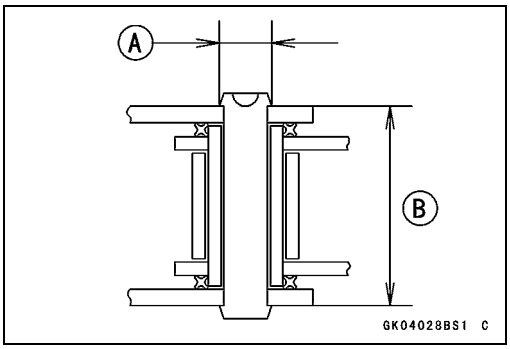

- After staking, check the staked area of the link pin for cracks.
- Measure the outside diameter [A] of the link pin and link plates width [B].

Link Pin Outside Diameter

Standard: **5.45 ~ 5.85 mm (0.21 ~ 0.23 in.)**

5.6 ~ 6.0 mm (0.22 ~ 0.24 in.) (EN500-C9 ~)

Link Plates Outside Width

Standard: **17.35 ~ 17.50 mm (0.683 ~ 0.689 in.)**

17.45 ~ 17.60 mm (0.687 ~ 0.693 in.) (EN500-C9 ~)

★If the reading exceeds the specified length, cut and rejoin the chain again.

- Check:
  Movement of the Rollers
- Adjust the drive chain slack after installing the chain (see Drive Chain Slack Adjustment).

Sprocket, Coupling

Engine Sprocket Removal

- Remove the bolts [A].
- Pull the engine sprocket cover [B].

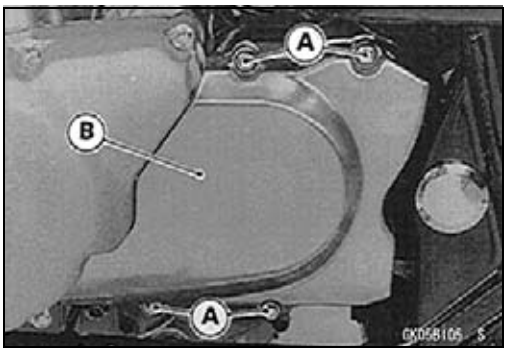

- Flatten out the bended washer [A].
- Remove the engine sprocket nut [B] and washer.

NOTE

○*When loosening the engine sprocket nut, hold the rear brake on.*

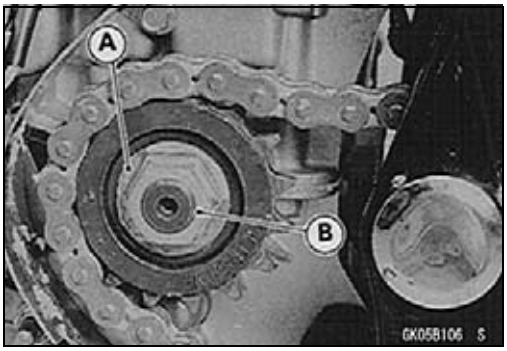

- Loosen the drive chain (see Drive Chain Slack Adjustment).
- Pull the engine sprocket [A] off the output shaft along with the chain.
- Remove the engine sprocket.

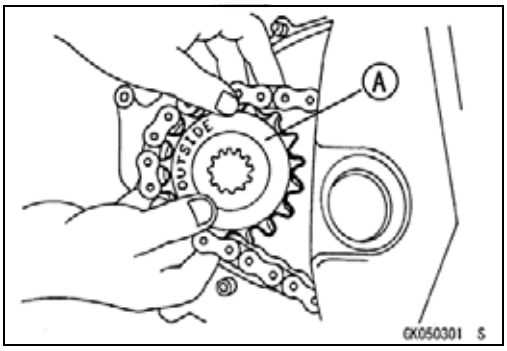

Engine Sprocket Installation

- Replace the sprocket washer with a new one.
- Install the engine sprocket so that the “OUTSIDE” mark [A] faces out.

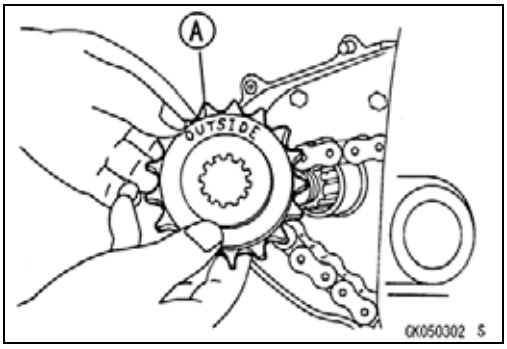

- Apply oil to the threads of the output shaft and the seating surface of the engine sprocket nut.
- After torquing the engine sprocket nut [A], bend the one side [B] of the washer over the nut.

NOTE

○*Tighten the nut while applying the rear brake.*

Torque - Engine Sprocket Nut: 127 N·m (13 kgf·m, 94 ft·lb)

- Install the engine sprocket cover.

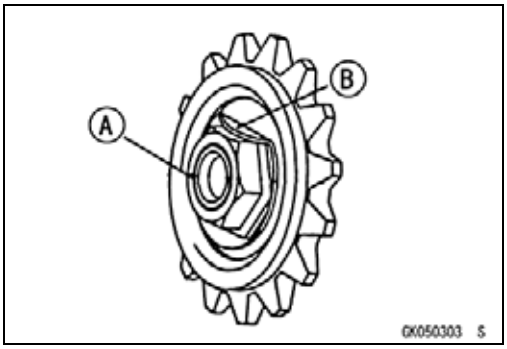

- Adjust the drive chain slack after installing the sprocket (see Drive Chain Slack Adjustment).

Sprocket, Coupling

Rear Sprocket Removal

- Remove the rear wheel (see Rear Wheel Removal in the Wheel/Tires chapter).
- Remove the rear sprocket nuts [A].
- Remove the rear sprocket [B].

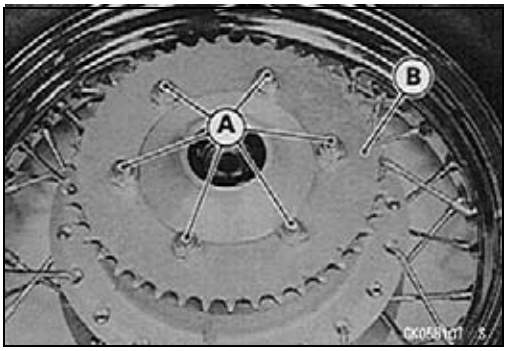

Rear Sprocket Installation

- Install the sprocket facing the tooth number marking [A] outward.
- Tighten the rear sprocket nuts.

Torque - Rear Sprocket Nuts: 74 N·m (7.5 kgf·m, 54 ft·lb)
(Self Locknut): 59 N·m (6.0 kgf·m , 43 ft·lb)

- Install the rear wheel (see Rear Wheel Installation in the Wheels/Tires chapter).
- Adjust the drive chain slack after installing the sprocket (see Drive Chain Slack Adjustment).

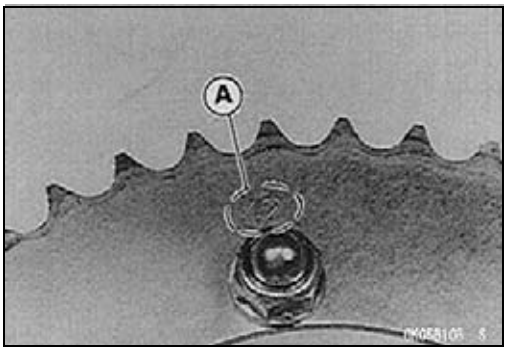

Sprocket Wear Inspection

- Visually inspect the engine and rear sprocket teeth for wear and damage.

★If the teeth are worn as illustrated, replace the sprocket with a new one, and inspect the drive chain wear (see Drive Chain Wear Inspection).

[A] Worn Tooth (Engine Sprocket)
[B] Worn Tooth (Rear Sprocket)
[C] Direction of Rotation

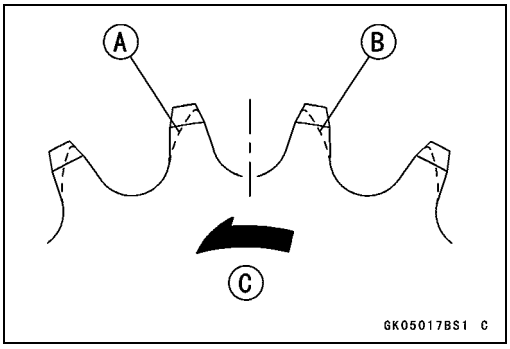

NOTE

○*If a sprocket requires replacement, the chain is probably worn also. When replacing a sprocket, inspect the chain.*

Rear Sprocket Warp Inspection

- Raise the rear wheel off the ground so that it will turn freely.

Special Tool - Jack: 57001-1238

- Set a dial gauge [A] against the rear sprocket [B] near the teeth as shown, and rotate [C] the rear wheel to measure the sprocket runout (warp). The difference between the highest and lowest dial gauge readings is the amount of runout (warp).

★If the runout exceeds the service limit, replace the rear sprocket.

Rear Sprocket Warp

Standard:	**less than 0.5 mm (0.020 in.)**
Service Limit:	**0.6 mm (0.024 in.)**

Sprocket, Coupling

Coupling Bearing Removal

- Remove:
  Coupling
  Grease Seal
  Circlip [A]

  Special Tool - Inside Circlip Pliers: 57001-143 [B]

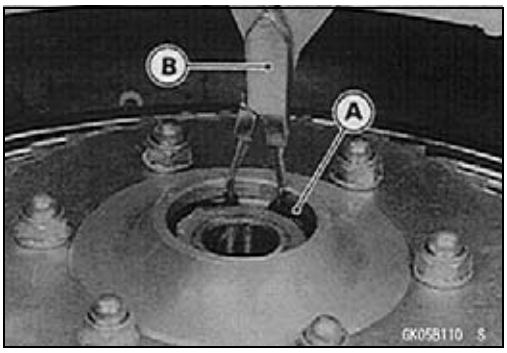

- Remove the bearing by tapping from the brake drum side.

  Special Tool - Bearing Driver Set: 57001-1129 [A]

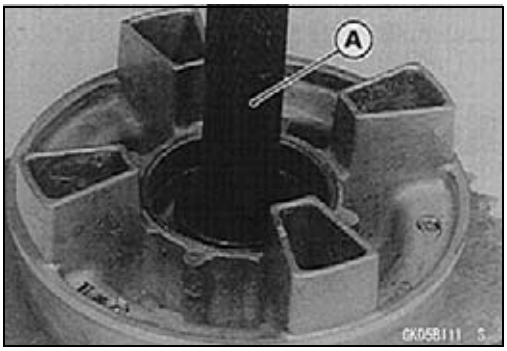

Coupling Bearing Installation

- Replace the bearing with a new one.
- Press in the bearing until it is bottomed.

  Special Tool - Bearing Driver Set: 57001-1129 [A]
- Pack the bearing with high temperature grease.
- Replace the circlip with a new one.

  Special Tool - Inside Circlip Pliers: 57001-143

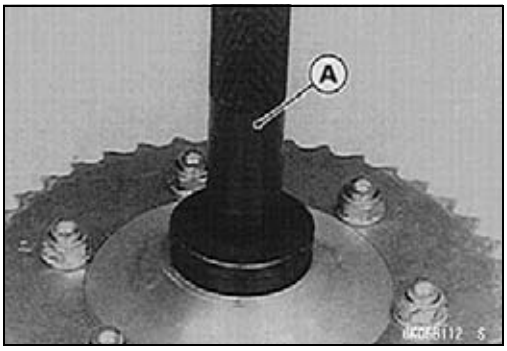

- Replace the grease seal with a new one.
- Press in the grease seal so that the seal surface is flush with the end of the hole.

○Apply high temperature grease to the grease seal lips.

Special Tool - Bearing Driver Set: 57001-1129 [A]

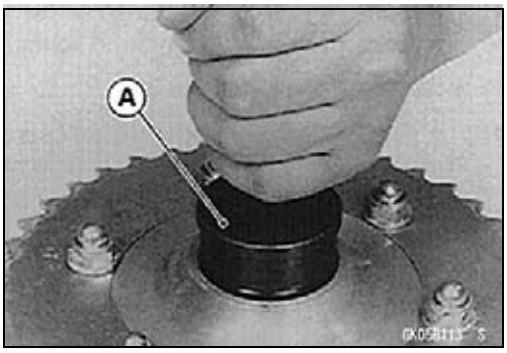

Coupling Installation

- Grease the following and install the coupling.
  Ball Bearing [A]
  Coupling Grease Seal [B]
  Coupling Internal Surface [C]

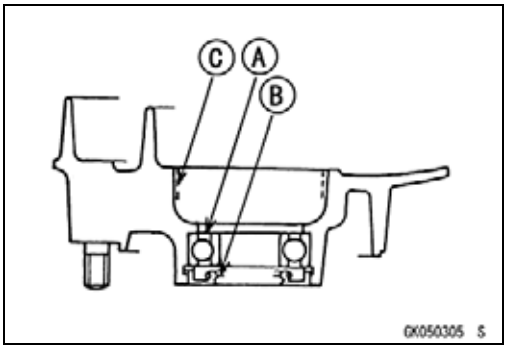

Sprocket, Coupling

Coupling Bearing Inspection and Lubrication

NOTE

○*It is not necessary to remove the coupling bearing for inspection and lubrication. If the bearing is removed, it will need to be replaced with a new one.*

- Spin the bearing by hand to check its condition.

★If it is noisy, does not spin smoothly, or has any rough spots, it must be replaced.

- Examine the bearing seal for tears or leakage.

★If the seal is torn or is leaking, replace the bearing.

- Pack the bearing with good quality bearing grease. Turn the bearing around by hand a few times to make sure the grease is distributed uniformly inside the bearing.

Brakes

Table of Contents

Exploded View 11-2
Specifications 11-4
Special Tool 11-5
Caliper 11-6
Caliper Removal 11-6
Caliper Installation 11-6
Caliper Disassembly 11-6
Caliper Assembly 11-7
Fluid Seal Damage Inspection 11-8
Dust Seal and Cover Damage Inspection 11-8
Piston Cylinder Damage Inspection 11-8
Caliper Holder Shaft Wear Inspection 11-8
Brake Pads 11-9
Brake Pad Removal 11-9
Brake Pad Installation 11-9
Brake Pad Lining Wear Inspection 11-9
Master Cylinder 11-10
Master Cylinder Removal 11-10
Master Cylinder Installation 11-10
Master Cylinder Disassembly 11-10
Master Cylinder Assembly 11-11
Master Cylinder Inspection (Visual Inspection) 11-11
Brake Disc 11-12
Brake Disc Removal 11-12
Brake Disc Installation 11-12
Brake Disc Wear Inspection 11-12
Brake Disc Warp Inspection 11-12
Brake Fluid 11-13
Brake Fluid Level Inspection 11-13
Brake Fluid Change 11-13
Bleeding the Brake Line 11-14
Brake Hose 11-16
Brake Hose Inspection 11-16
Brake Hose Replacement 11-16
Brake Pedal and Cable 11-17
Brake Pedal Position Inspection 11-17
Brake Pedal Position Adjustment 11-17
Brake Pedal Free Play Inspection 11-17
Brake Pedal Free Play Adjustment 11-17
Brake Pedal Removal 11-18
Brake Pedal Installation 11-18
Brake Cable Lubrication 11-19
Brake Panel and Drum 11-20
Cam Lever Angle Inspection 11-20
Cam Lever Angle Adjustment 11-20
Brake Panel Removal 11-20
Brake Panel Installation 11-20
Brake Panel Disassembly 11-21
Brake Panel Assembly 11-21
Brake Shoe Lining Wear Inspection 11-22
Brake Shoe Spring Inspection 11-22
Brake Camshaft and Camshaft Hole Wear Inspection 11-22
Brake Drum Wear Inspection 11-23
Brake Lubrication 11-23

Exploded View

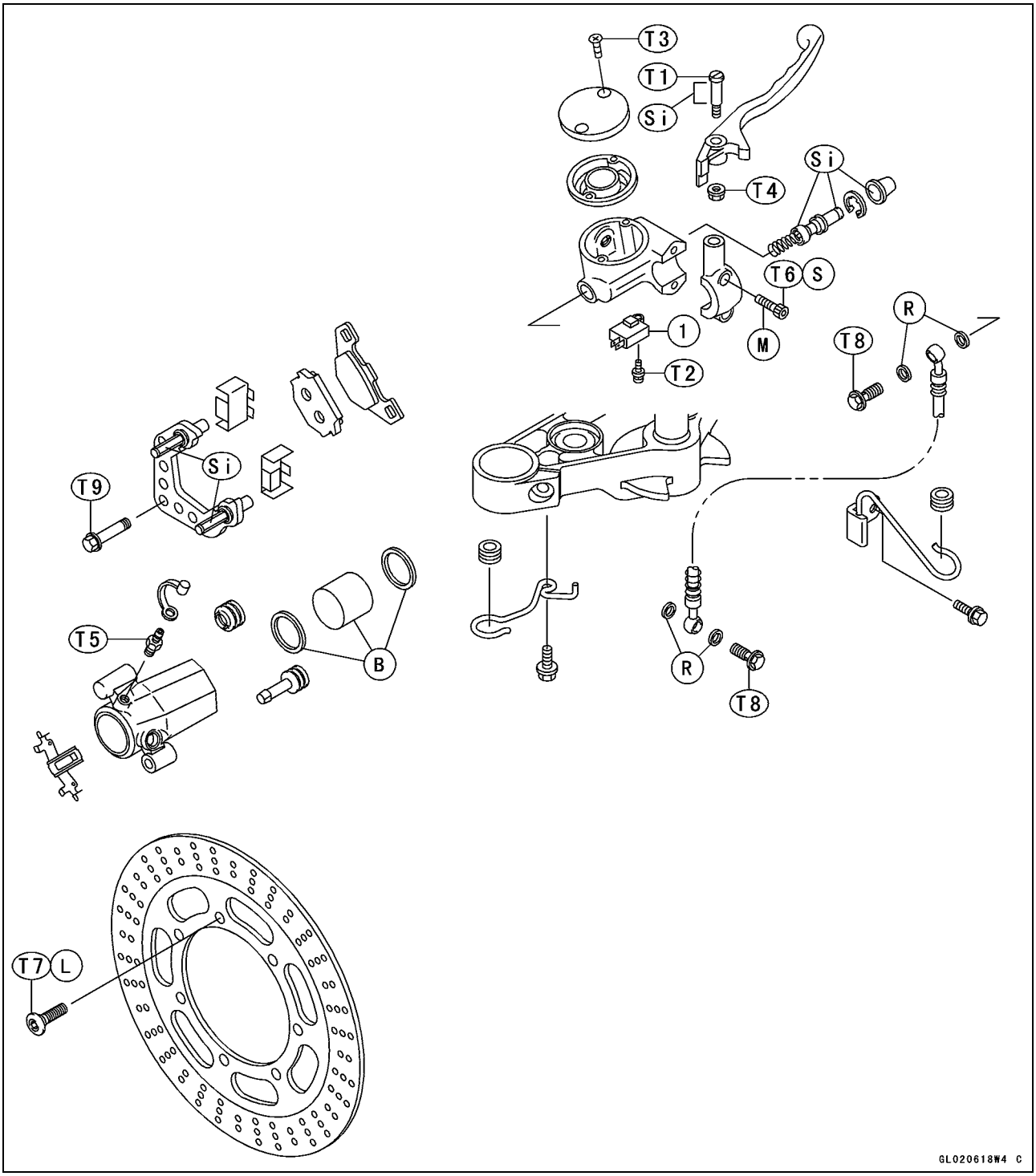

1. Front Brake Light Switch
T1: 1.0 N·m (0.1 kgf·m, 9 in·lb)
T2: 1.2 N·m (0.12 kgf·m, 10 in·lb)
T3: 1.5 N·m (0.15 kgf·m, 13 in·lb)
T4: 5.9 N·m (0.6 kgf·m, 52 in·lb)
T5: 7.8 N·m (0.8 kgf·m, 69 in·lb)
T6: 11 N·m (1.1 kgf·m, 95 in·lb)
T7: 27 N·m (2.8 kgf·m, 20 ft·lb)
T8: 34 N·m (3.5 kgf·m, 25 ft·lb)
T9: 34 N·m (3.5 kgf·m, 25 ft·lb)
T10: 19 N·m (1.9 kgf·m, 13.5 ft·lb)
B: Apply brake fluid.
L: Apply a non-permanent locking agent.
M: Apply molybdenum disulfide grease.
R: Replacement parts.
S: Follow the specific tightening sequence.
Si: Apply silicone grease, or PBC grease.

Exploded View

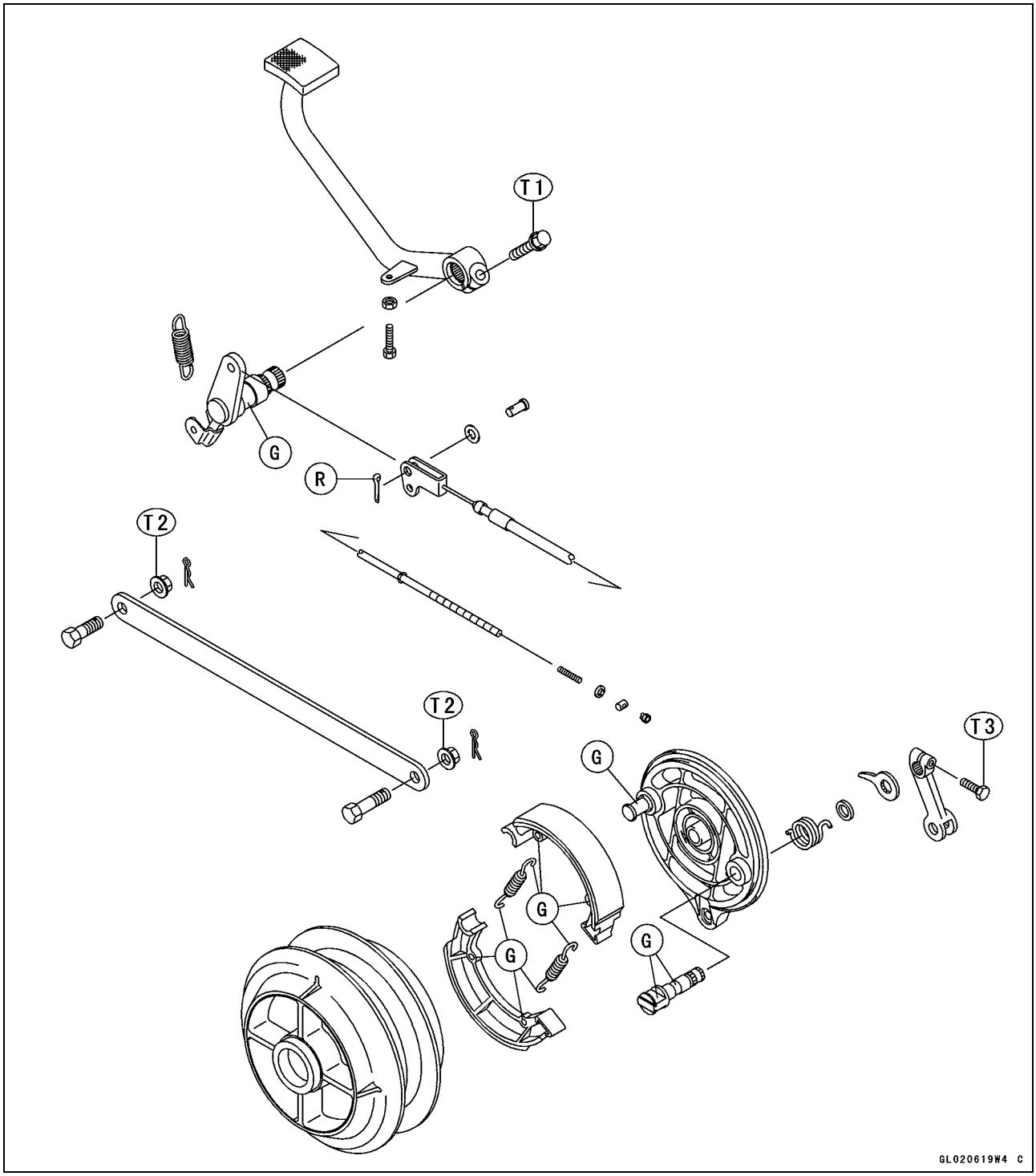

T1: 25 N·m (2.5 kgf·m, 18 ft·lb)
T2: 34 N·m (3.5 kgf·m, 25 ft·lb)
T3: 19 N·m (1.9 kgf·m, 13.5 ft·lb)
G: Apply grease.
R: Replacement Parts

Specifications

Item	Standard	Service Limit
Front Brake		
Pad Lining Thickness	4.85 mm (0.191 in.)	1 mm (0.04 in.)
Disc Thickness	4.8 ~ 5.2 mm (0.189 ~ 0.205 in.)	4.5 mm (0.177 in.)
Disc Runout	Not more than 0.15 mm (0.006 in.)	0.3 mm (0.012 in.)
Brake Fluid:		
Grade	DOT 4	– – –
Rear Brake		
Brake Pedal Position	About 55 mm (2.17 in.) above footpeg (from top of footpeg to top of brake pedal)	– – –
Cam Lever Angle	80 ~ 90°	– – –
Brake Pedal Free Play	20 ~ 30 mm (0.79 ~ 1.18 in.)	– – –
Brake Maintenance		
Brake Drum Inside Diameter	180.00 ~ 180.16 mm (7.086 ~ 7.093 in.)	180.75 mm (7.12 in.)
Brake Shoe Lining Thickness	4.9 ~ 5.5 mm (0.193 ~ 0.217 in.)	2.6 mm (0.102 in.)
Brake Camshaft Diameter	16.957 ~ 16.984 mm (0.6676 ~ 0.6687 in.)	16.88 mm (0.6646 in.)
Brake Camshaft Hole Diameter	17.00 ~ 17.07 mm (0.6693 ~ 0.6720 in.)	17.15 mm (0.6752 in.)

Special Tool

Inside Circlip Pliers:
57001-143

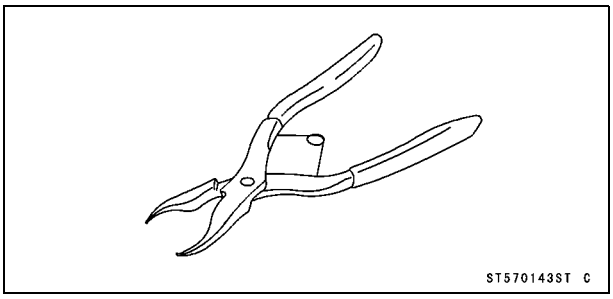

Caliper

Caliper Removal

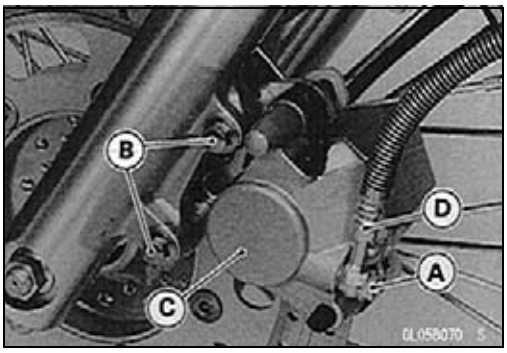

- Drain the brake fluid.
- Loosen the banjo bolt [A] at the brake hose lower end, and tighten it loosely.
- Unscrew the caliper mounting bolts [B], and detach the caliper [C] from the disc.
- Unscrew the banjo bolt and remove the brake hose [D] from the caliper.

★If the caliper is to be disassembled after removal and if compressed air is not available, remove the piston using the following steps before disconnecting the brake hose from the caliper.

○Remove the pads (see Pad Removal).

○Pump the brake lever to remove the caliper piston.

CAUTION
Immediately wash away any brake fluid that spills.

Caliper Installation

- Install the caliper and brake hose lower end.

○Replace the washers that are on each side of hose fitting with new ones.

- Tighten the caliper mounting bolts and banjo bolt.

Torque - Caliper Mounting Bolts: 34 N·m (3.5 kgf·m, 25 ft·lb)
Brake Hose Banjo Bolt: 34 N·m (3.5 kgf·m, 25 ft·lb)

- Check the fluid level in the brake reservoir, and bleed the brake line (see Bleeding the Brake Line).
- Check the brake for good braking power, no brake drag, and no fluid leakage.

⚠ WARNING
Do not attempt to drive the motorcycle until a full brake lever is obtained by pumping the brake lever until the pads are against the disc. The brakes will not function on the first application of the lever if this is not done.

Caliper Disassembly

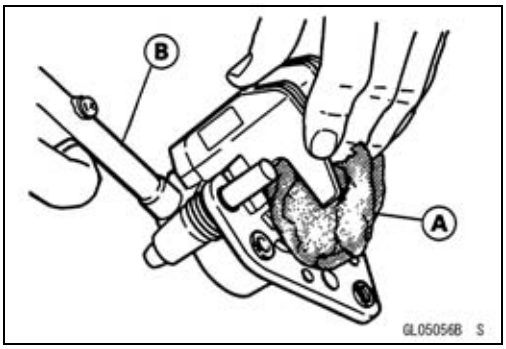

- Remove the caliper.
- Remove the pads and anti-rattle spring.
- Using compressed air, remove the piston.

○Cover the caliper opening with a clean, heavy cloth [A].

○Remove the piston by lightly applying compressed air [B] to where the brake line fits into the caliper.

Caliper

⚠ WARNING

To avoid serious injury, never place your fingers or palm inside the caliper opening. If you apply compressed air into the caliper, the piston may crush your hand or fingers.

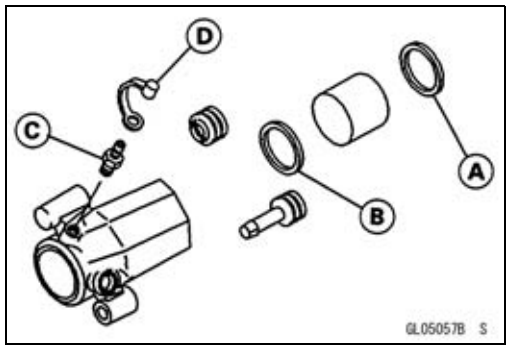

- Remove the dust seal [A] and fluid seal [B].
- Remove the caliper holder, shaft rubber friction boot and dust cover.
- Remove the bleed valve [C] and rubber cap [D].

NOTE

○*If compressed air is not available, do as follows with the brake hose connected to the caliper.*
○*Prepare a container for brake fluid and perform the work above it.*
○*Remove the pads and spring (see Brake Pad Removal).*
○*Pump the brake lever to remove the caliper piston.*

Caliper Assembly

- Clean the caliper parts except for the pads.

CAUTION

For cleaning the parts, use only disc brake fluid, isopropyl alcohol, or ethyl alcohol.

- Install the bleed valve and rubber cap.

Torque - Caliper Bleed Valve: 7.8 N·m (0.8 kgf·m, 69 in·lb)

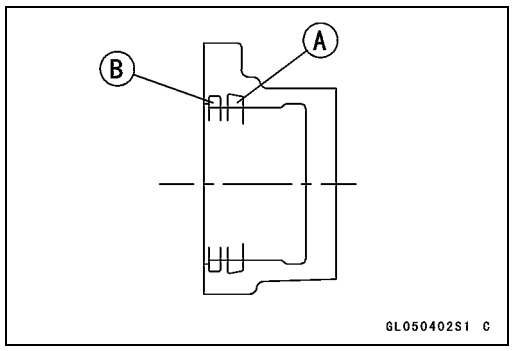

- Replace the fluid seal [A] with a new one.
○Apply brake fluid to the fluid seal, and install it into the cylinder by hand.
- Replace the dust seal [B] with a new one if it is damaged.
○Apply brake fluid to the dust seal, and install it into the cylinder by hand.

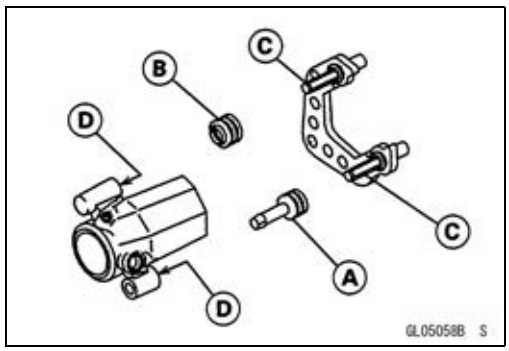

- Apply brake fluid to the outside of the piston, and push the piston into the cylinder by hand. Take care that neither the cylinder nor the piston skirt get scratched.
- Replace the shaft rubber friction boot [A] and dust cover [B] with new ones if they are damaged.
- Apply a thin coat of PBC (Poly Butyl Cuprysil) grease to the caliper holder shafts [C] and holder holes [D]. (PBC is a special high temperature, water-resistant grease).

Caliper

- Install the anti-rattle spring [A] in the caliper body as shown.
- Install the piston insulator.
- Install the pads.
- Wipe up any spilled brake fluid on the caliper with wet cloth.

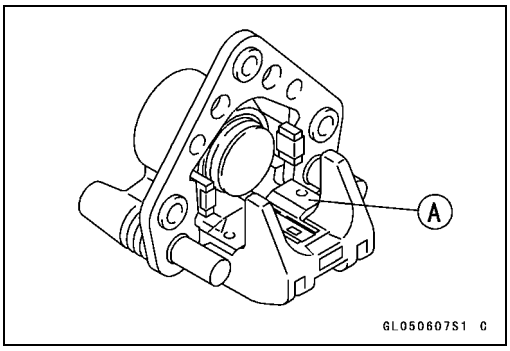

Fluid Seal Damage Inspection

The fluid seal around the piston maintains the proper pad/disc clearance. If this seal is not satisfactory, pad wear will increase, and constant pad drag on the disc will raise brake and brake fluid temperature.

- Replace the fluid seal under any of the following conditions:

○Fluid leakage around the pad.
○Brakes overheat.
○There is a large difference in left and right pad wear.
○The seal is stuck to the piston.
★If the fluid seal is replaced, replace the dust seal as well.

Dust Seal and Cover Damage Inspection

- Check that the dust seal and covers are not cracked, worn, swollen, or otherwise damaged.

★If they show any damage, replace them.

Piston Cylinder Damage Inspection

- Visually inspect the piston and cylinder surfaces.

★Replace the cylinder and piston if they are badly scored or rusty.

Caliper Holder Shaft Wear Inspection

The caliper body must slide smoothly on the caliper holder shafts. If the body does not slide smoothly, one pad will wear more than the other, pad wear will increase, and constant drag on the disc will raise brake and brake fluid temperature.

- Check to see if the caliper holder shafts are not badly worn or stepped, or rubber friction boot are not damaged.

★If the shafts and rubber friction boot are damaged, replace the rubber friction boot and the caliper holder.

Brake Pads

Brake Pad Removal

- Remove the caliper holder (see Caliper Removal).
- Take off the piston side pad from the caliper holder [A].
- Push the caliper holder to the piston side, and then remove the pad [B] from the caliper holder shaft.

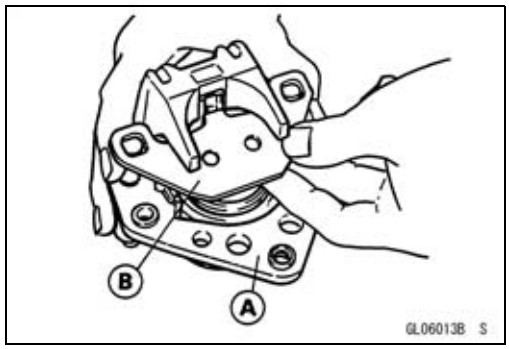

Brake Pad Installation

- Push the caliper piston in by hand as far as it will go.
- Install the anti-rattle spring in place.
- Install the brake pads.
- Install the caliper (see Caliper Installation).

⚠ WARNING

Do not attempt to drive the motorcycle until a full brake lever is obtained by pumping the brake lever until the pads are against the disc. The brake will not function on the first application of the lever if this is not done.

Brake Pad Lining Wear Inspection

- Check the lining thickness [A] of the pads.

★If the lining thickness of either pad is less than the service limit [B], replace both pads in the caliper as a set.

Brake Pad Lining Thickness

Standard:	**4.85 mm (0.191 in.)**
Service Limit:	**1 mm (0.04 in.)**

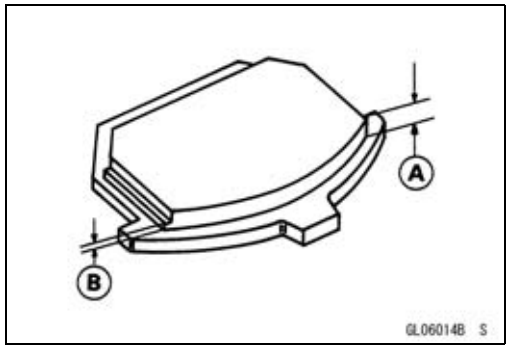

Master Cylinder

Master Cylinder Removal

- Disconnect the front brake switch leads [A].
- Remove the banjo bolt [B] to disconnect the upper brake hose end from the master cylinder [C]. There is a flat washer [D] on each side of the hose fitting.
- Remove the clamp bolts [E] and take off the master cylinder as an assembly with the reservoir, brake lever, and brake switch installed.

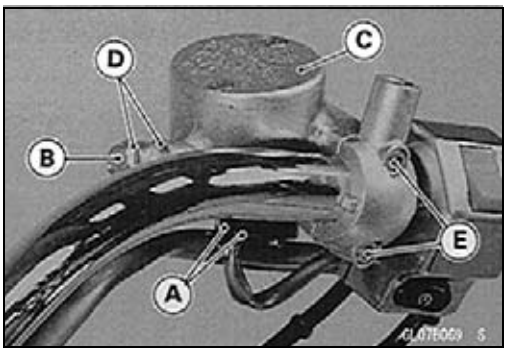

CAUTION
Immediately wipe up any brake fluid that spills.

Master Cylinder Installation

- Apply grease to the extreme end of the clamp bolts.
- Install the master cylinder clamp so that the upper mating surface [A] of the clamp is aligned with the punch mark [B] on the handlebar.
- Tighten the upper clamp bolt first, and then the lower clamp bolt. There will be a gap at the lower part of the clamp after tightening.

  Torque - Master Cylinder Clamp Bolts: 11 N·m (1.1 kgf·m, 95 in·lb)

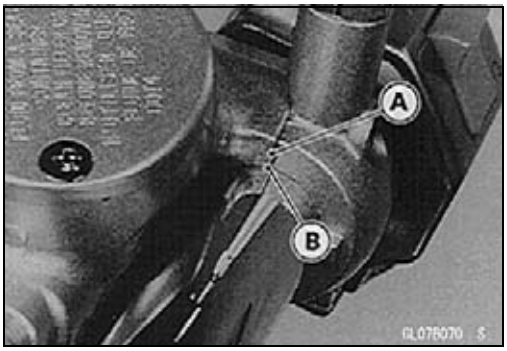

- Use a new flat washer on each side of the brake hose fitting.
- Tighten the banjo bolt.

  Torque - Brake Hose Banjo Bolt: 25 N·m (2.5 kgf·m, 18 ft·lb)

- Bleed the brake line after master cylinder installation (see Bleeding the Brake Line).
- Check the brake for weak braking power, brake drag, and fluid leakage.

Master Cylinder Disassembly

- Remove the master cylinder from the handlebar.
- Remove the reservoir cap and diaphragm, and pour the brake fluid into a container.
- Remove the locknut and pivot bolt, and remove the brake lever.
- Push the dust cover out of place, and remove the circlip.

  Special Tool - Inside Circlip Pliers: 57001-143

- Pull out the piston [A], secondary cup [B], primary cup [C] and return spring [D].

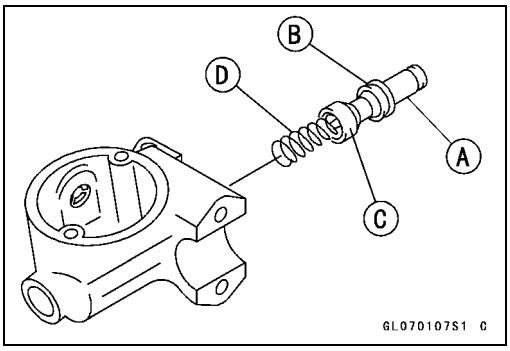

CAUTION
Do not remove the secondary cup from the piston since removal will damage it.

Master Cylinder

Master Cylinder Assembly

- Before assembly, clean all parts including the master cylinder with brake fluid or alcohol.

CAUTION
Except for the disc pads and disc, use only disc brake fluid, isopropyl alcohol, or ethyl alcohol, for cleaning brake parts. Do not use any other fluid for cleaning these parts. Gasoline, engine oil, or any other petroleum distillate will cause deterioration of the rubber parts. Oil spilled on any part will be difficult to wash off completely, and will eventually deteriorate the rubber used in the disc brake.

- Apply brake fluid to the removed parts and to the inner wall of the cylinder.
- Take care not to scratch the piston or the inner wall of the cylinder.
- Tighten the brake lever pivot bolt and pivot nut.

Torque - Brake Lever Pivot Bolt: 1.0 N·m (0.1 kgf·m, 9 in·lb)
Brake Lever Pivot Nut: 5.9 N·m (0.60 kgf·m, 52 in·lb)

Master Cylinder Inspection (Visual Inspection)

- Disassemble the master cylinder (see Master Cylinder Disassembly).
- Check that there are no scratches, rust or pitting on the inner wall of the master cylinder [A] and on the outside of the piston [B].

★If the master cylinder or piston shows any damage, replace them.

- Inspect the primary [C] and secondary [D] cups.

★If a cup is worn, damaged, softened (rotted), or swollen, the piston assembly should be replaced to renew the cups.

★If fluid leakage is noted at the brake lever, the piston assembly should be replaced to renew the cups.

- Check the dust cover [E] for damage.

★If it is damaged, replace it.

- Check that the relief [F] and supply [G] ports are not plugged.

★If the relief port becomes plugged, the brake pads will drag on the disc. Blow the ports clean with compressed air.

- Check the piston return spring [H] for any damage.

★If the spring is damaged, replace it.

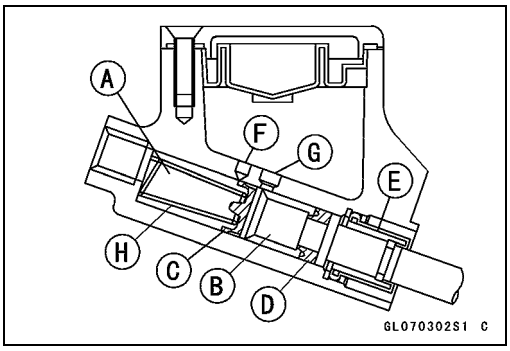

Brake Disc

Brake Disc Removal

- Remove the front wheel (see Front Wheel Removal in the Wheels/Tires chapter).
- Unscrew the mounting Allen bolts [A], and take off the disc [B].

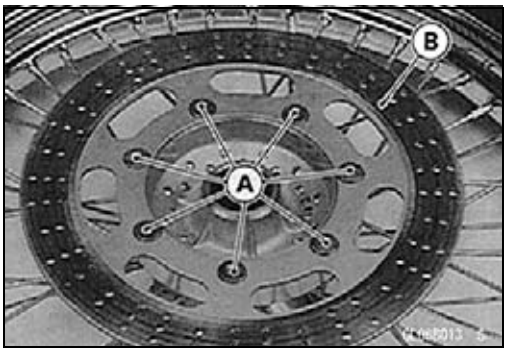

Brake Disc Installation

- Install the brake disc on the wheel so that the marked side [A] faces out.
- Tighten the mounting Allen bolts.

Torque - Brake Disc Mounting Bolts: 27 N·m (2.8 kgf·m, 20 ft·lb)

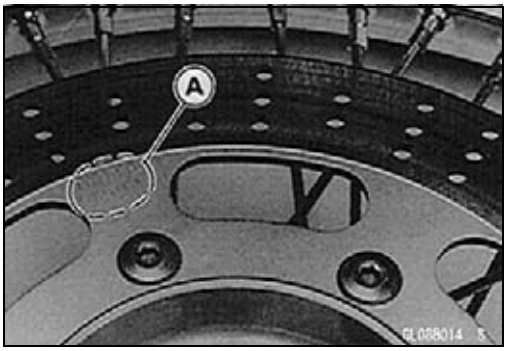

Brake Disc Wear Inspection

- Measure the thickness of the disc at the point where it has worn the most.

Disc Thickness
Standard: 4.8 ~ 5.2 mm (0.189 ~ 0.205 in.)
Service Limit: 4.5 mm (0.177 in.)

★Replace the disc [A] if it has worn past the service limit.
[B] Measuring Area

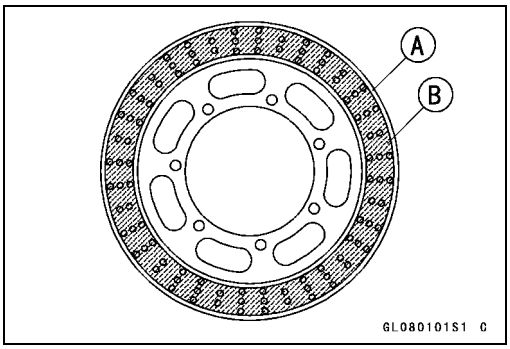

Brake Disc Warp Inspection

- Jack up the motorcycle so that the front wheel is off the ground.

Special Tool - Jack: 57001-1238

- Turn the handlebar fully to one side.
- Set up a dial gauge against the disc [A] as shown and measure disc runout.
[B] Turn the wheel by hand

Disc Runout
Standard: Less than 0.15 mm (0.006 in.)
Service Limit: 0.3 mm (0.012 in.)

★If runout exceeds the service limit, replace the disc.

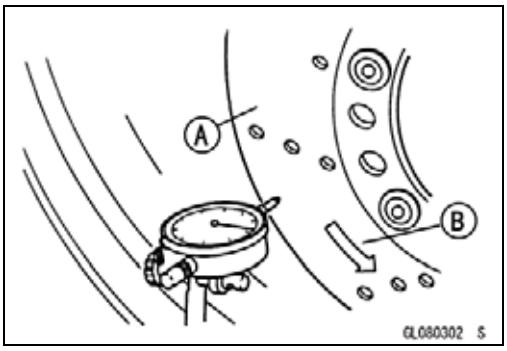

Brake Fluid

Brake Fluid Level Inspection

- Check that the brake fluid level in the front brake reservoir [A] is above the lower level line [B].

NOTE

○*Hold the reservoir horizontal by turning the handlebar when checking brake fluid level.*

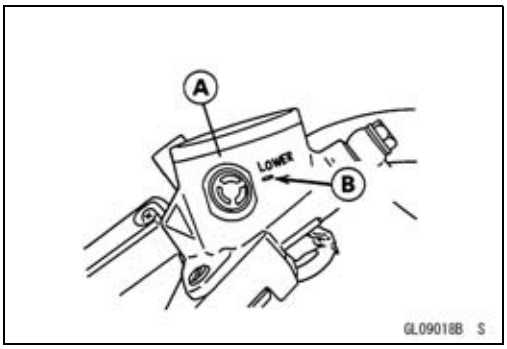

★If the fluid level is lower than the lower level line, fill the reservoir to the upper level line [A] in the reservoir [B].

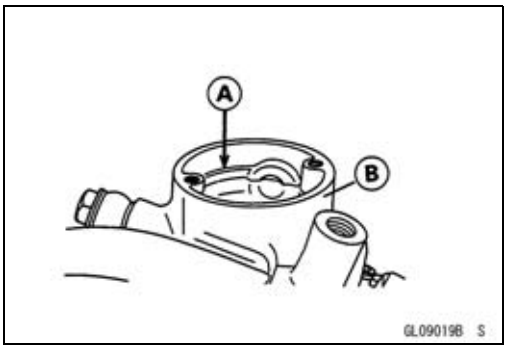

⚠ WARNING

Change the brake fluid in the brake line completely if the brake fluid must be refilled but the type and brand of the brake fluid that is already in the reservoir are unidentified. After changing the fluid, use only the same type and brand of fluid thereafter.

Recommended Disc Brake Fluid
Grade: DOT4

Brake Fluid Change

- Level the brake fluid reservoir.
- Remove the reservoir cap.
- Remove the rubber cap from the bleed valve [A] on the caliper.
- Attach a clear plastic hose [B] to the bleed valve, and run the other end of the hose into a container.
- Fill the reservoir with fresh specified brake fluid.

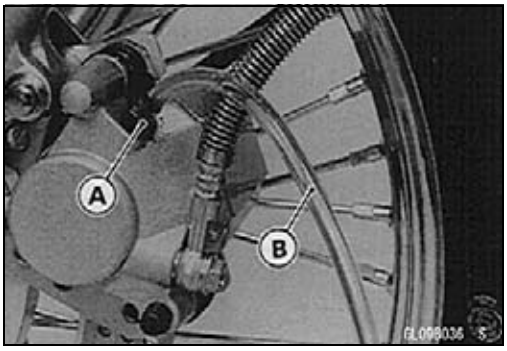

- Change the brake fluid as follows:
- Repeat this operation until fresh brake fluid comes out from the plastic hose or the color of the fluid changes.

NOTE

○*The fluid level must be checked often during the changing operation and replenished with fresh brake fluid. If the fluid in the reservoir runs out any time during the changing operation, the brakes will need to be bled since air will have entered the brake line.*

1. Open the bleed valve [A].
2. Apply the brake and hold it [B].
3. Close the bleed valve [C].
4. Release the brake [D].

- Remove the clear plastic hose.
- Tighten the bleed valve to the specified torque, and install the rubber cap.

Torque - Caliper Bleed Valve: 7.8 N·m (0.8 kgf·m, 69 in·lb)

- After changing the fluid, check the brake for good braking power, no brake drag, and no fluid leakage.

★If necessary, bleed the air from the lines.

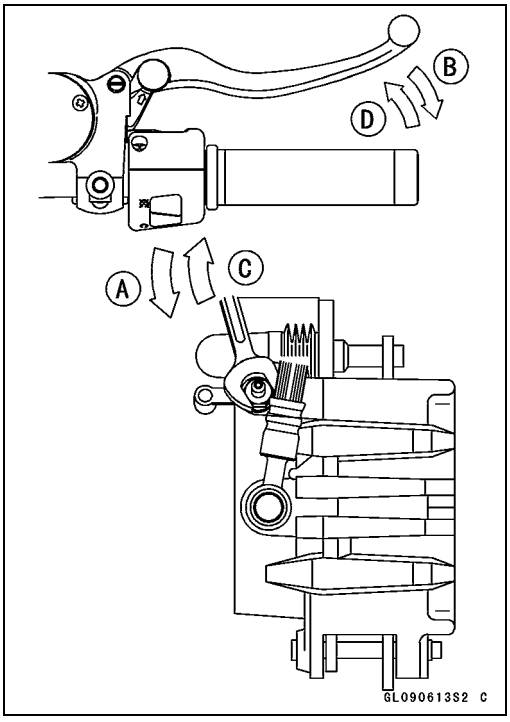

Brake Fluid

Bleeding the Brake Line

The brake fluid has a very low compression coefficient so that almost all the movement of the brake lever is transmitted directly to the caliper for braking action. Air, however, is easily compressed. When air enters the brake line, brake lever movement will be partially used in compressing the air. This will make the lever feel spongy, and it will be a loss in braking power.

⚠ WARNING

Be sure to bleed the air from the brake line whenever brake lever action feels soft or spongy, after the brake fluid is changed, or whenever a brake line fitting has been loosened for any reason.

- Remove the reservoir cap, and fill the reservoir with fresh brake fluid to the upper level line in the reservoir.
- With the reservoir cap off, slowly pump the brake lever several times until no air bubbles can be seen rising up through the fluid from the holes at the bottom of the reservoir.

○Bleed the air completely from the master cylinder by this operation.

NOTE

○*The fluid level must be checked often during the bleeding operation and replenished with fresh brake fluid as necessary. If the fluid in the reservoir runs almost out any time during bleeding operation, the bleeding operation must be done over again from the beginning since air will have entered the line.*

○*Tap the brake hose lightly from the caliper to the reservoir for easier bleeding.*

- Install the reservoir cap.
- Remove the rubber cap from the bleed valve on the caliper.
- Attach a clear plastic hose to the bleed valve on the caliper, and run the other end of the hose into a container.
- Bleed the air from the caliper as follows:
- Repeat this operation until no more air can be seen coming out into the plastic hose.

1. Pump the brake lever until it becomes hard, and apply the brake and hold it [A].
2. Quickly open and close [B] the bleed valve while holding the brake applied.
3. Release the brake [C].

- Detach the clear plastic hose from the bleed valve.
- Tighten the bleed valve to the specified torque, and install the rubber cap.

Torque - Caliper Bleed Valve: 7.8 N·m (0.80 kgf·m, 69 in·lb)

- Check the fluid level.
- After bleeding is done, check the brake for good braking power, no brake drag, and no fluid leakage.

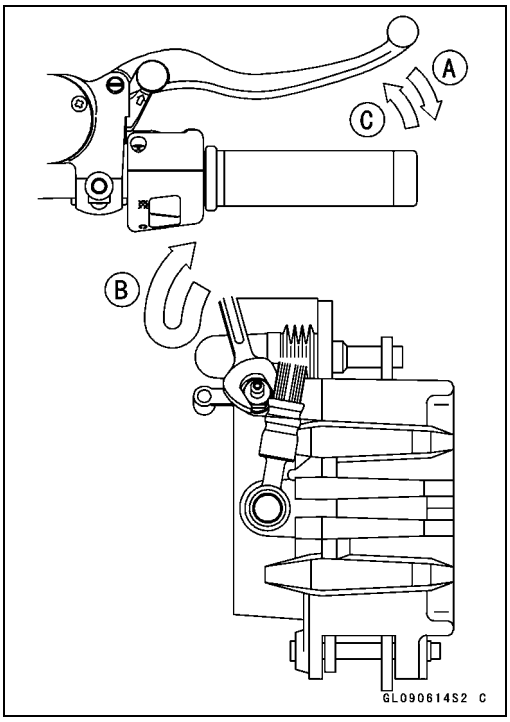

Brake Fluid

⚠ WARNING

When working with the disc brake, observe the precautions listed below.

1. Never reuse old brake fluid.
2. Do not use fluid from a container that has been left unsealed or that has been open for a long time.
3. Do not mix two types and brands of fluid for use in the brake. This lowers the brake fluid boiling point and could cause the brake to be ineffective. It may also cause the rubber brake parts to deteriorate.
4. Don't leave the reservoir cap off for any length of time to avoid moisture contamination of the fluid.
5. Don't change the fluid in the rain or when a strong wind is blowing.
6. Except for the disc pads and disc, use only disc brake fluid, isopropyl alcohol, or ethyl alcohol for cleaning brake parts. Do not use any other fluid for cleaning these parts. Gasoline, engine oil, or any other petroleum distillate will cause deterioration of the rubber parts. Oil spilled on any part will be difficult to wash off completely and will eventually deteriorate the rubber used in the disc brake.
7. When handling the disc pads or disc, be careful that no disc brake fluid or any oil gets on them. Clean off any fluid or oil that inadvertently gets on the pads or disc with a high-flash point solvent. Do not use one which will leave an oily residue. Replace the pads with new ones if they cannot be cleaned satisfactorily.
8. Brake fluid quickly ruins painted surfaces; any spilled fluid should be completely wiped up immediately.
9. If any of the brake line fittings or the bleed valve is opened at any time, the **AIR MUST BE BLED FROM THE BRAKE.**

Brake Hose

Brake Hose Inspection

- Inspect the brake hose and fittings for deterioration, cracks and signs of leakage.

○The high pressure inside the brake line can cause fluid to leak [A] or the hose to burst if the line is not properly maintained.

★Bend and twist the rubber hose while examining it.

★Replace it if any cracks [B] or bulges [C] are noticed.

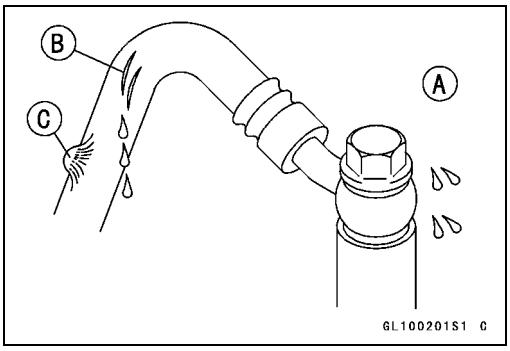

Brake Hose Replacement

CAUTION
Brake fluid quickly ruins painted or plastic surfaces; any spilled fluid should be completely wiped up immediately with wet cloth.

- When removing the brake hose, take care not to spill the brake fluid on the painted or plastic parts.
- When removing the brake hose, temporarily secure the end of the brake hose to some high place to keep fluid loss to a minimum.
- There are washers on each side of the brake hose fitting. Replace them with new ones when installing.
- When installing the hose, avoid sharp bending, kinking, flattening or twisting, and route the hose according to Hose Routing section in Appendix chapter.
- Tighten the banjo bolts to the specified torque.

  Torque - Brake Hose Banjo bolts: 34 N·m (3.5 kgf·m, 25 ft·lb)

- Bleed the brake line after installing the brake hose.

Brake Pedal and Cable

Brake Pedal Position Inspection

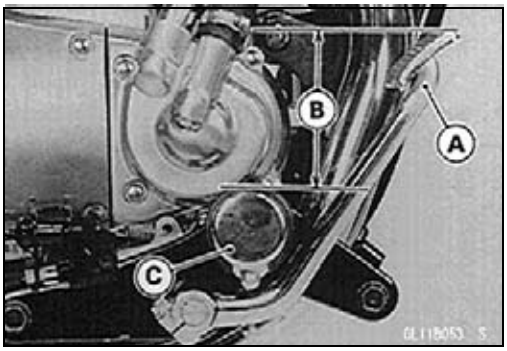

- With the brake pedal [A] in the correct position, inspect the brake pedal position [B] as shown.
  Footpeg [C]

Pedal Position
Standard: About 55 mm (2.17 in.) above footpeg
(from Top of the footpeg to Top of the brake Pedal)

★If it is incorrect, adjust the brake pedal position.

Brake Pedal Position Adjustment

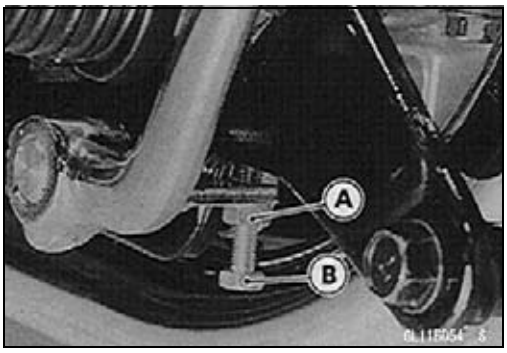

- Loosen the locknut [A], and turn in or turn out the adjusting bolt [B] to adjust the brake pedal position.
- Tighten the locknut.
- After adjusting brake pedal position, check brake pedal free play and rear brake light switch, and adjust if necessary.

NOTE

○*If the pedal position cannot be adjusted by turning the adjusting bolt, the brake pedal may be deformed or incorrectly installed.*

Brake Pedal Free Play Inspection

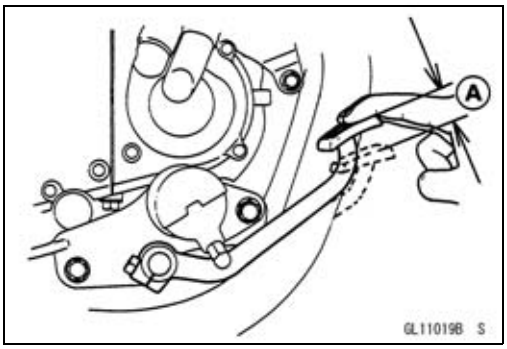

- Check the brake pedal free play [A].
- Depress the rear brake pedal lightly by hand until the brake is applied.

★If the rear brake pedal free play is incorrect, adjust it.

Brake Pedal Free Play
Standard: 20 ~ 30 mm (0.79 ~ 1.18 in.)

Brake Pedal Free Play Adjustment

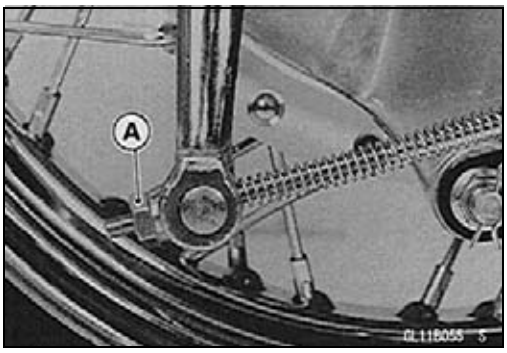

- Turn the adjuster [A] at the rear brake until the brake pedal has the correct amount of play.

- Operate the pedal a few times to see that it returns to its rest position immediately upon release.
- Rotate the rear wheel to check for brake drag.
- Check braking effectiveness.

★If there is any doubt as to the conditions of the brake, check the brake parts for wear or damage.

Brake Pedal and Cable

Brake Pedal Removal

- Remove:
  Adjuster [A]
  Clevis Pin [B]
  Return Spring [C]
  Dust Cover [D]
  Locknut [E]

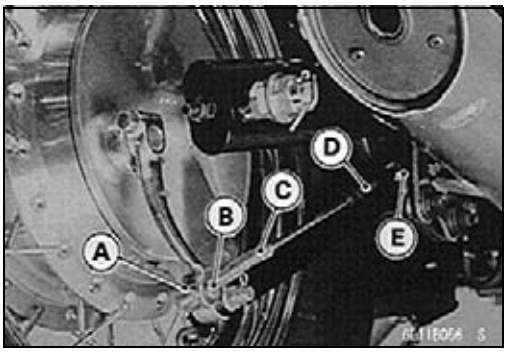

Brake Pedal Bolt [A]
Brake pedal [B]
Footpeg, Bracket Bolts [C]
Footpeg Bracket [D]

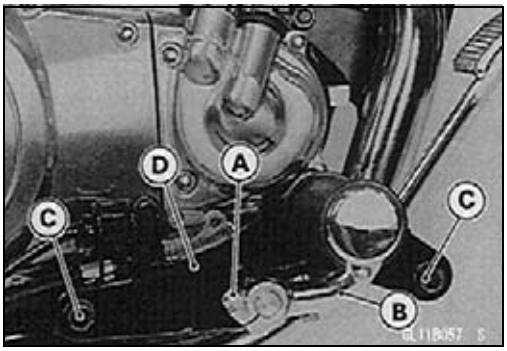

Brake Pedal Spring [A]
Brake Switch Spring [B]
Brake Shaft [C] with Brake Cable [D]

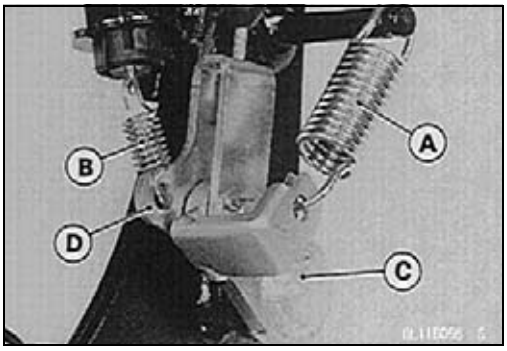

Cotter Pin [A]
Joint Pin [B]
Brake Cable [C]

- Cut off the band and pull out the brake cable.

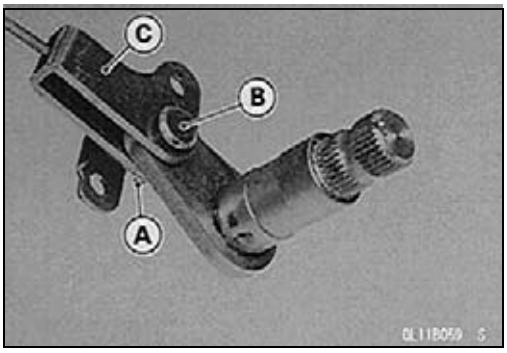

Brake Pedal Installation

- Brake pedal installation is the removal.
- Align the punch mark [A] on the brake pedal shaft with the punch mark [B] on the brake pedal.
- Apply a multi-purpose grease to the brake shaft pivot groove.
- Lubricate the brake cable (see Brake Cable Lubrication).
- Adjust the brake pedal free play (see Brake Pedal Free Play Adjustment).

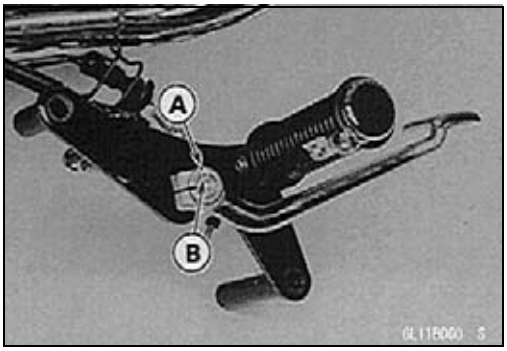

Brake Pedal and Cable

Brake Cable Lubrication

Whenever the brake cable is removed, lubricate the cable as follows:

● Lubricate the cable with a penetrating rust inhibitor.

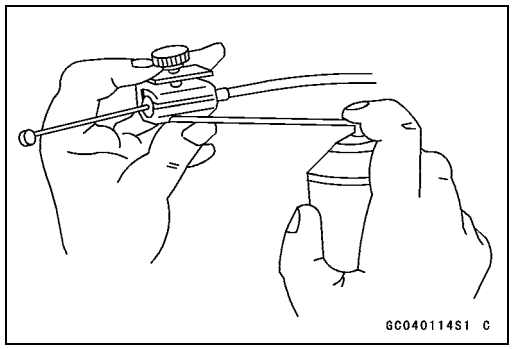

Brake Panel and Drum

Cam Lever Angle Inspection

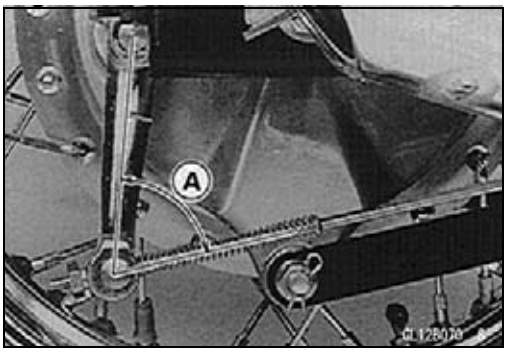

- Check that the rear brake cam lever comes to an 80° ~ 90° angle [A] with the rear brake rod when the rear brake is fully applied.

★If it does not, adjust the rear brake cam lever angle.

Cam Lever Angle
Standard: 80° ~ 90°

⚠ WARNING

Since a cam lever angle greater than 90° reduces braking effectiveness, cam lever angle adjustment should not be neglected.

Cam Lever Angle Adjustment

- Remove:
  Rear Wheel (see Rear Wheel Removal in the Wheels/Tires chapter)
  Cam Lever Bolt
  Cam Lever

○Before removing the brake cam lever, mark on the cam lever and camshaft at the same position.

- Mount the cam lever on the camshaft moving it one serration at a time from the original position so that the cam lever has the specified angle.

⚠ WARNING

When remounting the cam lever, be sure that the position of the wear indicator on the serrated shaft is not altered.
A change in cam lever angle is caused by wear of internal brake parts. Whenever the cam lever angle is adjusted, also check for drag and proper operation, taking particular note of the brake lining wear indicator position.
In case of doubt as to braking effectiveness, disassemble and inspect all internal brake parts. Worn parts could cause the brake to lock or fail.

- Install the rear wheel (see Rear Wheel Installation in the Wheels/Tires chapter).
- Adjust the rear brake pedal free play.

Brake Panel Removal

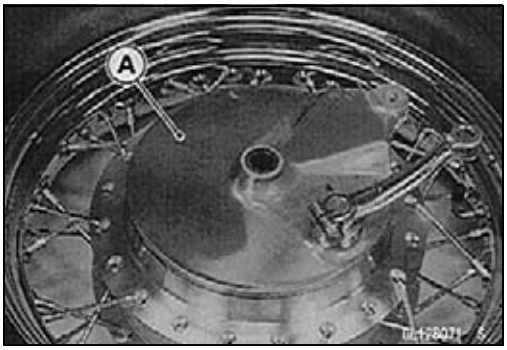

- Remove the rear wheel (see Rear Wheel Removal in the Wheels/Tires chapter).
- Separate the brake panel [A] from the wheel.

Brake Panel Installation

- Installation is the reverse of removal. Note the following.
- Adjust the brake pedal free play (see Brake Pedal Free Play Adjustment).

Brake Panel and Drum

Brake Panel Disassembly

- Remove the brake panel (see Brake Panel Removal).
- Hold the brake shoes, one in each hand with a clean cloth to protect the linings from grease and dirt.
- Pull up on the shoes [A] to remove them from the panel.
- Remove the springs to separate the two shoes.
- Mark the cam shaft and cam lever so that they can be aligned the same way during assembly.

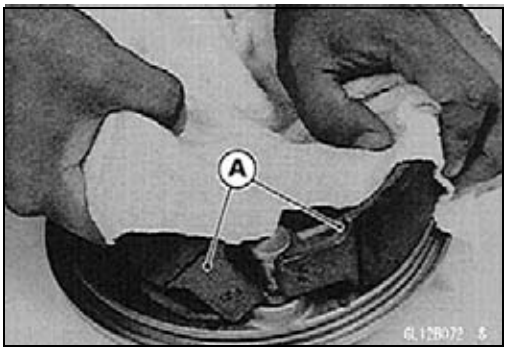

- Before removing the brake cam lever [A], mark [B] the position of the cam lever so that it can be installed later in the same position.
- Pull the brake cam shaft out from the inside. Do not lose the dust seal.

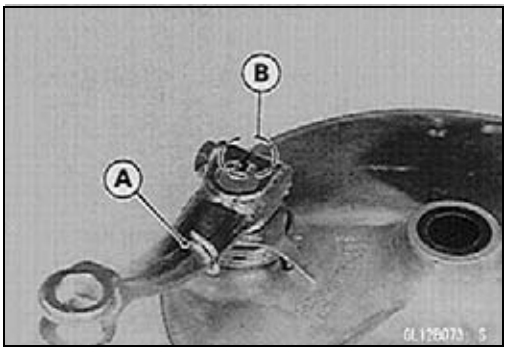

Brake Panel Assembly

- Clean the old grease from the camshaft and regrease it.
- ○Apply grease to the center of shaft and very lightly on the cam surfaces. Do not overgrease.
- Push the camshaft into the panel so that the triangular mark [A] on the cam surface points toward the center of the panel.

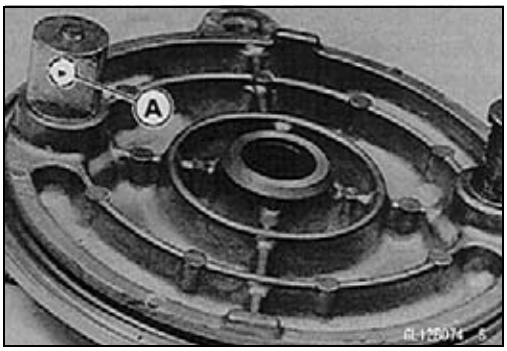

⚠ WARNING

Improper installation will cause ineffective braking.

- Link the brake shoes together with the springs, and push them onto the panel in the reverse of removal.
- Put the dust seal over the end of the cam shaft.
- Install the return spring.
- Install the indicator [A] on the serration so that it points to the extreme right of the USABLE RANGE box [B].
- Fit the cam lever so that the marks aligns.
- Put in the cam lever bolt, and tighten securely.

  Torque - Brake cam Lever Bolt: 19 N·m (1.9 kgf·m, 14 ft·lb)

- Install the brake panel assembly (see Brake Panel Installation).

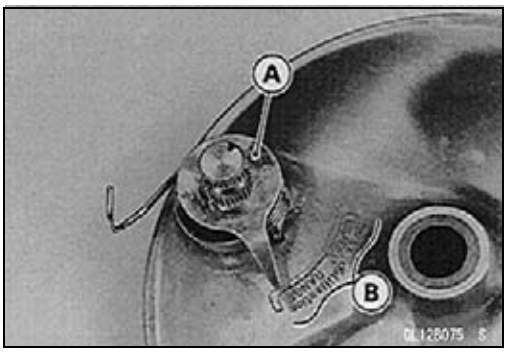

Brake Panel and Drum

Brake Shoe Lining Wear Inspection

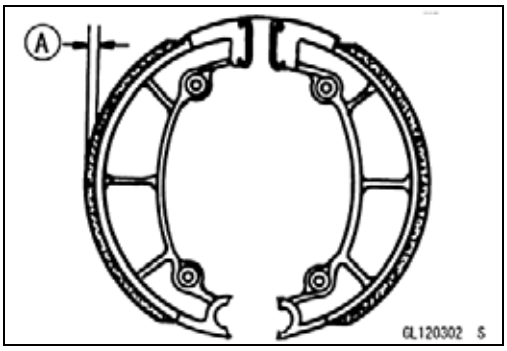

- Remove the brake shoes (see Brake Panel Disassembly).
- Measure the lining thickness [A].

○Use a pair of calipers or scale, and measure at several points as shown.

Shoe Lining Thickness
Standard: 4.9 ~ 5.5 mm (0.193 ~ 0.217 in.)
Service Limit: 2.6 mm (0.102 in.)

★If any measurement is less than the service limit, replace both shoes as a set.

★If the lining thickness is greater than the service limit, do the following before installing the shoes.

○File or sand down any high spots on the surface of the lining.

○Use a wire brush to remove any foreign particles from the lining.

- Wash off any oil or grease with an oilless cleaning fluid such as trichloroethylene or acetone.

⚠ WARNING

These cleaning fluids are usually highly flammable and harmful if breathed for prolonged periods. Be sure to heed the fluid manufacturer's warnings.

Brake Shoe Spring Inspection

- Visually inspect the brake shoe springs for breaks or distortion.

★If the springs are damaged in any way, replace them.

Brake Camshaft and Camshaft Hole Wear Inspection

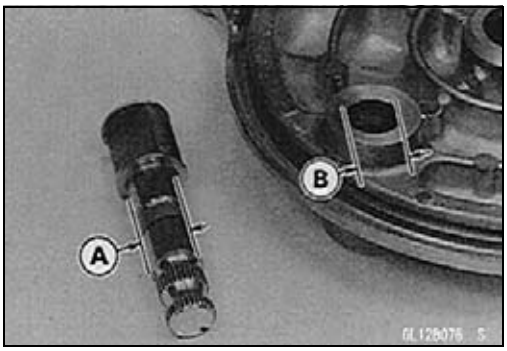

- Remove the brake camshaft (see Brake Panel Disassembly).
- Measure the shaft diameter [A].

○Use a micrometer at the point shown.

Camshaft Diameter
Standard: 16.957 ~ 16.984 mm (0.6676 ~ 0.6687 in.)
Service Limit: 16.88 mm (0.6646 in.)

★If any measurement is less than the service limit, replace the camshaft.

- Measure the inside diameter [B] of the camshaft hole in the brake panel.

○Use a small hole gauge in several directions inside the hole, and then measure the small hole gauge with a micrometer.

Camshaft Hole Diameter
Standard: 17.00 ~ 17.07 mm (0.6693 ~ 0.6720 in.)
Service Limit: 17.15 mm (0.6752 in.)

★If any measurement is larger than the service limit, replace the brake panel.

Brake Panel and Drum

Brake Drum Wear Inspection

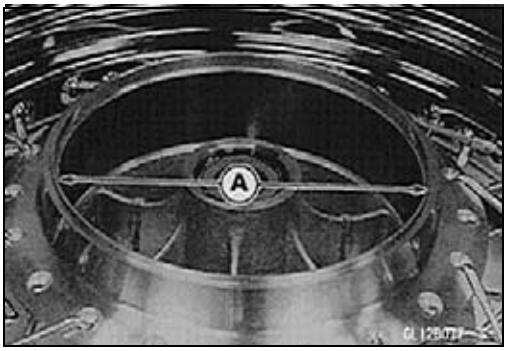

- Remove the rear wheel (see Rear Wheel Removal in the Wheels/Tires chapter).
- Measure the inside diameter [A] of the drum.

○Use a pair of calipers and measure at several points.

Drum Inside Diameter

Standard:	**180.00 ~ 180.16 mm (7.086 ~ 7.093 in.)**
Service Limit:	**180.75 mm (7.12 in.)**

★If any measurement is greater than the service limit, replace the wheel hub.

★If the drum is worn unevenly or scored, lightly turn the drum on a brake drum lathe or replace the wheel hub. Do not turn the drum beyond the service limit.

Brake Lubrication

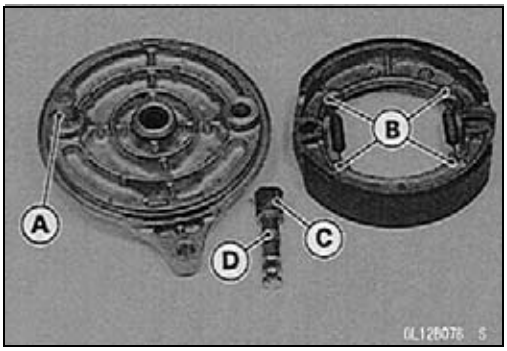

- Clean all old grease out of the brake parts with a cloth.
- Apply high-temperature grease to the following:
  Brake Shoe Anchor Pin [A]
  Spring Ends [B]
  Cam Surfaces [C]
  Camshaft Groove [D]

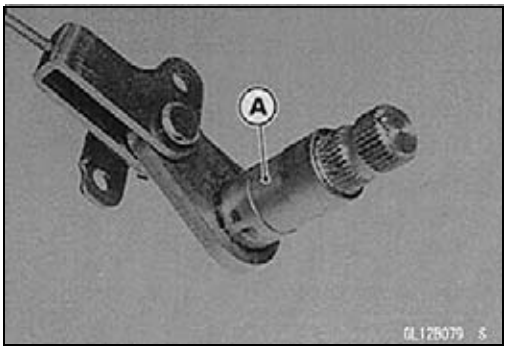

- Lubricate the brake pedal by applying a multi-purpose grease to the brake shaft pivot groove [A].

- Clean any excess grease from the parts before assembly.
- Lubricate the brake cable (see Brake Cable Lubrication).

Suspension

Table of Contents

Exploded View 12-2
Specifications 12-4
Special Tools 12-5
Front Fork 12-6
- Front Fork Removal (each fork leg) 12-6
- Front Fork Installation 12-6
- Fork Oil Change 12-6
- Front Fork Disassembly 12-8
- Front Fork Assembly 12-9
- Inner Tube Inspection 12-10
- Dust Seal Inspection 12-11
- Spring Tension Inspection 12-11

Rear Shock Absorber 12-12
- Spring Preload Adjustment 12-12
- Rear Shock Absorber Removal 12-12
- Rear Shock Absorber Installation 12-13
- Rear Shock Absorber Wear Inspection 12-13
- Bushing Wear Inspection 12-13

Swingarm 12-14
- Swingarm Removal 12-14
- Swingarm Installation 12-14
- Swingarm Disassembly/Assembly 12-14
- Swingarm Needle Bearing Lubrication 12-14
- Swingarm Sleeve and Needle Bearing Wear Inspection 12-14

Exploded View

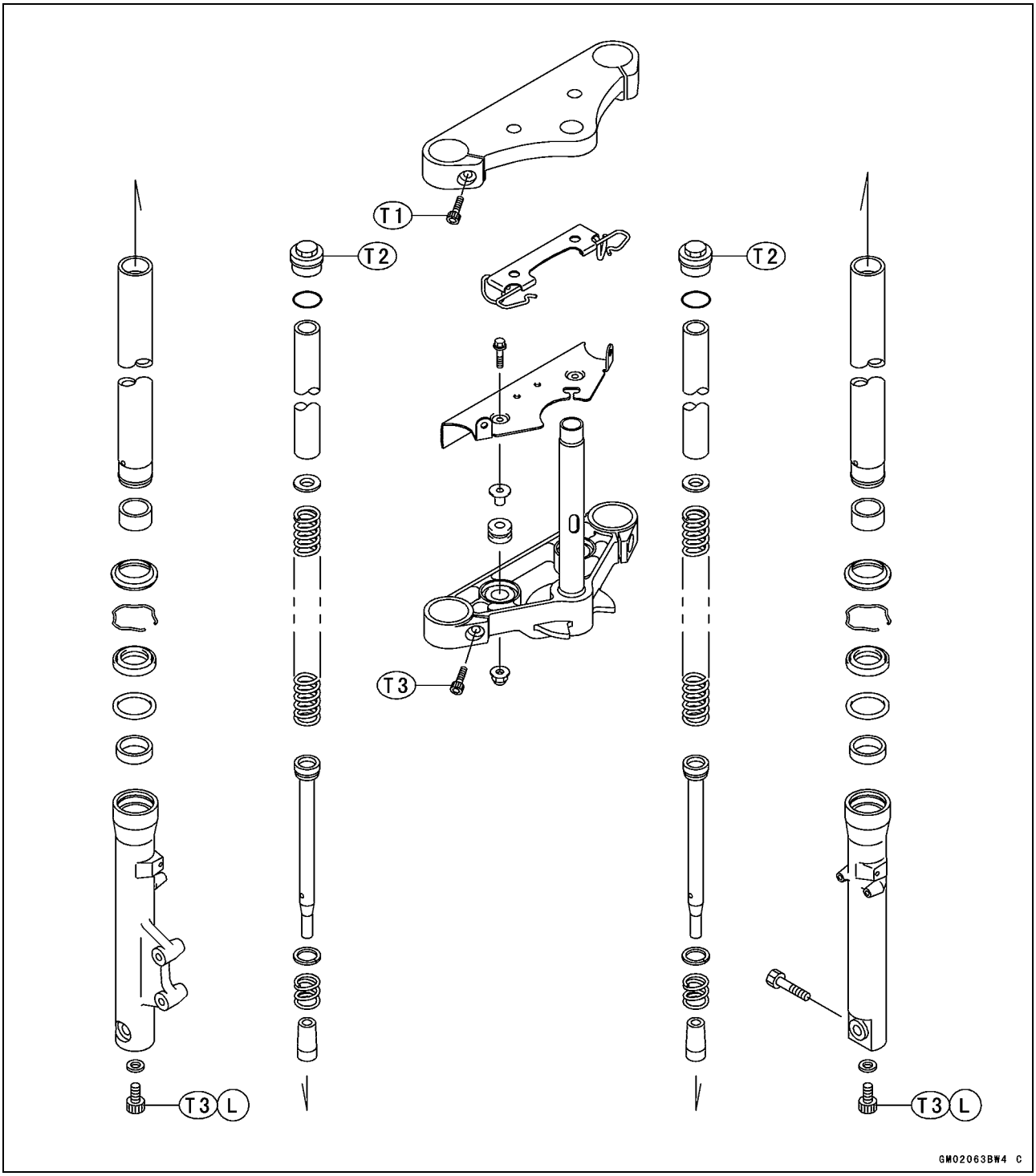

T1: 20 N·m (2.0 kgf·m, 14.5 ft·lb)
T2: 23 N·m (2.3 kgf·m, 16.5 ft·lb)
T3: 29 N·m (3.0 kgf·m, 22 ft·lb)
L: Apply a non-permanent locking agent.

Exploded View

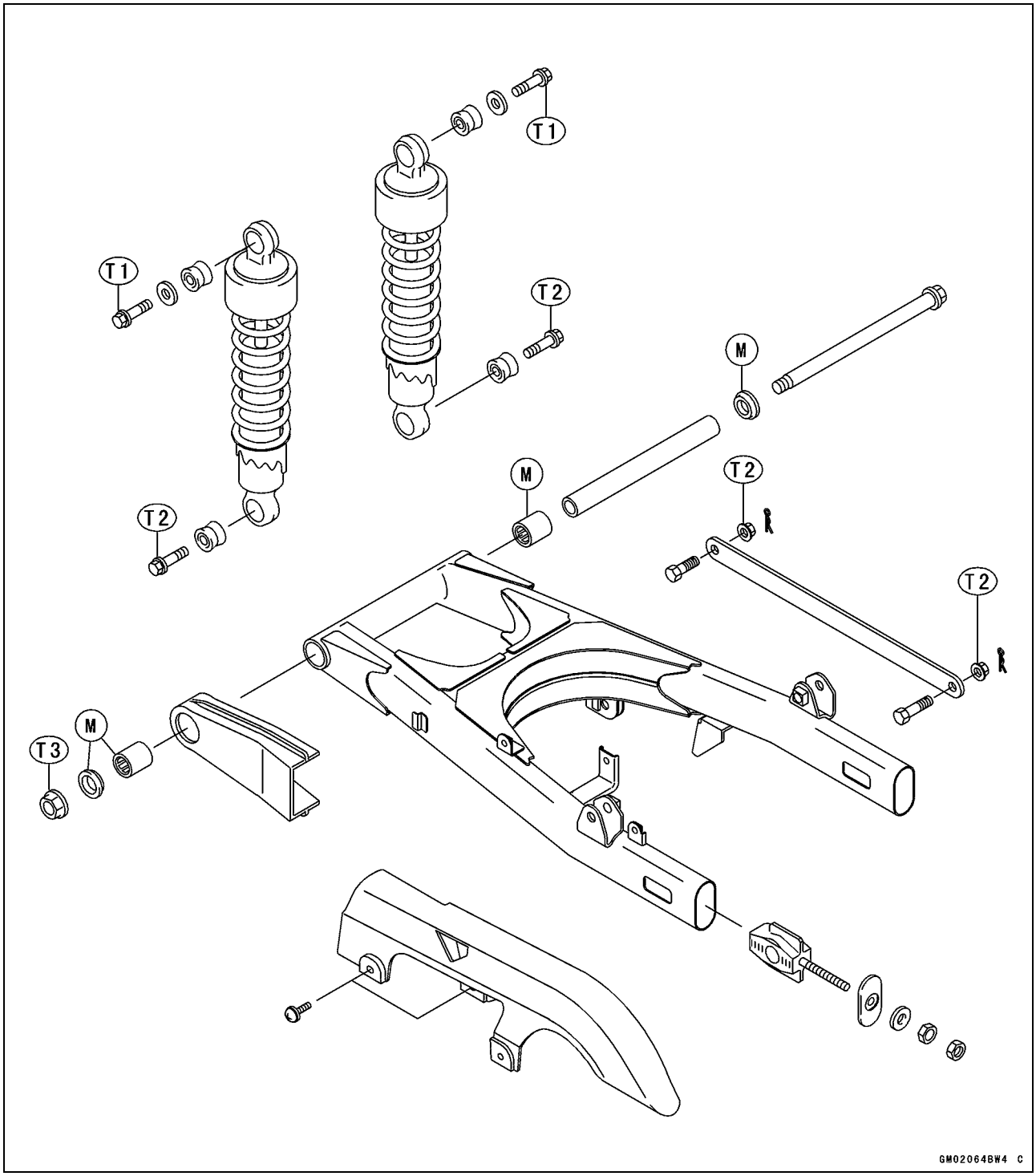

T1: 25 N·m (2.5 kgf·m, 18 ft·lb)
T2: 34 N·m (3.5 kgf·m, 25 ft·lb)
T3: 88 N·m (9.0 kgf·m, 65 ft·lb)
M: Apply molybdenum disulfide grease.

Specifications

Item	Standard	Service Limit
Front Fork		
Oil Type	KHL34-G10 (KAYABA) or equivalent	– – –
Oil Capacity	507 ±4 mL (17.1 ±0.14 US oz.) (approx. 430 mL (14.5 US oz.) at oil change)	– – –
Oil Level	125 ±2 mm (4.92 ±0.08 in.) (fully compressed, without spring)	– – –
Fork Spring Free Length	302.9 mm (11.9 in.)	297 mm (11.7 in.)
Rear Shock Absorber		
Spring Preload	2nd Position	(Usable Range) 1 ~ 5

Special Tools

Fork Cylinder Holder Handle:
57001-183

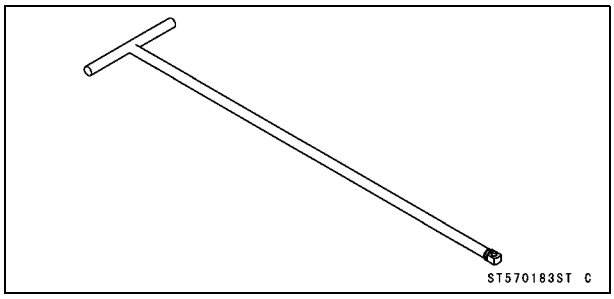

Oil Seal & Bearing Remover:
57001-1058

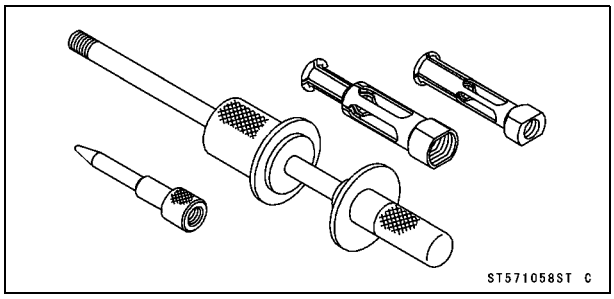

Bearing Driver Set:
57001-1129

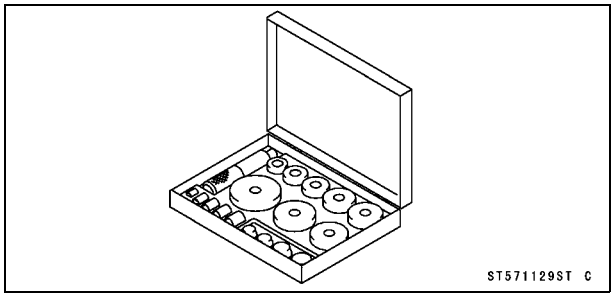

Fork Outer Tube Weight:
57001-1218

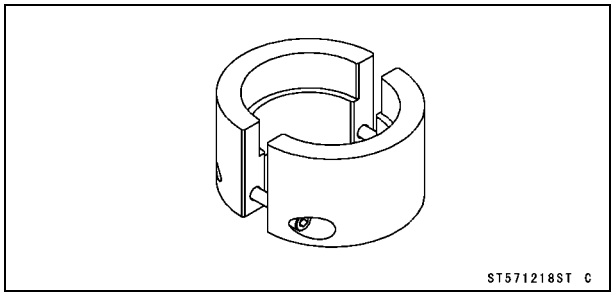

Front Fork Oil Seal Driver:
57001-1219

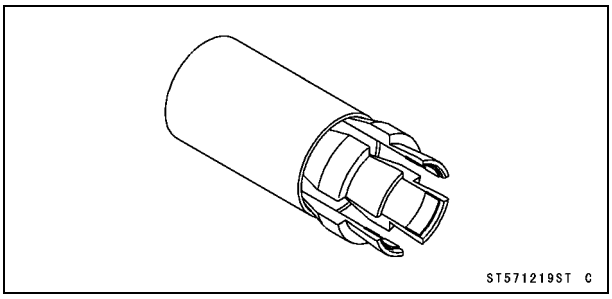

Jack:
57001-1238

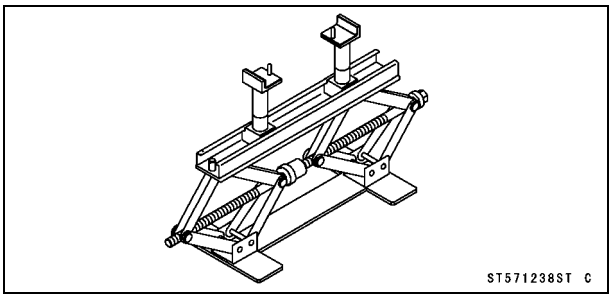

Fork Oil Level Gauge:
57001-1290

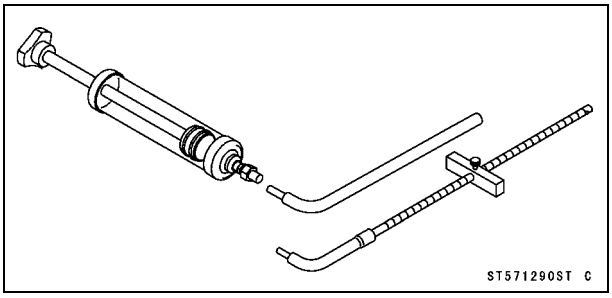

Hexagon Wrench, Hex 27:
57001-1375

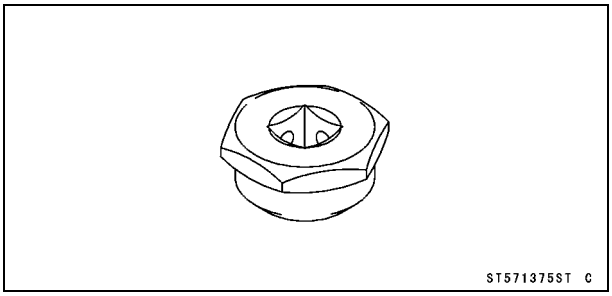

Front Fork

Front Fork Removal (each fork leg)

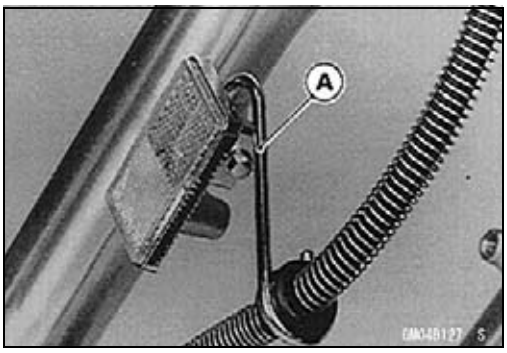

- Remove:
  Caliper (for left fork only) (see Caliper Removal in the Brakes chapter)
  Front Wheel (see Front Wheel Removal in the Wheels/Tires chapter)
  Front Fender (See Front Fender Removal in the Frame chapter)
  Clamp [A]

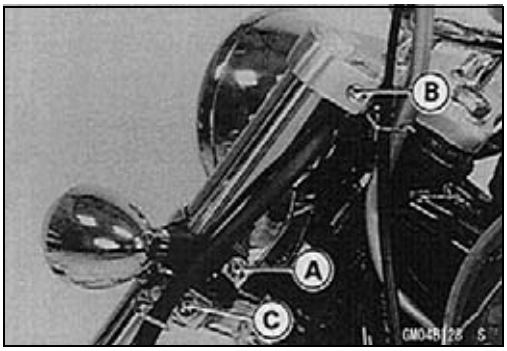

- Loosen:
  Front Turn Signal Light Bolt [A]
  Upper Clamp Allen Bolt [B]
  Lower Clamp Allen Bolt [C]
- With a twisting motion, work the fork leg down and out.

NOTE

○*If the front fork is to be disassembled, loosen the top plug before removing the fork. Loosen the top plug after loosening the fork upper clamp Allen bolt.*

Front Fork Installation

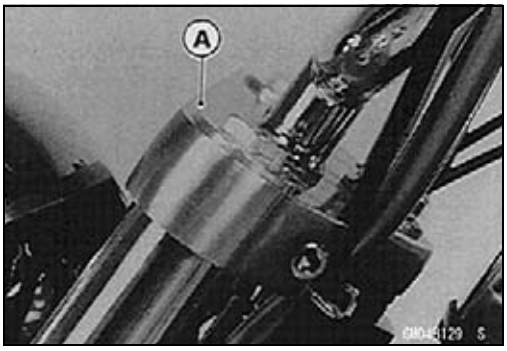

- Install the fork legs so that the top end of the inner tube is flush with the upper surface of the stem head [A].
- If the fork leg is disassembled, check the fork oil level (see Fork Oil Change).
- Route the brake hoses correctly.
- Tighten the lower and upper clamp Allen bolts.

Torque - Front Fork Upper Clamp Allen Bolt: 20 N·m (2.0 kgf·m, 14.5 ft·lb)
Front Fork Lower Clamp Allen Bolt: 29 N·m (3.0 kgf·m, 22 ft·lb)

- Install the removed parts (see appropriate chapters).
- Check the front brake after installation.

Fork Oil Change

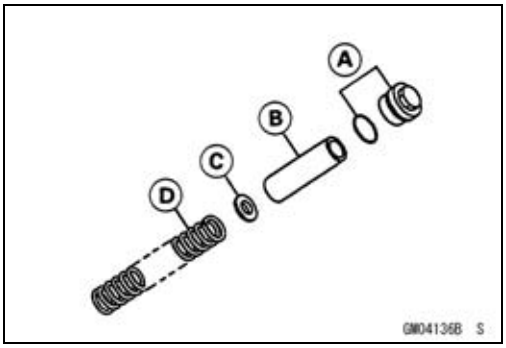

- Loosen the fork top plug.
- Remove the front fork leg (see Front Fork Removal).
- Remove:
  Fork Top Plug With O-ring [A]
  Spacer [B]
  Spring Seat [C]
  Fork Spring [D]

Front Fork

- Drain the fork oil into a suitable container.
- Pour in the specified type and amount of fork oil.

Front Fork Oil

Viscosity:	**KHL34-G10 (KAYABA) or equivalent**
Amount (per side)	
When changing oil:	**approx. 430 mL (14.5 US oz.)**
After disassembly and completely dry:	**507 ±4 mL (17.1 ±0.14 US oz.)**

★If necessary, measure the oil level as follows.
○Hold the outer tube vertically in a vise.
○Pump the inner tube several times to expel air bubbles.
○Wait until the oil level settles.

○With the fork leg fully compressed, insert a tape measure or rod into the inner tube, and measure the distance from the top of the inner tube to the oil.

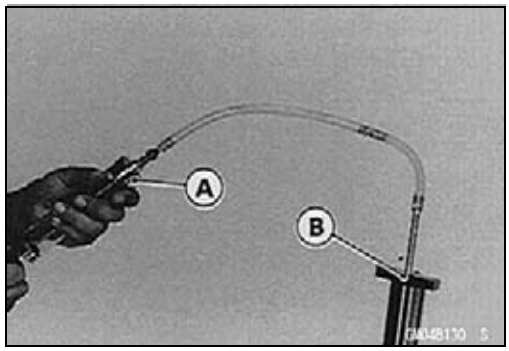

Oil Level (fully compressed, without spring)
Standard: 125 ±2 mm (4.92 ±0.08 in.) (from the top of the inner tube)

★If the oil is above or below the specified level, remove or add oil and recheck the oil level.
- Fork oil level may also be measured using the fork oil level gauge as follows.

Special Tool - Fork Oil Level Gauge: 57001-1290 [A]

○Set the gauge stopper [B] so that its lower side shows the oil level distance specified.
○With the fork leg fully compressed, and without fork spring, insert the gauge tube into the inner tube and position the stopper across the inner tube top end.
○Pull the handle slowly to pump out the excess oil until the oil no longer comes out.
★If no oil is pumped out, there is unsufficient oil in the inner tube. Pour in enough oil, then pump out the excess oil as shown above.
- Install:
  Spring
  Spring Seat
  Spacer
- Check the O-ring at the top plug, and replace it with a new one if it is damaged.
- Install the top plug with the O-ring.

Torque - Front Fork Top Plugs: 23 N·m (2.3 kgf·m, 16.5 ft·lb)

- Change the oil of the other fork leg in the same manner.
- Install the front fork legs (see Front Fork Installation).

Front Fork

Front Fork Disassembly

- Loosen the upper clamp Allen bolt.
- Loosen the fork top plug.
- Remove the front fork leg (see Front Fork Removal).
- Remove the top plug with the O-ring, spacer, spring seat, and spring (see Fork Oil Change).
- Pour out the fork oil (see Fork Oil Change).

NOTE

○*Turn the fork upside down, and force out the oil by pumping.*

- Hold the outer tube horizontally in a vice.
- Stop the cylinder [A] from turning by using the front fork cylinder holder handle [B] and hexagon wrench [C].

Special Tools - Fork Cylinder Holder Handle: 57001-183
Hexagon Wrench, Hex 27: 57001-1375

- Unscrew the Allen bolt [D] and take off the bolt and gasket from the bottom of the outer tube.

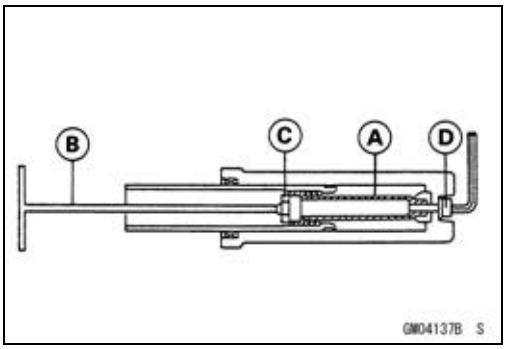

- Remove the piston cylinder unit [A] and short spring [B] from the inner tube.

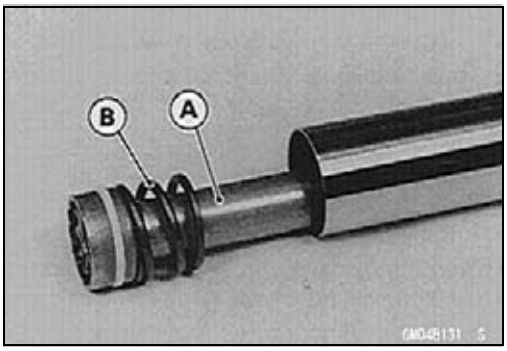

- Separate the inner tube from the outer tube as follows.

○Remove the dust seal [A] from the outer tube.
○Remove the retaining ring [B] from the outer tube.

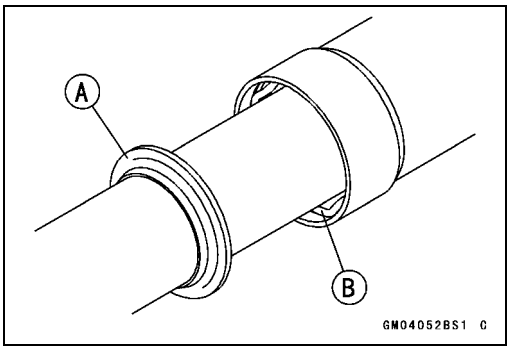

○Grasp the inner tube and stroke the outer tube up and down several times. The shock to the fork seal separates the inner tube from the outer tube.

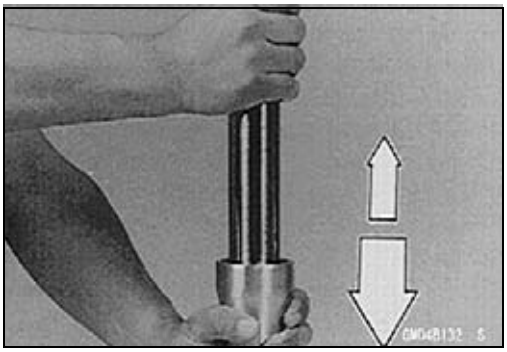

Front Fork

NOTE

○*If the tubes are tight, use a fork outer tube weight.*
○*Mount the front fork outer tube weight [A] on the top of the outer tube, by fitting the step of the weight to the top corner of the outer tube.*
○*Holding the inner tube by hand in a vertical position, stroke the outer tube up and down several times and pull it down.*

Special Tool - Fork Outer Tube Weight: 57001-1218

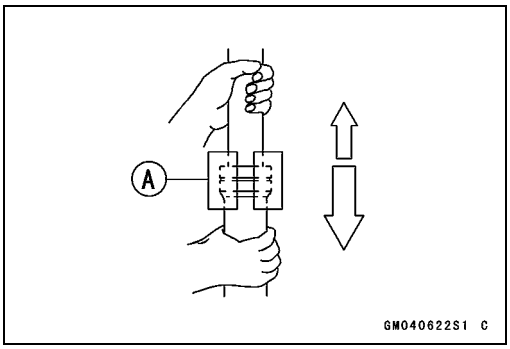

- Remove the oil seal [D], washer [C], outer tube guide bushing [B] and inner tube guide bushing [A] from the top of the inner tube.
- Remove the cylinder base out of the bottom of the outer tube.

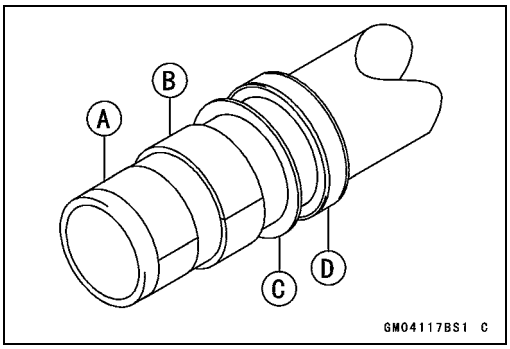

Front Fork Assembly

- Replace the following with new ones.
  Retaining Ring
  Oil Seal
  Dust Seal
  Guide Bushing (Inner, Outer)
  Fork Bottom Allen Bolt Gasket

- Fit the inner tube guide bushing in place.
- Insert the cylinder unit [A] and short spring into the inner tube [B].
- Install the cylinder base [C] on the end of the cylinder.
○Install the cylinder base from its stepped side.
- Insert the inner tube, cylinder unit, spring, cylinder base as a set into the outer tube [D].

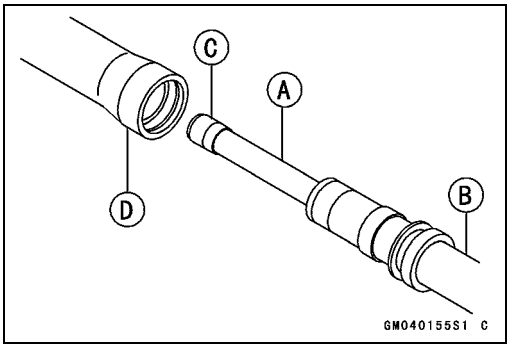

- Apply a non-permanent locking agent to the Allen bolt.
- Stop the cylinder from turning by using the front fork cylinder holder handle and hexagon wrench and tighten the Allen bolt.

Torque - Front Fork Bottom Allen Bolt: 29 N·m (3.0 kgf·m, 22 ft·lb)

Special Tools - Fork Cylinder Holder Handle: 57001-183
Hexagon Wrench, Hex 27: 57001-1375

Front Fork

- When replacing the outer tube guide bushing [A] with a new one, hold the used guide bushing [B] against the new one, and tap the used guide bushing with the front fork oil seal driver [C] until it stops. The slit [D] in the bushing must face toward the left or right.

  Special Tool - Front Fork Oil Seal Driver: 57001-1219

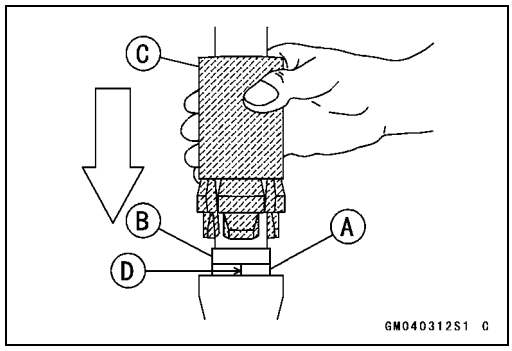

- Apply high temperature grease to the oil seal lips.
- After installing the washer, install the new oil seal [A] by using the fork oil seal driver [B].
- Install the new retaining ring into the outer tube.
- Using the front fork oil seal driver, install the dust seal.
- Pour in the type and amount of fork oil specified, and adjust the oil level (see Fork Oil Change).
- Insert the fork spring, spring seat and spacer.
- Check the O-ring at the top plug and replace it with a new one if it is damaged.
- Install the top plug with the O-ring.

  Torque - Front Fork Top Plugs: 23 N·m (2.3 kgf·m, 16.5 ft·lb)

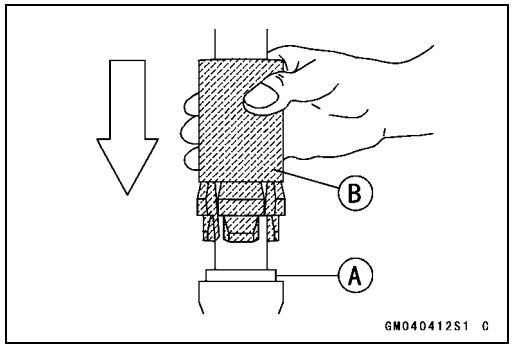

Inner Tube Inspection

- Visually inspect the inner tube [A], and repair any damage.
- Nicks or rust damage can sometimes be repaired by using a wet-stone to remove sharp edges or raised areas which cause seal damage .

★If the damages is not repairable, replace the inner tube. Since damage to the inner tube damages the oil seal, replace the oil seal whenever the inner tube is repaired or replaced.

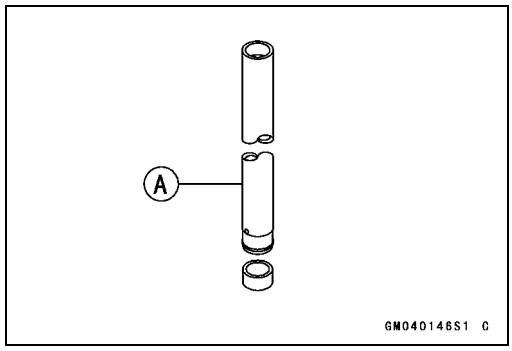

CAUTION

If the inner tube is badly bent or creased, replace it. Excessive bending, followed by subsequent straightening, can weaken the inner tube.

- Temporarily assemble the inner and outer tubes, and pump them back and forth manually to check for smooth operation.
- If you feel binding or catching, the inner and outer tubes must be replaced.

⚠ WARNING

A straightened inner or outer fork tube may fall in use, possibly causing an accident. Replace a badly bent or damaged inner or outer tube and inspect the other tube carefully before reusing it.

Front Fork

Dust Seal Inspection

- Inspect the dust seal [A] for any signs of deterioration or damage.

★Replace them if necessary.

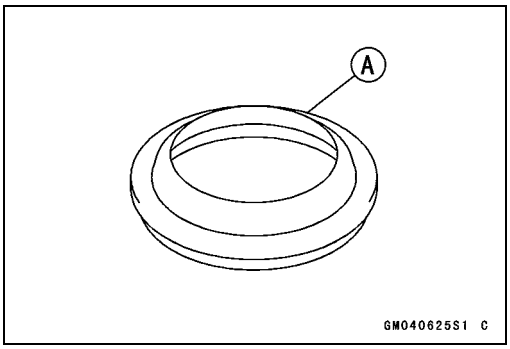

Spring Tension Inspection

- Since the spring becomes shorter as it weakens, check its free length [A] to determine its condition.

★If the spring of either fork leg is shorter than the service limit, it must be replaced.

★If the length of a replacement spring and that of the remaining spring vary greatly, the remaining spring should also be replaced in order to keep the fork legs balanced for motorcycle stability.

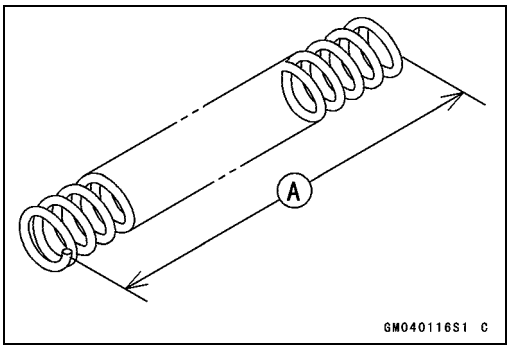

Spring Free Length

Standard:	**302.9 mm (11.9 in.)**
Service Limit:	**297 mm (11.7 in.)**

Rear Shock Absorber

Spring Preload Adjustment

The spring preload adjuster on each rear shock absorber has 5 positions so that the spring tension can be adjusted for different road and loading conditions.

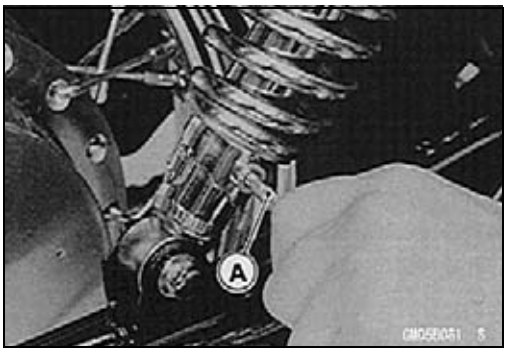

- Using the hook wrench [A], turn the adjuster to adjust the spring tension.

○The standard adjuster position for an average-build rider of 68 kg (150 lb) with no passenger and no accessories is 2nd step from the weakest position.

★If the spring action feels too soft or too stiff, adjust it in accordance with the following table.

Spring Preload Adjustment

Position	Spring Force	Setting	Load	Road	Speed
1	Weak	Soft	Light	Good	Low
2	↑	↑	↑	↑	↑
3	¦	¦	¦	¦	¦
4	↓	↓	↓	↓	↓
5	Strong	Hard	Heavy	Bad	High

- Check to see that both adjusting sleeves are turned to the same relative position.

⚠ WARNING

If they are not adjusted to the same position, an unsafe riding condition may result.

Rear Shock Absorber Removal

- Using the jack under the frame, steady the motorcycle.

  Special Tool - Jack: 57001-1238

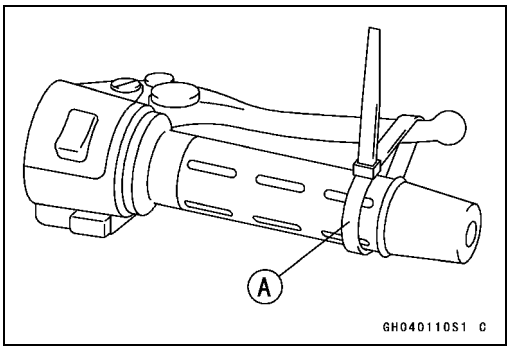

- Squeeze the brake lever slowly and bind it with a band [A].

⚠ WARNING

Be sure to hold the front brake when removing the shock absorber, or the motorcycle may fall over. It could cause an accident and injury.

- Remove the seat (see Seat Removal in the Frame chapter).

- Remove the mounting bolts [A] and pull off the rear shock absorber [B].

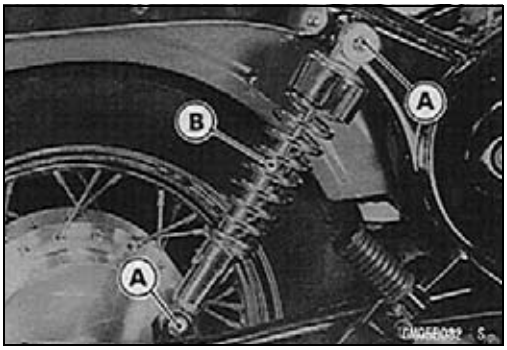

Rear Shock Absorber

Rear Shock Absorber Installation

- Tighten the mounting bolts.

Torque - Rear Shock Absorber Upper Mounting Bolt: 25 N·m (2.5 kgf·m, 18 ft·lb)
Rear Shock Absorber Lower Mounting Bolt: 34 N·m (3.5 kgf·m, 25 ft·lb)

- Adjust the rear shock absorber position (see Spring Preload Adjustment).

Rear Shock Absorber Wear Inspection

- Remove the rear shock absorbers (see Rear Shock Absorber Removal).
- Compress each rear shock absorber.
- Visually inspect the following items.
  Compression Stroke
  Oil Leakage
  Other Damage

★If there is any damage to the rear shock absorber, or one unit feels weaker than the other, replace both shock absorbers as a set.

Bushing Wear Inspection

- Visually inspect the rubber bushings [A].

★If they show any signs of damage, replace them.

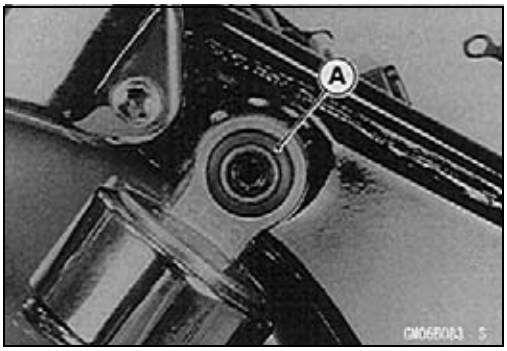

Swingarm

Swingarm Removal

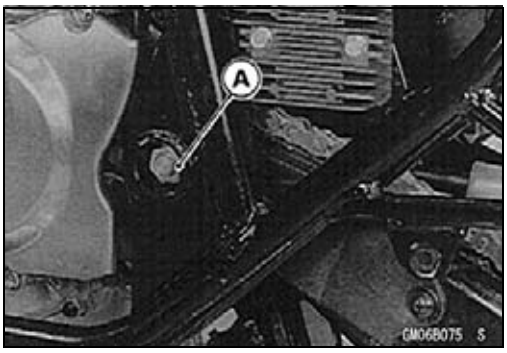

- Remove:
  Rear Wheel (see Rear Wheel Removal in the Wheels/Tires chapter)
  Mufflers (see Exhaust Pipe, Muffler Removal in the Engine Top End chapter).
  Rear Shock Absorbers (see Rear Shock Absorber Removal).
  Chain Case
  Pivot Shaft Caps
- Remove the pivot shaft nut [A], and pull out the pivot shaft.
- Pull back the swingarm and take off the swingarm.

Swingarm Installation

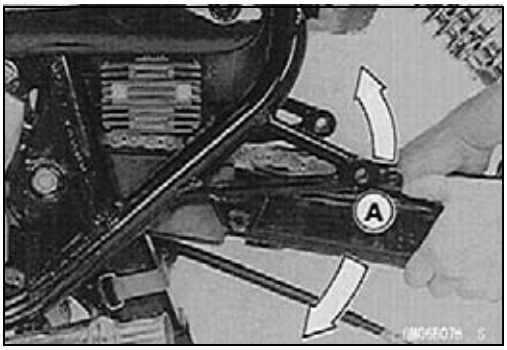

- Installation is the reverse of removal.
- Tighten the pivot shaft nut.

  Torque - Swingarm Pivot Nut: 88 N·m (9.0 kgf·m, 65 ft·lb)
- Tighten the torque link nut.

  Torque - Torque Link Nuts: 34 N·m (3.5 kgf·m, 25 ft·lb)
- Move the swingarm up and down [A] to check for abnormal friction.

Swingarm Disassembly/Assembly

- Remove the needle bearing using the oil seal and bearing remover.

  Special Tool - Oil Seal & Bearing Remover: 57001-1058
- Insert the needle bearing using the bearing driver set so that the marked side faces outside.

  Special Tool - Bearing Driver Set: 57001-1129
- Apply a thin coat of a molybdenum desulfide the grease to the lips of the grease seals.

Swingarm Needle Bearing Lubrication

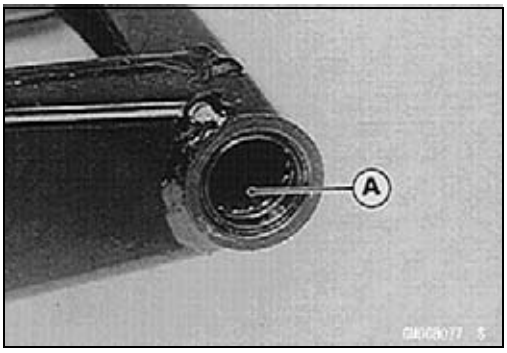

- Apply a thin coat of a molybdenum disulfide grease to the inner surfaces [A] of the needle bearings.

Swingarm Sleeve and Needle Bearing Wear Inspection

- Visually inspect the swingarm sleeve and needle bearing.

★If there is any damage to them, replace it.

Steering

Table of Contents

Exploded View 13-2
Special Tools 13-3
Steering 13-4
    Steering Inspection 13-4
    Steering Adjustment 13-4
Steering Stem 13-6
    Steering Stem, Stem Bearing Removal 13-6
    Steering Stem, Stem Bearing Installation 13-7
    Steering Stem Bearing Inspection and Lubrication 13-8
    Grease Seal Deterioration, Damage Inspection 13-8
    Steering Stem Warp Inspection 13-8
Handlebar 13-9
    Handlebar Removal 13-9
    Handlebar Installation 13-9

Exploded View

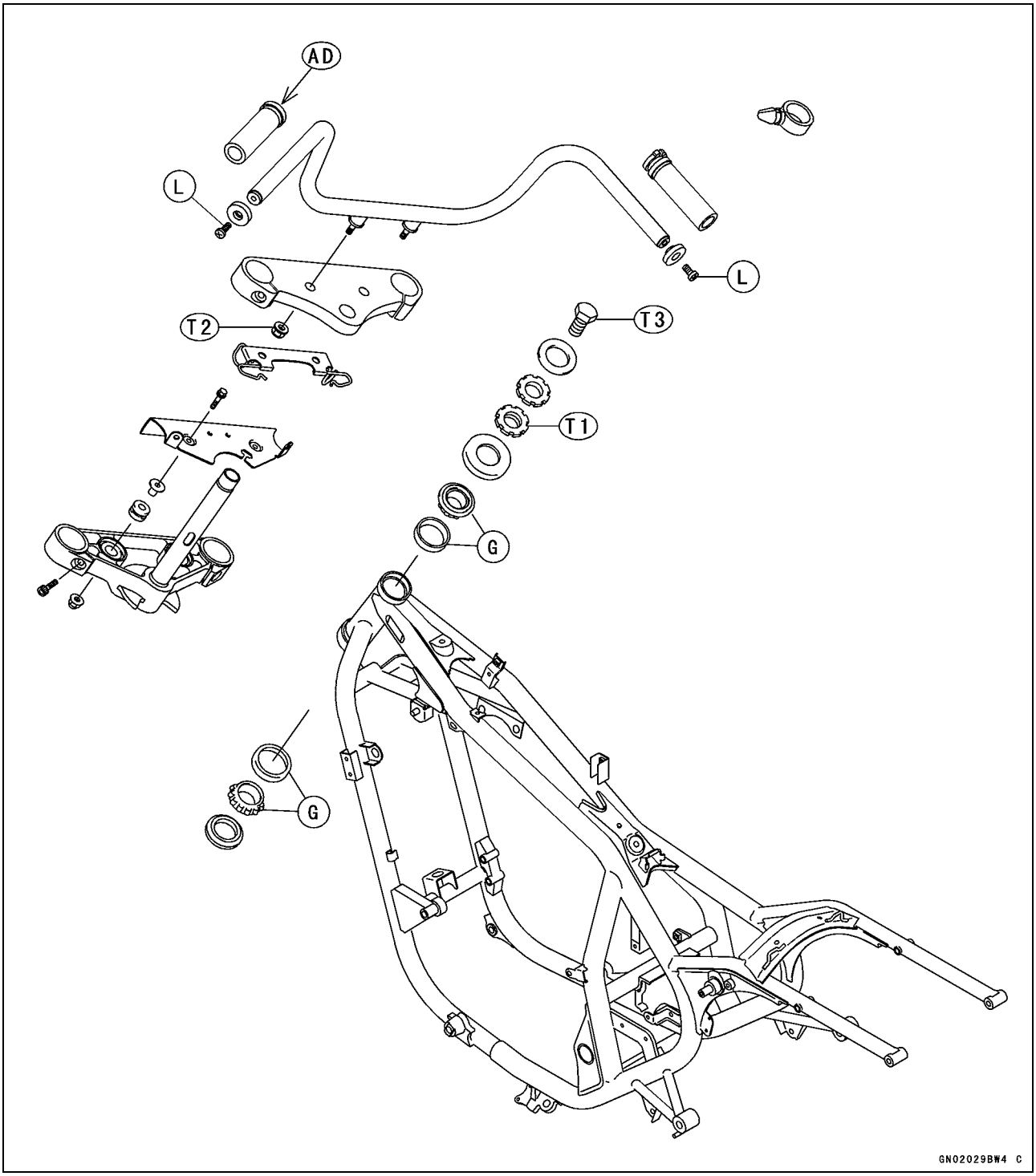

T1: Hand-tighten (about 4.9 N·m, 0.5 kgf·m, 43 in·lb)
T2: 34 N·m (3.5 kgf·m, 25 ft·lb)
T3: 44 N·m (4.5 kgf·m, 33 ft·lb)
AD: Apply adhesive cement.
G: Apply grease.
L: Apply a non-permanent locking agent.

Special Tools

Steering Stem Bearing Driver:
57001-137

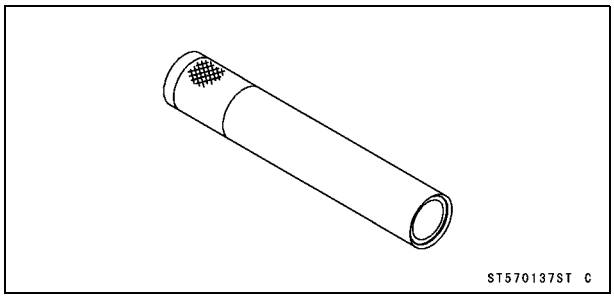

Steering Stem Bearing Driver Adapter, ϕ34.5:
57001-1074

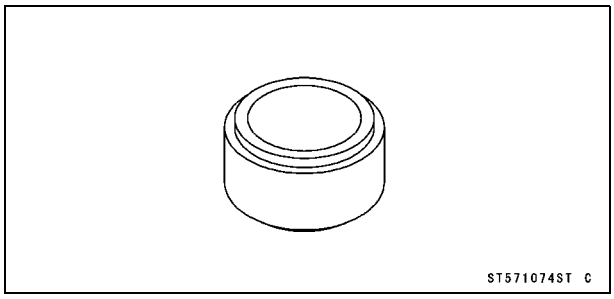

Head Pipe Outer Race Press Shaft:
57001-1075

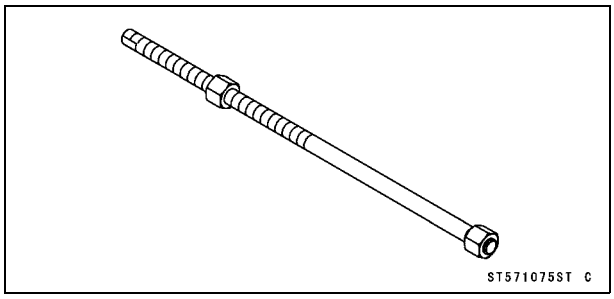

Head Pipe Outer Race Driver, ϕ51.5:
57001-1076

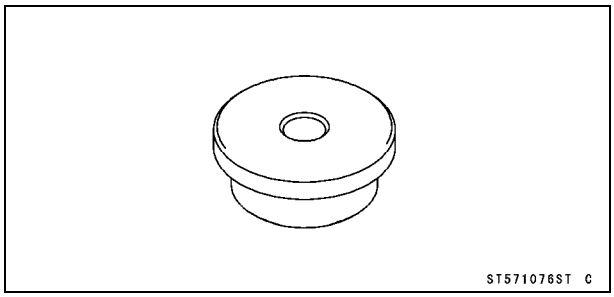

Steering Stem Nut Wrench:
57001-1100

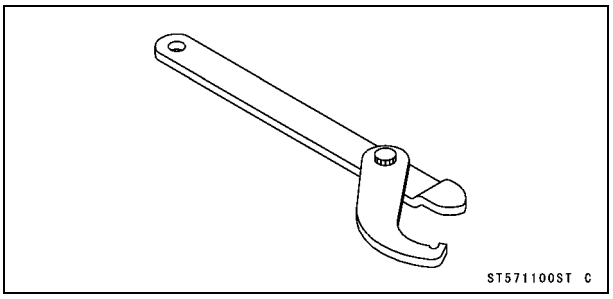

Head Pipe Outer Race Driver, ϕ46.5:
57001-1106

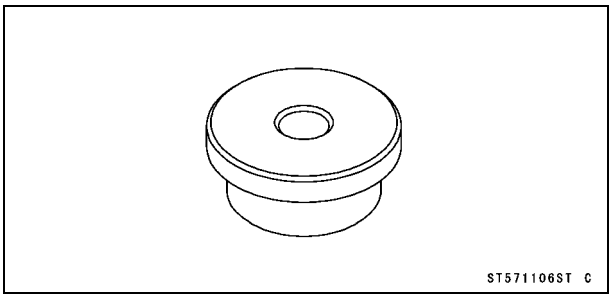

Head Pipe Outer Race Remover ID > 37 mm:
57001-1107

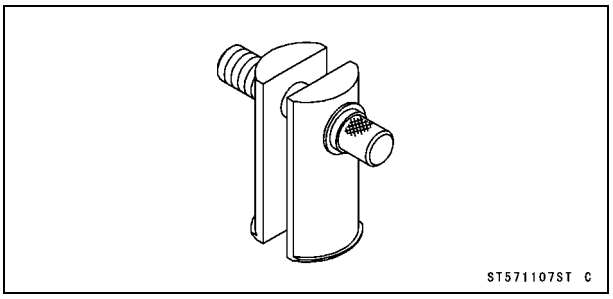

Jack:
57001-1238

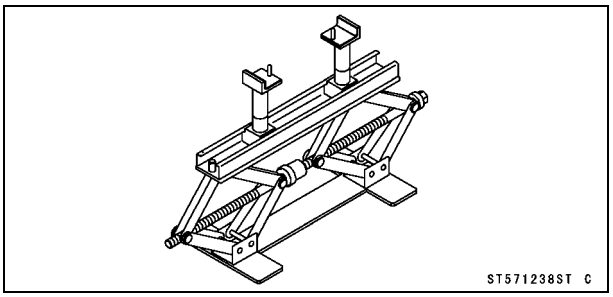

Steering

Steering Inspection

● Check the steering.

○Lift the front wheel off the ground using the jack.

Special Tool - Jack: 57001-1238

○With the front wheel pointing straight ahead, alternately tap each end of the handlebar. The front wheel should swing fully left and right from the force of gravity until the fork hits the stop.

★If the wheel binds or catches before the stop, the steering is too tight.

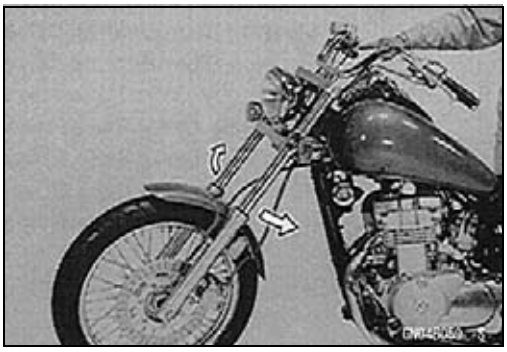

● Stand in front of the motorcycle and grasp the lower ends of fork near the axle.

● Feel for steering looseness by pushing [A] and pulling [B] the forks.

★If you feel looseness, the steering is too loose.

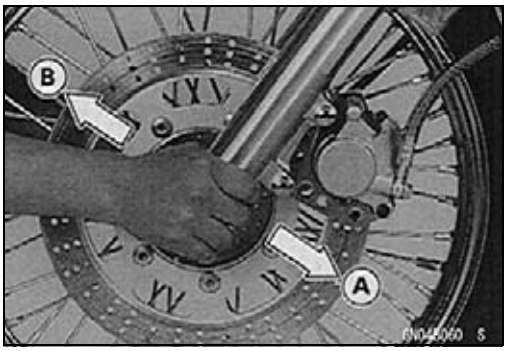

NOTE

○*The cables and wiring will have some effect on the motion of the fork which must be taken into account. Be sure the wires and cables are properly routed.*

○*The bearings must be in good condition and properly lubricated in order for any test to be valid.*

Steering Adjustment

● Remove:

Fuel Tank (see Fuel Tank Removal in the Fuel System chapter)

● Loosen:

Front Fork Lower Clamp Bolts [A]
Stem Head Bolt [B]
Steering Stem Locknut [C]

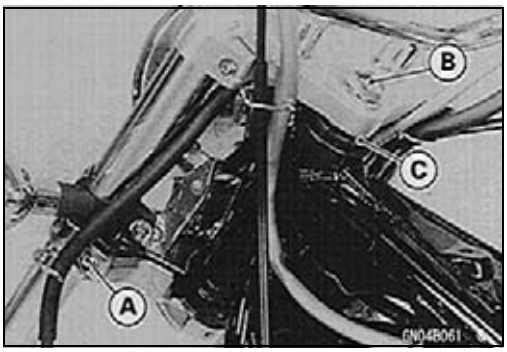

● Adjust the steering.

★If the steering is too tight, loosen the stem nut [A] a fraction of a turn.

★If the steering is too loose, tighten the stem nut a fraction of a turn.

Special Tool - Steering Stem Nut Wrench: 57001-1100 [B]

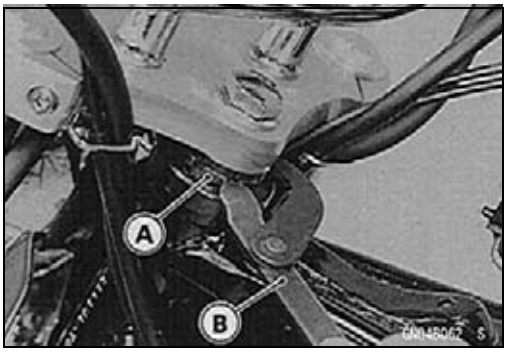

NOTE

○*Turn the stem nut a 1/8 turn at maximum at a time .*

Torque - Steering Stem Nut: 4.9 N·m (0.5 kgf·m, 43 in·lb, for reference)

● While holding the stem nut, hand tighten the stem locknut against the stem nut.

Steering

- Tighten the steering stem head bolt and lower fork clamp Allen bolts.

  Torque - Steering Stem Head Bolt: 44 N·m (4.5 kgf·m, 33 ft·lb)
  Front Fork Lower Clamp Allen Bolts: 29 N·m (3.0 kgf·m, 22 ft·lb)

- Check the steering again.

★If the steering is still too tight or too loose in spite of correct adjustment, inspect the steering stem parts.

- Install the removed parts.

Steering Stem

Steering Stem, Stem Bearing Removal

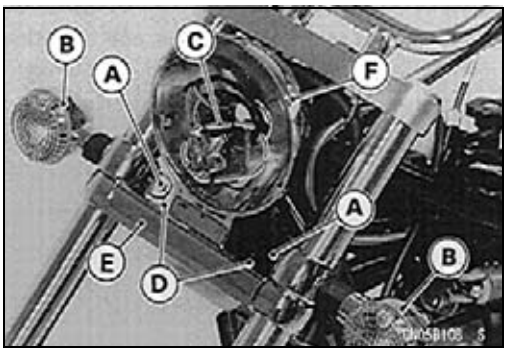

- Remove:
  Seat (see Seat Removal in the Frame chapter)
  Fuel Tank (see Fuel Tank Removal in the Fuel System chapter)
  Bolts [A] and Front Turn Signal Lights [B]
  Headlight Unit (see Headlight Unit/Housing Removal in the Electrical System chapter)
  Connectors [C] (disconnect)
  Bolts [D], Stem Base Cover [E]
  Headlight Housing [F]

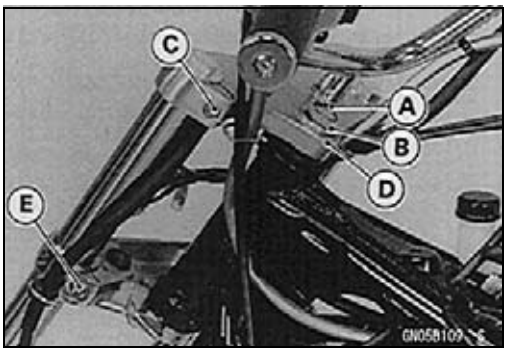

  Front Wheel (see Front Wheel Removal in the Wheels/Tires chapter)
  Stem Head Bolt [A]
  Stem Head Flat Washer [B]
- Loosen the upper fork clamp Allen bolts [C], remove the stem head [D] with the handlebar and hang them.
- Loosen the lower fork clamp Allen bolts [E], and remove the front fork with the front fender.

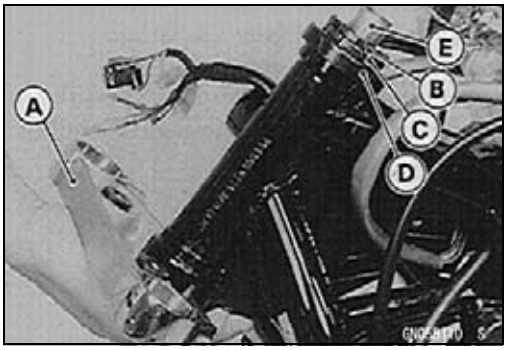

- Pushing up the stem base [A] remove the steering stem locknut [B], stem nut [C] and stem cap [D], then remove the steering stem [E] and stem base.
- Remove the upper stem bearing inner race.

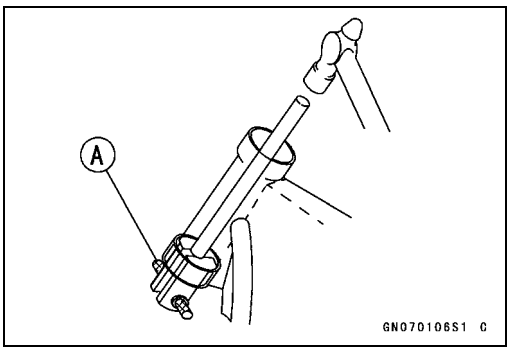

- To remove the outer races pressed into the head pipe, install the head pipe outer race remover [A] as shown, and hammer the stem bearing remover to drive it out.

Special Tool - Head Pipe Outer Race Remover ID > 37 mm: 57001-1107

NOTE

○*If either steering stem bearing is damaged, it is recommended that both the upper and lower bearings (including outer races) be replaced with new ones.*

- Remove the lower stem bearing with the grease seal which is pressed onto the steering stem, with a suitable commercially available bearing puller.

Steering Stem

Steering Stem, Stem Bearing Installation

- Apply grease to the outer races, and then drive them into the head pipe using the head pipe outer race drivers and the head pipe outer race press shaft [A].

Special Tools - Head Pipe Outer Race Press Shaft: 57001-1075
Head Pipe Outer Race Driver, ϕ46.5: 57001-1106 [B]
Head Pipe Outer Race Driver, ϕ51.5: 57001-1076 [C]

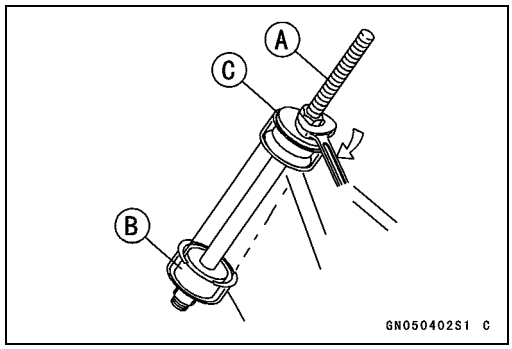

- Apply grease to the lower inner race [A], and drive it onto the steering stem using the stem bearing drive [B] and adapter [C].

Special Tools - Steering Stem Bearing Driver: 57001-137
Steering Stem Bearing Driver Adapter, ϕ34.5: 57001-1074

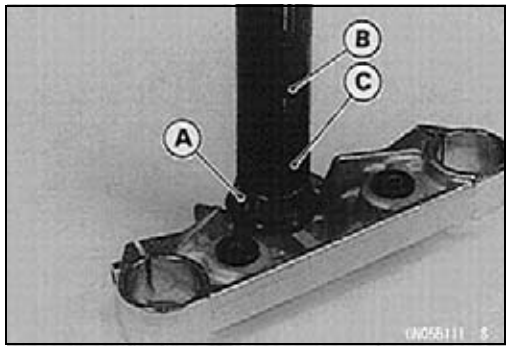

- Apply grease to the upper inner race, and install it in the head pipe.
- Insert the stem into the head pipe.
- Install the steering stem cap [A].
- Install the steering stem nut [B] so that the stepped side [C] faces down, and then install the stem locknut by hand.

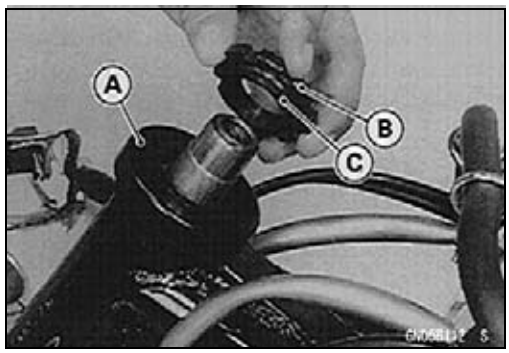

- Settle the inner races in place as follows:

○Using the steering stem nut wrench, tighten the stem nut to 39 N·m (4.0 kgf·m, 29 ft·lb) of torque. (To tighten the steering stem nut to the specified torque, hook the wrench on the stem nut, and pull the wrench at the hole by 200 N (22.2 kg, 49 lb) [B] force in the direction shown).

Special Tool - Steering Stem Nut Wrench: 57001-1100 [A]

○Check that there is no play and the steering stem turns smoothly without rattle. If not, the bearing on the inner race may be damaged.

○Again back out the stem nut a fraction of turn until it turns lightly.

○Turn the stem nut lightly clockwise until it just becomes hard to turn. Do not overtighten, or the steering will be too tight.

Torque - Steering Stem Nut: 4.9 N·m (0.5 kgf·m, 43 in·lb, for reference)

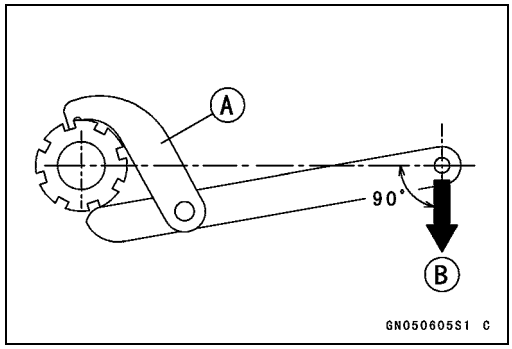

Steering Stem

- Install the steering stem head, washer, and tighten the stem head bolt.

  Torque - Steering Stem Head Bolt: 44 N·m (4.5 kgf·m, 33 ft·lb)
- Reinstall the removed parts (see appropriate chapter).
- Route the cables and harnesses correctly.
- Check and adjust the following.
  Steering
  Front Brake
  Headlight Beam

Steering Stem Bearing Inspection and Lubrication

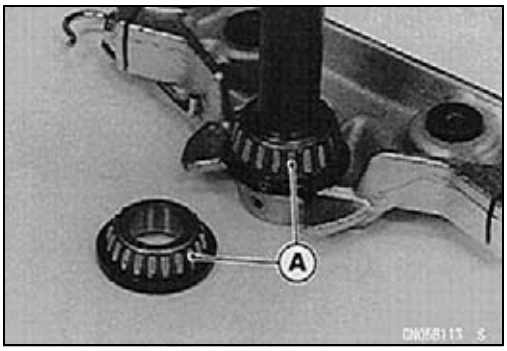

- Remove the steering stem.
- Using a high-flash point solvent, wash the upper and lower tapered roller bearings in the cages, and wipe the upper and lower outer races, which are press-fitted into the frame head pipe, clean of grease and dirt.
- Visually check the outer races and the rollers.

★Replace the bearing assemblies if they show wear or damage.

- Pack the upper and lower tapered roller bearings [A] in the cages with grease, and apply a light coat of grease to the upper and lower outer races.
- Install the steering stem, and adjust the steering.

Grease Seal Deterioration, Damage Inspection

- Inspect the grease seal on the upper tapered roller bearing for any signs of deterioration or damage.

★Replace the grease seal if necessary.

Steering Stem Warp Inspection

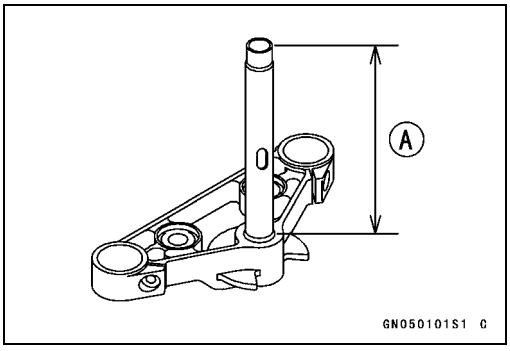

- Whenever the steering stem is removed, or if the steering cannot be adjusted for smooth action, check the steering stem for straightness.

★If the steering stem shaft [A] is bent, replace the steering stem.

Handlebar

Handlebar Removal

- Remove:
  - Clutch Cable Upper End [A]
  - Left Handlebar Switch Housing [B]
  - Right Handlebar Switch Housing [C]
  - Weight [D]
  - Throttle Grip [E]
  - Brake Master Cylinder [F]
  - Clamps [G]

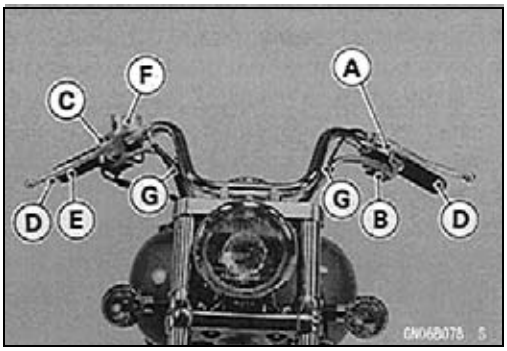

- Unscrew the handlebar mounting nuts [A] and remove the handlebar [B] and clamp [C].

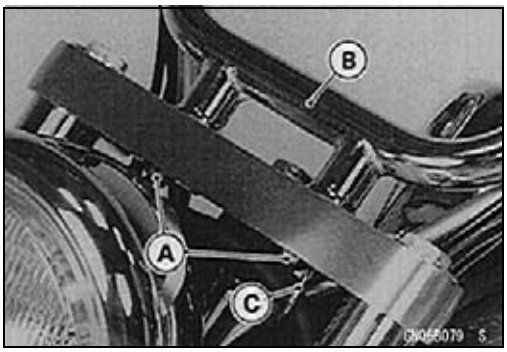

Handlebar Installation

- Install the handlebar on the steering stem head and clamp.
- Tighten the handlebar mounting nuts.

  Torque - Handlebar Mounting Nuts: 34 N·m (3.5 kgf·m, 25 ft·lb)

- Align the punch mark [A] on the handlebar with the gap [B] of the clutch lever holder.

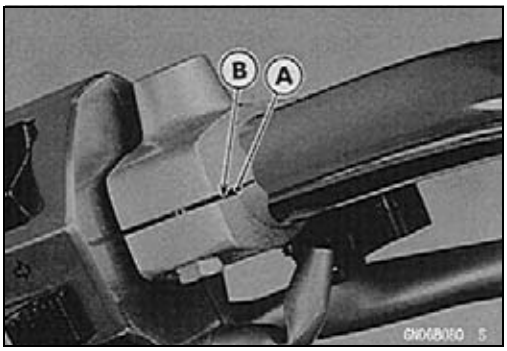

- Install the left and right switch housings.

○Fit the projection [A] into a small hole [B] in the handlebar.

- Apply a non-permanent locking agent to the threads of the handlebar grip screw, and install the weight with it.
- Align the punch mark on the handlebar with the mating surface of the brake master cylinder clamp.
- Check and adjust the following.
  - Throttle Grip
  - Front Brake
  - Clutch

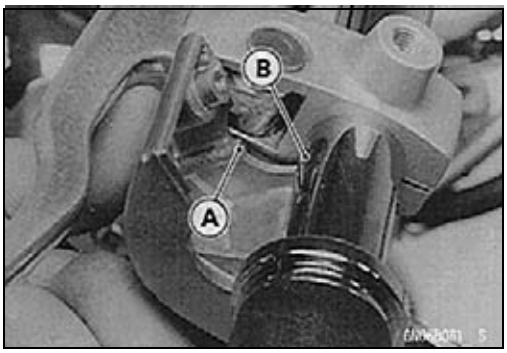

Frame

Table of Contents

Exploded View 14-2
Seat 14-4
Seat Removal/Installation 14-4
Side Covers 14-5
Right Side Cover Removal 14-5
Right Side Cover Installation 14-5
Left side Cover Removal 14-5
Left Side Cover installation 14-5
Fender 14-6
Front Fender Removal 14-6
Front Fender Installation 14-6
Rear Fender Removal 14-6
Storage Case 14-7
Storage Case Removal 14-7
Storage Case Installation 14-7
Battery Case 14-8

Exploded View

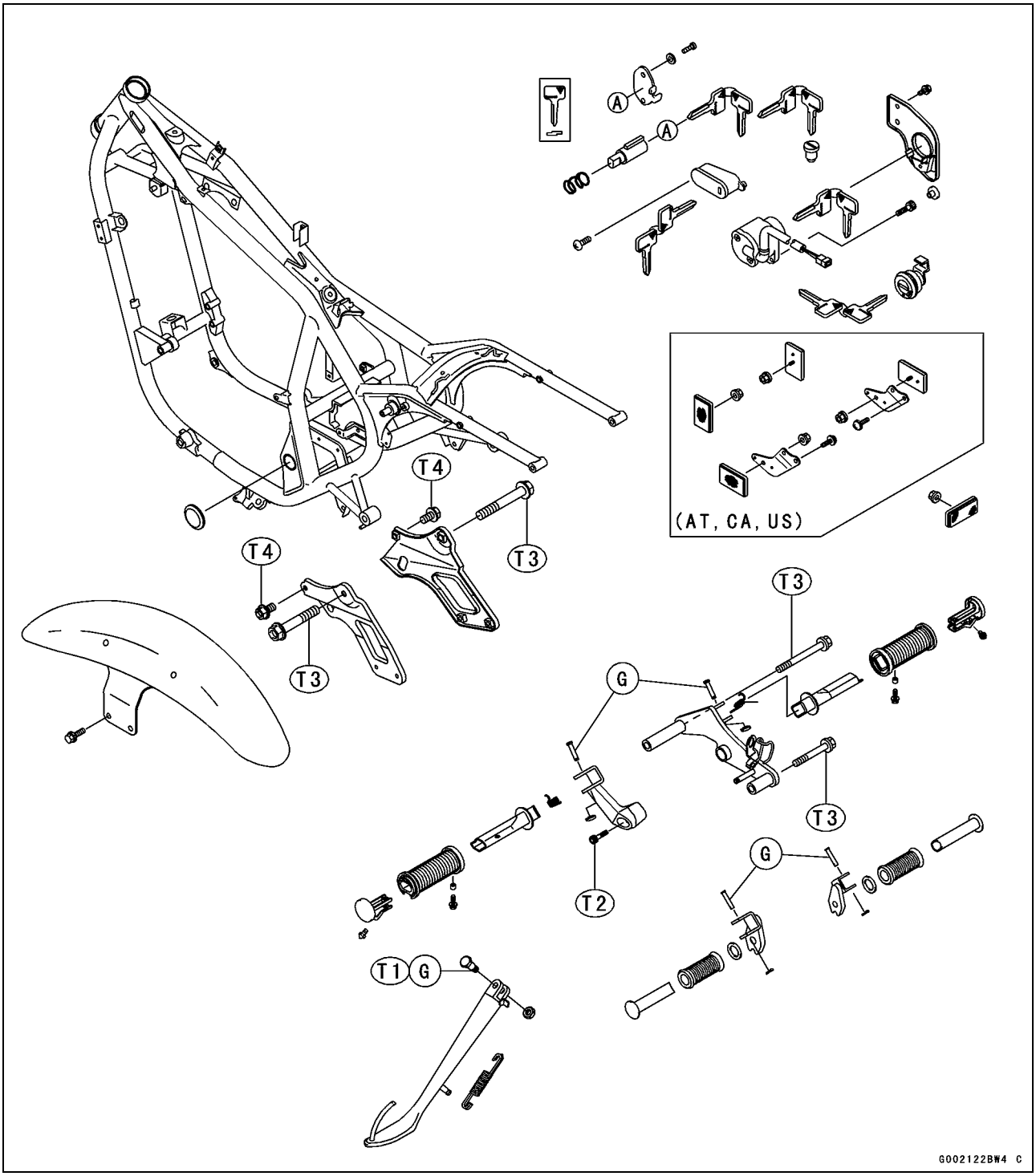

T1: 44 N·m (4.4 kgf·m, 33 ft·lb)
T2: 54 N·m (5.5 kgf·m, 39 ft·lb)
T3: 34 N·m (3.5 kgf·m, 25 ft·lb)
T4: 25 N·m (2.5 kgf·m, 18 ft·lb)
G: Apply grease.

AT: Austria Model
CA: Canada Model
US: United States Model

Exploded View

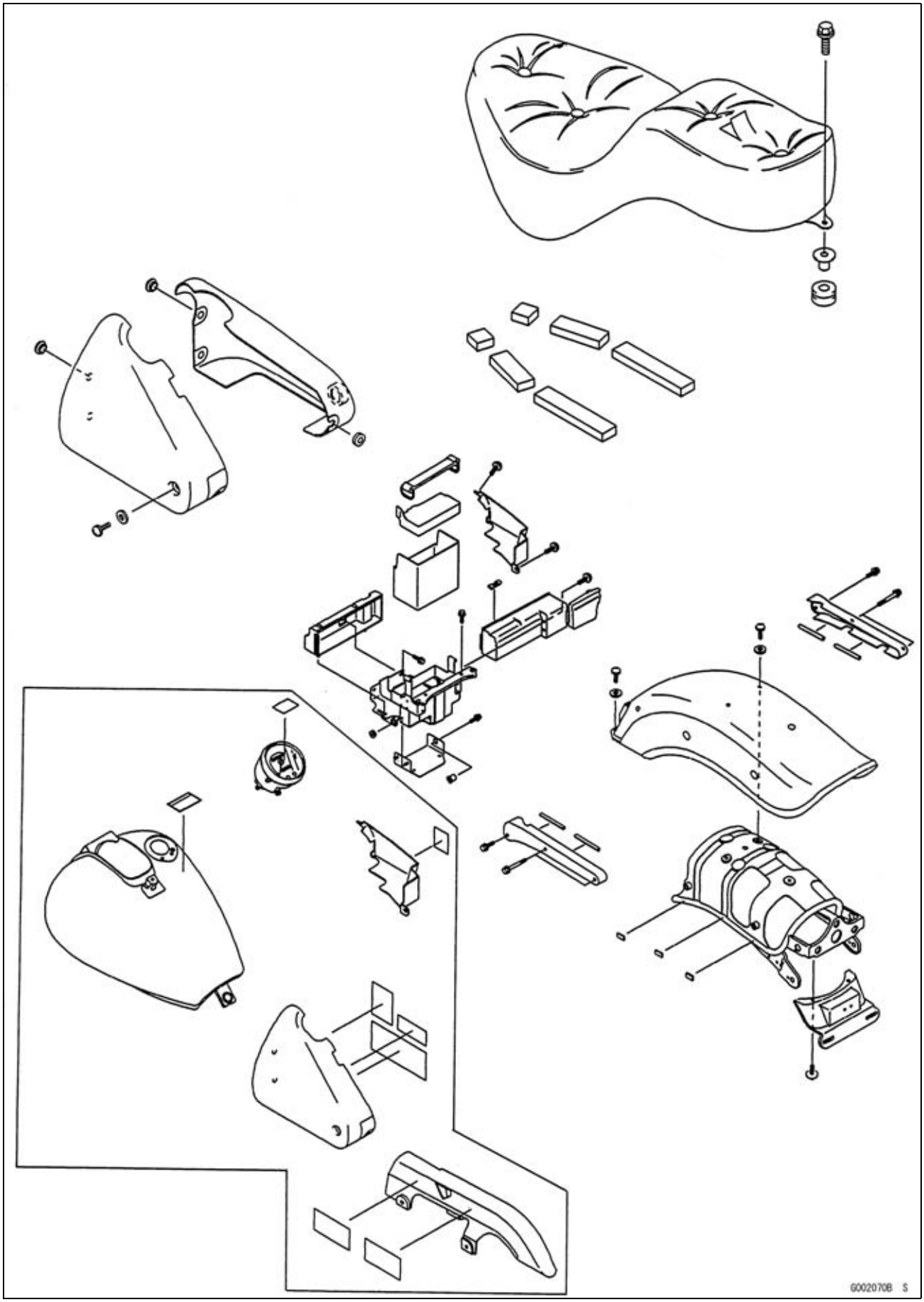

Seat

Seat Removal/Installation

- Unscrew the mounting bolts [A].
- Pull [B] the seat to unhook the front and rear hooks [C], and remove it.

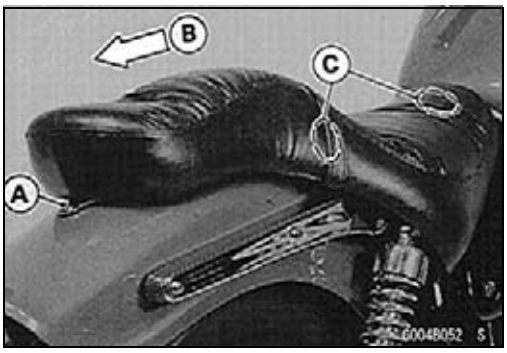

- Insert the front hook [A] into the brace [B] on the frame.
- Slip the rear hooks [C] under the loop [D] on the rear fender.

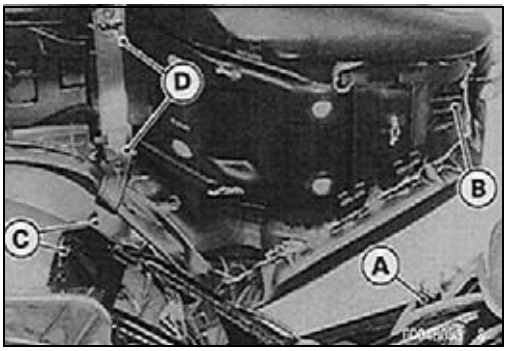

Side Covers

Right Side Cover Removal

- Insert the ignition switch key into the right side cover lock [A], turn the key counterclockwise, pull out the rear portion of the cover, and pull the cover forward.

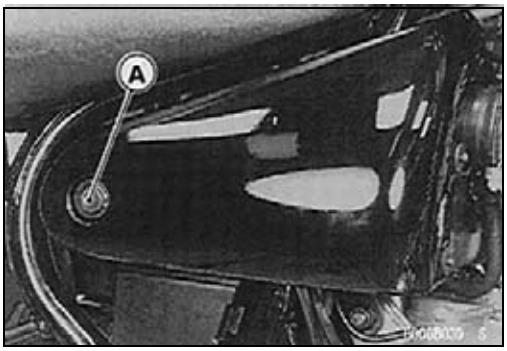

Right Side Cover Installation

- Put the holes [A] onto the projections [B] on the air cleaner housing, and then fit the slot [C] to the groove [D] in the dumper.
- Lock the cover with the ignition switch key.

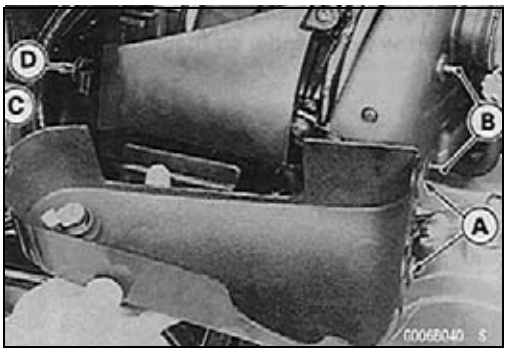

Left side Cover Removal

- Remove the screw [A], pull the cover [B] forward.

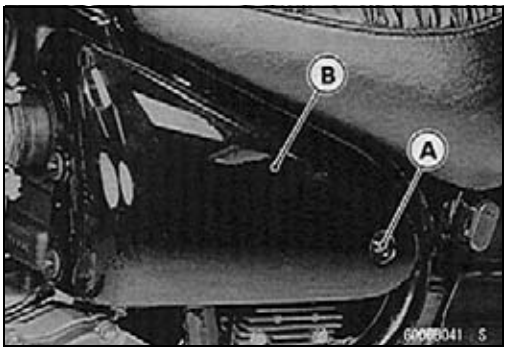

Left Side Cover installation

- Put the holes [A] onto the projections [B] on the air cleaner housing.

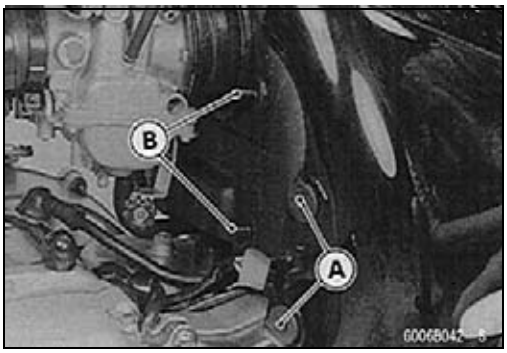

Fender

Front Fender Removal

- Unscrew the mounting bolts [A] and remove the front fender [B].

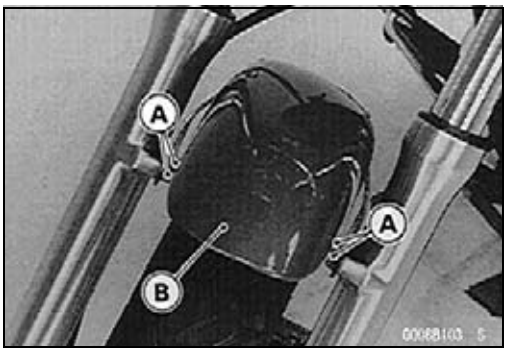

Front Fender Installation

- Install the front fender so that the L mark [A] faces to the left side.

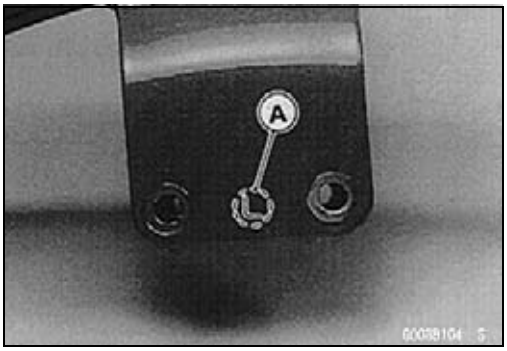

Rear Fender Removal

- Remove the seat (see Seat Removal).
- Pull out the junction box [A] from the rear fender.
- Disconnect the connectors [B].

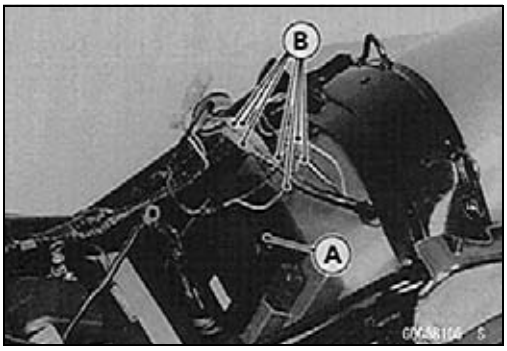

- Unscrew the rear fender mounting bolts [A] and screws [B].
- Pull out the rear fender.

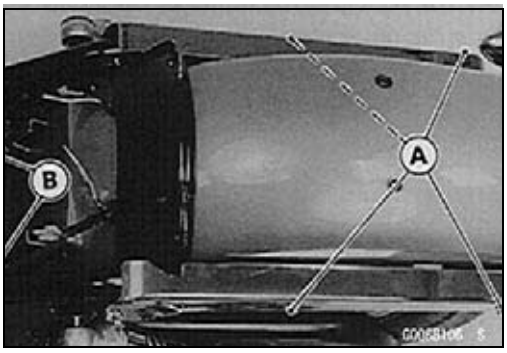

- Remove the following parts from the rear fender.
  Rear Turn Signal Lights [A]
  Tail/Brake Light Unit [B]
  Reinforce Bracket [C]

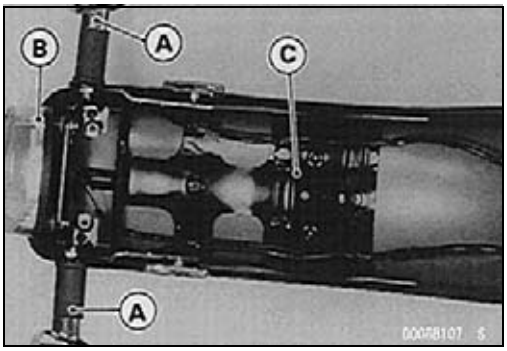

Storage Case

Storage Case Removal

- Remove:
  Right Side Cover (see Right Side Cover Removal)
  Screw [A] and Tool Cover [B]
- Open the storage case lid [C], remove the screws [D].
- Slide the rear storage case half [E] off.
- Remove the clamps [F].

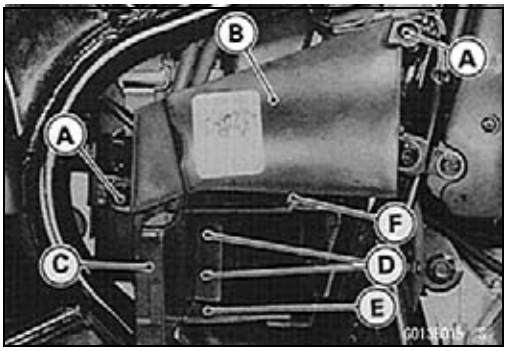

- Unscrew the bolts [A] slide the front storage case half [B] toward the rear, then remove it.

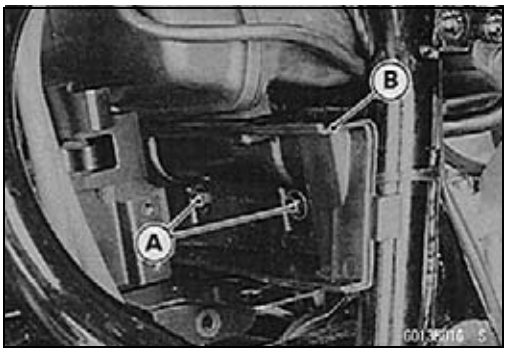

Storage Case Installation

- Insert the front storage case projection [A] into the hole [B] in the battery case, and tighten the screw.

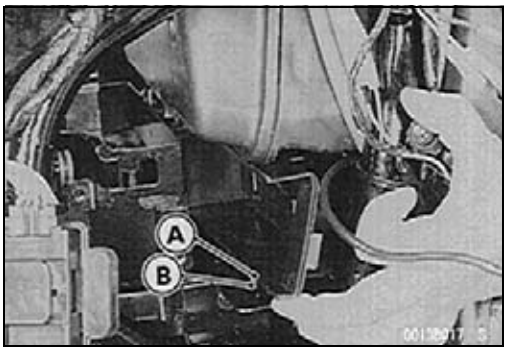

Battery Case

- Remove:
  Seat (see Seat Removal)
  Rear Fender (see Rear Fender Removal)
  Leads [A] and Band [B]
  Battery with Battery Cover [C]
  Side Covers (see Right/Left Side Cover Removal)
  Bolts [D] and Switch Bracket [E]
  Regulator/Rectifier (see Regulator/Rectifier Removal in the Electrical System chapter)
  Storage Case (see Storage Case Removal)
  IC Igniter (see IC Igniter Removal in the Electrical System chapter)

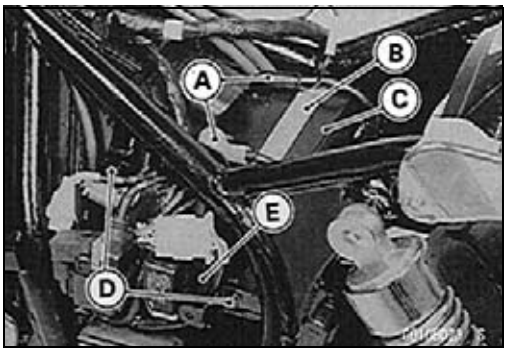

- Unscrew the mounting bolts [A].

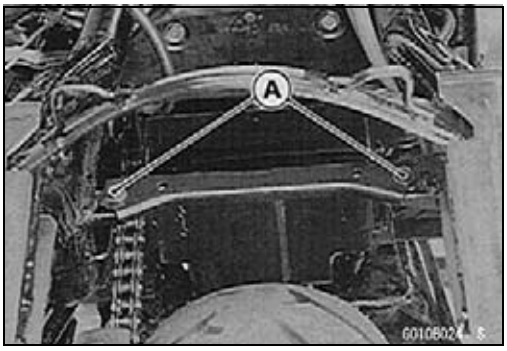

- Twist the battery case [A] to get clear of the bracket [B], and remove the case.

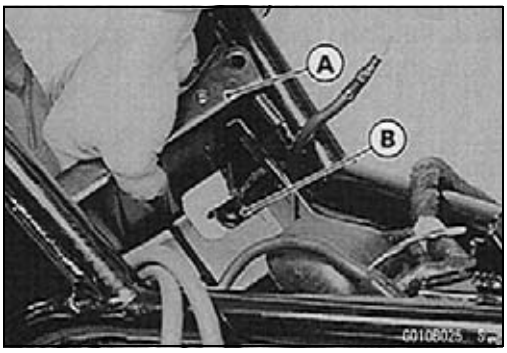

Electrical System

Table of Contents

Parts Location..... 15-3
Exploded View..... 15-4
Specifications 15-8
Special Tools and Sealant 15-9
Wiring Diagram (United States and Canada) EN500-C1 ~ C4 Model..... 15-10
Wiring Diagram (Other than United States and Canada) EN500-C1 ~ C3 Model 15-12
Wiring Diagram (United States and Canada) EN500-C5 Model 15-14
Wiring Diagram (Other than United States and Canada) EN500-C4 ~ C7 Model 15-16
Wiring Diagram (United States and Canada) EN500-C6 ~ 15-18
Wiring Diagram (Other than United States and Canada) EN500-C8 ~... 15-20
Precautions..... 15-22
Electrical Wiring..... 15-24
Wiring Inspection 15-24
Battery 15-25
Precautions:..... 15-25
Electrolyte Level Inspection 15-25
Battery Condition 15-25
Battery Initial Charging..... 15-26
Battery Ordinary Charging 15-28
Battery Test Charging 15-29
Charging System 15-31
Alternator Rotor/Starter Clutch Removal 15-31
Alternator Rotor/Starter Clutch Installation 15-32
Alternator Stator Removal..... 15-33
Alternator Stator Installation..... 15-33
Regulator/Rectifier Removal 15-33
Regulator/Rectifier Output Voltage Inspection..... 15-33
Alternator Inspection 15-35
Rectifier Inspection 15-36
Regulator Inspection 15-36
Ignition System 15-38
Safety instructions: 15-38
Crankshaft Sensor Removal 15-38
Crankshaft Sensor Installation 15-38
Crankshaft Sensor Inspection..... 15-38
Ignition Coil Removal/Installation. 15-39
Ignition Coil Inspection..... 15-39
Ignition Timing Inspection 15-40
Spark Plug Removal/Installation.. 15-41
Spark Plug Cleaning, Inspection.. 15-41
Spark Plug Gap Inspection 15-41
IC Igniter Removal 15-41
IC Igniter Installation 15-42
IC Igniter Inspection 15-42
Diodes Inspection 15-43
Electric Starter System 15-46
Starter Motor Removal..... 15-46
Starter Motor Installation..... 15-46
Starter Clutch Sprocket Removal. 15-47
Starter Clutch Sprocket Installation 15-47
Starter Motor Disassembly..... 15-47
Starter Motor Assembly 15-48
Starter Chain Guide Wear Inspection..... 15-48
Starter Clutch Inspection..... 15-49
Starter Relay Inspection..... 15-49
Brush Inspection 15-49
Brush Spring Inspection..... 15-49
Commutator Cleaning and Inspection..... 15-50
Armature Inspection..... 15-50
Brush Plate Inspection 15-51
Lighting System 15-53
Headlight Beam Horizontal Adjustment 15-53
Headlight Beam Vertical Adjustment 15-53
Headlight Bulb Replacement 15-53
Headlight Unit/Housing Removal. 15-54
Headlight Unit Installation 15-54
Tail/Brake Light Bulb Replacement 15-54
Tail/Brake Light Lens Removal/Installation..... 15-54
Turn Signal Light Bulb Replacement 15-55
Turn Signal Relay Inspection 15-55
Radiator Fan System 15-59
Radiator Fan System Circuit Inspection 15-59

Radiator Fan Motor Inspection..... 15-59
Meter Instruments 15-61
Meter Instruments Removal..... 15-61
Meter Instruments Installation..... 15-61
Meter Unit Disassembly 15-61
Bulb Replacement..... 15-61
Switches and Sensors 15-62
Front Brake Light Timing Inspection..... 15-62
Rear Brake Light Timing Inspection..... 15-62
Rear Brake Light Timing Adjustment 15-62
Switch Inspection 15-62
Radiator Fan Switch Inspection ... 15-63
Water Temperature Switch Inspection..... 15-64
Junction Box 15-65
Junction Box Fuse Circuit Inspection..... 15-65
Starter Circuit/Headlight Relay Inspection..... 15-65
Diode Circuit Inspection 15-66
Fuses..... 15-68
30 Ampere Fuse Removal 15-68
Junction Box Fuse Removal 15-68
Fuse Installation..... 15-68
Fuse Inspection..... 15-68

Parts Location

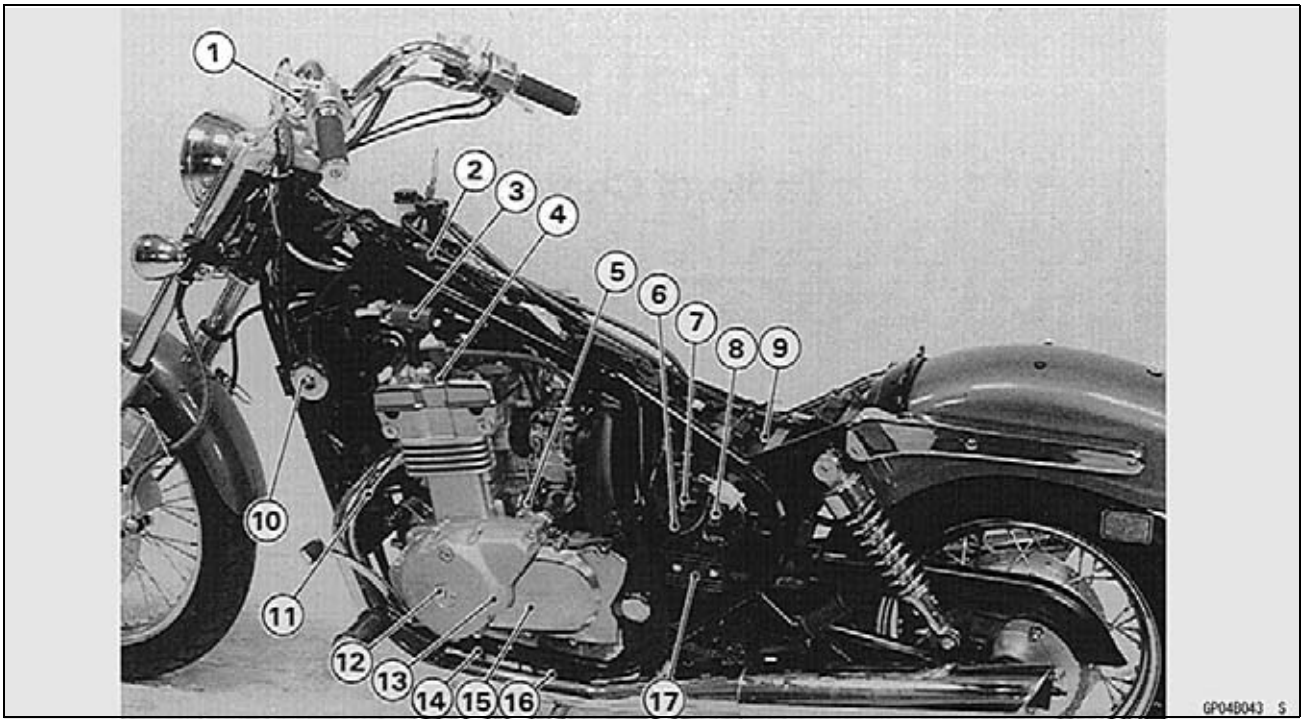

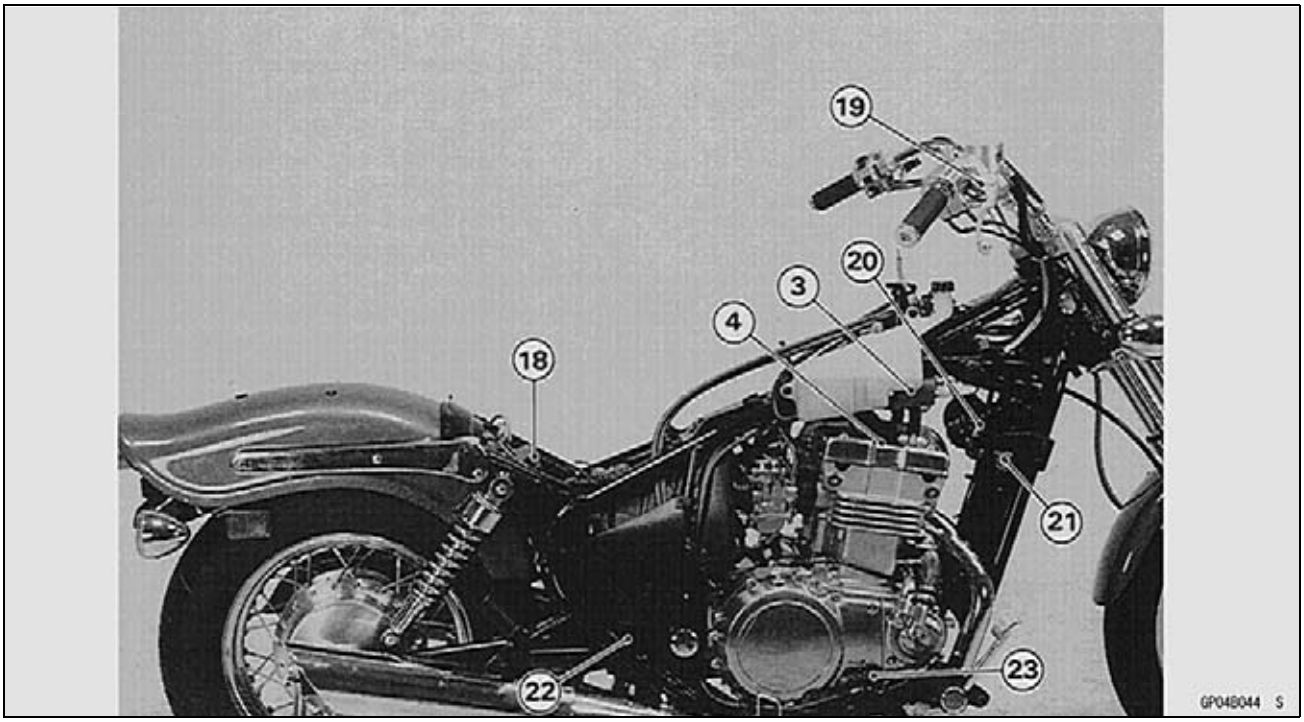

1. Starter Lockout Switch
2. Water Temperature Switch
3. Ignition Coils
4. Spark Plugs
5. Starter Motor
6. Starter Relay
7. 30 A Main Fuse
8. Turn Signal Relay
9. Battery
10. Horns
11. Fan Switch
12. Alternator
13. Crankshaft Sensor
14. Oil Pressure Switch
15. Neutral Switch
16. Side Stand Switch
17. Regulator/Rectifier
18. Junction Box
19. Front Brake Light Switch
20. Radiator Fan
21. Ignition Switch
22. IC Igniter
23. Rear Brake Light Switch

Exploded View

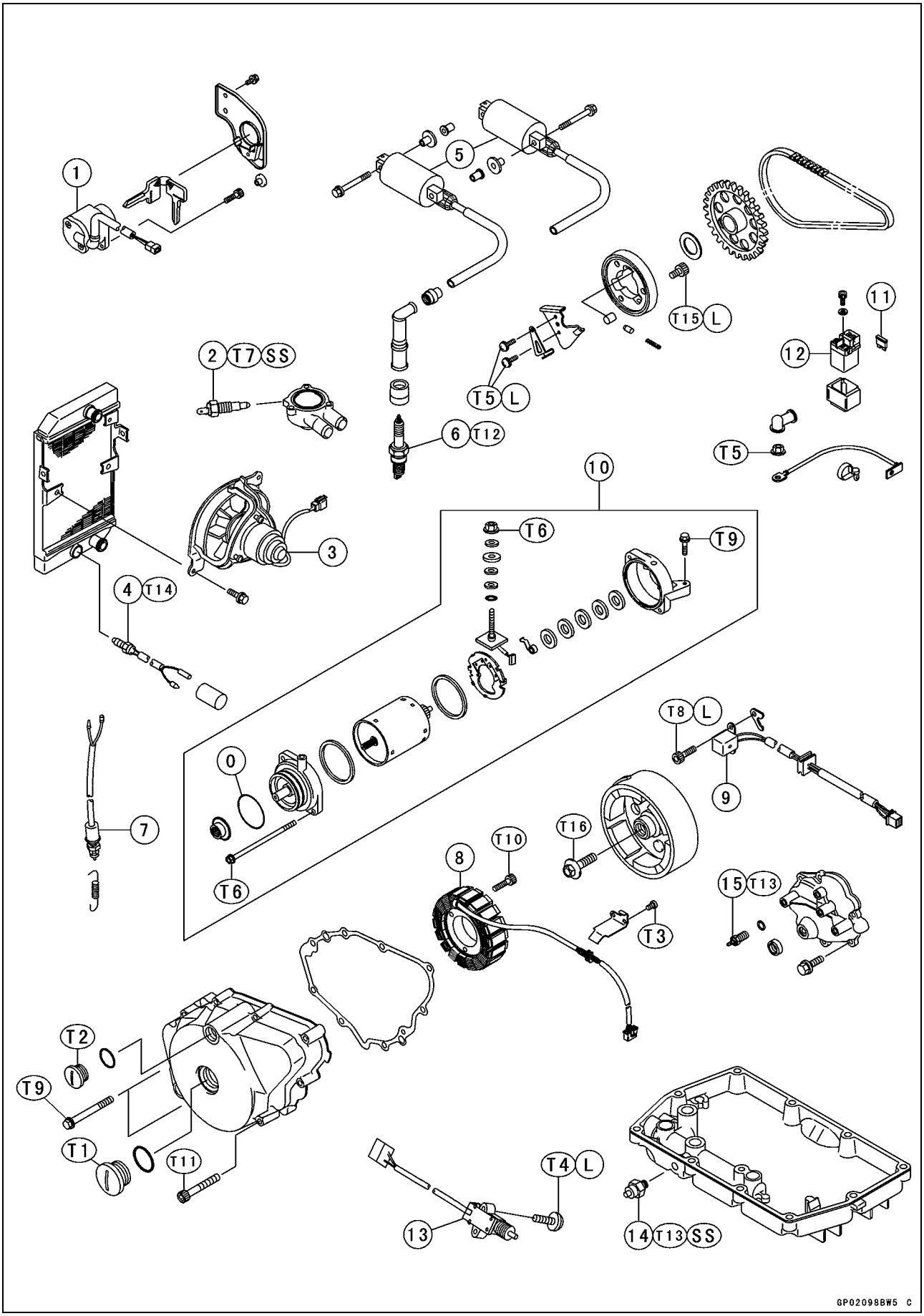

Exploded View

1. Ignition Switch
2. Water Temperature Switch
3. Radiator Fan
4. Fan Switch
5. Ignition Coils
6. Spark Plugs
7. Rear Brake Light Switch
8. Alternator Stator
9. Crankshaft Sensor
10. Starter Motor
11. 30 A Main Fuse
12. Starter Relay
13. Side Stand Switch
14. Oil Pressure Switch
15. Neutral Switch

T1: 1.5 N·m (0.15 kgf·m, 13 in·lb)
T2: 2.5 N·m (0.25 kgf·m, 22 in·lb)
T3: 2.9 N·m (0.3 kgf·m, 26 in·lb)
T4: 3.9 N·m (0.4 kgf·m, 35 in·lb)
T5: 4.9 N·m (0.5 kgf·m, 43 in·lb)
T6: 6.9 N·m (0.7 kgf·m, 65 in·lb)
T7: 7.8 N·m (0.8 kgf·m, 69 in·lb)
T8: 8.3 N·m (0.85 kgf·m, 74 in·lb)
T9: 11 N·m (1.1 kgf·m, 95 in·lb)
T10: 12 N·m (1.2 kgf·m, 104 in·lb)
T11: 13 N·m (1.3 kgf·m, 113 in·lb)
T12: 14 N·m (1.4 kgf·m, 10 ft·lb)
T13: 15 N·m (1.5 kgf·m, 11 ft·lb)
T14: 18 N·m (1.8 kgf·m, 13 ft·lb)
T15: 34 N·m (3.5 kgf·m, 25 ft·lb)
T16: 69 N·m (7.0 kgf·m, 51 ft·lb)
L: Apply a non-permanent locking agent.
O: Apply engine oil.
SS: Apply silicone sealant.

Exploded View

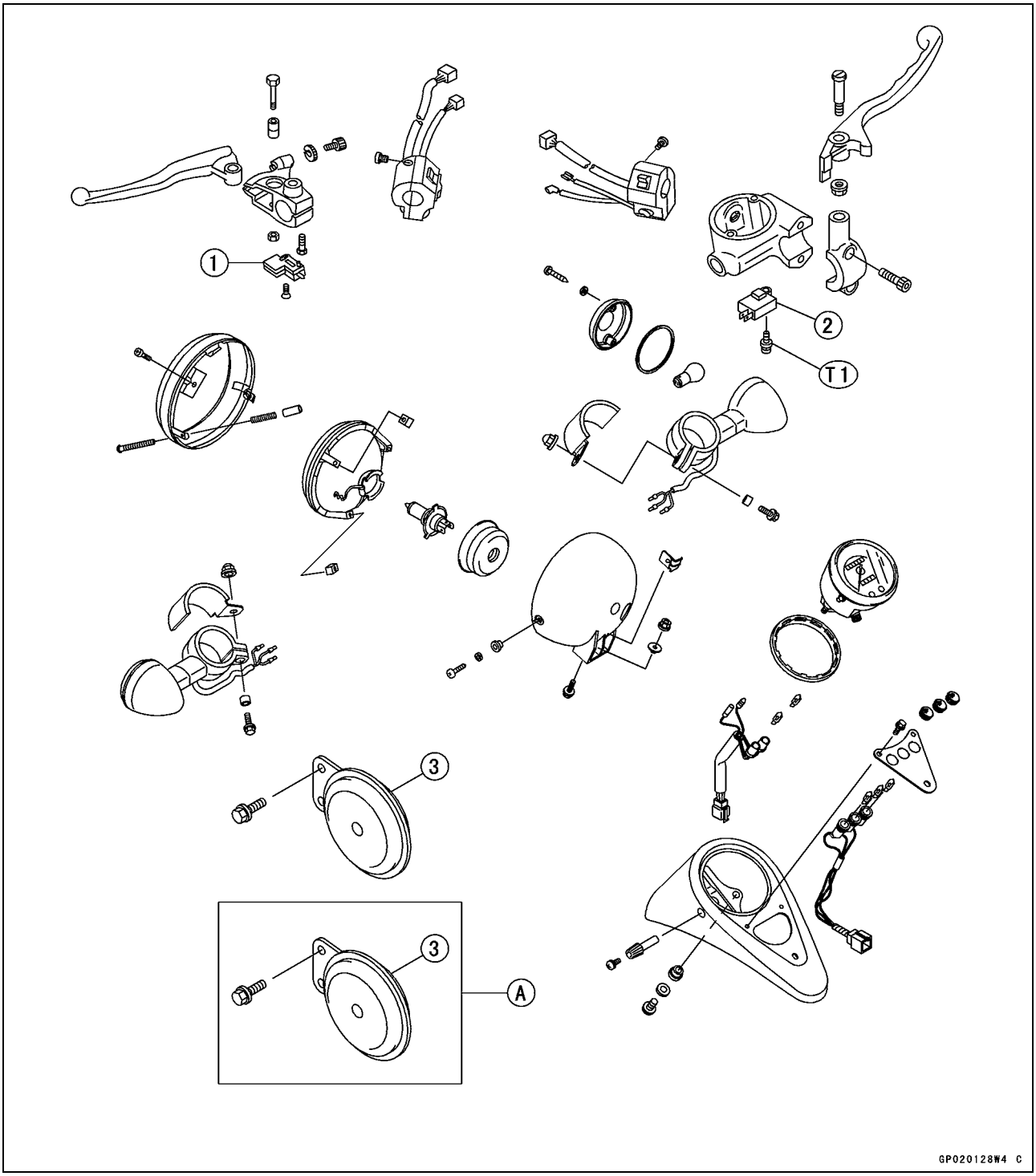

1. Starter Lockout Switch
2. Front Brake Light Switch
3. Horns

T1: 1.2 N·m (0.12 kgf·m, 10 in·lb)

A: Italy Model, Netherlands Model (EN500-C2 ~)

Exploded View

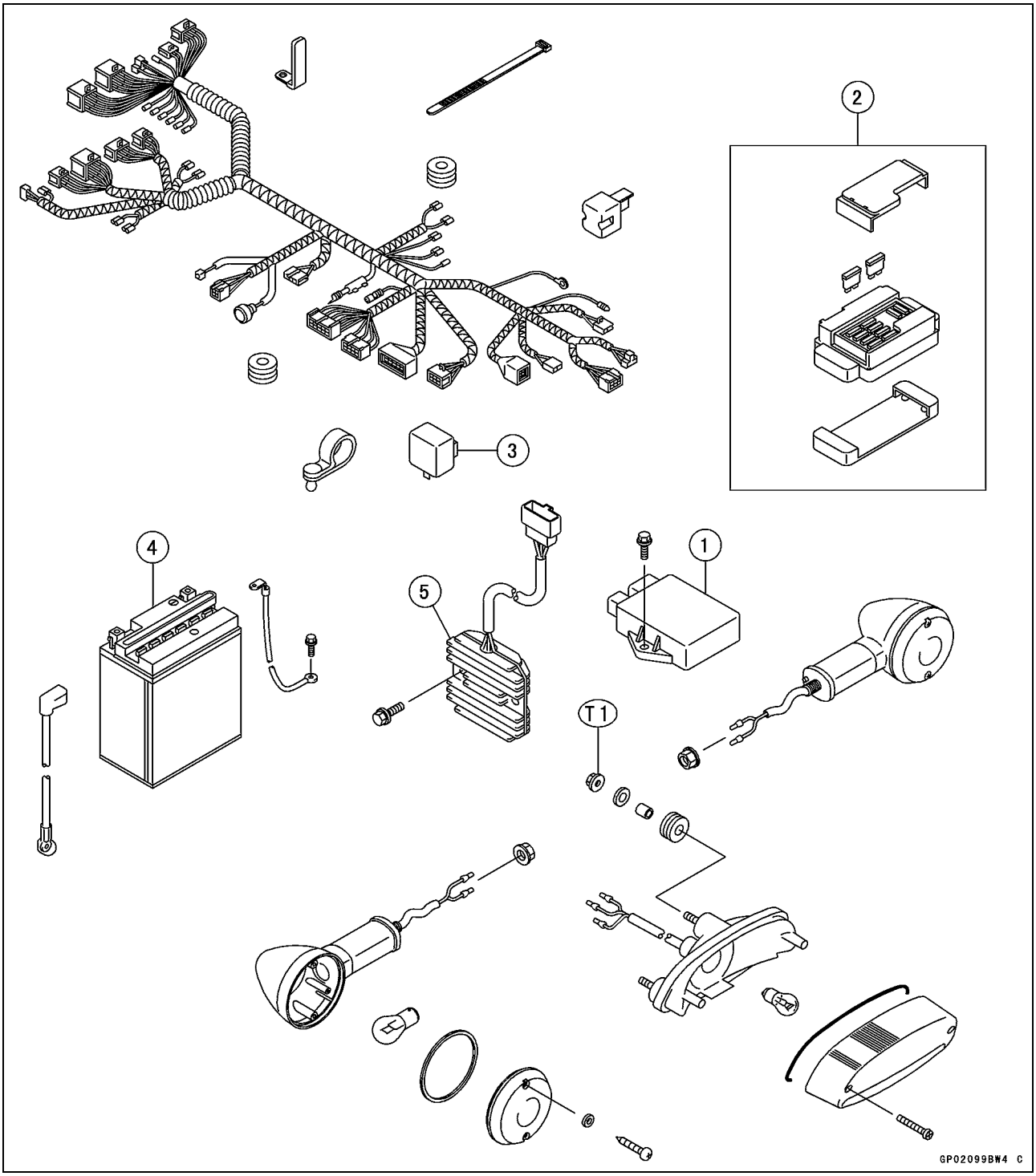

1. Regulator/Rectifier
2. Junction Box
3. Turn Signal Relay
4. Battery
5. IC Igniter

T1: 5.9 N·m (0.6 kgf/m, 52 in·lb)

Specifications

Item	Standard	Service Limit
Battery		
Type	12 V 12 Ah	– – –
Specific Gravity Of Electrolyte	1 280 @20°C (68°F)	– – –
Charging System		
Type	Three-phase AC	– – –
Alternator Output Voltage	about 60 V @4 000 r/min (rpm)	– – –
Stator Coil Resistance	0.3 ~ 0.6 Ω (Y - Y)	– – –
Charging Voltage	14 ~ 15 V	– – –
(Regulator/Rectifier Output Voltage)	(with headlight switch ON if applicable)	
Ignition System		
Ignition Coil:		
3 Needle Arcing Distance	8 mm (0.31 in.) or more	– – –
Winding Resistance:		
Primary Windings	2.6 ~ 3.2 Ω	– – –
Secondary Windings	13.5 ~ 16.5 kΩ	– – –
Spark Plug:		
Type	NGK DR9EA or ND X27ESR-U or NGK DR8EA or ND X24ESR-U	– – – – – –
Spark Plug Gap	0.6 ~ 0.7 mm (0.024 ~ 0.028 in.)	– – –
Crankshaft Sensor Resistance	400 ~ 490 Ω	– – –
Crankshaft Sensor Air Gap	0.7 mm (0.028 in.)	
Electric Starter System		
Starter Motor:		
Carbon Brush Length	12.0 ~ 12.5 mm (0.472 ~ 0.492 in.)	8.5 mm (0.335 in.)
Commutator Diameter	28 mm (1.10 in.)	27 mm (1.06 in.)
Switch and Sensor		
Rear Brake Light Timing	On after about 15 mm pedal travel	– – –
Engine Oil Pressure Switch Connections	When engine is stopped: ON When engine is running: OFF	
Radiator Fan Switch Connections:		
Rising Temperature	From OFF to ON at 96 ~ 100°C (205 ~ 212°F)	– – –
Falling Temperature	From ON to OFF at 91°C (196°F) ~ Less than temperature at ON temperature ON: Less than 0.5 Ω OFF: More than 1 MΩ	– – –
Water Temperature Switch Connections:		
Rising Temperature	From OFF to ON at 113 ~ 117°C (235 ~ 243°F)	– – –
Falling Temperature	From ON to OFF at 108°C (226°F) ~ Less than temperature at ON ON: Less than 0.5 Ω OFF: More than 1 MΩ	– – –

Special Tools and Sealant

Spark Plug Wrench, Hex 18:
57001-1024

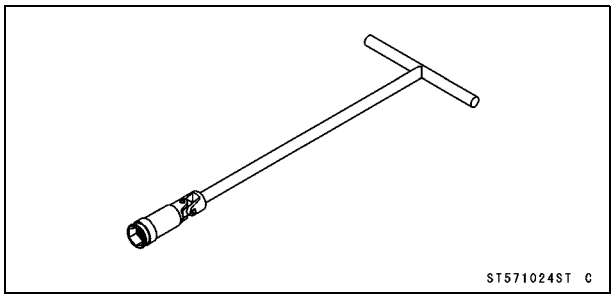

Rotor Puller, M16/M18/M20/M22 × 1.5:
57001-1216

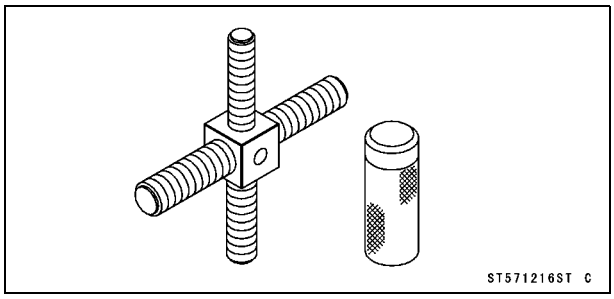

Timing Light:
57001-1241

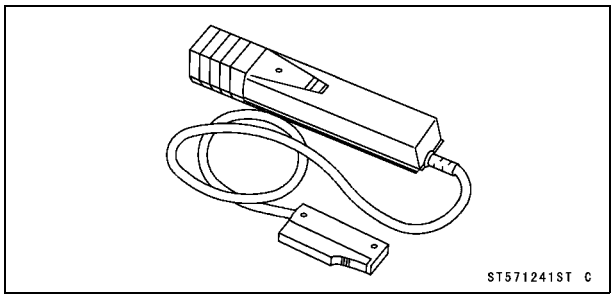

Flywheel Holder:
57001-1313

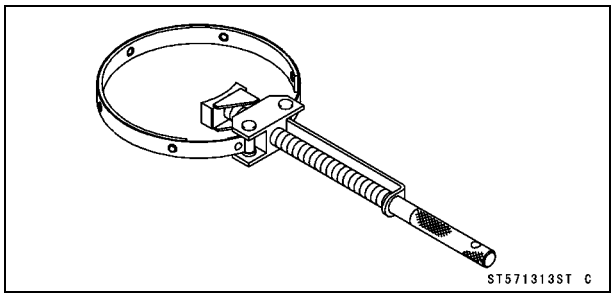

Igniter Checker Assembly:
57001-1378

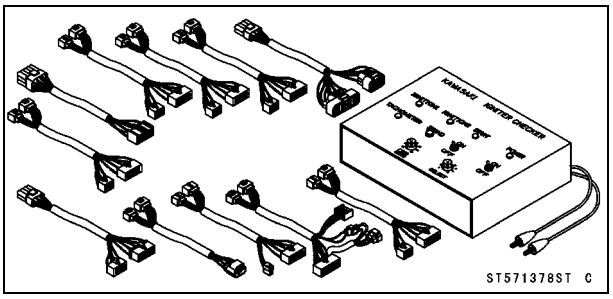

Hand Tester:
57001-1394

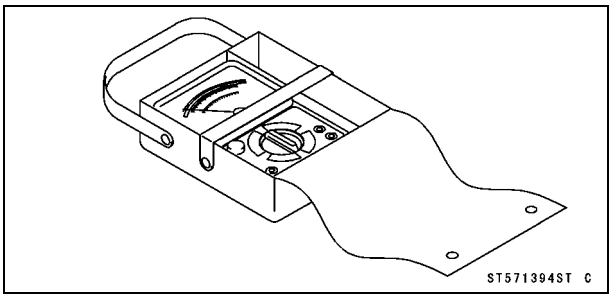

Filler Cap Driver:
57001-1454

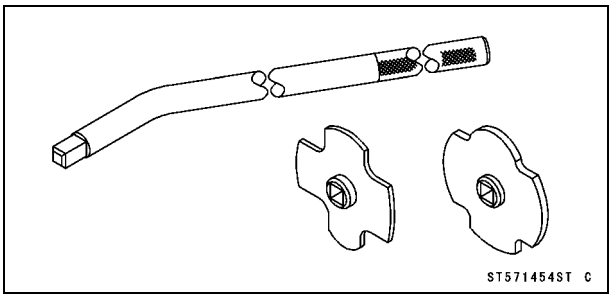

Kawasaki Bond (Silicone Sealant):
56019-120

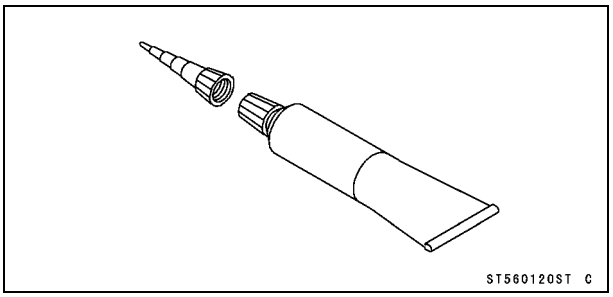

Wiring Diagram (United States and Canada) EN500-C1 ~ C4 Model

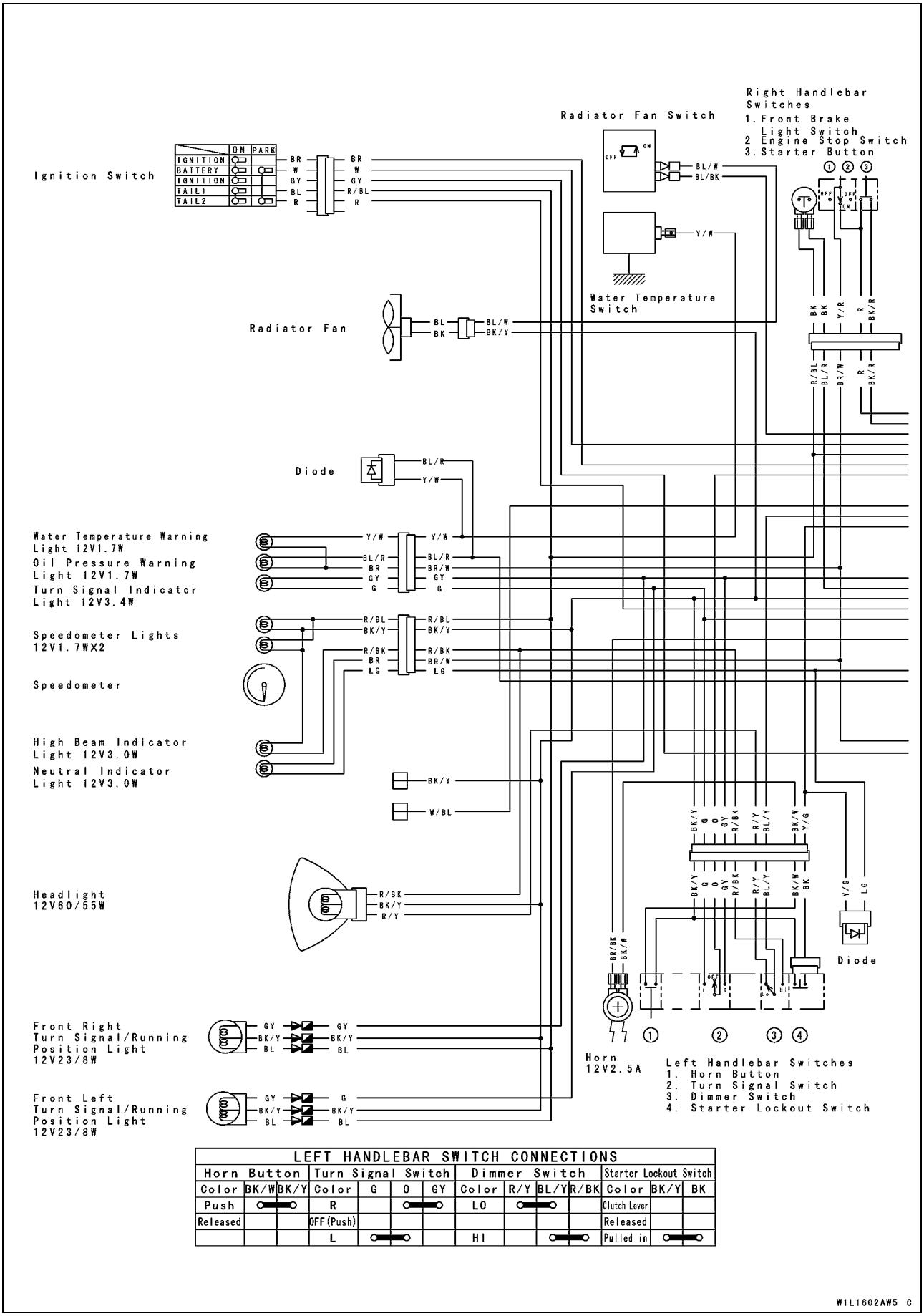

LEFT HANDLEBAR SWITCH CONNECTIONS													
Horn Button			Turn Signal Switch				Dimmer Switch				Starter Lockout Switch		
Color	BK/W	BK/Y	Color	G	O	GY	Color	R/Y	BL/Y	R/BK	Color	BK/Y	BK
Push	○	●	R		●	○	LO	●	○		Clutch Lever		
Released			OFF (Push)								Released		
			L	●	○		HI		●	●	Pulled in	●	○

Wiring Diagram (United States and Canada) EN500-C1 ~ C4 Model

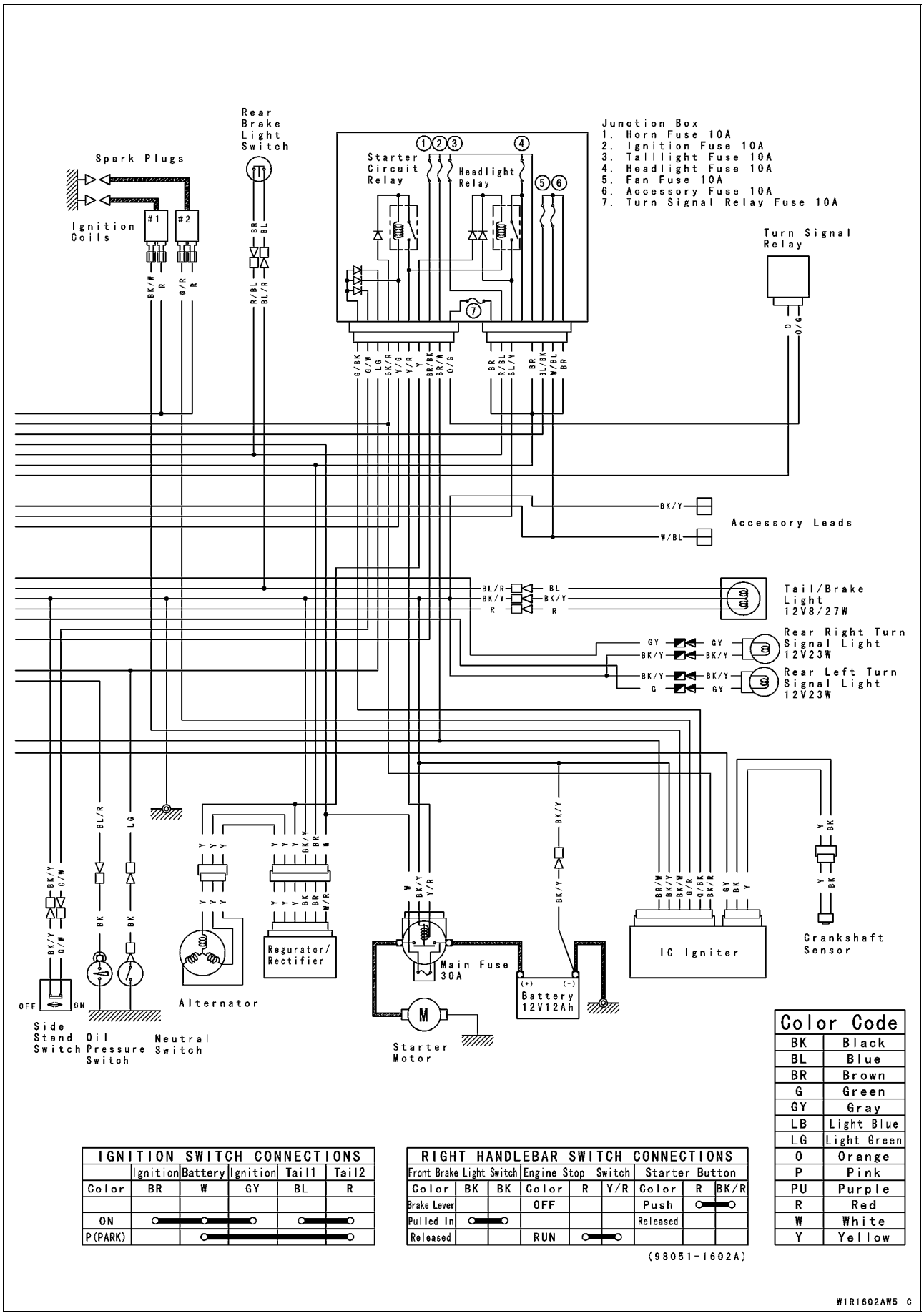

IGNITION SWITCH CONNECTIONS					
	Ignition	Battery	Ignition	Tail1	Tail2
Color	BR	W	GY	BL	R
ON	●	●	●	●	●
P(PARK)		●	●	●	●

RIGHT HANDLEBAR SWITCH CONNECTIONS								
Front Brake Light Switch			Engine Stop Switch			Starter Button		
Color	BK	BK	Color	R	Y/R	Color	R	BK/R
Brake Lever			OFF			Push	○	●
Pulled In	●	●				Released		
Released			RUN	●	●			

Color Code	
BK	Black
BL	Blue
BR	Brown
G	Green
GY	Gray
LB	Light Blue
LG	Light Green
O	Orange
P	Pink
PU	Purple
R	Red
W	White
Y	Yellow

(98051-1602A)

W1R1602AW5 C

Wiring Diagram (Other than United States and Canada) EN500-C1 ~ C3 Model

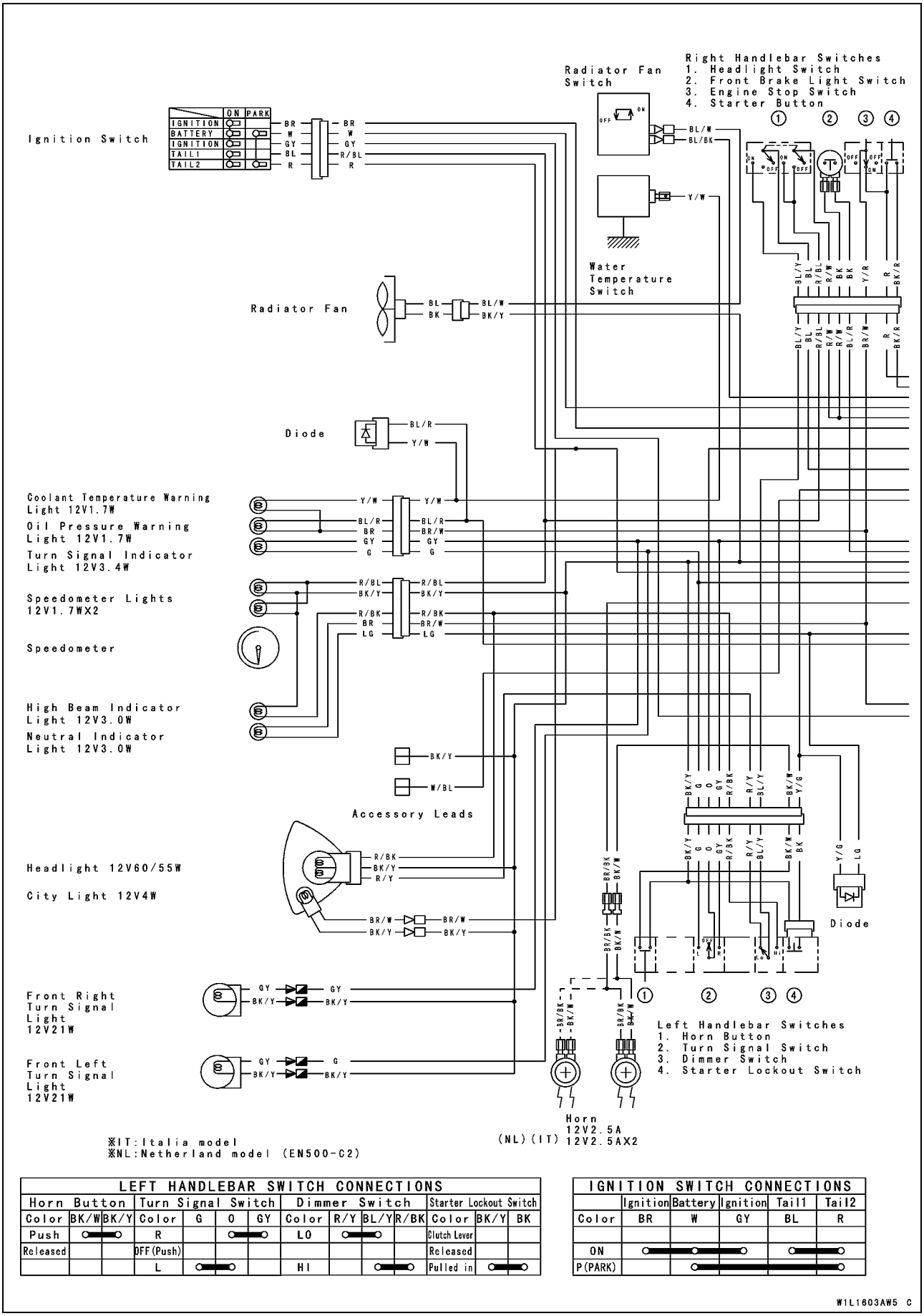

LEFT HANDLEBAR SWITCH CONNECTIONS													
Horn Button			Turn Signal Switch				Dimmer Switch				Starter Lockout Switch		
Color	BK/W	BK/Y	Color	G	O	GY	Color	R/Y	BL/Y	R/BK	Color	BK/Y	BK
Push	○	●	R		●		LO	●	●		Clutch Lever		
Released			OFF(Push)								Released		
			L	●	●		HI		●	●	Pulled in	●	●

IGNITION SWITCH CONNECTIONS					
	Ignition	Battery	Ignition	Tail1	Tail2
Color	BR	W	GY	BL	R
ON	●	●	●	●	●
P(PARK)		●	●	●	●

Wiring Diagram (Other than United States and Canada) EN500-C1 ~ C3 Model

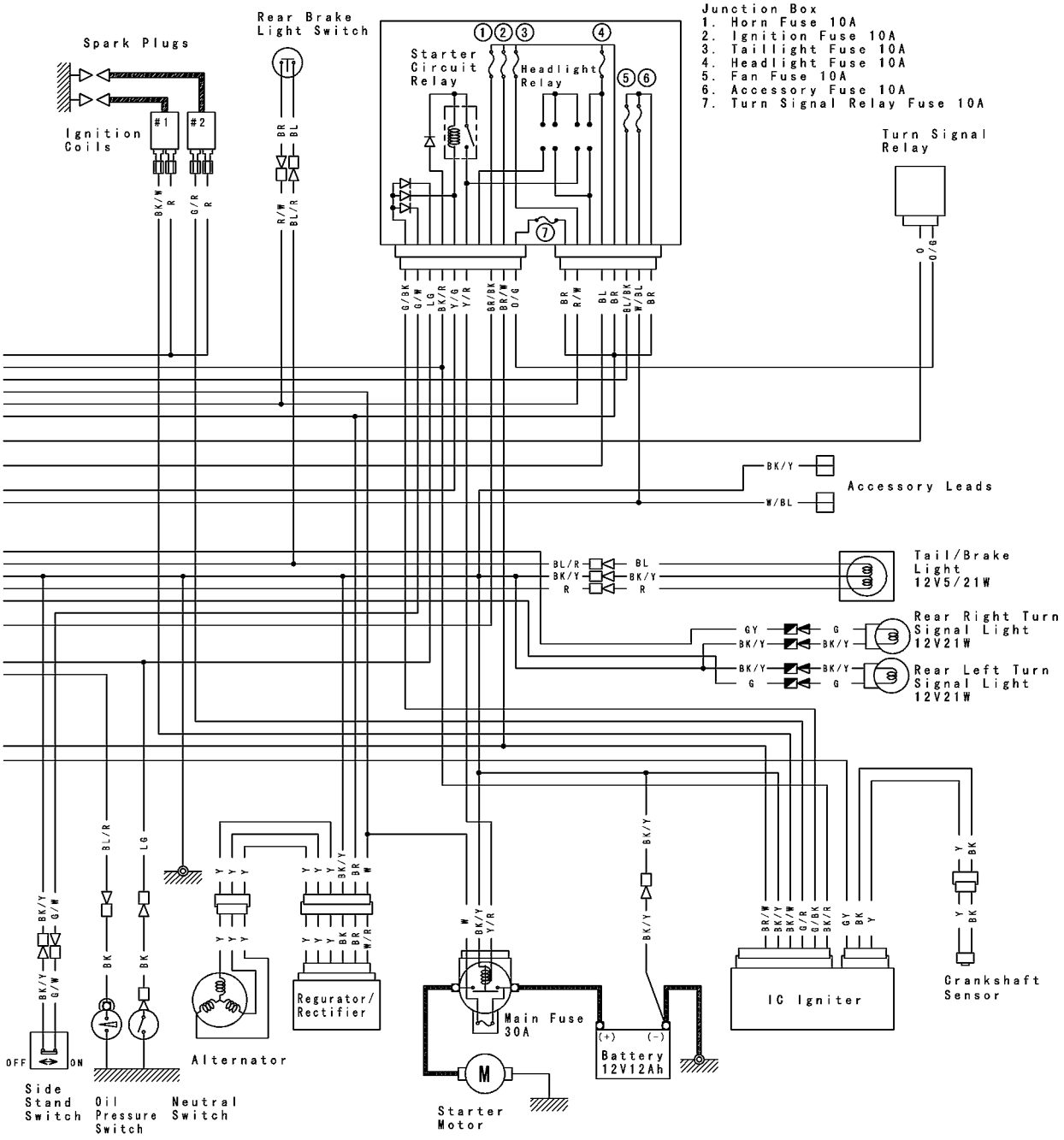

Color Code	
BK	Black
BL	Blue
BR	Brown
G	Green
GY	Gray
LB	Light Blue
LG	Light Green
O	Orange
P	Pink
PU	Purple
R	Red
W	White
Y	Yellow

RIGHT HANDLEBAR SWITCH CONNECTIONS													
Headlight Switch					Front Brake Light Switch			Engine Stop Switch			Starter Button		
Color	R/BL	R/W	BL/Y	BL	Color	BK	BK	Color	R	Y/R	Color	R	BK/R
OFF					Brake Lever			OFF			Push	○—●	
●	○—●				Pulled In	○—●					Released	——	
ON	○—●		○—●		Released			RUN	○—●				

(98051-1603A,1619A)

W1R1603AW5 C

Wiring Diagram (United States and Canada) EN500-C5 Model

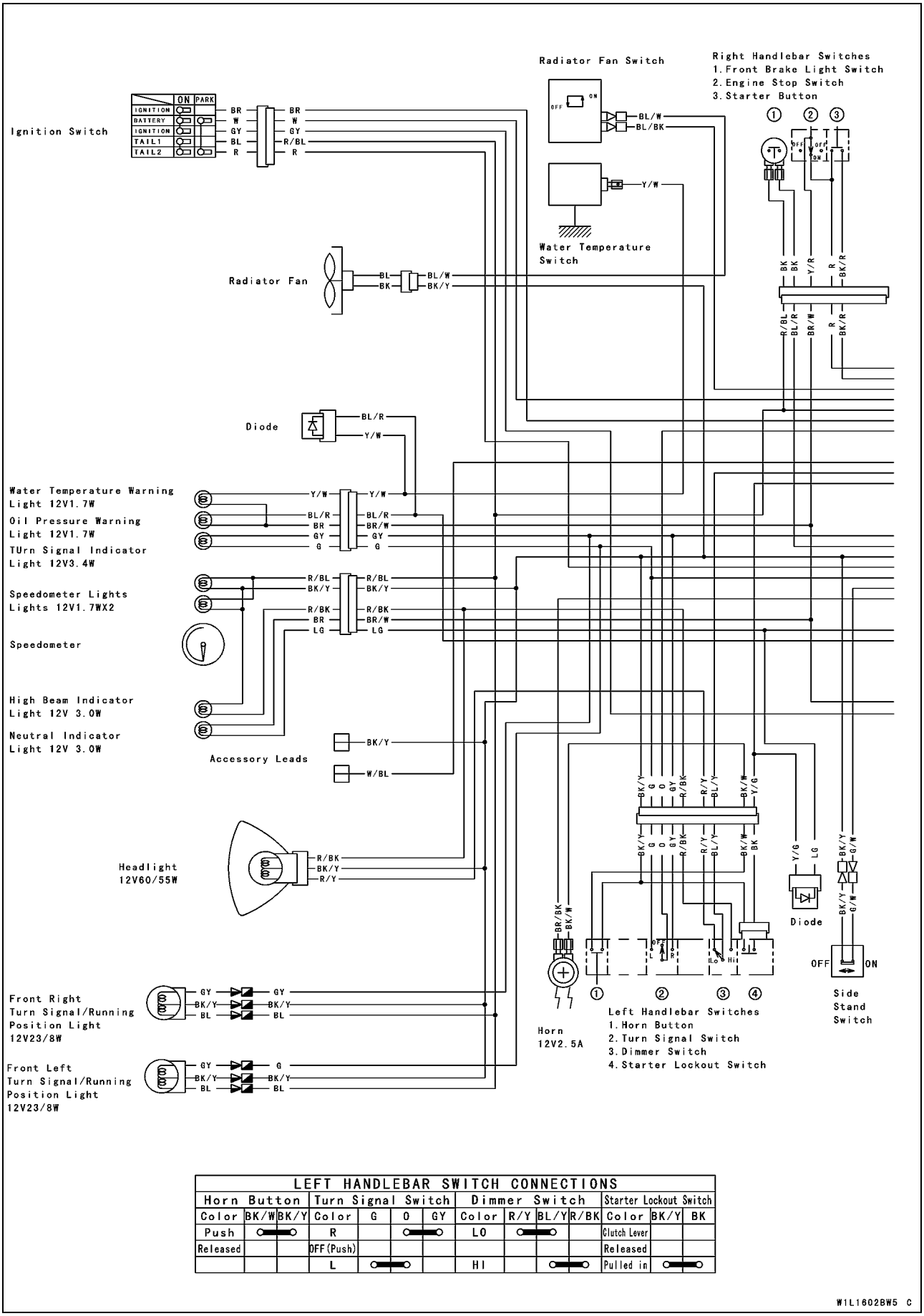

LEFT HANDLEBAR SWITCH CONNECTIONS												
Horn Button			Turn Signal Switch				Dimmer Switch				Starter Lockout Switch	
Color	BK/W	BK/Y	Color	G	O	GY	Color	R/Y	BL/Y	R/BK	Color	BK/Y	BK
Push	○	●	R		○	●	LO	○	●		Clutch Lever		
Released			OFF (Push)								Released		
			L	○	●		HI		○	●	Pulled in	○	●

Wiring Diagram (United States and Canada) EN500-C5 Model

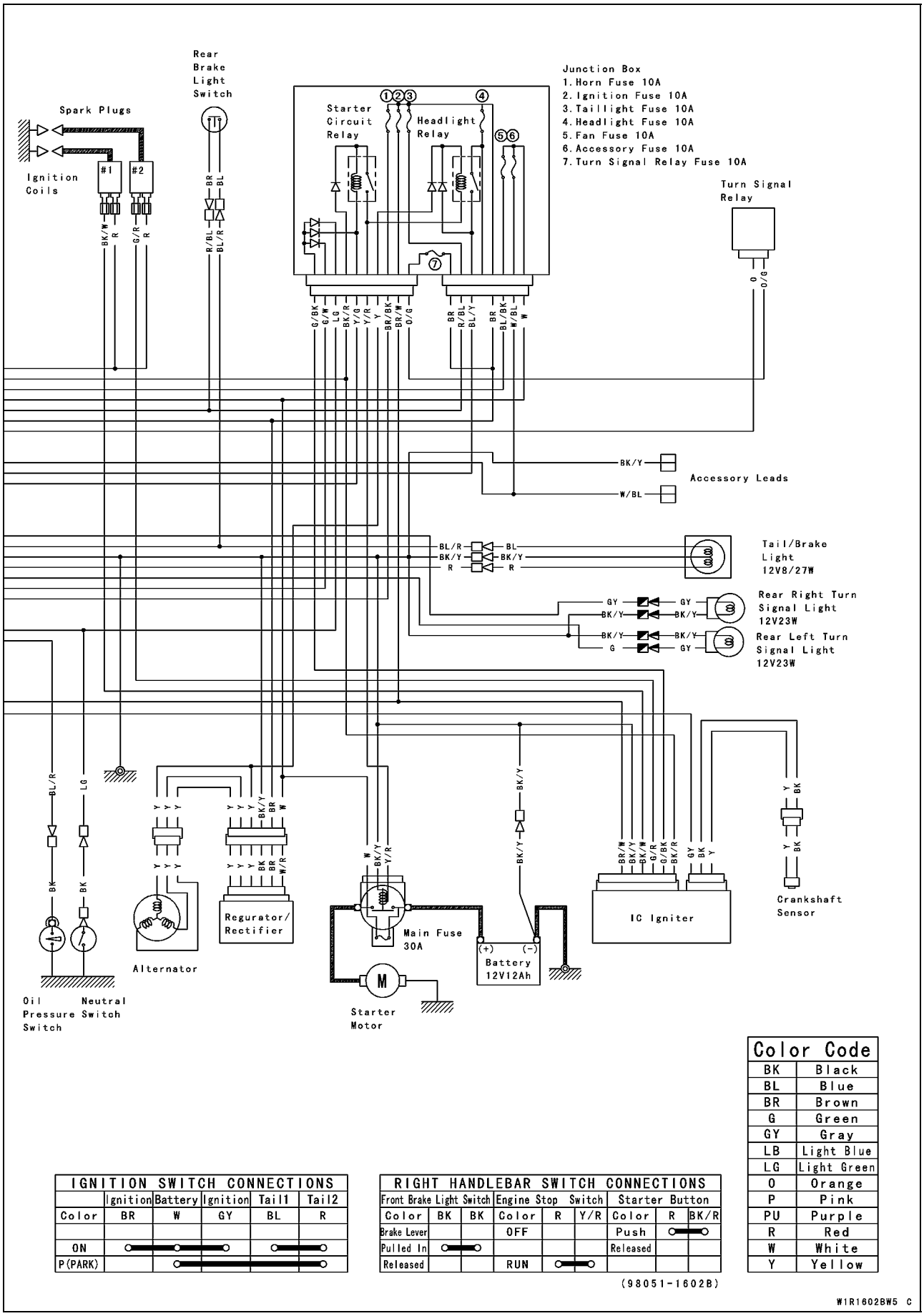

Color Code	
BK	Black
BL	Blue
BR	Brown
G	Green
GY	Gray
LB	Light Blue
LG	Light Green
O	Orange
P	Pink
PU	Purple
R	Red
W	White
Y	Yellow

IGNITION SWITCH CONNECTIONS

	Ignition	Battery	Ignition	Tail1	Tail2
Color	BR	W	GY	BL	R
ON	○	○	○	○	○
P(PARK)		○	○	○	○

RIGHT HANDLEBAR SWITCH CONNECTIONS

Front Brake Light Switch			Engine Stop Switch			Starter Button		
Color	BK	BK	Color	R	Y/R	Color	R	BK/R
Brake Lever			OFF			Push	○	○
Pulled In	○	○				Released		
Released			RUN	○	○			

(98051-1602B)

Wiring Diagram (Other than United States and Canada) EN500-C4 ~ C7 Model

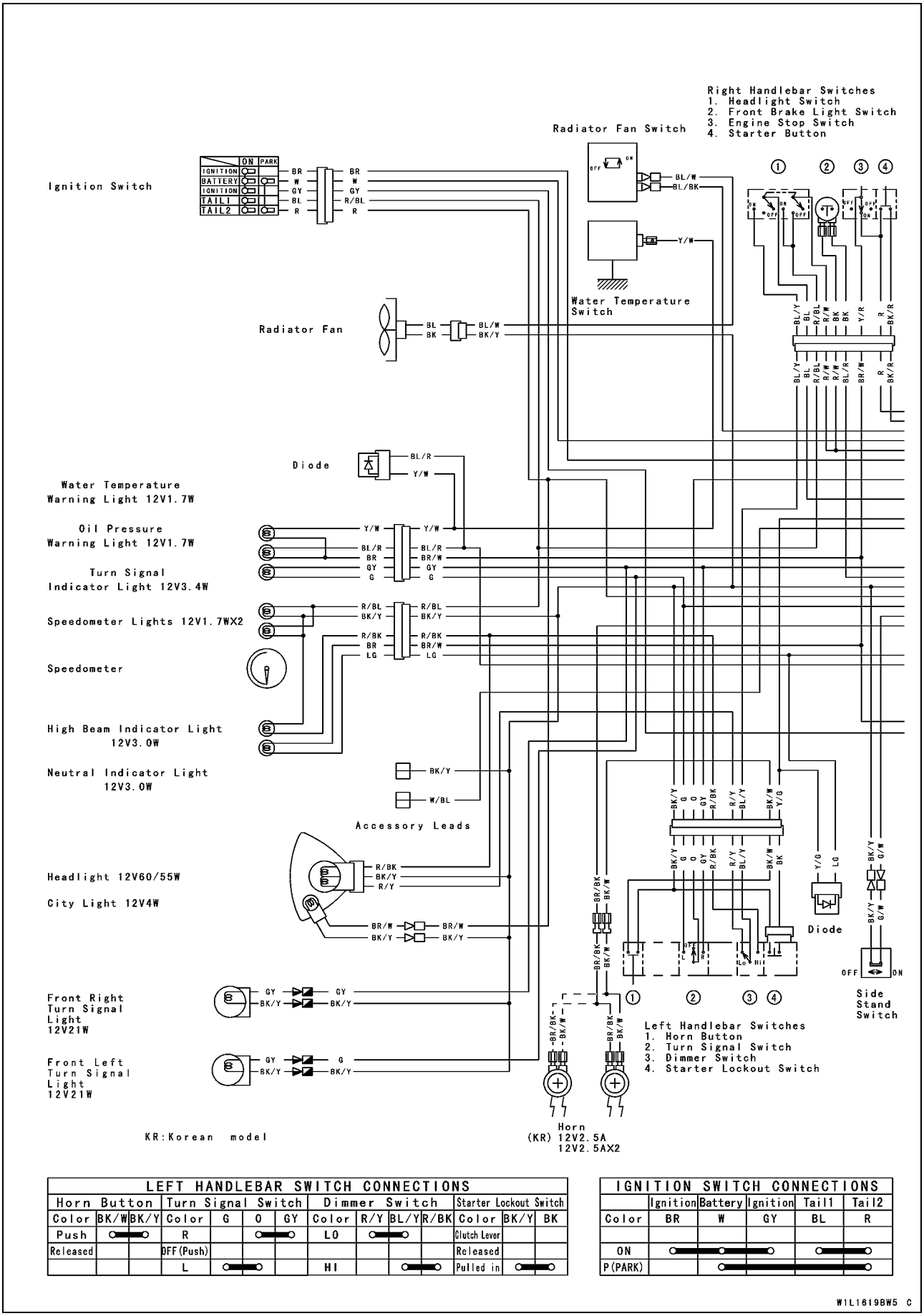

LEFT HANDLEBAR SWITCH CONNECTIONS												
Horn Button			Turn Signal Switch				Dimmer Switch				Starter Lockout Switch		
Color	BK/W	BK/Y	Color	G	O	GY	Color	R/Y	BL/Y	R/BK	Color	BK/Y	BK
Push	○	●	R		○	●	LO	○	●		Clutch Lever		
Released			OFF(Push)								Released		
			L	○	●		HI		○	●	Pulled in	○	●

IGNITION SWITCH CONNECTIONS					
	Ignition	Battery	Ignition	Tail1	Tail2
Color	BR	W	GY	BL	R
ON	○	●	○	○	●
P(PARK)		○	●		●

Wiring Diagram (Other than United States and Canada) EN500-C4 ~ C7 Model

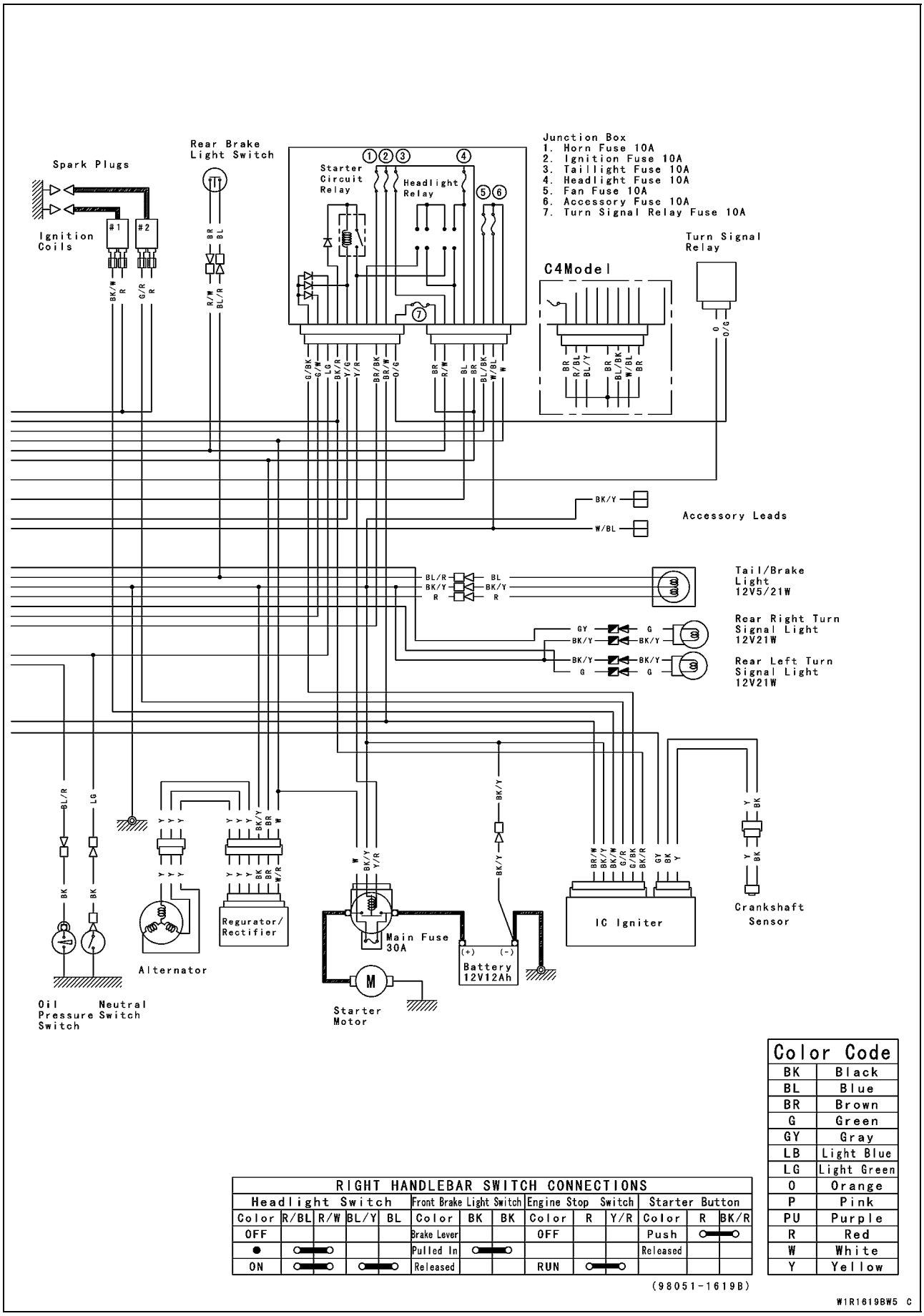

Color Code	
BK	Black
BL	Blue
BR	Brown
G	Green
GY	Gray
LB	Light Blue
LG	Light Green
O	Orange
P	Pink
PU	Purple
R	Red
W	White
Y	Yellow

RIGHT HANDLEBAR SWITCH CONNECTIONS													
Headlight Switch					Front Brake Light Switch			Engine Stop Switch			Starter Button		
Color	R/BL	R/W	BL/Y	BL	Color	BK	BK	Color	R	Y/R	Color	R	BK/R
OFF					Brake Lever			OFF			Push	○—○	
●	○—○				Pulled In	○—○					Released		
ON	○—○		○—○		Released			RUN	○—○				

(98051-1619B)

W1R1619BW5 C

Wiring Diagram (United States and Canada) EN500-C6 ~

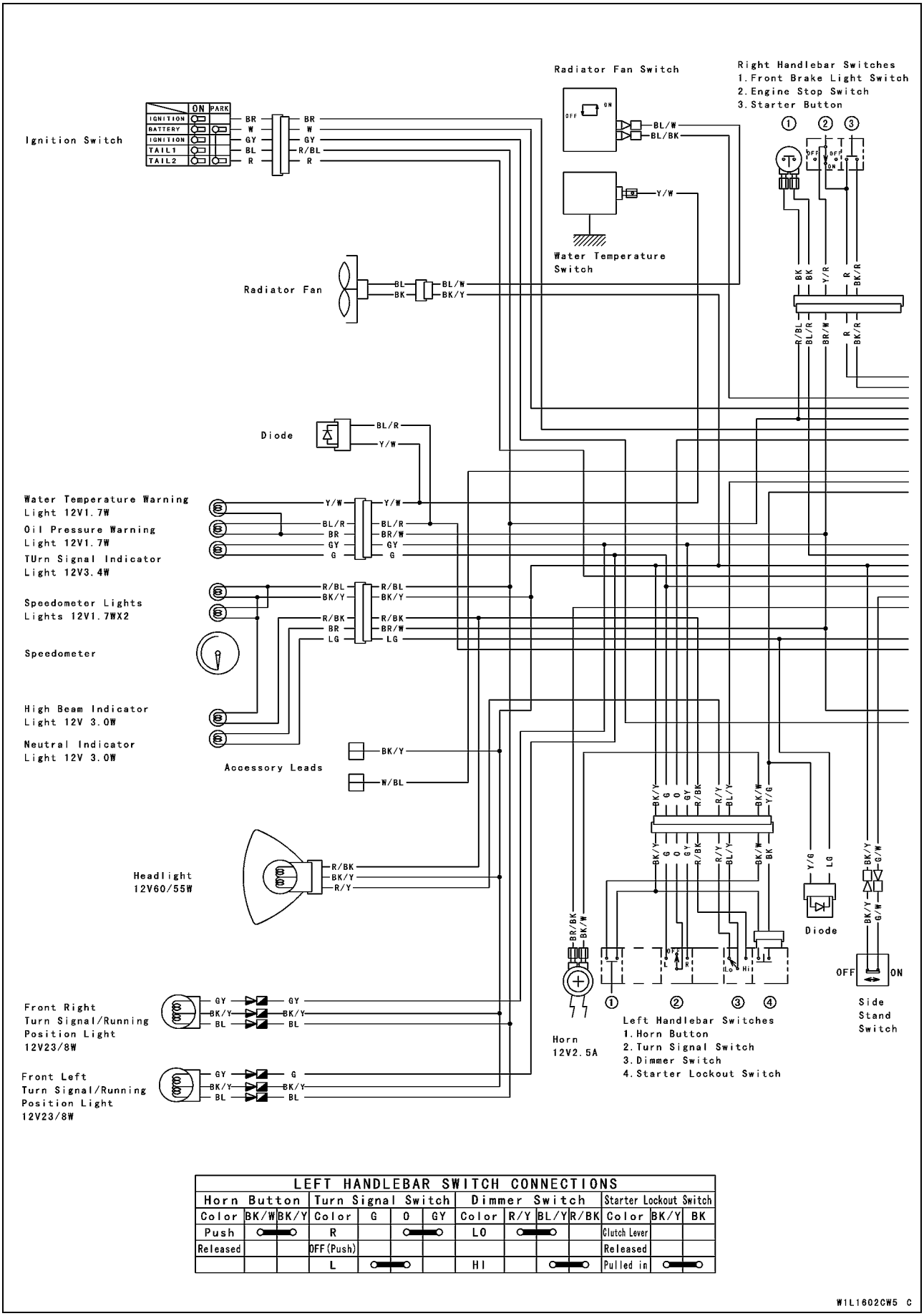

LEFT HANDLEBAR SWITCH CONNECTIONS													
Horn Button			Turn Signal Switch				Dimmer Switch				Starter Lockout Switch		
Color	BK/W	BK/Y	Color	G	O	GY	Color	R/Y	BL/Y	R/BK	Color	BK/Y	BK
Push	○	●	R		○	●	LO	○	●		Clutch Lever		
Released			OFF (Push)								Released		
			L	○	●		HI		○	●	Pulled in	○	●

Wiring Diagram (United States and Canada) EN500-C6 ~

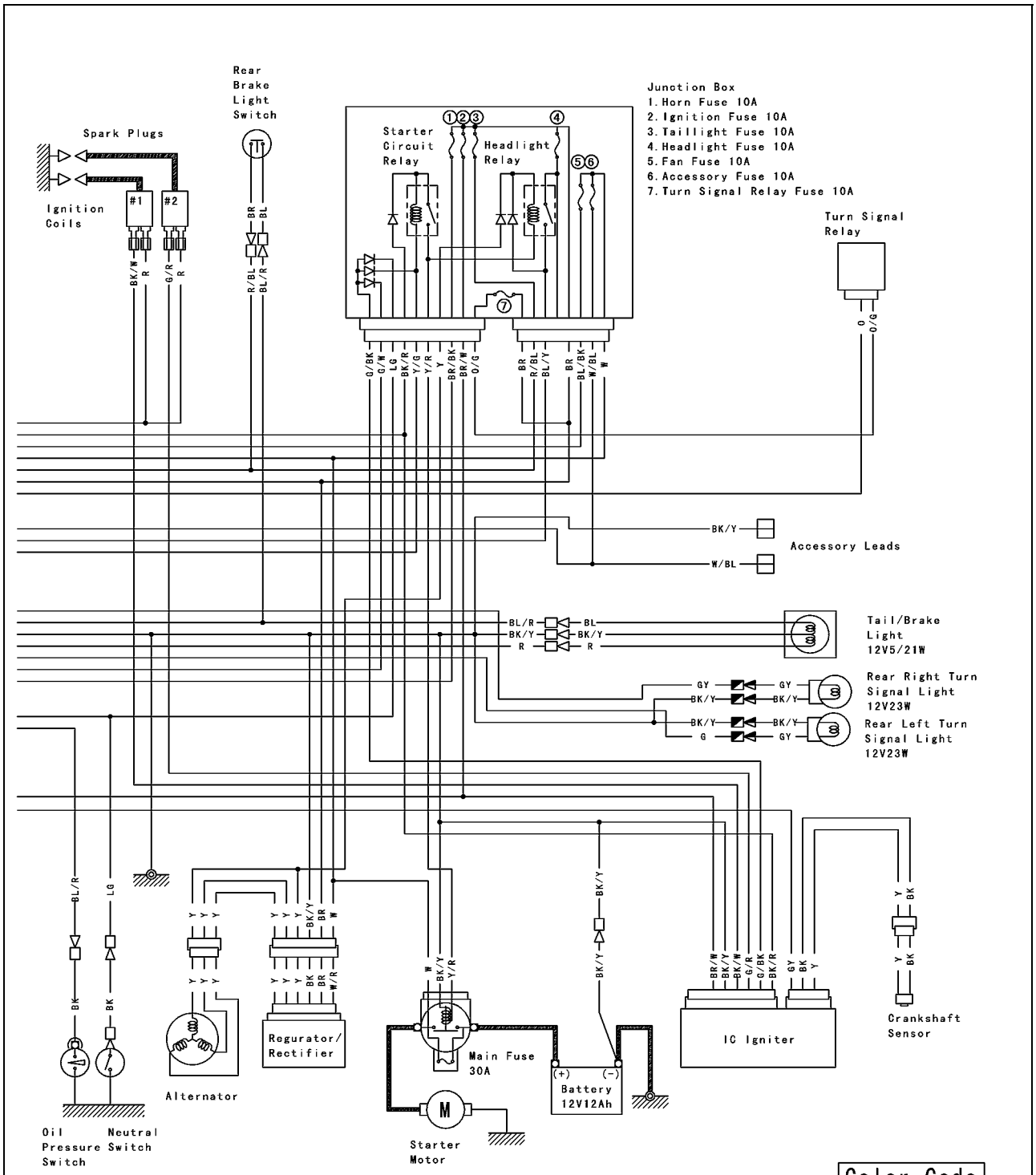

Color Code	
BK	Black
BL	Blue
BR	Brown
G	Green
GY	Gray
LB	Light Blue
LG	Light Green
O	Orange
P	Pink
PU	Purple
R	Red
W	White
Y	Yellow

IGNITION SWITCH CONNECTIONS

	Ignition	Battery	Ignition	Tail1	Tail2
Color	BR	W	GY	BL	R
ON	○	○	○	○	○
P(PARK)		○	○	○	○

RIGHT HANDLEBAR SWITCH CONNECTIONS

Front Brake Light Switch			Engine Stop Switch			Starter Button		
Color	BK	BK	Color	R	Y/R	Color	R	BK/R
Brake Lever			OFF			Push	○	○
Pulled In	○	○				Released		
Released			RUN	○	○			

(98051-1602C)

W1R1602CW5 C

Wiring Diagram (Other than United States and Canada) EN500-C8 ~

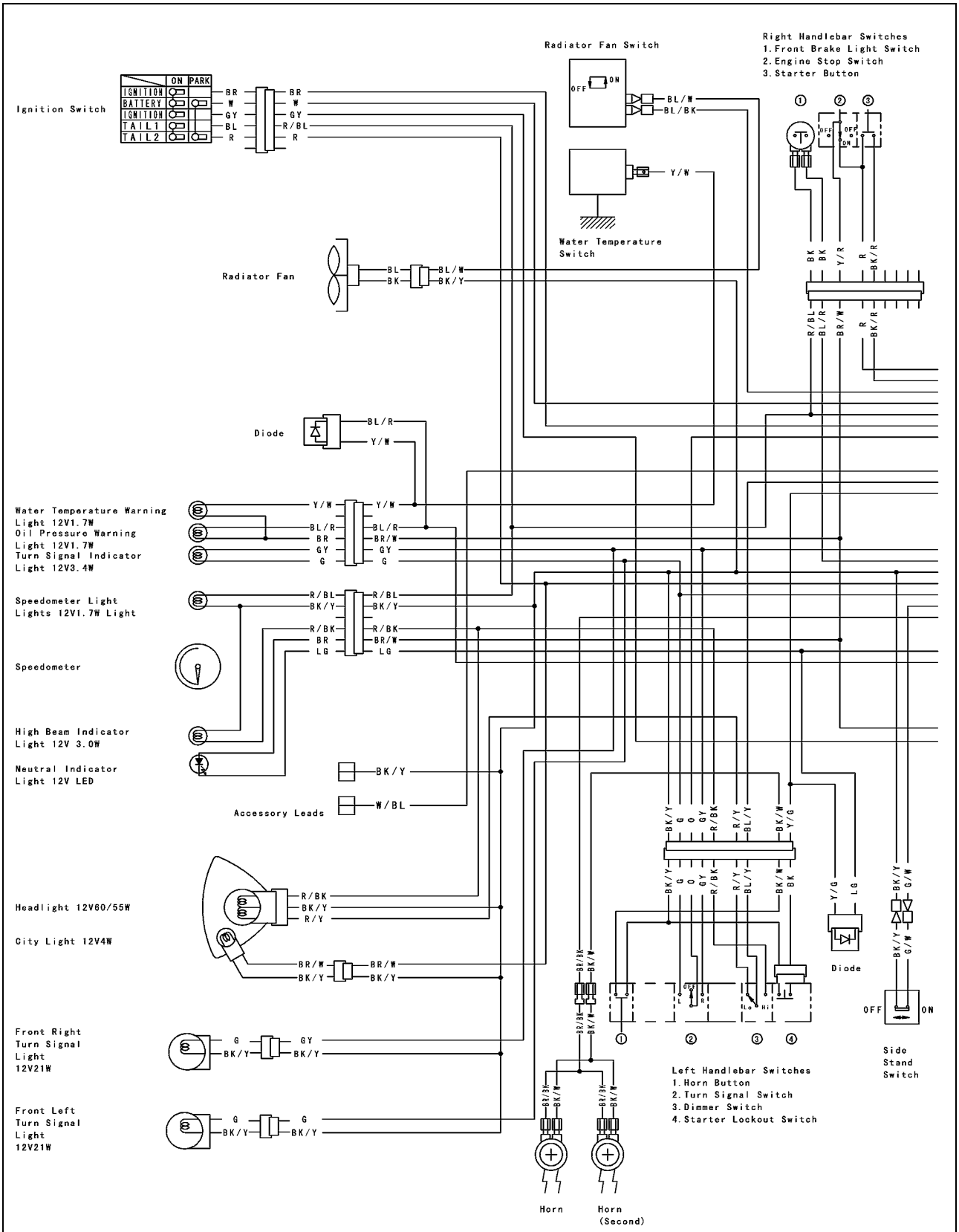

LEFT HANDLEBAR SWITCH CONNECTIONS													
Horn Button			Turn Signal Switch				Dimmer Switch				Starter Lockout Switch		
Color	BK/W	BK/Y	Color	G	O	GY	Color	R/Y	BL/Y	R/BK	Color	BK/Y	BK
Push	○—●		R		○—●		LO	○—●			Clutch Lever		
Released			OFF (Push)								Released		
			L	○—●			HI		○—●		Pulled in	○—●	

Wiring Diagram (Other than United States and Canada) EN500-C8 ~

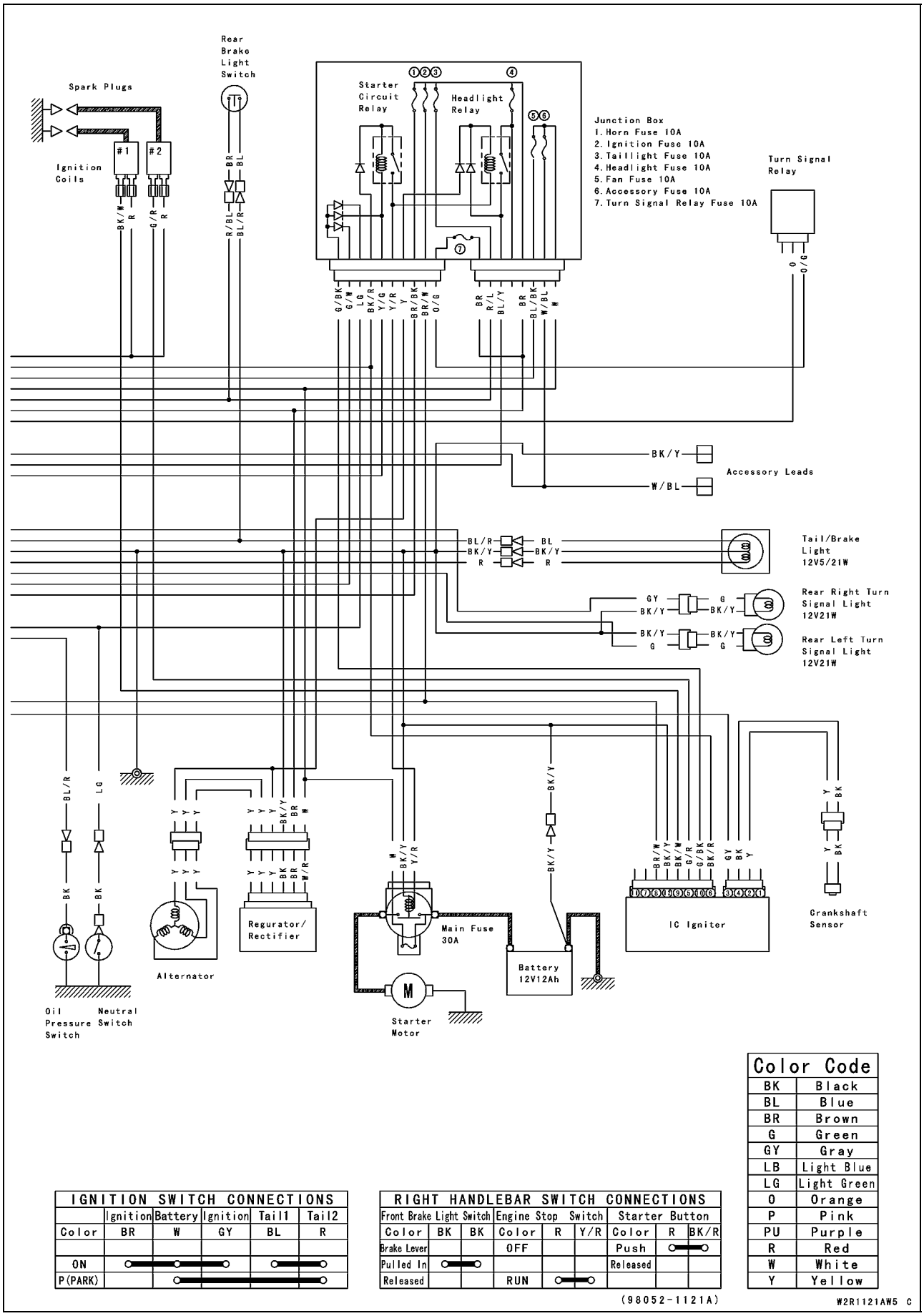

Color Code	
BK	Black
BL	Blue
BR	Brown
G	Green
GY	Gray
LB	Light Blue
LG	Light Green
O	Orange
P	Pink
PU	Purple
R	Red
W	White
Y	Yellow

IGNITION SWITCH CONNECTIONS

	Ignition	Battery	Ignition	Tail1	Tail2
Color	BR	W	GY	BL	R
ON	○——	——○——	——○	○——	——○
P(PARK)		○——	———	———	——○

RIGHT HANDLEBAR SWITCH CONNECTIONS

Front Brake Light Switch			Engine Stop Switch			Starter Button		
Color	BK	BK	Color	R	Y/R	Color	R	BK/R
Brake Lever			OFF			Push	○——	——○
Pulled In	○——	——○				Released		
Released			RUN	○——	——○			

(98052-1121A)

W2R1121AW5 C

Precautions

There are a number of important precautions that are musts when servicing electrical systems. Learn and observe all the rules below.

- Do not reverse the battery cable connections. This will burn out the diodes in the electrical parts.
- Always check battery condition before condemning other parts of an electrical system. A fully charged battery is a must for conducting accurate electrical system tests.
- The electrical parts should never be struck sharply, as with a hammer, or allowed to fall on a hard surface. Such a shock to the parts can damage them.
- To prevent damage to electrical parts, do not disconnect the battery cables or any other electrical connections when the ignition switch is on, or while the engine is running.
- Because of the large amount of current, never keep the starter button pushed when the starter motor will not turn over, or the current may burn out the starter motor windings.
- Do not use a meter illumination bulb rated for other than voltage or wattage specified in the wiring diagram, as the meter or gauge panel could be warped by excessive heat radiated from the bulb.
- Take care not to short the leads that are directly connected to the battery positive (+) terminal to the chassis ground.
- Troubles may involve one or in some cases all items. Never replace a defective part without determining what CAUSED the failure. If the failure was caused by some other item or items, they too must be repaired or replaced, or the new replacement will soon fail again.
- Make sure all connectors in the circuit are clean and tight, and examine wires for signs of burning, fraying, etc. Poor wires and bad connections will affect electrical system operation.
- Measure coil and winding resistance when the part is cold (at room temperature).
- Color Codes

BK: Black	G: Green	P: Pink
BL: Blue	GY: Gray	PU: Purple
BR: Brown	LB: Light blue	R: Red
CH: Chocolate	LG: Light green	W: White
DG: Dark green	O: Orange	Y: Yellow

Precautions

○Electrical Connectors

Connectors [A]

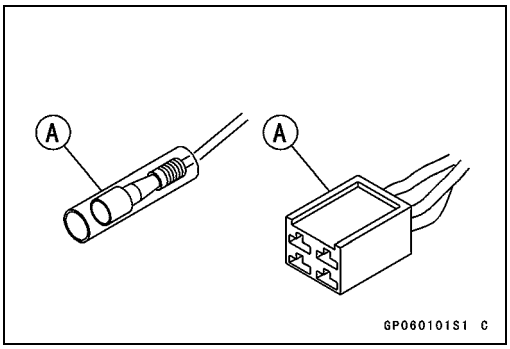

Connectors [B]

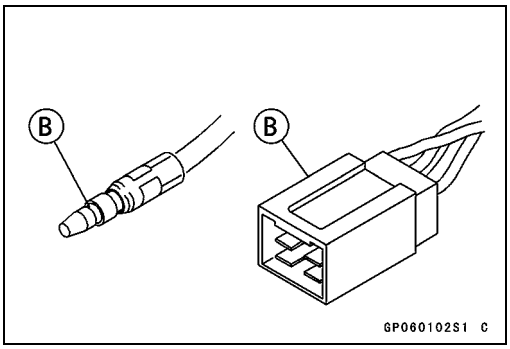

Electrical Wiring

Wiring Inspection

- Visually inspect the wiring for signs of burning, fraying, etc.

★If any wiring is in poor condition, replace the damaged wiring.

- Pull each connector [A] apart and inspect it for corrosion, dirt, and damage.

★If the connector is corroded or dirty, clean it carefully. If it is damaged, replace it.

- Check the wiring for continuity.

○Use the wiring diagram to find the ends of the lead which is suspected of being a problem.

○Connect an ohmmeter between the ends of the leads.

○Set the meter to the × 1 Ω range, and read the meter.

★If the meter does not read 0 Ω, the lead is defective. Replace the lead or the wiring harness [B] if necessary.

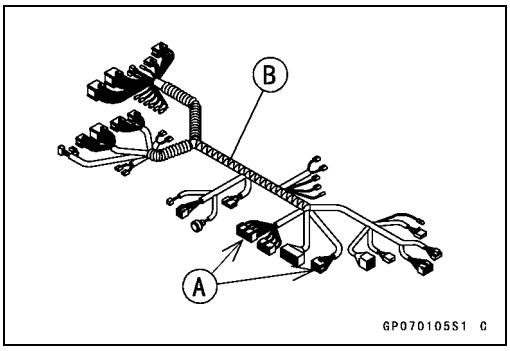

Battery

Precautions:

Following a few simple rules will greatly extend the life of the battery.

○When the level of the electrolyte in the battery is low, add only distilled water to each cell until the level is at the upper level line marked on the outside of the battery. Ordinary tap water is not a substitute for distilled water and will shorten the life of the battery.

○Never add sulphuric acid solution to the battery. This will make the electrolyte solution too strong and will ruin the battery within a very short time.

○Avoid quick-charging the battery. A quick-charge will damage the battery plates.

○Never let a good battery stand for more than 30 days without giving it a supplemental charge, and never let a discharged battery stand without charging it. If a battery stands for any length of time, it slowly self-discharges. Once it is discharged, the plates sulphate (turn white), and the battery will no longer take a charge.

○Keep the battery well-charged during cold weather so that the electrolyte does not freeze and crack open the battery. The more discharged the battery becomes, the more easily it freezes.

○Always keep the battery vent hose free of obstruction, and make sure it does not get pinched, crimped, or melted shut by contact with the hot muffler. If battery gases cannot escape through this hose, they will explode the battery.

○DON'T INSTALL THE BATTERY BACKWARDS. The negative side is grounded.

Electrolyte Level Inspection

- Remove the battery.
- Visually check the electrolyte level in the battery.

★If the level line of electrolyte in any cell is below the lower level line [A], add only distilled water to the cell until the level is at the upper level line [B].

- Install the battery.

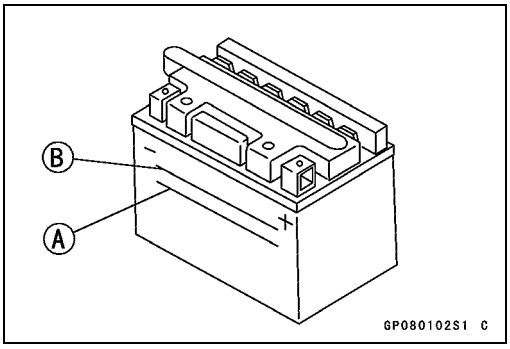

CAUTION
Ordinary tap water is not a substitute for distilled water and will shorten the life of the battery.

Battery Condition

- Before charging, check the battery condition by testing the specific gravity of the electrolyte in each cell.

○Draw a little fluid from the cell with a hydrometer.

○Read the level [B] of the electrolyte on the floating scale [A]. This is the specific gravity of the electrolyte.

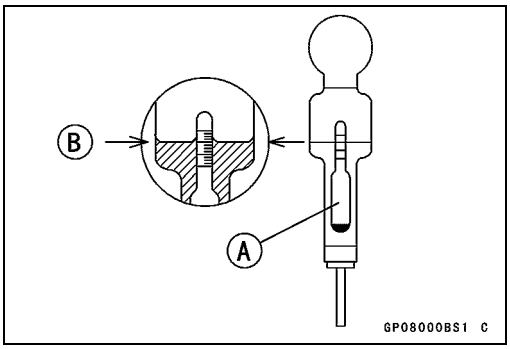

- Look for sediment [A] and white sulfation [B] inside the cells on the bottom of the plates.

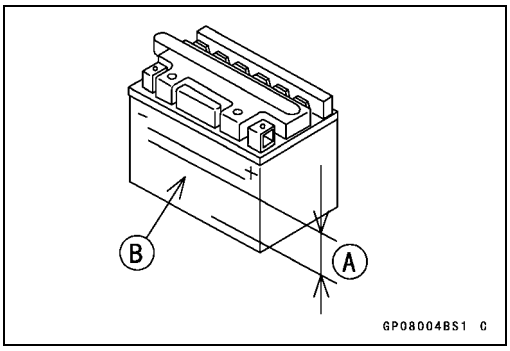

- See the Battery Troubleshooting Guide in Battery Test Charging.

★If the specific gravity is below 1.200, the battery needs to be charged.

NOTE

○*The specific gravity of the electrolyte varies with changes in temperature, so the specific gravity reading must be corrected for the temperature of the electrolyte.*

○*Celsius: Add 0.007 points to reading for each 10°C above 20°C or subtract 0.007 points for each 10°C below 20°C.*

○*Fahrenheit: Add 0.004 points to reading for each 10°F above 68°F or subtract 0.004 points for each 10°F below 68°F.*

★If the specific gravity of any of the cells is more than 0.050 away from any other reading, the battery will probably not accept a charge. It is generally best to replace a battery in this condition.

★If the specific gravity of all the cells is 1.230 or more, the battery is fully charged.

Battery Initial Charging

Before being placed in service, a new battery should be given an initial charging.

- Cut off the sealed end of the battery vent hose and remove the filler caps.
- Fill each cell to the upper level line on the battery case with fresh electrolyte at a temperature of 30°C (86°F) or less. Let the battery stand for about 30 minutes before charging.

Battery

NOTE

○*If the electrolyte level drops, add electrolyte to the upper level line before charging.*

- Leaving the caps off the cells, connect the battery to a charger, set the charging rate at 1/10 of the battery capacity, and charge it for 10 hours. For example, if the battery is rated at 12 Ah, the charging rate would be 1.2 Ah.

⚠ WARNING

Keep the battery away from sparks and open flames during charging, since the battery gives off an explosive gas mixture of hydrogen and oxygen. When using a battery charger, connect the battery to the charger before turning on the charger. This procedure prevents sparks at the battery terminals which could ignite any battery gases.

CAUTION

If the battery is not given a full initial charging, it will discharge in a few weeks and will not recover fully even with supplemental charging. After that it can not be charged by supplement charging. Do not use a high rate battery charger as is typically employed at automotive service stations, unless the charging rate can be reduced to the level required. Charging the battery at a rate higher than specified may ruin the battery. Charging at a high rate causes excess heat which can warp the plates and cause internal shorting. Higher-than-normal charging rates also cause the plates to shed active material. Deposits will accumulate, and can cause internal shorting.
If the temperature of the electrolyte rises above 45°C (115°F) during charging, reduce the charging rate to lower the temperature, and increase charging time proportionately.

- Turn the charger off, then disconnect it from the battery.
- Check battery voltage. Battery voltage should be 12 ~ 13 V.
- Check the specific gravity of each cell with a hydrometer (see Battery Condition).

★If the voltmeter or hydrometer readings are below those specified, additional charging is necessary before the battery can be installed.

Battery

Battery Ordinary Charging

- Remove the battery from motorcycle.

CAUTION

Always remove the battery from the motorcycle for changing. If the battery is charged while still installed, battery electrolyte may spill and corrode the frame or other parts of the motorcycle.

- Clean off the battery using a baking soda-and-water solution.
  - ○Mix one heaping tablespoon of baking soda in one cup of water.
  - ○Be careful not to get any of the cleaning solution in the battery.
  - ○The terminals must be especially clean.
- If any of the cells are low, fill them to the LOWER level line with distilled water only. The electrolyte will expand during charging, and the level will rise.
- Connect a charger to the battery BEFORE turning it on.

⚠ WARNING

Keep the battery away from sparks and open flames during charging, since the battery gives off an explosive gas mixture of hydrogen and oxygen. When using a battery charger, connect the battery to the charger before turning on the charger. This procedure prevents sparks at the battery terminals which could ignite any battery gases.

- Set the charging rate and time according to the battery condition previously determined (see Battery Condition), using the table.

CAUTION

Do not use a high rate battery charger as is typically employed at automotive service stations, unless the charger rate can be reduced to the level required. Charging the battery at a rate higher than specified may ruin the battery. Charging at a high rate causes excess heat which can warp the plates and cause internal shorting. Higher-than-normal charging rates also cause the plates to shed active material. Deposits will accumulate, and can cause internal shorting.
If the temperature of the electrolyte rises above 45°C (115°F) during charging, reduce the charging rate to lower the temperature, and increase charging time proportionately.

- Turn the charger off then disconnect it from the battery.
- Check battery condition (See Battery Condition).

★If the battery condition indicates that it is not fully charged, additional charging is necessary.

Battery

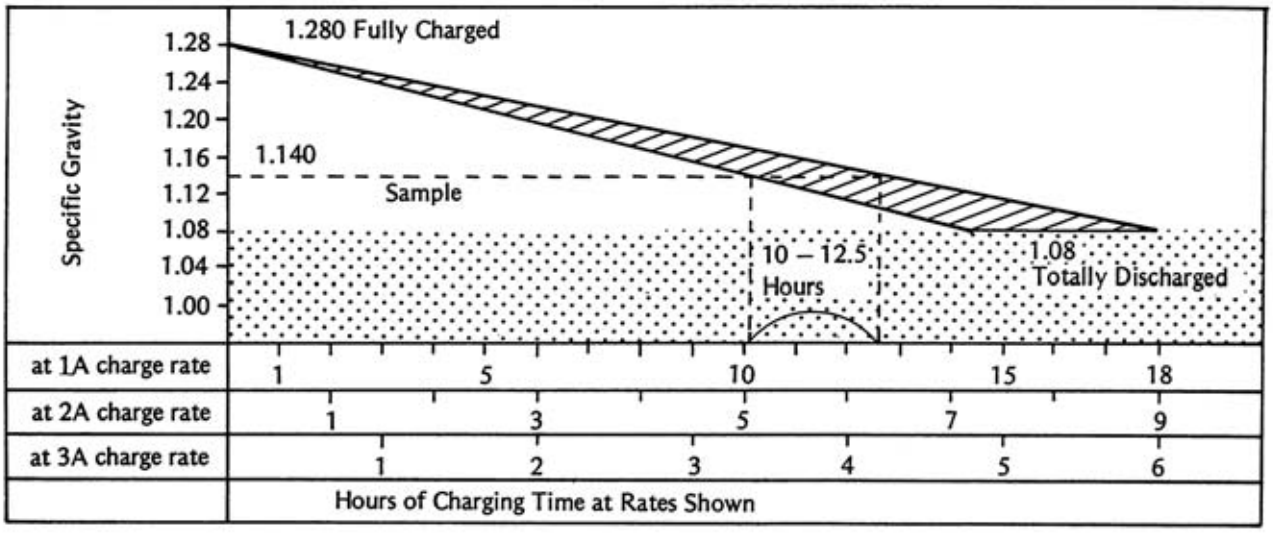

GP08015B S

Battery Test Charging

- If the battery is suspected of being defective, sulfated, or unable to take a charge, consult the table.
- To test charge a battery, perform the ordinary charging procedure and monitor the battery voltage and other signs as mentioned below.

★If the battery voltage suddenly jumps to over 13 V just after the start of charging, the plates are probably sulfated. A good battery will rise to 12 V immediately and then gradually go up to 12.5 or 13 V in about 30 minutes to an hour after the start of charging.

★If one cell produces no gas bubbles or has a very low specific gravity, it is probably shorted.

★If there does not appear to be enough sediment in a cell to short the plates, but that cell has a very low specific gravity after the battery is fully charged, the trouble may be that there is not enough acid in that one cell. In this case only, sulfuric acid solution may be added to correct the specific gravity.

★If a fully charged battery not in use loses its charge after 2 to 7 days, or if the specific gravity drops markedly, the battery is defective. The self-discharge rate of a good battery is only about 1% per day.

Battery

Battery Troubleshooting Guide

	Good Battery	Suspect Battery	Action
Plates	(+) chocolate color (−) gray color	white (sulphated); + plates broken or corroded	Replace
Sediment	none, or small amount	sediment up to plates, causing short	Replace
Voltage	above 12 V	below 12 V	test charge
Electrolyte Level	above plates	below top of plates	Fill and test charge
Specific Gravity	above 1.200 in all cells; no two cells more than 0.020 different	below 1.100, or difference of more than 0.020 between two cells	Test charge

Charging System

Alternator Rotor/Starter Clutch Removal

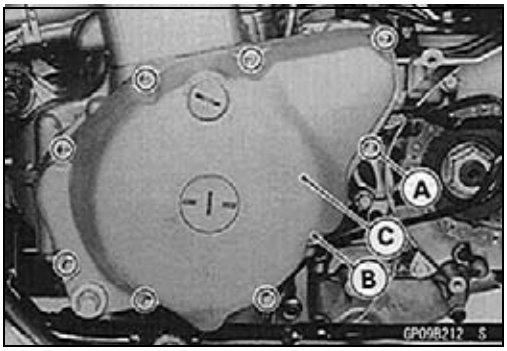

- Remove the engine sprocket cover (see Engine Sprocket Removal in the Final Drive chapter).
- Loosen the left footpeg mounting bolt and let the footpeg hang down.
- Remove the shift pedal.
- Remove the circlip and washer from the shift shaft.
- Remove the left side cover.
- Slide the air cleaner housing.
- Disconnect the alternator lead connectors.
- Place an oil pan beneath the alternator cover.
- Remove the alternator cover bolts [A], Allen bolt [B] and pull off the alternator cover [C] and gasket. There are two knock pins in the cover mating surface.

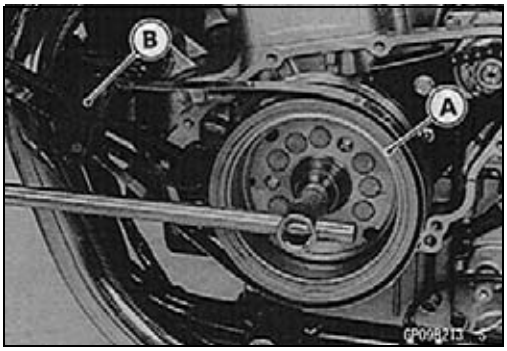

- Hold the alternator rotor [A] steady with the flywheel holder [B], and remove the rotor bolt.

  Special Tool - Flywheel Holder: 57001-1313

NOTE

○*The rotor bolt has left-handed threads, therefore it must be turned clockwise in removing.*

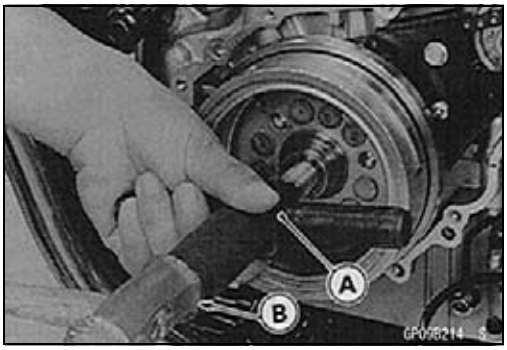

- Using the rotor puller [A], remove the alternator rotor and starter clutch assembly from the crankshaft. There is a spacer between the starter clutch sprocket and the alternator rotor. The woodruff key may come out with the alternator rotor and starter clutch assembly.

  Special Tool - Rotor Puller, M16/M18/M20/M22 × 1.5: 57001-1216

CAUTION

If the rotor is difficult to remove, turn the puller shaft using a wrench while tapping [B] the head of the puller shaft with a hammer. Do not attempt to strike the grab bar or the alternator rotor itself. Striking the bar or the rotor can cause the bar to bend or the magnets to lose their magnetism.

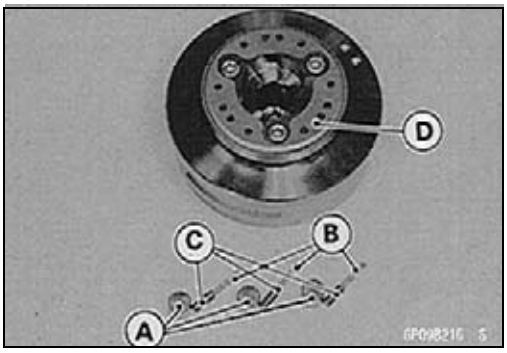

- Remove the rollers [A], springs [B], and spring caps [C] from the starter clutch [D].

- Holding the rotor [A] steady, remove the Allen bolts [B] to separate the rotor and starter clutch [C].

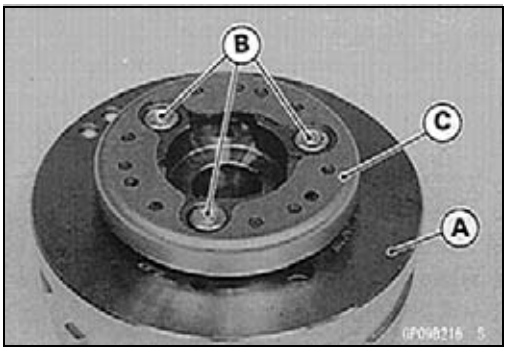

Alternator Rotor/Starter Clutch Installation

- Apply a non-permanent locking agent to the threads of the starter clutch Allen bolts, and tighten them to the specified torque in assembling the starter clutch onto the alternator rotor.

  Torque - Starter Clutch Allen Bolts: 34 N·m (3.5 kgf·m, 25 ft·lb)

○Be careful that the rollers do not drop out of the starter clutch during assembly.

- Using a high-flash point solvent, clean off any oil or dirt that may be on the crankshaft taper [A] and rotor tapered hole [B].
- Fit the woodruff key securely in the slot [C] in the crankshaft before installing the rotor assembly on the crankshaft.
- Tighten the rotor bolt while holding the rotor steady with the flywheel holder, and turn the rotor bolt counterclockwise to install it.

  Torque - Alternator Rotor Bolt: 69 N·m (7.0 kgf·m, 51 ft·lb)

  Special Tool - Flywheel Holder: 57001-1313

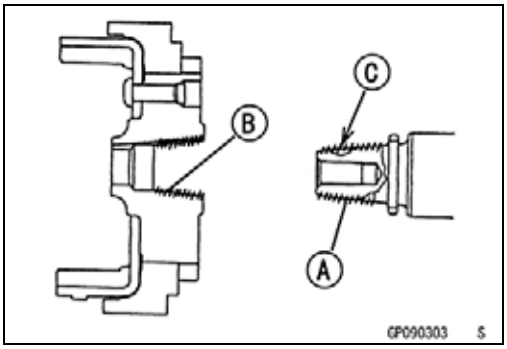

- Apply silicone sealant to the area [A] where the mating surface ends of the crankcase touch the alternator cover gasket.
- Apply silicone sealant around the circumference of the wiring grommets before setting it in the notch in the alternator cover.
- Check that knock pins [B] are in place on the crankcase.

  Sealant - Kawasaki Bond (Silicone Sealant): 56019-120

- Tighten the alternator cover Allen bolt and bolts.

  Torque - Alternator Cover Allen Bolt: 13 N·m (1.3 kgf·m, 113 in·lb)
  Alternator Cover Bolts: 11 N·m (1.1 kgf·m, 95 in·lb)

- Check the engine oil level, and add if necessary (see Engine Oil Level Inspection in the Engine Lubrication System chapter).

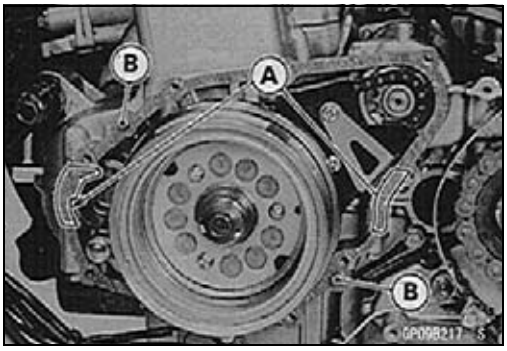

Charging System

Alternator Stator Removal

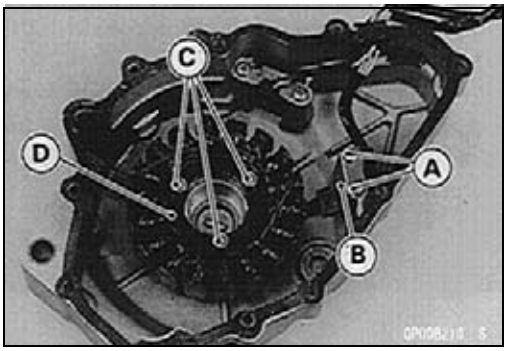

NOTE

○*To keep the loss of engine oil to a minimum, set the motorcycle vertically.*

- Remove the alternator cover (see Alternator Rotor and Starter Clutch Removal).
- Remove the screws [A] and the holding plate [B] for the stator wiring.
- Unscrew the Allen bolts [C] and remove the stator [D].
- Remove the grommet for the crankshaft sensor lead.

Alternator Stator Installation

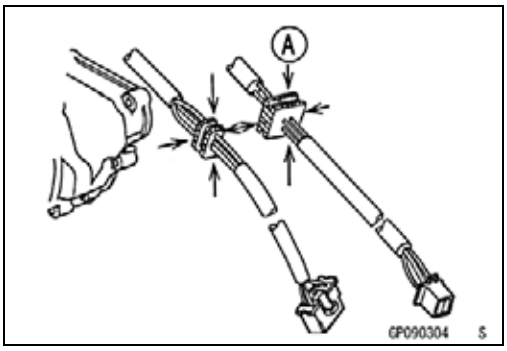

- Apply silicone sealant [A] around the circumference of the wiring grommets before setting them in the notch in the alternator cover.

  Sealant - Kawasaki Bond (Silicone Sealant): 56019-120

- Install the grommet for the stator wiring and crankshaft sensor lead in this order.

CAUTION

The stator wiring has to be installed along the alternator cover without rising away from its surface. If the wires touch the rotor, they will be damaged.

- Tighten the Allen bolts.

  Torque - Alternator Stator Allen Bolts: 12 N·m (1.2 kgf·m, 104 in·lb)
  Alternator Lead Clamp Screws: 2.9 N·m (0.30 kgf·m, 26 in·lb)

Regulator/Rectifier Removal

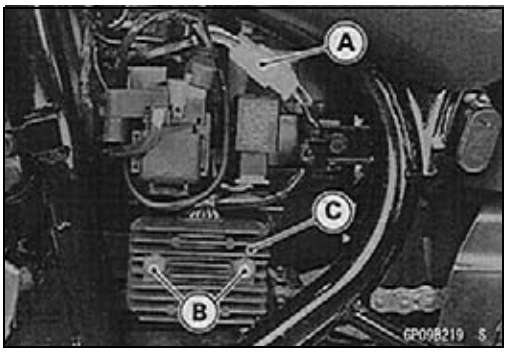

- Remove the left side cover (see Left Side Cover Removal in the Frame chapter).
- Disconnect the connector [A].
- Unscrew the mounting bolts [B] and remove the regulator/rectifier [C].

Regulator/Rectifier Output Voltage Inspection

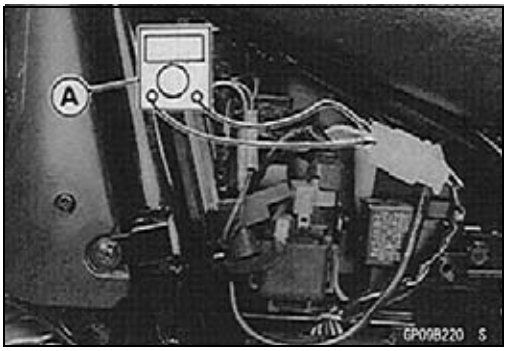

- Check the battery condition (see Battery Condition).
- Warm up the engine to obtain actual alternator operating conditions.
- Remove the left side cover (see Left Side Cover Removal in the Frame chapter).
- Check that the ignition switch is turned off, and connect the hand tester [A] as shown in the table.

- Start the engine, and note the voltage readings at various engine speeds with the headlight turned on and then turned off. (To turn off the headlight of United States and Canada models disconnect the headlight connector). The readings should show nearly battery voltage when the engine speed is low, and, as the engine speed rises, the readings should also rise. But they must be kept under the specified voltage.

Regulator/Rectifier Output Voltage

Meter Range	Connectings		Reading
	Tester (+) to	Tester (−) to	
25 V DC	White	Black/yellow	Battery Voltage 14 ~ 15 V

- Turn off the ignition switch to stop the engine, and disconnect the hand tester.

★If the regulator/rectifier output voltage is kept between the values given in the table, the charging system is considered to be working normally.

★If the output voltage is much higher than the values specified in the table, the regulator/rectifier is defective or the regulator/rectifier leads are loose or open.

★If the battery voltage does not rise as the engine speed increases, the regulator/rectifier is defective or the alternator output is insufficient for the loads. Check the alternator and regulator/rectifier to determine which part is defective.

Charging System

Alternator Inspection

There are three types of alternator failures: short, open (wire burned out), or loss in rotor magnetism. A short or open in one of the coil wires will result in either a low output or no output at all. A loss in rotor magnetism, which may be caused by dropping or hitting the alternator, by leaving it near an electromagnetic field, or just by aging, will result in low output.

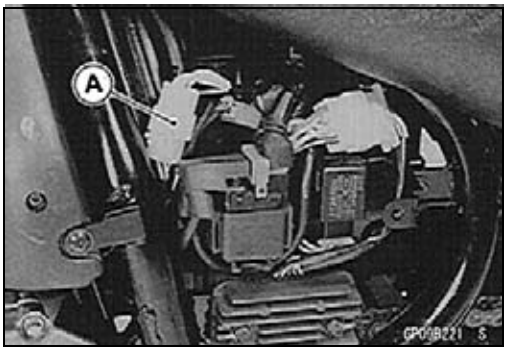

- To check the alternator output voltage, do the following procedures. Refer to the appropriate chapters and Charging System Wiring Diagram.

○Turn off the ignition switch.
○Remove the left side cover.
○Disconnect the alternator lead connector [A].
○Connect the hand tester as shown in the table 1.

Special Tool - Hand Tester: 57001-1394

○Start the engine.
○Run it at the rpm given in the table 1.
○Note the voltage readings (total 3 measurements).

Table 1 Alternator Output Voltage

Tester Range	Connectings		Reading @4 000 rpm
	Tester (+) to	Tester (−) to	
250 V AC	One yellow lead	Another yellow lead	About 60 V

★If the output voltage shows the value in the table 1, the alternator operates properly and the regulator/rectifier is damaged. A much lower reading than that given in the table indicates that the alternator is defective.

- Check the stator coil resistance as follows:

○Stop the engine.
○Connect the hand tester as shown in the table 2.
○Note the readings (total 3 measurements).

Table 2 Stator Coil Resistance

Tester Range	Connectings		Reading
	Tester (+) to	Tester (−) to	
× 1 Ω	One yellow lead (Connector 3)	Another yellow lead (Connector 3)	0.3 ~ 0.6 Ω

★If there is more resistance than shown in the table, or no meter reading (infinity) for any two leads, the stator has an open lead and must be replaced. Much less than this resistance means the stator is shorted, and must be replaced.

- Using the highest resistance range of the hand tester, measure the resistance between each of the yellow leads and chassis ground. Any hand tester reading less than infinity (∞) indicates a short, necessitating stator replacement.

★If the stator coil has normal resistance, but the voltage check shows the alternator to be defective; then the rotor magnets have probably weakened, and the rotor must be replaced.

Rectifier Inspection

- Check the diode resistance as follows. Refer to the appropriate chapters and Charging System Wiring Diagram.
- Turn off the ignition switch.
- Remove the left side cover (see Left Side Cover Removal in the Frame chapter).
- Disconnect the regulator/rectifier lead connector [A].
- Using the 1 kΩ range, check the resistance in both directions between the white/red lead and each yellow lead (in the 6-pin connector which leads to the alternator), and between the black lead and each yellow lead. There is a total of 12 measurements.

★The resistance should be low in one direction and more than ten times as much in the other direction. If any two leads are low or high in both directions, the rectifier is defective and must be replaced.

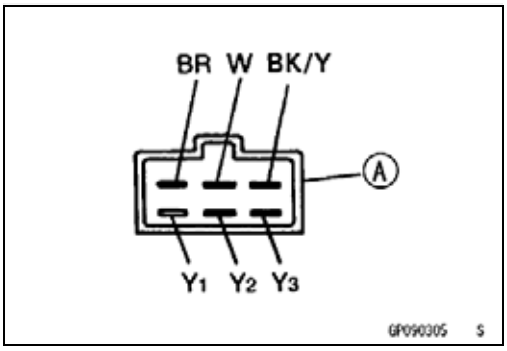

NOTE

○*The actual meter reading varies with the meter used and the individual rectifier, but, generally speaking, the lower reading should be from zero to one half the scale.*

Regulator Inspection

To test the regulator out of circuit, use three 12 V batteries and a test light (12 V 3 ~ 6 W bulb in a socket with leads).

CAUTION

The test light works as an indicator and also a current limiter to protect the regulator/rectifier from excessive current. Do not use an ammeter instead of a test light.

- Check to be sure the rectifier circuit is normal before continuing.
- Remove the regulator/rectifier (see Regulator/Rectifier Removal).

Regulator Circuit Test-1st Step:

- Connect the test light and the 12 V battery to the regulator/rectifier as shown.
- Check Y1, Y2, and Y3 terminals respectively.

★If the test light turns on, the regulator/rectifier is defective. Replace it.

★If the test light does not turn on, continue the test.

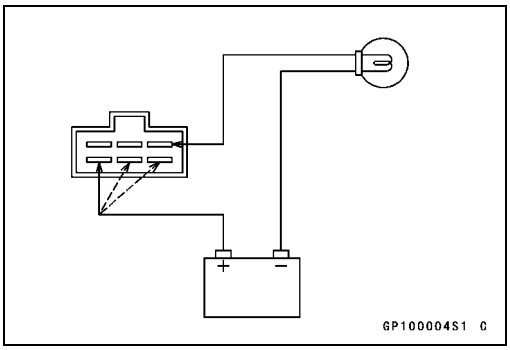

Regulator Circuit Test-2nd Step:

- Connect the test light and the 12 V battery in the same manner as specified in the “Regulator Circuit Test-1st Step”.
- Apply 12 V to the BR terminal.
- Check Y1, Y2, and Y3 terminals respectively.

★If the test light turns on, the regulator/rectifier is defective. Replace it.

- If the test light does not turn on, continue the test.

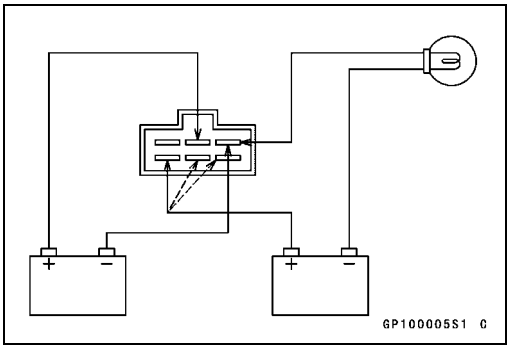

Charging System

Regulator Circuit Test-3rd Step:
- Connect the test light and the 12 V battery in the same manner as specified in the “Regulator Circuit Test-1st Step”.
- Momentarily apply 24 V to the BR terminal by adding a 12 V battery.
- Check Y1, Y2, and Y3 terminals respectively.

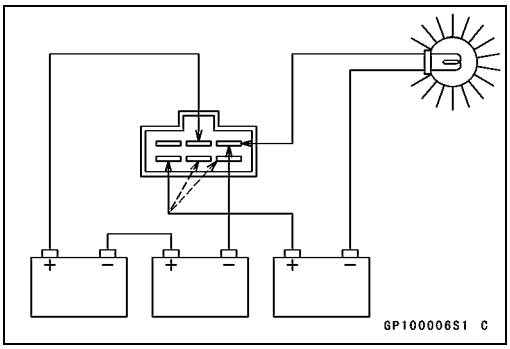

CAUTION
Do not apply more than 24 V to the regulator/rectifier and do not leave the 24 V applied for more than a few seconds, or the unit will be damaged.

★If the test light does not light when the 24 V was applied momentarily to the BR terminal, the regulator/rectifier is defective. Replace it.

★If the regulator/rectifier passes all of the tests described, it may still be defective. If the charging system still does not work properly after checking all of the components and the battery, test the regulator/rectifier by replacing it with a known good unit.

Charging System Circuit

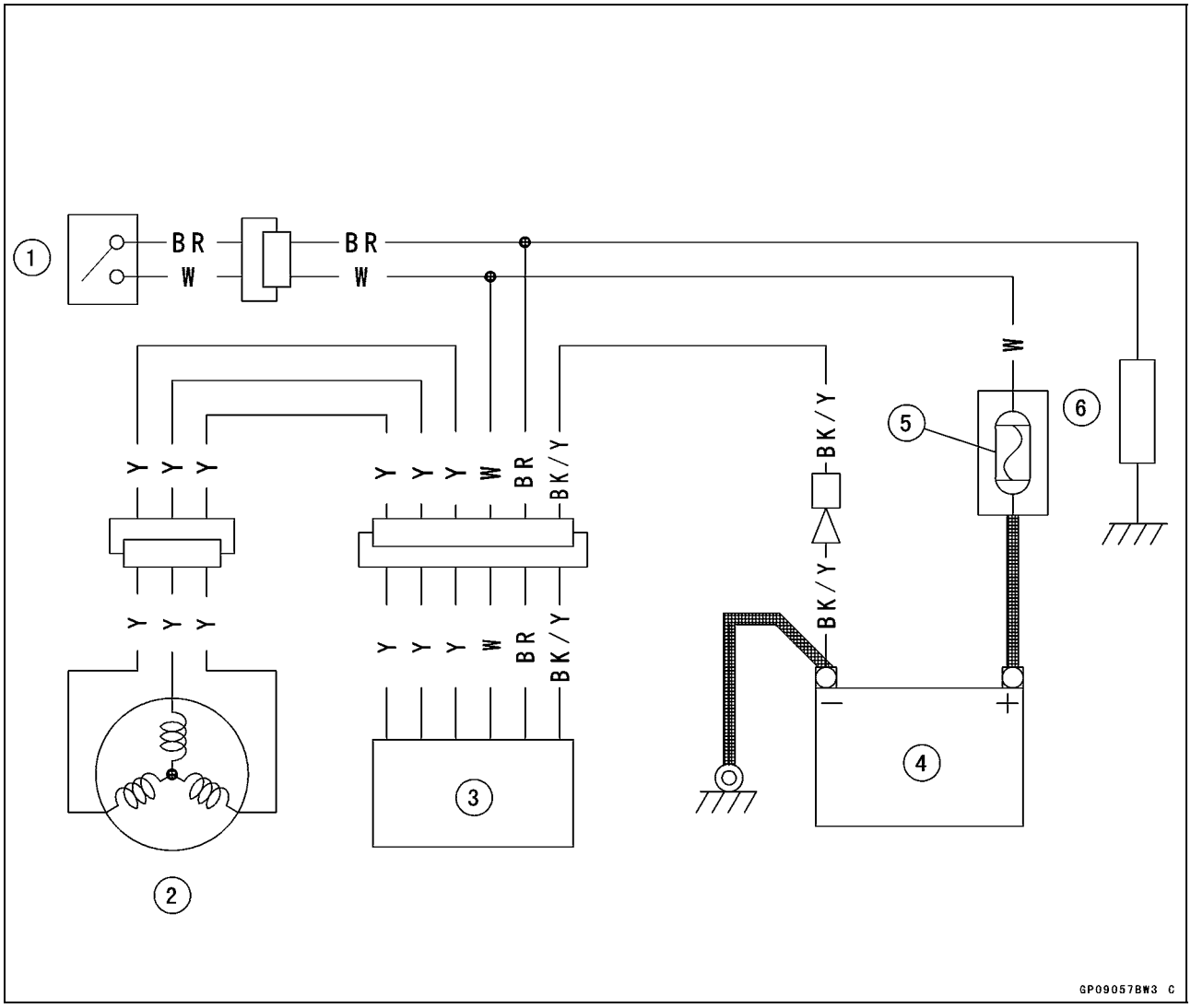

1. Ignition Switch
2. Alternator
3. Regulator/Rectifier
4. Battery
5. Main Fuse 30A
6. Load

Ignition System

Safety instructions:

⚠ WARNING

The ignition system produces extremely high voltage. Do not touch the spark plugs, ignition coils, or spark plug leads while the engine is running, or you could receive a severe electrical shock.

CAUTION

Do not disconnect the battery leads or any other electrical connections when the ignition switch is on or while the engine is running. This is to prevent IC igniter damage. Do not install the battery backwards. The negative side is grounded. This is to prevent damage to the diodes and IC igniter

Crankshaft Sensor Removal

- Remove:
  Alternator Cover (see Alternator Rotor/Starter Clutch Removal)
  Mounting Screws [A]
  Crankshaft Sensor [B]

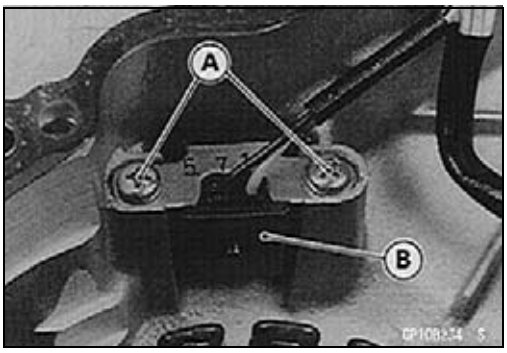

Crankshaft Sensor Installation

- Tighten the crankshaft sensor mounting screws.

  Torque - Crankshaft Sensor Screws: 8.3 N·m (0.85 kgf·m, 74 in·lb)

- Install the crankshaft sensor lead on the alternator cover (see Stator Coil Installation).

Crankshaft Sensor Inspection

- Disconnect the crankshaft sensor connector.
- Set the hand tester to the × 100 Ω range and connect it to the crankshaft sensor leads.

★If there is more resistance than the specified value, the coil has an open lead and must be replaced. Much less than this resistance means the coil is shorted, and must be replaced.

Crankshaft Sensor Resistance
100 ~ 150 Ω

- Using the highest resistance range of the tester, measure the resistance between the crankshaft sensor leads and chassis ground.

★Any tester reading less than infinity (∞) indicates a short, necessitating replacement of the crankshaft sensor assembly.

Ignition System

Ignition Coil Removal/Installation

- Remove the fuel tank (see Fuel Tank Removal in the Fuel System chapter).
- Disconnect the leads [A] and remove the ignition coil [B] with spark plug cap [C].
- Install the ignition coils. Note the following.

○Connect the primary winding leads to the ignition coil terminals as follows:

Black/White and Red leads	→ No. 1 ignition coil
Green/Red and Red leads	→ No. 2 ignition coil

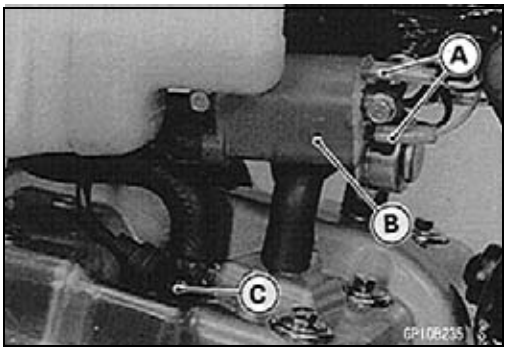

Ignition Coil Inspection

Measuring arcing distance:

- Remove the ignition coil (see Ignition Coil Removal/Installation).
- Measure the arcing distance with a suitable commercially available coil tester [A] to check the condition of the ignition coil [B].
- Connect the ignition coil (with the spark plug cap left attached to each end of the spark plug lead) to the tester in the manner prescribed by the manufacturer and measure the arcing distance.

Ignition Coil Arcing Distance
8 mm (0.31 in.) or more

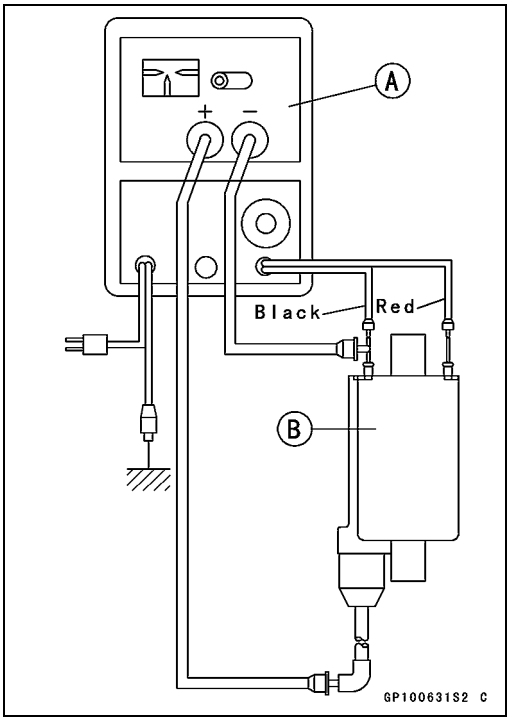

⚠ WARNING

To avoid extremely high voltage shocks, do not touch the coil or lead.

★If the distance reading is less than the specified value, the ignition coil or spark plug cap is defective.

- To determine which part is defective, measure the arcing distance again with the spark plug cap removed from the ignition coil.

★If the arcing distance is subnormal as before, the trouble is with the ignition coil itself. If the arcing distance is now normal, the trouble is with the spark plug cap.

★If the arcing tester is not available, the coil can be checked for a broken or badly shorted winding with the hand tester.

NOTE

○*The hand tester cannot detect layer shorts and shorts resulting from insulation breakdown under high voltage.*

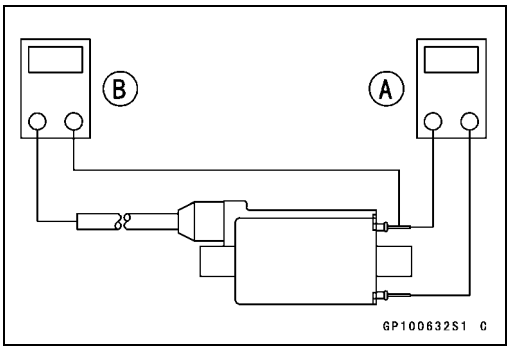

- Disconnect the primary leads from the coil terminals.
- Measure the primary winding resistance [A] as follows:
  - ○Connect the hand tester between the coil terminals.
  - ○Set the tester to the × 1 Ω range, and read the tester.
- Measure the secondary winding resistance [B] as follows:
  - ○Pull the spark plug cap off the lead.
  - ○Connect the hand tester between the spark plug lead and black or green lead terminal.
  - ○Set the tester to the × 1 kΩ range, and read the tester.

Ignition Coil Winding Resistance

Primary windings:	**2.6 ~ 3.2 Ω**
Secondary windings:	**13.5 ~ 16.5 kΩ**

★If the tester does not read as specified, replace the coil.

★If the tester reads as specified, the ignition coil windings are probably good. However, if the ignition system still does not perform as it should after all other components have been checked, test replace the coil with one known to be good.

- Check the spark plug leads for visible damage.

★If any spark plug lead is damaged, replace the coil.

Ignition Timing Inspection

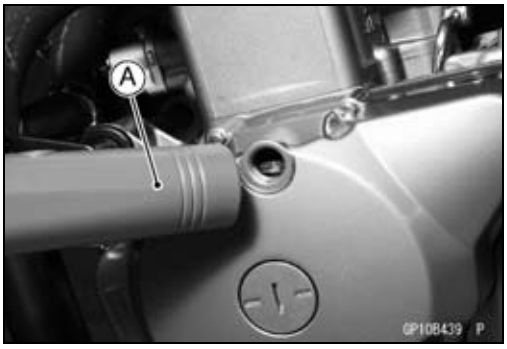

- Remove the ignition timing inspection plug.
- Attach the timing light [A] in the manner prescribed by the manufacturer.

Special Tools - Timing Light: 57001-1241
Filler Cap Driver: 57001-1454

- Start the engine and aim the timing light at the ignition timing mark on the alternator rotor.
- Run the engine at the speeds specified and note the alignment of the ignition timing marks.

Ignition Timing

Engine speed r/min (rpm)	Notch [A] aligns with:
1500 and below	F mark [B] on alternator rotor

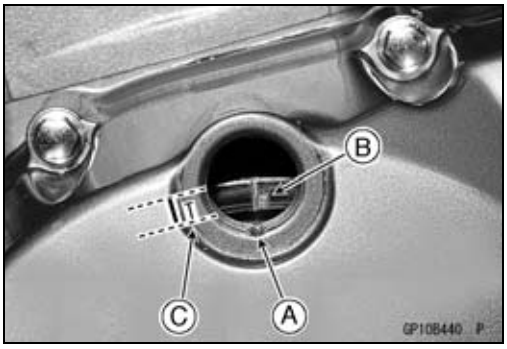

NOTE

○*Do not mix up the ignition timing marks with the top mark "T" [C].*

Torque - Timing Inspection Plug: 2.5 N·m (0.25 kgf·m, 22 in·lb)

★If the ignition timing is incorrect, inspect the IC igniter and the pickup coil.

Ignition System

Spark Plug Removal/Installation

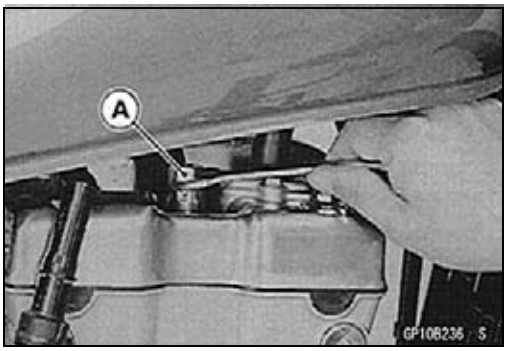

- Remove the fuel tank (see Fuel Tank Removal in the Fuel System chapter).
- Carefully pull the spark plug cap from the spark plug and unscrew the spark plug.
- Using the 18 mm plug wrench [A].
- Tighten the spark plug.

Torque - Spark Plug: 14 N·m (1.4 kgf·m, 10 ft·lb)

- Fit the plug cap securely.

Spark Plug Cleaning, Inspection

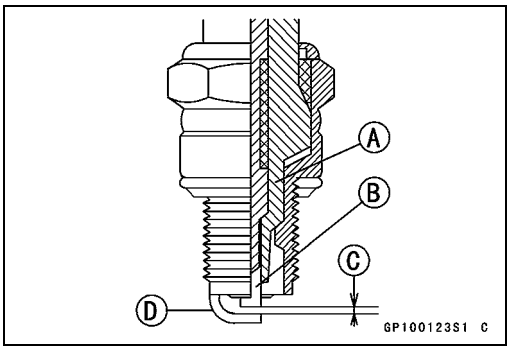

- Remove the spark plug.
- Clean the spark plug, preferably in a sandblasting device, and then clean off any abrasive particles. The plug may also be cleaned using a high-flash point solvent and a wire brush or other suitable tool.

★If the spark plug center electrode [B] and/or side electrode [D] are corroded or damaged, or if the insulator [A] is cracked, replace the plug.

- Use the standard spark or its equivalent.

Special Tool - Spark Plug Wrench: 57001-1024

Spark Plug Gap Inspection

- Remove the spark plug.
- Measure the gap [C] with a wire-type thickness gauge.

Spark Plug Gap
0.6 ~ 0.7 mm (0.024 ~ 0.028 in.)

Special Tool - Spark Plug Wrench: 57001-1024

★If the gap is incorrect, carefully bend the side electrode with a suitable tool to obtain the correct gap.

IC Igniter Removal

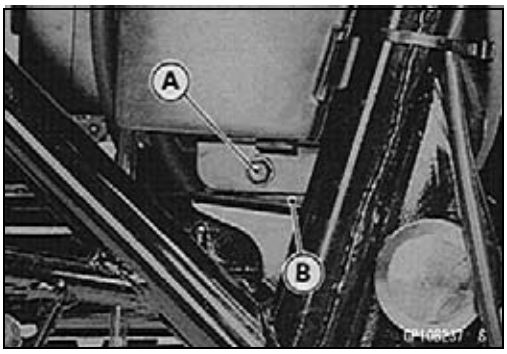

CAUTION
When inspecting the IC igniter observe the following to avoid damage to the IC Igniter. **Do not disconnect the IC igniter with the ignition switch on. This may damage the IC igniter.** **Do not disconnect the battery leads while the engine is running. This may damage the IC igniter.**

- Unscrew the bolt [A] from the IC igniter bracket.
- Pull out the IC igniter [B].
- Disconnect the IC igniter lead connectors.

IC Igniter Installation

- Insert the projection [A] on the IC igniter into the hole [B] in the IC igniter bracket.

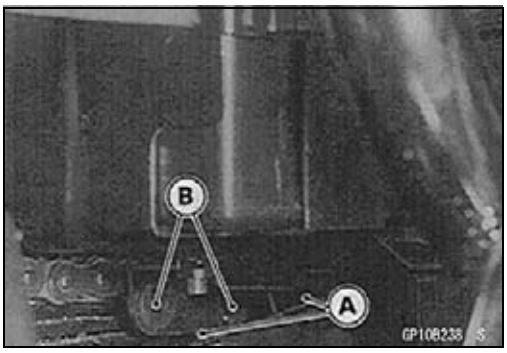

IC Igniter Inspection

- Remove the IC igniter (see IC Igniter Removal).
- The IC igniter can be checked by using either the igniter checker or hand tester.

(1) Igniter Checker.

- Use the igniter checker [A] to check the condition of the IC igniter [B].

Special Tool - Igniter Checker: 57001-1378

○Connect a 12 V battery [C] to the checker.

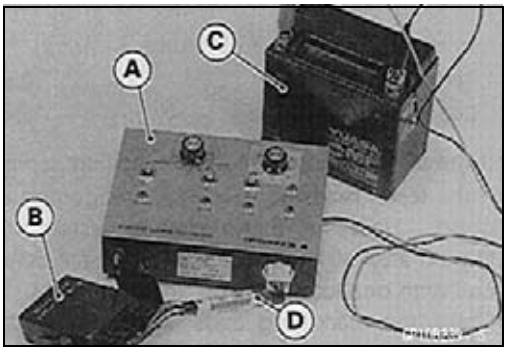

○Select the specified harness [D] (57001-1381) in the igniter checker instruction manual.

- Check the ignition, over-rev limiter, side stand interlock, and signal output for tachometer functions.

★Replace the IC igniter if any function is defective.

CAUTION
Read the Transistor Igniter Checker Instruction before checking.

(2) Hand Tester:

- Set the hand tester to the × 1 kΩ range and make the measurements shown in the table.

Special Tool - Hand Tester: 57001-1394

★If the tester readings are not as specified, replace the IC igniter.

CAUTION
Use only the hand tester (57001-1394) for this test. A tester other than the Kawasaki Hand Tester may show different readings. If a megger or a meter with a large-capacity battery is used, the IC igniter will be damaged.

Ignition System

IC Igniter Internal Resistance (4P) **Unit: kΩ**

		Tester (+) Lead Connection			
	Terminal	1	2	3	4
(–)*	1	–	∞	∞	∞
	2	∞	–	0 ~ 0.8	28 ~ 150
	3	∞	0 ~ 0.8	–	30 ~ 150
	4	∞	26 ~ 150	26 ~ 150	–

(–)*: Tester (–) Lead Connection

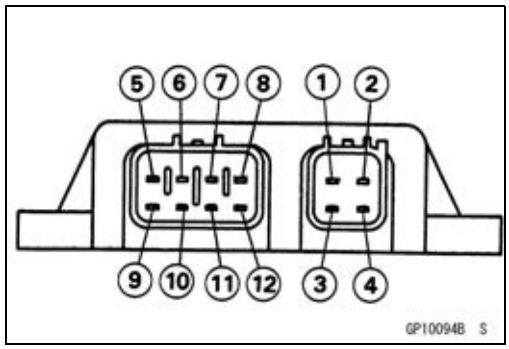

IC Igniter Internal Resistance (8P) **Unit: kΩ**

		Tester (+) Lead Connection							
	Terminal	5	6	7	8	9	10	11	12
(–)*	5	–	∞	∞	∞	∞	∞	∞	∞
	6	35 ~ 200	–	22 ~ 90	20 ~ 80	35 ~ 200	45 ~ 400	∞	18 ~ 80
	7	7 ~ 28	7 ~ 30	–	1.8 ~ 8	7 ~ 28	6 ~ 24	∞	4 ~ 17
	8	4.2 ~ 18	4.6 ~ 19	1.8 ~ 7.5	–	4.2 ~ 18	3 ~ 13	∞	1.8 ~ 8
	9	∞	∞	∞	∞	–	∞	∞	∞
	10	∞	∞	∞	∞	∞	–	∞	∞
	11	∞	∞	∞	∞	∞	∞	–	∞
	12	1.4 ~ 6	1.6 ~ 7	1.8 ~ 8	1.4 ~ 6.5	1.4 ~ 6	5 ~ 24	∞	–

(−)*: Tester (−) Lead Connection

Diodes Inspection

- Remove the meter instruments (see Meter Instruments Removal).
- Disconnect the diode assemblies [A].
- Zero the hand tester, and connect it to each diode terminal to check the resistance in both directions.

★The resistance should be low in one direction and more than ten times as much in the other direction. If any diode shows low or high in both directions, the diode is defective and the diode assembly must be replaced.

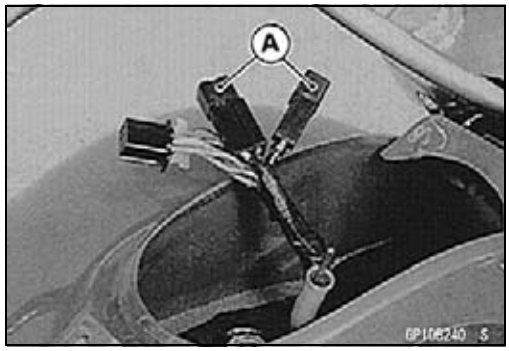

NOTE

○*The actual meter reading varies with the meter used and the individual diode, but, generally speaking, the lower reading should be from zero to one half the scale.*

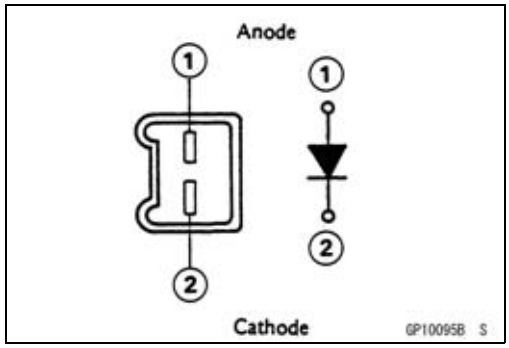

IC Igniter Troubleshooting

1) IC igniter crankshaft sensor damaged.
2) Even if the preceding checks show good, it may be defective in some manner not readily detectable with the hand tester.

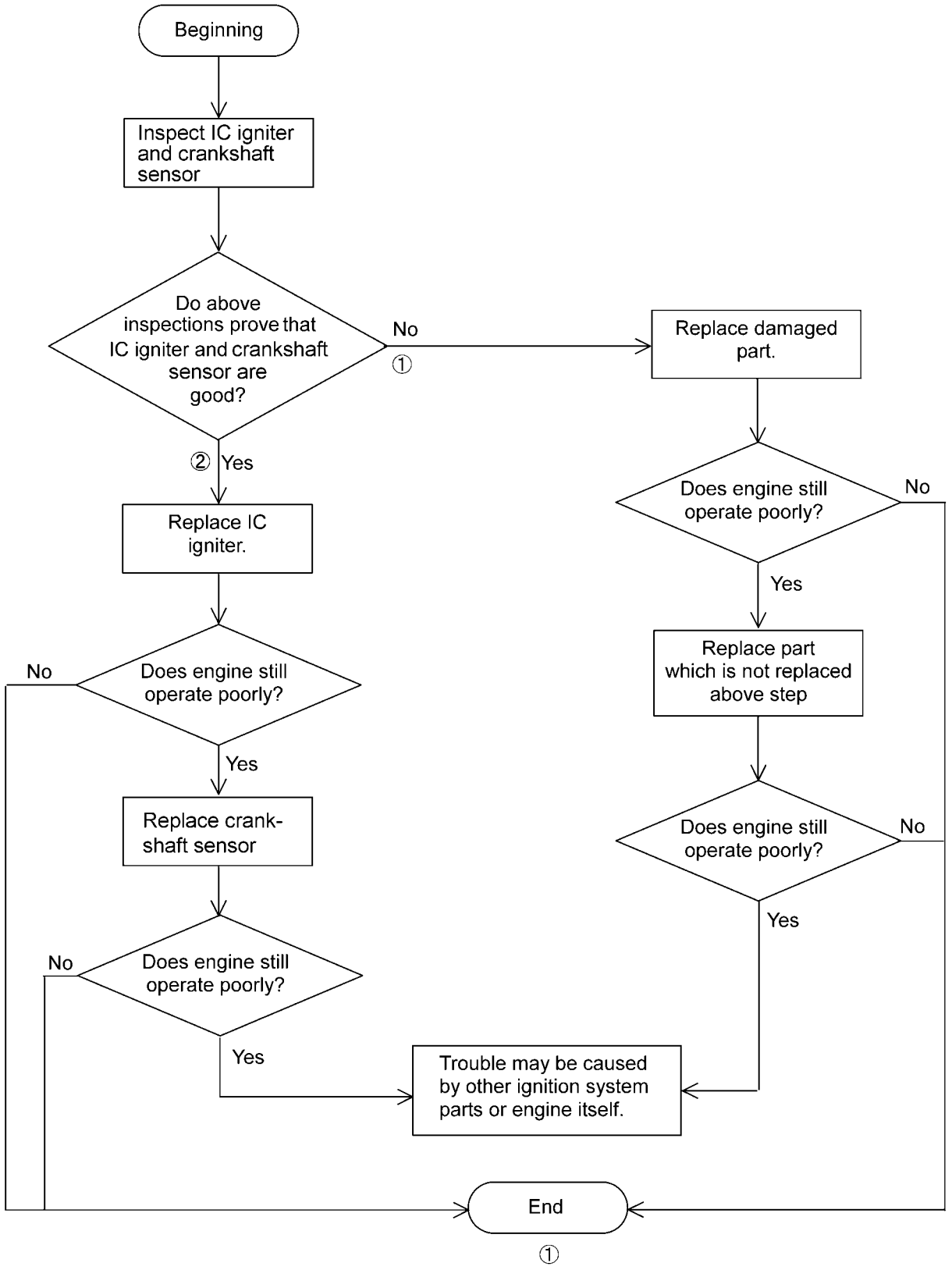

GP10096B F

Ignition System

Ignition System Circuit

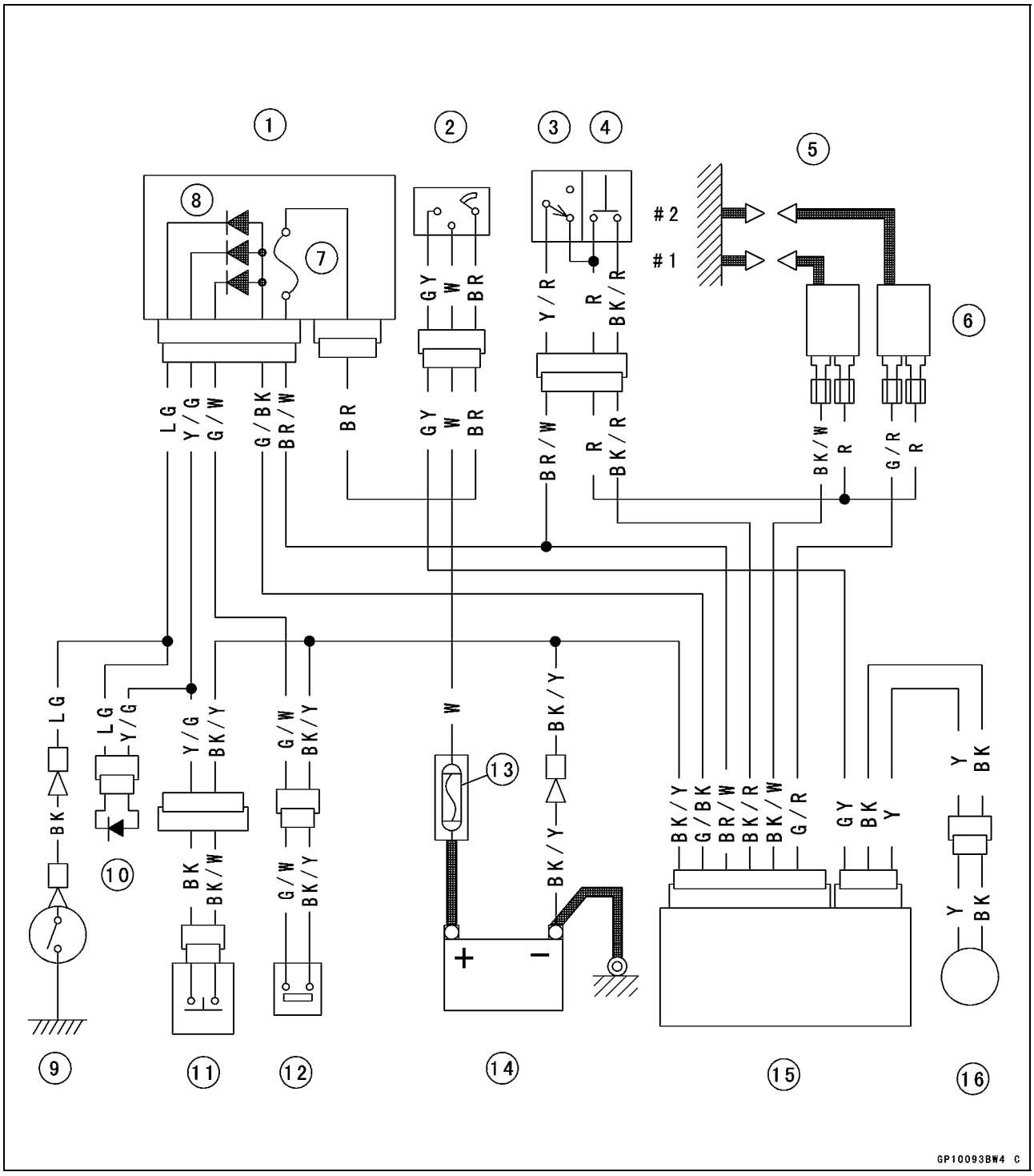

1. Junction Box
2. Ignition Switch
3. Engine stop Switch
4. Starter Button
5. Spark Plugs
6. Ignition Coils
7. Ignition Fuse 10 A
8. Diodes
9. Neutral Switch
10. Rectifier
11. Starter Lockout Switch
12. Side Stand Switch
13. Main Fuse 30 A
14. Battery
15. IC Igniter
16. Crankshaft Sensor

Electric Starter System

Starter Motor Removal

- Remove the alternator rotor with the starter clutch (see Alternator Rotor/Starter Clutch Removal).
- Remove the starter chain guide screws [A] and remove the starter chain guide [B] with the guide stay [C].
- Pull out the starter motor sprocket [D] with the starter motor chain [E] from the starter motor.

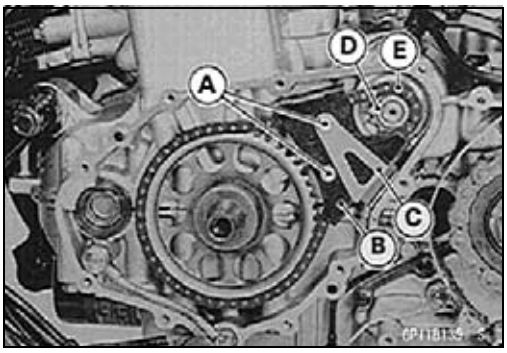

- Disconnect the starter motor cable [B].
- Remove the starter motor mounting bolts [A].

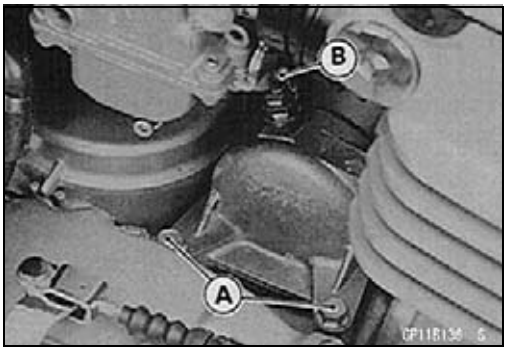

- Pry the starter motor loose from the crankcase with a screwdriver, slide the starter motor off towards the right side of the engine.
- Lift up the carburetor [A] with a suitable bar [B], and then lifting up the starter motor end pull out the starter motor [C] as shown.

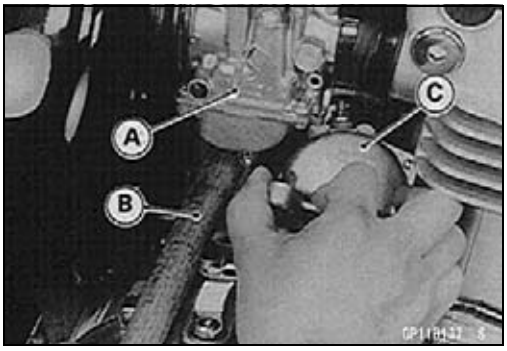

CAUTION
Do not tap on the starter motor shaft or body. Tapping on the shaft or body may damage the motor.

Starter Motor Installation

- Install the starter motor in the reverse order of removal.
- Clean the starter motor lugs [A] and crankcase where the starter motor is grounded [B].
- Replace the O-ring with a new one, if it is deteriorated or damaged, and apply a little oil to it.
- Tighten the starter motor mounting bolts with the ground lead.

  Torque - Starter Motor Mounting Bolts: 11 N·m (1.1 kgf·m, 95 in·lb)

- Pour in the specified type and amount of oil (see Engine Oil Change in the Engine Lubrication chapter).

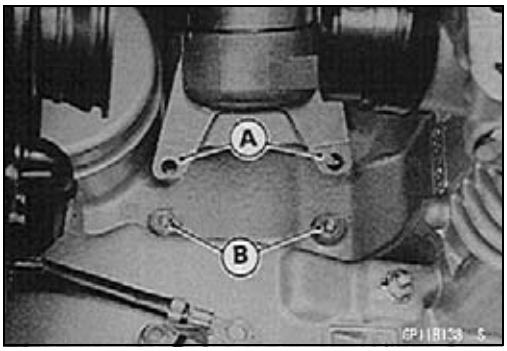

Electric Starter System

Starter Clutch Sprocket Removal

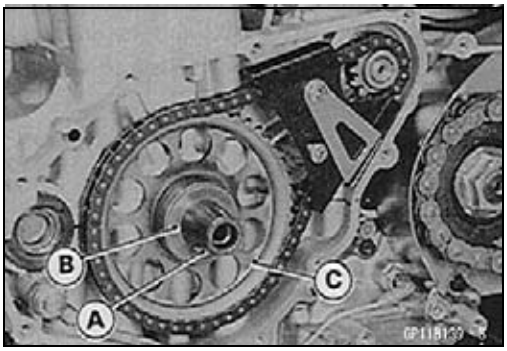

- Remove:
  Alternator cover (see Alternator Rotor/Starter Clutch Removal)
  Alternator rotor with Starter Clutch (see Alternator Rotor/Starter Clutch Removal)
- Remove the woodruff key [A] and washer [B].
- Remove the starter chain guide with the guide stay.
- Remove the starter clutch sprocket [C], starter motor sprocket and starter chain as a set.
- In case that the starter motor has been removed, do the following:

○Remove the starter motor sprocket.
○Remove the alternator rotor with the starter clutch, starter clutch sprocket and starter chain as a set.

Starter Clutch Sprocket Installation

- Apply a thin coat of molybdenum disulfide grease to the frictional surface between the crankshaft and the starter clutch sprocket.
- If the starter motor has been removed, install it first.
- Install the starter clutch sprocket, starter motor sprocket and starter chain as a set.
- Install the alternator rotor with the starter clutch and alternator cover.

Starter Motor Disassembly

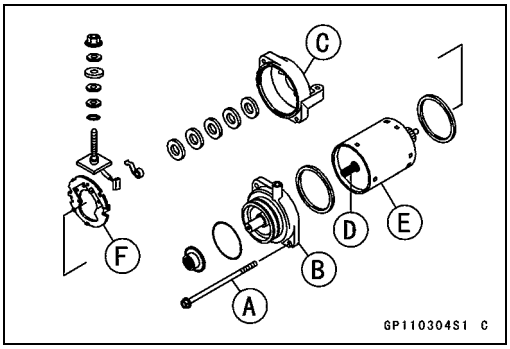

- Unscrew the starter motor through bolts [A] and pull off the gear cover [B] and the end cover [C] with the end bracket [F].
- Pull the armature [D] out of the yoke housing [E].

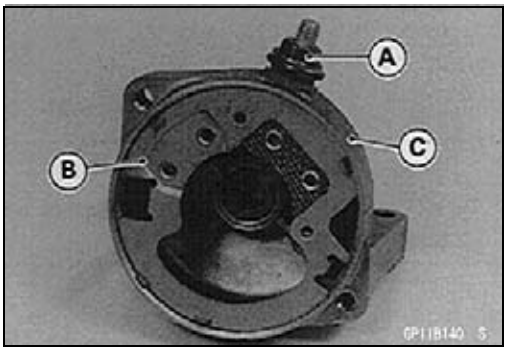

- Remove the terminal nut [A], and take the brush plate [B] off the end cover [C].

Electric Starter System

Starter Motor Assembly

- Install the brush plate on the end cover, align the tab [A] on the plate with the slot [B] in the cover.
- Replace any O-ring removed with a new one.
- Install the terminal bolt.
- Tighten the terminal nut.

Torque - Starter Motor Terminal Nut: 6.9 N·m (0.7 kgf·m, 61 in·lb)

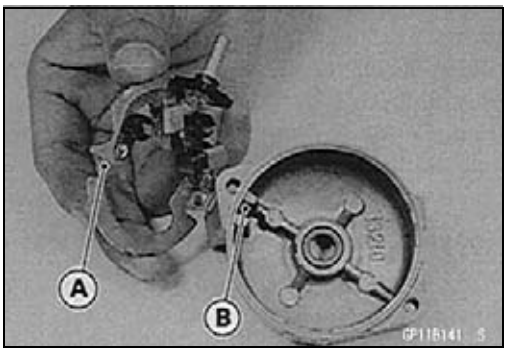

- Insert the armature into the yoke.
- Install the end bracket [A] and the gear cover [B] on the yoke housing [C], align the projection [D] on the housing with the notches [E] in the bracket and the cover.

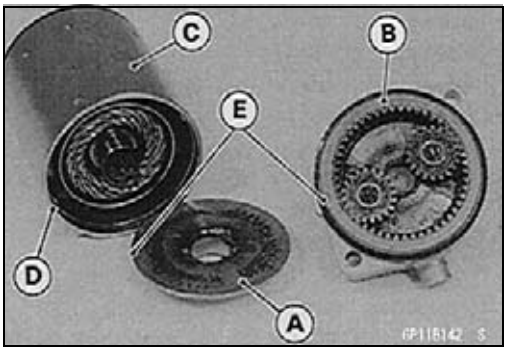

- Install the end cover on the yoke housing, align the short and wide tab [A] on the brush plate with the notch [B] in the housing.

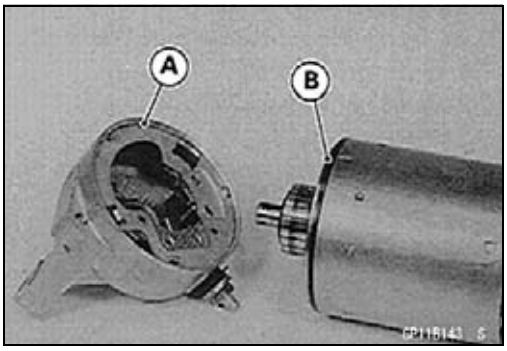

- Make sure that the marks [A] on the covers and yoke housing align with each other.
- Tighten the through bolts.

Torque - Starter Motor Through Bolts: 6.9 N·m (0.7 kgf·m, 65 in·lb)

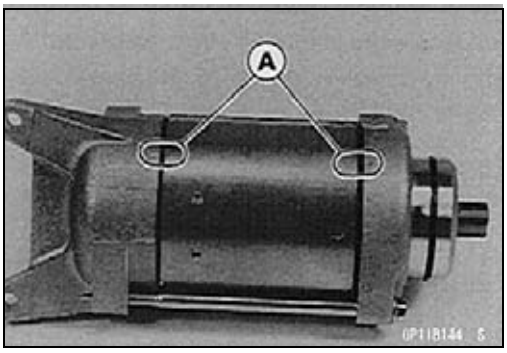

Starter Chain Guide Wear Inspection

- Visually inspect the rubber on the guide.

★If the rubber is cut or damaged in any way, replace the guide.

Electric Starter System

Starter Clutch Inspection

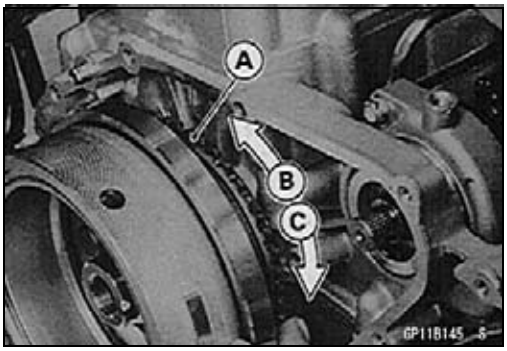

- Remove:
  Alternator Rotor (see Alternator Rotor/Starter Clutch Removal)
  Starter Chain Guide (see Starter Motor Removal)
  Starter Motor Sprocket (see Starter Motor Removal)
  Starter Chain (see Starter Clutch Sprocket Removal)
- Install the alternator rotor with the starter clutch.
- Turn the starter clutch sprocket [A] by hand. The starter clutch sprocket should turn counterclockwise freely [B], but should not turn [C] clockwise.

★If the clutch does not operate as it should or if it makes noise, disassemble the starter clutch, examine each part, and replace any worm or damaged parts.

Starter Relay Inspection

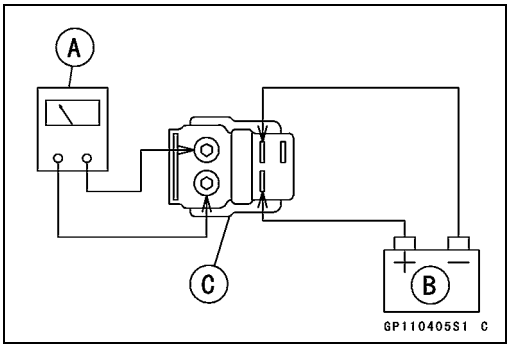

- Remove the left side cover (see Left Side Cover Removal in the Frame chapter).
- Remove the starter relay.
- Connect a hand tester [A] and one 12 V battery [B] to the starter relay [C] as shown.

★If the relay does not work as specified, the relay is defective. Replace the relay.

Testing Relay

Meter range:	**× 1 Ω**
Criteria:	**When battery is connected → 0 Ω**
	When battery is disconnected → ∞ Ω

Brush Inspection

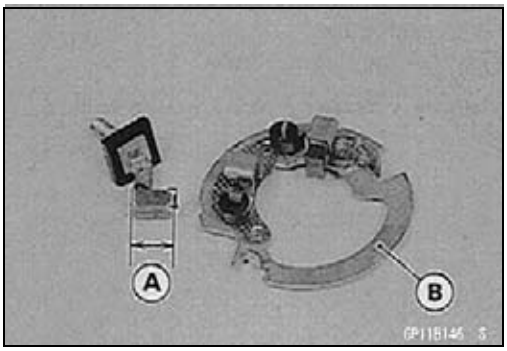

- Measure the length [A] of each brush.

★If any is worn down to the service limit, replace the brush plate assembly [B].

Starter Motor Brush Length

Standard:	**12.0 ~ 12.5 mm (0.472 ~ 0.492 in.)**
Service Limit:	**8.5 mm (0.335 in.)**

Brush Spring Inspection

- Check that the brush springs are in place and will snap the brushes firmly into place.

★If not, reinstall or replace the spring.

Commutator Cleaning and Inspection

- Smooth the commutator surface [A] if necessary with fine emery cloth (#400 ~ 500) [B], and clean out the grooves.

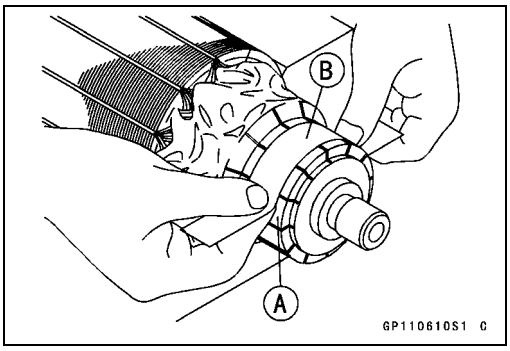

- Measure the diameter [A] of the commutator [B].

★Replace the starter motor with a new one if the commutator diameter is less than the service limit.

Commutator Diameter

Standard:	**28 mm (1.10 in.)**
Service Limit:	**27 mm (1.06 in.)**

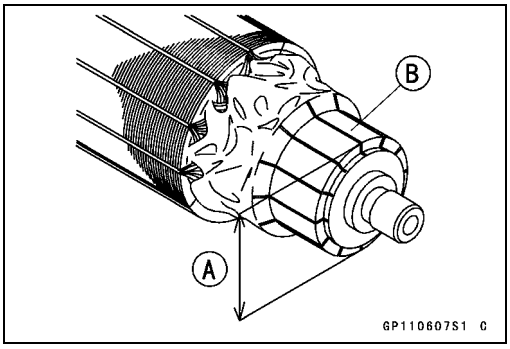

Armature Inspection

- Using the × 1 Ω hand tester range, measure the resistance between any two commutator segments [A].

★If there is a high resistance or no reading (∞) between any two segments, a winding is open and the starter motor must be replaced.

- Using the highest hand tester range, measure the resistance between the segments and the shaft [B].

★If there is any reading at all, the armature has a short and the starter motor must be replaced.

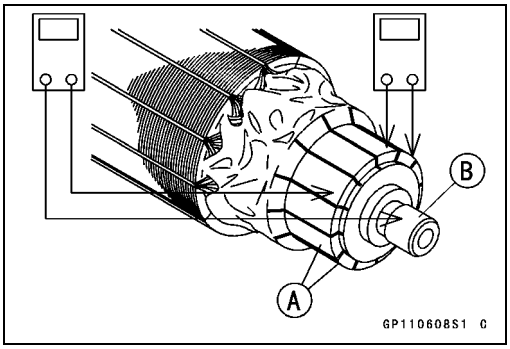

NOTE

○*Even if the foregoing checks show the armature to be good, it may be defective in some manner not readily detectable with the hand tester. If all other starter motor and starter motor circuit components check good, but the starter motor still does not turn over or only turns over weakly, replace the starter motor with a new one.*

Electric Starter System

Brush Plate Inspection

- Using the × 1 Ω hand tester range, measure the resistance between the brush plate [A] and the negative brush [B].

★If there is not close to zero ohm, the brush plate has an open. Replace the brush plate assembly.

- Using the highest hand tester range, measure the resistance between the brush plate and the positive brush holder [C].

★If there is any reading at all, the brush holder has a short. Replace the brush plate assembly.

- Using the × 1 Ω hand tester range, measure the resistance between the terminal bolt [D] and the positive brush [E].

★If there is a high resistance or no reading (∞), a lead is open and the brush plate must be replaced.

- Using the highest hand tester range, measure the resistance between the terminal bolt [A] and the end cover [B].

★If there is any reading at all, the insulation is faulty and the brush plate must be replaced. Replace the terminal assembly.

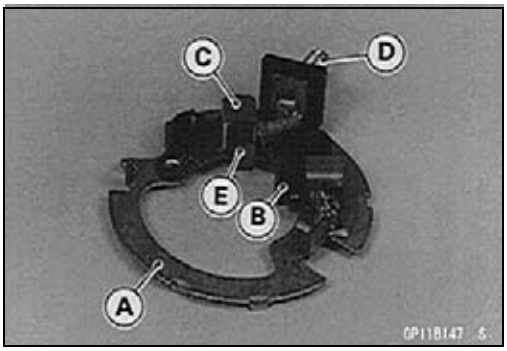

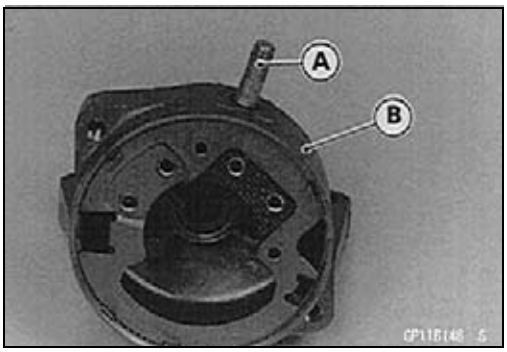

Electric Starter System

Electric Starter Circuit

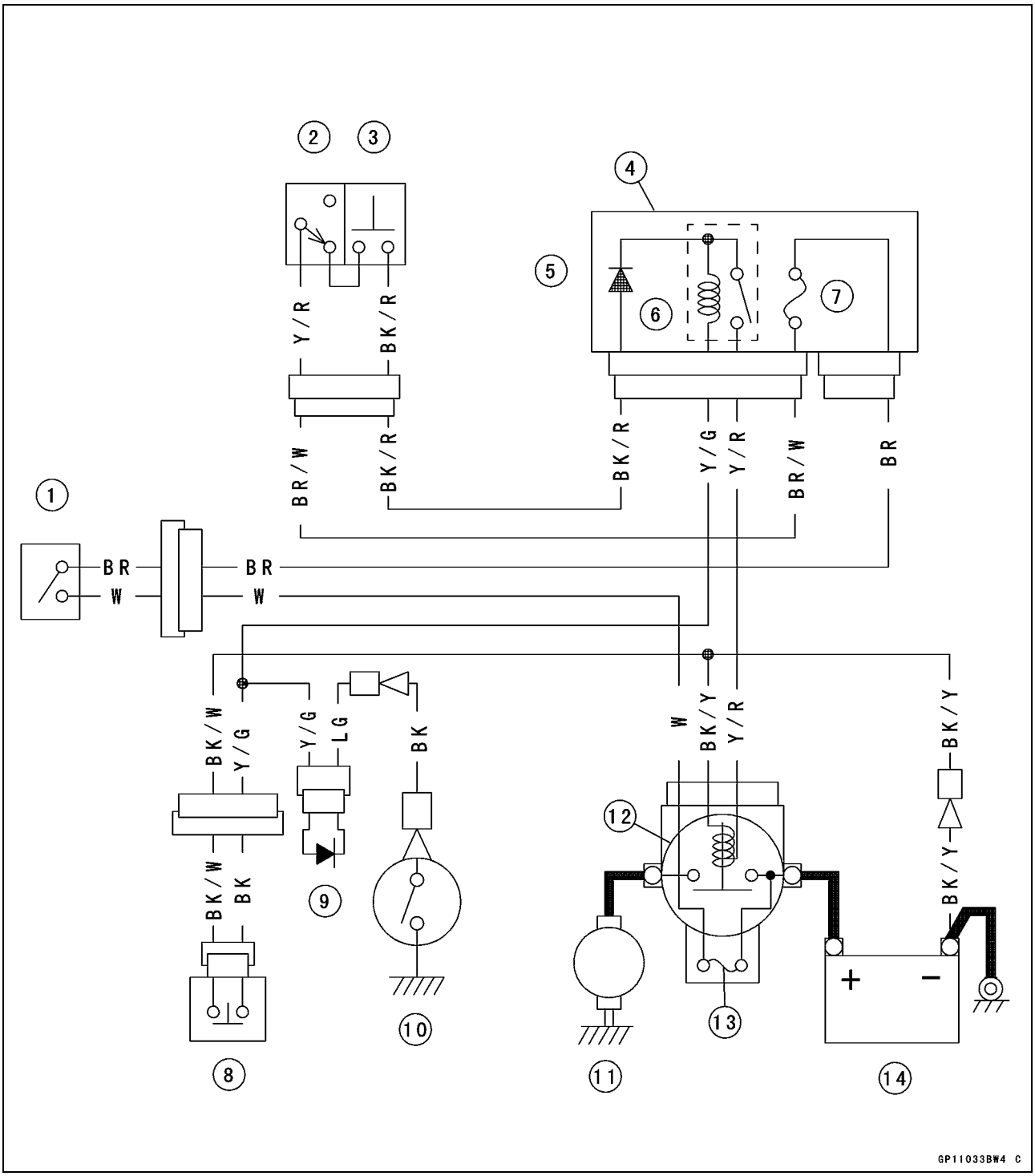

1. Ignition Switch
2. Engine Stop Switch
3. Starter Button
4. Junction Box
5. Diode
6. Starter Circuit Relay
7. Ignition Fuse 10A
8. Starter Lockout Switch
9. Rectifier
10. Neutral Switch
11. Starter Motor
12. Starter Relay
13. Main Fuse 30A
14. Battery

Lighting System

The United States and Canada models adopt the daylight system and have a headlight relay in the junction box. In these models, the headlight does not go on when the ignition switch and the engine stop switch are first turned on. The headlight comes on after the starter button is released and stays on until the ignition switch is turned off. The headlight will go out momentarily whenever the starter button is pressed and come back on when the button is released.

Headlight Beam Horizontal Adjustment

- Turn the horizontal adjuster [A] on the headlight rim in or out until the beam points straight ahead. Turning the adjusting screw clockwise moves the headlight beam to the left.

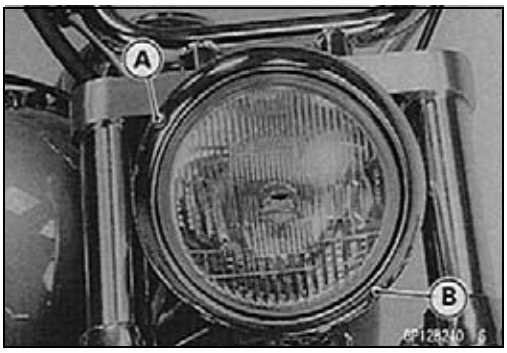

Headlight Beam Vertical Adjustment

- Turn the vertical adjuster [B] on the headlight rim in or out to adjust the headlight vertically.

NOTE

○*On high beam, the brightest point should be slightly below horizontal with the motorcycle on its wheels and rider seated. Adjust the headlight to the proper angle according to local regulations.*

○*For United States model, the proper angle is 0.4 degrees below horizontal. This is 50 mm (2 in.) drop at 7.6 m (25 ft.) measured from the center of the headlight with the motorcycle on its wheels and the rider seated.*

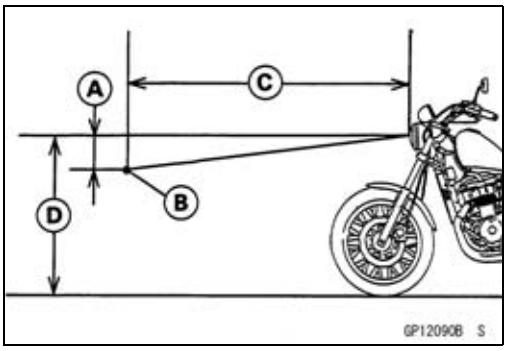

50 mm (2 in.) [A]
Center of Brightest Spot [B]
7.6 m (25 ft.) [C]
Height of Headlight Center [D]

Headlight Bulb Replacement

- Remove:
  Headlight Unit and Dust Cover [A]
  Hook [B]
- Replace the headlight bulb [C].

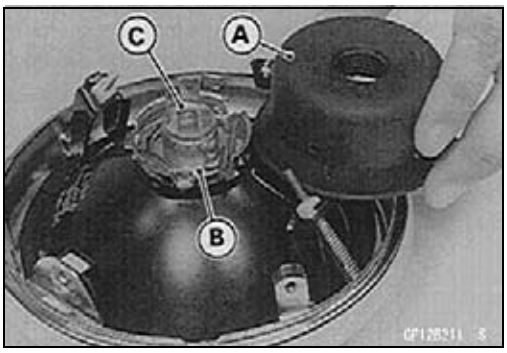

CAUTION

When handling the quartz-halogen bulb, never touch the glass portion with bare hands. Always use a clean cloth. Oil contamination from hands or dirty rags can reduce bulb life or cause the bulb to explode.

- Fit the dust cover [A] with the Top mark upward onto the bulb firmly as shown in the figure.
- After installation, adjust the headlight aim.
  Right [B]
  Wrong [C]

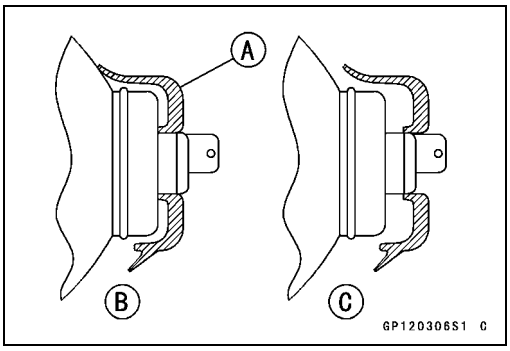

Headlight Unit/Housing Removal

- Remove:
  Screws [A] (both sides)

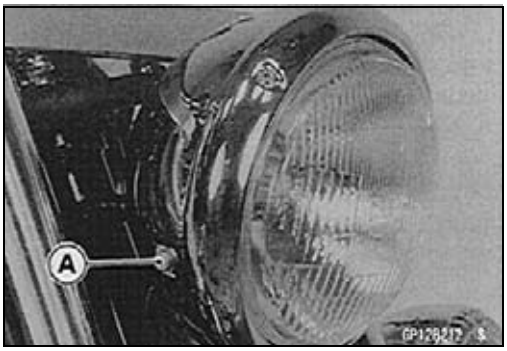

Headlight Connector [A]
Headlight Unit [B]
Turn Signal Light Lead Connectors [C]
Bolts and Nuts [D]
Headlight Housing [E]

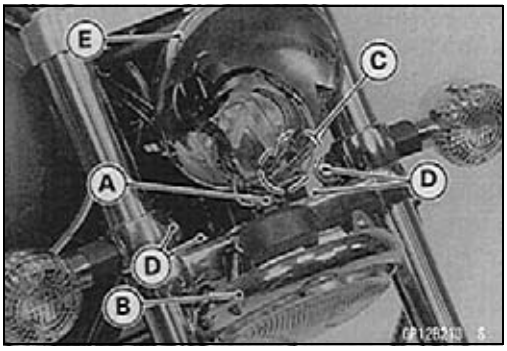

Headlight Unit Installation

- Install the headlight unit so that the “TOP” mark [A] on the lens points up.

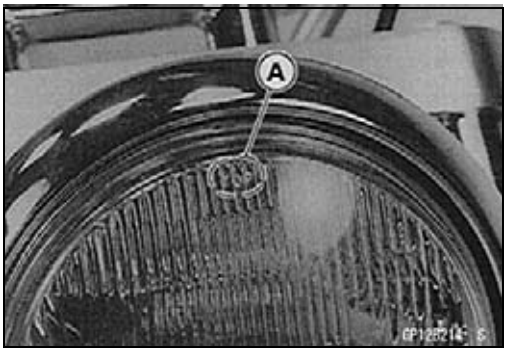

Tail/Brake Light Bulb Replacement

- Remove the tail/brake light lens.
- Insert the new bulb by aligning the pins with the grooves in the walls of the socket so that the pin closest to the bulb base [A] is to the upper right.

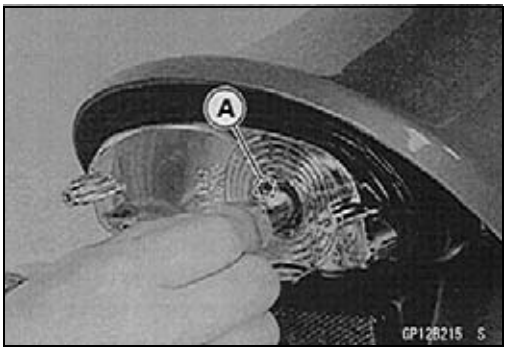

Tail/Brake Light Lens Removal/Installation

- Be careful not to overtighten the lens mounting screws.

Lighting System

Turn Signal Light Bulb Replacement

● Refer to the Tail/Brake Light Bulb Replacement section.
○Be careful not to overtighten the lens mounting screws.

Turn Signal Relay Inspection

● Remove:
Left Side Cover (see Left Cover Removal in the Frame chapter)
Turn Signal Relay [A]

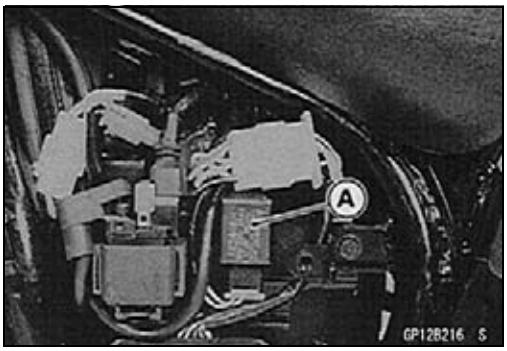

● Connect one 12 V battery and turn signal lights as indicated in the figure, and count how many times the lights flash for one minute.
Turn Signal Relay [A]
Turn Signal Lights [B]
12 V Battery [C]

★If the lights do not flash as specified, replace the turn signal relay.

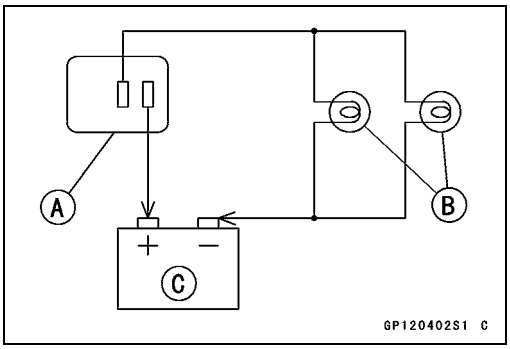

Testing Turn Signal Relay

Load		Flashing times (c/m*)
Number of Turn Signal Lights	Wattage (W)	
1	21 or 23	140 ~ 250
2	42 or 46	75 ~ 95

*: Cycle(s) per minute

Lighting System

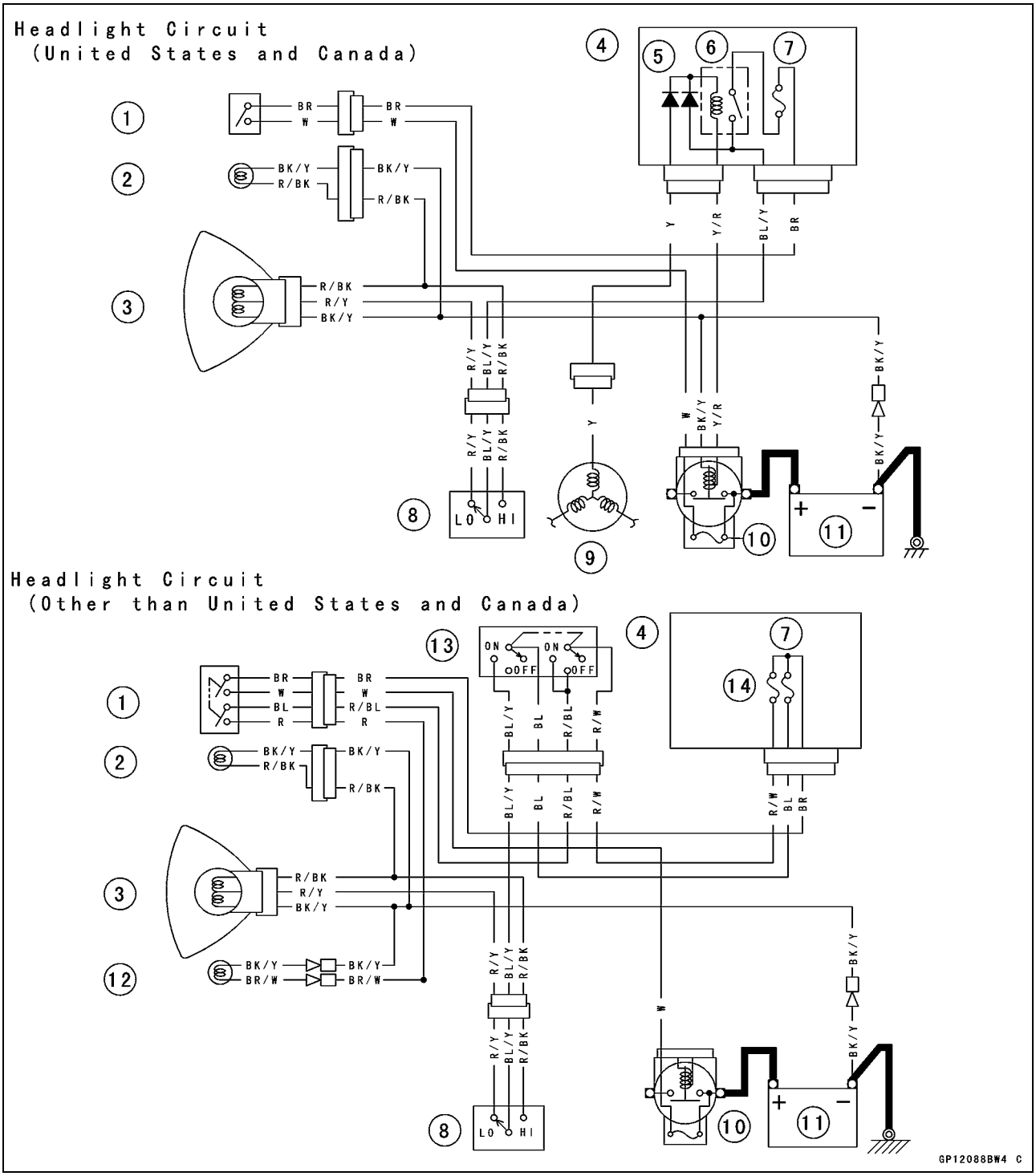

1. Ignition Switch
2. High Beam Indicator Light
3. Headlight
4. Junction Box
5. Diodes
6. Headlight Circuit Relay
7. Headlight Fuse 10 A
8. Dimmer Switch
9. Alternator
10. Main Fuse 30 A
11. Battery
12. City Light
13. Headlight Switch
14. Taillight Fuse 10 A

Lighting System

Headlight Circuit (EN500-C8 ~, Other than United States and Canada)

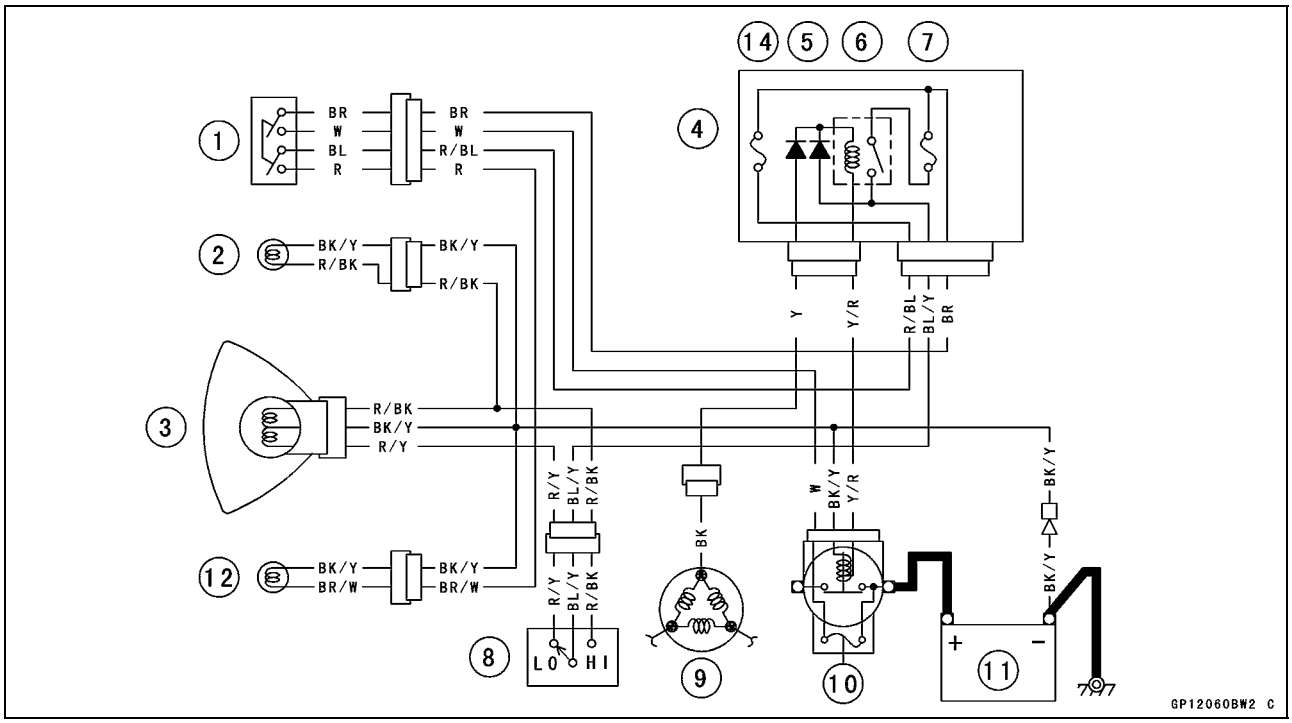

1. Ignition Switch
2. High Beam Indicator Light
3. Headlight
4. Junction Box
5. Diodes
6. Headlight Circuit Relay
7. Headlight Fuse 10 A
8. Dimmer Switch
9. Alternator
10. Main Fuse 30 A
11. Battery
12. City Light
13. Headlight Switch
14. Taillight Fuse 10 A

Lighting System

Turn Signal Light Circuit

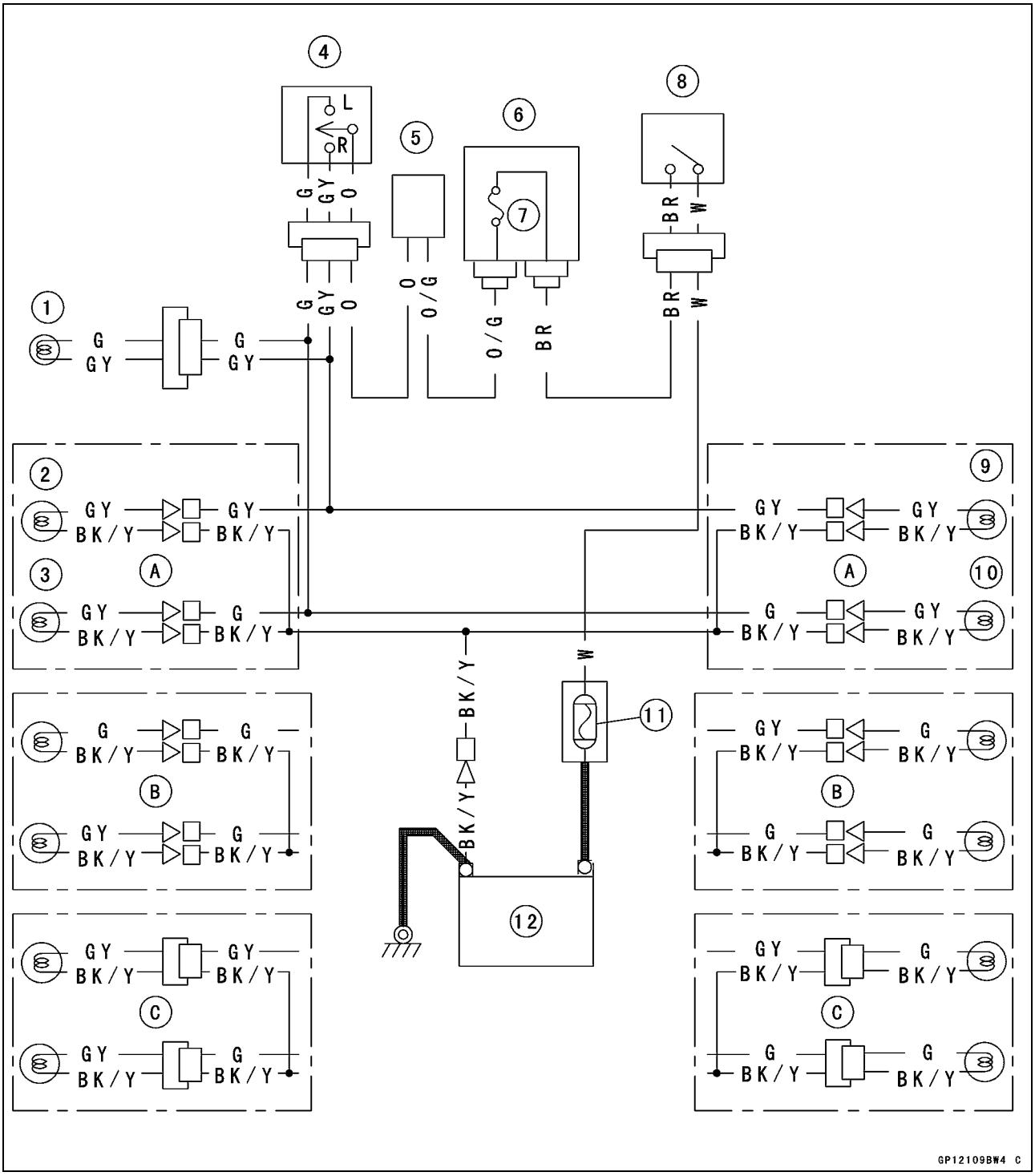

1. Turn Signal Indicator Light
2. Front Right Turn Signal Light
3. Front Left Turn Signal Light
4. Turn Signal Switch
5. Turn Signal Relay
6. Junction Box
7. Turn Signal Relay Fuse 10 A
8. Ignition Switch
9. Rear Right Turn Signal Light
10. Rear Left Turn Signal Light
11. Main Fuse 30 A
12. Battery

A: United States and Canada Model
B: EN500-C1 ~ C7, other than United States and Canada Model
C: EN-500-C8 ~, other than United States and Canada Model

Radiator Fan System

Radiator Fan System Circuit Inspection

- Turn on the ignition switch.
- Disconnect leads from the radiator fan switch [A].
- Using an auxiliary wire [B], connect the radiator fan switch leads.

★If the fan turns, inspect the fan switch.
★If the fan does not turn, inspect the following.
Lead and Connectors
Main Fuse and Fan Fuse
Fan Motor

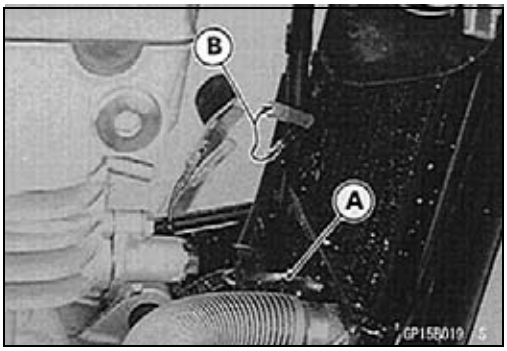

Radiator Fan Motor Inspection

- Disconnect connector from the fan.
- Using two auxiliary wires, supply battery power to the fan.

Wire Connectors
Blue Lead ⟷ Battery (+)
Black Lead ⟷ Battery (−)

★If the fan does not turn at this time, the fan is defective and must be replaced.

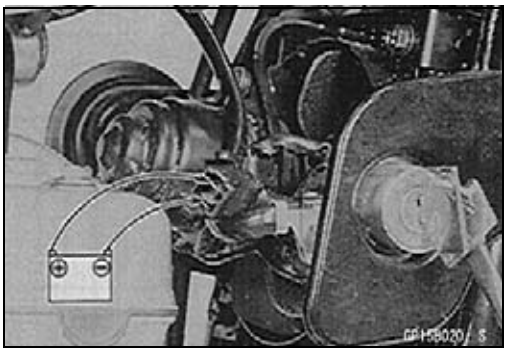

Radiator Fan Circuit (EN500-C1 ~ C4)

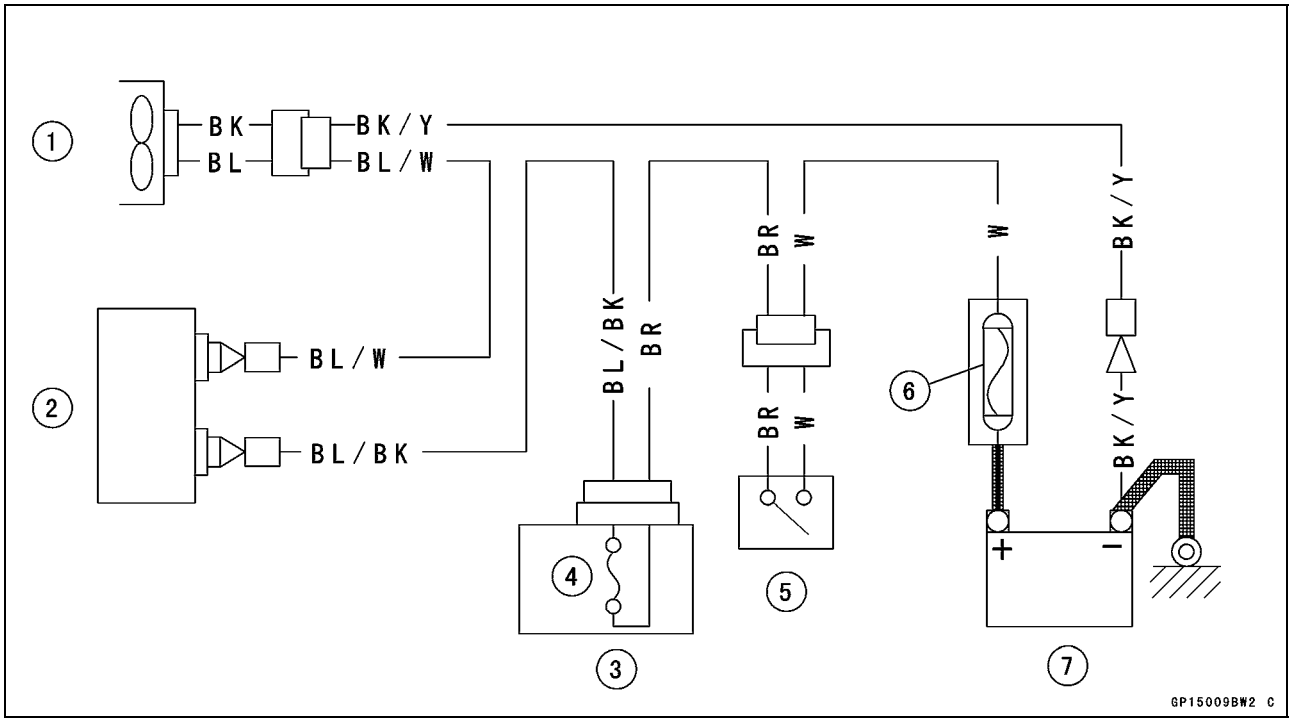

1. Radiator Fan
2. Radiator Fan Switch
3. Junction Box
4. Fan Fuse 10 A
5. Ignition Switch
6. Main Fuse 30 A
7. Battery

Radiator Fan System

Radiator Fan Circuit (EN500-C5 ~)

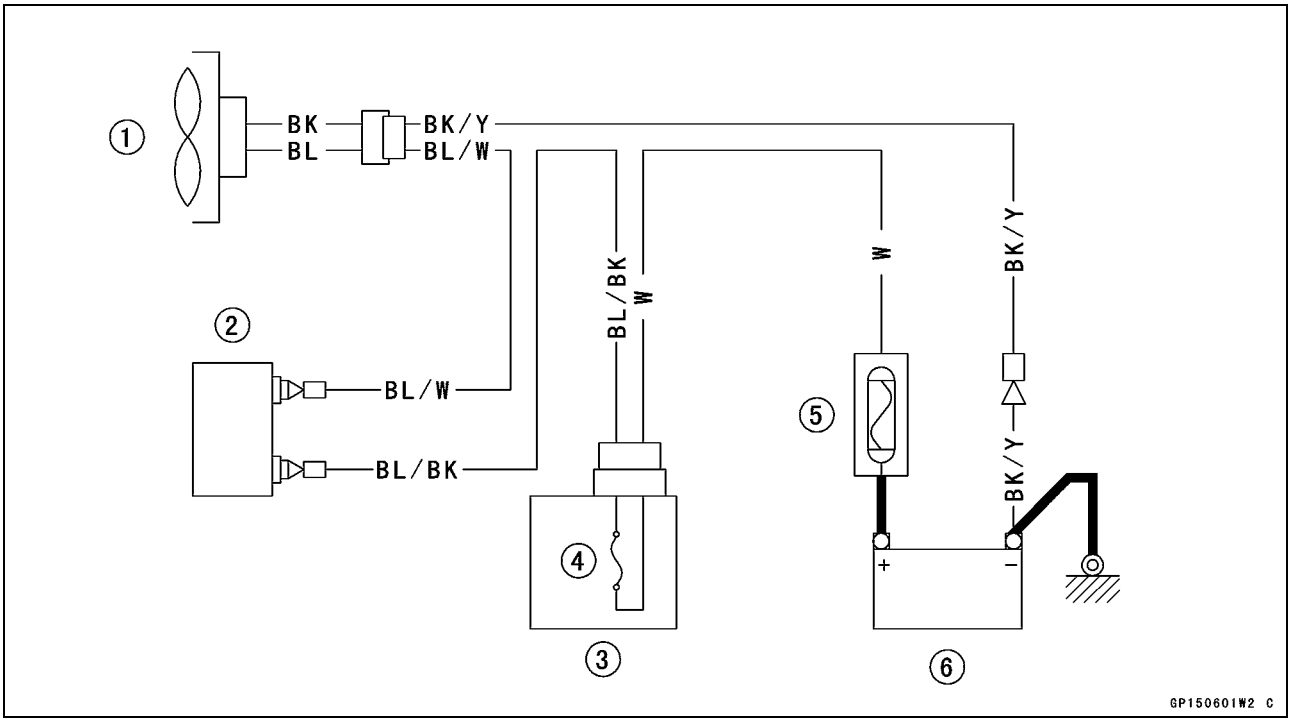

1. Radiator Fan
2. Radiator Fan Switch
3. Junction Box
4. Fan Fuse 10 A
5. Main Fuse 30 A
6. Battery

Meter Instruments

Meter Instruments Removal

- Remove the bolt [A], and separate the meter instruments [B] from the fuel tank.

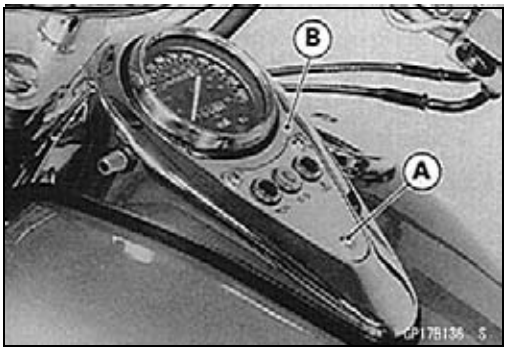

- Remove:
  Connectors [A]
  Speedometer Cable [B]

CAUTION
Place the meter so that the face is up. If a meter is left upside down or sideways for any length of time, it will malfunction.

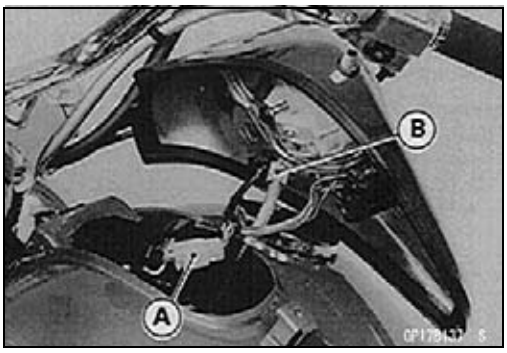

Meter Instruments Installation

- Insert the tongue [A] of the meter bracket into the damper slit [B] on the fuel tank.

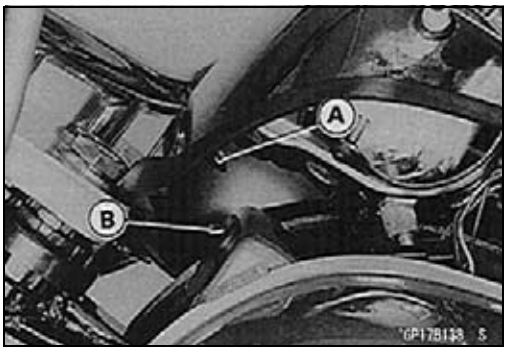

Meter Unit Disassembly

- Remove:
  Meter Instruments
  Screw and Knob [A]
  Screws [B]
  Speedometer [C]

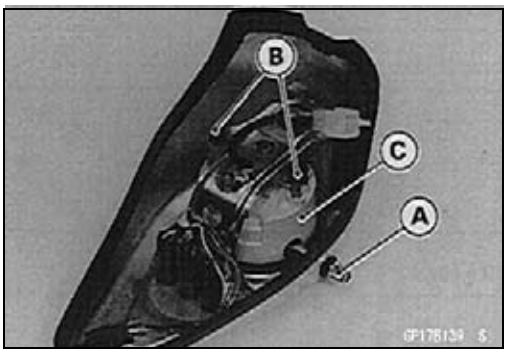

Bulb Replacement

- To remove the wedge-base type bulbs [A] (indicator and illumination), pull out the bulb sockets [B] and pull the bulbs out of the sockets.

CAUTION
Do not turn the bulb. Pull the bulb out to prevent damage to the bulb. **Do not use bulbs rated for greater wattage than the specified value.**

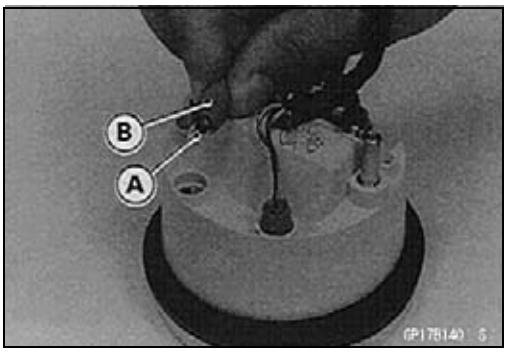

Switches and Sensors

Front Brake Light Timing Inspection

- Turn on the ignition switch.
- Check the operation of the front brake light switch by pulling the tip of brake lever. The brake light should go on as specified.

★If it does not, replace the brake light switch.

Brake Light Timing
Standard: On after about 5 ~ 21 mm (0.2 ~ 0.8 in.) lever travel [A]

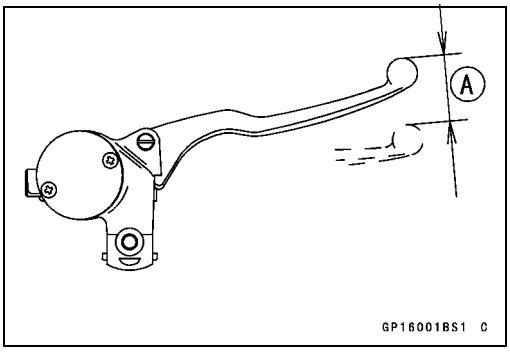

Rear Brake Light Timing Inspection

- Turn on the ignition switch.
- Check the operation of the rear brake light switch by depressing the brake pedal. The brake light should go on as specified.

★If it does not, adjust the brake light timing.

Brake Light Timing
Standard: On after about 15 mm (0.59 in.) pedal travel [A]

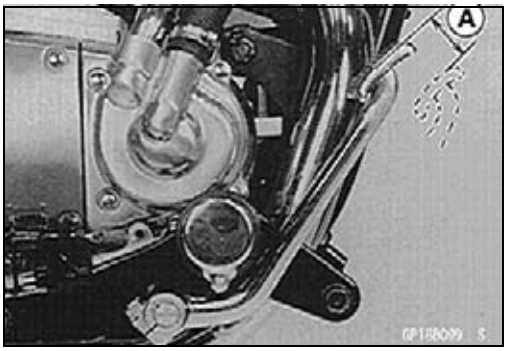

Rear Brake Light Timing Adjustment

Brake light timing is adjusted by changing the position of the rear brake light switch [A].

- Adjust the position of the switch so that the brake light goes on after the specified pedal travel by turning the adjusting nut [B].
  [C] Lights sooner.
  [D] Lights later.

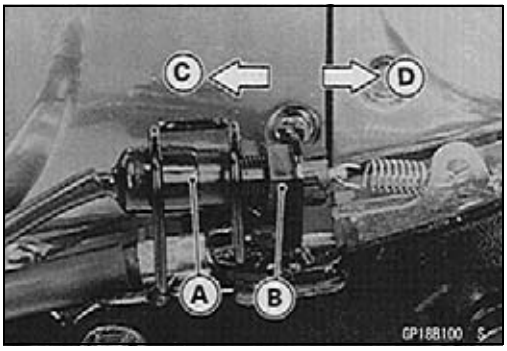

CAUTION
To avoid damaging the electrical connections inside the switch, be sure that the switch body does not turn during adjustment.

Switch Inspection

- Using the hand tester, check to see that only connections shown in the table have continuity (about zero ohm).

○For the handlebar switches and the ignition switch refer to the tables in the Wiring Diagram.

★If the switch has an open or short, repair it or replace it with a new one.

Special Tool - Hand Tester: 57001-1394

Neutral Switch Connections

	SW. Terminal	
When transmission is in neutral	○	○
When transmission is not in neutral		

Rear Brake Light Switch Connections

	BR	BL
When brake pedal is pushed down	○	○
When brake pedal is released		

Switches and Sensors

Oil Pressure Switch Connections*

	SW. Terminal	⏚
When engine is stopped	○———	———○
When engine is running		

*: Engine lubrication system is in good condition

Side Stand Switch Connections*

	BK/Y	G/W
When side stand is up	○———	———○
When side stand is down		

Radiator Fan Switch Inspection

- Remove the radiator fan switch (see Radiator Fan Switch Removal in the Cooling System chapter).
- Suspend the switch [A] in a container of water so that the temperature-sensing projection and threaded portion are submerged.
- Suspend an accurate thermometer [B] in the coolant so that the sensitive portions [C] are located in almost the same depth.

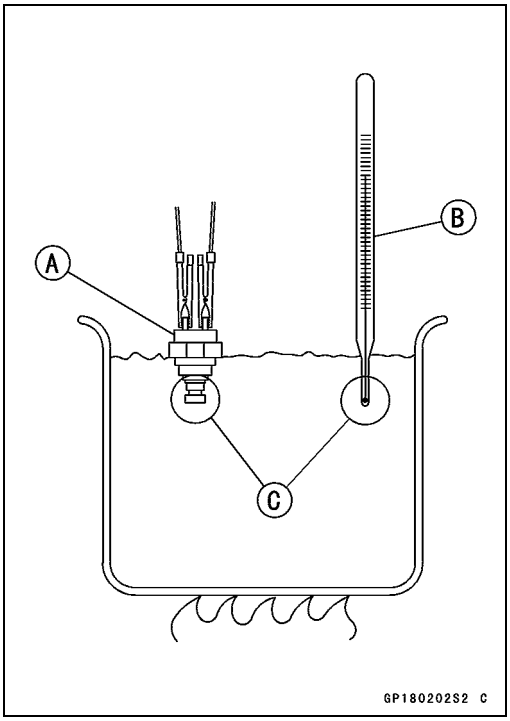

NOTE

○*The switch and thermometer must not touch the container sides or bottom.*

- Place the container over a source of heat and gradually raise the temperature of the water while stirring the water gently.
- Using the hand tester, measure the internal resistance of the switch across the terminals at the temperatures shown in the table.

★If the hand tester does not show the specified values, replace the switch.

Fan Switch Resistance

Rising temperature:

From OFF to ON at 96 ~ 100°C (205 ~ 212°F)

Falling temperature:

From ON to OFF at 91°C (196°F)

Less than temperature at ON

ON: Less than 0.5 Ω

OFF: More than 1 MΩ

Water Temperature Switch Inspection

- Remove the water temperature switch (see Water Temperature Switch Removal in the Cooling System chapter).
- Suspend the sensor [A] in a container of water so that the temperature sensing projection and threaded portion are submerged.
- Suspend an accurate thermometer [B] in the coolant so that the sensitive portions [C] are located in almost the same depth.

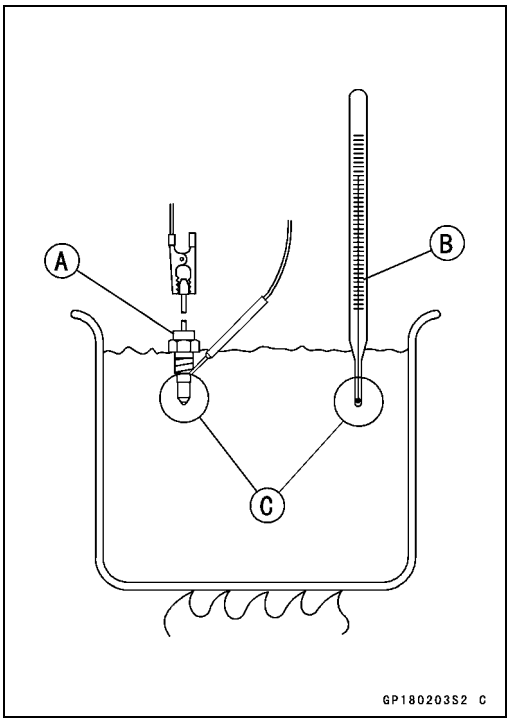

NOTE

○*The switch and thermometer must not touch the container sides or bottom.*

- Place the container over a source of heat and gradually raise the temperature of the water while stirring the water gently.
- Using a hand tester, measure the internal resistance of the sensor across the terminal and the body at the temperatures shown in the table.

★If the hand tester does not show the specified values, replace the switch.

Water Temperature Switch Resistance

○Rising temperature:

From OFF to ON at 113 ~ 117°C (235 ~ 243°F)

○Falling temperature

From ON to OFF at 108°C (226°F)

Less than temperature at ON

ON: Less than 0.5 Ω

OFF: More than 1 MΩ

Junction Box

The junction box [A] has fuses [B], relays, and diodes. The relays and diodes can not be removed.

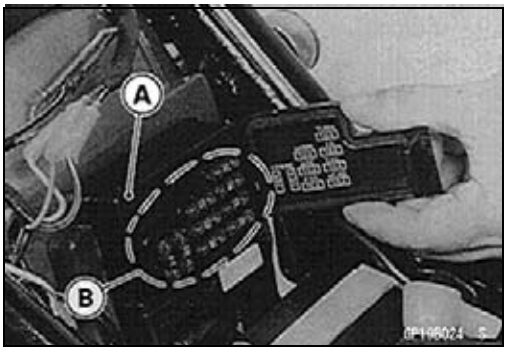

Junction Box Fuse Circuit Inspection

- Remove the seat (see Seat Removal in the Frame chapter).
- Remove the junction box.
- Pull off the connectors from the junction box.
- Make sure all connector-terminals are clean and tight, and none of them have been bent.

★Clean the dirty terminals, and straighten slightly-bent terminals.

- Check conductivity of the numbered terminals with the hand tester.

★If the tester does not read as specified, replace the junction box.

Fuse Circuit Inspection

Tester Connection	Tester Reading (Ω)		Tester Connection	Tester Reading (Ω)
1-1A	0		1A-8	∞
1-2	0		2-8	∞
3A-4	0		3A-8	∞
6-5	0		6-2	∞
6-10	0		6-3A	∞
6-7	0		17-3A	∞
6-17	0			

Starter Circuit/Headlight Relay Inspection

- Remove the junction box.
- Check conductivity of the following numbered terminals by connecting the hand tester and one 12 V battery to the junction box as shown.

★If the tester does not read as specified, replace the junction box.

Junction Box

Relay Circuit Inspection (with the battery disconnected)

	Tester Connection	Tester Reading (Ω)			Tester Connection	Tester Reading (Ω)
Headlight Relay*	7-8	∞		Starter Circuit Relay	9-11	∞
	7-13	∞			12-13	∞
	(+) (–) 13-9	Not ∞**			(+) (−) 13-11	∞
					(+) (−) 12-11	Not ∞**

*: United States and Canada Models only
EN500-C8 ~, All Model
**: The actual reading varies with the hand tester used.
(+): Apply tester positive lead.
(−): Apply tester negative lead.

Relay Circuit Inspection (with the battery connected)

	Battery Connection (+) (−)	Tester Connection	Tester Reading (Ω)
Headlight Relay*	9-13	7-8	0
Starter Circuit Relay	11-12	(+) (−) 13-11	Not ∞**

*: United States and Canada Models only
EN500-C8 ~, All Model
**: The actual reading varies with the hand tester used.
(+): Apply tester positive lead.
(−): Apply tester negative lead

Diode Circuit Inspection

- Remove the junction box.
- Check conductivity of the following pairs of terminals.

Diode Circuit Inspection

Tester Connection	*13-8, *13-9, 12-11, 12-14, 15-14, 16-14

*: United States and Canada Models only
EN500-C8 ~, All Model

★The resistance should be low in one direction and more than ten times as much in the other direction. If any diode shows low or high in both directions, the diode is defective and the junction box must be replaced.

NOTE

○*The actual meter reading varies with the meter used and the individual diodes, but, generally speaking, the lower reading should be from zero to one half the scale.*

Junction Box

Junction Box Internal Circuit (United States and Canada Models) (EN500-C8 ~, All Models)

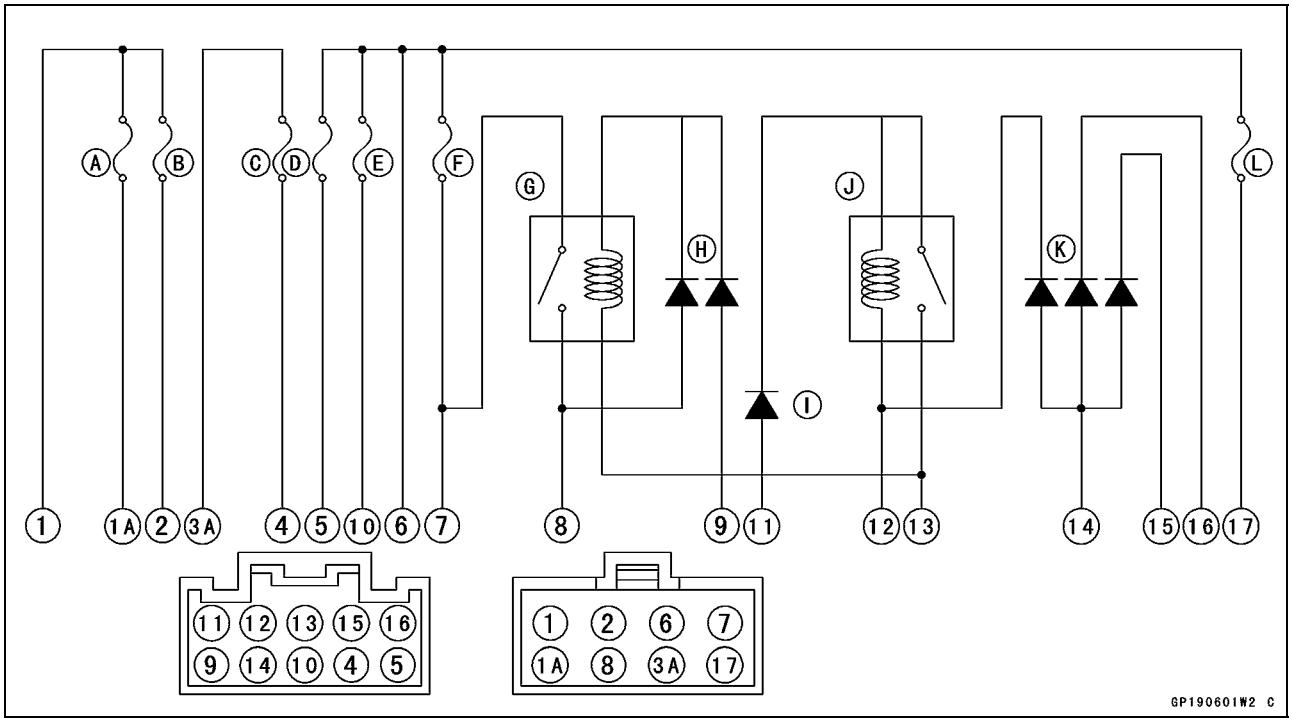

Junction Box Internal Circuit (EN500-C1 ~ C7, Other than United States and Canada Models)

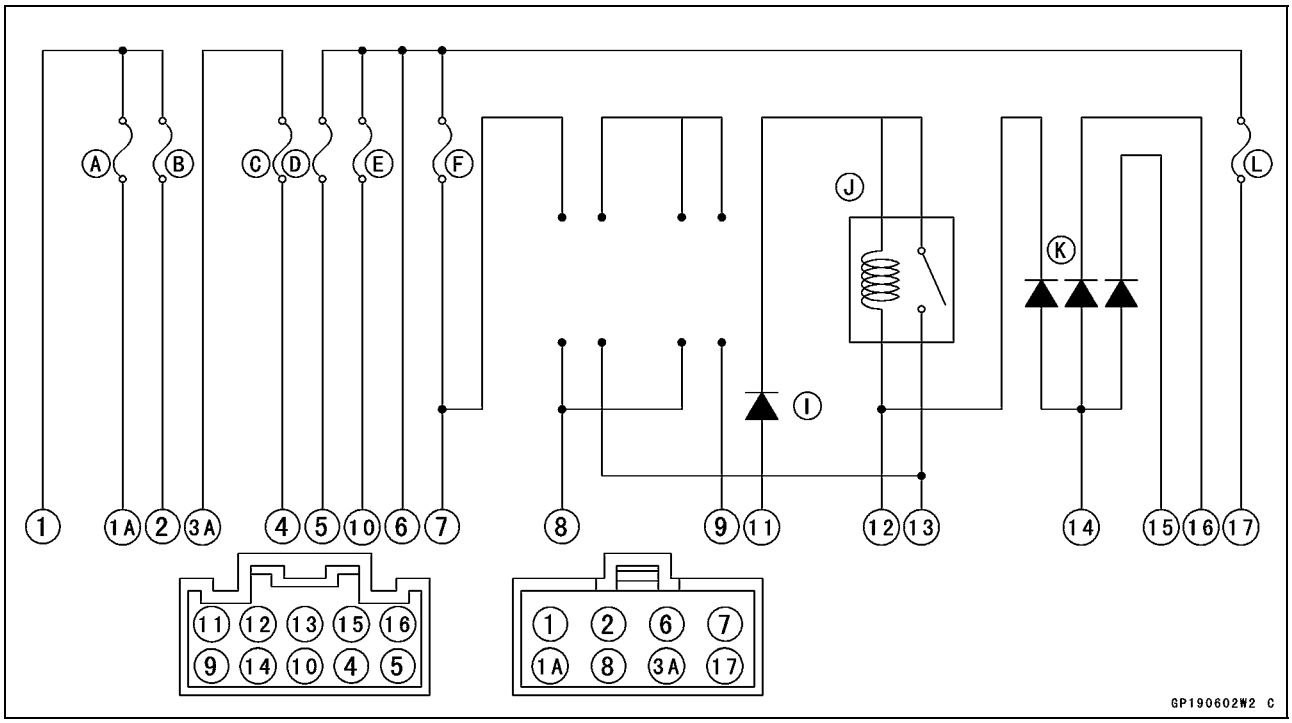

A. Accessory Fuse 10A
B. Fan Fuse 10A
C. Turn Signal Relay Fuse 10A
D. Horn Fuse 10A
E. Ignition Fuse 10A
F. Headlight Fuse 10A
G. Headlight Relay
H. Headlight Diodes
I. Starter Diode
J. Starter Circuit Relay
K. Interlock Diodes
L Taillight Fuse 10A

Fuses

30 Ampere Fuse Removal

- Remove the left side cover (see Left Side Cover Removal in the Frame chapter).
- Disconnect the 30 ampere fuse connector [A].
- Pull out the main fuse [B] from the starter relay with a pair of needle nose pliers.

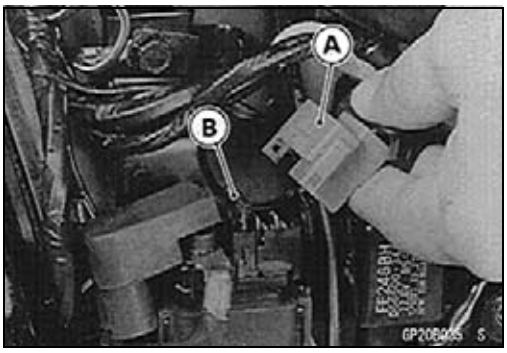

Junction Box Fuse Removal

- Remove the seat (see Seat Removal in the frame chapter).
- Unlock the hook to lift up the lid [A].
- Pull the fuse [B] straight out of the junction box with a pair of needle nose pliers.

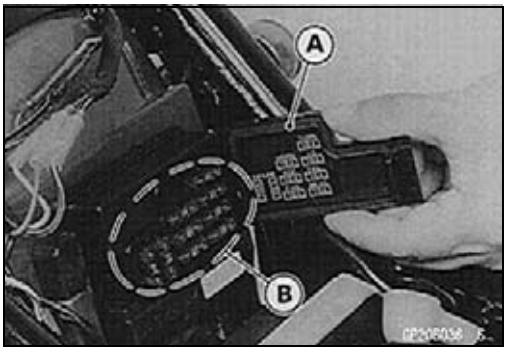

Fuse Installation

- If a fuse fails during operation, inspect the electrical system to determine the cause, and then replace it with a new fuse of proper amperage.
- Install the junction box fuses on the original position as specified on the lid.

Fuse Inspection

- Remove the fuse.
- Inspect the fuse element.
- If it is blown out, replace the fuse. Before replacing a blown fuse, always check the amperage in the affected circuit. If the amperage is equal to or greater than the fuse rating, check the wiring and related components for a short circuit.

Housing [A]	Terminals [C]
Fuse Element [B]	Blown Element [D]

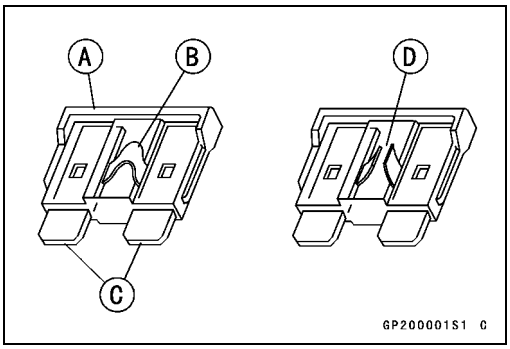

NOTE

○*A mass current flows to the battery according to the state of the battery which needs refreshing charge when the engine is turned causing main fuse blown out.*

CAUTION

When replacing a fuse, be sure the new fuse matches the specified fuse rating for that circuit. Installation of a fuse with a higher rating may cause damage to wiring and components.

Appendix

Table of Contents

Troubleshooting Guide 16-2
General Lubrication 16-7
Lubrication 16-7
Nut, Bolt, and Fastener Tightness 16-8
Tightness Inspection 16-8
Cable, Wire, and Hose Routing 16-9

Troubleshooting Guide

NOTE

○*This is not an exhaustive list, giving every possible cause for each problem listed. It is meant simply as a rough guide to assist the troubleshooting for some of the more common difficulties.*

Engine Doesn't Start, Starting Difficulty:

Starter motor not rotating:
- Starter lockout or neutral switch trouble
- Starter motor trouble
- Battery voltage low
- Starter relays not contacting or operating
- Starter button not contacting
- Wiring open or shorted
- Ignition switch trouble
- Engine stop switch trouble
- Fuse blown

Starter motor rotating but engine doesn't turn over:
- Starter clutch trouble

Engine won't turn over:
- Valve seizure
- Rocker arm seizure
- Cylinder, piston seizure
- Crankshaft seizure
- Connecting rod small end seizure
- Connecting rod big end seizure
- Transmission gear or bearing seizure
- Camshaft seizure
- Alternator shaft bearing seizure
- Balancer bearing seizure

No fuel flow:
- No fuel in tank
- Fuel tap vacuum hose clogged
- Fuel tank air vent obstructed
- Fuel tap clogged
- Fuel line clogged
- Float valve clogged

Engine flooded:
- Fuel level in carburetor float bowl too high
- Float valve worn or stuck open
- Starting technique faulty
- (When flooded, crank the engine with the throttle fully opened to allow more air to reach the engine.)

No spark; spark weak:
- Battery voltage low
- Spark plug dirty, broken, or maladjusted
- Spark plug cap or high tension wiring trouble
- Spark plug cap shorted or not in good contact
- Spark plug incorrect
- IC igniter trouble
- Neutral, starter lockout, or side stand switch trouble
- Crankshaft sensor trouble
- Ignition coil trouble
- Ignition or engine stop switch shorted
- Wiring shorted or open
- Fuse blown

Fuel/air mixture incorrect:
- Pilot screw and/or idle adjusting screw maladjusted
- Pilot jet, or air passage clogged
- Air cleaner clogged, poorly sealed, or missing
- Starter jet clogged

Compression low:
- Spark plug loose
- Cylinder head not sufficiently tightened down
- No valve clearance
- Cylinder, piston worn
- Piston ring bad (worn, weak, broken, or sticking)
- Piston ring/groove clearance excessive
- Cylinder head gasket damaged
- Cylinder head warped
- Valve spring broken or weak
- Valve not seating properly (valve bent, worn, or carbon accumulation on the seating surface)

Poor Running at Low Speed:

Spark weak:
- Battery voltage low
- Spark plug dirty, broken, or maladjusted
- Spark plug cap or high tension wiring trouble
- Spark plug cap shorted or not in good contact
- Spark plug incorrect
- IC igniter trouble
- Crankshaft sensor trouble
- Ignition coil trouble

Fuel/air mixture incorrect:
- Pilot screw maladjusted
- Pilot jet, or air passage clogged
- Air bleed pipe, bleed holes clogged
- Air cleaner clogged, poorly sealed, or missing
- Choke plunger stuck open
- Fuel level in carburetor float bowl too high or too low
- Fuel tank air vent obstructed
- Carburetor holder loose
- Air cleaner duct loose
- Air cleaner O-ring damaged

Compression low:
- Spark plug loose

Cylinder head not sufficiently tightened down
No valve clearance
Cylinder, piston worn
Piston ring bad (worn, weak, broken, or sticking)
Piston ring/groove clearance excessive
Cylinder head warped
Cylinder head gasket damaged
Valve spring broken or weak
Valve not seating properly (valve bent, worn, or carbon accumulation on the seating surface)

Other:
IC igniter trouble
Carburetor vacuum piston doesn't slide smoothly
Carburetor vacuum piston diaphragm damage
Engine oil viscosity too high
Drive train trouble
Brake dragging
Air suction valve trouble
Vacuum switch valve trouble
Coasting enricher trouble

Poor Running or No Power at High Speed:

Firing incorrect:
Spark plug dirty, broken, or maladjusted
Spark plug cap or high tension wiring trouble
Spark plug cap shorted or not in good contact
Spark plug incorrect
IC igniter trouble
Crankshaft sensor trouble
Ignition coil trouble

Fuel/air mixture incorrect:
Choke plunger stuck open
Main jet clogged or wrong size
Jet needle or needle jet worn
Air jet clogged
Fuel level in carburetor float bowl too high or too low
Bleed holes of needle jet holder or needle jet clogged
Air cleaner clogged, poorly sealed, or missing
Air cleaner duct loose
Air cleaner O-ring damaged
Water or foreign matter in fuel
Carburetor holder loose
Fuel tank air vent obstructed
Fuel tap clogged
Fuel line clogged

Compression low:
Spark plug loose
Cylinder head not sufficiently tightened down
No valve clearance
Cylinder, piston worn
Piston ring bad (worn, weak, broken, or sticking)
Piston ring/groove clearance excessive
Cylinder head gasket damaged
Cylinder head warped
Valve spring broken or weak
Valve not seating properly (valve bent, worn, or carbon accumulation on the seating surface.)

Knocking:
Carbon built up in combustion chamber
Fuel poor quality or incorrect
Spark plug incorrect
IC igniter trouble

Miscellaneous:
Throttle valve won't fully open
Carburetor vacuum piston doesn't slide smoothly
Carburetor vacuum piston diaphragm damaged
Brake dragging
Clutch slipping
Overheating
Engine oil level too high
Engine oil viscosity too high
Drive train trouble
Air suction valve trouble
Vacuum switch valve trouble
Coasting enricher trouble
Balancer mechanism malfunctioning

Overheating:

Firing incorrect:
Spark plug dirty, broken, or maladjusted
Spark plug incorrect
IC igniter trouble

Troubleshooting Guide

Fuel/air mixture incorrect:
- Main jet clogged or wrong size
- Fuel level in carburetor float bowl too low
- Carburetor holder loose
- Air cleaner duct loose
- Air cleaner poorly sealed, or missing
- Air cleaner O-ring damaged
- Air cleaner clogged

Compression high:
- Carbon built up in combustion chamber

Engine load faulty:
- Clutch slipping
- Engine oil level too high
- Engine oil viscosity too high
- Drive train trouble
- Brake dragging

Lubrication inadequate:
- Engine oil level too low
- Engine oil poor quality or incorrect

Coolant incorrect:
- Coolant level too low
- Coolant deteriorated

Cooling system component incorrect:
- Radiator fin damaged
- Radiator clogged
- Thermostat trouble
- Radiator cap trouble
- Radiator fan switch trouble
- Fan motor broken
- Fan blade damaged
- Water pump not turning
- Water pump impeller damaged

Over Cooling:

Cooling system component incorrect:
- Radiator fan switch trouble
- Thermostat trouble

Clutch Operation Faulty:

Clutch slipping:
- Friction plate worn or warped
- Steel plate worn or warped
- Clutch spring broken or weak
- Clutch cable maladjusted
- Clutch hub or housing unevenly worn
- No clutch lever play
- Clutch inner cable catching
- Clutch release mechanism trouble

Clutch not disengaging properly:
- Clutch plate warped or too rough
- Clutch spring compression uneven
- Engine oil deteriorated
- Engine oil viscosity too high
- Engine oil level too high
- Clutch housing frozen on drive shaft
- Clutch hub nut loose
- Clutch hub spline damaged
- Clutch friction plate installed wrong
- Clutch lever play excessive
- Clutch release mechanism trouble

Gear Shifting Faulty:

Doesn't go into gear; shift pedal doesn't return:
- Clutch not disengaging
- Shift fork bent or seized
- Gear stuck on the shaft
- Gear positioning lever binding
- Shift return spring weak or broken
- Shift return spring pin loose
- Shift mechanism arm spring broken
- Shift mechanism arm broken
- Shift pawl broken

Jumps out of gear:
- Shift fork ear worn, bent
- Gear groove worn
- Gear dogs and/or dog holes worn
- Shift drum groove worn
- Gear positioning lever spring weak or broken
- Shift fork pin worn
- Drive shaft, output shaft, and/or gear splines worn

Overshifts:
- Gear positioning lever spring weak or broken
- Shift mechanism arm spring broken

Abnormal Engine Noise:

Knocking:
- IC igniter trouble
- Carbon built up in combustion chamber
- Fuel poor quality or incorrect
- Spark plug incorrect
- Overheating

Piston slap:
- Cylinder/piston clearance excessive
- Cylinder, piston worn
- Connecting rod bent
- Piston pin, piston pin hole worn

Valve noise:
- Valve clearance incorrect
- Valve spring broken or weak
- Camshaft bearing worn
- Rocker arm worn
- Rocker shaft worn

Other noise:
- Connecting rod small end clearance excessive
- Connecting rod big end clearance excessive
- Piston ring worn, broken, or stuck
- Piston seizure, damage
- Cylinder head gasket leaking

Troubleshooting Guide

Exhaust pipe leaking at cylinder head connection
Crankshaft runout excessive
Engine mounts loose
Crankshaft bearing worn
Primary chain worn
Camshaft chain tensioner trouble
Camshaft chain, sprocket, guide worn
Air suction valve damaged
Vacuum switch valve damaged
Alternator rotor loose
Balancer gear worn or chipped
Balancer shaft position maladjusted
Balancer bearing worn
Starter chain, sprocket, guide worn

Abnormal Drive Train Noise:

Clutch noise:
Clutch rubber damper weak or damaged
Clutch housing/friction plate clearance excessive
Clutch housing gear worn

Transmission noise:
Bearings worn
Transmission gears worn or chipped
Metal chips jammed in gear teeth
Engine oil insufficient

Drive line noise:
Drive chain adjusted improperly
Drive chain worn
Rear and/or engine sprocket worn
Chain lubrication insufficient
Rear wheel misaligned

Abnormal Frame Noise:

Front fork noise:
Oil insufficient or too thin
Spring weak or broken

Rear shock absorber noise:
Shock absorber damaged

Disc brake noise:
Pad installed incorrectly
Pad surface glazed
Disc warped
Caliper trouble

Drum brake noise:
Brake linings overworn or worn unevenly
Drum worn unevenly or scored
Brake springs weak or broken
Foreign matter in hub
Brake not properly adjusted

Other noise:
Bracket, nut, bolt, etc. not properly mounted or tightened

Oil Pressure Warning Light Goes On:

Engine oil pump damaged
Engine oil screen clogged
Engine oil level too low
Engine oil viscosity too low
Camshaft bearing worn
Crankshaft bearings worn
Balancer bearings worn
Oil pressure switch damaged
Wiring faulty
Relief valve stuck open
O-ring at the oil passage in the crankcase damaged

Exhaust Smokes Excessively:

White smoke:
Piston oil ring worn
Cylinder worn
Valve oil seal damaged
Valve guide worn
Cylinder head gasket damaged
Engine oil level too high

Black smoke:
Air cleaner clogged
Main jet too large or fallen off
Choke plunger stuck open
Fuel level in carburetor float bowl too high

Brown smoke:
Main jet too small
Fuel level in carburetor float bowl too low
Air cleaner duct loose
Air cleaner O-ring damaged
Air cleaner poorly sealed or missing

Handling and/or Stability Unsatisfactory:

Handlebar hard to turn:
Cable routing incorrect
Hose routing incorrect
Wiring routing incorrect
Steering stem locknut too tight
Steering stem bearing damaged
Steering stem bearing lubrication inadequate
Steering stem bent
Tire air pressure too low

Handlebar shakes or excessively vibrates:
Tire worn
Swingarm pivot bearings worn
Rim warped, or not balanced
Wheel bearing worn
Handlebar clamp loose
Steering stem head bolt loose

Handlebar pulls to one side:
Frame bent
Wheel misalignment
Swingarm bent or twisted

Steering maladjusted
Front fork bent
Right and left front fork oil level uneven

Shock absorption unsatisfactory:
(Too hard)
Front fork oil excessive
Front fork oil viscosity too high
Rear shock absorber adjustment too hard
Tire air pressure too high
Front fork bent
(Too soft)
Tire air pressure too low
Front fork oil insufficient and/or leaking
Front fork oil viscosity too low
Rear shock adjustment too soft
Front fork, rear shock absorber spring weak
Rear shock absorber oil leaking

Brake Doesn't Hold:

Disc brake:
Air in the brake line
Pad or disc worn
Brake fluid leakage
Disc warped
Contaminated pad
Brake fluid deteriorated
Primary or secondary cup damaged in master cylinder
Master cylinder scratched inside

Drum brake:
Brake maladjusted
Brake linings or drum worn
Overheated
Water in brake drum
Brake cam, camshaft worn
Oil on brake linings

Battery Trouble:

Battery discharged:
Battery faulty (e.g., plates sulphated, shorted through sedimentation, electrolyte insufficient)
Battery cables making poor contact
Load excessive (e.g., bulb of excessive wattage)
Ignition switch trouble
Alternator trouble
Wiring faulty
Regulator/rectifier trouble

Battery overcharged:
Regulator/rectifier trouble

General Lubrication

Lubrication

- Before lubricating each part, clean off any rusty spots with rust remover and wipe off any grease, oil, dirt, or grime.
- Lubricate the points listed below with indicated lubricant.

NOTE

○*Whenever the vehicle has been operated under wet or rainy conditions, or especially after using a high-pressure water spray, perform the general lubrication.*

Pivots: Lubricate with Motor Oil.

Brake Lever
Brake Pedal
Side Stand
Rear Brake Rod Joint

Points: Lubricate with Grease.

Clutch Inner Cable Upper and Lower Ends
Throttle Inner Cable Upper and Lower Ends
Speedometer Inner Cable*

*: Grease the lower part of the inner cable sparingly.

Cables: Lubricate with Rust Inhabiter.

Throttle Cables
Clutch Cable

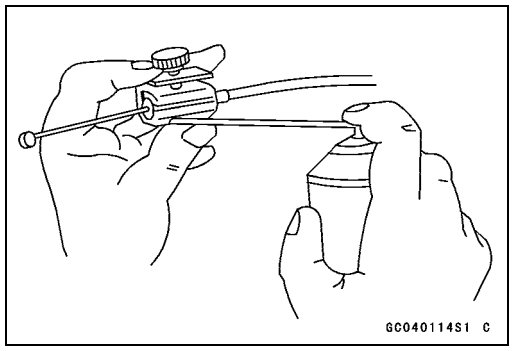

Nut, Bolt, and Fastener Tightness

Tightness Inspection

- Check the tightness of the bolts and nuts listed here. Also, check to see that each cotter pin is in place and in good condition.

NOTE

○*For the engine fasteners, check the tightness of them when the engine is cold (at room temperature).*

★If there are loose fasteners, retorque them to the specified torque following the specified tightening sequence. Refer to the appropriate chapter for torque specifications. If torque specifications are not in the appropriate chapter, see the Standard Torque Table. For each fastener, first loosen it by 1/2 turn, then tighten it.

★If cotter pins are damaged, replace them with new ones.

Nut, Bolt and Fastener to be checked

Wheels:
- Front Axle Nut
- Front Axle Clamp Bolt
- Rear Axle Nut
- Rear Axle Nut Cotter Pin

Brakes:
- Master Cylinder Clamp Bolts
- Brake Lever Pivot Nut
- Caliper Mounting Bolts
- Brake Pedal Lever Clamp Bolt
- Cam Lever Clamp Bolt
- Brake Rod Joint Cotter Pin
- Torque Link Nuts
- Torque Link Nut Clips

Suspension:
- Front Fork Clamp Allen Bolts
- Rear Shock Absorber Mounting Bolts
- Swingarm Pivot Shaft Nut

Steering:
- Stem Head Bolt
- Handlebar Mounting Nuts

Engine:
- Engine Mounting Bolts and Nuts
- Shift Pedal Bolt
- Muffler Mounting Bolts and Nuts
- Exhaust Pipe Holder Nuts
- Muffler Connecting Clamp Bolt
- Clutch Lever Holder Clamp Bolt
- Clutch Lever Pivot Nut

Others:
- Side Stand Pivot Nut
- Front Footpeg Bracket Mounting Bolts
- Front Fender Mounting Bolts

Cable, Wire, and Hose Routing

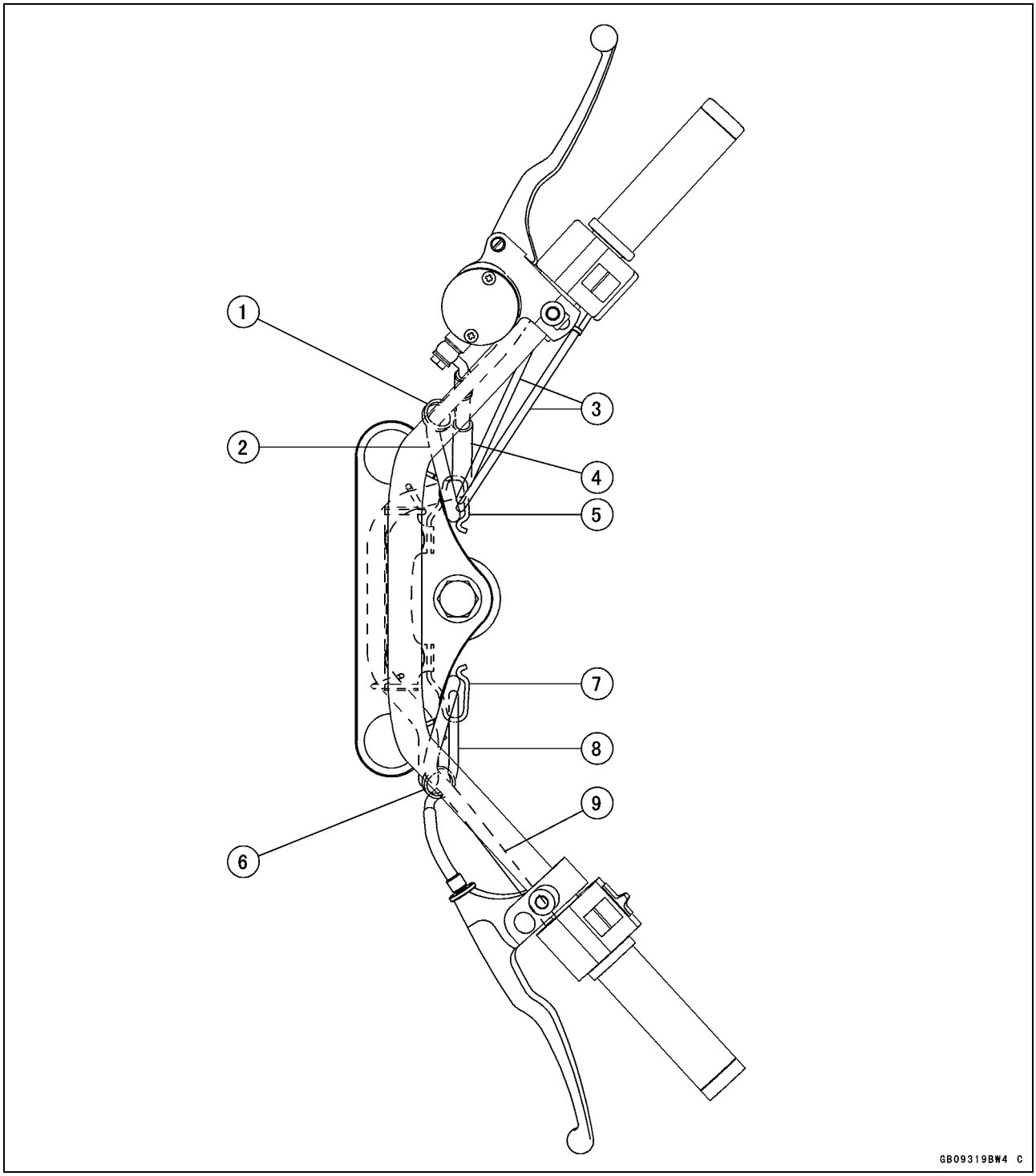

1. Clamp (Right Hand Switch Lead)
2. Right Hand Switch Lead
3. Throttle Cables
4. Brake Hose
5. Clamp (Right Hand Switch Lead, Throttle Cables, Brake Hose)
6. Clamp (Clutch Cable, Left Hand Switch Lead)
7. Clamp (Clutch Cable, Left Hand Switch Lead)
8. Clutch Cable
9. Left Hand Switch Lead

Cable, Wire, and Hose Routing

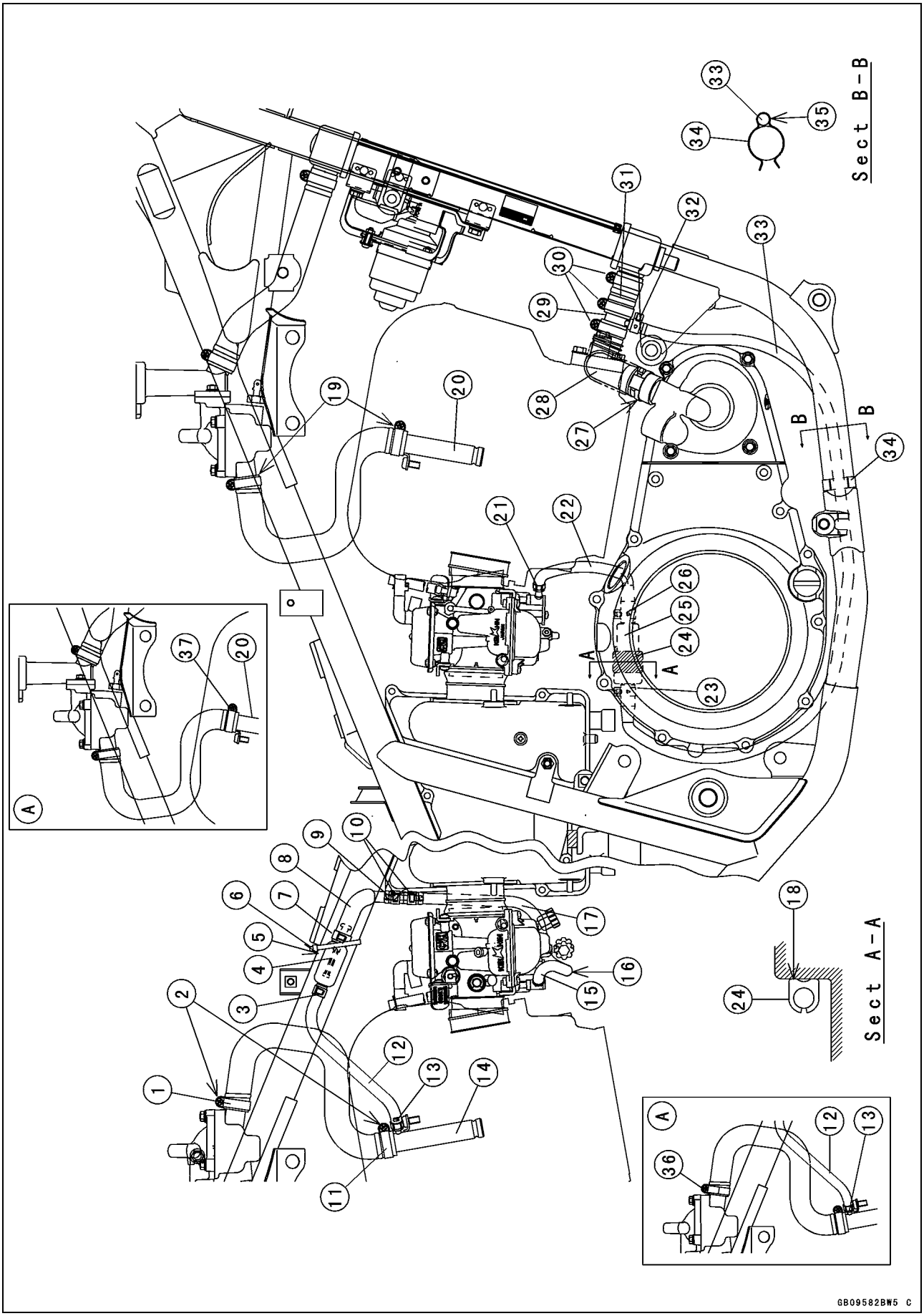

Cable, Wire, and Hose Routing

Korea, Germany, France, Italy, United Kingdom, Switzerland, Austria and Netherlands Models

1. Clamp
2. Direction of the clamp.
   Notice it differs from that of right side.
3. Clamp
4. Coolant Filter
5. Coolant Filter Housing (Set the coolant filter housing parallel to the outer side of the frame.)
6. Band
7. Clamp
8. Coolant Hose
9. Fitting
10. Clamps
11. Clamp
12. Coolant Hose
13. Clamp
14. Radiator Pipe (Left)
15. Coolant Hose
16. Install the hose of U-shaped side shown as illustrated.
17. Run the hose between the right carburetor boot and the left one.
18. Fit the flat part of the damper on the crankcase.
19. Direction of the clamp. Notice it differs from that of left side.
20. Radiator Pipe (Right)
21. Clamp
22. Coolant Hose
23. Clamp
24. Damper
25. Coolant Valve
26. Clamp
27. Set the hose with its white-painted mark located at the rear.
28. Radiator Hose
29. Fitting Pipe
30. Clamps
31. Radiator Hose
32. Clamp
33. Coolant Hose
34. Clamp
35. Set the clamp parallel to the inner side of the frame.
36. Direction of the clamp is same as left side and right side.
37. Direction of the clamp. Notice it differs from that of left side.

A: On and after EN500-C8.

Cable, Wire, and Hose Routing

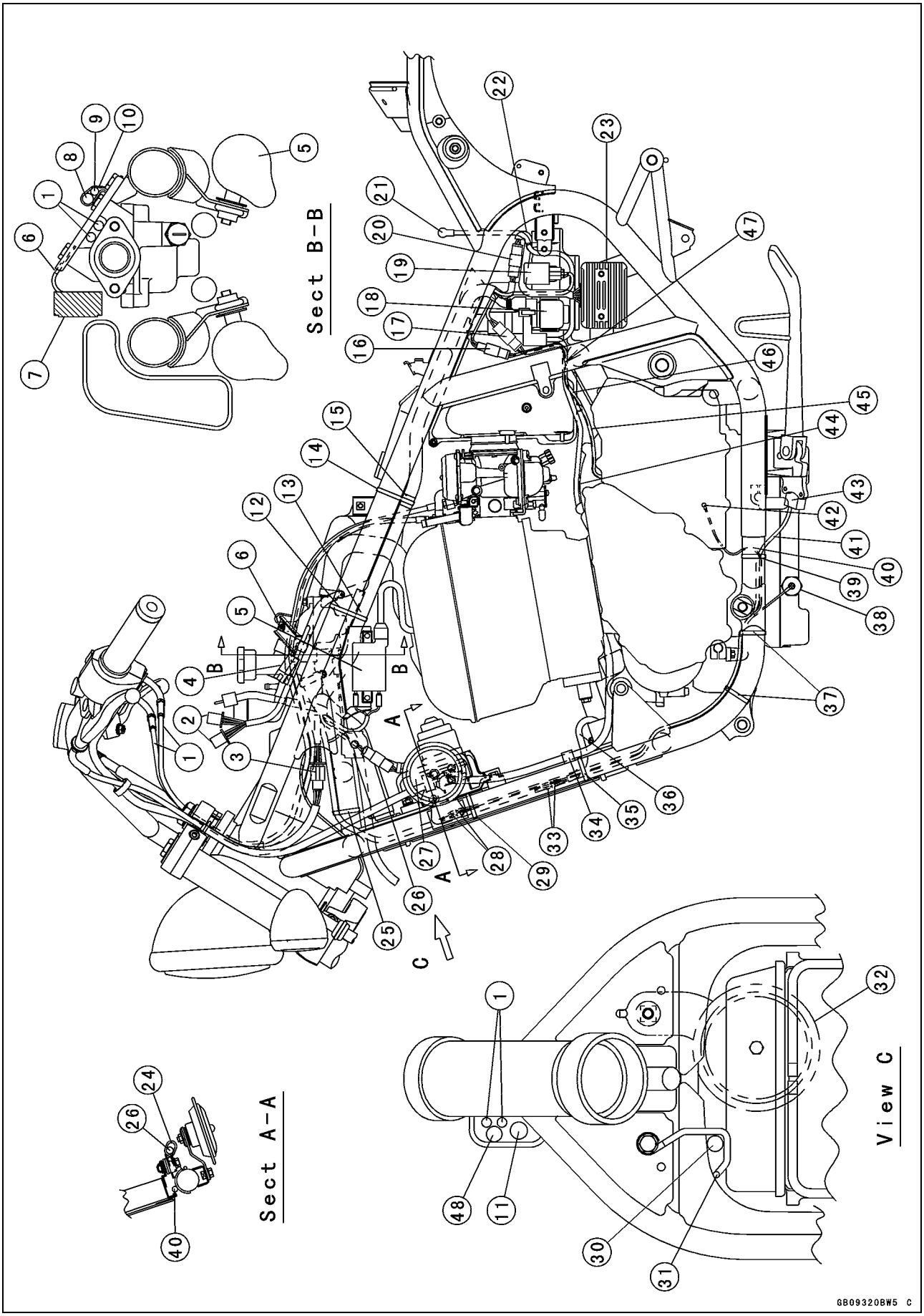

Cable, Wire, and Hose Routing

1. Throttle Cable
   (SECT B-B: Run the throttle cable between the thermostat case and the bracket. VIEW C: Run the throttle cable to the head side over the main harness and right handlebar switch lead.)
2. Meter Connector
3. Left Hand Switch Connector
4. Diode
5. Ignition Coils
6. Ground (Tighten the ground connection with the thermostat bracket.)
7. Ignition Switch Connector
8. Meter Lead
9. Diode Lead
10. Clamp (Meter Lead, Diode Lead)
11. Right Main Harness
12. Band (Left Main Harness)
13. Left Main Harness
14. Band (Main Harness)
15. White Tape
16. Crankshaft Sensor Lead Connector
17. Alternator Lead Connector
18. Starter Relay
19. Turn Signal Relay
20. Regulator/Rectifier Lead Connector
21. Battery Lead (+)
22. Clamp (Battery Lead +)
23. Regulator/Rectifier
24. Clamp (Clutch Cable) (Tighten the clamp with the radiator.)
25. Band (Main Harness)
26. Clutch Cable
27. Horn
28. Side Stand Switch Lead Connectors
29. Band (Side Stand Switch Lead, Main Harness)
30. Speedometer Cable
31. Clamp (Speedometer Cable)
32. Horn (Italian Model Only)
33. Water Temperature Switch Lead Connector
34. Clamp (Clutch Cable)
35. Band (Side Stand Switch Lead, Main Harness, Water Temperature Switch Lead)
36. Water Temperature Switch Lead
37. Band (Side Stand Switch Lead, Main Harness)
38. Oil Pressure Switch
39. Band (Side Stand Switch Lead, Main Harness)
40. Main Harness
41. Side Stand Switch Lead
42. Neutral Switch
43. Side Stand Switch
44. Starter Lead (+)
45. Alternator Lead
46. Crankshaft Sensor Lead
47. Run the harness between the crossed pipe and the air cleaner housing. The crankshaft sensor lead and the alternator lead should run above the starter motor lead (+).
48. Right Hand Switch Lead

Cable, Wire, and Hose Routing

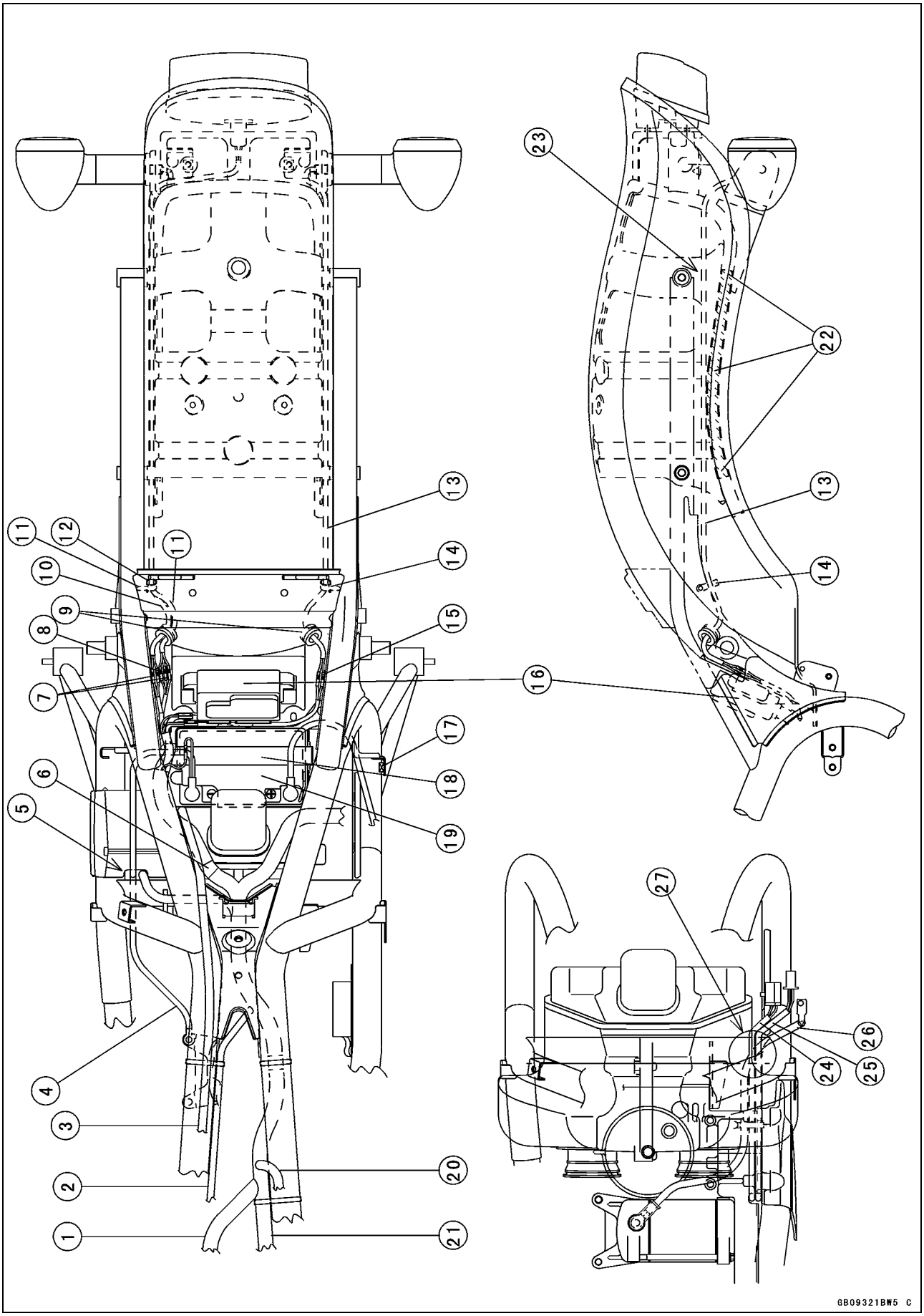

Cable, Wire, and Hose Routing

1. Main Harness
2. Ignition Switch Lead
3. Fuel Tank Drain Hose
4. Starter Lead (–) (Tighten the starter motor negative lead with the rear mounting part of the starter motor.)
5. Run the harness between the cross pipe and the storage container (Igniter Lead, Starter Motor Lead (–)).
6. White Tape
7. Rear Right Turn Signal Light Lead Connectors
8. Tail/Brake Light Lead Connectors
9. Grommets
10. Rear Right Turn Signal Light Lead
11. Tail/Brake Light Lead
12. Clamp (Rear Right Turn Signal Light Lead, Tail/Brake Light Lead)
13. Rear Left Turn Signal Light Lead
14. Clamp (Rear Left Turn Signal Light Lead)
15. Rear Left Turn Signal Light Lead Connectors
16. Junction Box
17. Battery Lead (+)
18. Battery Band
19. Battery Cover
20. Meter/Diode Lead
21. Main Harness
22. Dampers
23. Run the harness between the reinforces part and the rear fender.
24. Alternator Lead
25. Crankshaft Sensor Lead
26. Starter Lead (+)
27. Run the leads between the cross pipe and the air cleaner housing.

Cable, Wire, and Hose Routing

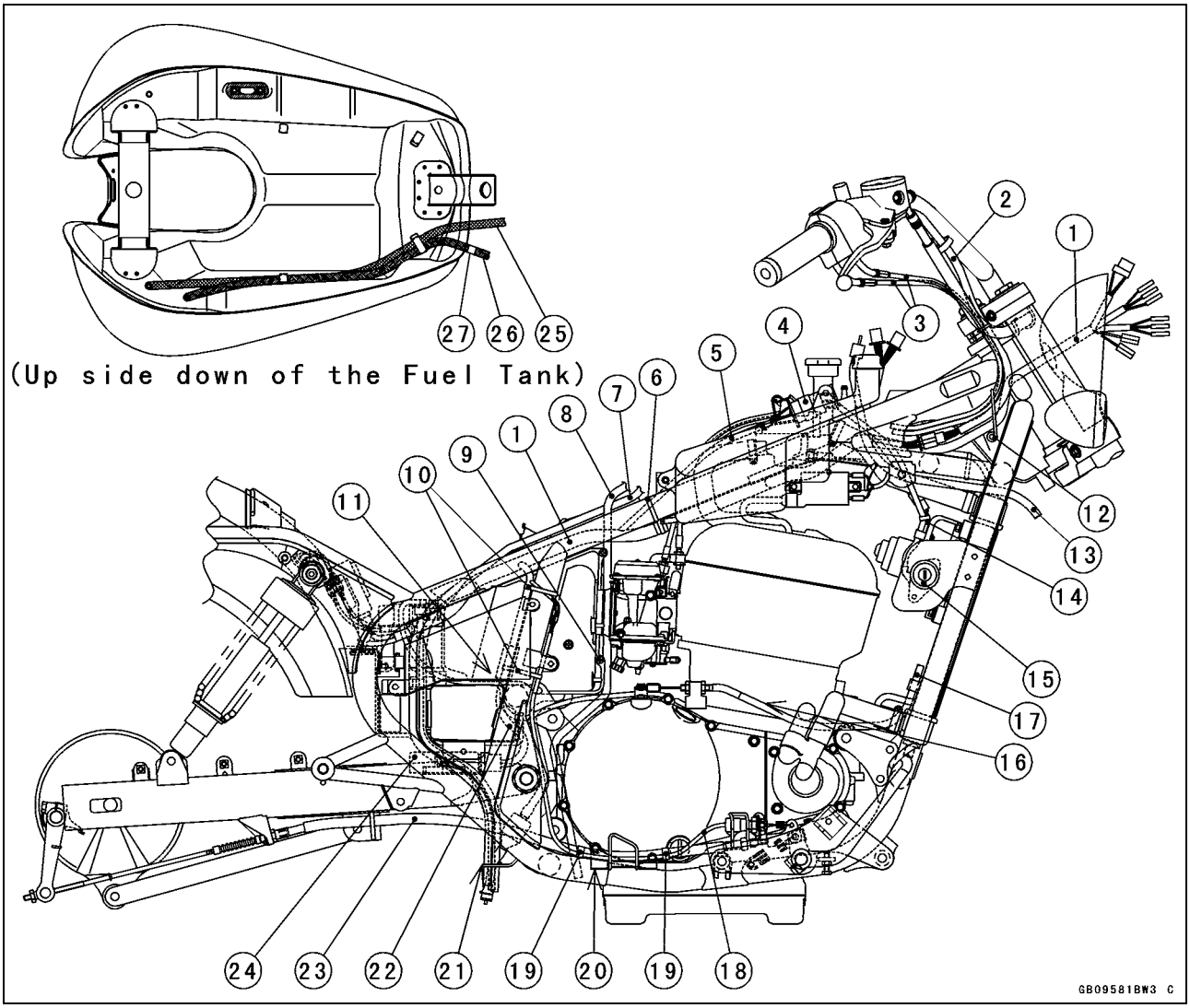

1. Main Harness
2. Right Hand Switch Lead
3. Throttle Cables
4. Ignition Switch Connector
5. Ignition Switch Lead
6. Band (Ignition Switch Lead)
7. Fuel Tank Breather Hose
8. Fuel Tank Drain Hose
9. Starter Lead (−)
10. Bands (Igniter Lead, Rear Brake Switch Lead)
11. Run the harness between the cross pipe and the storage container.
12. Clamp (Main Harness, Right Hand Switch Lead, Throttle Cables)
13. Speedometer Cable
14. Band (Fan Motor Lead, Ignition Switch Lead)
15. Ignition Switch
16. Install the elbow of the clutch cable facing downward.
17. Clutch Cable
18. Rear Brake Switch Lead
19. Clamp (Clamp the brake cable together with the brake switch lead run outside of the cable).
20. Harness Guide (Tighten the harness guide with clutch cover).
21. Clamp (Battery vent Hose, Air Cleaner Drain Hose, Fuel Tank Drain Hose, Radiator Drain Hose)
22. Igniter Lead
23. Brake Cable
24. Igniter
25. Run the fuel tank breather hose between the seat and the frame.
26. Run the fuel tank drain hose between the carburetor and the air cleaner box.
27. White Tape

Cable, Wire, and Hose Routing

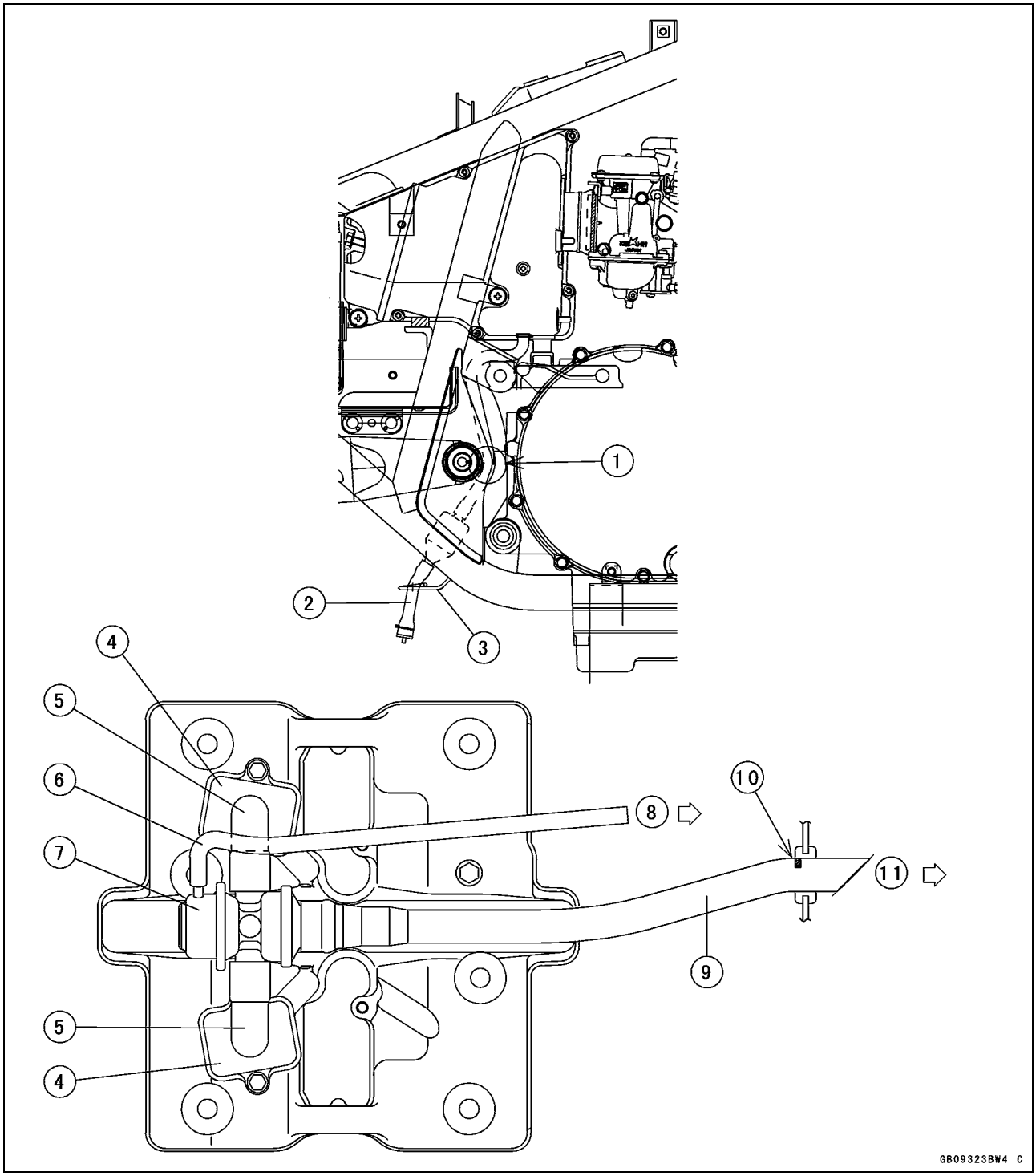

1. Run the air cleaner drain hose to the front of the pivot.
2. Air Cleaner Drain Hose
3. Clamp (Air Cleaner Drain Hose)

*4. Air Suction Valve Cover
*5. Tube
*6. Hose
*7. Vacuum Switch Valve (Install the vacuum switch valve with the negative pressure outlet facing the right upper side.)
*8. To the #2 carburetor.
*9. Tube
*10. Insert the hose till its white-painted mark is hidden in the grommet securely.
*11. Insert the hose into the air cleaner housing.

*: Austria, Korea, Switzerland, Untied States, Canada and Germany Models

Cable, Wire, and Hose Routing

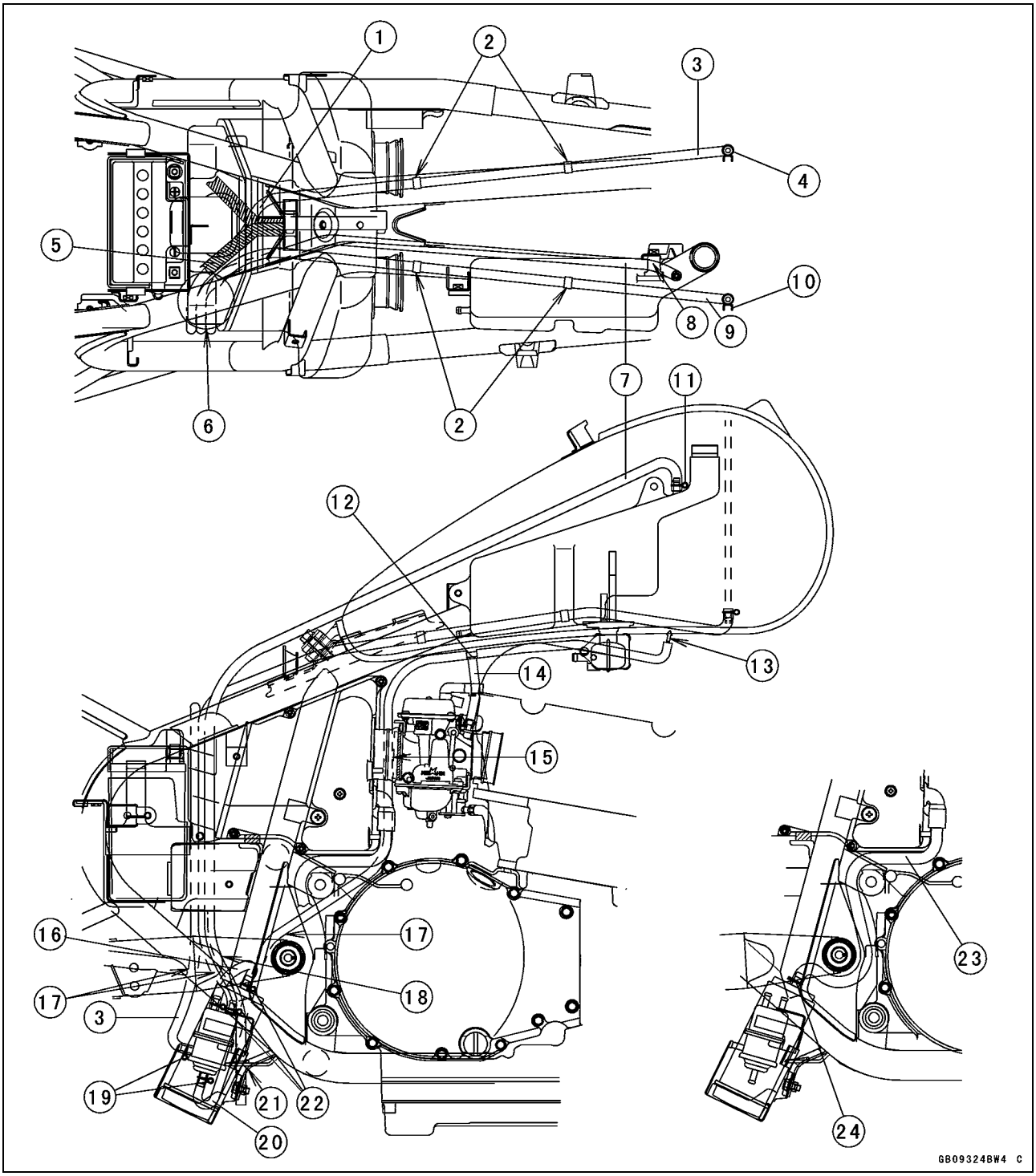

1. Run the hose below the main harness.
2. Run the hose into the clamp welded to the fuel tank.
3. Hose (Red)
4. Clamp
5. Run the hose under the main harness.
6. Run the hose below the frame.
7. Reserve Tank Over Flow Hose
8. Run the hose above the reserve tank mounting collar.
9. Hose (Blue)
10. Clamp
11. Clamp
12. Fitting
13. To the vacuum switch valve.
14. Hose (White)
15. Run the hose between the right carburetor boot and the left one.
16. Hose (Blue)
17. Run the hoses inside the swingarm.
18. Run the hose outside the swingarm.
19. Clamp
20. Hose (White)
21. Run the reserve tank overflow hose into the clamp.
22. Clamp
23. Hose (Green)
24. Clamp

Cable, Wire, and Hose Routing

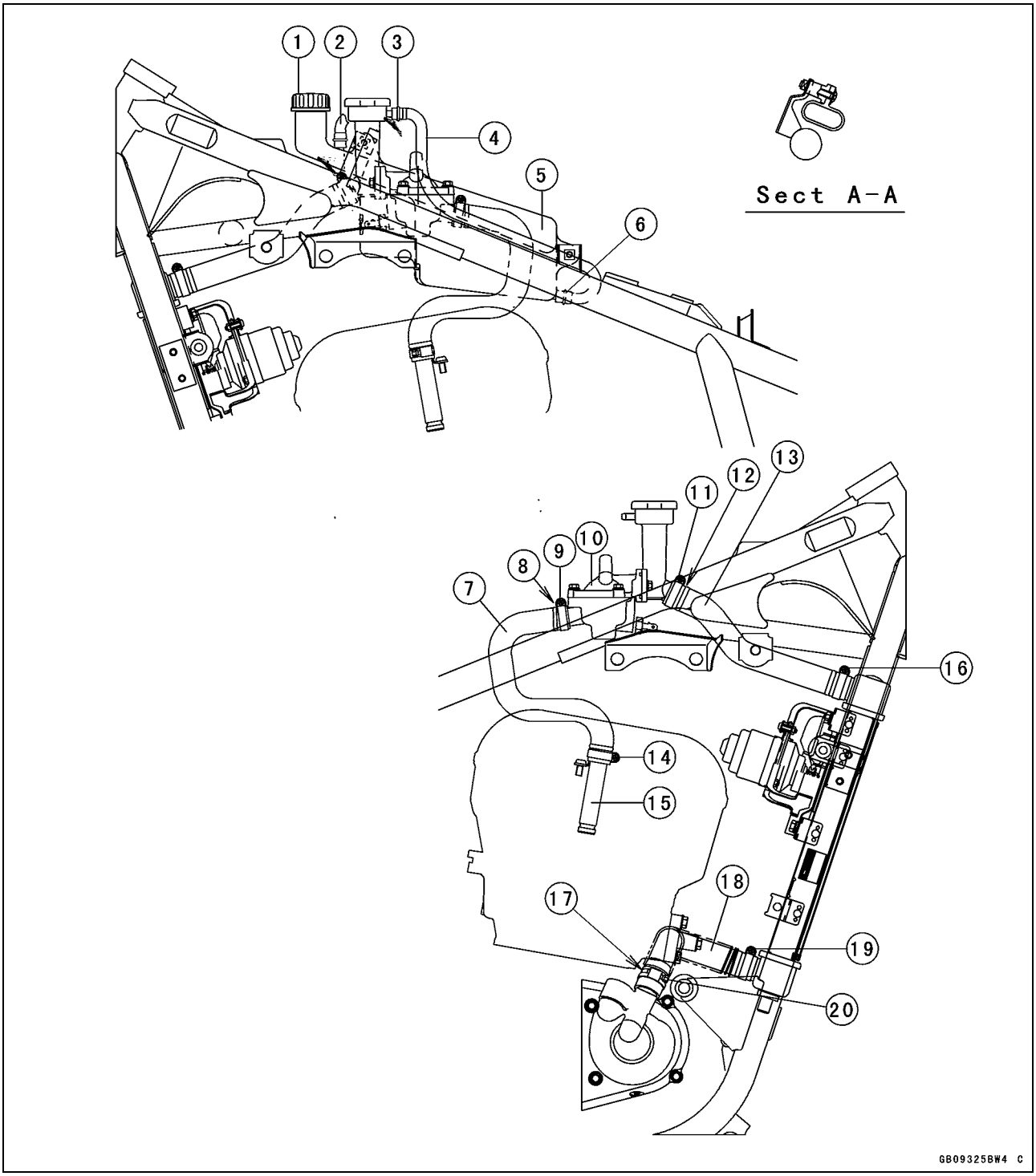

1. Reserve Tank Cap
2. Reserve Tank Overflow Hose
3. Clamp
4. Reserve Tank Hose
5. Reserve Tank
6. Clamp
7. Radiator Hose (Right)
8. Position the white-painted mark right above.
9. Clamp
10. Thermostat Housing
11. Clamp
12. Position the white-painted mark right above.
13. Radiator Hose
14. Clamp
15. Radiator Pipe (Right)
16. Clamp
17. Position the white-painted mark behind the hose.
18. Radiator Hose
19. Clamp
20. Clamp

Cable, Wire, and Hose Routing

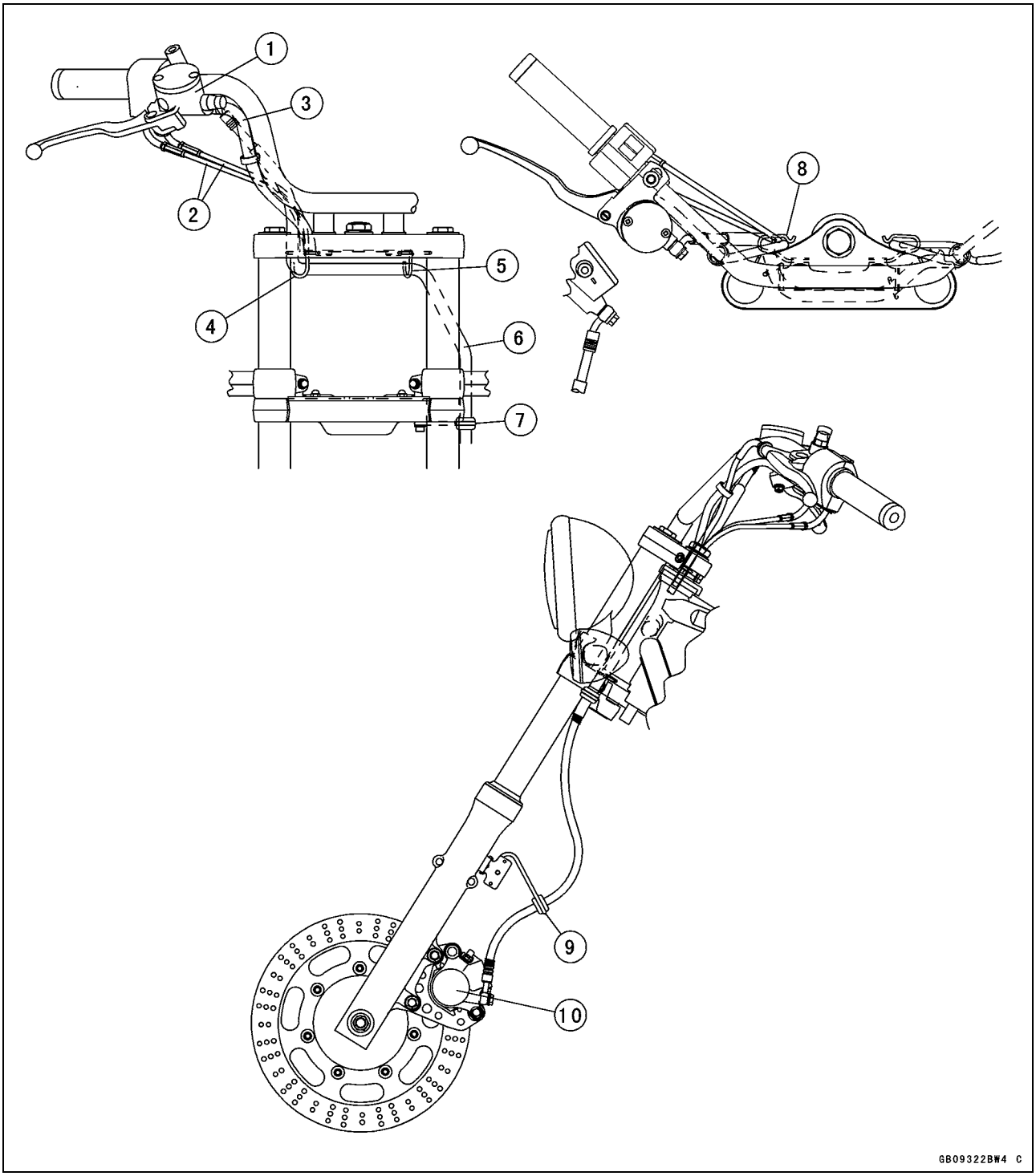

1. Master Cylinder
2. Throttle Cables
3. Right Hand Switch lead
4. Clamp
5. Clamp
6. Brake Hose
7. Clamp
8. Clamp (Brake Hose, Throttle Cables, Right Hand Switch Lead)
9. Clamp
10. Caliper

MODEL APPLICATION

Year	Model	Beginning Frame No.
1996	EN500-C1	JKAENVC1□TA000001 or EN500C-000001
1997	EN500-C2	JKAENVC1□TA005001 or EN500C-005001
1998	EN500-C3	JKAENVC1□WA150001 or EN500C-007001
1999	EN500-C4	JKAENVC1□XA156001 or JKAEN500ACA 156001
2000	EN500-C5	JKAENVC1□YA164001 or JKAEN500ACA 164001
2001	EN500-C6	JKAENVC1□1A168001 or JKAEN500ACA 168001
2002	EN500-C7	JKAENVC1□2A173001 or JKAEN500ACA 173001
2003	EN500-C8	JKAENVC1□3A180001 or JKAEN500ACA 180001
2004	EN500-C9	JKAENVC1□4A185001
2005	EN500-C10	JKAENVC1□5A189001
2006	EN500C6F	JKAENVC1□6A196001
2007	EN500C7F	JKAENVC1□7A204001
2008	EN500C8F	JKAENVC1□8A208001

□:This digit in the frame number changes from one machine to another.