Kawasaki

ER-6n

Motorcycle Service Manual

http://mototh.com

http://mototh.com

Quick Reference Guide

General Information	1
Periodic Maintenance	2
Fuel System (DFI)	3
Cooling System	4
Engine Top End	5
Clutch	6
Engine Lubrication System	7
Engine Removal/Installation	8
Crankshaft/Transmission	9
Wheels/Tires	10
Final Drive	11
Brakes	12
Suspension	13
Steering	14
Frame	15
Electrical System	16
Appendix	17

This quick reference guide will assist you in locating a desired topic or procedure.

- Bend the pages back to match the black tab of the desired chapter number with the black tab on the edge at each table of contents page.
- Refer to the sectional table of contents for the exact pages to locate the specific topic required.

http://mototh.com

http://mototh.com

Kawasaki

ER-6n

Motorcycle Service Manual

All rights reserved. No parts of this publication may be reproduced, stored in a retrieval system, or transmitted in any form or by any means, electronic mechanical photocopying, recording or otherwise, without the prior written permission of Quality Division/Consumer Products & Machinery Company/Kawasaki Heavy Industries, Ltd., Japan.

No liability can be accepted for any inaccuracies or omissions in this publication, although every possible care has been taken to make it as complete and accurate as possible.

The right is reserved to make changes at any time without prior notice and without incurring an obligation to make such changes to products manufactured previously. See your Motorcycle dealer for the latest information on product improvements incorporated after this publication.

All information contained in this publication is based on the latest product information available at the time of publication. Illustrations and photographs in this publication are intended for reference use only and may not depict actual model component parts.

© 2005 Kawasaki Heavy Industries, Ltd.

First Edition (1) : Aug. 5, 2005 (K)

http://mototh.com

LIST OF ABBREVIATIONS

A	ampere(s)	lb	pound(s)
ABDC	after bottom dead center	m	meter(s)
AC	alternating current	min	minute(s)
ATDC	after top dead center	N	newton(s)
BBDC	before bottom dead center	Pa	pascal(s)
BDC	bottom dead center	PS	horsepower
BTDC	before top dead center	psi	pound(s) per square inch
°C	degree(s) Celsius	r	revolution
DC	direct current	rpm	revolution(s) per minute
F	farad(s)	TDC	top dead center
°F	degree(s) Fahrenheit	TIR	total indicator reading
ft	foot, feet	V	volt(s)
g	gram(s)	W	watt(s)
h	hour(s)	Ω	ohm(s)
L	liter(s)		

Read OWNER’S MANUAL before operating.

Foreword

This manual is designed primarily for use by trained mechanics in a properly equipped shop. However, it contains enough detail and basic information to make it useful to the owner who desires to perform his own basic maintenance and repair work. A basic knowledge of mechanics, the proper use of tools, and workshop procedures must be understood in order to carry out maintenance and repair satisfactorily. Whenever the owner has insufficient experience or doubts his ability to do the work, all adjustments, maintenance, and repair should be carried out only by qualified mechanics.

In order to perform the work efficiently and to avoid costly mistakes, read the text, thoroughly familiarize yourself with the procedures before starting work, and then do the work carefully in a clean area. Whenever special tools or equipment are specified, do not use makeshift tools or equipment. Precision measurements can only be made if the proper instruments are used, and the use of substitute tools may adversely affect safe operation.

For the duration of the warranty period, we recommend that all repairs and scheduled maintenance be performed in accordance with this service manual. Any owner maintenance or repair procedure not performed in accordance with this manual may void the warranty.

To get the longest life out of your vehicle:

- Follow the Periodic Maintenance Chart in the Service Manual.
- Be alert for problems and non-scheduled maintenance.
- Use proper tools and genuine Kawasaki Motorcycle parts. Special tools, gauges, and testers that are necessary when servicing Kawasaki motorcycles are introduced by the Service Manual. Genuine parts provided as spare parts are listed in the Parts Catalog.
- Follow the procedures in this manual carefully. Don't take shortcuts.
- Remember to keep complete records of maintenance and repair with dates and any new parts installed.

How to Use This Manual

In preparing this manual, we divided the product into its major systems. These systems became the manual's chapters. All information for a particular system from adjustment through disassembly and inspection is located in a single chapter.

The Quick Reference Guide shows you all of the product's system and assists in locating their chapters. Each chapter in turn has its own comprehensive Table of Contents.

The Periodic Maintenance Chart is located in the Periodic Maintenance chapter. The chart gives a time schedule for required maintenance operations.

If you want spark plug information, for example, go to the Periodic Maintenance Chart first. The chart tells you how frequently to clean and gap the plug. Next, use the Quick Reference Guide to locate the Periodic Maintenance chapter. Then, use the Table of Contents on the first page of the chapter to find the Spark Plug section.

Whenever you see these WARNING and CAUTION symbols, heed their instructions! Always follow safe operating and maintenance practices.

⚠ WARNING

This warning symbol identifies special instructions or procedures which, if not correctly followed, could result in personal injury, or loss of life.

CAUTION

This caution symbol identifies special instructions or procedures which, if not strictly observed, could result in damage to or destruction of equipment.

This manual contains four more symbols (in addition to WARNING and CAUTION) which will help you distinguish different types of information.

http://mototh.com

NOTE

○*This note symbol indicates points of particular interest for more efficient and convenient operation.*

● Indicates a procedural step or work to be done.

○Indicates a procedural sub-step or how to do the work of the procedural step it follows. It also precedes the text of a NOTE.

★Indicates a conditional step or what action to take based on the results of the test or inspection in the procedural step or sub-step it follows.

In most chapters an exploded view illustration of the system components follows the Table of Contents. In these illustrations you will find the instructions indicating which parts require specified tightening torque, oil, grease or a locking agent during assembly.

http://mototh.com

General Information

Table of Contents

Before Servicing 1-2
Model Identification..... 1-7
General Specifications..... 1-8
Technical Information - Cassette Type Transmission 1-11
Technical Information - Inlet Air Pressure Sensor 1-12
Unit Conversion Table 1-13

http://mototh.com

Before Servicing

Before starting to perform an inspection service or carry out a disassembly and reassembly operation on a motorcycle, read the precautions given below. To facilitate actual operations, notes, illustrations, photographs, cautions, and detailed descriptions have been included in each chapter wherever necessary. This section explains the items that require particular attention during the removal and reinstallation or disassembly and reassembly of general parts.

Especially note the following:

Battery Ground

Before completing any service on the motorcycle, disconnect the battery wires from the battery to prevent the engine from accidentally turning over. Disconnect the ground wire (–) first and then the positive (+). When completed with the service, first connect the positive (+) wire to the positive (+) terminal of the battery then the negative (–) wire to the negative terminal.

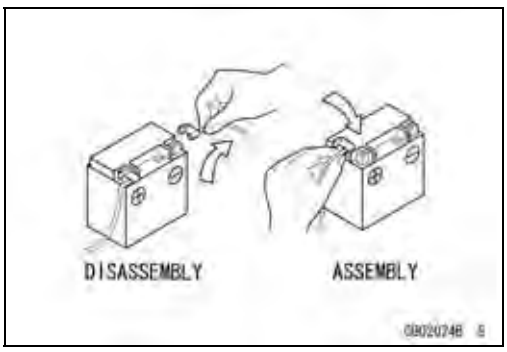

Edges of Parts

Lift large or heavy parts wearing gloves to prevent injury from possible sharp edges on the parts.

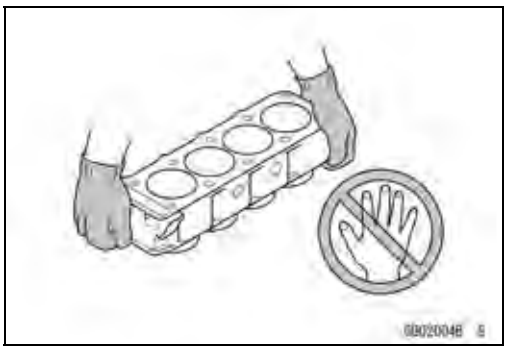

Solvent

Use a high-flush point solvent when cleaning parts. High -flush point solvent should be used according to directions of the solvent manufacturer.

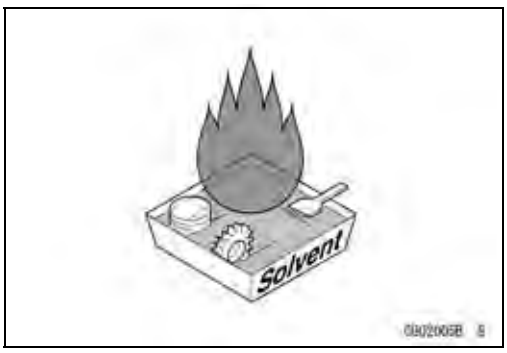

Cleaning Vehicle before Disassembly

Clean the vehicle thoroughly before disassembly. Dirt or other foreign materials entering into sealed areas during vehicle disassembly can cause excessive wear and decrease performance of the vehicle.

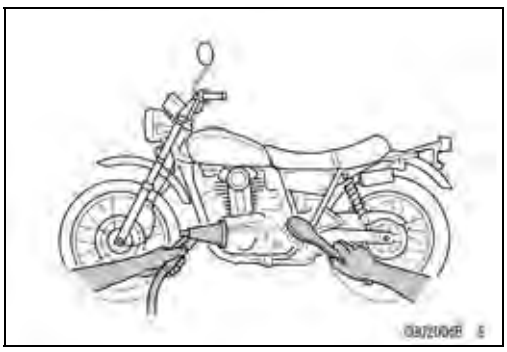

http://mototh.com

Before Servicing

Arrangement and Cleaning of Removed Parts

Disassembled parts are easy to confuse. Arrange the parts according to the order the parts were disassembled and clean the parts in order prior to assembly.

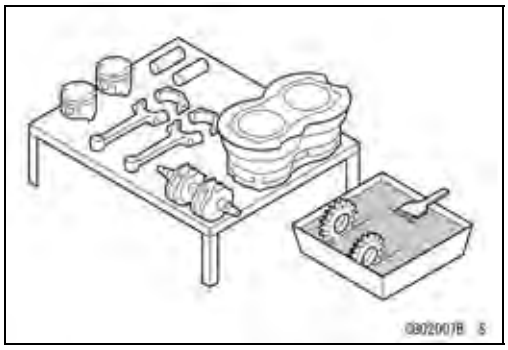

Storage of Removed Parts

After all the parts including subassembly parts have been cleaned, store the parts in a clean area. Put a clean cloth or plastic sheet over the parts to protect from any foreign materials that may collect before re-assembly.

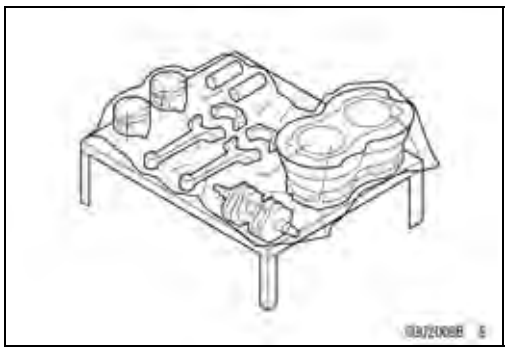

Inspection

Reuse of worn or damaged parts may lead to serious accident. Visually inspect removed parts for corrosion, discoloration, or other damage. Refer to the appropriate sections of this manual for service limits on individual parts. Replace the parts if any damage has been found or if the part is beyond its service limit.

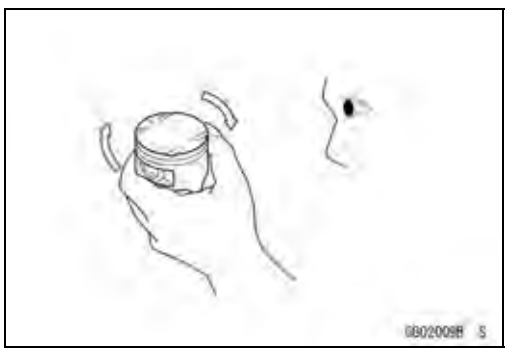

Replacement Parts

Replacement parts must be KAWASAKI genuine or recommended by KAWASAKI. Gaskets, O-rings, oil seals, grease seals, circlips or cotter pins must be replaced with new ones whenever disassembled.

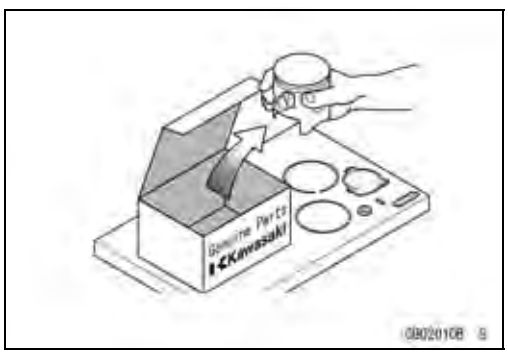

Assembly Order

In most cases assembly order is the reverse of disassembly, however, if assembly order is provided in this Service Manual, follow the procedures given.

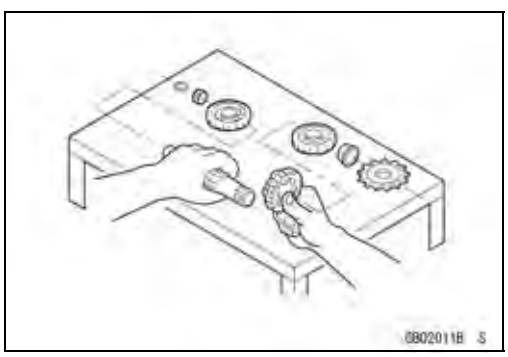

http://mototh.com

Before Servicing

Tightening Sequence

Generally, when installing a part with several bolts, nuts, or screws, start them all in their holes and tighten them to a snug fit. Then tighten them according to the specified sequence to prevent case warpage or deformation which can lead to malfunction. Conversely when loosening the bolts, nuts, or screws, first loosen all of them by about a quarter turn and then remove them. If the specified tightening sequence is not indicated, tighten the fasteners alternating diagonally.

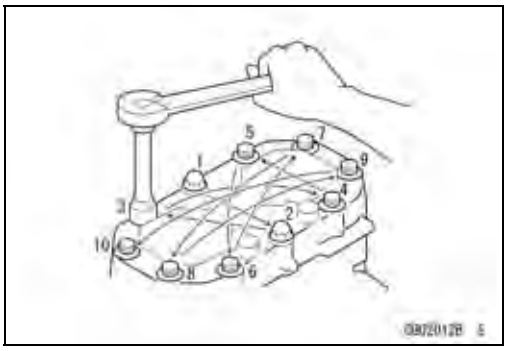

Tightening Torque

Incorrect torque applied to a bolt, nut, or screw may lead to serious damage. Tighten fasteners to the specified torque using a good quality torque wrench. Often, the tightening sequence is followed twice-initial tightening and final tightening with torque wrench.

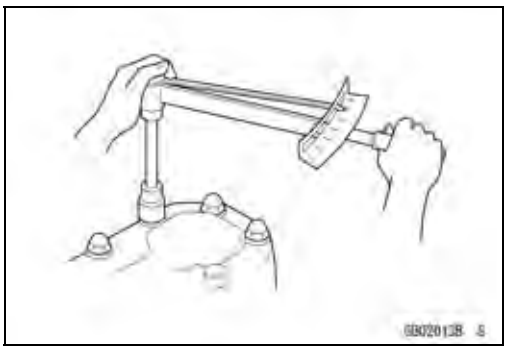

Force

Use common sense during disassembly and assembly, excessive force can cause expensive or hard to repair damage. When necessary, remove screws that have a non-permanent locking agent applied using an impact driver. Use a plastic-faced mallet whenever tapping is necessary.

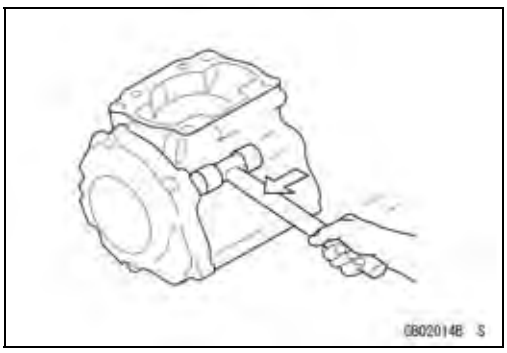

Gasket, O-ring

Hardening, shrinkage, or damage of both gaskets and O-rings after disassembly can reduce sealing performance. Remove old gaskets and clean the sealing surfaces thoroughly so that no gasket material or other material remains. Install new gaskets and replace used O-rings when re-assembling

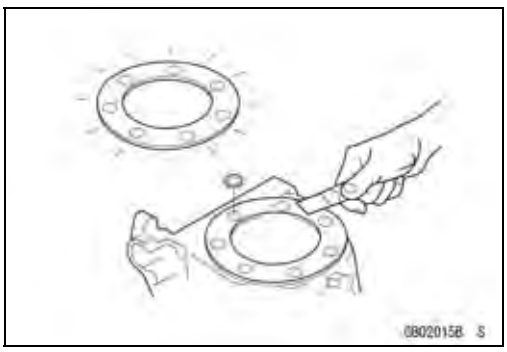

Liquid Gasket, Non-permanent Locking Agent

For applications that require Liquid Gasket or a Non-permanent Locking Agent, clean the surfaces so that no oil residue remains before applying liquid gasket or non-permanent locking agent. Do not apply them excessively. Excessive application can clog oil passages and cause serious damage.

Before Servicing

Press

For items such as bearings or oil seals that must be pressed into place, apply small amount of oil to the contact area. Be sure to maintain proper alignment and use smooth movements when installing.

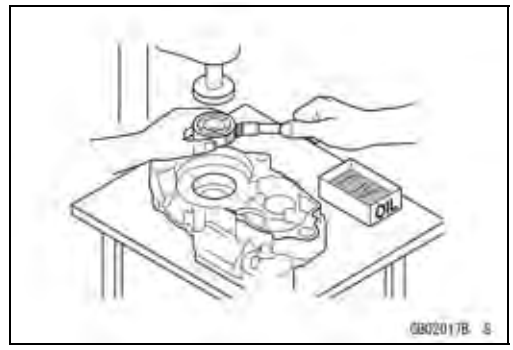

Ball Bearing and Needle Bearing

Do not remove pressed ball or needle unless removal is absolutely necessary. Replace with new ones whenever removed. Press bearings with the manufacturer and size marks facing out. Press the bearing into place by putting pressure on the correct bearing race as shown.

Pressing the incorrect race can cause pressure between the inner and outer race and result in bearing damage.

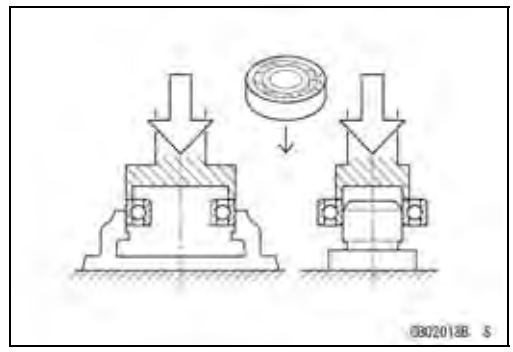

Oil Seal, Grease Seal

Do not remove pressed oil or grease seals unless removal is necessary. Replace with new ones whenever removed. Press new oil seals with manufacture and size marks facing out. Make sure the seal is aligned properly when installing.

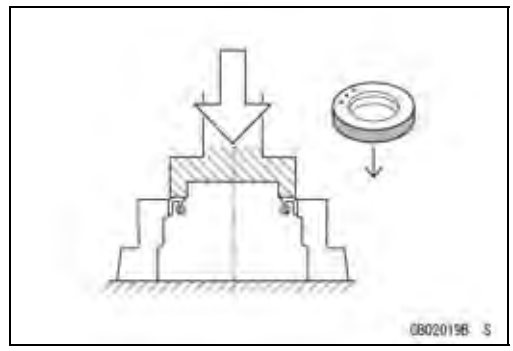

Apply specified grease to the lip of seal before installing the seal.

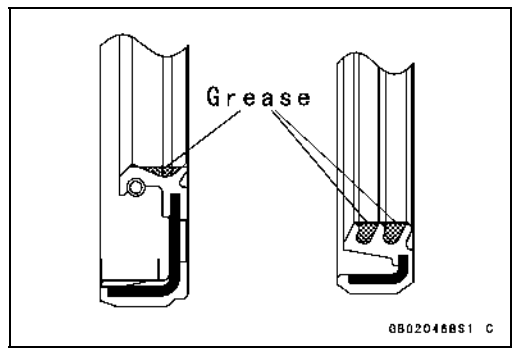

Circlips, Cotter Pins

Replace circlips or cotter pins that were removed with new ones. Take care not to open the clip excessively when installing to prevent deformation.

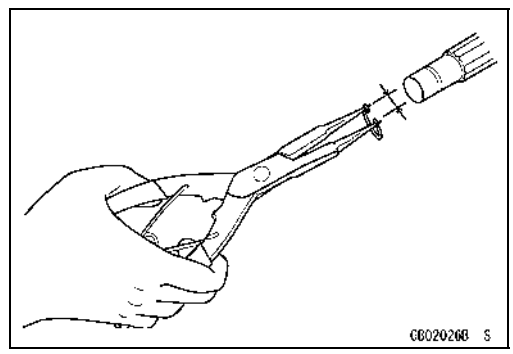

http://mototh.com

Before Servicing

Lubrication

It is important to lubricate rotating or sliding parts during assembly to minimize wear during initial operation. Lubrication points are called out throughout this manual, apply the specific oil or grease as specified.

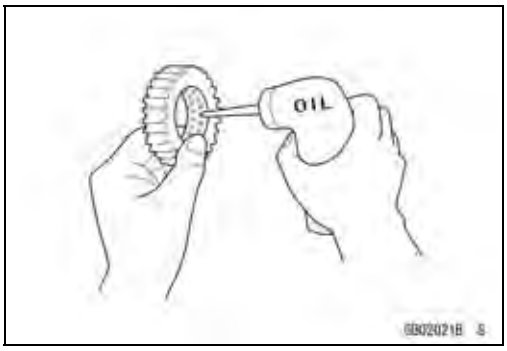

Direction of Engine Rotation

When rotating the crankshaft by hand, the free play amount of rotating direction will affect the adjustment. Rotate the crankshaft to positive direction (clockwise viewed from output side).

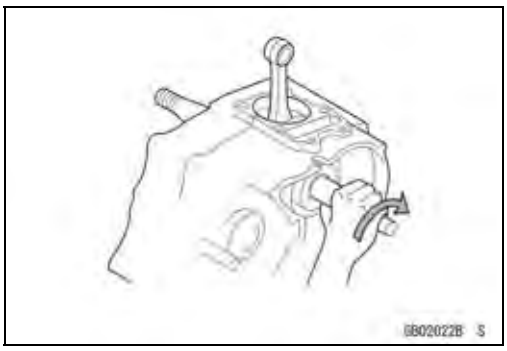

Electrical Wires

A two-color wire is identified first by the primary color and then the stripe color. Unless instructed otherwise, electrical wires must be connected to those of the same color.

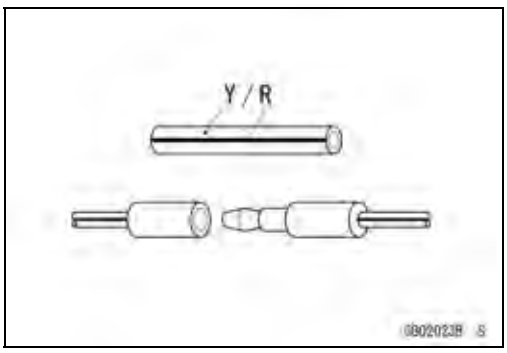

Instrument

Use a meter that has enough accuracy for an accurate measurement. Read the manufacture's instructions thoroughly before using the meter. Incorrect values may lead to improper adjustments.

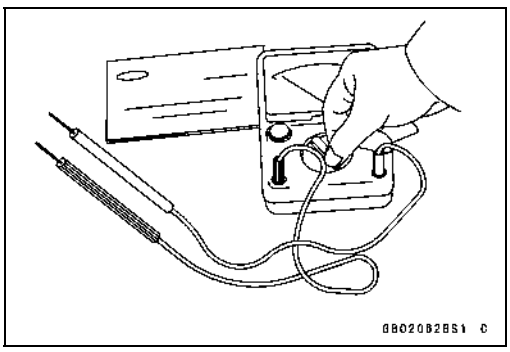

http://mototh.com

Model Identification

ER650A6F/ER650A6S Left Side View

ER650A6F/ER650A6S Right Side View

ER650A6F: Australia, Malaysia
ER650A6S: Europe

http://mototh.com

General Specifications

Items	ER650A6F/ER650A6S
Dimensions	
Overall Length	2 100 mm (82.7 in.)
Overall Width	760 mm (29.9 in.)
Overall Height	1 095 mm (43.1 in.)
Wheelbase	1 405 mm (55.3 in.)
Road Clearance	140 mm (5.5 in.)
Seat Height	785 mm (30.9 in.)
Dry Mass	174 kg (383.7 lb)
Curb Mass:	
Front	98 kg (216.1 lb)
Rear	98 kg (216.1 lb)
Fuel Tank Capacity	15.5 L (4.1 US gal.)
Performance	
Minimum Turning Radius	2.7 m (8.9 ft)
Engine	
Type	4-stroke, DOHC, 2-cylinder
Cooling System	Liquid-cooled
Bore and Stroke	83 × 60 mm (3.3 × 2.4 in.)
Displacement	649 cm^3 (39.60 cu in.)
Compression Ratio	11.3 : 1
Maximum Horsepower	53 kW (72 PS) @8 500 r/min (rpm),
Maximum Torque	66 N·m (6.7 kgf·m, 49 ft·lb) @7 000 r/min (rpm),
Carburetion System	FI (Fuel Injection) KEIHIN TTK38 × 2
Starting System	Electric starter
Ignition System	Battery and coil (transistorized)
Timing Advance	Electronically advanced (digital igniter)
Ignition Timing	From 10° BTDC @1 300 r/min (rpm) to 35° BTDC @4 800 r/min (rpm)
Spark Plug	NGK CR9EIA-9
Cylinder Numbering Method	Left to right, 1-2
Firing Order	1-2
Valve Timing:	
Inlet:	
Open	31° BTDC
Close	61° ABDC
Duration	272°
Exhaust:	
Open	50° BBDC
Close	30° ATDC
Duration	260°
Lubrication System	Forced lubrication (semi-dry sump)
Engine Oil:	
Type	API SE, SF or SG API SH, SJ or SL with JASO MA

http://mototh.com

General Specifications

Items	ER650A6F/ER650A6S
Viscosity	SAE 10W-40
Capacity	2.4 L (2.5 US qt)
Drive Train	
Primary Reduction System:	
Type	Gear
Reduction Ratio	2.095 (88/42)
Clutch Type	Wet multi disc
Transmission:	
Type	6-speed, constant mesh, return shift
Gear Ratios:	
1st	2.438 (39/16)
2nd	1.714 (36/21)
3rd	1.333 (32/24)
4th	1.111 (30/27)
5th	0.966 (28/29)
6th	0.852 (23/27)
Final Drive System:	
Type	Chain drive
Reduction Ratio	3.067 (46/15)
Overall Drive Ratio	5.473 @Top gear
Frame	
Type	Tubular, diamond
Caster (Rake Angle)	24.5°
Trail	102 mm (4.0 in.)
Front Tire:	
Type	Tubeless
Size	120/70 ZR17 M/C (58W)
Rim Size	17 × 3.50
Rear Tire:	
Type	Tubeless
Size	160/60 ZR17 M/C (69W)
Rim Size	17 × 4.50
Front Suspension:	
Type	Telescopic fork
Wheel Travel	120 mm (4.7 in.)
Rear Suspension:	
Type	Swingarm
Wheel Travel	125 mm (4.9 in.)
Brake Type:	
Front	Dual discs
Rear	Single disc
Electrical Equipment	
Battery	12 V 10 Ah

http://mototh.com

General Specifications

Items	ER650A6F/ER650A6S
Headlight:	
Type	Semi-sealed beam
Bulb	12 V 55 W × 2/55 W (Hi/Lo)
Tail/Brake Light	12 V 5/21 W
Alternator:	
Type	Three-phase AC
Rated Output	24 A/14 V @5 000 r/min (rpm)

Specifications are subject to change without notice, and may not apply to every country.

http://mototh.com

Technical Information - Cassette Type Transmission

Cassette Type Transmission

The transmission of the current model is unable to be removed without disassembling upper and lower crankcase halves.

The ER650A enables transmission to be removed from the right side of engine as an assy, without disassembling crankcase halves (see Transmission Assy Removal in the Crankshaft/Transmission chapter).

Transmission Assy: Drive Shaft [A]
Output Shaft [B]
Shift Rods [C]
Shift Dram [D]
Shift Forks [E]
Transmission Case [F]

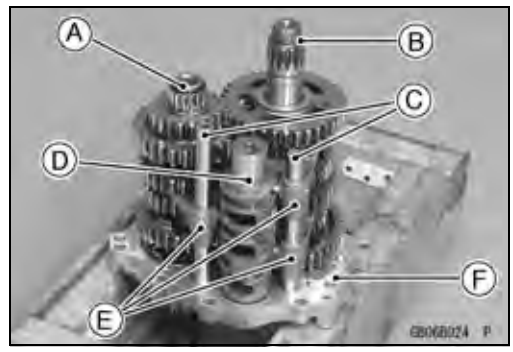

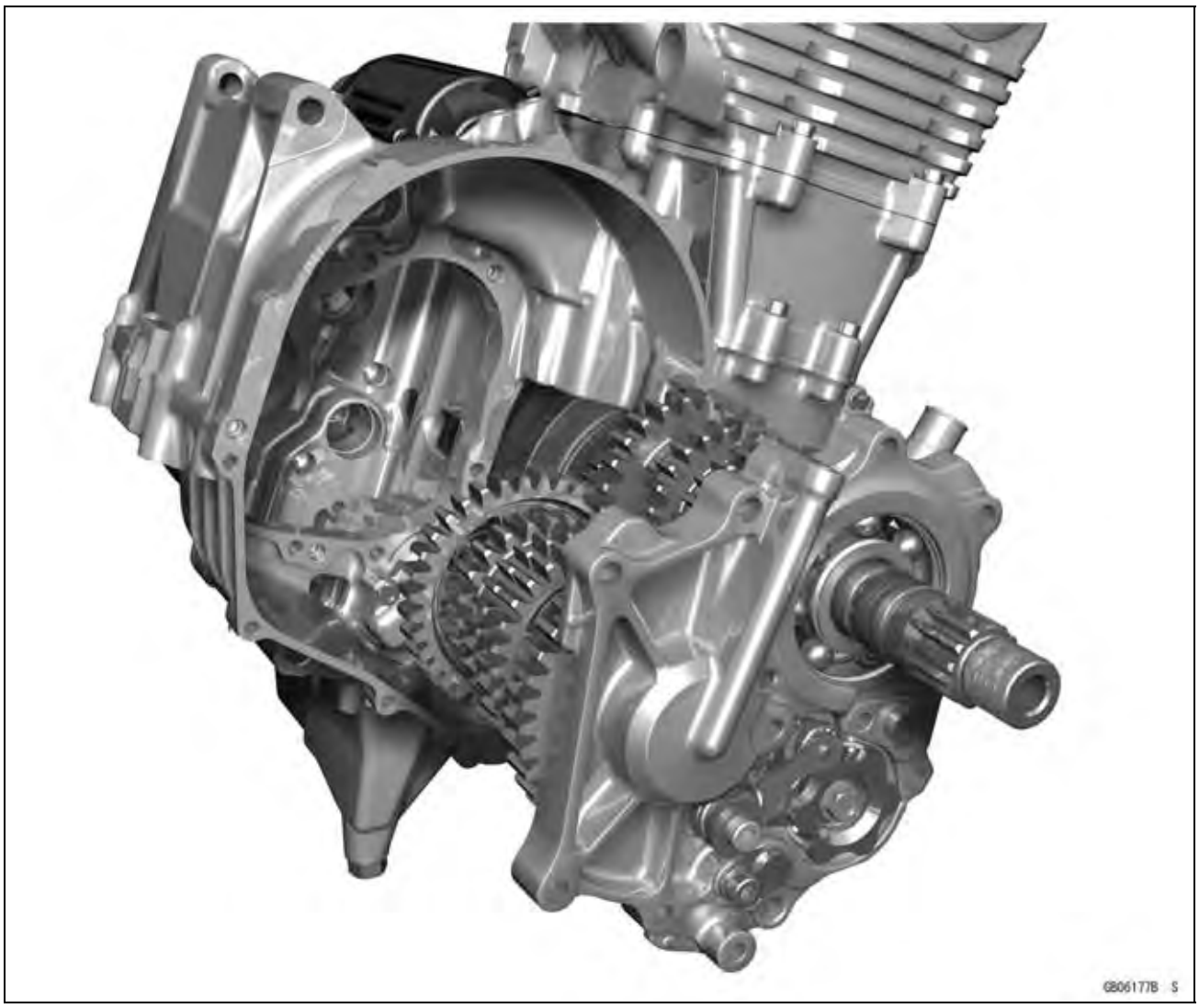

Technical Information - Inlet Air Pressure Sensor

Atmospheric pressure sensor and camshaft position sensor are not equipped with the ER650A. As a substitute of these sensors above, the ER650A recognizes atmospheric pressure and intake stroke of #1 by the signal of inlet air pressure sensor.

The ECU detects atmospheric pressure when the ignition is switched ON. While the engine is running, the ECU also presumes atmospheric pressure by analyzing the waveform of boost pressure over fixed period. The intake stroke is recognized by waveform of boost pressure, therefore the system can recognize the difference of each stroke.

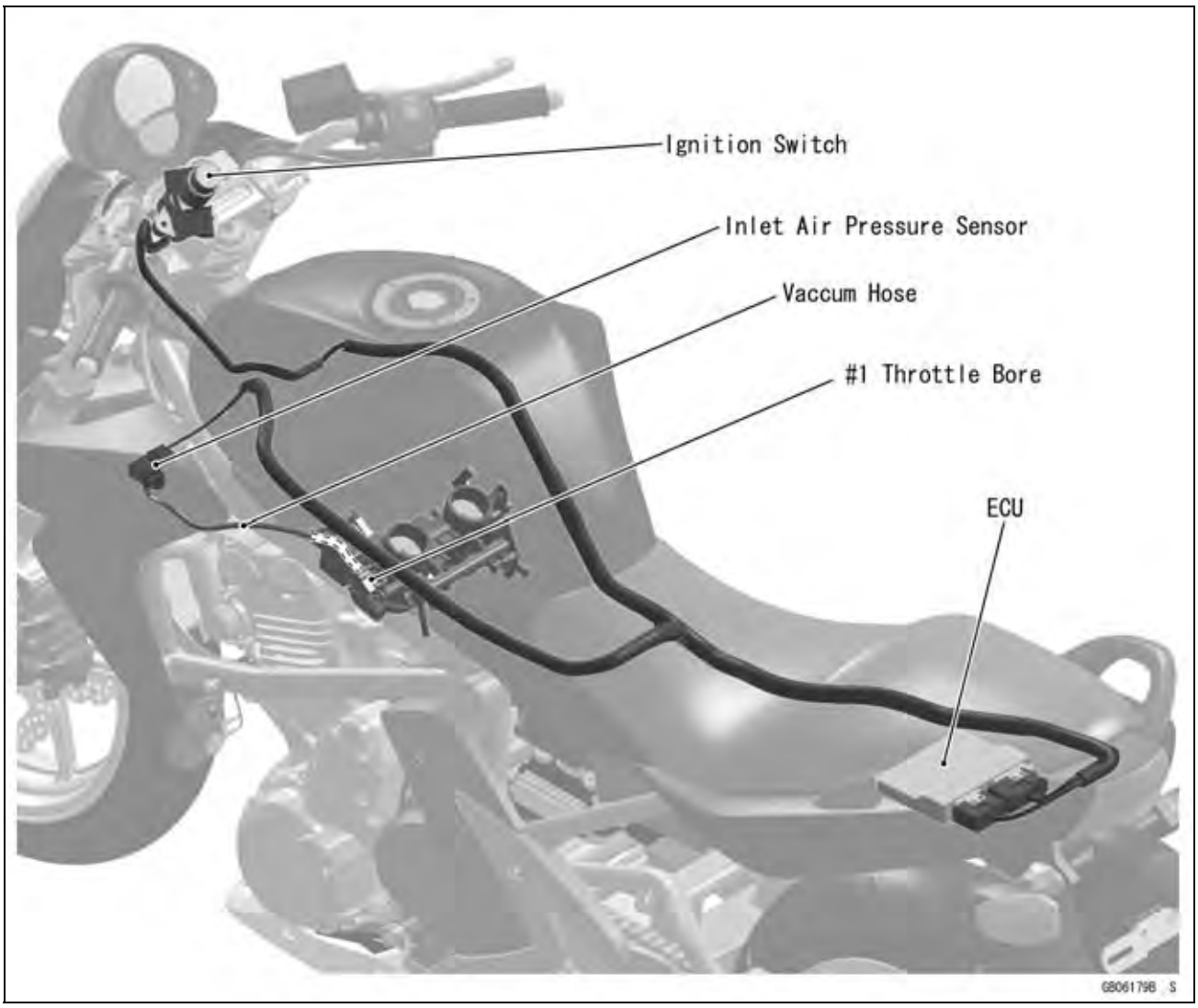

Unit Conversion Table

Prefixes for Units:

Prefix	Symbol	Power
mega	M	× 1 000 000
kilo	k	× 1 000
centi	c	× 0.01
milli	m	× 0.001
micro	µ	× 0.000001

Units of Mass:

kg	×	2.205	=	lb
g	×	0.03527	=	oz

Units of Volume:

L	×	0.2642	=	gal (US)
L	×	0.2200	=	gal (imp)
L	×	1.057	=	qt (US)
L	×	0.8799	=	qt (imp)
L	×	2.113	=	pint (US)
L	×	1.816	=	pint (imp)
mL	×	0.03381	=	oz (US)
mL	×	0.02816	=	oz (imp)
mL	×	0.06102	=	cu in

Units of Force:

N	×	0.1020	=	kg
N	×	0.2248	=	lb
kg	×	9.807	=	N
kg	×	2.205	=	lb

Units of Length:

km	×	0.6214	=	mile
m	×	3.281	=	ft
mm	×	0.03937	=	in

Units of Torque:

N·m	×	0.1020	=	kgf·m
N·m	×	0.7376	=	ft·lb
N·m	×	8.851	=	in·lb
kgf·m	×	9.807	=	N·m
kgf·m	×	7.233	=	ft·lb
kgf·m	×	86.80	=	in·lb

Units of Pressure:

kPa	×	0.01020	=	kgf/cm²
kPa	×	0.1450	=	psi
kPa	×	0.7501	=	cmHg
kgf/cm²	×	98.07	=	kPa
kgf/cm²	×	14.22	=	psi
cmHg	×	1.333	=	kPa

Units of Speed:

km/h	×	0.6214	=	mph

Units of Power:

kW	×	1.360	=	PS
kW	×	1.341	=	HP
PS	×	0.7355	=	kW
PS	×	0.9863	=	HP

Units of Temperature:

$$\frac{9\,(°C + 40)}{5} - 40 = °F \qquad \frac{5\,(°F + 40)}{9} - 40 = °C$$

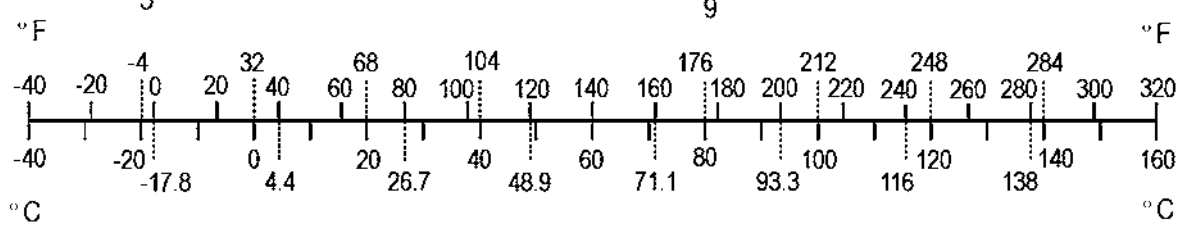

http://mototh.com

Periodic Maintenance

Table of Contents

Periodic Maintenance Chart 2-3
Torque and Locking Agent 2-6
Specifications 2-11
Special Tools 2-13
Periodic Maintenance Procedures 2-14
  Fuel System (DFI) 2-14
    Fuel Hose Inspection (fuel leak, damage, installation condition) 2-14
    Throttle Control System Inspection 2-14
    Idle Speed Inspection 2-15
    Idle Speed Adjustment 2-15
    Air Cleaner Element Cleaning 2-16
    Engine Vacuum Synchronization Inspection 2-17
  Cooling System 2-19
    Coolant Level Inspection 2-19
    Radiator Hose and Pipe Inspection (coolant leak, damage, installation condition) 2-20
  Air Suction System 2-20
    Air Suction System Damage Inspection 2-20
  Engine Top End 2-20
    Valve Clearance Inspection 2-20
    Valve Clearance Adjustment 2-22
  Clutch 2-25
    Clutch Operation Inspection 2-25
  Wheels/Tires 2-25
    Air Pressure Inspection 2-25
    Wheel/Tire Damage Inspection 2-26
    Tire Tread Wear, Abnormal Wear Inspection 2-26
    Wheel Bearing Damage Inspection 2-27
  Drive Train 2-27
    Drive Chain Lubrication Condition Inspection 2-27
    Drive Chain Slack Inspection 2-28
    Drive Chain Slack Adjustment 2-28
    Wheel Alignment Inspection 2-29
    Drive Chain Wear Inspection 2-30
    Chain Guide Inspection 2-30
  Brake System 2-31
    Brake Fluid Leak (Brake Hose and Pipe) Inspection 2-31
    Brake Hose Damage and Installation Condition Inspection 2-31
    Brake Operation Inspection 2-31
    Brake Fluid Level Inspection 2-32
    Brake Pad Wear Inspection 2-33
    Brake Light Switch Operation Inspection 2-33
  Suspensions 2-34
    Front Forks/Rear Shock Absorber Operation Inspection 2-34
    Front Fork Oil Leak Inspection 2-34
    Rear Shock Absorber Oil Leak Inspection 2-34
  Steering System 2-35

http://mototh.com

Steering Play Inspection 2-35
Steering Play Adjustment 2-35
Steering Stem Bearing Lubrication 2-36
Electrical System 2-37
Spark Plug Condition Inspection 2-37
Lights and Switches Operation Inspection 2-38
Headlight Aiming Inspection 2-40
Sidestand Switch Operation Inspection 2-41
Engine Stop Switch Operation Inspection 2-42
Others 2-43
Chassis Parts Lubrication 2-43
Bolts, Nuts and Fasteners Tightness Inspection 2-44
Replacement Parts 2-45
Air Cleaner Element Replacement 2-45
Engine Oil Change 2-45
Oil Filter Replacement 2-46
Fuel Hose Replacement 2-46
Coolant Change 2-47
Radiator Hose and O-ring Replacement 2-50
Brake Hose and Pipe Replacement 2-51
Brake Fluid Change 2-51
Master Cylinder Rubber Parts Replacement 2-53
Caliper Rubber Parts Replacement 2-54
Spark Plug Replacement 2-56

http://mototh.com

Periodic Maintenance Chart

The scheduled maintenance must be done in accordance with this chart to keep the motorcycle in good running condition.**The initial maintenance is vitally important and must not be neglected.**

Periodic Inspection

FREQUENCY / INSPECTION	Whichever comes first ➡ ⬇ Every	* ODOMETER READING × 1 000 km (× 1 000 mile) 1 (0.6)	6 (4)	12 (7.5)	18 (12)	24 (15)	30 (20)	36 (24)	See Page
Fuel System									
Air cleaner element - clean				●		●		●	2-16
Throttle control system (play, smooth return, no drag) - inspect	year	●		●		●		●	2-14
Engine vacuum synchronization - inspect				●		●		●	2-17
Idle speed - inspect		●		●		●		●	2-15
Fuel leak (fuel hose and pipe) - inspect	year	●		●		●		●	2-14
Fuel hose and pipe damage - inspect	year	●		●		●		●	2-14
Fuel hose and pipe installation condition - inspect	year	●		●		●		●	2-14
Cooling System									
Coolant level - inspect		●		●		●		●	2-19
Coolant leak (radiator hose and pipe) - inspect	year	●		●		●		●	2-20
Radiator hose damage - inspect	year	●		●		●		●	2-20
Radiator hose installation condition - inspect	year	●		●		●		●	2-20
Air Suction System									
Air suction system damage - inspect				●		●		●	2-20
Engine Top End									
Valve clearance - inspect	Every 42 000 km (26 000 mile)								2-20
Clutch									
Clutch operation (play, disengagement, engagement) - inspect		●		●		●		●	2-25
Wheels and Tires									
Tire air pressure - inspect	year			●		●		●	2-25
Wheel/tire damage - inspect				●		●		●	2-26
Tire tread wear, abnormal wear - inspect				●		●		●	2-26
Wheel bearing damage - inspect	year			●		●		●	2-27
Drive Train									
Drive chain lubrication condition - inspect #	Every 600 km (400 mile)								2-27
Drive chain slack - inspect #	Every 1 000 km (600 mile)								2-28
Drive chain wear - inspect #				●		●		●	2-30
Chain guide wear - inspect				●		●		●	2-30
Brake System									
Brake fluid leak (brake hose and pipe) - inspect	year	●	●	●	●	●	●	●	2-31

http://mototh.com

Periodic Maintenance Chart

FREQUENCY / INSPECTION	Whichever comes first ➡ ⬇ Every	* ODOMETER READING × 1 000 km (× 1 000 mile) 1 (0.6)	6 (4)	12 (7.5)	18 (12)	24 (15)	30 (20)	36 (24)	See Page
Brake hose and pipe damage - inspect	year	●	●	●	●	●	●	●	2-31
Brake hose installation condition - inspect	year	●	●	●	●	●	●	●	2-31
Brake operation (effectiveness, play, no drag) - inspect	year	●	●	●	●	●	●	●	2-31
Brake fluid level - inspect	6 months	●	●	●	●	●	●	●	2-32
Brake pad wear - inspect #			●	●	●	●	●	●	2-33
Brake light switch operation - inspect		●	●	●	●	●	●	●	2-33
Suspensions									
Front forks/rear shock absorber operation (damping and smooth stroke) - inspect				●		●		●	2-34
Front forks/rear shock absorber oil leak - inspect	year			●		●		●	2-34
Steering System									
Steering play - inspect	year	●		●		●		●	2-35
Steering stem bearings - lubricate	2 years					●			2-36
Electrical System									
Spark plug condition - inspect				●		●		●	2-37
Lights and switches operation - inspect	year			●		●		●	2-38
Headlight aiming - inspect	year			●		●		●	2-40
Sidestand switch operation - inspect	year			●		●		●	2-41
Engine stop switch operation - inspect	year			●		●		●	2-42
Others									
Chassis parts - lubricate	year			●		●		●	2-43
Bolts and nuts tightness - inspect		●		●		●		●	2-44

#: Service more frequently when operating in severe conditions; dusty, wet, muddy, high speed or frequent starting/stopping.

*: For higher odometer readings, repeat at the frequency interval established here.

http://mototh.com

Periodic Maintenance Chart

Periodic Replacement Parts

FREQUENCY / CHANGE/REPLACE ITEM	Whichever comes first ➡ ⬇ Every	* ODOMETER READING × 1 000 km (× 1 000 mile) 1 (0.6)	12 (7.5)	24 (15)	36 (24)	48 (30)	See Page
Air cleaner element #	2 years						2-45
Engine oil #	year	●	●	●	●	●	2-45
Oil filter	year	●	●	●	●	●	2-46
Fuel hose	4 years					●	2-46
Coolant	3 years				●		2-47
Radiator hose and O-ring	3 years				●		2-50
Brake hose and pipe	4 years					●	2-51
Brake fluid	2 years			●		●	2-51
Rubber parts of master cylinder and caliper	4 years					●	2-53
Spark plug			●	●	●	●	2-56

#: Service more frequently when operating in severe conditions; dusty, wet, muddy, high speed or frequent starting/stopping.

*: For higher odometer readings, repeat at the frequency interval established here.

http://mototh.com

Torque and Locking Agent

The following tables list the tightening torque for the major fasteners requiring use of a non-permanent locking agent or liquid gasket.

Letters used in the “Remarks” column mean:
AL: Tighten the two clamp bolts alternately two times to ensure even tightening torque.
EO: Apply engine oil.
L: Apply a non-permanent locking agent to the threads.
Lh: Left-hand threads
MO: Apply molybdenum disulfide oil solution.
R: Replacement Parts
S: Tighten the fasteners following the specified sequence.
Si: Apply silicone grease (ex. PBC grease).
SS: Apply silicone sealant.

Fastener	Torque			Remarks
	N·m	kgf·m	ft·lb	
Fuel System				
Water Temperature Sensor	12	1.2	106 in·lb	
Speed Sensor Bolt	7.8	0.80	69 in·lb	L
Fuel Pump Bolts	9.8	1.0	87 in·lb	L, S
Oxygen Sensor	44.1	4.50	32.5	
Cooling System				
Radiator Hose Clamp Screws	2.0	0.20	17 in·lb	
Water Pump Impeller Bolt	9.8	1.0	87 in·lb	
Water Pump Cover Bolts	9.8	1.0	87 in·lb	
Water Pump Drain Bolt	7.0	0.70	62 in·lb	
Thermostat Housing Bolts	9.8	1.0	87 in·lb	
Water Temperature Sensor	12	1.2	106 in·lb	
Engine Top End				
Air Suction Valve Cover Bolts	9.8	1.0	87 in·lb	
Cylinder Head Cover Bolts	9.8	1.0	87 in·lb	
Camshaft Cap Bolts	12	1.2	106 in·lb	S
Cylinder Head Bolts (M10 New Bolts)	54	5.5	40	MO, S
Cylinder Head Bolts (M10 Used Bolts)	49	5.0	36	MO, S
Cylinder Bolt (M8)	27.5	2.8	20	MO, S
Cylinder Nut (M10)	49	5.0	36	MO, S
Cylinder Head Bolts (M6)	12	1.2	106 in·lb	S
Cylinder Bolts (M6)	12	1.2	106 in·lb	S
Throttle Body Holder Bolts	12	1.2	106 in·lb	
Rear Camshaft Chain Guide Bolt	20	2.0	15	L
Camshaft Chain Tensioner Mounting Bolts	9.8	1.0	87 in·lb	
Camshaft Chain Tensioner Cap Bolt	20	2.0	15	
Camshaft Sprocket Bolts	15	1.5	11	L
Spark Plugs	15	1.5	11	
Exhaust Pipe Manifold Holder Nuts	17	1.7	12	
Muffler Body Mounting Bolt (Front)	20	2.0	15	
Muffler Body Mounting Bolt (Rear)	20	2.0	15	
Baffle Plate Bolts	5.9	0.60	52 in·lb	L

http://mototh.com

Torque and Locking Agent

Fastener	Torque			Remarks
	N·m	kgf·m	ft·lb	
Clutch				
Upper Cap on Clutch Cover	3.9	0.40	35 in·lb	
Lower Cap on Clutch Cover	–	–	–	Hand-tighten
Oil Filler Plug	–	–	–	Hand-tighten
Clutch Cover Mounting Bolts	9.8	1.0	87 in·lb	
Clutch Spring Bolts	9.8	1.0	87 in·lb	
Clutch Hub Nut	132	13.5	98	R
Clutch Lever Clamp Bolts	7.8	0.80	69 in·lb	S
Oil Pump Chain Guide Bolts	12	1.2	106 in·lb	L
Clutch Cable Holder Bolts	9.8	1.0	87 in·lb	L
Clutch Cable Clamp Bolt	9.8	1.0	87 in·lb	
Engine Lubrication				
Engine Oil Drain Bolt	20	2.0	15	
Filter Plate Bolt	9.8	1.0	87 in·lb	L
Oil Filter	17.2	1.75	13	EO, R
Holder Mounting Bolt	25	2.5	18	L
Oil Pan Bolts	12	1.2	106 in·lb	
Oil Pipe Bolts	9.8	1.0	87 in·lb	
Oil Pipe Plate Bolt	9.8	1.0	87 in·lb	L
Oil Pressure Relief Valve	15	1.5	11	L
Oil Pressure Switch	15	1.5	11	SS
Oil Pump Cover Bolts	9.8	1.0	87 in·lb	L
Oil Pump Sprocket Bolt	12	1.2	106 in·lb	L, Lh
Oil Passage Plug	20	2.0	15	L
Oil Plate Bolts	9.8	1.0	89 in·lb	L
Engine Removal/Installation				
Engine Mounting Bracket Bolts	25	2.5	18	
Front Engine Mounting Bolts	44	4.5	32	
Rear Engine Mounting Nuts	44	4.5	32	
Crankshaft/Transmission				
Oil Plate Bolts	9.8	1.0	87 in·lb	L
Breather Plate Bolts	9.8	1.0	87 in·lb	L
Crankcase Bolts (M9, L = 113 mm)	44	4.5	32	MO, S
Crankcase Bolts (M9, L = 83 mm)	44	4.5	32	MO, S
Crankcase Bolts (M8, L = 73 mm)	35	3.6	26	MO, S
Crankcase Bolts (M8, L = 60 mm)	35	3.6	26	MO, S
Crankcase Bolts (M8, L = 110 mm)	27.5	2.8	20	S
Crankcase Bolts (M8, L = 50 mm)	27.5	2.8	20	S
Crankcase Bolts (M6)	19.6	2.0	15	S
Upper Crankcase Bolts	27.5	2.8	20	S
Shift Drum Bearing Holder Screw	4.9	0.50	43 in·lb	L
Connecting Rod Big End Nuts	see Text	←	←	←
Timing Rotor Bolt	40	4.1	30	

http://mototh.com

Torque and Locking Agent

Fastener	Torque			Remarks
	N·m	kgf·m	ft·lb	
Oil Pressure Switch	15	1.5	11	SS
Oil Passage Plug	20	2.0	15	L
Gear Positioning Lever Bolt	12	1.2	106 in·lb	L
Shift Shaft Return Spring pin	29	2.9	22	L
Shift Drum Cam Bolt	12	1.2	106 in·lb	L
Neutral Switch	15	1.5	11	
Transmission Case Bolts	20	2.0	15	
Shift Rod Plate Bolt	9.8	1.0	87 in·lb	
Neutral Switch Holder Screw	4.9	0.50	43 in·lb	L
Shift Shaft Cover Bolts	9.8	1.0	87 in·lb	L (see Text)
Shift Shaft Cover Screw	4.9	0.50	43 in·lb	L
Wheels/Tires				
Front Axle	108	11.0	80	
Front Axle Clamp Bolt	34	3.5	25	
Rear Axle Nut	108	11.0	80	
Final Drive				
Engine Sprocket Nut	125	12.7	92	MO
Rear Axle Nut	108	11.0	80	
Rear Sprocket Nuts	59	6.0	44	
Speed Sensor Bolt	7.8	0.80	69 in·lb	L
Speed Sensor Bracket Bolts	9.8	1.0	87 in·lb	
Brakes				
Bleed Valve	7.8	0.80	69 in·lb	
Brake Hose Banjo Bolts	25	2.5	18	
Brake Lever Pivot Bolt	1.0	0.10	9 in·lb	Si
Brake Lever Pivot Bolt Locknut	5.9	0.60	52 in·lb	
Brake Pedal Bolt	8.8	0.90	78 in·lb	
Front Brake Disc Mounting Bolts	27	2.8	20	L
Front Brake Light Switch Screw	1.0	0.10	9 in·lb	
Front Brake Reservoir Cap Screws	1.0	0.10	9 in·lb	
Front Caliper Mounting Bolts	34	3.5	25	
Front Master Cylinder Clamp Bolts	8.8	0.90	78 in·lb	S
Rear Brake Disc Mounting Bolts	27	2.8	20	L
Rear Caliper Mounting Bolts	25	2.5	18	
Rear Master Cylinder Mounting Bolts	25	2.5	18	
Rear Master Cylinder Push Rod Locknut	18	1.8	13	
Suspension				
Front Axle Clamp Bolt	34	3.5	25	
Front Fork Bottom Allen Bolts	30	3.1	22	L
Front Fork Clamp Bolts (Lower)	20	2.0	15	AL
Front Fork Clamp Bolts (Upper)	20	2.0	15	
Front Fork Top Plugs	25	2.5	18	
Rear Shock Absorber Bolt	59	6.0	44	

http://mototh.com

Torque and Locking Agent

Fastener	Torque			Remarks
	N·m	kgf·m	ft·lb	
Rear Shock Absorber Nut	59	6.0	44	
Swingarm Pivot Shaft Nut	108	11.0	80	
Steering				
Front Fork Clamp Bolts (Lower)	20	2.0	15	AL
Front Fork Clamp Bolts (Upper)	20	2.0	15	
Handlebar Holder Bolts	25	2.5	18	S
Left Switch Housing Screws	3.5	0.36	31 in·lb	
Right Switch Housing Screws	3.5	0.36	31 in·lb	
Steering Stem Head Bolt	108	11.0	80	
Steering Stem Nut	20	2.0	15	
Frame				
Footpeg Stay Bolts	34	3.5	25	
Front Fender Bolts	3.9	0.40	35 in·lb	
Front Fender Bracket Bolts	8.8	0.90	78 in·lb	L
Grab Rail Mounting Bolts	25	2.5	18	
Lower Fairing Mounting Bolts	8.8	0.90	78 in·lb	
Sidestand Bolt	44	4.5	32	
Sidestand Switch Bolt	8.8	0.90	78 in·lb	L
Electrical System				
Alternator Cover Bolts	9.8	1.0	87 in·lb	
Alternator Lead Holding Plate Bolt	9.8	1.0	87 in·lb	L
Alternator Rotor Bolt	155	15.8	114	MO
Crankshaft Sensor Bolts	6.0	0.60	53 in·lb	
Front Brake Light Switch Screw	1.2	0.12	11 in·lb	
Left Switch Housing Screws	3.5	0.36	31 in·lb	
License Plate Light Cover Screws	0.90	0.090	8 in·lb	
License Plate Light Mounting Screws	1.2	0.12	11 in·lb	
Meter Screws	1.2	0.12	11 in·lb	
Neutral Switch	15	1.5	11	
Oil Pressure Switch	15	1.5	11	SS
Oxygen Sensor	44.1	4.50	32.5	
Regulator/Rectifier Bolts	8.8	0.90	78 in·lb	
Right Switch Housing Screws	3.5	0.36	31 in·lb	
Sidestand Switch Bolt	8.8	0.90	78 in·lb	L
Spark Plugs	15	1.5	11	
Speed Sensor Bolt	7.8	0.80	69 in·lb	L
Starter Motor Cable Terminal Nut	6.0	0.60	53 in·lb	
Starter Motor Clutch Bolts	34	3.5	25	L
Starter Motor Mounting Bolts	9.8	1.0	87 in·lb	L
Starter Motor Terminal Locknut	11	1.1	97 in·lb	
Starter Motor Through Bolts	4.9	0.50	43 in·lb	
Stator Coil Bolts	12	1.2	106 in·lb	L

http://mototh.com

Torque and Locking Agent

Fastener	Torque			Remarks
	N·m	kgf·m	ft·lb	
Timing Rotor Bolt	40	4.1	30	
Water Temperature Sensor	12	1.2	106 in·lb	

The table below, relating tightening torque to thread diameter, lists the basic torque for the bolts and nuts. Use this table for only the bolts and nuts which do not require a specific torque value. All of the values are for use with dry solvent-cleaned threads.

Basic Torque for General Fasteners

Threads Diameter (mm)	Torque		
	N·m	kgf·m	ft·lb
5	3.4 ~ 4.9	0.35 ~ 0.50	30 ~ 43 in·lb
6	5.9 ~ 7.8	0.60 ~ 0.80	52 ~ 69 in·lb
8	14 ~ 19	1.4 ~ 1.9	10.0 ~ 13.5
10	25 ~ 34	2.6 ~ 3.5	19.0 ~ 25
12	44 ~ 61	4.5 ~ 6.2	33 ~ 45
14	73 ~ 98	7.4 ~ 10.0	54 ~ 72
16	115 ~ 155	11.5 ~ 16.0	83 ~ 115
18	165 ~ 225	17.0 ~ 23.0	125 ~ 165
20	225 ~ 325	23.0 ~ 33.0	165 ~ 240

http://mototh.com

Specifications

Item	Standard	Service Limit
Fuel System		
Throttle Grip Free Play	2 ~ 3 mm (0.08 ~ 0.12 in.)	– – –
Idle Speed	1 300 ±50 r/min (rpm)	– – –
Bypass Screws (Turn Out)	0 ~ 3 1/2 (for reference)	– – –
Engine Vacuum	35.3 ±1.3 kPa (265 ±10 mm Hg)	
Air Cleaner Element	Polyurethane Foam	– – –
Cooling System		
Coolant:		
Type (recommended)	Permanent type of antifreeze	– – –
Color	Green	– – –
Mixed Ratio	Soft water 50%, Coolant 50%	– – –
Freezing Point	–35°C (–31°F)	– – –
Total Amount	1.2 L (1.3 US qt)	– – –
Engine Top End		
Valve Clearance:		
Exhaust	0.22 ~ 0.31 mm (0.0087 ~ 0.0122 in.)	– – –
Inlet	0.15 ~ 0.21 mm (0.0059 ~ 0.0083 in.)	– – –
Clutch		
Clutch Lever Free Play	2 ~ 3 mm (0.08 ~ 0.12 in.)	– – –
Engine Lubrication System		
Engine Oil:		
Type	API SE, SF or SG	– – –
	API SH, SJ or SL with JASO MA	
Viscosity	SAE 10W-40	– – –
Capacity	1.7 L (1.8 US qt) (when filter is not removed)	– – –
	1.9 L (2.0 US qt) (when filter is removed)	– – –
	2.4 L (2.5 US qt) (when engine is completely dry)	– – –
Level	Between upper and lower level lines (after idling or running)	– – –
Wheels/Tires		
Tread Depth:		
Front	6.5 mm (0.26 in.)	1 mm (0.04 in.), (AT, CH, DE) 1.6 mm (0.06 in.)
Rear	9.0 mm (0.35 in.)	Up to 130 km/h (80 mph): 2 mm (0.08 in.), Over 130 km/h (80 mph): 3 mm (0.12 in.)
Air Pressure (when Cold):		
Front	Up to 180 kg (397 lb) load: 225 kPa (2.25 kgf/cm², 32 psi)	– – –
Rear	Up to 180 kg (397 lb) load: 250 kPa (2.50 kgf/cm², 36 psi)	– – –

http://mototh.com

Specifications

Item	Standard	Service Limit
Final Drive		
Drive Chain Slack	30 ~ 40 mm (1.2 ~ 1.6 in.)	– – –
Drive Chain Wear (20-link Length)	317.5 ~ 318.2 mm (12.50 ~ 12.53 in.)	323 mm (12.7 in.)
Standard Chain:		
Make	ENUMA	– – –
Type	EK520MVXL1	– – –
Link	114 links	– – –
Brakes		
Brake Fluid:		
Grade	DOT4	– – –
Brake Pad Lining Thickness:		
Front	4.5 mm (0.18 in.)	1 mm (0.04 in.)
Rear	5.0 mm (0.20 in.)	1 mm (0.04 in.)
Brake Light Timing:		
Front	Pulled ON	– – –
Rear	ON after about 10 mm (0.39 in.) of pedal travel	– – –
Electrical System		
Spark Plug Gap	0.8 ~ 0.9 mm (0.03 ~ 0.04 in.)	– – –

AT: Austria
CH: Switzerland
DE: Germany

http://mototh.com

Special Tools

Inside Circlip Pliers:
57001-143

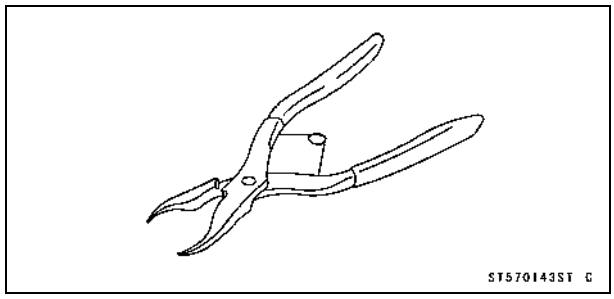

Steering Stem Nut Wrench:
57001-1100

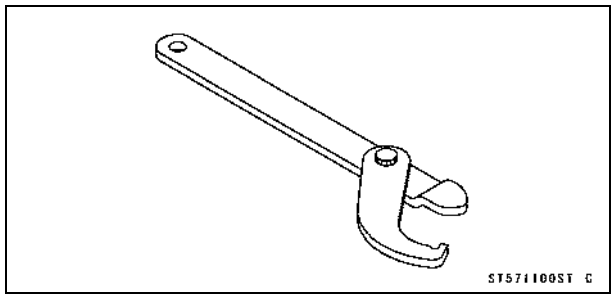

Jack:
57001-1238

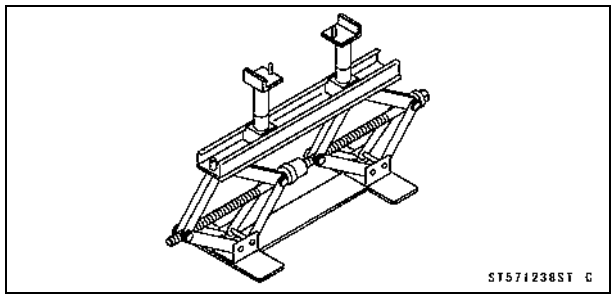

Oil Filter Wrench:
57001-1249

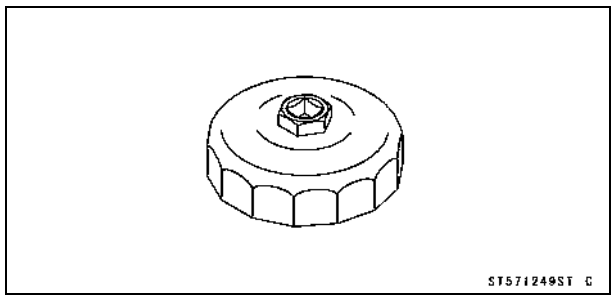

Extension Tube:
57001-1578

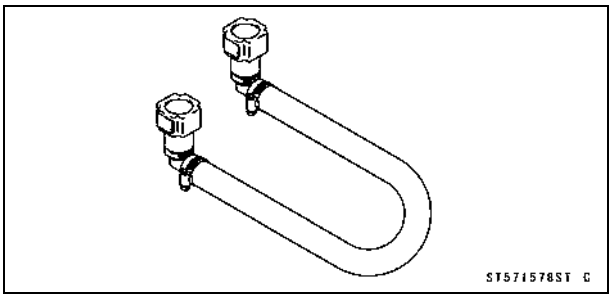

Pilot Screw Adjuster, E:
57001-1603

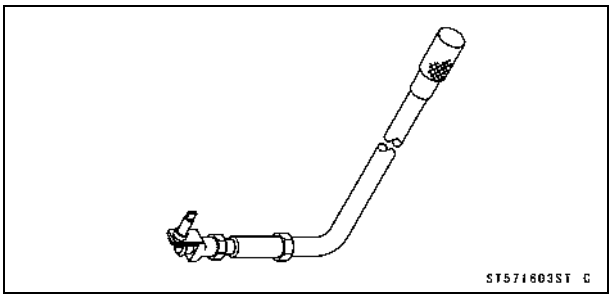

Jack Attachment:
57001-1608

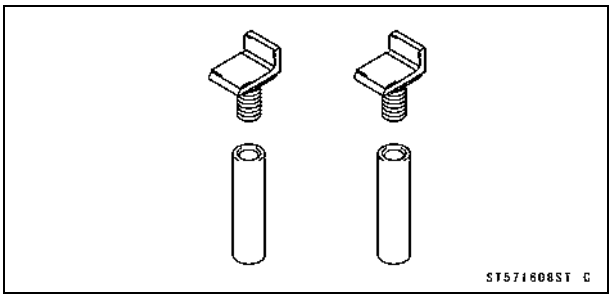

http://mototh.com

Fuel System (DFI)

Fuel Hose Inspection (fuel leak, damage, installation condition)

○The fuel hose is designed to be used throughout the motorcycle's life without any maintenance. However, if the motorcycle is not properly handled, the high pressure inside the fuel line can cause fuel to leak [A] or the hose to burst. Remove the fuel tank (see Fuel Tank Removal Fuel System (DFI) chapter) and check the fuel hose.

★Replace the fuel hose if any fraying, cracks [B] or bulges [C] are noticed.

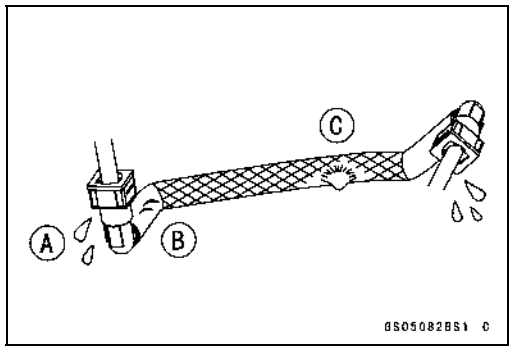

● Check that the hoses are routed according to Cable, Wire, and Hose Routing section in the Appendix chapter.

★Replace the hose if it has been sharply bent or kinked.
Hose Joints [A]
Fuel Hose [B]

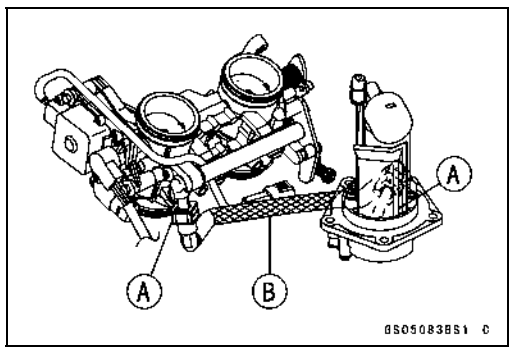

● Check that the hose joints are securely connected.

○Push and pull [A] the hose joint [B] back and forth more than two times, and make sure it is locked.

★If it does not locked, reinstall the hose joint.

⚠ WARNING

Make sure the hose joint is installed correctly on the delivery pipe by sliding the joint, or the fuel could leak.

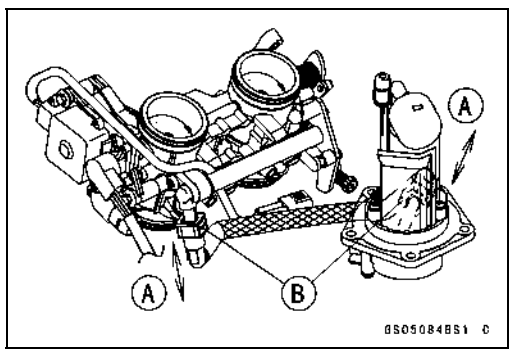

Throttle Control System Inspection

● Check that the throttle grip moves smoothly from full open to close [A], and the throttle closes quickly and completely by the return spring in all steering positions.

★If the throttle grip doesn't return properly, check the throttle cable routing, grip free play, and cable damage. Then lubricate the throttle cable.

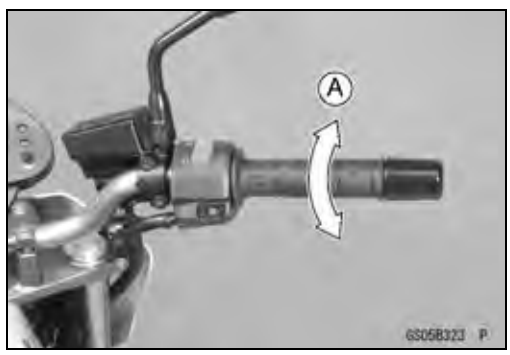

● Check the throttle grip free play [A].

★If the free play is incorrect, adjust the throttle cable.

Throttle Grip Free Play
Standard: 2 ~ 3 mm (0.08 ~ 0.12 in.)

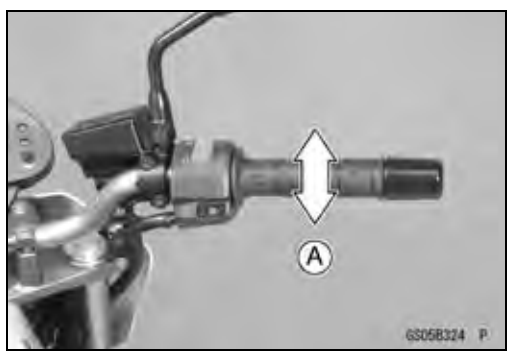

http://mototh.com

Periodic Maintenance Procedures

★If necessary, adjust the throttle cable as follows.
- Loosen the locknut [A] at the upper end of the accelerator cable.
- Turn the adjuster [B] in completely so as to give the throttle grip plenty of play.

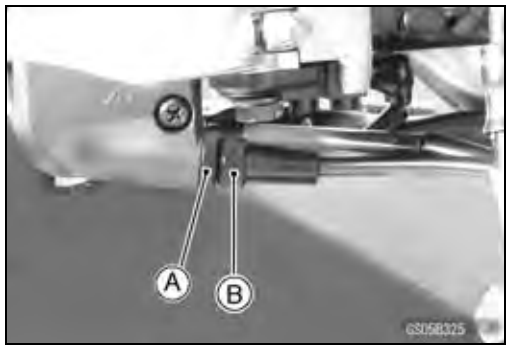

- Loosen the locknut [A] at the middle of the decelerator cable.
- Turn the adjuster [B] until there is no play when the throttle grip is completely closed.
- Tighten the locknut.
- Turn the accelerator cable adjuster until the proper amount of throttle grip free play is obtained.
- Tighten the locknut.

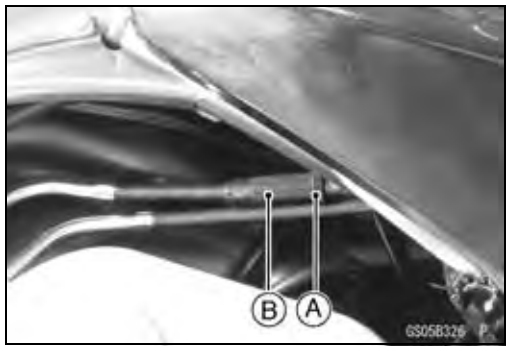

Idle Speed Inspection
- Start the engine and warm it up thoroughly.
- With the engine idling, turn the handlebar to both sides [A].

★If handlebar movement changes the idle speed, the throttle cables may be improperly adjusted or incorrectly routed or damaged. Be sure to correct any of these conditions before riding (see Throttle Control System Inspection or Cable, Wire, and Hose Routing section in the Appendix chapter).

⚠ WARNING

Operation with improperly adjusted, incorrectly routed or damaged cables could result in an unsafe riding condition.

- Check idle speed.

★If the idle speed is out of the specified range, adjust it.

Idle Speed
Standard: 1 300 ±50 r/min (rpm)

Idle Speed Adjustment
- Start the engine and warm it up thoroughly.
- Turn the adjusting screw [A] until the idle speed is correct.

○Open and close the throttle a few times to make sure that the idle speed is within the specified range. Readjust if necessary.

http://mototh.com

Periodic Maintenance Procedures

Air Cleaner Element Cleaning

NOTE

○*In dusty areas, the element should be cleaned more frequently than the recommended interval.*
○*After riding through rain or on muddily roads, the element should be cleaned immediately.*

⚠ WARNING

If dirt or dust is allowed to pass through into the throttle assy, the throttle may become stuck, possibly causing accident.

CAUTION

If dirt gets through into the engine, excessive engine wear and possibly engine damage will occur.

- Remove the fuel tank (see Fuel Tank Removal in the Fuel System (DFI) chapter).
- Remove:
  Air Switching Valve Hose [A] (Disconnect)
  Air Cleaner Element Screw [B]
  Air Cleaner Element [C]

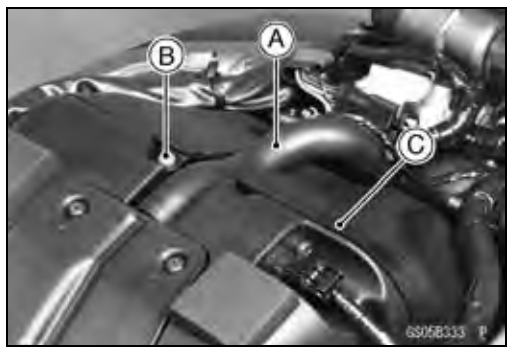

- Remove:
  Upper Plastic Holder [A]
  Element [B]

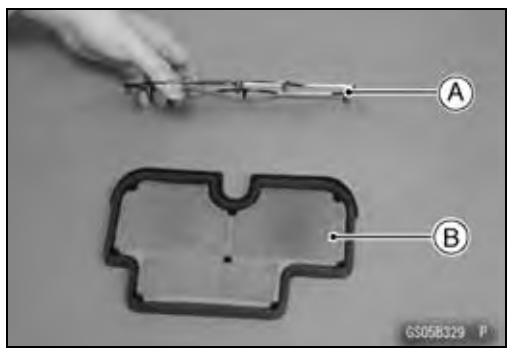

NOTE

○*The wire screen [A] is fastened with an adhesive for the shaded portion [B]. Do not remove the wire screen.*

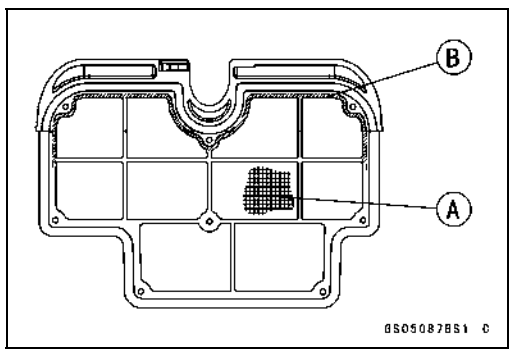

Periodic Maintenance Procedures

⚠ WARNING

Clean the element in a well-ventilated area, and make sure that there are no sparks or flame anywhere near the working area.
Because of the danger of highly flammable liquids, do not use gasoline or a low flash-point solvent to clean the element.

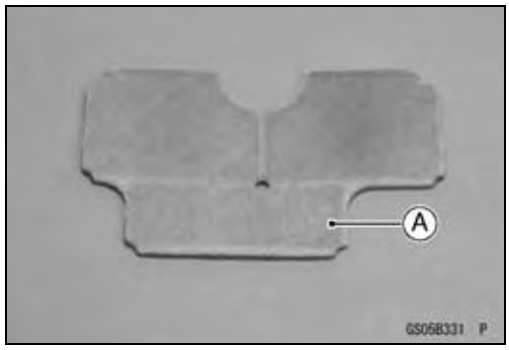

- Clean the element [A] in a bath of high flash-point solvent, and then dry it with compressed air or by shaking it.
- After cleaning, saturate a clean, lint-free towel with SE, SF, or SG class SAE 30 oil and apply the oil to the element by tapping the element outside with the towel.
- Visually check the element for tears or breaks.
- If the element has any tears or breaks, replace the element.

- Install the element unit [A] with the foam element side (gray) [B] facing down.

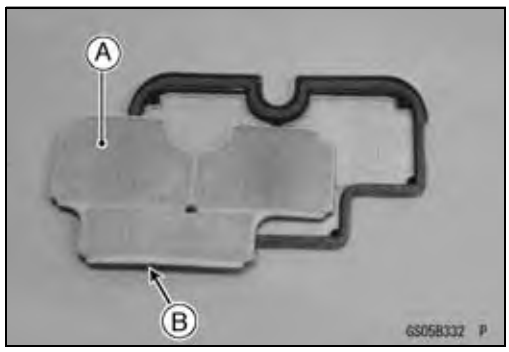

Engine Vacuum Synchronization Inspection

NOTE

○*These procedures are explained on the assumption that the inlet and exhaust systems of the engine are in good condition.*

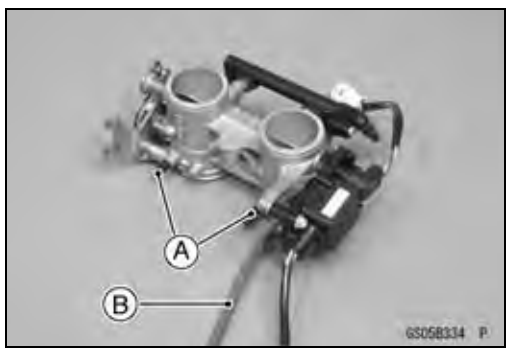

- Situate the motorcycle so that it is vertical.
- Remove the center fairing (see Center Fairing Removal in the Frame chapter).
- Pull off the rubber caps [A] from the fitting of each throttle body (In the photo, the throttle body has been removed for clarity).

CAUTION

Do not remove the inlet air pressure sensor hose [B] on the left fitting of the throttle body.

- Connect a commercially available vacuum gauge and hoses [A] to the fittings of the throttle body as shown.
- Connect a highly accurate tachometer to one of the stick coil primary leads.

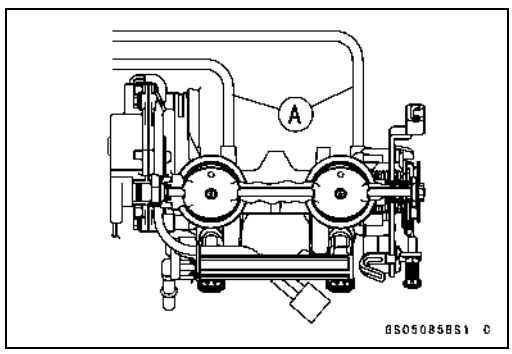

Periodic Maintenance Procedures

- Start the engine and warm it up thoroughly.
- Check the idle speed.
  Tachometer [A]
- Open and close the throttle.

★If the idle speed is out of the specified range, adjust it.

CAUTION
Do not measure the idle speed by the tachometer of the meter unit.

- While idling the engine, inspect the engine vacuum, using the vacuum gauge [B].

Engine Vacuum
Standard: 35.3 ±1.3 kPa (265 ±10 mmHg) at Idle Speed 1 300 ±50 r/min (rpm)

★If any one vacuum is not within the specification, turn in the bypass screws until it seats fully but not tightly.

Special Tool - Pilot Screw Adjuster, E [A]: 57001-1603

CAUTION
Do not over tighten them. They could be damaged, requiring replacement.

- Turn out the bypass screw of the higher vacuum between #1 [A] and #2 [B] to the lower vacuum.
- Open and close the throttle valves after each measurement and adjust the idle speed as necessary.
- Inspect the vacuums as before.

★If both vacuums are within the specification, finish the engine vacuum synchronization.

★If any vacuum can not be adjusted within the specification, remove the bypass screws #1, #2 and clean them.

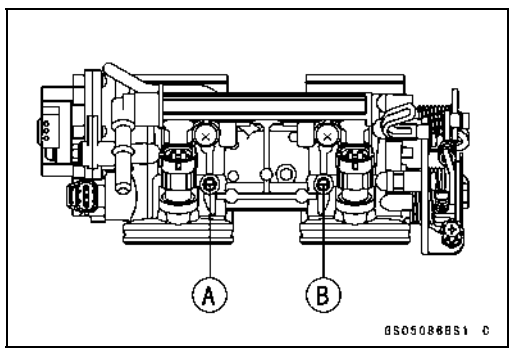

- Remove the bypass screw [A], spring [B], washer [C] and O-ring [D].

○Check the bypass screw and its hole for carbon deposits.

★If any carbon accumulates, wipe the carbon off the bypass screw and the hole, using a cotton pad penetrated with a high-flash point solvent.

○Replace the O-ring with a new one.

○Check the tapered portion [E] of the bypass screw for wear or damage.

★If the bypass screw is worn or damaged, replace it.

- Turn in the bypass screw until it seats fully but not tightly.

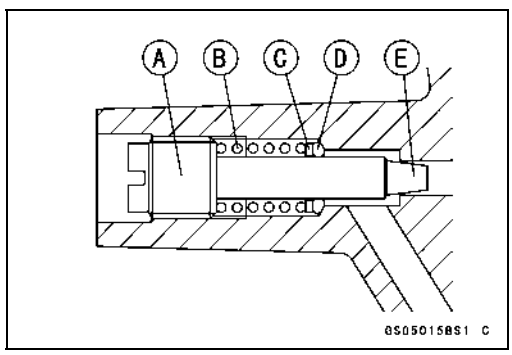

Periodic Maintenance Procedures

- Repeat the same procedure for other bypass screws.
- Repeat the synchronization.

★If the vacuums are correct, check the output voltage of the main throttle sensor (see Main Throttle Sensor Output Voltage Inspection in the Fuel System (DFI) chapter).

Main Throttle Sensor Output Voltage
Connections to ECU
Meter (+) → Y/W lead (terminal 7)
Meter (–) → BR/BK lead (terminal 28)
Standard:
1.055 ~ 1.095 V DC (at idle throttle opening)

★If the output voltage is out of the range, check the throttle input voltage (see Main Throttle Sensor Input Voltage Inspection in the Fuel System (DFI) chapter).

- Remove the vacuum gauge hoses and install the vacuum hoses and rubber caps.

Cooling System

Coolant Level Inspection

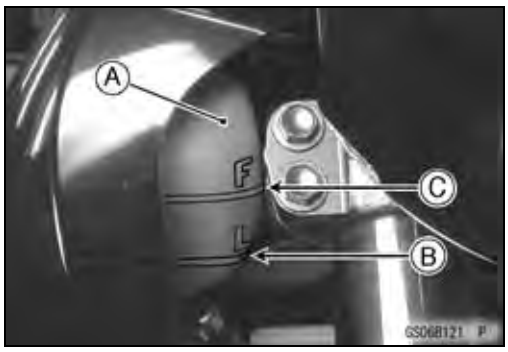

NOTE

○*Check the level when the engine is cold (room or ambient temperature).*

- Check the coolant level in the reserve tank [A] with the motorcycle held perpendicular (Do not use the sidestand).

★If the coolant level is lower than the “L” level line [B], remove the right center fairing (see Center Fairing Removal in the Frame chapter) and unscrew the reserve tank cap, and add coolant to the “F” level line [C].
“L”: low
“F”: full

CAUTION

For refilling, add the specified mixture of coolant and soft water. Adding water alone dilutes the coolant and degrades its anticorrosion properties. The diluted coolant can attack the aluminum engine parts. In an emergency, soft water alone can be added. But the diluted coolant must be returned to the correct mixture ratio within a few days.
If coolant must be added often or the reservoir tank has run completely dry, there is probably leakage in the cooling system. Check the system for leaks.
Coolant ruins painted surfaces. Immediately wash away any coolant that spills on the frame, engine, wheels or other painted parts.

http://mototh.com

Periodic Maintenance Procedures

Radiator Hose and Pipe Inspection (coolant leak, damage, installation condition)

○The high pressure inside the radiator hose and pipe can cause coolant to leak [A] or the hose to burst if the line is not properly maintained.

● Visually inspect the hoses for signs of deterioration. Squeeze the hoses. A hose should not be hard and brittle, nor should it be soft or swollen.

★Replace the hose if any fraying, cracks [B] or bulges [C] are noticed.

● Check that the hoses are securely connected and clamps are tightened correctly.

Torque - Radiator Hose Clamp Screws: 2.0 N·m (0.20 kgf·m, 17 in·lb)

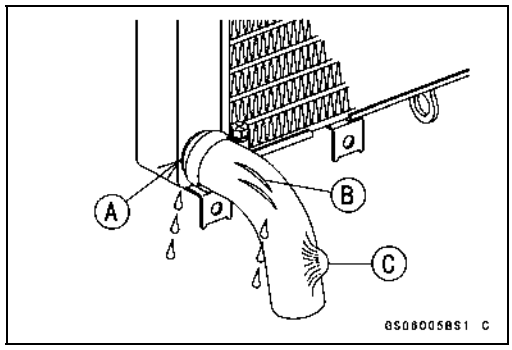

Air Suction System

Air Suction System Damage Inspection

● Remove the fuel tank (see Fuel Tank Removal in the Fuel System (DFI) chapter).

● Remove the fuel hose (see Fuel Hose Replacement).

● Connect:
Fuel Pump Lead Connector [A]
Extension Tube [B]

Special Tool - Extension Tube: 57001-1578

● Pull the air switching valve hose [C] out of the air cleaner housing.

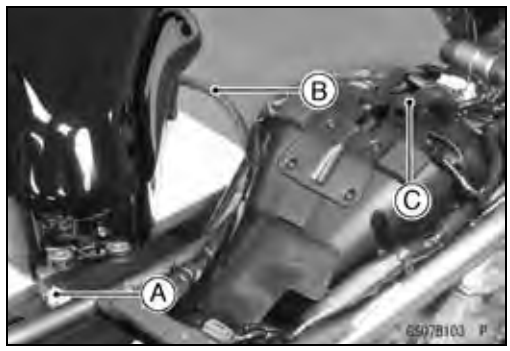

● Start the engine and run it at idle speed.

● Plug [A] the air switching valve hose end with your finger and feel vacuum pulsing in the hose.

★If there is no vacuum pulsation, check the hose line for leak. If there is no leak, check the air switching valve (see Air Switching Valve Unit Test in the Electrical System chapter) or air suction valve (see Air Suction Valve Inspection in the Engine Top End chapter).

Engine Top End

Valve Clearance Inspection

NOTE

○*Valve clearance must be checked and adjusted when the engine is cold (room temperature).*

● Remove the cylinder head cover (see Cylinder Head Cover Removal in the Engine Top End chapter).

● Unscrew the upper [A] and lower [B] caps on the clutch cover.

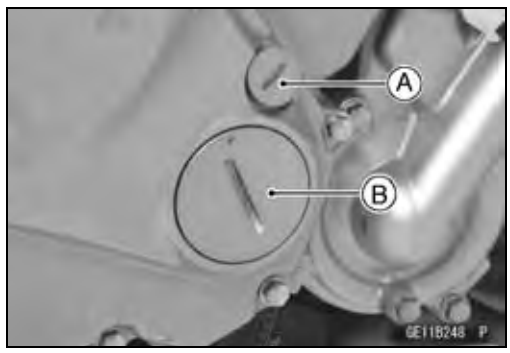

http://mototh.com

Periodic Maintenance Procedures

- Check the valve clearance when the pistons are at TDC.
  - ○The pistons are numbered beginning with the engine left side.
- Using a wrench [A] on the crankshaft rotation bolt, turn the crankshaft clockwise until the "1|T" mark on the timing rotor is aligned with the notch [B] in the edge of the upper hole in the clutch cover for #1 piston and "2|T" mark for #2 piston.

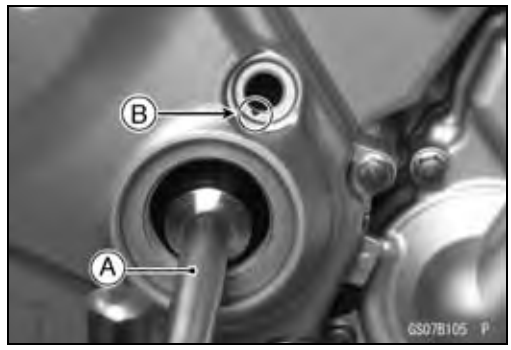

1|T Mark [A]
2|T Mark [B]
Hole [C] of Upper Cap
Notch [D] in Edge of Upper Hole

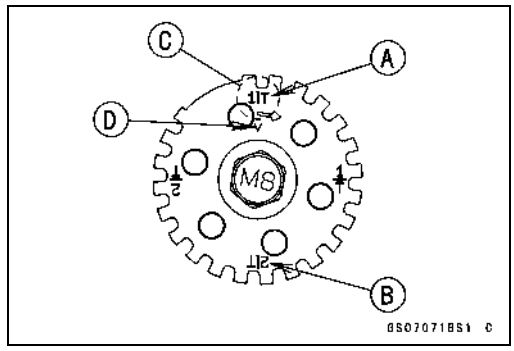

○Measure the valve clearance of the valves for which the cam are turned away from each other.

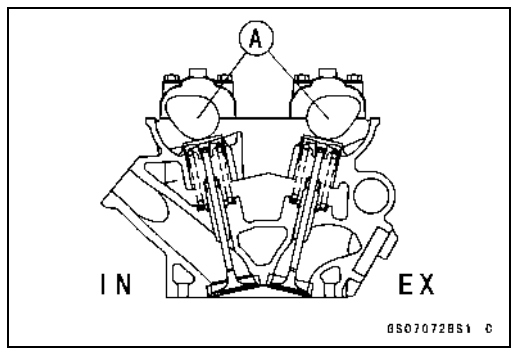

- Using the thickness gauge [A], measure the valve clearance between cam and valve lifter.

Valve Clearance
Standard:

Exhaust	**0.22 ~ 0.31 mm (0.0087 ~ 0.0122 in.)**
Inlet	**0.15 ~ 0.21 mm (0.0059 ~ 0.0083 in.)**

○Each piston has two inlet and two exhaust valves. Measure these two inlet or exhaust valves at the same crankshaft position.

Valve Clearance Measuring Position
#1 Piston TDC at End of Compression Stroke →
Inlet valve clearances of #1 piston, and
Exhaust valve clearances of #1 piston

NOTE

○*Check the valve clearance using this method only. Checking the clearance at any other cam position may result in improper valve clearance.*

Periodic Maintenance Procedures

Valve Clearance Measuring Position
#2 Piston TDC at End of Compression Stroke →
Inlet valve clearances of #2 piston, and
Exhaust valve clearances of #2 piston

★If the valve clearance is not with in the specified range, first record the clearance, and adjust it.

Valve Clearance Adjustment

- To change the valve clearance, remove the camshaft chain tensioner, camshafts and valve lifters. Replace the shim with one of a different thickness.

NOTE

○*Mark and record the valve lifter and shim locations so they can be reinstalled in their original positions.*
○*If there is no clearance, select a shim which is several sizes smaller and then measure the clearance.*

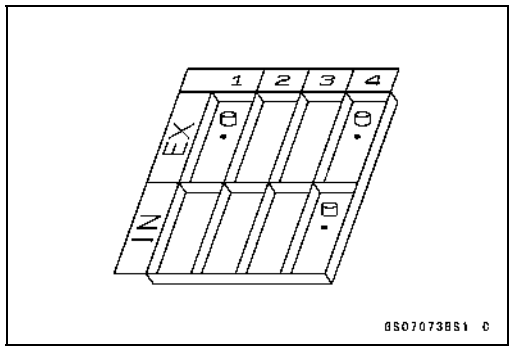

- To select a new shim which brings the valve clearance within the specified range, refer to the Valve Clearance Adjustment Charts.
- Apply a thin coat of molybdenum disulfide grease to the valve lifters.
- Install the camshafts. Be sure to time the camshafts properly (see Camshaft Installation in the Engine Top End chapter).
- Remeasure any valve clearance that was adjusted. Readjust if necessary.

CAUTION

Do not put shim stock under the shim. This may cause the shim to pop out at high rpm, causing extensive engine damage.
Do not grind the shim. This may cause it to fracture, causing extensive engine damage.

http://mototh.com

Periodic Maintenance Procedures

VALVE CLEARANCE ADJUSTMENT CHART INLET VALVE

INLET

	PRESENT SHIM (Example)																			
Part No. (92180)	1014	1016	1018	1020	1022	1024	1026	1028	1030	1032	1034	1036	1038	1040	1042	1044	1046	1048	1050	1052	1054
MARK	50	55	60	65	70	75	80	85	90	95	00	5	10	15	20	25	30	35	40	45	50
THICKNESS (mm)	2.50	2.55	2.60	2.65	2.70	2.75	2.80	2.85	2.90	2.95	3.00	3.05	3.10	3.15	3.20	3.25	3.30	3.35	3.40	3.45	3.50

VALVE CLEARANCE MEASUREMENT (mm) (Example)																				
0.00 ~ 0.02	—	—	—	—	2.50	2.55	2.60	2.65	2.70	2.75	2.80	2.85	2.90	2.95	3.00	3.05	3.10	3.15	3.20	3.25	3.30
0.03 ~ 0.07	—	—	—	2.50	2.55	2.60	2.65	2.70	2.75	2.80	2.85	2.90	2.95	3.00	3.05	3.10	3.15	3.20	3.25	3.30	3.35
0.08 ~ 0.12	—	—	2.50	2.55	2.60	2.65	2.70	2.75	2.80	2.85	2.90	2.95	3.00	3.05	3.10	3.15	3.20	3.25	3.30	3.35	3.40
0.13~ 0.14	—	2.50	2.55	2.60	2.65	2.70	2.75	2.80	2.85	2.90	2.95	3.00	3.05	3.10	3.15	3.20	3.25	3.30	3.35	3.40	3.45
0.15 ~ 0.24	SPECIFIED CLEARANCE/NO CHANGE REQUIRED																				
0.25 ~ 0.27	2.55	2.60	2.65	2.70	2.75	2.80	2.85	2.90	2.95	3.00	3.05	3.10	3.15	3.20	3.25	3.30	3.35	3.40	3.45	3.50	
0.28 ~ 0.32	2.60	2.65	2.70	2.75	2.80	2.85	2.90	2.95	3.00	3.05	3.10	3.15	3.20	3.25	3.30	3.35	3.40	3.45	3.50		
0.33 ~ 0.37	2.65	2.70	2.75	2.80	2.85	2.90	2.95	3.00	3.05	3.10	3.15	3.20	3.25	3.30	3.35	3.40	3.45	3.50			
0.38 ~ 0.42	2.70	2.75	2.80	2.85	2.90	2.95	3.00	3.05	3.10	3.15	3.20	3.25	3.30	3.35	3.40	3.45	3.50				
0.43 ~ 0.47	2.75	2.80	2.85	2.90	2.95	3.00	3.05	3.10	3.15	3.20	3.25	3.30	3.35	3.40	3.45	3.50					
0.48 ~ 0.52	2.80	2.85	2.90	2.95	3.00	3.05	3.10	3.15	3.20	3.25	3.30	3.35	3.40	3.45	3.50						
0.53 ~ 0.57	2.85	2.90	2.95	3.00	3.05	3.10	3.15	3.20	3.25	3.30	3.35	3.40	3.45	3.50							
0.58 ~ 0.62	2.90	2.95	3.00	3.05	3.10	3.15	3.20	3.25	3.30	3.35	3.40	3.45	3.50								
0.63 ~ 0.67	2.95	3.00	3.05	3.10	3.15	3.20	3.25	3.30	3.35	3.40	3.45	3.50									
0.68 ~ 0.72	3.00	3.05	3.10	3.15	3.20	3.25	3.30	3.35	3.40	3.45	3.50										
0.73 ~ 0.77	3.05	3.10	3.15	3.20	3.25	3.30	3.35	3.40	3.45	3.50											
0.78 ~ 0.82	3.10	3.15	3.20	3.25	3.30	3.35	3.40	3.45	3.50												
0.83 ~ 0.87	3.15	3.20	3.25	3.30	3.35	3.40	3.45	3.50													
0.88 ~ 0.92	3.20	3.25	3.30	3.35	3.40	3.45	3.50														
0.93 ~ 0.97	3.25	3.30	3.35	3.40	3.45	3.50															
0.98 ~ 1.02	3.30	3.35	3.40	3.45	3.50																
1.03 ~ 1.07	3.35	3.40	3.45	3.50																	
1.08 ~ 1.12	3.40	3.45	3.50																		
1.13 ~ 1.17	3.45	3.50																			
1.18 ~ 1.22	3.50																				

INSTALL THE SHIM OF THIS THICKNESS (mm)

1. Measure the clearance (when engine is cold).
2. Check present shim size.
3. Match clearance in vertical column with present shim size in horizontal column.
4. Install the shim specified where the lines intersect. This shim will give the proper clearance.

Example: Present shim is **2.95 mm**
Measured clearance is **0.45 mm**
Replace **2.95 mm** shim with **3.20 mm** shim.

5. Remeasure the valve clearance and readjust if necessary.

VALVE CLEARANCE ADJUSTMENT CHART EXHAUST VALVE

EXHAUST

	PRESENT SHIM (Example)																				
Part No. (92180)	1014	1016	1018	1020	1022	1024	1026	1028	1030	1032	1034	1036	1038	1040	1042	1044	1046	1048	1050	1052	1054
MARK	50	55	60	65	70	75	80	85	90	95	00	5	10	15	20	25	30	35	40	45	50
THICKNESS (mm)	2.50	2.55	2.60	2.65	2.70	2.75	2.80	2.85	2.90	2.95	3.00	3.05	3.10	3.15	3.20	3.25	3.30	3.35	3.40	3.45	3.50
VALVE CLEARANCE MEASUREMENT (mm) (Example)																					
0.00 ~ 0.04	–	–	–	–	–	2.50	2.55	2.60	2.65	2.70	2.75	2.80	2.85	2.90	2.95	3.00	3.05	3.10	3.15	3.20	3.25
0.05 ~ 0.09	–	–	–	–	2.50	2.55	2.60	2.65	2.70	2.75	2.80	2.85	2.90	2.95	3.00	3.05	3.10	3.15	3.20	3.25	3.30
0.10 ~ 0.14	–	–	–	2.50	2.55	2.60	2.65	2.70	2.75	2.80	2.85	2.90	2.95	3.00	3.05	3.10	3.15	3.20	3.25	3.30	3.35
0.15 ~ 0.19	–	–	2.50	2.55	2.60	2.65	2.70	2.75	2.80	2.85	2.90	2.95	3.00	3.05	3.10	3.15	3.20	3.25	3.30	3.35	3.40
0.20 ~ 0.21	–	2.50	2.55	2.60	2.65	2.70	2.75	2.80	2.85	2.90	2.95	3.00	3.05	3.10	3.15	3.20	3.25	3.30	3.35	3.40	3.45
0.22 ~ 0.31	SPECIFIED CLEARANCE/NO CHANGE REQUIRED																				
0.32 ~ 0.34	2.55	2.60	2.65	2.70	2.75	2.80	2.85	2.90	2.95	3.00	3.05	3.10	3.15	3.20	3.25	3.30	3.35	3.40	3.45	3.50	
0.35 ~ 0.39	2.60	2.65	2.70	2.75	2.80	2.85	2.90	2.95	3.00	3.05	3.10	3.15	3.20	3.25	3.30	3.35	3.40	3.45	3.50		
0.40 ~ 0.44	2.65	2.70	2.75	2.80	2.85	2.90	2.95	3.00	3.05	3.10	3.15	3.20	3.25	3.30	3.35	3.40	3.45	3.50			
0.45 ~ 0.49	2.70	2.75	2.80	2.85	2.90	2.95	3.00	3.05	3.10	3.15	3.20	3.25	3.30	3.35	3.40	3.45	3.50				
0.50 ~ 0.54	2.75	2.80	2.85	2.90	2.95	3.00	3.05	3.10	3.15	3.20	3.25	3.30	3.35	3.40	3.45	3.50					
0.55 ~ 0.59	2.80	2.85	2.90	2.95	3.00	3.05	3.10	3.15	3.20	3.25	3.30	3.35	3.40	3.45	3.50						
0.60 ~ 0.64	2.85	2.90	2.95	3.00	3.05	3.10	3.15	3.20	3.25	3.30	3.35	3.40	3.45	3.50							
0.65 ~ 0.69	2.90	2.95	3.00	3.05	3.10	3.15	3.20	3.25	3.30	3.35	3.40	3.45	3.50								
0.70 ~ 0.74	2.95	3.00	3.05	3.10	3.15	3.20	3.25	3.30	3.35	3.40	3.45	3.50									
0.75 ~ 0.79	3.00	3.05	3.10	3.15	3.20	3.25	3.30	3.35	3.40	3.45	3.50										
0.80 ~ 0.84	3.05	3.10	3.15	3.20	3.25	3.30	3.35	3.40	3.45	3.50											
0.85 ~ 0.89	3.10	3.15	3.20	3.25	3.30	3.35	3.40	3.45	3.50												
0.90 ~ 0.94	3.15	3.20	3.25	3.30	3.35	3.40	3.45	3.50													
0.95 ~ 0.99	3.20	3.25	3.30	3.35	3.40	3.45	3.50														
1.00 ~ 1.04	3.25	3.30	3.35	3.40	3.45	3.50															
1.05 ~ 1.09	3.30	3.35	3.40	3.45	3.50																
1.10 ~ 1.14	3.35	3.40	3.45	3.50																	
1.15 ~ 1.19	3.40	3.45	3.50																		
1.20 ~ 1.24	3.45	3.50																			
1.25 ~ 1.29	3.50																				

INSTALL THE SHIM OF THIS THICKNESS (mm)

1. Measure the clearance (when engine is cold).
2. Check present shim size.
3. Match clearance in vertical column with present shim size in horizontal column.
4. Install the shim specified where the lines intersect. This shim will give the proper clearance.

Example: Present shim is **2.95 mm.**
Measured clearance is **0.47 mm.**
Replace **2.95 mm** shim with **3.15 mm** shim.

5. Remeasure the valve clearance and readjust if necessary.

Periodic Maintenance Procedures

Clutch

Clutch Operation Inspection

- Pull the clutch lever just enough to take up the free play [A].
- Measure the gap between the lever and the lever holder.

★If the gap is too wide, the clutch may not release fully. If the gap is too narrow, the clutch may not engage fully. In either case, adjust it.

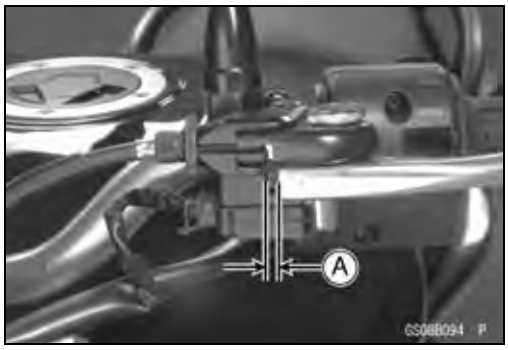

Clutch Lever Free Play
Standard: 2 ~ 3 mm (0.08 ~ 0.12 in.)

⚠ WARNING

To avoid a serious burn, never touch the engine or exhaust pipe during clutch adjustment.

- Turn the adjuster [A] so that 5 ~ 6 mm (0.20 ~ 0.24 in.) [B] of threads are visible.

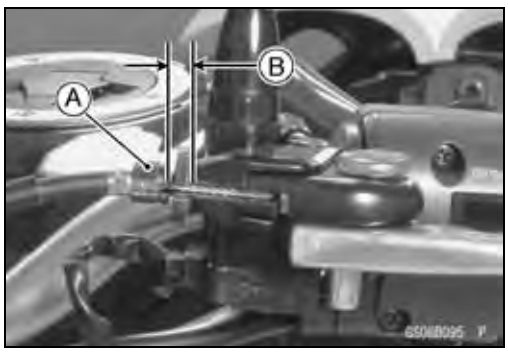

- Slide the dust cover [A] at the middle of the clutch cable out of place.
- Loosen the locknut [B] at the middle of clutch cable.
- Turn the adjusting nut [C] until the free play is correct.

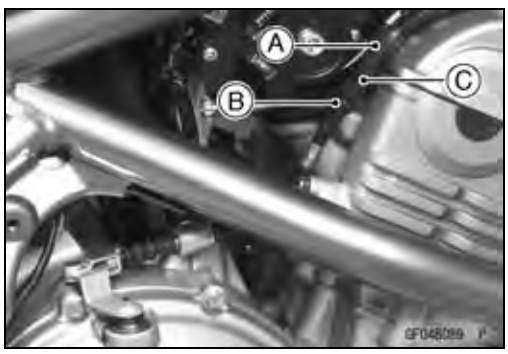

⚠ WARNING

Be sure that the outer cable end at the clutch lever is fully seated in the adjuster at the clutch lever, or it could slip into place later, creating enough cable play to prevent clutch disengagement.

- After the adjustment, tighten the locknut and start the engine and check that the clutch does not slip and that it releases properly.

Wheels/Tires

Air Pressure Inspection

- Remove the air valve cap.
- Measure the tire air pressure with an air pressure gauge [A] when the tires are cold (that is, when the motorcycle has not been ridden more than a mile during the past 3 hours).
- Install the air valve cap.

★Adjust the tire air pressure according to the specifications if necessary.

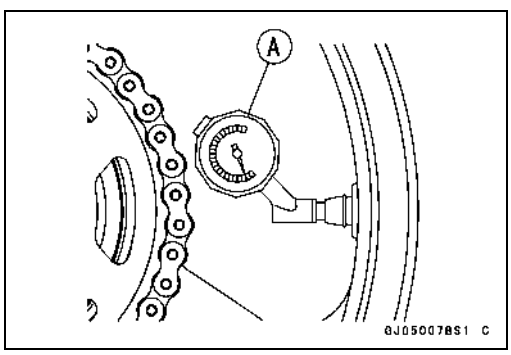

Air Pressure (when Cold)

Front:	**Up to 180 kg (397 lb)** **225 kPa (2.25 kgf/cm², 32 psi)**
Rear:	**Up to 180 kg (397 lb)** **250 kPa (2.50 kgf/cm², 36 psi)**

http://mototh.com

Periodic Maintenance Procedures

Wheel/Tire Damage Inspection

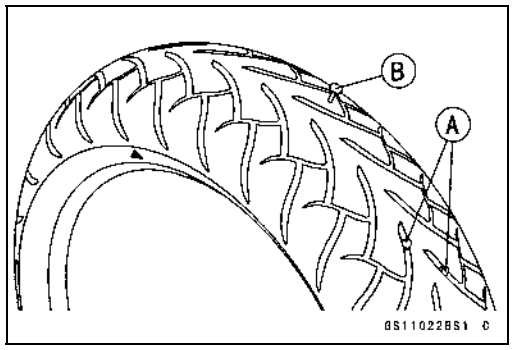

- Remove any imbedded stones [A] or other foreign particles [B] from tread.
- Visually inspect the tire for cracks and cuts, and replace the tire if necessary. Swelling or high spots indicate internal damage, requiring tire replacement.
- Visually inspect the wheel for cracks, cuts and dents damage.

★If any damage is found, replace the wheel if necessary.

Tire Tread Wear, Abnormal Wear Inspection

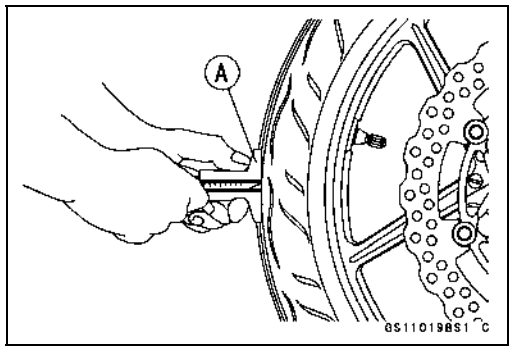

As the tire tread wears down, the tire becomes more susceptible to puncture and failure. An accepted estimate is that 90% of all tire failures occur during the last 10% of tread life (90% worn). So it is false economy and unsafe to use the tires until they are bald.

- Measure the tread depth at the center of the tread with a depth gauge [A]. Since the tire may wear unevenly, take measurement at several places.

★If any measurement is less than the service limit, replace the tire (see Tire Removal/Installation in the Wheels/Tires chapter).

Tread Depth

Standard:	
Front	**6.5 mm (0.26 in.)**
Rear	**9.0 mm (0.35 in.)**
Service Limit:	
Front	**1 mm (0.04 in.)** **(AT, CH, DE) 1.6 mm (0.06 in.)**
Rear	**2 mm (0.08 in.)** **(Up to 130 km/h (80 mph))**
	3 mm (0.12 in.) **(Over 130 km/h (80 mph))**

⚠ WARNING

To ensure safe handling and stability, use only the recommended standard tires for replacement, inflated to the standard pressure.

NOTE

○*Most countries may have their own regulations a minimum tire tread depth: be sure to follow them.*

○*Check and balance the wheel when a tire is replaced with a new one.*

Periodic Maintenance Procedures

Wheel Bearing Damage Inspection

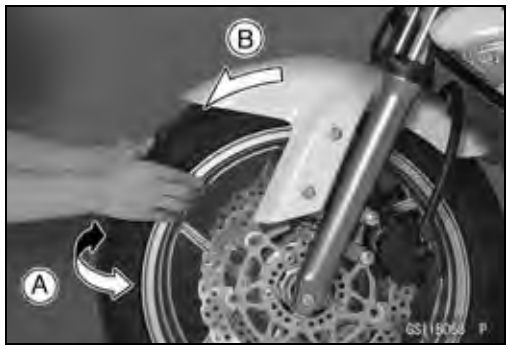

- Raise the front wheel off the ground with jack (see Front Wheel Removal in the Wheels/Tires chapter).
- Turn the handlebar all the way to the right or left.
- Inspect the roughness of the front wheel bearing by pushing and pulling [A] the wheel.
- Spin [B] the front wheel lightly, and check for smoothly turn, roughness, binding or noise.

★If roughness, binding or noise is found, remove the front wheel and inspect the wheel bearing (see Front Wheel Removal, Hub Bearing Inspection in the Wheels/Tires chapter).

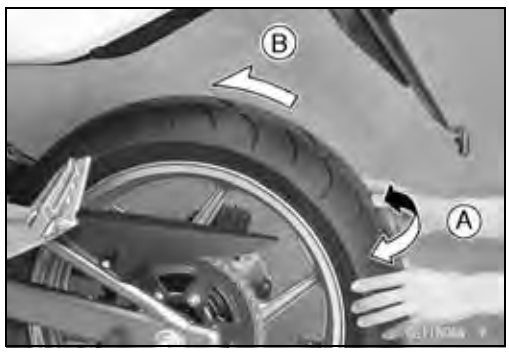

- Raise the rear wheel off the ground with stand (see Rear Wheel Removal in the Wheels/Tires chapter).
- Inspect the roughness of the rear wheel bearing by pushing and pulling [A] the wheel.
- Spin [B] the rear wheel lightly, and check for smoothly turn, roughness, binding or noise.

★If roughness, binding or noise is found, remove the rear wheel and inspect the wheel bearing (see Rear Wheel Removal, Hub Bearing Inspection in the Wheels/Tires chapter) and coupling (see Coupling Bearing Inspection in the Final Drive chapter).

Drive Train

Drive Chain Lubrication Condition Inspection

- If a special lubricant is not available, a heavy oil such as SAE 90 is preferred to a lighter oil because it will stay on the chain longer and provide better lubrication.
- If the chain appears especially dirty, clean it before lubrication.

CAUTION

The O-rings between the side plates seal in the lubricant between the pin and the bushing. To avoid damaging the O-rings and resultant loss of lubricant, observe the following rules.
Use only kerosene or diesel oil for cleaning an O-ring drive chain. Any other cleaning solution such as gasoline or trichloroethylene will cause deterioration and swelling of the O-ring. Immediately blow the chain dry with compressed air after cleaning. Complete cleaning and drying the chain within 10 minutes.

http://mototh.com

Periodic Maintenance Procedures

- Apply oil to the sides of the rollers so that oil will penetrate to the rollers and bushings. Apply the oil to the O-rings so that the O-rings will be coated with oil.
- Wipe off any excess oil.
  Oil Applied Areas [A]
  O-rings [B]

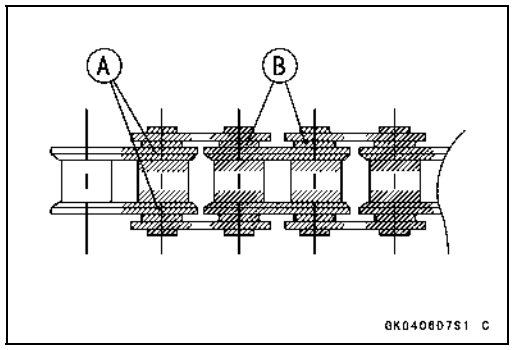

Drive Chain Slack Inspection

NOTE

○*Check the slack with the motorcycle setting on its side-stand.*
○*Clean the chain if it is dirty, and lubricate it if it appears dry.*

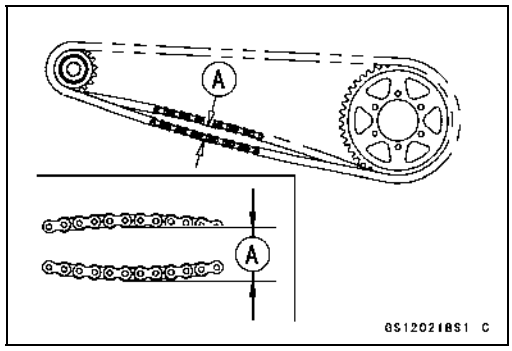

- Check the wheel alignment (see Wheel Alignment Inspection).
- Rotate the rear wheel to find the position where the chain is tightest.
- Measure the vertical movement (chain slack) [A] midway between the sprockets.

★If the chain slack exceeds the standard, adjust it.

Chain Slack
Standard: 30 ~ 40 mm (1.2 ~ 1.6 in.)

Drive Chain Slack Adjustment

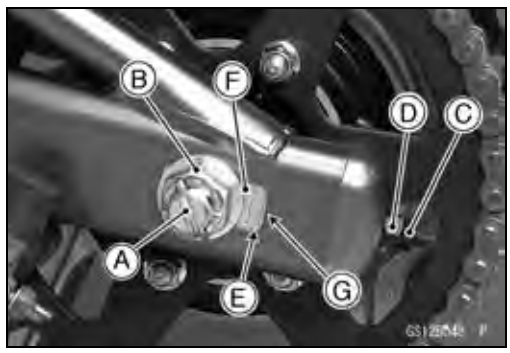

- Remove the cotter pin [A], and loosen the axle nut [B].
- Loosen the both chain adjuster locknuts [C].

★If the chain is too loose, turn in the left and right chain adjuster nuts [D] evenly.

★If the chain is too tight, turn out the left and right chain adjuster nuts evenly, and kick the wheel forward.

- Turn both chain adjuster nuts evenly until the drive chain has the correct amount of slack. To keep the chain and wheel properly aligned, the value [E] on the left wheel alignment adjuster [F] should align with the same (left or right) edge [G] of inspection window on the swingarm that the right wheel alignment adjuster value aligns with.

⚠ WARNING

Misalignment of the wheel will result in abnormal wear and may result in an unsafe riding condition.

- Tighten both chain adjuster locknuts securely.
- Tighten the axle nut.

Torque - Rear Axle Nut: 108 N·m (11.0 kgf·m, 80 ft·lb)

- Turn the wheel, measure the chain slack again at the tightest position, and readjust if necessary.

http://mototh.com

Periodic Maintenance Procedures

● Insert a new cotter pin [A].

NOTE

○*When inserting the cotter pin, if the slots in the nut do not align with the cotter pin hole in the axle, tighten the nut clockwise [B] up to next alignment.*
○*It should be within 30°.*
○*Loosen once and tighten again when the slot goes past the nearest hole.*

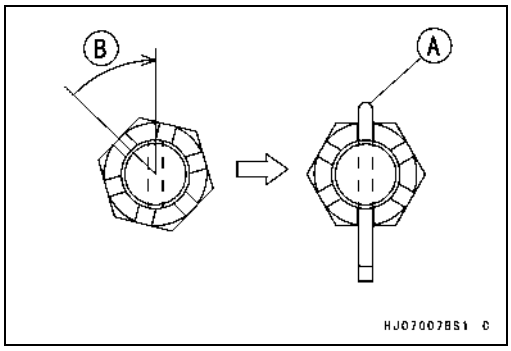

● Bend the cotter pin [A] over the nut [B].

⚠ WARNING

If the rear axle nut is not securely tightened or the cotter pin is not installed, an unsafe riding condition may result.

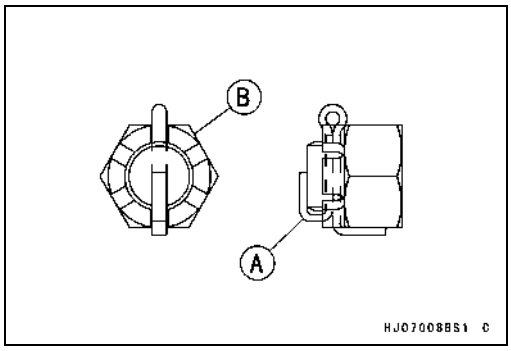

Wheel Alignment Inspection

● Check that the value [A] on the left wheel alignment adjuster [B] aligns with the same (left or right) edge [C] of inspection window on the swingarm that the right wheel alignment adjuster value aligns with.

★If they do not, adjust the chain slack and align the wheel alignment (see Drive Chain Slack Adjustment).

NOTE

○*Wheel alignment can be also checked using the straightedge or string method.*

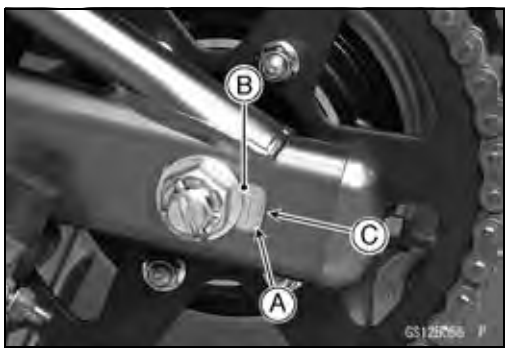

⚠ WARNING

Misalignment of the wheel will result in abnormal wear, and may result in an unsafe riding condition.

http://mototh.com

Periodic Maintenance Procedures

Drive Chain Wear Inspection

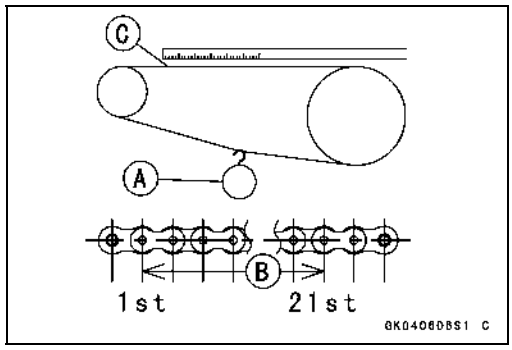

- Remove:
  Chain Cover (see Swingarm Removal in the Suspension chapter)
- Rotate the rear wheel to inspect the drive chain for damaged rollers, and loose pins and links.

★If there is any irregularity, replace the drive chain.

★Lubricate the drive chain if it appears dry.

- Stretch the chain taut by hanging a 98 N (10 kg, 20 lb) weight [A] on the chain.
- Measure the length of 20 links [B] on the straight part [C] of the chain from the pin center of the 1st pin to the pin center of the 21st pin. Since the chain may wear unevenly, take measurements at several places.

★If any measurements exceed the service limit, replace the chain. Also, replace the front and rear sprockets when the drive chain is replaced.

Drive Chain 20-link Length

Standard:	**317.5 ~ 318.2 mm (12.50 ~ 12.53 in.)**
Service Limit:	**323 mm (12.7 in.)**

⚠ WARNING

If the drive chain wear exceeds the service limit, replace the chain or an unsafe riding condition may result. A chain that breaks or jumps off the sprockets could snag on the engine sprocket or lock the rear wheel, severely damaging the motorcycle and causing it to go out of control.
For safely, use only the standard chain. It is an endless type and should not be cut for installation.

Standard Chain

Make:	**ENUMA**
Type:	**EK520MVXL1**
Link:	**114 links**

Chain Guide Inspection

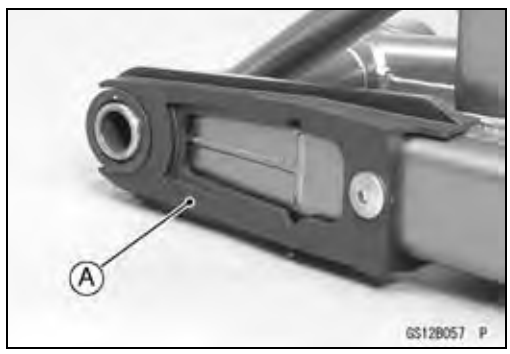

- Remove:
  Swingarm (see Swingarm Removal in the Suspension chapter)
- Visually inspect the chain guide [A].

★Replace the chain guide if it shows any signs of abnormal wear or damage.

http://mototh.com

Periodic Maintenance Procedures

Brake System

Brake Fluid Leak (Brake Hose and Pipe) Inspection

- Apply the brake lever or pedal and inspect the brake fluid leak from the brake hoses [A] and fittings [B].

★If the brake fluid leaked from any position, inspect or replace the problem part.

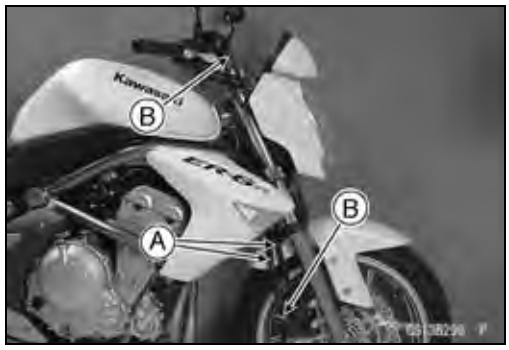

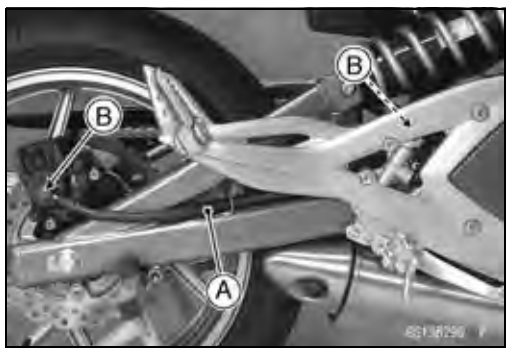

Brake Hose Damage and Installation Condition Inspection

- Inspect the brake hoses and fittings for deterioration, cracks and signs of leakage.

○The high pressure inside the brake line can cause fluid to leak [A] or the hose to burst if the line is not properly maintained. Bend and twist the rubber hose while examining it.

★Replace the hose if any crack [B], bulge [C] or leakage is noticed.

★Tighten any brake hose banjo bolts.

Torque - Brake Hose Banjo Bolts: 25 N·m (2.5 kgf·m, 18 ft·lb)

- Inspect the brake hose routing.

★If any brake hose routing is incorrect, route the brake hose according to Cable, Wire, and Hose Routing section in the Appendix chapter.

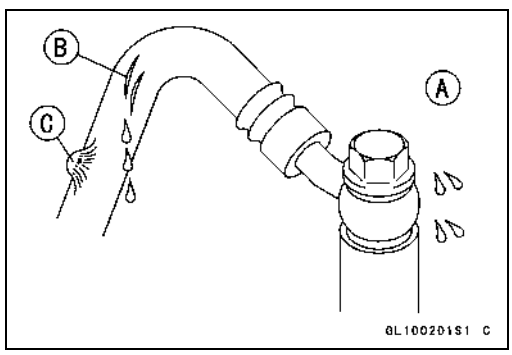

Brake Operation Inspection

- Inspect the operation of the front and rear brake by running the vehicle on the dry road.

★If the brake operation is insufficiency, inspect the brake system.

⚠ WARNING

When inspecting by running the vehicle, note a surrounding traffic situation enough in the place of safety.

http://mototh.com

Periodic Maintenance Procedures

Brake Fluid Level Inspection

- Check that the brake fluid level in the front brake reservoir [A] is above the lower level line [B].

NOTE

○*Hold the reservoir horizontal by turning the handlebar when checking brake fluid level.*

★If the fluid level is lower than the lower level line, fill the reservoir to the upper level line [C] in the reservoir.

- Remove the seat (see Seat Removal in the Frame chapter).
- Check that the brake fluid level in the rear brake reservoir [A] is above the lower level line [B].

★If the fluid level is lower than the lower level line, fill the reservoir to the upper level line [C].

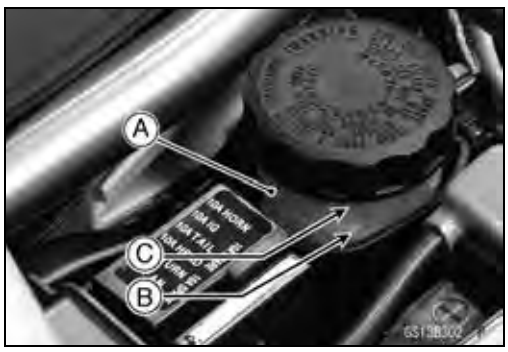

⚠ WARNING

Change the brake fluid in the brake line completely if the brake fluid must be refilled but the type and brand of the brake fluid that is already in the reservoir are unidentified. After changing the fluid, use only the same type and brand of fluid thereafter.

Recommended Disc Brake Fluid
Grade: DOT4

- Follow the procedure below to install the rear brake fluid reservoir cap correctly.

○First, tighten the rear brake fluid reservoir cap [B] clockwise [C] by hand until slight resistance is felt indicating that the cap is seated on the reservoir body, then tighten the cap an additional 1/6 turn [D] while holding the brake fluid reservoir body [A].

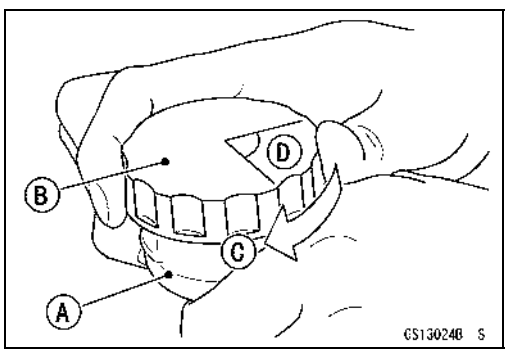

Periodic Maintenance Procedures

Brake Pad Wear Inspection

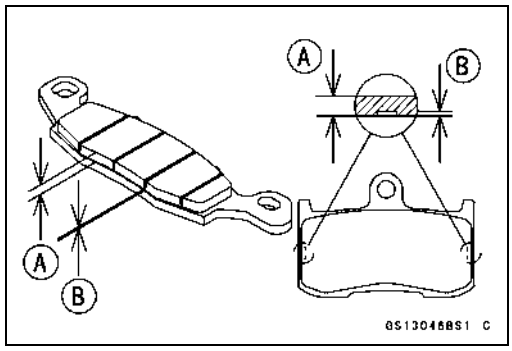

- Check the lining thickness [A] of the pads in each caliper.

★If the lining thickness of either pad is less than the service limit [B], replace both pads in the caliper as a set.

Pad Lining Thickness

Standard:	
Front	**4.5 mm (0.18 in.)**
Rear	**5.0 mm (0.20 in.)**
Service Limit:	**1 mm (0.04 in.)**

Brake Light Switch Operation Inspection

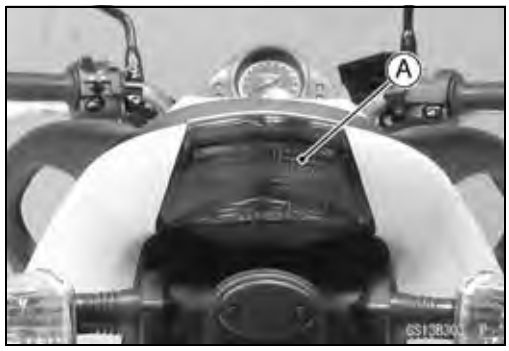

- Turn on the ignition switch.
- The brake light [A] should go on when the brake lever is applied or after the brake pedal is depressed about 10 mm (0.39 in.).

★If it does not, adjust the brake light switch.

- While holding the switch body, turn the adjusting nut [A] to adjust the switch.

CAUTION
To avoid damaging the electrical connections inside the switch, be sure that the switch body does not turn during adjustment.

★If it does not go on, inspect or replace the following items.

Battery (see Charging Condition Inspection in the Electrical System chapter)
Brake Light (see Tail/Brake Light Removal in the Electrical System chapter)
Main Fuse 30 A and Taillight Fuse 10 A (see Fuse Inspection in the Electrical System chapter)
Front Brake Light Switch [A] (see Switch Inspection in the Electrical System chapter)
Rear Brake Light Switch (see Switch Inspection in the Electrical System chapter)
Harness (see Wiring Inspection in the Electrical System chapter)

http://mototh.com

Suspensions

Front Forks/Rear Shock Absorber Operation Inspection

- Pump the forks down and up [A] 4 or 5 times, and inspect the smooth stroke.

★If the forks do not smoothly or noise is found, inspect the fork oil level or fork clamps (see Front Fork Oil Change in the Suspension chapter).

- Pump the seat down and up [A] 4 or 5 times, and inspect the smooth stroke.

★If the shock absorber does not smoothly stroke or noise is found, inspect the oil leak (see Rear Shock Absorber Oil Leak Inspection).

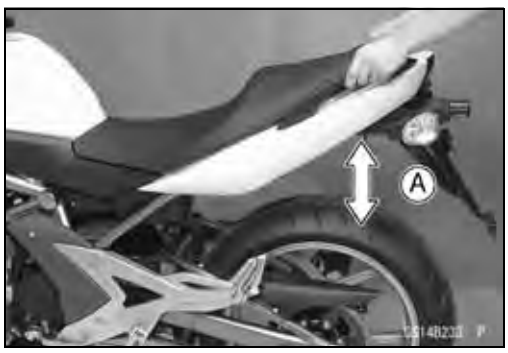

Front Fork Oil Leak Inspection

- Visually inspect the front forks [A] for oil leakage.

★Replace or repair any defective parts, if necessary.

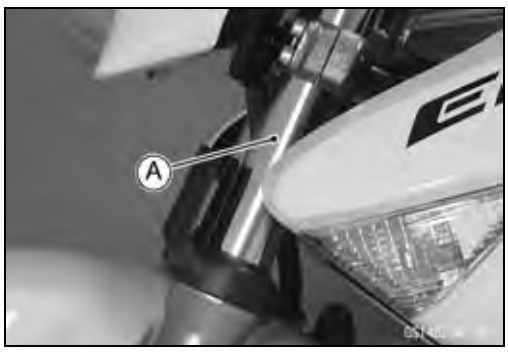

Rear Shock Absorber Oil Leak Inspection

- Visually inspect the shock absorber [A] for oil leakage.

★If the oil leakage is found on it, replace the shock absorber with a new one.

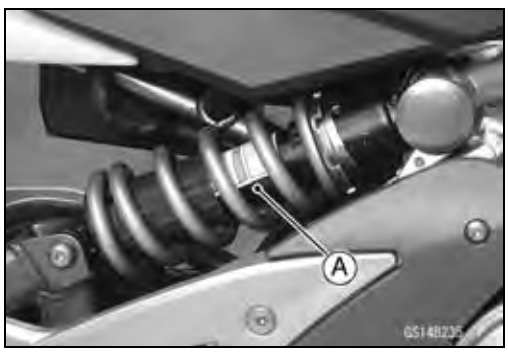

http://mototh.com

Periodic Maintenance Procedures

Steering System

Steering Play Inspection

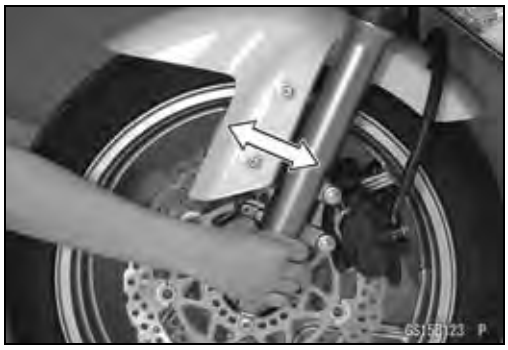

- Raise the front wheel off the ground with jack.

  Special Tools - Jack: 57001-1238
  Jack Attachment: 57001-1608

- With the front wheel pointing straight ahead, alternately tap each end of the handlebar. The front wheel should swing fully left and right from the force of gravity until the fork hits the stop.

★If the wheel binds or catches before the stop, the steering is too tight.

- Feel for steering looseness by pushing and pulling the forks.

★If you feel looseness, the steering is too loose.

NOTE

○*The cables and wiring will have some effect on the motion of the fork which must be taken into account.*
○*Be sure the wires and cables are properly routed.*
○*The bearings must be in good condition and properly lubricated in order for any test to be valid.*

Steering Play Adjustment

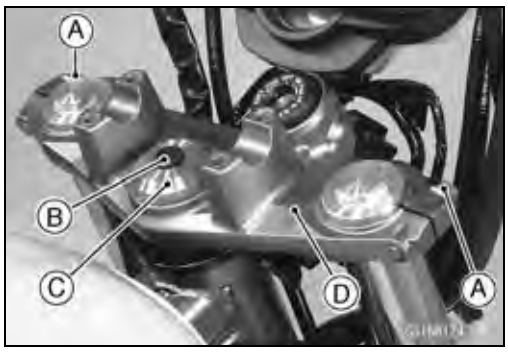

- Remove:
  Headlight Assy (see Headlight Removal/Installation in the Electrical System chapter)
  Handlebar (see Handlebar Removal in the Steering chapter)
  Upper Fork Clamp Bolts [A]
  Steering Stem Head Bolt Plug [B]
  Stem Head Bolt [C]
- Remove the steering stem head [D].

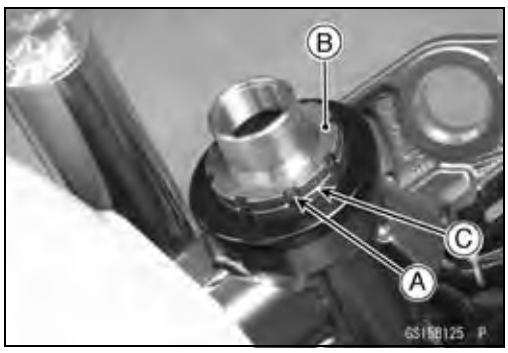

- Straighten the claws [A] of the claw washer.
- Remove the steering stem locknut [B] and claw washer [C].

Periodic Maintenance Procedures

- Adjust the steering.

Special Tool - Steering Stem Nut Wrench [A]: 57001-1100

★If the steering is too tight, loosen the stem nut [B] a fraction of a turn.

★If the steering is too loose, tighten the stem nut a fraction of a turn.

NOTE

○*Turn the stem nut 1/8 turn at time maximum.*

- Install the claw washer [A] so that its bent side [B] faces upward, and engage the bent claws with the grooves of stem locknut [C].
- Hand tighten the stem locknut until it touches the claw washer.
- Tighten the stem locknut clockwise until the claws are aligned with the grooves (ranging from 2nd to 4th) of stem nut [D], and bend the 2 claws downward [E].
- Install the steering stem head.
- Install the washer, and tighten the stem head bolt.
- Tighten:

Torque - Steering Stem Head Bolt: 108 N·m (11.0 kgf·m, 80 ft·lb)

Front Fork Clamp Bolts (Upper): 20 N·m (2.0 kgf·m, 15 ft·lb)

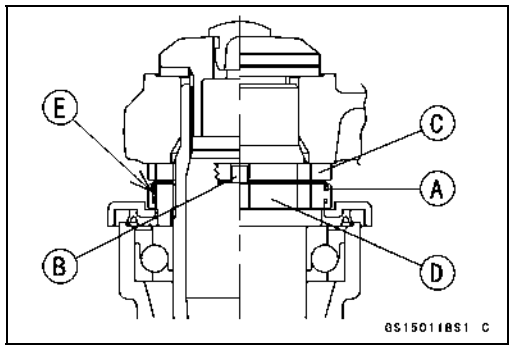

- Check the steering again.

★If the steering is still too tight or too loose, repeat the adjustment.

- Install the removed parts (see appropriate chapters).

Steering Stem Bearing Lubrication

- Remove the steering stem (see Stem, Stem Bearing Removal in the Steering chapter).
- Using a high flash-point solvent, wash the upper and lower ball bearings in the cages, and wipe the upper and lower outer races, which are press-fitted into the frame head pipe, clean off grease and dirt.
- Visually check the outer races and the ball bearings.

★Replace the bearing assemblies if they show wear or damage.

- Pack the upper and lower ball bearings [A] in the cages with grease, and apply a light coat of grease to the upper and lower outer races.
- Install the steering stem (see Stem, Stem Bearing Installation in the Steering chapter).
- Adjust the steering (see Steering Play Adjustment).

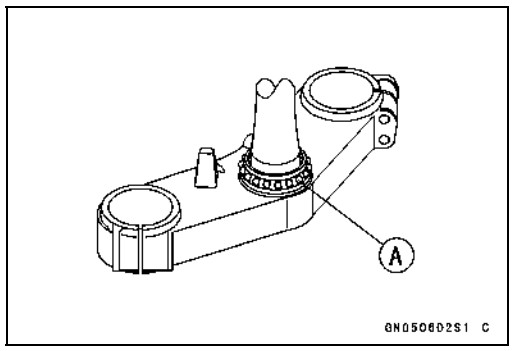

Periodic Maintenance Procedures

Electrical System

Spark Plug Condition Inspection

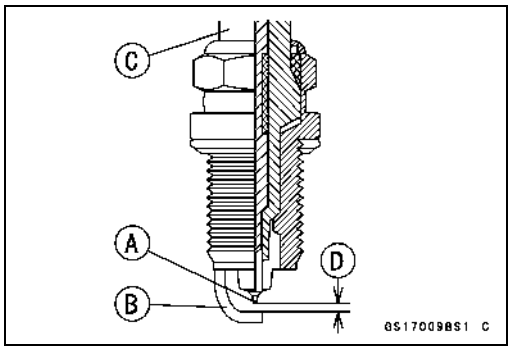

- Remove the spark plugs (see Spark Plug Replacement).
- Visually inspect the spark plugs.

★If the spark plug center electrode [A] and/or side electrode [B] are corroded or damaged, or if the insulator [C] is cracked, replace the plug.

★If the spark plug is dirtied or the carbon is accumulated, replace the spark plug.

- Measure the gap [D] with a wire-type thickness gauge.

★If the gap is incorrect, replace the spark plug.

Spark Plug Gap: 0.8 ~ 0.9 mm (0.03 ~ 0.04 in.)

- Use the standard spark plug or its equivalent.

Spark Plug: CR9EIA-9

http://mototh.com

Periodic Maintenance Procedures

Lights and Switches Operation Inspection

First Step

- Turn on the ignition switch.
- The following lights should go on according to below table.

City Light [A]	goes on
Taillight [B]	goes on
License Plate Light [C]	goes on
Meter Panel LCD [D]	goes on
Neutral Indicator Light (LED) [E]	goes on
Oil Pressure/Water Temperature Warning Indicator Light (LED) [F]	goes on
FI Indicator Light (LED) [G]	goes on (about 2 seconds)

★If the light does not go on, inspect or replace the following item.

Battery (see Charging Condition Inspection in the Electrical System chapter)
Applicable Bulb (see Wiring Diagram in the Electrical System chapter)
Meter Unit for Meter Panel LCD (see Electronic Combination Meter Unit Inspection in the Electrical System chapter)
Meter Unit for Neutral Indicator Light (LED) (see Electronic Combination Meter Unit Inspection in the Electrical System chapter)
Meter Unit for Oil Pressure/Water Temperature Warning Indicator Light (LED) (see Electronic Combination Meter Unit Inspection in the Electrical System chapter)
Meter Unit for FI Indicator Light (LED) (see Electronic Combination Meter Unit Inspection in the Electrical System chapter)
ECU (see ECU Power Supply Inspection in the Fuel System (DFI) chapter)
Main Fuse 30 A and Taillight Fuse 10 A (see Fuse Inspection in the Electrical System chapter)
Ignition Switch (see Switch Inspection in the Electrical System chapter)
Neutral Switch (see Switch Inspection in the Electrical System chapter)
Harness (see Wiring Inspection in the Electrical System chapter)

- Turn off the ignition switch.
- The all lights should go off.

★If the light does not go off, replace the ignition switch.

Second Step

- Turn the ignition switch to P (Park) position.
- The city light, taillight and license plate light should go on.

★If the light does not go on, inspect or replace the following item.

Ignition Switch (see Switch Inspection in the Electrical System chapter)

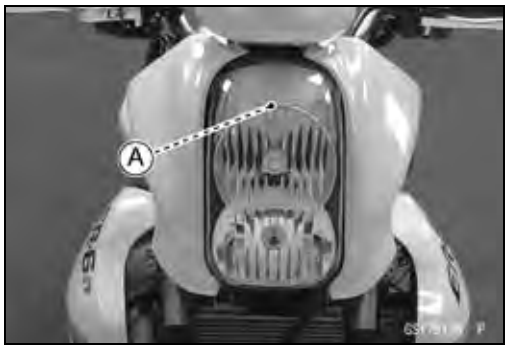

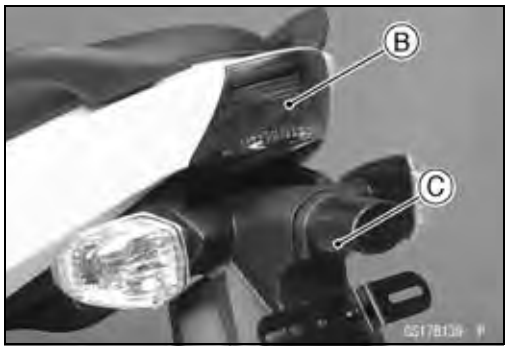

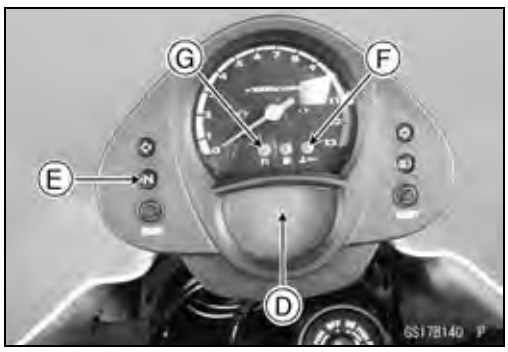

Periodic Maintenance Procedures

Third Step

- Turn on the turn signal switch [A] (left or right position).
- The left or right turn signal lights [B] (front and rear) according to the switch position should flash.
- The turn signal indicator light (LED) [C] in the meter unit should flash.

★If the each light does not flash, inspect or replace the following item.

Turn Signal Light Bulb (see Turn Signal Light Bulb Replacement in the Electrical System chapter)
Meter Unit for Turn Signal Light Indicator Light (LED) (see Electronic Combination Meter Unit Inspection in the Electrical System chapter)
Turn Signal Relay Fuse 10 A (see Fuse Inspection in the Electrical System chapter)
Turn Signal Switch (see Switch Inspection in the Electrical System chapter)
Turn Signal Relay (see Turn Signal Relay Inspection in the Electrical System chapter)
Harness (see Wiring Inspection in the Electrical System chapter)

- Push the turn signal switch.
- The turn signal lights and indicator light (LED) should go off.

★If the light does not go off, inspect or replace the following item.

Turn Signal Switch (see Switch Inspection in the Electrical System chapter)
Turn Signal Relay (see Turn Signal Relay Inspection in the Electrical System chapter)

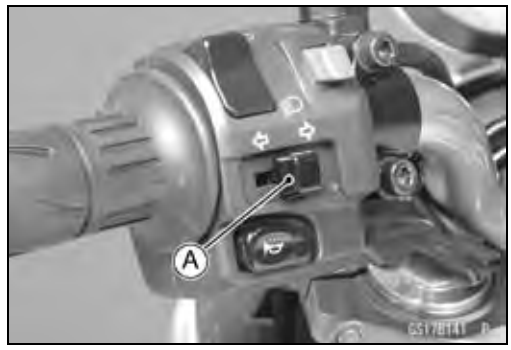

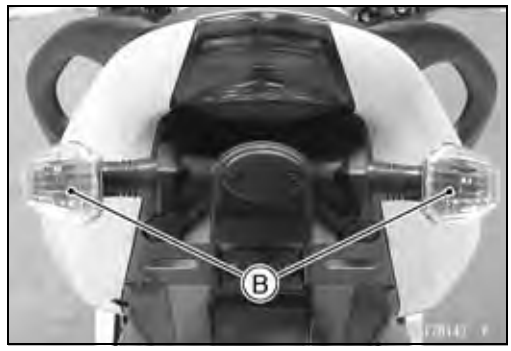

Fourth Step

- Set the dimmer switch [A] to low beam position.
- Start the engine.
- The low beam headlight should go on.

★If the low beam headlight does not go on, inspect or replace the following item.

Headlight Low Beam Bulb (see Headlight Bulb Replacement in the Electrical System chapter)
Headlight Fuse 10 A (see Fuse Inspection in the Electrical System chapter)
Dimmer Switch (see Switch Inspection in the Electrical System chapter)
Headlight Relay in Relay Box (see Relay Circuit Inspection in the Electrical System chapter)
Harness (see Wiring Inspection in the Electrical System chapter)

http://mototh.com

Periodic Maintenance Procedures

- Set the dimmer switch to high beam position.
- The low beam [A] and high beam [B] headlights should go on.
- The high beam indicator light (LED) [C] should go on.

★If the high beam headlight and/or high beam indicator light (LED) does not go on, inspect or replace the following item.
  Headlight High Beam Bulb (see Headlight Bulb Replacement in the Electrical System chapter)
  Dimmer Switch (see Switch Inspection in the Electrical System chapter)

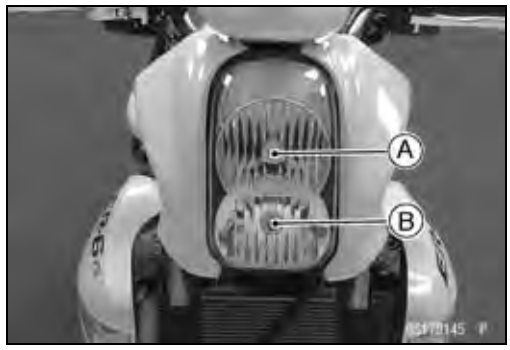

- Turn off the engine stop switch.
- The low beam and high beam headlights should stay going on.

★If the headlights and high beam indicator light (LED) does go off, inspect or replace the following item.
  Headlight Relay in Relay Box (see Relay Circuit Inspection in the Electrical System chapter)

- Turn off the ignition switch.
- The headlights and high beam indicator light (LED) should go off.

Headlight Aiming Inspection

- Inspect the headlight beam for aiming.

★If the headlight beam points to one side rather than straight ahead, adjust the horizontal beam.

Headlight Beam Horizontal Adjustment

- Turn the horizontal adjuster [A] on the headlight with the screwdriver in or out until the beam points straight ahead.

★If the headlight beam points too low or high, adjust the vertical beam.

Headlight Beam Vertical Adjustment

- Turn the vertical adjuster [A] on the headlight with the screwdriver in or out to adjust the headlight vertically.

Periodic Maintenance Procedures

NOTE

○*ON high beam, the brightest points should be slightly below horizontal with the motorcycle on its wheels and the rider seated. Adjust the headlight to the proper angle according to local regulations.*

Low Beam [A]
Height of Headlight Center [B]
High Beam [C]

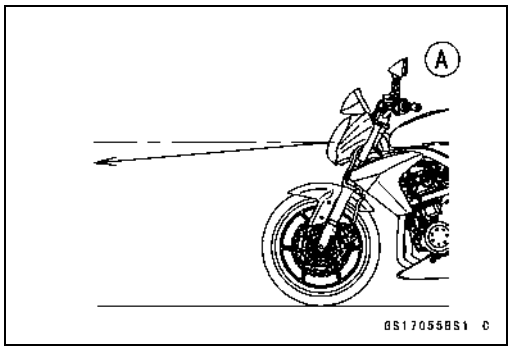

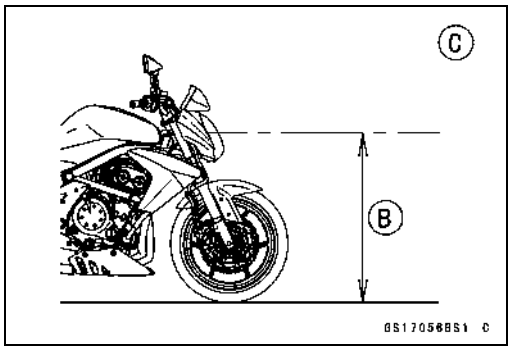

Sidestand Switch Operation Inspection

- Inspect the sidestand switch [A] operation accordance to below table.

Sidestand Switch Operation

Sidestand	Gear Position	Clutch Lever	Engine Start	Engine Run
Up	Neutral	Released	Starts	Continue running
Up	Neutral	Pulled in	Starts	Continue running
Up	In Gear	Released	Doesn't start	Stops
Up	In Gear	Pulled in	Starts	Continue running
Down	Neutral	Released	Starts	Continue running
Down	Neutral	Pulled in	Starts	Continue running
Down	In Gear	Released	Doesn't start	Stops
Down	In Gear	Pulled in	Doesn't start	Stops

http://mototh.com

★If the sidestand switch operation does not work, inspect or replace the following item.
Battery (see Charging Condition Inspection in the Electrical System chapter)
Main Fuse 30 A (see Fuse Inspection in the Electrical System chapter)
Ignition Fuse 10 A (see Fuse Inspection in the Electrical System chapter)
Ignition Switch (see Switch Inspection in the Electrical System chapter)
Sidestand Switch (see Switch Inspection in the Electrical System chapter)
Engine Stop Switch (see Switch Inspection in the Electrical System chapter)
Starter Button (see Switch Inspection in the Electrical System chapter)
Neutral Switch (see Switch Inspection in the Electrical System chapter)
Starter Control Relay (see Starter Relay Inspection in the Electrical System chapter)
Relay Box (see Relay Circuit Inspection in the Electrical System chapter)
Starter Circuit Relay (see Relay Circuit Inspection in the Electrical System chapter)
Harness (see Wiring Inspection in the Electrical System chapter)

★If the all parts are good condition, replace the ECU (see ECU Removal/Installation in the Fuel System (DFI) chapter).

Engine Stop Switch Operation Inspection

First Step

- Turn on the ignition switch.
- Set the neutral position.
- Turn the engine stop switch to stop position [A].
- Push the starter button.
- The engine does not start.

★If the engine starts, inspect or replace the following item.
Engine Stop Switch (see Switch Inspection in the Electrical System chapter)

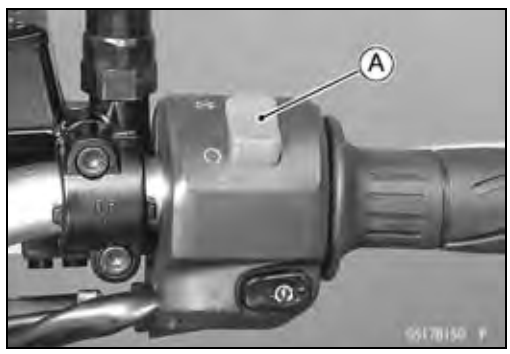

Second Step

- Turn on the ignition switch.
- Set the neutral position.
- Turn the engine stop switch to run position [A].
- Push the starter button and run the engine.
- Turn the engine stop switch to stop position.
- Immediately the engine should be stop.

★If the engine does not stop, inspect or replace the following item.
Engine Stop Switch (see Switch Inspection in the Electrical System chapter)

★If the engine stop switch is good condition, replace the ECU (see ECU Removal/Installation in the Fuel System (DFI) chapter).

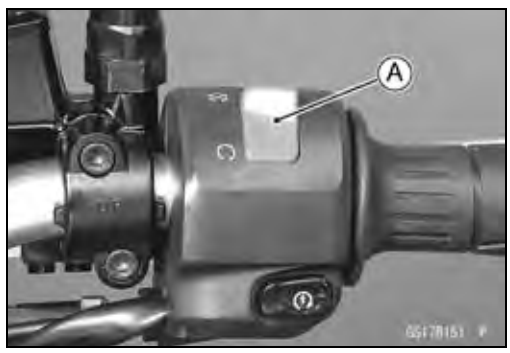

http://mototh.com

Periodic Maintenance Procedures

Others

Chassis Parts Lubrication

- Before lubricating each part, clean off any rusty spots with rust remover and wipe off any grease, oil, dirt, or grime.
- Lubricate the points listed below with indicated lubricant.

NOTE

○*Whenever the vehicle has been operated under wet or rainy conditions, or especially after using a high-pressure water spray, perform the general lubrication.*

Pivots: Lubricate with Grease.

Brake Lever
Brake Pedal
Clutch Lever
Rear Brake Joint Pin
Sidestand

Points: Lubricate with Grease.

Clutch Inner Cable Upper and Lower Ends [A]
Throttle Inner Cable Upper and Lower Ends

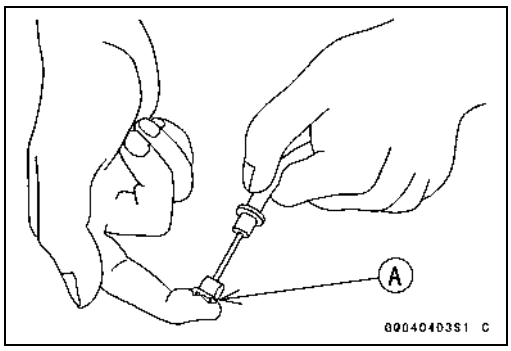

Cables: Lubricate with Rust Inhibitor.

Clutch Cable
Throttle Cables

- Lubricate the cables by seeping the oil between the cable and housing.

○The cable may be lubricated by using a commercially available pressure cable lubricator with an aerosol cable lubricant.

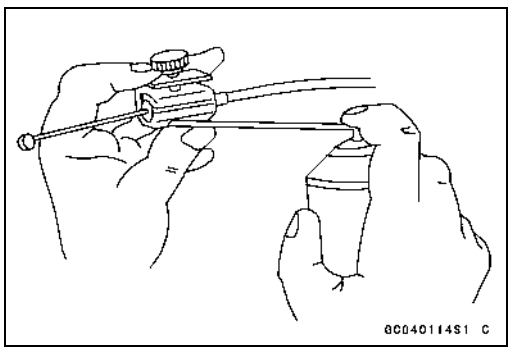

- With the cable disconnected at both ends, the inner cable should move freely [A] within the cable housing.

★If cable movement is not free after lubricating, if the cable is frayed [B], or if the cable housing is kinked [C], replace the cable.

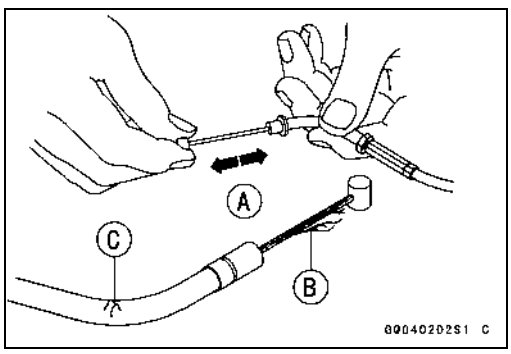

Periodic Maintenance Procedures

Bolts, Nuts and Fasteners Tightness Inspection

● Check the tightness of the bolts and nuts listed here. Also, check to see that each cotter pin is in place and in good condition.

NOTE

○*For the engine fasteners, check the tightness of them when the engine is cold (at room temperature).*

★If there are loose fasteners, retighten them to the specified torque following the specified tightening sequence. Refer to the appropriate chapter for torque specifications. If torque specifications are not in the appropriate chapter, see the Standard Torque Table. For each fastener, first loosen it by 1/2 turn, then tighten it.

★If cotter pins are damaged, replace them with new ones.

Bolt, Nut and Fastener to be checked

Engine:
- Clutch Lever Pivot Nut
- Engine Mounting Bolts and Nuts
- Exhaust Pipe Manifold Holder Nuts
- Muffler Body Mounting Bolts

Wheels:
- Front Axle
- Front Axle Clamp Bolt
- Rear Axle Nut
- Rear Axle Nut Cotter Pin

Brakes:
- Brake Lever Pivot Nut
- Brake Pedal Bolt
- Brake Rod Joint Cotter Pin
- Caliper Mounting Bolts
- Front Master Cylinder Clamp Bolts
- Rear Master Cylinder Mounting Bolts

Suspension:
- Front Fork Clamp Bolts
- Rear Shock Absorber Bolt and Nut
- Swingarm Pivot Shaft Nut

Steering:
- Steering Stem Head Bolt
- Handlebar Holder Bolts

Others:
- Footpeg Stay Bolts
- Front Fender Bolts
- Sidestand Bolt

http://mototh.com

Periodic Maintenance Procedures

Replacement Parts

Air Cleaner Element Replacement

- Refer to the Air Cleaner Element Cleaning.

Engine Oil Change

- Situate the motorcycle so that it is vertical after warming up the engine.
- Unscrew the oil filler plug [A].
- Place on oil pan beneath the engine.

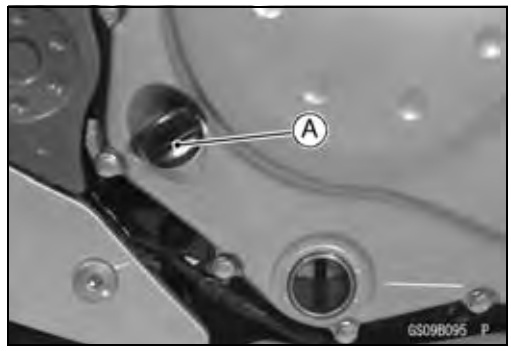

- Remove the engine oil drain bolt [A] to drain the oil.

○The oil in the oil filter can be drained by removing the filter (see Oil Filter Replacement).

★Replace the drain bolt gasket [B] with a new one.

- Tighten the drain bolt.

Torque - Engine Oil Drain Bolt: 20 N·m (2.0 kgf·m, 15 ft·lb)

- Pour in the specified type and amount of oil.

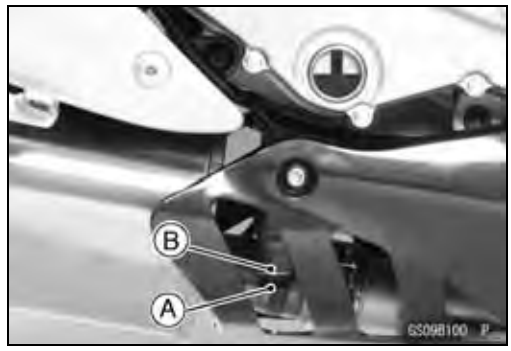

Recommended Engine Oil

Type:	**API SE, SF or SG**
	API SH, SJ or SL with JASO MA
Viscosity:	**SAE 10W-40**
Capacity:	**1.7 L (1.8 US qt) (when filter is not removed)**
	1.9 L (2.0 US qt) (when filter is removed)
	2.4 L (2.5 US qt) (when engine is completely dry)

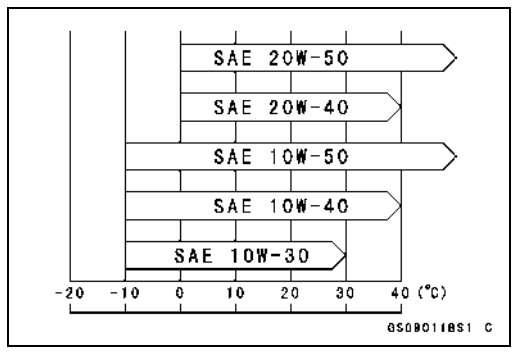

NOTE

○*Although 10W-40 engine oil is the recommended oil for most conditions, the oil viscosity may need to be changed to accommodate atmospheric conditions in your riding area.*

- Check the oil level (see Oil Level Inspection in the Engine Lubrication System chapter).

Periodic Maintenance Procedures

Oil Filter Replacement

- Drain the engine oil (see Engine Oil Change).
- Remove the oil filter [A] with the oil filter wrench [B].

Special Tool - Oil Filter Wrench: 57001-1249

- Replace the filter with a new one.
- Apply engine oil to the gasket [A] before installation.
- Tighten the filter with the oil filter wrench.

Torque - Oil Filter: 17.2 N·m (1.75 kgf·m, 13 ft·lb)

NOTE

○*Hand tightening of the oil filter can not be allowed since it does not reach to this tightening torque.*

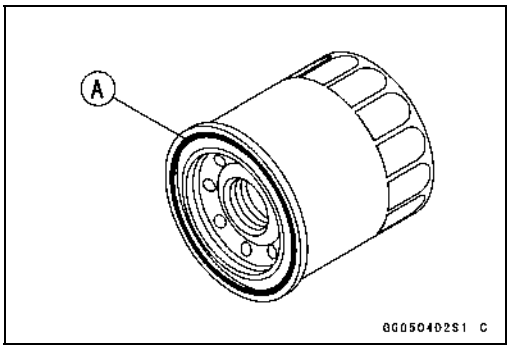

- Pour in the specified type and amount of oil (see Engine Oil Change).

Fuel Hose Replacement

CAUTION

When removing and installing the fuel hose joint, do not apply strong force to the outlet pipe on the fuel pump and delivery pipe on the throttle body assy. The pipes made from resin could be damaged.

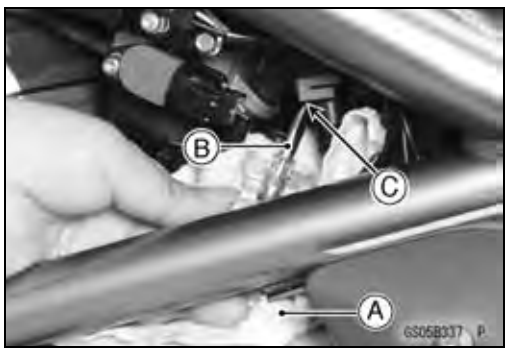

- Remove the fuel tank (see Fuel Tank Removal in the Fuel System (DFI) chapter).
- Be sure to place a piece of cloth [A] around the fuel hose joint.
- Insert a minus screw driver [B] into the slit [C] on the joint lock.

- Turn [A] the driver to disconnect the joint lock [B].
- Pull [C] the fuel hose joint [D] out of the delivery pipe.

⚠ WARNING

Be prepared for fuel spillage; any spilled fuel must be completely wiped up immediately.
When the fuel hose is disconnected, fuel spills out from the hose and the pipe. Cover the hose connection with a clean shop towel to prevent fuel spillage.

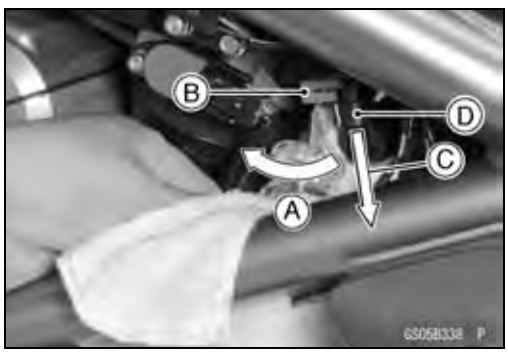

http://mototh.com

Periodic Maintenance Procedures

- Install the new fuel hose.
- Insert [A] the fuel hose joint [B] straight onto the delivery pipe until the hose joint clicks.
- Push [C] the joint lock [D].

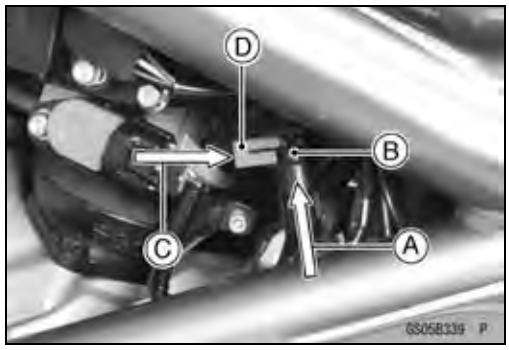

- Push and pull [A] the fuel hose joint [B] back and forth more than two times and make sure it is locked and doesn't come off.

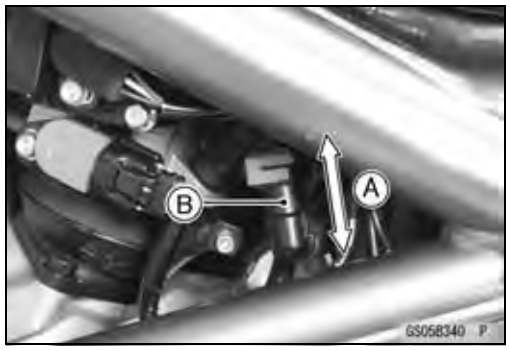

⚠ WARNING

Make sure the fuel hose joint is installed correctly on the delivery pipe or the fuel could leak.

★If it comes off, reinstall the hose joint.
- Run the fuel hose correctly (see Cable, Wire, and Hose Routing section in the Appendix chapter).
- Install the removed parts (see appropriate chapters).
- Start the engine and check the fuel hose for leaks.

Coolant Change

⚠ WARNING

To avoid burns, do not remove the radiator cap or try to change the coolant when the engine is still hot. Wait until it cools down. Coolant on tires will make them slippery and can cause an accident and injury. Immediately wipe up or wash away any coolant that spills on the frame, engine, or other painted parts.
Since coolant is harmful to the human body, do not use for drinking.

- Remove:
  Right Center Fairing (see Center Fairing Removal in the Frame chapter)
  Lower Fairing (see Lower Fairing Removal in the Frame chapter)
- Remove:
  Reserve Tank Bolts [A]
  Reserve Tank [B]

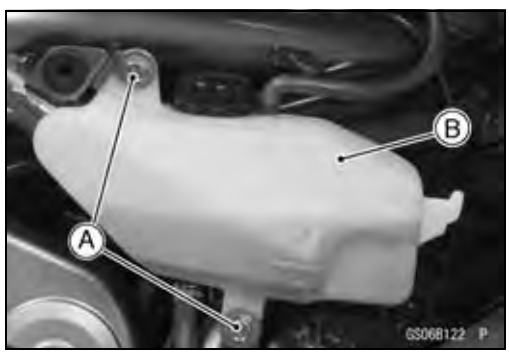

Periodic Maintenance Procedures

- Put [A] the projection [B] on the reserve tank into the hole [C] on the frame bracket, and place the reserve tank on the right side of frame.

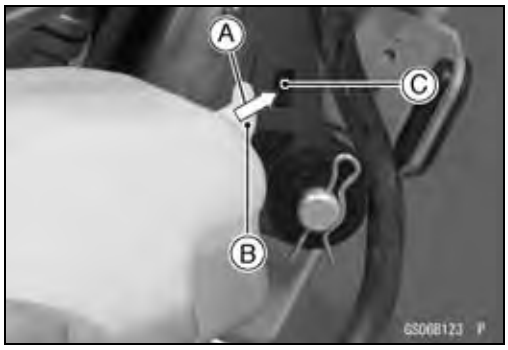

- Place a container under the water pump drain bolt [A], then remove the drain bolt.

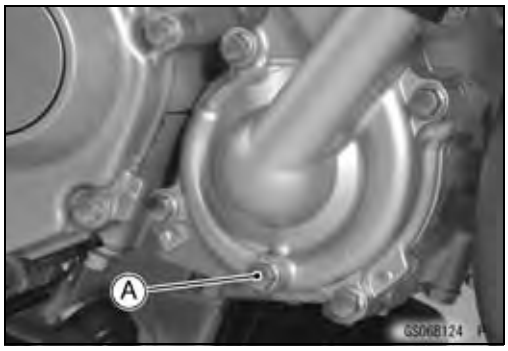

- Remove the radiator cap [A] in two steps. First turn the cap counterclockwise to the first stop. Then push and turn it further in the same direction and remove the cap.

○The coolant will drain from the radiator and engine.

- Turn over [A] the reserve tank, remove the cap, and pour the coolant into a suitable container.
- Place the reserve tank on the right side of frame.
- Tighten the drain bolt with the gasket.

○Replace the drain bolt gasket with a new one.

Torque - Water Pump Drain Bolt: 7.0 N·m (0.70 kgf·m, 92 in·lb)

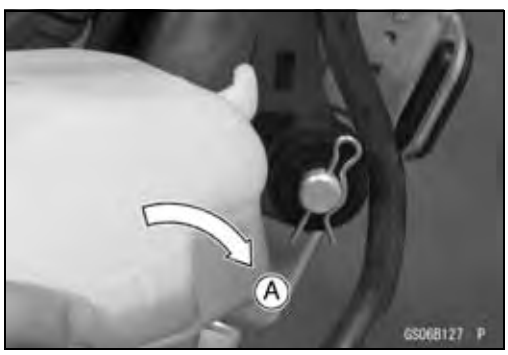

http://mototh.com

Periodic Maintenance Procedures

- When filling the coolant, choose a suitable mixture ratio by referring to the coolant manufacturer's directions.

CAUTION

Soft or distilled water must be used with the antifreeze in the cooling system.
If hard water is used in the system, it causes scales accumulation in the water passages, and considerably reduces the efficiency of the cooling system.

Water and Coolant Mixture Ratio (Recommended)

Soft Water:	**50%**
Coolant:	**50%**
Freezing Point:	**–35°C (–31°F)**
Total Amount:	**1.2 L (1.3 US qt)**

- Fill the radiator up to the filler neck [A] with coolant.

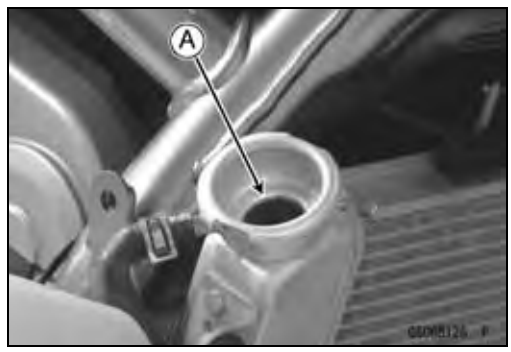

NOTE

○*Pour in the coolant slowly so that it can expel the air from the engine and radiator.*

- Check the cooling system for leaks.
- Tap the radiator hoses to force any air bubbles caught inside.
- Fill the radiator up to the filler neck with coolant.

- Temporarily install the reserve tank to the frame with two mounting bolts.
- Fill the reserve tank up to the "F" (full) level line [A] with coolant and install the cap [B].
- Start the engine, warm it up thoroughly until the radiator fan turns on and then stop the engine.
- Check the coolant level in the reserve tank after the engine cools down.

★If the coolant level is lower than the "L" level line, add coolant to the "F" level line.

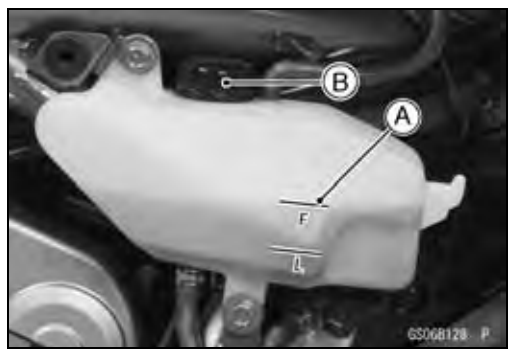

CAUTION

Do not add more coolant above the "F" level line.

Periodic Maintenance Procedures

Radiator Hose and O-ring Replacement

- Drain the coolant (see Coolant Change in the Periodic Maintenance chapter).
- Remove:
  Thermostat Housing [A] (see Water Pump Removal in the Cooling System chapter)
  Water Pump Cover [B] (see Water Pump Removal in the Cooling System chapter)
  Hoses [C]
  O-rings [D]
- Apply grease to the new O-rings and install them.
- Instal the new hoses and tighten the clamps securely.
- Fill the coolant (see Coolant Change in the Periodic Maintenance chapter).
- Check the cooling system for leaks.

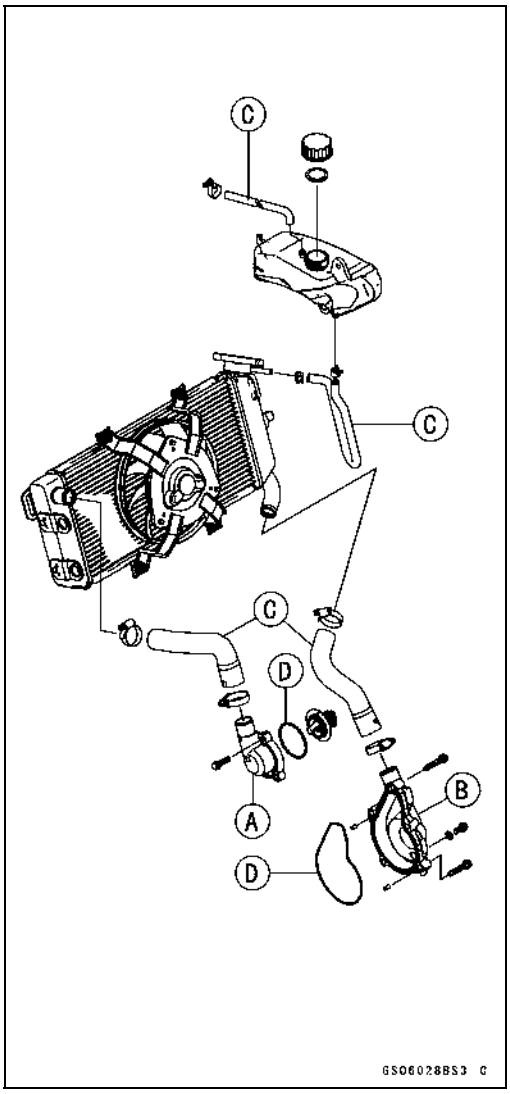

Periodic Maintenance Procedures

Brake Hose and Pipe Replacement

CAUTION

Brake fluid quickly ruins painted plastic surfaces; any spilled fluid should be completely washed away immediately.

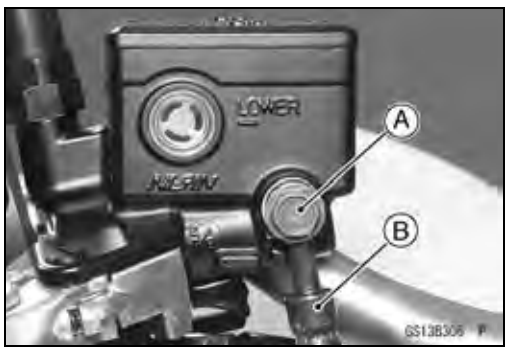

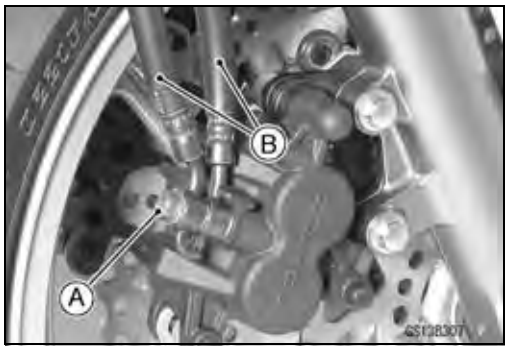

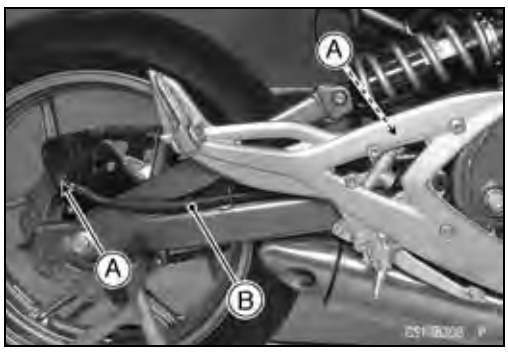

- Remove the banjo bolts [A].
- When removing the brake hose, take care not to spill the brake fluid on the painted or plastic parts.
- When removing the brake hoses [B], temporarily secure the end of the brake hose to some high place to keep fluid loss to a minimum.
- Immediately wash away any brake fluid that spills.
- There are washers on each side of the brake hose fitting. Replace them with new ones when installing.
- Tighten:

  Torque - Brake Hose Banjo Bolts: 25 N·m (2.5 kgf·m, 18 ft·lb)

- When installing the hoses, avoid sharp bending, kinking, flatting or twisting, and route the hoses according to Cable, Wire, and Hose Routing section in the Appendix chapter.
- Fill the brake line after installing the brake hose (see Brake Fluid Change).

Brake Fluid Change

NOTE

○*The procedure to change the front brake fluid is as follows. Changing the rear brake fluid is the same as for the front brake.*

Periodic Maintenance Procedures

- Level the brake fluid reservoir.
- Remove the reservoir cap and diaphragm.
- Remove the rubber cap from the bleed valve [A] on the caliper.
- Attach a clear plastic hose [B] to the bleed valve, and run the other end of the hose into a container.
- Fill the reservoir with fresh specified brake fluid.

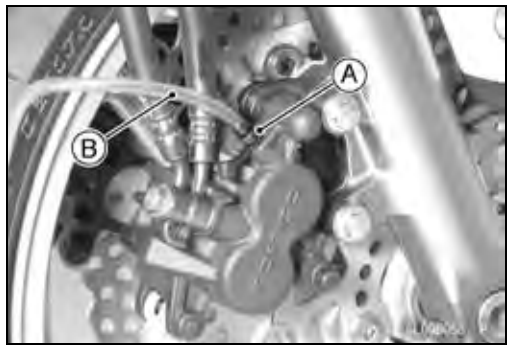

- Change the brake fluid.

○Repeat this operation until fresh brake fluid comes out from the plastic hose or the color of the fluid changes.

1. Open the bleed valve [A].
2. Apply the brake and hold it [B].
3. Close the bleed valve [C].
4. Release the brake [D].

NOTE

○*The fluid level must be checked often during the changing operation and replenished with fresh brake fluid. If the fluid in the reservoir runs out any time during the changing operation, the brakes will need to be bled since air will have entered the brake line.*

○*Front Brake: Repeat the above steps for the other caliper.*

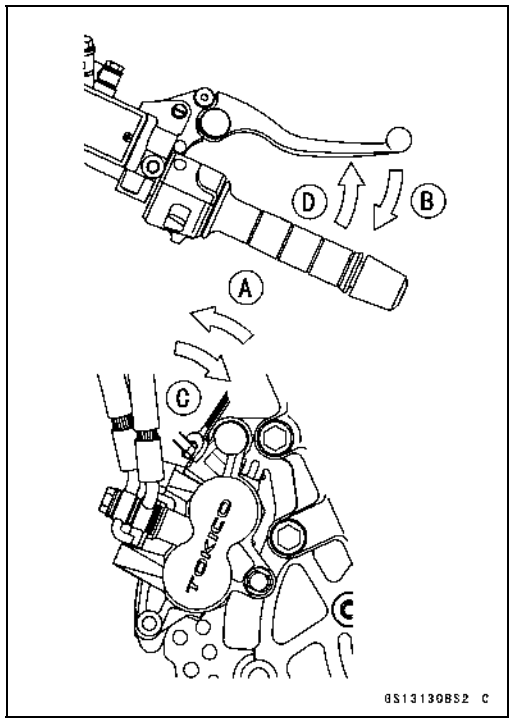

- Remove the clear plastic hose.
- Install the diaphragm and reservoir cap.
- Tighten:

Torque - Front Brake Reservoir Cap Screws: 1.0 N·m (0.10 kgf·m, 9 in·lb)

- Follow the procedure below to install the rear brake fluid reservoir cap correctly.

○First, tighten the rear brake fluid reservoir cap [B] clockwise [C] by hand until slight resistance is felt indicating that the cap is seated on the reservoir body, then tighten the cap an additional 1/6 turn [D] while holding the brake fluid reservoir body [A].

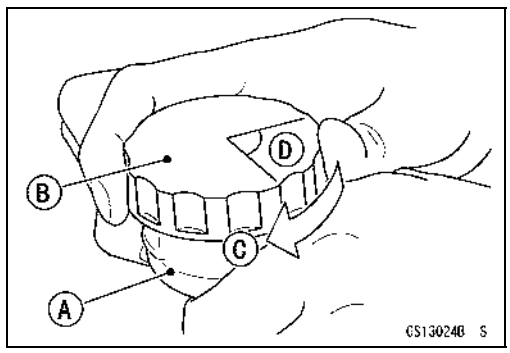

- Tighten the bleed valve, and install the rubber cap.

Torque - Bleed Valve: 7.8 N·m (0.80 kgf·m, 69 in·lb)

- After changing the fluid, check the brake for good braking power, no brake drag, and no fluid leakage.

★If necessary, bleed the air from the lines.

http://mototh.com

Periodic Maintenance Procedures

Master Cylinder Rubber Parts Replacement

Front Master Cylinder Disassembly

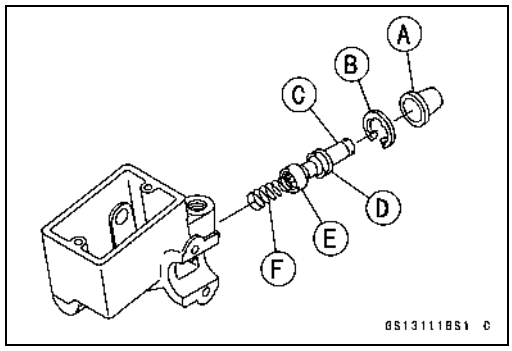

- Remove the front master cylinder (see Front Master Cylinder Removal in the Brakes chapter).
- Remove the reservoir cap and diaphragm, and pour the brake fluid into a container.
- Unscrew the locknut and pivot bolt, and remove the brake lever.
- Pull the dust cover [A] out of place, and remove the circlip [B].

  Special Tool - Inside Circlip Pliers: 57001-143

- Pull out the piston [C], secondary cup [D], primary cup [E], and return spring [F].

CAUTION
Do not remove the secondary cup from the piston since removal will damage it.

Rear Master Cylinder Disassembly

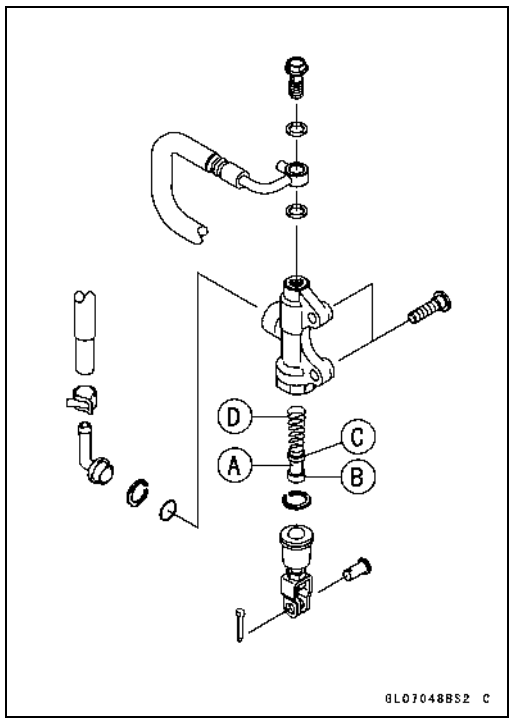

NOTE

○*Do not remove the push rod clevis for master cylinder disassembly since removal reguires brake position adjustment.*

- Remove the rear master cylinder (see Rear Master Cylinder Removal in the Brakes chapter).
- Slide the dust cover on the push rod out of place, and remove the circlip.

  Special Tool - Inside Circlip Pliers: 57001-143

- Pull out the push rod with the piston stop.
- Take off the piston [A], secondary cup [B], primary cup [C] and return spring [D].

CAUTION
Do not remove the secondary cup from the piston since removal will damage it.

Master Cylinder Assembly

- Before assembly, clean all parts including the master cylinder with brake fluid or alcohol.

CAUTION
Except for the disc pads and disc, use only disc brake fluid, isopropyl alcohol, or ethyl alcohol for cleaning brake parts. Do not use any other fluid for cleaning these parts. Gasoline, engine oil, or any other petroleum distillate will cause deterioration of the rubber parts. Oil spilled on any part will be difficult to wash off completely, and will eventually deteriorate the rubber used in the disc brake.

http://mototh.com

- Apply brake fluid to the new parts and to the inner wall of the cylinder.
- Take care not to scratch the piston or the inner wall of the cylinder.
- Tighten the brake lever pivot bolt and locknut.
- Apply silicone grease.
  Brake Lever Pivot Bolt
- Tighten:

Torque - Brake Lever Pivot Bolt: 1.0 N·m (0.10 kgf·m, 9 in·lb)
Brake Lever Pivot Bolt Locknut: 5.9 N·m (0.60 kgf·m, 52 in·lb)

Caliper Rubber Parts Replacement

Front Caliper Disassembly

- Remove:
  Front Caliper (see Front Caliper Removal in the Brakes chapter)
  Brake Pads (see Front Brake Pad Removal in the Brakes chapter)
- Using compressed air, remove the pistons.
  ○Cover the piston area with a clean, thick cloth [A].
  ○Blow compressed air [B] into the hole for the banjo bolt to remove the piston.

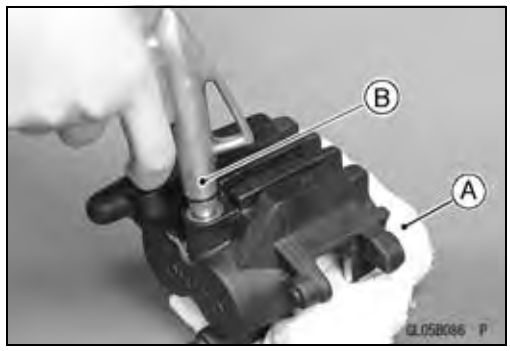

⚠ WARNING

To avoid serious injury, never place your fingers or palm in front of the piston. If you apply compressed air into the caliper, the piston may crush your hand or fingers.

○Pull out the pistons by hand.
- Remove the dust seals [A] and fluid seals [B].
- Remove the bleed valve [C] and rubber cap [D].

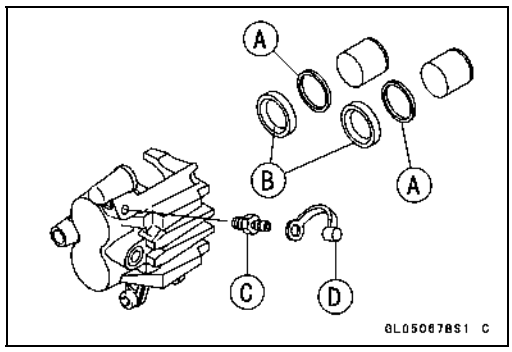

NOTE

○*If compressed air is not available, with the brake hose still attached, apply the brake lever to remove the piston. The remaining process is as described above.*

Front Caliper Assembly

- Clean the caliper parts except for the pads.

CAUTION

For cleaning the parts, use only disc brake fluid, isopropyl alcohol, or ethyl alcohol.

- Install the bleed valve and rubber cap.

Torque - Bleed Valve: 7.8 N·m (0.80 kgf·m, 69 in·lb)

Periodic Maintenance Procedures

- Replace the fluid seals [A] with new ones.
  - ○Apply brake fluid to the fluid seals, and install them into the cylinders by hand.
- Replace the dust seals [B] with new ones if they are damaged.
  - ○Apply brake fluid to the dust seals, and install them into the cylinders by hand.

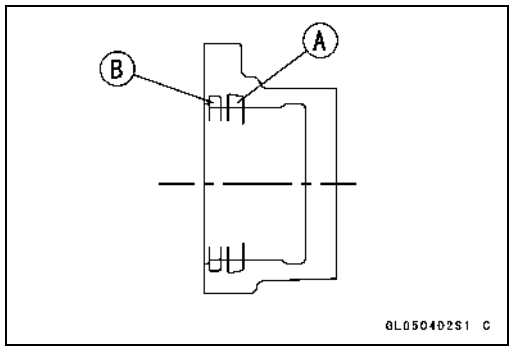

- Apply brake fluid to the outside of the pistons, and push them into each cylinder by hand.
- Check the shaft rubber friction boot [A] and the dust cover [B] replace them with new ones if they are damaged.
- Apply a thin coat of PBC (Poly Butyl Cuprysil) grease to the caliper holder shafts [C] and holder holes [D] (PBC is a special high-temperature, water-resistance grease).

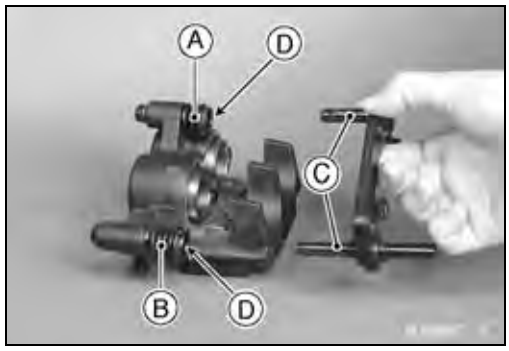

- Install the anti-rattle spring [A].
- Install the pads (see Front Brake Pad Installation in the Brakes chapter).
- Wipe up any spilled brake fluid on the caliper with wet cloth.

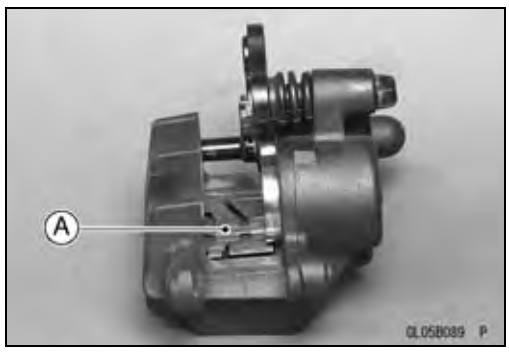

Rear Caliper Disassembly

- Remove the rear caliper (see Rear Caliper Removal in the Brakes chapter).
- Remove the pads and anti-rattle spring (see Rear Brake Pad Removal in the Brakes chapter).
- Using compressed air, remove the piston.
  - ○Cover the piston area with a clean, thick cloth [B].
  - ○Blow compressed air [A] into the hole for the banjo bolt to remove the piston.

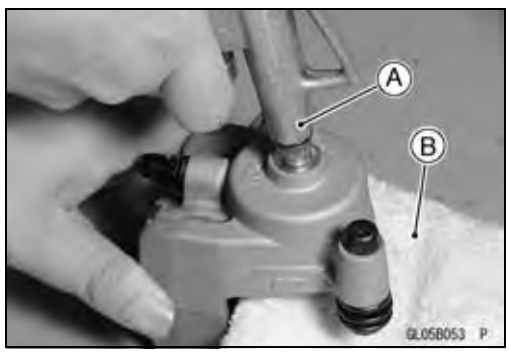

⚠ WARNING

To avoid serious injury, never place your fingers or palm inside the caliper opening. If you apply compressed air into the caliper, the piston may crush your hand or fingers.

- Remove the dust seal and fluid seal.
- Remove the bleed valve and rubber cap.

NOTE

○*If compressed air is not available, with the brake hose still attached, apply the brake pedal to remove the piston. The remaining process is as described above.*

Periodic Maintenance Procedures

Rear Caliper Assembly

- Clean the caliper parts except for the pads.

CAUTION
For cleaning of the parts, use only disc brake fluid, isopropyl alcohol, or ethyl alcohol.

- Install the bleed valve and rubber cap.

  Torque - Bleed Valve: 7.8 N·m (0.80 kgf·m, 69 in·lb)

- Replace the fluid seal [A] with a new one.
  - ○Apply brake fluid to the fluid seal, and install it into the cylinder by hand.
- Replace the dust seal [B] with a new one if it is damaged.
  - ○Apply brake fluid to the dust seal, and install it into the cylinder by hand.

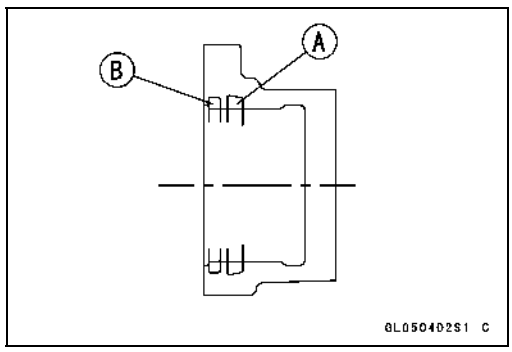

- Apply brake fluid to the outside of the piston, and push it into the cylinder by hand.
- Replace the shaft rubber friction boot [A] and dust cover [B] if they are damaged.
- Apply a thin coat of PBC (Poly Butyl Cuprysil) grease to the caliper holder shafts [C] and holder holes [D] (PBC is a special high-temperature, water-resistance grease).

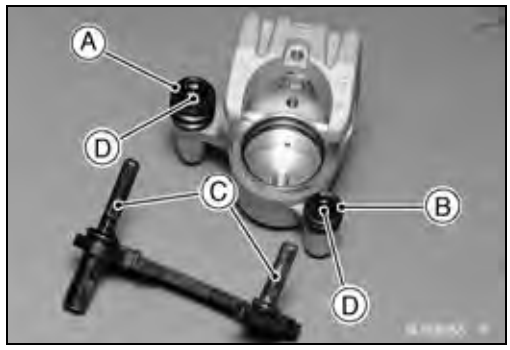

- Install the anti-rattle spring [A] in the caliper as shown.
- Install the pads (see Rear Brake Pad Installation in the Brakes chapter).
- Wipe up any spilled brake fluid on the caliper with wet cloth.

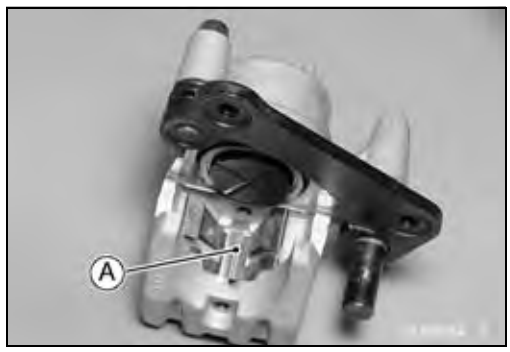

Spark Plug Replacement

- Remove:
  Stick Coils (see Stick Coil (Ignition Coil together with Spark Plug Cap) Removal in the Electrical System chapter)
- Remove the spark plugs using the 16 mm plug wrench [A].

  Owner's Tool - Spark Plug Wrench, 16 mm: 92110-1132

Periodic Maintenance Procedures

- Insert the spark plug vertically into the plug hole with the spark plug installed in the plug wrench [A].

  Owner's Tool - Spark Plug Wrench, 16 mm: 92110-1132

- Tighten:

  Torque - Spark Plugs: 15 N·m (1.5 kgf·m, 11 ft·lb)

- Install:
  Stick Coils (see Stick Coil (Ignition Coil together with Spark Plug Cap) Installation in the Electrical System chapter)

http://mototh.com

Fuel System (DFI)

Table of Contents

Exploded View 3-4
DFI System 3-8
DFI System 3-10
DFI Parts Location 3-13
Specifications 3-14
Special Tools and Sealant 3-16
DFI Servicing Precautions 3-18
  DFI Servicing Precautions 3-18
Troubleshooting the DFI System 3-20
  Outline 3-20
    Outline 3-20
  Inquiries to Rider 3-24
    Inquiries to Rider 3-24
DFI System Troubleshooting Guide 3-27
Self-Diagnosis 3-35
  Self-diagnosis Outline 3-35
    Self-diagnosis Outline 3-35
  Self-diagnosis Procedures 3-35
    Self-diagnosis Procedures 3-35
  Service Code Clearing Procedures 3-36
    Service Code Clearing Procedures 3-36
  How to Read Service Codes 3-38
    How to Read Service Codes 3-38
  How to Erase Service Codes 3-38
    How to Erase Service Codes 3-38
  Service Code Table 3-39
    Service Code Table 3-39
  Backups 3-40
    Backups 3-40
Main Throttle Sensor (Service Code 11) 3-42
    Main Throttle Sensor Removal/Adjustment 3-42
    Input Voltage Inspection 3-42
    Output Voltage Inspection 3-43
    Resistance Inspection 3-44
Inlet Air Pressure Sensor (Service Code 12) 3-45
    Removal 3-45
    Installation 3-45
    Input Voltage Inspection 3-45
    Output Voltage Inspection 3-46
Inlet Air Temperature Sensor (Service Code 13) 3-50
    Removal/Installation 3-50
    Output Voltage Inspection 3-50
    Sensor Resistance Inspection 3-51
Water Temperature Sensor (Service Code 14) 3-52
    Water Temperature Sensor Removal/Installation 3-52
    Water Temperature Sensor Output Voltage Inspection 3-52

http://mototh.com

Sensor Resistance Inspection 3-53
Crankshaft Sensor (Service Code 21) 3-54
Crankshaft Sensor Removal/Installation 3-54
Crankshaft Sensor Inspection 3-54
Speed Sensor (Service Code 24, 25) 3-55
Speed Sensor Removal/Installation 3-55
Speed Sensor Inspection 3-55
Speed Sensor Input Voltage Inspection 3-55
Speed Sensor Output Voltage Inspection 3-55
Vehicle-down Sensor (Service Code 31) 3-57
Vehicle-down Sensor Removal 3-57
Vehicle-down Sensor Installation 3-57
Vehicle-down Sensor Inspection 3-57
Subthrottle Sensor (Service Code 32) 3-60
Subthrottle Sensor Removal/Adjustment 3-60
Subthrottle Sensor Input Voltage Inspection 3-60
Subthrottle Sensor Output Voltage Inspection 3-61
Subthrottle Sensor Resistance Inspection 3-62
Oxygen Sensor-not activated (Service Code 33) - Europe Model 3-63
Oxygen Sensor Removal/Installation 3-63
Oxygen Sensor Inspection 3-63
Stick Coils (#1, #2: Service Code 51, 52) 3-65
Stick Coil Removal/Installation 3-65
Stick Coil Input Voltage Inspection 3-65
Radiator Fan Relay (Service Code 56) 3-67
Radiator Fan Relay Removal/Installation 3-67
Radiator Fan Relay Inspection 3-67
Subthrottle Valve Actuator (Service Code 62) 3-68
Subthrottle Valve Actuator Removal 3-68
Subthrottle Valve Actuator Audible Inspection 3-68
Subthrottle Valve Actuator Visual Inspection 3-68
Subthrottle Valve Actuator Resistance Inspection 3-68
Subthrottle Valve Actuator Input Voltage Inspection 3-69
Air Switching Valve (Service Code 64) 3-70
Air Switching Valve Removal/Installation 3-70
Air Switching Valve Inspection 3-70
Oxygen Sensor Heater (Service Code 67) - Europe Model 3-71
Oxygen Sensor Heater Removal/Installation 3-71
Oxygen Sensor Heater Inspection 3-71
Oxygen Sensor-Incorrect Output Voltage (Service Code 94) - Europe Model 3-73
Oxygen Sensor Removal/Installation 3-73
Oxygen Sensor Inspection 3-73
FI Indicator Light (LED) 3-75
FI Indicator Light (LED) Inspection 3-76
ECU 3-77
ECU Removal 3-77
ECU Installation 3-77
ECU Power Supply Inspection 3-78
Fuel Line 3-80
Fuel Pressure Inspection 3-80
Fuel Flow Rate Inspection 3-82
Fuel Pump 3-84
Fuel Pump Removal 3-84
Fuel Pump Installation 3-84
Fuel Pump Operation Inspection 3-85
Fuel Pump Operating Voltage Inspection 3-85
Pressure Regulator Removal 3-86

http://mototh.com

Pump Screen, Fuel Filter Cleaning 3-86
Fuel Injectors 3-88
Removal/Installation 3-88
Audible Inspection 3-88
Fuel Injector Power Source Voltage Inspection 3-88
Fuel Injector Output Voltage Inspection 3-89
Injector Signal Test 3-89
Injector Resistance Inspection 3-90
Injector Unit Test 3-91
Injector Fuel Line Inspection 3-91
Throttle Grip and Cables 3-93
Throttle Grip Free Play Inspection 3-93
Throttle Grip Free Play Adjustment 3-93
Throttle Cable Installation 3-93
Throttle Cable Lubrication 3-93
Throttle Body Assy 3-94
Idle Speed Inspection 3-94
Engine Vacuum Synchronization Inspection/Adjustment 3-94
High Altitude Performance Adjustment 3-94
Throttle Body Assy Removal 3-94
Throttle Body Assy Installation 3-95
Throttle Body Assy Disassembly 3-96
Throttle Body Assy Assembly 3-97
Air Cleaner 3-98
Air Cleaner Element Removal/Installation 3-98
Air Cleaner Element Inspection 3-98
Air Cleaner Oil Draining 3-98
Air Cleaner Housing Removal 3-98
Air Cleaner Housing Installation 3-99
Fuel Tank 3-100
Fuel Tank Removal 3-100
Fuel Tank Installation 3-101
Fuel Tank and Cap Inspection 3-102
Fuel Tank Cleaning 3-103

http://mototh.com

Exploded View

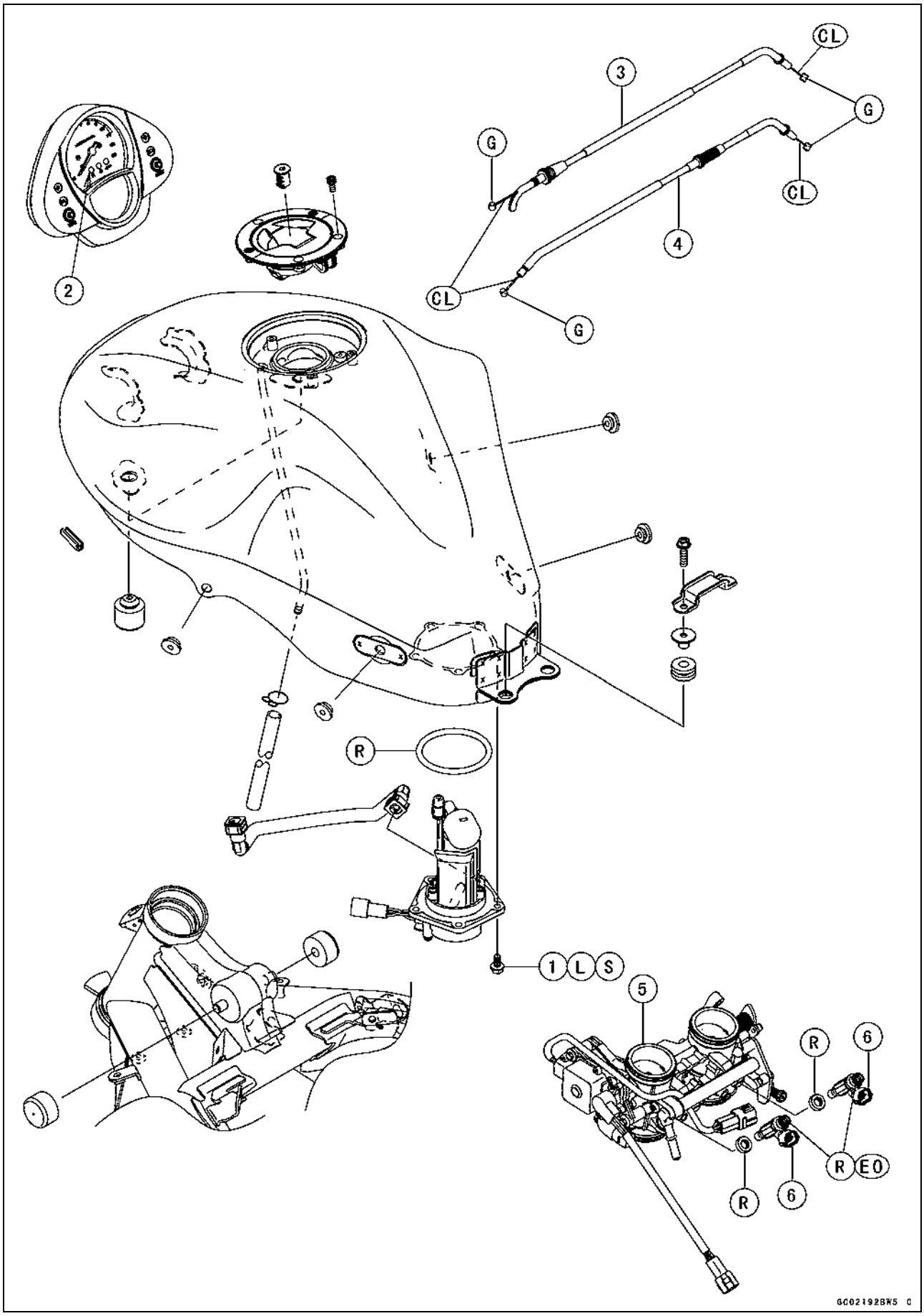

Exploded View

No.	Fastener	Torque			Remarks
		N·m	kgf·m	ft·lb	
1	Fuel Pump Bolts	9.8	1.0	87 in·lb	L, S

2. FI Indicator LED Light
3. Throttle Cable (Accelerator)
4. Throttle Cable (Decelerator)
5. Throttle Body Assy
6. Injectors

CL: Apply cable lubricant.
EO: Apply engine oil.
G: Apply grease.
L: Apply a non-permanent locking agent.
R: Replacement Parts
S: Follow the specified tightening sequence.

http://mototh.com

Exploded View

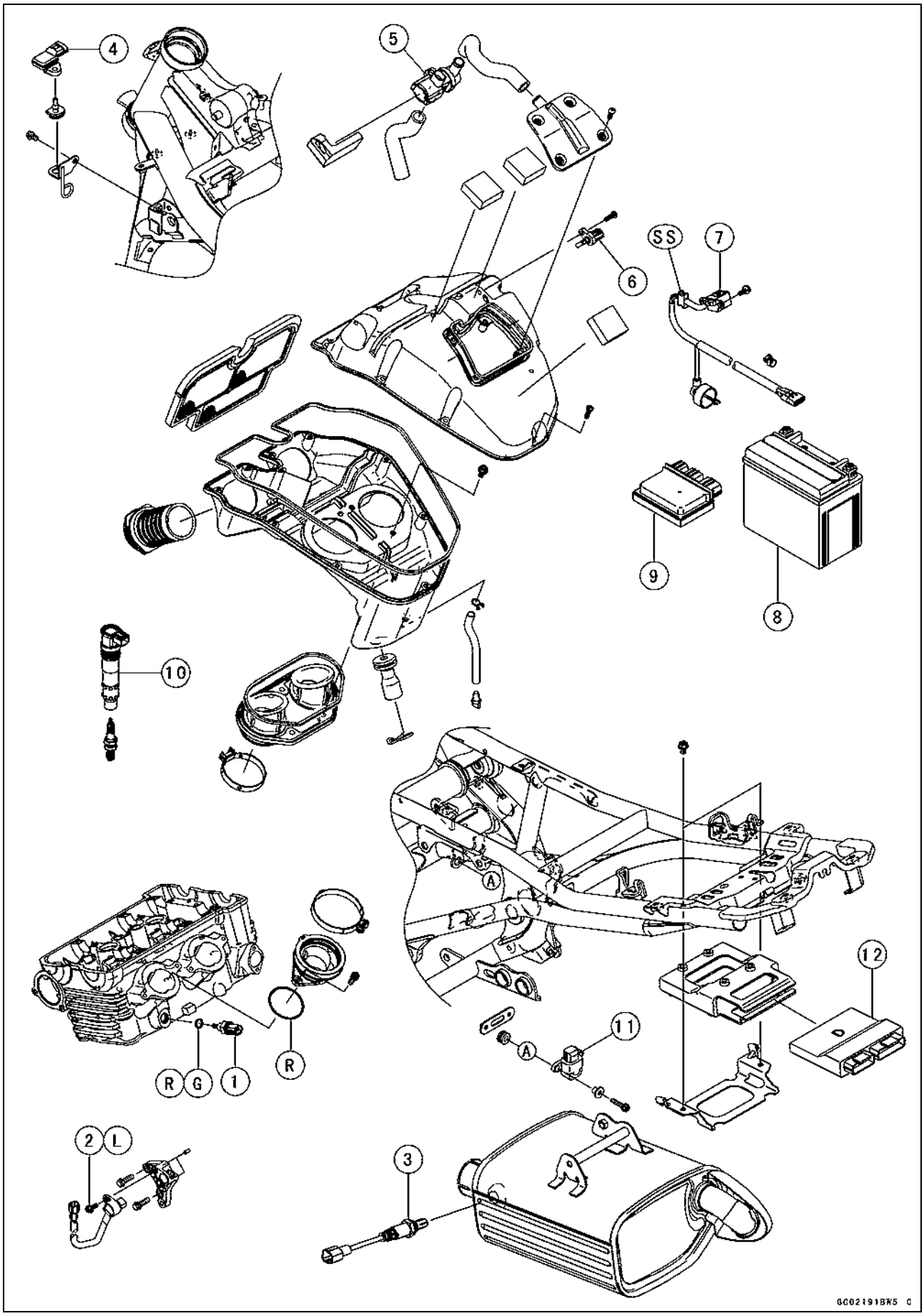

Exploded View

No.	Fastener	Torque			Remarks
		N·m	kgf·m	ft·lb	
1	Water Temperature Sensor	12	1.2	106 in·lb	
2	Speed Sensor Bolt	7.8	0.80	66 in·lb	L
3	Oxygen Sensor (Europe Model)	44.1	4.50	32.5	

4. Inlet Air Pressure Sensor
5. Air Switching Valve
6. Inlet Air Temperature Sensor
7. Crankshaft Sensor
8. Sealed Battery
9. Relay Box
10. Stick Coil
11. Vehicle-down Sensor
12. ECU (Electronic Control Unit)

L: Apply a non-permanent locking agent.
R: Replacement Parts
SS: Apply silicone sealant.

http://mototh.com

DFI System

DFI System

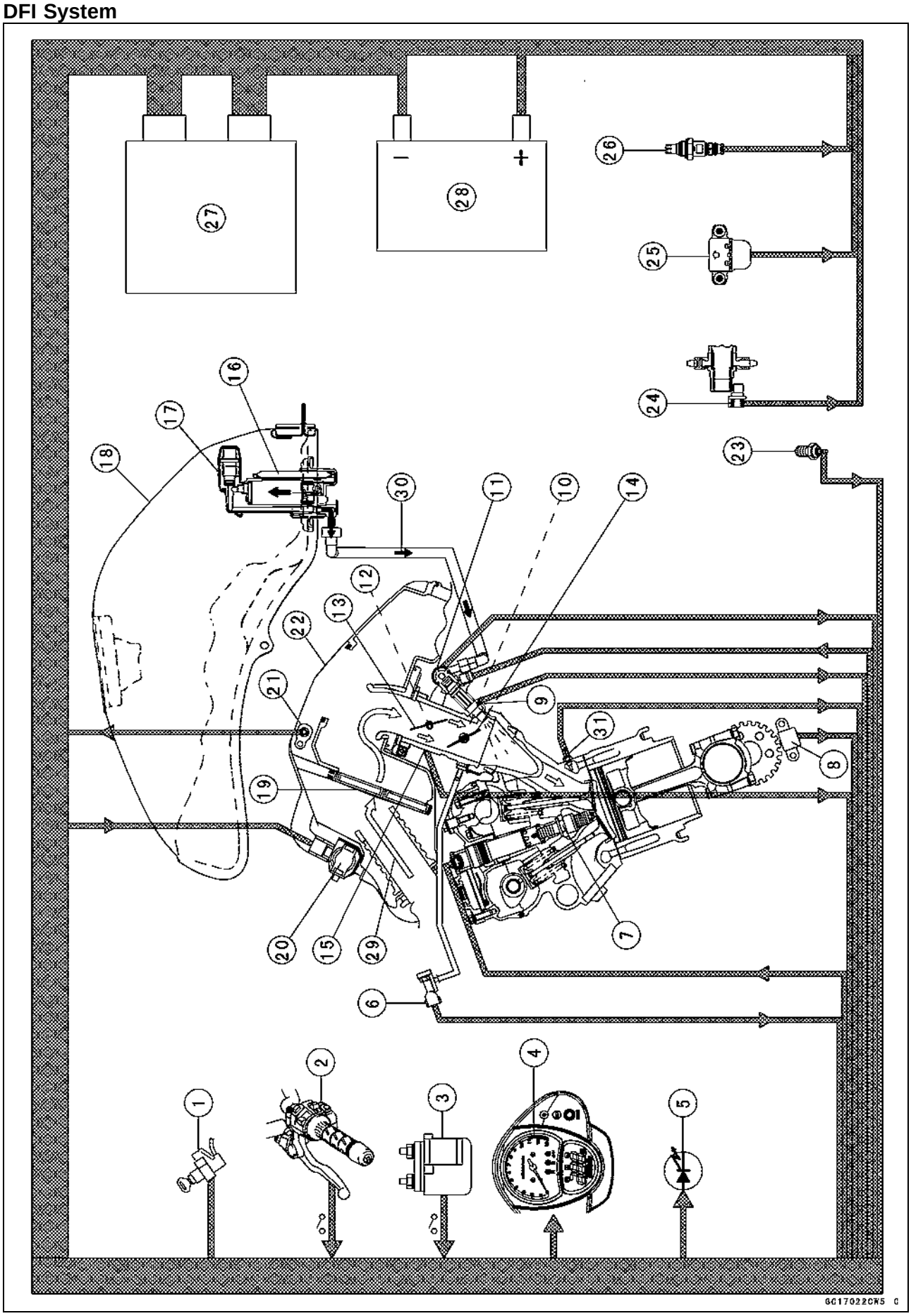

DFI System

1. Ignition Switch
2. Starter Lockout Switch
3. Starter Relay
4. Tachometer
5. FI Indicator Light (LED)
6. Inlet Air Pressure Sensor
7. Spark Plug
8. Crankshaft Sensor
9. Injector
10. Main Throttle Sensor
11. Delivery Pipe
12. Subthrottle Sensor
13. Subthrottle Valve
14. Main Throttle Valve
15. Subthrottle Valve Actuator
16. Fuel Pump
17. Pressure Regulator
18. Fuel Tank
19. Air Cleaner Element
20. Air Switching Valve
21. Inlet Air Temperature Sensor
22. Air Cleaner Housing
23. Neutral Switch
24. Speed Sensor
25. Vehicle-down Sensor
26. Oxygen Sensor (Europe Model)
27. ECU (Electronic Control Unit)
28. Sealed Battery
29. Air Flow
30. Fuel Flow
31. Water Temperature Sensor

http://mototh.com

DFI System

DFI System Wiring Diagram

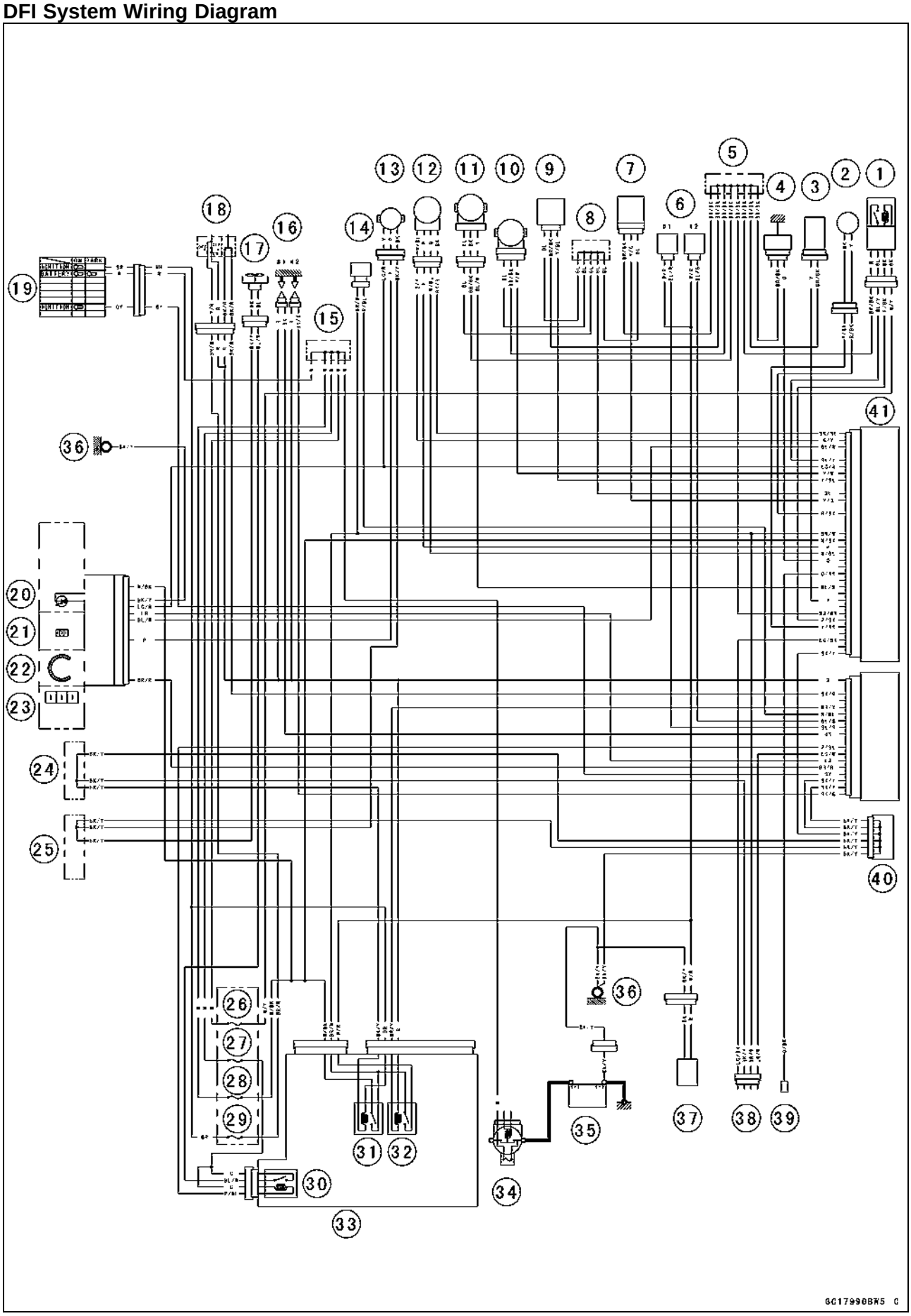

DFI System

Part Name

1. Oxygen Sensor (Europe Model)
2. Crankshaft Sensor
3. Inlet Air Temperature Sensor
4. Water Temperature Sensor
5. Water-proof Joint E
6. Injectors
7. Vehicle-down Sensor
8. Water-proof Joint D
9. Inlet Air Pressure Sensor
10. Main Throttle Sensor
11. Subthrottle Sensor
12. Subthrottle Valve Actuator
13. Speed Sensor
14. Air Switching Valve
15. Water-proof Joint C
16. Stick Coil
17. Fan Motor
18. Engine Stop Switch
19. Ignition Switch
20. FI Indicator Light (LED)
21. Water Temperature Gauge
22. Tachometer
23. Speedometer
24. Water-proof Joint A
25. Water-proof Joint B
26. Oxygen Sensor Heater Fuse 10 A
27. Radiator Fan Fuse 15 A
28. ECU Fuse 15 A
29. Ignition Fuse 10 A
30. Radiator Fan Relay
31. ECU Main Relay
32. Fuel Pump Relay
33. Relay Box
34. Main Fuse 30 A
35. Battery
36. Frame Ground
37. Fuel Pump
38. Diagnosis Connector
39. Self-diagnosis Terminal
40. Joint Connector
41. ECU

http://mototh.com

DFI System

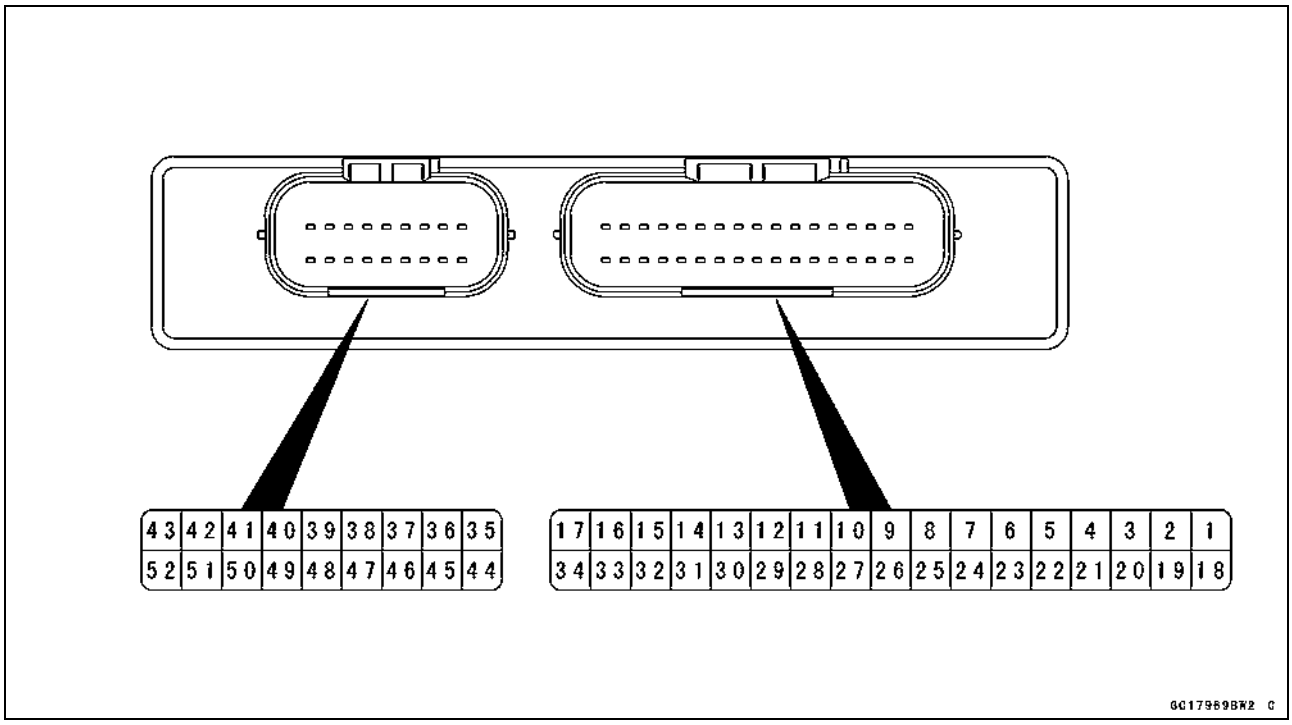

Terminal Names

1. Subthrottle Valve Actuator Drive Signal 2
2. Subthrottle Valve Actuator Drive Signal 1
3. Water Temperature Warning Light Signal
4. Unused
5. Oxygen Sensor Signal
6. Speed Sensor Signal
7. Main Throttle Sensor Signal
8. Inlet Air Pressure Sensor Signal
9. Unused
10. Power Supply to Sensors
11. Vehicle-down Sensor Signal
12. Neutral Switch Signal
13. Crankshaft Sensor (+) Signal
14. Unused
15. Unused
16. Power Supply to ECU (from ECU Main Relay)
17. Power Supply to ECU (from Battery)
18. Subthrottle Valve Actuator Drive Signal 4
19. Subthrottle Valve Actuator Drive Signal 3
20. Water Temperature Sensor Signal
21. Unused
22. Self-diagnosis Terminal
23. Unused
24. Subthrottle Sensor Signal
25. Unused
26. Inlet Air Temperature Sensor Signal
27. Unused
28. Ground to Sensors
29. Oxygen Sensor Heater Signal
30. Crankshaft Sensor (–) Signal
31. Unused
32. External Diagnosis System Signal
33. Unused
34. Ground to ECU
35. Engine Stop Switch Signal
36. Starter Lockout Switch Signal
37. Starter Button Signal
38. Unused
39. Fuel Pump Relay Signal
40. Air Switching Valve Signal
41. Fuel Injector #2 Signal
42. Fuel Injector #1 Signal
43. Stick Coil #1 Signal
44. Sidestand Switch Signal
45. Radiator Fan Relay Signal
46. External Communication Line (Mode Switch)
47. Tachometer Signal
48. FI Indicator LED Light
49. –
50. Ground for Fuel System
51. Ground for ignition System
52. Stick Coil #2 Signal

http://mototh.com

DFI Parts Location

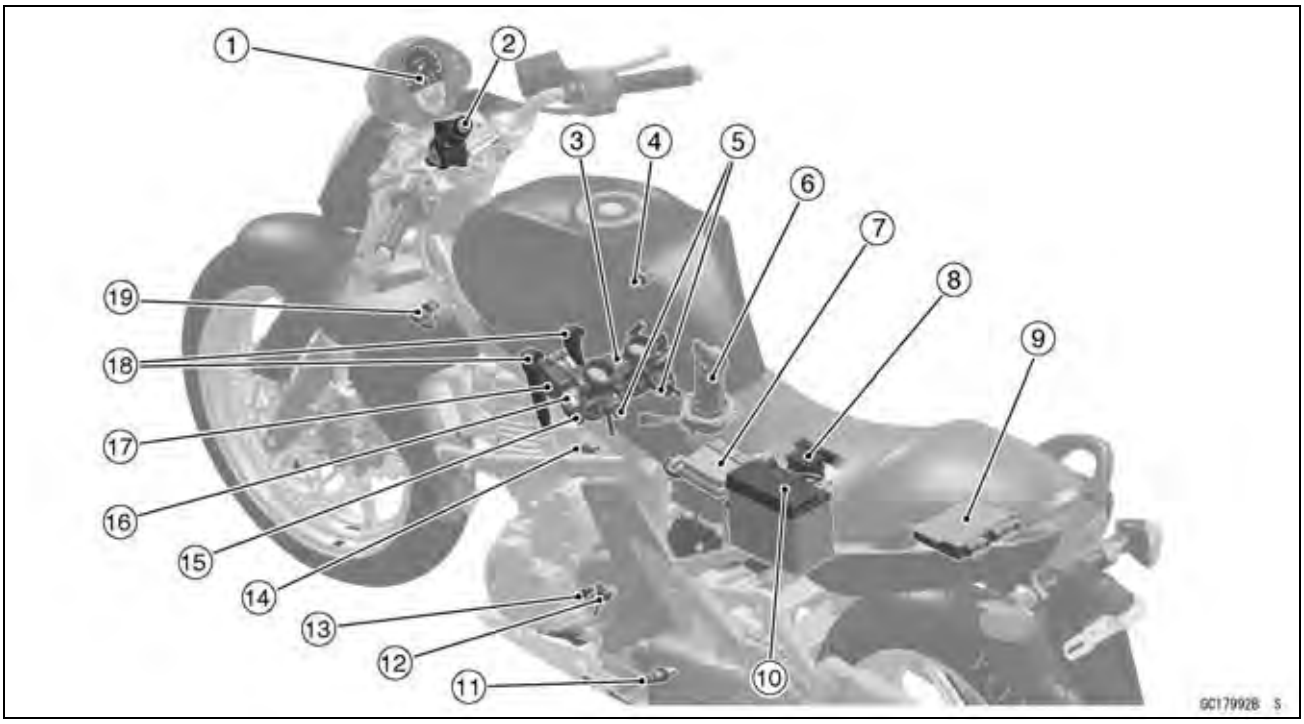

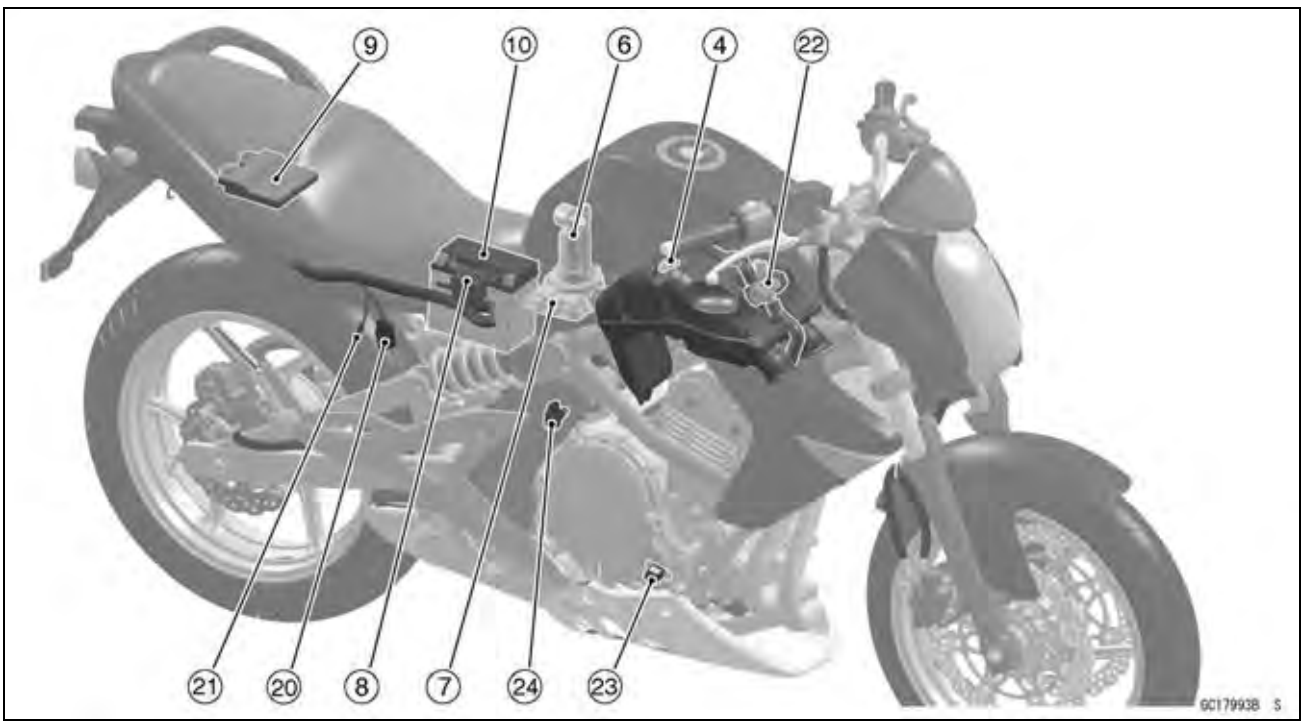

DFI: Digital Fuel Injection Parts

1. FI Indicator Light LED (DFI)
2. Ignition Switch
3. Throttle Body Assy
4. Inlet Air Temperature Sensor
5. Injectors
6. Fuel Pump
7. Relay Box (ECU Main Relay, Fuel Pump Relay, Radiator Fan Relay)
8. Fuse Box (ECU Fuse 15 A, Oxygen Sensor Heater Fuse 10 A)
9. ECU
10. Sealed Battery
11. Oxygen Sensor
12. Speed Sensor
13. Neutral Switch
14. Water Temperature Sensor
15. Subthrottle Sensor
16. Main Throttle Sensor
17. Subthrottle Valve Actuator
18. Stick Coils
19. Inlet Air Pressure Sensor
20. Diagnosis Connector
21. Self-diagnosis Terminal
22. Air Switching Valve
23. Crankshaft Sensor
24. Vehicle-down Sensor

http://mototh.com

Specifications

Item	Standard
Digital Fuel Injection System	
Idle Speed	1 300 ±50 r/min (rpm)
Throttle Assy:	
Type	Two barrel type
Bore	ϕ38 mm (1.50 in.)
ECU (Electronic Control Unit):	
Make	Denso
Type	Digital memory type, with built in IC igniter, sealed with resin
Usable Engine Speed	100 ~ 12 000 r/min (rpm)
Fuel Pressure (High Pressure Line):	
Right after Ignition Switch ON	323 kPa (3.3 kgf/cm², 47 psi) with fuel pump running
After 3 Seconds from Ignition Switch ON	265 kPa (2.7 kgf/cm², 38 psi) with fuel pump stopped
With Engine Idling	333 kPa (3.4 kgf/cm², 48 psi) with fuel pump running
Fuel Pump:	
Type	In-tank friction pump
Discharge	60 mL or more for 3 seconds
Fuel Injectors:	
Type	INP-287
Nozzle Type	One spray type with 12 holes
Resistance	about 11.7 ~ 12.3 Ω at 20°C (68°F)
Main Throttle Sensor:	Non-adjustable and non-removable
Input Voltage	4.75 ~ 5.25 V DC between BL and BR/BK leads
Output Voltage at Idle Throttle Opening	1.073 ~ 1.077 V DC between Y/W and BR/BK leads
Output Voltage at Full Throttle Opening	4.29 ~ 4.49 V DC between Y/W and BR/BK leads
Resistance	4 ~ 6 kΩ
Inlet Air Pressure Sensor:	
Input Voltage	4.75 ~ 5.25 V DC between BL and BR/BK leads
Output Voltage	3.80 ~ 4.20 V DC at standard atmospheric pressure (see this text for details)
Inlet Air Temperature Sensor:	
Resistance	5.4 ~ 6.6 kΩ at 0°C (32°F)
	0.29 ~ 0.39 kΩ at 80°C (176°F)
Output Voltage at ECU	about 2.25 ~ 2.50 V @20°C (68°F)
Water Temperature Sensor:	
Resistance	see Electrical System chapter
Output Voltage at ECU	about 2.80 ~ 2.97 V @20°C (68°F)
Speed Sensor:	
Input Voltage at Sensor	about 9 ~ 11 V DC at Ignition Switch ON
Output Voltage at Sensor	about 0.05 ~ 0.07 V DC at Ignition Switch ON and 0 km/h
Vehicle-down Sensor:	
Detection Method	Magnetic flux detection method
Detection Angle	more than 60 ~ 70° for each bank

http://mototh.com

Specifications

Item	Standard
Output Voltage	with the sensor tilted 60 ~ 70° or more: 0.65 ~ 1.35 V with sensor arrow mark pointed up: 3.55 ~ 4.45 V
Subthrottle Sensor:	Non-adjustable and non-removal
Input Voltage	4.75 ~ 5.25 V DC between BL and BR/BK leads
Output Voltage at Idle Throttle Opening	0.4 ~ 0.6 V DC between BL/W and BR/BK leads
Output Voltage at Full Throttle Opening	3.625 ~ 3.775 V DC between BL/W and BR/BK leads
Resistance	4 ~ 6 kΩ
Subthrottle Valve Actuator:	
Resistance	about 5.5 ~ 7.5 Ω
Input Voltage	about 8.5 ~ 10.5 V DC
Oxygen Sensor (Europe Model):	
Output Voltage (Rich)	0.7 V or more
Output Voltage (Lean)	0.2 V or less
Heater Resistance	11.7 ~ 14.5 Ω at 20°C (68°F)
Throttle Grip and Cables	
Throttle Grip Free Play	2 ~ 3 mm (0.08 ~ 0.12 in.)

http://mototh.com

Special Tools and Sealant

Oil Pressure Gauge, 5 kgf/cm²:
57001-125

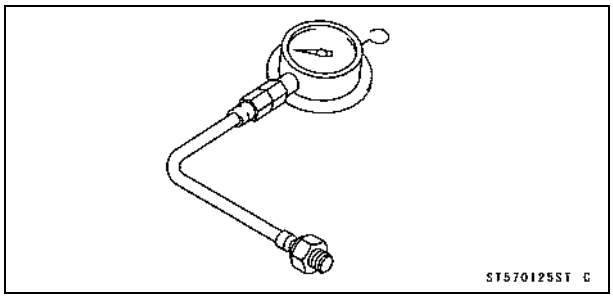

Fork Oil Level Gauge:
57001-1290

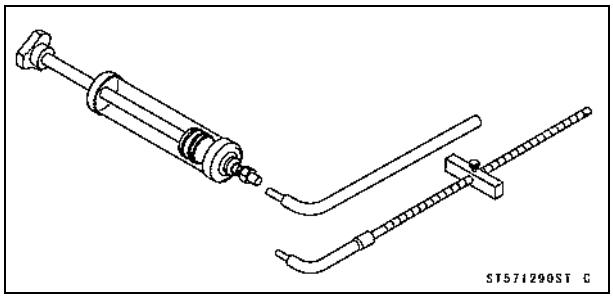

Hand Tester:
57001-1394

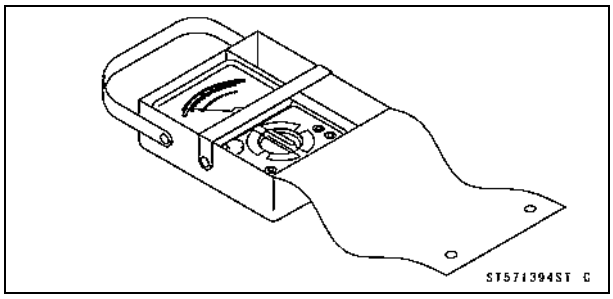

Throttle Sensor Setting Adapter #1:
57001-1400

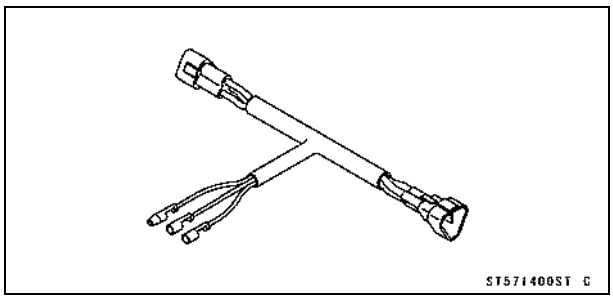

Peak Voltage Adapter:
57001-1415

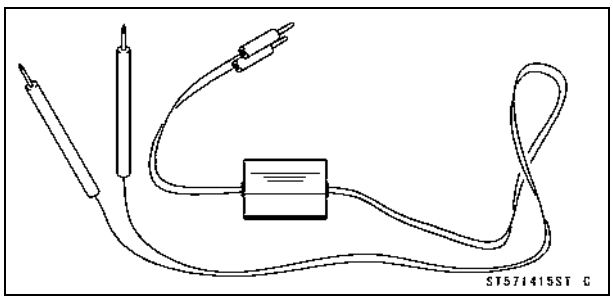

Needle Adapter Set:
57001-1457

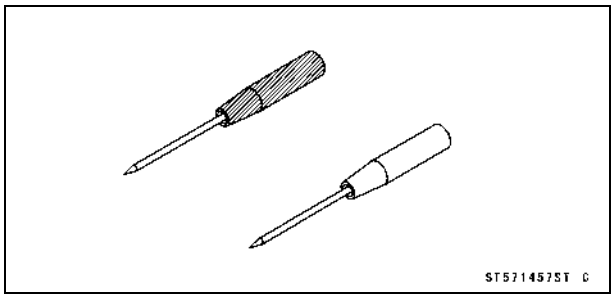

Throttle Sensor Setting Adapter:
57001-1538

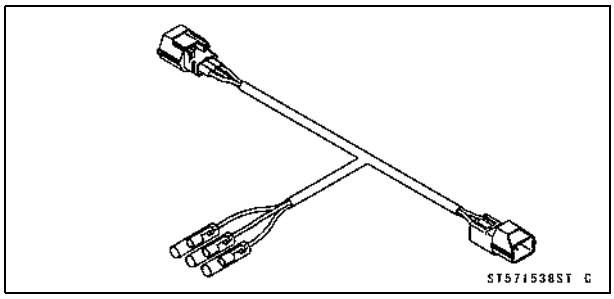

Sensor Harness Adapter:
57001-1561

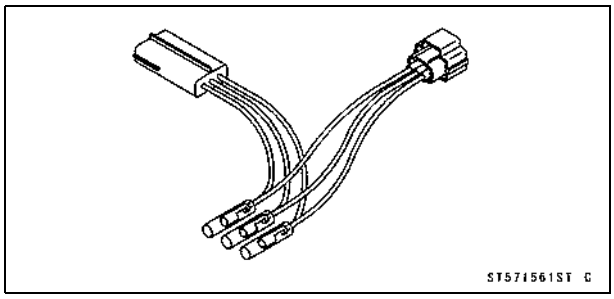

Fuel Pressure Gauge Adapter:
57001-1593

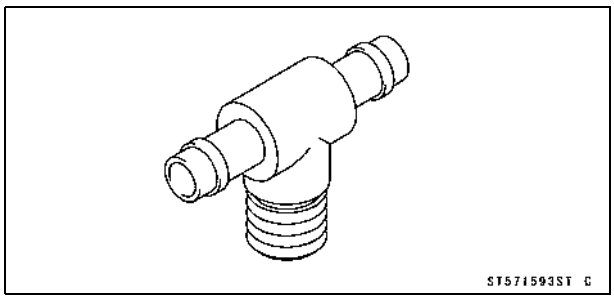

Fuel Hose:
57001-1607

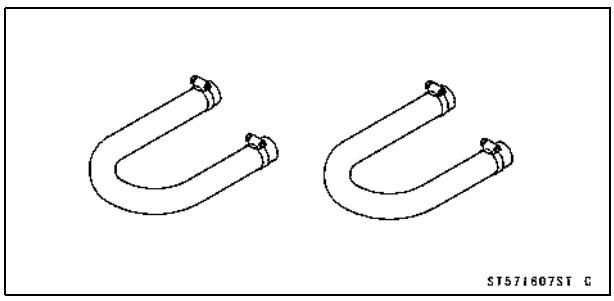

http://mototh.com

Special Tools and Sealant

Kawasaki Bond (Silicone Sealant):
56019-120

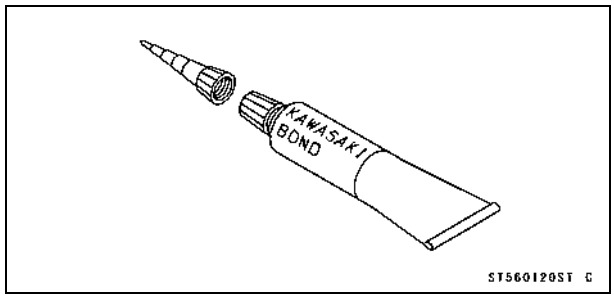

DFI Servicing Precautions

DFI Servicing Precautions

There are a number of important precautions that should be followed servicing the DFI system.

- This DFI system is designed to be used with a 12 V sealed battery as its power source. Do not use any other battery except for a 12 V sealed battery as a power source.
- Do not reverse the battery cable connections. This will damage the ECU.
- To prevent damage to the DFI parts, do not disconnect the battery cables or any other electrical connections when the ignition switch is on or while the engine is running.
- Take care not to short the leads that are directly connected to the battery positive (+) terminal to the chassis ground.
- When charging, remove the battery from the motorcycle. This is to prevent ECU damage by excessive voltage.
- Do not turn the ignition switch ON while any of the DFI electrical connectors are disconnected. The ECU memorizes service codes.
- Do not spray water on the electrical parts, DFI parts, connectors, leads, and wiring.

- Whenever the DFI electrical connections are to be disconnected, first turn off the ignition switch, and disconnect the battery (–) terminal. Do not pull the lead, only the connector. Conversely, make sure that all the DFI electrical connections are firmly reconnected before starting the engine.
- Connect these connectors until they click [A]

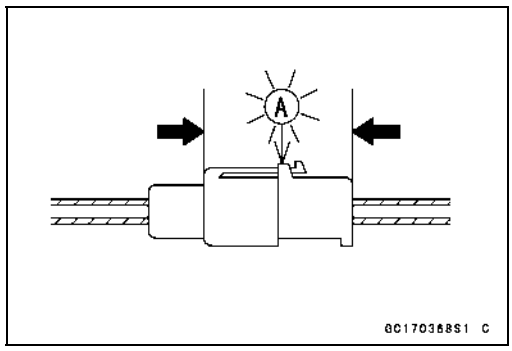

- If a transceiver is installed on the motorcycle, make sure that the operation of the DFI system is not influenced by electric wave radiated from the antenna. Check operation of the system with the engine at idle. Locate the antenna as far as possible away from the ECU.
- When any fuel hose is disconnected, fuel may spout out by residual pressure in the fuel line. Cover the hose joint with a piece of clean cloth to prevent fuel spillage.
- When any fuel hose is disconnected, do not turn on the ignition switch. Otherwise, the fuel pump will operate and fuel will spout from the fuel hose.
- Do not operate the fuel pump if the pump is completely dry. This is to prevent pump seizure.
- Before removing the fuel system parts, blow the outer surfaces of these parts clean with compressed air.
- To prevent corrosion and deposits in the fuel system, do not add to fuel any fuel antifreeze chemicals.

http://mototh.com

DFI Servicing Precautions

○To maintain the correct fuel/air mixture (F/A), there must be no inlet air leaks in the DFI system. Be sure to install the oil filler plug [A] after filling the engine oil.
Clutch Cover [B]

Torque - Oil Filler Plug: Hand-tighten

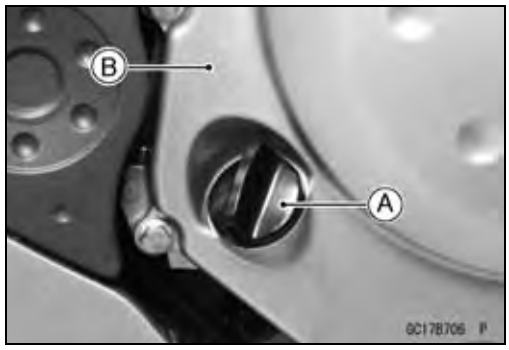

Troubleshooting the DFI System

Outline

Outline

When an abnormality in the system occurs, the FI indicator LED (Light Emitting Diode) light goes on to alert the rider on the meter panel. In addition, the condition of the problem is stored in the memory of the ECU (electronic control unit). With the engine stopped and turned in the self-diagnosis mode, the service code [A] is indicated by the number of times the FI indicator LED light blinks.

When due to a malfunction, the FI indicator LED light remains lit, ask the rider about the conditions [B] under which the problem occurred and try to determine the cause [C].

- First, conduct a self-diagnosis inspection and then a non-self-diagnosis inspection. The non-self-diagnosis items are not indicated by the FI indicator LED light. Don't rely solely on the DFI self-diagnosis function, use common sense.

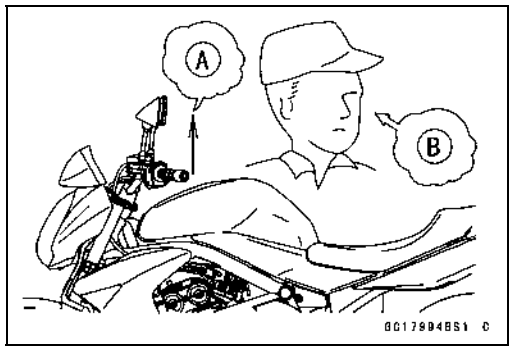

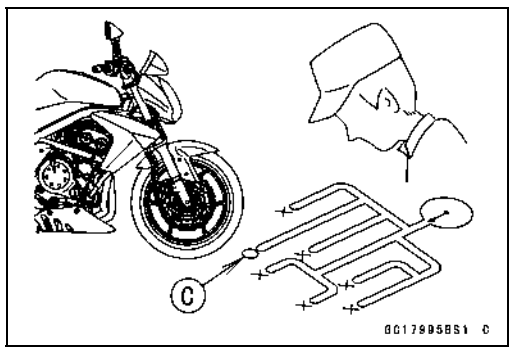

Even when the DFI system is operating normally, the FI indicator LED light [A] may light up under strong electrical interference. No repair needed. Turn the ignition switch OFF to stop the indicator light.

When the FI indicator LED light goes on and the motorcycle is brought in for repair, check the service codes.

When the repair has been done, the LED light doesn't go on. But the service codes stored in memory are not erased to preserve the problem history, and the LED light can display the codes in the self-diagnosis mode. The problem history is referred when solving unstable problems.

When the motorcycle is down, the vehicle-down sensor is turned OFF and the ECU shuts off the fuel injectors and ignition system. The FI indicator LED light blinks but the service code cannot be displayed. The ignition switch is left ON. If the starter button is pushed, the electric starter turns but the engine doesn't start. To start the engine again, raise the motorcycle, turn the ignition switch OFF, and then ON. The vehicle-down sensor is turned ON and the LED light goes OFF.

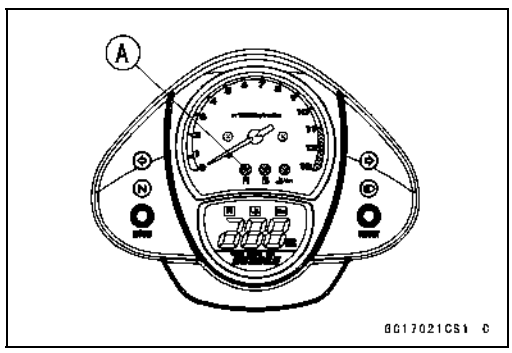

http://mototh.com

Troubleshooting the DFI System

○The DFI part connectors [A] have seals [B], including the ECU.

- Join the connector and insert the needle adapters [C] inside the seals [B] from behind the connector until the adapter reaches the terminal.

Special Tool - Needle Adapter Set: 57001-1457

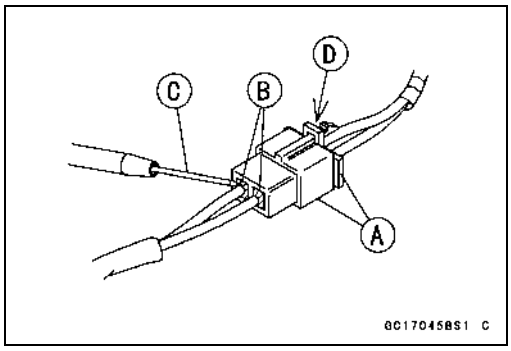

CAUTION
Insert the needle adapter straight along the terminal in the connector to prevent short-circuit between terminals.

- Make sure that measuring points are correct in the connector, noting the position of the lock [D] and the lead color before measurement. Do not reverse connections of the hand tester or a digital meter.
- Be careful not to short-circuit the leads of the DFI or electrical system parts by contact between adapters.
- Turn the ignition switch ON and measure the voltage with the connector joined.

CAUTION
Incorrect, reverse connection or short circuit by needle adapters could damage the DFI or electrical system parts.

○After measurement, remove the needle adapters and apply silicone sealant to the seals [A] of the connector [B] for waterproofing.

Silicone Sealant (Kawasaki Bond: 56019-120) - Seals of Connector

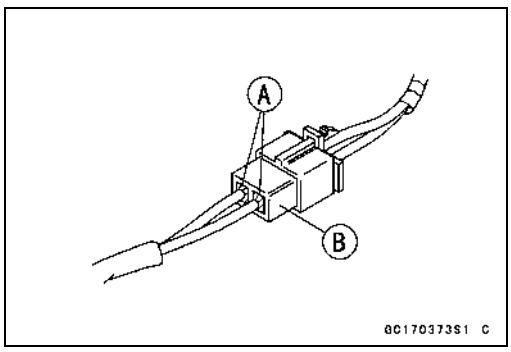

- Always check battery condition before replacing the DFI parts. A fully charged battery is a must for conducting accurate tests of the DFI system.

- Trouble may involve one or in some cases all items. Never replace a defective part without determining what CAUSED the problem. If the problem was caused by some other item or items, they too must be repaired or replaced, or the new replacement part will soon fail again.
- Measure coil winding resistance when the DFI part is cold (at room temperature).
- Make sure all connectors in the circuit are clean and tight, and examine wires for signs of burning, fraying, short, etc. Deteriorated wires and bad connections can cause reappearance of problems and unstable operation of the DFI system.

★If any wiring is deteriorated, replace the wiring.

http://mototh.com

Troubleshooting the DFI System

● Pull each connector [A] apart and inspect it for corrosion, dirt, and damage.
★If the connector is corroded or dirty, clean it carefully. If it is damaged, replace it. Connect the connectors securely.
● Check the wiring for continuity.
○Use the wiring diagram to find the ends of the lead which is suspected of being a problem.
○Connect the hand tester between the ends of the leads.
○Set the tester to the × 1 Ω range, and read the tester.
★If the tester does not read 0 Ω, the lead is defective. Replace the lead or the main harness or the sub harness.

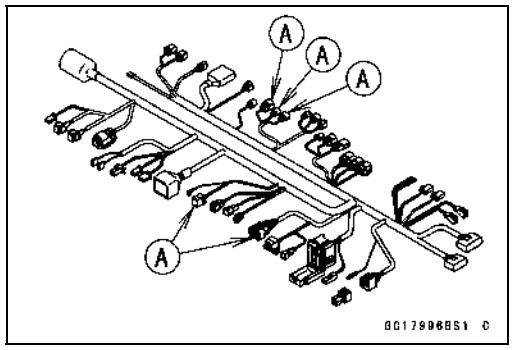

○If both ends of a harness [A] are far apart, ground [B] the one end [C], using a jumper lead [D] and check the continuity between the end [E] and the ground [F]. This enables to check a long harness for continuity. If the harness is open, repair or replace the harness.

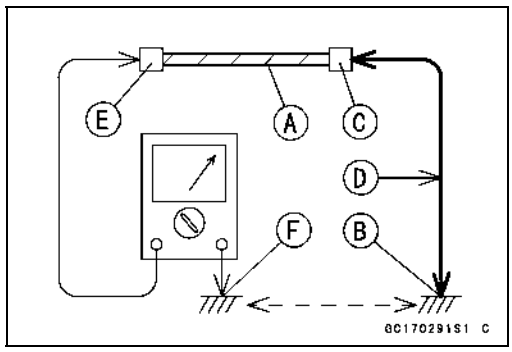

○When checking a harness [A] for short circuit, open one end [B] and check the continuity between the other end [C] and ground [D]. If there is continuity, the harness has a short circuit to ground, and it must be repaired or replaced.

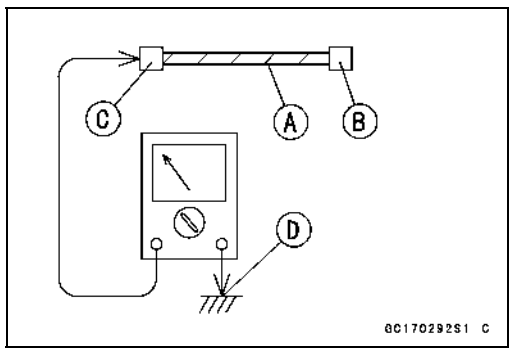

● Narrow down suspicious locations by repeating the continuity tests from the ECU connectors.
★If no abnormality is found in the wiring or connectors, the DFI parts are the next likely suspects. Check the part, starting with input and output voltages. However, there is no way to check the ECU itself.
★If an abnormality is found, replace the affected DFI part.
★If no abnormality is found in the wiring, connectors, and DFI parts, replace the ECU.

○Lead Color Codes:

BK: Black	G: Green	P: Pink
BL: Blue	GY: Gray	PU: Purple
BR: Brown	LB: Light blue	R: Red
CH: Chocolate	LG: Light green	W: White
DG: Dark green	O: Orange	Y: Yellow

http://mototh.com

Troubleshooting the DFI System

○There are two ways to inspect the DFI system. One is voltage Check Method and the other is Resistance Check Method.

(Voltage Check Method)

○This method is conducted by measuring the input voltage [B] to a sensor [A] first, and then the output voltage [C] from the sensor.

○Sometimes this method can detect a fault of the ECU.

- Refer to each sensor inspection section for detail in this chapter.
- Use a fully charged battery and a digital meter [D] which can be read two decimal places voltage or resistance.

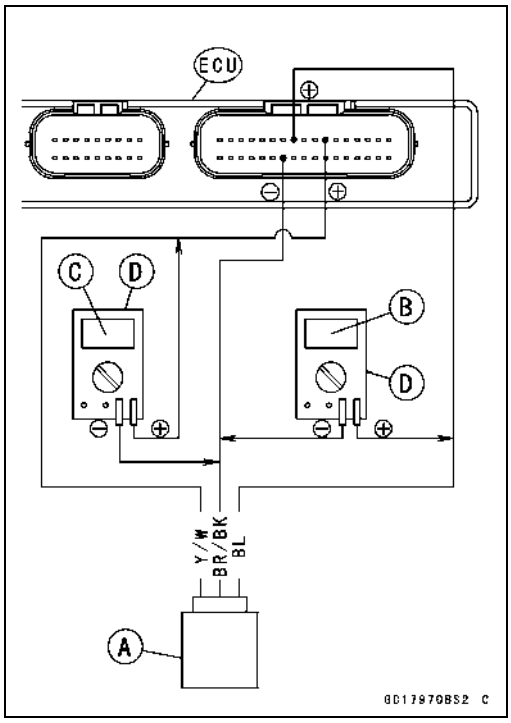

(Resistance Check Method)

○This method is simple. No need for a fully charged battery and the needle adapter. Just do the following especially when a sensor [A] is suspect.

- Turn the ignition switch OFF and disconnect the connectors.
- Inspect the sensor resistance, using a digital meter (see each sensor inspection in this chapter).
- Inspect the wiring and connectors [B] for continuity, using the hand tester [C] (analog tester) rather than a digital meter.

Special Tool - Hand Tester: 57001-1394

★If the sensor, the wiring and connections are good, inspect the ECU for its ground and power supply (see this chapter). If the ground and power supply are good, the ECU is suspect. Replace the ECU.

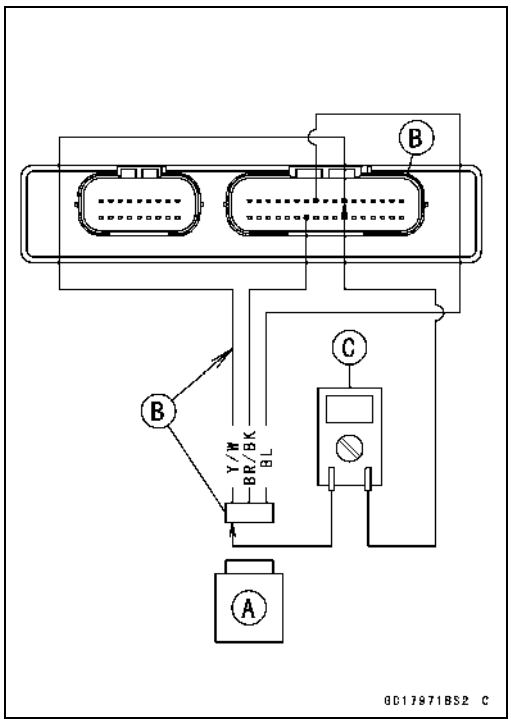

Troubleshooting the DFI System

DFI Diagnosis Flow Chart

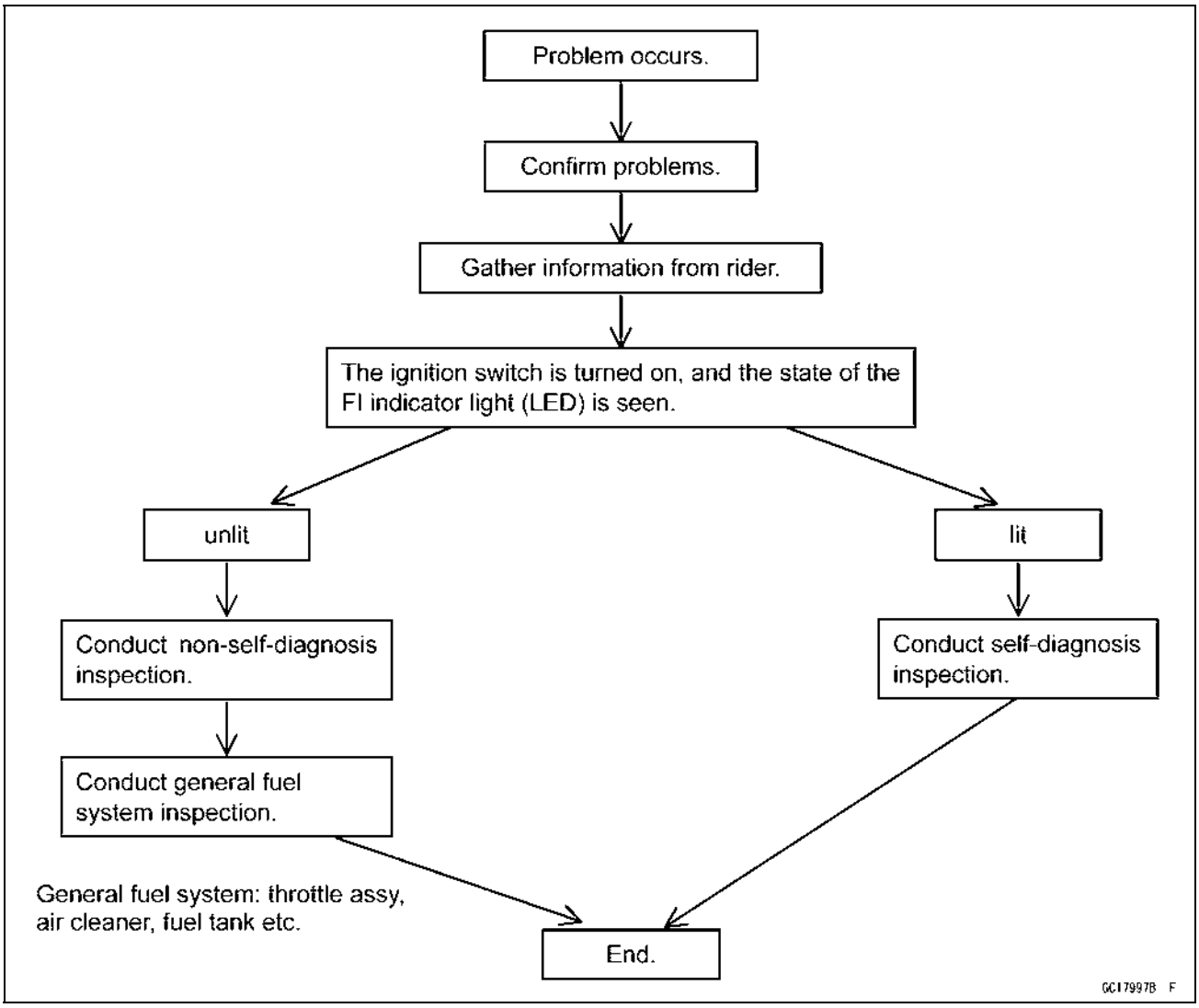

Inquiries to Rider

Inquiries to Rider

- Each rider reacts to problems in different ways, so it is important to confirm what kind of symptoms the rider has encountered.
- Try to find out exactly what problem occurred under exactly what conditions by asking the rider; knowing this information may help you reproduce the problem.
- The following sample diagnosis sheet will help prevent you from overlooking any areas, and will help you decide if it is a DFI system problem, or a general engine problem.

http://mototh.com

Troubleshooting the DFI System

Sample Diagnosis Sheet

Rider name:	**Registration No. (license plate No.):**
Year of initial registration:	**Model:**
Engine No.:	**Frame No.:**
Date problem occurred:	**Mileage:**
Environment when problem occurred.	
Weather	☐fine, ☐cloudy,☐rain, ☐snow, ☐always, ☐other:
Temperature	☐hot, ☐warm, ☐cold, ☐very cold, ☐always
Problem frequency	☐chronic, ☐often, ☐once
Road	☐street, ☐highway, ☐mountain road (☐uphill, ☐downhill), ☐bumpy, ☐pebble
Altitude	☐normal, ☐high (about 1 000 m or more)
Motorcycle conditions when problem occurred.	
FI indicator light (LED)	☐light up immediately after ignition switch ON, and goes off after 1 ~ 2 seconds (normal)
	☐lights blinks immediately after ignition switch ON, and stays on (DFI problem)
	☐lights up immediately after ignition switch ON, but goes off after about 10 seconds (DFI problem)
	☐unlights (light (LED), ECU or its wiring fault)
	☐sometimes lights up (probably wiring fault)
Starting difficulty	☐starter motor not rotating
	☐starter motor rotating but engine doesn’t turn over
	☐starter motor and engine don’t turn over
	☐no fuel flow (☐no fuel in tank, ☐no fuel pump sound)
	☐engine flooded (do not crank engine with throttle opened, which promotes engine flooding)
	☐no spark
	☐choke lever is not pulled fully when using the lever (pull it fully when using)
	☐other
Engine stops	☐right after starting
	☐when opening throttle grip
	☐when closing throttle grip
	☐when moving off
	☐when stopping the motorcycle
	☐when cruising
	☐other
Poor running at low speed	☐very low idle speed, ☐very high idle speed, ☐rough idle speed
	☐battery voltage is low (charge the battery)
	☐spark plug loose (tighten it)
	☐spark plug dirty, broken, or gap maladjusted (remedy it)
	☐backfiring
	☐afterfiring
	☐hesitation when acceleration
	☐engine oil viscosity too high ☐brake dragging
	☐engine overheating

http://mototh.com

Troubleshooting the DFI System

	☐clutch slipping
	☐other
Poor running or no power at high speed	☐spark plug loose (tighten it)
	☐spark plug dirty, broken, or gap maladjusted (remedy it)
	☐spark plug incorrect (replace it)
	☐knocking (fuel poor quality or incorrect, → use high-octane gasoline)
	☐brake dragging
	☐clutch slipping
	☐engine overheating
	☐engine oil level too high
	☐engine oil viscosity too high
	☐other

http://mototh.com

DFI System Troubleshooting Guide

NOTE

- *This is not an exhaustive list, giving every possible cause for each problem listed. It is meant simply as a rough guide to assist the troubleshooting for some of the more common difficulties.*
- *The ECU may be involved in the DFI electrical and ignition system troubles. If these parts and circuits are checked out good, be sure to check the ECU for ground and power supply. If the ground and power supply are checked good, replace the ECU.*

Engine Doesn't Start, Starting Difficulty

Symptoms or possible Causes	Actions (chapter)
Starter motor not rotating:	
Ignition and engine stop switches not ON	Turn both switches ON.
Starter lockout switch or neutral switch trouble	Inspect (see chapter 16)
Starter motor trouble	Inspect (see chapter 16).
Battery voltage low	Inspect and charge (see chapter 16).
Starter relays not contacting or operating	Inspect the starter relay (see chapter 16).
Starter button not contacting	Inspect and replace (see chapter 16).
Starter system wiring open or shorted	Inspect the wiring (see chapter 16).
Ignition switch trouble	Inspect and replace (see chapter 16).
Engine stop switch trouble	Inspect and repair or replace (see chapter 16).
Main 30A or ignition fuse blown	Inspect and replace (see chapter 16).
Starter motor rotating but engine doesn't turn over:	
Starter clutch trouble	Inspect (see chapter 16).
Starter idle gear trouble	Inspect (see chapter 16).
Engine won't turn over:	
Valve seizure	Inspect and replace (see chapter 5).
Cylinder, piston seizure	Inspect and replace (see chapter 5).
Camshaft seizure	Inspect and replace (see chapter 5).
Connecting rod small end seizure	Inspect and replace (see chapter 9).
Connecting rod big end seizure	Inspect and replace (see chapter 9).
Crankshaft seizure	Inspect and replace (see chapter 9).
Transmission gear or bearing seizure	Inspect and replace (see chapter 9).
Balancer bearing seizure	Inspect and replace (see chapter 9).
No fuel flow:	
No or little fuel in tank	Supply fuel (see Owner's Manual).
Fuel pump not rotating	Inspect (see chapter 3).
Fuel injector trouble	Inspect and replace (see chapter 3).
Fuel tank air vent obstructed	Inspect and repair (see chapter 3).
Fuel filter or pump screen clogged	Inspect and replace fuel pump (see chapter 3).
Fuel pressure regulator clogged	Inspect and replace fuel pump (see chapter 3).
Fuel line clogged	Inspect and repair (see chapter 3).
Engine flooded:	
Spark plug dirty, broken or gap maladjusted	Replace (see chapter 2).
Starting technique faulty	When flooded, don't crank engine with throttle fully opened.
No spark or spark weak:	
Ignition and engine stop switches not ON	Turn both switches ON .

http://mototh.com

DFI System Troubleshooting Guide

Symptoms or possible Causes	Actions (chapter)
Clutch lever not pulled in and gear not in neutral whether sidestand up or not	Pull the lever in and shift the gear in neutral.
Though clutch lever pulled in, sidestand up and gear not in neutral	Sidestand down and clutch lever pulled in whether gear in neutral or not
Vehicle-down-sensor coming off	Reinstall (see chapter 3).
Vehicle-down-sensor trouble	Inspect (see chapter 3) .
ECU ground or power supply trouble	Inspect (see chapter 3) .
Battery voltage low	Inspect and charge (see chapter 16).
Spark plug dirty, broken or gap maladjusted	Replace (see chapter 2).
Stick coil trouble	Inspect stick coil (see chapter 16).
Stick coil shorted or not in good contact	Reinstall or inspect stick coil (see chapter 16).
Spark plug incorrect	Replace it with the correct plug (see chapter 16).
IC igniter in ECU trouble	Inspect (see chapter 16).
Neutral, starter lockout or sidestand switch trouble	Inspect each switch (see chapter 16).
Crankshaft sensor trouble	Inspect (see chapter 16).
Stick coil trouble	Inspect (see chapter 16).
Ignition switch shorted	Inspect and replace (see chapter 16).
Engine stop switch shorted	Inspect and repair or replace (see chapter 2) .
Starter system wiring shorted or open	Inspect and repair or replace (see chapter 16).
Main 30A or ignition fuse blown	Inspect and replace (see chapter 16).
Fuel/air mixture incorrect:	
Air cleaner clogged, poorly sealed or missing	Clean or reinstall (see chapter 3).
Leak from oil filler cap, crankcase breather hose or air cleaner drain hose	Inspect and repair or replace (see chapter 3).
Water or foreign matter in fuel	Change fuel. Inspect and clean fuel system (see chapter 3).
Fuel pressure regulator trouble	Inspect fuel pressure and replace fuel pump (see chapter 3).
Main throttle sensor trouble	Inspect (see chapter 3).
Fuel pressure may be low	Inspect (see chapter 3).
Fuel pump trouble	Inspect (see chapter 3).
Fuel injector trouble	Inspect (see chapter 3).
Inlet air pressure sensor trouble	Inspect (see chapter 3).
Inlet air temperature sensor trouble	Inspect (see chapter 3).
Water temperature sensor trouble	Inspect (see chapter 3).
Crankshaft sensor trouble	Inspect (see chapter 3).
Compression low:	
Spark plug loose	Reinstall (see chapter 16).
Cylinder head not sufficiently tightened down	Tighten (see chapter 5).
Cylinder, piston worn	Inspect and replace (see chapter 5).
Piston ring bad (worn, weak, broken or sticking)	Inspect and replace (see chapter 5).
Piston ring/groove clearance excessive	Inspect and replace (see chapter 5).
Cylinder head gasket damaged	Replace (see chapter 5).
Cylinder head warped	Inspect and replace (see chapter 5).

http://mototh.com

DFI System Troubleshooting Guide

Symptoms or possible Causes	Actions (chapter)
No valve clearance	Adjust (see chapter 2).
Valve guide worn	Inspect and replace (see chapter 5).
Valve spring broken or weak	Inspect and replace (see chapter 5).
Valve not seating properly (valve bent, worn or carbon accumulating on seating surface)	Inspect and repair or replace (see chapter 5).

Poor Running at Low Speed

Symptoms or Possible Causes	Actions (chapter)
Spark weak:	
Battery voltage low	Inspect and charge (see chapter 16).
Spark plug dirty, broken or gap maladjusted	Replace (see chapter 2).
Stick coil trouble	Inspect the stick coil (see chapter 16).
Stick coil shorted or not in good contact	Reinstall or inspect stick coil (see chapter 16).
Spark plug incorrect	Replace it with the correct plug (see chapter 16).
IC igniter in ECU trouble	Inspect (see chapter 16).
Crankshaft sensor trouble	Inspect (see chapter 16).
Stick coil trouble	Inspect (see chapter 16).
Fuel/air mixture incorrect:	
Little fuel in tank	Supply fuel (see Owner's Manual).
Air cleaner clogged, poorly sealed, or missing	Clean element or inspect sealing (see chapter 2, 3).
Air cleaner duct loose	Reinstall (see chapter 3).
Air cleaner O-ring damaged	Replace (see chapter 3).
Fuel tank air vent obstructed	Inspect and repair (see chapter 3).
Throttle body assy loose	Reinstall (see chapter 3).
Throttle body assy O-ring damage	Replace (see chapter 3).
Fuel filter or pump screen clogged	Inspect and replace fuel pump (see chapter 3).
Fuel pressure regulator clogged	Inspect fuel pressure and replace fuel pump (see chapter 3).
Fuel line clogged	Inspect and repair (see chapter 3).
Inlet air pressure sensor trouble	Inspect (see chapter 3).
Inlet air temperature sensor trouble	Inspect (see chapter 3).
Thermostat trouble	Inspect and replace (see chapter 4).
Unstable (rough) idling:	
Fuel injector trouble	Inspect (see chapter 3).
Main throttle sensor trouble	Inspect (see chapter 3).
Crankshaft sensor trouble	Inspect (see chapter 3).
Throttle valves not synchronizing	Inspect (see chapter 2).
Inlet air temperature sensor trouble	Inspect (see chapter 3).
Water temperature sensor trouble	Inspect (see chapter 3).
Fuel pressure too low or too high	Inspect (see chapter 3).
Battery voltage low	Inspect and charge (see chapter 16).
Incorrect idle speed:	
Water temperature sensor trouble	Inspect (see chapter 3).
Main throttle sensor trouble	Inspect (see chapter 3).

http://mototh.com

DFI System Troubleshooting Guide

Symptoms or Possible Causes	Actions (chapter)
Engine stalls easily:	
Fuel pump trouble	Inspect (see chapter 3).
Fuel injector trouble	Inspect (see chapter 3).
Main throttle sensor trouble	Inspect (see chapter 3).
Fuel pressure too low or too high	Inspect (see chapter 3).
Inlet air pressure sensor trouble	Inspect (see chapter 3).
Water temperature sensor trouble	Inspect (see chapter 3).
Inlet air temperature sensor trouble	Inspect (see chapter 3).
Fuel line clogged	Inspect and repair (see chapter 3).
Fuel pressure too low or too high	Inspect (see chapter 3).
Fuel pressure regulator trouble	Inspect fuel pressure and replace fuel pump (see chapter 3).
Crankshaft sensor trouble	Inspect (see chapter 16).
Stick coil trouble	Inspect (see chapter 16).
Compression Low:	
Spark plug loose	Reinstall (see chapter 16).
Cylinder head not sufficiently tightened down	Tighten (see chapter 5).
No valve clearance	Adjust (see chapter 2).
Cylinder, piston worn	Inspect and replace (see chapter 5).
Piston ring bad (worn, weak, broken or sticking)	Inspect and replace (see chapter 5).
Piston ring/groove clearance excessive	Inspect and replace (see chapter 5).
Cylinder head gasket damaged	Replace (see chapter 5).
Cylinder head warped	Inspect and replace (see chapter 5).
Valve guide worn or stem seal damaged	Inspect and replace (see chapter 5).
Valve spring broken or weak	Inspect and replace (see chapter 5).
Valve not seating properly (valve bent, worn or carbon accumulating on seating surface)	Inspect and repair or replace (see chapter 5).
Camshaft cam worn	Inspect and replace (see chapter 5).
Hesitation:	
Too low fuel pressure	Inspect (see chapter 3).
Clogged fuel line	Inspect and repair (see chapter 3).
Cracked or obstructed inlet air pressure sensor hose	Inspect and repair or replace (see chapter 3).
Fuel pump trouble	Inspect (see chapter 3).
Fuel injector trouble	Inspect (see chapter 3).
Inlet air temperature sensor trouble	Inspect (see chapter 3).
Main throttle sensor trouble	Inspect (see chapter 3).
Subthrottle sensor trouble	Inspect (see chapter 3).
Subthrottle valve actuator trouble	Inspect (see chapter 3).
Water temperature sensor trouble	Inspect (see chapter 3).
Inlet air pressure sensor trouble	Inspect (see chapter 3).
Loose injector connectors	Remedy (see chapter 3).
Crankshaft sensor trouble	Inspect and repair or replace (see chapter 16).
Stick coil trouble	Inspect and repair or replace (see chapter 16).

http://mototh.com

DFI System Troubleshooting Guide

Symptoms or Possible Causes	Actions (chapter)
Loose terminal of battery (–) lead or engine ground lead	Inspect and repair (see chapter 16).
Delay of ignition timing	Inspect crankshaft sensor and IC igniter in ECU (see chapter 16).
Poor acceleration:	
Too low fuel pressure	Inspect (see chapter 3).
Water or foreign matter in fuel	Change fuel. Inspect and clean fuel system (see chapter 3).
Clogged fuel filter or pump screen	Inspect and replace fuel pump (see chapter 3).
Fuel pump trouble	Inspect (see chapter 3).
Fuel injector trouble	Inspect (see chapter 3).
Inlet air temperature sensor trouble	Inspect (see chapter 3).
Water temperature sensor trouble	Inspect (see chapter 3).
Subthrottle sensor trouble	Inspect (see chapter 3).
Subthrottle valve actuator trouble	Inspect (see chapter 3).
Stick coil trouble	Inspect and replace (see chapter 16).
Engine oil level to high	Repair (see chapter 7).
Spark plug dirty, broken or gap maladjusted	Replace (see chapter 2).
Stumble:	
Too low fuel pressure	Inspect (see chapter 3).
Fuel injector trouble	Inspect (see chapter 3).
Main throttle sensor malfunction	Inspect (see chapter 3).
Subthrottle sensor trouble	Inspect (see chapter 3).
Subthrottle valve actuator trouble	Inspect (see chapter 3).
Water temperature sensor trouble	Inspect (see chapter 3).
Inlet air pressure sensor trouble	Inspect (see chapter 3).
Surge:	
Unstable fuel pressure	Fuel pressure regulator trouble (Inspect and replace fuel pump) or kinked fuel line (Inspect and repair fuel line) (see chapter 3).
Fuel injector trouble	Inspect (see chapter 3).
Water temperature sensor trouble	Inspect (see chapter 3).
Backfiring when deceleration:	
Spark plug dirty, broken or gap maladjusted	Replace (see chapter 2).
Too low fuel pressure	Inspect (see chapter 3).
Fuel pump trouble	Inspect (see chapter 3).
Main throttle sensor trouble	Inspect (see chapter 3).
Inlet air temperature sensor trouble	Inspect (see chapter 3).
Water temperature sensor trouble	Inspect (see chapter 3).
Inlet air pressure sensor trouble	Inspect (see chapter 3).
Air switching valve broken	Inspect and replace (see chapter 5).
Air suction valve trouble	Inspect and replace (see chapter 5).
After fire:	
Crankshaft sensor trouble	Inspect (see chapter 16).
Spark plug burned or gap maladjusted	Replace (see chapter 2).

http://mototh.com

DFI System Troubleshooting Guide

Symptoms or Possible Causes	Actions (chapter)
Inlet air temperature sensor trouble	Inspect (see chapter 3).
Water temperature sensor trouble	Inspect (see chapter 3).
Inlet air pressure sensor trouble	Inspect (see chapter 3).
Fuel injector trouble	Inspect (see chapter 3).
Run-on (dieseling):	
Ignition switch trouble	Inspect and replace (see chapter 16).
Engine stop switch trouble	Inspect and repair or replace (see chapter 2).
Fuel injector trouble	Inspect (see chapter 3).
Loose terminal of battery (–) cable or ECU ground lead	Inspect and repair (see chapter 16).
Carbon accumulating on valve seating surface	Repair (see chapter 5).
Engine overheating	(see Overheating of Troubleshooting Guide, see chapter 17)
Other:	
Engine oil viscosity too high	Change (see chapter 2).
Drive train trouble	Inspect drive chain (see chapter 2) and sprocket (see chapter 11).
Brake dragging	Inspect caliper fluid seal damage or clogging of master cylinder relief and supply ports (see chapter 12).
Clutch slipping	Inspect friction plates for wear (see chapter 6).
Engine overheating	(see Overheating of Troubleshooting Guide, see chapter 17)
Air switching valve trouble	Inspect and replace (see chapter 5).
Air suction valve trouble	Inspect and replace (see chapter 5).
Intermittent any DFI fault and its recovery	Check that DFI connectors are clean and tight, and examine wires for signs of burning or fraying (see chapter 3).

Poor Running or No Power at High Speed:

Symptoms or Possible Causes	Actions (chapter)
Firing incorrect:	
Spark plug dirty, broken or maladjusted	Replace (see chapter 2).
Stick coil trouble	Inspect stick coil (see chapter 16).
Stick coil shorted or not in good contact	Reinstall or inspect stick coil (see chapter 16).
Spark plug incorrect	Replace it with the correct plug (see chapter 16).
IC igniter in ECU trouble	Inspect (see chapter 16).
Crankshaft sensor trouble	Inspect (see chapter 16).
Stick coil trouble	Inspect (see chapter 16).
Fuel/air mixture incorrect:	
Air cleaner clogged, poorly sealed, or missing	Clean element or inspect sealing (see chapter 3).
Air cleaner duct loose	Reinstall (see chapter 3).
Air cleaner O-ring damaged	Replace (see chapter 3).
Water or foreign matter in fuel	Change fuel. Inspect and clean fuel system (see chapter 3).
Throttle body assy loose	Reinstall (see chapter 3).

http://mototh.com

DFI System Troubleshooting Guide

Symptoms or Possible Causes	Actions (chapter)
Throttle body assy O-ring damaged	Replace (see chapter 3).
Fuel tank air vent obstructed	Inspect and repair (see chapter 3).
Fuel line clogged	Inspect and repair (see chapter 3).
Fuel pump operates intermittently and often DFI fuse blows.	Pump bearings may wear. Replace the pump (see chapter 3).
Fuel pump trouble	Inspect (see chapter 3).
Inlet air temperature sensor trouble	Inspect (see chapter 3).
Main throttle sensor trouble	Inspect (see chapter 3).
Inlet air pressure sensor trouble	Inspect (see chapter 3).
Cracked or obstructed inlet air pressure sensor hose	Inspect and repair or replace (see chapter 3).
Injector clogged	Visually inspect and replace (see chapter 3).
Compression low:	
Spark plug loose	Reinstall (see chapter 16).
Cylinder head not sufficiently tightened down	Tighten (see chapter 5).
No valve clearance	Adjust (see chapter 2).
Cylinder, piston worn	Inspect and replace (see chapter 5).
Piston ring bad (worn, weak, broken or sticking)	Inspect and replace (see chapter 5).
Piston ring/groove clearance excessive	Inspect and replace (see chapter 5).
Cylinder head gasket damaged	Replace (see chapter 5) .
Cylinder head warped	Inspect and replace (see chapter 5).
Valve spring broken or weak	Inspect and replace (see chapter 5).
Valve not seating properly (valve bent , worn or carbon accumulating on the seating surface)	Inspect and repair or replace (see chapter 5).
Knocking:	
Carbon built up in combustion chamber	Repair (see chapter 5).
Fuel poor quality or incorrect (Use the gasoline recommended in the Owner's Manual)	Change fuel (see chapter 3).
Spark plug incorrect	Replace it with the correct plug (see chapter 16).
Stick coil trouble	Inspect (see chapter 16).
IC igniter in ECU trouble	Inspect (see chapter 16).
Inlet air temperature sensor trouble	Inspect (see chapter 3).
Miscellaneous:	
Subthrottle sensor trouble	Inspect (see chapter 3).
Subthrottle valve actuator trouble	Inspect (see chapter 3).
Speed sensor trouble	Inspect (see chapter 3).
Throttle valves won't fully open	Inspect throttle cable and lever linkage (see chapter 3).
Brake dragging	Inspect caliper fluid seal damage or clogging of master cylinder relief and supply ports (see chapter 12).
Clutch slipping	Inspect friction plates for wear (see chapter 6).
Engine overheating - Water temperature sensor, crankshaft sensor or speed sensor trouble	(see Overheating of Troubleshooting Guide in chapter 17).
Engine oil level too high	Repair (see chapter 7).
Engine oil viscosity too high	Change (see chapter 2).

http://mototh.com

DFI System Troubleshooting Guide

Symptoms or Possible Causes	Actions (chapter)
Drive train trouble	Inspect drive chain (see chapter 2) and sprockets (see chapter 11).
Camshaft cam worn	Inspect and replace (see chapter 5).
Air switching valve trouble	Inspect and replace (see chapter 5).
Air suction valve trouble	Inspect and replace (see chapter 5).
Catalytic converters melt down due to muffler overheating	Replace muffler (see chapter 5).
Exhaust Smokes Excessively:	
(White smokes)	
Piston oil ring worn	Inspect and replace (see chapter 5).
Cylinder worn	Inspect and replace (see chapter 5).
Valve oil seal damaged	Replace (see chapter 5).
Valve guide worn	Replace the guide (see chapter 5).
Engine oil level too high	Repair (see chapter 7).
(Black smoke)	
Air cleaner clogged	Clean (see chapter 3).
Too high fuel pressure	Inspect (see chapter 3) .
Injector stuck open	Inspect (see chapter 3).
Water temperature sensor trouble	Inspect and replace (see chapter 3).
Inlet air temperature sensor trouble	Inspect and replace (see chapter 3).
(Brown smoke)	
Air cleaner duct loose	Reinstall (see chapter 3).
Air cleaner O-ring damaged	Replace (see chapter 3).
Too low fuel pressure	Inspect fuel line and fuel pump (see chapter 3).
Water temperature sensor trouble	Inspect and replace (see chapter 3).
Inlet air temperature sensor trouble	Inspect and replace (see chapter 3)

http://mototh.com

Self-Diagnosis

Self-diagnosis Outline

Self-diagnosis Outline

The self-diagnosis system has three modes and can be switched to another mode by grounding the self-diagnosis terminal.

User Mode

The ECU notifies the rider of troubles in DFI system and ignition system by lighting the FI indicator when DFI system and ignition system parts are faulty, and initiates fail-safe function. In case of serious troubles, the ECU stops the injection/ignition/starter motor operation.

Dealer Mode 1

The FI indicator light (LED) emits service code(s) to show the problem(s) which the DFI system, and ignition system has at the moment of diagnosis.

Dealer Mode 2

The FI indicator light (LED) emits service code(s) to show the problem(s) which the DFI system, and ignition system had in the past.

Self-diagnosis Procedures

Self-diagnosis Procedures

○When a problem occurs with the DFI system and ignition system, the DFI indicator light (LED) [A] goes on.

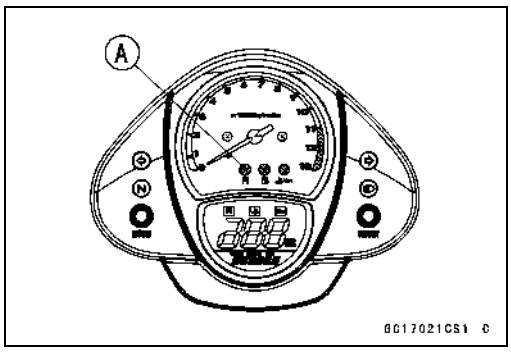

NOTE

○*Use a fully charged battery when conducting self-diagnosis. Otherwise, the light (LED) blinks very slowly or doesn't blink.*

○*Keep the self-diagnosis terminal grounded during self -diagnosis, with an auxiliary lead.*

- Remove the seat (see Seat Removal in the Frame chapter).
- Ground [A] the self-diagnosis terminal [B] (Orange/Black lead) to the battery (–) terminal [C] or battery (–) lead connector, using a wire.

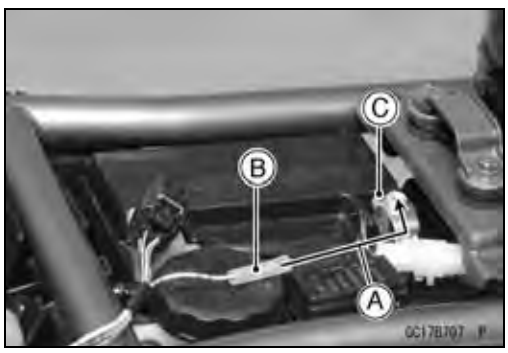

- Turn on the ignition switch.
- Connect an auxiliary lead [E] to the self-diagnosis terminal [G] for grounding.
- To enter the self-diagnosis dealer mode 1, ground [A] the self-diagnosis indicator terminal to the battery (–) terminal for more than 2 seconds [C], and then keep it grounded continuously [D].

○Count the blinks of the light (LED) to read the service code. Keep the auxiliary lead ground until you finish reading the service code.

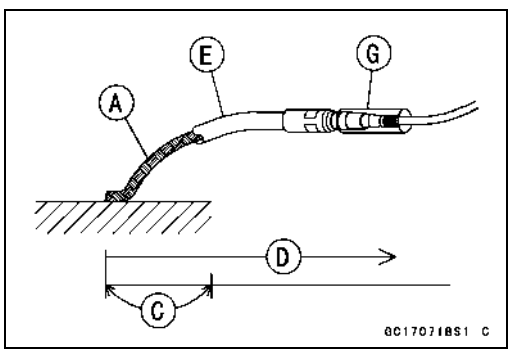

Self-Diagnosis

- To enter the self-diagnosis dealer mode 2, open [B] and ground [A] the lead more than five times [F] within 2 seconds [C] after the lead is first grounded, and then keep it grounded continuously [D] for more than 2 seconds.

○Count the blinks of the light (LED) to read the service code. Keep the auxiliary lead ground until you finish reading the service code.
Auxiliary Lead [E]
Self-diagnosis Terminal [G]

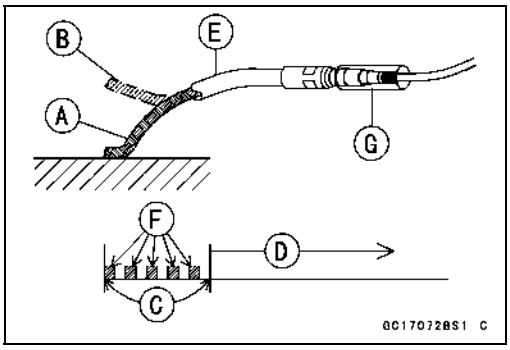

NOTE

○*To enter the dealer mode 2 from the dealer mode 1, turn off the ignition switch once.*

Service Code Clearing Procedures

Service Code Clearing Procedures

- Enter the self-diagnosis dealer mode 2 (see Self -diagnosis Procedures in this chapter).

NOTE

○*Make sure to keep the grounding until the following opening and grounding starts.*

- Pull the clutch lever in more than 5 seconds, and then release it.
- Repeat opening [B] and grounding [A] the lead (self-diagnosis terminal) more than five times [F] within 2 seconds [C] after the lead is grounded, and then keep it grounded continuously [D] for more than 2 seconds.
Auxiliary Lead [E]
Self-diagnosis Terminal [G]

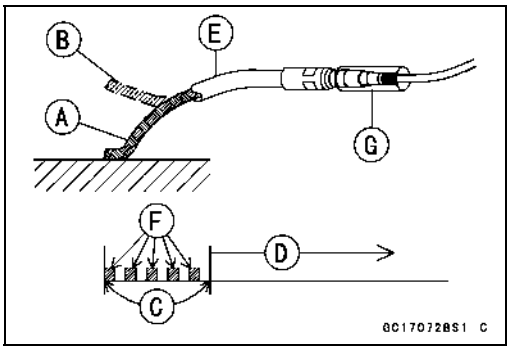

http://mototh.com

Self-Diagnosis

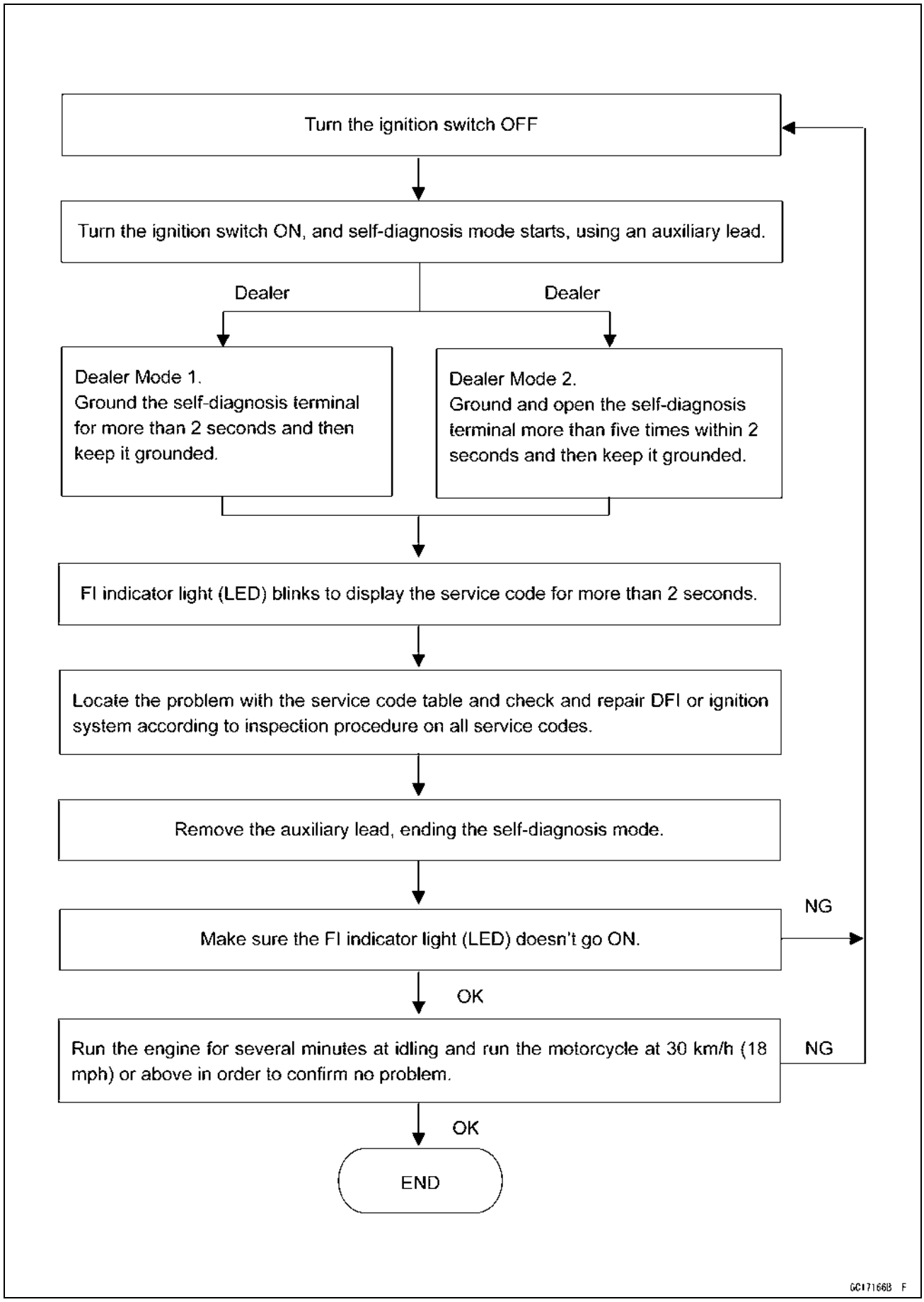

http://mototh.com

Self-Diagnosis

How to Read Service Codes

How to Read Service Codes

○Service codes are shown by a series of long and short blinks of the FI indicator light (LED) as shown below.

○Read 10th digit and unit digit as the FI indicator light (LED) blinks.

○When there are a number of problems, all the service codes can be stored and the display will begin starting from the lowest number service code in the numerical order. Then after completing all codes, the display is repeated until the self-diagnosis indicator terminal is open.

○If there is no problem, no code and unlight.

○For example, if two problems occurred in the order of 21, 12, the service codes are displayed from the lowest number in the order listed.

(12 → 21) → (12 → 21) → · · · (repeated)

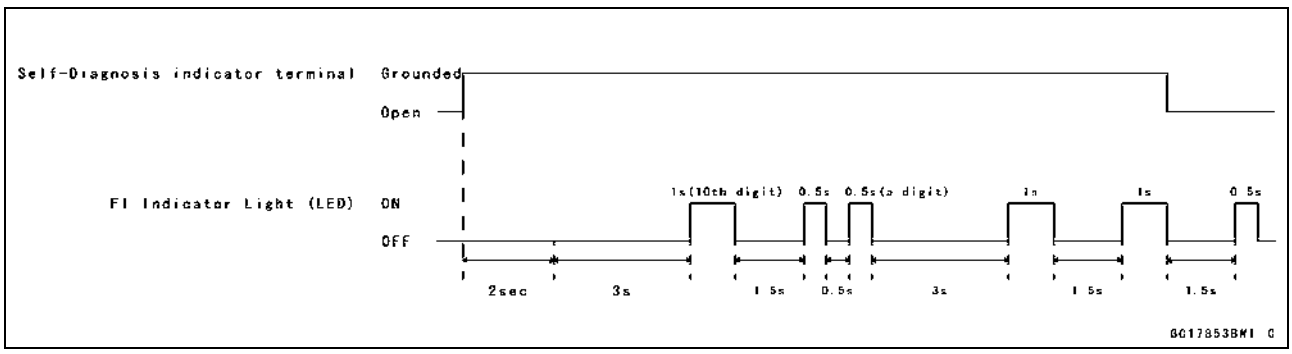

○If the problem is with the following parts, the ECU cannot memorize these problems, the FI indicator light (LED) doesn't go on, and no service codes can be displayed.

FI Indicator Light (LED)
Fuel Pump
Fuel Pump Relay
DFI Main Relay
ECU Power Source Wiring and Ground Wiring (see ECU Inspection)
Fuel Injectors

How to Erase Service Codes

How to Erase Service Codes

○Even if the ignition switch is turned OFF, the battery or the ECU are disconnected or the problem is solved, all service codes remain in the ECU.

○Refer to the Service Code Clearing Procedure for the service code erasure.

http://mototh.com

Self-Diagnosis

Service Code Table

Service Code Table

Service Code	FI Indicator LED Light	Problems
11	ON OFF	Main throttle sensor malfunction, wiring open or short
12		Inlet air pressure sensor malfunction, wiring open or short
13		Inlet air temperature sensor malfunction, wiring open or short
14		Water temperature sensor malfunction, wiring open or short
21		Crankshaft sensor malfunction, wiring open or short
24 and **25**	+	Speed sensor malfunction, wiring open or short First 24 is displayed and then 25, repeatedly
31		Vehicle-down sensor, malfunction, wiring open or short
32		Subthrottle sensor malfunction, wiring open or short
33		Oxygen sensor inactivation, wiring open or short (Europe Model)
51		Stick (Ignition) coil #1 malfunction, wiring open or short
52		Stick (Ignition) coil #2 malfunction, wiring open or short
56		Radiator fan relay malfunction, wiring open or short
62		Subthrottle valve actuator malfunction, wiring open or short
64		Air switching valve malfunction, wiring open or short
67		Oxygen sensor heater malfunction, wiring open or short (Europe Model)
94		Oxygen sensor malfunction, wiring open or short (Europe Model)

Notes:

○The ECU may be involved in these problems. If all the parts and circuits checked out good, be sure to check the ECU for ground and power supply. If the ground and power supply are checked good, replace the ECU.

○When no service code is displayed, the electrical parts of the DFI system has no fault, and the mechanical parts of the DFI system and the engine are suspect.

http://mototh.com

Self-Diagnosis

Backups

Backups

○The ECU takes the following measures to prevent engine damage when the DFI or the ignition system parts have troubles.

Service Codes	Parts	Output Signal Usable Range or Criteria	Backups by ECU
11	Main Throttle Sensor	Main Throttle Sensor Output Voltage 0.20 ~ 4.8 V	If the main throttle sensor system fails (the signal is out of the usable range, wiring short or open), the ECU locks ignition timing into the ignition timing at closed throttle position and sets the DFI in the D-J method. Also, the main throttle sensor system and inlet air pressure fails, the ECU locks ignition timing into the ignition timing at closed throttle position and sets the DFI in the α-N method.
12	Inlet Air Pressure Sensor	Inlet Air Pressure (absolute) Pv = 150 mmHg ~ 800 mmHg	If the inlet air pressure sensor system fails (the signal Pv is out of the usable range, wiring short or open), the ECU sets the DFI in the α - N method.
13	Inlet Air Temperature Sensor	Inlet Air Temperature Ta = –30°C ~ +120°C	If the inlet air temperature sensor fails (the signal is out of the usable range, wiring short or open), the ECU sets Ta at 40°C.
14	Water Temperature Sensor	Water Temperature Tw = –30C° ~ +120°C	If the water temperature sensor system fails (the signal is out of the usable range, wiring short or open), the ECU sets Tw at 80°C.
21	Crankshaft Sensor	Crankshaft sensor must send 22 signals (output signal) to the ECU at the one cranking.	If crankshaft sensor generates other than 22 signals, the engine stops by itself.
24 and **25**	Speed Sensor	Speed sensor must send 4 signals (output signal) to the ECU at the one rotation of the engine sprocket. The gear position is decided by the signal of the speed sensor.	If the speed sensor system fails (no signal, wiring short or open), the speedometer shows 0, and the ECU sets the top (6) gear position.
31	Vehicle-down Sensor	Vehicle-down Sensor Output Voltage (signal) Vd = 0.65 V ~ 4.45 V	If the vehicle-down sensor system has failures (the output voltage Vd is more than usable range, wiring open), the ECU shuts off the fuel pump, the fuel injectors and the ignition system.
32	Subthrottle Sensor	Subthrottle Sensor Output Voltage 0.15 ~ 4.85 V	If the subthrottle sensor system fails (the signal is out of the usable range, wiring short or open), the actuator locks sub throttle valve at full open position.
33	Oxygen Sensor (Europe Model)	The oxygen sensor is active and sensor must send signals (output voltage) continuously to the ECU.	If the oxygen sensor is not activated, the ECU stops oxygen sensor feedback mode.

http://mototh.com

Self-Diagnosis

Service Codes	Parts	Output Signal Usable Range or Criteria	Backups by ECU
51	Stick Coil #1 (Ignition Coil)*	The stick coil primary winding must send signals (output voltage) continuously to the ECU.	If the ignition primary winding #1 has failures (no signal, wiring short or open), the ECU shuts off the injector #1 to stop fuel to the cylinder #1, though the engine keeps running.
52	Stick Coil #2 (Ignition Coil)*	The stick coil primary winding must send signals (output voltage) continuously to the ECU.	If the ignition primary winding #2 has failures (no signal, wiring short or open), the ECU shuts off the injector #2 to stop fuel to the cylinder #2, though the engine keeps running.
62	Subthrottle Valve Actuator	The actuator operates open and close of the subthrottle valve by the pulse signal from the ECU.	If the subthrottle valve actuator fails (the signal is out of the usable range, wiring short or open), the ECU stops the current to the actuator.
67	Oxygen Sensor (Europe Model)	The oxygen sensor heater raise temperature of the sensor for its earlier activation. 12V-6.6W, 0.55A	If the oxygen sensor heater fails (wiring short or open), the ECU stops the current to the heater.
94	Oxygen Sensor (Europe Model)	The oxygen sensor must send signals (output voltage) continuously to the EUC	If the oxygen sensor output voltage is incorrect, the ECU stops oxygen sensor feed back mode.

Note:

(1) D-J Method and α - N Method: When the engine load is light like at idling or low speed, the ECU determines the injection quantity by calculating from the throttle vacuum (inlet air pressure sensor output voltage) and engine speed (crankshaft sensor output voltage). This method is called D-J method (low-speed mode). As the engine speed increases, and the engine load turns middle to heavy, the ECU determines the injection quantity by calculating from the throttle opening (throttle sensor output voltage) and the engine speed. This method is called α - N method (high-speed mode).

(*) This depends on the number of stopped cylinders.

http://mototh.com

Main Throttle Sensor (Service Code 11)

Main Throttle Sensor Removal/Adjustment

CAUTION

Do not remove or adjust the main throttle sensor [A] since it has been adjusted and set with precision at the factory.
Never drop the sensor, especially on a hard surface. Such a shock to the sensor can damage it.

Input Voltage Inspection

NOTE

○*Be sure the battery is fully charged.*

- Turn the ignition switch OFF.
- Disconnect the main throttle sensor connector and connect the harness adapter [A] between these connectors.
- Connect a digital meter to the harness adapter lead.

Special Tool - Throttle Sensor Harness Adapter: 57001 -1538

- Measure the sensor input voltage with the engine stopped and with the connector joined.
- Turn the ignition switch ON.

Main Throttle Sensor Input Voltage
Connections to Adapter
Meter (+) → R (sensor BL) lead
Meter (–) → BK (sensor BR/BK) lead
Standard: 4.75 ~ 5.25 V DC

- Turn the ignition switch OFF.

★If the input voltage is normal, check the sensor output voltage.
★If the input voltage is less than the standard, remove the ECU and check the wiring between these connectors.
○Disconnect the ECU and sensor connectors.

Wiring Connection
ECU Connector [A] ←→ Throttle Sensor Connector [B]
BL lead (ECU terminal 10)
BR/BK lead (ECU terminal 28)

★If the wiring is good, check the ECU for its ground and power supply (see ECU Power Supply Inspection).

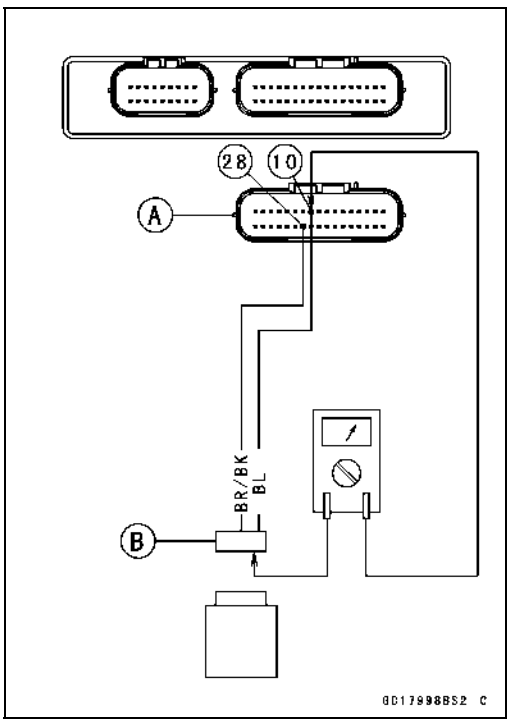

Main Throttle Sensor (Service Code 11)

Output Voltage Inspection

- Measure the output voltage at the main throttle sensor in the same way as input voltage inspection, Note the following.
- Disconnect the main throttle sensor connector and connect the harness adapter [A] between these connectors.

Special Tool - Throttle Sensor Harness Adapter: 57001 -1538

- Start the engine and warm it up thoroughly.
- Check idle speed to ensure the throttle opening is correct.

Idle Speed
Standard: 1 300 ±50 r/min (rpm)

★If the idle speed is out of the specified range, adjust it (see Idle Speed Inspection in the Periodic Maintenance chapter).

- Turn off the ignition switch.
- Measure the output voltage of the sensor with the engine stopped, and with the connector joined.
- Turn the ignition switch ON.

Main Throttle Sensor Output Voltage
Connections to Adapter
Meter (+) → R (sensor Y/W) lead
Meter (–) → W (sensor BR/BK) lead
Standard:
1.073 ~ 1.077 V DC (at idle throttle opening)
4.29 ~ 4.49 V DC (at full throttle opening)

★If the output voltage is out of the standard, inspect the main throttle sensor resistance.

★If the output voltage is normal, check the wiring for continuity.

Wiring Connection
ECU Connector [A] ←→ Throttle Sensor Connector [B]
Y/W lead (ECU terminal 7)
BR/BK lead (ECU terminal 28)

★If the wiring is good, check the ECU for its ground and power supply (see ECU Power Supply Inspection).

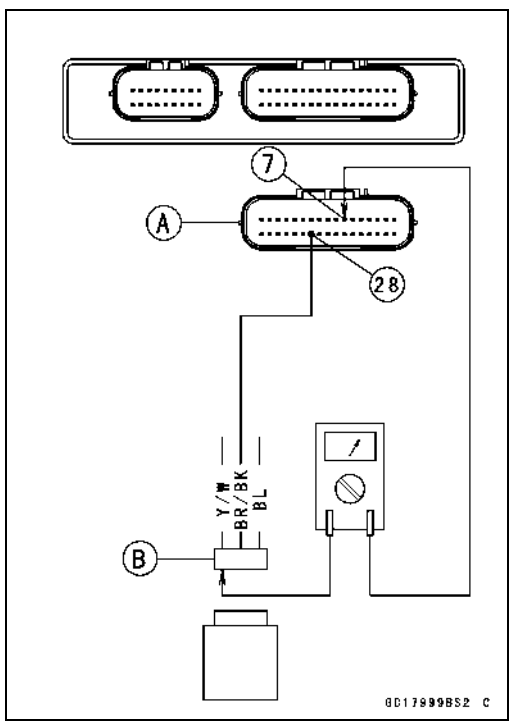

Main Throttle Sensor (Service Code 11)

Resistance Inspection

- Turn the ignition switch OFF.
- Disconnect the main throttle sensor connector.
- Connect a digital meter [A] to the main throttle sensor connector [B].
- Measure the main throttle sensor resistance.

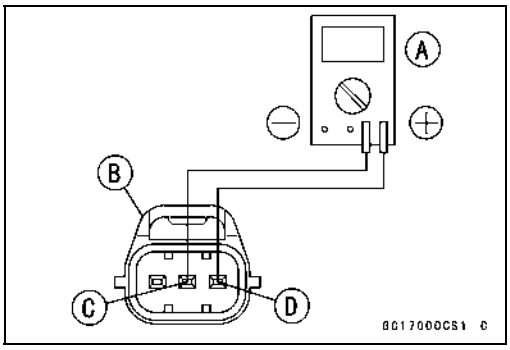

Main Throttle Sensor Resistance

Connections: **BL lead [C] ←→ BR/BK lead [D]**

Standard: **4 ~ 6 kΩ**

★If the reading is out of the range, replace the throttle body assy.

★If the reading is within the range, but the problem still exists, replace the ECU (see ECU Removal).

Main Throttle Sensor Circuit

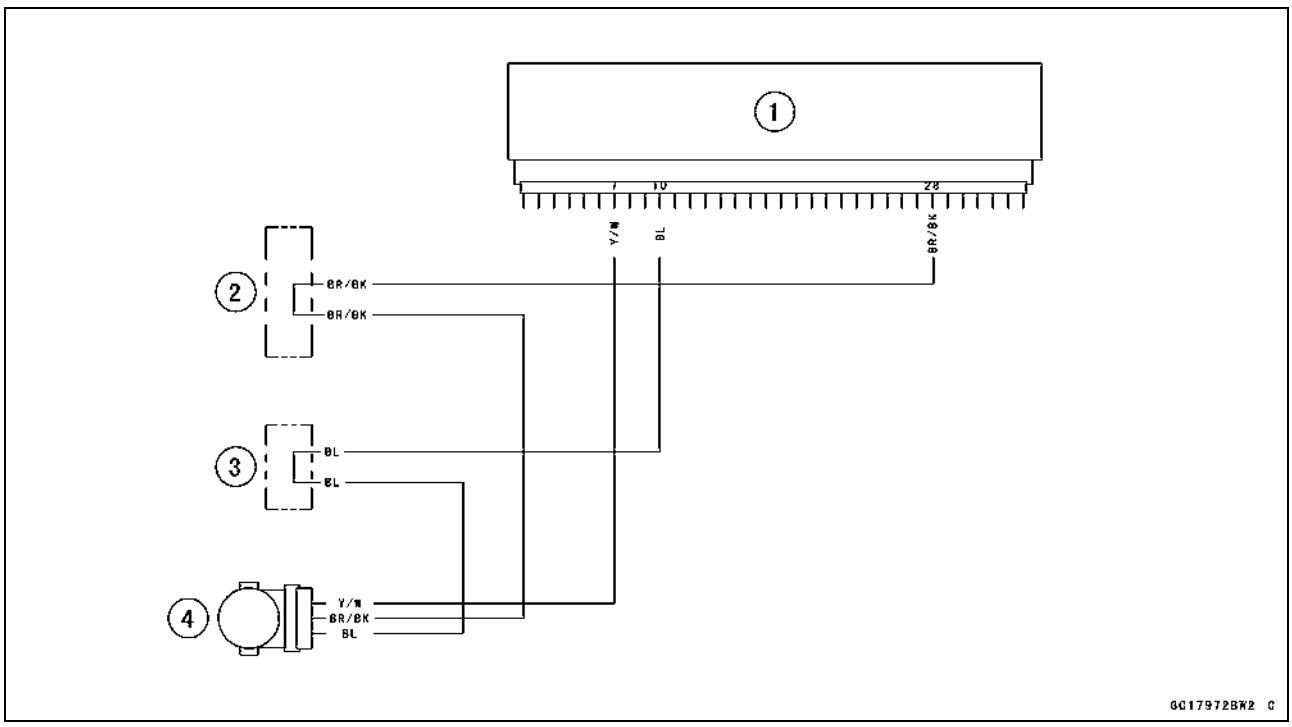

1. ECU
2. Water-proof Joint E
3. Water-proof Joint D
4. Main Throttle Sensor

Inlet Air Pressure Sensor (Service Code 12)

CAUTION
Never drop the sensor, especially on a hard surface. Such a shock to the part can damage it.

Removal

- Remove:
  Left Center Fairing (see Center Fairing Removal in the Frame chapter)
- Disconnect the inlet air pressure sensor connector [A] and the vacuum hose [B].
- Pull up the inlet air pressure sensor [C].

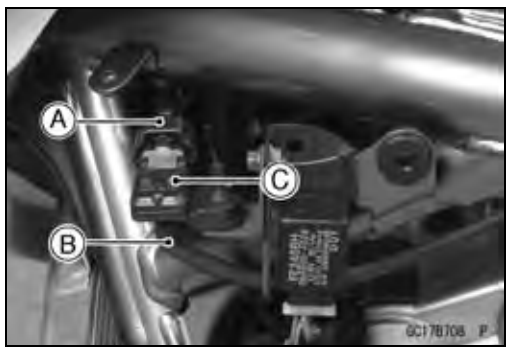

Installation

- Install:
  Vacuum Hose
  Inlet Air Pressure Sensor

Input Voltage Inspection

NOTE

○*Be sure the battery is fully charged.*
○*The inspection is the same as "Input Voltage Inspection" of the main throttle sensor.*

- Turn the ignition switch OFF.
- Remove the ECU (see ECU Removal). Do not disconnect the ECU connectors.
- Connect a digital voltmeter [A] to the connector [B] with the needle adapter set.

  Special Tool - Needle Adapter Set: 57001-1457

- Measure the input voltage with the engine stopped, and with the connectors joined.
- Turn the ignition switch ON.

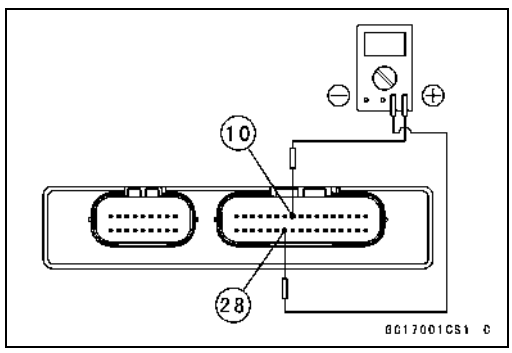

Inlet Air Pressure Sensor Input Voltage
Connections to ECU
Meter (+) → BL lead (terminal 10)
Meter (–) → BR/BK lead (terminal 28)

Standard: 4.75 ~ 5.25 V DC

★If the reading is within the standard range, check the sensor output voltage.
★If the reading is less than the standard range, remove the ECU and check the wiring between these connectors.
★If the wiring is good, check the ECU for its ground and power supply (see ECU Power Supply Inspection).

http://mototh.com

Inlet Air Pressure Sensor (Service Code 12)

Output Voltage Inspection

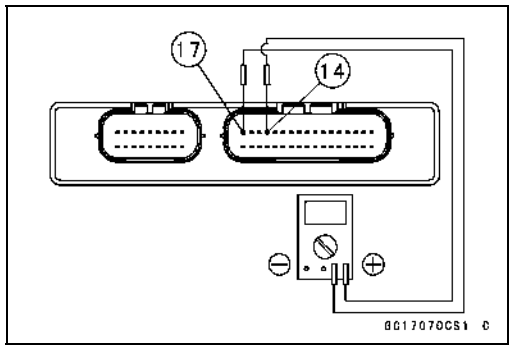

NOTE

○*The output voltage changes according to the local atmospheric pressure.*

● Measure the output voltage at the ECU in the same way as input voltage inspection. Note the following.

Inlet Air Pressure Sensor Output Voltage
Connections to ECU
Meter (+) → Y/BL lead (terminal 17)
Meter (–) → BR/BK lead (terminal 14)

Usable Range: 3.74 ~ 4.26 V DC at the standard atmospheric pressure (101.32 kPa, 76 cmHg abs.)

● Turn the ignition switch OFF.
★If the output voltage is within the usable range, check the ECU for its ground, and power supply (see ECU Power Supply Inspection).
★If the output voltage is out of the usable range, remove the fuel tank and check the wiring. If the output voltage is 4.8 V, the ECU is normal.

★If the wiring is good, check the sensor for various vacuum.
★If the output voltage for various vacuum is normal, check the ECU for its ground, and power supply (see ECU Power Supply Inspection).
● Remove the inlet air pressure sensor [A] and disconnect the vacuum hose from the sensor.
○Do not disconnect the sensor connector.
● Connect an auxiliary hose [B] to the inlet air pressure sensor.
● Temporarily install the inlet air pressure sensor.
○Connect a commercially available digital meter [C], vacuum gauge [D], the fork oil level gauge [E] and the harness adapter to the inlet air pressure sensor.

Special Tools - Fork Oil Level Gauge: 57001-1290
Sensor Harness Adapter: 57001-1561

Inlet Air Pressure Sensor Output Voltage
Connection to Adapter
Meter (+) → G (sensor Y/BL) lead
Meter (–) → BK (sensor BR/BK) lead

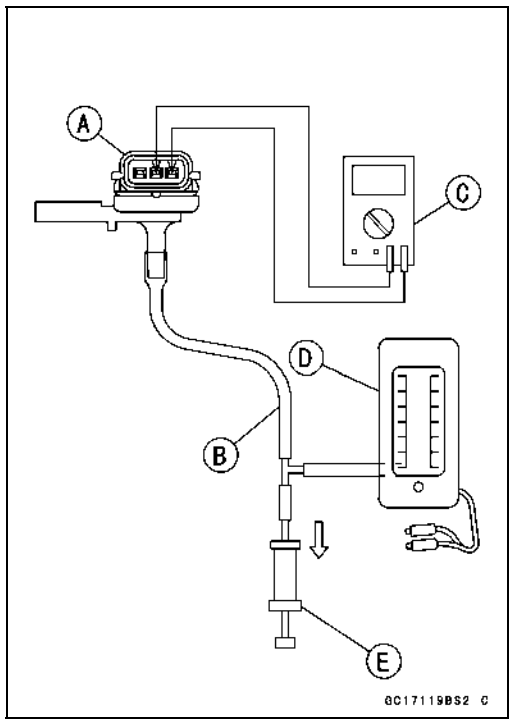

○Turn the ignition switch ON.
○Measure the inlet air pressure sensor output voltage from various vacuum readings, while pulling the handle of the fork oil level gauge.
○Check the inlet air pressure sensor output voltage, using the following formula and chart.

Suppose:
Pg: Vacuum Pressure (gauge) to Sensor
Pl: Local Atmospheric Pressure (absolute) measured by a barometer
Pv: Vacuum Pressure (absolute) to Sensor
Vv: Sensor Output Voltage (v)

Inlet Air Pressure Sensor (Service Code 12)

then
Pv = Pl – Pg

For example, suppose the following data is obtained:
Pg = 8 cmHg (Vacuum gauge reading)
Pl = 70 cmHg (Varometer reading)
Vv = 3.2 V (Digital volt meter reading)

then
Pv = 70 – 8 = 62 cmHg (Abs)

Plot this Pv (62 cmHg) at a point [1] on the chart and draw a vertical line through the point. Then, you can get the usable range [2] of the sensor output voltage.
Usable range = 3.04 ~ 3.49 V

Plot Vv (3.2 V) on the vertical line. → Point [3].
Results: In the chart, Vv is within the usable range and the sensor is normal.
Pv = 24 ~ 55 cmHg

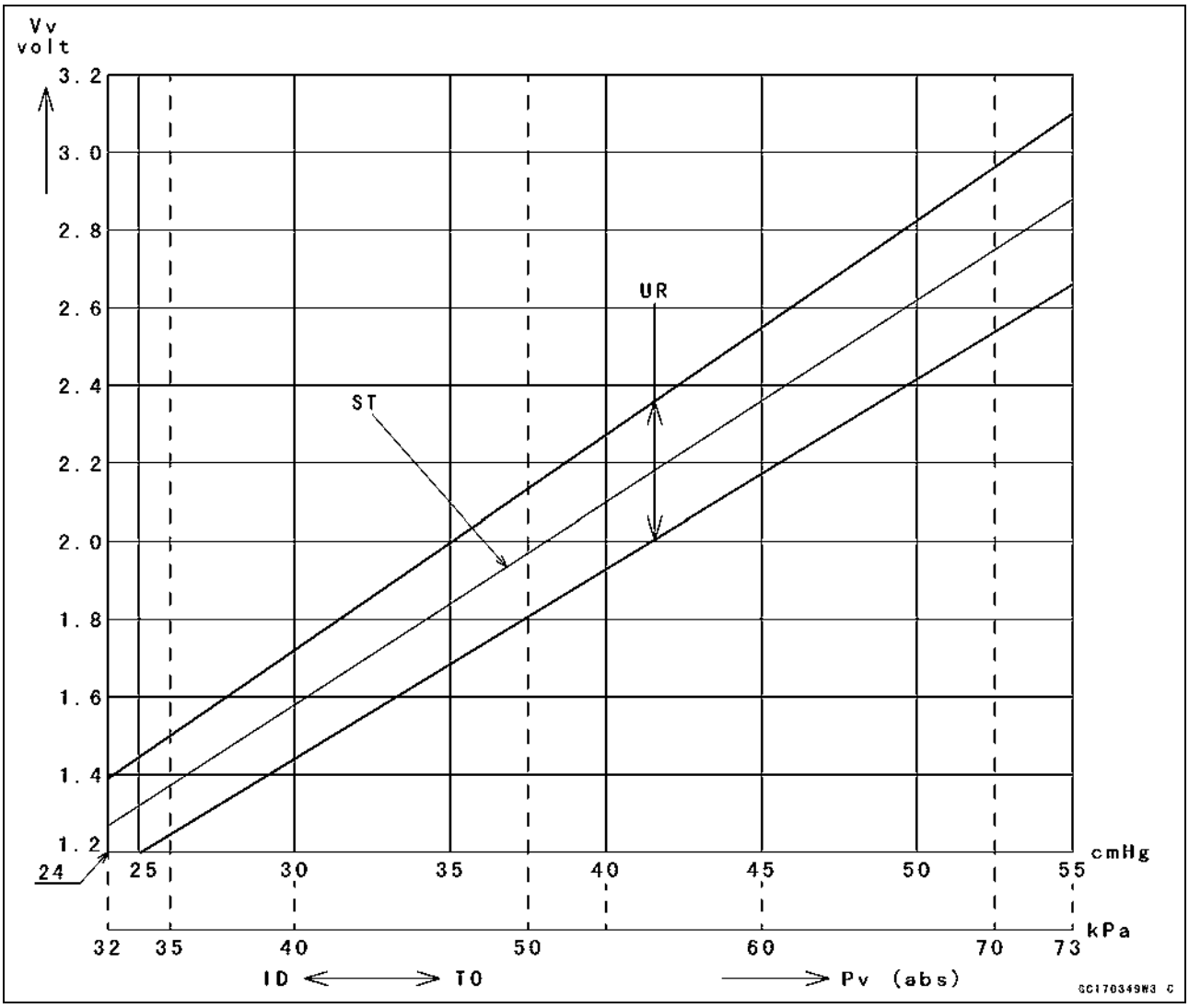

Inlet Air Pressure Sensor (Service Code 12)

Pv = 55 ~ 86 cmHg

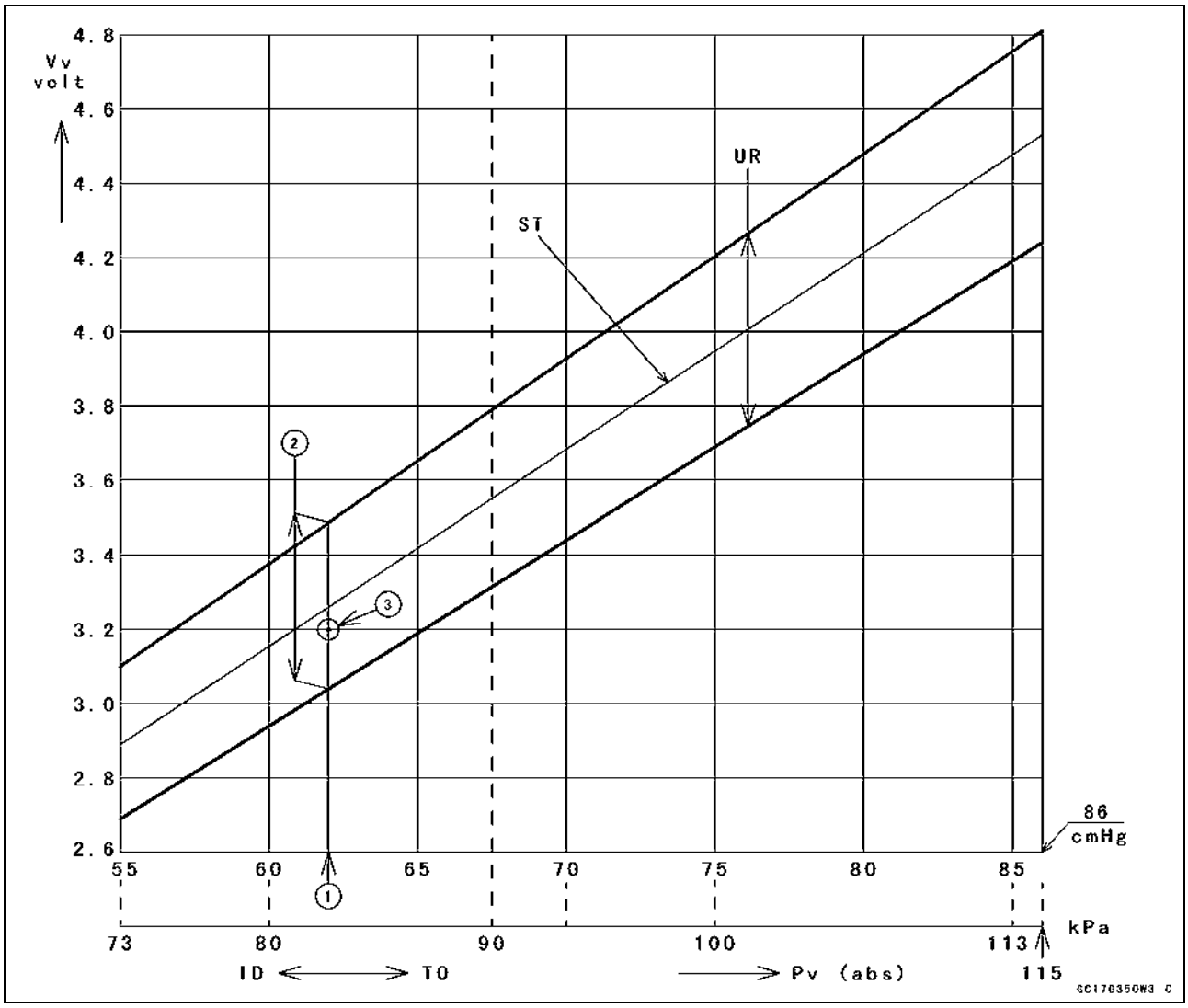

Vv: Inlet Air Pressure Sensor Output Voltage (V) (Digital Meter Reading)
Pv: Throttle Vacuum Pressure (Absolute)
Ps: Standard Atmospheric Pressure (Absolute)
ID: Idling
TO: Throttle Full Open
ST: Standard of Sensor Output Voltage (v)
UR: Usable Range of Sensor Output Voltage (v)

Inlet Air Pressure Sensor (Service Code 12)

Inlet Air Pressure Sensor Circuit

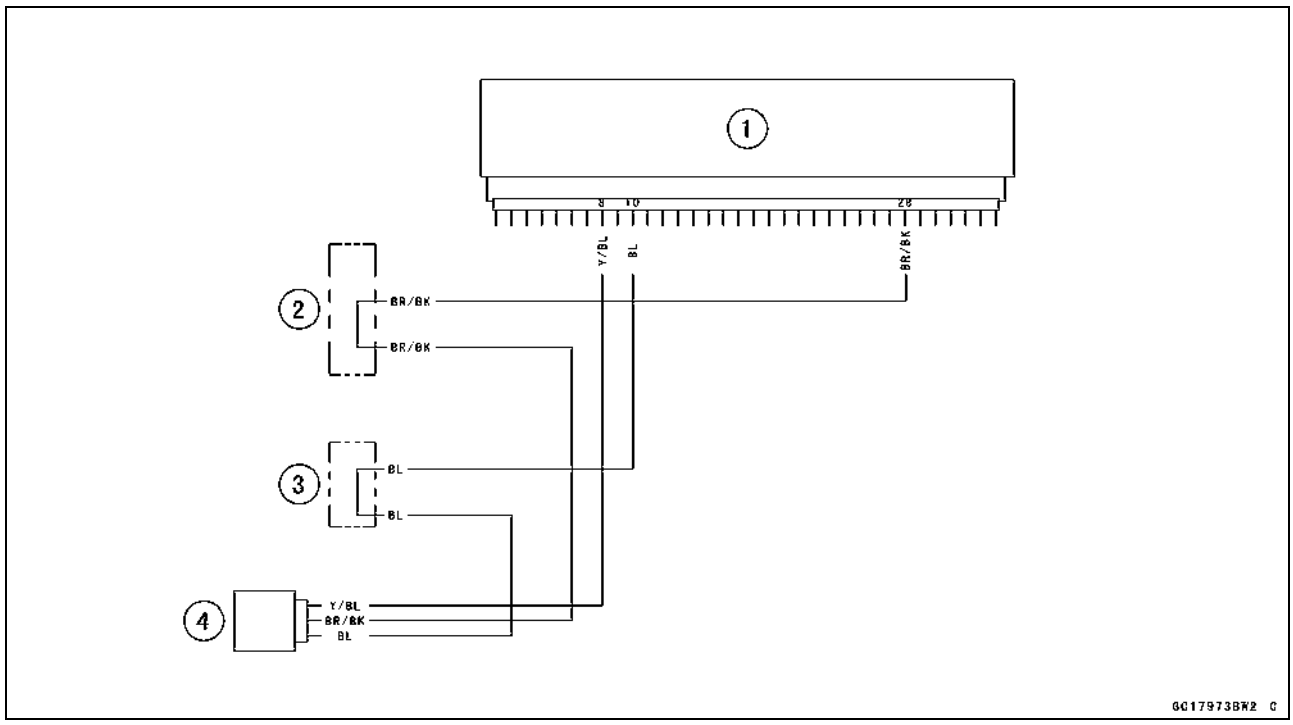

1. ECU
2. Water-proof Joint E
3. Water-proof Joint D
4. Inlet Air Pressure Sensor

Inlet Air Temperature Sensor (Service Code 13)

Removal/Installation

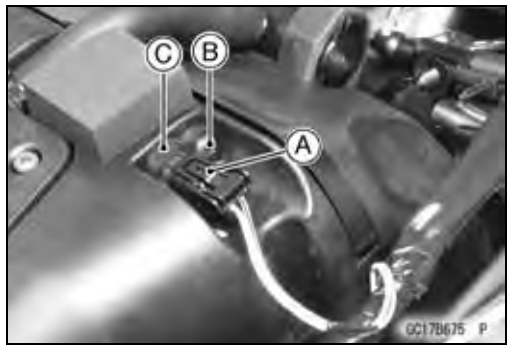

CAUTION
Never drop the sensor, especially on a hard surface. Such a shock to the sensor can damage it.

- Remove the fuel tank (see Fuel Tank Removal).
- Disconnect the connector [A] from the inlet air temperature sensor.
- Remove the screw [B].
- Pull out the inlet air temperature sensor [C].
- Put the inlet air temperature sensor into the air cleaner housing.
- Tighten the screw securely.

Output Voltage Inspection

NOTE

○*Be sure the battery is fully charged.*
○*The output voltage changes according to the inlet air temperature.*

- Remove the ECU (see ECU Removal). Do not disconnect the ECU connectors.

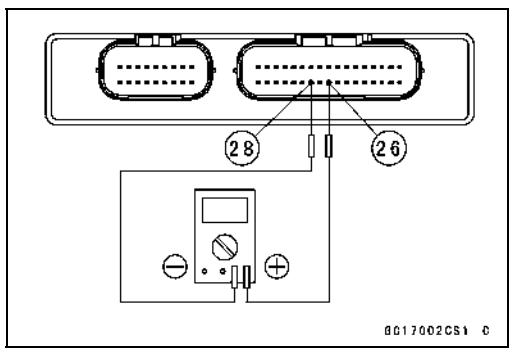

- Connect a digital voltmeter to the ECU connector, using needle adapter set.

  Special Tool - Needle Adapter Set: 57001-1457

- Measure the sensor output voltage with the engine stopped and the connector joined.
- Turn the ignition switch ON.

Inlet Air Temperature Sensor Output Voltage
Connections to ECU Connector

Meter (+) → Y lead (terminal 26)

Meter (–) → BR/BK lead (terminal 28)

Standard: about 2.25 ~ 2.50 V at inlet air temperature 20°C (68°F)

- Turn the ignition switch OFF.

★If the output voltage is out of the standard, remove the fuel tank and check the wiring. And if the output voltage is 4.8 V, the ECU is normal.

★If the output voltage is within the standard, check the ECU for its ground, and power supply (see ECU Power Supply Inspection).

★If the wiring is good, check the sensor resistance.

- Remove the needle adapter set, and apply silicone sealant to the seals of the connector for waterproofing.

  Silicone Sealant (Kawasaki Bond: 56019-120) - Seals of ECU Connectors

Inlet Air Temperature Sensor (Service Code 13)

Sensor Resistance Inspection

- Remove the inlet air temperature sensor.
- Suspend the sensor [A] in a container of machine oil so that the heat-sensitive portion is submerged.
- Suspend a thermometer [B] with the heat-sensitive portion [C] located in almost the same depth with the sensor.

NOTE

○*The sensor and thermometer must not touch the container side or bottom.*

- Place the container over a source of heat and gradually raise the temperature of the oil while stirring the oil gently for even temperature.
- Using a digital meter, measure the internal resistance of the sensor across the terminals at the temperatures shown in the table.

Inlet Air Temperature Sensor Resistance

Standard: 5.4 ~ 6.6 kΩ at 0°C (68°F)

0.29 ~ 0.39 kΩ at 80°C (176°F)

★If the measurement is out of the range, replace the sensor.

★If the measurement is within the specified, replace the ECU.

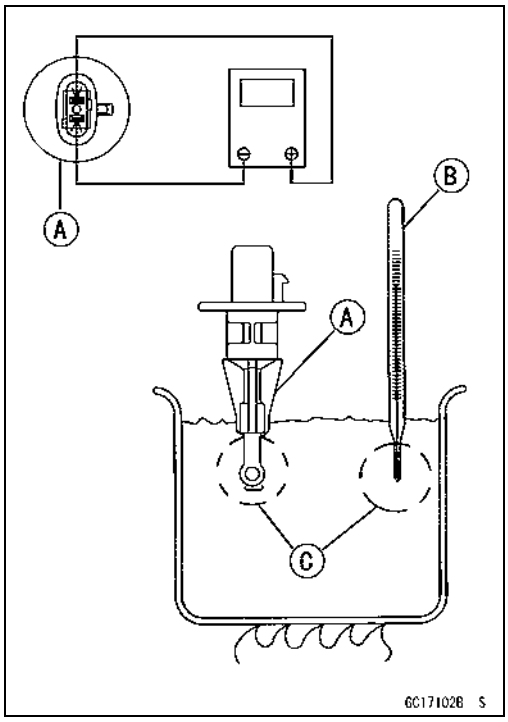

Inlet Air Temperature Sensor Circuit

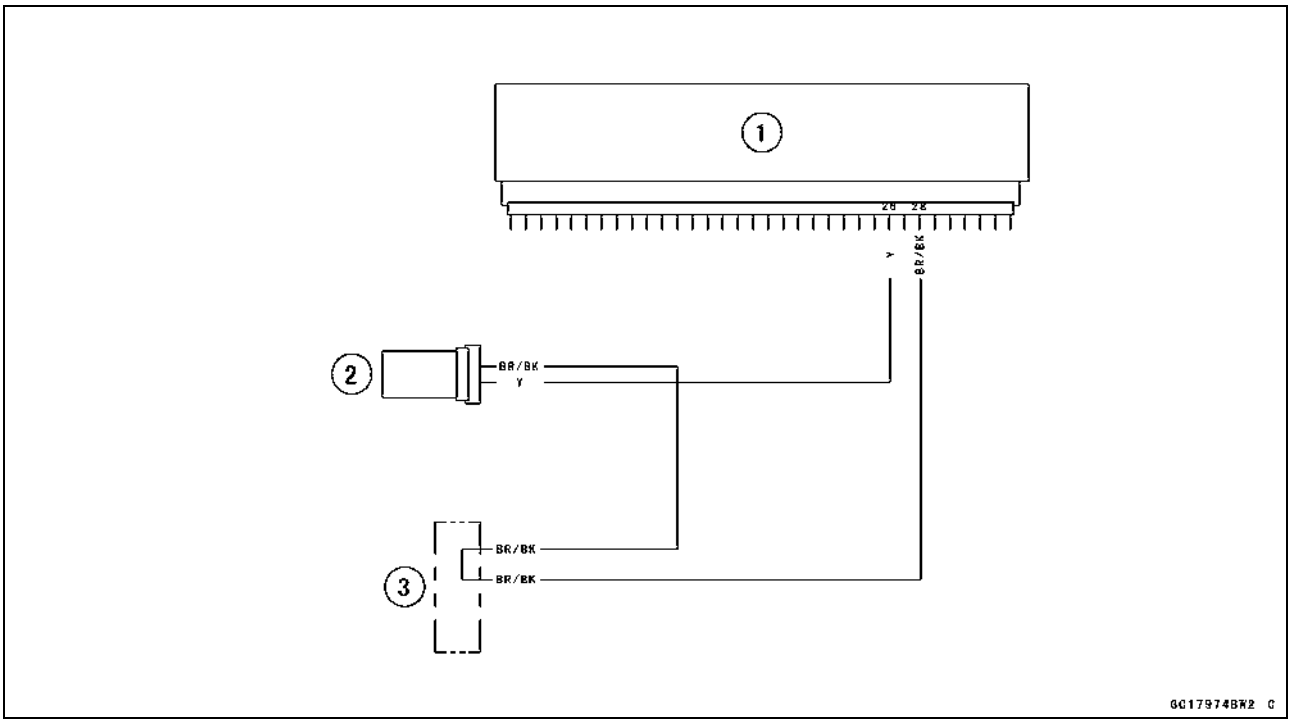

1. ECU
2. Inlet Air Temperature Sensor
3. Water-proof Joint E

Water Temperature Sensor (Service Code 14)

Water Temperature Sensor Removal/Installation

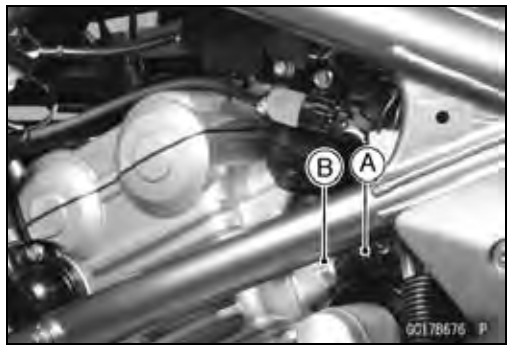

CAUTION

Never drop the sensor, especially on a hard surface. Such a shock to the sensor can damage it.

- Drain the coolant (see Coolant Change in the Periodic Maintenance chapter).
- Disconnect the sensor connector [A], and unscrew the water temperature sensor [B].

  Torque - Water Temperature Sensor: 12 N·m (1.2 kgf·m, 106 in·lb)
- Apply grease to new O-ring on the water temperature sensor.
- Fill the engine with coolant and bleed the air from the cooling system (see Coolant Change in the Periodic Maintenance chapter).

Water Temperature Sensor Output Voltage Inspection

NOTE

○*Be sure the battery is fully charged.*

- Remove the ECU (see ECU Removal). Do not disconnect the connectors.

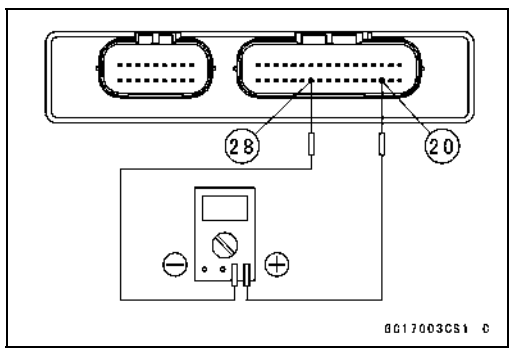

- Connect a digital voltmeter [A] to the ECU connector [B] with the needle adapter set.

  Special Tool - Needle Adapter Set: 57001-1457
- Measure the sensor output voltage with the engine stopped and the connector joined.
- Turn the ignition switch ON.

  Water Temperature Sensor Output Voltage
  Connections to ECU
  Meter (+) → O lead (terminal 20)
  Meter (–) → BR/BK lead (terminal 28)

  Standard: about 2.80 ~ 2.97 V at 20°C (68°F)

NOTE

○*The output voltage changes according to the coolant temperature in the engine.*

- Turn the ignition switch OFF.

★If the output voltage is within the standard, check the ECU for its ground, and power supply (see ECU Power Supply Inspection).

★If the output voltage is out of the standard, check the wiring. And if the output voltage is 4.8 V, the ECU is normal.

★If the wiring is good, check the water temperature sensor resistance.

- Remove the needle adapter set, and apply silicone sealant to the seals of the connector for waterproofing.

  Silicone Sealant (Kawasaki Bond: 56019-120) - Seals of ECU Connectors

Water Temperature Sensor (Service Code 14)

Water Temperature Sensor Circuit

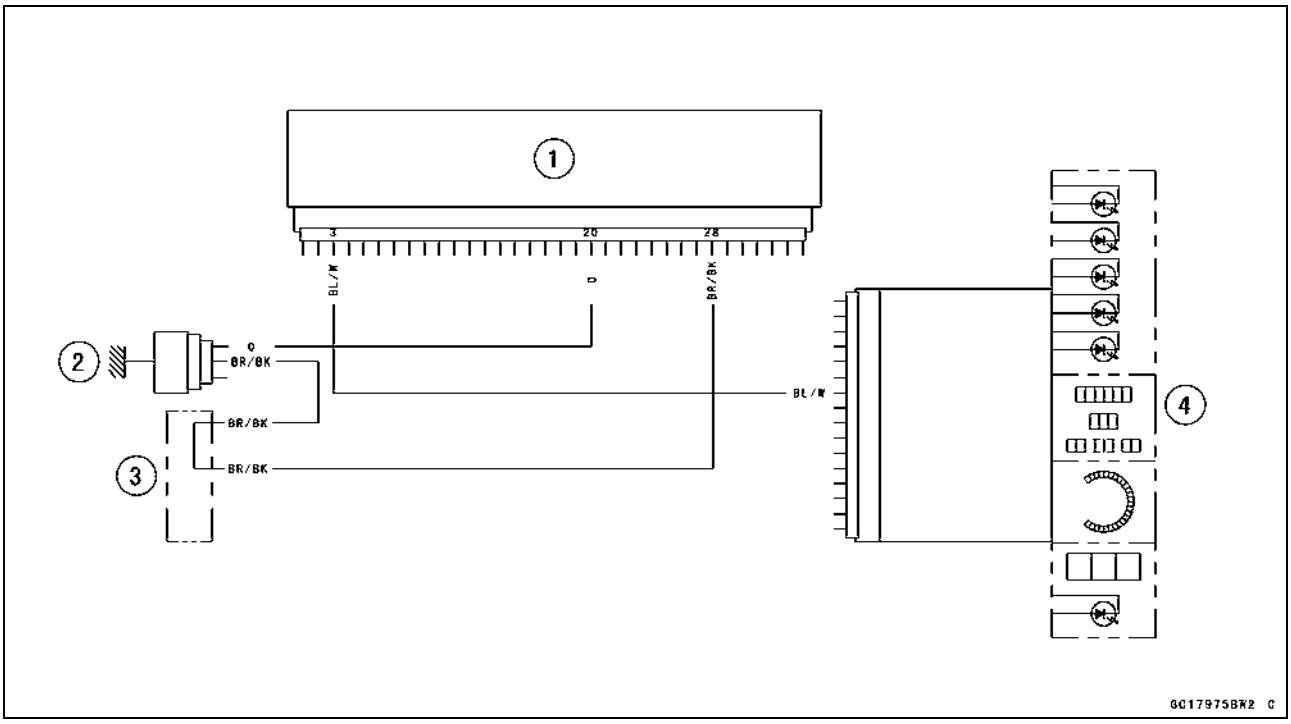

1. ECU
2. Water Temperature Sensor
3. Water-proof Joint E
4. Meter Unit

Sensor Resistance Inspection

- Remove the water temperature sensor (see Water Temperature Sensor Removal/Installation).
- Refer to Water Temperature Sensor Inspection in the Electrical System chapter.

http://mototh.com

Crankshaft Sensor (Service Code 21)

Start the engine and switch the diagnosis mode to Dealer 1 mode to know all the problem that the DFI system has at the time of self-diagnosis. If the engine cannot be started, the self-diagnosis system does not detect dynamic condition of the crankshaft sensor. In this case, turn off the ignition switch and turn it on again to enter the Dealer 2 mode. In this mode, the system tells all the troubles which the DFI system had in both static and dynamic conditions.

Crankshaft Sensor Removal/Installation

- See the Ignition System section in the Electrical System chapter.

Crankshaft Sensor Inspection

○The crankshaft sensor has no power source, and when the engine stops, the crankshaft sensor generates no signals.

- Crank the engine and measure the peak voltage of the crankshaft sensor (see Crankshaft Sensor Inspection in the Electrical System) in order to check the sensor.
- Check the wiring for continuity, using the following diagram.

Crankshaft Sensor Circuit

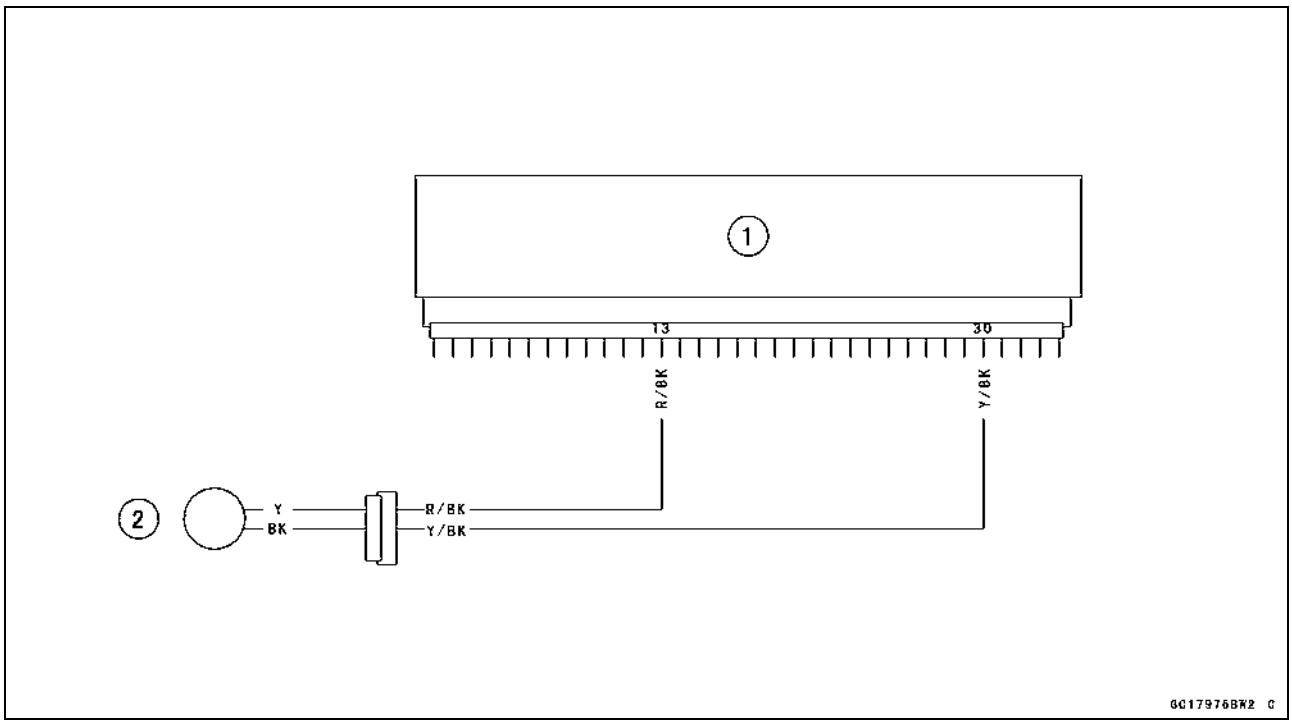

1. ECU
2. Crankshaft Sensor

http://mototh.com

Speed Sensor (Service Code 24, 25)

Speed Sensor Removal/Installation

- See the Switches and Sensors section in the Electrical System chapter.

Speed Sensor Inspection

- See Speed Sensor Inspection section in the Electrical System chapter.

Speed Sensor Input Voltage Inspection

NOTE

○*Be sure the battery is fully charged.*

- Turn the ignition switch OFF.
- Disconnect the speed sensor connector and connect the harness adapter [A] between the harness connector and speed sensor connector.
- Connect a digital meter to the harness adapter leads.

Special Tool - Throttle Sensor Setting Adapter #1: 57001 -1400

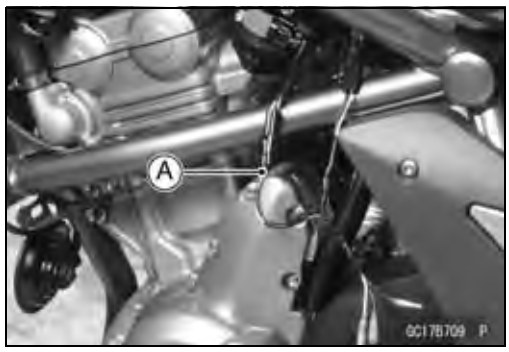

- Measure the sensor input voltage with the engine stopped, and with the connector joined.
- Turn the ignition switch ON.

Speed Sensor Input Voltage
Connection to Adapter
Meter (+) → BL (sensor P) lead [C]
Meter (−) → BK (sensor BK/Y) lead [D]

Standard: About 9 ~ 11 V DC at Ignition Switch ON

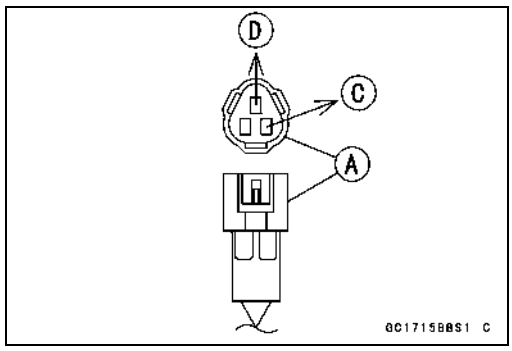

★If the reading is out of the range, check the wiring (see wiring diagram in this section), and meter (see Electronic Combination Meter Unit Inspection in the Electrical System chapter).
★If the reading is good, check the output voltage.
- Turn the ignition switch OFF.

Speed Sensor Output Voltage Inspection

- Before this inspection, inspect the input voltage (see Speed Sensor Input Voltage Inspection).

NOTE

○*Be sure the battery is fully charged.*

- Turn the ignition switch OFF.

Speed Sensor (Service Code 24, 25)

- Disconnect the speed sensor connector and connect the harness adapter [A] between the harness connector and speed sensor connector.
- Connect a digital meter to the harness adapter leads.

Special Tool - Throttle Sensor Setting Adapter #1: 57001 -1400

- Measure the sensor output voltage with the engine stopped, and with the connector joined.
- Turn the ignition switch ON.

Speed Sensor Output Voltage at Sensor Connections to Adapter

Meter (+) → Y/W (sensor LG/R) lead [C]

Meter (–) → BK (sensor BK/Y) lead [D]

Standard: About 0.05 ~ 0.07 V DC

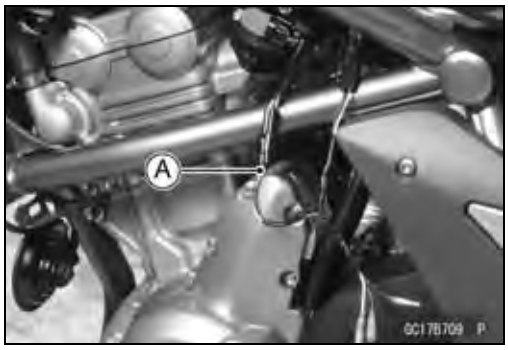

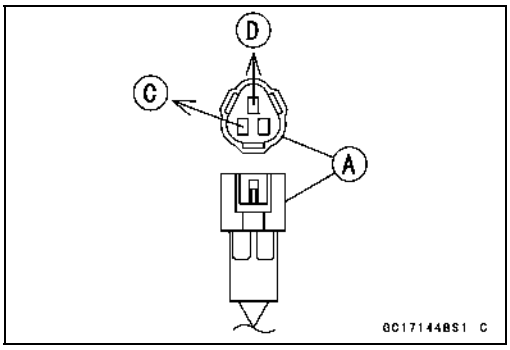

NOTE

○*If you rotate the engine sprocket, the output voltage will be increased.*

★If the reading is out of the range, check the speed sensor operation (see Speed Sensor Inspection in the Electrical System chapter) and the wiring to ECU (see wiring diagram in this section).

★If the reading, speed sensor operation and wiring are good, check the ECU for its ground, and power supply (see ECU Power Supply Inspection).

Speed Sensor Circuit

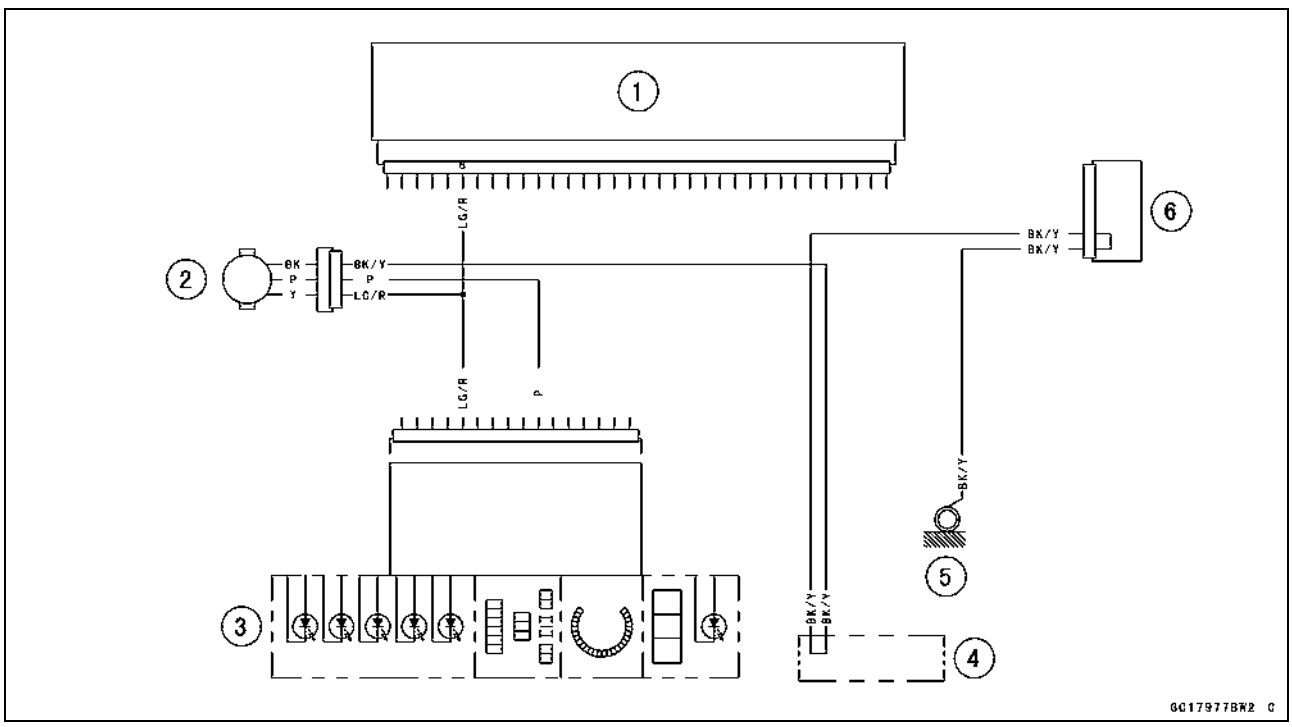

1. ECU
2. Speed Sensor
3. Meter Unit
4. Water-proof Joint B
5. Frame Ground
6. Joint Connector

Vehicle-down Sensor (Service Code 31)

Vehicle-down Sensor Removal

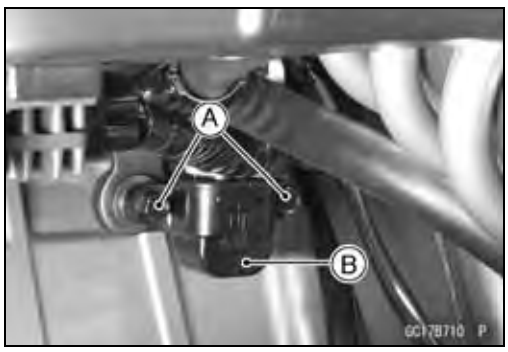

CAUTION

Never drop the down-sensor, especially on a hard surface. Such a shock to the sensor can damage it.

- Remove:
  Bolts [A]
  Connection and Vehicle-down Sensor [B]

Vehicle-down Sensor Installation

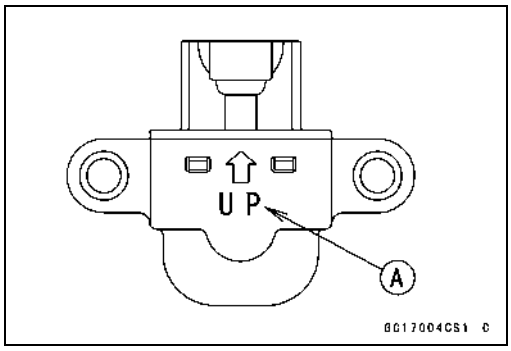

- The UP mark [A] of the sensor should face upward.

⚠ WARNING

Incorrect installation of the vehicle-down sensor could cause sudden loss of engine power. The rider could lose balance during certain riding situations like leaning over in a turn with the potential for an accident resulting in injury or death. Ensure that the down sensor is held in place by the sensor brackets.

Vehicle-down Sensor Inspection

NOTE

○*Be sure the battery is fully charged.*

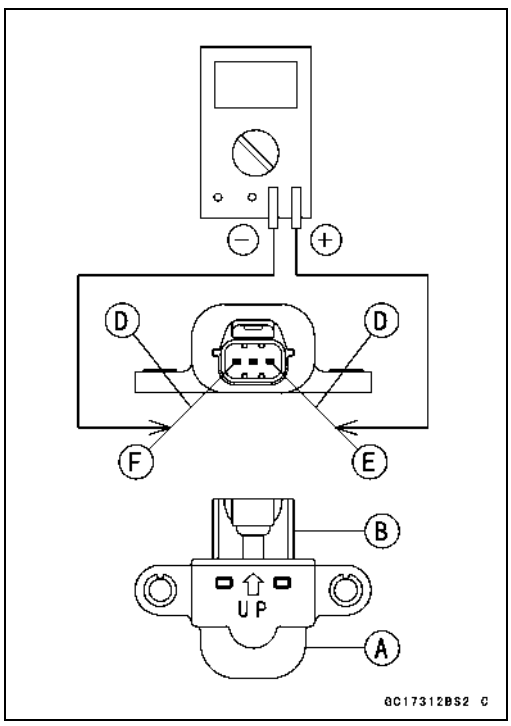

- Connect a digital volt meter [C] to the connector [B] of the vehicle-down sensor [A] with the needle adapter set [D].

  Vehicle-down Sensor Power Source Voltage
  Connections to Sensor
  Meter (+) → BL lead [D]
  Meter (–) → BR/BK lead [E]

- Turn the ignition switch ON, and measure the power source voltage with the connector joined.

  Vehicle-down Sensor Input Voltage
  Standard: 4.75 ~ 5.25 V DC

- Turn the ignition switch OFF.

★If the reading of input voltage is less than the standard, check the ECU for its ground, power supply and wiring shorted.

★If the power source is normal, check the output voltage.

Vehicle-down Sensor (Service Code 31)

- Remove the sensor.
- Connect a digital volt meter [A] to the connector with needle adapter set [B].

Special Tool - Needle Adapter Set: 57001-1457

Vehicle-down Sensor Output Voltage
Connections to Sensor

Meter (+) → Y/G lead [E]

Meter (–) → BR/BK lead [F]

- Hold the sensor vertically.
- Turn the ignition switch ON, and measure the output voltage with the connector joined.

○Tilt the sensor 60 ~ 70° or more [C] right or left, then hold the sensor almost vertical with the arrow mark pointed up [D], and measure the output voltage.

Output Voltage at Sensor

Standard: **with sensor tilted 60 ~ 70° or more right or left: 0.65 ~ 1.35 V**

with sensor arrow mark pointed up: 3.55 ~ 4.45 V

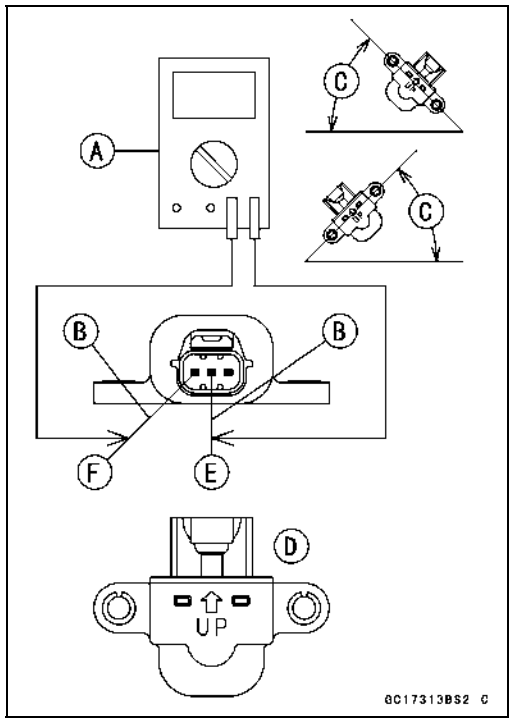

NOTE

○*If you need to test again, turn the ignition switch OFF, and then ON.*

- Turn the ignition switch OFF.
- Remove the needle adapter set, and apply silicone sealant to the seals of the connector for waterproofing.

Silicone Sealant (Kawasaki Bond: 56019-120) - Seals of Vehicle-down Sensor Connector

★If the output voltage is normal, the wiring is suspect. Check the wiring.

★If the wiring is good, check the ECU for its ground and power supply (see ECU Power Supply Inspection).

★If the output voltage is out of the specified, replace the vehicle-down sensor.

http://mototh.com

Vehicle-down Sensor (Service Code 31)

Vehicle-down Sensor Circuit

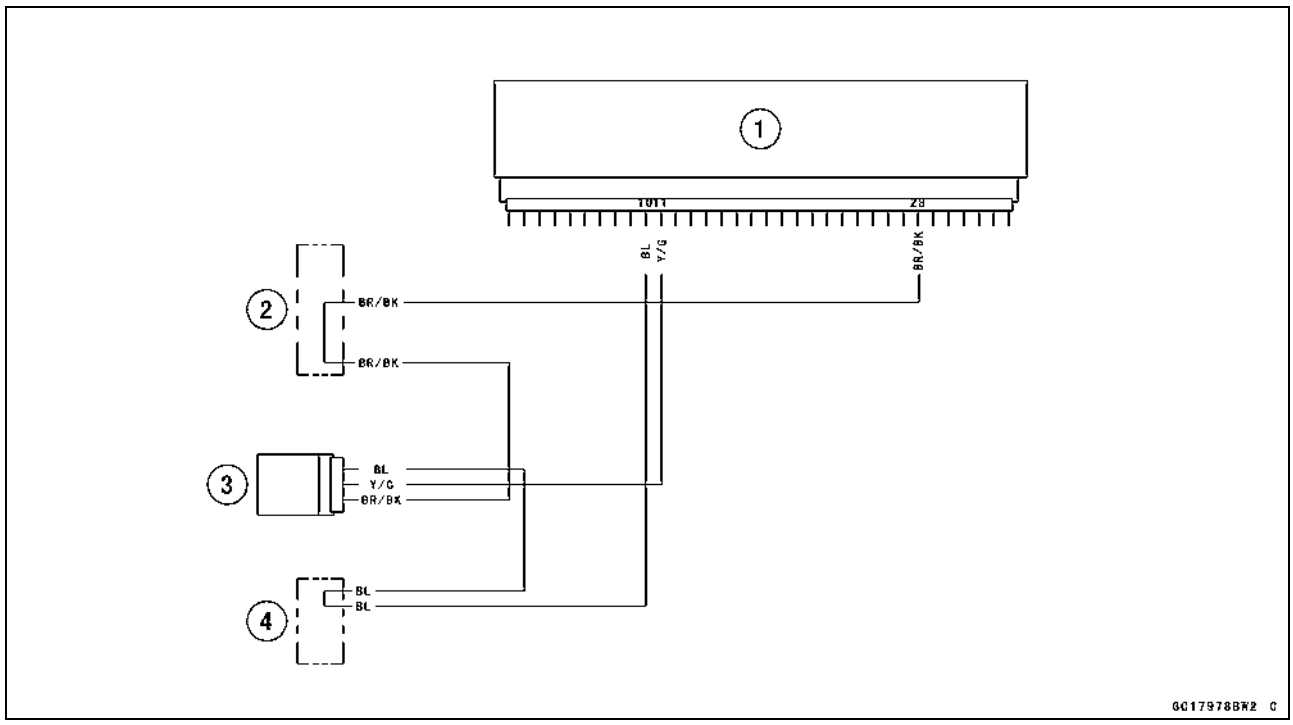

1. ECU
2. Water-proof Joint E
3. Vehicle-down Sensor
4. Water-proof Joint D

Subthrottle Sensor (Service Code 32)

Subthrottle Sensor Removal/Adjustment

CAUTION

Do not remove or adjust the subthrottle sensor [A] since it has been adjusted and set with precision at the factory.
Never drop the sensor, especially on a hard surface. Such a shock to the sensor can damage it.

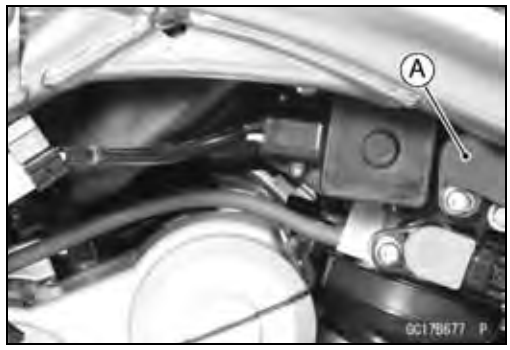

Subthrottle Sensor Input Voltage Inspection

NOTE

○*Be sure the battery is fully charged.*

- Remove the fuel tank (see Fuel Tank Removal).
- Turn the ignition switch OFF.
- Disconnect the subthrottle sensor connector and connect the harness adapter [A] between these connectors.
- Connect a digital meter to the harness adapter lead.

Special Tool - Throttle Sensor Harness Adapter: 57001 -1400

- Measure the sensor input voltage with the engine stopped and with the connector joined.
- Turn the ignition switch ON.

Subthrottle Sensor Input Voltage
Connections to Adapter
Meter (+) → BL (sensor BL) lead
Meter (–) → BK (sensor BR/BK) lead
Standard: 4.75 ~ 5.25 V DC

- Turn the ignition switch OFF.

★If the input voltage is normal, check the sensor output voltage.
★If the input voltage is less than the standard, remove the ECU and check the wiring between these connectors.
○Disconnect the ECU and sensor connectors.

Wiring Connection
ECU Connector [A] ←→
Subthrottle Sensor Connector [B]
BL lead (terminal 10)
BR/BK lead (terminal 28)

★If the wiring is good, check the ECU for its ground and power supply (see ECU Power Supply Inspection).

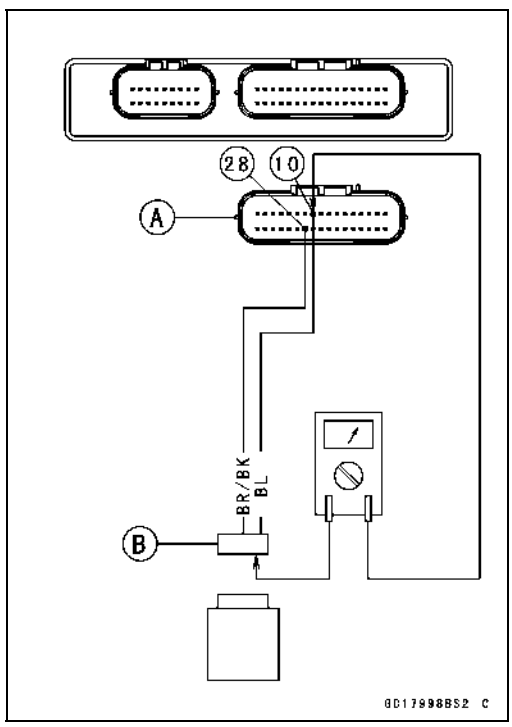

Subthrottle Sensor (Service Code 32)

Subthrottle Sensor Output Voltage Inspection

- Remove the fuel tank (see Fuel Tank Removal).
- Measure the output voltage at the subthrottle sensor in the same way as input voltage inspection. Note the following.
- Disconnect the subthrottle sensor connector and (black) connect the harness adapter [A] between these connectors.

Special Tool - Throttle Sensor Harness Adapter: 57001 -1400

- Measure the output voltage of the sensor with the engine stopped, and with the connector joined.
- Turn the ignition switch ON.
- Measure the output voltage when the subthrottle valve is fully opened or completely closed by hand.

Subthrottle Sensor Output Voltage
Connections to Adapter
Meter (+) → Y (sensor BL/W) lead
Meter (–) → BK (sensor BR/BK) lead
Standard:
0.4 ~ 0.6 V DC (at idle throttle opening)
3.625 ~ 3.775 V DC (at full throttle opening)

★If the output voltage is out of the standard, inspect the subthrottle sensor resistance.
★If the output voltage is normal, check the wiring for continuity.

Wiring Connection
ECU Connector [A] ←→
Subthrottle Sensor Connector [B]
BL/W lead (terminal 7)
BR/BK lead (terminal 28)

★If the wiring is good, check the ECU for its ground and power supply (see ECU Power Supply Inspection).

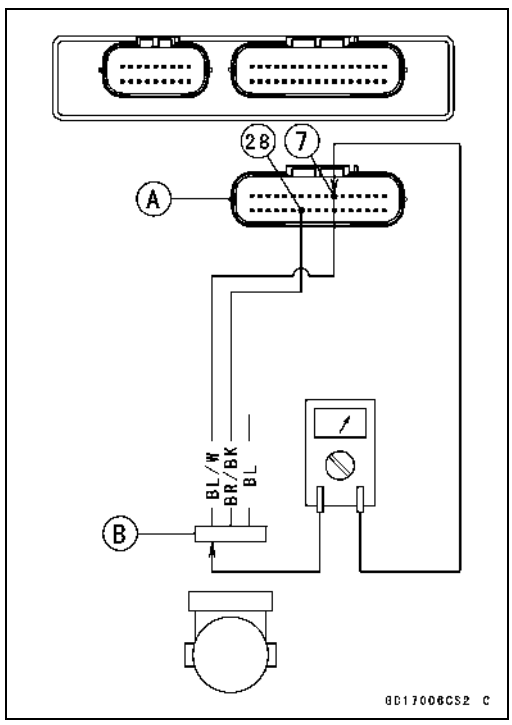

Subthrottle Sensor (Service Code 32)

Subthrottle Sensor Resistance Inspection

- Turn the ignition switch OFF.
- Disconnect the subthrottle sensor connector.
- Connect a digital meter [A] to the subthrottle sensor connector [B].
- Measure the subthrottle sensor resistance.

Throttle Sensor Resistance

Connections: **BL lead [C] ←→ BK lead [D]**

Standard: **4 ~ 6 kΩ**

★If the reading is out of the range, replace the throttle body assy.

★If the reading is within the range, but the problem still exists, replace the ECU (see ECU section).

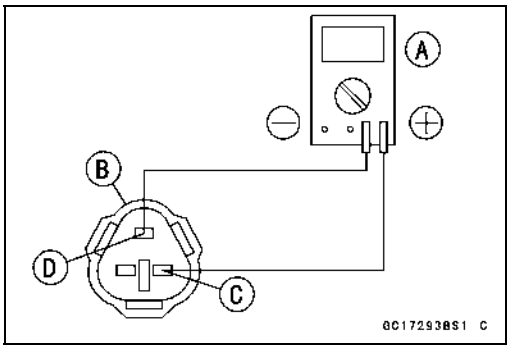

Subthrottle Sensor Circuit

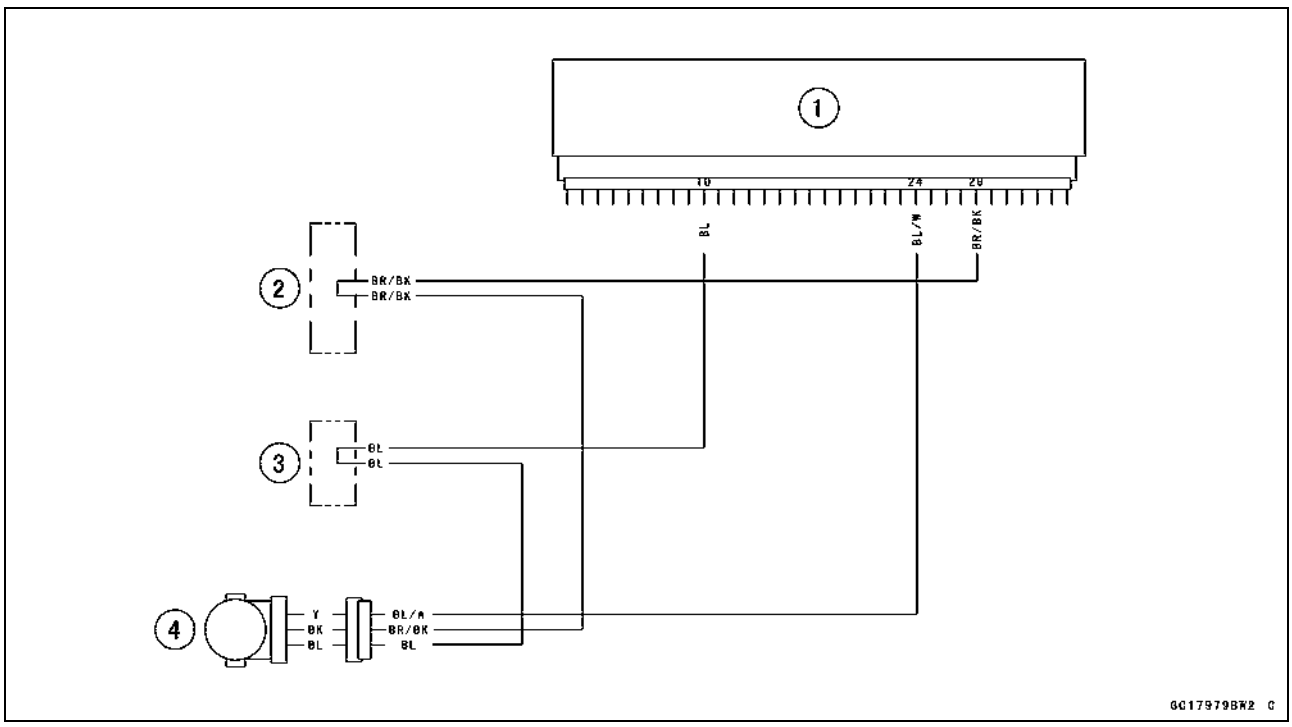

1. ECU
2. Water-proof Joint E
3. Water-proof Joint D
4. Subthrottle Sensor

Oxygen Sensor-not activated (Service Code 33) - Europe Model

Oxygen Sensor Removal/Installation

- Refer to Switches and Sensors section in the Electrical System chapter.

Oxygen Sensor Inspection

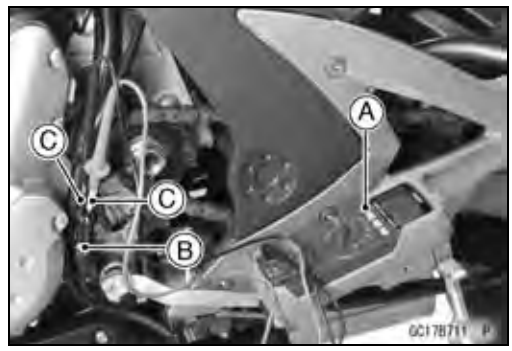

- Warm up the engine thoroughly until the radiator fan starts.
- Turn the ignition switch OFF.
- Remove:
  Left Center Fairing (see Center Fairing Removal in the Frame chapter)
  Sprocket Cover (see Engine Sprocket Removal in the Final Drive chapter)
- Connect a digital voltmeter [A] to the oxygen sensor connector [B] (main harness side), using the needle adapter set [C].

Special Tool - Needle Adapter Set: 57001-1457

Oxygen Sensor Output Voltage
Connections to Oxygen Sensor Connector
Meter (+) → BL/Y lead
Meter (−) → BR/BK lead

- Remove the air switching valve hoses from the fitting.
- Install the suitable plugs [A] on the fitting [B] and shut off the secondary air.

- Turn the ignition switch ON.
- Start the engine, and let it idle.
- Measure the output voltage of the sensor with the connector joined.

Oxygen Sensor Output Voltage (with Plugs)
Standard: 0.7 V or more

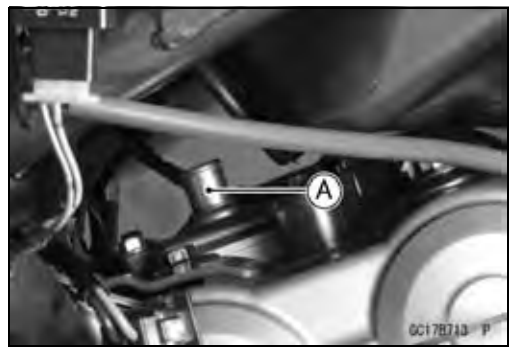

- Next, remove the plugs from the fitting [A] with idling.

Oxygen Sensor-not activated (Service Code 33) - Europe Model

- Measure the output voltage of the sensor with the connector joined.

Oxygen Sensor Output Voltage (without Plugs)
Standard: 0.2 V or less

★If the reading is within range (with plugs: 0.7 V or more, without plugs: 0.2 V or less), the oxygen sensor is good.
★If the reading is without range, replace the oxygen sensor.

Oxygen Sensor Circuit

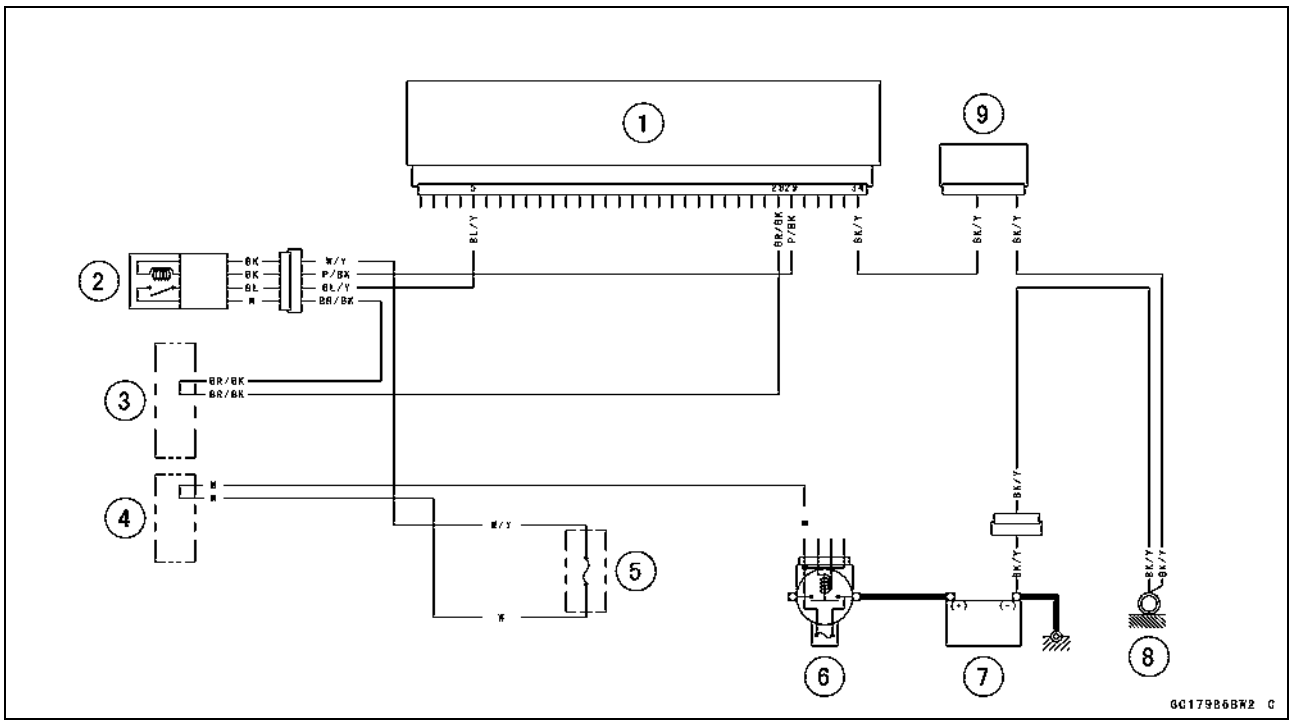

1. ECU
2. Oxygen Sensor
3. Water-proof Joint E
4. Water-proof Joint D
5. Oxygen Sensor Heater Fuse 10 A
6. Main Fuse 30 A
7. Battery
8. Frame Ground
9. Joint Connector

http://mototh.com

Stick Coils (#1, #2: Service Code 51, 52)

Stick Coil #1: Ignition Coil (Service Code 51)
Stick Coil #2: Ignition Coil (Service Code 52)

Stick Coil Removal/Installation

CAUTION
Never drop the stick coils, especially on a hard surface. Such a shock to the stick coil can damage it.

- Refer to the Ignition System section in the Electrical System chapter.

Stick Coil Input Voltage Inspection

NOTE

○*Be sure the battery is fully charged.*

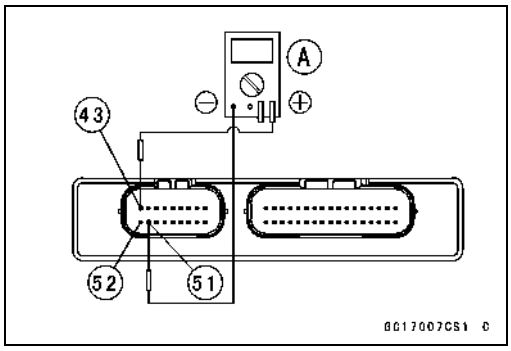

- Turn the ignition switch OFF.
- Remove the ECU (see ECU Removal). Do not disconnect the ECU connector.
- Connect a digital voltmeter [A] as shown, with the needle adapter set [B].

○Measure the input voltage to each primary winding of the ignition coils with the engine stopped, and with the connectors joined.

- Turn the ignition switch ON.

Stick Coil Input Voltage at ECU

Connections for Stick Coil #1

Meter (+) → BK lead (terminal 43)

Meter (–) → BK/Y lead (terminal 51)

Connections for Stick Coil #2

Meter (+) → BK/G lead (terminal 52)

Meter (–) → BK/Y lead (terminal 51)

Input Voltage at ECU

Standard: Battery Voltage (12.8 V or more)

★If the reading is out of the standard, check the wiring (see next wiring diagram).

★If the reading is good, the input voltage is normal. Crank the engine, and check the peak voltage of the stick coils (see Stick Coil Primary Peak Voltage in the Electrical System chapter) in order to check the primary coils.

http://mototh.com

Stick Coils (#1, #2: Service Code 51, 52)

Stick Coil Circuit

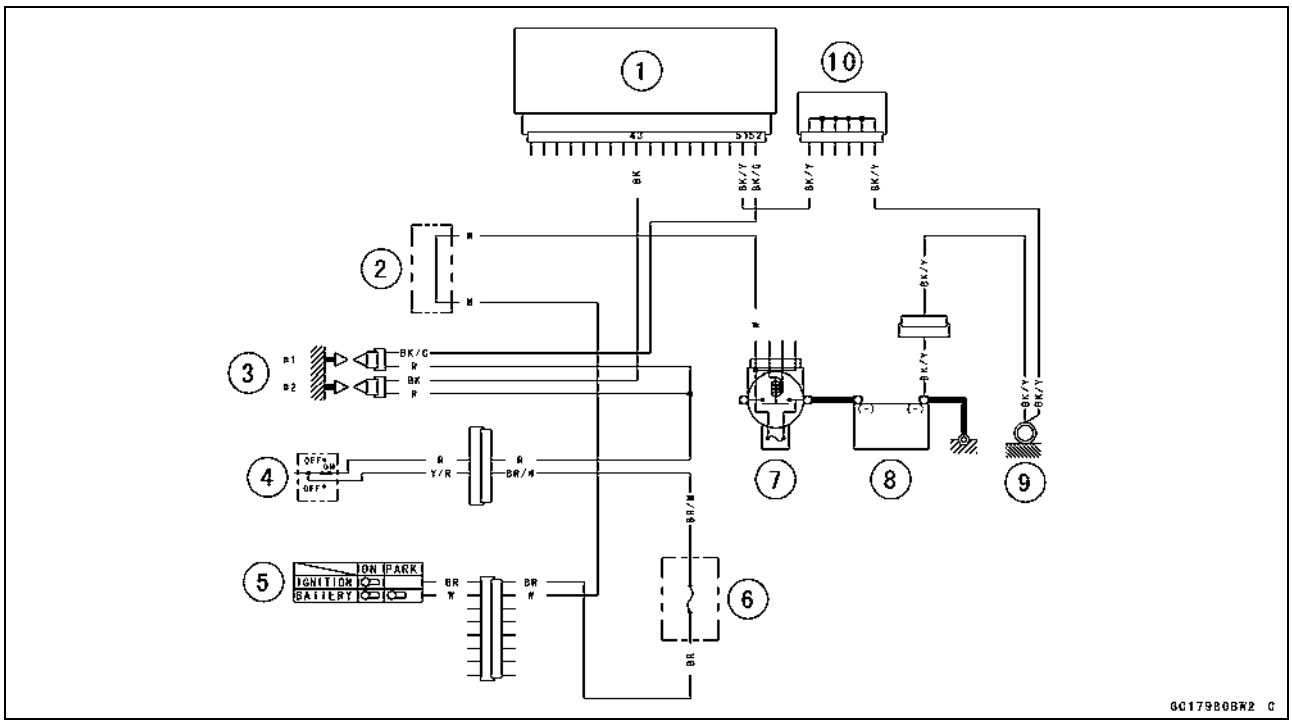

1. ECU
2. Water-proof Joint C
3. Stick Coils
4. Engine Stop Switch
5. Ignition Switch
6. Ignition Fuse 10 A
7. Main Fuse 30 A
8. Battery
9. Frame Ground
10. Joint Connector

Radiator Fan Relay (Service Code 56)

Radiator Fan Relay Removal/Installation

- Radiator fan relay is bult in the relay box.
- Remove the relay box (see Relay Box Removal in the Electrical System chapter).

Radiator Fan Relay Inspection

- See Relay Circuit Inspection in the Electrical System chapter.
- Remove the relay box and ECU (see ECU Removal). Do not disconnect the relay box and ECU connectors. Check the wiring for continuity, using the following diagram.

★If wiring and radiator fan relay are good, check the ECU for its ground, and power supply (see ECU Power Supply Inspection). If the ground and power supply are good, replace the ECU.

Radiator Fan Relay Circuit

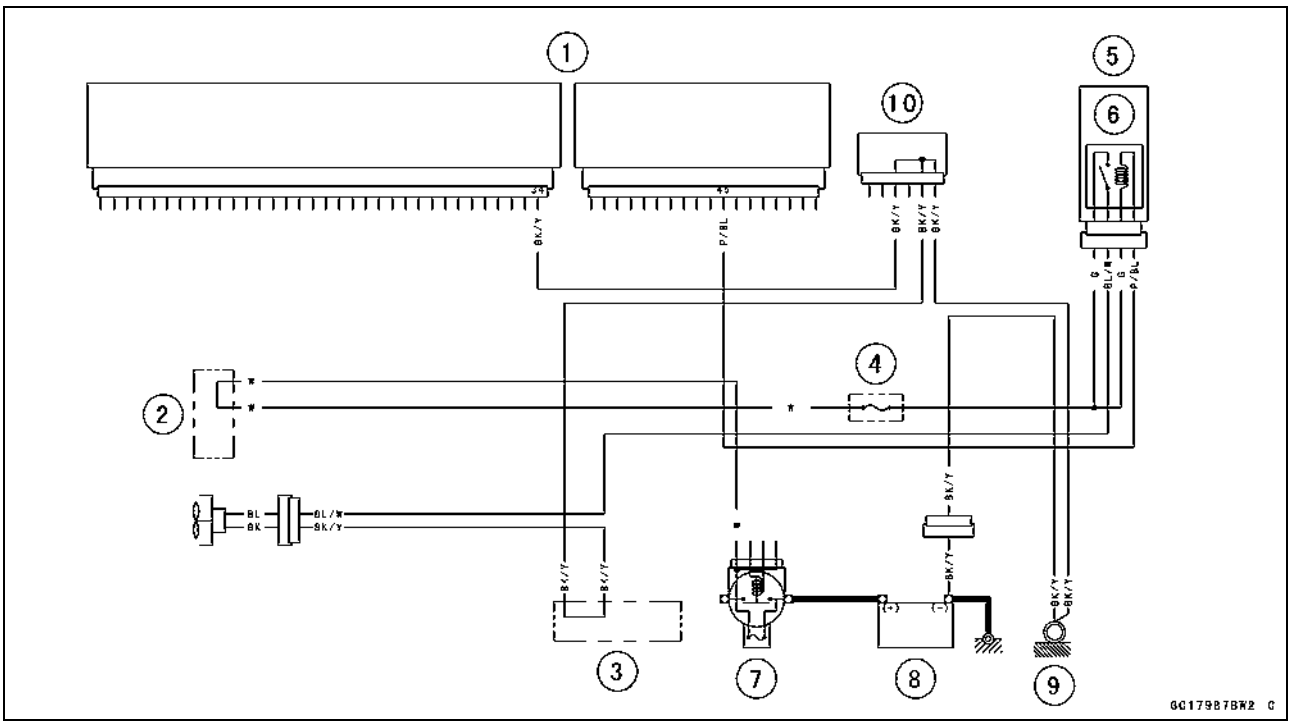

1. ECU
2. Water-proof Joint C
3. Water-proof Joint B
4. Radiator Fan Fuse 15 A
5. Relay Box
6. Radiator Fan Relay
7. Main Fuse 30 A
8. Battery
9. Frame Ground
10. Joint Connector

http://mototh.com

Subthrottle Valve Actuator (Service Code 62)

Subthrottle Valve Actuator Removal

CAUTION

Do not remove the subthrottle valve actuator [A] since it has been adjusted and set with precision at the factory.
Never drop the actuator , especially on a hard surface. Such a shock to the actuator can damage it.

Subthrottle Valve Actuator Audible Inspection

NOTE

○*Be sure the battery is fully charged.*

- Turn the ignition switch ON and ensure that the actuator valves open and close (make light sounds) several times within seconds, and then close at the idle throttle opening position.
- Turn the ignition switch OFF.

★If the actuator does not work as described above, do the visual inspection.

Subthrottle Valve Actuator Visual Inspection

- Remove the throttle body assy (see Throttle Body Assy Removal).
- Turn the ignition switch ON.
- Check to see that all the subthrottle valves [A] open and close smoothly.

★If the subthrottle valves do not operate, check the actuator internal resistance (see Subthrottle Valve Actuator Resistance Inspection).

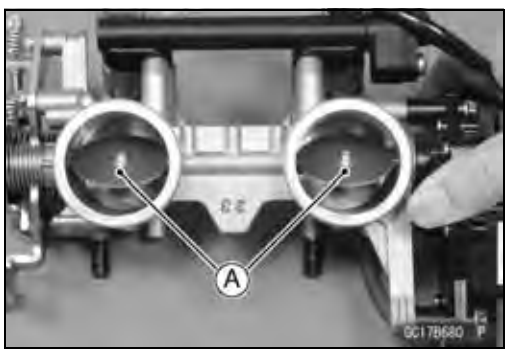

Subthrottle Valve Actuator Resistance Inspection

- Turn the ignition switch OFF.
- Remove the throttle body assy (see Throttle Body Assy Removal).
- Disconnect the subthrottle valve actuator connector [A].

- Connect a digital meter to the subthrottle valve actuator connector [A].
- Measure the subthrottle valve actuator resistance.

Subthrottle Valve Actuator Resistance

Connections:	**BK lead [1] ←→ P lead [2]**
	G lead [3] ←→ W/BL lead [4]
Standard:	**About 5.5 ~ 7.5 kΩ**

Special Tool - Hand Tester: 57001-1394

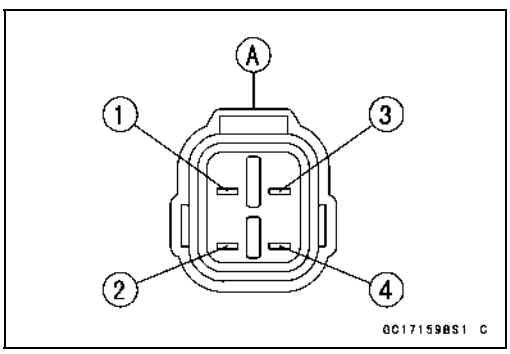

★If the reading is out of the range, replace the actuator along with the throttle body assy.

★If the reading is within the range, check the input voltage (see Subthrottle Valve Actuator Input Voltage Inspection).

http://mototh.com

Subthrottle Valve Actuator (Service Code 62)

Subthrottle Valve Actuator Input Voltage Inspection

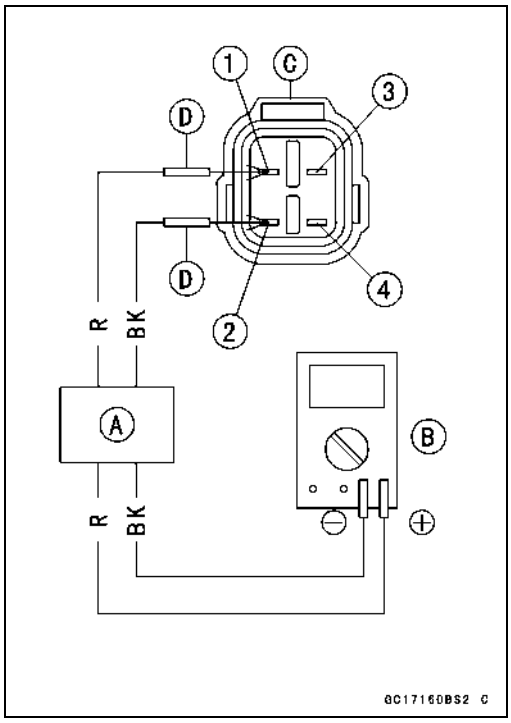

NOTE

○*Be sure the battery is fully charged.*

- Turn the ignition switch OFF.
- Connect the peak voltage adapter [A] and a digital meter [B] to the connector [C], using the needle adapter set [D].

Special Tools - Peak Voltage Adapter: 57001-1415
Type: KEK-54-9-B
Brand: KOWA SEIKI
Needle Adapter Set: 57001-1457

Subthrottle Valve Actuator Input Voltage Connections to Harness Connector

(I) Meter (+) → BK/BL lead [1]
Meter (–) → P lead [2]
(II) Meter (+) → W/BL lead [3]
Meter (–) → G/Y lead [4]

- Measure the actuator input voltage with the engine stopped, and with the connector joined.
- Turn the ignition switch ON.

Input Voltage at Actuator
Standard: about 8.5 ~ 10.5 V DC

★If the reading is within the standard but the actuator doesn't operate, replace it.
★If the reading is out of the range, check the wiring to ECU (see wiring diagram in this section).
★If the wiring is good, check the ECU for its ground and power supply (see ECU Power Supply Inspection).

Subthrottle Valve Actuator Circuit

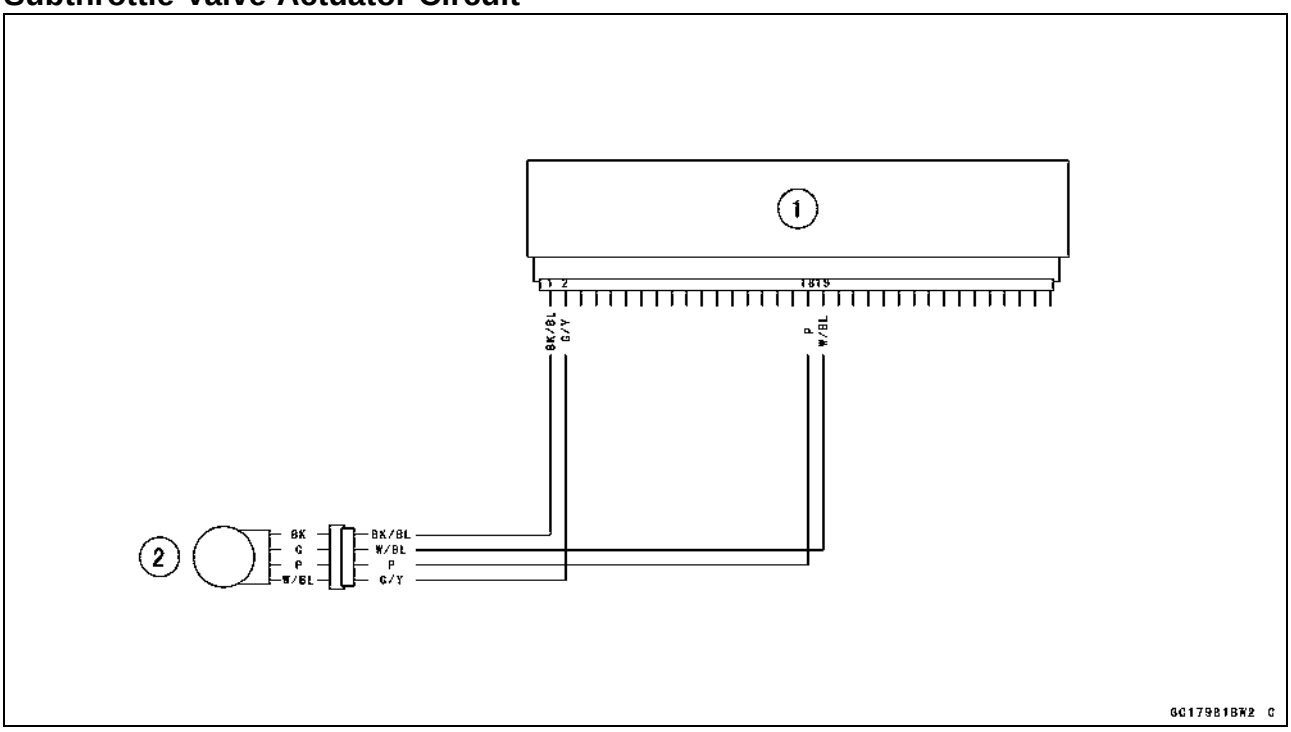

1. ECU
2. Subthrottle Valve Actuator

http://mototh.com

Air Switching Valve (Service Code 64)

Air Switching Valve Removal/Installation

- Refer to Clean Air System section in the Engine Top End chapter.

Air Switching Valve Inspection

- Refer to Air Switching Valve section in the Electrical System chapter.
- Remove the fuel tank and check the wiring continuity, using the following diagram.

Air Switch Valve Circuit

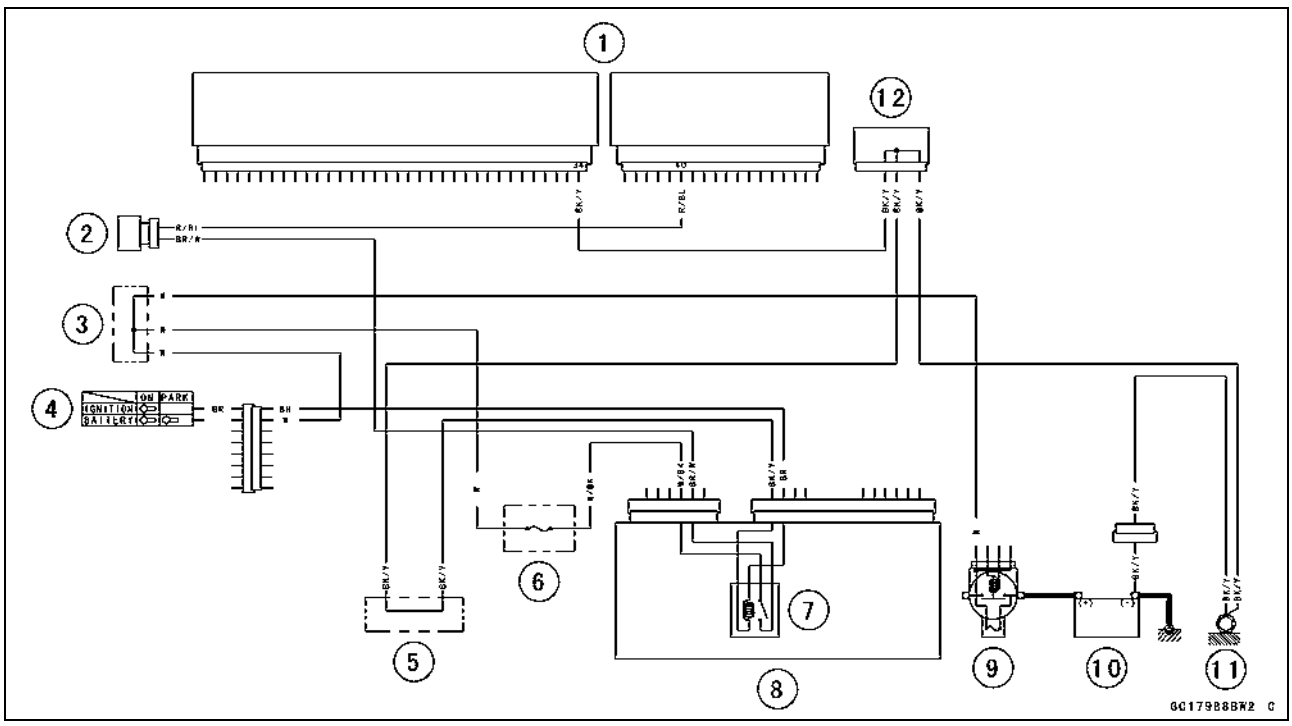

1. ECU
2. Air Switching Valve
3. Water-proof Joint C
4. Ignition Switch
5. Water-proof Joint A
6. ECU Fuse 15 A
7. ECU Main Relay
8. Relay Box
9. Main Fuse 30 A
10. Battery
11. Frame Ground
12. Joint Connector

http://mototh.com

Oxygen Sensor Heater (Service Code 67) - Europe Model

Oxygen Sensor Heater Removal/Installation

The oxygen sensor heater is bult in the oxygen sensor. So, the heater itself can not be removed. Remove the oxygen sensor (see Oxygen Sensor Removal in the Electrical System chapter).

Oxygen Sensor Heater Inspection

- Remove the engine sprocket cover (see Engine Sprocket Removal in the Final Drive chapter).
- Disconnect the oxygen sensor lead connector [A].

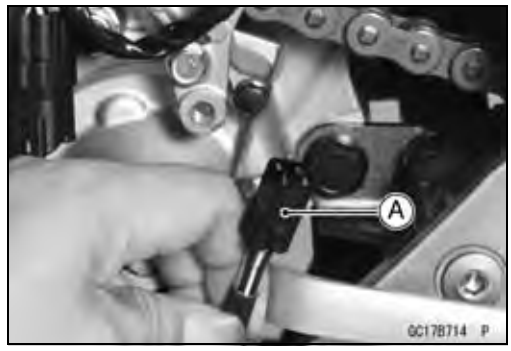

- Set the hand tester [A] to the × 1 Ω range and connect it to the terminals in the oxygen sensor lead connector [B].
  Black [C]
  Black [D]

Special Tool - Hand Tester: 57001-1394

Oxygen Sensor Resistance
Standard: 11.7 ~ 14.5 Ω at 20°C (68°F)

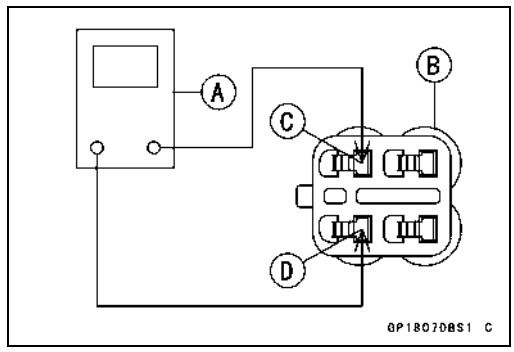

★If the tester reading is not as specified, replace the oxygen sensor with a new one.

★If he tester reading is specified, check the power source voltage Inspection.

NOTE

○*Be sure the battery is fully charged.*

- Connect a digital voltmeter [A] to the oxygen sensor connector [B], using the needle adapter [C].

Special Tool - Needle Adapter Set: 57001-1457

- Measure the power source voltage with the engine stopped, and with the oxygen sensor connector joined.

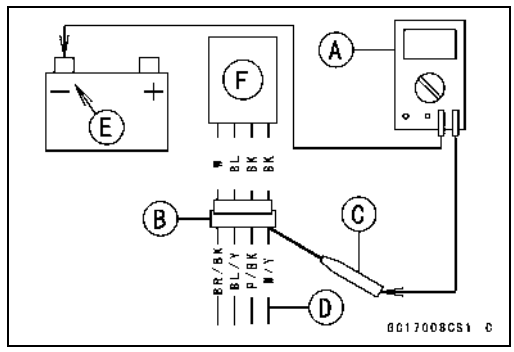

Oxygen Sensor Power Source Voltage
Connections to Oxygen Sensor Connector
Tester (+) → W/Y lead [D]
Tester (−) → Battery (−) Terminal [E]

Standard: Battery Voltage

Oxygen Sensor [F]

★If the reading is incorrect, check the following.
Battery
Main Fuse 30 A
Oxygen Sensor Heater Fuse 10 A

★If the reading is good, the power source voltage is normal, Inspect the Red/Black lead between the oxygen sensor connector and the ECU for continuity, using the following diagram.

★If the wiring is good, inspect the ECU for its ground, and power supply (see ECU Power Supply Inspection). If the ground and power supply are good, replace the ECU.

http://mototh.com

Oxygen Sensor Heater (Service Code 67) - Europe Model

Oxygen Sensor Circuit

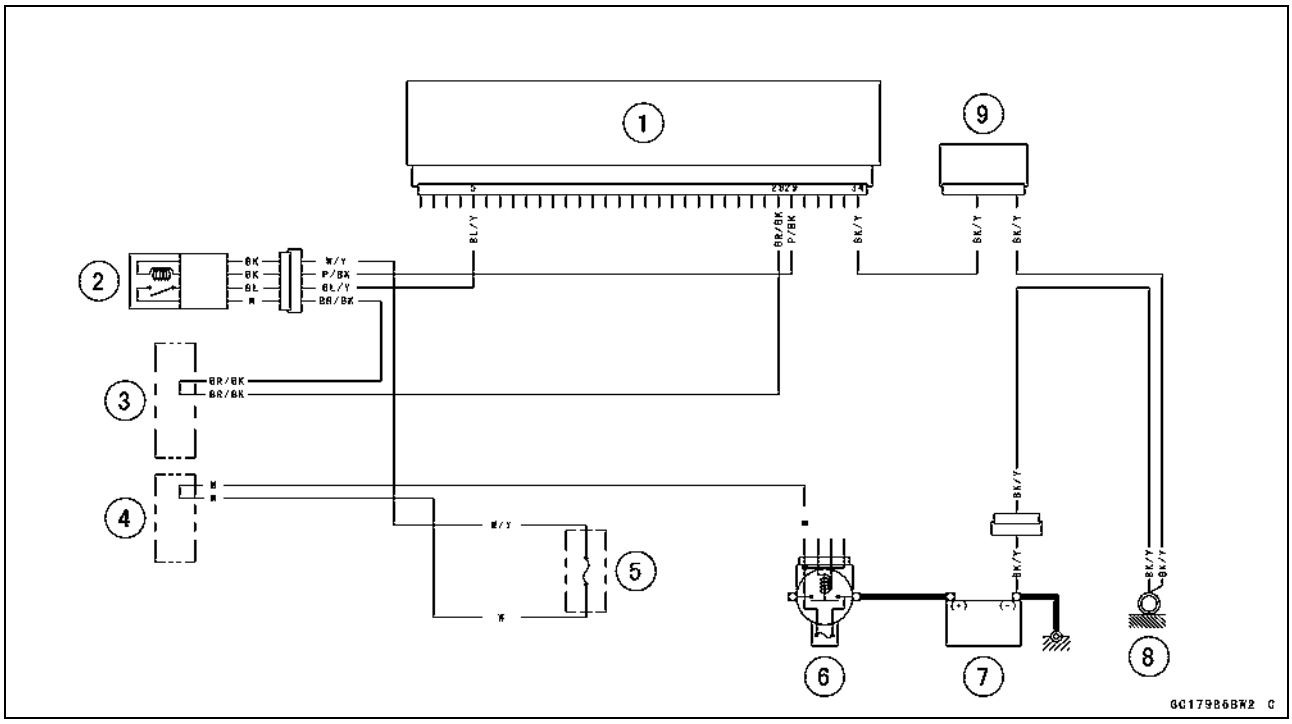

1. ECU
2. Oxygen Sensor
3. Water-proof Joint E
4. Water-proof Joint D
5. Oxygen Sensor Heater Fuse 10 A
6. Main Fuse 30 A
7. Battery
8. Frame Ground
9. Joint Connector

Oxygen Sensor-Incorrect Output Voltage (Service Code 94) - Europe Model

Oxygen Sensor Removal/Installation

- Refer to Oxygen Sensor Removal/Installation in the Electrical System chapter.

Oxygen Sensor Inspection

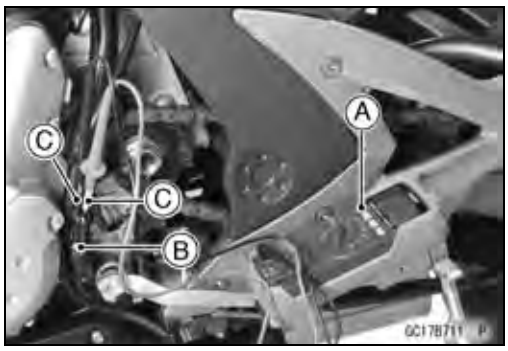

- Warm up the engine thoroughly until the radiator fan starts.
- Turn the ignition switch OFF.
- Remove:
  Left Center Fairing (see Center Fairing Removal in the Frame chapter)
  Sprocket Cover (see Engine Sprocket Removal in the Final Drive chapter)
- Connect a digital voltmeter [A] to the oxygen sensor connector [B] (main harness side), using the needle adapter set [C].

  Special Tool - Needle Adapter Set: 57001-1457

  Oxygen Sensor Output Voltage
  Connections to Oxygen Sensor Connector
  Meter (+) → BL/Y lead
  Meter (−) → BR/BK lead

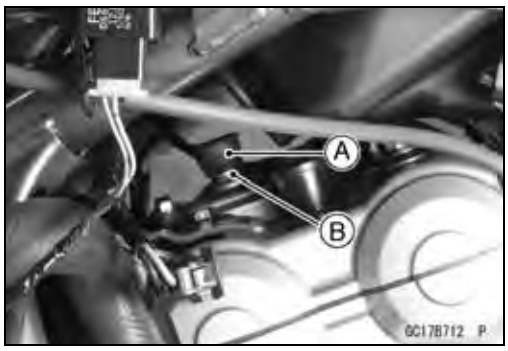

- Remove the air switching valve hoses from the fitting.
- Install the suitable plugs [A] on the fitting [B] and shut off the secondary air.

- Turn the ignition switch ON.
- Start the engine, and let it idle.
- Measure the output voltage of the sensor with the connector joined.

  Oxygen Sensor Output Voltage (with Plugs)
  Standard: 0.7 V or more

- Next, remove the plugs from the fitting [A] with idling.

Oxygen Sensor-Incorrect Output Voltage (Service Code 94) - Europe Model

- Measure the output voltage of the sensor with the connector joined.

Oxygen Sensor Output Voltage (without Plugs)
Standard: 0.2 V or less

★If the reading is within range (with plugs: 0.7 V or more, without plugs: 0.2 V or less), the oxygen sensor is good.
★If the reading is without range, inspect the engine and fuel supply system.
★If the engine and fuel supply system good, replace the oxygen sensor.

Oxygen Sensor Circuit

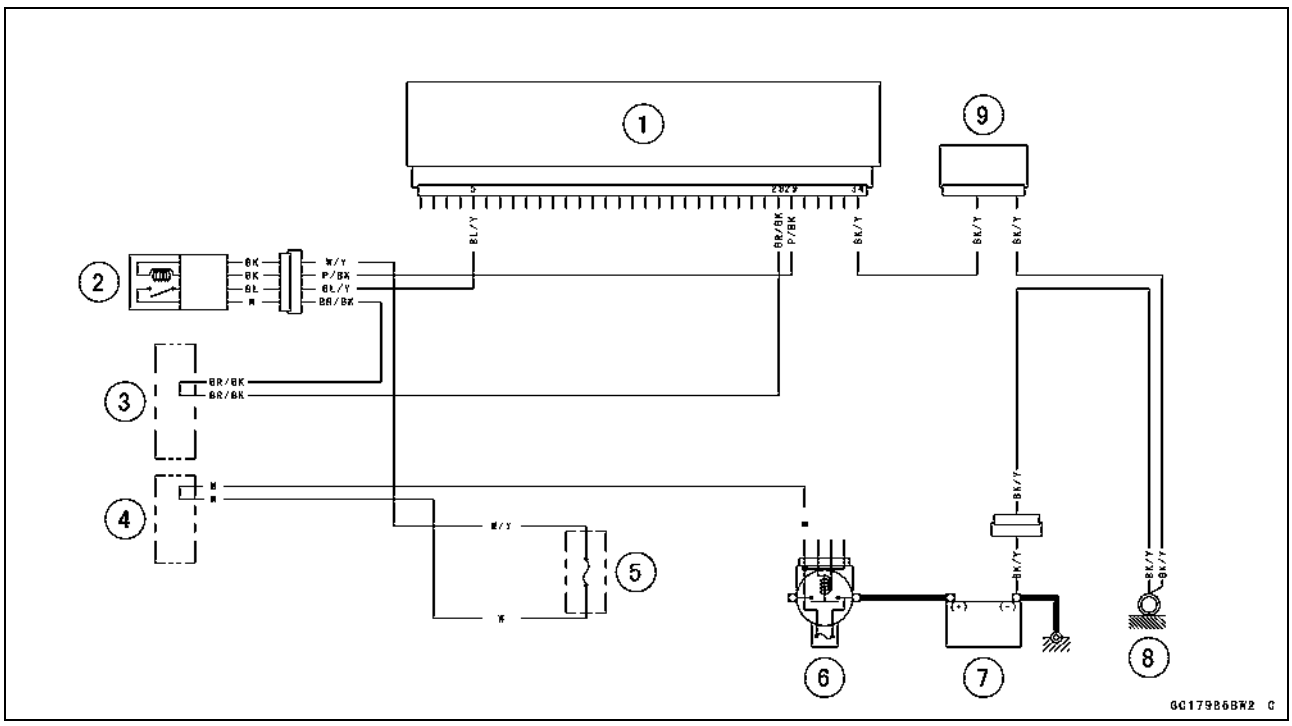

1. ECU
2. Oxygen Sensor
3. Water-proof Joint E
4. Water-proof Joint D
5. Oxygen Sensor Heater Fuse 10 A
6. Main Fuse 30 A
7. Battery
8. Frame Ground
9. Joint Connector

FI Indicator Light (LED)

Inspection Flow Chart

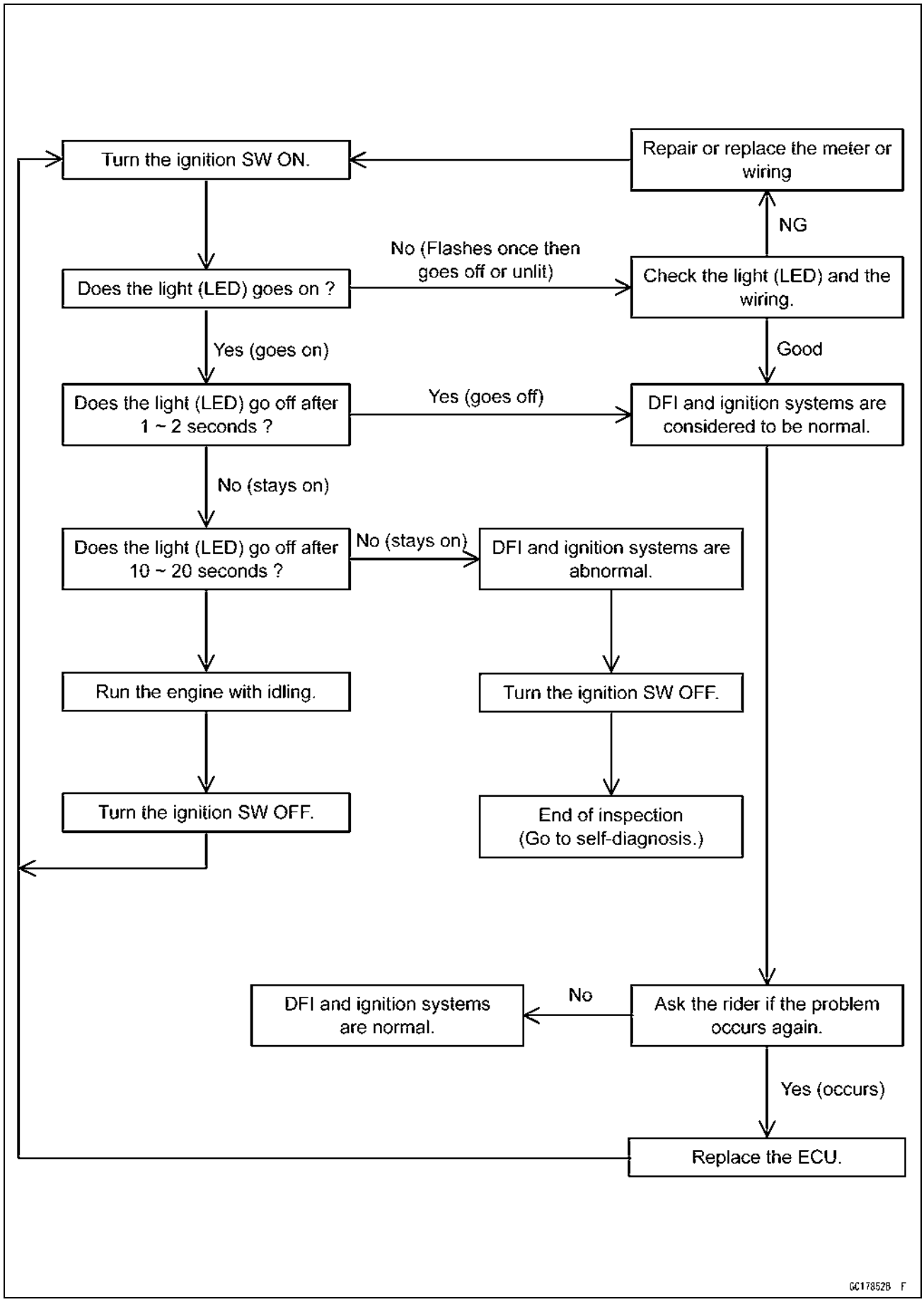

FI Indicator Light (LED)

FI Indicator Light (LED) Inspection

- Remove the meter unit (see Meter Unit Removal in the Electrical System chapter).
- Using two auxiliary leads, supply battery power to the FI indicator light (LED) [A].
  12 V Battery [B]

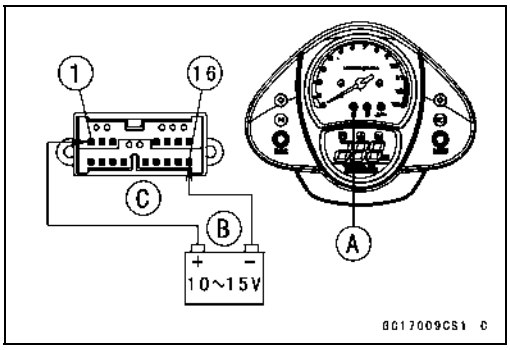

FI Indicator Light (LED) Check

Connector:	**Meter Connector [C] (disconnected)**
Connection:	**W/BK Lead Terminal [1] of the Meter → Battery (+) Terminal**
	BR/R Lead Terminal [16] of the Meter → Battery (–) Terminal
Criterion:	**The light (LED) should light.**

★If the light (LED) does not go on, replace the meter unit.

FI Indicator Light (LED) Circuit

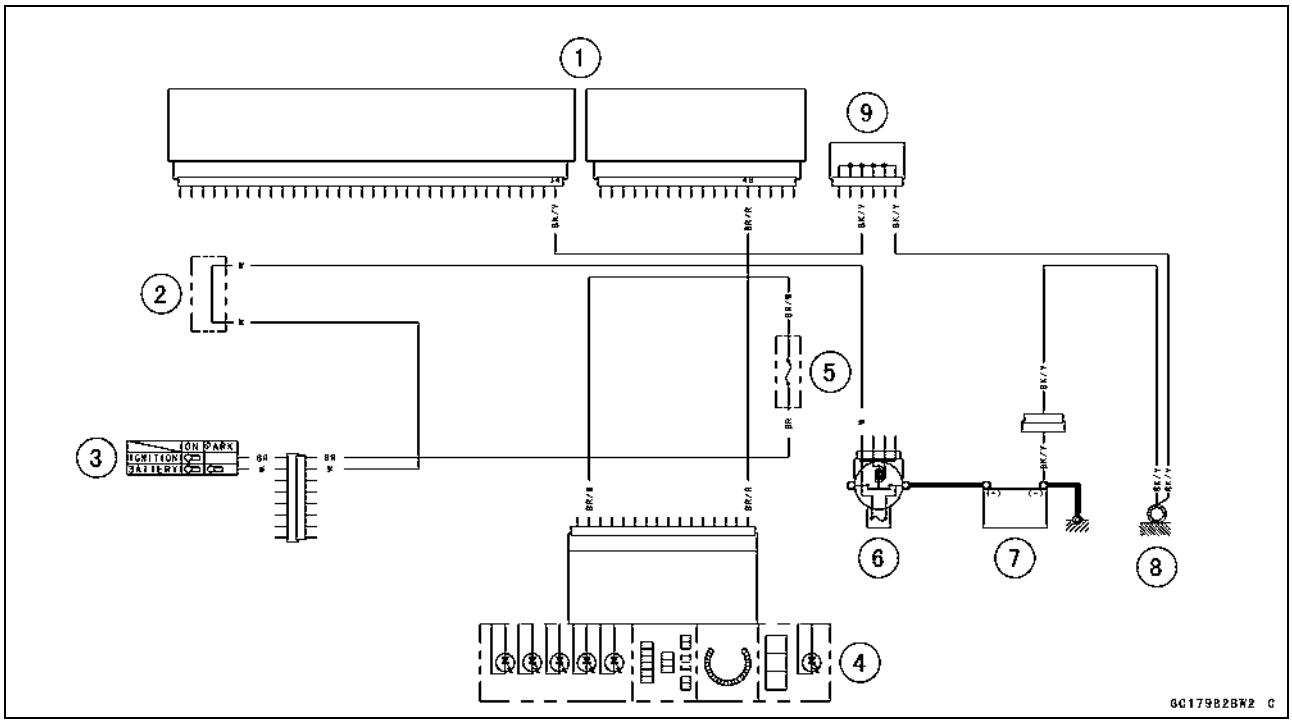

1. ECU
2. Water-proof Joint C
3. Ignition Switch
4. Meter Unit
5. Ignition Fuse 10 A
6. Main Fuse 30 A
7. Battery
8. Frame Ground
9. Joint Connector

ECU

CAUTION
Never drop the ECU, especially on a hard surface. Such a shock to the ECU can damage it.

ECU Removal

- Remove:
  Seat (see Seat Removal in the Frame chapter)
  Grab Rails [A] (see Seat Covers Removal in the Frame chapter)
  Center Seat Cover [B] (see Seat Covers section in the Frame chapter)
  Seat Covers [C] (see Seat Covers Removal in the Frame chapter)
  Rear Fender Rear Bolts [D]

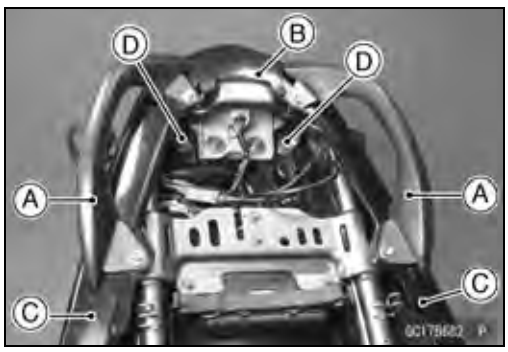

- Pull down the rear fender rear [A].

- Remove the ECU bracket bolts [A].
- Take the ECU [B] out along with the harness.
- Disconnect the ECU lead connectors.

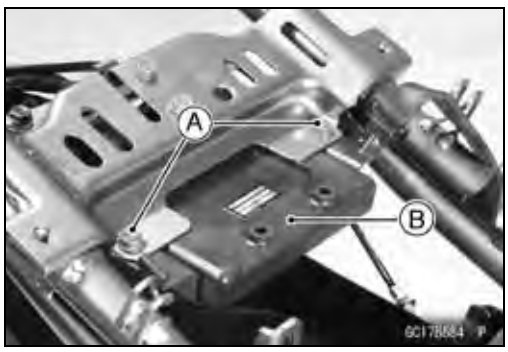

ECU Installation

- Fit [A] the bracket on the ECU as shown.

ECU

ECU Power Supply Inspection

● Visually inspect the terminals [A] of the ECU connectors.

★If the connector is clogged with mud or dust, blow it off with compressed air.

★Replace the main harness if the terminals of the main harness connectors are cracked, bent, or otherwise damaged.

★Replace the ECU if the terminals of the ECU connectors are cracked, bent, or otherwise damaged.

● With the ECU connectors [A] connected, check the following ground lead for continuity with the ignition switch OFF, using a tester and needle adapter set.

Battery [B]

Tester [C]

Special Tool - Needle Adapter Set: 57001-1457

ECU Grounding Inspection

34, 50, or 51 (BK/Y) Terminal	⟷	**Battery (–) Terminal: 0 Ω**
Engine Ground	⟷	**Battery (–) Terminal: 0 Ω**

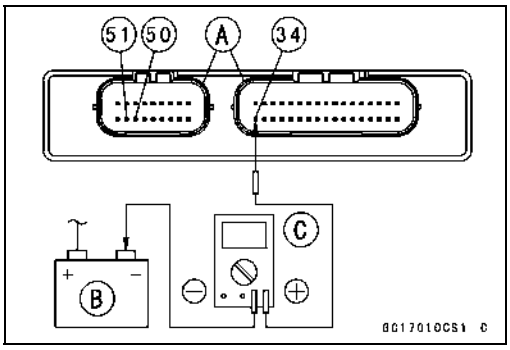

★If no continuity, check the connector, the engine ground lead, or main harness, and repair or replace them if necessary.

● Check the ECU power source voltage with a digital meter [A].

○Position the terminal in accordance with terminal numbers of ECU connectors [B] in this chapter figure.

Battery [C]

ECU Power Source Inspection

Meter Connections:

Between Terminal 16 (BR/W) and Battery (–) Terminal

Between Terminal 17 (W/BK) and Battery (–) Terminal

Ignition Switch OFF:

Terminal 16 (BR/W): 0 V

Terminal 17 (W/BK): Battery Voltage (12.6 V or more)

Ignition Switch ON:

Both: Battery Voltage (12.6 V or more)

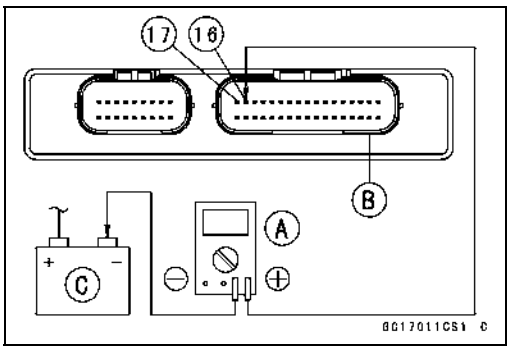

★If the meter does not read as specified, check the following:

Main Fuse 30 A (see Fuse section in the Electrical System chapter)

ECU Fuse 15 A (see Fuse Inspection in the Electrical System chapter)

ECU Main Relay (see Relay Circuit Inspection in the Electrical System chapter)

Power Source Wiring (see wiring diagram below)

★If the inspection checks good, the ECU is damaged. Replace the ECU. The ECU itself cannot be checked or serviced.

http://mototh.com

ECU

ECU Power Source Circuit

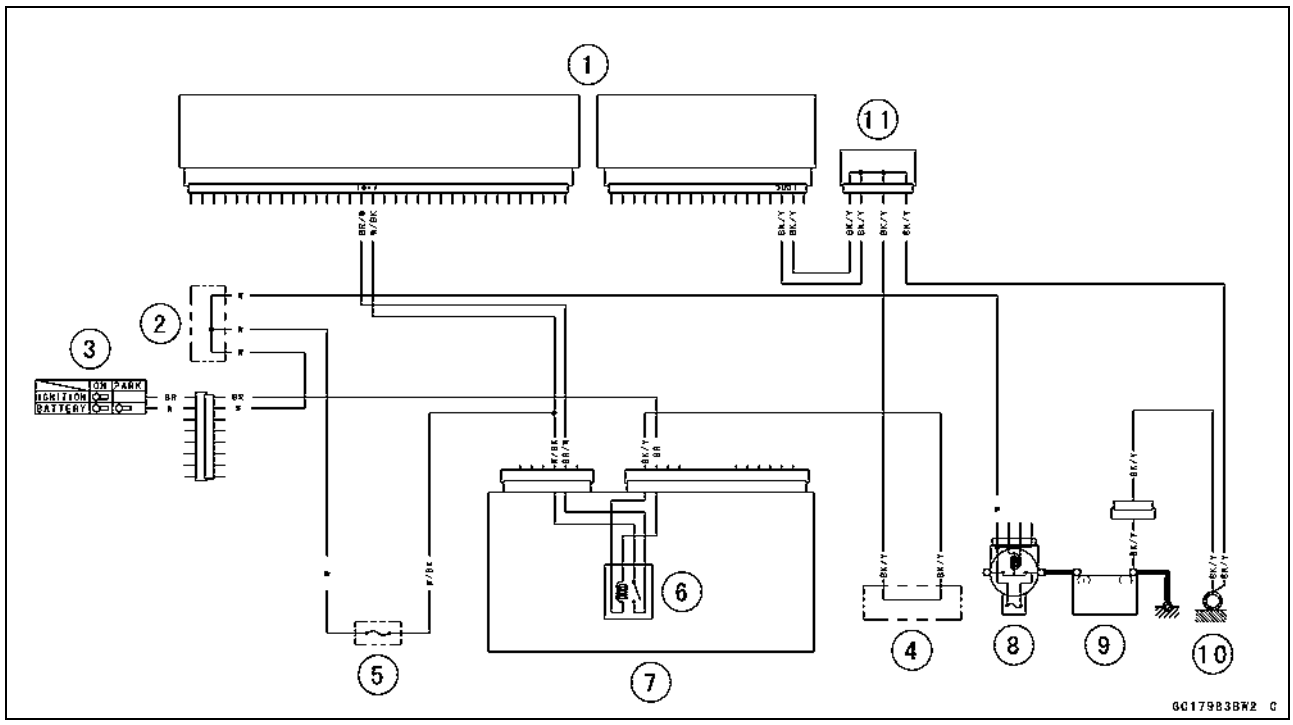

1. ECU
2. Water-proof Joint C
3. Ignition Switch
4. Water-proof Joint A
5. ECU Main Fuse 15 A
6. ECU Main Relay
7. Relay Box
8. Main Fuse 30 A
9. Battery
10. Frame Ground
11. Joint Connector

Fuel Line

Fuel Pressure Inspection

NOTE

○*This inspection can determine which trouble the DFI system has, mechanical or electrical trouble.*
○*It is preferable to measure the fuel pressure while running the motorcycle just when trouble occurred in order to know symptom well.*
○*Be sure the battery is fully charged.*

- Remove the fuel tank (see Fuel Tank Removal).
- Be sure to place a piece of cloth around the fuel hose joint and the delivery pipe.
- Insert a minus screw driver [A] into the slit on the joint lock [B].
- Turn the driver to disconnect the joint lock.
- Remove the fuel hose [C].

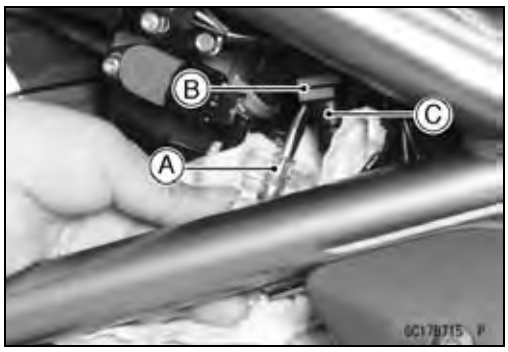

⚠ WARNING

Be prepared for fuel spillage; any spilled fuel must be completely wiped up immediately.
When the fuel hose is disconnected, fuel spills out from the hose and the pipe because of residual pressure. Cover the hose connection with a piece of clean cloth to prevent fuel spillage.

- Install the fuel pressure gauge adapter [A] and fuel hoses between the fuel pump outlet pipe [B] and the delivery pipe [C].
- Connect the pressure gauge [D] to the fuel pressure gauge adapter.

Special Tools - Oil Pressure Gauge, 5 kgf/cm²: 57001-125
Fuel Pressure Gauge Adapter: 57001-1593
Fuel Hose: 57001-1607

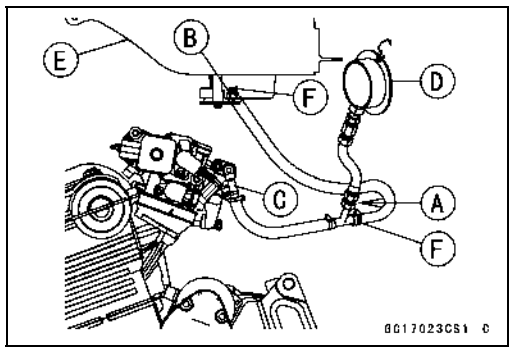

⚠ WARNING

Do not try to start the engine with the fuel hoses disconnected.

- Temporarily, install the fuel tank [E].
  Clamps [F]

Fuel Line

- Turn the ignition switch ON. The fuel pump will turn for 3 seconds, and then stop.

CAUTION
Do not drive the fuel pump without the fuel in the fuel tank.

- Measure the fuel pressure with the engine stopped.

Fuel Pressure

Right after Ignition Switch ON, with pump running:

Standard: 323 kPa (3.3 kgf/cm², 47 psi)

After 3 seconds from Ignition Switch ON, with pump stopped:

Standard: 265 kPa (2.7 kgf/cm², 38 psi) (residual fuel pressure)

The system should hold the residual pressure about 30 seconds.

- Start the engine, and let it idle.
- Measure the fuel pressure with the engine idling.

Fuel Pressure (Idling)

Standard: 333 kPa (3.4 kgf/cm², 48 psi)

NOTE

○*The gauge needle will fluctuate. Read the pressure at the average of the maximum and minimum indications.*

★If the fuel pressure is normal, the fuel circulation system (fuel pump, pressure regulator, and fuel passage) is no faults. Check the DFI electronic control system (injectors, sensors, crankshaft sensor, and ECU).

★If the fuel pressure is much lower than specified, check the following:
Fuel Line Leakage
Fuel Pump Operation (check the sound of the pump)
Amount of Fuel Flow (see Fuel Flow Rate Inspection)

★If the fuel pressure is much higher than specified, check the following:
Delivery Pipe Clogging
Injector Clogging

- Remove the fuel pressure gauge and adapter.
- Install the fuel tank (see Fuel Tank Installation).

http://mototh.com

Fuel Line

Fuel Flow Rate Inspection

NOTE

○*Be sure the battery is fully charged.*

⚠ WARNING

Gasoline is extremely flammable and can be explosive under certain conditions. Make sure the area is well-ventilated and free from any source of flame or sparks; this includes any appliance with a pilot light. Do not smoke. Turn the ignition switch OFF. Be prepared for fuel spillage; any spilled fuel must be completely wiped up immediately.

- Turn the ignition switch, and engine stop switch OFF.
- Wait until the engine cools down.
- Prepare a plastic hose of the inside diameter 7.5 mm (0.30 in.) and a measuring cylinder.
- Remove the fuel tank bolt (see Fuel Tank Removal).
- Open the fuel tank cap [A] to lower the pressure in the tank.

⚠ WARNING

Be prepared for fuel spillage; any spilled fuel must be completely wiped up immediately.
When the fuel hose is disconnected, fuel spills out from the hose and the pipe because of residual pressure. Cover the hose connection with a piece of clean cloth to prevent fuel spillage.

- Connect the plastic hose [A] to the fuel pump outlet pipe.
- Secure the plastic hose with a clamp [B].
- Run the other side of the plastic hose into the measuring cylinder [C].

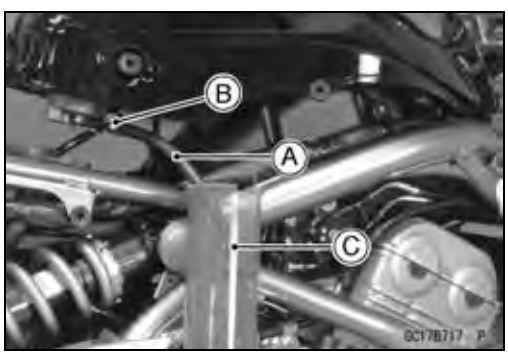

⚠ WARNING

Wipe off spilled out fuel immediately.
Be sure to hold the measuring cylinder vertical.

- Temporarily install the fuel tank and close the fuel tank cap.
- With the engine stopped, turn the ignition switch ON. The fuel pump should operate for 3 seconds, and then should stop. Repeat this several times until the plastic hose is filled with fuel.

http://mototh.com

Fuel Line

CAUTION
Do not drive the fuel pump without the fuel in the fuel tank.

- Measure the discharge for 3 seconds with the plastic hose filled with fuel.

○Repeat this operation several times.

Amount of Fuel Flow
Standard: 60 mL or more for 3 seconds

★If the fuel flow is much less than the specified, check the battery condition (see Battery section in the Electrical System chapter). If the battery is good, replace the fuel pump.

- After inspection, install the fuel tank. (see Fuel Tank Installation).
- Start the engine and check for fuel leakage.

http://mototh.com

Fuel Pump

Fuel Pump Removal

CAUTION

Never drop the fuel pump, especially on a hard surface. Such a shock to the pump can damage it.

⚠ WARNING

Gasoline is extremely flammable and can be explosive under certain conditions. Make sure the area is well-ventilated and free from any source of flame or sparks; this includes any appliance with a pilot light. Do not smoke. Turn the ignition switch OFF. Disconnect the battery (–) terminal.
To make fuel spillage minimum, draw the fuel out from the fuel tank when the engine is cold. Be prepared for fuel spillage; any spilled fuel must be completely wiped up immediately.

- Draw the fuel out from the fuel tank with a commercially available electric pump.
- Remove the fuel tank (see Fuel Tank Removal).

○Be careful of fuel spillage from the fuel tank since fuel still remains in the fuel tank and fuel pump. Plug the fuel pipe of the fuel tank.

- Turn the fuel tank upside down.
- Remove:
  Fuel Pump Bolts [A]
  Fuel Pump [B] and gasket
- Discard the fuel pump gasket.

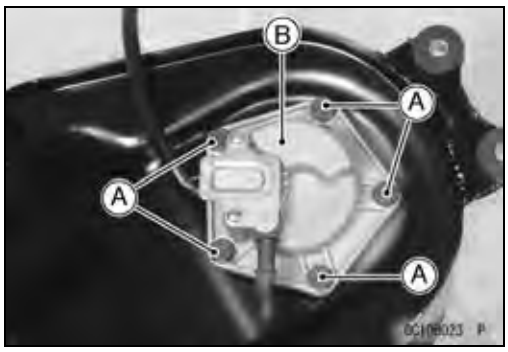

CAUTION

Do not pull the lead of the fuel pump. If they are pulled, the lead terminals may be damaged.

Fuel Pump Installation

- Remove dirt or dust from the fuel pump [A] by lightly applying compressed air.

Fuel Pump

- Replace the fuel pump gasket [A] with a new one.

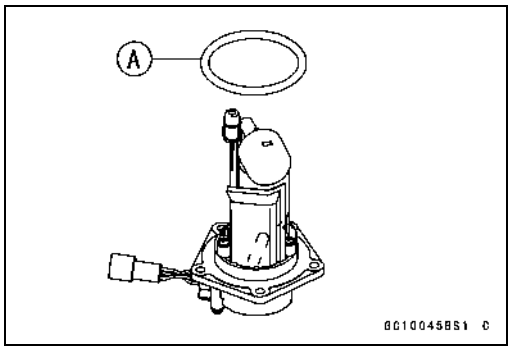

- Apply a non-permanent locking agent to the threads of the fuel pump bolts.
- Tighten the fuel pump bolts to a snug fit, tighten them alternating diagonally.

Torque - Fuel Pump Bolts: 9.8 N·m (1.0 kgf·m, 87 in·lb)

- Tighten the pump bolts again alternating diagonally to check the tightness.

Fuel Pump Operation Inspection

NOTE

○*Be sure the battery is fully charged.*
○*Just listen to the pump sound in the fuel tank to confirm pump operation.*

- Turn the ignition switch ON and make sure that the fuel pump operates (make light sounds) for 3 seconds, and then stops.
- Turn the ignition switch OFF.

★If the pump does not work as described above, inspect the operating voltage.

Fuel Pump Operating Voltage Inspection

NOTE

○*Be sure the battery is fully charged.*

- Turn the ignition switch OFF.
- Remove the left side cover (see Side Cover Removal in the Frame chapter).

Fuel Pump

- Connect the hand tester (25 V DC) to the fuel pump connector [A] with needle adapter set.

Special Tools - Hand Tester: 57001-1394
Needle Adapter Set: 57001-1457

○Measure the operating voltage with the engine stopped, and with the connector joined.

- Turn the ignition switch ON.

○The tester needle should indicate battery voltage for 3 seconds, and then 0 V.

Pump Operating Voltage at Pump Connections to Pump Connectors

Tester (+) → W/R Lead

Tester (–) → BK/Y Lead

Operating Voltage at Pump Connector

Standard: Battery Voltage (12.8 V or more) for 3 seconds, and then 0 V.

★If the reading stays on battery voltage, and never shows 0 V. Check the ECU and fuel pump relay.

★If the voltage is in specification, but the pump doesn't work, replace the pump.

★If there is still no battery voltage, check the pump relay (see Relay Box section in the Electrical System chapter).

Pressure Regulator Removal

○The pressure regulator [A] is built into the fuel pump [B] and cannot be removed.

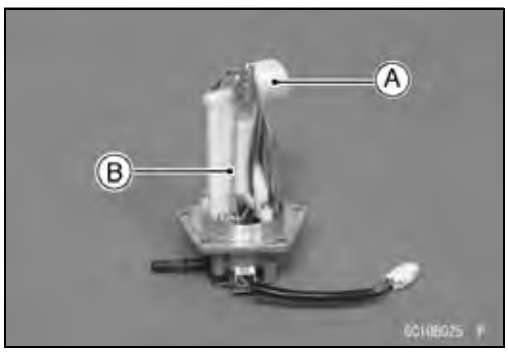

Pump Screen, Fuel Filter Cleaning

○The fuel filter [A] is built into the pump and cannot be cleaned or checked.

★If the fuel filter is suspected of clogging or being damaged, replace it with the fuel pump as a set.

Fuel Pump

Fuel Pump Circuit

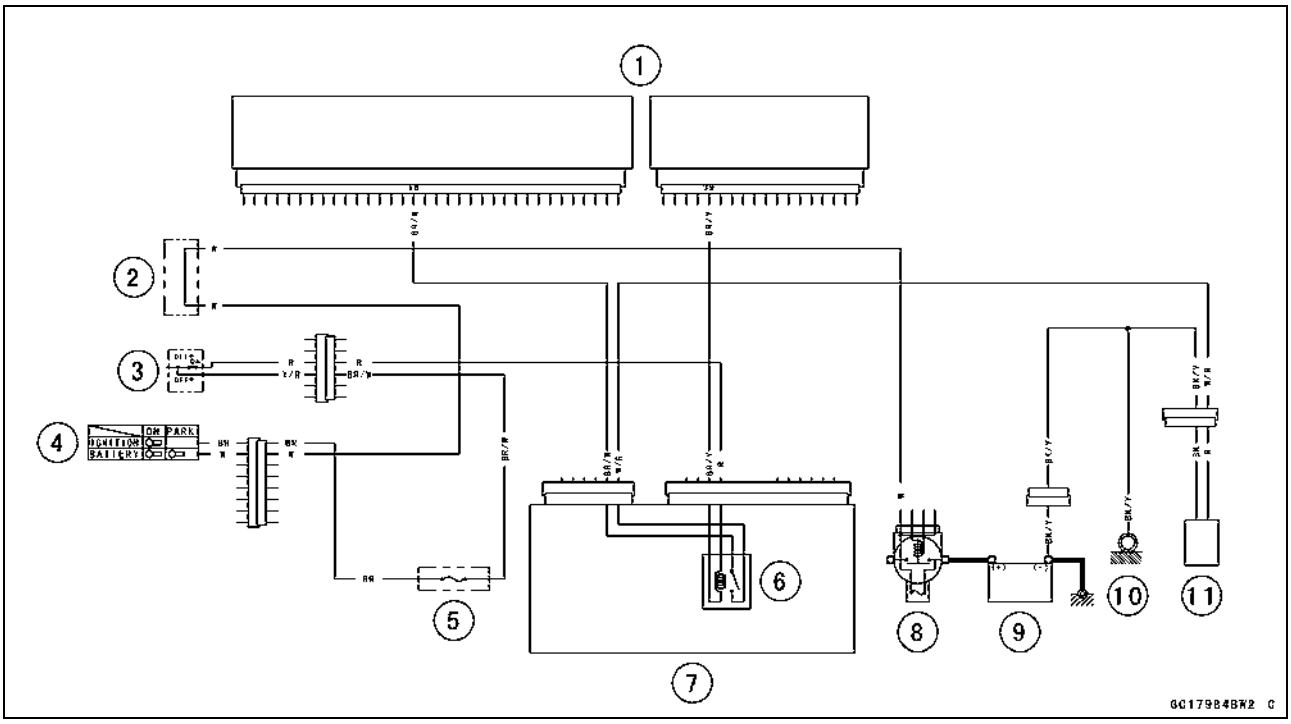

1. ECU
2. Water-proof Joint C
3. Engine Stop Switch
4. Ignition Switch
5. Ignition Fuse 10 A
6. Fuel Pump Relay
7. Relay Box
8. Main Fuse 30 A
9. Battery
10. Frame Ground
11. Fuel Pump

http://mototh.com

Fuel Injectors

Removal/Installation

● Refer to the Throttle Body Assy Disassembly/Assembly.

Audible Inspection

● Start the engine.
● Apply the tip of a screwdriver [A] to the injector [C]. Put the grip end onto your ear, and listen whether the injector is clicking or not.
○A sound scope [B] can also be used.
● Do the same for the other injectors.
★If all the injectors click at a regular intervals, the injectors are good. The trouble may be related to the fuel line, requiring fuel pressure inspection (see Fuel Line section).
○The click interval becomes shorter as the engine speed rises.
★If any injector(s) doesn't click, the DFI circuit or the injector is suspect. Perform "Fuel Injector Power Source Voltage Inspection", first.

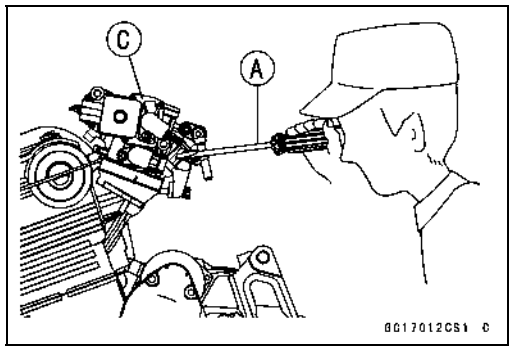

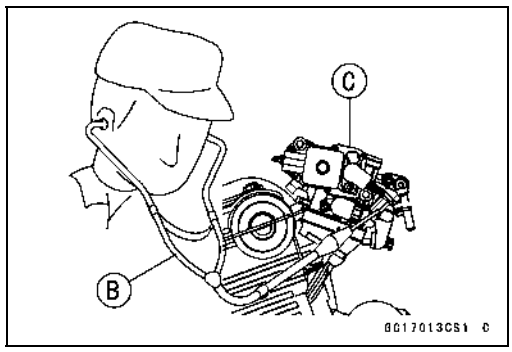

Fuel Injector Power Source Voltage Inspection

● Remove the ECU (see ECU Power Supply Inspection).
○Do not disconnect the ECU connector.
● Connect a digital meter [A] to the ECU connector [B], using the needle adapter [C].

Special Tool - Needle Adapter Set: 57001-1457

○Measure the power source voltage with the engine stopped, and with the connector joined.
● Turn the ignition switch ON.

Injector Power Source Voltage at ECU

Connections:	**Meter (+) → W/Y (terminal 16)**
	Meter (–) → Battery (–) Terminal
Service Limit:	**Voltage (12.6 V or more)**

★If the meter doesn't read as specified, check the following.
Main Fuse 30 A (see Fuse section in the Electrical System chapter)
Fuel Pump Relay (see Relay Circuit Inspection in the Electrical System chapter)
Power Source Wiring (see Wiring Diagram below)
○To check the W/R leads between the injector connector and the fuel pump relay, remove the fuel tank (see Fuel Tank Removal) and the left side cover (see Side Cover Removal in the Frame chapter).
★If the power source voltage is normal, check the output voltage of the injectors.

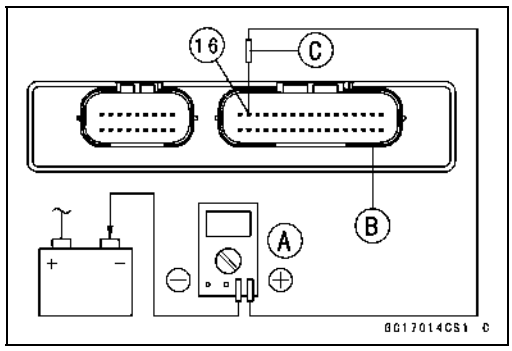

http://mototh.com

Fuel Injectors

Fuel Injector Output Voltage Inspection

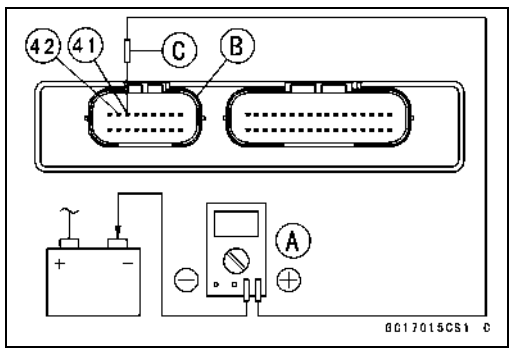

- Turn the ignition switch OFF.
- Remove the ECU (see ECU Power Supply Inspection).
- Connect a digital voltmeter [A] to the ECU connector [B] with the needle adapter set [C].

  Special Tool - Needle Adapter Set: 57001-1457

  Injector Output Voltage
  Connections to Injector #1
  Meter (+) → BL/R lead (terminal 42)
  Meter (–) → Battery (–) Terminal
  Connections to Injector #2
  Meter (+) → BL/G lead (terminal 41)
  Meter (–) → Battery (–) Terminal

- Turn the ignition switch ON.

  Output Voltage at Injector Connector
  Standard: Battery Voltage (12.8 V or more)

★If the output voltage is normal, perform “Injector Signal Test”.
★If the output voltage is out of the standard, turn the ignition switch OFF, remove the fuel tank, and check the injector wiring for continuity.

Injector Wiring Inspection

ECU Connector		Injector Connectors
Terminal 36	→	Injector #1 Terminal (BL/R)
Terminal 35	→	Injector #2 Terminal (BL/G)

★If the wiring is good, inspect the resistance of the injectors (see Injector Resistance Inspection).
- Remove the needle adapter.
- Apply silicone sealant to the seals of the ECU connector for waterproofing.

  Silicone Sealant (Kawasaki Bond: 56019-120) - Seals of ECU Connectors

Injector Signal Test

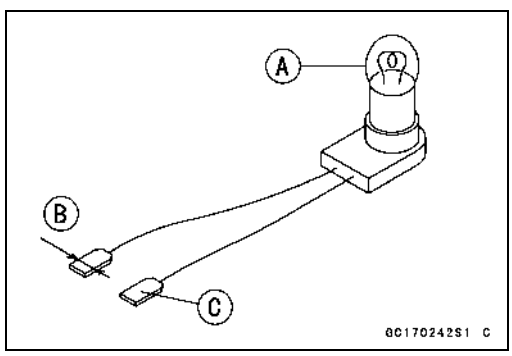

- Prepare two test light sets with male terminals as shown.
  Rating of Bulb [A]: 12 V × 3 ~ 3.4 W
  Terminal Width [B]: 1.8 mm (0.071 in.)
  Terminal Thickness [C]: 0.8 mm (0.031 in.)

CAUTION

Do not use larger terminals than specified above. A larger terminal could damage the injector main harness connector (female), leading to harness repair or replacement.
Be sure to connect bulbs in series. The bulb works as a current limiter to protect the solenoid in the injector from excessive current.

http://mototh.com

Fuel Injectors

- Remove the fuel tank (see Fuel Tank Removal).
- Remove the air cleaner housing (see Air Cleaner Housing Removal)
- Remove connectors for injector [A].
- Connect each test light set [B] to the injector sub harness connector [C].
- Turn the ignition switch ON.
- While cranking the engine with the starter motor, watch the test lights.

★If the test lights flicker at regular intervals, the injector circuit in the ECU, and the wiring are good. Perform the "Injector Resistance Inspection".

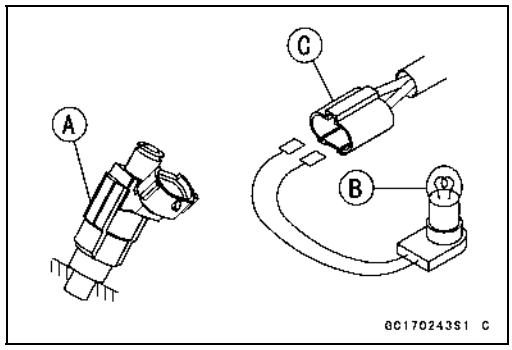

○Injector signals can be also confirmed by connecting the hand tester (× 10 V AC) instead of the test light set to the injector main harness (female) connector. Crank the engine with the starter motor, and check to see if the hand oscillates at regular intervals.

Special Tool - Hand Tester: 57001-1394

★If the test light doesn't flicker (or the tester needle doesn't oscillates), check the wiring and connectors again. If the wiring is good, check the injector voltage. If the wiring is good, inspect the ECU for its ground and power supply (see ECU Power Supply Inspection).

Injector Resistance Inspection

- Remove the fuel tank (see Fuel Tank Removal).
- Remove the air cleaner housing (see Air Cleaner Housing Removal).
- Disconnect the connector from the injector [A].
- Measure the injector resistance with the hand tester [B].

Special Tool - Hand Tester: 57001-1394

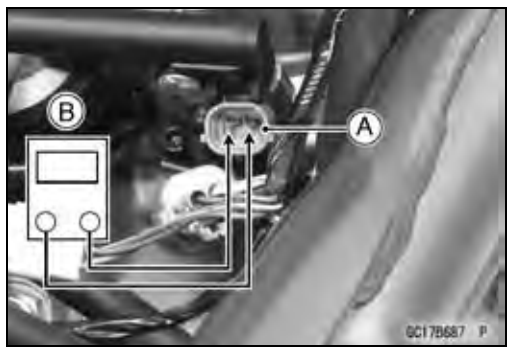

Injector Resistance

Connections to Injector

	Meter (+)		Meter (–)
#1:	W/R	←→	BL/R Terminal
#2:	W/R	←→	BL/G Terminal

Standard: about 11.7 ~ 12.3 Ω @20°C (68°F)

★If the reading is out of the range, perform the "Injector Unit Test".

★If the reading is normal, perform the "Injector Unit Test" for confirmation.

http://mototh.com

Fuel Injectors

Injector Unit Test

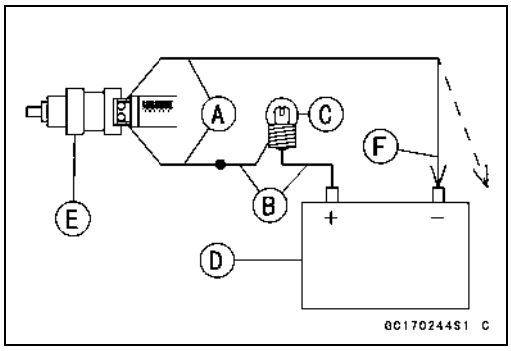

- Use two leads [A] and the same test light set [B] as in "Injector Signal Test".
  Rating of Bulb [C]: 12 V × (3 ~ 3.4) W
  12 V Battery [D]

CAUTION
Be sure to connect the bulb in series. The bulb works as a current limiter to protect the solenoid in the injector from excessive current.

- Connect the test light set to the injector [E] as shown.
- Open and connect [F] the end of the lead to the battery (–) terminal repeatedly. The injector should click.

★If the injector does not click, replace the injector.
★If the injector clicks, check the wiring again. If the wiring is good, replace the injector (may be clogged) or ECU.

Injector Fuel Line Inspection

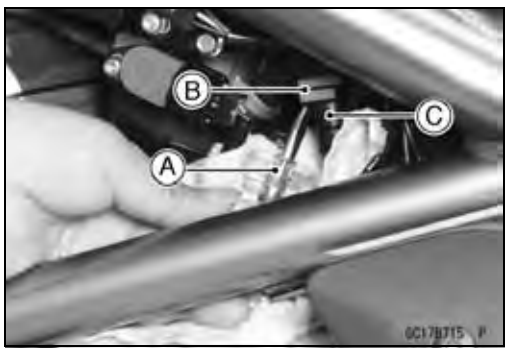

- Remove:
  Fuel Tank (see Fuel Removal)
- Be sure to place a piece of cloth around the fuel hose joint and the delivery pipe.
- Insert a minus screw driver [A] into the slit on the joint lock [B].
- Turn the driver to disconnect the joint lock.
- Pull the fuel hose joint [C] out of the delivery pipe.

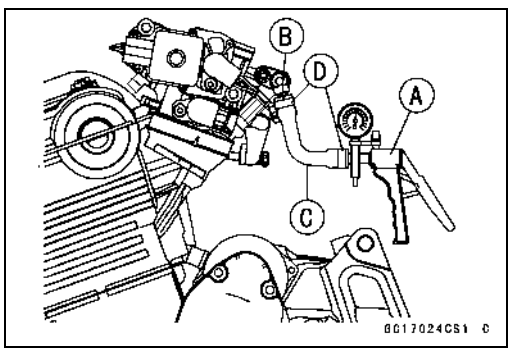

- Check the injector fuel line for leakage as follows:

○Connect a commercially available vacuum/pressure pump [A] to the nipple of the delivery pipe [B] with a high-pressure fuel hose [C] (both ends connected with the clamps [D]) as shown.

Torque - Fuel Hose Clamp Screws: 1.5 N·m (0.15 kgf·m, 13 in·lb)

○Apply soap and water solution to the areas [E] as shown.
○Watching the pressure gauge, squeeze the pump lever [F], and build up the pressure until the pressure reaches the maximum pressure.

Injector Fuel Line Maximum Pressure
Standard: 333 kPa (3.4 kgf/cm², 48 psi)

CAUTION
During pressure testing, do not exceed the maximum pressure for which the system is designed.

- Watch the gauge for at least 6 seconds.

★If the pressure holds steady, the system is good.
★If the pressure drops at once or if bubbles are found in the area, the line is leaking. Replace the delivery pipe, injectors and related parts.

○Repeat the leak test, and check the fuel line for no leakage.

- Install the pump outlet hose (see Fuel Tank Installation).
- Run the hoses correctly (see Cable, Wire, and Hose Routing section in the Appendix chapter).

http://mototh.com

Fuel Injectors

Fuel Injector Circuit

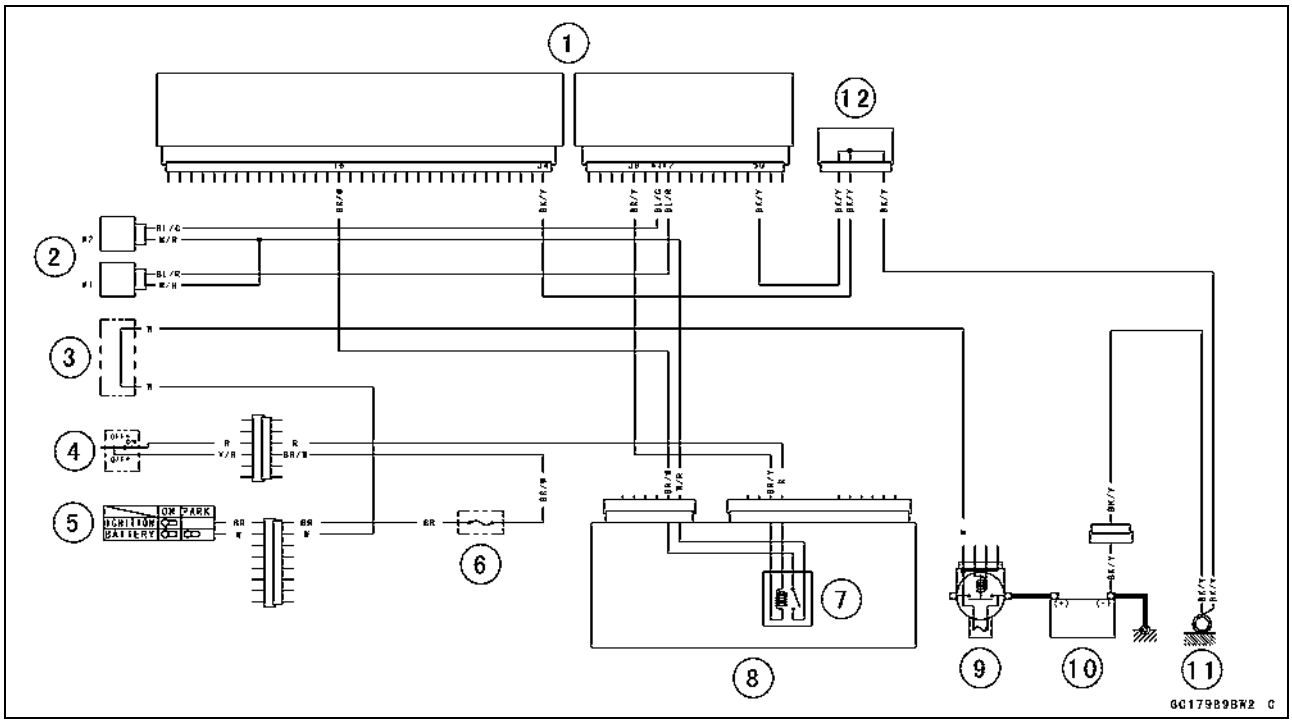

1. ECU
2. Fuel Injectors
3. Water-proof Joint C
4. Engine Stop Switch
5. Ignition Switch
6. Ignition Fuse 10 A
7. Fuel Pump Relay (for fuel pump and injectors)
8. Relay Box
9. Main Fuse 30 A
10. Battery
11. Frame Ground
12. Joint Connector

Throttle Grip and Cables

Throttle Grip Free Play Inspection

- Refer to Throttle Control System Inspection in the Periodic Maintenance chapter.

Throttle Grip Free Play Adjustment

- Refer to Throttle Control System Inspection in the Periodic Maintenance chapter.

Throttle Cable Installation

- Install the throttle cables in accordance with Cable, Wire, and Hose Routing section in the Appendix chapter.
- Install the lower ends of the throttle cables in the cable bracket on the throttle assy after installing the upper ends of the throttle cables in the grip.
- After installation, adjust each cable properly.

⚠ WARNING

Operation with incorrectly routed or improperly adjusted cables could result in an unsafe riding condition.

Throttle Cable Lubrication

- Refer to Chassis Parts Lubrication in the Periodic Maintenance chapter.

http://mototh.com

Throttle Body Assy

Idle Speed Inspection

- Refer to Idle Speed Inspection in the Periodic Maintenance chapter.

Engine Vacuum Synchronization Inspection/Adjustment

- Refer to Engine Vacuum Synchronization Inspection in the Periodic Maintenance chapter.

High Altitude Performance Adjustment

- Any modification is not necessary in this model since the inlet air pressure sensor senses inlet air pressure change due to high altitude and the ECU compensates the change.

Throttle Body Assy Removal

⚠ WARNING

Gasoline is extremely flammable and can be explosive under certain conditions. Turn the ignition switch OFF. Disconnect the battery (–) cable terminal. Do not smoke. Make sure the area is well-ventilated and free from any source of flame or sparks; this includes any appliance with a pilot light.
Be prepared for fuel spillage: any spilled fuel must be completely wiped up immediately.

- Remove:
  Fuel Tank (see Fuel Tank Removal)

- Disconnect:
  Main Throttle Sensor Connector [A]
  Fuel Hose Lower End [B]
  Vacuum Hose [C]
  Subthrottle Sensor Actuator [D] Connector

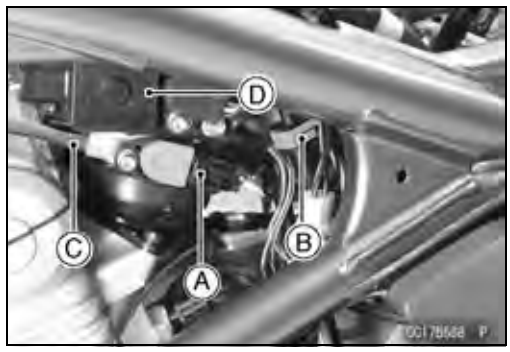

- Disconnect:
  #1. #2 Injector Connector [A]
  Subthrottle Sensor Connector [B]
- Loosen:
  Holder and Duct Clamp Bolts [C]

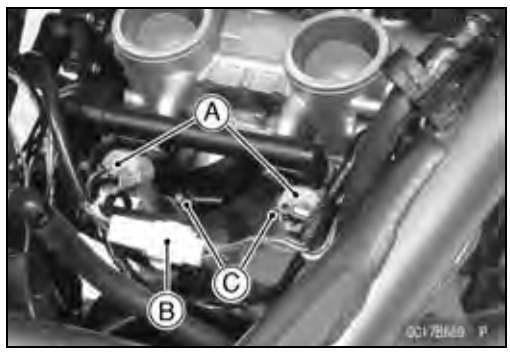

Throttle Body Assy

- Loosen the locknut and screw in the throttle cable adjuster fully to give the cables plenty of play.
- Remove the right switch housing and take out the accelerator cable upper end [A] and the decelerator cable upper end [B].

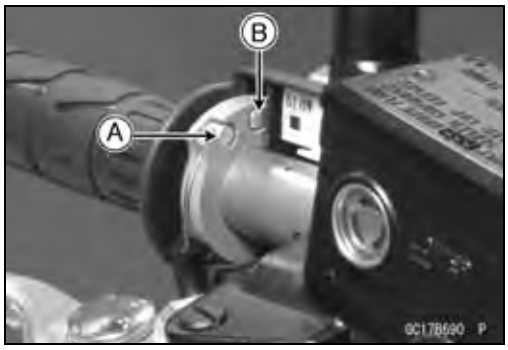

- Remove the throttle cable lower ends [A] from the throttle pulley.

- After removing the throttle body assy, stuff pieces of lint -free, clean cloth into the throttle body holders.

CAUTION
If dirt gets into the engine, excessive engine wear and possible engine damage will occur.

Throttle Body Assy Installation

- Install the holder clamp bolts [A] in the direction shown with each bolt heads [B], facing outwards.

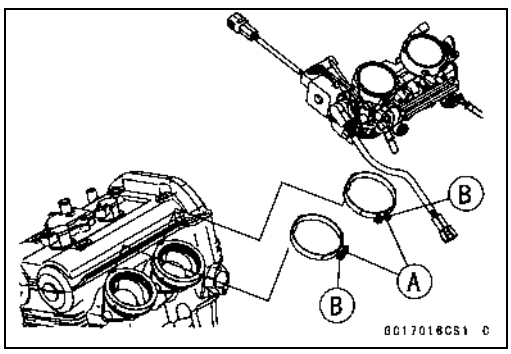

- Install the air cleaner duct clamp screw [A] so that their screw heads [B] face the right.
- Run the vacuum hose (see Cable, Wire, and Hose Routing section in the Appendix chapter).

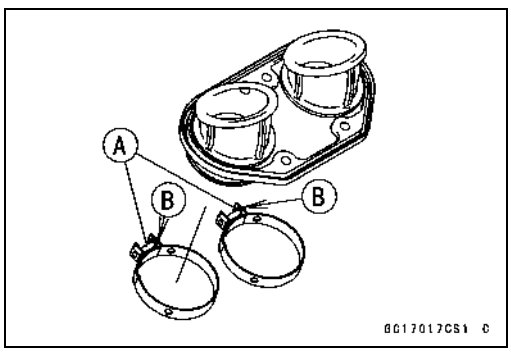

Throttle Body Assy

- Fit the accelerator cable end [A] and the decelerator cable end [B] into the throttle pulley.
- Check fuel leakage from the throttle body assy.

⚠ WARNING

Fuel spilled from the carburetors is hazardous.

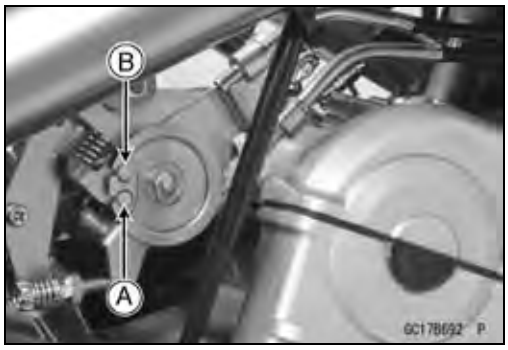

- Apply a thin coating of grease to the throttle cable upper ends.
- Install the upper ends of the throttle cables in the grip.
- Fit the projection [A] of the right switch housing into the hole [B] of the handlebar.
- Turn the throttle grip and make sure that the throttle valves move smoothly and return by spring force.
- Check the throttle grip free play (see Throttle Control System Inspection in the Periodic Maintenance chapter).

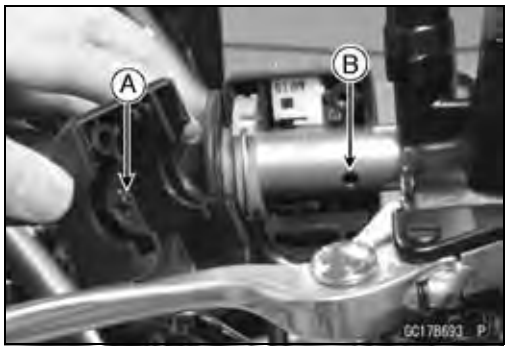

⚠ WARNING

Operation with an incorrectly routed cable could result in an unsafe riding condition.

- Adjust:
  Throttle Grip Free Play
  Idle Speed

Throttle Body Assy Disassembly

CAUTION

Do not remove, disassemble or adjust the main throttle sensor [A], subthrottle sensor [B], subthrottle valve actuator [C], throttle link mechanism [D] and throttle body assy [E], because they are adjusted or set at the manufacturer. Adjustment of these parts could result in poor performance, requiring replacement of the throttle body assy.

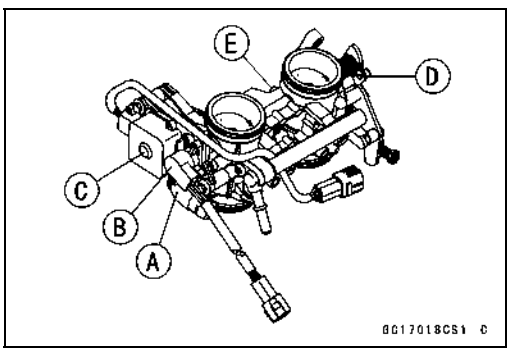

- Remove the throttle body assy (see Throttle Body Assy Removal).

CAUTION

Never drop the throttle body assy , especially on a hard surface. Such a shock to the body assy can damage it.

http://mototh.com

Throttle Body Assy

- Remove:
  Screws [A]
  Delivery Pipe [B]
  Fuel Injectors [C]

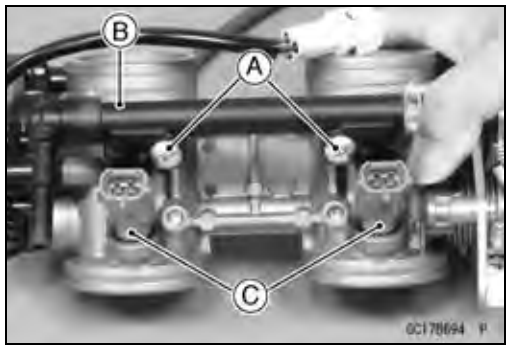

Throttle Body Assy Assembly

○Replace the O-rings [A] and seals [B] with the new ones.

- Before assembling, blow away dirt or dust from the throttle body and delivery pipe by applying compressed air.
- Apply engine oil to the new O-rings of each injector [C], insert them into the delivery pipe and confirm whether the injectors turn smoothly or not.
- Install the injectors along with the delivery pipe assy into the throttle bodies.

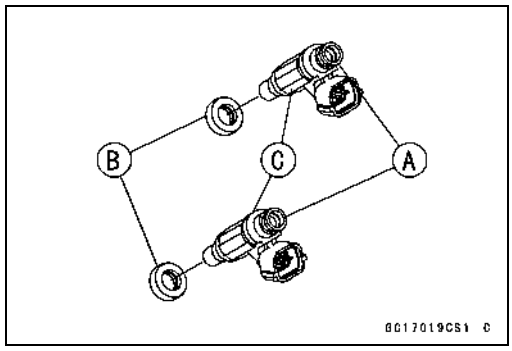

- Install the throttle body assy (see Throttle Body Assy Installation).

Air Cleaner

Air Cleaner Element Removal/Installation

- Refer to Air Cleaner Element Replacement in the Periodic Maintenance chapter.

Air Cleaner Element Inspection

- Remove the air cleaner element (see Air Cleaner Element Replacement in the Periodic Maintenance chapter).
- Visually check the element [A] for tears or breaks.

★If the element has any tears or breaks, replace the element.

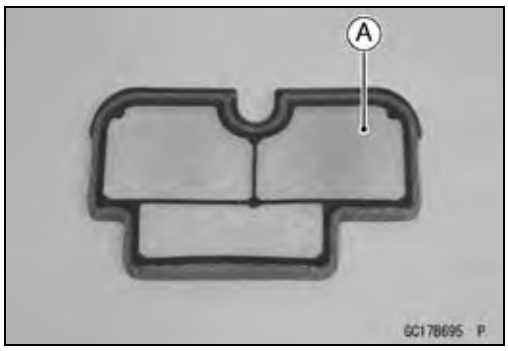

Air Cleaner Oil Draining

A drain hose is connected to the bottom of the air cleaner to drain water or oil accumulated in the cleaner part.

- Visually check the drain hose [A] if the water or oil accumulates.

★If any water or oil accumulates in the hose, remove the plug [B] from the drain hose and drain it.

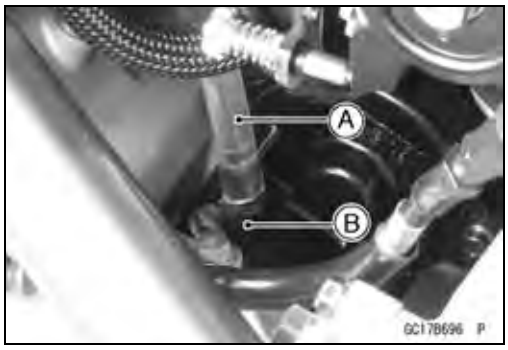

⚠ WARNING

Be sure to reinstall the plug in the drain hose after draining. Oil on tires will make them slippery and can cause an accident and injury.

Air Cleaner Housing Removal

- Remove disconnect.
  - Hose (Disconnect) [A]
  - Inlet Air Temperature Sensor Connector [B]
  - Screws [C]
  - Cover [D]

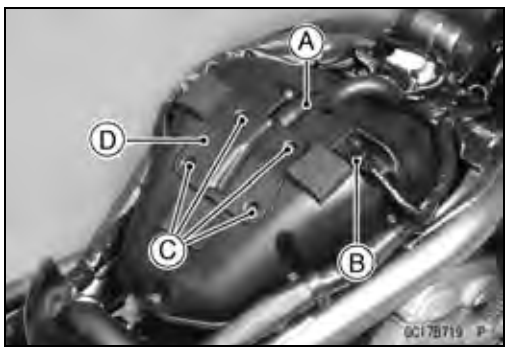

- Disconnect the breather hose [A] on the upper crankcase.

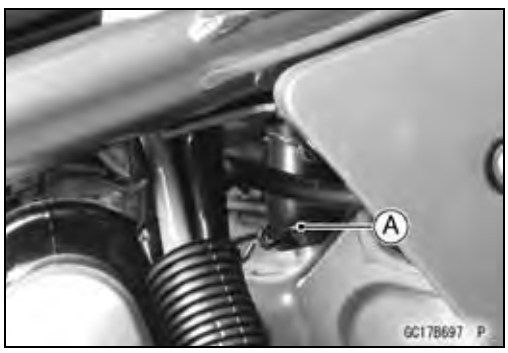

Air Cleaner

- Unscrew the bolts [A] and remove the air cleaner housing [B].

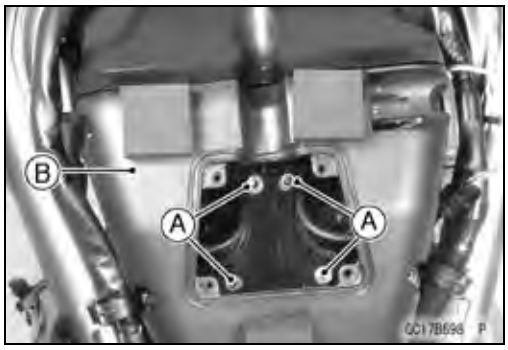

Air Cleaner Housing Installation

- Install the clamp on the hose [A] so that its pinch heads [B] face the right.
- Install the clamp on the breather hose [C] so that its pinch heads [D] face the front.

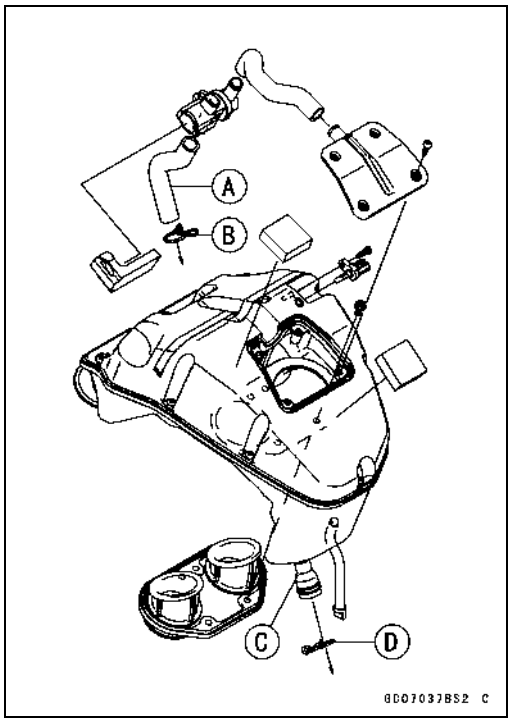

Fuel Tank

Fuel Tank Removal

⚠ WARNING

Gasoline is extremely flammable and can be explosive under certain conditions. Make sure the area is well-ventilated and free from any source of flame or sparks; this includes any appliance with a pilot light. Do not smoke. Turn the ignition switch OFF. Be prepared for fuel spillage; any spilled fuel must be completely wiped up immediately.

- Remove:
  Seat (see Seat Removal in the Frame chapter)
  Side Covers (see Side Covers Removal in the Frame chapter)
  Fuel Tank Bolts [A]

- Turn the ignition switch, and engine stop switch OFF.
- Wait until the engine cools down.
- Open the fuel tank cap [A] to lower the pressure in the tank.

○During tank removal, keep the tank cap open to release pressure in the tank. This makes fuel spillage less.

- Draw the fuel out from the fuel tank with a commercially available pump [A].

○Use a soft plastic hose [B] as a pump inlet hose in order to insert the hose smoothly.

○Put the hose through the fill opening [C] into the tank and draw the fuel out.
  Front [D]

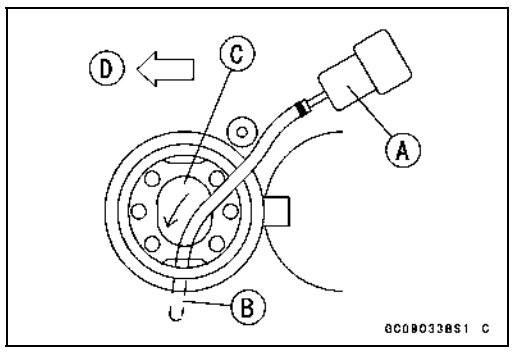

⚠ WARNING

The fuel could not be removed completely from the fuel tank. Be careful for remained fuel spillage.

- Remove:
  Left Side Cover (see Side Cover Removal in the Frame chapter)
- Disconnect the fuel pump lead connector [A] and the tube [B].

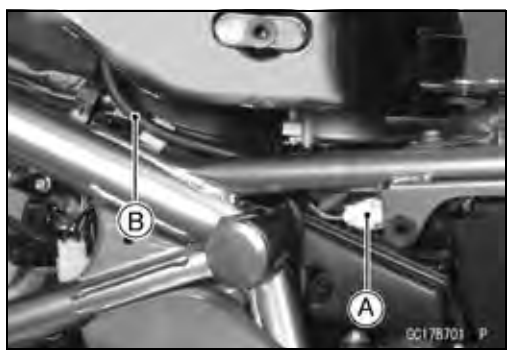

Fuel Tank

- Be sure to place a piece of cloth [A] around the fuel hose joint.
- Insert a minus screw driver [B] into the slit [C]on the joint lock.

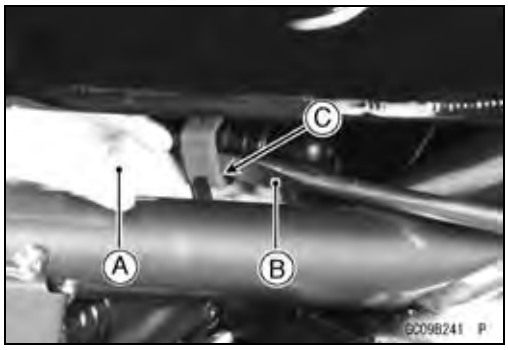

- Turn [A] the driver to disconnect the joint lock [B].
- Pull [C] the fuel hose joint out [D] of the outlet pipe.

CAUTION
When removing the fuel hose joint, do not apply strong force to the outlet pipe on the fuel pump. The pipe made from resin could be damaged.

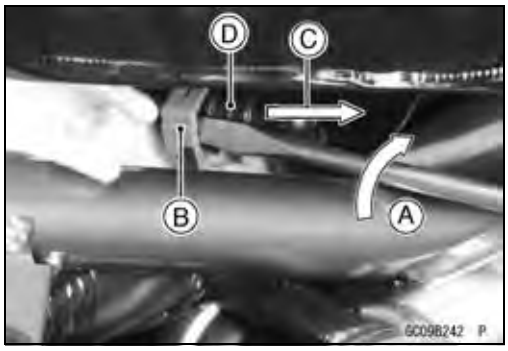

- Close the fuel tank cap.
- Remove the fuel tank, and place it on a flat surface.

○Do not apply the load to the fuel pump outlet portion [A] especially the outlet pipe made from resin.

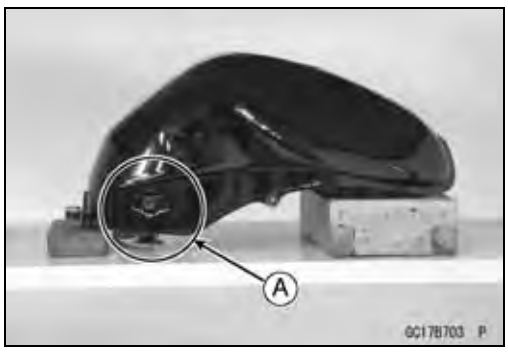

Fuel Tank Installation

- Note the above WARNING (see Fuel Tank Removal).
- Route the hoses correctly (see Cable, Wire, and Hose Routing in the Appendix chapter).
- Check that the rubber dampers [A] are on the frame and the fuel tank.

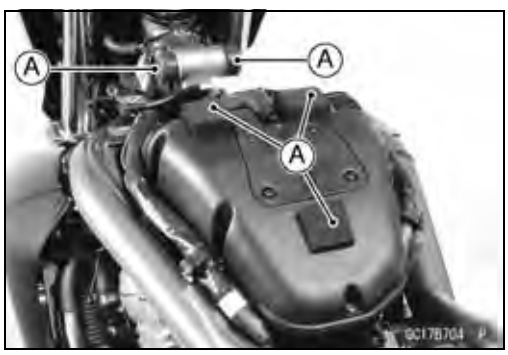

- Check that the dampers [A] are in place on the fuel tank as well.

★If the dampers are damaged or deteriorated, replace them.

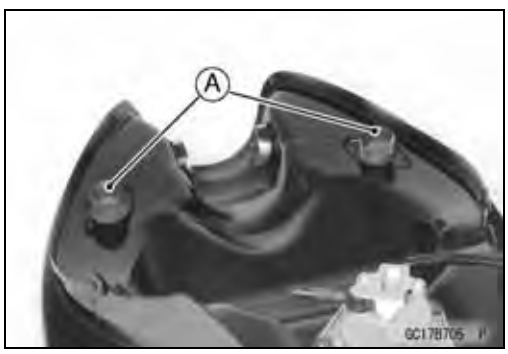

Fuel Tank

- Be sure that the trim seal [A] is on the fuel tank.
  Reverse Side of Fuel Tank [B]
  Side Cover [C]
  Approx. 17 mm (0.67 in.) [D]
  Front [E]

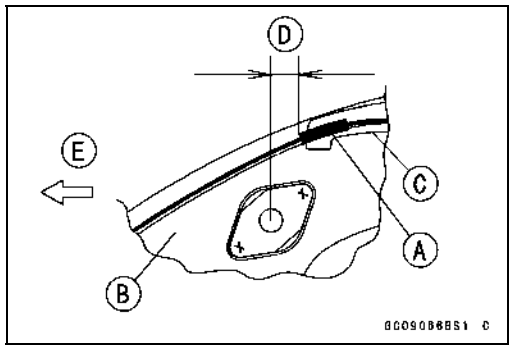

- Insert [A] the fuel hose joint [B] straight onto the delivery pipe until the hose joint clicks.

CAUTION

When installing the fuel hose joint, do not apply strong force to the outlet pipe on the fuel pump. The pipe made from resin could be damaged.

- Push [C] the joint lock [D].

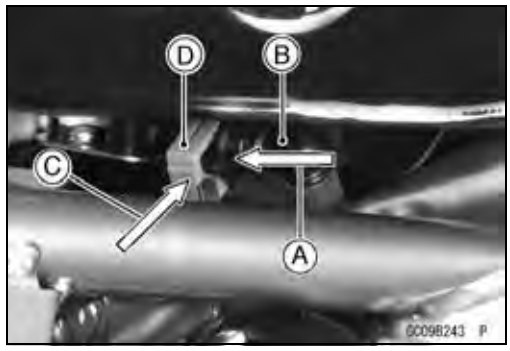

- Push and pull [A] the hose joint [B] back and forth more than two times and make sure it is locked and doesn't come off.

⚠ WARNING

Make sure the hose joint is installed correctly on the delivery pipe by sliding the joint, or the fuel could leak.

★If it comes off, reinstall the hose joint.
- Connect the fuel pump and the fuel level sensor connectors and the battery (–) cable terminal.

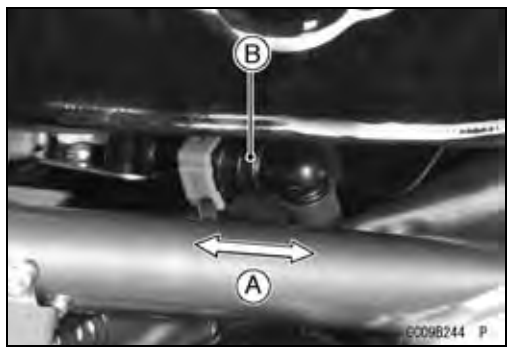

Fuel Tank and Cap Inspection

- Visually inspect the gasket [A] on the tank cap for any damage.

★Replace the gasket if it is damaged.
- Check to see if the water drain pipe [B] in the tank is not clogged. check the tank cap breather also.

★If they are clogged, remove the tank and drain it, and then blow the breather free with compressed air.

CAUTION

Do not apply compressed air to the air vent holes [C] in the tank cap. This could cause damage and clogging of the labyrinth in the cap.

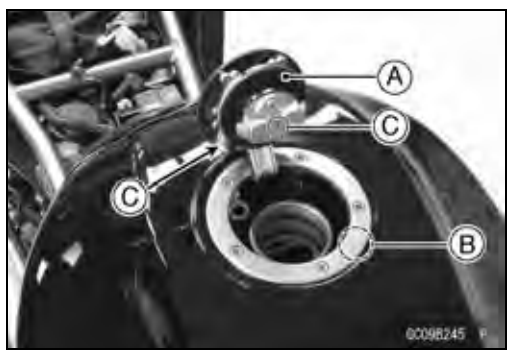

Fuel Tank

Fuel Tank Cleaning

⚠ WARNING

Clean the tank in a well-ventilated area, and take care that there are no sparks or flame anywhere near the working area. Because of the danger or highly flammable liquids, do not use gasoline or low-flash point solvents to clean the tank.

- Remove the fuel tank (see Fuel Tank Removal).
- Remove the fuel pump inlet hose and the fuel pump (see Fuel Pump section).
- Pour some high-flash point solvent into the fuel tank and shake the tank to remove dirt and fuel deposits.
- Draw the solvent out of the fuel tank.
- Dry the tank with compressed air.
- Install the fuel pump (see Fuel Pump Installation).
- Install the fuel tank (see Fuel Tank Installation).

http://mototh.com

http://mototh.com

Cooling System

Table of Contents

Exploded View 4-2
Coolant Flow Chart 4-4
Specifications 4-6
Special Tools 4-7
Coolant 4-8
  Coolant Deterioration Inspection 4-8
  Coolant Level Inspection 4-8
  Coolant Draining 4-8
  Coolant Filling 4-8
  Pressure Testing 4-8
  Cooling System Flushing 4-9
  Coolant Reserve Tank Removal/Installation 4-9
Water Pump 4-10
  Water Pump Removal 4-10
  Water Pump Installation 4-10
  Mechanical Seal Inspection 4-11
  Water Pump Housing Disassembly 4-11
  Water Pump Housing Assembly 4-11
  Impeller Assembly 4-12
  Pump Impeller Inspection 4-12
Radiator 4-13
  Radiator and Radiator Fan Removal 4-13
  Radiator and Radiator Fan Installation 4-14
  Radiator Inspection 4-14
  Radiator Cap Inspection 4-14
  Radiator Filler Neck Inspection 4-15
Thermostat 4-16
  Thermostat Removal 4-16
  Thermostat Installation 4-16
  Thermostat Inspection 4-16
Hose and Pipes 4-18
  Hose Installation 4-18
  Hose Inspection 4-18
Water Temperature Sensor 4-19
  Water Temperature Sensor Removal/Installation 4-19
  Water Temperature Sensor Inspection 4-19

http://mototh.com

Exploded View

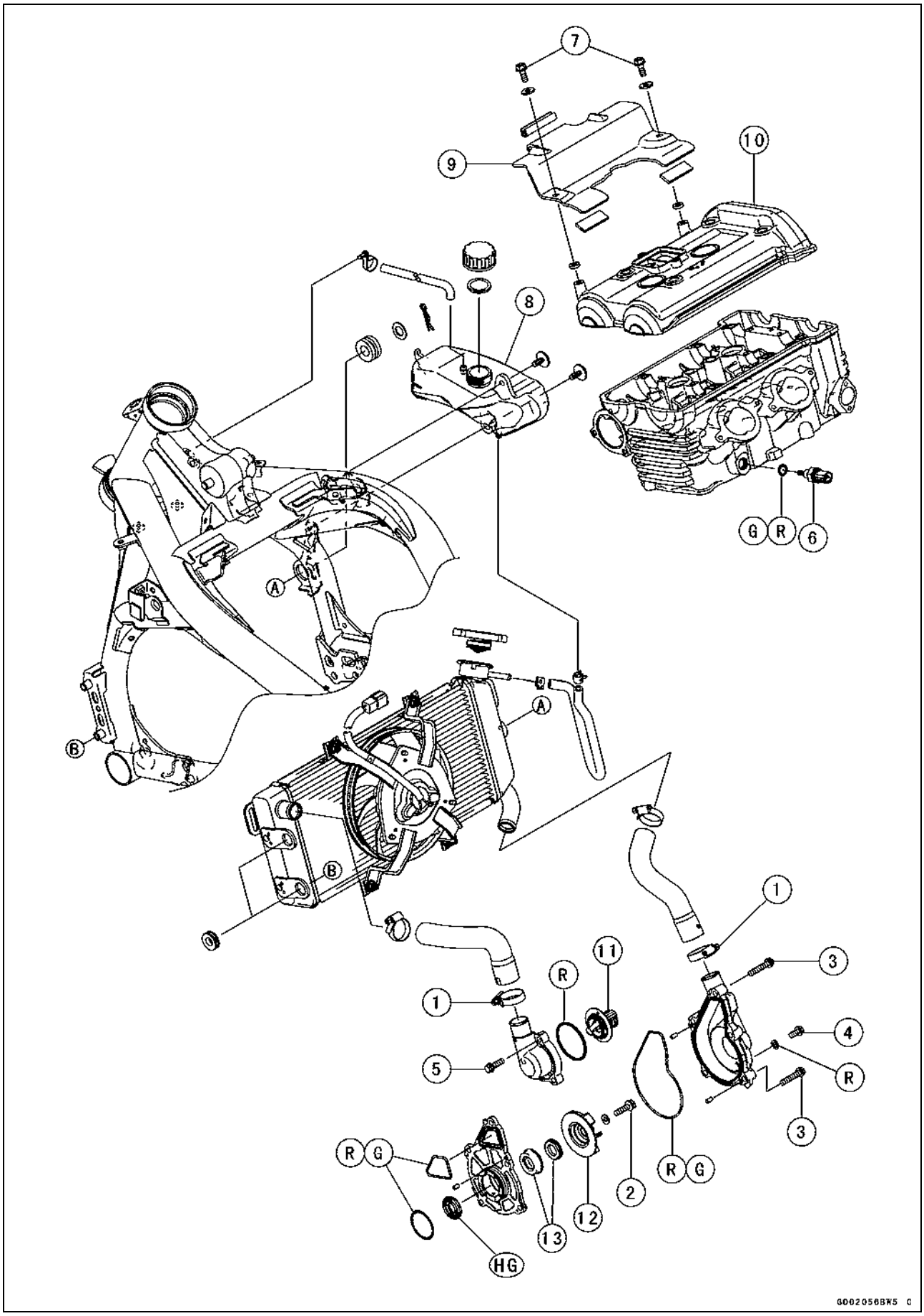

Exploded View

No.	Fastener	Torque			Remarks
		N·m	kgf·m	ft·lb	
1	Radiator Hose Clamp Screws	2.0	0.20	17 in·lb	
2	Water Pump Impeller Bolt	9.8	1.0	87 in·lb	
3	Water Pump Cover Bolts	9.8	1.0	87 in·lb	
4	Water Pump Drain Bolt	7.0	0.70	62 in·lb	
5	Thermostat Housing Bolts	9.8	1.0	87 in·lb	
6	Water Temperature Sensor	12	1.2	106 in·lb	
7	Baffle Plate Bolts	5.9	0.60	52 in·lb	L

8. Reserve Tank
9. Baffle Plate
10. Cylinder Head Cover
11. Thermostat
12. Water Pump Impeller
13. Mechanical Seal

G: Apply grease.
HG: Apply high-temperature grease.
R: Replacement Parts

http://mototh.com

Coolant Flow Chart

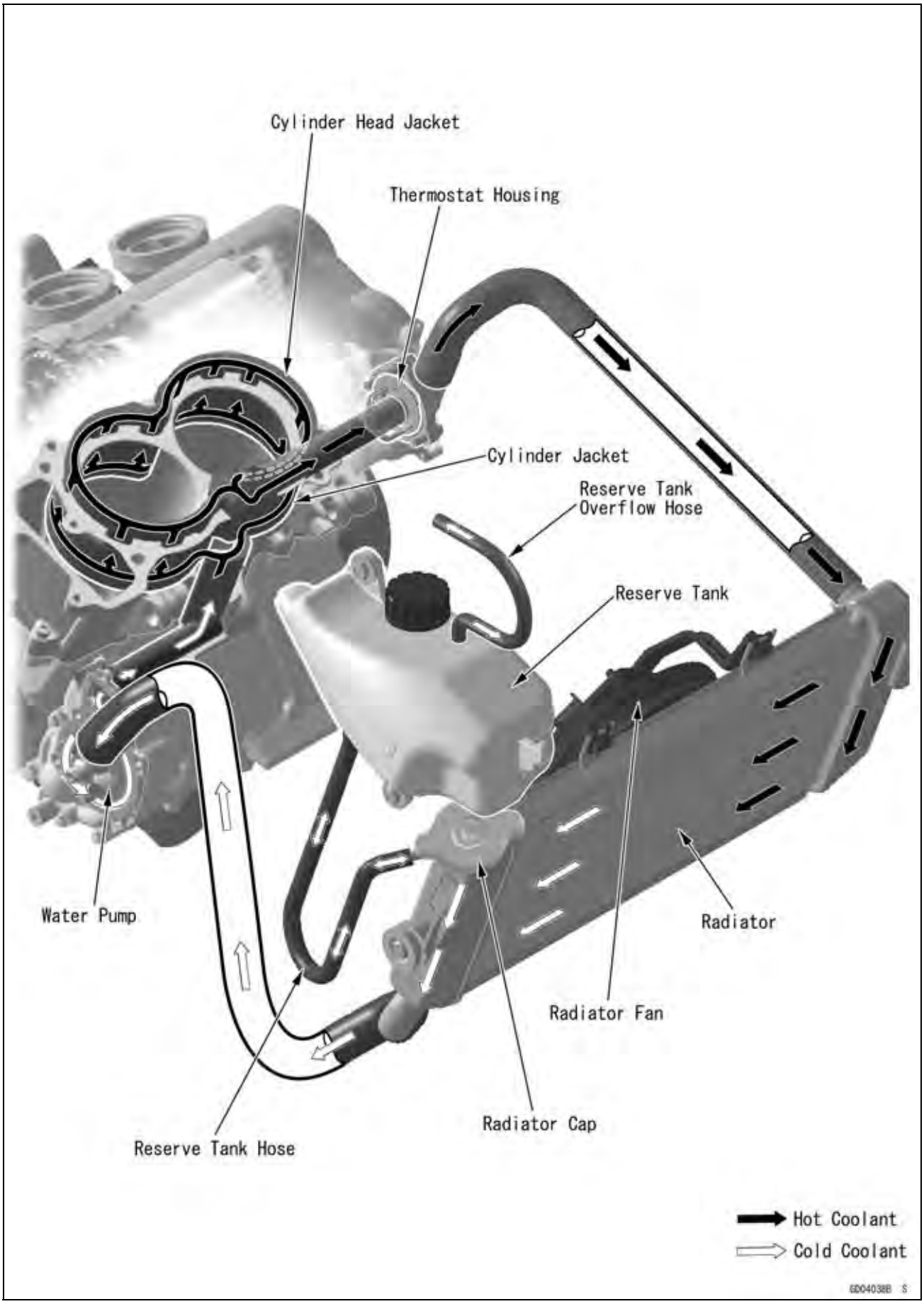

Coolant Flow Chart

Permanent type antifreeze is used as a coolant to protect the cooling system from rust and corrosion. When the engine starts, the water pump turns and the coolant circulates.

The thermostat is a wax pellet type which opens or closes with coolant temperature changes. The thermostat continuously changes its valve opening to keep the coolant temperature at the proper level. When coolant temperature is below 80.5 ~ 83.5°C (177 ~ 182°F), the thermostat closes so that the coolant flow is restricted through the air bleeder hole, causing the engine to warm up more quickly. When coolant temperature is more than 80.5 ~ 83.5°C, the thermostat opens and the coolant flows.

When the coolant temperature goes up beyond 93 ~ 103°C (199 ~ 217°F), the radiator fan relay conducts to operate the radiator fan. The radiator fan draws air through the radiator core when there is not sufficient air flow such as at low speeds. This increases up the cooling action of the radiator. When the temperature is below 91°C (196°F) ~ temperature less than ON temperature, the fan relay opens and the radiator fan stops.

In this way, this system controls the engine temperature within narrow limits where the engine operates most efficiently even if the engine load varies.

The system is pressurized by the radiator cap to suppress boiling and the resultant air bubbles which can cause engine overheating. As the engine warms up, the coolant in the radiator and the water jacket expands. The excess coolant flows through the radiator cap and hose to the reserve tank to be stored there temporarily. Conversely, as the engine cools down, the coolant in the radiator and the water jacket contracts, and the stored coolant flows back to the radiator from the reserve tank.

The radiator cap has two valves. One is a pressure valve which holds the pressure in the system when the engine is running. When the pressure exceeds 112.3 ~ 141.7 kPa (1.15 ~ 1.45 kgf/cm², 16.3 ~ 20.5 psi), the pressure valve opens and releases the pressure to the reserve tank. As soon as pressure escapes, the valve closes, and keeps the pressure at 112.3 ~ 141.7 kPa (1.15 ~ 1.45 kgf/cm², 16.3 ~ 20.5 psi). When the engine cools down, another small valve (vacuum valve) in the cap opens. As the coolant cools, the coolant contracts to form a vacuum in the system. The vacuum valve opens and allows the coolant from the reserve tank to enter the radiator.

http://mototh.com

Specifications

Item	Standard
Coolant Provided when Shipping	
Type (Recommended)	Permanent type of antifreeze (soft water and ethylene glycol plus corrosion and rust inhibitor chemicals for aluminum engines and radiators)
Color	Green
Mixed Ratio	Soft water 50%, coolant 50%
Freezing Point	−35°C (−31°F)
Total Amount	1.2 L (1.3 US qt) (reserve tank full level, including radiator and engine)
Radiator Cap	
Relief Pressure	112.3 ~ 141.7 kPa (1.15 ~ 1.45 kgf/cm², 16.3 ~ 20.5 psi)
Thermostat	
Valve Opening Temperature	80.5 ~ 83.5°C (177 ~ 182°F)
Valve Full Opening Lift	8 mm (0.31 in.) or more @95°C (203°F)

http://mototh.com

Special Tools

Bearing Driver Set:
57001-1129

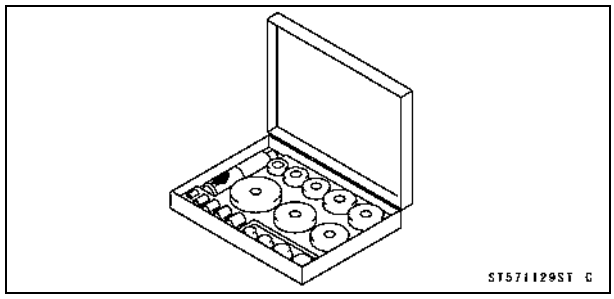

Oil Seal Driver:
57001-1660

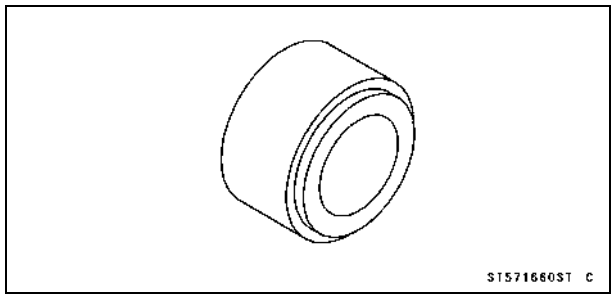

http://mototh.com

Coolant

Coolant Deterioration Inspection

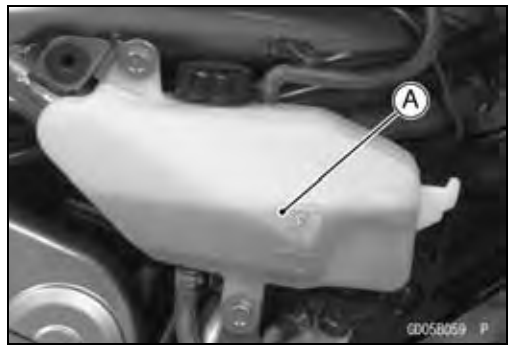

- Remove the right center fairing cover (see Center Fairing Removal in the Frame chapter).
- Visually inspect the coolant [A] in the reserve tank.

★If whitish cotton-like wafts are observed, aluminum parts in the cooling system are corroded. If the coolant is brown, iron or steel parts are rusting. In either case, flush the cooling system.

★If the coolant gives off an abnormal smell, check for a cooling system leak. It may be caused by exhaust gas leaking into the cooling system.

Coolant Level Inspection

- Refer to Coolant Level in the Periodic Maintenance chapter.

Coolant Draining

- Refer to Coolant Change in the Periodic Maintenance chapter.

Coolant Filling

- Refer to Coolant Change in the Periodic Maintenance chapter.

Pressure Testing

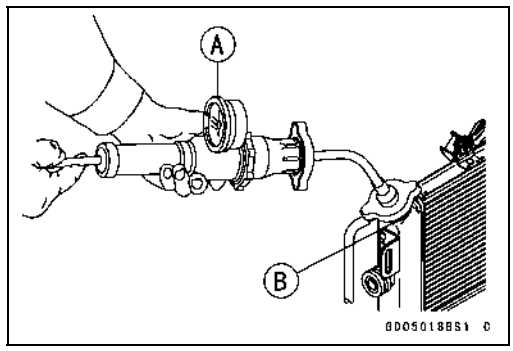

- Remove the reserve tank (see Coolant Change in the Periodic Maintenance chapter).
- Remove the radiator cap, and install a cooling system pressure tester [A] on the filler neck [B].

NOTE

○*Wet the cap sealing surfaces with water or coolant to prevent pressure leaks.*

- Build up pressure in the system carefully until the pressure reaches 141.7 kPa (1.45 kgf/cm², 20.5 psi).

CAUTION
During pressure testing, do not exceed the pressure for which the system is designed. The maximum pressure is 141.7 kPa (1.45 kgf/cm², 20.5 psi).

- Watch the gauge for at least 6 seconds.

★If the pressure holds steady, the system is all right.

★If the pressure drops and no external source is found, check for internal leaks. Droplets in the engine oil indicate internal leakage. Check the cylinder head gasket and the water pump.

- Remove the pressure tester, replenish the coolant, and install the radiator cap.

http://mototh.com

Coolant

Cooling System Flushing

Over a period of time, the cooling system accumulates rust, scale, and lime in the water jacket and radiator. When this accumulation is suspected or observed, flush the cooling system. If this accumulation is not removed, it will clog up the water passage and considerable reduce the efficiency of the cooling system.

- Drain the cooling system (see Coolant Change in the Periodic Maintenance chapter).
- Fill the cooling system with fresh water mixed with a flushing compound.

CAUTION
Do not use a flushing compound which is harmful to the aluminum engine and radiator. Carefully follow the instructions supplied by the manufacturer of the cleaning product.

- Warm up the engine, and run it at normal operating temperature for about ten minutes.
- Stop the engine, and drain the cooling system.
- Fill the system with fresh water.
- Warm up the engine and drain the system.
- Repeat the previous two steps once more.
- Fill the system with a permanent type coolant and bleed the air from the system (see Coolant Change in the Periodic Maintenance chapter).

Coolant Reserve Tank Removal/Installation

- The coolant reserve tank is removed and installed during coolant change (see Coolant Change in the Periodic Maintenance chapter).

http://mototh.com

Water Pump

Water Pump Removal

- Drain the coolant (see Coolant Change in the Periodic Maintenance chapter).
- Loosen the clamp and remove the radiator hose [A] from the water pump cover [B].
- Remove the water pump cover bolts [C].

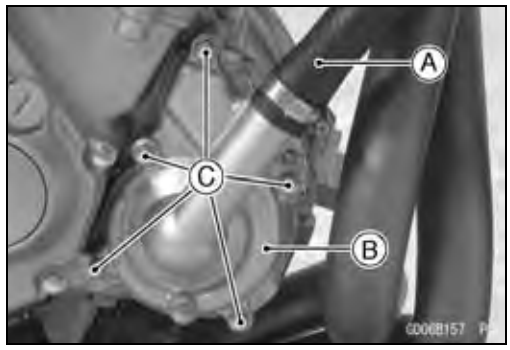

- Shift the transmission into 1st gear.
- While applying the rear brake, remove the water pump impeller bolt [A].
- Remove:
  Impeller [B]
  Water Pump Housing [C]

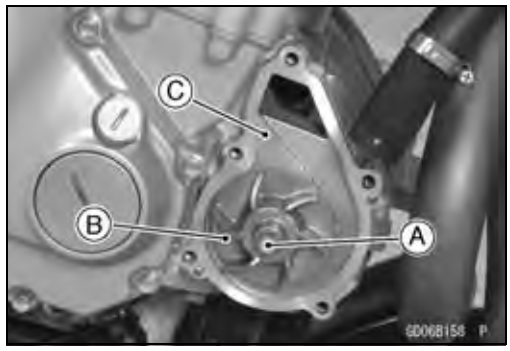

Water Pump Installation

- When installing the water pump impeller bolt, shift the transmission into 1st gear and apply the rear brake.
- Replace the O-rings [A] on the water pump housing with new ones and apply grease them.
- Apply high temperature grease to the lips of the water pump housing oil seal [B].

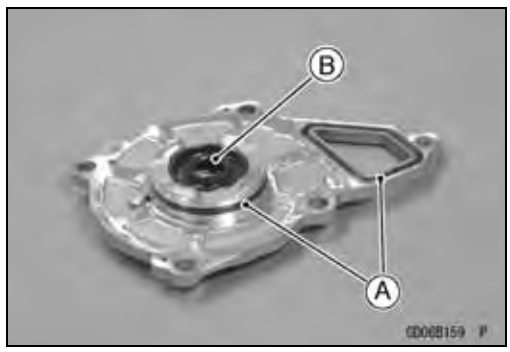

- Be sure that the dowel pin [A] is in position.
- Install the water pump housing.
- Tighten:

  Torque - Water Pump Impeller Bolt: 9.8 N·m (1.0 kgf·m, 87 in·lb)

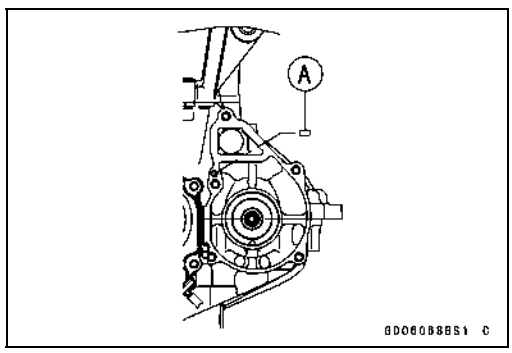

- Replace the O-ring [A] on the water pump cover with a new one and grease it.

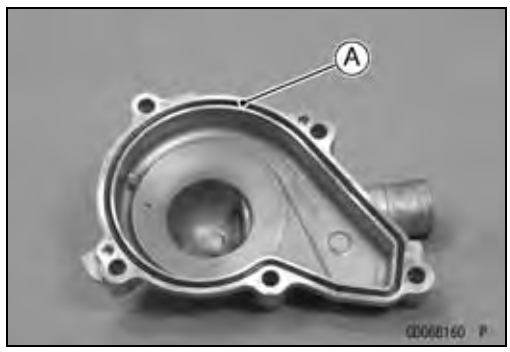

Water Pump

- Install the water pump cover, being careful of the two dowel pins [A].

  Torque - Water Pump Cover Bolts: 9.8 N·m (1.0 kgf·m, 87 in·lb)

Mechanical Seal Inspection

- Visually inspect the mechanical seal.

★If any one of the parts is damaged, replace the mechanical seal as a unit.

○The sealing seat and rubber seal may be removed easily by hand.

[A] Impeller Sealing Seat Surface
[B] Rubber Seal
[C] Mechanical Seal Diaphragm

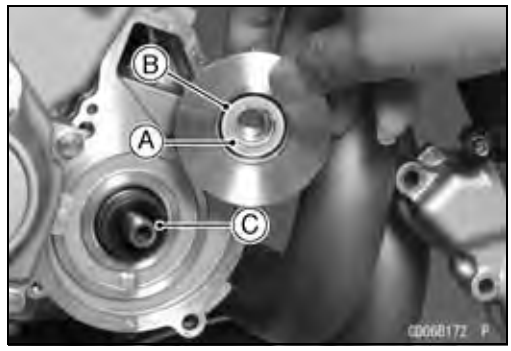

Water Pump Housing Disassembly

CAUTION
Be careful not to damage the sealing surface of the mechanical seal.

- Take the oil seal [A] out of the housing [B] with a hook [C].

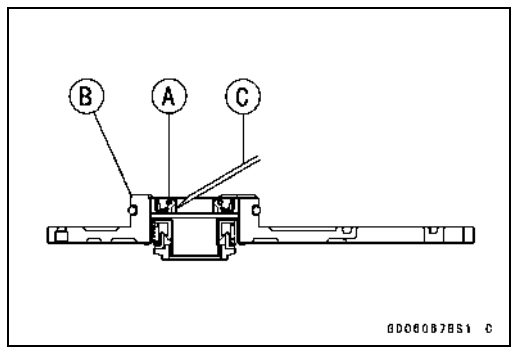

- Press the mechanical seal [A] out of the housing with a bearing driver [B].

  Special Tool - Bearing Driver Set: 57001-1129

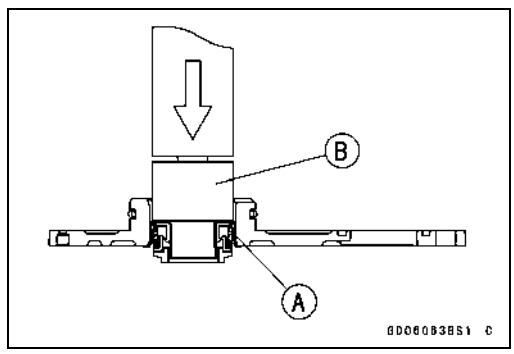

Water Pump Housing Assembly

- Apply a high temperature grease [A] to the new oil seal [B].
- Press the oil seal into the housing with a bearing driver so that the seal surface is flush [C] with the end of the hole.
- Press the new mechanical seal into the housing with the oil seal driver [D] until its flange [E] touches the surface [F] of the housing.

  Special Tool - Oil Seal Driver: 57001-1660

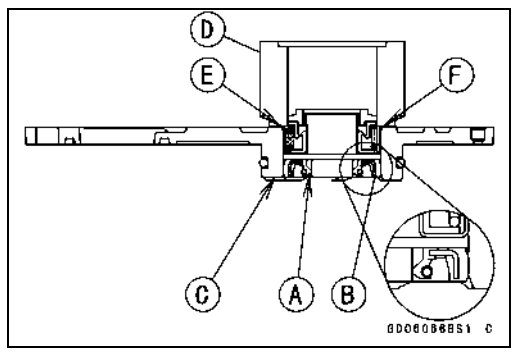

Water Pump

Impeller Assembly

- Clean the sliding surface of the mechanical seal with a high flash-point solvent, and apply a little coolant to the sliding surface to give the mechanical seal initial lubrication.
- Apply coolant to the surfaces of the rubber seal [A] and sealing seat [B], and install the rubber seal and sealing seat into the impeller by pressing them by hand until the seat stops at the bottom of the hole.

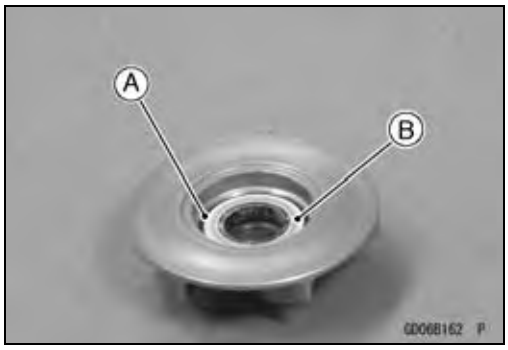

Pump Impeller Inspection

- Visually check the impeller [A].

★If the surface is corroded, or if the blades are damaged, replace the impeller.

http://mototh.com

Radiator

Radiator and Radiator Fan Removal

- Drain the coolant (see Coolant Change in the Periodic Maintenance chapter).
- Remove:
  Left/Right Center Fairing (see Center Fairing in the Frame chapter)
  Reserve Tank (see Coolant Change in the Periodic Maintenance chapter)
  Radiator Fan Motor Connector [A] (Disconnect)
  Radiator Hose Clamp Screw [B] (Loosen)

- Loosen:
  Radiator Hose Clamp Screw [A]
- Remove:
  Cotter Pin [B]

- Pull [A] the radiator [B] toward the left, noting the baffle plate [C] on the cylinder head cover.

CAUTION
Do not touch the radiator core. This could damage the radiator fins, resulting in loss of cooling efficiency.

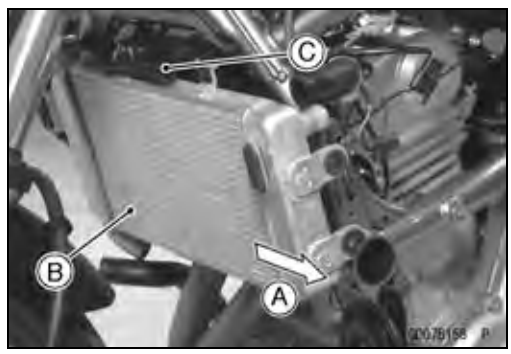

- If necessary, remove:
  Radiator Fan Mounting Bolts [A]
  Radiator Fan [B]

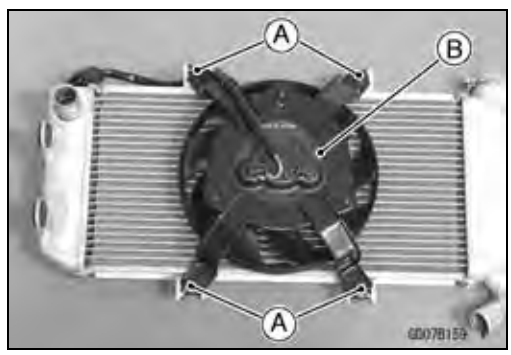

Radiator

Radiator and Radiator Fan Installation

- ● Install the grommet [A] so that its large side faces the front.
- ● Install the radiator [B] to the frame.
- ○Align [C] the projection on the radiator with the hole on the frame.
- ○Align [D] the projection on the frame with the hole on the radiator.
- ○Note the baffle plate on the cylinder head cover when intalling the radiator.
- ○Position the radiator hose clamp screws [E] as shown.

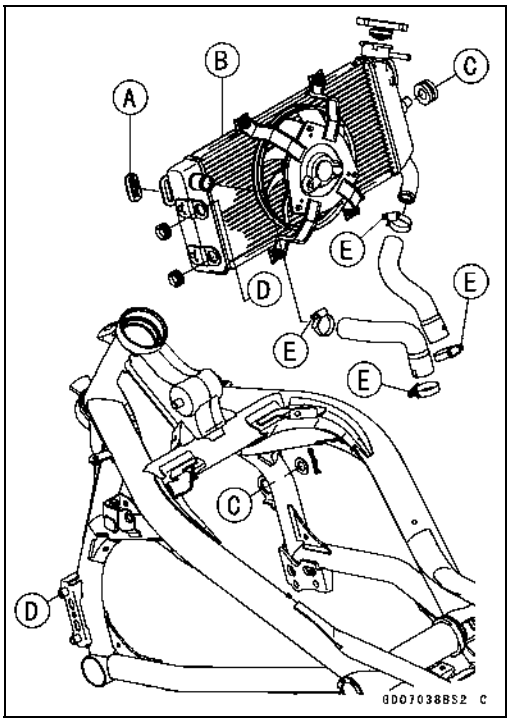

Radiator Inspection

- ● Check the radiator core.
- ★If there are obstructions to air flow, remove them.
- ★If the corrugated fins [A] are deformed, carefully straighten them.
- ★If the air passages of the radiator core are blocked more than 20% by unremovable obstructions or irreparably deformed fins, replace the radiator with a new one.

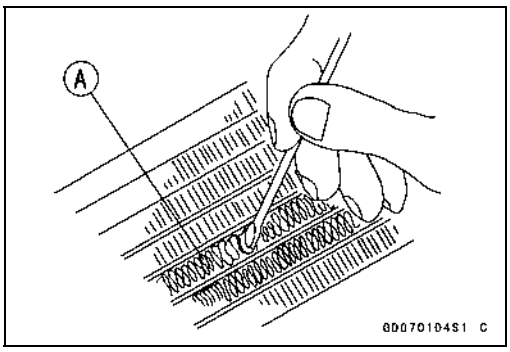

CAUTION

When cleaning the radiator with steam cleaner, be careful of the following to prevent radiator damage:
Keep the steam gun [A] away more than 0.5 m (1.6 ft) [B] from the radiator core.
Hold the steam gun perpendicular [C] (not oblique [D]) to the core surface.
Run the steam gun, following the core fin direction.

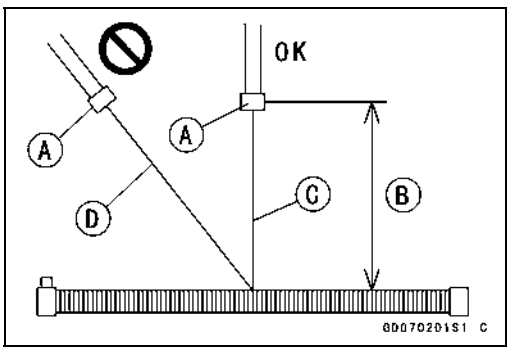

Radiator Cap Inspection

- ● Remove:
  Reserve Tank (see Coolant Change in the Periodic Maintenance chapter)
  Radiator Cap
- ● Check the condition of the bottom [A] and top [B] valve seals and valve spring [C].
- ★If any one of them shows visible damage, replace the cap with a new one.

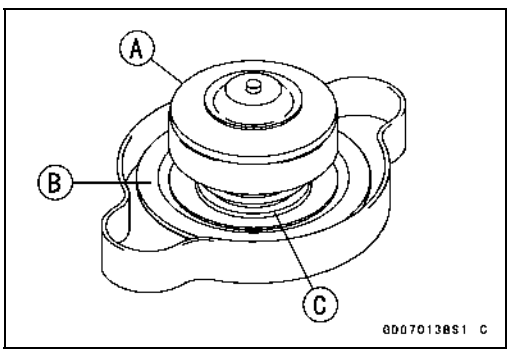

Radiator

- Install the cap [A] on a cooling system pressure tester [B].

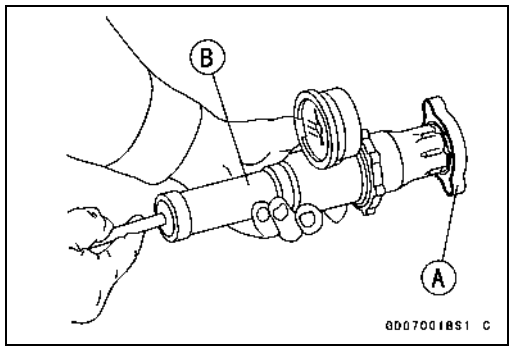

NOTE

○*Wet the cap sealing surfaces with water or coolant to prevent pressure leaks.*

- Watching the pressure gauge, pump the pressure tester to build up the pressure until the relief valve opens: the gauge needle flicks downward. Stop pumping and measure leak time at once. The relief valve must open within the specified range in the table below and the gauge hand must remain within the same range at least 6 seconds.

Radiator Cap Relief Pressure
Standard: 112.3 ~ 141.7 kPa (1.15 ~ 1.45 kgf/cm², 16.3 ~ 20.5 psi)

★If the cap can not hold the specified pressure or if it holds too much pressure, replace it with a new one.

Radiator Filler Neck Inspection

- Remove the reserve tank (see Coolant Change in the Periodic Maintenance chapter).
- Remove the radiator cap.
- Check the radiator filler neck for signs of damage.
- Check the condition of the top and bottom sealing seats [A] in the filler neck. They must be smooth and clean for the radiator cap to function properly.

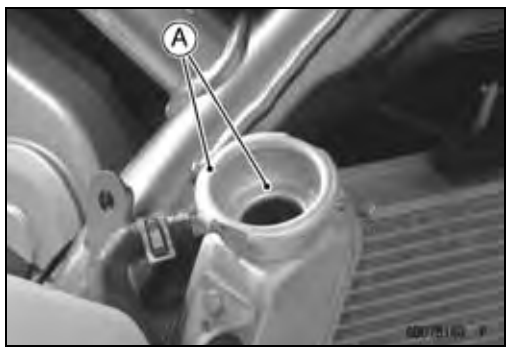

Thermostat

Thermostat Removal

- Drain the coolant (see Coolant Change in the Periodic Maintenance chapter).
- Remove:
  Left Center Fairing (see Center Fairing Removal in the Frame chapter)
  Thermostat Hosing Bolts [A]
  Thermostat Hosing [B]

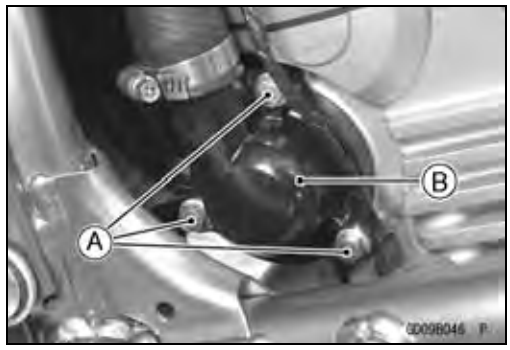

- Pull the thermostat [A] out of the cylinder head.

Thermostat Installation

- Install the thermostat [A] in the cylinder head so that the air bleeder hole [B] is on top.
- Install a new O-ring into the housing and apply grease it.
- Tighten:

  Torque - Thermostat Hosing Bolts: 9.8 N·m (1.0 kgf·m, 87 in·lb)

- Fill the radiator with coolant (see Coolant Change in the Periodic Maintenance chapter).

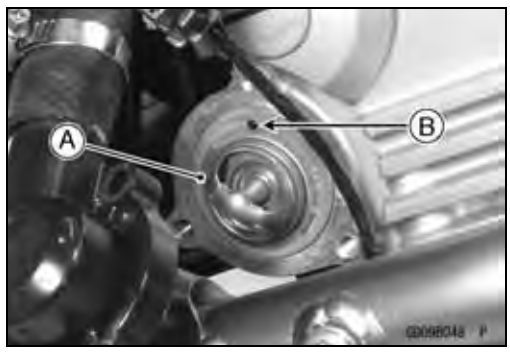

Thermostat Inspection

- Remove the thermostat, and inspect the thermostat valve [A] at room temperature.

★If the valve is open, replace the thermostat with a new one.

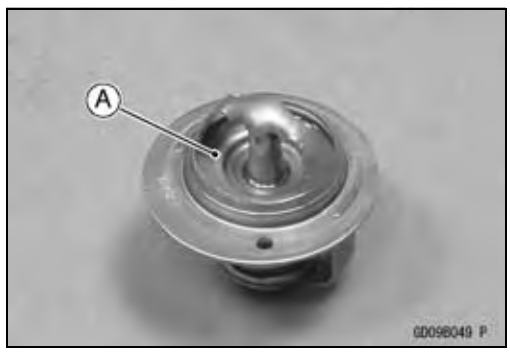

http://mototh.com

Thermostat

- ● To check valve opening temperature, suspend the thermostat [A] in a container of water and raise the temperature of the water.
- ○ The thermostat must be completely submerged and must not touch the container sides or bottom. Suspend an accurate thermometer [B] in the water so that the heat sensitive portions [C] are located in almost the same depth. It must not touch the container, either.
- ★ If the measurement is out of the specified range, replace the thermostat with a new one.

Thermostat Valve Opening Temperature
80.5 ~ 83.5°C (177 ~ 182°F)

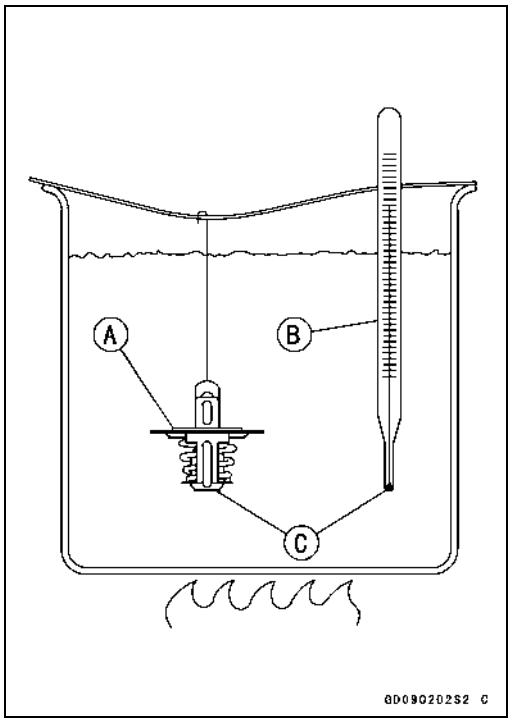

http://mototh.com

Hose and Pipes

Hose Installation

- Install the hoses and pipes, being careful to follow bending direction. Avoid sharp bending, kinking, flattening or twisting.
- Run the hoses (see Cable, Wire, and Hose Routing section in the Appendix chapter).
- Install the clamp [A] as near as possible to the hose end to clear the raised rib of the fitting. This will prevent the hoses from working loose.

○The clamp screws should be positioned correctly to prevent the clamps from contacting the other parts.

Torque - Radiator Hose Clamp Screws: 2.0 N·m (0.20 kgf·m, 17 in·lb)

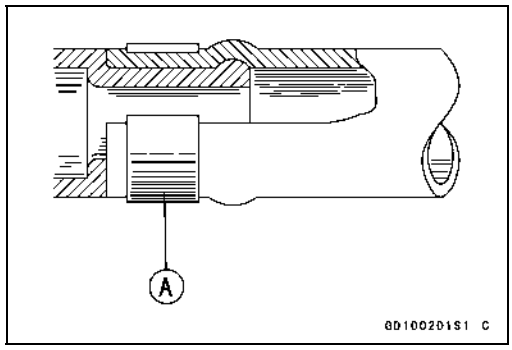

Hose Inspection

- Refer to Cooling Hose and Connection Inspection in the Periodic Maintenance chapter.

http://mototh.com

Water Temperature Sensor

CAUTION
The water temperature sensor should never be allowed to fall on a hard surface. Such a shock to the water temperature sensor can damage it.

Water Temperature Sensor Removal/Installation

- Refer to Water Temperature Sensor Removal/Installation in the Fuel System (DFI) chapter.
  Water Temperature Sensor [A]

Water Temperature Sensor Inspection

- Refer to Water Temperature Sensor Inspection in the Electrical System chapter.

http://mototh.com

http://mototh.com

Engine Top End

Table of Contents

Exploded View 5-2
Specifications 5-7
Special Tools and Sealant 5-9
Clean Air System 5-11
Air Suction Valve Removal 5-11
Air Suction Valve Installation 5-11
Air Suction Valve Inspection 5-11
Air Switching Valve Removal 5-11
Air Switching Valve Installation 5-12
Air Switching Valve Operation Test 5-12
Air Switching Valve Unit Test 5-12
Clean Air System Hose Inspection 5-12
Cylinder Head Cover 5-13
Cylinder Head Cover Removal 5-13
Cylinder Head Cover Installation 5-13
Camshaft Chain Tensioner 5-14
Camshaft Chain Tensioner Removal 5-14
Camshaft Chain Tensioner Installation 5-14
Camshaft, Camshaft Chain 5-15
Camshaft Removal 5-15
Camshaft Installation 5-15
Camshaft and Sprocket Assembly 5-18
Camshaft, Camshaft Cap Wear 5-18
Camshaft Runout 5-19
Cam Wear 5-19
Camshaft Chain Removal 5-19
Cylinder Head 5-20
Cylinder Compression Measurement 5-20
Cylinder Head Removal 5-21
Cylinder Head Installation 5-22
Cylinder Head Warp 5-24
Valves 5-25
Valve Clearance Inspection 5-25
Valve Clearance Adjustment 5-25
Valve Removal 5-25
Valve Installation 5-25
Valve Guide Removal 5-25
Valve Guide Installation 5-26
Valve-to-Guide Clearance Measurement (Wobble Method) 5-26
Valve Seat Inspection 5-27
Valve Seat Repair 5-27
Cylinder, Pistons 5-32
Cylinder Removal 5-32
Cylinder Installation 5-32
Piston Removal 5-32
Piston Installation 5-33
Cylinder Wear 5-34
Piston Wear 5-34
Piston Ring, Piston Ring Groove Wear 5-35
Piston Ring Groove Width 5-35
Piston Ring Thickness 5-35
Piston Ring End Gap 5-36
Throttle Body Holder 5-37
Throttle Body Holder Installation 5-37
Muffler 5-38
Muffler Body Removal 5-38
Exhaust Pipe Removal 5-38
Muffler Body and Exhaust Pipe Installation 5-39

http://mototh.com

Exploded View

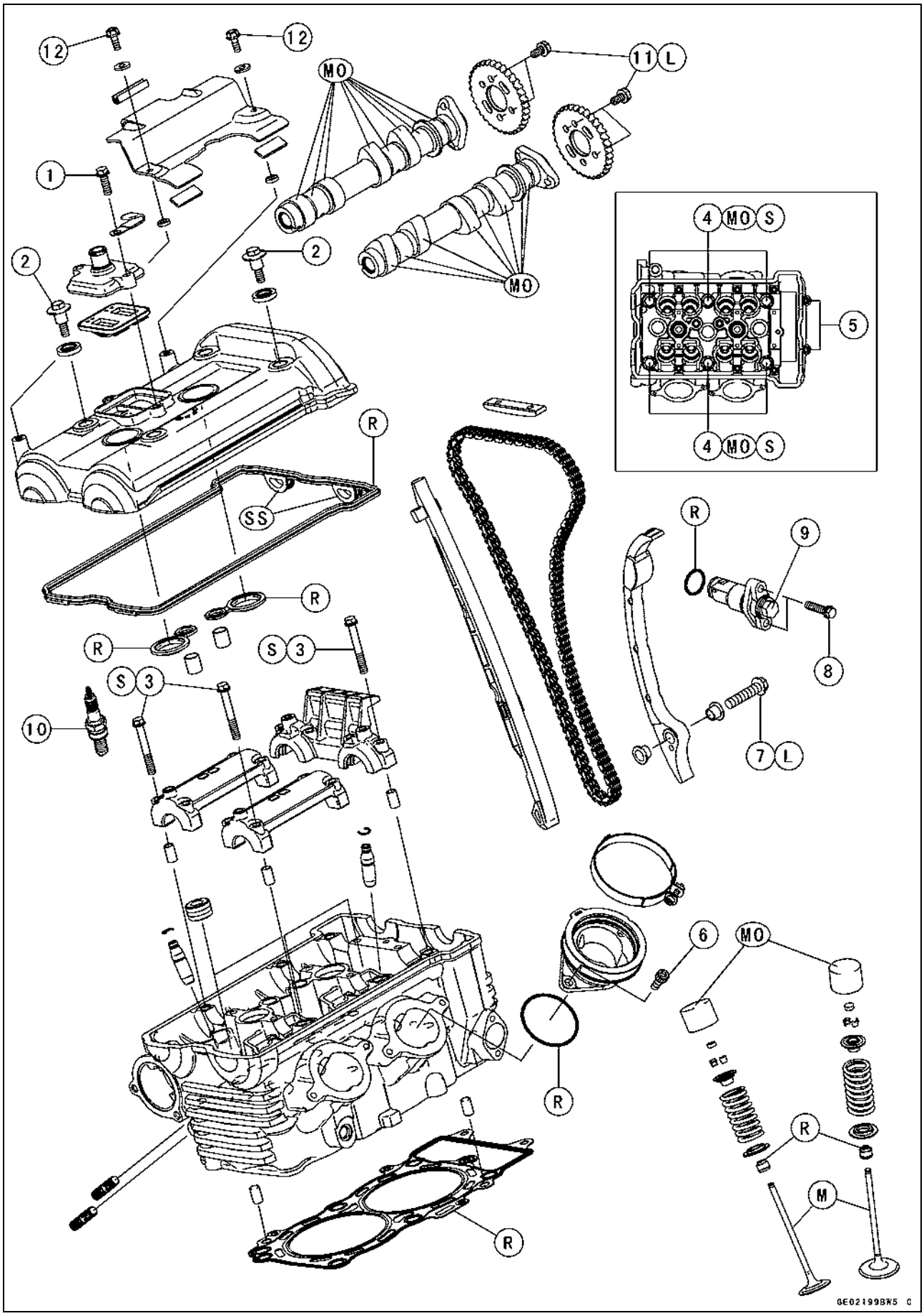

Exploded View

No.	Fastener	Torque			Remarks
		N·m	kgf·m	ft·lb	
1	Air Suction Valve Cover Bolts	9.8	1.0	87 in·lb	
2	Cylinder Head Cover Bolts	9.8	1.0	87 in·lb	
3	Camshaft Cap Bolts	12	1.2	106 in·lb	S
4	Cylinder Head Bolts (M10 New Bolts)	54	5.5	40	MO, S
	Cylinder Head Bolts (M10 Used Bolts)	49	5.0	36	MO, S
5	Cylinder Head Bolts (M6)	12	1.2	106 in·lb	S
6	Throttle Body Holder Bolts	12	1.2	106 in·lb	
7	Rear Camshaft Chain Guide Bolts	20	2.0	15	L
8	Camshaft Chain Tensioner Mounting Bolts	9.8	1.0	87 in·lb	
9	Camshaft Chain Tensioner Cap Bolt	20	2.0	15	
10	Spark Plugs	15	1.5	11	
11	Camshaft Sprocket Bolts	15	1.5	11	L
12	Baffle Plate Bolts	5.9	0.60	52 in·lb	L

L: Apply a non-permanent locking agent.
M: Apply molybdenum disulfide grease.
MO: Apply molybdenum disulfide oil solution.
(mixture of the engine oil and molybdenum disulfide grease in a weight ratio 10 : 1)
R: Replacement Parts
S: Follow the specific tightening sequence.
SS: Apply silicone sealant.

http://mototh.com

Exploded View

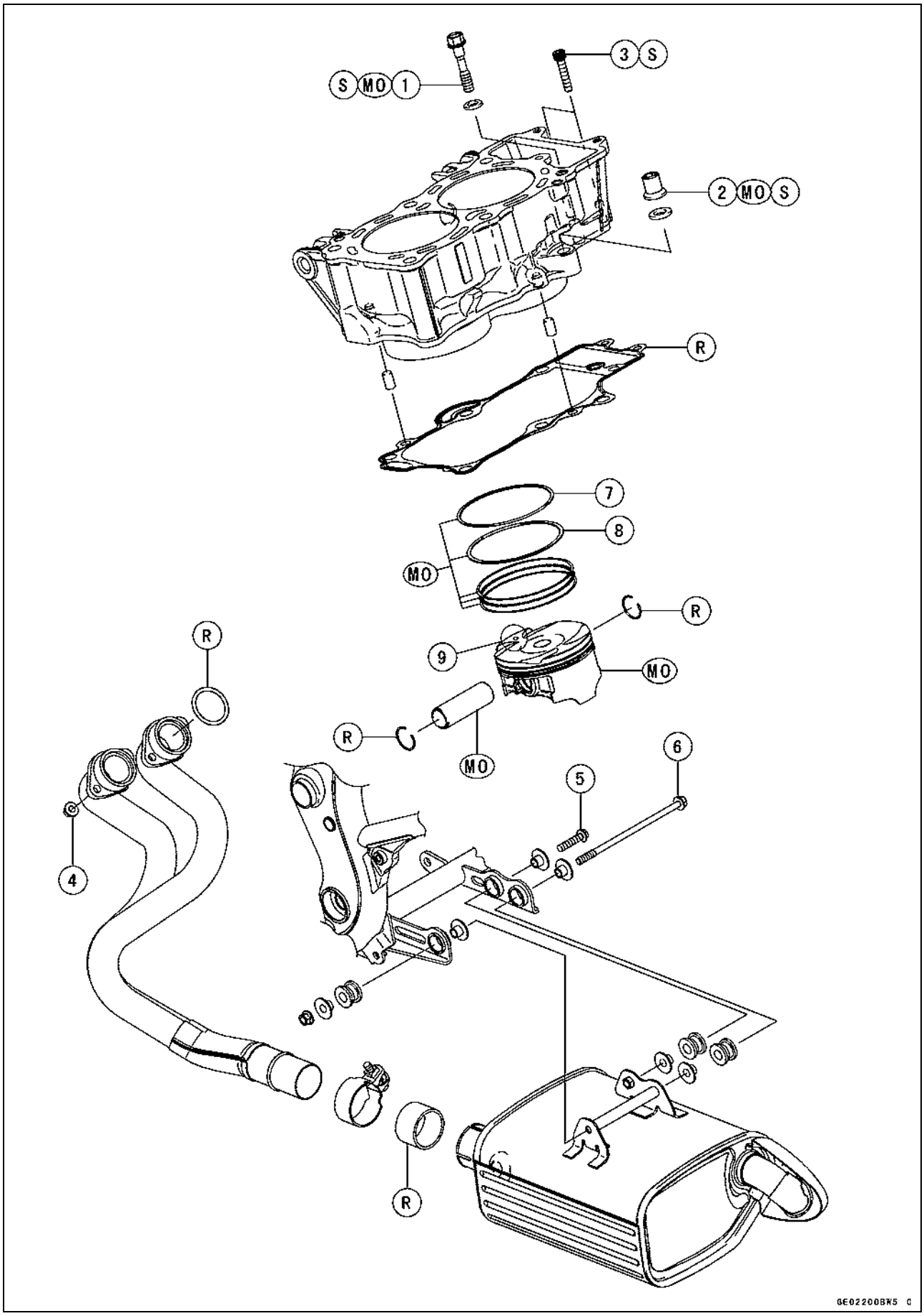

Exploded View

No.	Fastener	Torque			Remarks
		N·m	kgf·m	ft·lb	
1	Cylinder Bolt (M8)	27.5	2.8	20	MO,S
2	Cylinder Nut (M10)	49	5.0	36	MO,S
3	Cylinder Bolts (M6)	12	1.2	106 in·lb	S
4	Exhaust Pipe Manifold Holder Nuts	17	1.7	12	
5	Muffler Body Mounting Bolt (Front)	20	2.0	15	
6	Muffler Body Mounting Bolt (Rear)	20	2.0	15	

7. "R" marked side faces up.
8. "RN" marked side faces up.
9. Hollow mark faces forward.

MO: Apply molybdenum disulfide oil solution.
(mixture of the engine oil and molybdenum disulfide grease in a weight ratio 10 : 1)
R: Replacement Parts

Exhaust System ER650A6F

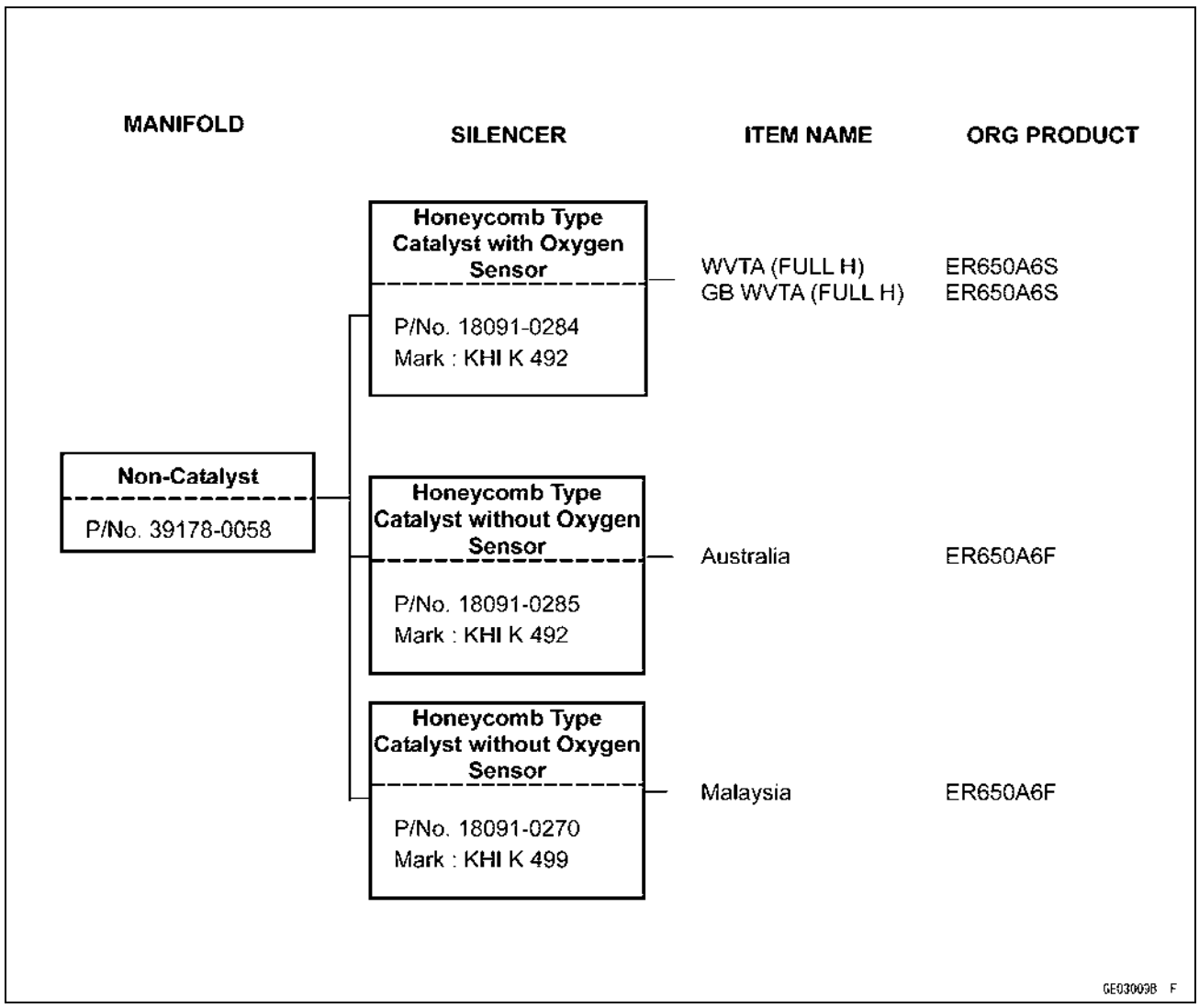

Full: Full Power
H: Honeycomb Type Catalyst
GB: United Kingdom Model

http://mototh.com

Exploded View

Silencer [C] with Hole [A] for Oxygen Sensor [B]

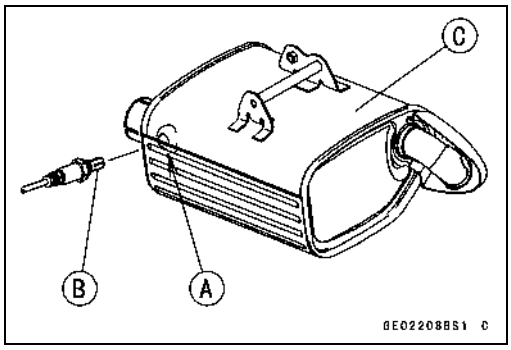

Specifications

Item	Standard	Service Limit
Camshafts		
Cam Height:		
Exhaust	35.843 ~ 35.957 mm (1.4111 ~ 1.4156 in.)	35.74 mm (1.4071 in.)
Inlet	36.543 ~ 36.657 mm (1.4387 ~ 1.4432 in.)	36.44 mm (1.4346 in.)
Camshaft Journal, Camshaft Cap Clearance	0.028 ~ 0.071 mm (0.0011 ~ 0.0028 in.)	0.16 mm (0.0063 in.)
Camshaft Journal Diameter	23.950 ~ 23.972 mm (0.9429 ~ 0.9438 in.)	23.92 mm (0.942 in.)
Camshaft Bearing Inside Diameter	24.000 ~ 24.021 mm (0.9449 ~ 0.9457 in.)	24.08 mm (0.948 in.)
Camshaft Runout	TIR 0.02 mm (0.0008 in.) or less	TIR 0.1 mm (0.004 in.)
Cylinder Head		
Cylinder Compression	(Usable Range) 961 ~ 1 471 kPa (9.8 ~ 15.0 kgf/cm², 139~ 213 psi) @400 r/min (rpm)	– – –
Cylinder Head Warp	– – –	0.05 mm (0.002 in.)
Valves		
Exhaust	0.22 ~ 0.31 mm (0.0087 ~ 0.0122 in.)	– – –
Inlet	0.15 ~ 0.21 mm (0.0059 ~ 0.0083 in.)	– – –
Valve Head Thickness:		
Exhaust	0.8 mm (0.031 in.)	0.5 mm (0.020 in.)
Inlet	0.5 mm (0.020 in.)	0.25 mm (0.0098 in.)
Valve Stem Bend	TIR 0.01 mm (0.0004 in.) or less	TIR 0.05 mm (0.002 in.)
Valve Stem Diameter:		
Exhaust	4.455 ~ 4.470 mm (0.1754 ~ 0.1760 in.)	4.44 mm (0.175 in.)
Inlet	4.475 ~ 4.490 mm (0.1762 ~ 0.1768 in.)	4.46 mm (0.176 in.)
Valve Guide Inside Diameter:		
Exhaust	4.500 ~ 4.512 mm (0.1772 ~ 0.1776 in.)	4.58 mm (0.180 in.)
Inlet	4.500 ~ 4.512 mm (0.1772 ~ 0.1776 in.)	4.58 mm (0.180 in.)
Valve/Valve Guide Clearance (Wobble Method):		
Exhaust	0.07 ~ 0.14 mm (0.0028 ~ 0.0055 in.)	0.27 mm (0.0106 in.)
Inlet	0.02 ~ 0.08 mm (0.0008 ~ 0.0032 in.)	0.22 mm (0.0087 in.)
Valve Seat Cutting Angle	45°, 32°, 55°, 60°	– – –
Valve Seating Surface:		
Width:		
Exhaust	0.5 ~ 1.0 mm (0.020 ~ 0.039 in.)	– – –
Inlet	0.5 ~ 1.0 mm (0.020 ~ 0.039 in.)	– – –
Outside Diameter:		
Exhaust	27.6 ~ 27.8 mm (1.087 ~ 1.094 in.)	– – –
Inlet	32.6 ~ 32.8 mm (1.283 ~ 1.291 in.)	– – –

http://mototh.com

Specifications

Item	Standard	Service Limit
Valve Spring Free Length:		
Exhaust	41.91 mm (1.650 in.)	40.3 mm (1.587 in.)
Inlet	41.91 mm (1.650 in.)	40.3 mm (1.587 in.)
Cylinder, Pistons		
Cylinder Inside Diameter	82.994 ~ 83.006 mm (3.2675 ~ 3.2679 in.)	83.10 mm (3.2716 in.)
Piston Diameter	82.969 ~ 82.984 mm (3.2665 ~ 3.2671 in.)	82.82 mm (3.2606 in.)
Piston/Cylinder Clearance	0.010 ~ 0.037 mm (0.0004 ~ 0.0015 in.)	– – –
Piston Ring/Groove Clearance:		
Top	0.03 ~ 0.07 mm (0.0012 ~ 0.0028 in.)	0.17 mm (0.0067 in.)
Second	0.02 ~ 0.06 mm (0.0008 ~ 0.0024 in.)	0.16 mm (0.0063 in.)
Piston Ring Groove Width:		
Top	0.92 ~ 0.94 mm (0.0362 ~ 0.0370 in.)	1.02 mm (0.040 in.)
Second	1.01 ~ 1.03 mm (0.0398 ~ 0.0406 in.)	1.11 mm (0.044 in.)
Piston Ring Thickness:		
Top	0.87 ~ 0.89 mm (0.0342 ~ 0.0350 in.)	0.80 mm (0.031 in.)
Second	0.97 ~ 0.99 mm (0.0382 ~ 0.0390 in.)	0.90 mm (0.035 in.)
Piston Ring End Gap:		
Top	0.25 ~ 0.40 mm (0.0098 ~ 0.0157 in.)	0.7 mm (0.028 in.)
Second	0.40 ~ 0.55 mm (0.0157 ~ 0.0217 in.)	0.8 mm (0.031 in.)

http://mototh.com

Special Tools and Sealant

Compression Gauge, 20 kgf/cm²:
57001-221

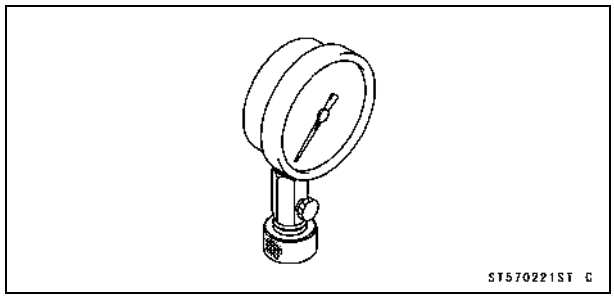

Valve Spring Compressor Assembly:
57001-241

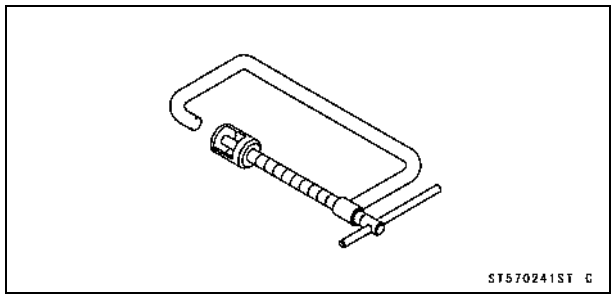

Valve Seat Cutter, 45° - ϕ35:
57001-1116

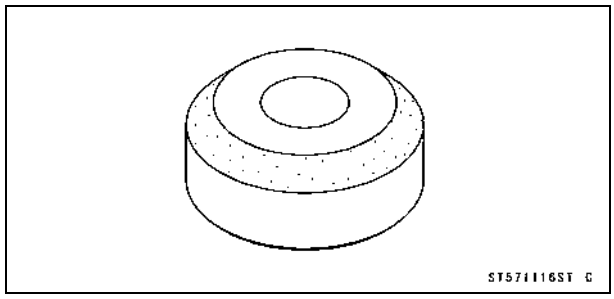

Valve Seat Cutter, 32° - ϕ30:
57001-1120

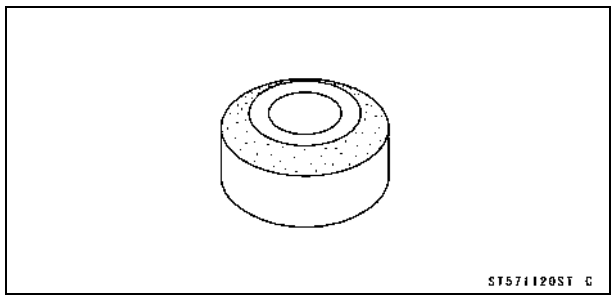

Valve Seat Cutter, 32° - ϕ35:
57001-1121

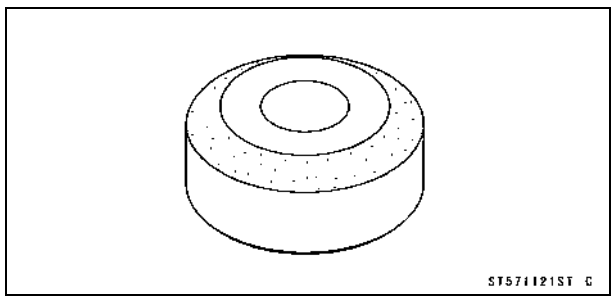

Valve Seat Cutter, 60° - ϕ30:
57001-1123

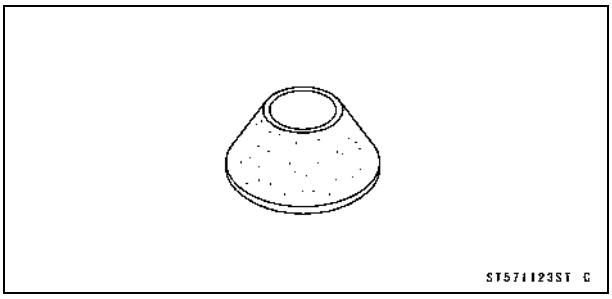

Valve Seat Cutter Holder Bar:
57001-1128

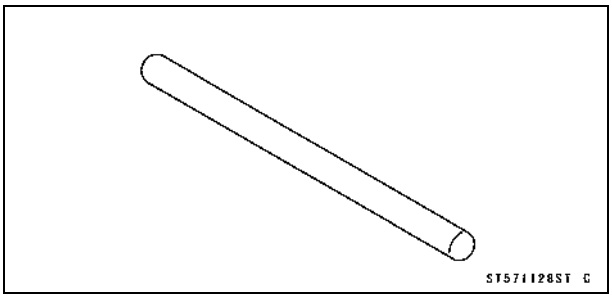

Valve Seat Cutter, 45° - ϕ30:
57001-1187

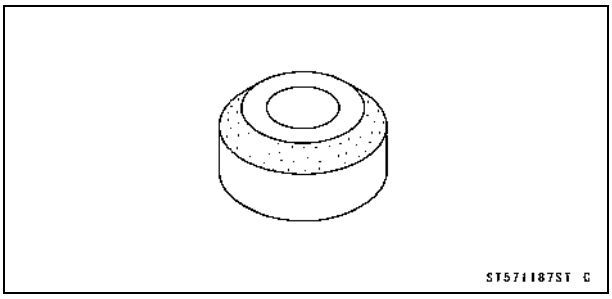

Valve Seat Cutter, 55° - ϕ35:
57001-1247

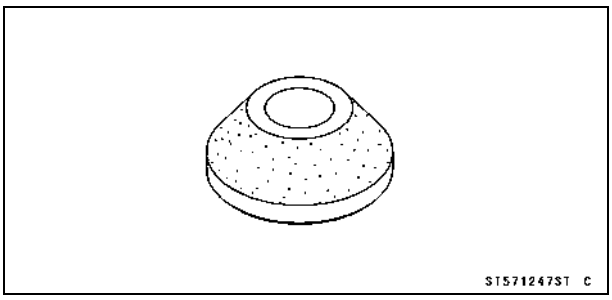

Valve Spring Compressor Adapter, ϕ21:
57001-1272

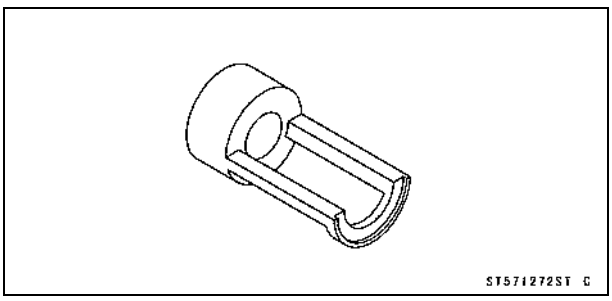

http://mototh.com

Special Tools and Sealant

Compression Gauge Adapter, M10 × 1.0:
57001-1317

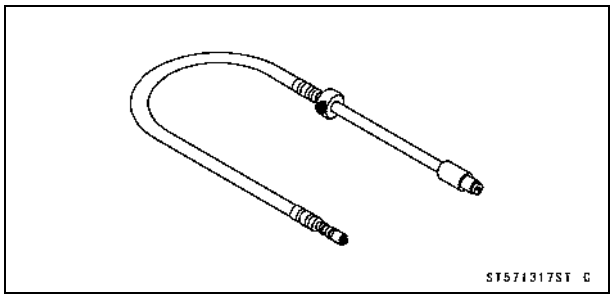

Valve Seat Cutter Holder, ϕ4.5:
57001-1330

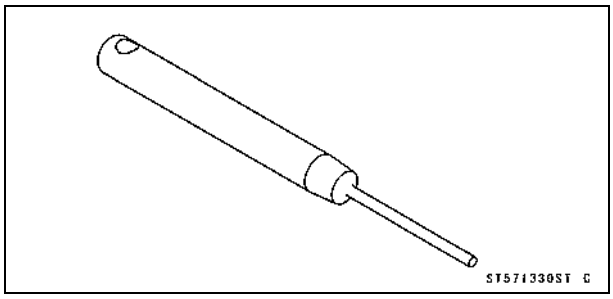

Valve Guide Arbor, ϕ4.5:
57001-1331

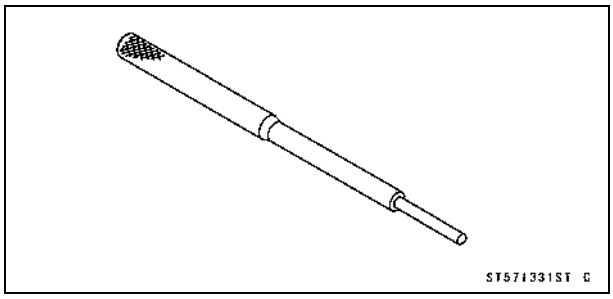

Valve Guide Reamer, ϕ4.5:
57001-1333

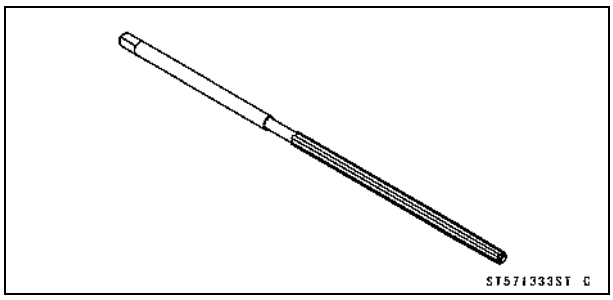

Piston Pin Puller:
57001-1568

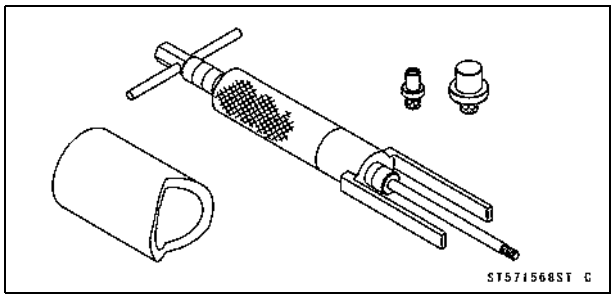

Piston Pin Puller Adapter C:
57001-1657

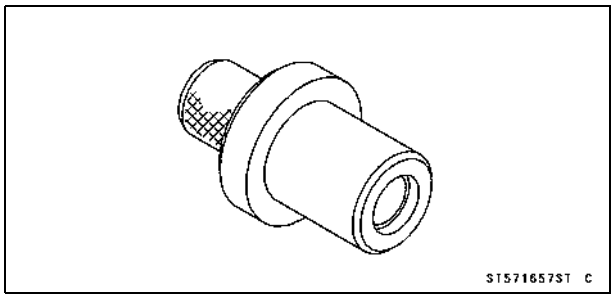

Kawasaki Bond (Silicone Sealant):
92104-0004

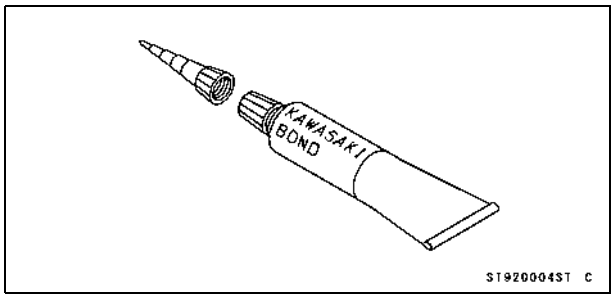

http://mototh.com

Clean Air System

Air Suction Valve Removal

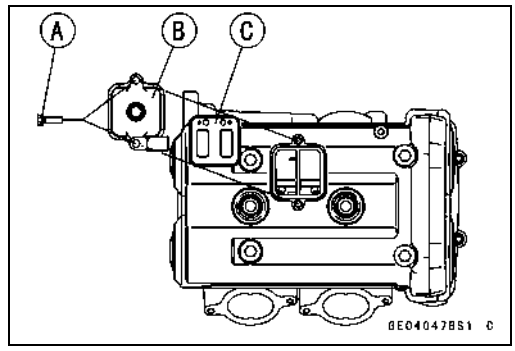

- Remove:
  Fuel Tank (see Fuel Tank Removal in the Fuel System (DFI) chapter)
  Air Cleaner Housing (see Air Cleaner Housing Removal in the Fuel System (DFI) chapter)
  Air Switching Valve with Hoses (see Air Switching Valve Removal)
  Air Suction Valve Cover Bolts [A] and Clamp
  Air Suction Valve Cover [B]
  Air Suction Valve [C]

Air Suction Valve Installation

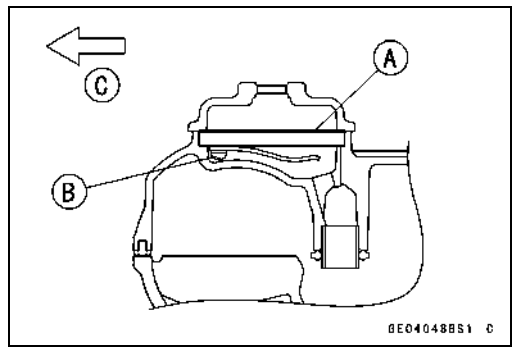

- Install the air suction valve [A] so that its side where stopper is fixed with the screws [B] faces the front [C] .
- Tighten:

  Torque - Air Suction Valve Cover Bolts: 9.8 N·m (1.0 kgf·m, 87 in·lb)

Air Suction Valve Inspection

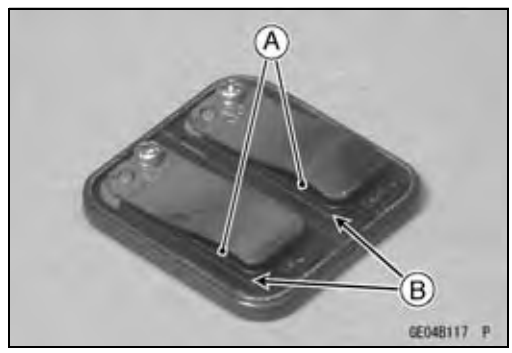

- Remove the air suction valve (see Air Suction Valve Removal).
- Visually inspect the reeds for cracks, folds, warps, heat damage or other damage.
- ★If there is any doubt as to the condition of the reeds [A], replace the air suction valve as an assembly.
- Check the reed contact areas [B] of the valve holder for grooves, scratches, any signs of separation from the holder or heat damage.
- If there is any doubt as to the condition of the reed contact areas, replace the air suction valve as an assembly.
- If any carbon or other foreign particles have accumulated between the reed and the reed contact area, wash the valve assembly clean with a high-flash point solvent.

CAUTION
Do not scrape off the deposits with a scraper as this could damage the rubber, requiring replacement of the suction valve assembly.

Air Switching Valve Removal

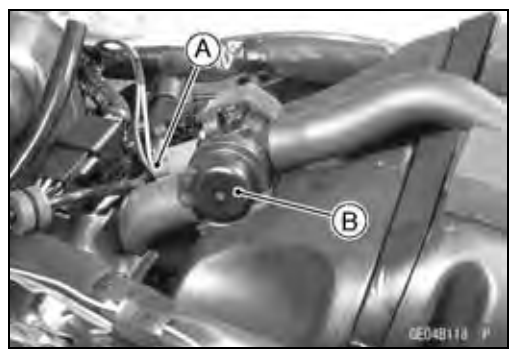

- Remove:
  Fuel Tank (see Fuel Tank Removal in the Fuel System (DFI) chapter)
  Air Switching Valve Connector [A] (Disconnect)
  Vacuum Switch Valve [B]

Clean Air System

Air Switching Valve Installation

- Install the vacuum switch valve so that the vacuum fitting [A] faces left side.
- Route the hoses correctly (see Cable, Wire, and Hose Routing section in the Appendix chapter).

Air Switching Valve Operation Test

- Refer to Air Switching Valve Operation Test in the Electrical System chapter.

Air Switching Valve Unit Test

- Refer to Air Switching Valve Unit Test in the Electrical System chapter.

Clean Air System Hose Inspection

- Be certain that all the hoses are routed without being flattened or kinked, and are connected correctly to the air cleaner housing, air switching valve, #1 and #2 throttle body holders and air suction valve covers.

★If they are not, correct them. Replace them if they are damaged.

http://mototh.com

Cylinder Head Cover

Cylinder Head Cover Removal

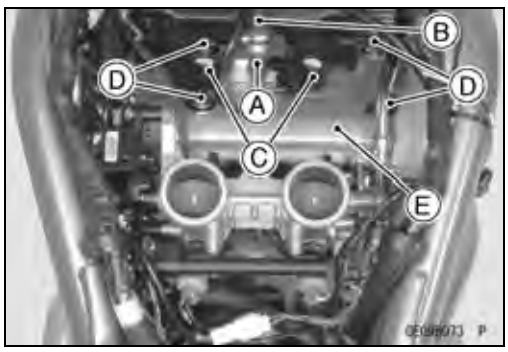

- Remove:
  Fuel Tank (see Fuel Tank Removal in the Fuel System (DFI) chapter)
  Air Cleaner Housing (see Air Cleaner Housing Removal in the Fuel System (DFI) chapter)
  Air Suction Valve Cover [A] with Hose [B]
  Stick Coils [C]
  Baffle Plate
  Cylinder Head Cover Bolts [D]
  Cylinder Head Cover [E]

Cylinder Head Cover Installation

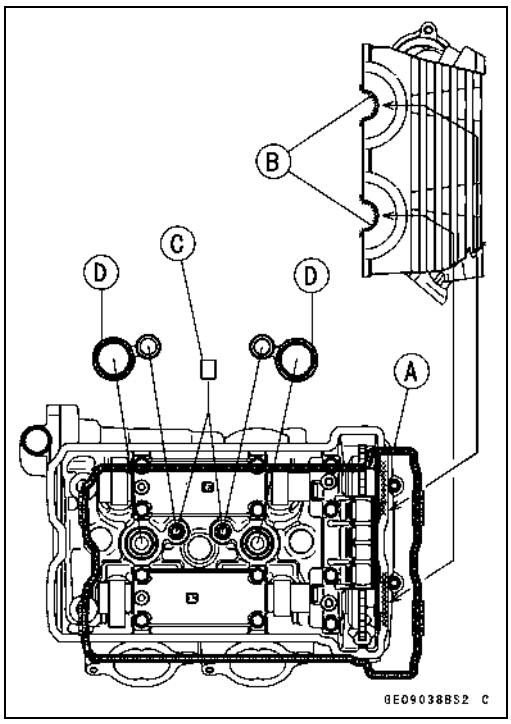

- Replace the head cover gasket [A] with a new one.
- Apply silicone sealant [B] to the cylinder head as shown.

  Sealant - Kawasaki Bond (Silicone Sealant): 92104-0004

- Install:
  Dowel Pins [C]
  Plug Hole Gaskets [D]

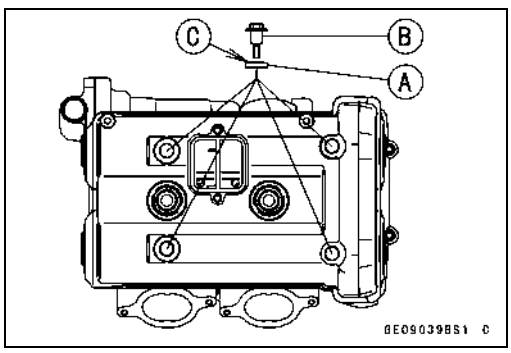

- Install:
  Washers [A]
  Cylinder Head Cover Bolts [B]

○Install the washers with metal side [C] faces upward.

- Tighten:

  Torque - Cylinder Head Cover Bolts: 9.8 N·m (1.0 kgf·m, 87 in·lb)

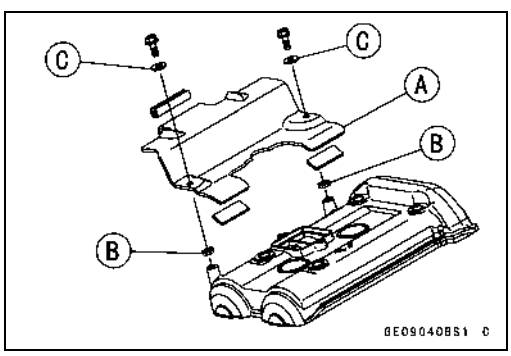

- Install the baffle plate [A].

○Put the insulators [B] under the baffle plate and the washers [C] on the baffle plate.

○Apply a non-permanent locking agent to the baffle plate bolts and torque them.

Torque - Baffle Plate Bolts: 5.9 N·m (0.60 kgf·m, 52 in·lb)

Camshaft Chain Tensioner

Camshaft Chain Tensioner Removal

CAUTION

This is a non-return type camshaft chain tensioner. The push rod does not return to its original position once it moves out to take up camshaft chain slack. Observe all the rules listed below:
When removing the tensioner, do not take out the mounting bolts only halfway. Retightening the mounting bolts from this position could damage the tensioner and the camshaft chain. Once the bolts are loosened, the tensioner must be removed and reset as described in "Camshaft Chain Tensioner Installation."
Do not turn over the crankshaft while the tensioner is removed. This could upset the camshaft chain timing, and damage the valves.

- Remove:
  Cap Bolt [A]
  Washer [B]
  Spring [C]
- Remove the mounting bolts [D] and take off the camshaft chain tensioner.

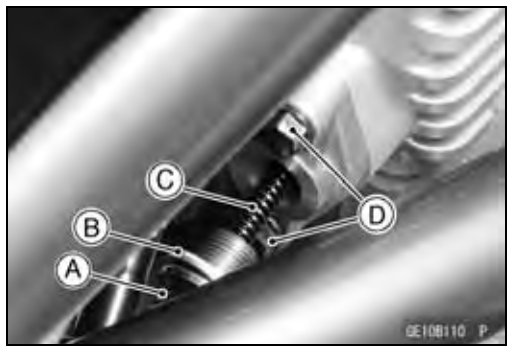

Camshaft Chain Tensioner Installation

- Release the stopper [A] and push the push rod [B] into the tensioner [C].
- Install the tensioner so that the stopper faces upward.

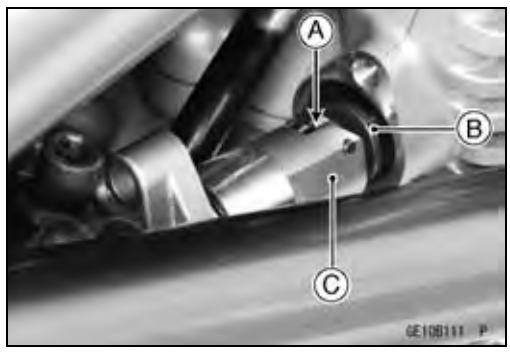

- Tighten the tensioner mounting bolts [A].

  Torque - Camshaft Chain Tensioner Mounting Bolts: 9.8 N·m (1.0 kgf·m, 87 in·lb)

- Install the spring and washer.
- Tighten the cap bolt [B].

  Torque - Camshaft Chain Tensioner Cap Bolt: 20 N·m (2.0 kgf·m, 15 ft·lb)

- Turn the crankshaft 2 turns clockwise to allow the tensioner to expand and recheck the camshaft chain timing.

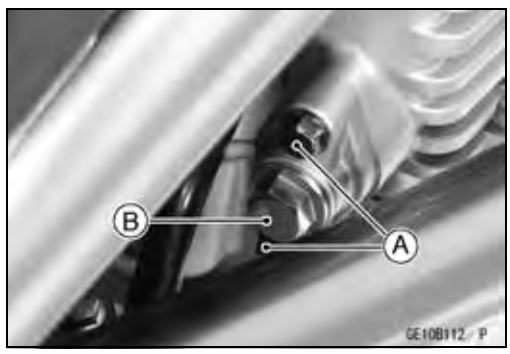

http://mototh.com

Camshaft, Camshaft Chain

Camshaft Removal

● Remove:
Cylinder Head Cover (see Cylinder Head Cover Removal)

● Position the crankshaft as follows.

○Remove the upper [A] and lower [B] caps on the clutch cover.

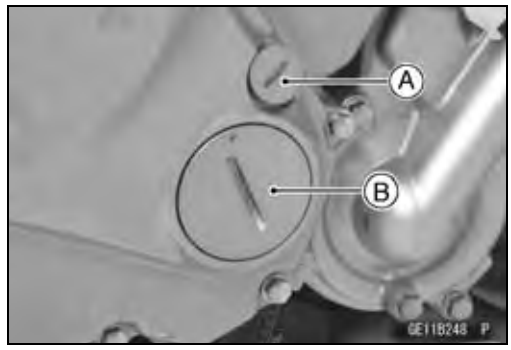

○Using a wrench on the crankshaft rotation bolt, turn the crankshaft clockwise until the 2|T mark line [A] on the timing rotor is aligned with the notch [B] in the edge of the upper hole [C] in the clutch cover.

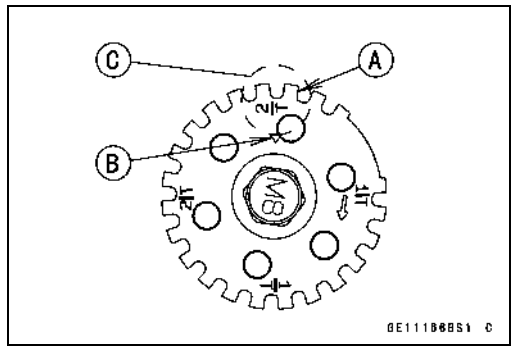

● Remove:
Camshaft Chain Tensioner (see Camshaft Chain Tensioner Removal)
Camshaft Cap Bolts [A]
Camshaft Caps [B]
Camshafts [C]

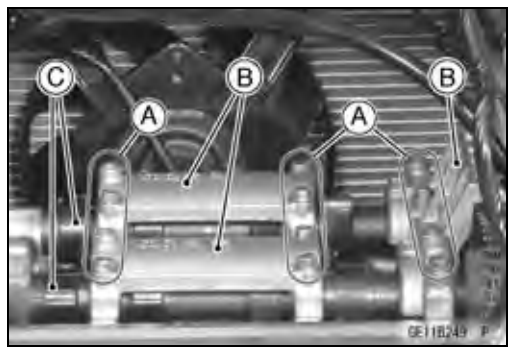

CAUTION
The crankshaft may be turned while the camshafts are removed. Always pull the chain taut while turning the crankshaft. This avoids kinking the chain on the lower (crankshaft) sprocket. A kinked chain could damage both the chain and the sprocket.

Camshaft Installation

● Be sure to install the following parts.
Plug Hole Gaskets [A]
Dowel Pins [B]

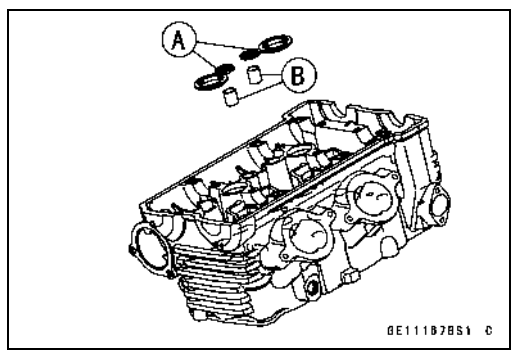

Camshaft, Camshaft Chain

- Apply molybdenum disulfide oil solution to all cams [A] journals [B] and thrust blocks [C] with × marks.
- If a new camshaft is to be used, apply a thin coat of molybdenum disulfide grease to the cam surfaces.

NOTE

○*The exhaust camshaft has a 2 412 EX mark [D] and the inlet camshaft has a 2 412 IN mark [E]. Be careful not to mix up these shafts.*

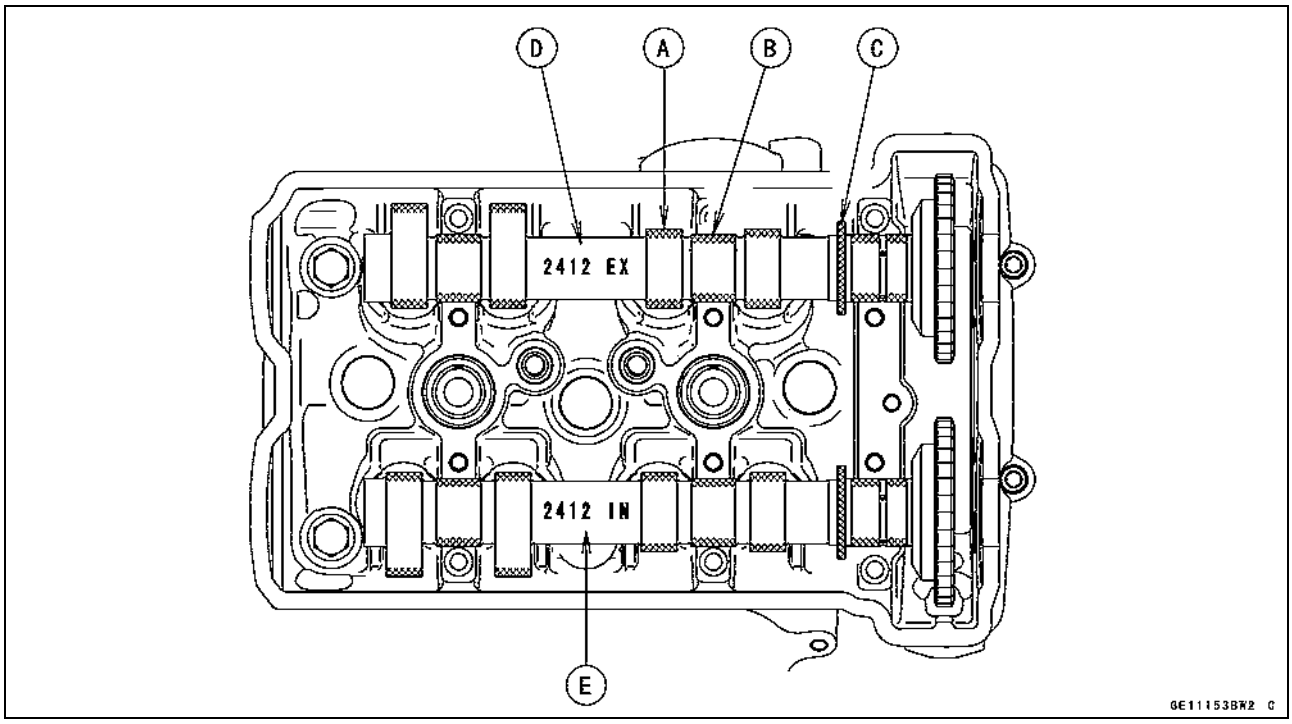

- Position the crankshaft as follows.
- Pull the tension side (exhaust side) of the chain taut to install the chain.
- Engage the camshaft chain with the camshaft sprockets so that the timing marks on the sprockets are positioned as shown.

○Using a wrench on the crankshaft rotation bolt, turn the crankshaft clockwise until the 2|T mark line [A] on the timing rotor is aligned with the notch [B] in the edge of the upper hole [C] in the clutch cover.

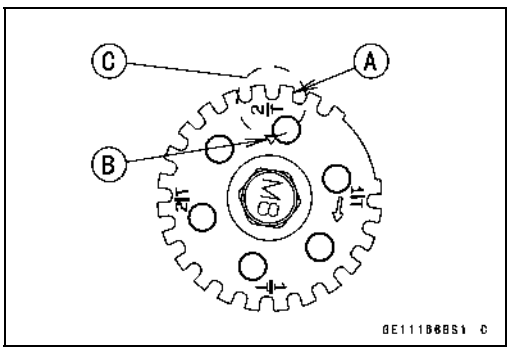

- If the clutch cover is removed, perform the next procedure.

○Using a wrench on the crankshaft rotation bolt, turn the crankshaft clockwise until the 1|T mark line [A] on the timing rotor is aligned with the wating surface [B] of the crankcase halves.

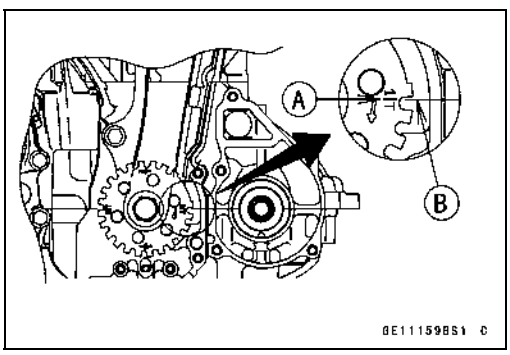

Camshaft, Camshaft Chain

○The timing marks must be aligned with the cylinder head upper surface [C].
EX mark [D] (Between #1 Pin and #2 Pin)
IN mark [E] (Between #31 Pin and #32 Pin)
#1 Pin [F]
#2 Pin [G]
#31 Pin [H]
#32 Pin [J]

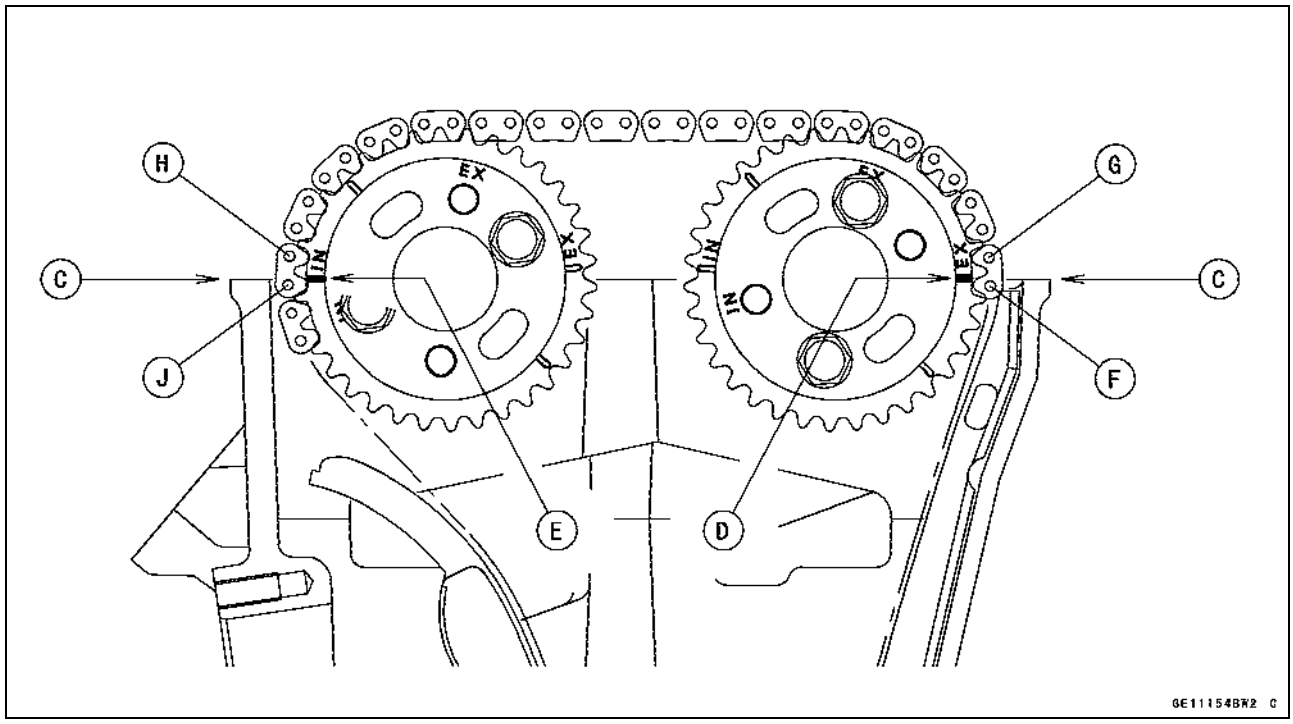

● Install the camshaft cap, while pushing the camshaft chain, tighten all camshaft bolts and chain guide bolts.

NOTE

○*The exhaust cap has a "EX" mark [A] and the inlet cap has a "IN" mark [B]. Be careful not to mix up these caps.*

○First tighten all the camshaft cap bolts evenly to seat the camshaft in place, then tighten all bolts following the specified tightening sequence.

Torque - Camshaft Cap Bolts (1 ~ 12): 12 N·m (1.2 kgf·m, 106 in·lb)

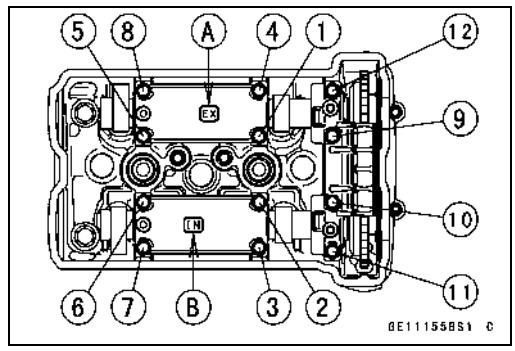

● Install:
Camshaft Chain Tensioner (see Camshaft Chain Tensioner Installation)
Cylinder Head Cover (see Cylinder Head Cover Installation)

Camshaft, Camshaft Chain

Camshaft and Sprocket Assembly

○The inlet and exhaust sprockets are identical.

- Install the sprockets so that the marked ("IN" and "EX") side faces to the right side.

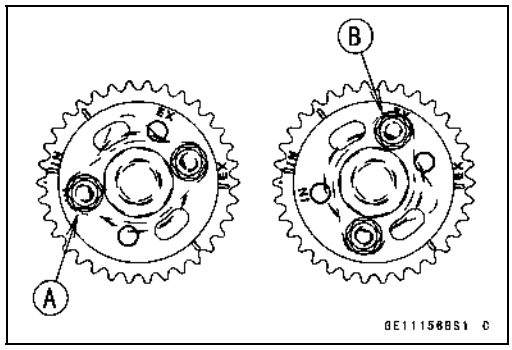

CAUTION

Inlet sprocket must use "IN" marked bolts holes [A]. Exhaust sprocket must use "EX" marked bolts holes [B].

- Apply a non-permanent locking agent to the camshaft sprockets bolts and tighten them.

Torque - Camshaft Sprockets Bolts: 15 N·m (1.5 kgf·m, 11 ft·lb)

★If a new camshaft is to be used, apply a thin coat of a molybdenum disulfide grease to the cam surfaces.

Camshaft, Camshaft Cap Wear

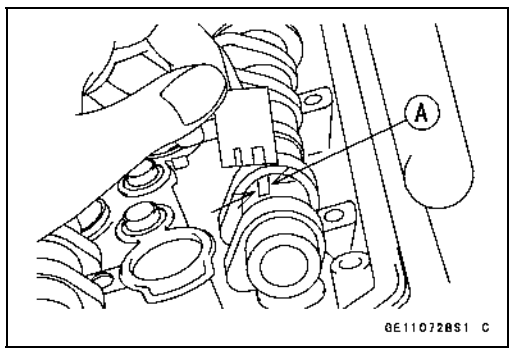

- Remove:
  Camshaft Caps (see Camshaft Removal)
- Cut strips of plastigage to journal width. Place a strip on each journal parallel to the camshaft installed in the correct position.
- Measure each clearance between the camshaft journal and the camshaft cap using plastigage (press gauge) [A].
- Tighten:

Torque - Camshaft Cap Bolts: 12 N·m (1.2 kgf·m, 106 in·lb)

NOTE

○*Do not turn the camshaft when the plastigage is between the journal and camshaft cap.*

Camshaft Journal, Camshaft Cap Clearance

Standard: 0.028 ~ 0.071 mm (0.0011 ~ 0.0028 in.)

Service Limit: 0.16 mm (0.0063 in.)

★If any clearance exceeds the service limit, measure the diameter of each camshaft journal with a micrometer.

Camshaft Journal Diameter

Standard: 23.950 ~ 23.972 mm (0.9429 ~ 0.9438 in.)

Service Limit: 23.92 mm (0.942 in.)

★If the camshaft journal diameter is less than the service limit, replace the camshaft with a new one and measure the clearance again.

★If the clearance still remains out of the limit, replace the cylinder head unit.

http://mototh.com

Camshaft, Camshaft Chain

Camshaft Runout

- Remove the camshaft (see Camshaft Removal).
- Set the camshaft in a camshaft alignment jig or on V blocks.
- Measure runout with a dial gauge at the specified place as shown.

★If the runout exceeds the service limit, replace the shaft.

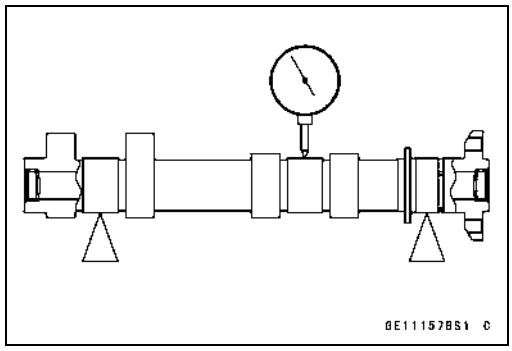

Camshaft Runout

Standard:	**TIR 0.02 mm (0.0008 in.) or less**
Service Limit:	**TIR 0.1 mm (0.004 in.)**

Cam Wear

- Remove the camshaft (see Camshaft Removal).
- Measure the height [A] of each cam with a micrometer.

★If the cams are worn down past the service limit, replace the camshaft.

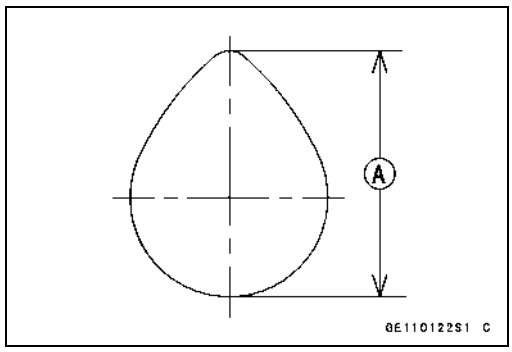

Cam Height

Standard:	
Exhaust	**35.843 ~ 35.957 mm (1.4111 ~ 1.4156 in.)**
Inlet	**36.543 ~ 36.657 mm (1.4387 ~ 1.4432 in.)**
Service Limit:	
Exhaust	**35.74 mm (1.4071 in.)**
Inlet	**36.44 mm (1.4346 in.)**

Camshaft Chain Removal

- Split the crankcase (see Crankcase Splitting in the Crankshaft/Transmission chapter).
- Remove the camshaft chain [A] from the crankshaft sprocket.

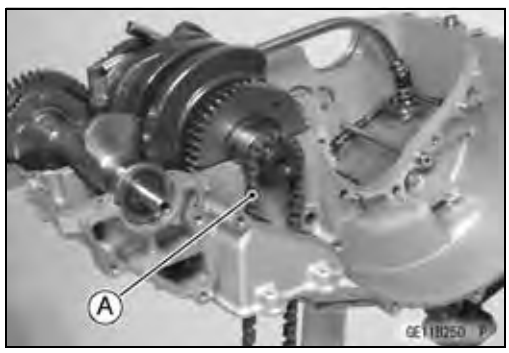

Cylinder Head

Cylinder Compression Measurement

NOTE

○*Use the battery which is fully charged.*

- Warm up the engine thoroughly.
- Stop the engine.
- Remove:
  Seat (see Seat Removal in the Frame chapter)
  Fuel Tank (see Fuel Tank Removal in the Fuel System (DFI) chapter)
  Air Cleaner Housing (see Air Cleaner Housing Removal in the Fuel System (DFI) chapter)
  Stick Coils (see Stick Coil (Ignition Coil together with Spark Plug Cap) Removal in the Electrical System chapter)
  Spark Plugs (see Spark Plug Replacement in the Periodic Maintenance chapter)

Owner's Tool - Spark Plug Wrench, 16 mm: 92110-1132

NOTE

○*Reconnect the connectors of the air switching valve lead and the inlet air temperature sensor lead. When the ignition switch is turned ON with the above connectors disconnected, the service codes (13, 64) are stores in the ECU.*

- Attach the compression gauge [A] and adapter [B] firmly into the spark plug hole.

○Using the starter motor, turn the engine over with the throttle fully open until the compression gauge stops rising; the compression is the highest reading obtainable.

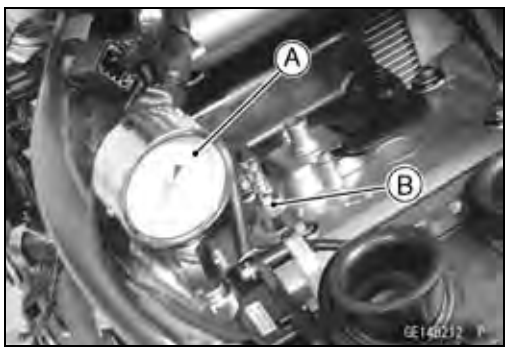

Special Tools - Compression Gauge, 20 kgf/cm²: 57001-221
Compression Gauge Adapter, M10 × 1.0: 57001-1317

Cylinder Compression
Usable Range: 961 ~ 1 471 kPa (9.8 ~ 15.0 kgf/cm², 139 ~ 213 psi) @400 r/min (rpm)

- Repeat the measurement for the other cylinders.
- Install the spark plugs.

Torque - Spark Plugs: 15 N·m (1.5 kgf·m, 11 ft·lb)

http://mototh.com

Cylinder Head

The following table should be consulted if the obtainable compression reading is not within the usable range.

Problem	Diagnosis	Remedy (Action)
Cylinder compression is higher than usable range	Carbon accumulation on piston and in combustion chamber possibly due to damaged valve stem oil seal and/or damaged piston oil rings (This may be indicated by white exhaust smoke).	Remove the carbon deposits and replace damaged parts if necessary.
	Incorrect cylinder head gasket thickness	Replace the gasket with a standard part.
Cylinder compression is lower than usable range	Gas leakage around cylinder head	Replace damaged gasket and check cylinder head warp.
	Bad condition of valve seating	Repair if necessary.
	Incorrect valve clearance	Adjust the valve clearance.
	Incorrect piston/cylinder clearance	Replace the piston and/or cylinder.
	Piston seizure	Inspect the cylinder and replace/repair the cylinder and/or piston as necessary.
	Bad condition of piston ring and/or piston ring grooves	Replace the piston and/or the piston rings.

Cylinder Head Removal

- Remove:
  - Exhaust Pipes (see Exhaust Pipe Removal)
  - Cylinder Head Cover (see Cylinder Head Cover Removal)
  - Camshafts (see Camshaft Removal)
  - Throttle Body Assy (see Throttle Body Assy Removal in the Fuel System (DFI) chapter)
  - Throttle Body Holder
  - Water Hose
  - Water Temperature Sensor Connector [A]
  - Front Camshaft Chain Guide

http://mototh.com

Cylinder Head

- Firstly remove the M6 cylinder head bolts and M6 cylinder bolts [A].
- Secondly, remove the M8 bolts [B].
- Thirdly, remove the M10 nut [C].
- Fourthly, remove the M10 bolts [D].

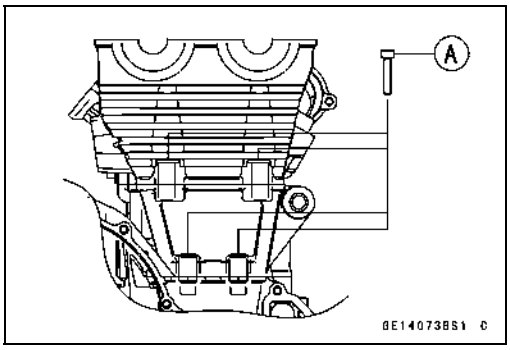

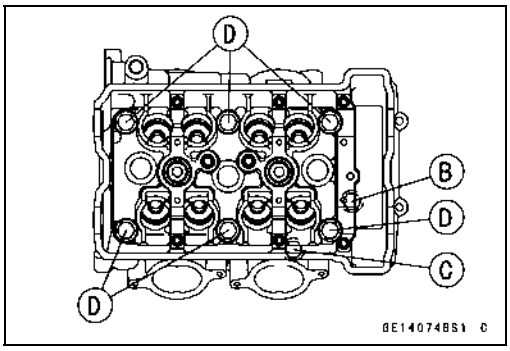

Cylinder Head Installation

NOTE

○*The camshaft cap is machined with the cylinder head, so if a new cylinder head is installed, use the cap that is supplied with the new head.*

- Install a new cylinder head gasket [A] and dowel pins [B].

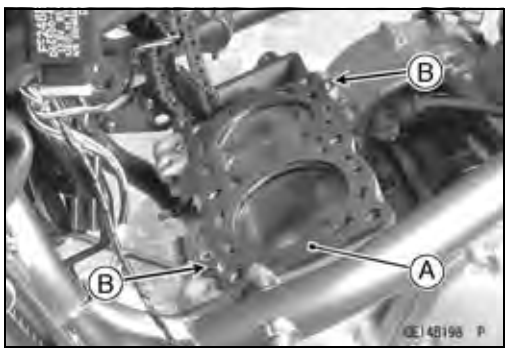

Cylinder Head

- Apply molybdenum disulfide oil solution [A] to both sides of washers and the threads of bolts and nut.
  M10 Cylinder Head Bolts [B]
  M10 Cylinder Nut [C]
  M8 Cylinder Bolt [D]
- Torque the all the bolts and nut following the tightening sequence [1 ~ 8].

Torque - Cylinder Head Bolts (M10):
First: 25 N·m (2.5 kgf·m, 18 ft·lb)
Final:
Used Bolts 49 N·m (5.0 kgf·m, 36 ft·lb)
New Bolts 54 N·m (5.5 kgf·m, 40 ft·lb)
Cylinder Nut (M10): 49 N·m (5.0 kgf·m, 36 ft·lb)
Cylinder Bolt (M8): 27.5 N·m (2.8 kgf·m, 20 ft·lb)

NOTE

○*The tightening sequence No.1 ~ No.5 are the cylinder head bolts that are tightened between the cylinder head with the crankcase.*
○*The No.6 is the cylinder head bolt that is tightened between the cylinder head with the cylinder.*
○*The No.7 and No.8 are the cylinder nut and cylinder bolt that are tightened between the cylinder and the crankcase.*

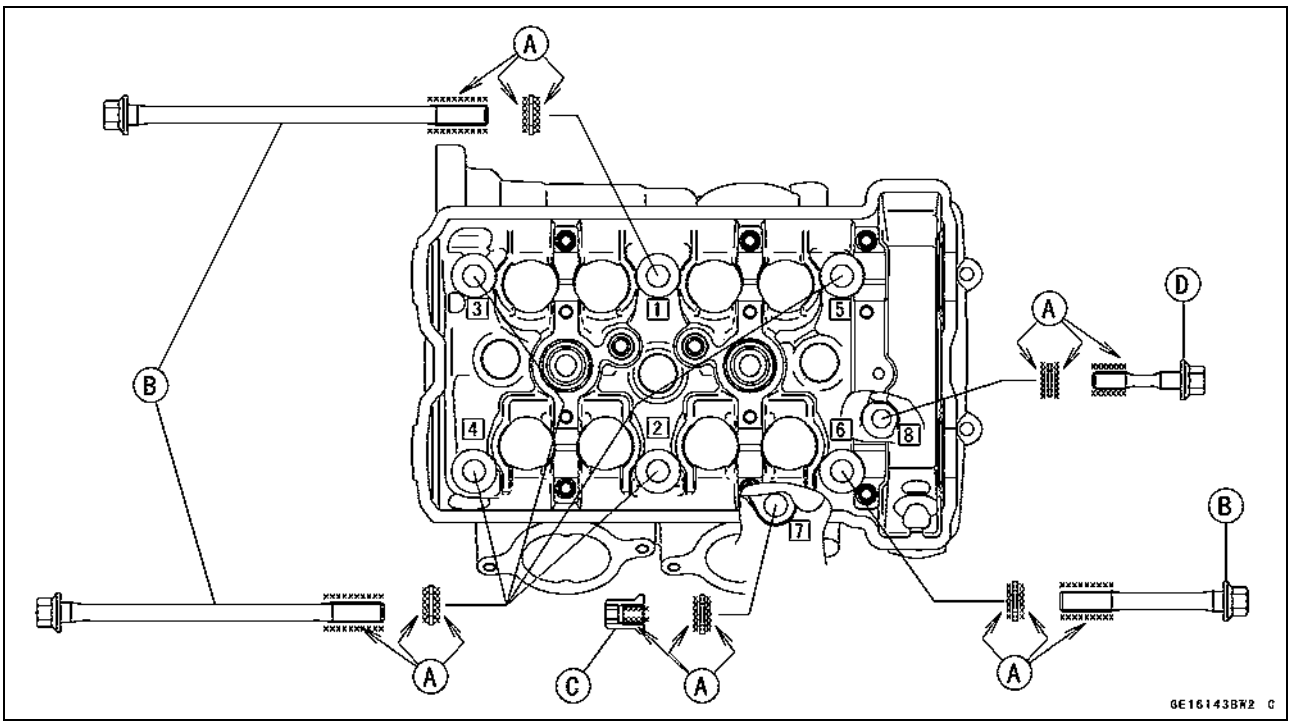

Cylinder Head

- Tighten the M6 cylinder head bolts and M6 cylinder bolts [A].

  Torque - Cylinder Head Bolts (M6): 12 N·m (1.2 kgf·m, 106 in·lb)
  Cylinder Bolts (M6): 12 N·m (1.2 kgf·m, 106 in·lb)

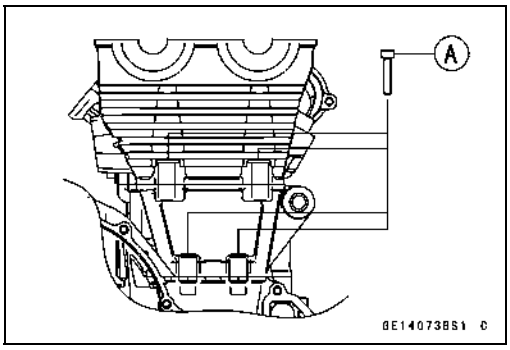

- Install the front camshaft chain guide [A].
- ○Insert the end [B] of front camshaft chain guide into the hollow on the lower crankcase half.
- Install the removed parts (see appropriate chapters).

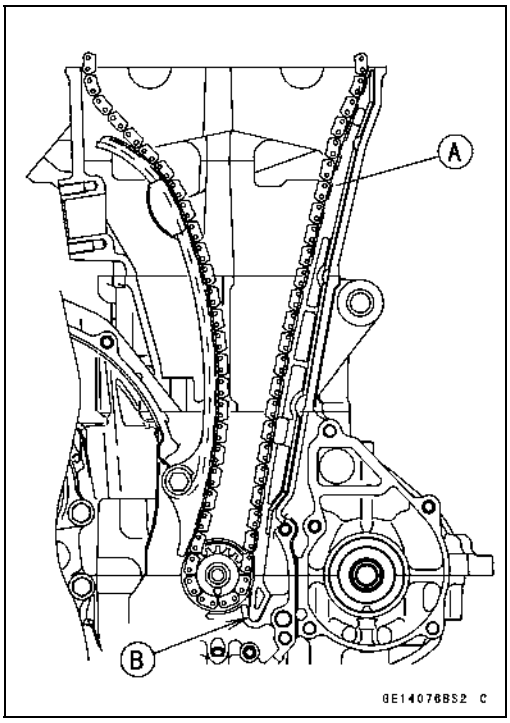

Cylinder Head Warp

- Clean the cylinder head.
- Lay a straightedge across the lower surface of the cylinder head at several positions.
- Use a thickness gauge [A] to measure the space between the straightedge [B] and the head.

  Cylinder Head Warp
  Standard: – – –
  Service Limit: 0.05 mm (0.002 in.)

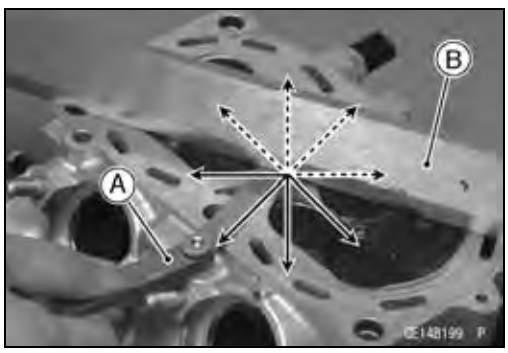

★If the cylinder head is warped more than the service limit, replace it.

★If the cylinder head is warped less than the service limit, repair the head by rubbing the lower surface on emery paper secured to a surface plate (first No. 200, then No. 400).

Valves

Valve Clearance Inspection

- Refer to Valve Clearance Inspection in the Periodic Maintenance chapter.

Valve Clearance Adjustment

- Refer to Valve Clearance Adjustment in the Periodic Maintenance chapter.

Valve Removal

- Remove cylinder head (see Cylinder Head Removal).
- Remove the valve lifter and shim.

○Mark and record the valve lifter and shim locations so they can be installed in their original positions.

- Using the valve spring compressor assembly, remove the valve.

Special Tools - Valve Spring Compressor Assembly: 57001-241 [A]
Valve Spring Compressor Adapter, ϕ21: 57001-1272 [B]

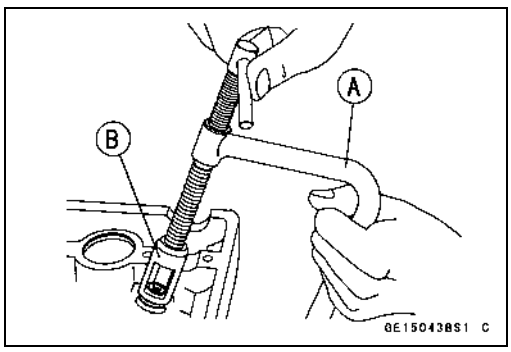

Valve Installation

- Replace the oil seal with a new one.

○Apply engine oil to the oil seal lip.

- Apply a thin coat of molybdenum disulfide grease to the valve stem before valve installation.
- Install the springs so that the closed coil end faces downwards (the side painted in green faces upwards).

Valve Stem [A]
Oil Seal [B]
Spring Seat [C]
Closed Coil End [D]
Valve Spring [E]
Side Painted in Green [F]
Retainer [G]
Split Keepers [H]

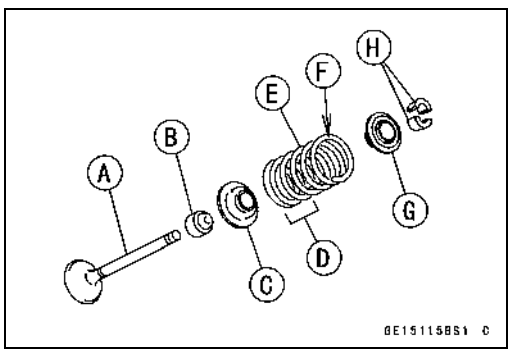

Valve Guide Removal

- Remove:

Valve (see Valve Removal)
Oil Seal
Spring Seat

- Heat the area around the valve guide to 120 ~ 150°C (248 ~ 302°F), and hammer lightly on the valve guide arbor [A] to remove the guide from the top of the head.

CAUTION
Do not heat the cylinder head with a torch. This will warp the cylinder head. Soak the cylinder head in oil and heat the oil.

Special Tool - Valve Guide Arbor, ϕ4.5: 57001-1331

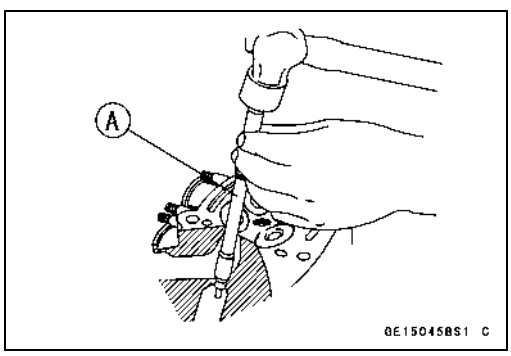

Valves

Valve Guide Installation

- Apply oil to the valve guide outer surface before installation.
- Heat the area around the valve guide hole to about 120 ~ 150°C (248 ~ 302°F).
- Drive the valve guide in from the top of the head using the valve guide arbor. The flange stops the guide from going in too far.

Special Tool - Valve Guide Arbor, ϕ4.5: 57001-1331

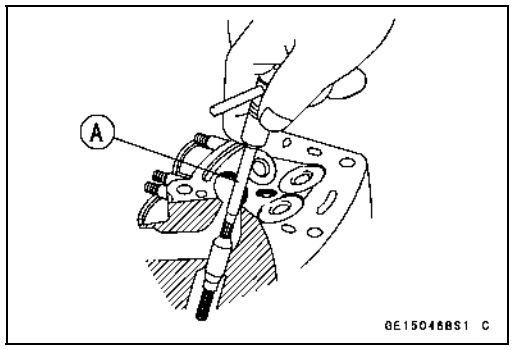

- Wait until the cylinder head cools down and then ream the valve guide with the valve guide reamer [A] even if the old guide is reused.

○Turn the reamer in a clockwise direction until the reamer turns freely in the guide. Never turn the reamer counterclockwise or it will be dulled.

○Once the guides are reamed they must be cleaned thoroughly.

Special Tool - Valve Guide Reamer, ϕ4.5: 57001-1333

Valve-to-Guide Clearance Measurement (Wobble Method)

If a small bore gauge is not available, inspect the valve guide wear by measuring the valve to valve guide clearance with the wobble method as indicated below.

- Insert a new valve [A] into the guide [B] and set a dial gauge against the stem perpendicular to it as close as possible to the cylinder head mating surface.
- Move the stem back and forth [C] to measure valve/valve guide clearance.
- Repeat the measurement in a direction at a right angle to the first.

★If the reading exceeds the service limit, replace the guide.

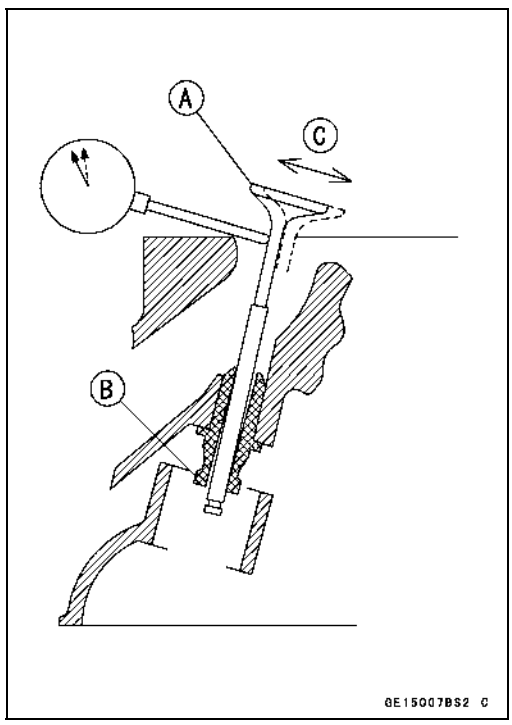

NOTE

○*The reading is not actual valve/valve guide clearance because the measuring point is above the guide.*

Valve/Valve Guide Clearance (Wobble Method)

Standard:

Exhaust	**0.07 ~ 0.14 mm (0.0028 ~ 0.0055 in.)**
Inlet	**0.02 ~ 0.08 mm (0.0008 ~ 0.0032 in.)**

Service Limit:

Exhaust	**0.27 mm (0.0106 in.)**
Inlet	**0.22 mm (0.0087 in.)**

http://mototh.com

Valves

Valve Seat Inspection

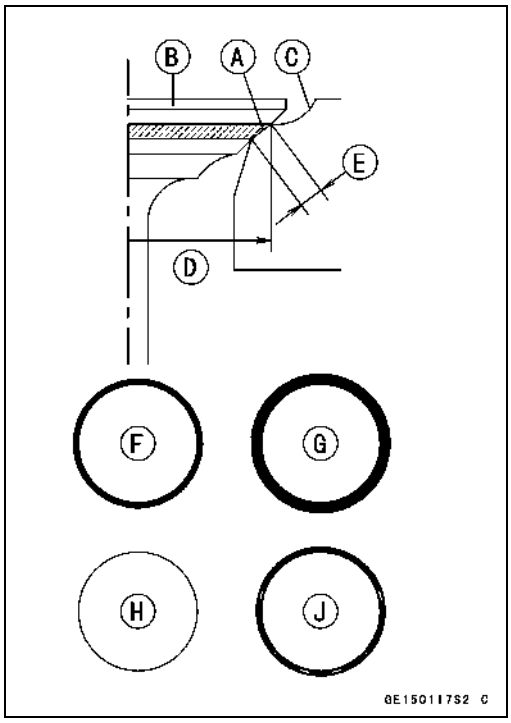

- Remove the valve (see Valve Removal).
- Check the valve seating surface [A] between the valve [B] and valve seat [C].

○Measure the outside diameter [D] of the seating pattern on the valve seat.

★If the outside diameter is too large or too small, repair the seat (see Valve Seat Repair).

Valve Seating Surface Outside Diameter
Standard:

Exhaust	**27.6 ~ 27.8 mm (1.087 ~ 1.094 in.)**
Inlet	**32.6 ~ 32.8 mm (1.283 ~ 1.291 in.)**

○Measure the seat width [E] of the portion where there is no build-up carbon (white portion) of the valve seat with a vernier caliper.
Good [F]

★If the width is too wide [G], too narrow [H] or uneven [J], repair the seat (see Valve Seat Repair).

Valve Seating Surface Width
Standard:

Exhaust	**0.5 ~ 1.0 mm (0.020 ~ 0.039 in.)**
Inlet	**0.5 ~ 1.0 mm (0.020 ~ 0.039 in.)**

Valve Seat Repair

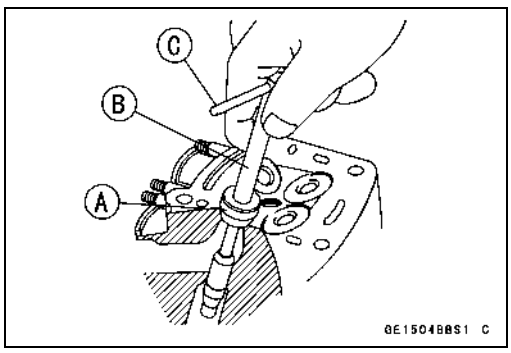

- Repair the valve seat with the valve seat cutters [A].

Special Tools - Valve Seat Cutter Holder Bar: 57001-1128 [C]
Valve Seat Cutter Holder, ϕ4.5: 57001-1330 [B]

For Exhaust Valve Seat
Valve Seat Cutter, 45° - ϕ30: 57001-1187
Valve Seat Cutter, 32° - ϕ30: 57001-1120
Valve Seat Cutter, 60° - ϕ30: 57001-1123

For Inlet Valve Seat
Valve Seat Cutter, 45° - ϕ35: 57001-1116
Valve Seat Cutter, 32° - ϕ35: 57001-1121
Valve Seat Cutter, 55° - ϕ35: 57001-1247

★If the manufacturer's instructions are not available, use the following procedure.

http://mototh.com

Valves

Seat Cutter Operation Care

1. This valve seat cutter is developed to grind the valve for repair. Therefore the cutter must not be used for other purposes than seat repair.
2. Do not drop or shock the valve seat cutter, or the diamond particles may fall off.
3. Do not fail to apply engine oil to the valve seat cutter before grinding the seat surface. Also wash off ground particles sticking to the cutter with washing oil.

NOTE

○*Do not use a wire brush to remove the metal particles from the cutter. It will take off the diamond particles.*

4. Setting the valve seat cutter holder in position, operate the cutter in one hand. Do not apply too much force to the diamond portion.

NOTE

○*Prior to grinding, apply engine oil to the cutter and during the operation, wash off any ground particles sticking to the cutter with washing oil.*

5. After use, wash it with washing oil and apply thin layer of engine oil before storing.

Marks Stamped on the Cutter

The marks stamped on the back of the cutter [A] represent the following.

60° ..... Cutter angle [B]

ϕ37.5 ..... Outer diameter of cutter [C]

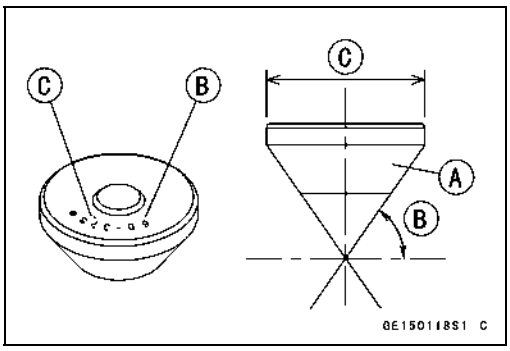

Operating Procedures

- Clean the seat area carefully.
- Coat the seat with machinist's dye.
- Fit a 45° cutter into the holder and slide it into the valve guide.
- Press down lightly on the handle and turn it right or left. Grind the seating surface only until it is smooth.

CAUTION

Do not grind the seat too much. Overgrinding will reduce valve clearance by sinking the valve into the head. If the valve sinks too far into the head, it will be impossible to adjust the clearance, and the cylinder head must be replaced.

http://mototh.com

Valves

- Measure the outside diameter of the seating surface with a vernier caliper.

★If the outside diameter of the seating surface is too small, repeat the 45° grind until the diameter is within the specified range.

Widened Width [A] of engagement by machining with 45° cutter
Ground Volume [B] by 32° cutter
32° [C]
Correct Width [D]
Ground Volume [E] by 60° or 55° cutter
60° or 55° [F]

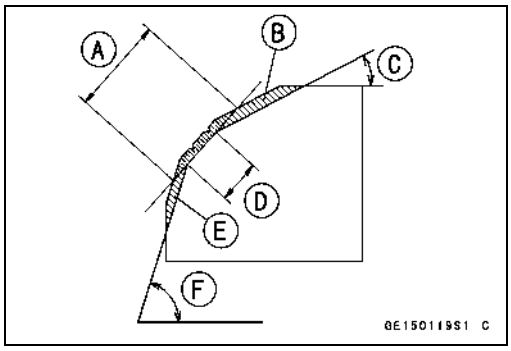

- Measure the outside diameter of the seating surface with a vernier caliper.

★If the outside diameter of the seating surface is too small, repeat the 45° grind [A] until the diameter is within the specified range.

Original Seating Surface [B]

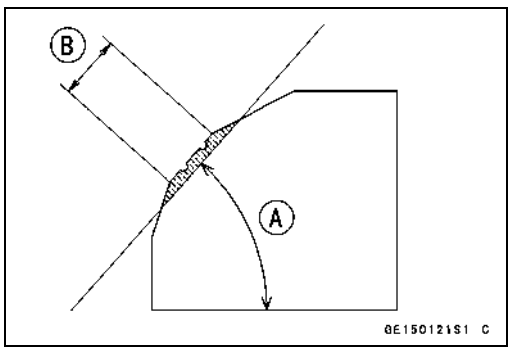

NOTE

○*Remove all pittings of flaws from 45° ground surface.*
○*After grinding with 45° cutter, apply thin coat of machinist's dye to seating surface. This makes seating surface distinct and 32° and 60° (or 55°) grinding operation easier.*
○*When the valve guide is replaced, be sure to grind with 45° cutter for centering and good contact.*

★If the outside diameter [A] of the seating surface is too large, make the 32° grind described below.

★If the outside diameter of the seating surface is within the specified range, measure the seat width as described below.

- Grind the seat at a 32° angle [B] until the seat outside diameter is within the specified range.

○To make the 32° grind, fit a 32° cutter into the holder, and slide it into the valve guide.

○Turn the holder one turn at a time while pressing down very lightly. Check the seat after each turn.

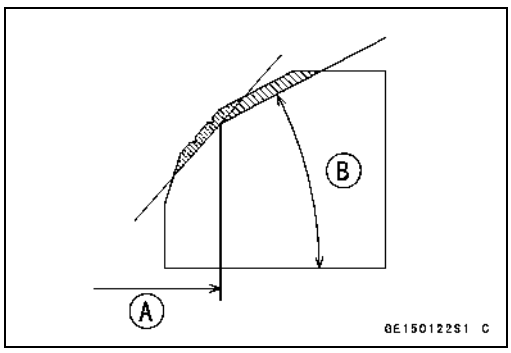

CAUTION

The 32° cutter removes material very quickly. Check the seat outside diameter frequently to prevent overgrinding.

○After making the 32° grind, return to the seat outside diameter measurement step above.

- To measure the seat width, use a vernier caliper to measure the width of the 45° angle portion of the seat at several places around the seat.

★If the seat width is too narrow, repeat the 45° grind until the seat is slightly too wide, and then return to the seat outside diameter measurement step above.

http://mototh.com

Valves

★If the seat width is too wide, make the 60° or 55° [A] grind described below.
★If the seat width is within the specified range, lap the valve to the seat as described below.
● Grind the seat at a 60° or 55° angle until the seat width is within the specified range.
○To make the 60° or 55° grind, fit 60° or 55° cutter into the holder, and slide it into the valve guide.
○Turn the holder, while pressing down lightly.
○After making the 60° or 55° grind, return to the seat width measurement step above.
Correct Width [B]

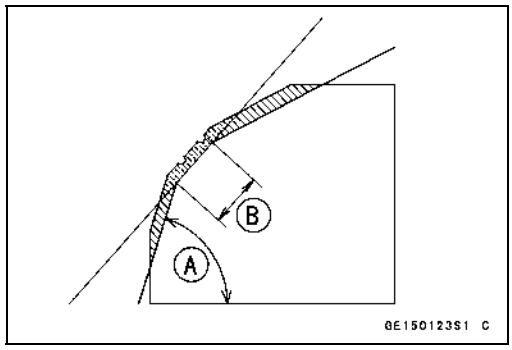

● Lap the valve to the seat, once the seat width and outside diameter are within the ranges specified above.
○Put a little coarse grinding compound on the face of the valve in a number of places around the valve head.
○Spin the valve against the seat until the grinding compound produces a smooth, matched surface on both the seat and the valve.
○Repeat the process with a fine grinding compound.
Lapper [A]
Valve Seat [B]
Valve [C]

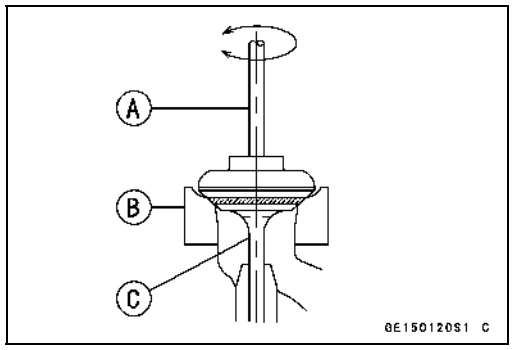

● The seating area should be marked about in the middle of the valve face.
★If the seat area is not in the right place on the valve, check to be sure the valve is the correct part. If it is, it may have been refaced too much; replace it.
● Be sure to remove all grinding compound before assembly.
● When the engine is assembled, be sure to adjust the valve clearance (see Valve Clearance Adjustment in the Periodic Maintenance chapter).

http://mototh.com

Valves

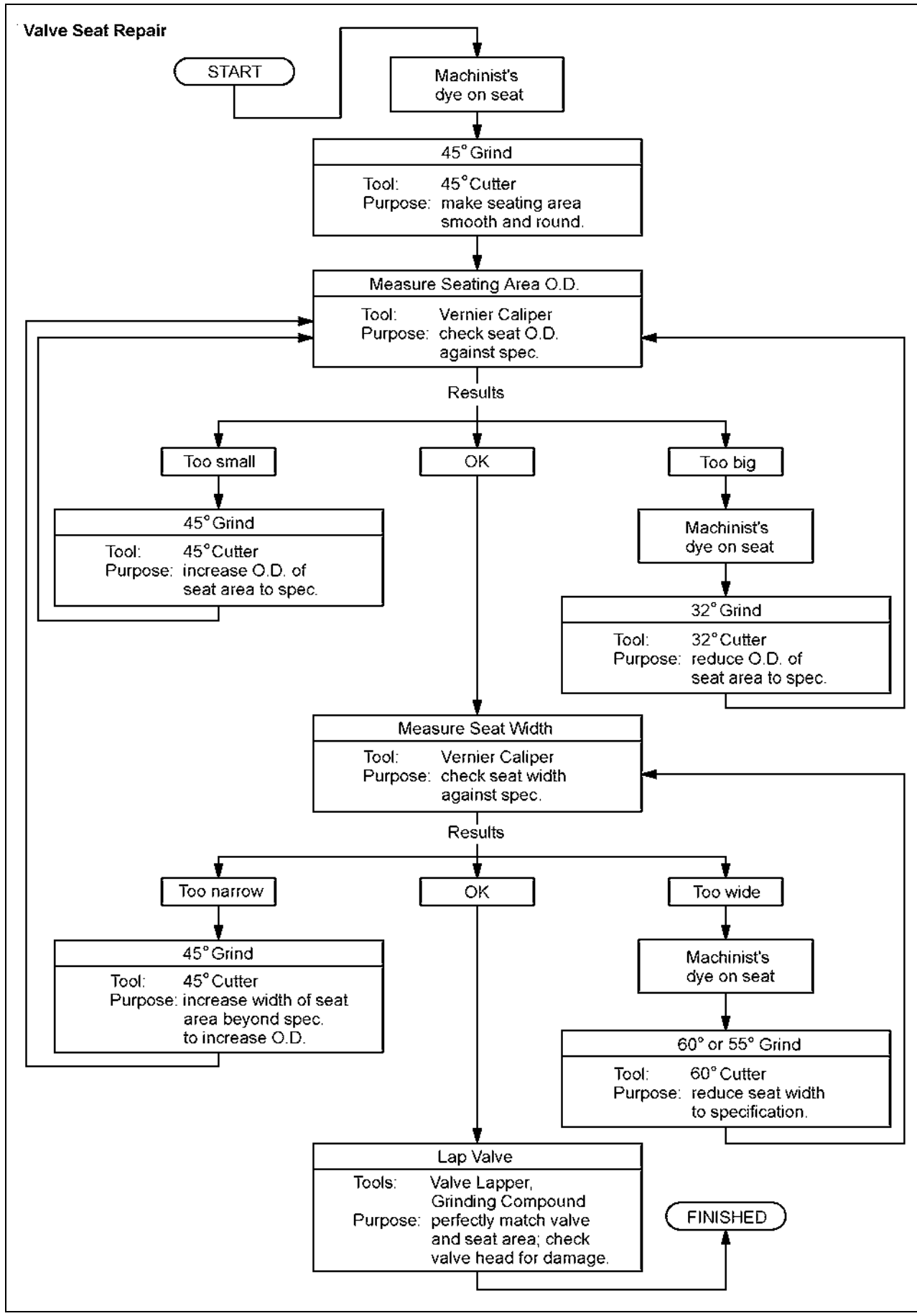

http://mototh.com

Cylinder, Pistons

Cylinder Removal

- Remove:
  Cylinder Head (see Cylinder Head Removal)
  Horn
- Remove:
  Front Engine Mounting Bolts (Both Side) [A] (see Engine Removal in the Engine Removal/Installation chapter)
  Front Engine Brackets (Both Side) [B] (see Engine Removal in the Engine Removal/Installation chapter)
  Cylinder [C]

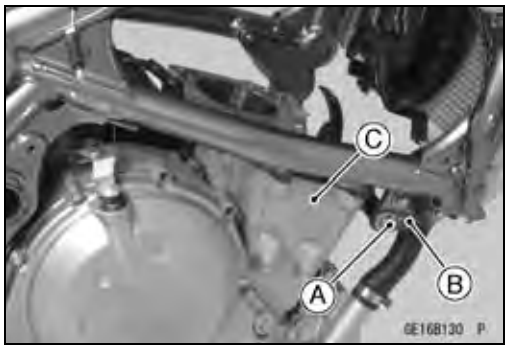

Cylinder Installation

NOTE

○*If a new cylinder is used, use new piston ring.*

- Install the dowel pins [A] and new cylinder gasket [B].

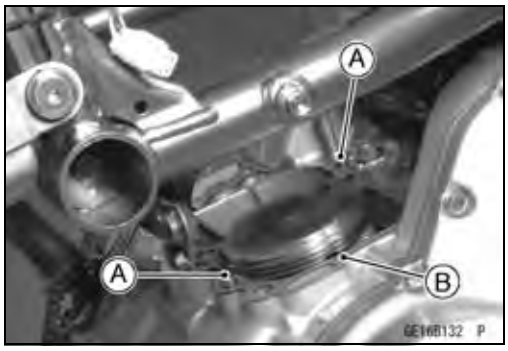

- The piston ring openings must be positioned as shown in the figure. The openings of the oil ring steel rails must be about 30 ~ 40° of angle from the opening of the top ring.
  Top Ring [A]
  Second Ring [B]
  Oil Ring Steel Rails [C]
  Oil Ring Expander [D]
  Hollow [E]
  30 ~ 40° [F]

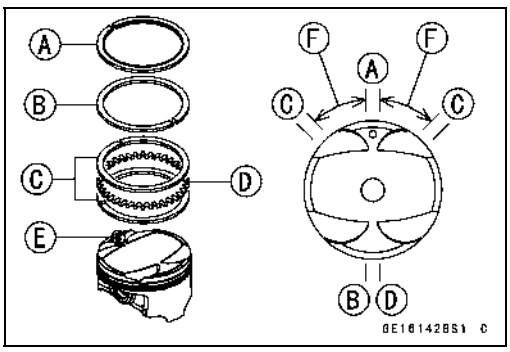

- Apply molybdenum disulfide oil solution to the cylinder bore, piston rings and piston.
- Prepare two auxiliary head bolts with their head cut.

○Install the two bolts [A] diagonally in the crankcase.

- Position the crankshaft so that all the piston heads are almost level.
- Install the cylinder block.

○Insert the piston rings with your thumbs.

Piston Removal

- Remove the cylinder (see Cylinder Removal).
- Place a clean cloth under the pistons and remove the piston pin snap ring [A] from the outside of each piston.

http://mototh.com

Cylinder, Pistons

- Remove the piston pins.

  Special Tool - Piston Pin Puller: 57001-1568 [A]
  Piston Pin Puller Adapter C: 57001-1657 [D]

  Center Bolt [B]
  Shall of Piston [C]
- Remove the pistons.

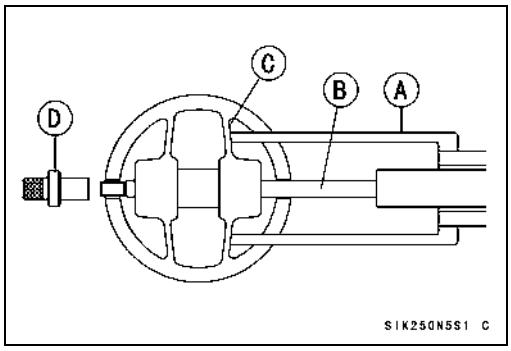

- Carefully spread the ring opening with your thumbs and then push up on the opposite side of the ring [A] to remove it.
- Remove the 3-piece oil ring with your thumbs in the same manner.

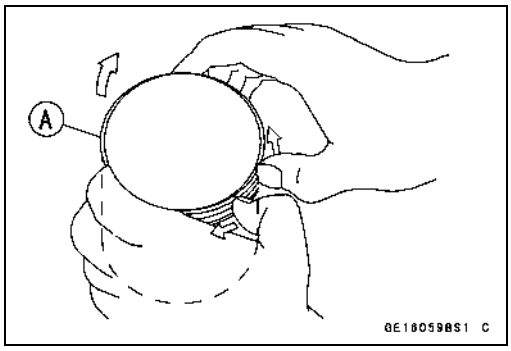

Piston Installation

- Install the oil ring expander [A] in the bottom piston ring groove so the ends [B] butt together.
- Install the oil ring steel rails, one above the expander and one below it.

○Spread the rail with your thumbs, but only enough to fit the rail over the piston.
○Release the rail into the bottom piston ring groove.

NOTE

○*The oil ring rails have no “top” or “bottom”.*

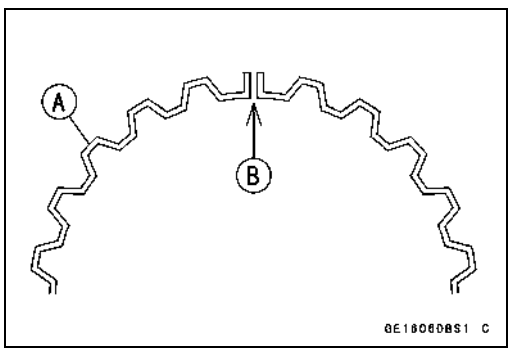

- Do not mix up the top and second ring.
- Install the top ring [A] so that the "R" mark [B] faces up.
- Install the second ring [C] so that the "RN" mark [D] faces up.

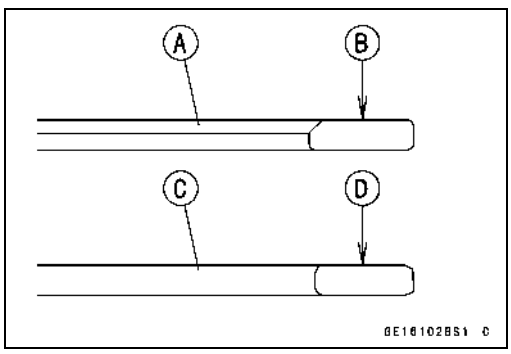

Cylinder, Pistons

NOTE

○*If a new piston is used, use new piston ring.*

- Install the piston with its marking hollow facing forward.
- Fit a new piston pin snap ring into the side of the piston so that the ring opening [A] does not coincide with the slit [B] of the piston pin hole.

○Apply molybdenum disulfide oil solution to the piston pins and piston journals.

○When installing the piston pin snap ring, compress it only enough to install it and no more.

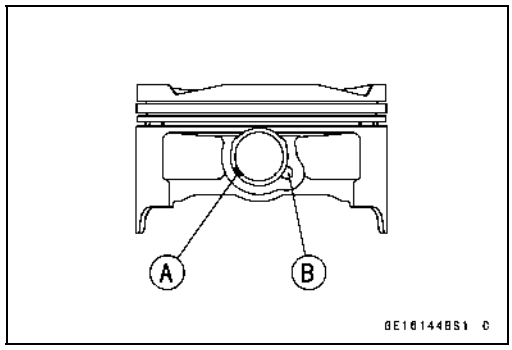

CAUTION

Do not reuse snap rings, as removal weakens and deforms them. They could fall out and score the cylinder wall.

- Install the cylinder (see Cylinder Installation).

Cylinder Wear

- Since there is a difference in cylinder wear in different directions, take a side-to-side and a front-to-back measurement at each of the two locations (total of four measurements) shown in the figure.

★If any of the cylinder inside diameter measurements exceeds the service limit, replace the cylinder.

10 mm (0.39 in.) [A]
60 mm (2.36 in.) [B]

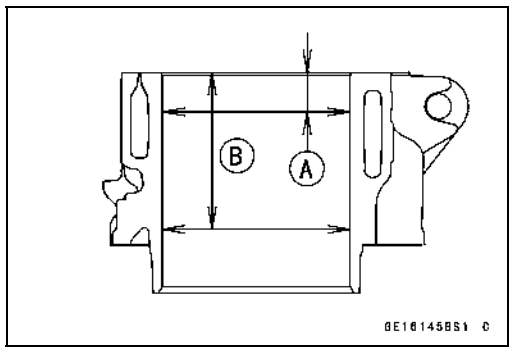

Cylinder Inside Diameter

Standard:	**82.994 ~ 83.006 mm (3.2675 ~ 3.2679 in.)**
Service Limit:	**83.10 mm (3.2716 in.)**

Piston Wear

- Measure the outside diameter [A] of each piston 18 mm (0.7087 in.) [B] up from the bottom of the piston at a right angle to the direction of the piston pin.

★If the measurement is under service limit, replace the piston.

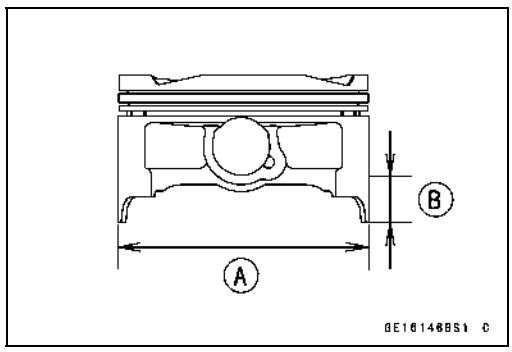

Piston Diameter

Standard:	**82.969 ~ 82.984 mm (3.2665 ~ 3.2671 in.)**
Service Limit:	**82.82 mm (3.2606 in.)**

http://mototh.com

Cylinder, Pistons

Piston Ring, Piston Ring Groove Wear

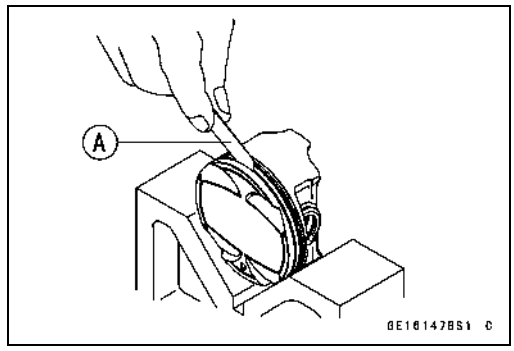

- Check for uneven groove wear by inspecting the ring seating.

★The rings should fit perfectly parallel to groove surfaces. If not, replace the piston and all the piston rings.

- With the piston rings in their grooves, make several measurements with a thickness gauge [A] to determine piston ring/groove clearance.

Piston Ring/Groove Clearance

Top

Standard:	**0.03 ~ 0.07 mm (0.0012 ~ 0.0028 in.)**
Service Limit:	**0.17 mm (0.0067 in.)**

Second

Standard:	**0.02 ~ 0.06 mm (0.0008 ~ 0.0024 in.)**
Service Limit:	**0.16 mm (0.0063 in.)**

Piston Ring Groove Width

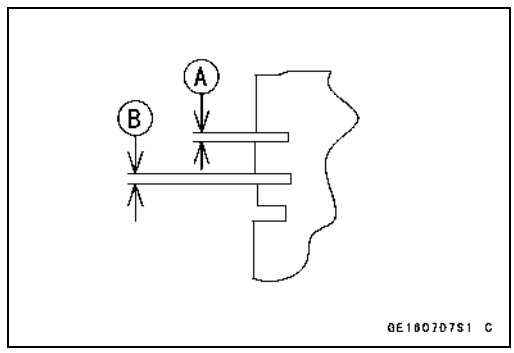

- Measure the piston ring groove width.

○Use a vernier caliper at several points around the piston.

Piston Ring Groove Width

Top [A]

Standard:	**0.92 ~ 0.94 mm (0.0362 ~ 0.0370 in.)**
Service Limit:	**1.02 mm (0.040 in.)**

Second [B]

Standard:	**1.01 ~ 1.03 mm (0.0398 ~ 0.0406 in.)**
Service Limit:	**1.11 mm (0.044 in.)**

★If the width of any of the two grooves is wider than the service limit at any point, replace the piston.

Piston Ring Thickness

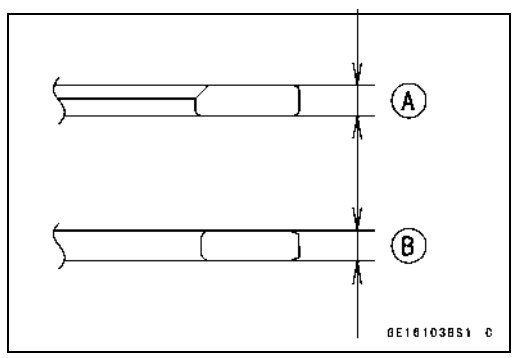

- Measure the piston ring thickness.

○Use the micrometer to measure at several points around the ring.

Piston Ring Thickness

Top [A]

Standard:	**0.87 ~ 0.89 mm (0.0342 ~ 0.0350 in.)**
Service Limit:	**0.80 mm (0.031 in.)**

Second [B]

Standard:	**0.97 ~ 0.99 mm (0.0382 ~ 0.0390 in.)**
Service Limit:	**0.90 mm (0.035 in.)**

★If any of the measurements is less than the service limit on either of the rings, replace all the rings.

NOTE

○*When using new rings in a used piston, check for uneven groove wear. The rings should fit perfectly parallel to the groove sides. If not, replace the piston.*

Cylinder, Pistons

Piston Ring End Gap

- Place the piston ring [A] inside the cylinder, using the piston to locate the ring squarely in place. Set it close to the bottom of the cylinder, where cylinder wear is low.
- Measure the gap [B] between the ends of the ring with a thickness gauge.

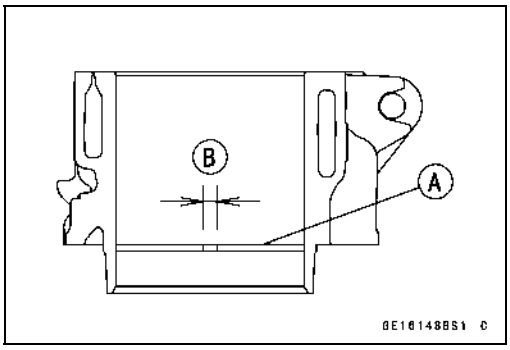

Piston Ring End Gap

Top

Standard:	**0.25 ~ 0.40 mm (0.0098 ~ 0.0157 in.)**
Service Limit:	**0.7 mm (0.028 in.)**

Second

Standard:	**0.40 ~ 0.55 mm (0.0157 ~ 0.0217 in.)**
Service Limit:	**0.8 mm (0.031 in.)**

★If the end gap of either ring is greater than the service limit, replace all the rings.

http://mototh.com

Throttle Body Holder

Throttle Body Holder Installation

- Be sure to install the O-rings [A].
- Install the clamps [B] as shown and so that their projections fit [C] on the holes of the holders.

○Be sure that the clamp bolt heads [D] face outwards.

- Tighten:

Torque - Throttle Body Holder Bolts [E]: 12 N·m (1.2 kgf·m, 106 in·lb)

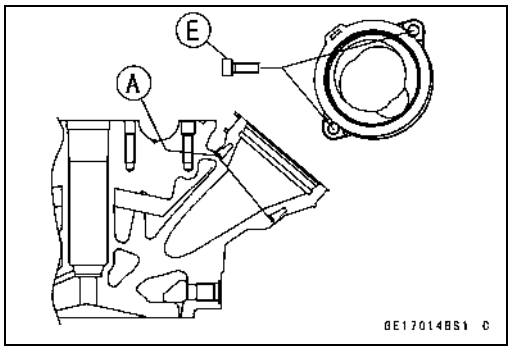

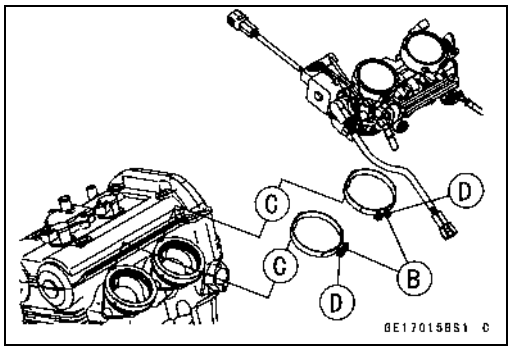

Muffler

⚠ WARNING

To avoid a serious burn, do not remove the muffler when the engine is still hot. Wait until the muffler cool down.

Muffler Body Removal

- Remove:
  Right Frame Cover (see Frame Cover Removal in the Frame chapter)
- Remove the bolts and lift up the right footpeg stay [A].

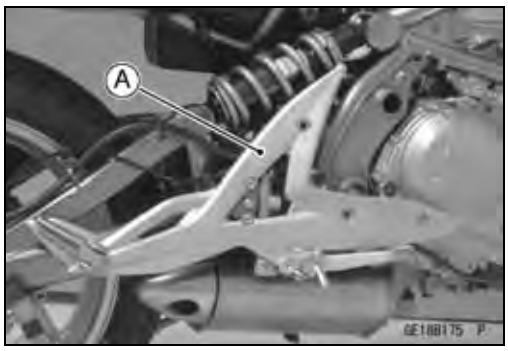

- Remove the muffler body mounting bolts [A] and nut, and pull the muffler body [B] backward.

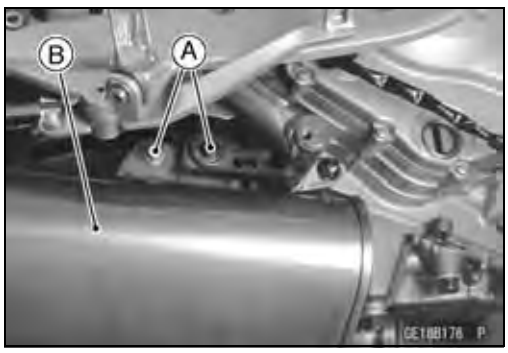

Exhaust Pipe Removal

- Remove:
  Lower Fairing (see Lower Fairing Removal in the Frame chapter)
  Center Fairing (see Center Fairing Removal in the Frame chapter)
  Muffler Body Clamp Bolt [A]
  Exhaust Pipe Manifold Holder Nuts [B]
  Exhaust Pipe [C]
  Gaskets

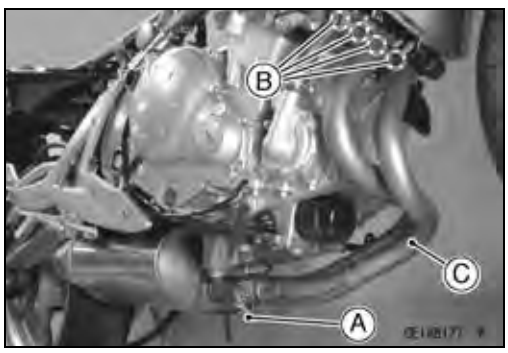

Muffler

Muffler Body and Exhaust Pipe Installation

- Replace the exhaust pipe gaskets [A] and muffler body connection gasket [B] with new ones and install them.

○Install the muffler body connection gasket until it is bottomed so that the chamfer side [C] feces muffler body [D].

- Install:
  Muffler Body
  Exhaust Pipe [E]
- Tighten:

Torque - Exhaust Pipe Manifold Holder Nut [F]: 17 N·m (1.7 kgf·m, 12 ft·lb)
Muffler Body Mounting Bolts (Front and Rear) [G]: 20 N·m (2.0 kgf·m, 15 ft·lb)

- Tighten the muffler body clamp bolts [H].

○Install the muffler body clamp bolt [H] as shown.

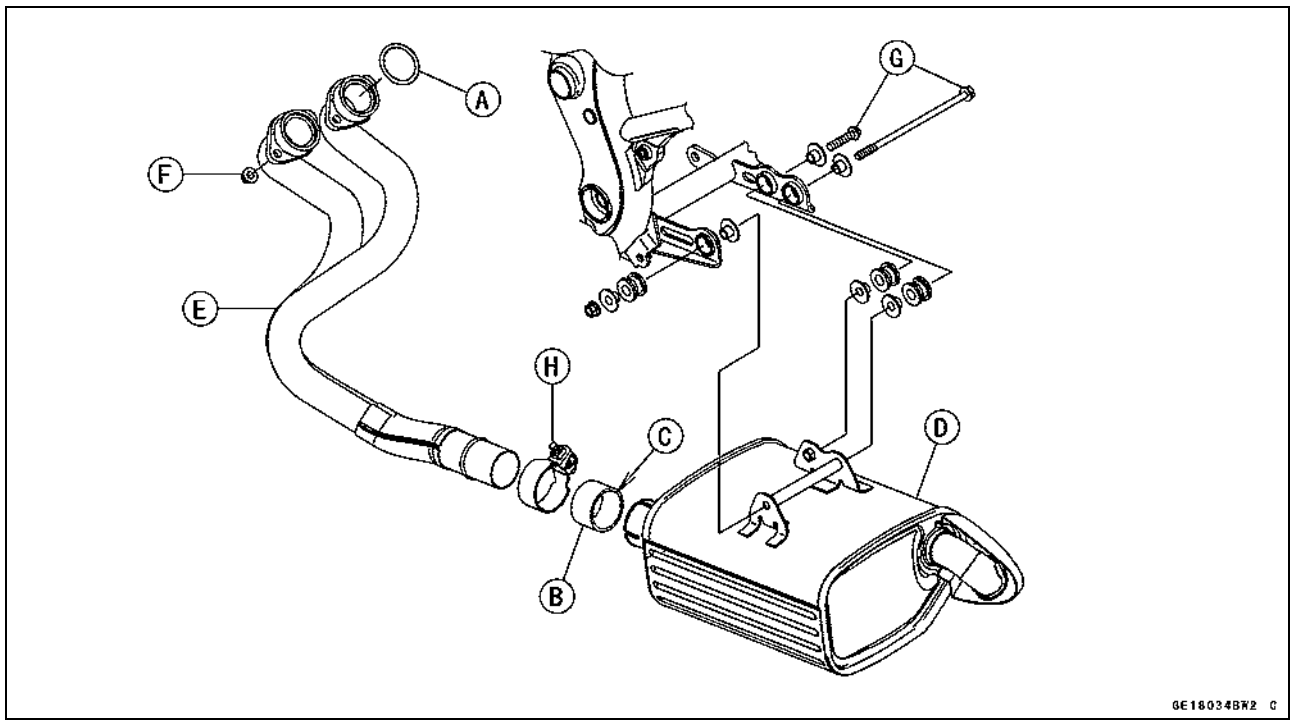

- Thoroughly warm up the engine, wait until the engine cools down, and retighten all the bolts and nuts.

http://mototh.com

Clutch

Table of Contents

Exploded View 6-2
Specifications 6-4
Special Tool and Sealant 6-5
Clutch Lever and Cable 6-6
Clutch Lever Free Play Inspection 6-6
Clutch Lever Free Play Adjustment 6-6
Clutch Cable Removal 6-6
Clutch Cable Installation 6-6
Clutch Cable Lubrication 6-6
Clutch Lever Installation 6-7
Clutch Lever Adjustment 6-7
Clutch Cover 6-8
Clutch Cover Removal 6-8
Clutch Cover Installation 6-8
Release Shaft Removal 6-9
Release Shaft Installation 6-9
Clutch Cover Disassembly 6-9
Clutch Cover Assembly 6-10
Clutch 6-11
Clutch Removal 6-11
Clutch Installation 6-11
Clutch Plate, Wear, Damage Inspection 6-13
Clutch Plate Warp Inspection 6-13
Clutch Spring Free Length Measurement 6-14
Clutch Housing Finger Inspection 6-14
Clutch Housing Spline Inspection 6-14

http://mototh.com

Exploded View

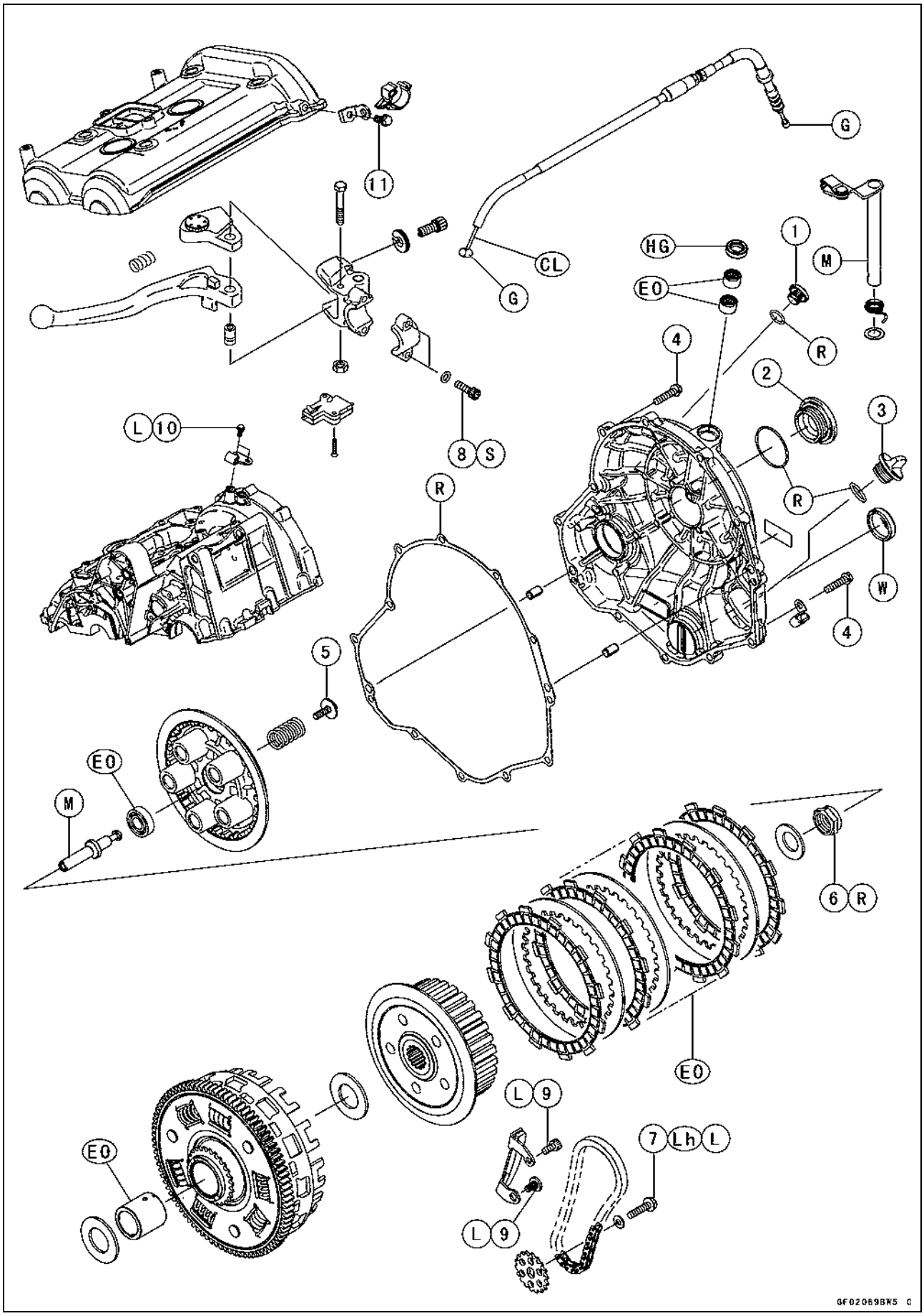

Exploded View

No.	Fastener	Torque			Remarks
		N·m	kgf·m	ft·lb	
1	Upper Cap on Clutch Cover	3.9	0.40	35 in·lb	
2	Lower Cap on Clutch Cover	–	–	–	Hard-tighten
3	Oil Filler Plug	–	–	–	Hard-tighten
4	Clutch Cover Mounting Bolts	9.8	1.0	87 in·lb	
5	Clutch Spring Bolts	9.8	1.0	87 in·lb	
6	Clutch Hub Nut	132	13.5	98	R
7	Oil Pump Sprocket Bolt	12	1.2	106 in·lb	L, Lh
8	Clutch Lever Clamp Bolts	7.8	0.80	69 in·lb	S
9	Oil Pump Chain Guide Bolts	12	1.2	106 in·lb	L
10	Clutch Cable Holder Bolts	9.8	1.0	87 in·lb	L
11	Clutch Cable Clamp Bolt	9.8	1.0	87 in·lb	

CL: Apply cable lubricant.
EO: Apply engine oil.
G: Apply grease.
HG: Apply high-temperature grease.
Lh: Left-hard Threads
M: Apply molybdenum disulfide grease.
R: Replacement Parts
W: Apply water.

http://mototh.com

6-4 CLUTCH

Specifications

Item	Standard	Service Limit
Clutch Lever Free Play	2 ~ 3 mm (0.08 ~ 0.12 in.)	– – –
Clutch		
Friction Plate Thickness	2.92 ~ 3.08 mm (0.115 ~ 0.121 in.)	2.8 mm (0.110 in.)
Friction Plate Warp	0.15 mm (0.16 in.) or less	0.3 mm (0.012 in.)
Steel Plate Warp	0.2 mm (0.008 in.) or less	0.3 mm (0.012 in.)
Clutch Spring Free Length	33.6 mm (1.32 in.)	32.6 mm (1.28 in.)

http://mototh.com

Special Tool and Sealant

Clutch Holder:
57001-1243

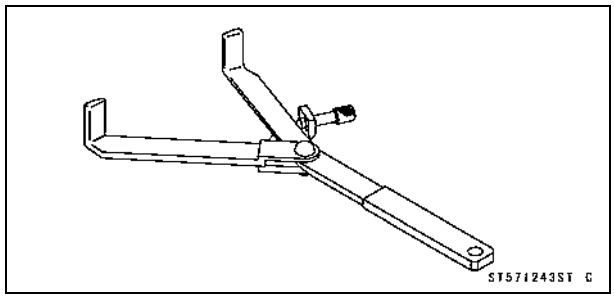

Kawasaki Bond (Silicone Sealant):
92104-0004

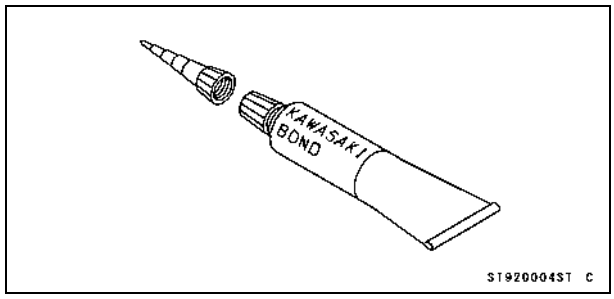

Clutch Lever and Cable

Clutch Lever Free Play Inspection

- Refer to Clutch Operation Inspection in the Periodic Maintenance chapter.

Clutch Lever Free Play Adjustment

- Refer to Clutch Operation Inspection in the Periodic Maintenance chapter.

Clutch Cable Removal

- Remove the right frame cover (see Frame Cover Removal in the Frame chapter).
- Slide the dust cover [A] at the middle of clutch cable out of place.
- Loosen the locknut [B], and turn the adjusting nut [C] to give the cable plenty of play.

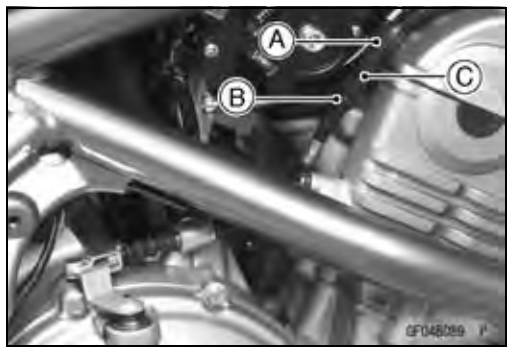

- Screw in the adjuster.
- Line up the slots [A] in the clutch lever and adjuster [B], and then free the cable from the lever.
- Free the clutch inner cable tip from the clutch release lever.

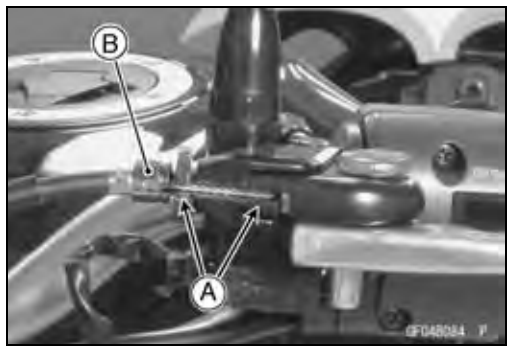

- Disconnect the clutch cable clamp [A] on the cylinder head cover.
- Pull the clutch cable out of the frame.

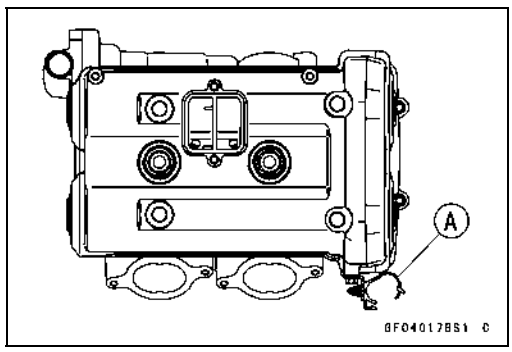

Clutch Cable Installation

- Run the clutch cable correctly (see Cable, Wire, and Hose Routing section in the Appendix chapter).
- Adjust the clutch cable (see Clutch Operation Inspection in the Periodic Maintenance chapter).

Clutch Cable Lubrication

- Refer to Chassis Parts Lubrication in the Periodic Maintenance chapter.

http://mototh.com

Clutch Lever and Cable

Clutch Lever Installation

- Install the clutch lever so that the mating surface [B] of the clutch lever clamp is aligned with the punch mark [A].
- Tighten the upper clamp bolt first, and then the lower clamp bolt. There will be a gap at the lower part of the clamp after tightening.

Torque - Clutch Lever Clamp Bolts: 7.8 N·m (0.80 kgf·m, 69 in·lb)

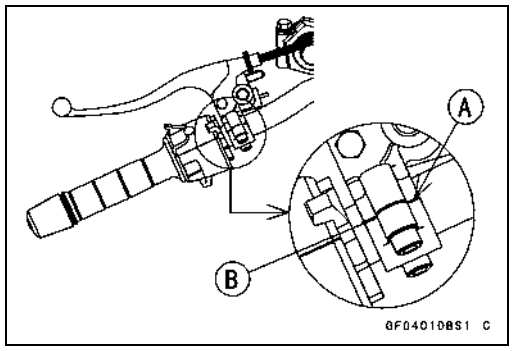

Clutch Lever Adjustment

The adjuster has 5 positions so that the clutch lever position can be adjusted to suit the operator's hand.

- Push the lever forward and turn the adjuster [A] to align the number with the arrow mark [B] on the lever holder.

○The distance from the grip to the lever is minimum at number 5 and maximum at number 1.

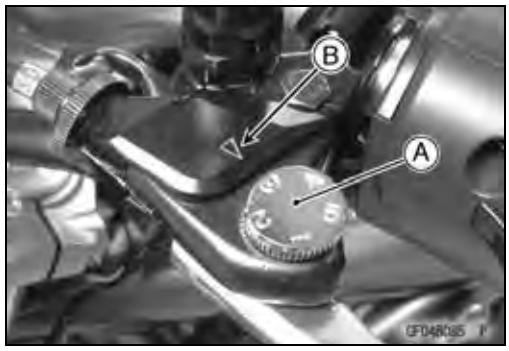

Clutch Cover

Clutch Cover Removal

- Remove:
  Engine Oil (drain, see Engine Oil Change in the Periodic Maintenance chapter)
  Right Frame Cover (see Frame Cover Removal in the Frame chapter)
  Clutch Cable Lower End [A]
  Clutch Cover Mounting Bolts [B]

- Turn the release lever [A] toward the rear as shown, and remove the clutch cover [B].
  About 90° [C]
- Push the release lever toward the front of the motorcycle and tape the release lever to the clutch cover to prevent the release shaft from falling out.

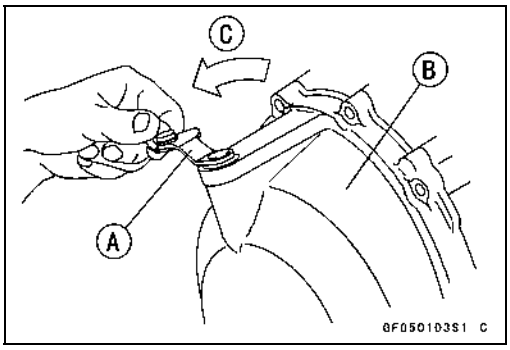

Clutch Cover Installation

- Apply silicone sealant to the area [A] where the mating surface of the crankcase touches the clutch cover gasket and to the crankshaft sensor lead grommet [B].

  Sealant - Kawasaki Bond (Silicone Sealant): 92104-0004

- Be sure that the dowel pins [C] are in position.
- Replace the clutch cover gasket [D] with a new one.
- Tighten the clutch cover mounting bolts.

  Torque - Clutch Cover Mounting Bolts: 9.8 N·m (1.0 kgf·m, 87 in·lb)

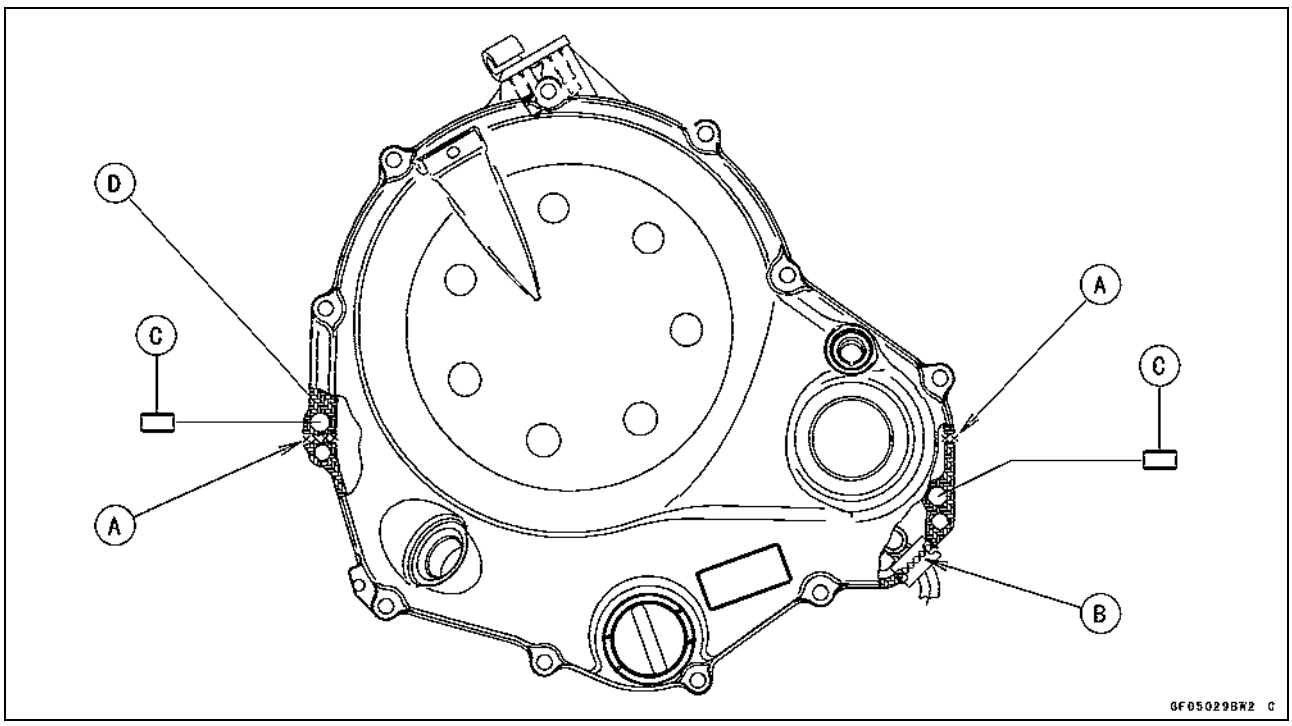

Clutch Cover

Release Shaft Removal

CAUTION

Do not remove the clutch release lever and shaft assembly unless it is absolutely necessary. If removed, the oil seal replacement may be required.

- Remove the clutch cover (see Clutch Cover Removal).
- Pull the lever and shaft assembly straight out of the clutch cover.

Release Shaft Installation

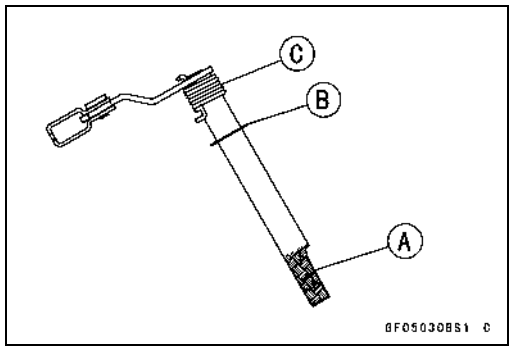

- Apply high-temperature grease to the oil seal lips on the upper ridge of the clutch cover.
- Apply engine oil to the needle bearings in the hole of the clutch cover.
- Apply molybdenum disulfide grease to the pusher-holding portion [A] on the release shaft.
- Install the washer [B] and spring [C].
- Insert the release shaft straight into the upper hole of the clutch cover.

CAUTION

When inserting the release shaft, be careful not to remove the spring of the oil seal.

- Fit the spring [A] as shown.
  Release Shaft [B]
  Clutch Cover [C]

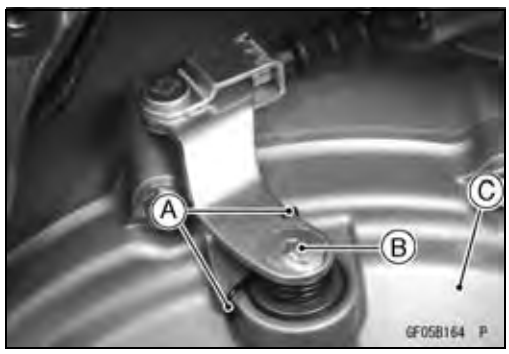

Clutch Cover Disassembly

- Remove:
  Oil Seal [A]
  Needle Bearings [B]

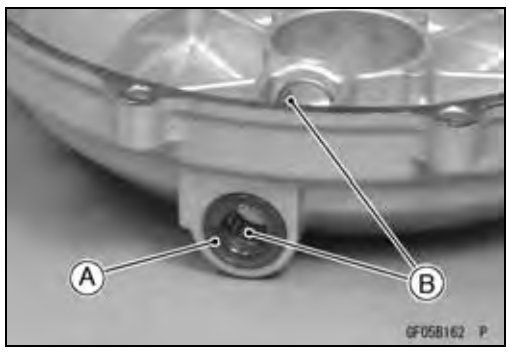

Clutch Cover

- Remove the oil level gauge [A].

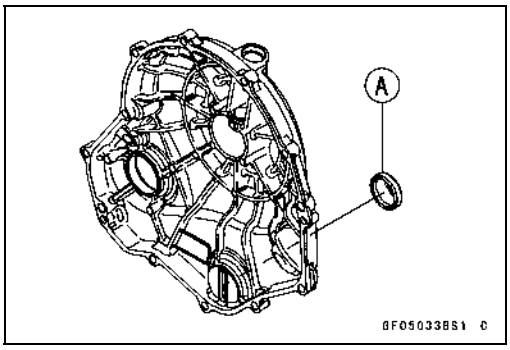

Clutch Cover Assembly

- Replace the needle bearings and oil seal with new ones.

NOTE

○*Install the needle bearings so that the manufacture's mark face out.*

- Install the needle bearings [A] and oil seal [B] position as shown.
  Press [C] the bearing so that the bearing surface [D] is flushwith the housing end of clutch cover [E].

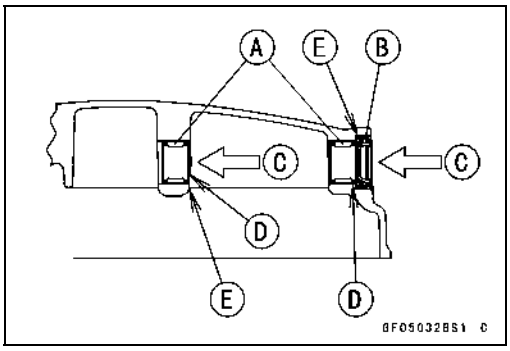

- Apply water to the rubber of the oil gauge [A] and press [C] it so that the ring [B] face outside.

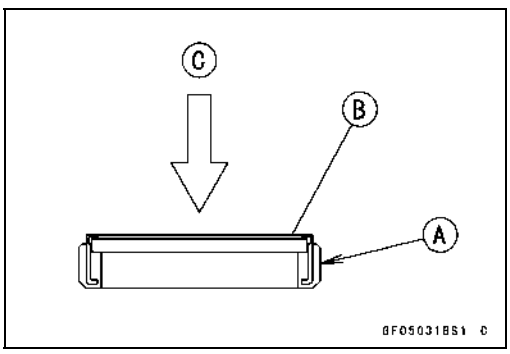

Clutch

Clutch Removal

- Remove:
  Engine Oil (drain, see Engine Oil Change in the Periodic Maintenance chapter)
  Clutch Cover (see Clutch Cover Removal)
  Clutch Spring Bolts [A]
  Clutch Springs
  Clutch Spring Plate [B] (with thrust bearing and pusher [C])

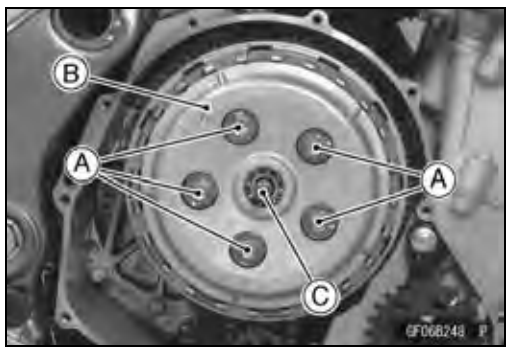

- Remove:
  Friction Plates, Steel Plates
  Clutch Hub Nut [A]

○Holding the clutch hub [B], remove the nut and washer.

Special Tool - Clutch Holder [C]: 57001-1243

- Remove:
  Clutch Hub
  Spacer

- Remove the oil pump sprocket boat [A].

NOTE

○*The oil pump sprocket bolt has a left-hand threads.*

- Using the hole [B], pull out the sleeve [C].
- Remove the following as a set.
  Clutch Housing [D]
  Oil Pump Chain [E]
  Oil Pump Sprocket [F]

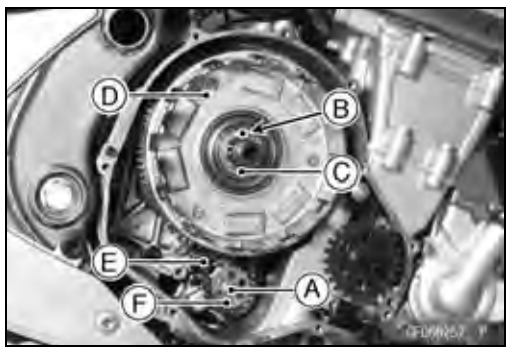

- Unscrew the bolts [A] and remove the oil pump chain guide [B].

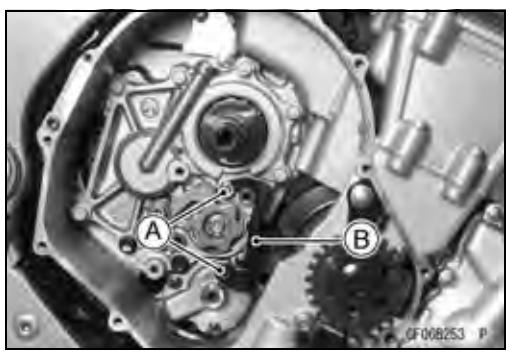

Clutch Installation

- Apply a non-permanent locking agent to the oil pump chain guide bolts and tighten them.

Torque - Oil Pump Chain Guide Bolts: 12 N·m (1.2 kgf·m, 106 in·lb)

- Put the oil pump chain [A] on the clutch housing gear [B] and the oil pump sprocket [C].

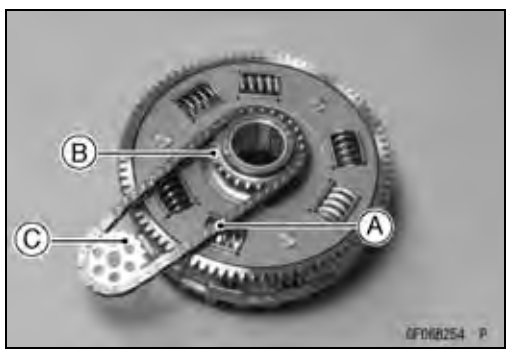

Clutch

● Be sure that the spacer [A] is in position.

● Insert the following on the drive shaft.
Clutch Housing [A] with Chain [B] and Sprocket [C]
Sleeve [D]

● Align [E] the hole on the oil pump sprocket with the oil pump shaft.

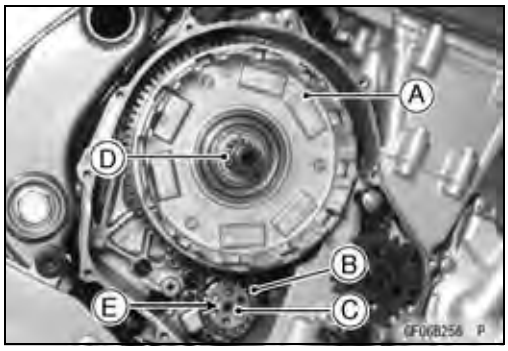

● Install the following parts on the drive shaft.
Spacer [A]
Clutch Hub [B]
Washer [C]
Nut [D]

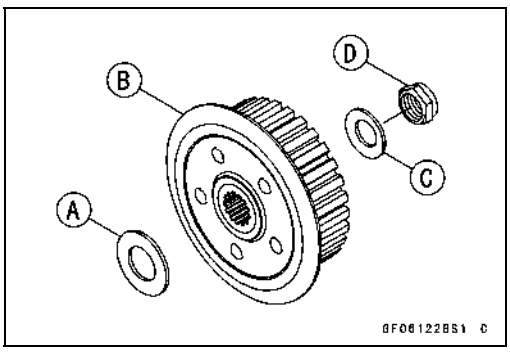

○Install the washer so that the OUTSIDE mark [A] faces outward.

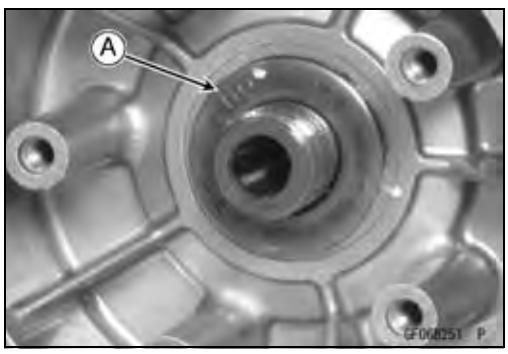

○Replace the clutch hub nut with a new one.
○Holding the clutch hub, tighten the clutch hub nut.

Special Tool - Clutch Holder: 57001-1243

Torque - Clutch Hub Nut: 132 N·m (13.5 kgf·m, 98 ft·lb)

http://mototh.com

Clutch

- Install the friction plates and steel plates, starting with a friction plate and alternating them.

CAUTION
If new dry friction plates and steel plates are installed, apply engine oil to the surfaces of each plate to avoid clutch plate seizure.

○For the first steel plate [A], its thickness is 2.6 mm (0.10 in.). The others are 2.3 mm (0.09 in.).

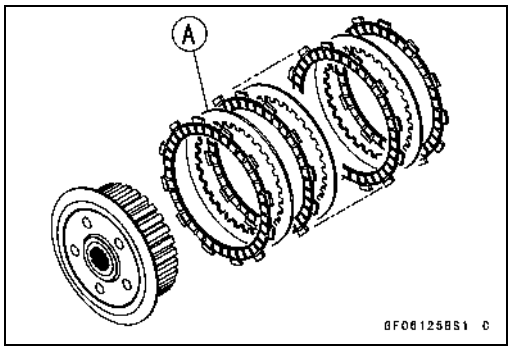

○Install the last friction plate [A] fitting the tangs in the grooves in the housing as shown.

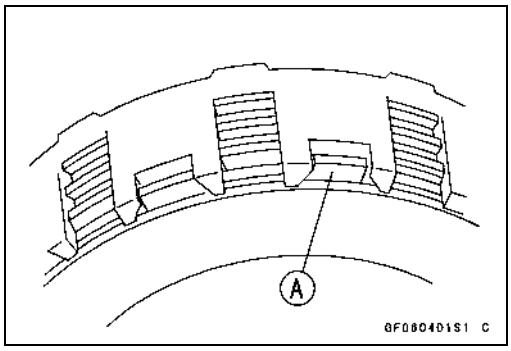

- Apply molybdenum disulfide grease to the pusher ends [A] and install it in the clutch spring plate [B].

○Apply engine oil to the bearing [C].

- Install the clutch spring plate and springs [D], and tighten the clutch spring bolts [E].

Torque - Clutch Spring Bolts: 9.8 N·m (1.0 kgf·m, 87 in·lb)

- Install the clutch cover (see Clutch Cover Installation).

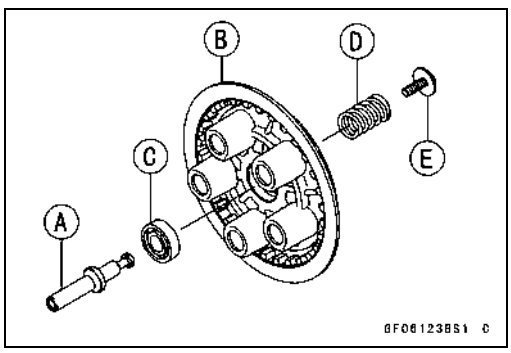

Clutch Plate, Wear, Damage Inspection

- Visually inspect the friction and steel plates for signs of seizure, overheating (discoloration), or uneven wear.
- Measure the thickness of each friction plate [A] at several points.

★If any plates show signs of damage, or if they have worn past the service limit, replace them with new ones.

Friction Plate Thickness

Standard: 2.92 ~ 3.08 mm (0.115 ~ 0.121 in.)

Service Limit: 2.8 mm (0.110 in.)

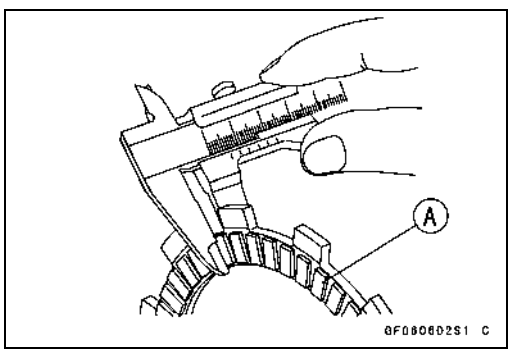

Clutch Plate Warp Inspection

- Place each friction plate or steel plate on a surface plate and measure the gap between the surface plate [A] and each friction plate or steel plate [B] with a thickness gauge [C]. The gap is the amount of friction or steel plate warp.

★If any plate is warped over the service limit, replace it with a new one.

Friction and Steel Plate Warp

Standard: 0.15 mm (0.006 in.) or less

Service Limit: 0.3 mm (0.012 in.)

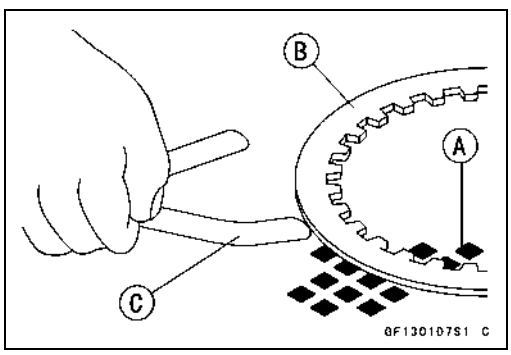

Clutch

Clutch Spring Free Length Measurement

- Measure the free length of the clutch springs [A].

★If any spring is shorter than the service limit, it must be replaced.

Clutch Spring Free Length

Standard:	**33.6 mm (1.32 in.)**
Service Limit:	**32.6 mm (1.28 in.)**

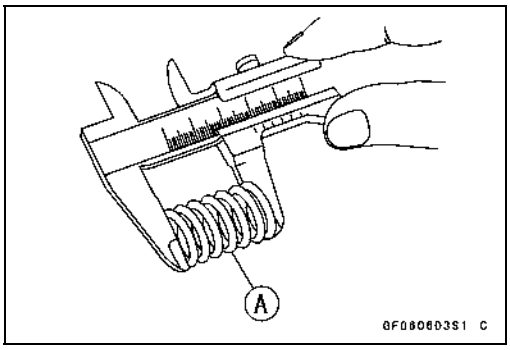

Clutch Housing Finger Inspection

- Visually inspect the clutch housing fingers [A] where the friction plate tangs [B] hit them.

★If they are badly worn or if there are groove cuts where the tangs hit, replace the housing. Also, replace the friction plates if their tangs are damaged.

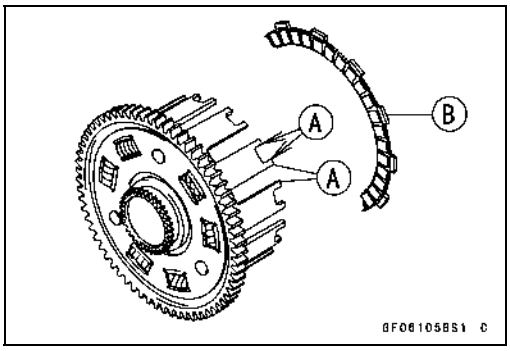

Clutch Housing Spline Inspection

- Visually inspect where the teeth [B] on the steel plates wear against the clutch hub splines [A].

★If there are notches worn into the splines, replace the clutch hub. Also, replace the steel plates if their teeth are damaged.

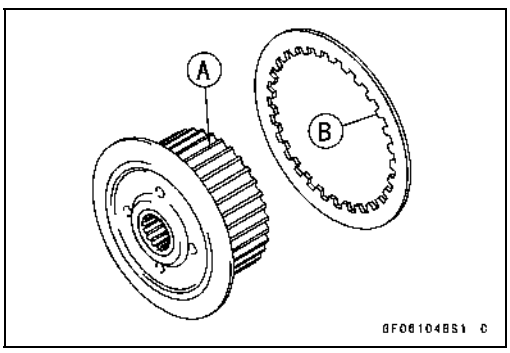

http://mototh.com

Engine Lubrication System

Table of Contents

Exploded View 7-2
Engine Oil Flow Chart 7-4
Specifications 7-6
Special Tools and Sealant 7-7
Engine Oil and Oil Filter 7-8
    Oil Level Inspection 7-8
    Engine Oil Change 7-8
    Oil Filter Replacement 7-8
Oil Pan 7-9
    Oil Pan Removal 7-9
    Oil Pan Installation 7-10
Oil Pressure Relief Valve 7-11
    Oil Pressure Relief Valve Removal 7-11
    Oil Pressure Relief Valve Installation 7-11
    Oil Pressure Relief Valve Inspection 7-11
Oil Pump 7-12
    Oil Pump Removal 7-12
    Oil Pump Installation 7-13
Oil Pressure Measurement 7-14
    Oil Pressure Measurement 7-14
Oil Pressure Switch 7-15
    Oil Pressure Switch Removal 7-15
    Oil Pressure Switch Installation 7-15

http://mototh.com

Exploded View

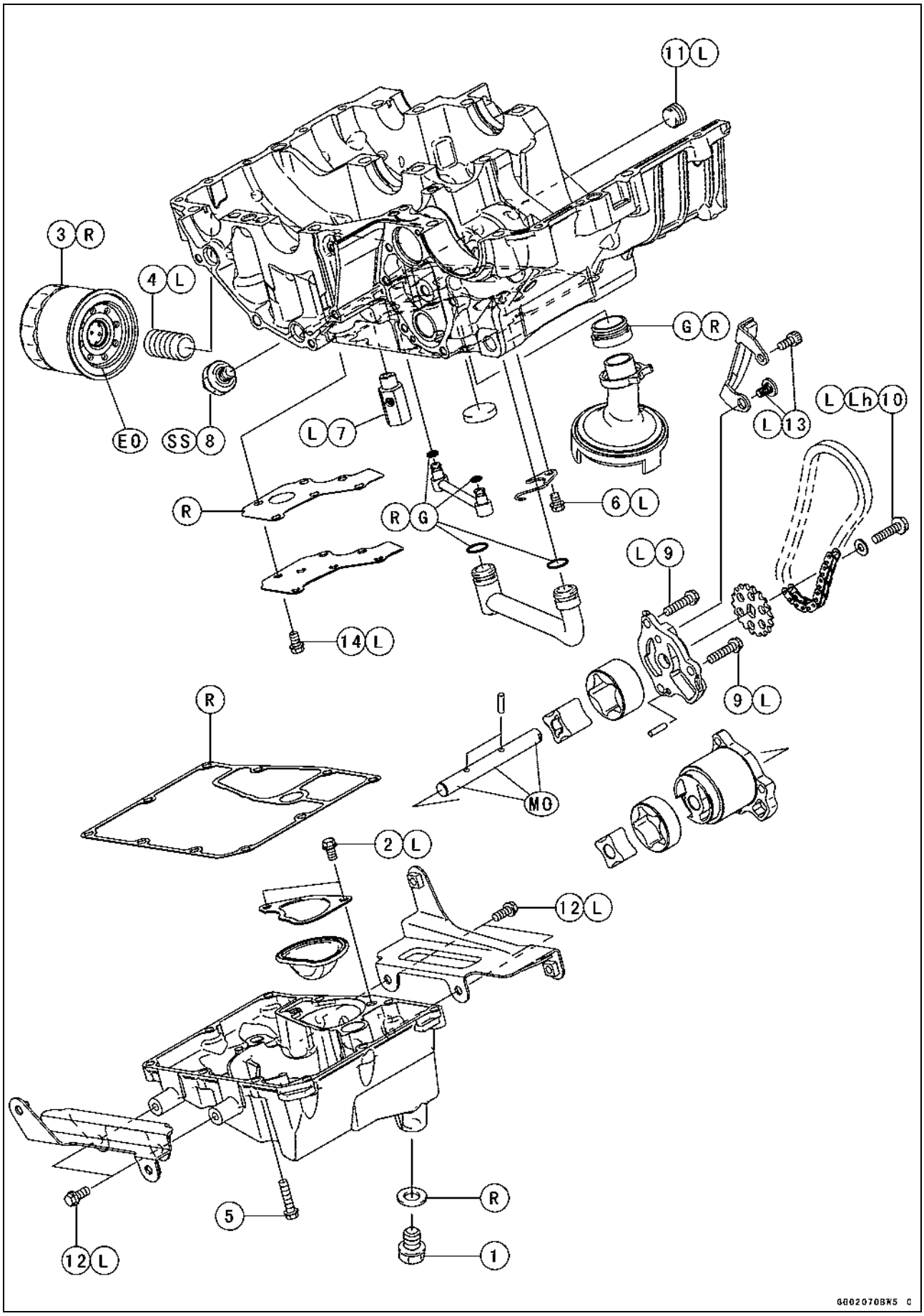

Exploded View

No.	Fastener	Torque			Remarks
		N·m	kgf·m	ft·lb	
1	Engine Oil Drain Bolt	20	2.0	15	
2	Filter Plate Bolts	9.8	1.0	87 in·lb	L
3	Oil Filter	17.2	1.75	13	EO, R
4	Holder Mounting Bolt	25	2.5	18	L
5	Oil Pan Bolts	12	1.2	106 in·lb	
6	Oil Pipe Plate Bolt	9.8	1.0	87 in·lb	L
7	Oil Pressure Relief Valve	15	1.5	11	L
8	Oil Pressure Switch	15	1.5	11	SS
9	Oil Pump Cover Bolts	9.8	1.0	87 in·lb	L
10	Oil Pump Sprocket Bolt	12	1.2	106 in·lb	L, Lh
11	Oil Passage Plugs	20	2.0	15	L
12	Lower Fairing Bracket Bolts	12	1.2	106 in·lb	L
13	Oil Pump Chain Guide Bolts	12	1.2	106 in·lb	L
14	Oil Plate Bolts	9.8	1.0	87 in·lb	L

EO: Apply engine oil.
G: Apply grease.
L: Apply a non-permanent locking agent.
Lh: Left-hand-threads
MO: Apply molybdenum disulfide oil solution.
(mixture of the engine oil and molybdenum disulfide grease in a weight ratio 10 : 1)
R: Replacement Parts
SS: Apply silicone sealant (Kawasaki Bond: 56019-120).

http://mototh.com

Engine Oil Flow Chart

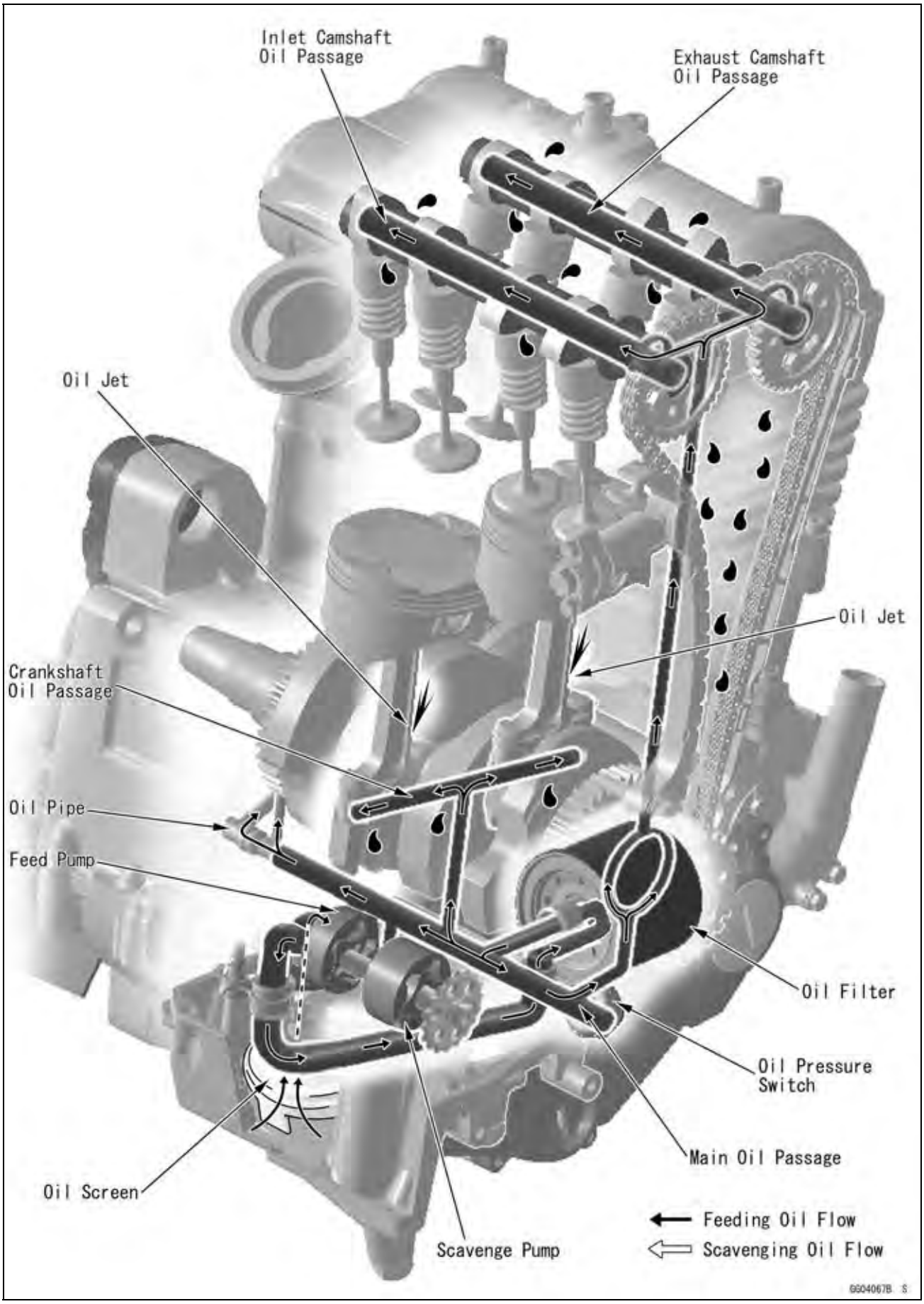

http://mototh.com

Engine Oil Flow Chart

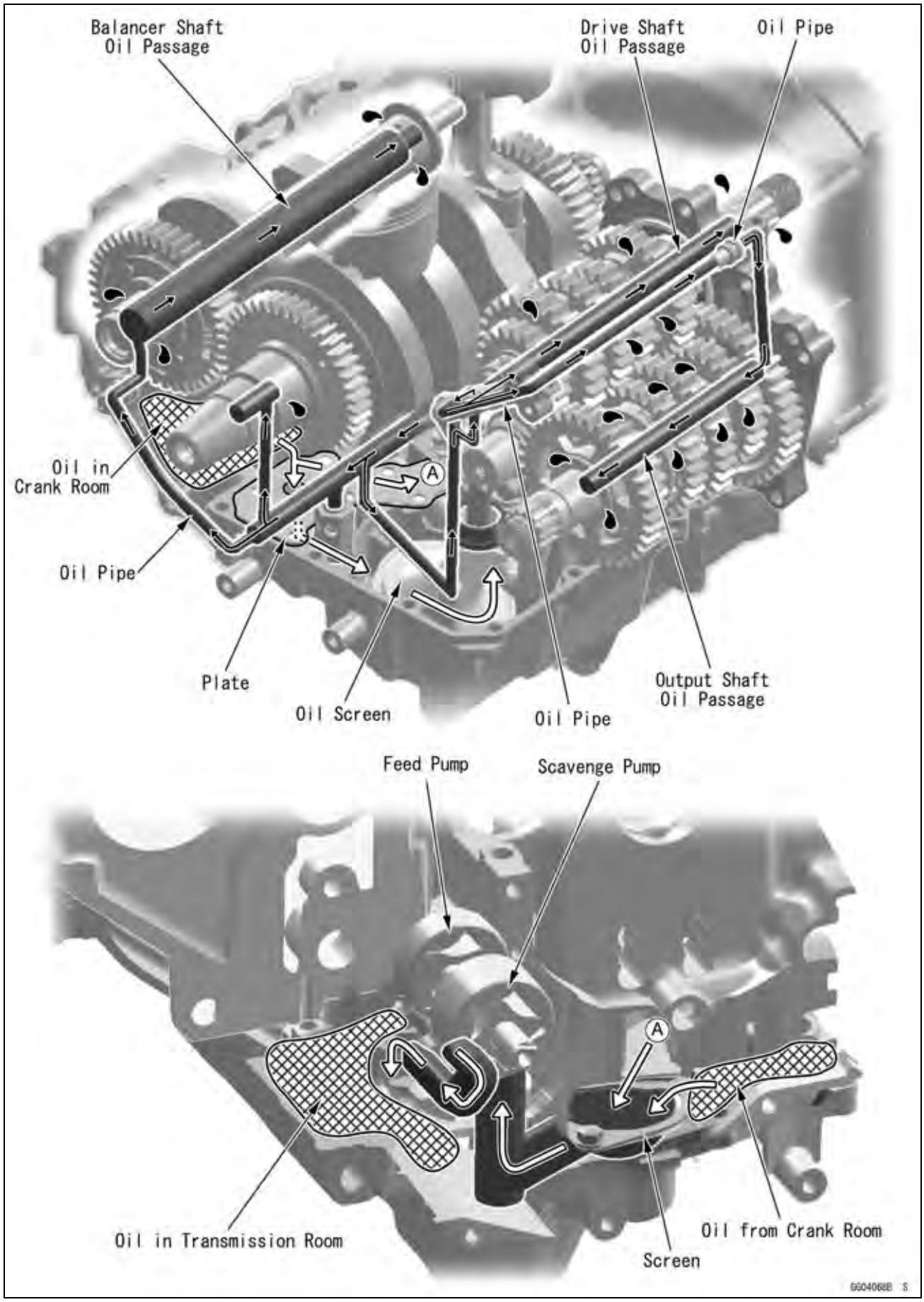

Specifications

Item	Standard
Engine Oil	
Type	API SE, SF or SG
	API SH, SJ or SL with JASO MA
Viscosity	SAE 10W-40
Capacity:	1.7 L (1.8 US gt) (when filter is not removed)
	1.9 L (2.0 US gt) (when filter is removed)
	2.4 L (2.5 US gt) (when engine is completely dry)
Level	Between upper and lower level lines
Oil Pressure Measurement	
Oil Pressure	216 ~ 294 kPa (2.2 ~ 3.0 kgf/cm², 31 ~ 43 psi) @4 000 r/min (rpm), Oil Temperature 90°C (194°F)

http://mototh.com

Special Tools and Sealant

Oil Pressure Gauge, 10 kgf/cm²:
57001-164

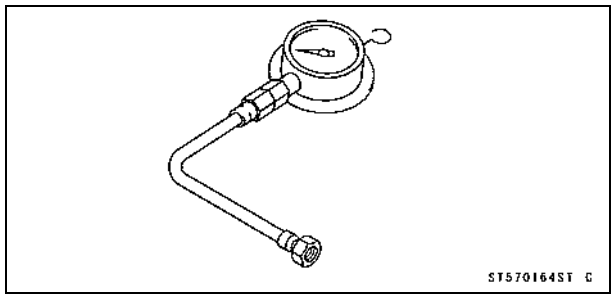

Oil Filter Wrench:
57001-1249

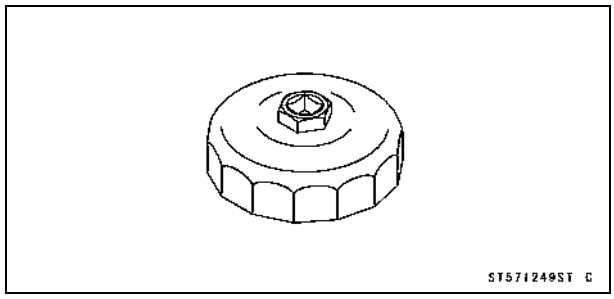

Oil Pressure Gauge Adapter, PT3/8 × 19/in.:
57001-1233

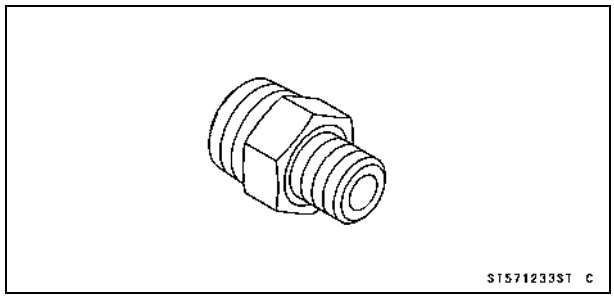

Kawasaki Bond (Silicone Sealant):
56019-120

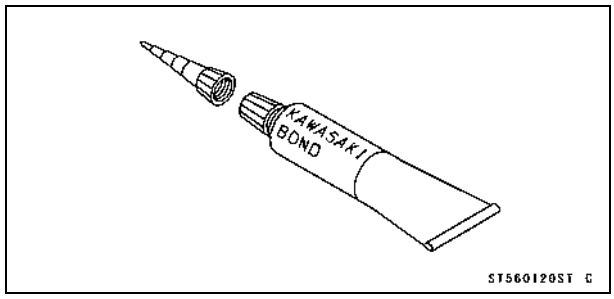

Engine Oil and Oil Filter

⚠ WARNING

Motorcycle operation with insufficient, deteriorated, or contaminated engine oil will cause accelerated wear and may result in engine or transmission seizure, accident, and injury.

Oil Level Inspection

- Check that the engine oil level is between the upper [A] and lower [B] levels in the gauge.

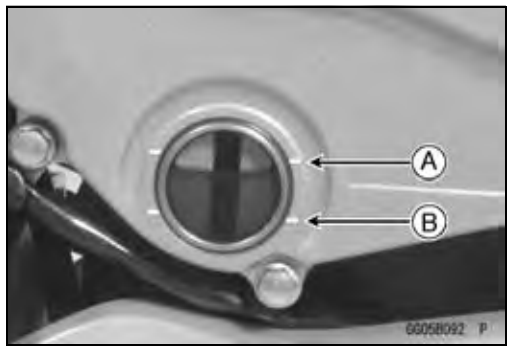

NOTE

○*Situate the motorcycle so that it is perpendicular to the ground.*

○*If the motorcycle has just been used, wait several minutes for all the oil to drain down.*

○*If the oil has just been changed, start the engine and run it for several minutes at idle speed. This fills the oil filter with oil. Stop the engine, then wait several minutes until the oil settles.*

CAUTION

Racing the engine before the oil reaches every part can cause engine seizure.
If the engine oil gets extremely low or if the oil pump or oil passages clog up or otherwise do not function properly, the oil pressure warning light will light. If this light stays on when the engine is running above idle speed, stop the engine immediately and find the cause.

★If the oil level is too high, remove the excess oil, using a syring or some other suitable device.

★If the oil level is too low, add the correct amount of oil through the oil filter opening. Use the same type and make of oil that is already in the engine.

NOTE

○*If the engine oil type and make are unknown, use any brand of the specified oil to top off the level in preference to running the engine with the oil level low. Then at your earliest convenience, change the oil completely.*

Engine Oil Change

- Refer to Engine Oil Change in the Periodic Maintenance chapter.

Oil Filter Replacement

- Refer to Oil Filter Replacement in the Periodic Maintenance chapter.

http://mototh.com

Oil Pan

Oil Pan Removal

- Remove:
  Engine Oil (drain, see Engine Oil Change in the Periodic Maintenance chapter)
  Exhaust Pipe (see Exhaust Pipe Removal in the Engine Top End chapter)
  Muffler Body (see Muffler Body Removal in the Engine Top End chapter)
  Oil Pan Bolts [A]
  Oil Pan [B]
  Gasket [C]
  Damper [D]

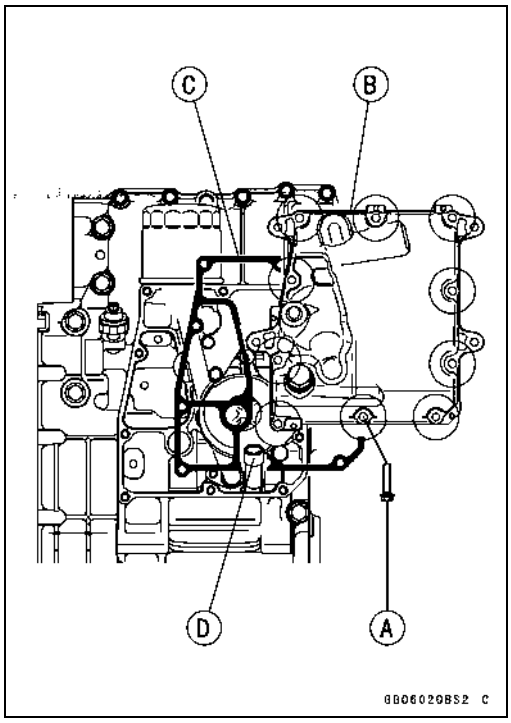

- Remove the following from the oil pan as necessary.
  Filter Plate Bolts [A]
  Filter Plate [B]
  Filter [C]

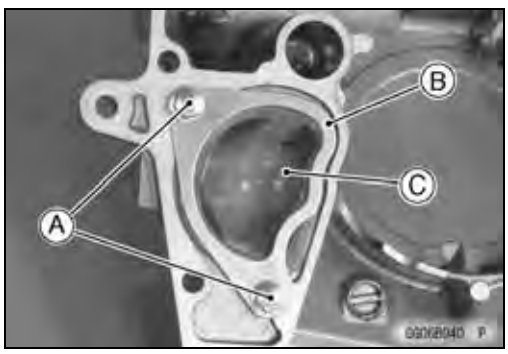

- Remove the following from the lower crankcase half as necessary.
  Oil Screen [A]
  Oil Pipe Plate Bolt [B]
  Oil Pipe Plate [C]
  Oil Pipes [D]
  Oil Pressure Relief Valve [E]

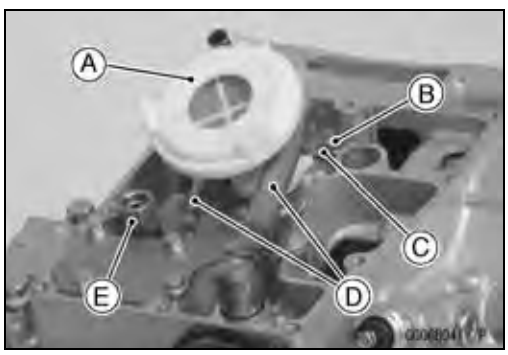

Oil Pan

Oil Pan Installation

- Apply grease to the O-rings on the oil pipes [A].
- Install the oil pipe plate [B] so that its guide portion [C] fits the breather pipe [D] as shown.
- Apply a non-permanent locking agent to the oil pipe plate bolt.

Torque - Oil Pipe Plate Bolt [E]: 9.8 N·m (1.0 kgf·m, 87 in·lb)

★If the oil pressure relief valve [F] was removed, install it.

○Apply a non-permanent locking agent to the threads [G] of the oil pressure relief valve, and tighten it.

CAUTION
Do not apply too much non-permanent locking agent to the threads. This may block the oil passage.

Torque - Oil Pressure Relief Valve: 15 N·m (1.5 kgf·m, 11 ft·lb)

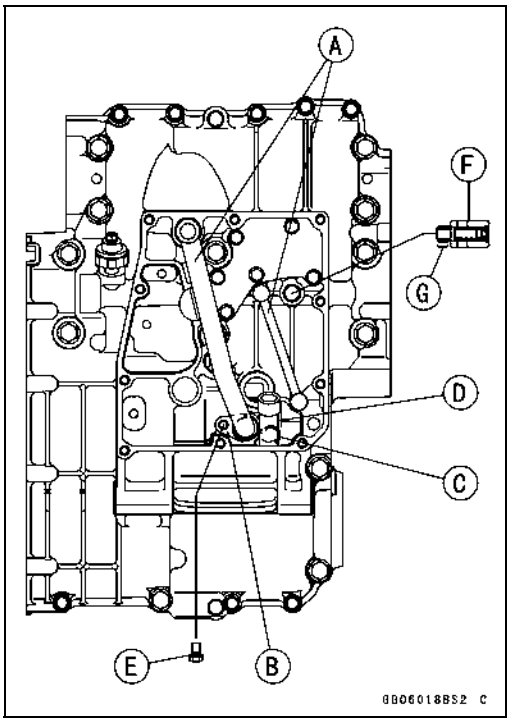

- Apply grease to the O-ring [A] on the oil screen [B] and install it on the lower crankcase half as shown.
- Be sure the damper [C] is on the end of the breather pipe [D].

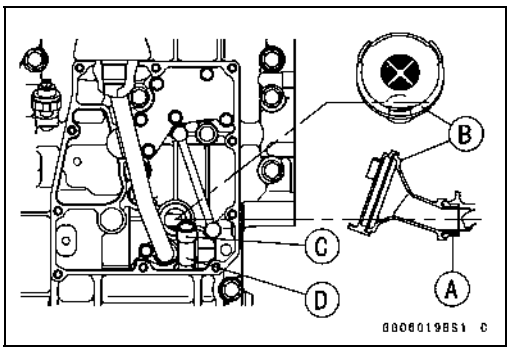

- Replace the oil pan gasket with a new one.
- When installing the oil pan, align [A] the damper [B] on the breather pipe with the hollow [C] on the oil pan.
- Tighten:

Torque - Oil Pan Bolts: 12 N·m (1.2 kgf·m, 106 in·lb)

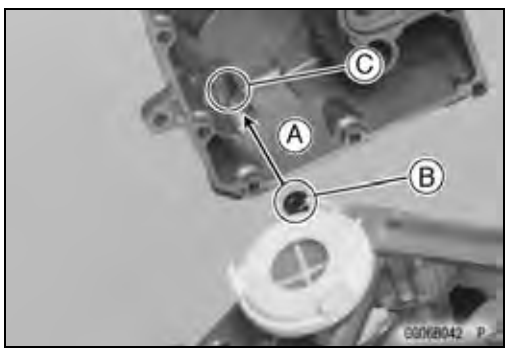

Oil Pressure Relief Valve

Oil Pressure Relief Valve Removal

- See Oil Pan Removal.

Oil Pressure Relief Valve Installation

- See Oil Pan Installation.

Oil Pressure Relief Valve Inspection

- Check to see if the valve [A] slides smoothly when pushing it in with a wooden or other soft rod, and see if it comes back to its seat by spring [B] pressure.

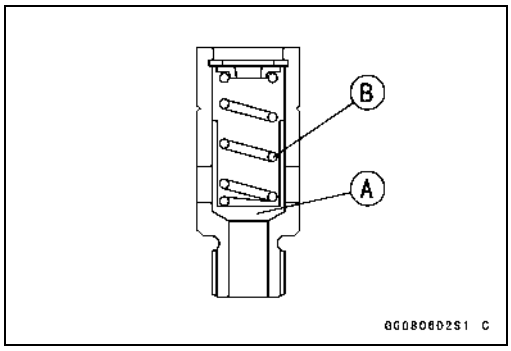

NOTE

○*Inspect the valve in its assembled state. Disassembly and assembly may change the valve performance.*

★If any rough spots are found during above inspection, wash the valve clean with a high-flash point solvent and blow out any foreign particles that may be in the valve with compressed air.

⚠ WARNING

Clean the oil pressure relief valve in a well -ventilated area, and take care that there is no spark or flame anywhere near the working area. Because of the danger of highly flammable liquids, do not use gasoline or low-flash point solvent.

★If cleaning does not solve the problem, replace the oil pressure relief valve as an assembly. The oil pressure relief valve is precision made with no allowance for replacement of individual parts.

http://mototh.com

Oil Pump

Oil Pump Removal

- Drain:
  Engine Oil (see Engine Oil Change in the Periodic Maintenance chapter)
- Remove:
  Clutch (see Clutch Removal in the Clutch chapter)
  Oil Pump Cover Bolts [A]
  Oil Pump Cover [B]

- Remove:
  Inner Rotor [A] for Scavenge Pump
  Outer Rotor [B] for Scavenge Pump

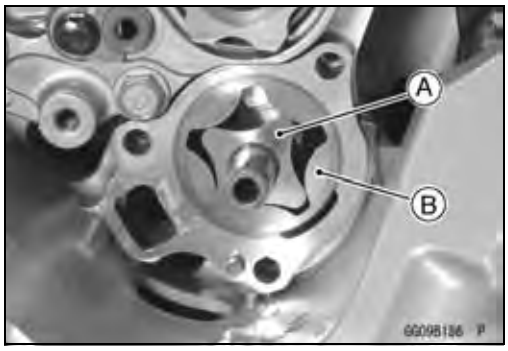

- Remove:
  Dowel Pin [A]
  Pin [B]
  Oil Pump Body [C] with Oil Pump Shaft [D] and Pin

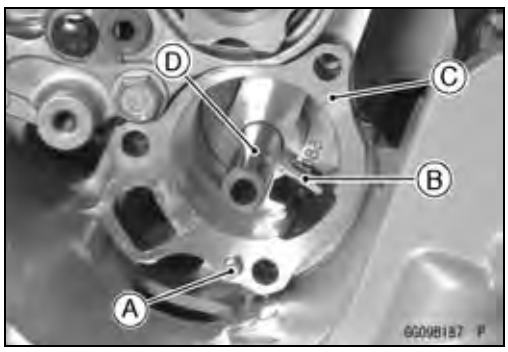

- Remove:
  Inner Rotor [A] for Feed Pump
  Outer Rotor [B] for Feed Pump

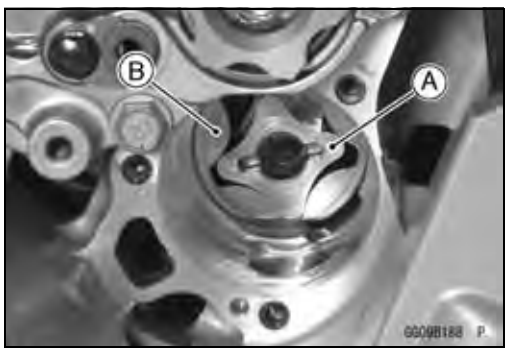

Oil Pump

Oil Pump Installation

- Apply molybdenum disulfide grease to the portion [A] of the oil pump shaft, as shown.
- Install:
  Outer Rotor [B] for Feed Pump
  Inner Rotor [C] for Feed Pump
  Oil Pump Shaft [D] and Pin [E]
  Dowel Pin [F]
  Oil Pump Body [G]
  Pin [H] and Inner Rotor [I] for Scavenge Pump
  Outer Rotor [J] for Scavenge Pump
  Oil Pump Cover [K]

NOTE

○*The scavenge pump rotors are wider than the feed pump rotors.*

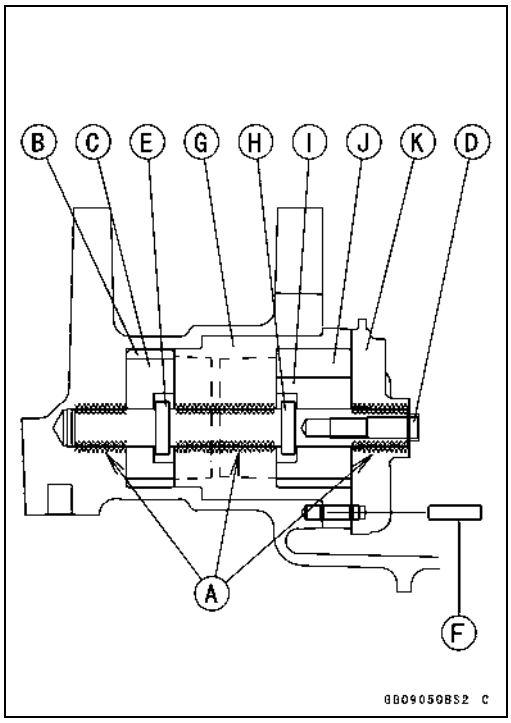

- Apply a non-permanent locking agent to the oil pump cover bolts and tighten them.

Torque - Oil Pump Cover Bolts: 9.8 N·m (1.0 kgf·m, 87 in·lb)

Oil Pressure Measurement

Oil Pressure Measurement

- Remove the lower fairing (see Lower Fairing Removal in the Frame chapter).
- Remove the oil passage plug, and attach the adapter [A] and gauge [B] to the plug hole.

Special Tools - Oil Pressure Gauge, 10 kgf/cm²: 57001-164
Oil Pressure Gauge Adapter, PT3/8 × 19/in.: 57001-1233

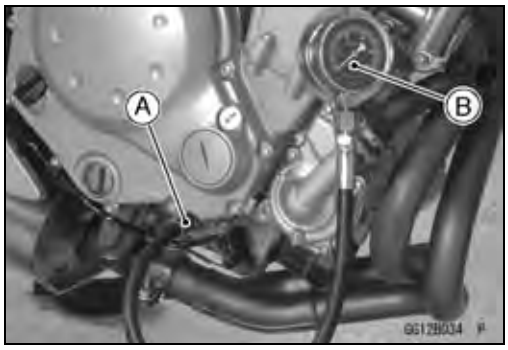

- Start the engine and warm up the engine.
- Run the engine at the specified speed, and read the oil pressure gauge.

★If the oil pressure is much lower than the standard, check the oil pump, relief valve, and/or crankshaft bearing insert wear immediately.

★If the reading is much higher than the standard, check the oil passages for clogging.

Oil Pressure
Standard: 216 ~ 294 kPa (2.2 ~ 3.0 kgf/cm², 31 ~ 43 psi) @ 4 000 r/min (rpm), oil temperature. 90°C (194°F)

- Stop the engine.
- Remove the oil pressure gauge and adapter.

⚠ WARNING

Take care against burns form hot engine oil that will drain through the oil passage when the gauge adapter is removed.

- Apply a non-permanent locking agent to the oil passage plug, and install it.

Torque - Oil Passage Plug (Right): 20 N·m (2.0 kgf·m, 15 ft·lb)

Oil Pressure Switch

Oil Pressure Switch Removal

- Remove or drain:
  Engine Oil (see Engine Oil Change in the Periodic Maintenance chapter)
  Switch Cover [A]
  Switch Terminal Bolt [B]
  Oil Pressure Switch [C]

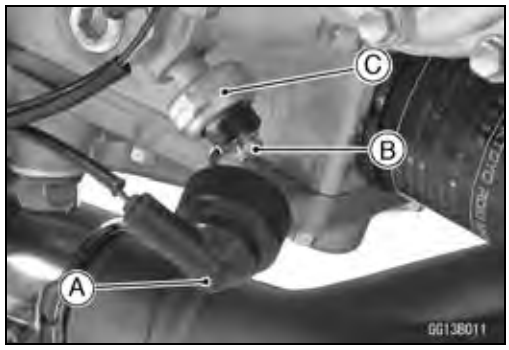

Oil Pressure Switch Installation

- Apply silicone sealant to the threads of the oil pressure switch and tighten it.

  Sealant - Kawasaki Bond (Silicone Sealant): 56019-120

  Torque - Oil Pressure Switch: 15 N·m (1.5 kgf·m, 11 ft·lb)
- Tighten the terminal bolt securely.
- Apply a small amount grease to the terminal so that grease should not close the holes [A] of the switch cover.

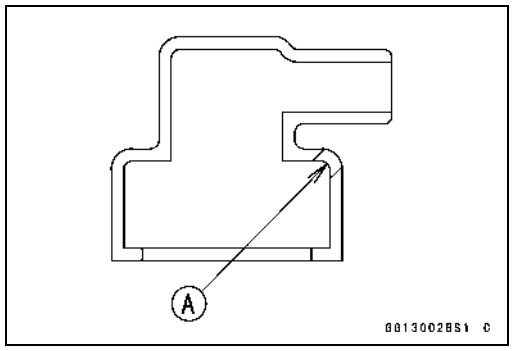

http://mototh.com

Engine Removal/Installation

Table of Contents

Exploded View 8-2
Engine Removal/Installation 8-4
Engine Removal 8-4

http://mototh.com

Exploded View

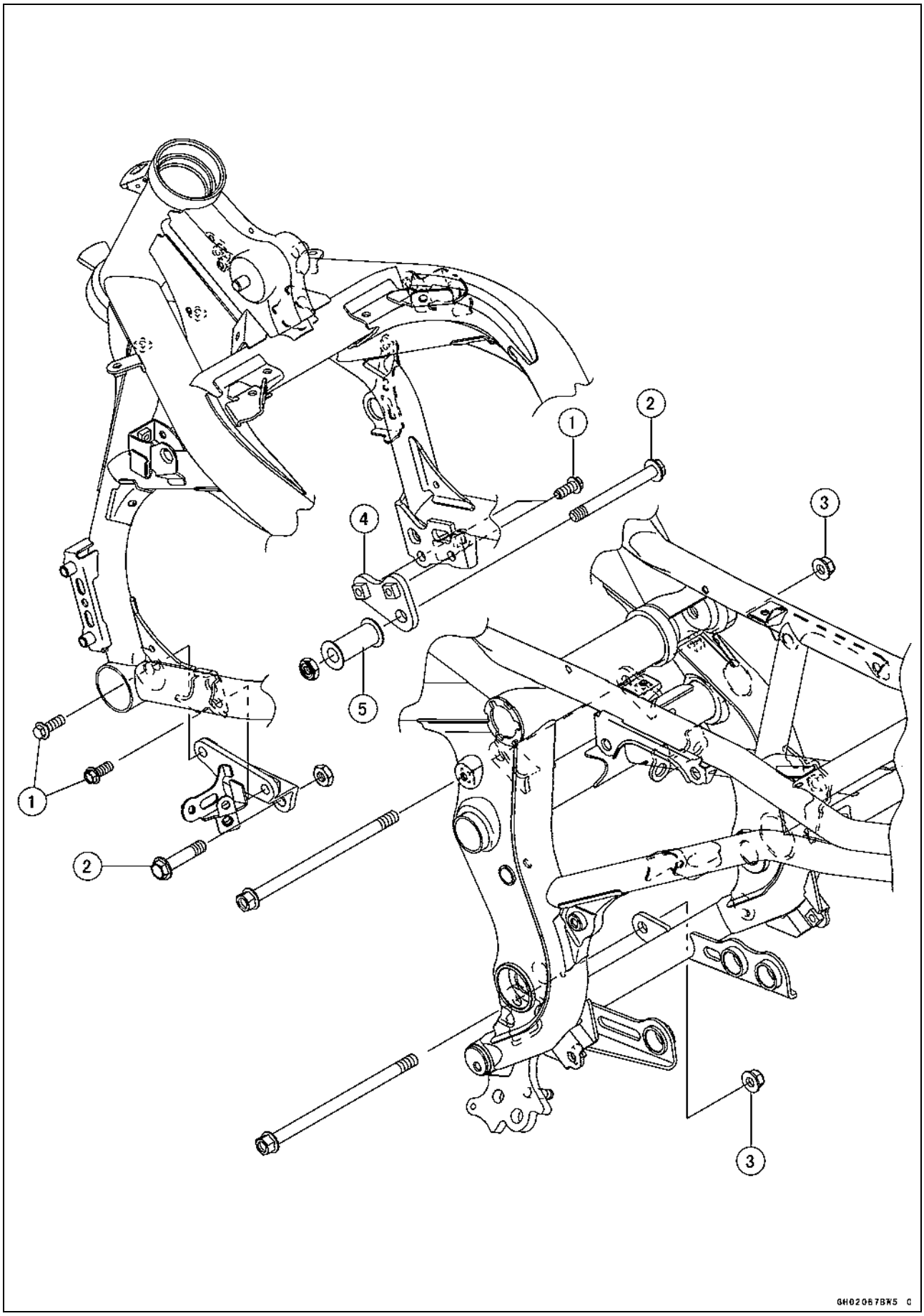

Exploded View

No.	Fastener	Torque			Remarks
		N·m	kgf·m	ft·lb	
1	Engine Mounting Bracket Bolts	25	2.5	18	
2	Front Engine Mounting Bolts	44	4.5	32	
3	Rear Engine Mounting Nuts	44	4.5	32	

4. Engine Mounting Brackets
5. Collar

http://mototh.com

Engine Removal/Installation

Engine Removal

- Support the rear part of the swingarm with a stand.
- Squeeze the brake lever slowly and hold it with a band [A].

⚠ WARNING

Be sure to hold the front brake when removing the engine, or the motorcycle may fall over. It could cause an accident and injury.

CAUTION

Be sure to hold the front brake when removing the engine, or the motorcycle may fall over. The engine or the motorcycle could be damaged.

- Drain:
  Engine Oil (see Engine Oil Change in the Periodic Maintenance chapter)
  Coolant (see Coolant Change in the Periodic Maintenance chapter)

- Remove:
  Seat (see Seat Removal in the Frame chapter)
  Lower Fairing and Center Fairing (see Fairing section in the Frame chapter)
  Side Covers (see Side Cover Removal in the Frame chapter)
  Frame Covers (see Frame Cover Removal in the Frame chapter)
  Radiator and Hoses (see Radiator and Radiator Fan Removal in the Cooling System chapter)
- Unscrew the lower fairing bracket bolts (both sides) [A] and remove the brackets (both sides) [B].

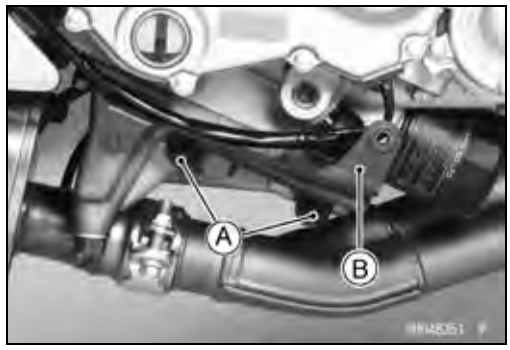

- Disconnect the oil pressure switch terminal [A].

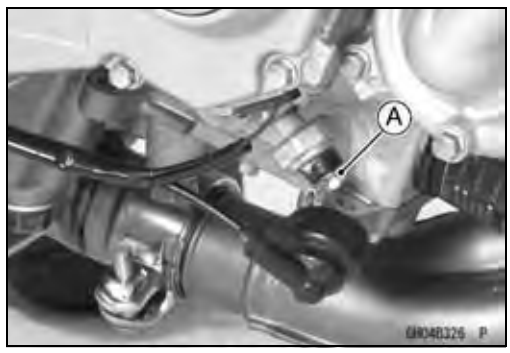

http://mototh.com

Engine Removal/Installation

- Disconnect the crankshaft sensor lead connector [A].

- Remove:
  Exhaust Pipe (see Exhaust Pipe Removal in the Engine Top End chapter)
  Muffler Body (see Muffler Body Removal in the Engine Top End chapter)
  Fuel Tank (see Fuel Tank Removal in the Fuel System (DFI) chapter)
  Air Switching Valve and Hose (see Air Switching Valve Removal in the Engine Top End chapter)
  Air Cleaner Housing (see Air Cleaner Housing Removal in the Fuel System (DFI) chapter)
  Throttle Body Assy (see Throttle Body Removal in the Fuel System (DFI) chapter)
  Clutch Cable (see Clutch Cable Removal in the Clutch chapter)

- Remove:
  Stick Coils [A]
  Baffle Plate [B]

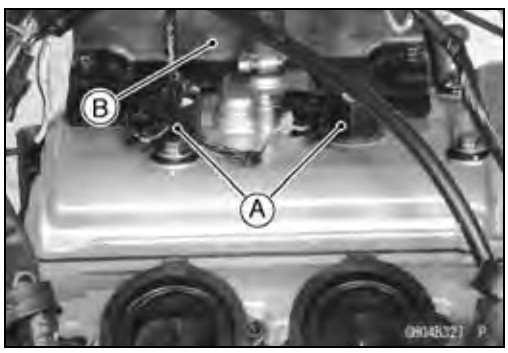

- Remove or disconnect:
  Water Temperature Sensor Lead Connector [A]
  Starter Motor Cable [B]
  Engine Ground Cable Terminal Bolt [C]
  Alternator Lead Connector [D]
  Sidestand Switch Lead Connector [E]
  Speed Sensor Lead Connector [F]

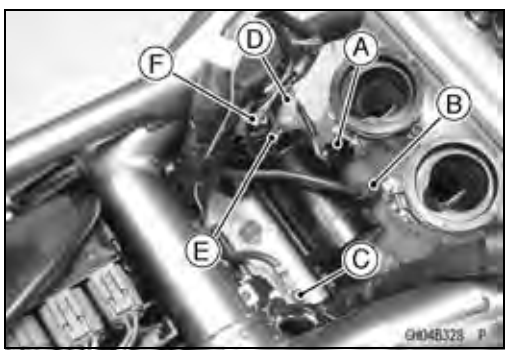

Engine Removal/Installation

- Remove the engine sprocket cover (see Engine Sprocket Removal in the Final Drive chapter).
- Remove the shift pedal [A] (see Shift Pedal Removal in the Crankshaft/Transmission chapter).
- Disconnect:
  Oxygen Sensor Lead Connector [B]
  Neutral Switch Lead Terminal [C]
- Remove the bracket [D] and the engine sprocket [E] (see Engine Sprocket Removal in the Final Drive chapter).

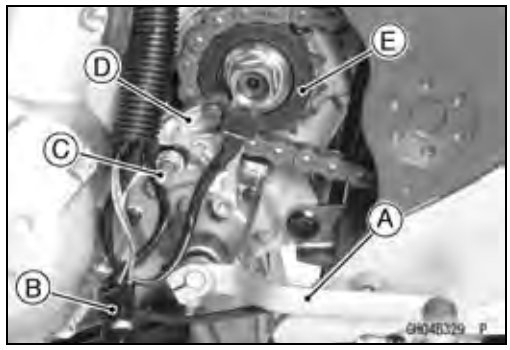

- Remove:
  Horn Leads [A] (Disconnect)
  Horn Bolt [B]
  Horn [C]

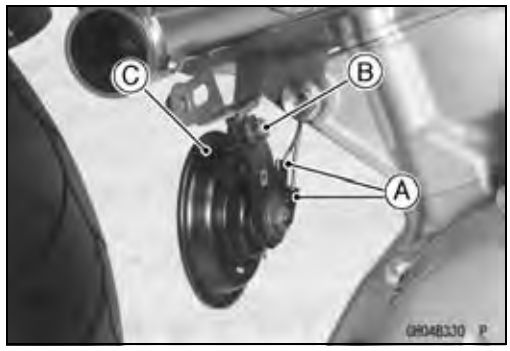

- Support the engine with a stand or jack [A].
  ○Put a wooden board [B] on the suitable stand.
- Remove the engine mounting bolts [C].
- Remove the engine mounting bracket bolts (both sides) [D] and remove the brackets [E].
- Remove the engine [F].

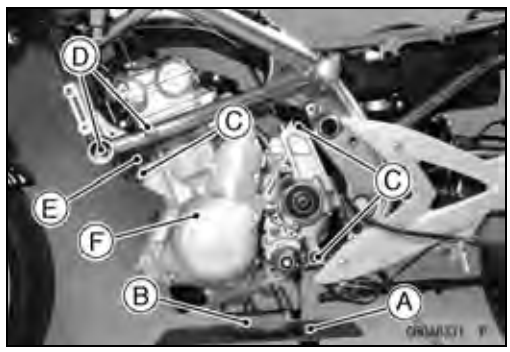

- Insert the rear engine mounting bolts from the left side of the engine and tighten the nuts.
- Install the engine mounting brackets [A] with the bolts [B].
- Insert the front engine mounting bolts [C] and tighten the bolts.
  ○Position the collar [D] on the right engine mounting bracket.

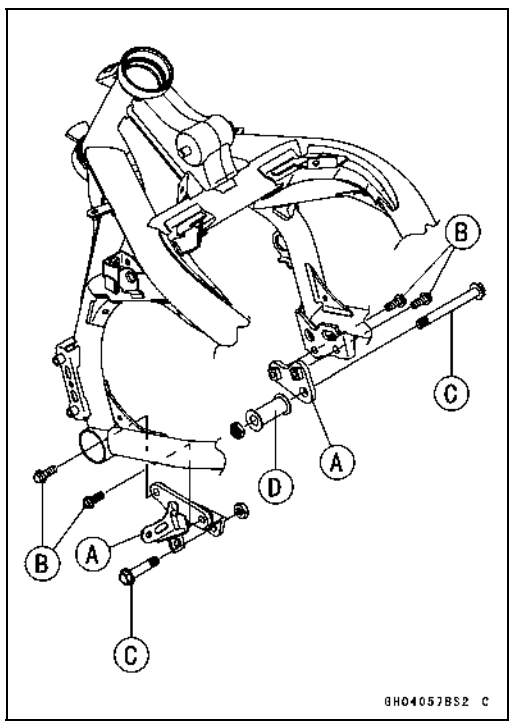

Engine Removal/Installation

- Tighten:

  Torque - Rear Engine Mounting Nuts: 44 N·m (4.5 kgf·m, 32 ft·lb)
  Font Engine Mounting Bolts: 44 N·m (4.5 kgf·m, 32 ft·lb)
  Engine Mounting Bracket bolts: 25 N·m (2.5 kgf·m, 18 ft·lb)

- Install the engine sprocket (see Engine Sprocket Installation in the Final Drive chapter).
- Run the leads, cables, and hoses correctly (see Cable, Wire, and Hose Routing section in the Appendix chapter).
- Install the removed parts (see appropriate chapters).
- Adjust:
  Throttle Cables (see Throttle Control System Inspection in the Periodic Maintenance chapter)
  Clutch Cable (see Clutch Operation Inspection in the Periodic Maintenance chapter)
  Drive Chain (see Drive Chain Slack Adjustment in the Periodic Maintenance chapter)
- Fill the engine with engine oil (see Engine Oil Change in the Periodic Maintenance chapter).
- Fill the engine with coolant and bleed the air from the cooling system (see Coolant Change in the Periodic Maintenance chapter).
- Adjust the idling (see Idle Speed Adjustment in the Periodic Maintenance chapter).

http://mototh.com

http://mototh.com

Crankshaft/Transmission

Table of Contents

Exploded View 9-2
Specifications 9-6
Special Tools and Sealant 9-9
Crankcase Splitting..... 9-10
  Crankcase Splitting 9-10
  Crankcase Assembly 9-11
Crankshaft and Connecting Rods..... 9-17
  Crankshaft Removal 9-17
  Crankshaft Installation 9-17
  Connecting Rod Removal 9-17
  Connecting Rod Installation 9-18
  Crankshaft/Connecting Rod Cleaning 9-21
  Connecting Rod Bend 9-21
  Connecting Rod Twist 9-22
  Connecting Rod Big End Side Clearance 9-22
  Connecting Rod Big End Bearing Insert/Crankpin Wear 9-22
  Crankshaft Side Clearance 9-24
  Crankshaft Runout 9-24
  Crankshaft Main Bearing Insert/Journal Wear 9-24
Balancer 9-27
  Balancer Removal..... 9-27
  Balancer Installation..... 9-27
  Balancer Shaft Bearing Insert/Journal Clearance 9-27
Transmission 9-29
  Shift Pedal Removal 9-29
  Shift Pedal Installation 9-29
  External Shift Mechanism Removal 9-29
  External Shift Mechanism Installation 9-30
  External Shift Mechanism Inspection 9-31
  Transmission Assy Removal..... 9-32
  Transmission Assy Disassembly . 9-33
  Transmission Assy Assembly 9-33
  Transmission Assy Installation..... 9-34
  Transmission Shaft Removal 9-35
  Transmission Shaft Installation 9-35
  Transmission Shaft Disassembly. 9-36
  Transmission Shaft Assembly..... 9-36
  Shift Drum and Fork Removal..... 9-39
  Shift Drum and Fork Installation... 9-39
  Shift Drum Disassembly..... 9-39
  Shift Drum Assembly 9-39
  Shift Fork Bending 9-39
  Shift Fork/Gear Groove Wear 9-39
  Shift Fork Guide Pin/Drum Groove Wear 9-40
  Gear Dog and Gear Dog Hole Damage..... 9-40
Ball Bearing, Needle Bearing, and Oil Seal..... 9-41
  Ball and Needle Bearing Replacement 9-41
  Ball and Needle Bearing Wear..... 9-41
  Oil Seal Inspection 9-41

http://mototh.com

Exploded View

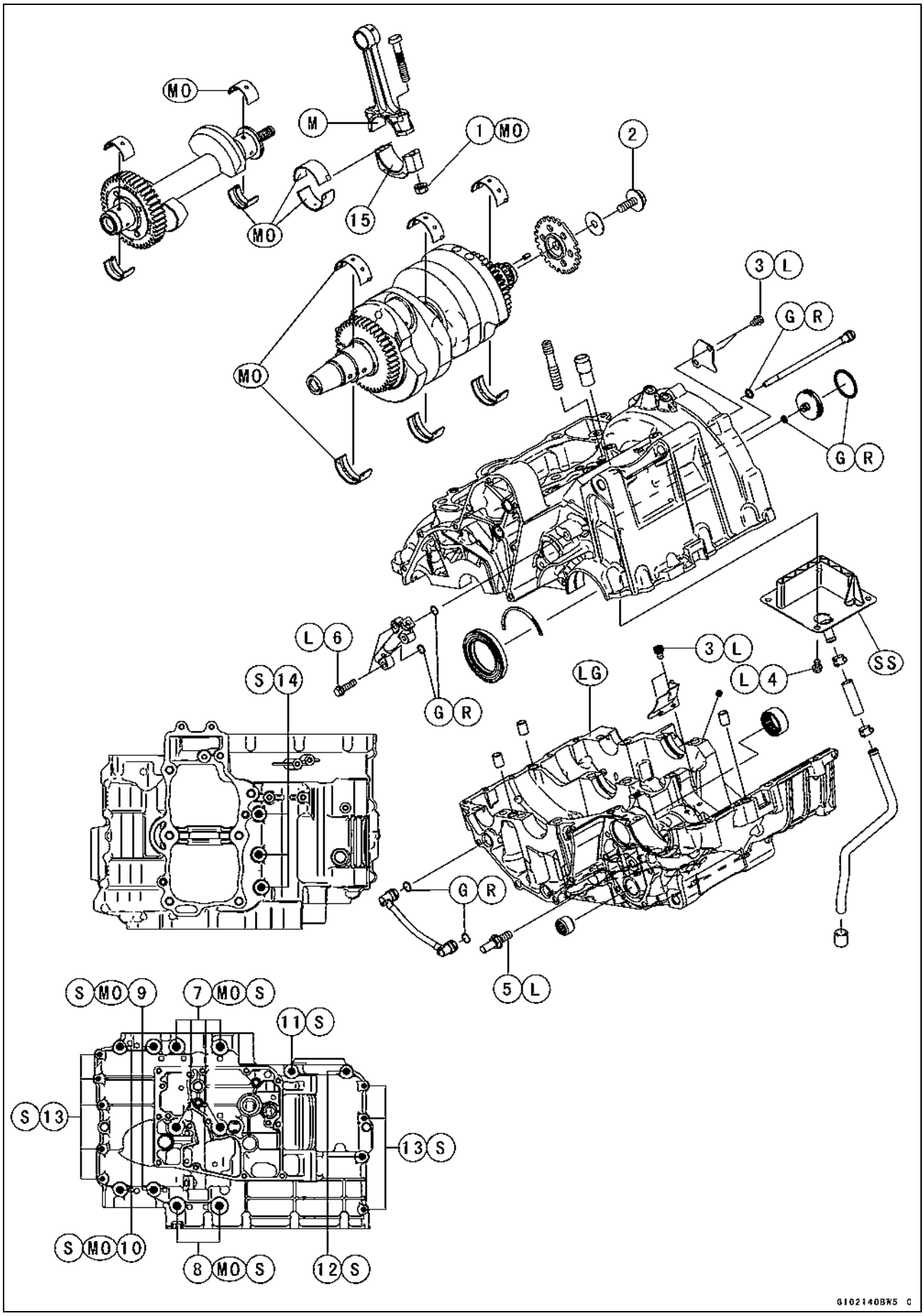

Exploded View

No.	Fastener	Torque			Remarks
		N·m	kgf·m	ft·lb	
1	Connecting Rod Big End Nuts	see Text	←	←	←
2	Timing Rotor Bolt	40	4.1	30	
3	Oil Plate Bolts	9.8	1.0	87 in·lb	L
4	Breather Plate Bolts	9.8	1.0	87 in·lb	L
5	Shift Shaft Return Spring Pin	29	2.9	22	L
6	Oil Pipe Bolts	9.8	1.0	87 in·lb	L
7	Crankcase Bolts (M9, L = 113 mm)	44	4.5	32	MO, S
8	Crankcase Bolts (M9, L = 83 mm)	44	4.5	32	MO, S
9	Crankcase Bolts (M8, L = 73 mm)	35	3.6	26	MO, S
10	Crankcase Bolts (M8, L = 60 mm)	35	3.6	26	MO, S
11	Crankcase Bolts (M8, L = 110 mm)	27.5	2.8	20	S
12	Crankcase Bolts (M8, L = 50 mm)	27.5	2.8	20	S
13	Crankcase Bolts (M6)	19.6	2.0	15	S
14	Upper Crankcase Bolts	27.5	2.8	20	S

15. Do not apply any grease or oil.
G: Apply grease.
L: Apply a non-permanent locking agent.
LG: Apply liquid gasket (Kawasaki Bond: 92104-1064).
M: Apply molybdenum disulfide grease.
MO: Apply molybdenum disulfide oil solution.
(mixture of the engine oil and molybdenum disulfide grease in a weight ratio 10 : 1)
R: Replacement Parts
S: Follow the specific tightening sequence.
SS: Apply silicone sealant (Three Bond 1207B).

http://mototh.com

Exploded View

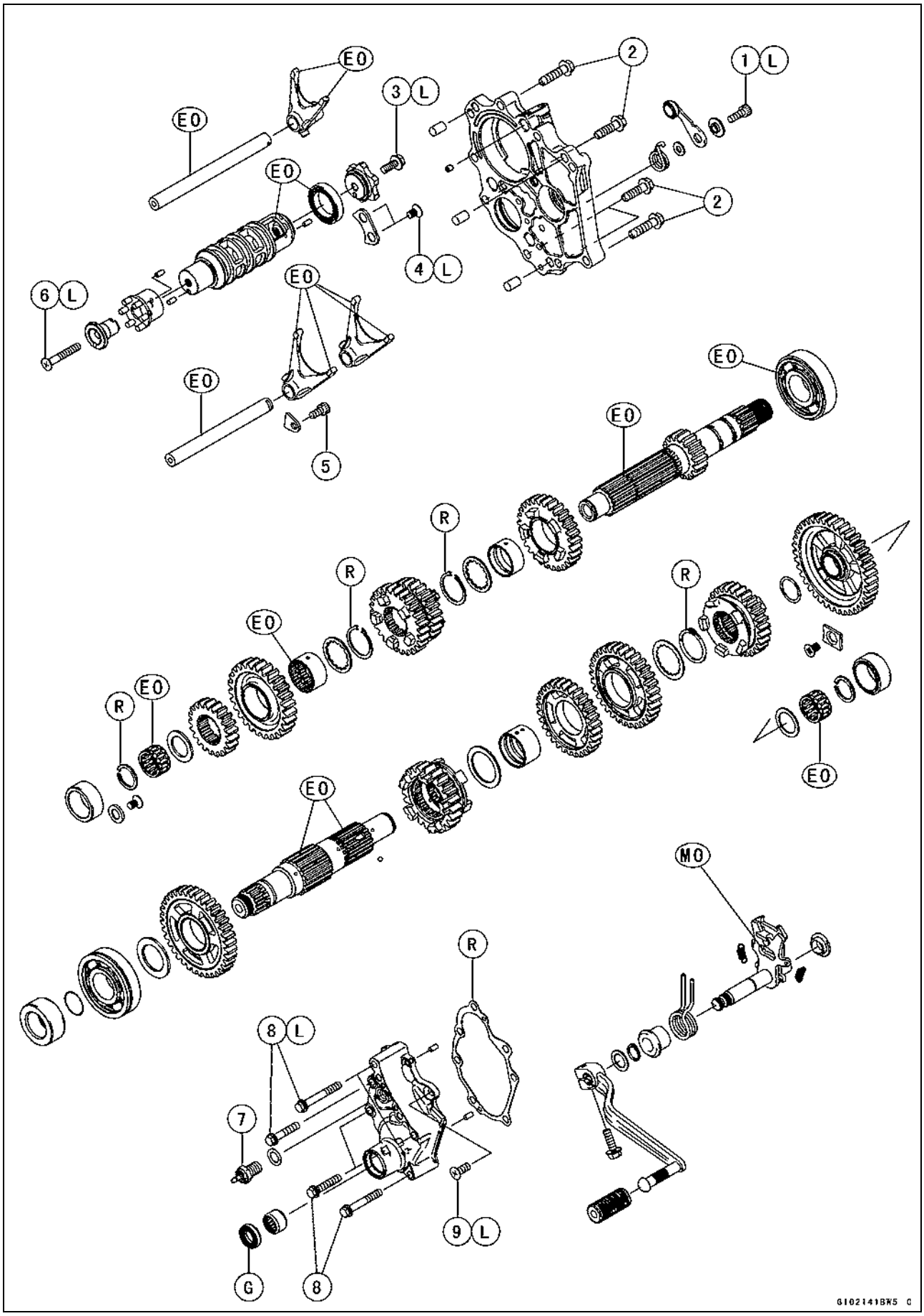

Exploded View

No.	Fastener	Torque			Remarks
		N·m	kgf·m	ft·lb	
1	Gear Positioning Lever Bolt	12	1.2	106 in·lb	L
2	Transmission Case Bolts	20	2.0	15	
3	Shift Drum Cam Bolt	12	1.2	106 in·lb	L
4	Shift Drum Bearing Holder Screw	4.9	0.50	43 in·lb	L
5	Shift Rod Plate Bolt	9.8	1.0	87 in·lb	
6	Neutral Switch Holder Screw	4.9	0.50	43 in·lb	L
7	Neutral Switch	15	1.5	11	
8	Shift Shaft Cover Bolts	9.8	1.0	87 in·lb	(L)
9	Shift Shaft Cover Screw	4.9	0.50	43 in·lb	L

EO: Apply engine oil.
G: Apply grease.
L: Apply a non-permanent locking agent.
MO: Apply molybdenum disulfide oil solution.
(mixture of the engine oil and molybdenum disulfide grease in a weight ratio 10 : 1)
R: Replacement Parts

http://mototh.com

Specifications

Item	Standard	Service Limit
Crankshaft, Connecting Rods		
Connecting Rod Bend	– – –	TIR 0.2/100 mm (0.008/3.94 in.)
Connecting Rod Twist	– – –	TIR 0.2/100 mm (0.008/3.94 in.)
Connecting Rod Big End Side Clearance	0.13 ~ 0.38 mm (0.0051 ~ 0.0150 in.)	0.58 mm (0.023 in.)
Connecting Rod Big End Bearing Insert/Crankpin Clearance	0.017 ~ 0.041 mm (0.0007 ~ 0.0016 in.)	0.08 mm (0.0031 in.)
Crankpin Diameter:	37.984 ~ 38.000 mm (1.4954 ~ 1.4961 in.)	37.97 mm (1.4949 in.)
Marking:		
None	37.984 ~ 37.992 mm (1.4954 ~ 1.4957 in.)	– – –
○	37.993 ~ 38.000 mm (1.4958 ~ 1.4961 in.)	– – –
Connecting Rod Big End Inside Diameter:	41.000 ~ 41.016 mm (1.6142 ~ 1.6148 in.)	– – –
Marking:		
None	41.000 ~ 41.008 mm (1.6142 ~ 1.6145 in.)	– – –
○	41.009 ~ 41.016 mm (1.6145 ~ 1.6148 in.)	– – –
Connecting Rod Big End Bearing Insert Thickness:		
Brown	1.475 ~ 1.480 mm (0.05807 ~ 0.05827 in.)	– – –
Black	1.480 ~ 1.485 mm (0.05827 ~ 0.05846 in.)	– – –
Blue	1.485 ~ 1.490 mm (0.05846 ~ 0.05866 in.)	– – –

Connecting Rod Big End Bearing Insert Selection:

Con-rod Big End Bore Diameter Marking	Crankpin Diameter Marking	Bearing Insert	
		Size Color	Part Number
None	○	Brown	92139-0116
None	None	Black	92139-0115
○	○		
○	None	Blue	92139-0114

Connecting Rod Bolt Stretch: (Usable Range)		
New Connecting Rod	0.24 ~ 0.36 mm (0.0094 ~ 0.0142 in.)	– – –
Used Connecting Rod	0.20 ~ 0.32 mm (0.0079 ~ 0.0126 in.)	– – –
Crankshaft Side Clearance	0.05 ~ 0.20 mm (0.0020 ~ 0.0079 in.)	0.40 mm (0.0157 in.)

http://mototh.com

Specifications

Item	Standard	Service Limit
Crankshaft Runout	TIR 0.02 mm (0.0008 in.) or less	TIR 0.05 mm (0.0020 in.)
Crankshaft Main Bearing Insert/Journal Clearance	0.012 ~ 0.036 mm (0.0005 ~ 0.0014 in.)	0.07 mm (0.0028 in.)
Crankshaft Main Journal Diameter:	37.984 ~ 38.000 mm (1.4954 ~ 1.4961 in.)	37.96 mm (1.4945 in.)
Marking:		
None	37.984 ~ 37.992 mm (1.4954 ~ 1.4957 in.)	– – –
1	37.993 ~ 38.000 mm (1.4958 ~ 1.4961 in.)	– – –
Crankcase Main Bearing Inside Diameter:	41.000 ~ 41.016 mm (1.6142 ~ 1.6148 in.)	– – –
Marking:		
○	41.000 ~ 41.008 mm (1.6142 ~ 1.6145 in.)	– – –
None	41.009 ~ 41.016 mm (1.6145 ~ 1.6148 in.)	– – –
Crankshaft Main Bearing Insert Thickness:		
Brown	1.490 ~ 1.494 mm (0.0587 ~ 0.0588 in.)	– – –
Black	1.494 ~ 1.498 mm (0.0588 ~ 0.0590 in.)	– – –
Blue	1.498 ~ 1.502 mm (0.0590 ~ 0.0591 in.)	– – –

Crankshaft Main Bearing Insert Selection:

Crankcase Main Bearing Inside Diameter Marking	Crankshaft Main Journal Diameter Marking	Bearing Insert*	
		Size Color	Part Number
○	1	Brown	92028-1905
None	1	Black	92028-1904
○	None		
None	None	Blue	92028-1903

*The bearing inserts for Nos. 1, 2 and 3 journals have oil grooves.

Balancer Shaft		
Balancer Shaft Bearing Insert/Journal Clearance	0.011 ~ 0.033 mm (0.0004 ~ 0.0013 in.)	0.08 mm (0.0031 in.)
Balancer Shaft Journal Diameter:	27.987 ~ 28.000 mm (1.1019 ~ 1.1024 in.)	27.96 mm (1.1108 in.)
Marking:		
None	27.987 ~ 27.993 mm (1.1019 ~ 1.1021 in.)	– – –
○	27.994 ~ 28.000 mm (1.1021 ~ 1.1024 in.)	– – –

http://mototh.com

Specifications

Item	Standard	Service Limit
Crankcase Bearing Bore Diameter:	31.000 ~ 31.016 mm (1.2205 ~ 1.2228 in.)	– – –
Marking:		
○	31.000 ~ 31.008 mm (1.2205 ~ 1.2208 in.)	– – –
None	31.009 ~ 31.016 mm (1.2208 ~ 1.2211 in.)	– – –
Balancer Shaft Bearing Insert Thickness:		
Brown	1.490 ~ 1.494 mm (0.0587 ~ 0.0588 in.)	– – –
Black	1.494 ~ 1.498 mm (0.0588 ~ 0.0590 in.)	– – –
Blue	1.498 ~ 1.502 mm (0.0590 ~ 0.0591 in.)	– – –

Balancer Shaft Bearing Insert Selection:

Crankcase Bearing Bore Diameter Marking	Balancer Shaft Journal Diameter Marking	Bearing Insert*	
		Size Color	Part Number
○	○	Brown	92139-0119
○	None	Black	92139-0118
None	○		
None	None	Blue	92139-0117

*The bearing inserts for Nos. 1,2 journals have oil grooves.

Transmission		
Shift Fork Ear Thickness	5.9 ~ 6.0 mm (0.232 ~ 0.236 in.)	5.8 mm (0.228 in.)
Gear Groove Width	6.05 ~ 6.15 mm (0.238 ~ 0.242 in.)	6.25 mm (0.246 in.)
Shift Fork Guide Pin Diameter	6.9 ~ 7.0 mm (0.272 ~ 0.276 in.)	6.8 mm (0.268 in.)
Shift Drum Groove Width	7.05 ~ 7.20 mm (0.278 ~ 0.283 in.)	7.3 mm (0.287 in.)

http://mototh.com

Special Tools and Sealant

Outside Circlip Pliers:
57001-144

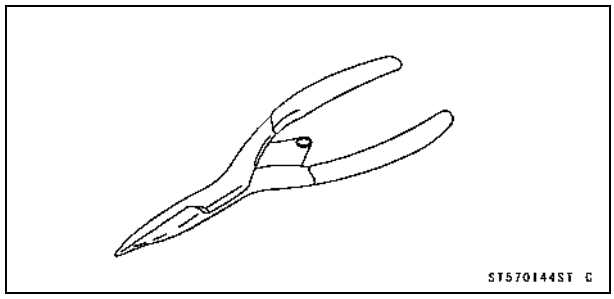

Bearing Driver Set:
57001-1129

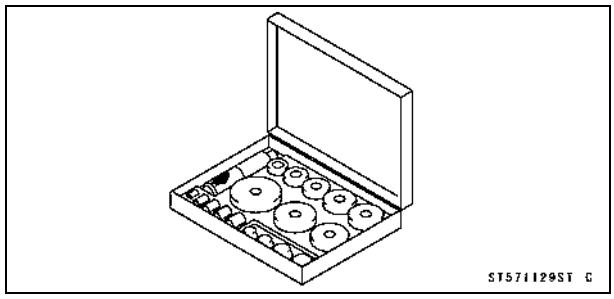

Kawasaki Bond:
92104-1064

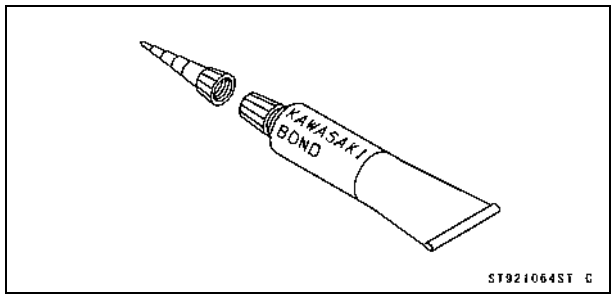

Crankcase Splitting

Crankcase Splitting

- Remove:
  Engine (see Engine Removal in the Engine Removal/Installation chapter)
  Cylinder (see Cylinder Removal in the Engine Top End chapter)
  Pistons (see Piston Removal in the Engine Top End chapter)
  Stater Motor (see Starter Motor Removal in the Electrical System chapter)
  Clutch (see Clutch Removal in the Clutch chapter)
  Transmission Assy (see Transmission Assy Removal)
  Alternator Rotor (see Alternator Rotor Removal in the Electrical System chapter)

- Remove the upper crankcase bolts (M8) [A] and the washers.

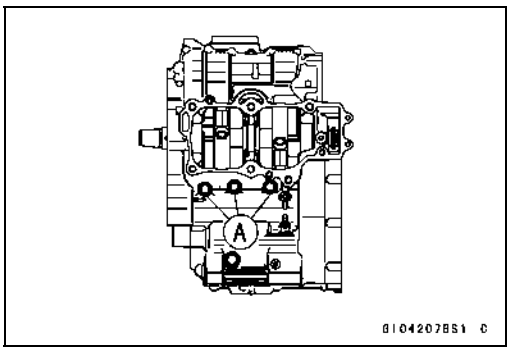

- Remove the oil pan, relief valve, oil screen and oil pipes (see Oil Pan Removal in the Engine Lubrication System chapter).
- Remove the lower crankcase bolts.

○Firstly loosen the M6 bolts, secondly the M8 bolts and lastly the M9 bolts.
  M6 Bolts [A]
  M8 Bolts [B]
  M9 Bolts [C] and Washers

- Tap lightly around the crankcase mating surface with a plastic mallet, and split the crankcase. Take care not to damage the crankcase.

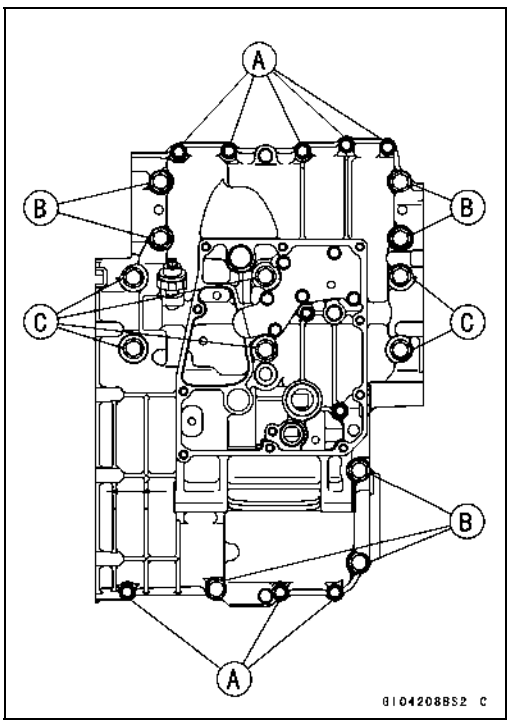

Crankcase Splitting

★If the oil pie is to be removed, follow the next procedure.
○Unscrew the bolts [A] and remove the oil pipe [B].

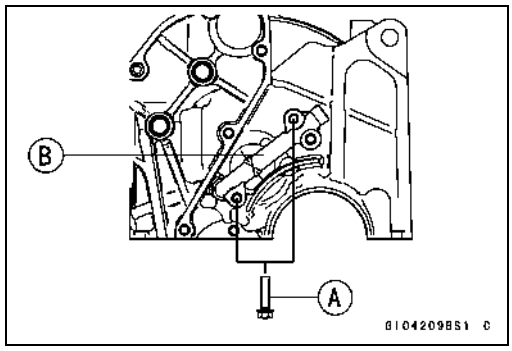

○Prepare a ϕ5 mm rod [B], and insert it to the hole of the upper crankcase half.
○Remove the oil pipe [A], tapping [C] the rod as shown.

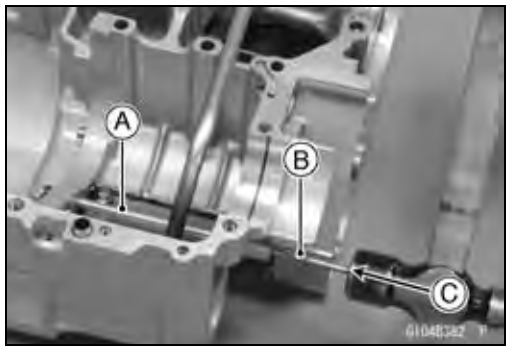

★If the breather plate [A] is to be removed, follow the next procedure.
○Remove the oil pipe (see above).
○Cut the gasket around the plate [B].
○Remove:
Breather Plate Bolts [C]
Breather Plate with Pipe

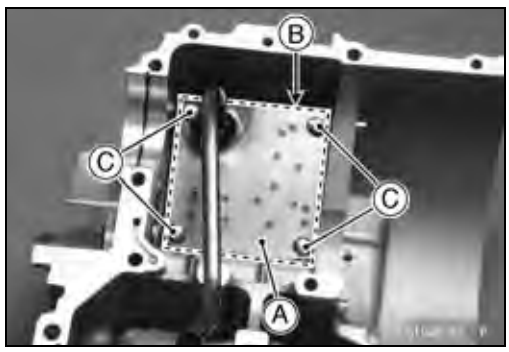

Crankcase Assembly

CAUTION
The upper and lower crankcase halves are machined at the factory in the assembled state, so the crankcase halves must be replaced as a set.

- With a high-flash point solvent, clean off the mating surfaces of the crankcases halves and wipe dry.
- Using compressed air, blow out the oil passages in the crankcase halves.

- If the oil plate [A] on the upper crankcase half was removed, install it as shown.
- Apply a non-permanent locking agent to the oil plate bolts and torque them.

Torque - Oil Plate Bolts [B]: 9.8 N·m (1.0 N·m, 87 in·lb)

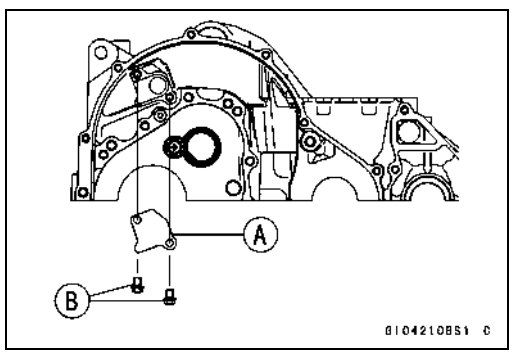

Crankcase Splitting

- Press and insert [A] the new needle bearing [B] for the shift drum until it is bottomed.

  Special Tool - Bearing Driver Set: 57001-1129

- Press and insert [C] the new needle bearing [D] for the shift shaft so that the bearing surface is flush with the end of the hole.

  Special Tool - Bearing Driver Set: 57001-1129

  Lower Crankcase Half [E]

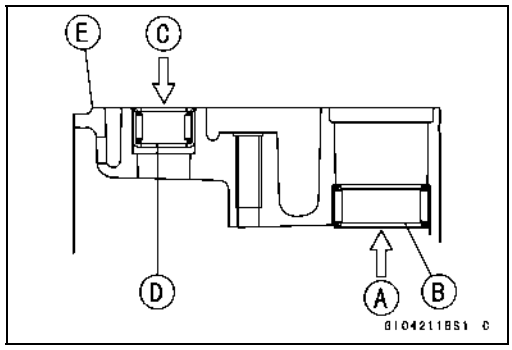

- Apply silicone sealant to the breather plate mating surface [A] 1 mm (0.04 in.) or more thick, and then install the breather plate.

  Sealant - Three Bond 1207B

NOTE

○*Make the application finish within 7 minutes when the liquid gasket to the mating surface of the breather plate is applied.*

○*Moreover fit the plate and tighten the bolts just after application of the liquid gasket.*

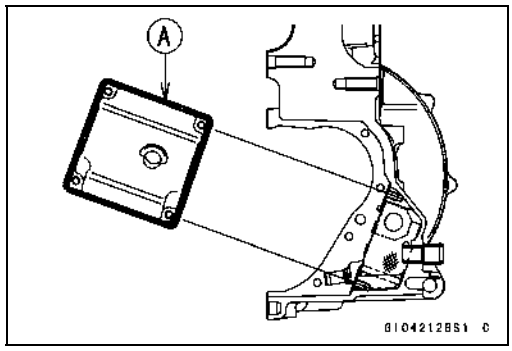

- Apply a non-permanent locking agent to the threads and tighten the bolts [A].

  Torque - Breather Plate Bolts: 9.8 N·m (1.0 kgf·m, 87 in·lb)

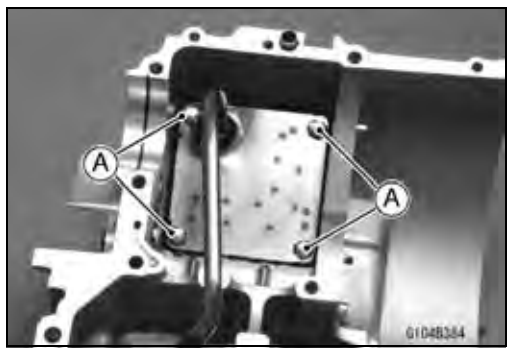

- Install the breather pipe [A].

○Align the white mark [B] on the pipe with the white mark [C] on the breather fittling.

○Install the clamp [D] so that the pinch portions [E] face the white marks.

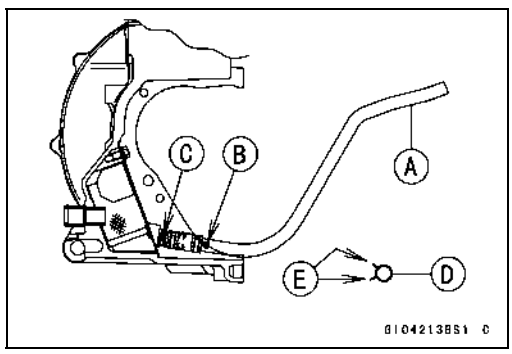

- Install the oil pipe [A] so that its flange [B] touches to the surface [C] of the upper crankcase half.
- Apply grease to the O-ring [D] on the oil pipe.

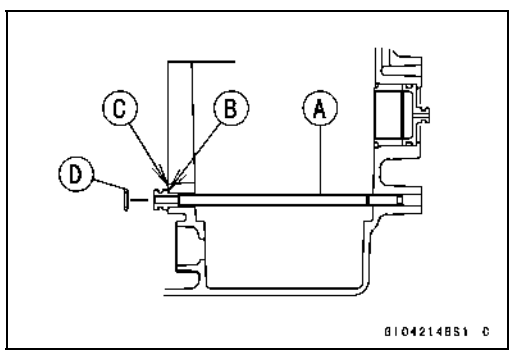

Crankcase Splitting

- Install the crankshaft assembly and the balancer shaft assembly on the upper crankcase half.

○Align [A] the timing mark on the balancer gear [B] with the timing mark on the balancer drive gear [C] of the crankshaft.

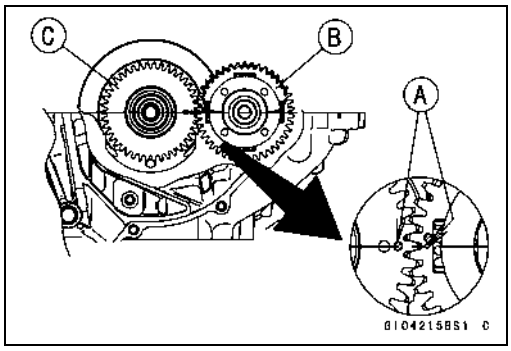

- Be sure to hang the camshaft chain [A] on the crankshaft.

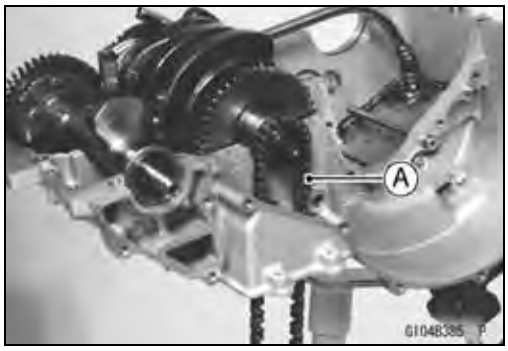

- Be sure that the dowel pins [A] are in position.

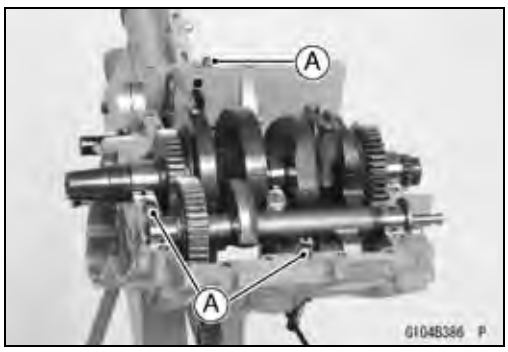

- Set the bearing groove [A] on the positioning ring [B] as shown.

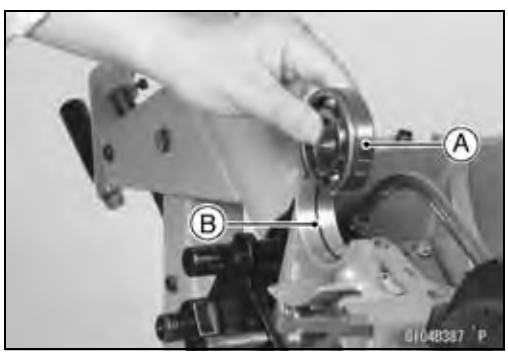

http://mototh.com

Crankcase Splitting

- Apply liquid gasket [A] to the mating surface of the lower crankcase half.

  Sealant - Kawasaki Bond: 92104-1064

NOTE

○*Especially, apply a liquid gasket carefully so that it shall be filled up on the grooves.*

CAUTION
Do not apply liquid gasket around the crankshaft main bearing inserts, and oil passage holes.

○Do not apply liquid gasket to the oil passage [B].

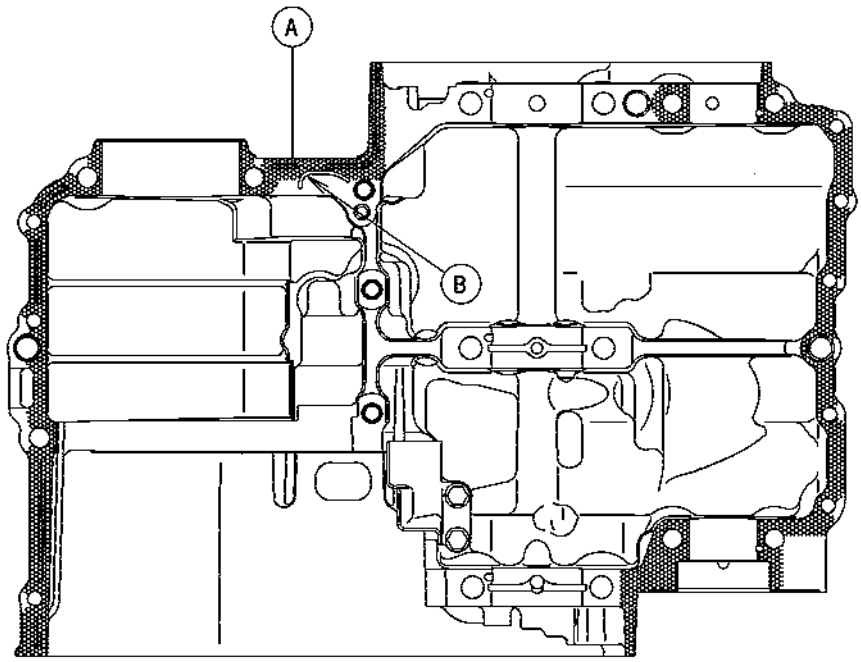

Crankcase Splitting

● Fit the lower crankcase half to the upper crankcase half.

○Insert [A] the breather pipe [B] on the upper crankcase half through the hole [C] on the lower crankcase half.

NOTE

○*Make the application finish within 20 minutes when the liquid gasket to the mating surface of the lower crankcase half is applied.*

○*Moreover fit the case and tighten the case bolts just after finishing the application of the liquid gasket.*

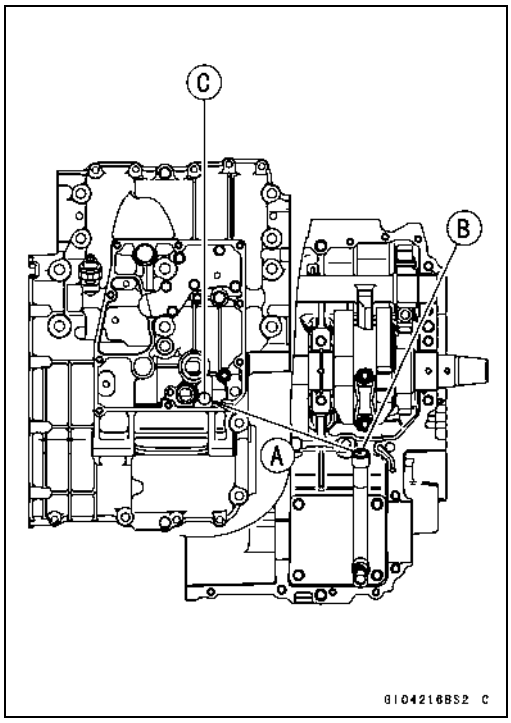

○The M9 bolts [1 ~ 6] (see the next figure) have copper plated washers. Replace them with new ones.

● Apply molybdenum disulfide oil solution to both sides [A] of the M9 bolts washers and the threads [B] of the M9 bolts.

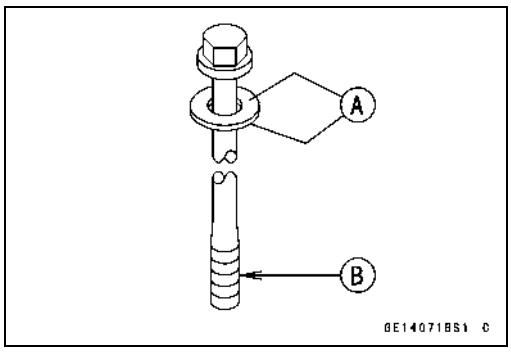

● Apply molybdenum disulfide oil solution to flange [A] and the threads [B] of the M8 bolts which is tightening order is [7 ~ 10] only (see the next figure).

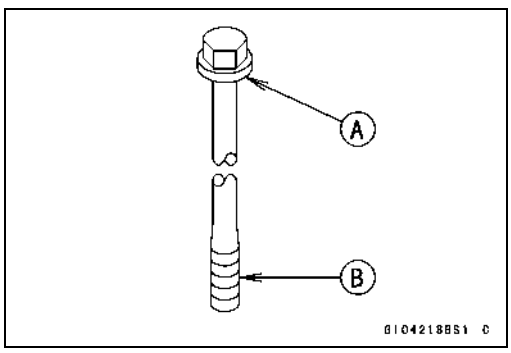

http://mototh.com

Crankcase Splitting

- Tighten the lower crankcase bolts using the following steps.

○Following the sequence numbers on the lower crankcase half, tighten the M9 bolts [1, 2] L= 113 mm (4.45 in.) with washers.

Torque - Crankcase Bolts (M9): 44 N·m (4.5 kgf·m, 32 ft·lb)

○Tighten the M9 bolts [3, 4] L= 83 mm (3.27 in.) with washers.

Torque - Crankcase Bolts (M9): 44 N·m (4.5 kgf·m, 32 ft·lb)

○Tighten the M9 bolts [5, 6] L= 113 mm (4.45 in.) with washers.

Torque - Crankcase Bolts (M9): 44 N·m (4.5 kgf·m, 32 ft·lb)

○Tighten the M8 bolts [7 ~ 10].

Torque - Crankcase Bolts (M8): 35 N·m (3.6 kgf·m, 26 ft·lb)

○Tighten the M8 bolts [A] (Do not apply molybdenum oil solution).

Torque - Crankcase Bolts (M8): 27.5 N·m (2.8 kgf·m, 20 ft·lb)

○Tighten the M6 bolts [B].

Torque - Crankcase Bolts (M6): 19.6 N·m (2.0 kgf·m, 15 ft·lb)

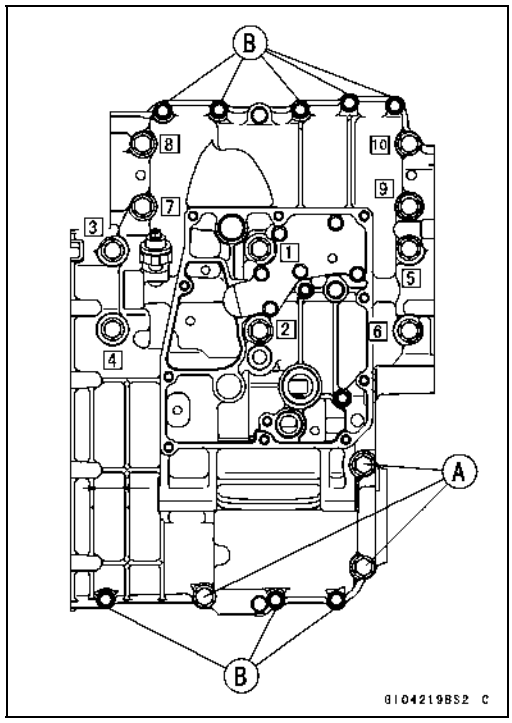

- Tighten the upper crankcase bolts.

○The upper crankcase bolts have copper plated washers. Replace them with new ones.

Torque - Upper Crankcase Bolts (M8) [A]: 27.5 N·m (2.8 kgf·m, 20 ft·lb)

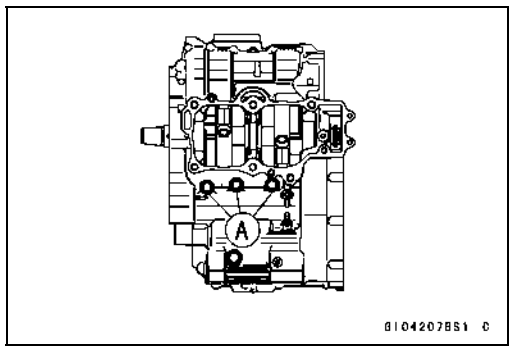

- After tightening all crankcase bolts, check the following items.

○Crankshaft and balancer shafts turn freely.

Crankshaft and Connecting Rods

Crankshaft Removal

- Split the crankcase (see Crankcase Splitting).
- Remove the crankshaft [A].

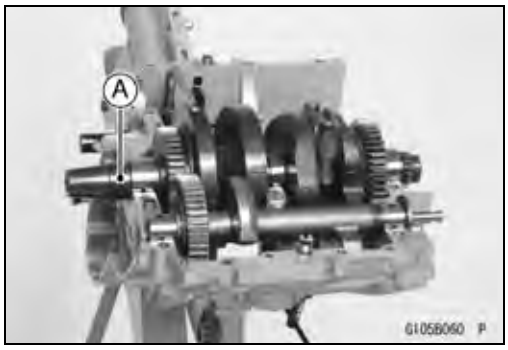

Crankshaft Installation

CAUTION

If the crankshaft, bearing inserts, or crankcase halves are replaced with new ones, select the bearing inserts and check clearance with a plastigage (press gauge) before assembling engine to be sure the correct bearing inserts are installed.

- Apply molybdenum disulfide oil solution to the crankshaft main bearing inserts.

○Align [A] the timing mark on the balancer gear [B] with the timing mark on the balancer drive gear [C] of the crankshaft.

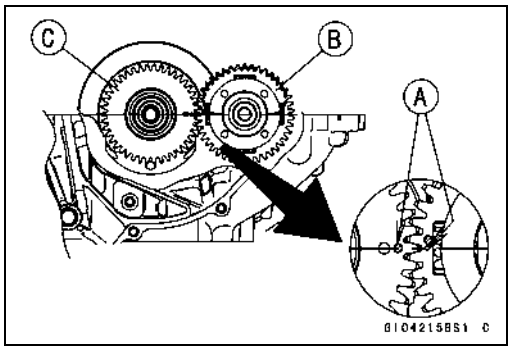

- Install the crankshaft with the camshaft chain [A] hanging on it.

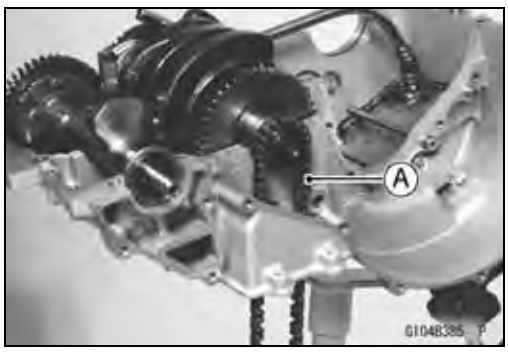

Connecting Rod Removal

- Split the crankcase (see Crankcase Splitting).
- Remove the connecting rod nuts [A].
- Remove the crankshaft.

NOTE

○*Mark and record the locations of the connecting rods and their big end caps so that they can be reassembled in their original positions.*

- Remove the connecting rods from the crankshaft.

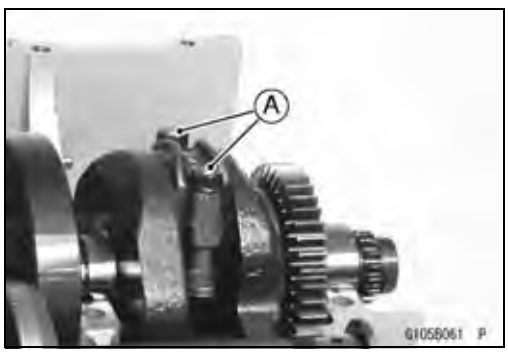

CAUTION

Discard the connecting rod bolts. To prevent damage to the crankpin surfaces, do not allow the connecting rod bolts to bump against the crankpins.

http://mototh.com

Crankshaft and Connecting Rods

Connecting Rod Installation

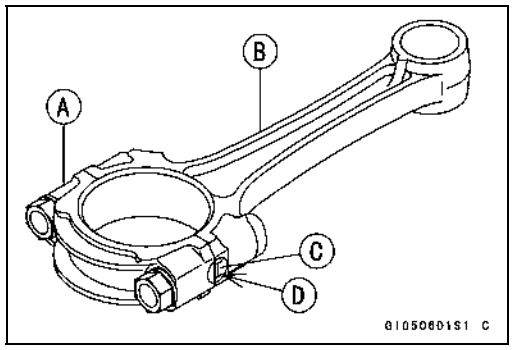

CAUTION

To minimize vibration, the connecting rods should have the same weight mark.

Big End Cap [A]
Connecting Rod [B]
Weight Mark, Alphabet [C]
Diameter Mark [D]: "○" or no mark

CAUTION

If the connecting rods, big end bearing inserts, or crankshaft are replaced with new ones, select the bearing insert and check clearance with a plastigage (press gauge) before assembling engine to be sure the correct bearing inserts are installed.

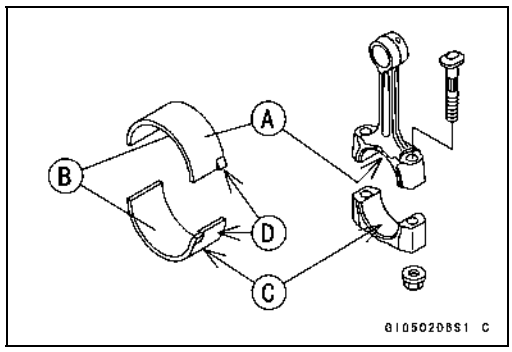

- Apply molybdenum disulfide grease [A] to the outer surface of the upper insert and the inner surface of the connecting rod big end.
- Apply molybdenum disulfide oil solution [B] to the inner surfaces of upper and lower bearing inserts.

○The molybdenum disulfide oil solution is a mixture of engine oil and molybdenum disulfide grease with a weight ratio (10 : 1).

○Do not apply any grease or oil [C] to the cap inside and cap insert outside.

○Install the inserts so that their nails [D] are on the same side and fit them into the recess of the connecting rod and cap.

CAUTION

Wrong application of oil and grease could cause bearing damage.

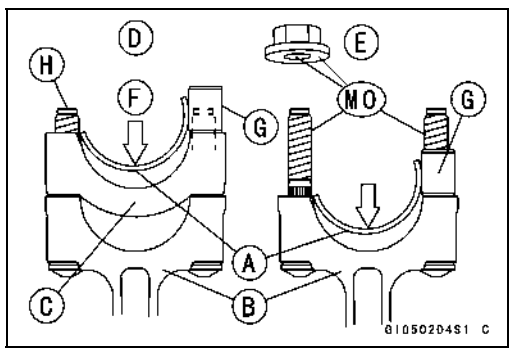

○When installing the inserts [A], be careful not to damage the insert surface with the edge of the connecting rod [B] or the cap [C]. One way to install inserts is as follows:
Installation [D] to Cap
Installation [E] to Connecting Rod
Push [F]
Spare Dowel Pin [G]
Connecting Rod Bolts [H]

- Install the cap on the connecting rod, aligning the weight and diameter marks.
- Remove debris and clean the surface of inserts.
- Apply molybdenum disulfide oil solution [MO] to the threads and seating surfaces of the big end nuts and bolts.

http://mototh.com

Crankshaft and Connecting Rods

- Install the crankshaft (see Crankshaft Installation).
- Install each connecting rod on its original crankpin.

NOTE

○*Install each connecting rod so that its oil jet [A] faces the exhaust side (the front [B]) (see Engine Oil Flow Chart in the Engine Lubrication System chapter).*

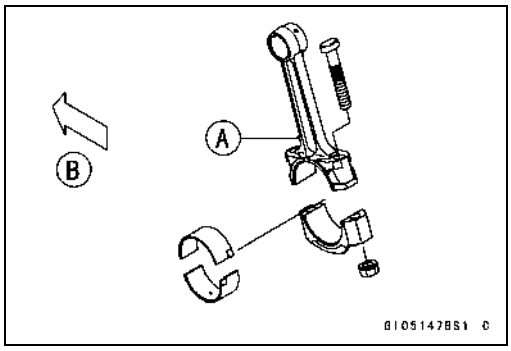

○The connecting rod big end is bolted using the “plastic region fastening method”.
○This method precisely achieves the needed clamping force without exceeding it unnecessarily, allowing the use of thinner, lighter bolts further decreasing connecting rod weight.
○There are two types of the plastic region fastening. One is a bolt length measurement method and other is a rotation angle method. Observe one of the following two, but the bolt length measurement method is preferable because this is a more reliable way to tighten the big end nuts.

CAUTION

The connecting rod bolts are designed to stretch when tightened. Never reuse the connecting rod bolts. See the table below for correct bolt and nut usage.

CAUTION

Be careful not to overtighten the nuts.
The bolts must be positioned on the seating surface correctly to prevent the bolt heads from hitting the crankcase.

(1) Bolt Length Measurement Method

- Be sure to clean the bolts, nuts, and connecting rods thoroughly with a high-flash point solvent, because the new connecting rods, bolts, and nuts are treated with an anti-rust solution.

⚠ WARNING

Clean the bolts, nuts, and connecting rods in a well -ventilated area, and take care that there is no spark or flame anywhere near the working area. This includes any appliance with a pilot light. Because of the danger of highly flammable liquids, do not use gasoline or low-flash point solvents to clean them.

CAUTION

Immediately dry the bolts and nuts with compressed air after cleaning.
Clean and dry the bolts and nuts completely.

Crankshaft and Connecting Rods

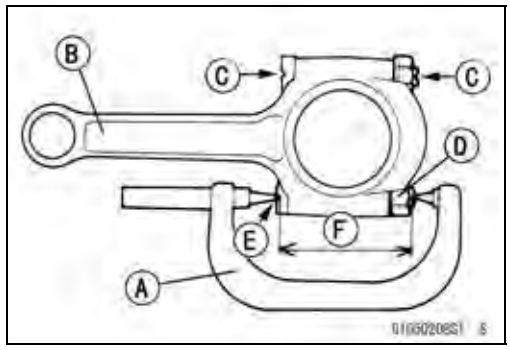

- Install new bolts in reused connecting rods.
- Dent both bolt head and bolt tip with a punch as shown.
- Before tightening, use a point micrometer [A] to measure the length of new connecting rod bolts and record the values to find the bolt stretch.
  Connecting Rod [B]
  Mark here with a punch [C].
  Nuts [D]
  Fit micrometer pins into punch marks [E].
- Apply a small amount of molybdenum disulfide oil solution to the following:
  Threads of Nuts and Bolts
  Seating Surfaces of Nuts and Con-rods
- Tighten the big end nuts until the bolt elongation reaches the length specified in the table.
- Check the length [F] of the connecting rod bolts.

★If the stretch is more than the usable range, the bolt has stretched too much. An overelongated bolt may break in use.

Bolt Length after tightening – Bolt Length before tightening = Bolt Stretch

Connecting Rod Assy	Bolt	Nut	Usable Range of Connecting Rod Bolt Stretch
New	Use the bolts attached to new con-rod.	Attached to new con-rod	0.24 ~ 0.36 mm (0.0094 ~ 0.0142 in.)
		New	
Used	Replace the bolts with new ones.	Used	0.20 ~ 0.32 mm (0.0079 ~ 0.0126 in.)
		New	

(2) Rotation Angle Method

★If you don't have a point micrometer, you may tighten the nuts using the "Rotation Angle Method".

- Be sure to clean the bolts and nuts thoroughly with a high -flash point solvent, because the new bolts and nuts are treated with an anti-rust solution.

⚠ WARNING

Clean the bolts and nuts in a well-ventilated area, and take care that there is no spark or flame anywhere near the working area. This includes any appliance with a pilot light. Because of the danger or highly flammable liquids, do not use gasoline or low-flash point solvents to clean them.

CAUTION

Immediately dry the bolts and nuts with compressed air after cleaning.
Clean and dry the bolts and nuts completely.

http://mototh.com

Crankshaft and Connecting Rods

- Install new bolts in reused connecting rods.
- Apply a small amount of molybdenum disulfide oil to the following:
  Threads [A] of Nuts and Bolts
  Seating Surfaces [B] of Nuts and Con-rods

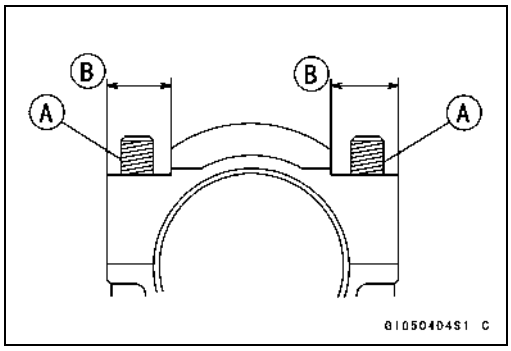

- First, tighten the nuts to the specified torque. See the table below.
- Next, tighten the nuts **120° ±5°** .

○Mark [A] the connecting rod big end caps and nuts so that nuts can be turned 120° [B] properly.

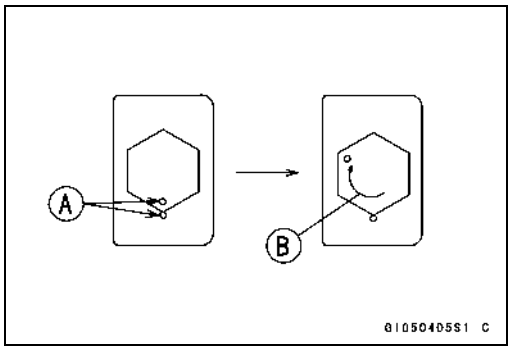

Connecting Rod Assy	Bolt	Nut	Torque + Angle N·m (kgf·m, ft·lb)
New	Use the bolts attached to new con-rod.	Attached to new con-rod	18 (1.8, 13.0) + 120°
		New	20 (2.0, 14.5) + 120°
Used	Replace the bolts with new ones.	Used	24 (2.4, 17.4) + 120°
		New	25 (2.6, 18.8) + 120°

Crankshaft/Connecting Rod Cleaning

- After removing the connecting rods from the crankshaft, clean them with a high-flash point solvent.
- Blow the crankshaft oil passages with compressed air to remove any foreign particles or residue that may have accumulated in the passages.

Connecting Rod Bend

- Remove the connecting rod big end bearing inserts, and reinstall the connecting rod big end cap.
- Select an arbor [A] of the same diameter as the connecting rod big end, and insert the arbor through the connecting rod big end.
- Select an arbor of the same diameter as the piston pin and at least 100 mm (3.94 in.) long, and insert the arbor [B] through the connecting rod small end.
- On a surface plate, set the big-end arbor on V block [C].
- With the connecting rod held vertically, use a height gauge to measure the difference in the height of the arbor above the surface plate over a 100 mm (3.94 in.) length to determine the amount of connecting rod bend.

★If connecting rod bend exceeds the service limit, the connecting rod must be replaced.

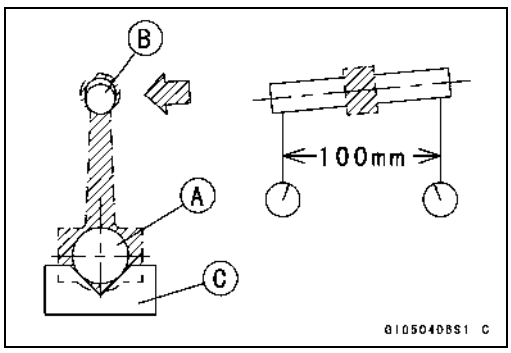

Connecting Rod Bend
Service Limit: TIR 0.2/100 mm (0.008/3.94 in.)

Crankshaft and Connecting Rods

Connecting Rod Twist

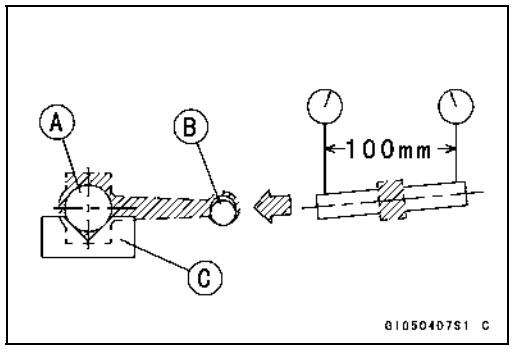

- With the big-end arbor [A] still on V block [C], hold the connecting rod horizontally and measure the amount that the arbor [B] varies from being paralleled with the surface plate over a 100 mm (3.94 in.) length of the arbor to determine the amount of connecting rod twist.

★If connecting rod twist exceeds the service limit, the connecting rod must be replaced.

Connecting Rod Twist
Service Limit: TIR 0.2/100 mm (0.008/3.94 in.)

Connecting Rod Big End Side Clearance

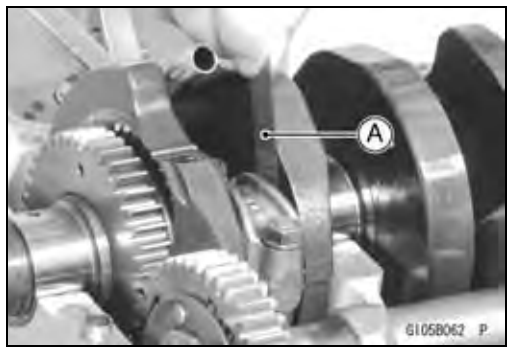

- Measure connecting rod big end side clearance.

○Insert a thickness gauge [A] between the big end and either crank web to determine clearance.

Connecting Rod Big End Side Clearance
Standard: 0.13 ~ 0.38 mm (0.0051 ~ 0.0150 in.)
Service Limit: 0.58 mm (0.023 in.)

★If the clearance exceeds the service limit, replace the connecting rod with new one and then check clearance again. If clearance is too large after connecting rod replacement, the crankshaft also must be replaced.

Connecting Rod Big End Bearing Insert/Crankpin Wear

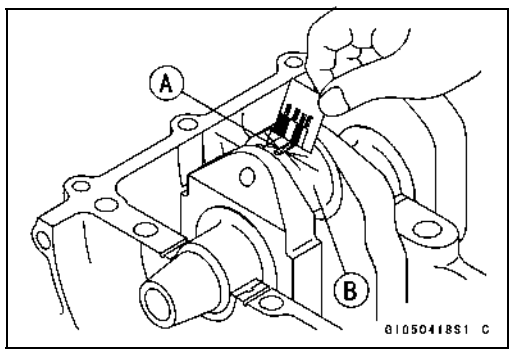

- Measure the bearing insert/crankpin [B] clearance with plastigage [A].
- Tighten the big end nuts to the specified torque (see Connecting Rod Installation).

NOTE

○*Do not move the connecting rod and crankshaft during clearance measurement.*

CAUTION
After measurement, replace the connecting rod bolts.

Connecting Rod Big End Bearing Insert/Crankpin Clearance
Standard: 0.017 ~ 0.041 mm (0.0001 ~ 0.0016 in.)
Service Limit: 0.08 mm (0.0031 in.)

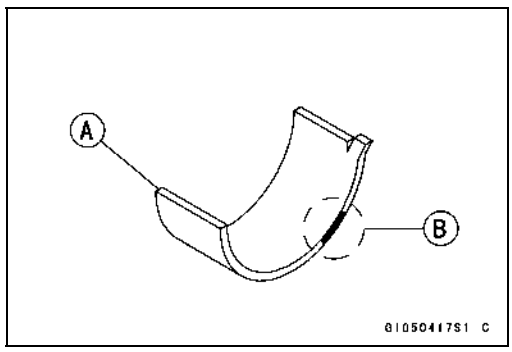

★If the clearance is within the standard, no bearing replacement is required.

★If the clearance is between 0.042 mm (0.00165 in.) and the service limit (0.08 mm, 0.0031 in.), replace the bearing inserts [A] with inserts painted blue [B]. Check insert/crankpin clearance with the plastigage. The clearance may exceed the standard slightly, but it must not be less than the minimum in order to avoid bearing seizure.

★If the clearance exceeds the service limit, measure the diameter of the crankpins.

Crankpin Diameter
Standard: 37.984 ~ 38.000 mm (1.4954 ~ 1.4961 in.)
Service Limit: 37.97 mm (1.4949 in.)

http://mototh.com

Crankshaft and Connecting Rods

★If any crankpin has worn past the service limit, replace the crankshaft with a new one.
★If the measured crankpin diameters are not less than the service limit, but do not coincide with the original diameter markings on the crankshaft, make new marks on it.

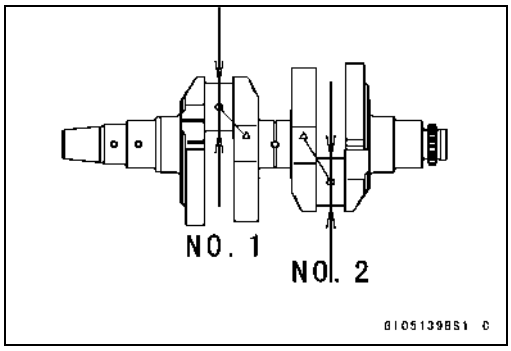

Crankpin Diameter Marks
None 37.984 ~ 37.992 mm (1.4954 ~ 1.4957 in.)
○ 37.993 ~ 38.000 mm (1.4958 ~ 1.4961 in.)

Δ: Crankpin Diameter Marks, "○" or no mark.

- Measure the connecting rod big end inside diameter, and mark each connecting rod big end in accordance with the inside diameter.
- Tighten the connecting rod big end nuts to the specified torque (see Connecting Rod Installation).

NOTE

○*The mark already on the big end should almost coincide with the measurement.*

Connecting Rod Big End Inside Diameter Marks
None 41.000 ~ 41.008 mm (1.6142 ~ 1.6145 in.)
○ 41.009 ~ 41.016 mm (1.6145 ~ 1.6148 in.)

Big End Cap [A]
Connecting Rod [B]
Weight Mark, Alphabet [C]
Diameter Mark (Around Weight Mark) [D]: "○" or no mark

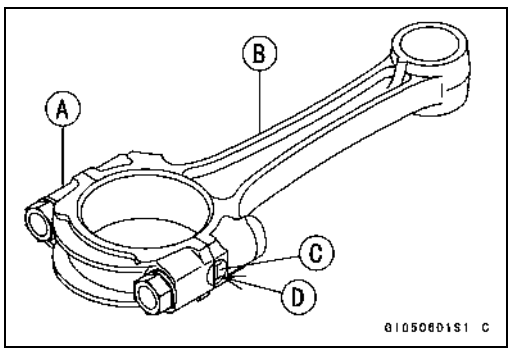

- Select the proper bearing insert [A] in accordance with the combination of the connecting rod and crankshaft coding.
  Size Color [B]

Con-rod Big End Inside Diameter Marking	Crankpin Diameter Marking	Bearing Insert	
		Size Color	Part Number
None	○	Brown	92139-0116
None	None	Black	92139-0115
○	○		
○	None	Blue	92139-0114

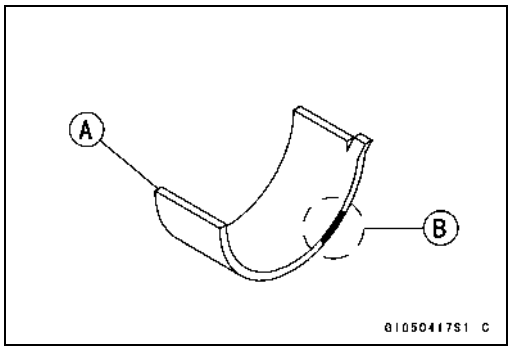

- Install the new inserts in the connecting rod and check insert/crankpin clearance with the plastigage.

http://mototh.com

Crankshaft and Connecting Rods

Crankshaft Side Clearance

- Insert a thickness gauge [A] between the crankcase main bearing and the crank web at the No. 2 journal [B] to determine clearance.

★If the clearance exceeds the service limit, replace the crankcase halves as a set.

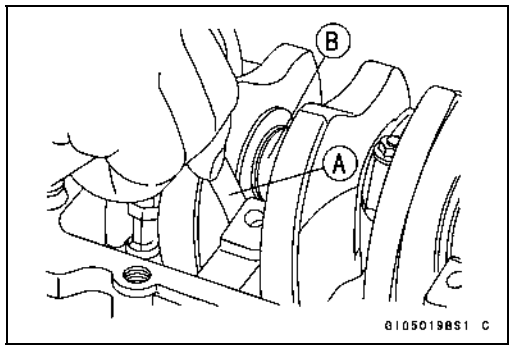

NOTE

○*The upper and lower crankcase halves are machined at the factory in the assembled state, so the crankcase halves must be replaced as a set.*

Crankshaft Side Clearance

Standard: 0.05 ~ 0.20 mm (0.0020 ~ 0.0079 in.)

Service Limit: 0.40 mm (0.0157 in.)

Crankshaft Runout

- Measure the crankshaft runout.

★If the measurement exceeds the service limit, replace the crankshaft.

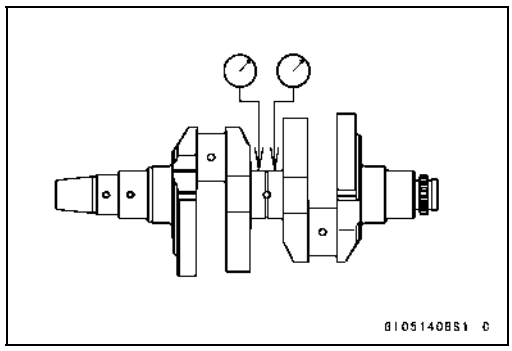

Crankshaft Runout

Standard: TIR 0.02 mm (0.0008 in.) or less

Service Limit: TIR 0.05 mm (0.0020 in.)

Crankshaft Main Bearing Insert/Journal Wear

- Using a plastigage (press gauge) [A], measure the bearing insert/journal [B] clearance.

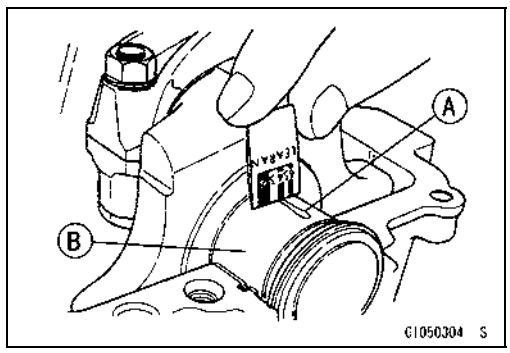

NOTE

○*Tighten the crankcase bolts to the specified torque (see Crankcase Assembly).*

○*Do not turn the crankshaft during clearance measurement.*

○*Journal clearance less than 0.025 mm (0.00098 in.) can not be measured by plastigage, however, using genuine parts maintains the minimum standard clearance.*

Crankshaft Main Bearing Insert/Journal Clearance

Standard: 0.012 ~ 0.036 mm (0.0005 ~ 0.0014 in.)

Service Limit: 0.07 mm (0.0028 in.)

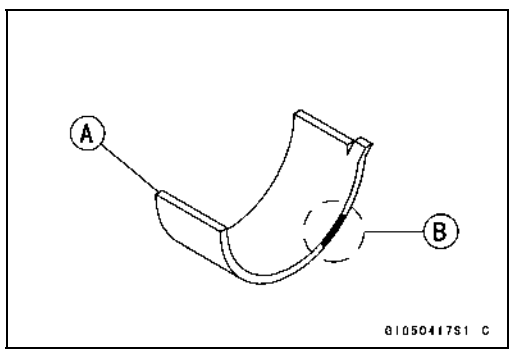

★If the clearance is within the standard, no bearing replacement is required.

★If the clearance is between 0.037 mm (0.0015 in.) and the service limit (0.07 mm, 0.0028 in.), replace the bearing inserts [A] with inserts painted blue [B]. Check insert/journal clearance with the plastigage. The clearance may exceed the standard slightly, but it must not be less than the minimum in order to avoid bearing seizure.

★If the clearance exceeds the service limit, measure the diameter of the crankshaft main journal.

http://mototh.com

Crankshaft and Connecting Rods

Crankshaft Main Journal Diameter
Standard: 37.984 ~ 38.000 mm (1.4954 ~ 1.4961 in.)
Service Limit: 37.96 mm (1.4945 in.)

★If any journal has worn past the service limit, replace the crankshaft with a new one.
★If the measured journal diameters are not less than the service limit, but do not coincide with the original diameter markings on the crankshaft, make new marks on it.

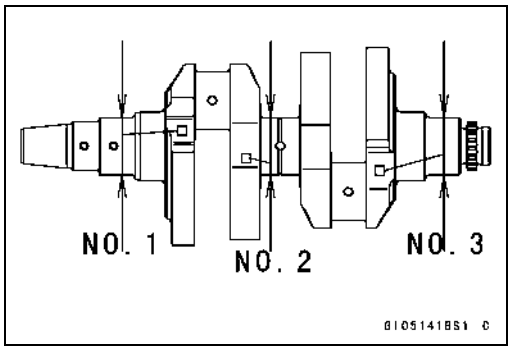

Crankshaft Main Journal Diameter Marks
None 37.984 ~ 37.992 mm (1.4954 ~ 1.4957 in.)
1 37.993 ~ 38.000 mm (1.4958 ~ 1.4961 in.)

□: Crankshaft Main Journal Diameter Marks, “1” or no mark.

- Measure the main bearing inside diameter, and mark the upper crankcase half in accordance with the inside diameter.
  Crankcase Main Bearing Inside Diameter Marks: “○” or no mark.
- Tighten the crankcase bolts to the specified torque (see Crankcase Assembly).

NOTE

○*The mark already on the upper crankcase half should almost coincide with the measurement.*

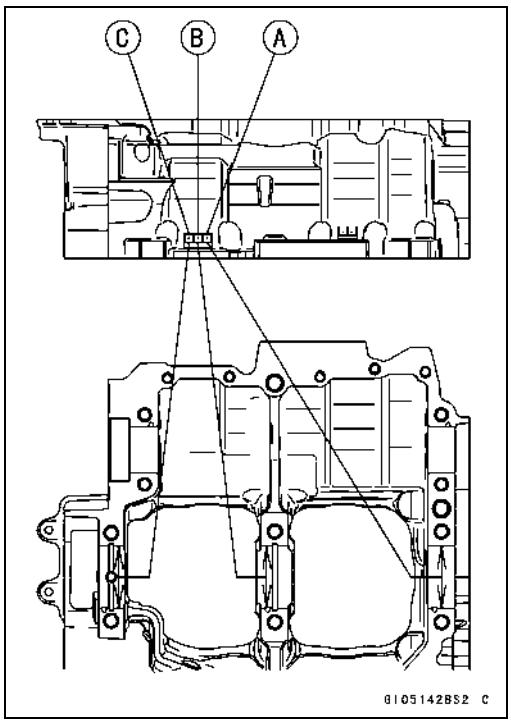

Crankcase Main Bearing Inside Diameter Marks
○ 41.000 ~ 41.008 mm (1.6142 ~ 1.6145 in.)
None 41.009 ~ 41.016 mm (1.6145 ~ 1.6148 in.)

□□□: Crankcase Main Bearing Inside Diameter Marks, “○” mark or no mark

[A] No.1 Journal
[B] No.2 Journal
[C] No.3 Journal

- Select the proper bearing insert [A] in accordance with the combination of the crankcase and crankshaft coding.
  Size Color [B]

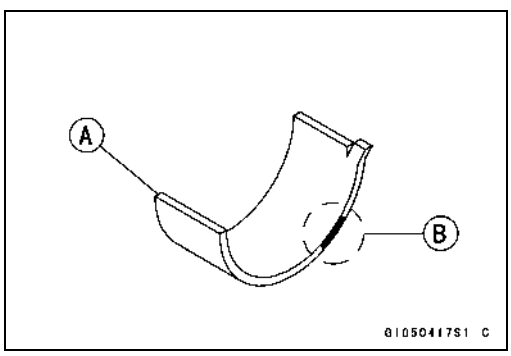

Crankcase Main Bearing Inside Diameter Marking	Crankshaft Main Journal Diameter Marking	Bearing Insert*	
		Size Color	Part Number
○	1	Brown	92028-1905
None	1	Black	92028-1904
○	None		
None	None	Blue	92028-1903

* The bearing inserts for Nos. 1, 2 and 3 journals have oil groove.

http://mototh.com

Crankshaft and Connecting Rods

- Install the new inserts in the crankcase halves and check insert/journal clearance with the plastigage.

http://mototh.com

Balancer

Balancer Removal

- Split the crankcase (see Crankcase Splitting).
- Pull the balancer shaft with the balancer gear out of the crankcase.

Balancer Installation

- Apply molybdenum disulfide oil solution to the inside of the balancer shaft bearing insert.
- Align [A] the timing mark on the balancer gear [B] with the timing mark on the balancer drive gear [C] of the crankshaft.
- Assemble the crankcase (see Crankcase Assembly).

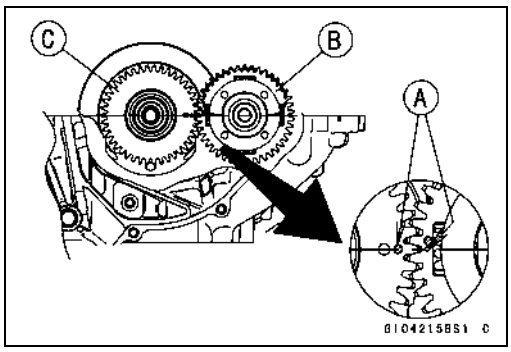

Balancer Shaft Bearing Insert/Journal Clearance

- Measure the bearing insert/journal clearance using a plastigage.

○Split the crankcase and wipe each bearing insert and journal surface clean of oil.

○Cut strips of plastigage to bearing insert width, and place a strip on each journal parallel to the balancer shaft so that the plastigage will be compressed between the journal and the bearing insert.

○Install the lower crankcase half, and tighten the case bolts to the specified torque (see Crankcase Assembly).

NOTE

○*Do not turn the balancer shaft during clearance measurement.*

○Remove the lower crankcase half and measure the plastigage width [A] to determine the bearing insert/journal [B] clearance.

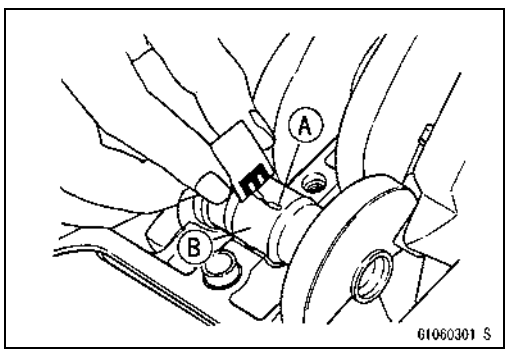

Balancer Shaft Bearing Insert/Journal Clearance

Standard: 0.011 ~ 0.033 mm (0.0004 ~ 0.0013 in.)

Service Limit: 0.08 mm (0.0031 in.)

★If the clearance is within the standard, no bearing insert replacement is required.

★If the clearance is between 0.050 mm and the service limit (0.09 mm), replace the bearing inserts [A] with inserts painted blue [B] Check insert/journal clearance with a plastigage. The clearance may exceed the standard slightly, but it must not be less than the minimum in order to avoid bearing seizure.

★If the clearance exceeds the service limit, measure the diameter of the balancer shaft journal.

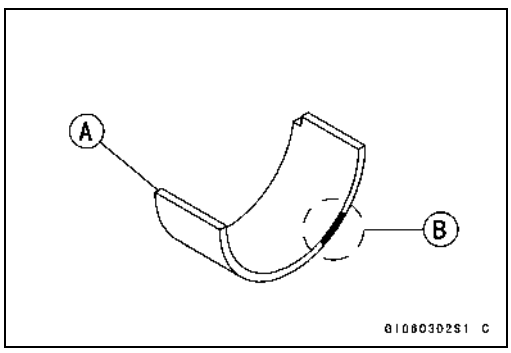

Balancer Shaft Journal Diameter

Standard: 27.987 ~ 28.000 mm (1.1019 ~ 1.1024 in.)

Service Limit: 27.96 mm (1.1008 in.)

Balancer

★If either journal has worn past the service limit, replace the balancer shaft with a new one.
★If the measured journal diameters are not less than the service limit, but do not coincide with the original diameter markings on the balancer shaft, write new marks on it.

Balancer Shaft Diameter Marks

None	**27.987 ~ 27.993 mm (1.1019 ~ 1.1021 in.)**
○	**27.994 ~ 28.000 mm (1.1021 ~ 1.1024 in.)**

Δ: Balancer Shaft Journal Diameter Marks, "○" mark or no mark.

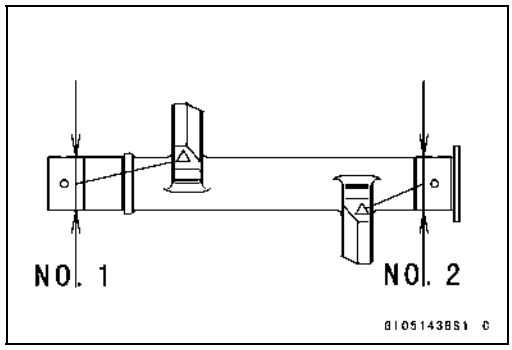

- Put the lower crankcase half on the upper crankcase half without bearing inserts, and tighten the case bolts to the specified torque and sequence (see Crankcase Assembly).
- Measure the crankcase bearing bore diameter for the balancer shaft, and mark the upper crankcase half in accordance with the bore diameter.

NOTE

○*The mark already on the upper crankcase half should almost coincide with the measurement.*

Crankcase Bearing Bore Diameter Marks

○	**31.000 ~ 31.008 mm (1.2205 ~ 1.2208 in.)**
None	**31.009 ~ 31.016 mm (1.2208 ~ 1.2211 in.)**

□□: Crankcase Bearing Bore Diameter Marks, "○" mark or no mark.

[A] No. 1 Journal
[B] No. 2 Journal

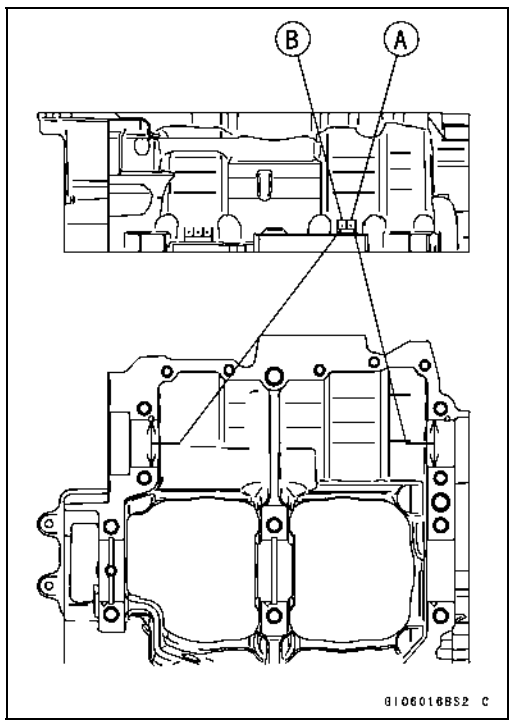

- Select the proper bearing insert in accordance with the combination of the crankcase and the balancer shaft coding.
- Install the new inserts in the crankcase and check insert/journal clearance with a plastigage.

Balancer Shaft Bearing Insert Selection

Crankcase Main Bearing Bore Diameter Mark	Crankshaft Main Journal Diameter Mark	Bearing Insert*	
		Size Color	Part Number
○	○	Brown	92139-0119
○	None	Black	92139-0118
None	○		
None	None	Blue	92139-0117

Transmission

Shift Pedal Removal

- Remove:
  Shift Lever Bolt [A]
  Shift Lever [B]

Shift Pedal Installation

- Align the mark [A] on the shift shaft with the slit [B] on the shift lever.
- Tighten the shift lever bolt securely.

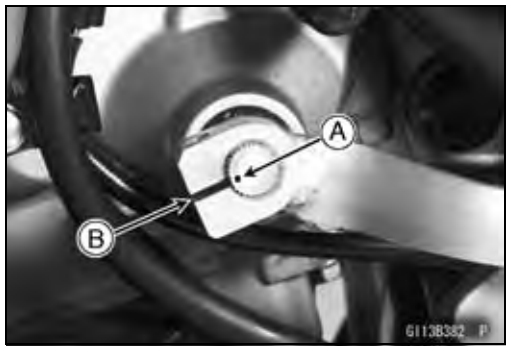

- Be sure the shift pedal position is as shown.
  Shift Pedal Damper [A]
  Bottom [B] of Left Footpeg Stay
  Shift Lever [C]
  Bolt [D] of Left Footpeg Stay

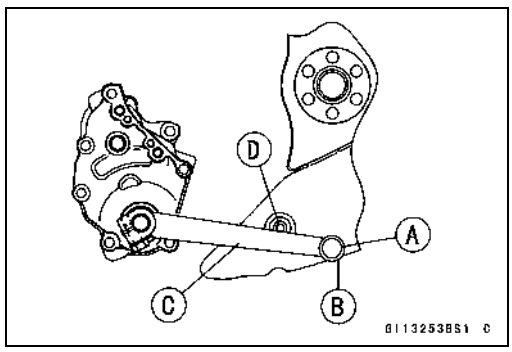

External Shift Mechanism Removal

- Remove:
  Engine Oil (drain, see Engine Oil Change in the Periodic Maintenance chapter)
  Shift Pedal (see Shift Pedal Removal)
  Engine Sprocket (see Engine Sprocket Removal in the Final Drive)
  Neutral Switch Lead Connector (Disconnect)
  Shift Shaft Cover Bolts [A]
  Shift Shaft Cover Screw [B]
  Shift Shaft Cover [C]

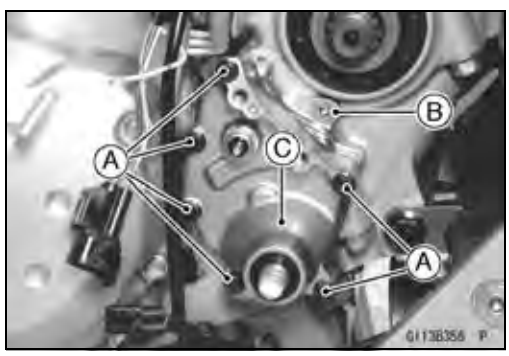

- Remove the shift shaft assembly [A].

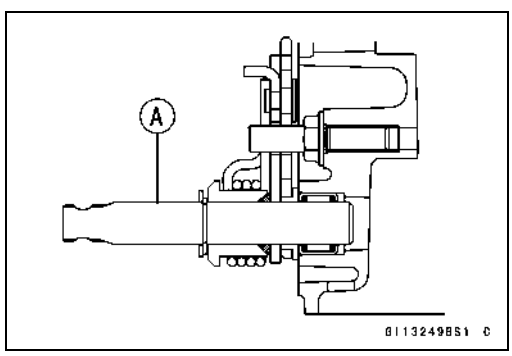

Transmission

● Remove:
Clutch (see Clutch Removal in the Clutch chapter)
Gear Positioning Lever Bolt [A]
Gear Positioning Lever [B], Spacer, Washer and Spring

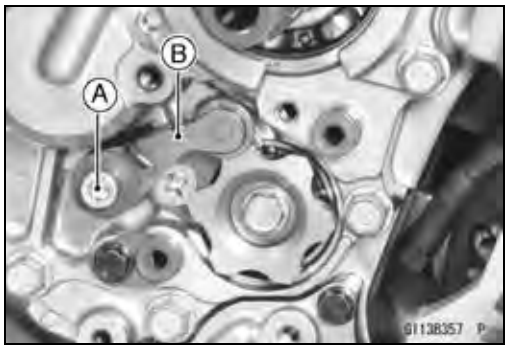

External Shift Mechanism Installation

● Install the gear positioning lever [A] as shown.
Spring [B]
Washer [C]
Spacer [D]
Bolt [E]

○Fook the spring at gear positioning lever, pushing up [F] the fook portion, as shown.

● Apply a non-permanent locking agent to the gear positioning lever bolt and torque it.

Torque - Gear Positioning Lever Bolt: 12 N·m (1.2 kgf·m, 106 in·lb)

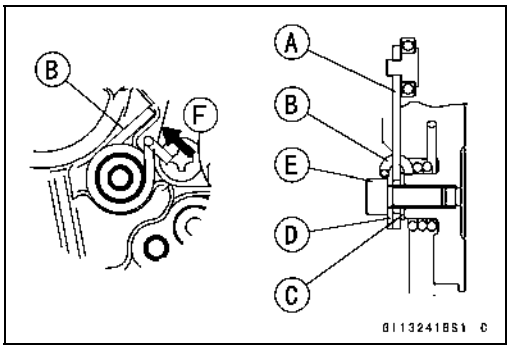

● Install the shift shaft assembly.

○Apply [A] molybdenum disulfide oil solution to the rubbing surface between the lever [B] and pawl [C] and move them two or three times up and down to lubricate them.

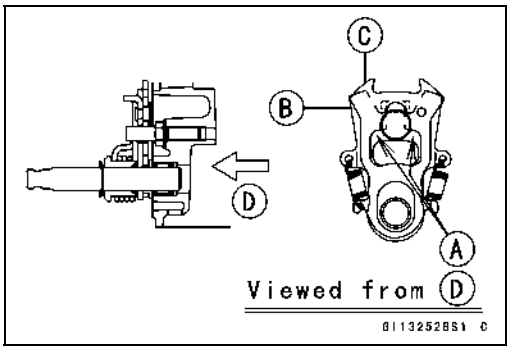

○Be sure that the washer [A] is on the shaft.

○Be sure that the spring hook portions [B] are as shown.

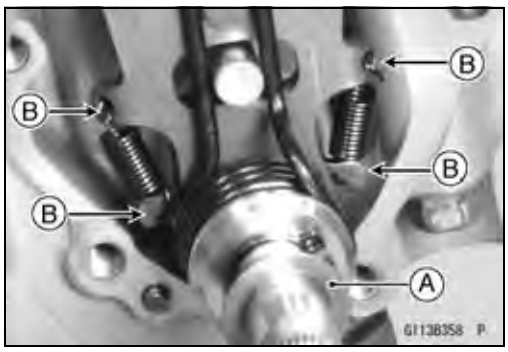

http://mototh.com

Transmission

- When the new needle bearing [A] is installed in the shift shaft cover [B], press and insert the new needle bearing until it is bottomed.

  Special Tool - Bearing Driver Set: 57001-1129

- When the new oil seal [C] is installed in the shift cover, press and insert the new oil seal so that its surface is flush with the end of the hole.

  Special Tool - Bearing Driver Set: 57001-1129

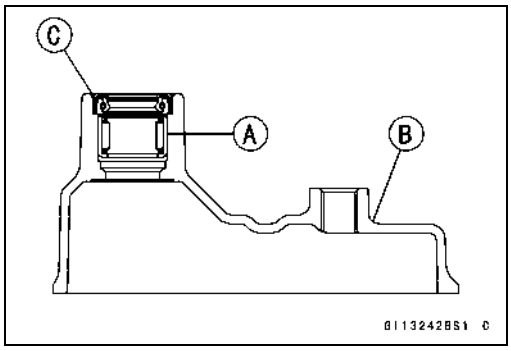

- Install the shift shaft cover.

○Be sure that the dowel pins [A] are in position.
○Install new gasket [B].

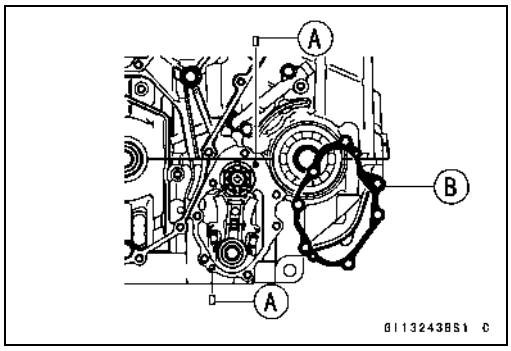

- Apply a non-permanent locking agent to the shift shaft cover screw [A] and bolts [B, C] and torque them.

○Do not apply a non-permanent locking agent to the shift shaft cover bolts [D, E].

Torque - Shift Shaft Cover Bolts: 9.8 N·m (1.0 kgf·m, 87 in·lb)
Shift Shaft Cover Screw: 4.9 N·m (0.50 kgf·m, 43 in·lb)

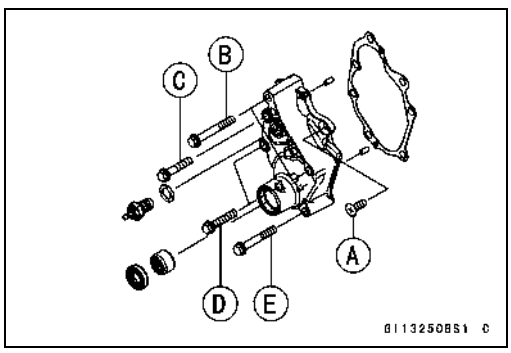

External Shift Mechanism Inspection

- Examine the shift shaft [A] for any damage.

★If the shaft is bent, straighten or replace it.
★If the serration [B] are damaged, replace the shaft.
★If the springs [C] are damaged in any way, replace them.
★If the shift mechanism arm [D] is damaged in any way, replace the arm.

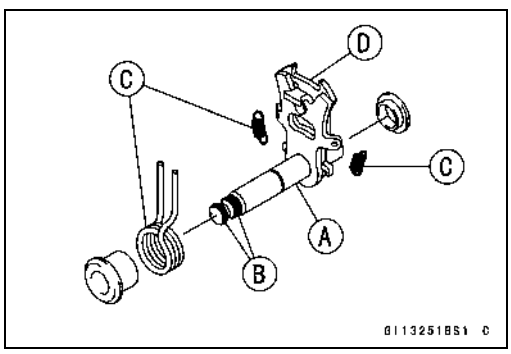

- Check the return spring pin [A] is not loose.

★If it is loose, unscrew it, apply a non-permanent locking agent to the threads, and tighten it.

Torque - Shift Shaft Return Spring Pin: 29 N·m (2.9 kgf·m, 21 ft·lb)

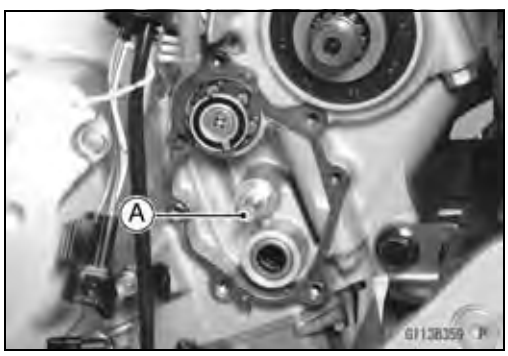

Transmission

- Check the gear positioning lever [A] and its spring for breaks or distortion.

★If the lever or spring are damaged in any way, replace them.

- Visually inspect the shift drum cam [B].

★If they are badly worn or if they show any damage, replace it.

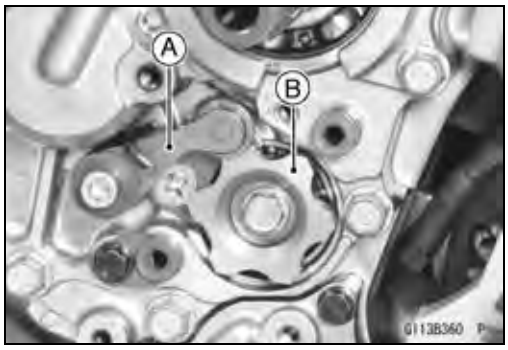

Transmission Assy Removal

- Remove:
  Shift Shaft Assembly (see External Shift Mechanism Removal)
  Neutral Switch Holder Bolt [A]
  Neutral Switch Holder [B] and Pin
  Shift Drum Holder [C] and Pin

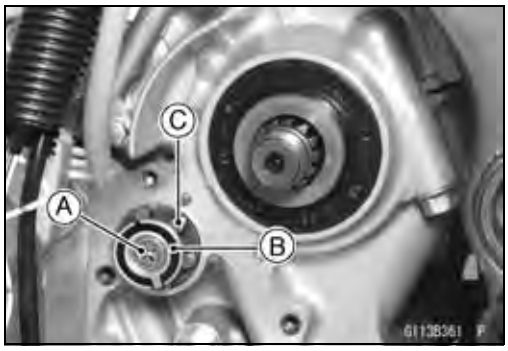

- Remove:
  Collar [A]
  O-ring [B]

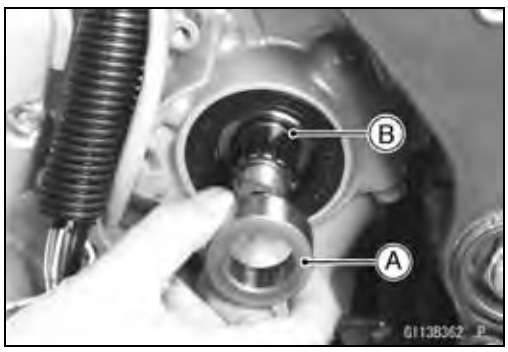

- Remove:
  Clutch (see Clutch Removal in the Clutch chapter)
  Transmission Case Bolts [A]

★If the transmission assy is to be disassembed, remove the following.
  Shift Rod Plate Bolt [B]
  Shift Rod Plate [C]
  Gear Positioning Lever Bolt [D]
  Gear Positioning Lever [E] with Spring, Washer and Spacer

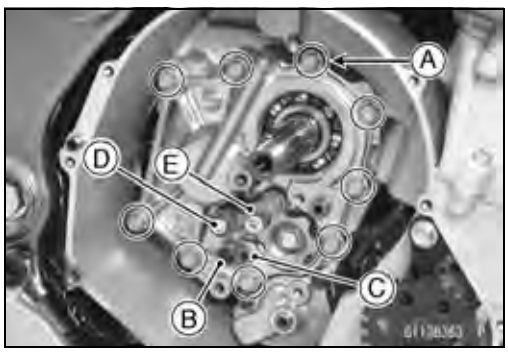

- Pull the transmission assy [A] out of the crankcase.

http://mototh.com

Transmission

Transmission Assy Disassembly

- Remove the transmission assy (see Transmission Assy Removal)
- Remove the following from the transmission case [A].
  Shift Rods [B]
  Shift Forks [C]
  Drive Shaft [D]
  Output Shaft [E]

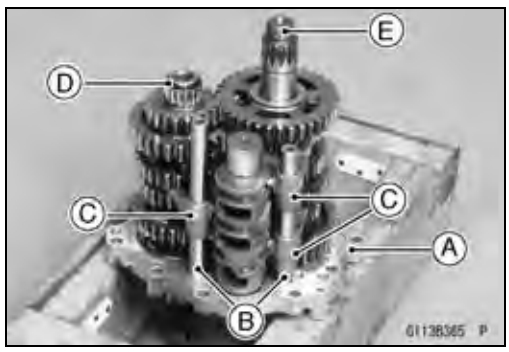

- Remove:
  Shift Drum Cam Bolt [A]
  Shift Drum [B] and Pin
  Shift Drum [C]

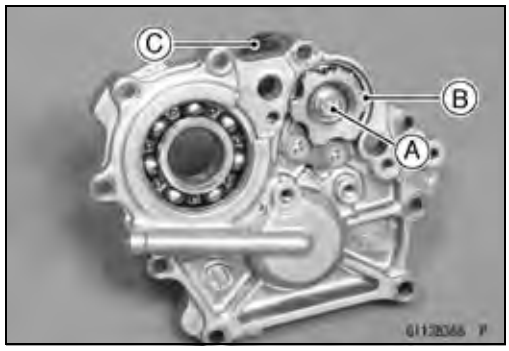

Transmission Assy Assembly

- When the new ball bearings [A] are installed in the transmission case [B], press and insert them until they are bottomed.

  Special Tool - Bearing Driver Set 57001-1129

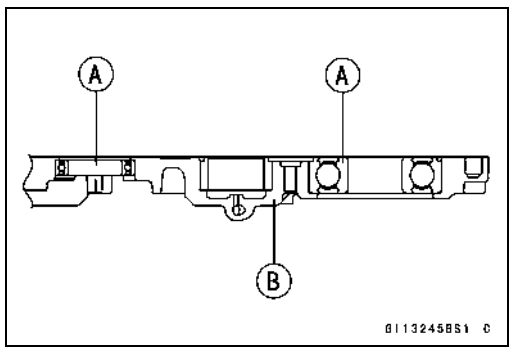

Transmission

- Install the following on the transmission case [A].
  Shift Drum [B]
  Pin [C]
  Shift Drum Cam [D]

○Align the pin with the hole on the shift drum cam.

- Apply a non-permanent locking agent to the shift drum cam bolt and torque it.

Torque - Shift Drum Cam Bolt: 12 N·m (1.2 kgf·m, 106 in·lb)

- Install the following as a set.
  Drive Shaft [F]
  Output Shaft [G]
- Install the forks as shown.

○Position the one [H] with shortest ears on the drive shaft and place the pin in the center groove in the shift drum.

○The two forks [J] on the output shaft are identical.

- Install the shift rods, noting the groove position.

○The rod [K] length of the output shaft side is shorter than the rod [L] length of the drive shaft side.

- Apply molybdenum disulfide oil solution to the transmission gears shown with X marks [M].
- Be sure that the spacer [P] is on the output shaft.

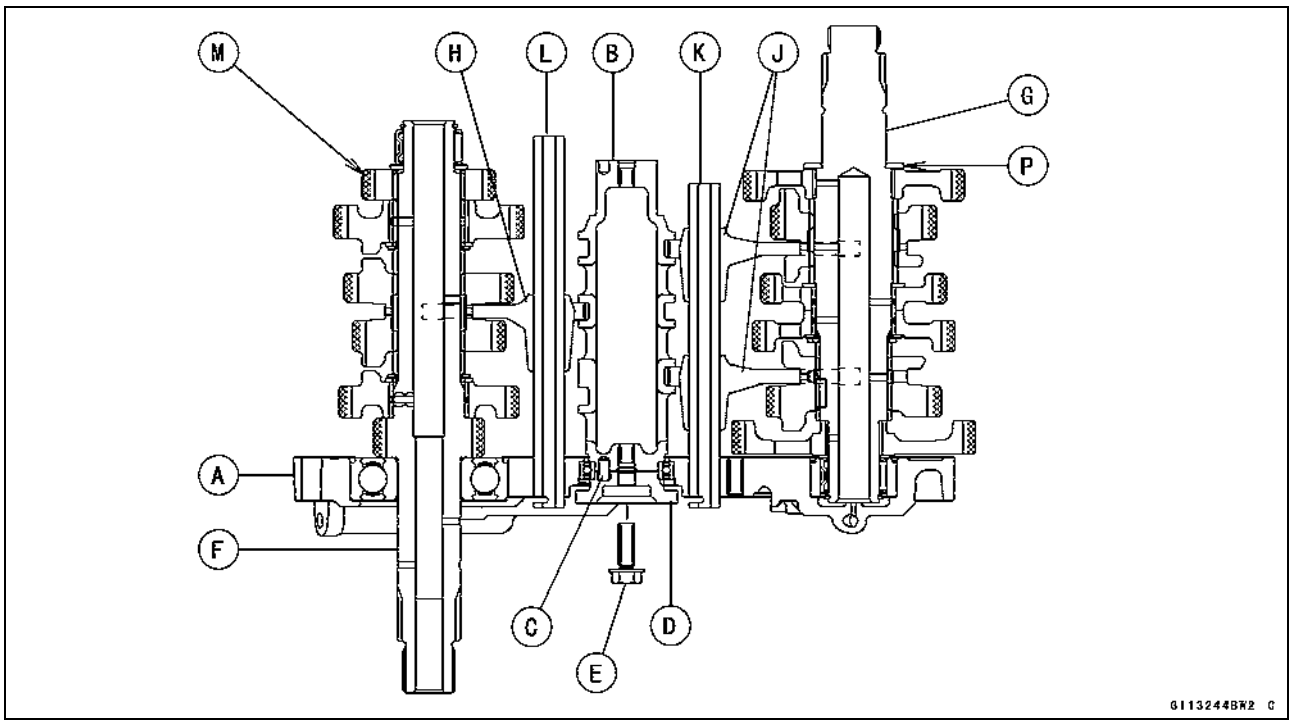

Transmission Assy Installation

- Assemble the transmission assy (see Transmission Assy Assembly).
- Be sure that the dowel pins [A] are in position.
- Apply grease to the O-ring [B] on the oil pipe.
- Install the transmission assy on the crankcase.
- Tighten the transmission case bolts.

Torque - Transmission Case Bolts: 20 N·m (2.0 kgf·m, 15 ft·lb)

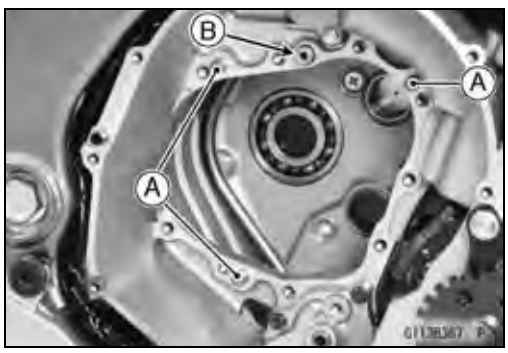

Transmission

- Install the gear positioning lever (see External Shift Mechanism Installation).
- Install the shift rod plate.

  Torque - Shift Rod Plate Bolt: 9.8 N·m (1.0 kgf·m, 87 in·lb)
- Set the gear positioning lever to the neutral position [A].
- Check that the drive and output shaft turn freely.

- Install:
  Pin [A]
  Shift Drum Holder [B]
  Pin [C]
  Neutral Switch Holder [D]
  Neutral Switch Holder Screw [E]

○Apply a non-permanent locking agent to the neutral switch holder screw and torque it.

Torque - Neutral Switch Holder Screw: 4.9 N·m (0.50 kgf·m, 43 in·lb)

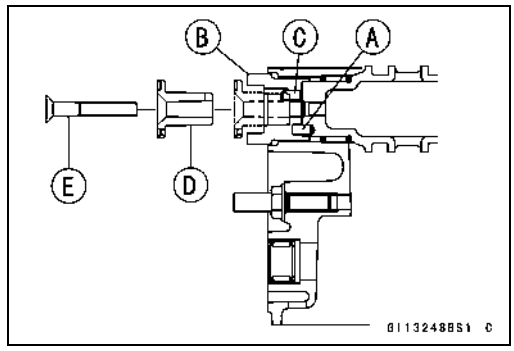

- Apply grease to the O-ring [A] and install its position [B] on the output shaft.
- Apply grease to the lip of the oil seal [C].
- Install the collar [D].

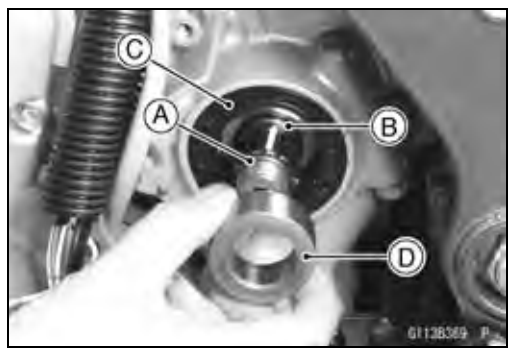

Transmission Shaft Removal

- Remove the transmission assy (see Transmission Assy Removal).
- Remove:
  Shift Rods [A]
  Shift Forks [B]
  Drive Shaft [C] and Output Shaft [D]

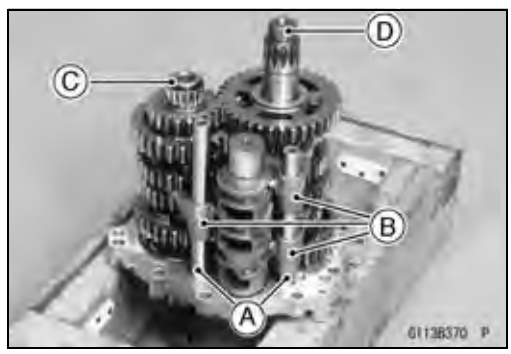

Transmission Shaft Installation

- Be sure that the spacer [A] is on the output shaft [B].

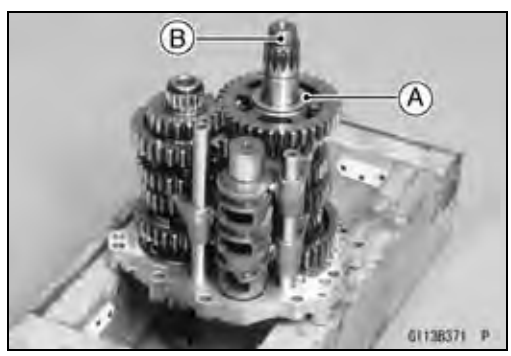

Transmission

- Install the transmission assy on the crankcase (see Transmission Assy Installation).
- Press in the oil seal [A] onto collar [B] so that the surface of the oil seal is flush with the surface [C] of the crankcase.

○Apply oil to the outer circumference [D] of the oil seal so that it will go into place smoothly.

○Apply grease to the lip [E] of the oil seal.

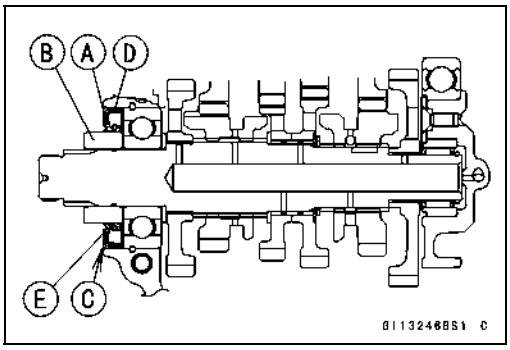

Transmission Shaft Disassembly

- Remove the transmission shafts (see Transmission Shaft Removal).
- Remove the circlips, disassemble the transmission shafts.

Special Tool - Outside Circlip Pliers: 57001-144

- The 5th gear [A] on the output shaft has three steel balls assembled into it for the positive neutral finder mechanism. Remove the 5th gear.

○Set the output shaft in a vertical position holding the 3rd gear [B].

○Spin the 5th gear quickly [C] and pull it off upward.

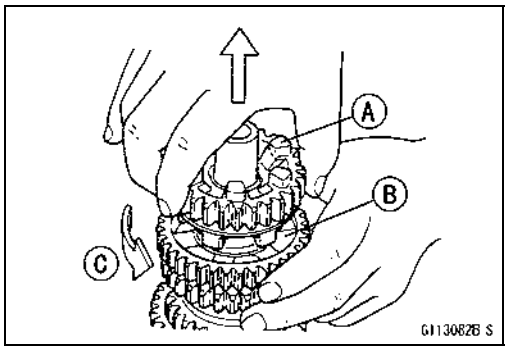

Transmission Shaft Assembly

- Apply engine oil to the bushings, needle bearings and shafts.
- Install the gear bushings [A] on the shaft with their holes [B] aligned.

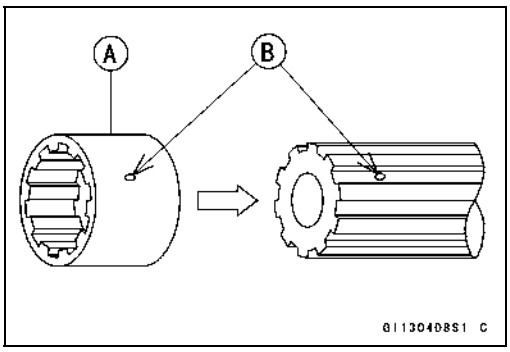

- Replace any circlips removed with new ones.
- Install the circlips [A] so that the opening [B] is aligned with a spline groove [C].

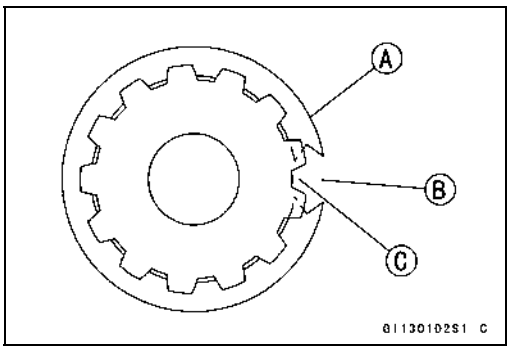

Transmission

- The drive shaft gears can be recognized by size: the gear with the smallest diameter is 1st gear, and the largest one is 6th gear. Be sure that all parts are put back in the correct sequence and all circlips and washers are properly in place.
- Install the 3rd/4th gear onto the drive shaft with their oil holes aligned.
- Install the 6th gear bushing onto the drive shaft with their oil holes aligned.
- The output shaft gears can be recognized by size: the gear with the largest diameter is 1st gear, and the smallest one is 6th gear. Be sure that all parts are put back in the correct sequence and all circlips and washers are properly in place.
- Install the 5th and 6th gears onto the output shaft with their oil holes aligned.
- Install the 3rd/4th gear bushings onto the output shaft with their oil holes aligned.

- Fit the steel balls into the 5th gear holes in the output shaft, aligning three oil holes [D].
  5th Gear [A]
  Output Shaft [B]
  Steel Balls [C]

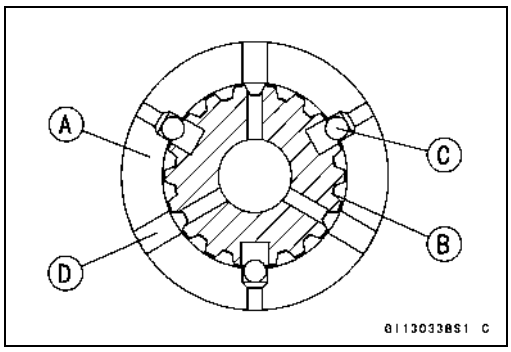

CAUTION

Do not apply grease to the balls to hold them in place. This will cause the positive neutral finder mechanism to malfunction.

○After assembling the 5th gear with steel balls in place on the output shaft, check the ball-locking effect that the 5th gear doesn't come out of the output shaft when moving it up and down by hand.

- Check that each gear spins or slides freely on the transmission shafts without binding after assembly.

http://mototh.com

Transmission

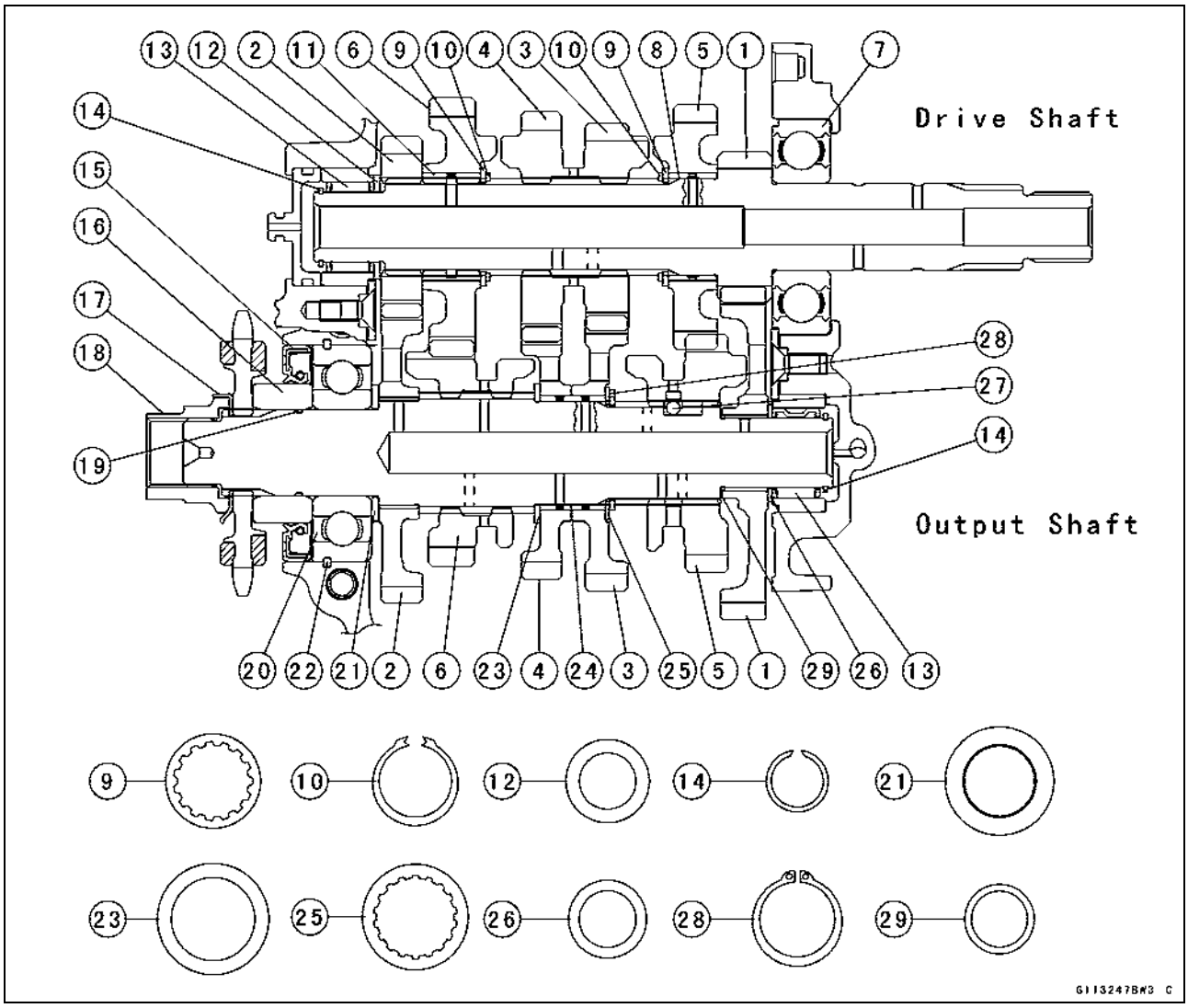

1. 1st Gear
2. 2nd Gear
3. 3rd Gear
4. 4th Gear
5. 5th Gear
6. 6th (Top) Gear
7. Ball Bearing
8. Bushing
9. Toothed Washer, ϕ34 mm (1.34 in.)
10. Circlip
11. Bushing
12. Thrust Washer, ϕ30 mm (1.18 in.)
13. Needle Bearing
14. Circlip
15. Oil Seal
16. Collar
17. Washer
18. Nut
19. O-ring
20. Bearing
21. Spacer, ϕ39 mm (1.54 in.)
22. Positioning Ring
23. Washer, ϕ40 mm (1.57 in.)
24. Bushing
25. Toothed Washer, ϕ38 mm (1.50 in.)
26. Shim, ϕ28 mm (1.10 in.)
27. Steel Ball
28. Circlip, ϕ32.2 mm (1.268 in.)
29. Thrust Washer, ϕ25 mm (0.98 in.)

http://mototh.com

Transmission

Shift Drum and Fork Removal

- Remove the transmission assy (see Transmission Assy Removal).
- Remove the shift forks [A] and shift drum [B] (see Transmission Assy Disassembly).

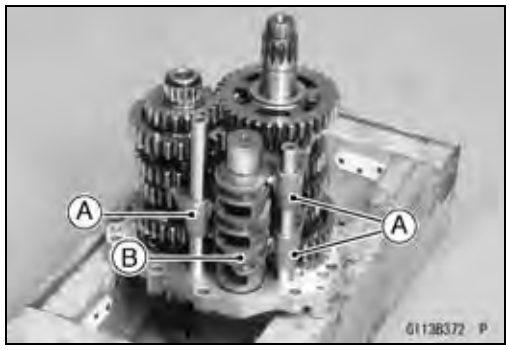

Shift Drum and Fork Installation

- Refer to Transmission Assy Assembly and Installation.

Shift Drum Disassembly

- Refer to Transmission Assy Removal and Disassembly.

Shift Drum Assembly

- Refer to Transmission Assembly and Installation.

Shift Fork Bending

- Visually inspect the shift forks, and replace any fork that is bent. A bent fork could cause difficulty in shifting, or allow the transmission to jump out of gear when under power.
  90° [A]

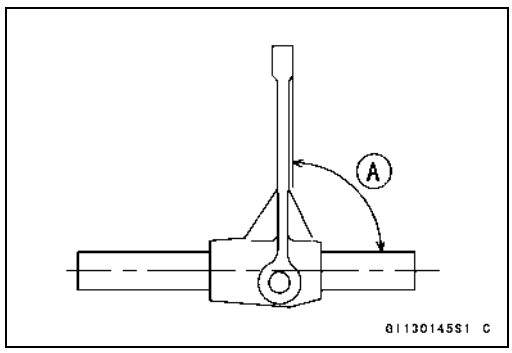

Shift Fork/Gear Groove Wear

- Measure the thickness of the shift fork ears [A], and measure the width [B] of the gear grooves.

★If the thickness of a shift fork ear is less than the service limit, the shift fork must be replaced.

Shift Fork Ear Thickness

Standard:	**5.9 ~ 6.0 mm (0.232 ~ 0.236 in.)**
Service Limit:	**5.8 mm (0.228 in.)**

★If the gear groove is worn over the service limit, the gear must be replaced.

Gear Groove Width

Standard:	**6.05 ~ 6.15 mm (0.238 ~ 0.242 in.)**
Service Limit:	**6.25 mm (0.246 in.)**

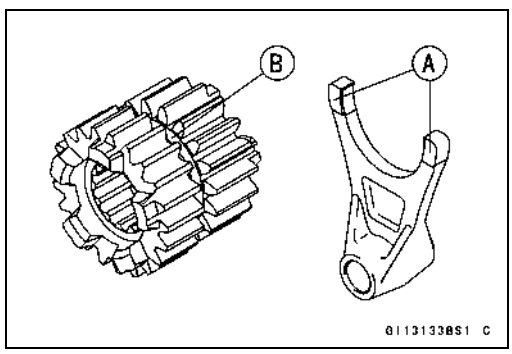

Transmission

Shift Fork Guide Pin/Drum Groove Wear

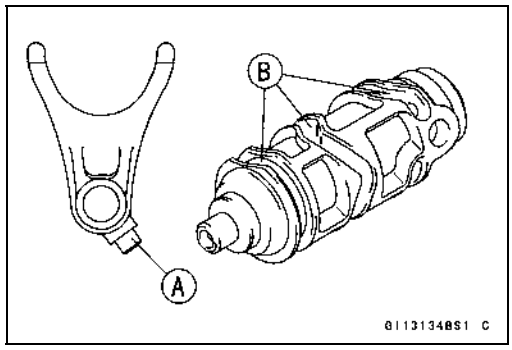

- Measure the diameter of each shift fork guide pin [A], and measure the width [B] of each shift drum groove.

★If the guide pin on any shift fork is less than the service limit, the fork must be replaced.

Shift Fork Guide Pin Diameter

Standard: 6.9 ~ 7.0 mm (0.272 ~ 0.276 in.)

Service Limit: 6.8 mm (0.268 in.)

★If any shift drum groove is worn over the service limit, the drum must be replaced.

Shift Drum Groove Width

Standard: 7.05 ~ 7.20 mm (0.278 ~ 0.283 in.)

Service Limit: 7.3 mm (0.287 in.)

Gear Dog and Gear Dog Hole Damage

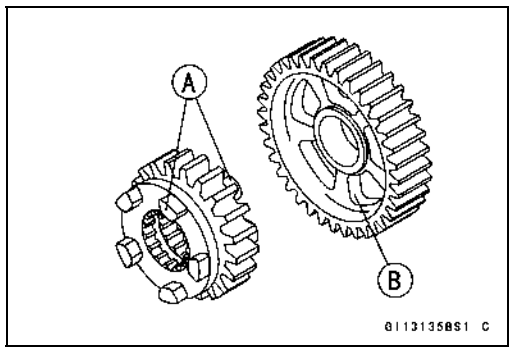

- Visually inspect the gear dogs [A] and gear dog holes [B].

★Replace any damaged gears or gears with excessively worn dogs or dog holes.

http://mototh.com

Ball Bearing, Needle Bearing, and Oil Seal

Ball and Needle Bearing Replacement

CAUTION

Do not remove the ball or needle bearings unless it is necessary. Removal may damage them.

- Using a press or puller, remove the ball bearing and/or needle bearings.

NOTE

○*In the absence of the above mentioned tools, satisfactory results may be obtained by heating the case to approximately 93°C (200°F) max., and tapping the bearing in or out.*

CAUTION

Do not heat the case with a torch. This will warp the case. Soak the case in oil and heat the oil.

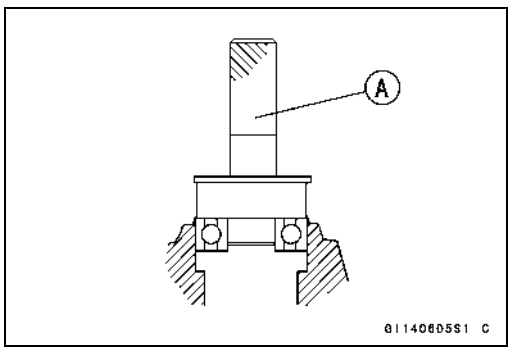

- Using a press and the bearing driver set [A], install the new ball bearing until it stops at the bottom of its housing.

○The new needle bearings must be pressed into the crankcase so that the end is flush with the end of the hole.

Special Tool - Bearing Driver Set: 57001-1129

Ball and Needle Bearing Wear

CAUTION

Do not remove the bearings for inspection. Removal may damage them.

- Check the ball bearings.

○Since the ball bearings are made to extremely close tolerances, the wear must be judged by feel rather than measurement. Clean each bearing in a high-flash point solvent, dry it (do not spin the bearing while it is dry), and oil it with engine oil.

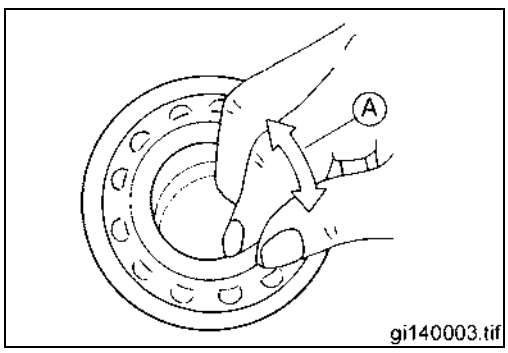

○Spin [A] the bearing by hand to check its condition.

★If the bearing is noisy, does not spin smoothly, or has any rough spots, replace it.

- Check the needle bearings.

○The rollers in a needle bearing normally wear very little, and wear is difficult to measure. Instead of measuring, inspect the bearing for abrasion, color change, or other damage.

★If there is any doubt as to the condition of a needle bearing, replace it.

Oil Seal Inspection

- Inspect the oil seals.

★Replace it if the lips are misshapen, discolored (indicating that the rubber has deteriorated), hardened or otherwise damaged.

http://mototh.com

http://mototh.com

Wheels/Tires

Table of Contents

Exploded View 10-2
Specifications 10-4
Special Tools 10-5
Wheels (Rims) 10-6
Front Wheel Removal 10-6
Front Wheel Installation 10-6
Rear Wheel Removal 10-8
Rear Wheel Installation 10-8
Wheel Inspection 10-10
Axle Inspection 10-10
Balance Inspection 10-11
Balance Adjustment 10-11
Balance Weight Removal 10-11
Balance Weight Installation 10-11
Tires 10-13
Air Pressure Inspection/Adjustment 10-13
Tire Inspection 10-13
Tire Removal 10-13
Tire Installation 10-13
Tire Repair 10-15
Hub Bearing 10-16
Hub Bearing Removal 10-16
Hub Bearing Installation 10-16
Hub Bearing Inspection 10-16
Hub Bearing Lubrication 10-17

http://mototh.com

Exploded View

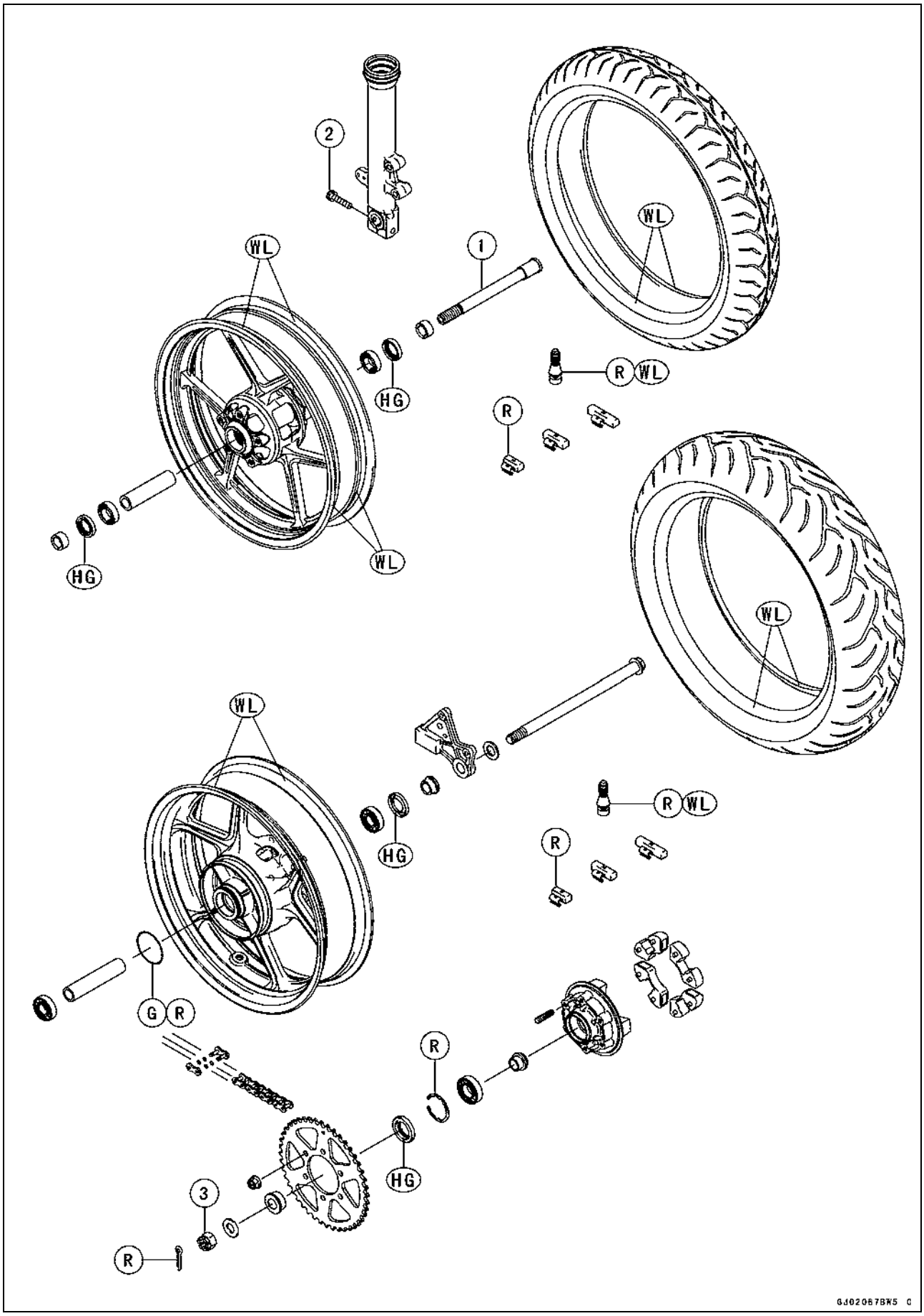

Exploded View

No.	Fastener	Torque			Remarks
		N·m	kgf·m	ft·lb	
1	Front Axle	108	11.0	80	
2	Front Axle Clamp Bolt	34	3.5	25	
3	Rear Axle Nut	108	11.0	80	

G: Apply grease.
HG: Apply high-temperature grease.
R: Replacement Parts
WL: Apply soap and water solution or rubber lubricant.

http://mototh.com

Specifications

Item	Standard	Service Limit
Wheels (Rims)		
Rim Runout:		
Axial	TIR 0.5 mm (0.02 in.) or less	TIR 1.0 mm (0.04 in.)
Radial	TIR 0.8 mm (0.03 in.) or less	TIR 1.0 mm (0.04 in.)
Axle Runout/100 mm (3.94 in.)	TIR 0.03 mm (0.0012 in.) or less	TIR 0.2 mm (0.008 in.)
Wheel Balance	10 g (0.35 oz.) or less	– – –
Balance Weights	10 g (0.35 oz.), 20 g (0.71 oz.), 30 g (1.06 oz.)	– – –
Rim Size:		
Front	17 × 3.50	– – –
Rear	17 × 4.50	– – –
Tires		
Air Pressure (when Cold):		
Front	Up to 180 kg (397 lb) load: 225 kPa (2.25 kgf/cm², 32 psi)	– – –
Rear	Up to 180 kg (397 lb) load: 250 kPa (2.50 kgf/cm², 36 psi)	– – –
Tread Depth:		
Front	6.5 mm (0.26 in.)	1 mm (0.04 in.) (AT, CH, DE) 1.6 mm (0.06 in.)
Rear	9.0 mm (0.35 in.)	Up to 130 km/h (80 mph): 2 mm (0.08 in.) Over 130 km/h (80 mph): 3 mm (0.12 in.)
Standard Tires:	Make, Type	Size
Front	DUNLOP, SPORTMAX RADIAL D221FAJ	120/70 ZR17 M/C (58 W)
Rear	DUNLOP, SPORTMAX D221J	160/60 ZR17 M/C (69 W)

AT: Austria
CH: Switzerland
DE: Germany

⚠ WARNING

Use the same manufacturer's tires on both front and rear wheels.

http://mototh.com

Special Tools

Bearing Driver Set:
57001-1129

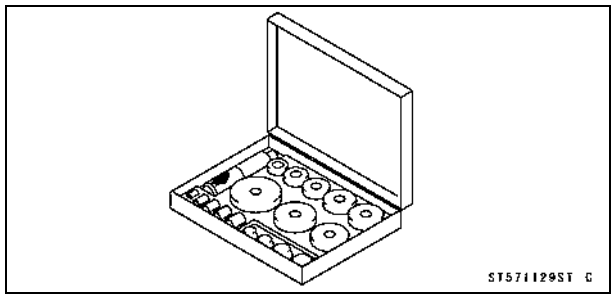

Jack:
57001-1238

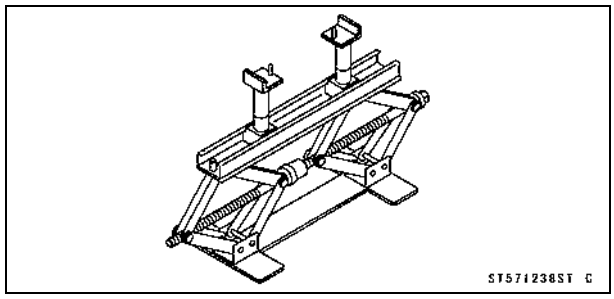

Bearing Remover Head, ϕ20 × ϕ22:
57001-1293

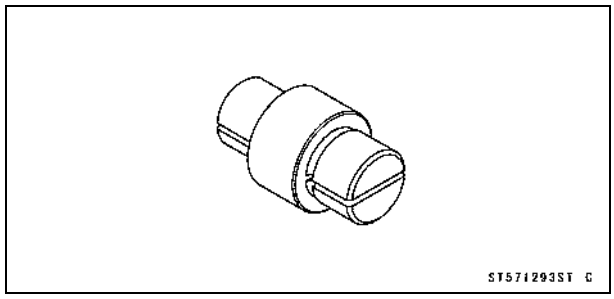

Bearing Remover Shaft, ϕ13:
57001-1377

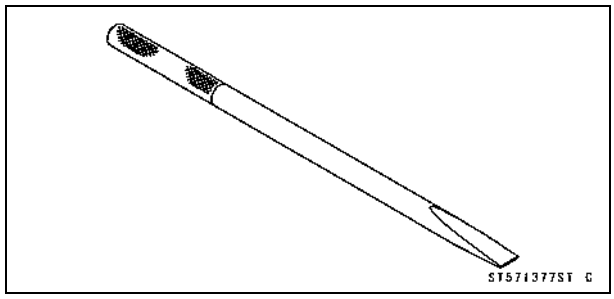

Jack Attachment:
57001-1608

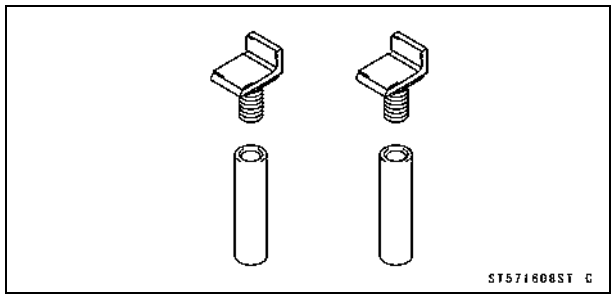

http://mototh.com

Wheels (Rims)

Front Wheel Removal

- Remove:
  Brake Caliper Mounting Bolts [A]
  Front Brake Calipers [B]

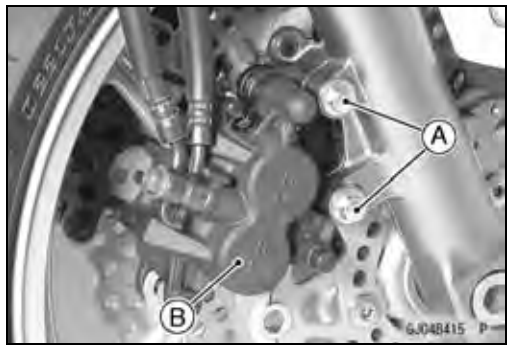

- Loosen:
  Axle Clamp Bolt [A]
- Remove the front axle [B].

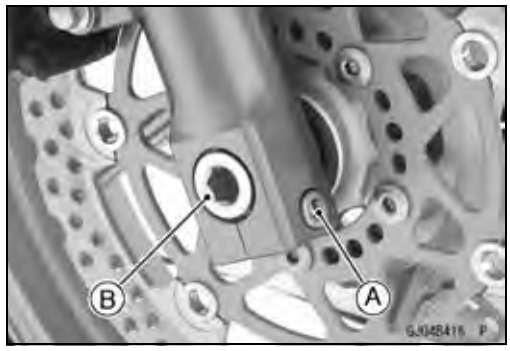

- Remove the lower fairing (see Lower Fairing Removal in the Frame chapter).
- Raise the front wheel off the ground with jack.

Special Tools - Jack: 57001-1238
Jack Attachment: 57001-1608

- Pull out the axle to the right and drop the front wheel out of the forks.

CAUTION
Do not lay the wheel on the ground with the discs facing down. This can damage or warp the disc. Place wooden blocks under the wheel so that the disc does not touch the ground.

Front Wheel Installation

NOTE

○*The direction of the wheel rotation [A] is shown by an arrow [B] on the wheel spoke.*

- Check the wheel rotation mark on the front wheel and install it.

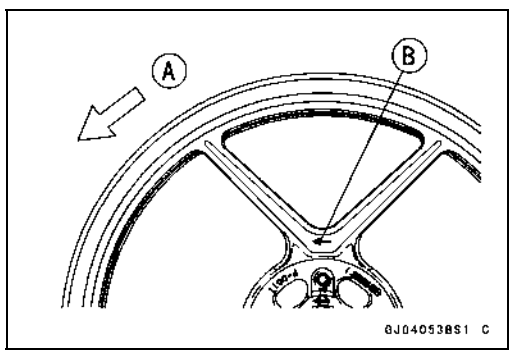

http://mototh.com

Wheels (Rims)

- Apply high-temperature grease to the grease seal lips.
- Fit the collars [A] on the both sides of the hub.

- Insert the front axle, and tighten the axle.

  Torque - Front Axle: 108 N·m (11.0 kgf·m, 80 ft·lb)
- Before tightening the axle clamp bolt on the right front fork leg, pump the front fork up and down 4 or 5 times to allow the right front fork leg to seat on the front axle.

NOTE

○*Put a block in front of the front wheel to stop moving.*

- Tighten the axle clamp bolt [A].

  Torque - Front Axle Clamp Bolt: 34 N·m (3.5 kgf·m, 25 ft·lb)

- Install the lower fairing (see Lower Fairing Installation in the Frame chapter).
- Install the front brake calipers (see Caliper Installation in the Brakes chapter).
- Check the front brake effectiveness (see Brake Operation Inspection in the Periodic Maintenance chapter).

⚠ WARNING

Do not attempt to drive the motorcycle until a full brake lever is obtained by pumping the brake lever until the pads are against the disc. The brake will not function on the first application of the lever if this is not done.

http://mototh.com

Wheels (Rims)

Rear Wheel Removal

- Raise the rear wheel off the ground with stand [A].

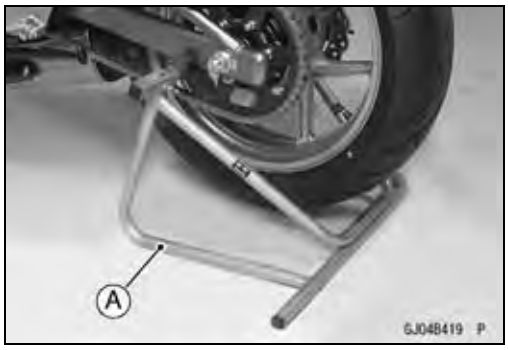

- Remove:
  Brake Caliper Mounting Bolts [A]
  Rear Brake Caliper [B]

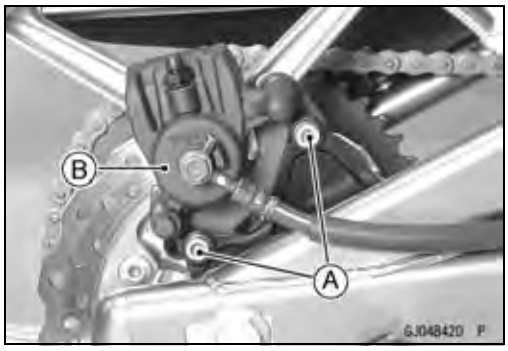

- Remove:
  Cotter Pin [A]
  Axle Nut [B]
  Washer [C]
  Axle [D] with Washer

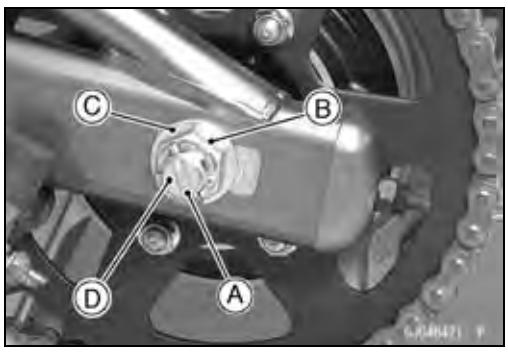

- Remove the drive chain [A] from the rear sprocket toward the left.
- Move the rear wheel back and remove it.

CAUTION
Do not lay the wheel on the ground with the disc facing down. This can damage or warp the disc. Place wooden blocks under the wheel so that the disc does not touch the ground.

Rear Wheel Installation

- Apply high-temperature grease to the grease seal lips.
- Fit the collars [A] on the both sides of the hub.

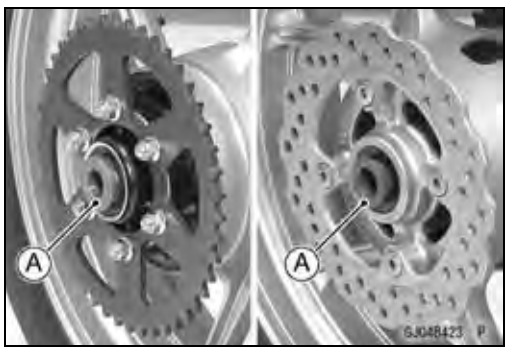

http://mototh.com

Wheels (Rims)

- Engage the drive chain with the rear sprocket.
- Install the caliper bracket [A] onto the swingarm stop [B].
- Insert the axle from the right side of the wheel, and tighten the axle nut.

Torque - Rear Axle Nut: 108 N·m (11.0 kgf·m, 80 ft·lb)

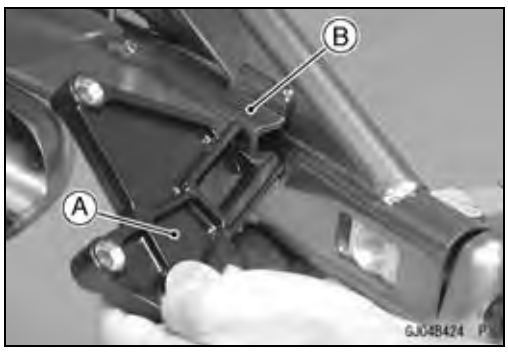

- Insert a new cotter pin [A].

NOTE

○*When inserting the cotter pin, if the slots in the nut do not align with the cotter pin hole in the axle, tighten the nut clockwise [B] up to next alignment.*
○*It should be within 30°.*
○*Loosen once and tighten again when the slot goes past the nearest hole.*

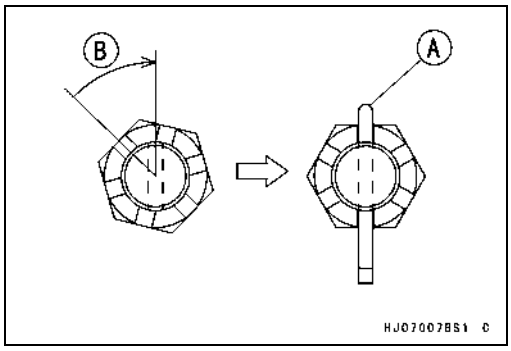

- Bend the cotter pin [A] over the nut [B].

⚠ WARNING

If the rear axle nut is not securely tightened or the cotter pin is not installed, an unsafe riding condition may result.

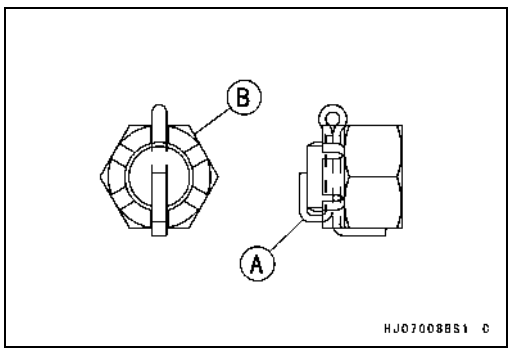

- Adjust the drive chain slack after installation (see Drive Chain Slack Inspection in the Periodic Maintenance chapter).
- Install the rear brake caliper (see Caliper Installation in the Brakes chapter).
- Check the rear brake effectiveness (see Brake Operation Inspection in the Periodic Maintenance chapter).

⚠ WARNING

Do not attempt to drive the motorcycle until a full brake pedal is obtained by pumping the brake pedal until the pads are against the disc. The brake will not function on the first application of the pedal if this is not done.

http://mototh.com

Wheels (Rims)

Wheel Inspection

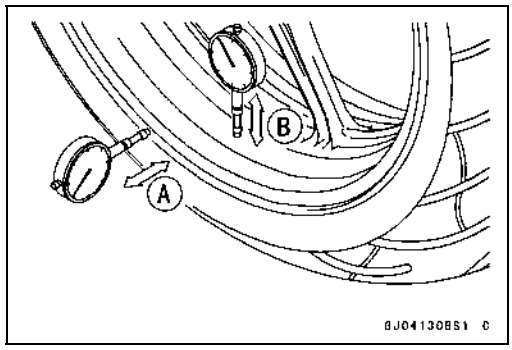

- Raise the front/rear wheel off the ground with jack.

  Special Tools - Jack: 57001-1238
  Jack Attachment: 57001-1608

- Spin the wheel lightly, and check for roughness or binding.
- ★If roughness or binding is found, replace the hub bearings.
- Inspect the wheel for small cracks, dents, bending, or warp.
- ★If there is any damage to the wheel, replace the wheel.
- Remove the wheel, and support it without the tire by the axle.
- Measure the rim runout, axial [A] and radial [B], with a dial gauge.
- ★If rim runout exceeds the service limit, check the hub bearings.
- ★If the problem is not due to the bearings, replace the wheel.

Rim Runout

Standard:	
Axial	**TIR 0.5 mm (0.02 in.) or less**
Radial	**TIR 0.8 mm (0.03 in.) or less**
Service Limit:	
Axial	**TIR 1.0 mm (0.04 in.)**
Radial	**TIR 1.0 mm (0.04 in.)**

⚠ WARNING

Never attempt to repair a damaged wheel. If there is any damage besides wheel bearings, the wheel must be replaced to insure safe operational condition.

Axle Inspection

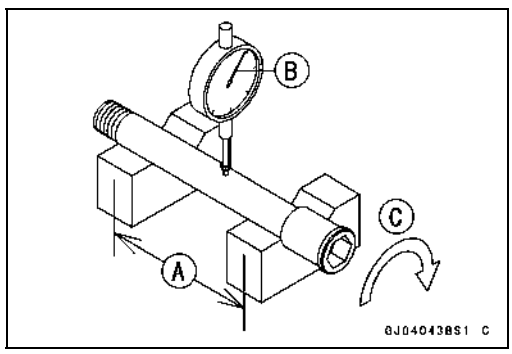

- Remove the front and rear axles (see Front/Rear Wheel Removal).
- Visually inspect the front and rear axle for damages.
- ★If the axle is damaged or bent, replace it.
- Place the axle in V blocks that are 100 mm (3.94 in.) [A] apart, and set a dial gauge [B] on the axle at a point halfway between the blocks. Turn [C] the axle to measure the runout. The difference between the highest and lowest dial readings is the amount of runout.
- ★If axle runout exceeds the service limit, replace the axle.

Axle Runout/100 mm (3.94 in.)

Standard:	**TIR 0.03 mm (0.0012 in.) or less**
Service Limit:	**TIR 0.2 mm (0.008 in.)**

http://mototh.com

Wheels (Rims)

Balance Inspection

- Remove the front and rear wheels (see Front/Rear Wheel Removal).
- Support the wheel so that it can be spun freely.
- Spin the wheel lightly, and mark [A] the wheel at the top when the wheel stops.

○Repeat this procedure several times. If the wheel stops of its own accord in various positions, it is well balanced.

★If the wheel always stops in one position, adjust the wheel balance (see Balance Adjustment).

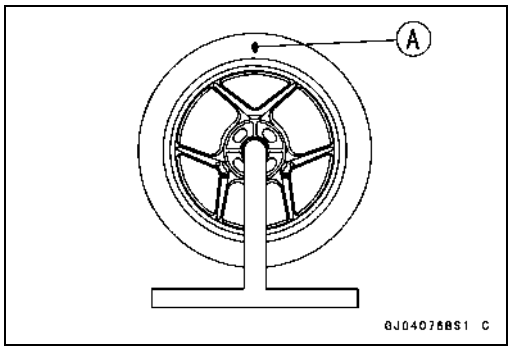

Balance Adjustment

- If the wheel always stops in one position, provisionally attach a balance weight [A] on the rim at the marking using adhesive tape.
- Rotate the wheel 1/4 turn [B], and see whether or not the wheel stops in this position. If it does, the correct balance weight is being used.

★If the wheel rotates and the weight goes up, replace the weight with the next heavier size. If the wheel rotates and the weight goes down, replace the weight with the next lighter size. Repeat these steps until the wheel remains at rest after being rotated 1/4 turn.

- Rotate the wheel another 1/4 turn and then another 1/4 turn to see if the wheel is correctly balanced.
- Repeat the entire procedure as many times as necessary to achieve correct wheel balance.
- Permanently install the balance weight.

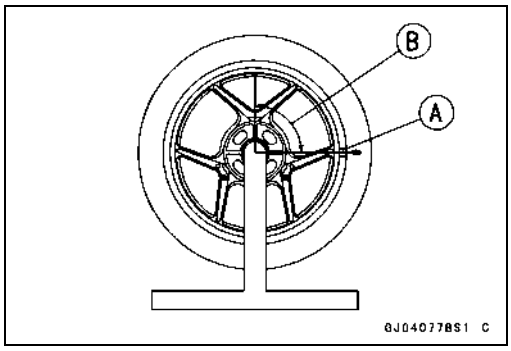

Balance Weight Removal

- Insert a regular tip screwdrivers [A] [B] between the rib [C] and the weight [D] as shown.
- Pry the balance weight with two screwdrivers and remove the balance weight.
- Discard the used balance weight.

CAUTION

Do not tap the screwdrivers. The rim could be damaged.

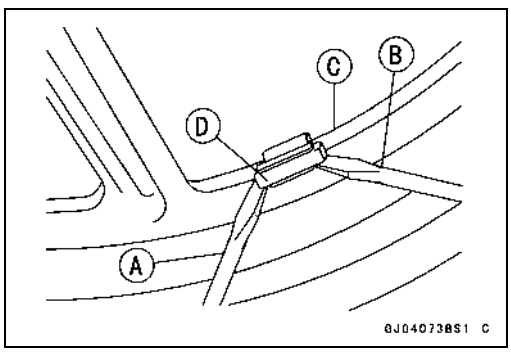

Balance Weight Installation

- Check if the weight portion has any play on the blade [A] and clip [B].

★If it does, discard it.

⚠ WARNING

If the balance weight has any play on the rib of the rim, the blade and/or clip have been stretched. Replace the loose balance weight. Do not reuse used balance weight. Unbalanced wheels can create an unsafe riding condition.

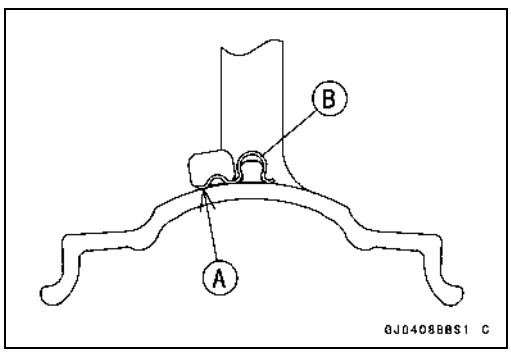

Wheels (Rims)

Balance Weight

Part Number	Weight
41075-0007	10 g (0.35 oz.)
41075-0008	20 g (0.71 oz.)
41075-0009	30 g (1.06 oz.)

NOTE

○*Balance weights are available from Kawasaki dealers in 10, 20, and 30 grams (0.35, 0.71, and 1.06 oz.) sizes. An imbalance of less than 10 grams (0.35 oz.) will not usually affect running stability.*

○*Do not use four or more balance weight (more than 90 gram, 3.17 oz.). If the wheel requires an excess balance weight, disassemble the wheel to find the cause.*

● Slip the balance weight [A] onto the rib [B] by pushing or lightly hammering [C] the clip [D].
Left Side [E]
Right Side [F]

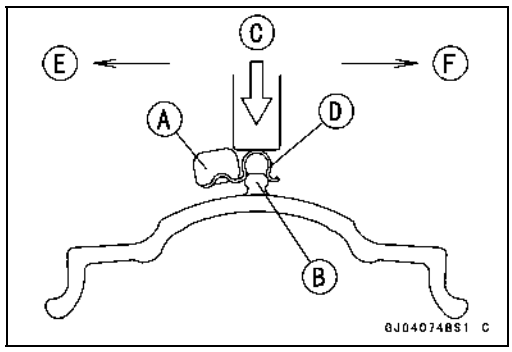

● Be sure to install the balance weight.

○Check that the blade [A] and clip [B] are fully seated on the rim [C] and that the clip is hooked over the rib [D].
Left Side [E]
Right Side [F]

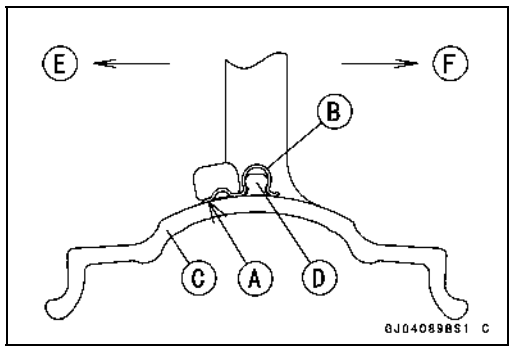

Tires

Air Pressure Inspection/Adjustment

- Refer to the Air Pressure Inspection in the Periodic Maintenance chapter.

Tire Inspection

- Refer to the Wheel/Tire Damage Inspection in the Periodic Maintenance chapter.

Tire Removal

- Remove:
  Wheel (see Front/Rear Wheel Removal)
  Valve Core (Let out the air)
- To maintain wheel balance, mark the valve stem position on the tire with chalk so that the tire can be reinstalled in the same position.
  Chalk Mark or Yellow Mark [A]
  Air Valve [B]
  Align [C]

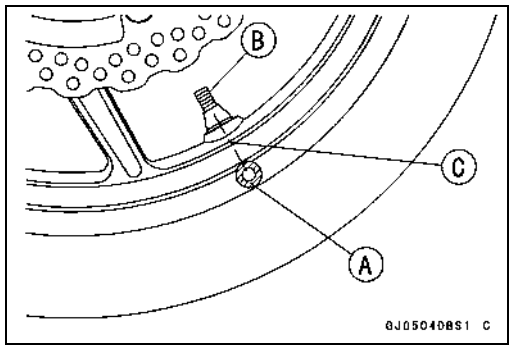

- Lubricate the tire beads and rim flanges on both sides with a soap and water solution or rubber lubricant. This helps the tire beads slip off the rim flanges.

CAUTION

Never lubricate with engine oil or petroleum distillates because they will deteriorate the tire.

- Remove the tire from the rim using a suitable commercially available tire changer.

NOTE

○*The tires cannot be removed with hand tools because they fit the rims too tightly.*

Tire Installation

⚠ WARNING

Use the same manufacturer's tires on both front and rear wheels.

- Inspect the rim and tire, and replace them if necessary.
- Clean the sealing surfaces of the rim and tire, and smooth the sealing surfaces of the rim with a fine emery cloth if necessary.
- Remove the air valve and discard it.

CAUTION

Replace the air valve whenever the tire is replaced. Do not reuse the air valve.

http://mototh.com

Tires

- Install a new valve in the rim.

○Remove the valve cap, lubricate the stem seal [A] with a soap and water solution or rubber lubricant, and pull [B] the valve stem through the rim from the inside out until it snaps into place.

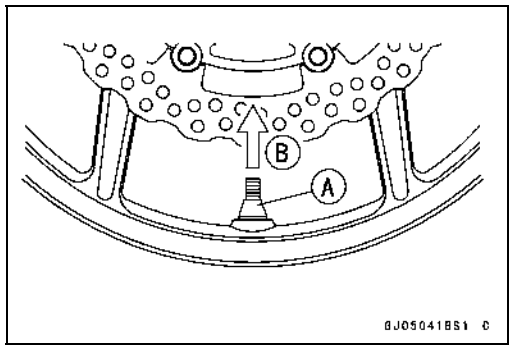

CAUTION

Do not use engine oil or petroleum distillates to lubricate the stem because they will deteriorate the rubber.

○The air valve is shown in the figure.
Valve Cap [A]
Valve Core [B]
Stem Seal [C]
Valve Stem [D]
Valve Seat [E]
Valve Opened [F]

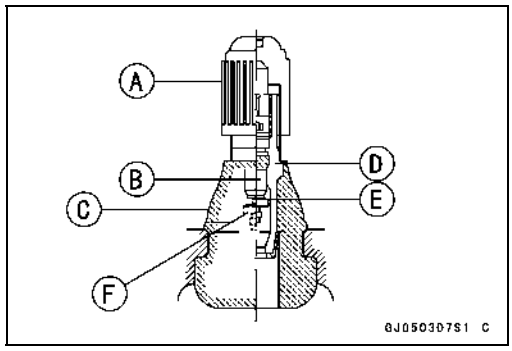

- Check the tire rotation mark on the front and rear tires and install them on the rim accordingly.
  Tire Rotation Mark [A]
  Rotating Direction [B]

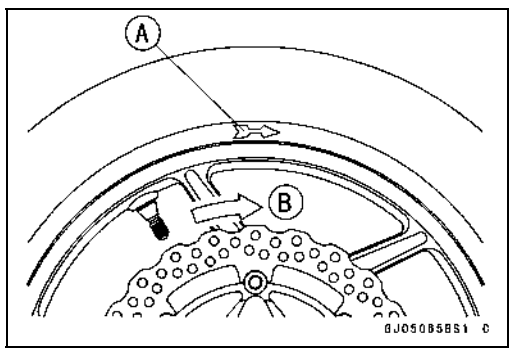

- Position the tire on the rim so that the valve [A] align with the tire balance mark [B] (the chalk mark made during removal, or the yellow paint mark on a new tire).
- Install the tire bead over the rim flange using a suitable commercially available tire changer.
- Lubricate the tire beads and rim flanges with a soap and water solution or rubber lubricant to help seat the tire beads in the sealing surfaces of the rim while inflating the tire.
- Center the rim in the tire beads, and inflate the tire with compressed air until the tire beads seat in the sealing surfaces.

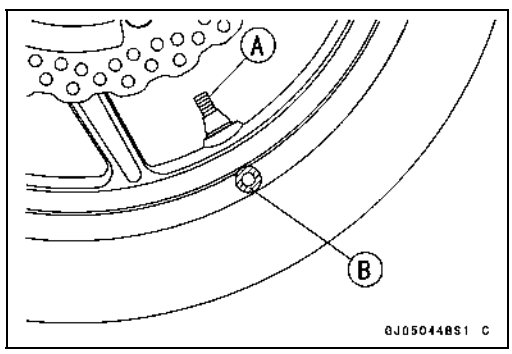

⚠ WARNING

Be sure to install the valve core whenever inflating the tire, and do not inflate the tire to more than 400 kPa (4.0 kgf/cm², 57 psi). Overinflation can explode the tire with possibility of injury and loss of life.

http://mototh.com

Tires

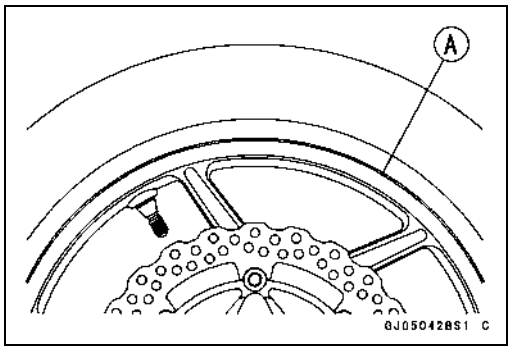

- Check to see that the rim lines [A] on both sides of the tire sidewalls are parallel with the rim flanges.

★If the rim flanges and tire sidewall rim lines are not parallel, remove the valve core.

- Lubricate the rim flanges and tire beads.
- Install the valve core and inflate the tire again.
- After the tire beads seat in the rim flanges, check for air leakage.

○Inflate the tire slightly above standard inflation.

○Use a soap and water solution or submerge the tire, and check for bubbles that would indicate leakage.

- Adjust the air pressure to the specified pressure (see Air Pressure Inspection in the Periodic Maintenance chapter).
- Install the air valve cap.
- Adjust the wheel balance (see Balance Adjustment).

Tire Repair

Currently two types of repair for tubeless tires have come into wide use. One type is called a temporary (external) repair which can be carried out without removing the tire from the rim, and the other type is called permanent (internal) repair which requires tire removal. It is generally understood that higher running durability is obtained by permanent (internal) repairs than by temporary (external) ones. Also, permanent (internal) repairs have the advantage of permitting a thorough examination for secondary damage not visible from external inspection of the tire. For these reasons, Kawasaki does not recommend temporary (external) repair. Only appropriate permanent (internal) repairs are recommended. Repair methods may vary slightly from make to make. Follow the repair methods indicated by the manufacturer of the repair tools and materials so that safe results can be obtained.

http://mototh.com

Hub Bearing

Hub Bearing Removal

- Remove the wheel (see Front/Rear Wheel Removal), and take out the following.
  Collars
  Coupling (Out of rear hub)
  Grease Seals

- Use the bearing remover to remove the hub bearings [A].

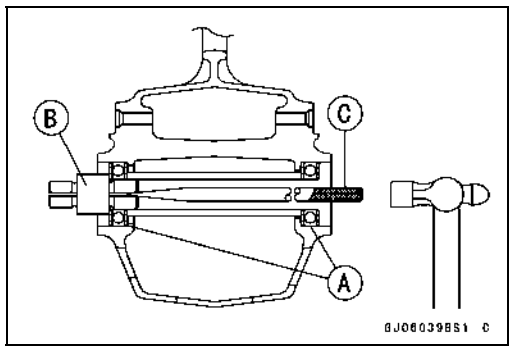

CAUTION
Do not lay the wheel on the ground with the disc facing down. This can damage or warp the disc. Place wooden blocks under the wheel so that the disc does not touch the ground.

Special Tools - Bearing Remover Head, ϕ20 × ϕ22 [B]: 57001-1293
Bearing Remover Shaft, ϕ13 [C]: 57001-1377

Hub Bearing Installation

- Before installing the hub bearings, blow any dirt or foreign particles out of the hub with compressed air to prevent contamination of the bearings.
- Replace the bearings with new ones.

NOTE

○*Install the bearings so that the marked side faces out.*

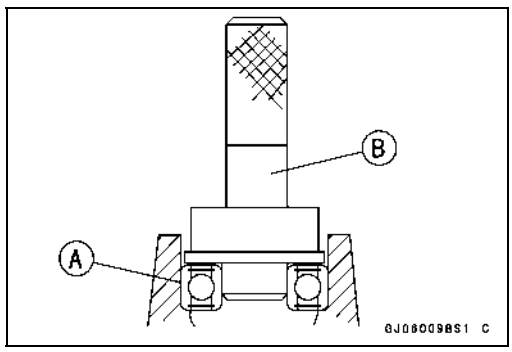

- Install the bearings by using the bearing driver set which does not contact the bearing inner race.
- Press in each bearing [A] right until they are bottomed.

Special Tool - Bearing Driver Set [B]: 57001-1129

- Replace the grease seals with new ones.
- Press in the grease seals [A] so that the seal surface is flush [B] with the end of the hole.

○Apply high-temperature grease to the grease seal lips.

Special Tool - Bearing Driver Set [C]: 57001-1129

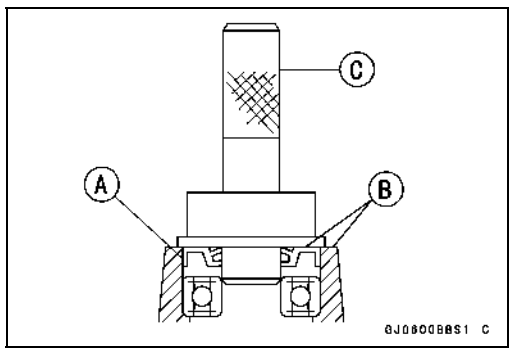

Hub Bearing Inspection

Since the hub bearings are made to extremely close tolerances, the clearance can not normally be measured.

NOTE

○*Do not remove any bearings for inspection. If any bearings are removed, they will need to be replaced with new ones.*

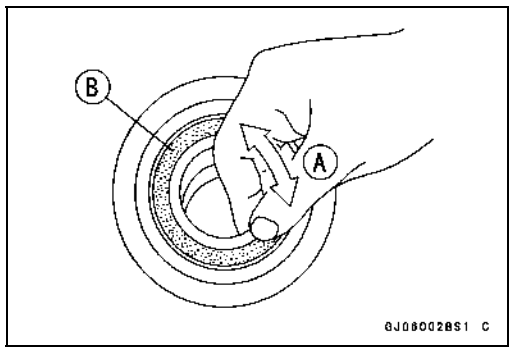

- Turn each bearing in the hub back and forth [A] while checking for plays, roughness or binding.

★If bearing play, roughness or binding is found, replace the bearing.

- Examine the bearing seal [B] for tears or leakage.

★If the seal is torn or is leaking, replace the bearing.

Hub Bearing

Hub Bearing Lubrication

NOTE

○*Since the hub bearings are packed with grease and sealed, lubrication is not required.*

http://mototh.com

http://mototh.com

Final Drive

Table of Contents

Exploded View 11-2
Specifications 11-4
Special Tools 11-5
Drive Chain 11-6
- Drive Chain Slack Inspection 11-6
- Drive Chain Slack Adjustment 11-6
- Wheel Alignment Inspection/Adjustment 11-6
- Drive Chain Wear Inspection 11-6
- Drive Chain Lubrication 11-6
- Drive Chain Removal 11-6
- Drive Chain Installation 11-7

Sprocket, Coupling 11-10
- Engine Sprocket Removal 11-10
- Engine Sprocket Installation 11-11
- Rear Sprocket Removal 11-11
- Rear Sprocket Installation 11-11
- Coupling Installation 11-12
- Coupling Bearing Removal 11-12
- Coupling Bearing Installation 11-12
- Coupling Bearing Inspection 11-13
- Coupling Bearing Lubrication 11-13
- Coupling Damper Inspection 11-13
- Sprocket Wear Inspection 11-13
- Rear Sprocket Warp Inspection 11-14

http://mototh.com

Exploded View

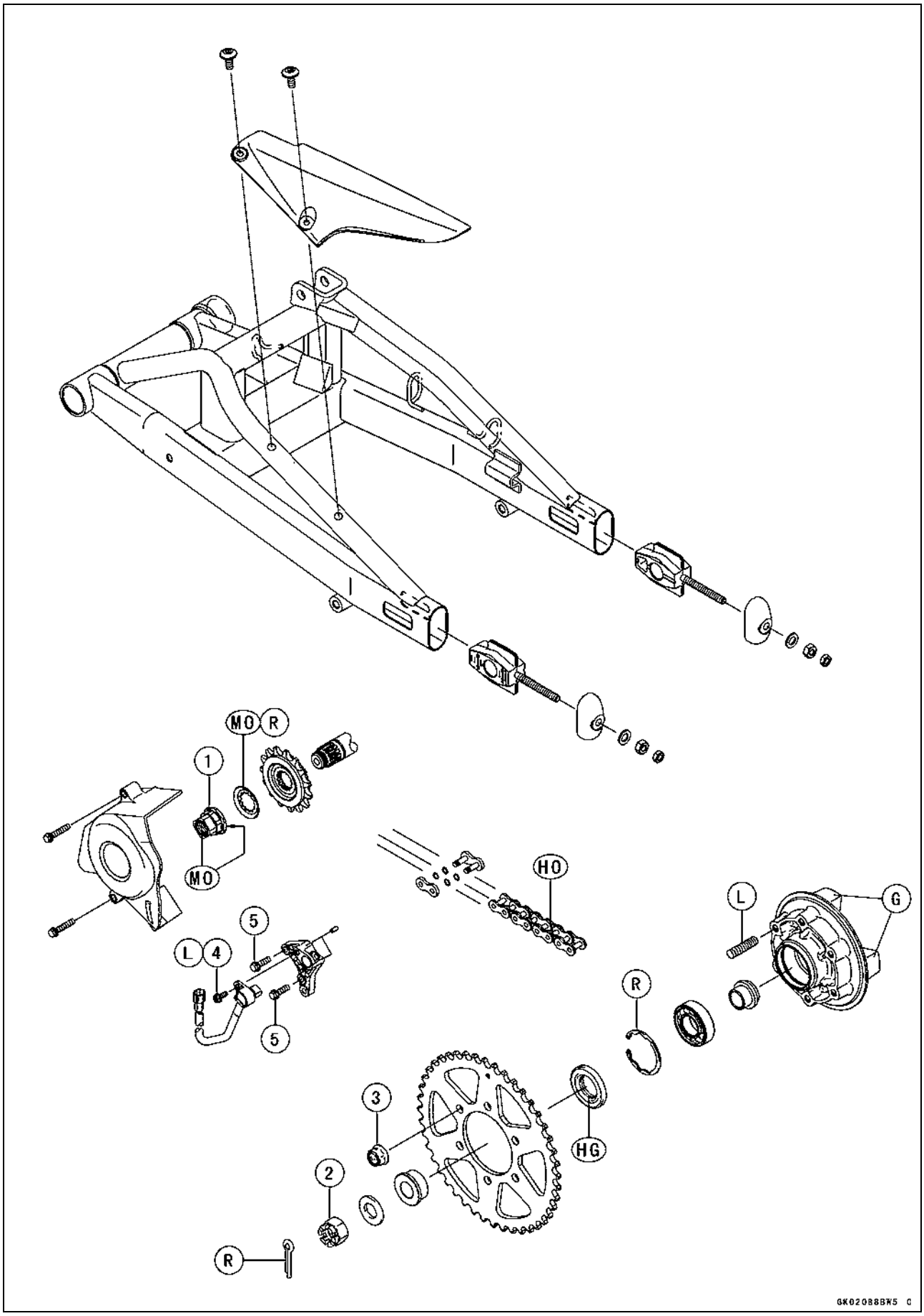

Exploded View

No.	Fastener	Torque			Remarks
		N·m	kgf·m	ft·lb	
1	Engine Sprocket Nut	125	12.7	92	MO
2	Rear Axle Nut	108	11.0	80	
3	Rear Sprocket Nuts	59	6.0	44	
4	Speed Sensor Bolt	7.8	0.80	69 in·lb	L
5	Speed Sensor Bracket Bolts	9.8	1.0	87 in·lb	

G: Apply grease.
HG: Apply high-temperature grease.
HO: Apply heavy oil.
L: Apply a non-permanent locking agent.
MO: Apply molybdenum disulfide oil solution.
(mixture of the engine oil and molybdenum disulfide grease in a weight ratio 10 : 1)
R: Replacement Parts

http://mototh.com

Specifications

Item	Standard	Service Limit
Drive Chain		
Drive Chain Slack	30 ~ 40 mm (1.2 ~ 1.6 in.)	– – –
Drive Chain Wear (20-link Length)	317.5 ~ 318.2 mm (12.50 ~ 12.53 in.)	323 mm (12.7 in.)
Standard Chain:		
Make	ENUMA	– – –
Type	EK520MVXL1	– – –
Link	114 links	– – –
Sprockets		
Rear Sprocket Warp	0.4 mm (0.016 in.) or less	0.5 mm (0.020 in.)

http://mototh.com

Special Tools

Inside Circlip Pliers:
57001-143

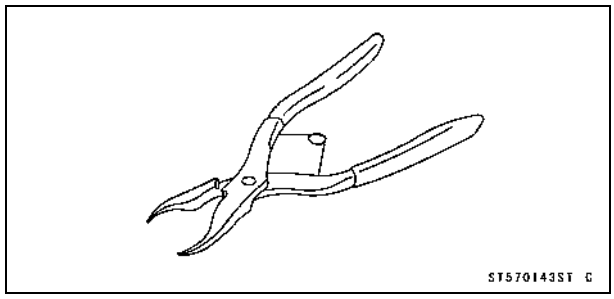

Bearing Driver Set:
57001-1129

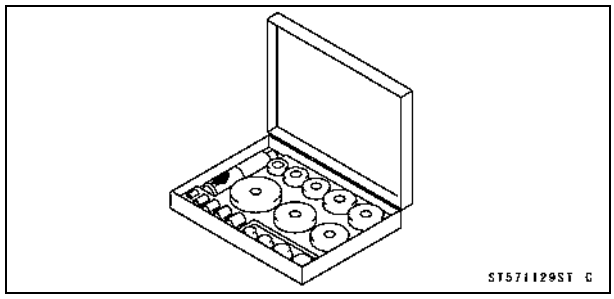

http://mototh.com

Drive Chain

Drive Chain Slack Inspection

- Refer to the Drive Chain Slack Inspection in the Periodic Maintenance chapter.

Drive Chain Slack Adjustment

- Refer to the Drive Chain Slack Adjustment in the Periodic Maintenance chapter.

Wheel Alignment Inspection/Adjustment

- Refer to the Wheel Alignment Inspection in the Periodic Maintenance chapter.

Drive Chain Wear Inspection

- Refer to the Drive Chain Wear Inspection in the Periodic Maintenance chapter.

Drive Chain Lubrication

- Refer to the Drive Chain Lubrication Condition Inspection in the Periodic Maintenance chapter.

Drive Chain Removal

NOTE

○*Since the drive chain is installed through the swingarm, the chain cannot be removed other than by cutting it. Prepare the new link pin, link plate, grease seals, and tools for rejoining the chain.*

- Using a suitable tool, cut the drive chain by removing the link pins.

Recommended Tool: EK Joint Tool #50

CAUTION
Read the Tool Manual before removing.

Body [A]
Handlebar [B]
Cutting and Riveting Pin [C]
For Cutting [D]
For Riveting [E]
Plate Holder (a) [F]
Plate Holder (b) [G]
Gauge [H]

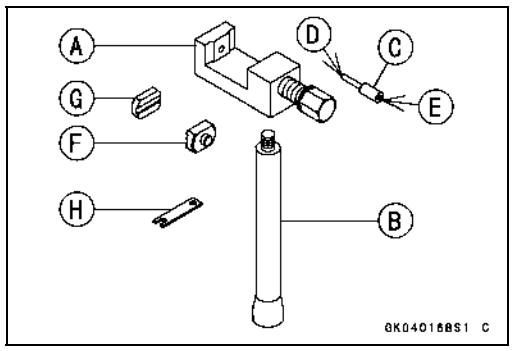

- Grind [A] the pin head to make it flat.
- Set the cutting and riveting pin [B] as shown.

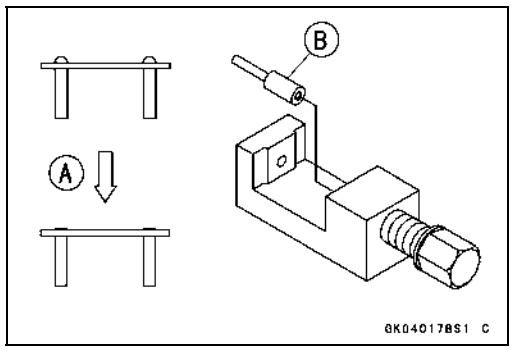

Drive Chain

- Screw the pin holder until it touches chain pin.
- Be sure that the cutting pin hits center of chain pin.

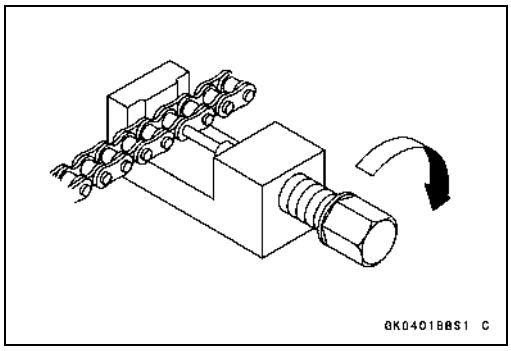

- Screw the handlebar [A] into body.
- Turn the pin holder with wrench [B] clockwise to extract chain pin.

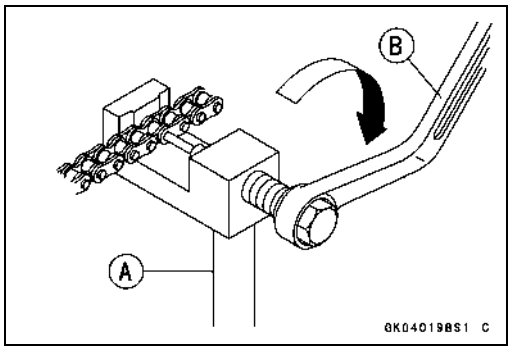

Drive Chain Installation

- Engage the new drive chain to the old drive chain and pull the end of the old drive chain until they are changing the position.
- Remove the old drive chain from the new drive chain.
- Apply grease to the link pins [A] and grease seals [B] [C].
- Engage the drive chain on the rear sprocket through the swingarm.
- Insert the link pins in the drive chain ends.
- Install the grease seals [C].
- Install the link plate so that the mark [D] faces out.
- Push the link plate by hand or plier to fix it.
- In case of grease seal chain, be sure to set the grease seals correctly.

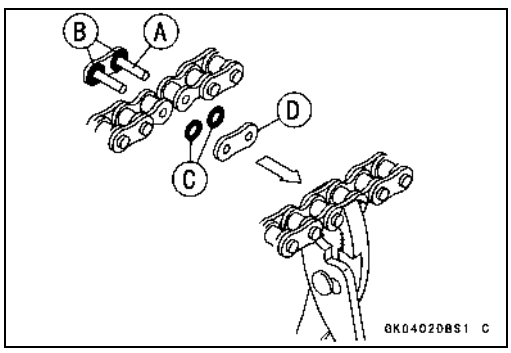

- Set the plate holder (a) [A] and plate holder (b) [B] on the body.

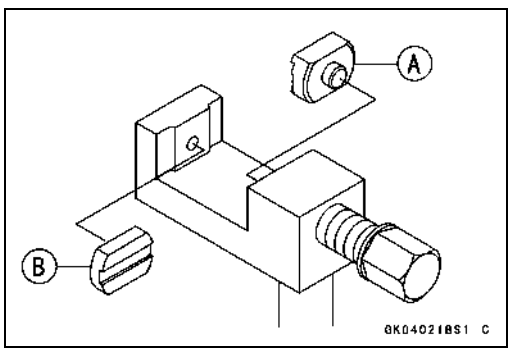

Drive Chain

- Fit the plate holder (a) to link plate.
- Turn the pin holder by hand until plate holder (b) touches the other link plate.

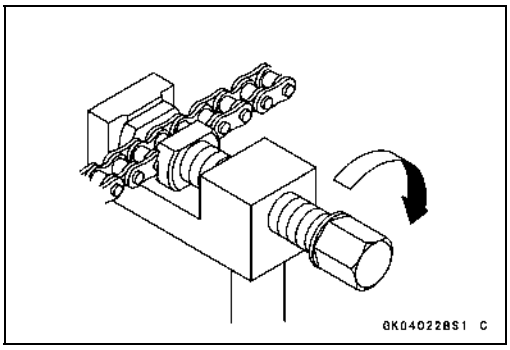

- Turn the pin holder by wrench clockwise until two pins of link come into groove of plate holder (a).
- Take off the plate holder (a).

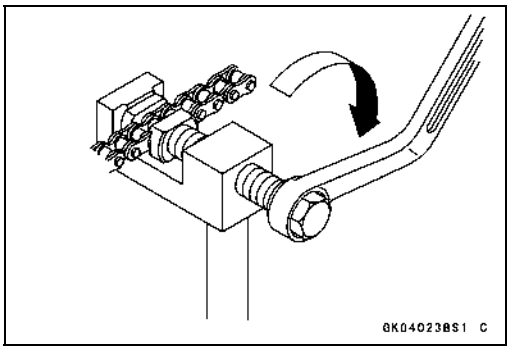

- Set the plate holder (b) [A] and cutting and riveting pin [B] as shown.

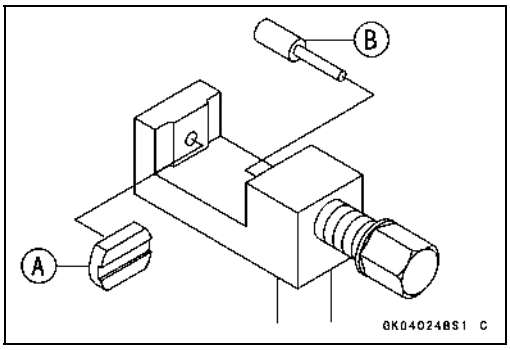

- Turn the pin holder until riveting pin touches link pin.

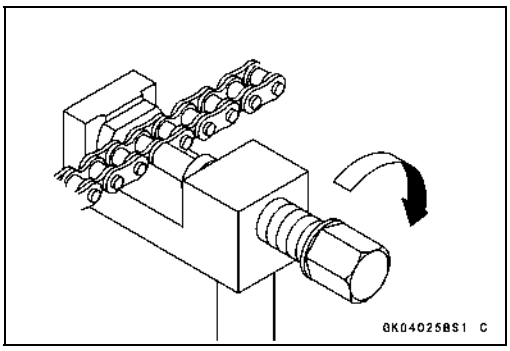

- Turn the wrench clockwise until tip of riveting pin hits of link pin.
- Rivet it.
- Same work for the other link pin.

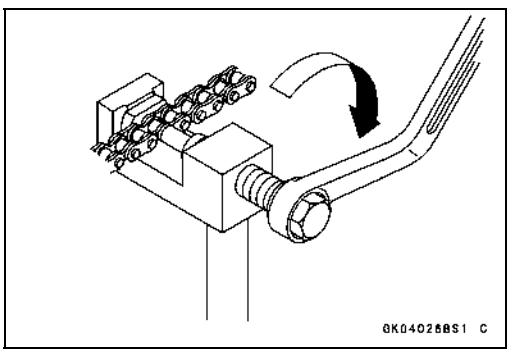

http://mototh.com

Drive Chain

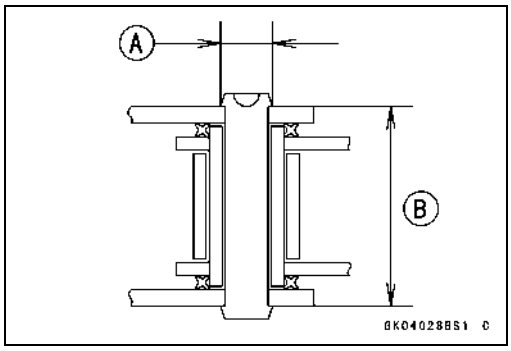

- After staking, check the staked area of the link pin for cracks.
- Measure the outside diameter [A] of the link pin and link plates width [B].

Link Pin Outside Diameter
Standard: 5.7 ~ 6.0 mm (0.22 ~ 0.24 in.)

Link Plates Outside Width
Standard: 17.25 ~ 17.45 mm (0.679 ~ 0.687 in.)

★If the reading exceeds the specified length, cut and rejoin the chain again.

- Check:
  Movement of the Rollers
- Adjust the drive chain slack after installing the chain (see Drive Chain Slack Adjustment in the Periodic Maintenance chapter).

http://mototh.com

Sprocket, Coupling

Engine Sprocket Removal

- Remove:
  Engine Sprocket Cover Bolts [A]
  Engine Sprocket Cover [B]

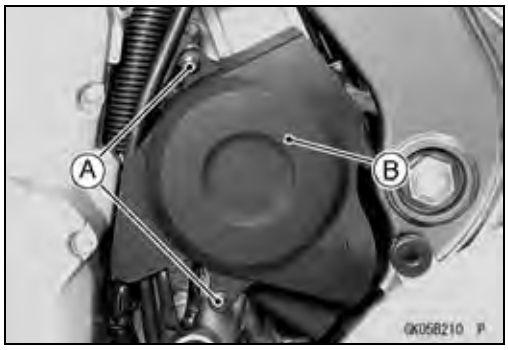

- Remove:
  Speed Sensor Bracket Bolts [A]
  Speed Sensor Bracket [B]

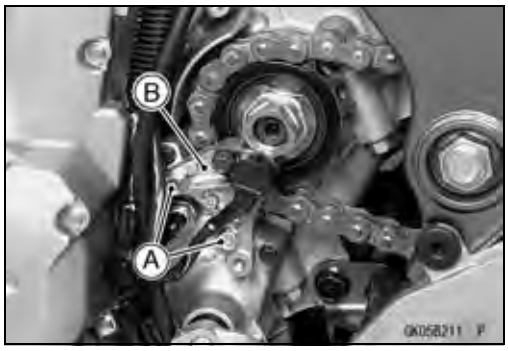

- Flatten out the bended washer [A].
- Remove the engine sprocket nut [B] and washer.

NOTE

○*When loosening the engine sprocket nut, hold the rear brake on.*

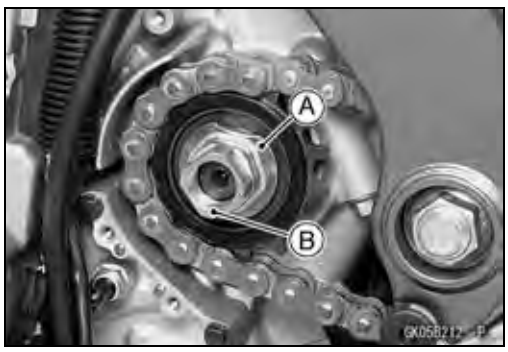

- Raise the rear wheel off the ground with stand.
- Remove the axle cotter pin, and loosen the rear axle nut.
- Loosen the drive chain (see Drive Chain Slack Adjustment in the Periodic Maintenance chapter).
- Remove the drive chain from the rear sprocket toward the right.
- Pull the engine sprocket [A] with drive chain [B] off the output shaft [C].
- Disengage the drive chain from the engine sprocket.

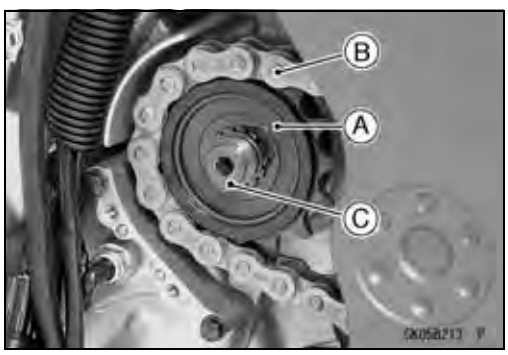

Sprocket, Coupling

Engine Sprocket Installation

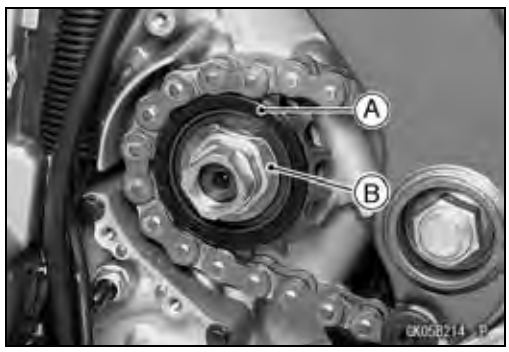

- Replace the sprocket washer and axle cotter pin.
- Install the engine sprocket [A] so that “OUTSIDE” letters face outward.
- Apply molybdenum disulfide oil solution to the threads of the output shaft and seating surface of the engine sprocket nut.
- After torquing the engine sprocket nut, bend the one side of the washer [B] over the nut.

NOTE

○*Tighten the engine sprocket nut while applying the rear brake.*

- Tighten:

Torque - Engine Sprocket Nut: 125 N·m (12.7 kgf·m, 92 ft·lb)
Speed Sensor Bracket Bolts: 9.8 N·m (1.0 kgf·m, 87 in·lb)

- Install the engine sprocket cover, and tighten the bolts.
- Adjust the drive chain slack after installing the sprocket (see Drive Chain Slack Adjustment in the Periodic Maintenance chapter).
- Bend the end of axle cotter pin surely after tightening the axle nut (see Rear Wheel Installation in the Wheels/Tires chapter).

Rear Sprocket Removal

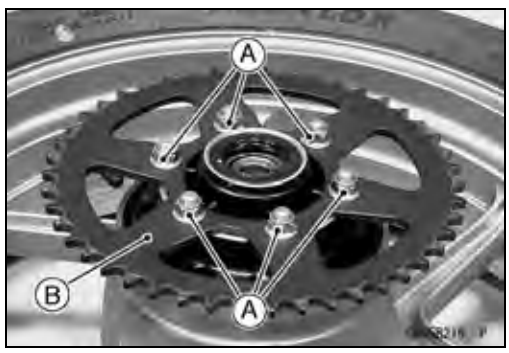

- Remove the rear wheel (see Rear Wheel Removal in the Wheels/Tires chapter).

CAUTION

Do not lay the wheel on the ground with the disc facing down. This can damage or warp the disc. Place wooden blocks under the wheel so that the disc does not touch the ground.

- Remove the rear sprocket nuts [A].
- Remove the rear sprocket [B].

Rear Sprocket Installation

- Install the sprocket facing the tooth number marking [A] outward.
- Tighten the rear sprocket nuts.

Torque - Rear Sprocket Nuts: 59 N·m (6.0 kgf·m, 44 ft·lb)

- Install the rear wheel (see Rear Wheel Installation in the Wheels/Tires chapter).

http://mototh.com

Sprocket, Coupling

Coupling Installation

- Apply high-temperature grease to the coupling grease seal lips [A].
- Apply grease to the coupling internal surface [B].

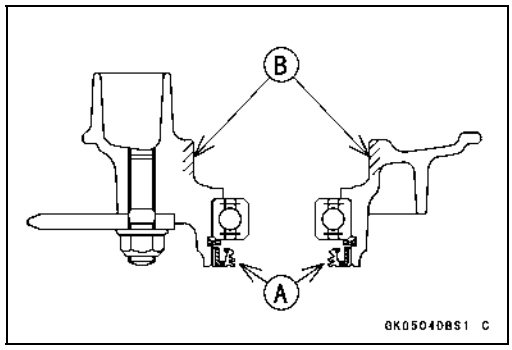

- Grease the following.
  Wheel Flange Portion [A]
  O-ring [B]
- Install the collar [C].

Coupling Bearing Removal

- Remove:
  Coupling
  Grease Seal
  Circlip [A]

  Special Tool - Inside Circlip Pliers: 57001-143

- Remove the bearing [A] by tapping from the wheel side.

  Special Tool - Bearing Driver Set [B]: 57001-1129

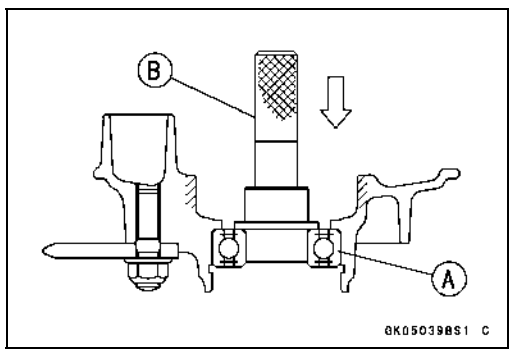

Coupling Bearing Installation

- Replace the bearing with a new one.
- Press in the bearing [A] until it is bottomed.

  Special Tool - Bearing Driver Set [B]: 57001-1129
- Replace the circlip with a new one.

  Special Tool - Inside Circlip Pliers: 57001-143

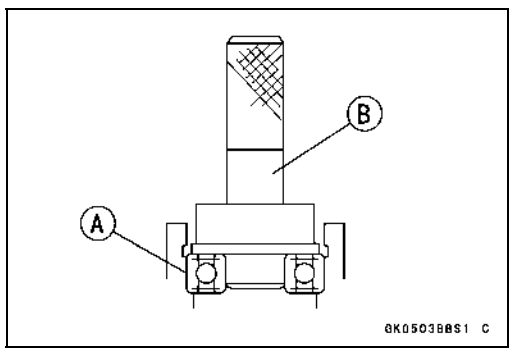

http://mototh.com

Sprocket, Coupling

- Replace the grease seal with a new one.
- Press in the grease seal so that the seal surface is flush with the end of the hole.

○Apply high-temperature grease to the grease seal lips.

Special Tool - Bearing Driver Set: 57001-1129

Coupling Bearing Inspection

Since the coupling bearing is made to extremely close tolerances, the clearance can not normally be measured.

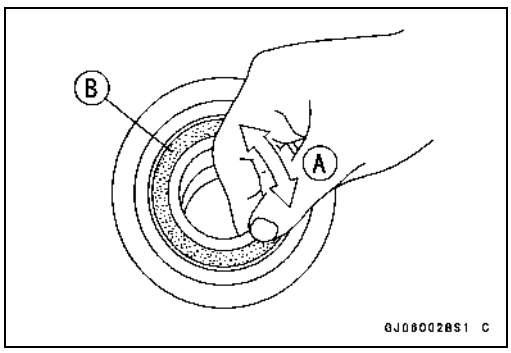

NOTE

○*It is not necessary to remove the coupling bearing for inspection. If the bearing is removed, it will need to be replaced with a new one.*

- Turn the bearing in the coupling back and forth [A] while checking for plays, roughness or binding.

★If the bearing play, roughness or binding is found, replace the bearing.

- Examine the bearing seal [B] for tears or leakage.

★If the seal is torn or is leaking, replace the bearing.

Coupling Bearing Lubrication

NOTE

○*Since the coupling bearing is packed with grease and sealed, lubrication is not required.*

Coupling Damper Inspection

- Remove the rear wheel coupling, and inspect the rubber dampers [A].
- Replace the damper if it appears damaged or deteriorated.

Sprocket Wear Inspection

- Visually inspect the engine and rear sprocket teeth for wear and damage.

★If the teeth are worn as illustrated, replace the sprocket, and inspect the drive chain wear (see Drive Chain Wear Inspection in the Periodic Maintenance chapter).

Worn Tooth (Engine Sprocket) [A]
Worn Tooth (Rear Sprocket) [B]
Direction of Rotation [C]

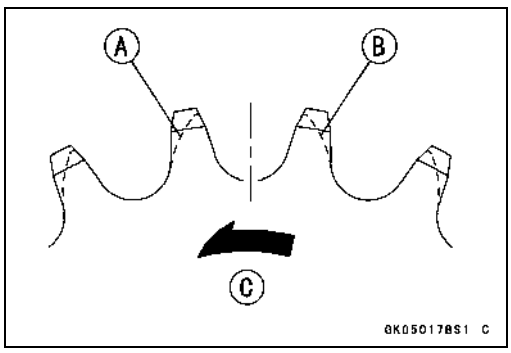

NOTE

○*If a sprocket requires replacement, the chain is probably worn also. When replacing a sprocket, inspect the chain.*

Sprocket, Coupling

Rear Sprocket Warp Inspection

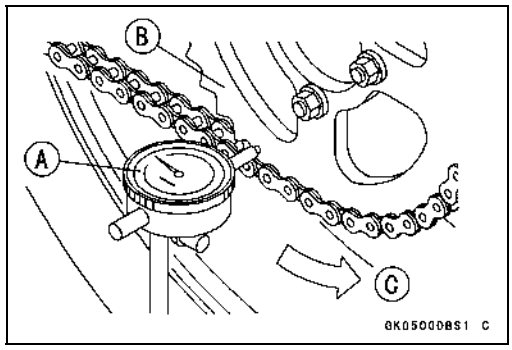

- Raise the rear wheel off the ground with stand so that it will turn freely.
- Set a dial gauge [A] against the rear sprocket [B] near the teeth as shown, and rotate [C] the rear wheel to measure the sprocket runout (warp). The difference between the highest and lowest dial gauge readings is the amount of runout (warp).

★If the runout exceeds the service limit, replace the rear sprocket.

Rear Sprocket Warp

Standard:	**0.4 mm (0.016 in.) or less**
Service Limit:	**0.5 mm (0.020 in.)**

http://mototh.com

Brakes

Table of Contents

Exploded View 12-2
Specifications 12-6
Special Tools 12-7
Brake Lever, Brake Pedal 12-8
Brake Lever Position Adjustment. 12-8
Brake Pedal Position Inspection .. 12-8
Brake Pedal Position Adjustment. 12-8
Brake Pedal Removal 12-9
Brake Pedal Installation 12-9
Calipers 12-11
Front Caliper Removal 12-11
Rear Caliper Removal 12-11
Caliper Installation 12-11
Front Caliper Disassembly 12-12
Front Caliper Assembly 12-12
Rear Caliper Disassembly 12-12
Rear Caliper Assembly 12-12
Caliper Fluid Seal Damage 12-12
Rear Caliper Dust Boot and Friction Boot Damage 12-12
Caliper Piston and Cylinder Damage 12-13
Rear Caliper Holder Shaft Wear .. 12-13
Brake Pads 12-14
Front Brake Pad Removal 12-14
Front Brake Pad Installation 12-14
Rear Brake Pad Removal 12-14
Rear Brake Pad Installation 12-14
Brake Pad Wear Inspection 12-14
Master Cylinder 12-15
Front Master Cylinder Removal ... 12-15
Front Master Cylinder Installation 12-15
Rear Master Cylinder Removal 12-16
Rear Master Cylinder Installation. 12-16
Front Master Cylinder Disassembly 12-16
Rear Master Cylinder Disassembly 12-16
Master Cylinder Assembly 12-16
Master Cylinder Inspection 12-17
Brake Disc 12-18
Brake Disc Removal 12-18
Brake Disc Installation 12-18
Brake Disc Wear 12-18
Brake Disc Warp 12-18
Brake Fluid 12-19
Brake Fluid Level Inspection 12-19
Brake Fluid Change 12-19
Brake Line Bleeding 12-19
Brake Hose 12-22
Brake Hose Removal/Installation. 12-22
Brake Hose Inspection 12-22

http://mototh.com

Exploded View

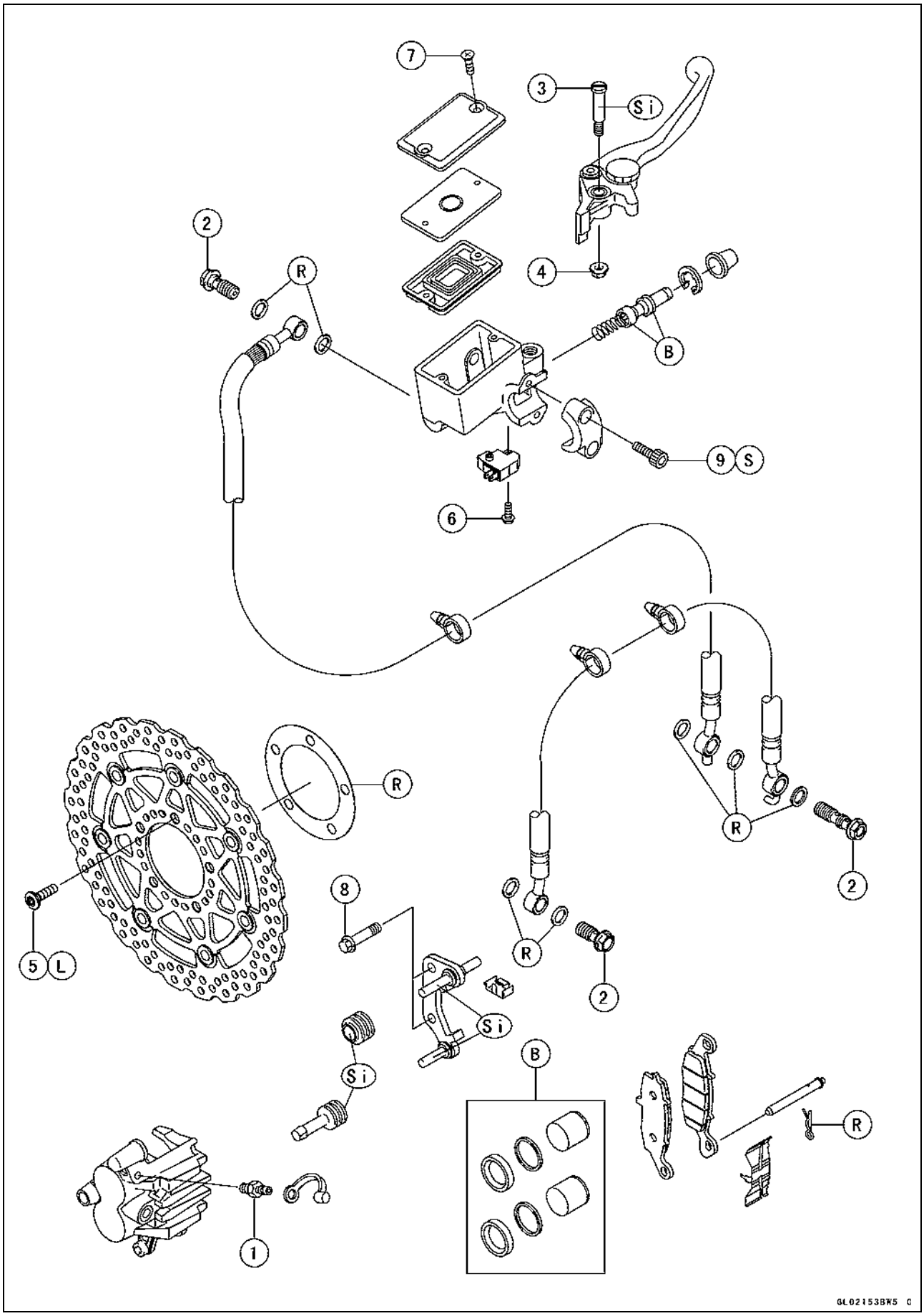

Exploded View

No.	Fastener	Torque			Remarks
		N·m	kgf·m	ft·lb	
1	Bleed Valve	7.8	0.80	69 in·lb	
2	Brake Hose Banjo Bolts	25	2.5	18	
3	Brake Lever Pivot Bolt	1.0	0.10	9 in·lb	Si
4	Brake Lever Pivot Bolt Locknut	5.9	0.60	52 in·lb	
5	Front Brake Disc Mounting Bolts	27	2.8	20	L
6	Front Brake Light Switch Screw	1.0	0.10	9 in·lb	
7	Front Brake Reservoir Cap Screws	1.0	0.10	9 in·lb	
8	Front Caliper Mounting Bolts	34	3.5	25	
9	Front Master Cylinder Clamp Bolts	8.8	0.90	78 in·lb	S

B: Apply brake fluid.
L: Apply a non-permanent locking agent.
R: Replacement Parts
S: Follow the specified tightening sequence.
Si: Apply silicone grease (ex. PBC grease).

http://mototh.com

Exploded View

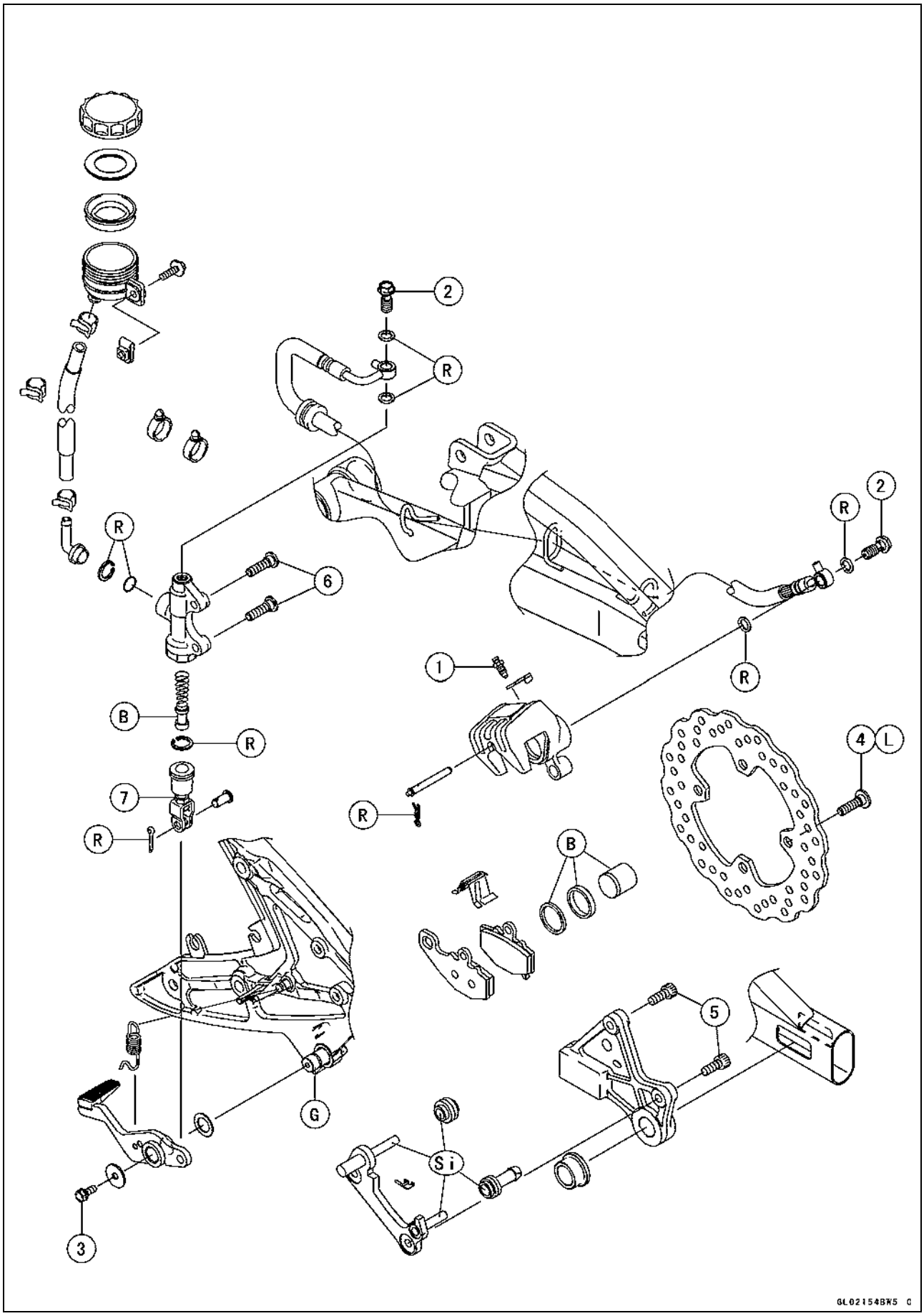

Exploded View

No.	Fastener	Torque			Remarks
		N·m	kgf·m	ft·lb	
1	Bleed Valve	7.8	0.80	69 in·lb	
2	Brake Hose Banjo Bolts	25	2.5	18	
3	Brake Pedal Bolt	8.8	0.90	78 in·lb	
4	Rear Brake Disc Mounting Bolts	27	2.8	20	L
5	Rear Caliper Mounting Bolts	25	2.5	18	
6	Rear Master Cylinder Mounting Bolts	25	2.5	18	
7	Rear Master Cylinder Push Rod Locknut	18	1.8	13	

B: Apply brake fluid.
G: Apply grease.
L: Apply a non-permanent locking agent.
R: Replacement Parts
Si: Apply silicone grease (ex. PBC grease).

http://mototh.com

Specifications

Item	Standard	Service Limit
Brake Lever, Brake Pedal		
Brake Lever Position	5-way adjustable (to suit rider)	– – –
Brake Lever Free Play	Non-adjustable	– – –
Pedal Free Play	Non-adjustable	– – –
Pedal Position	About 40 mm (1.6 in.) below top of footpeg	– – –
Brake Pads		
Lining Thickness:		
Front	4.5 mm (0.18 in.)	1 mm (0.04 in.)
Rear	5.0 mm (0.20 in.)	1 mm (0.04 in.)
Brake Disc		
Thickness:		
Front	4.3 ~ 4.7 mm (0.17 ~ 0.19 in.)	4.0 mm (0.16 in.)
Rear	4.8 ~ 5.2 mm (0.19 ~ 0.20 in.)	4.5 mm (0.18 in.)
Runout	0.15 mm (0.006 in.) or less	0.3 mm (0.01 in.)
Brake Fluid		
Grade	DOT4	– – –

http://mototh.com

Special Tools

Inside Circlip Pliers:
57001-143

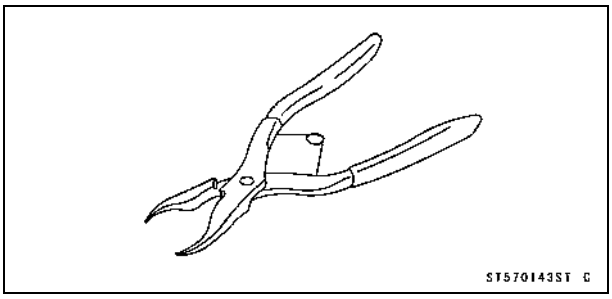

Jack:
57001-1238

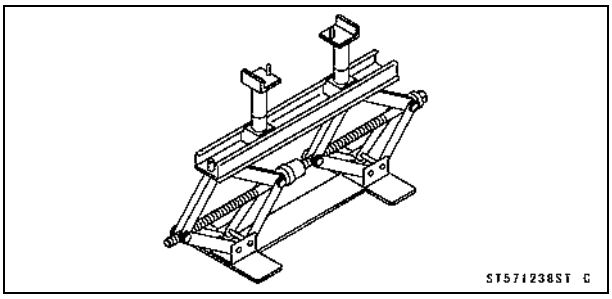

Jack Attachment:
57001-1608

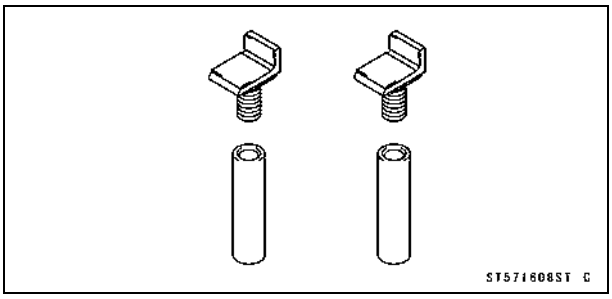

http://mototh.com

Brake Lever, Brake Pedal

Brake Lever Position Adjustment

The brake lever adjuster has 5 positions so that the brake lever position can be adjusted to suit the operator's hand.

- Push the lever forward and turn the adjuster [A] to align the number with the arrow mark [B] on the lever holder.

○The distance from the grip to the lever is minimum at number 5 and maximum at number 1.

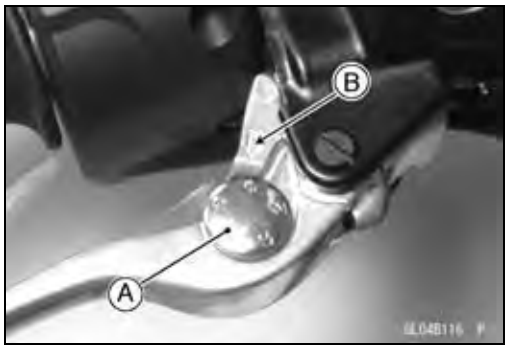

Brake Pedal Position Inspection

- Check that the brake pedal [A] is in the correct position.
  Footpeg [B]

Pedal Position
Standard: About 40 mm (1.6 in.) [C] below top of footpeg

★If it is incorrect, adjust the brake pedal position.

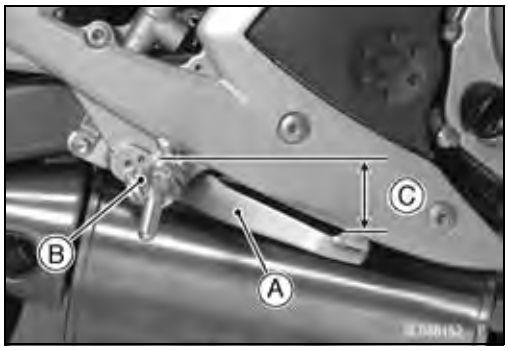

Brake Pedal Position Adjustment

NOTE

○*Usually it is not necessary to adjust the pedal position, but always adjust it when the push rod locknut has been loosened.*

- Remove:
  Frame Cover (see Frame Cover Removal in the Frame chapter)
  Bolts [A]
  Right Footpeg Stay [B]

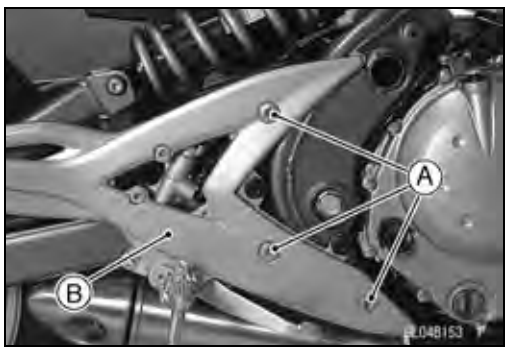

- Loosen the locknut [A] and turn the push rod with the hex head [B] to achieve the correct pedal position.

★If the length [C] shown is **70 ±1 mm (2.76 ±0.04 in.)**, the pedal position will be within the standard range.

- Tighten:

Torque - Rear Master Cylinder Push Rod Locknut: 18 N·m (1.8 kgf·m, 13 ft·lb)

- Install the footpeg stay, and tighten the bolts.

Torque - Footpeg Stay Bolts: 34 N·m (3.5 kgf·m, 25 ft·lb)

- Check the brake light switch operation (see Brake Light Switch Operation Inspection in the Periodic Maintenance chapter).

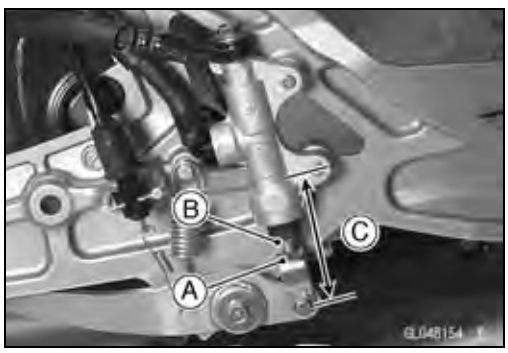

http://mototh.com

Brake Lever, Brake Pedal

Brake Pedal Removal

- Remove:
  Frame Cover (see Frame Cover Removal in the Frame chapter)
  Bolts [A]
  Right Footpeg Stay [B]

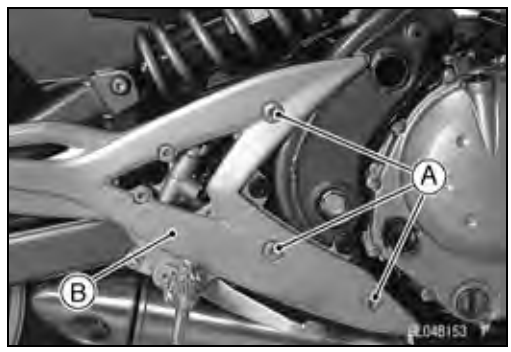

- Remove:
  Cotter Pin [A]
  Joint Pin [B]
  Rear Brake Light Switch Spring [C]
  Return Spring [D]
- Remove the mounting bolt [E] and take out the brake pedal.

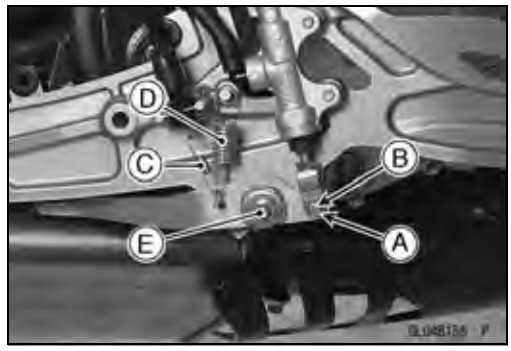

Brake Pedal Installation

- Apply grease to the pivot shaft [A] and install the washer [B].
- Install:
  Brake Pedal [C]
  Washer [D]
  Brake Pedal Bolt [E]

  Torque - Brake Pedal Bolt: 8.8 N·m (0.90 kgf·m, 78 in·lb)

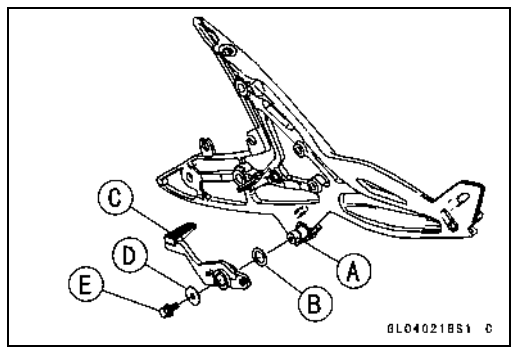

- Hook the lower end of the rear brake light switch spring [A] on the pedal hook.
- Hook the upper end of the return spring [B] on the pedal hook.

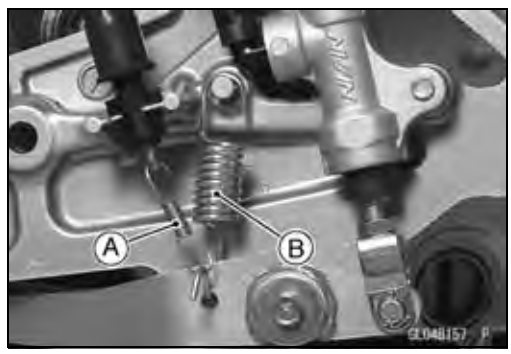

- Replace the cotter pin with a new one.
- Insert the cotter pin [A] and bend the pin ends [B].

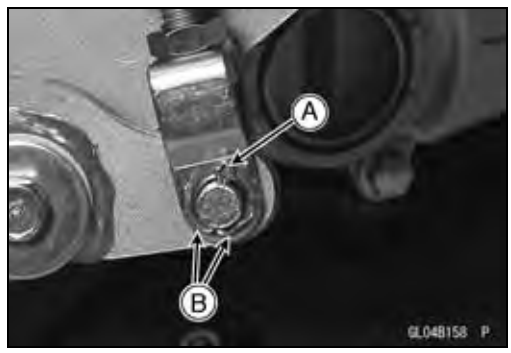

Brake Lever, Brake Pedal

- Install the right footpeg stay, and tighten the bolts.

  Torque - Footpeg Stay Bolts: 34 N·m (3.5 kgf·m, 25 ft·lb)

○Depress the brake pedal [A] and then align the bolts holes of the master cylinder [B].

  Torque - Rear Master Cylinder Mounting Bolts: 25 N·m (2.5 kgf·m, 18 ft·lb)

- Check the brake pedal position (see Brake Pedal Position Inspection).

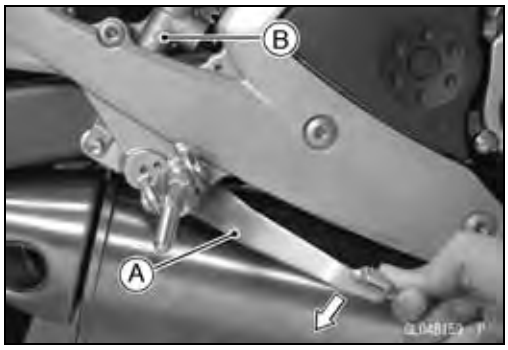

Calipers

Front Caliper Removal

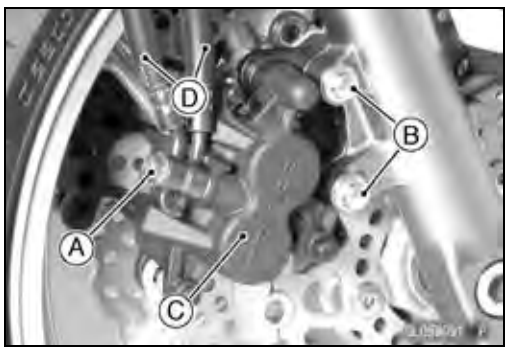

- Loosen the banjo bolt [A] at the brake hose lower end, and tighten it loosely.
- Unscrew the caliper mounting bolts [B], and detach the caliper [C] from the disc.
- Unscrew the banjo bolt and remove the brake hoses [D] from the caliper (see Brake Hose Removal/Installation).

CAUTION

Immediately wash away any brake fluid that spills.

NOTE

○*If the caliper is to be disassembled after removal and if compressed air is not available, disassemble the caliper before the brake hose is removed (see Front Caliper Disassembly).*

Rear Caliper Removal

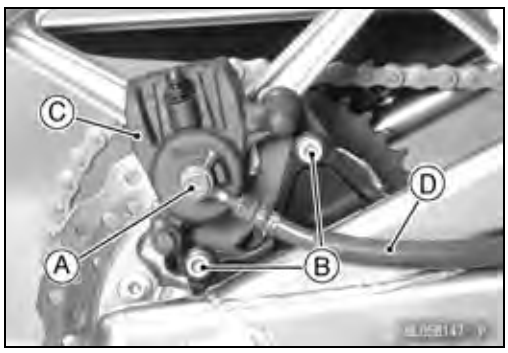

- Loosen the banjo bolt [A] at the brake hose lower end, and tighten it loosely.
- Unscrew the caliper mounting bolts [B], and detach the caliper [C] from the disc.
- Unscrew the banjo bolt and remove the brake hose [D] from the caliper (see Brake Hose Removal/Installation).

CAUTION

Immediately wash away any brake fluid that spills.

NOTE

○*If the caliper is to be disassembled after removal and if compressed air is not available, disassemble the caliper before the brake hose is removed (see Rear Caliper Disassembly).*

Caliper Installation

- Install the caliper and brake hose lower end.

○Replace the washers on each side of hose fitting with new ones.

- Tighten:

Torque - Caliper Mounting Bolts
Front: 34 N·m (3.5 kgf·m, 25 ft·lb)
Rear: 25 N·m (2.5 kgf·m, 18 ft·lb)
Brake Hose Banjo Bolts: 25 N·m (2.5 kgf·m, 18 ft·lb)

- Check the fluid level in the brake reservoirs.
- Bleed the brake line (see Brake Line Bleeding).
- Check the brake for good braking power, no brake drag, and no fluid leakage.

⚠ WARNING

Do not attempt to drive the motorcycle until a full brake lever or pedal is obtained by pumping the brake lever or pedal until the pads are against the disc. The brakes will not function on the first application of the lever or pedal if this is not done.

http://mototh.com

Calipers

Front Caliper Disassembly

- Refer to the Caliper Rubber Parts Replacement in the Periodic Maintenance chapter.

Front Caliper Assembly

- Refer to the Caliper Rubber Parts Replacement in the Periodic Maintenance chapter.

Rear Caliper Disassembly

- Refer to the Caliper Rubber Parts Replacement in the Periodic Maintenance chapter.

Rear Caliper Assembly

- Refer to the Caliper Rubber Parts Replacement in the Periodic Maintenance chapter.

Caliper Fluid Seal Damage

The fluid seal (piston seal) [A] is placed around the piston to maintain clearance between the pad and the disc. If the seal is in a poor condition, it could lead the pad to wear excessively or the brake to drag, which may cause the temperature of the discs or the brake fluid to increase.

- Replace the fluid seal if it exhibits any of the conditions listed below.

○Brake fluid leakage around the pad.
○Brakes overheat.
○Considerable difference in inner and outer pad wear.
○Seal and piston are stuck together.

★If the fluid seal is replaced, replace the dust seal [B] as well. Also, replace all seals every other time the pads are changed.

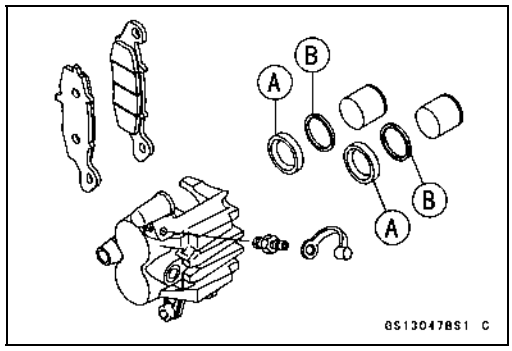

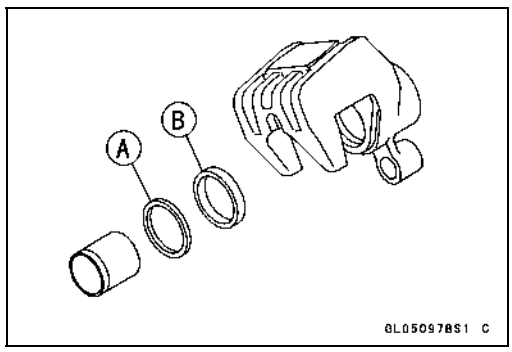

Rear Caliper Dust Boot and Friction Boot Damage

- Check that the dust boot [A] and friction boot [B] are not cracked, worn, swollen, or otherwise damaged.

★If they show any damage, replace it.

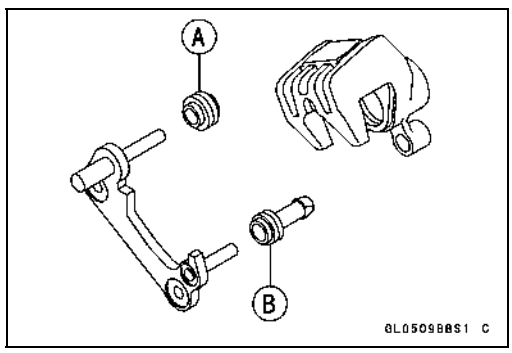

Calipers

Caliper Piston and Cylinder Damage

- Visually inspect the pistons [A] and cylinder surfaces [B].
- ★Replace the caliper if the cylinder and piston are badly scores or rusty.

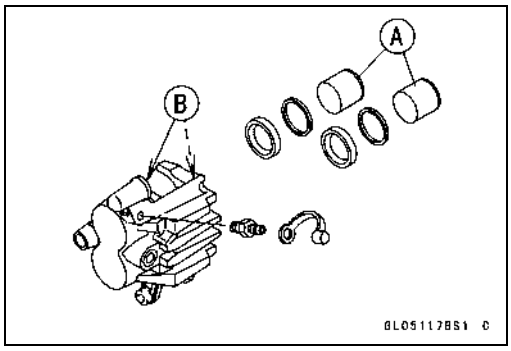

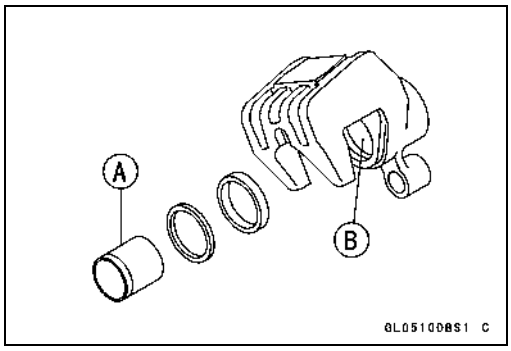

Rear Caliper Holder Shaft Wear

The caliper body must slide smoothly on the caliper holder shafts [A]. If the body does not slide smoothly, one pad will wear more than the other, pad wear will increase, and constant drag on the disc will raise brake and brake fluid temperature.

- Check to see that the caliper holder shafts are not badly worn or stepped, and that the rubber friction boots are not damaged.
- ★If the rubber friction boot is damaged, replace the rubber friction boot. To replace the friction boot, remove the pads and the caliper bracket.
- ★If the caliper holder shaft is damage, replace the caliper bracket.

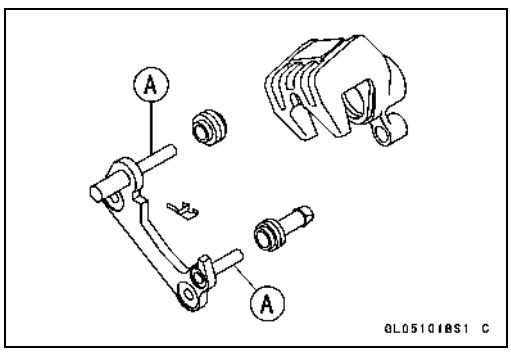

Brake Pads

Front Brake Pad Removal

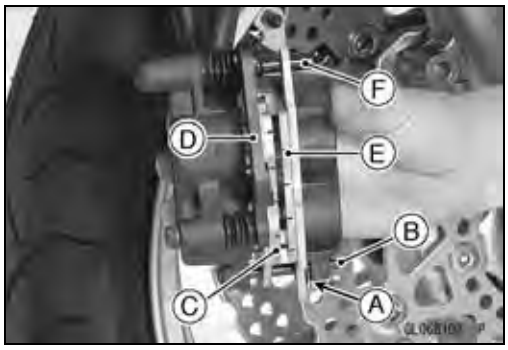

- Remove the front caliper with the hose installed (see Front Caliper Removal).
- Draw out the holder shaft pin [A], and take off the holder shaft [B].
- Remove the pad [C] on the piston side.
- Push the holder [D] towards the piston, and remove the pad of the other side [E] from the holder shaft [F].

Front Brake Pad Installation

- Push the caliper pistons in by hand as far as they will go.
- Install the anti-rattle spring in its correct position.
- Install the pad on the piston side first, then install the other pad on the holder.
- Install the front caliper (see Caliper Installation).

⚠ WARNING

Do not attempt to drive the motorcycle until a full brake lever is obtained by pumping the brake lever until the pads are against the disc. The brake will not function on the first application of the lever if this is not done.

Rear Brake Pad Removal

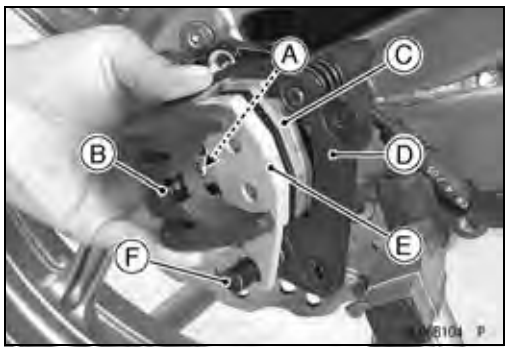

- Remove the rear caliper with the hose installed (see Rear Caliper Removal).
- Draw out the holder shaft pin [A], and take off the holder shaft [B].
- Remove the pad [C] on the piston side.
- Push the holder [D] towards the piston, and remove the pad of the other side [E] from the holder shaft [F].

Rear Brake Pad Installation

- Push the caliper piston in by hand as far as it will go.
- Install the anti-rattle spring in its correct position.
- Install the pad on the piston side first, then install the other pad on the holder.
- Install the rear caliper (see Caliper Installation).

⚠ WARNING

Do not attempt to drive the motorcycle until a full brake pedal is obtained by pumping the brake pedal until the pads are against the disc. The brake will not function on the first application of the pedal if this is not done.

Brake Pad Wear Inspection

- Refer to the Brake Pad Wear Inspection in the Periodic Maintenance chapter.

http://mototh.com

Master Cylinder

Front Master Cylinder Removal

- Remove the banjo bolt [A] to disconnect the brake hose from the master cylinder [B] (see Brake Hose Removal/Installation).

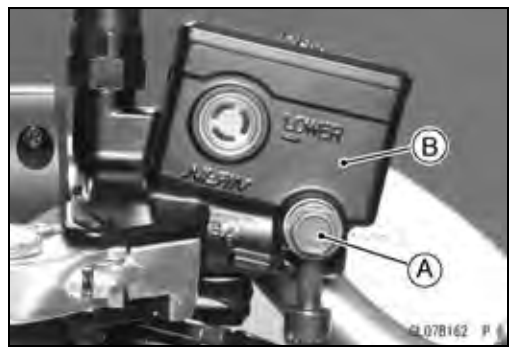

- Disconnect the front brake light switch connectors [A].
- Unscrew the clamp bolts [B], and take off the master cylinder as an assembly with the reservoir, brake lever and brake switch installed.

CAUTION
Immediately wash away any brake fluid that spills.

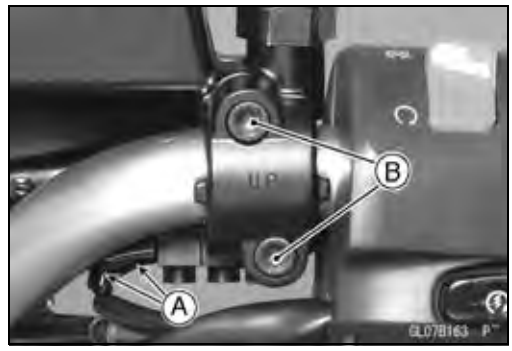

- Remove:
  Brake Lever Pivot Bolt [A] and Locknut
  Brake Lever [B]
  Front Brake Light Switch [C]

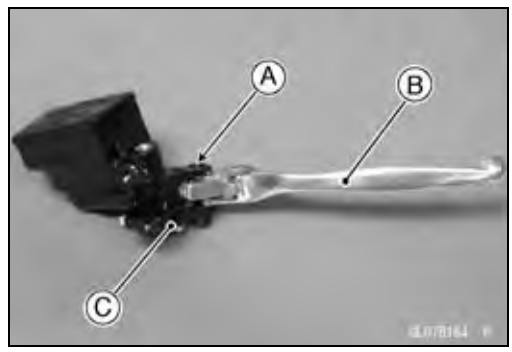

Front Master Cylinder Installation

- Install the front master cylinder so that the punch mark [A] of the handlebar is aligned with the mating surface [B] of the master cylinder clamp to level the reservoir.

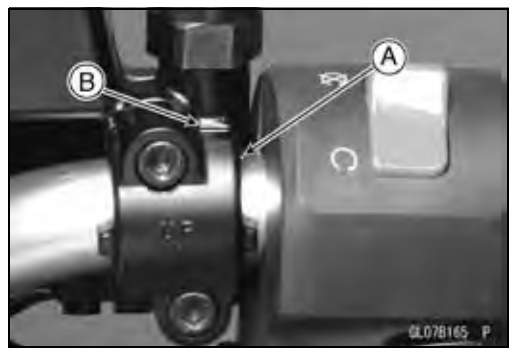

- The master cylinder clamp must be installed with the arrow mark [A] upward.
- Tighten the upper clamp bolt [B] first, and then the lower clamp bolt [C]. There will be a gap at the lower part of the clamp after tightening.

  Torque - Front Master Cylinder Clamp Bolts: 8.8 N·m (0.90 kgf·m, 78 in·lb)

- Replace the washers on each side of the hose fitting with new ones.
- Tighten the brake hose banjo bolt.

  Torque - Brake Hose Banjo Bolt: 25 N·m (2.5 kgf·m, 18 ft·lb)

- Bleed the brake line (see Brake Line Bleeding).
- Check the brake for good braking power, no brake drag, and no fluid leakage.

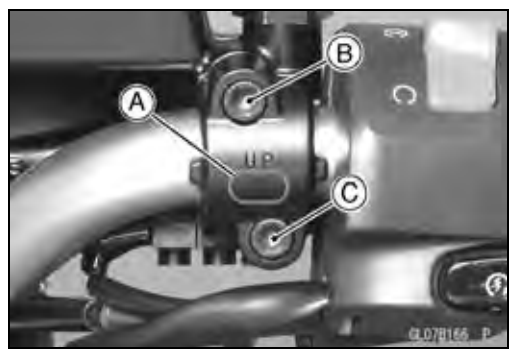

Master Cylinder

Rear Master Cylinder Removal

- Unscrew the brake hose banjo bolt [A] on the master cylinder (see Brake Hose Removal/Installation).

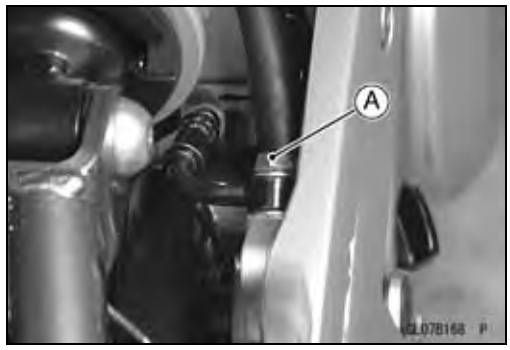

- Unscrew the master cylinder mounting bolts [A].
- Remove the cotter pin [B].

NOTE

○*Pull off the joint pin while pressing down the brake pedal.*

- Pull off the reservoir hose lower end [C], and drain the brake fluid into a container.
- Remove the master cylinder.

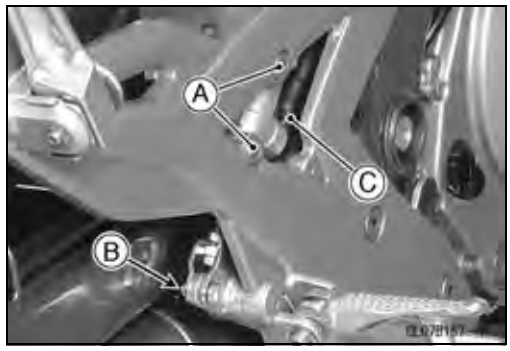

Rear Master Cylinder Installation

- Replace the cotter pin [A] with a new one.
- Replace the washers on each side of hose fitting with new ones.
- Tighten the following bolts.

Torque - Rear Master Cylinder Mounting Bolts: 25 N·m (2.5 kgf·m, 18 ft·lb)
Brake Hose Banjo Bolt: 25 N·m (2.5 kgf·m, 18 ft·lb)

- Bleed the brake line (see Brake Line Bleeding).
- Check the brake for good braking power, no brake drag, and no fluid leakage.

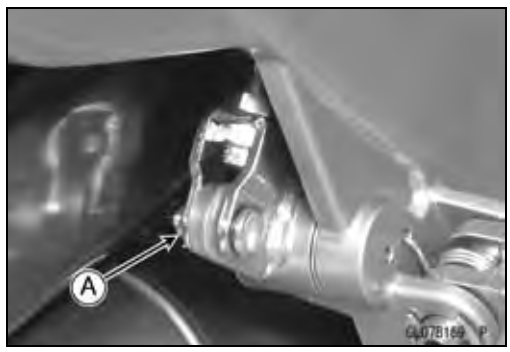

Front Master Cylinder Disassembly

- Refer to the Master Cylinder Rubber Parts Replacement in the Periodic Maintenance chapter.

Rear Master Cylinder Disassembly

- Refer to the Master Cylinder Rubber Parts Replacement in the Periodic Maintenance chapter.

Master Cylinder Assembly

- Refer to the Master Cylinder Rubber Parts Replacement in the Periodic Maintenance chapter.

http://mototh.com

Master Cylinder

Master Cylinder Inspection

- Remove the master cylinders (see Front/Rear Master Cylinder Removal).
- Disassemble the front and rear master cylinders.
- Check that there are no scratches, rust or pitting on the inner wall [A] of each master cylinder and on the outside of each piston [B].

★If a master cylinder or piston shows any damage, replace them.

- Inspect the primary cup [C] and secondary cup [D].

★If a cup is worn, damaged softened (rotted), or swollen, the piston assembly should be replaced to renew the cups.

★If fluid leakage is noted at the brake lever, the piston assembly should be replaced to renew the cups.

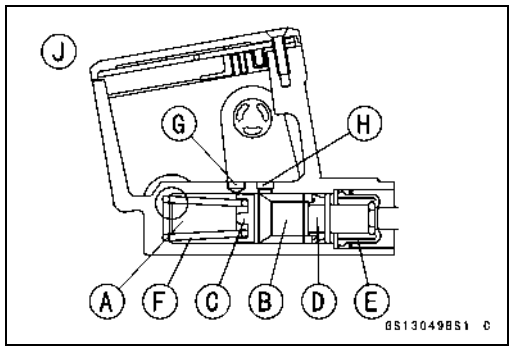

Front Master Cylinder [J]

- Check the dust covers [E] for damage.

★If they are damaged, replace them.

- Check the piston return springs [F] for any damage.

★If the springs are damaged, replace them.

- Check that relief port [G] and supply port [H] are not plugged.

★If the relief port becomes plugged, the brake pads will drag on the disc. Blow the ports clean with compressed air.

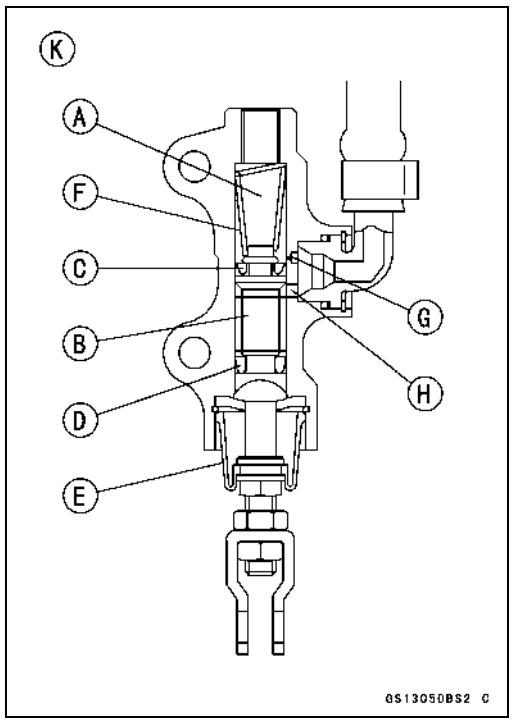

Rear Master Cylinder [K]

Brake Disc

Brake Disc Removal

- Remove the wheel (see Front/Rear Wheel Removal in the Wheels/Tires chapter).
- Unscrew the mounting bolts, and take off the disc.
- Remove the gaskets.

Brake Disc Installation

- Replace the gaskets with new ones.
- Install the brake disc on the wheel so that the marked side [A] faces out.
- Apply a non-permanent locking agent to the threads of the front and rear brake disc mounting bolts [B].
- Tighten:

Torque - Brake Disc Mounting Bolts: 27 N·m (2.8 kgf·m, 20 ft·lb)

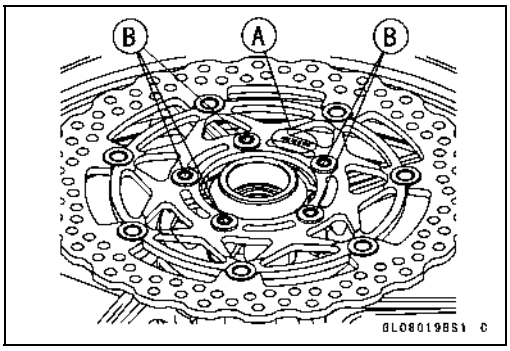

Brake Disc Wear

- Measure the thickness of each disc [A] at the point where it has worn the most.

★If the disc has worn past the service limit, replace it.
Measuring Area [B]

Brake Discs Thickness

Standard:

Front	**4.3 ~ 4.7 mm (0.17 ~ 0.19 in.)**
Rear	**4.8 ~ 5.2 mm (0.19 ~ 0.20 in.)**

Service Limit:

Front	**4.0 mm (0.16 in.)**
Rear	**4.5 mm (0.18 in.)**

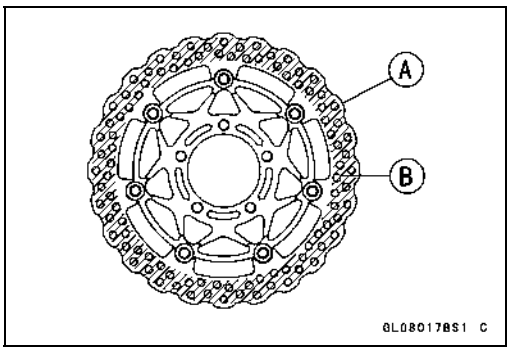

Brake Disc Warp

- Raise the wheel off the ground with jack (see Front/Rear Wheel Removal in the Wheels/Tires chapter).

Special Tools - Jack: 57001-1238
Jack Attachment: 57001-1608

○For front disc inspection, turn the handlebar fully to one side.

- Set up a dial gauge against the disc [A] as shown and measure disc runout, while turning [B] the wheel by hand.

★If runout exceeds the service limit, replace the disc.

Disc Runout

Standard:	**0.15 mm (0.006 in.) or less**
Service Limit:	**0.3 mm (0.01 in.)**

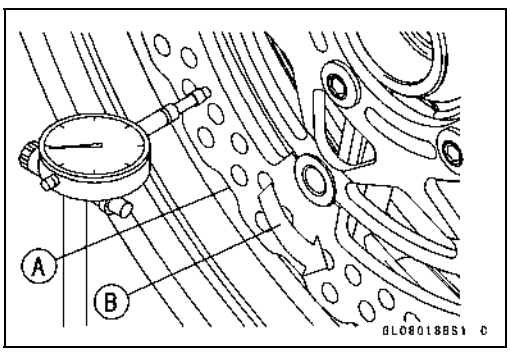

http://mototh.com

Brake Fluid

Brake Fluid Level Inspection

- Refer to the Brake Fluid Level Inspection in the Periodic Maintenance chapter.

Brake Fluid Change

- Refer to the Brake Fluid Change in the Periodic Maintenance chapter.

Brake Line Bleeding

The brake fluid has a very low compression coefficient so that almost all the movement of the brake lever or pedal is transmitted directly to the caliper for braking action. Air, however, is easily compressed. When air enters the brake lines, brake lever or pedal movement will be partially used in compressing the air. This will make the lever or pedal feel spongy, and there will be a loss in braking power.

⚠ WARNING

Be sure to bleed the air from the brake line whenever brake lever or pedal action feels soft or spongy after the brake fluid is changed, or whenever a brake line fitting has been loosened for any reason.

NOTE

○*The procedure to bleed the front brake line is as follows. Bleeding the rear brake line is the same as for the front brake.*

- Remove the reservoir cap [A] and diaphragm.
- Fill the reservoir with fresh brake fluid to the upper level line in the reservoir.
- Slowly pump the brake lever several times until no air bubbles can be seen rising up through the fluid from the holes at the bottom of the reservoir.

○Bleed the air completely from the master cylinder by this operation.

- Remove the rubber cap from the bleed valve [A] on the caliper.
- Attach a clear plastic hose [B] to the bleed valve, and run the other end of the hose into a container.

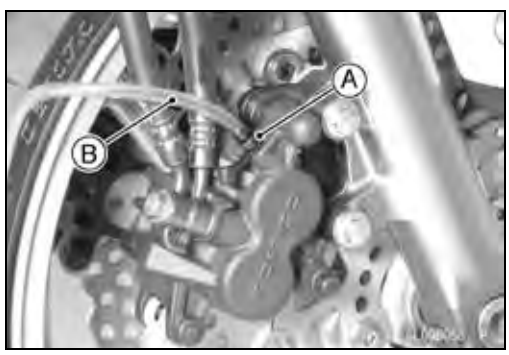

Brake Fluid

- Bleed the brake line and the caliper.

○Repeat this operation until no more air can be seen coming out into the plastic hose.

1. Pump the brake lever until it becomes hard, and apply the brake and hold it [A].
2. Quickly open and close [B] the bleed valve while holding the brake applied.
3. Release the brake [C].

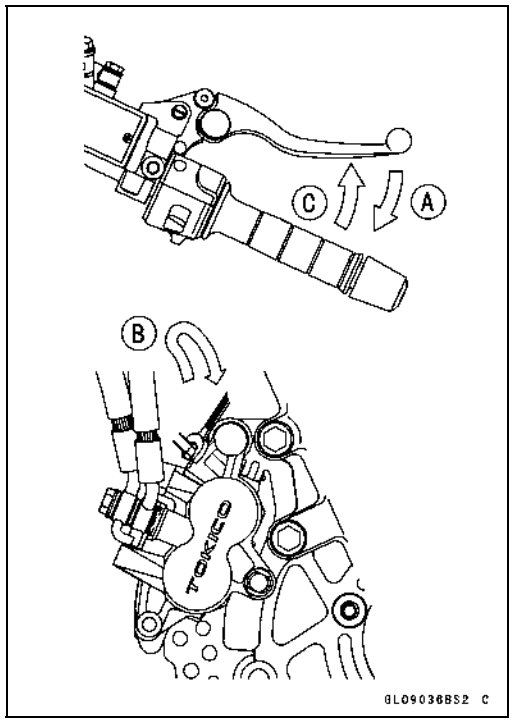

NOTE

○*The fluid level must be checked often during the bleeding operation and replenished with fresh brake fluid as necessary. If the fluid in the reservoir runs completely out any time during bleeding, the bleeding operation must be done over again from the beginning since air will have entered the line.*

○*Tap the brake hose lightly from the caliper to the reservoir for more complete bleeding.*

○*Front Brake: First bleeding the right caliper then repeat the above steps for the left caliper.*

- Remove the clear plastic hose.
- Install the diaphragm and reservoir cap.
- Tighten:

Torque - Front Brake Reservoir Cap Screws: 1.0 N·m (0.10 kgf·m, 9 in·lb)

- Follow the procedure below to install the rear brake fluid reservoir cap correctly.

○First, tighten the rear brake fluid reservoir cap [B] clockwise [C] by hand until slight resistance is felt indicating that the cap is seated on the reservoir body, then tighten the cap an additional 1/6 turn [D] while holding the brake fluid reservoir body [A].

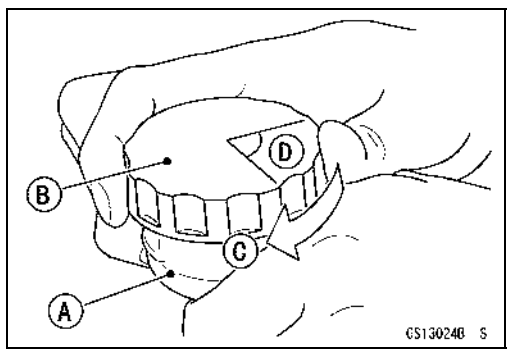

- Tighten the bleed valve, and install the rubber cap.

Torque - Bleed Valve: 7.8 N·m (0.80 kgf·m, 69 in·lb)

- Check the fluid level (see Brake Fluid Level Inspection in the Periodic Maintenance chapter).
- After bleeding is done, check the brake for good braking power, no brake drag, and no fluid leakage.

http://mototh.com

Brake Fluid

⚠ WARNING

When working with the disc brake, observe the precautions listed below.

1. Never reuse old brake fluid.
2. Do not use fluid from a container that has been left unsealed or that has been open for a long time.
3. Do not mix two types and brands of fluid for use in the brake. This lowers the brake fluid boiling point and could cause the brake to be ineffective. It may also cause the rubber brake parts to deteriorate.
4. Don't leave the reservoir cap off for any length of time to avoid moisture contamination of the fluid.
5. Don't change the fluid in the rain or when a strong wind is blowing.
6. Except for the disc pads and disc, use only disc brake fluid, isopropyl alcohol, or ethyl alcohol for cleaning of the brake parts. Do not use any other fluid for cleaning these parts. Gasoline, engine oil, or any other petroleum distillate will cause deterioration of the rubber parts. Oil spilled on any part will be difficult to wash off completely and will eventually deteriorate the rubber used in the disc brake.
7. When handling the disc pads or disc, be careful that no disc brake fluid or any oil gets on them. Clean off any fluid or oil that inadvertently gets on the pads or disc with a high-flash point solvent. Do not use one which will leave an oily residue. Replace the pads with new ones if they cannot be cleaned satisfactorily.
8. Brake fluid quickly ruins painted surfaces; any spilled fluid should be completely wiped up immediately.
9. If any of the brake line fittings or the bleed valve is opened at any time, the **AIR MUST BE BLED FROM THE BRAKE LINE.**

http://mototh.com

Brake Hose

Brake Hose Removal/Installation

- Refer to the Brake Hose and Pipe Replacement in the Periodic Maintenance chapter.

Brake Hose Inspection

- Refer to the Brake Hose Damage and Installation Condition Inspection in the Periodic Maintenance chapter.

http://mototh.com

Suspension

Table of Contents

Exploded View 13-2
Specifications 13-6
Special Tools 13-7
Front Fork 13-9
- Front Fork Removal 13-9
- Front Fork Installation 13-9
- Front Fork Oil Change 13-9
- Front Fork Disassembly 13-11
- Front Fork Assembly 13-12
- Inner Tube Inspection 13-13
- Dust Seal Inspection 13-13
- Fork Spring Inspection 13-14

Rear Shock Absorber 13-15
- Spring Preload Adjustment 13-15
- Rear Shock Absorber Removal 13-15
- Rear Shock Absorber Installation 13-16
- Rear Shock Absorber Inspection 13-16

Swingarm 13-17
- Swingarm Removal 13-17
- Swingarm Installation 13-17
- Swingarm Bearing Removal 13-18
- Swingarm Bearing Installation 13-18
- Swingarm Bearing, Sleeve Inspection 13-19
- Swingarm Bearing Lubrication 13-20
- Chain Guide Inspection 13-20

http://mototh.com

Exploded View

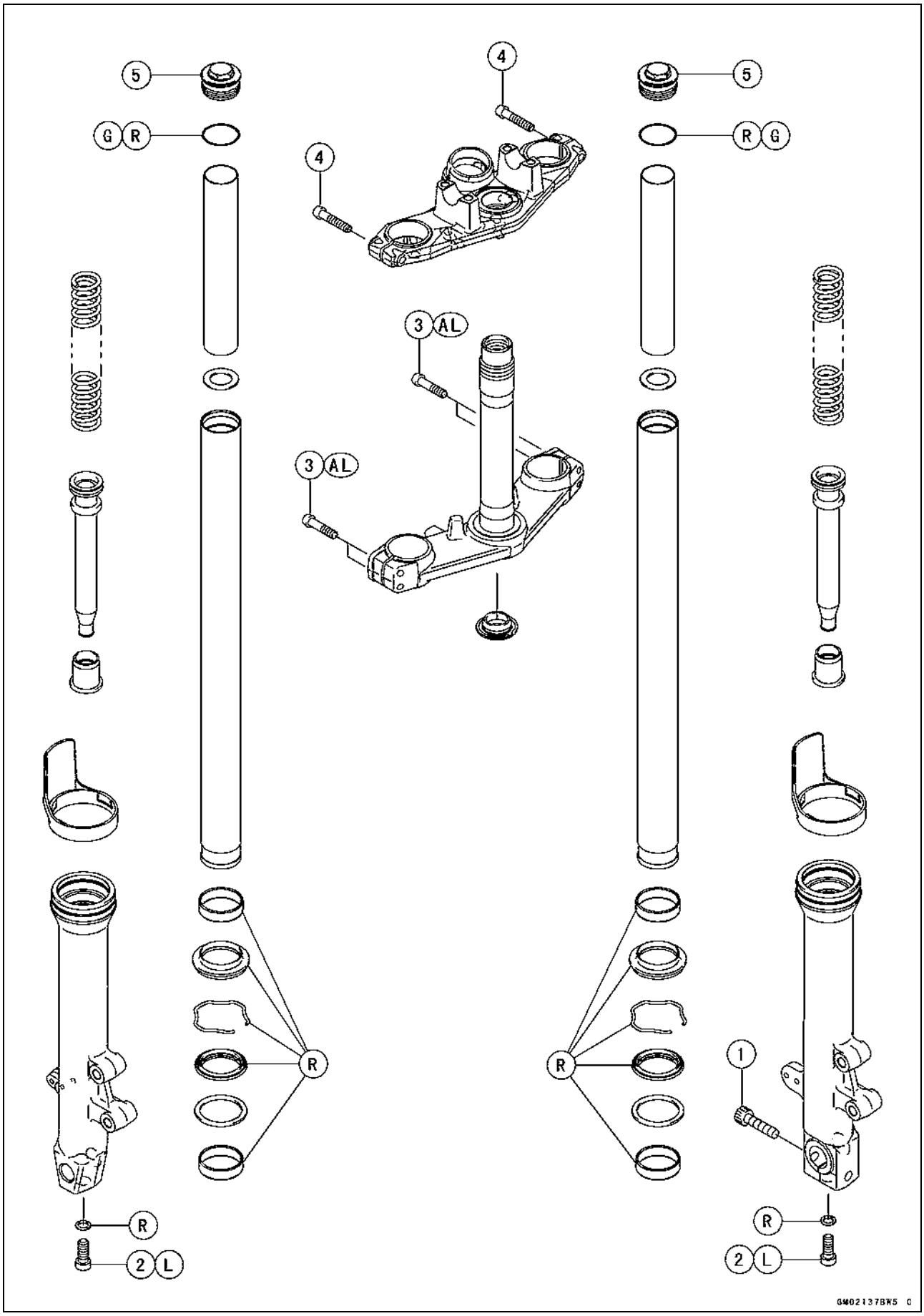

Exploded View

No.	Fastener	Torque			Remarks
		N·m	kgf·m	ft·lb	
1	Front Axle Clamp Bolt	34	3.5	25	
2	Front Fork Bottom Allen Bolts	30	3.1	22	L
3	Front Fork Clamp Bolts (Lower)	20	2.0	15	AL
4	Front Fork Clamp Bolts (Upper)	20	2.0	15	
5	Front Fork Top Plugs	25	2.5	18	

AL: Tighten the two clamp bolts alternately two times to ensure even tightening torque.
G: Apply grease.
L: Apply a non-permanent locking agent.
R: Replacement Parts

http://mototh.com

Exploded View

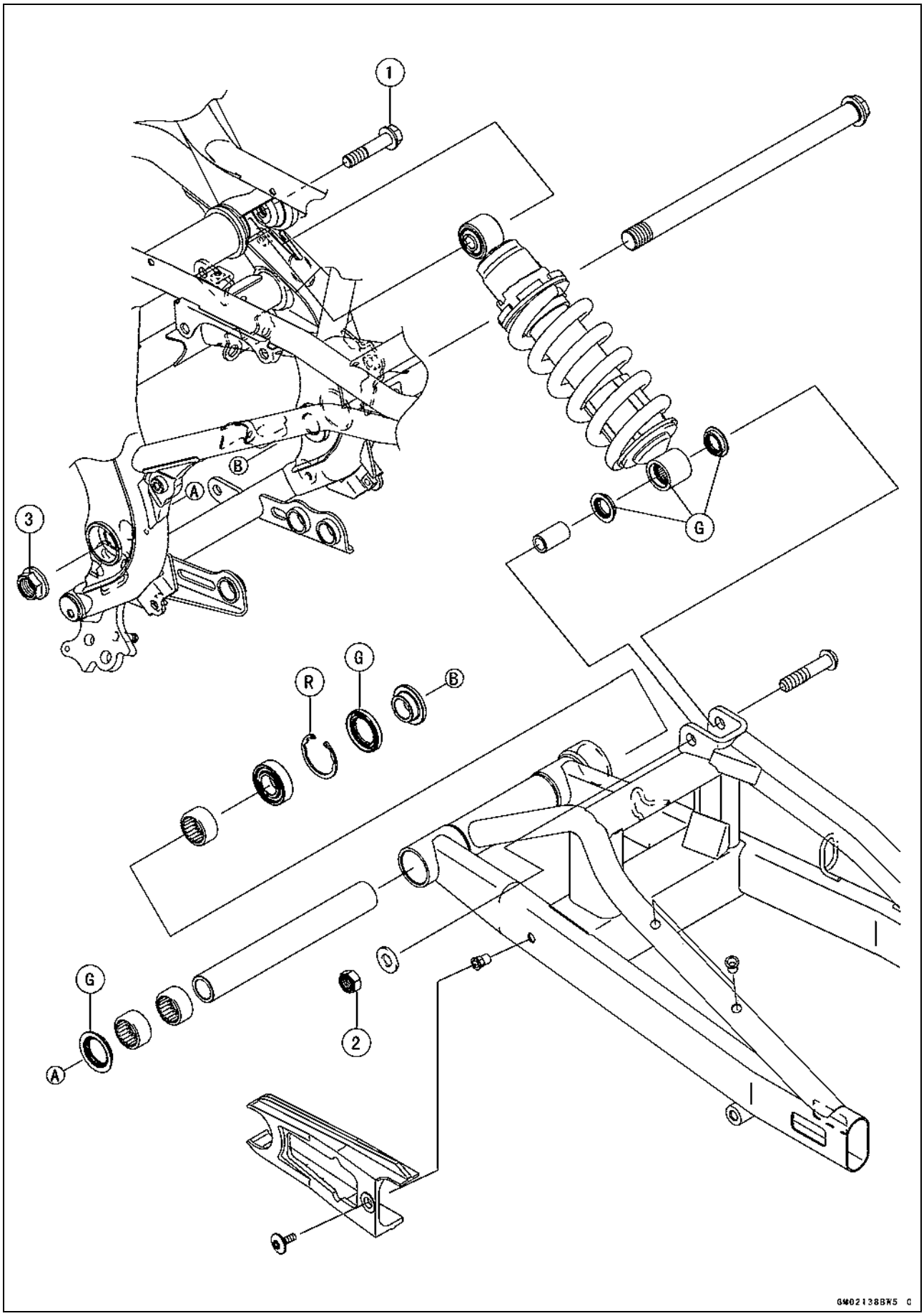

Exploded View

No.	Fastener	Torque			Remarks
		N·m	kgf·m	ft·lb	
1	Rear Shock Absorber Bolt	59	6.0	44	
2	Rear Shock Absorber Nut	59	6.0	44	
3	Swingarm Pivot Shaft Nut	108	11.0	80	

G: Apply grease.
R: Replacement Parts

http://mototh.com

Specifications

Item	Standard
Front Fork (Per One Unit)	
Fork Inner Tube Outside Diameter	41 mm (1.6 in.)
Air Pressure	Atmospheric pressure (Non-adjustable)
Fork Spring Setting	Non-adjustable
Damper Setting	Non-adjustable
Fork Oil:	
Viscosity	KAYABA KHL34-G10 or equivalent
Amount	approx. 390 mL (13.2 US oz.) (when changing oil) 458 ±4 mL (15.5 ±0.14 US oz.) (after disassembly and completely dry)
Fork Oil Level	115 ±2 mm (4.5 ±0.08 in.) (below from inner tube top with fully compressed, without fork spring)
Fork Spring Free Length	277.8 mm (10.94 in.) (Service limit 272 mm (10.7 in.))
Rear Shock Absorber	
Spring Preload	3rd position (Adjustable Range: 1st ~ 7th position)
Gas Pressure	980 kPa (10 kgf/cm², 142 psi, Non-adjustable)

http://mototh.com

Special Tools

Inside Circlip Pliers:
57001-143

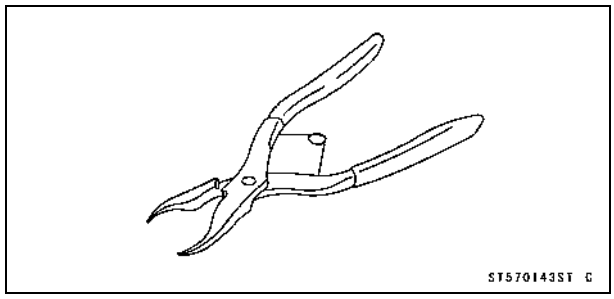

Fork Cylinder Holder Handle:
57001-183

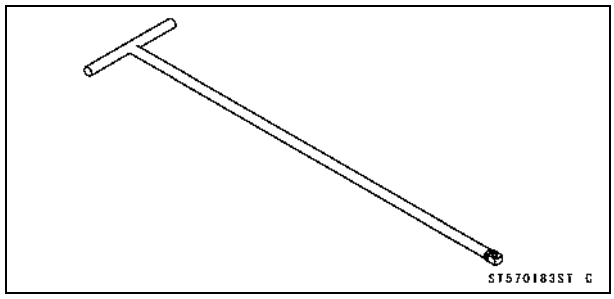

Fork Cylinder Holder Adapter:
57001-1057

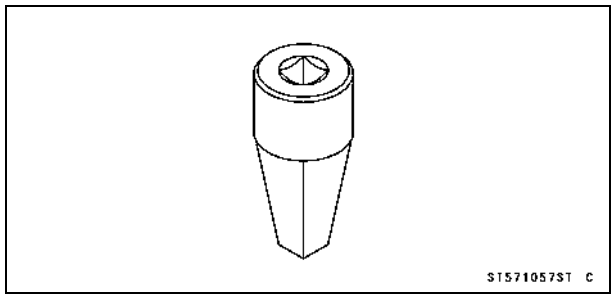

Oil Seal & Bearing Remover:
57001-1058

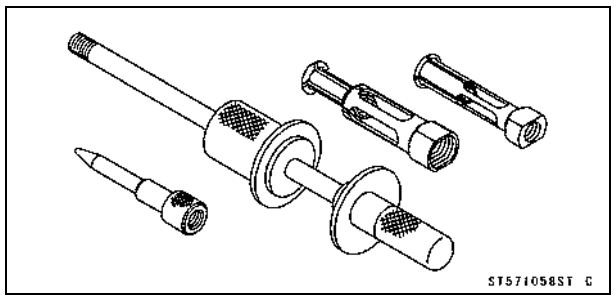

Bearing Driver Set:
57001-1129

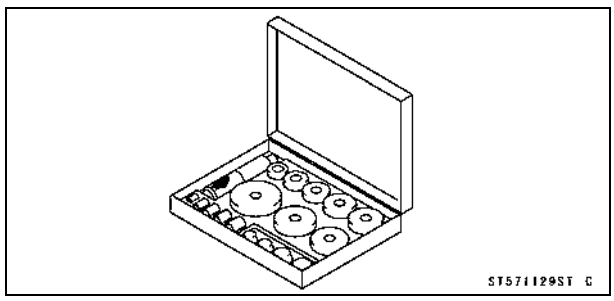

Jack:
57001-1238

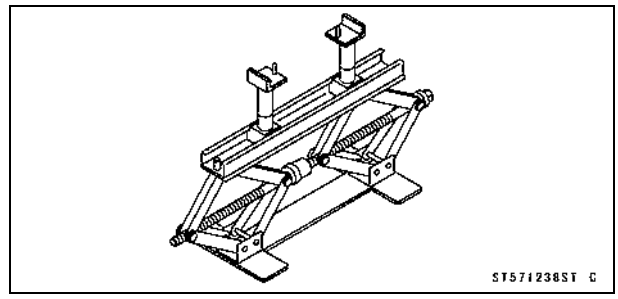

Fork Oil Seal Driver, ϕ41:
57001-1288

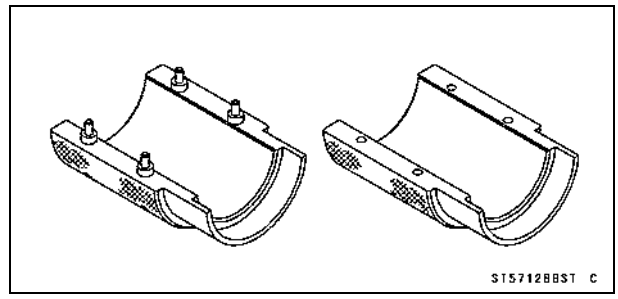

Fork Oil Level Gauge:
57001-1290

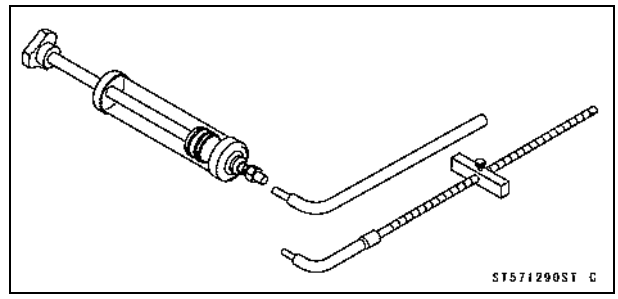

Jack Attachment:
57001-1608

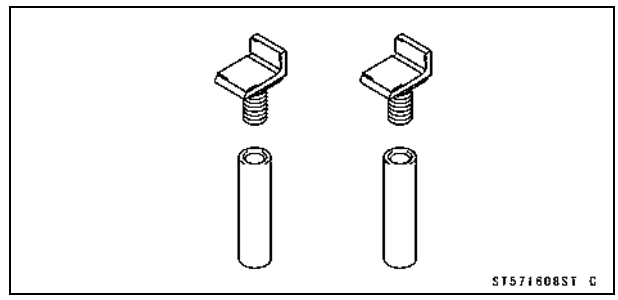

Stem Bearing Driver, ϕ28:
57001-1610

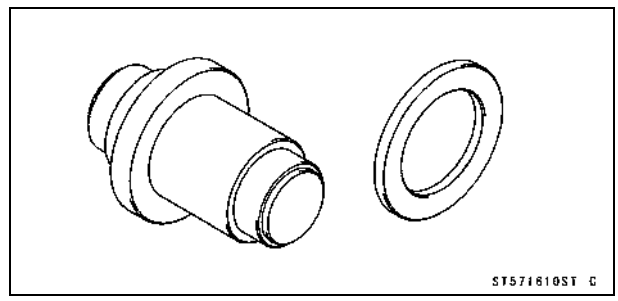

Special Tools

Spacer, ϕ28:
57001-1663

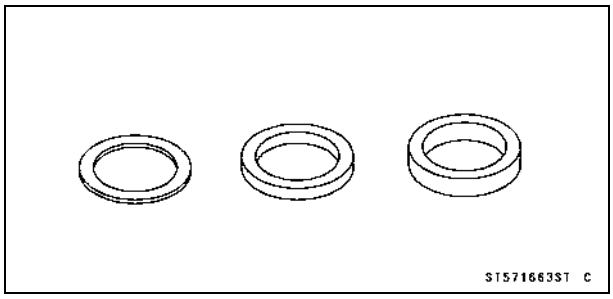

Front Fork

Front Fork Removal

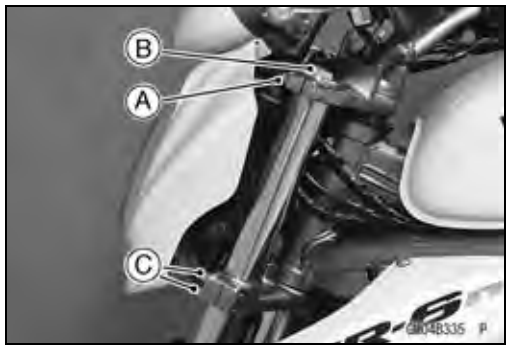

- Remove:
  Front Wheel (see Front Wheel Removal in the Wheels/Tires chapter)
  Front Fender (see Front Fender Removal in the Frame chapter)

★Loosen the upper fork clamp bolt [A] and fork top plug [B] beforehand if the fork leg is to be disassembled.

NOTE

○*Loosen the top plug after loosening the upper fork clamp bolt.*

- Loosen the upper fork clamp bolt and lower fork clamp bolts [C].
- With a twisting motion, work the fork leg down and out.

Front Fork Installation

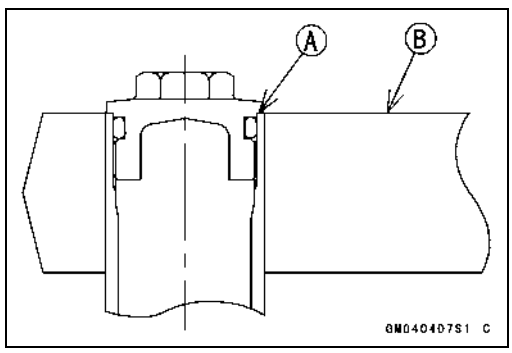

- Install the fork with the upper end of the inner tube flush [A] against the top surface of the stem head [B].
- Tighten:

Torque - Front Fork Clamp Bolts (Lower): 20 N·m (2.0 kgf·m, 15 ft·lb)
Front Fork Top Plug: 25 N·m (2.5 kgf·m, 18 ft·lb)

NOTE

○*Tighten the top plug before tightening the upper fork clamp bolt.*
○*Tighten the two clamp bolts alternately two times to ensure even tightening torque.*

- Tighten:

Torque - Front Fork Clamp Bolt (Upper): 20 N·m (2.0 kgf·m, 15 ft·lb)

- Install the removed parts (see appropriate chapters).

Front Fork Oil Change

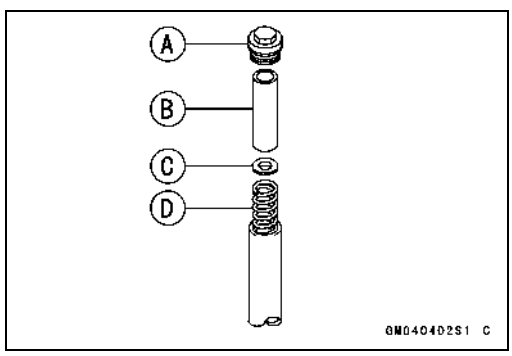

- Remove the front fork (see Front Fork Removal).
- Remove:
  Top Plug [A] with O-ring
  Collar [B]
  Fork Spring Seat [C]
  Fork Spring [D]

http://mototh.com

Front Fork

- Compress [A] the fork [B] upside down to draw out the oil into the suitable container [C].
- Pour in the specified amount of oil.

Fork Oil

Viscosity: **KAYABA KHL34-G10 or equivalent**

Amount (Per Side):

When changing oil: **approx. 390 mL (13.2 US oz.)**

After disassembly and completely dry: **458 ±4 mL (15.5 ±0.14 US oz.)**

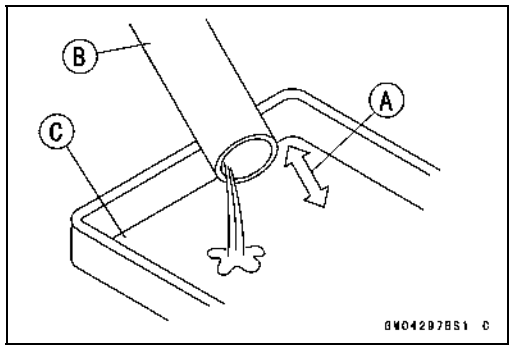

NOTE

○*Move the outer tube up and down a few times to remove the air that is trapped in the fork oil in order to stabilize the oil level.*

- Hold the outer tube vertically in a vise and compress the fork completely.
- Wait until the oil level stabilizes.
- Use the fork oil level gauge [A] to measure the distance between the top of the inner tube to the oil level.

Special Tool - Fork Oil Level Gauge: 57001-1290

○Set the oil level gauge stopper [B] so that the distance [C] from the bottom of the stopper to the lower end of the pipe is the standard oil level distance.

○A correct measurement can not be obtained unless the level gauge pipe is placed in the center of the inner tube.

Oil Level (fully compressed, without spring)

Standard: **115 ±2 mm (4.5 ±0.08 in.)**

○Place the stopper of the level gauge at the top [D] of the inner tube [E] and pull the handle slowly to draw out the excess oil from fork into the gauge, thus attaining the standard level.

○If not oil is drawn out, there is not enough oil in the fork. Pour in some more oil and measure again.

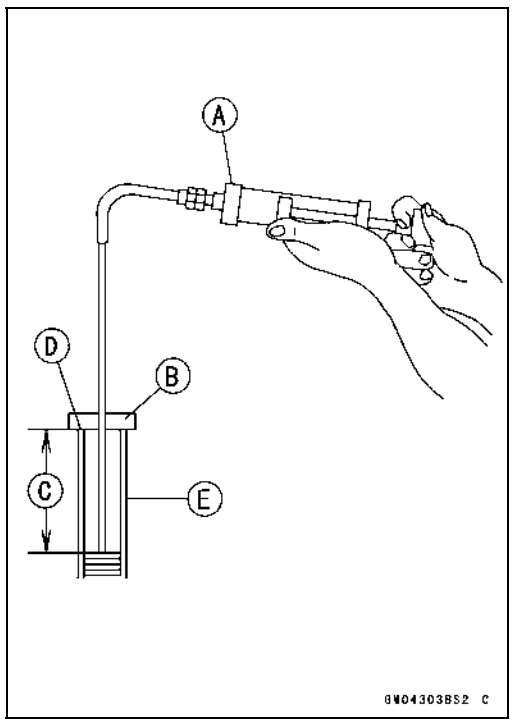

- Repeat the same procedure for adjusting the other fork.
- Install the fork spring [A], fork spring seat [B] and collar [C].
- Inspect the top plug O-ring and replace it with a new one.
- Install the front fork (see Front Fork Installation).

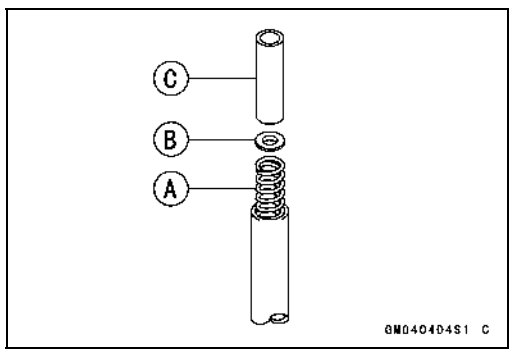

Front Fork

Front Fork Disassembly

- Remove the front fork (see Front Fork Removal).
- Remove the top plug [A] with O-ring, take out the collar [B], fork spring seat [C], and fork spring [D].
- Drain the fork oil (see Front Fork Oil Change).

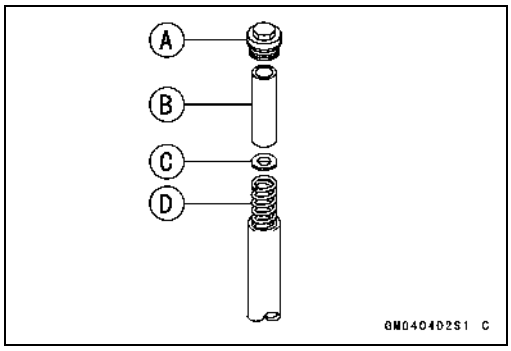

- Remove the Allen bolt [A] from the bottom of the fork.

Special Tools - Fork Cylinder Holder Handle [B]: 57001-183
Fork Cylinder Holder Adapter [C]: 57001-1057

NOTE

○*Hold the outer tube in a vise [D], stop the cylinder unit [E] from turning by using the special tools, and unscrew the Allen bolt.*

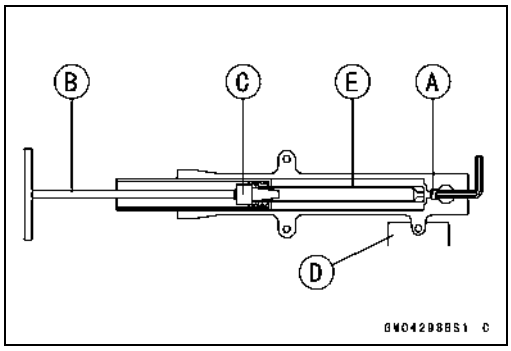

- Remove the cylinder unit [A], washer, and the spring [B] from the inner tube.

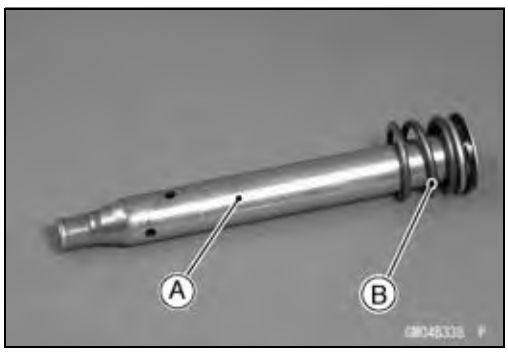

- Remove the following from the top of the outer tube.
  Dust Seal [A]
  Retaining Ring [B]

- Separate the inner tube [A] from the outer tube [B].

NOTE

○*From the compressed state, firmly pull down the outer tube a few times towards the direction of elongation.*

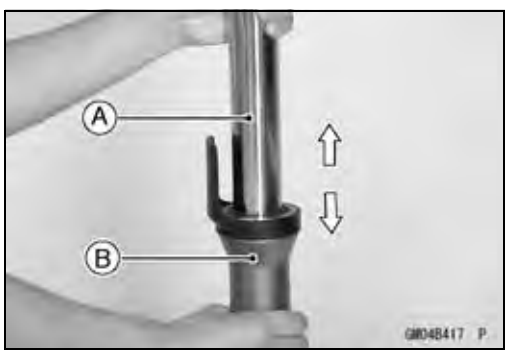

Front Fork

- Remove the following from the inner tube.
  Inner Guide Bushing [A]
  Outer Guide Bushing [B]
  Washer [C]
  Oil Seal [D]

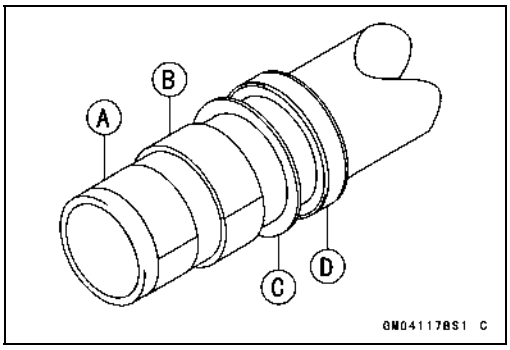

- Remove the cylinder base [A] from the bottom of the outer tube.

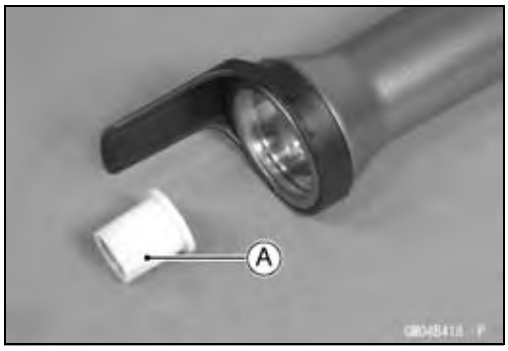

Front Fork Assembly

- Check the top plug O-ring and replace it with a new one.
- Replace the following parts with new ones.
  Retaining Ring [A]
  Dust Seal [B]
  Oil Seal [C]
  Inner Guide Bushing [D]
  Outer Guide Bushing [E]
  Fork Bottom Allen Bolt Gasket [F]

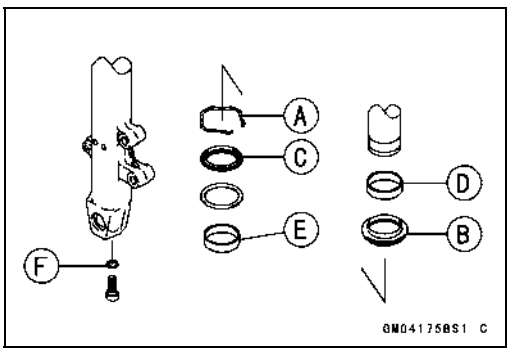

- Install the guide bushing on the end of the inner tube.
- Insert the cylinder unit and the spring into the inner tube, and install the cylinder base [A] onto the cylinder end [B] that protrudes from the bottom.

○Install the cylinder base starting with its stepped end.

- Insert the inner tube, cylinder unit, washer, spring, and cylinder base as a set into the outer tube.

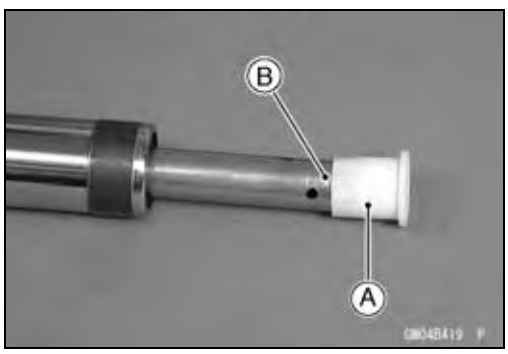

- Install the guide bushing into the outer tube.
- After installing the washer, install the oil seal [A] by using the fork oil seal driver [B].

  Special Tool - Fork Oil Seal Driver, ϕ41: 57001-1288

- Install the retaining ring into the outer tube.
- Install the dust seal by hand.

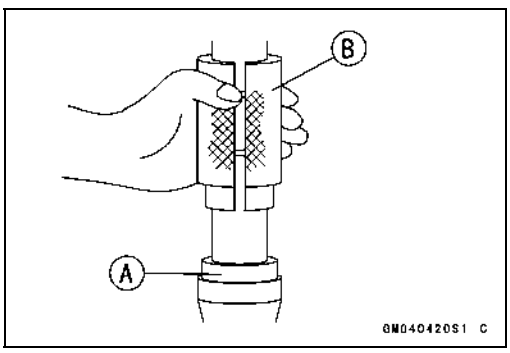

http://mototh.com

Front Fork

- Apply non-permanent locking agent to the threads of the bottom Allen bolt [A].
- Hold the front fork horizontally in a vise [B].
- Hold the cylinder unit [C] with the special tools and tighten the bottom Allen bolt to secure the cylinder in place.

Torque - Front Fork Bottom Allen Bolt: 30 N·m (3.1 kgf·m, 22 ft·lb)

Special Tools - Fork Cylinder Holder Handle [D]: 57001-183
Fork Cylinder Holder Adapter [E]: 57001-1057

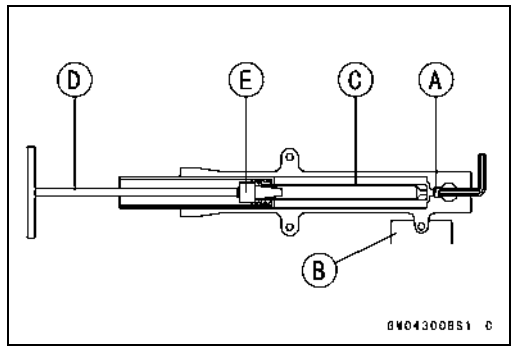

- Pour in the specified type of oil (see Front Fork Oil Change).

Inner Tube Inspection

- Visually inspect the inner tube [A], and repair any damage.
- Nicks or rust damage can sometimes be repaired by using a wet-stone to remove sharp edges or raised areas which cause seal damage.

★If the damage is not repairable, replace the inner tube. Since damage to the inner tube damages the oil seal, replace the oil seal whenever the inner tube is repaired or replaced.

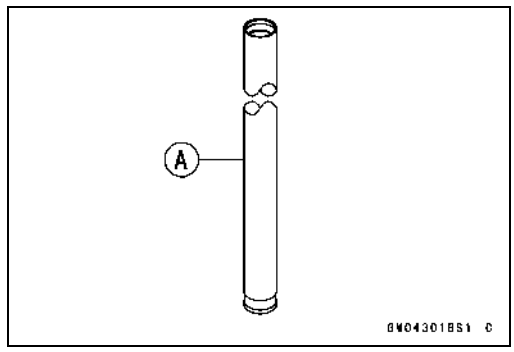

CAUTION

If the inner tube is badly bent or creased, replace it. Excessive bending, followed by subsequent straightening, can weaken the inner tube.

- Temporarily assemble the inner and outer tubes, and pump them back and forth manually to check for smooth operation.
- If you feel binding or catching, the inner and outer tubes must be replaced.

⚠ WARNING

A straightened inner or outer fork tube may fall in use, possibly causing an accident. Replace a badly bent or damaged inner or outer tube and inspect the other tube carefully before reusing it.

Dust Seal Inspection

- Inspect the dust seal [A] for any signs of deterioration or damage.

★Replace it if necessary.

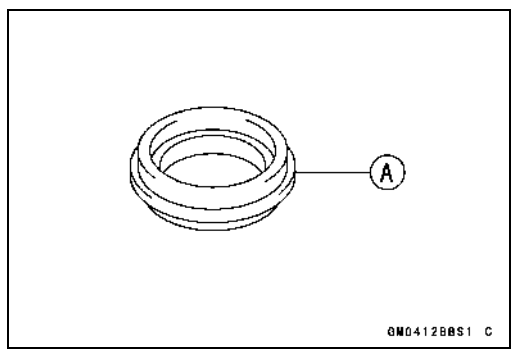

Front Fork

Fork Spring Inspection

- Measure the free length [A] of the fork spring [B].

★If the measured length is shorter than the service limit, the spring must be replaced. If the free length of the replacement spring and that of the remaining spring vary greatly, the remaining spring should also be replaced in order to keep the fork legs balanced to ensure stability.

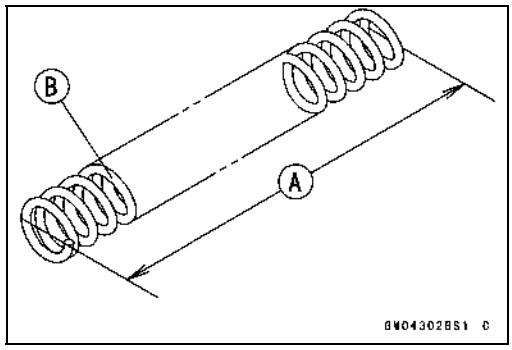

Fork Spring Free Length

Standard:	**277.8 mm (10.94 in.)**
Service Limit:	**272 mm (10.7 in.)**

Rear Shock Absorber

Spring Preload Adjustment

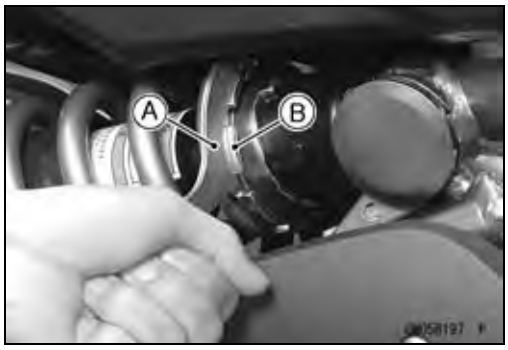

- Using the hook wrench [A], turn the adjusting nut [B] to adjust the spring preload.

○The standard adjuster setting for average-build rider of 68 kg (150 lb) with no passenger and no accessories is 3rd position.

Spring Preload Setting

Standard Position: 3rd position

Adjustable Range: 1st to 7th position

- If the compression of the spring is not suited to the operating conditions, adjust it to an appropriate position by referring to the table below.

Spring Preload Adjustment

Adjuster Position	Damping Force	Shock Absorber Hardness	Load	Road Conditions	Driving Speed
1st	Weak	Soft	Light	Good	Low
↑	↑	↑	↑	↑	↑
↓	↓	↓	↓	↓	↓
7th	Strong	Hard	Heavy	Bad	Highway

Rear Shock Absorber Removal

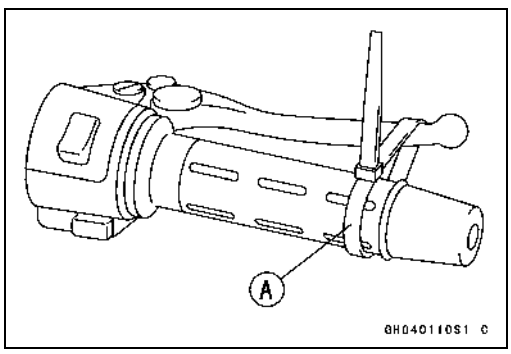

- Remove:
  Frame Covers (see Frame Cover Removal in the Frame chapter)
  Muffler Body (see Muffler Body Removal in the Engine Top End chapter)
- Raise the rear wheel off the ground with jack.

Special Tools - Jack: 57001-1238
Jack Attachment: 57001-1608

- Squeeze the brake lever slowly and hold it with a band [A].

⚠ WARNING

Be sure to hold the front brake when removing the shock absorber, or the motorcycle may tall over. It could cause an accident and injury.

- Remove:
  Right Stay Cover [A]

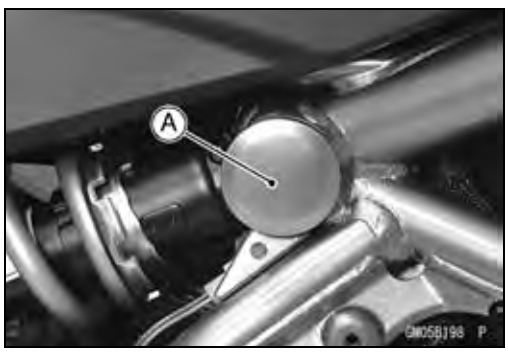

Rear Shock Absorber

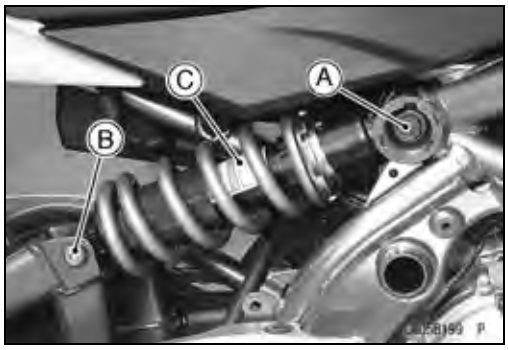

- Remove:
  Upper Shock Absorber Bolt [A]
  Lower Shock Absorber Nut and Washer
  Lower Shock Absorber Bolt [B]
- Remove the shock absorber [C] from backward.

Rear Shock Absorber Installation

- Installation is the reverse of removal.
- Apply grease to the lip of oil seals and bearing of rear shock absorber.

○Be sure to install the oil seals to the shock absorber.

- Tighten:

Torque - Rear Shock Absorber Bolt: 59 N·m (6.0 kgf·m, 44 ft·lb)
Rear Shock Absorber Nut: 59 N·m (6.0 kgf·m, 44 ft·lb)

- Install the removed parts (see appropriate chapters).

Rear Shock Absorber Inspection

- Remove the rear shock absorber (see Rear Shock Absorber Removal).
- Visually inspect the following items.
  Smooth Stroke
  Oil Leakage
  Crack or Dent

★If there is any damage to the rear shock absorber, replace it.

- Visually inspect the rubber bushing.

★If it show any signs of damage, replace it.

http://mototh.com

Swingarm

Swingarm Removal

- Remove:
  Chain Cover Bolts [A] and Cover [B]

- Remove:
  Right Side Cover (see Side Cover Removal in the Frame chapter)
  Frame Covers (see Frame Cover Removal in the Frame chapter)
- Remove the brake hose banjo bolt from the rear caliper, free the brake hose [A] from the clamps [B], and remove the footpeg stay with the rear master cylinder (see Rear Caliper Removal in the Brakes chapter).
- Remove:
  Muffler Body (see Muffler Body Removal in the Engine Top End chapter)
  Rear Wheel (see Rear Wheel Removal in the Wheels/Tires chapter)

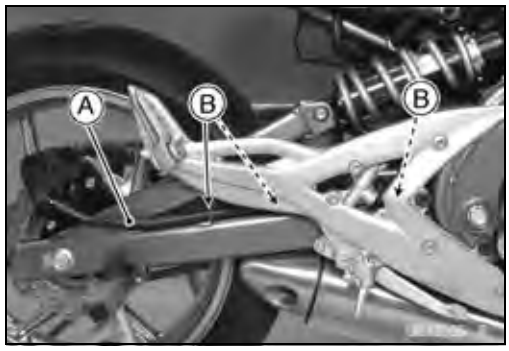

- Raise the rear wheel off the ground with jack.

  Special Tools - Jack: 57001-1238
  Jack Attachment: 57001-1608

- Remove the lower shock absorber nut and bolt [A].

- Remove the drive chain (see Drive Chain Removal in the Final Drive chapter).
- Unscrew the swingarm pivot shaft nut [A].
- Pull off the pivot shaft [B], and remove the swingarm.

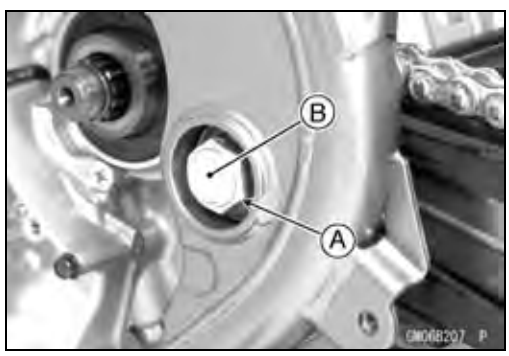

Swingarm Installation

- Installation is the reverse of removal.
  - ○Apply grease to the lip of the oil seals.
  - ○Be sure to install the oil seal and collar to the swingarm.
- Tighten the pivot shaft nut.

  Torque - Swingarm Pivot Shaft Nut: 108 N·m (11.0 kgf·m, 80 ft·lb)

- Install the removed parts (see appropriate chapters).

http://mototh.com

Swingarm

Swingarm Bearing Removal

- Remove:
  Swingarm (see Swingarm Removal)
  Collar [A]
  Oil Seals [B]
  Sleeve [C]
  Circlip [D]

  Special Tool - Inside Circlip Pliers: 57001-143

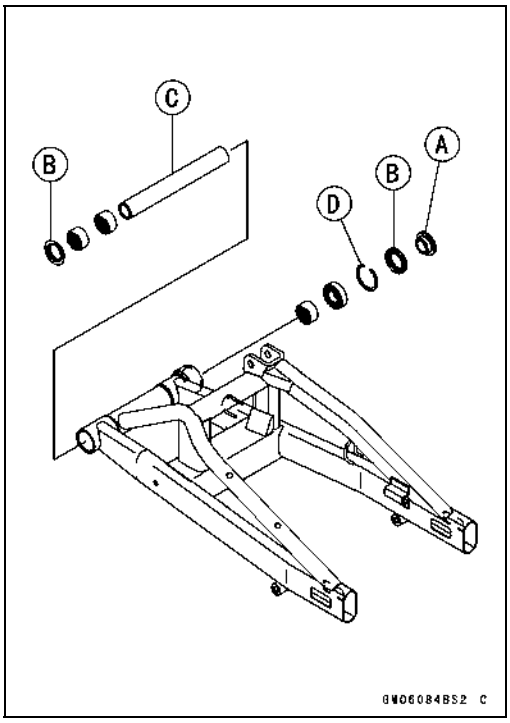

- Remove the ball bearing and needle bearings.

  Special Tool - Oil Seal & Bearing Remover [A]: 57001-1058

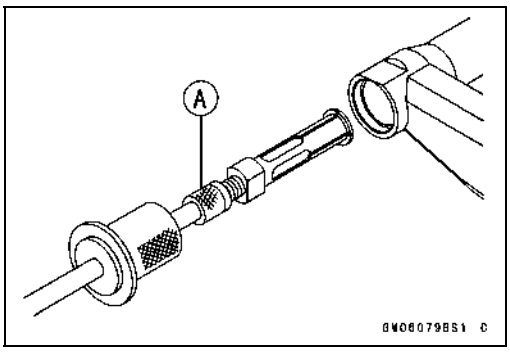

Swingarm Bearing Installation

- Replace the ball and needle bearings [A] with new ones.
- Install the ball and needle bearings so that the manufacturer's marks face out.

  Special Tools - Bearing Driver Set: 57001-1129
  Stem Bearing Driver, ϕ28 [B]: 57001-1610
  Spacer, ϕ28: 57001-1663

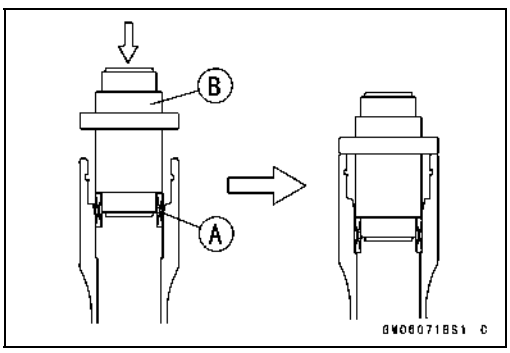

http://mototh.com

Swingarm

- Install the needle bearings [A], ball bearing [B] and oil seals [C] position as shown.
  Circlip [D]
  25 mm (0.98 in.) [E]
  17 mm (0.67 in.) [F]
  1 mm (0.04 in.) [G]
  0.5 mm (0.02 in.) [H]
  1 mm (0.04 in.) [I]
  23.5 mm (0.93 in.) [J]
  6 mm (0.24 in.) [K]

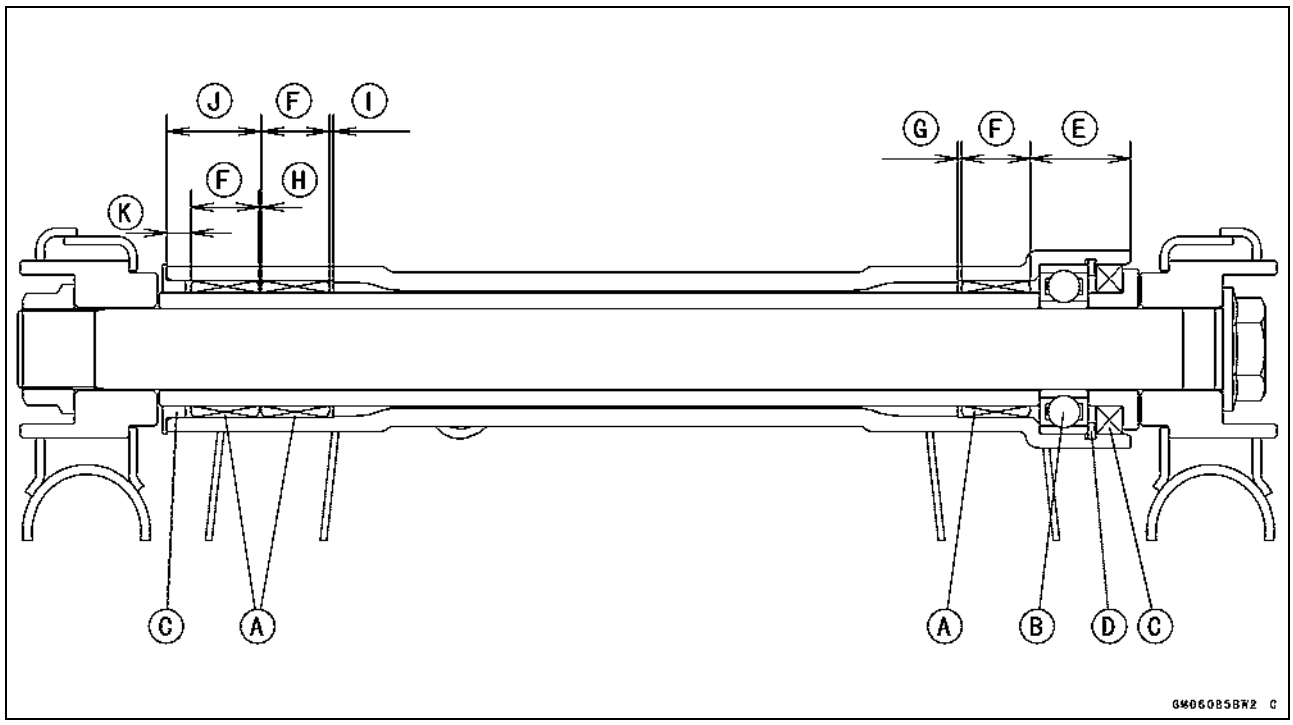

Swingarm Bearing, Sleeve Inspection

CAUTION
Do not remove the bearings for inspection. Removal may damage them.

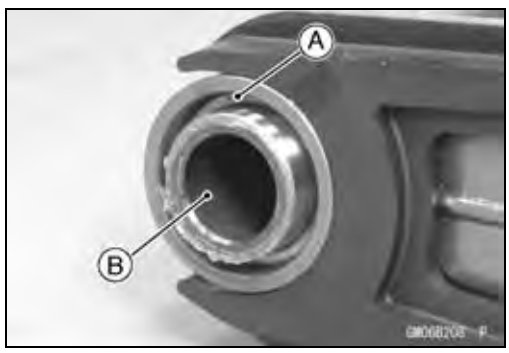

- Inspect the needle bearings [A] and ball bearing installed in the swingarm.

○The rollers and ball in a bearing normally wear very little, and wear is difficult to measure. Instead of measuring, visually inspect the bearing for abrasion, discoloration, or other damage.

★If the needle bearing and sleeve [B] show any sings of abnormal wear, discoloration, or damage, replace them as a set.

http://mototh.com

Swingarm

- Turn the bearing in the swingarm back and forth [A] while checking for plays, roughness, or binding.

★If the bearing play, roughness, or binding is found, replace the bearing.

- Examine the bearing seal [B] for tears or leakage.

★If the seal is torn or is leaking, replace the bearing.

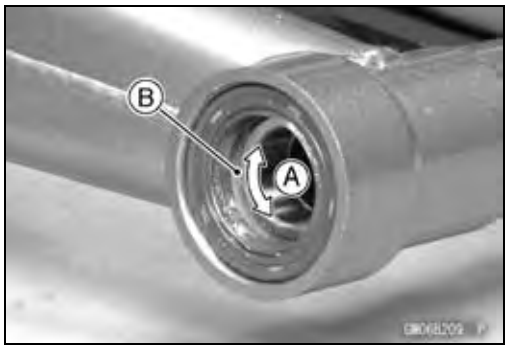

Swingarm Bearing Lubrication

NOTE

○*Since the bearings are packed with grease and sealed, lubrication is not required.*

Chain Guide Inspection

- Refer to the Chain Guide Wear Inspection in the Periodic Maintenance chapter.

http://mototh.com

Steering

Table of Contents

Exploded View 14-2
Special Tools 14-4
Steering 14-5
    Steering Inspection 14-5
    Steering Adjustment 14-5
Steering Stem 14-6
    Stem, Stem Bearing Removal 14-6
    Stem, Stem Bearing Installation 14-7
    Stem Bearing Lubrication 14-8
    Steering Stem Warp 14-9
    Stem Cap Deterioration, Damage 14-9
Handlebar 14-10
    Handlebar Removal 14-10
    Handlebar Installation 14-10

http://mototh.com

Exploded View

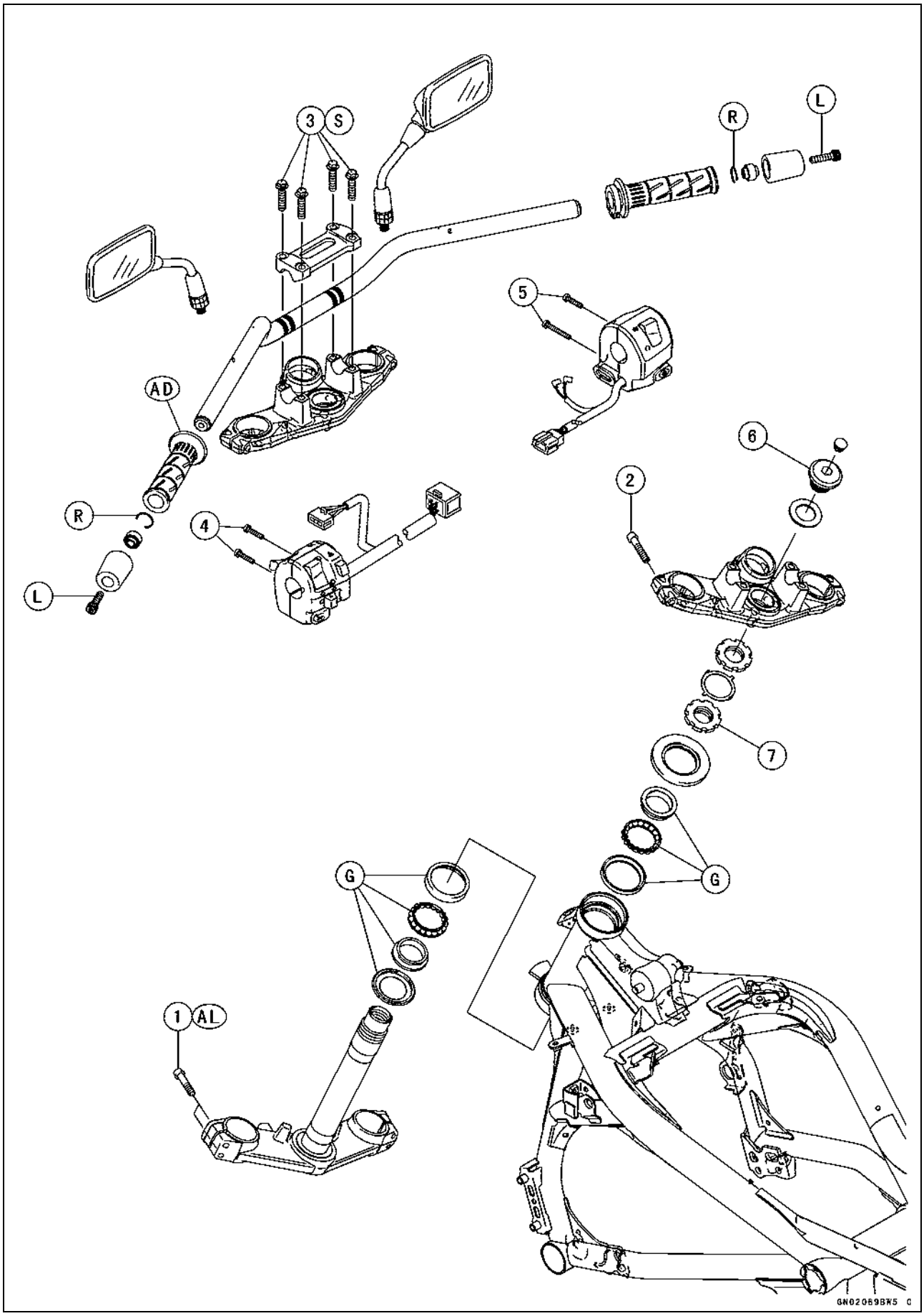

Exploded View

No.	Fastener	Torque			Remarks
		N·m	kgf·m	ft·lb	
1	Front Fork Clamp Bolts (Lower)	20	2.0	15	AL
2	Front Fork Clamp Bolts (Upper)	20	2.0	15	
3	Handlebar Holder Bolts	25	2.5	18	S
4	Left Switch Housing Screws	3.5	0.36	31 in·lb	
5	Right Switch Housing Screws	3.5	0.36	31 in·lb	
6	Steering Stem Head Bolt	108	11.0	80	
7	Steering Stem Nut	20	2.0	15	

AD: Apply adhesive.
AL: Tighten the two clamp bolts alternately two times to ensure even tighten torque.
G: Apply grease.
L: Apply a non-permanent locking agent.
R: Replacement Parts
S: Follow the specified tightening sequence.

http://mototh.com

Special Tools

Steering Stem Nut Wrench:
57001-1100

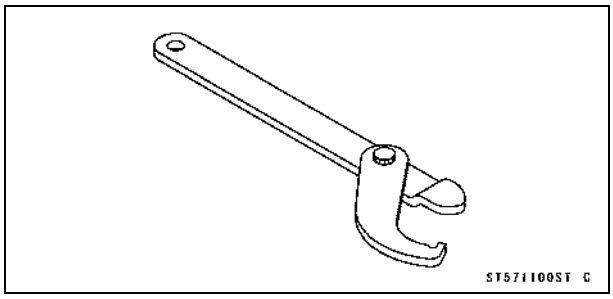

Steering Stem Bearing Driver, ϕ42.5:
57001-1344

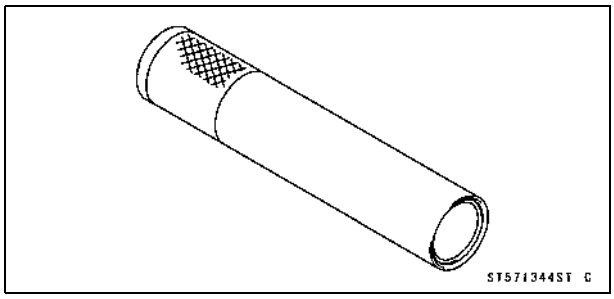

Bearing Driver Set:
57001-1129

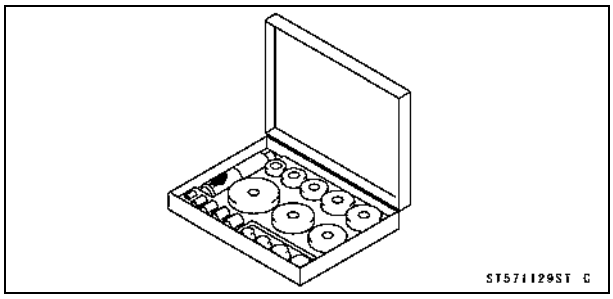

Steering Stem Bearing Driver Adapter, ϕ41.5:
57001-1345

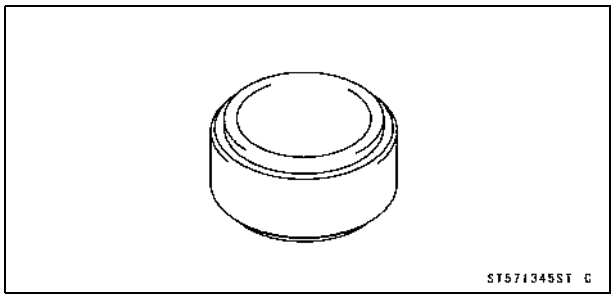

http://mototh.com

Steering

Steering Inspection

- Refer to the Steering Play Inspection in the Periodic Maintenance chapter.

Steering Adjustment

- Refer to the Steering Play Adjustment in the Periodic Maintenance chapter.

http://mototh.com

Steering Stem

Stem, Stem Bearing Removal

- Remove:
  Front Wheel (see Front Wheel Removal in the Wheels/Tires chapter)
  Headlight Assy (see Headlight Removal/Installation in the Electrical System chapter)
  Handlebar (see Handlebar Removal)
  Steering Stem Head Bolt Plug [A]
  Steering Stem Head Bolt [B] and Washer
  Front Fork Clamp Bolts (Upper) [C] (Loosen)
  Steering Stem Head [D]

- Remove:
  Under Bracket [A] (see Upper Fairing Bracket Removal in the Frame chapter)
  Front Forks (see Front Fork Removal in the Suspension chapter)

- Straighten the claws [A] of the claw washer.
- Remove the steering stem locknut [B] and claw washer [C].

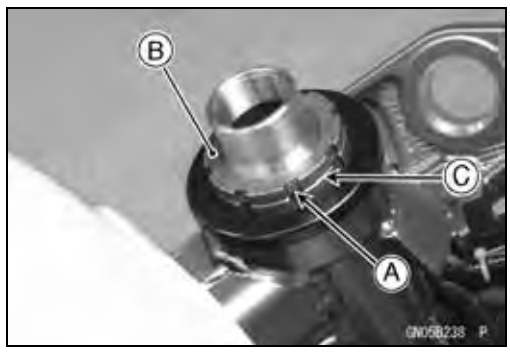

- Pushing up the stem base, and remove the steering stem nut [A] with stem cap [B].

  Special Tool - Steering Stem Nut Wrench [C]: 57001-1100

- Remove the steering stem [D] under side.
- Remove the upper stem bearing inner race and bearing.

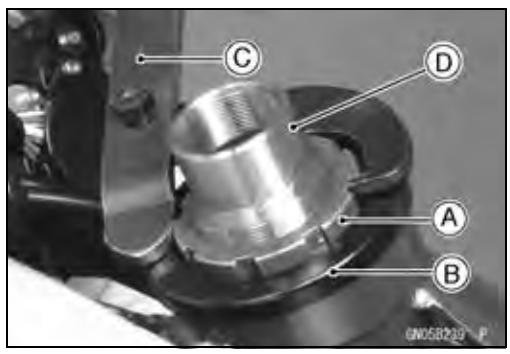

- To remove the bearing outer races [A] pressed into the head pipe [B], insert a bar [C] into the recesses of head pipe, and applying it to both recess alternately hammer it to drive the race out.

NOTE

○*If either steering stem bearing is damaged, it is recommended that both the upper and lower bearings (including outer races) should be replaced with new ones.*

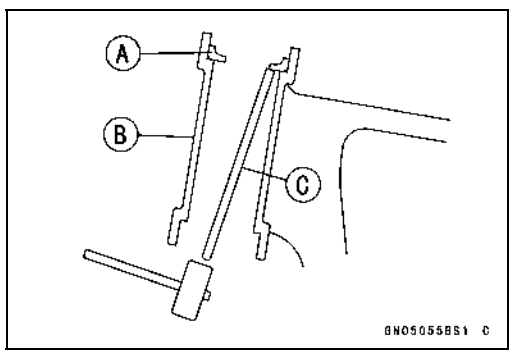

Steering Stem

- Remove the lower bearing inner race [A] which is pressed onto the steering stem with a suitable commercially available chisel [B].

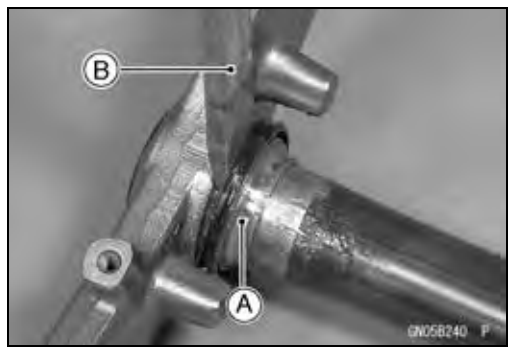

Stem, Stem Bearing Installation

- Replace the bearing outer races with new ones.
- Apply grease to the outer races, and drive them into the head pipe at the same time.

Special Tool - Bearing Driver Set [A]: 57001-1129

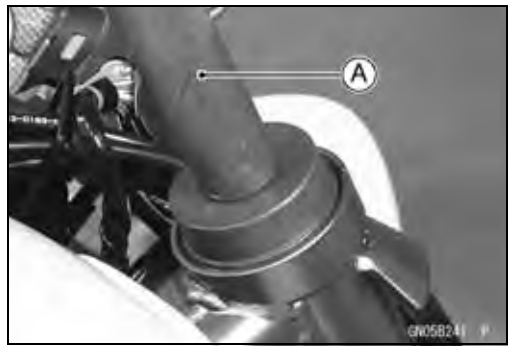

- Replace the bearing inner races and oil seal with new ones.
- Apply grease to the oil seal.
- Drive the lower ball bearing inner race applied the grease onto the stem.

Special Tools - Steering Stem Bearing Driver, ϕ42.5 [A]: 57001-1344
Steering Stem Bearing Driver Adapter, ϕ41.5 [B]: 57001-1345

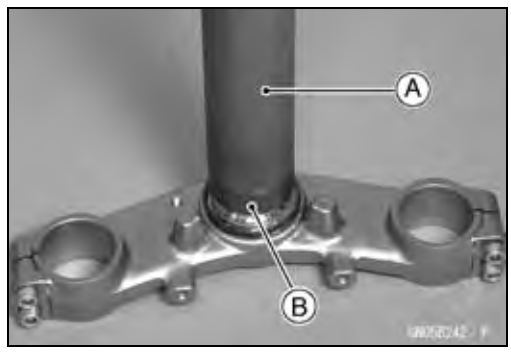

- Apply grease to the lower ball bearing [A], and install it onto the stem.
- Apply grease to the upper ball bearing [B] and inner race [C].

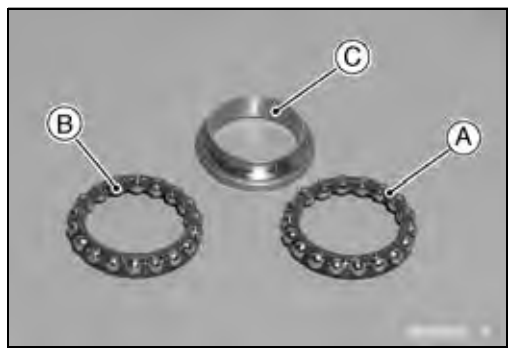

- Install the stem [A] through the head pipe and install the ball bearing [B] and inner race [C] on it.
- Install the stem cap [D] and steering stem nut [E].

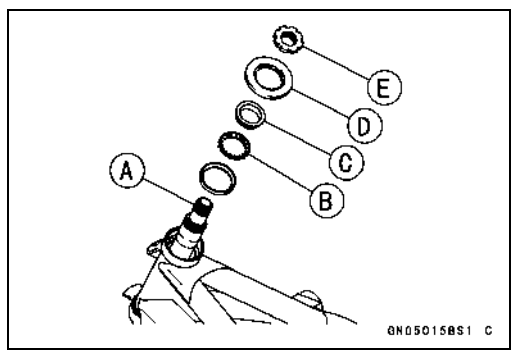

Steering Stem

- Settle the inner races in place as follows.

○Tighten the steering stem nut with 39 N·m (4.0 kgf·m, 29 ft·lb) of torque first, and loosen it a fraction of a turn until it turns lightly. Afterward tighten it again with specified torque using a stem nut wrench [A] in the direction shown.

○Check that there is no play and the steering stem turns smoothly without rattles. If not, the steering stem bearings may be damaged.

Special Tool - Steering Stem Nut Wrench: 57001-1100

Torque - Steering Stem Nut: 20 N·m (2.0 kgf·m, 15 ft·lb)

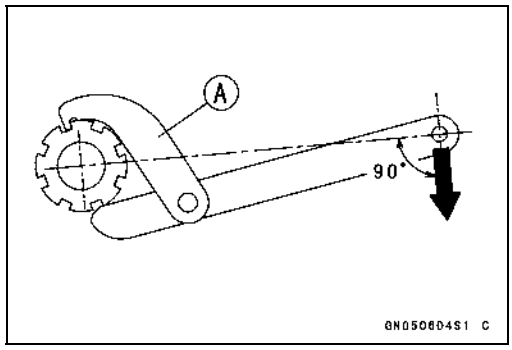

- Install the claw washer [A] so that its bent side [B] faces upward, and engage the bent claws with the grooves of stem locknut [C].
- Hand tighten the stem locknut until it touches the claw washer.
- Tighten the stem locknut clockwise until the claws are aligned with the grooves (ranging from 2nd to 4th) of stem nut [D], and bend the 2 claws downward [E].
- Install the stem head.
- Install the washer, and tighten the stem head bolt with specified torque.
- Install the front forks (see Front Fork Installation in the Suspension chapter).

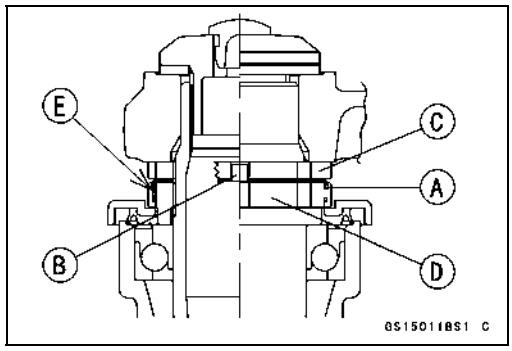

NOTE

○*Tighten the upper fork clamp bolts first, next the stem head bolt, last the lower fork clamp bolts.*

○*Tighten the two clamp bolts alternately two times to ensure even tightening torque.*

Torque - Front Fork Clamp Bolts (Upper): 20 N·m (2.0 kgf·m, 15 ft·lb)
Steering Stem Head Bolt: 108 N·m (11.0 kgf·m, 80 ft·lb)
Front Fork Clamp Bolts (Lower): 20 N·m (2.0 kgf·m, 15 ft·lb)

⚠ WARNING

Do not impede the handlebar turning by routing the cables, harnesses and hoses improperly (see Cable, Wire, and Hose Routing section in the Appendix chapter).

- Install the steering stem head bolt plug.
- Install the removed parts (see appropriate chapters).

Stem Bearing Lubrication

- Refer to the Steering Stem Bearing Lubrication in the Periodic Maintenance chapter.

http://mototh.com

Steering Stem

Steering Stem Warp

- Whenever the steering stem is removed, or if the steering cannot be adjusted for smooth action, check the steering stem for straightness.

★If the steering stem [A] is bent, replace the steering stem.

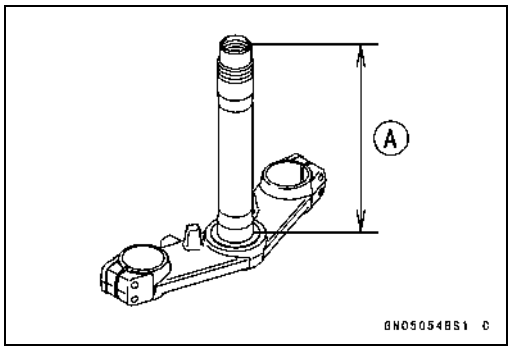

Stem Cap Deterioration, Damage

★Replace the stem cap if its oil seal [A] shows damage.

http://mototh.com

Handlebar

Handlebar Removal

- Remove:
  Clutch Lever Assembly [A]
  Left Switch Housing [B]
  Left Handlebar Weight [C]

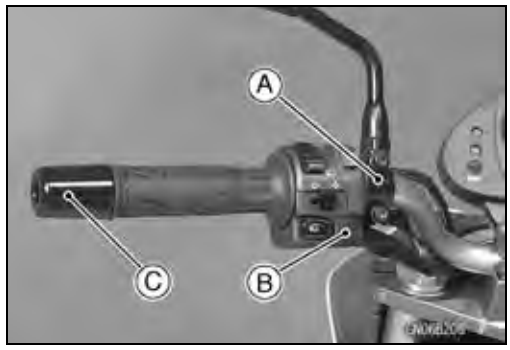

- Remove:
  Front Brake Master Cylinder [A] (see Front Master Cylinder Removal in the Brakes chapter)
  Right Switch Housing [B]
  Right Handlebar Weight [C]
  Throttle Grip [D]

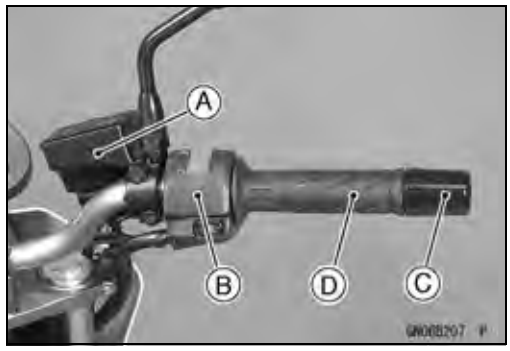

- Remove the handlebar holder bolts [A].
- Remove the handlebar holder [B] and then pull out the handlebar.

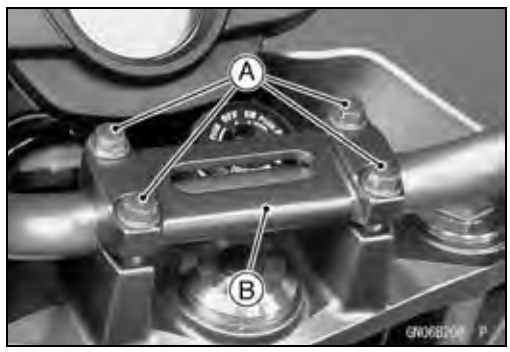

Handlebar Installation

- Align the punch mark [A] on the handlebar and the corner edge [B] on the stem head.

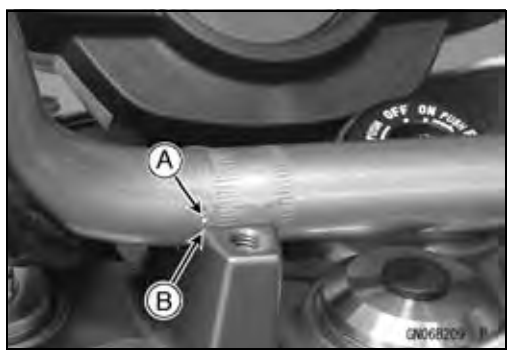

- Tighten the front holder bolts first, and then the rear holder bolts. There will be a gap [A] at the rear part of the handlebar holder after tightening.

  Torque - Handlebar Holder Bolts: 25 N·m (2.5 kgf·m, 18 ft·lb)

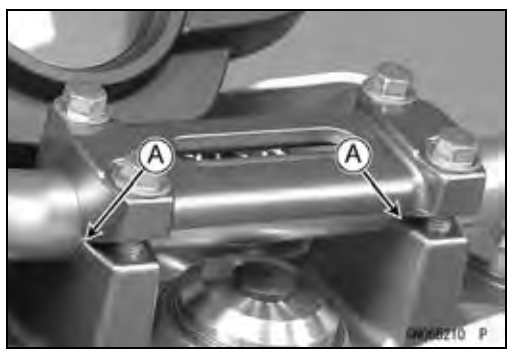

Handlebar

- Install the clutch lever (see Clutch Lever Installation in the Clutch chapter).
- Apply adhesive cement to the inside of the left handlebar grip.
- Apply a non-permanent locking agent to the left handlebar weight bolt.
- Install the left switch housing.

○Fit the projection [A] into a small hole [B] in the handlebar.

Torque - Left Switch Housing Screws: 3.5 N·m (0.36 kgf·m, 31 in·lb)

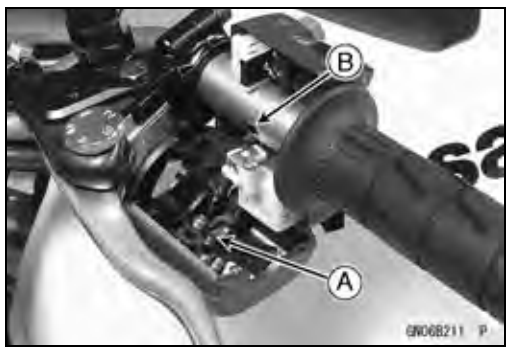

- Install:
  Throttle Grip
  Throttle Cable Tips [A]
  Right Switch Housing

○Fit the projection [B] into a small hole [C] in the handlebar.

Torque - Right Switch Housing Screws: 3.5 N·m (0.36 kgf·m, 31 in·lb)

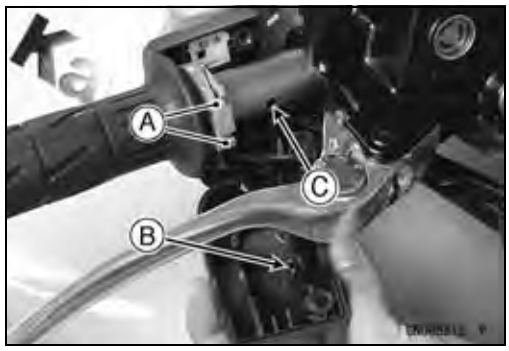

- Apply a non-permanent locking agent to the right handlebar weight bolt.
- Install the front brake master cylinder (see Front Master Cylinder Installation in the Brakes chapter).

http://mototh.com

Frame

Table of Contents

Exploded View 15-2
Seat 15-8
  Seat Removal 15-8
  Seat Installation 15-8
Fairings 15-9
  Lower Fairing Removal 15-9
  Lower Fairing Installation 15-9
  Center Fairing Removal 15-9
  Center Fairing Installation 15-9
  Upper Fairing Removal 15-10
  Upper Fairing Installation 15-10
  Upper Fairing Bracket Removal 15-10
  Inner Fairing Removal 15-11
  Inner Fairing Installation 15-11
Side Covers 15-12
  Side Cover Removal 15-12
  Side Cover Installation 15-12
Seat Covers 15-13
  Seat Cover Removal 15-13
  Seat Cover Installation 15-13
Fenders 15-14
  Front Fender Removal 15-14
  Front Fender Installation 15-14
  Flap and Rear Fender Rear Removal 15-14
  Flap and Rear Fender Rear Installation 15-14
  Rear Fender Front Removal 15-15
  Rear Fender Front Installation 15-15
Frame 15-16
  Frame Inspection 15-16
Sidestand 15-17
  Sidestand Removal 15-17
  Sidestand Installation 15-17
Frame Cover 15-18
  Frame Cover Removal 15-18
  Frame Cover Installation 15-18
Rear View Mirrors 15-19
  Rear View Mirrors Removal 15-19
  Rear View Mirrors Installation 15-19

http://mototh.com

Exploded View

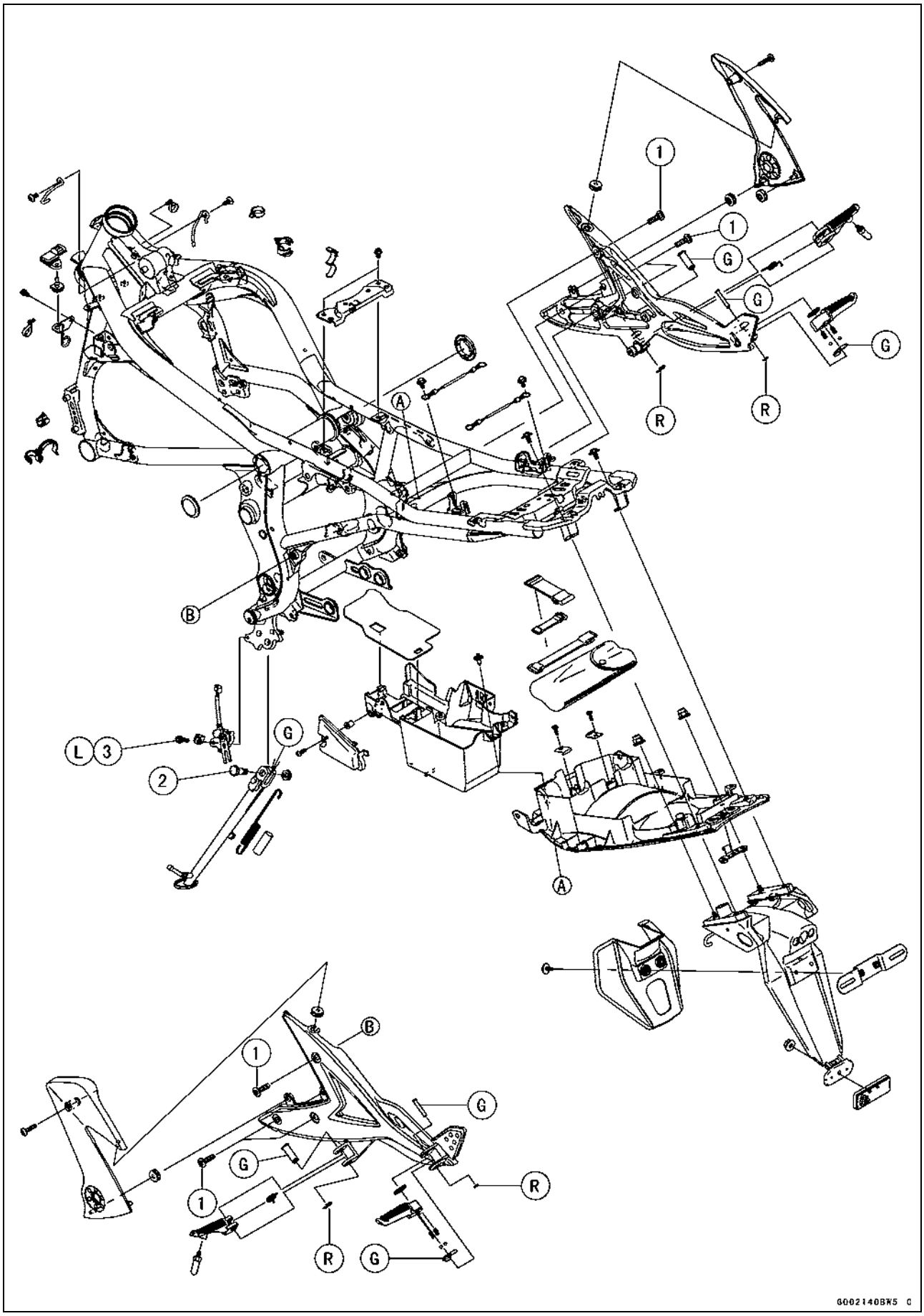

Exploded View

No.	Fastener	Torque			Remarks
		N·m	kgf·m	ft·lb	
1	Footpeg Stay Bolts	34	3.5	25	
2	Sidestand Bolt	44	4.5	33	
3	Sidestand Switch Bolt	8.8	0.90	78 in·lb	L

G: Apply grease.
L: Apply a non-permanent locking agent.
R: Replacement Parts

http://mototh.com

Exploded View

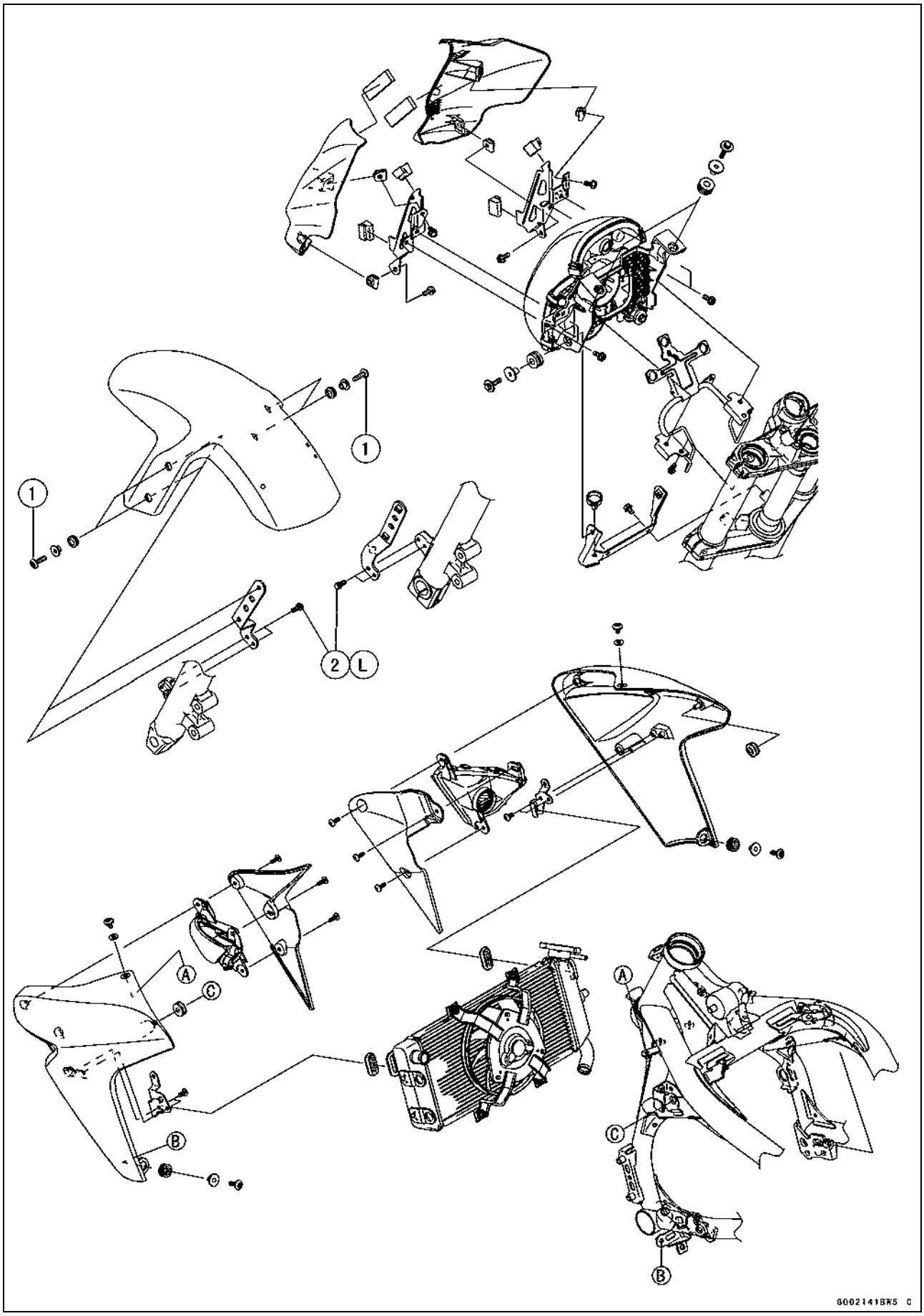

Exploded View

No.	Fastener	Torque			Remarks
		N·m	kgf·m	ft·lb	
1	Front Fender Bolts	3.9	0.40	35 in·lb	
2	Front Fender Bracket Bolts	8.8	0.90	78 in·lb	L

L: Apply a non-permanent locking agent.

http://mototh.com

Exploded View

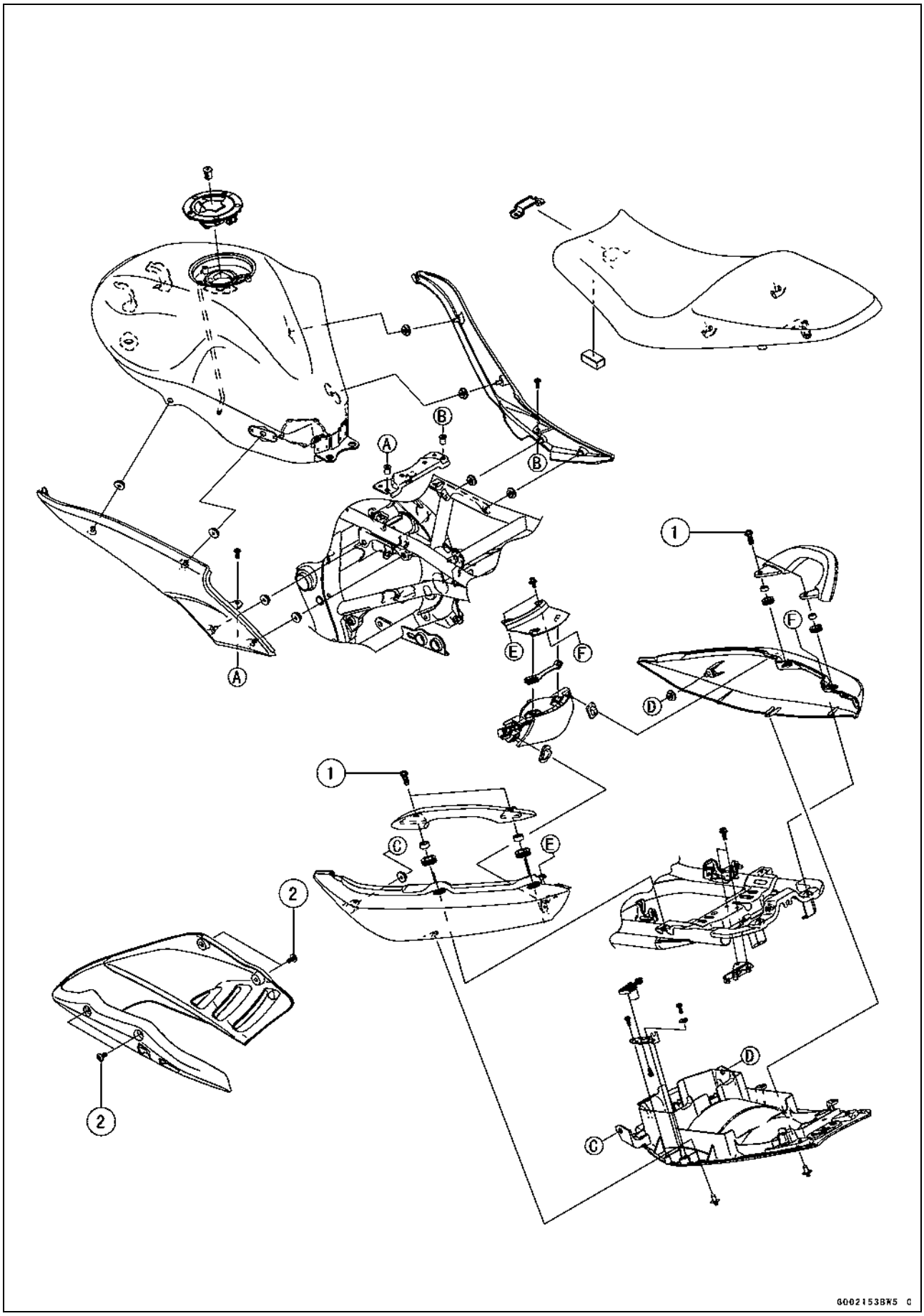

Exploded View

No.	Fastener	Torque			Remarks
		N·m	kgf·m	ft·lb	
1	Grab Rail Mounting Bolts	25	2.5	18	
2	Lower Fairing Mounting Bolts	8.8	0.90	78 in·lb	

http://mototh.com

Seat

Seat Removal

- Insert the ignition switch key [A] into the seat lock, turning the key clockwise, pulling up on the rear of the seat [B], and pulling the seat backward.

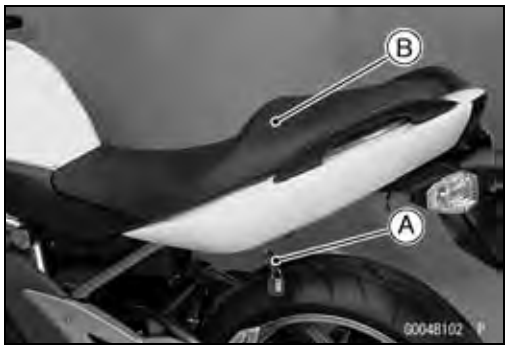

Seat Installation

- Slip the seat hook [A] under the brace [B] on the fuel tank bracket.

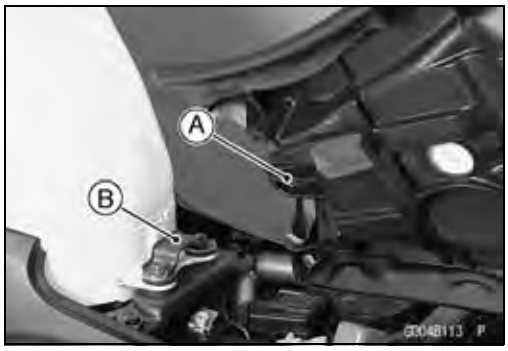

- Insert the seat latch [A] into the latch hole [B].
- Push down the rear part of the seat until the lock clicks.

http://mototh.com

Fairings

Lower Fairing Removal

- Remove the mounting bolts [A] and lower fairing [B].

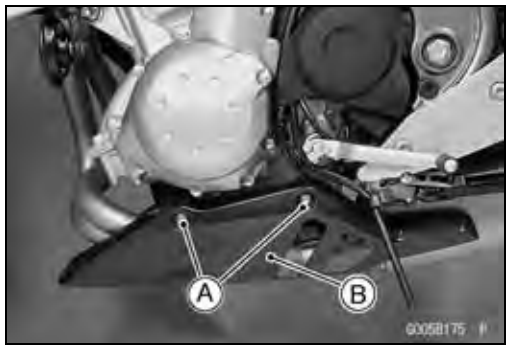

Lower Fairing Installation

- Install the lower fairing, and tighten the mounting bolts.

Torque - Lower Fairing, Mounting Bolts: 8.8 N·m (0.90 kgf·m, 78 in·lb)

Center Fairing Removal

- Remove the mounting bolts [A].
- Pull the center fairing [B] evenly outward to clear the stoppers.

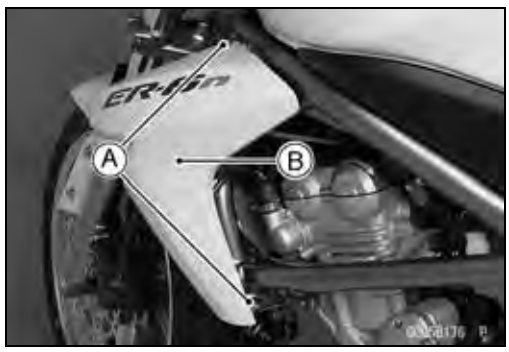

- Disconnect the turn signal lead connector [A].

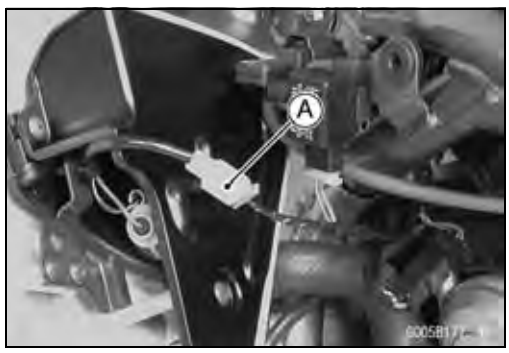

- Remove the inner fairing (see Inner Fairing Removal).
- Remove the bracket screws [A] and turn signal light [B].

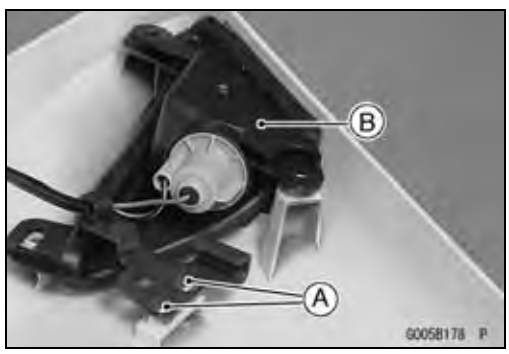

Center Fairing Installation

- Install the turn signal light to the center fairing.
- Install the inner fairing (see Inner Fairing Installation).

Fairings

- Connect the turn signal lead connector.
- Insert the projections [A] into the holes [B].
- Install the mounting bolts.

Upper Fairing Removal

- Remove:
  Headlight Assy (see Headlight Removal/Installation in the Electrical System chapter)
  Mounting Bolts [A]
  Upper Fairings

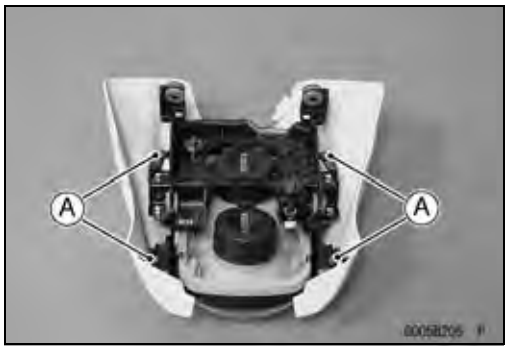

Upper Fairing Installation

- Installation is the reverse of removal.

Upper Fairing Bracket Removal

- Remove:
  Headlight Assy (see Headlight Removal/Installation in the Electrical System chapter)
  Meter Unit (see Meter Unit Removal in the Electrical System chapter)
  Bolts [A]
- Free the following parts from the bracket.
  Clutch Cable
  Ignition Switch Lead
  Main Harness
  Brake Hose
  Throttle Cables
  Switch Housing Leads
- Remove the upper fairing bracket [B].

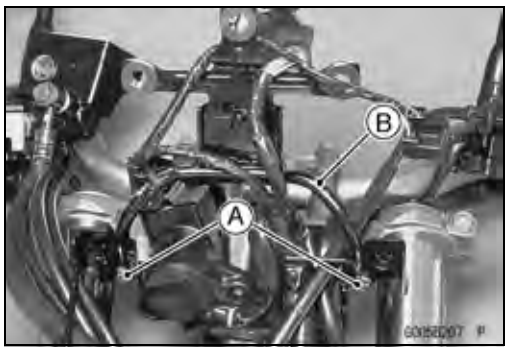

- Remove:
  Clamp [A]
  Bolts [B]
  Under Bracket [C]

Fairings

Inner Fairing Removal

- Remove:
  Center Fairings (see Center Fairing Removal)
  Mounting Screws [A]
  Inner Fairing [B]

Inner Fairing Installation

- Tighten the mounting screws.
- Install the center fairings (see Center Fairing Installation).

http://mototh.com

Side Covers

Side Cover Removal

- Remove the seat (see Seat Removal).
- Remove the bolt [A].
- Pull the side cover [B] evenly outward to clear the stoppers.

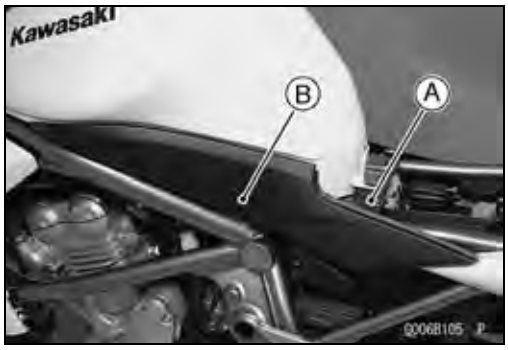

Side Cover Installation

- Insert the tabs [A] into the holes [B].
- Tighten the bolt.
- Install the seat (see Seat Installation).

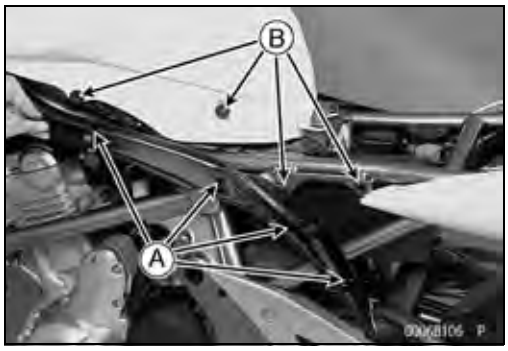

Seat Covers

Seat Cover Removal

- Remove:
  Seat (see Seat Removal)
  Bolts [A]
  Grab Rails [B]
  Screw Rivets [C]

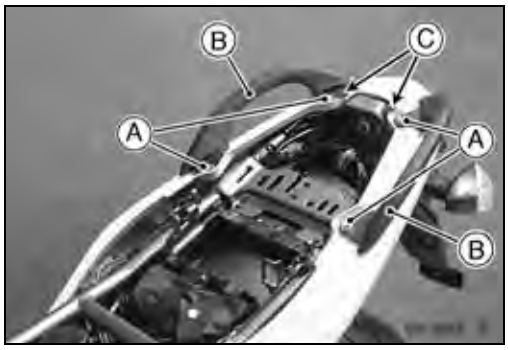

- Push the central pin, and then remove the quick rivets [A].
- Pull the front and rear portions of the seat cover outside, and then remove the seat covers.

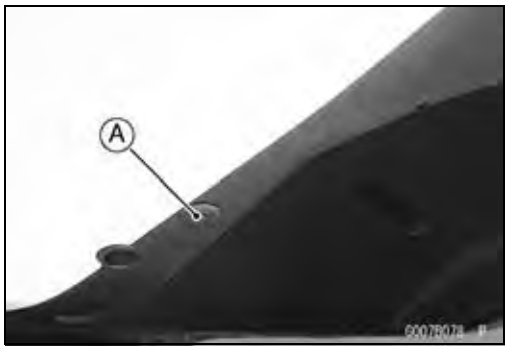

Seat Cover Installation

- Installation is the reverse of removal.
- Put the projection [A] into the grommet [B] on the rear fender rear.

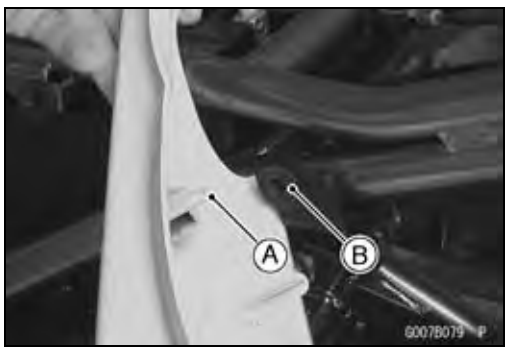

- Put the projection [A] into the hole [B] of the seat cover.
- Install:
  Grab Rails and Bolts

  Torque - Grab Rail Mounting Bolts: 25 N·m (2.5 kgf·m, 18 ft·lb)

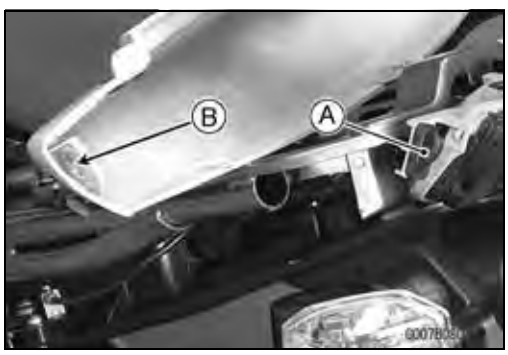

- Insert the projections [A] of the center seat cover into the holes [B] of the side seat cover.
- Install:
  Screw Rivets
  Seat (see Seat Installation)

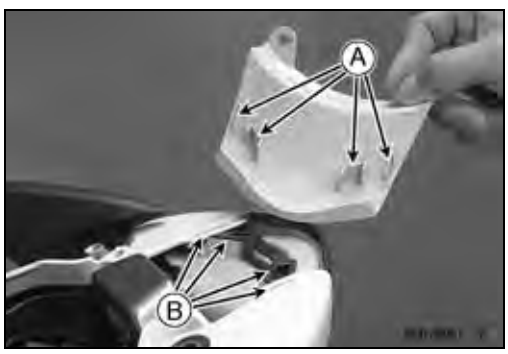

Fenders

Front Fender Removal

- Remove:
  Brake Hose Clamps [A]
  Bolts [B] with Collar (Both Side)
- Remove the front fender [C].

Front Fender Installation

- Tighten:

Torque - Front Fender Bolts: 3.9 N·m (0.40 kgf·m, 35 in·lb)

- Install the brake hose clamps to the front fender holes.

Flap and Rear Fender Rear Removal

- Remove:
  Seat (see Seat Removal)
  Seat Covers (see Seat Cover Removal)
  Tail/Brake Light [A] (see Tail/Brake Light Removal in the Electrical System chapter)

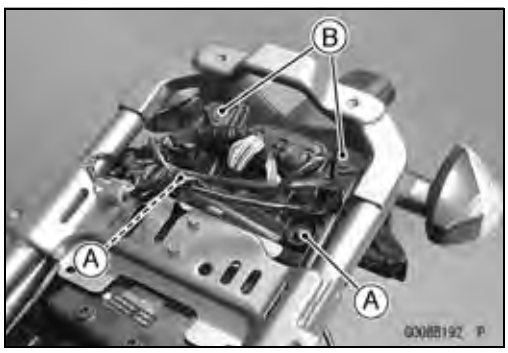

- Remove:
  Nuts [A] and Bolts [B]
  Flap (with License Plate Light)

- Remove:
  Seat Lock Cable Lower End [A]
  Quick Rivet [B]
- Free the clamps from the rear fender rear.
- Pull out the rear fender rear backward and downward.

Flap and Rear Fender Rear Installation

- Installation is the reverse of removal.

Fenders

Rear Fender Front Removal

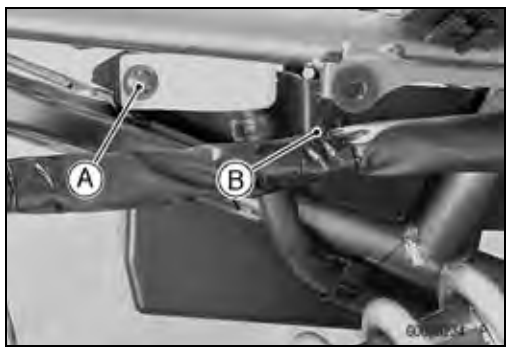

- Remove:
  Rear Fender Rear (see Flap and Rear Fender Rear Removal)
  Battery (see Battery Removal in the Electrical System chapter)
  Relay Box (see Relay Box Removal in the Electrical System chapter)
  Starter Relay (see Starter Relay Inspection in the Electrical System chapter)
- Remove the fuse box from the rear fender front.
- Remove:
  Bolt [A]
  Clamp [B]

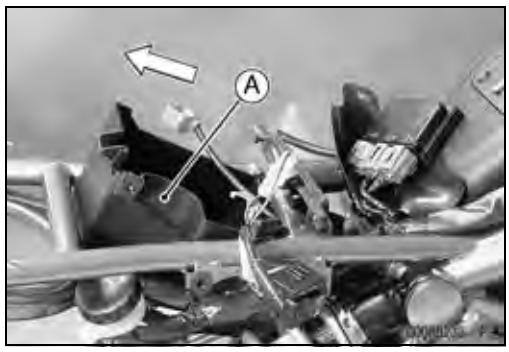

- Free the clamp from the rear fender front.
- Remove the rear fender front [A] backward and upward.

Rear Fender Front Installation

- Installation is the reverse of removal.
- Install the removed parts (see appropriate chapters).

http://mototh.com

Frame

Frame Inspection

- Visually inspect the frame for cracks, dents, bending or warp.

○If there is any damage to the frame, replace it.

⚠ WARNING

A repaired frame may fail in use, possibly causing an accident. If the frame is bent, dented, cracked, or warped, replace it.

http://mototh.com

Sidestand

Sidestand Removal

- Raise the rear wheel off the ground with stand.
- Remove:
  Frame Cover (see Frame Cover Removal)
  Bolts [A]
  Footpeg Stay [B]

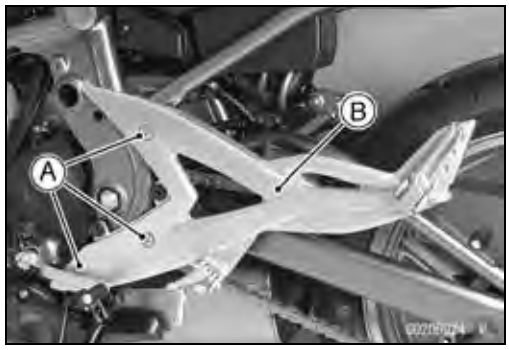

- Remove:
  Sidestand Switch Bolt [A] with Clamp
  Sidestand Switch [B]

- Remove:
  Spring [A]
  Sidestand Nut [B]
  Sidestand Bolt [C]
  Sidestand [D]

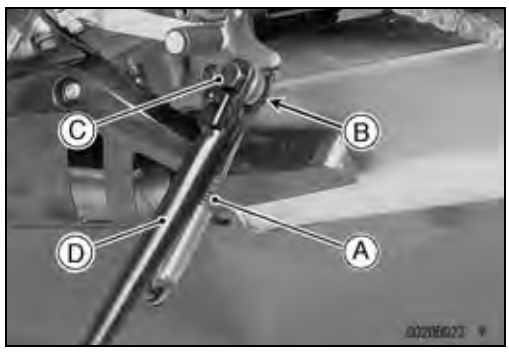

Sidestand Installation

- Apply grease to the sliding area [A] of the sidestand [B].
- Tighten the bolt and lock them with the nut.

  Torque - Sidestand Bolt: 44 N·m (4.5 kgf·m, 33 ft·lb)

- Hook the spring.
- Install the sidestand switch.

○Apply a non-permanent locking agent to the thread of the switch bolt.

Torque - Sidestand Switch Bolt: 8.8 N·m (0.90 kgf·m, 78 in·lb)

- Install the footpeg stay.
- Tighten:

  Torque - Footpeg Stay Bolts: 34 N·m (3.5 kgf·m, 25 ft·lb)

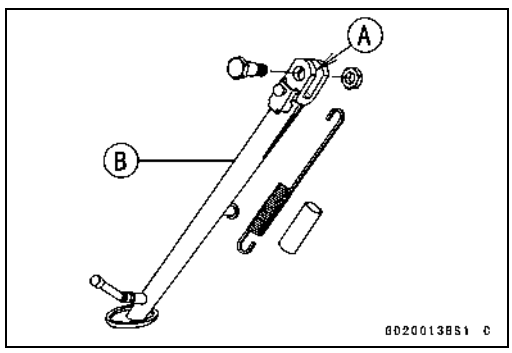

Frame Cover

Frame Cover Removal

- Remove the bolt [A].
- Pull the frame cover [B] outward to clear the stoppers.

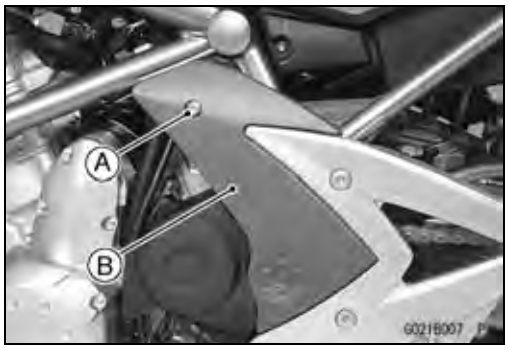

Frame Cover Installation

- Insert the projections [A] into the holes [B].
- Tighten the bolt.

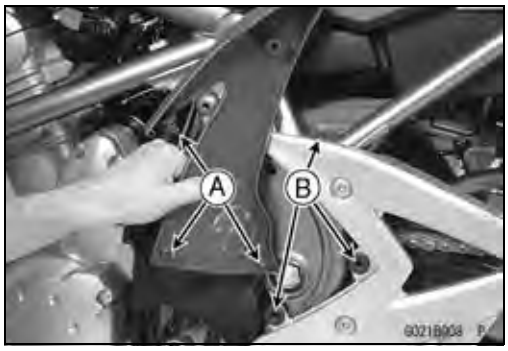

http://mototh.com

Rear View Mirrors

Rear View Mirrors Removal

- Loosen the lower hexagonal area [A] for tightening to remove the rear view mirror from the holder.

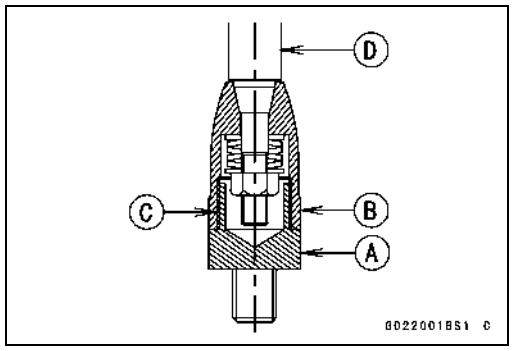

CAUTION

Do not force to tighten and/or loosen the upper hexagonal area (adapter) [B] with a pair of spanners. Disassembly of this area is Not Available. Non-permanent locking agent [C] is already applied to the threads of this inner area. Forcible loosening may damage the adapter and/or the turning mechanism of the stay [D].

Rear View Mirrors Installation

- Screw the mounting area of the right rear view mirror into the holder all the way, and tighten the lower hexagonal area for tightening securely.
  Lower Hexagonal Area for Tightening [A]
  Upper Hexagonal Area (Adapter) [B]
  Rear View Mirror (Right) [C]

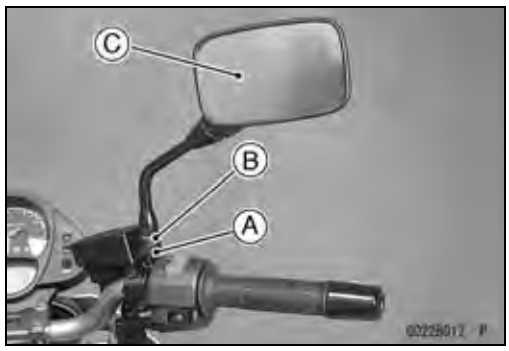

- Turn the stay [A] to assure the safe conditions of the rear with the operator sat on the motorcycle.
- Adjust the rear view mirror slightly with its mirror [B].

○Installation and adjustment of the left side are common with those of the right side. Follow the procedure specified at the right side.

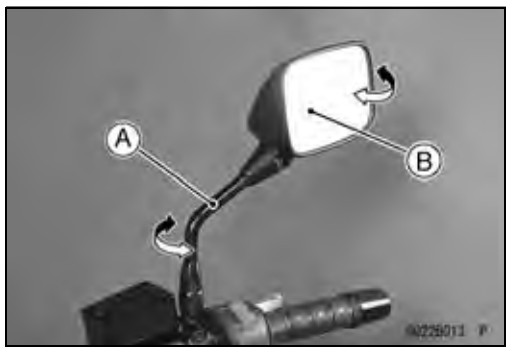

http://mototh.com

Electrical System

Table of Contents

Exploded View 16-3
Specifications 16-10
Special Tools and Sealants 16-11
Parts Location 16-12
Wiring Diagram 16-14
Precautions 16-16
Electrical Wiring 16-18
  Wiring Inspection 16-18
Battery 16-19
  Battery Removal 16-19
  Battery Installation 16-19
  Battery Activation 16-19
  Precautions 16-22
  Interchange 16-22
  Charging Condition Inspection 16-23
  Refreshing Charge 16-23
Charging System 16-25
  Alternator Cover Removal 16-25
  Alternator Cover Installation 16-25
  Stator Coil Removal 16-25
  Stator Coil Installation 16-26
  Alternator Rotor Removal 16-26
  Alternator Rotor Installation 16-26
  Alternator Inspection 16-28
  Regulator/Rectifier Inspection 16-29
  Charging Voltage Inspection 16-31
Starter Motor Clutch 16-33
  Starter Motor Clutch Removal/Installation 16-33
  Starter Motor Clutch Inspection 16-33
  Starter Motor Clutch Disassembly 16-33
  Starter Motor Clutch Assembly 16-33
Ignition System 16-34
  Crankshaft Sensor Removal 16-34
  Crankshaft Sensor Installation 16-35
  Crankshaft Sensor Inspection 16-35
  Crankshaft Sensor Peak Voltage Inspection 16-35
  Timing Rotor Removal 16-36
  Timing Rotor Installation 16-36
  Stick Coil (Ignition Coil together with Spark Plug Cap) Removal 16-36
  Stick Coil (Ignition Coil together with Spark Plug Cap) Installation 16-36
  Stick Coil (Ignition Coil together with Spark Plug Cap) Inspection 16-37
  Stick Coil Primary Peak Voltage 16-37
  Spark Plug Removal 16-38
  Spark Plug Installation 16-38
  Spark Plug Condition Inspection 16-38
  Interlock Operation Inspection 16-39

http://mototh.com

IC Igniter Inspection 16-40
Electric Starter System 16-43
Starter Motor Removal 16-43
Starter Motor Installation 16-43
Starter Motor Disassembly 16-43
Starter Motor Assembly 16-44
Brush Inspection 16-45
Commutator Cleaning and Inspection 16-45
Armature Inspection 16-45
Brush Lead Inspection 16-46
Brush Plate and Terminal Bolt Inspection 16-46
Starter Relay Inspection 16-46
Lighting System 16-49
Headlight Beam Horizontal Adjustment 16-49
Headlight Beam Vertical Adjustment 16-49
Headlight Bulb Replacement 16-49
City Light Bulb Replacement 16-50
Headlight Removal/Installation 16-51
Tail/Brake Light Removal 16-51
Tail/Brake Light Installation 16-51
License Plate Light Bulb Replacement 16-52
Turn Signal Light Bulb Replacement 16-53
Turn Signal Relay Inspection 16-54
Air Switching Valve 16-56
Air Switching Valve Operation Test 16-56
Air Switching Valve Unit Test 16-56
Radiator Fan System 16-58
Fan Motor Inspection 16-58
Meter, Gauge, Indicator Unit 16-59
Meter Unit Removal 16-59
Meter, Gauge Disassembly 16-59
Electronic Combination Meter Unit Inspection 16-60
Switches and Sensors 16-67
Brake Light Timing Inspection 16-67
Brake Light Timing Adjustment 16-67
Switch Inspection 16-67
Water Temperature Sensor Inspection 16-68
Speed Sensor Removal 16-68
Speed Sensor Installation 16-68
Speed Sensor Inspection 16-69
Oxygen Sensor Removal (Europe Models) 16-69
Oxygen Sensor Installation (Europe Models) 16-69
Oxygen Sensor Inspection (Europe Models) 16-70
Fuel Reserve Switch Inspection 16-70
Relay Box 16-71
Relay Box Removal 16-71
Relay Circuit Inspection 16-71
Diode Circuit Inspection 16-72
Fuse 16-74
30 A Main Fuse Removal 16-74
Fuse Box Fuse Removal 16-74
15 A ECU Fuse Removal 16-74
Fuse Installation 16-75
Fuse Inspection 16-75

http://mototh.com

Exploded View

Dummy Page

http://mototh.com

Exploded View

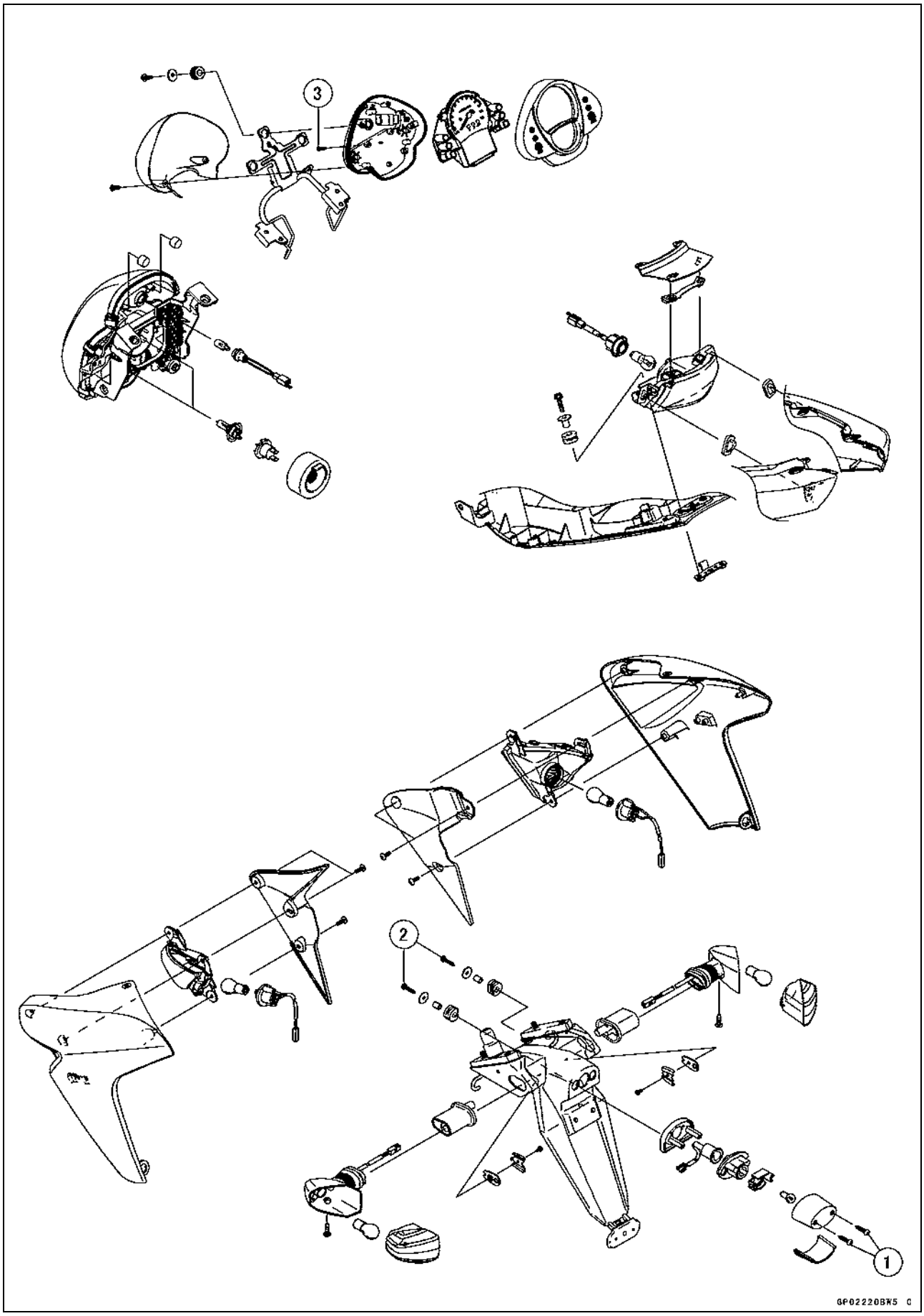

Exploded View

No.	Fastener	Torque			Remarks
		N·m	kgf·m	ft·lb	
1	License Plate Light Cover Screws	0.90	0.090	8 in·lb	
2	License Plate Light Mounting Screws	1.2	0.12	11 in·lb	
3	Meter Screws	1.2	0.12	11 in·lb	

http://mototh.com

Exploded View

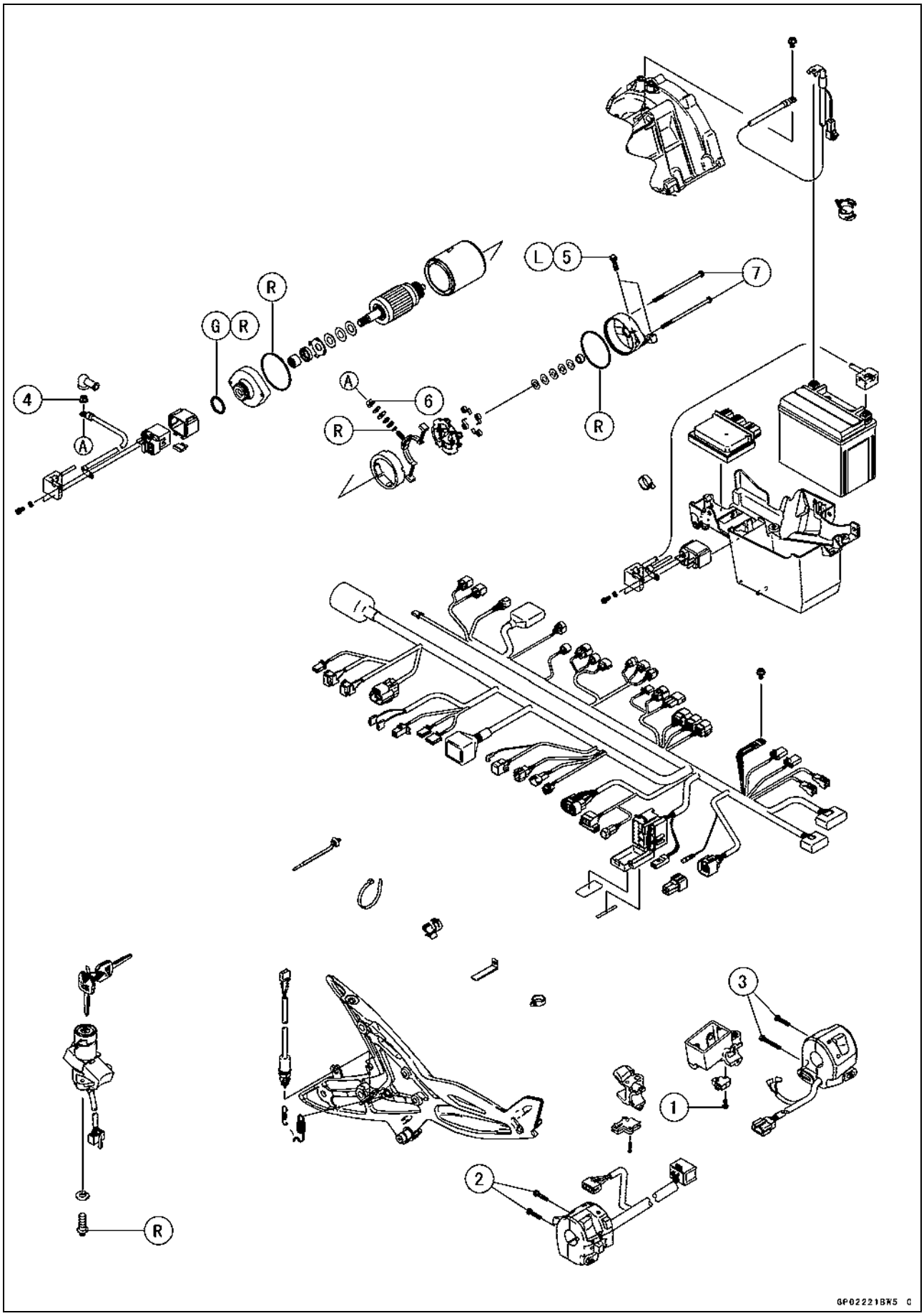

Exploded View

No.	Fastener	Torque			Remarks
		N·m	kgf·m	ft·lb	
1	Front Brake Light Switch Screw	1.2	0.12	11 in·lb	
2	Left Switch Housing Screws	3.5	0.36	31 in·lb	
3	Right Switch Housing Screws	3.5	0.36	31 in·lb	
4	Starter Motor Cable Terminal Nut	6.0	0.60	53 in·lb	
5	Starter Motor Mounting Bolts	9.8	1.0	87 in·lb	L
6	Starter Motor Terminal Locknut	11	1.1	97 in·lb	
7	Starter Motor Through Bolts	4.9	0.50	43 in·lb	

G: Apply grease.
L: Apply a non-permanent locking agent.
R: Replacement Parts

http://mototh.com

Exploded View

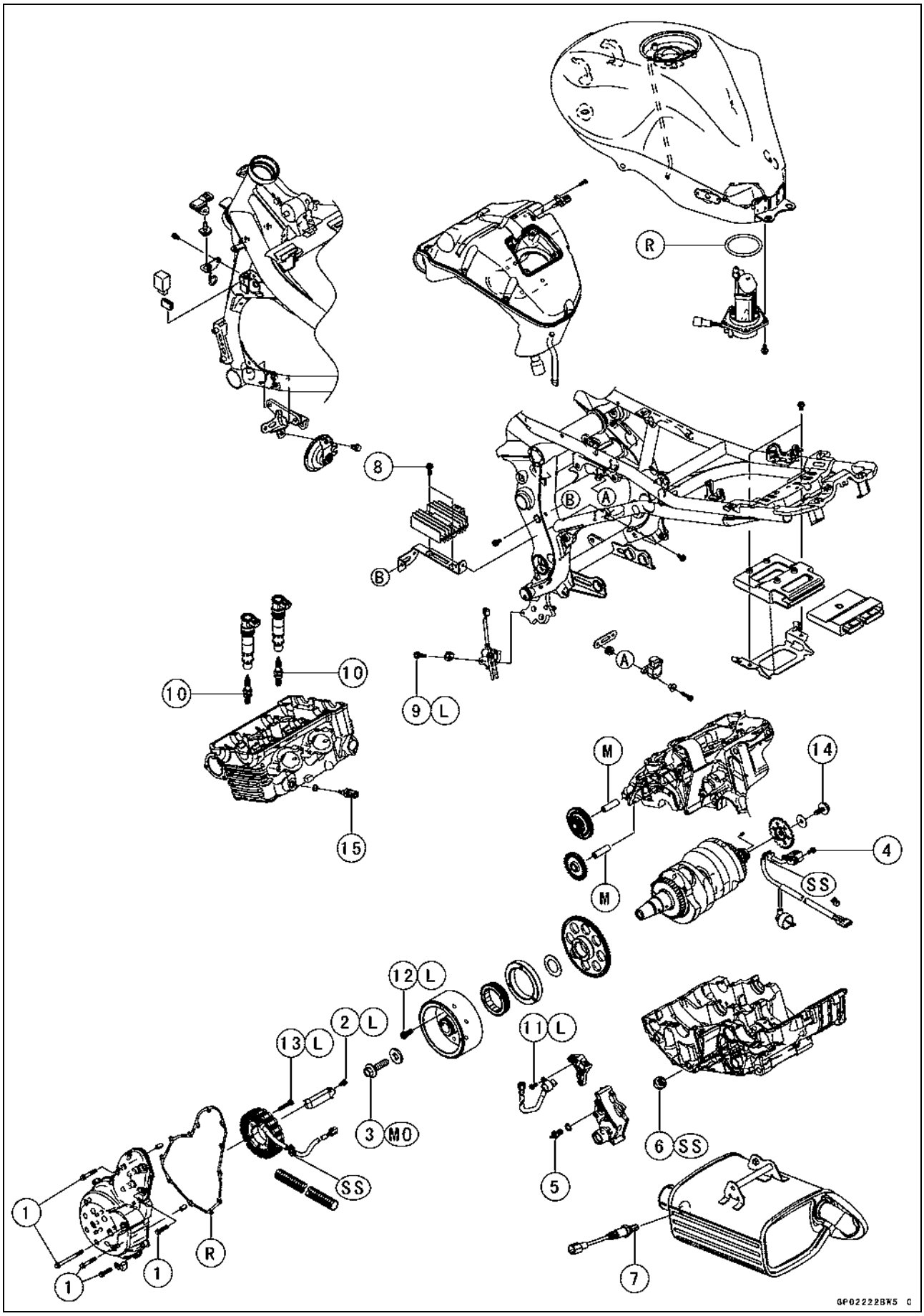

Exploded View

No.	Fastener	Torque			Remarks
		N·m	kgf·m	ft·lb	
1	Alternator Cover Bolts	9.8	1.0	87 in·lb	
2	Alternator Lead Holding Plate Bolt	9.8	1.0	87 in·lb	L
3	Alternator Rotor Bolt	155	15.8	114	MO
4	Crankshaft Sensor Bolts	6.0	0.60	53 in·lb	
5	Neutral Switch	15	1.5	11	
6	Oil Pressure Switch	15	1.5	11	SS
7	Oxygen Sensor	44.1	4.50	32.5	
8	Regulator/Rectifier Bolts	8.8	0.90	78 in·lb	
9	Sidestand Switch Bolt	8.8	0.90	78 in·lb	L
10	Spark Plugs	15	1.5	11	
11	Speed Sensor Bolt	7.8	0.80	69 in·lb	L
12	Starter Motor Clutch Bolts	34	3.5	25	L
13	Stator Coil Bolts	12	1.2	106 in·lb	L
14	Timing Rotor Bolt	40	4.1	30	
15	Water Temperature Sensor	12	1.2	106 in·lb	

L: Apply a non-permanent locking agent.
M: Apply molybdenum disulfide grease.
MO: Apply molybdenum disulfide oil solution.
(Mixture of the engine oil and molybdenum disulfide grease in a weight ratio 10 : 1)
R: Replacement Parts
SS: Apply silicone sealant.

http://mototh.com

Specifications

Item	Standard
Battery	
Type	Sealed Battery
Model Name	YTX12-BS
Capacity	12 V 10 Ah
Voltage	12.8 V or more
Charging System	
Type	Three-phase AC
Alternator Output Voltage	42 V or more at 4 000 r/min (rpm)
Stator Coil Resistance	0.18 ~ 0.27 Ω
Charging Voltage (Regulator/Rectifier Output Voltage)	14.2 ~ 15.2 V
Ignition System	
Crankshaft Sensor Resistance	376 ~ 564 Ω
Crankshaft Sensor Peak Voltage	1.9 V or more
Stick Coil:	
Primary Winding Resistance	1.1 ~ 1.5 Ω
Secondary Winding Resistance	10.8 ~ 16.2 kΩ
Primary Peak Voltage	88 V or more
Spark Plug:	
Spark Plug Gap	0.8 ~ 0.9 mm (0.03 ~ 0.04 in.)
Electric Starter System	
Starter Motor:	
Brush Length	12 mm (0.47 in.) (Service limit: 6.0 mm, 0.24 in.)
Commutator Diameter	28 mm (1.10 in.) (Service limit: 27 mm, 1.06 in.)
Air Switching Valve	
Resistance	18 ~ 22 Ω at 20°C (68°F)
Switch and Sensor	
Rear Brake Light Switch Timing	ON after about 10 mm (0.39 in.) pedal travel
Engine Oil Pressure Switch Connections	When engine is stopped: ON When engine is running: OFF
Water Temperature Sensor Resistance	in the text

http://mototh.com

Special Tools and Sealants

Hand Tester:
57001-1394

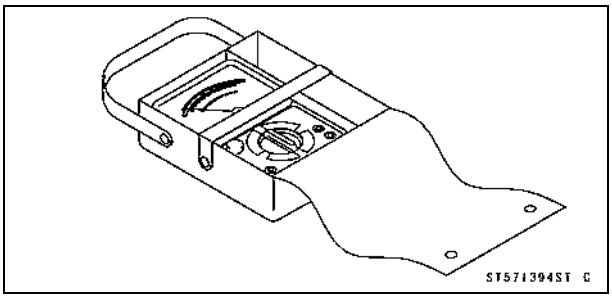

Flywheel Puller Assembly, M38 × 1.5/M35 × 1.5:
57001-1405

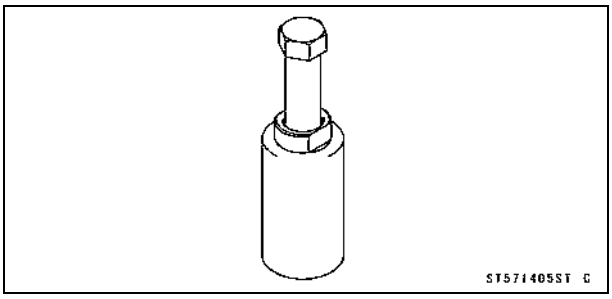

Peak Voltage Adapter:
57001-1415

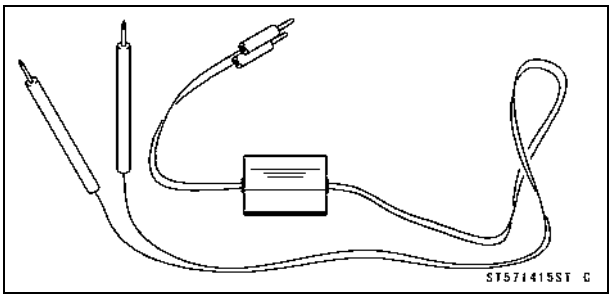

Lead Wire - Peak Voltage Adapter:
57001-1449

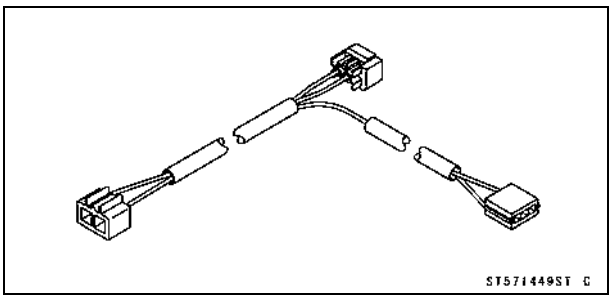

Needle Adapter Set:
57001-1457

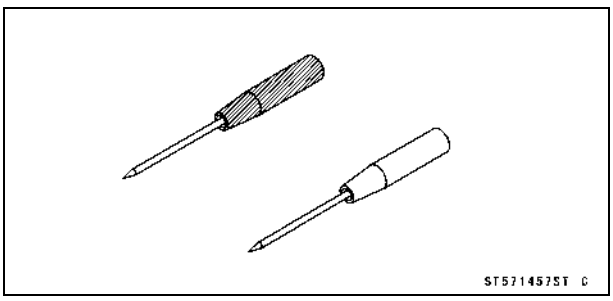

Grip:
57001-1591

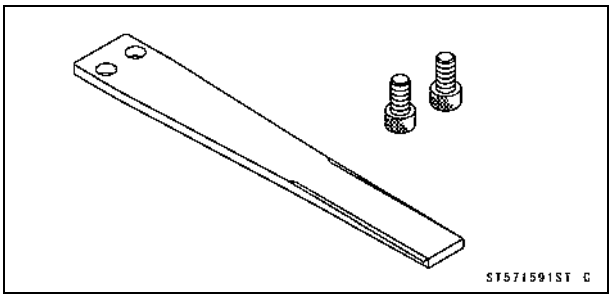

Flywheel & Pulley Holder:
57001-1605

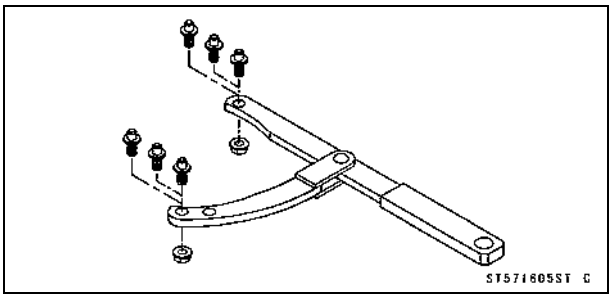

Rotor Holder:
57001-1658

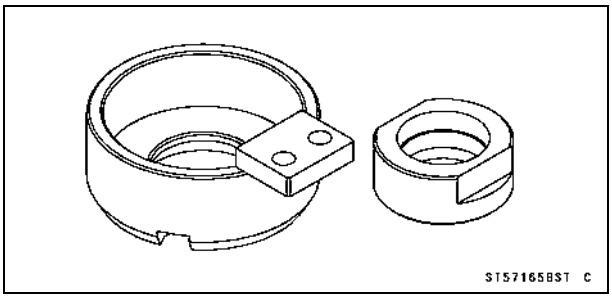

Kawasaki Bond (Silicone Sealant):
56019-120

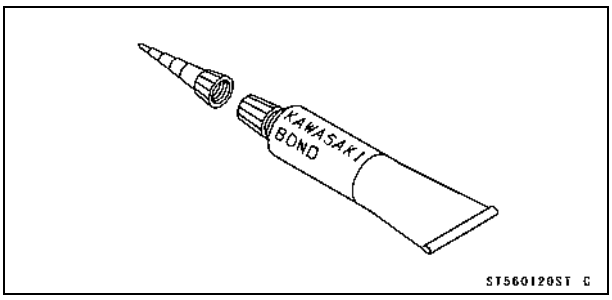

Kawasaki Bond (Silicone Sealant):
92104-0004

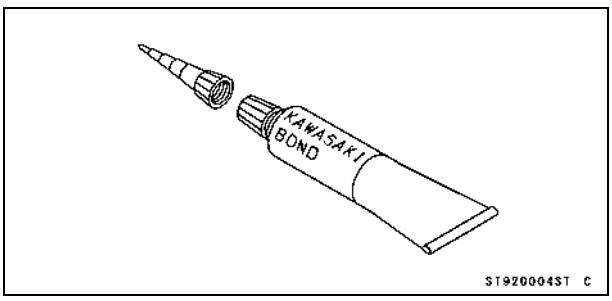

Parts Location

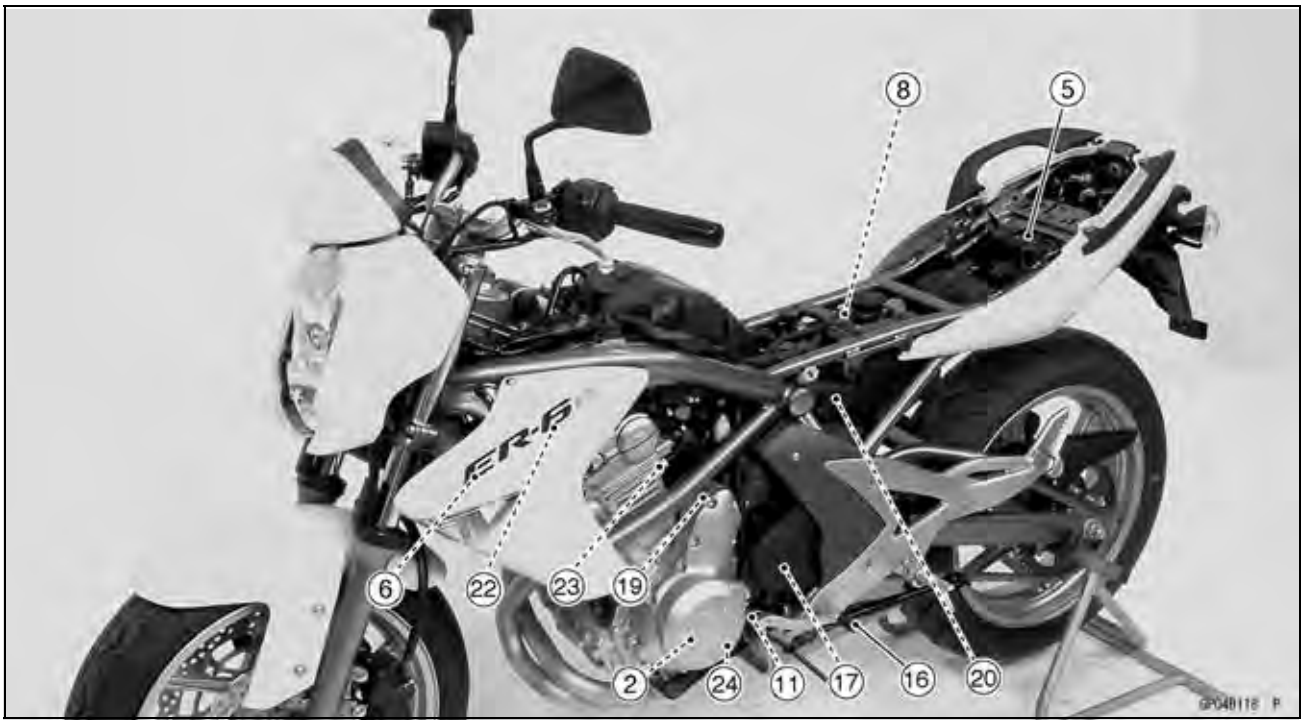

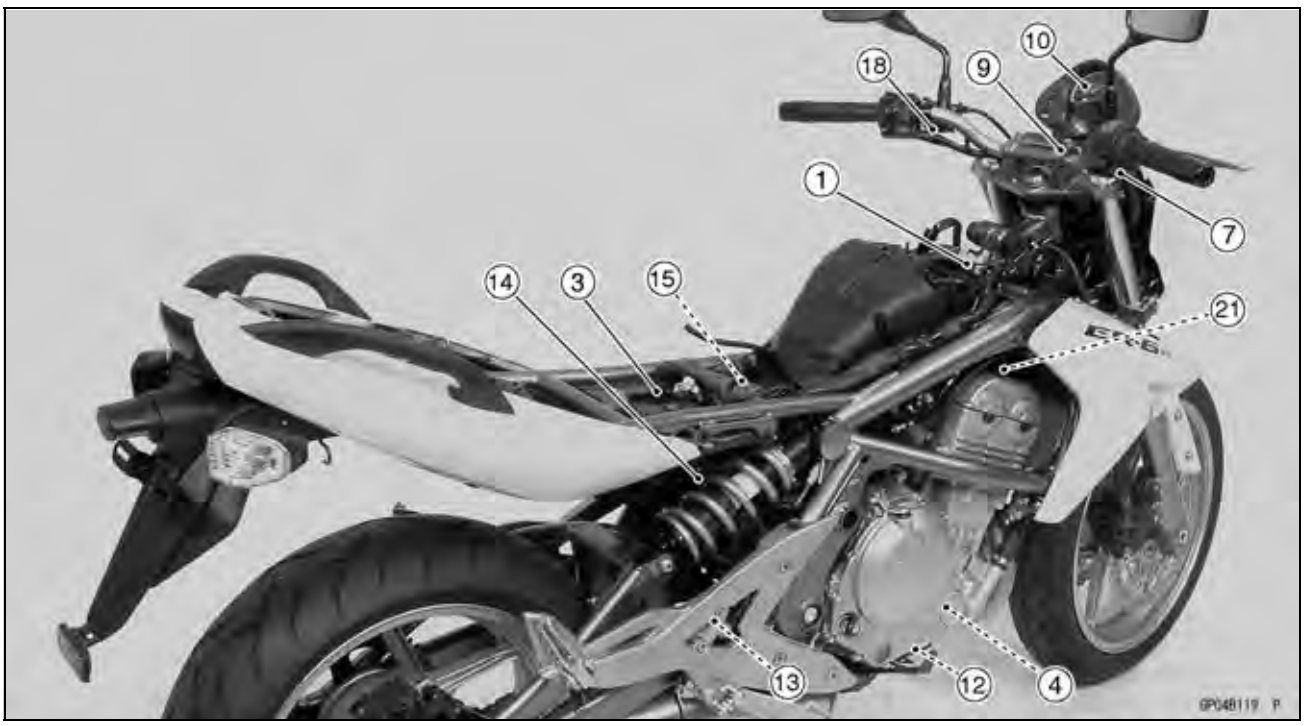

1. Air Switching Valve
2. Alternator
3. Battery 12 V 10 Ah
4. Crankshaft Sensor
5. ECU (Electric Control Unit)
6. Fan Motor
7. Front Brake Light Switch
8. Fuse Box with ECU Main Fuse
9. Ignition Switch
10. Meter Unit
11. Neutral Switch
12. Oil Pressure Switch
13. Rear Brake Light Switch
14. Regulator/Rectifier
15. Relay Box
16. Sidestand Switch
17. Speed Sensor
18. Starter Lockout Switch
19. Starter Motor
20. Starter Relay with Main Fuse
21. Stick Coils
22. Turn Signal Relay
23. Water Temperature Sensor
24. Oxygen Sensor (Europe Models)

http://mototh.com

Parts Location

Dummy Page

http://mototh.com

Wiring Diagram

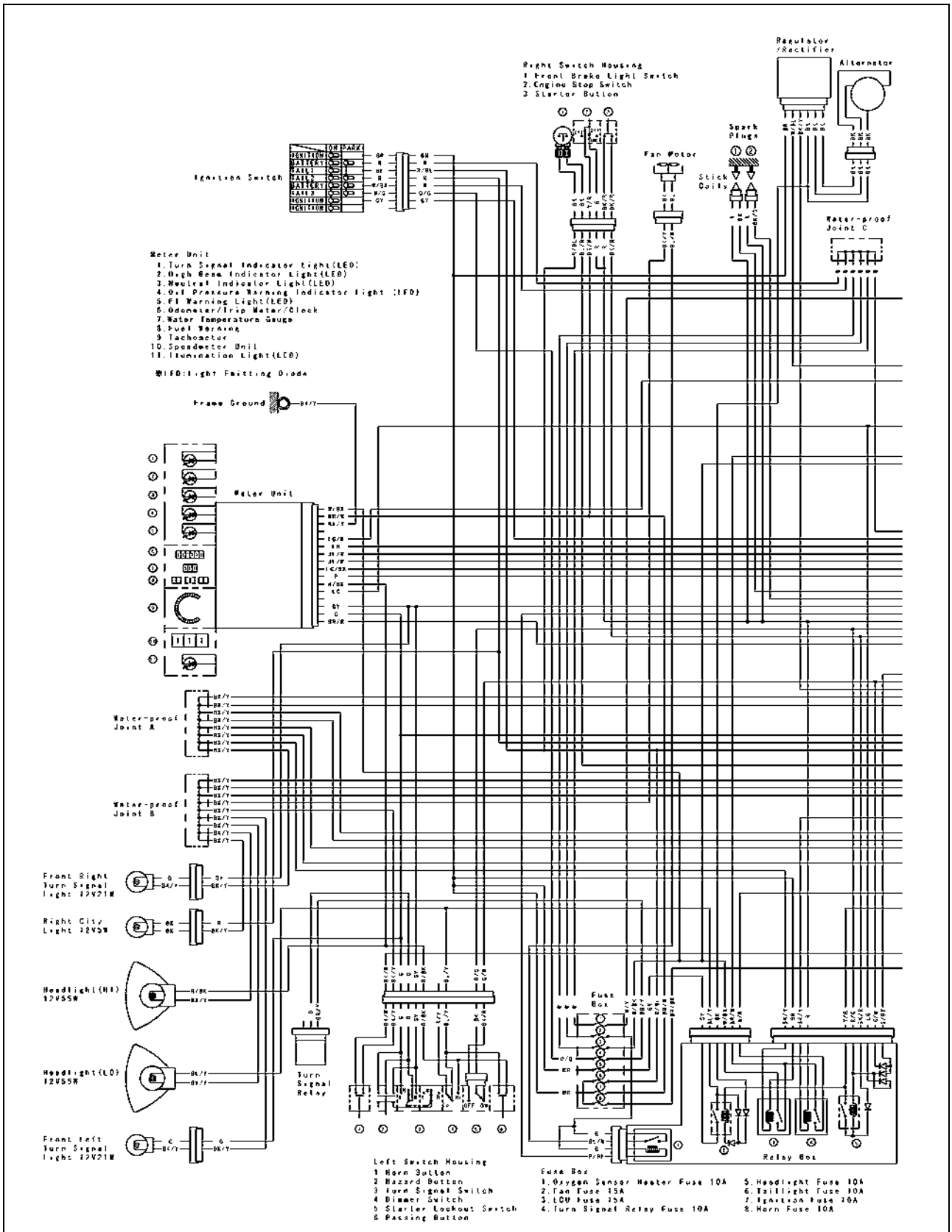

LEFT SWITCH HOUSING CONNECTIONS

Horn Button			Hazard Button				Turn Signal Switch				Dimmer Switch				Starter Lockout Switch			Passing Button		
Color	BK/W	BK/Y	Color	G	O	GY	Color	G	O	GY	Color	R/BK	BL/Y	R/Y	Color	BK	BK/R	Color	R/BK	BL/Y
							L	●	●		HI	●	●		Clutch Lever					
Push	●	●	Push	●	●	●	OFF (Push)								Released			Push	●	●
			OFF (Push)				R		●	●	LO		●	●	Pulled in	●	●			

※2L0221AW5 0

Wiring Diagram

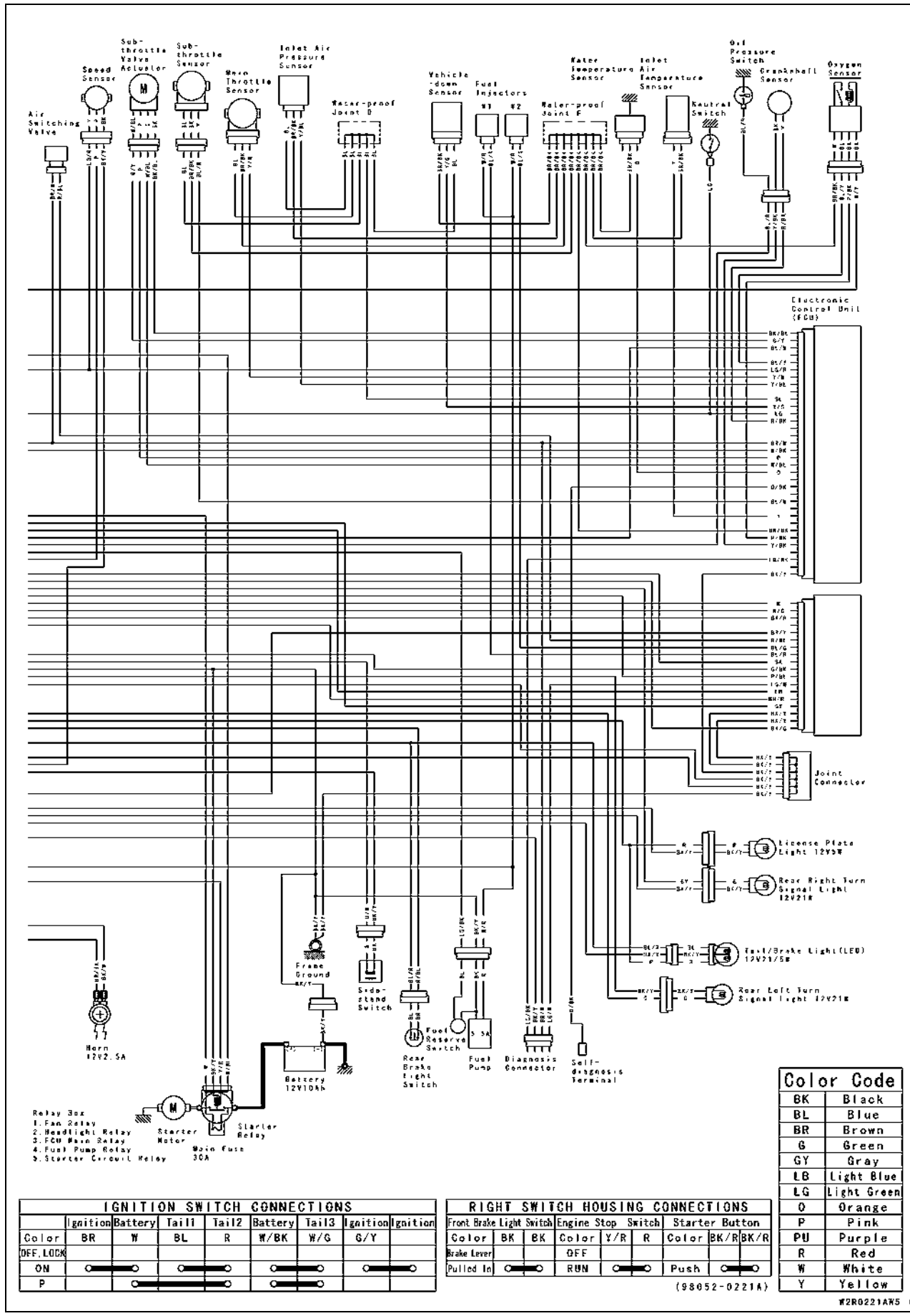

Precautions

There are a number of important precautions that are musts when servicing electrical systems. Learn and observe all the rules below.

- Do not reverse the battery cable connections. This will burn out the diodes on the electrical parts.
- Always check battery condition before condemning other parts of an electrical system. A fully charged battery is a must for conducting accurate electrical system tests.
- The electrical parts should never be struck sharply, as with a hammer, or allowed to fall on a hard surface. Such a shock to the parts can damage them.
- To prevent damage to electrical parts, do not disconnect the battery cables or any other electrical connections when the ignition switch is on, or while the engine is running.
- Because of the large amount of current, never keep the starter button pushed when the starter motor will not turn over, or the current may burn out the starter motor windings.
- Do not use a meter illumination bulb rated for other than voltage or wattage specified in the wiring diagram, as the meter or gauge panel could be warped by excessive heat radiated from the bulb.
- Take care not to short the cables that are directly connected to the battery positive (+) terminal to the chassis ground.
- Troubles may involve one or in some cases all items. Never replace a defective part without determining what CAUSED the failure. If the failure was caused by some other item or items, they must be repaired or replaced, or the new replacement will soon fail again.
- Make sure all connectors in the circuit are clean and tight, and examine wires for signs of burning, fraying, etc. Poor wires and bad connections will affect electrical system operation.
- Measure coil and winding resistance when the part is cold (at room temperature).
- Color Codes:

BK: Black	G: Green	P: Pink
BL: Blue	GY: Gray	PU: Purple
BR: Brown	LB: Light Blue	R: Red
CH: Chocolate	LG: Light Green	W: White
DG: Dark Green	O: Orange	Y: Yellow

- Electrical Connectors
  Female Connectors [A]

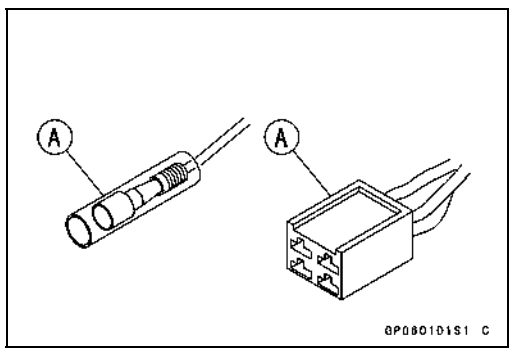

Precautions

Male Connectors [B]

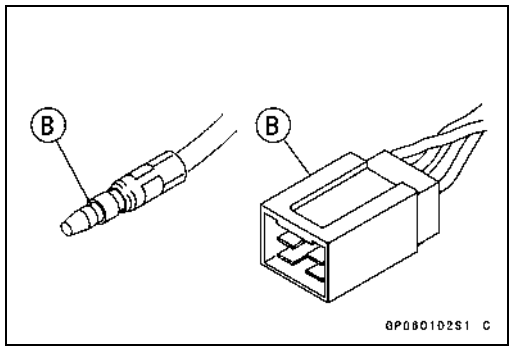

http://mototh.com

Electrical Wiring

Wiring Inspection

- Visually inspect the wiring for signs of burning, fraying, etc.

★If any wiring is poor, replace the damaged wiring.

- Pull each connector [A] apart and inspect it for corrosion, dirt, and damage.

★If the connector is corroded or dirty, clean it carefully. If it is damaged, replace it.

- Check the wiring for continuity.

○Use the wiring diagram to find the ends of the lead which is suspected of being a problem.

○Connect the hand tester between the ends of the leads.

Special Tool - Hand Tester: 57001-1394

○Set the tester to the × 1 Ω range, and read the tester.

★If the tester does not read 0 Ω, the lead is defective. Replace the lead or the wiring harness [B] if necessary.

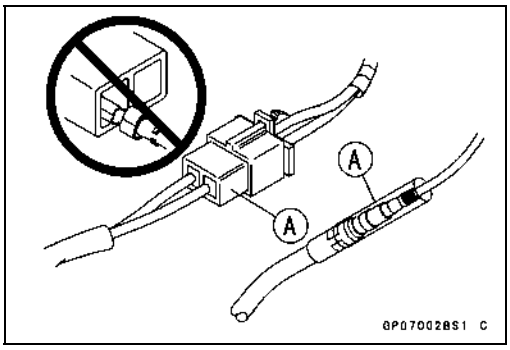

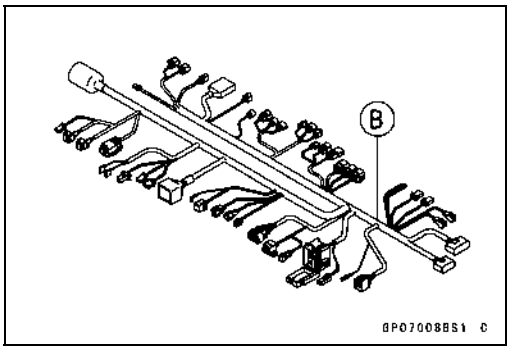

http://mototh.com

Battery

Battery Removal

- Remove:
  Seat (see Seat Removal in the Frame chapter)
- Disconnect the negative (–) cable [A].
- Slide out the positive (+) terminal cap [B] and then disconnect the positive (+) cable.

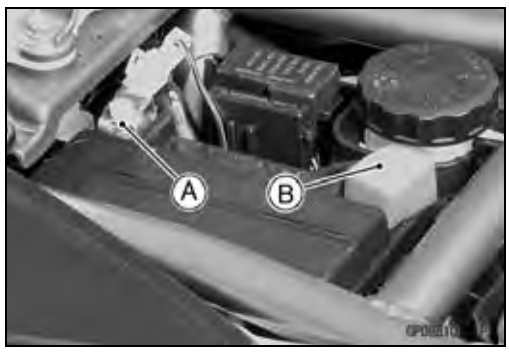

CAUTION
Be sure to disconnect the negative (–) cable first.

- Remove the battery.

Battery Installation

- Put the battery into the rear fender front.
- Apply a light coat of grease on the terminals to prevent corrosion.
- Install the positive (+) cable [A] first.
- Cover the positive (+) terminal with the cap [B].
- Install the negative (–) cable [C].

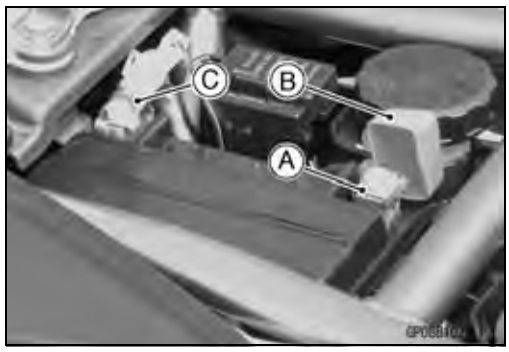

Battery Activation

Electrolyte Filling

- Make sure that the model name [A] of the electrolyte container matches the model name [B] of the battery. These names must be the same.

Battery Model Name for ER650A: YTX12-BS

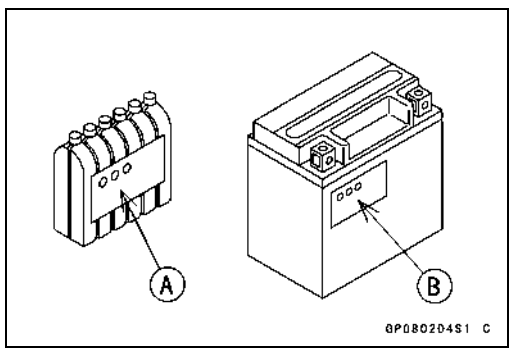

CAUTION
Be sure to use the electrolyte container with the same model name as the battery since the electrolyte volume and specific gravity vary with the battery type. This is to prevent overfilling of the electrolyte, shorting the battery life, and deterioration of the battery performance.

CAUTION
Do not remove the aluminum sealing sheet [A] from the filler ports [B] until just prior to use. Be sure to use the dedicated electrolyte container for correct electrolyte volume.

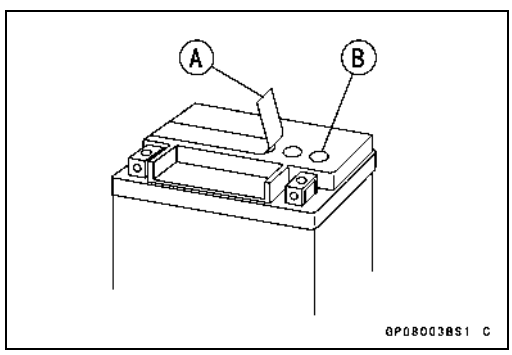

- Place the battery on a level surface.
- Check to see that the sealing sheet has no peeling, tears, or holes in it.
- Remove the sealing sheet.

NOTE

○*The battery is vacuum sealed. If the sealing sheet has leaked air into the battery, it may require a longer initial charge.*

Battery

- Remove the electrolyte container from the vinyl bag.
- Detach the strip of caps [A] from the container and set aside, these will be used later to seal the battery.

NOTE

○*Do not pierce or otherwise open the sealed cells [B] of the electrolyte container. Do not attempt to separate individual cells.*

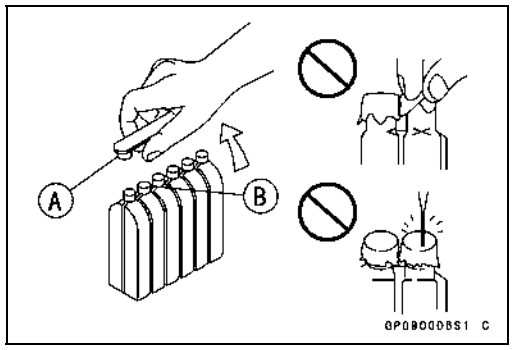

- Place the electrolyte container upside down with the six sealed cells into the filler ports of the battery. Hold the container level, push down to break the seals of all six cells. You will see air bubbles rising into each cell as the ports fill.

NOTE

○*Do not tilt the electrolyte container*

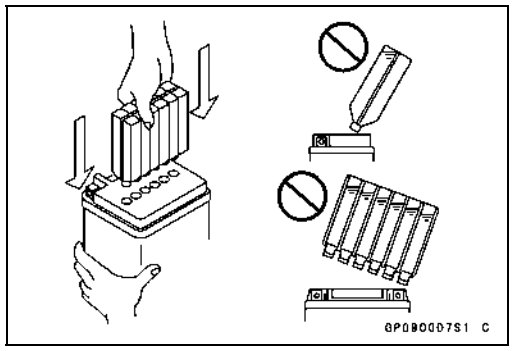

- Check the electrolyte flow.

★If no air bubbles [A] are coming up from the filler ports, or if the container cells have not emptied completely, tap the container [B] a few times.

- Keep the container in place for **20** minutes or more. Don't remove the container from the battery until it's empty, the battery requires all the electrolyte from the container for proper operation.

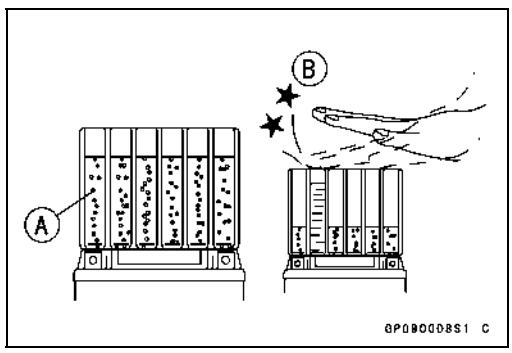

CAUTION

Removal of the container before it is completely empty can shorten the service life of the battery. Do not remove the electrolyte container until it is completely empty and 20 minutes have elapsed.

- Gently remove the container from the battery.
- Let the battery sit for **30** minutes prior to charging to allow the electrolyte to permeate into the plates for optimum performance.

NOTE

○*Charging the battery immediately after filling can shorten service life. Let the battery sit for at least **30** minutes after filling.*

http://mototh.com

Battery

Initial Charge

- Place the strip [A] of caps loosely over the filler ports.
- Newly activated sealed batteries require an initial charge.

Standard Charge: 1.2 A × 5 ~ 10 hours

★If using a recommended battery charger, follow the charger's instructions for newly activated sealed battery.

Kawasaki-recommended chargers

Optimate III

Yuasa 1.5 Amp Automatic Charger

Battery Mate 150-9

★If the above chargers are not available, use equivalent one.

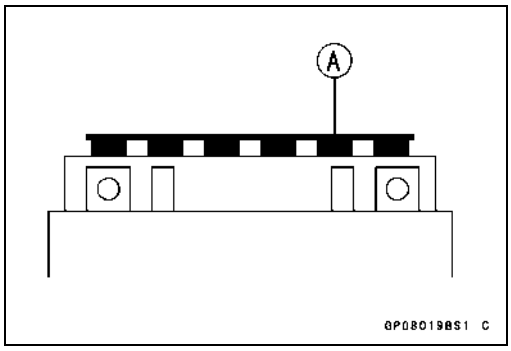

NOTE

○*Charging rates will vary depending on how long the battery has been stored, temperature, and the type of charger used. Let battery sit 30 minutes after initial charge, then check voltage using a voltmeter. If it is not at least 12.8 V, repeat charging cycle.*

- After charging is completed, press down firmly with both hands to seat the strip of caps [A] into the battery (don't pound or hammer.). When properly installed, the strip of the caps will be level with the top of the battery.

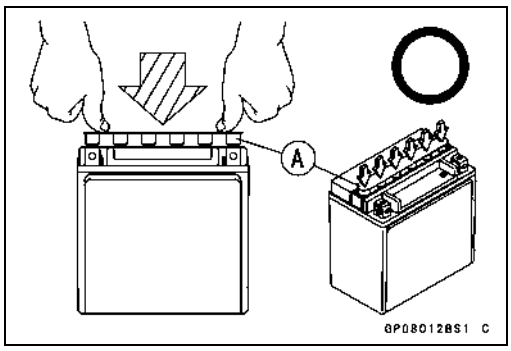

CAUTION

Once the strip of the caps [A] is installed onto the battery, never remove the caps, nor add water or electrolyte to the battery.

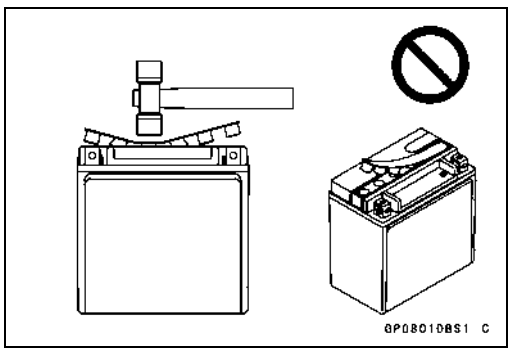

NOTE

○*To ensure maximum battery life and customer satisfaction, it is recommended the battery be load tested at three times its amp-hour rating for 15 seconds.*
Re-check voltage and if less than 12.8 V repeat the charging cycle and load test. If still below 12.8 V the battery is defective.

Battery

Precautions

1) No need of topping-up
   No topping-up is necessary in this battery until it ends its life under normal use. Forcibly prying off the seal cap to add water is very dangerous. Never do that.
2) Refreshing charge.
   If an engine will not start, a horn sounds weak, or lamps are dim, it indicates the battery has been discharged. Give refresh charge for 5 to 10 hours with charge current shown in the specification (see Specifications).
   When a fast charge is inevitably required, do it following precisely the maximum charge current and time conditions indicated on the battery.

CAUTION

This battery is designed to sustain no unusual deterioration if refresh-charged according to the method specified above. However, the battery's performance may be reduced noticeably if charged under conditions other than given above. Never remove the seal cap during refresh charge.
If by chance an excessive amount of gas is generated due to overcharging, the relief valve releases the gas to keep the battery normal.

3) When you do not use the motorcycle for months.
   Give a refresh charge before you store the motorcycle and store it with the negative cable removed. Give a refresh charge **once a month** during storage.
4) Battery life.
   If the battery will not start the engine even after several refresh charges, the battery has exceeded its useful life. Replace it (Provided, however, the vehicle's starting system has no problem).

⚠ WARNING

Keep the battery away from sparks and open flames during charging, since the battery gives off an explosive gas mixture of hydrogen and oxygen. When using a battery charger, connect the battery to the charger before turning on the charger.
This procedure prevents sparks at the battery terminals which could ignite any battery gases.
No fire should be drawn near the battery, or no terminals should have the tightening loosened.
The electrolyte contains sulfuric acid. Be careful not to have it touch your skin or eyes. If touched, wash it off with liberal amount of water. Get medial attention if severe.

Interchange

A sealed battery can fully display its performance only when combined with a proper vehicle electric system. Therefore, replace a sealed battery only on a motorcycle which was originally equipped with a sealed battery.

Be careful, if a sealed battery is installed on a motorcycle which had an ordinary battery as original equipment, the sealed battery's life will be shortened.

http://mototh.com

Battery

Charging Condition Inspection

○Battery charging condition can be checked by measuring battery terminal voltage with a digital voltmeter [A].

- Remove:
  Seat (see Seat Removal in the Frame chapter)
  Battery Cable Cap (see Battery Removal)
- Disconnect the battery terminals.

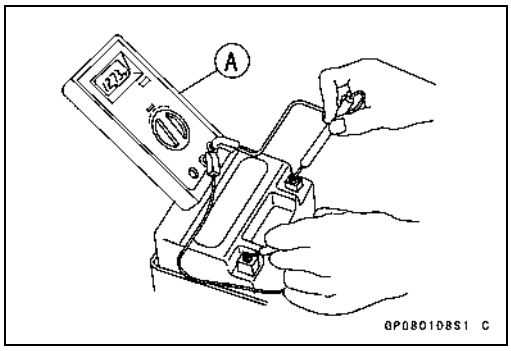

CAUTION

Be sure to disconnect the negative (–) cable first.

- Measure the battery terminal voltage.

NOTE

○*Measure with a digital voltmeter which can be read one decimal place voltage.*

★If the reading is 12.8 V or more, no refresh charge is required, however, if the read is below the specified, refresh charge is required.

Battery Terminal Voltage
Standard: 12.8 V or more

Terminal Voltage (V) [A]
Battery Charge Rate (%) [B]
Good [C]
Refresh charge is required [D]

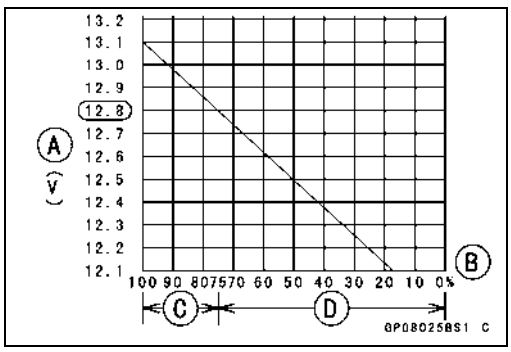

Refreshing Charge

- Remove the battery [A] (see Battery Removal).
- Do refresh charge by following method according to the battery terminal voltage.

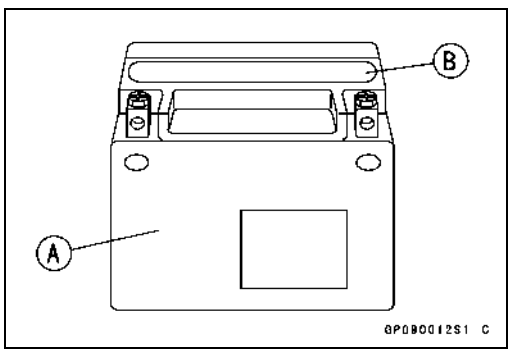

⚠ WARNING

This battery is sealed type. Never remove sealing cap [B] even at charging. Never add water. Charge with current and time as stated below.

Battery

Terminal Voltage: 11.5 ~ less than 12.8 V
Standard Charge 1.2 A × 5 ~ 10 h (see following chart)
Quick Charge 5 A × 1 h

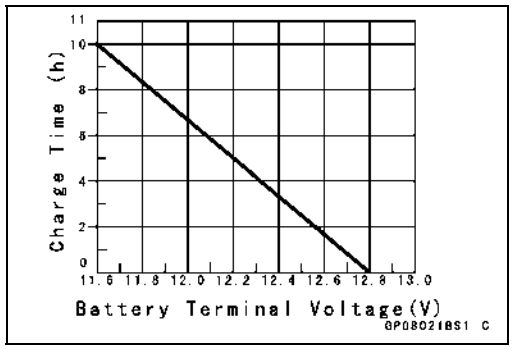

CAUTION
If possible, do not quick charge. If quick charge is done unavoidably, do standard charge later on.

Terminal Voltage: less than 11.5 V
Charging Method 1.2 A × 20 h

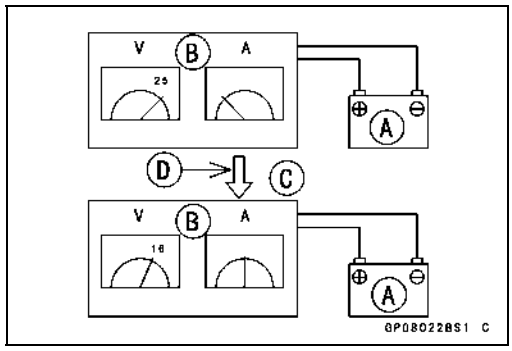

NOTE

○*Increase the charging voltage to a maximum voltage of 25 V if the battery will not accept current initially. Charge for no more than 5 minutes at the increased voltage then check if the battery is drawing current. If the battery will accept current decrease the voltage and charge by the standard charging method described on the battery case. If the battery will not accept current after 5 minutes, replace the battery.*

Battery [A]
Battery Charger [B]
Standard Value [C]
Current starts to flow [D]

● Determine the battery condition after refresh charge.
○Determine the condition of the battery left for 30 minutes after completion of the charge by measuring the terminal voltage according to the table below.

Criteria	Judgement
12.8 V or higher	Good
12.0 ~ lower than 12.8 V	Charge insufficient → Recharge
lower than 12.0 V	Unserviceable → Replace

Charging System

Alternator Cover Removal

- Remove:
  Lower Fairing (see Lower Fairing Removal in the Frame chapter)
  Alternator Lead Connector [A]

- Place a suitable container under the alternator cover [A], and remove the cover bolts [B].
- Pull the alternator cover outside.

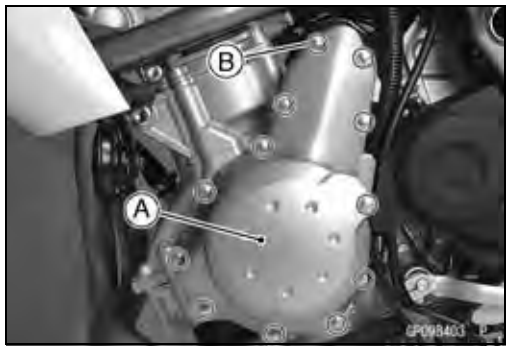

Alternator Cover Installation

- Apply silicone sealant to the alternator lead grommet and crankcase halves mating surface [A] on the front and rear sides of the cover mount.

  Sealant - Kawasaki Bond (Silicone Sealant): 92104-0004

- Check that dowel pins [B] are in place on the crankcase.
- Install a new gasket and the alternator cover.
- Tighten:

  Torque - Alternator Cover Bolts: 9.8 N·m (1.0 kgf·m, 87 in·lb)

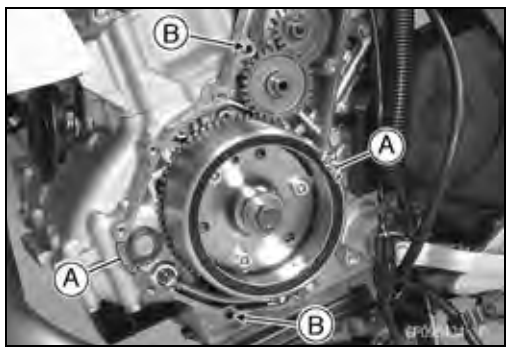

Stator Coil Removal

- Remove:
  Alternator Cover (see Alternator Cover Removal)
  Holding Plate Bolt [A] and Plate
  Alternator Lead Grommet [B]
  Stator Coil Bolts [C]
- Remove the stator coil [D] from the alternator cover.

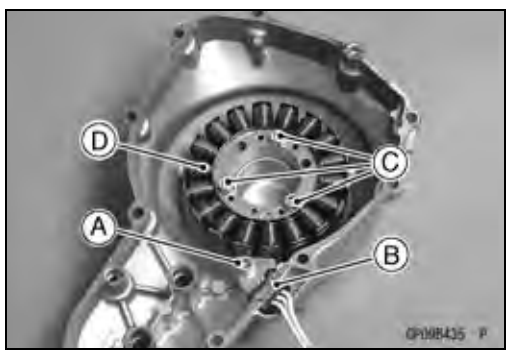

Stator Coil Installation

- Apply a non-permanent locking agent to the threads of the stator coil bolts and tighten them.

  Torque - Stator Coil Bolts: 12 N·m (1.2 kgf·m, 106 in·lb)

- Secure the alternator lead with a holding plate, and tighten the bolt.

○Apply a non-permanent locking agent to the threads of the holding plate bolt.

  Torque - Alternator Lead Holding Plate Bolt: 9.8 N·m (1.0 kgf·m, 87 in·lb)

- Apply silicone sealant to the circumference of the alternator lead grommet, and fit the grommet into the notch of the cover securely.

  Sealant - Kawasaki Bond (Silicone Sealant): 92104-0004

- Install the alternator cover (see Alternator Cover Installation).

Alternator Rotor Removal

- Remove the alternator cover (see Alternator Cover Removal).
- Remove the starter idle gear, torque limiter and shafts.
- Wipe oil off the outer circumference of the rotor.
- Hold the alternator rotor steady with the rotor holder [A], and remove the rotor bolt [B] and washer.

  Special Tools - Grip: 57001-1591
  Rotor Holder: 57001-1658

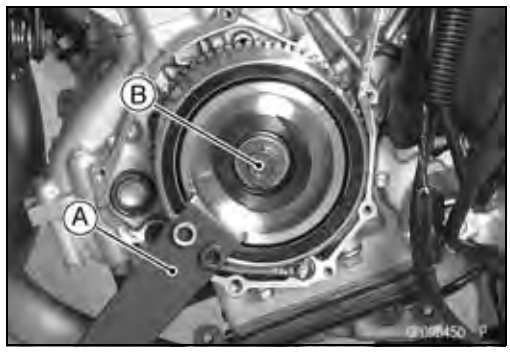

- Using the flywheel puller [A], remove the alternator rotor from the crankshaft.

  Special Tool - Flywheel Puller Assembly, M38 × 1.5/M35 × 1.5: 57001-1405

CAUTION
Do not attempt to strike the alternator rotor itself. Striking the rotor can cause the magnets to lose their magnetism.

Alternator Rotor Installation

- Using a cleaning fluid, clean off any oil or dirt on the following portions and dry them with a clean cloth.
  Crankshaft Tapered Portion [A]
  Alternator Rotor Tapered Portion [B]
- Apply a thin coat of molybdenum disulfide grease to the crankshaft [C].

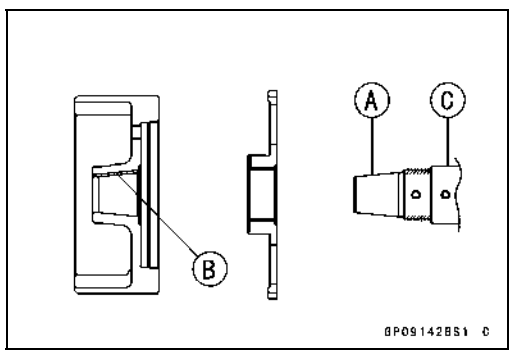

Charging System

- Install the starter gear [A] and washer [B].
- Again, clean the crankshaft tapered portion [C] and dry there.

- Install the alternator rotor [A] while turning [B] it counter-clockwise.

- Install the washer [A].

NOTE

○*Confirm the alternator rotor fit or not to the crankshaft before tightening it with specified torque.*

- Apply molybdenum disulfide oil solution to the threads and seating surface of the rotor bolt.
- Install the rotor bolt [B] and tighten it with 70 N·m (7.0 kgf·m, 52 ft·lb) of torque.
- Remove the rotor bolt and washer.
- Check the tightening torque with flywheel puller.

★If the rotor is not pulled out with 20 N·m (2.0 kgf·m, 15 ft·lb) of drawing torque, it is installed correctly.

★If the rotor is pulled out with under 20 N·m (2.0 kgf·m, 15 ft·lb) of drawing torque, clean off any oil dirt or flaw of the crankshaft and rotor tapered portion, and dry them with a clean cloth. Then, confirm that it is not pulled out with above torque.

- Tighten the alternator rotor bolt while holding the alternator rotor steady with the rotor holder.

Special Tools - Grip: 57001-1591
Rotor Holder: 57001-1658

Torque - Alternator Rotor Bolt: 155 N·m (15.8 kgf·m, 114 ft·lb)

http://mototh.com

- Apply a thin coat of molybdenum disulfide grease to the shafts [A], and install them.
- Install the torque limiter [B] and starter idle gear [C].
- Install the alternator cover (see Alternator Cover Installation).

Alternator Inspection

There are three types of alternator failures: short, open (wire burned out), or loss in rotor magnetism. A short or open in one of the coil wires will result in either a low output, or no output at all. A loss in rotor magnetism, which may be caused by dropping or hitting the alternator, by leaving it near an electromagnetic field, or just by aging, will result in low output.

- To check the alternator output voltage, do the following procedures.

○Turn off the ignition switch.
○Disconnect the alternator lead connector [A].
○Connect the hand tester as shown in the table 1.
○Start the engine.
○Run it at the rpm given in the table 1.
○Note the voltage readings (total 3 measurements).

Table 1 Alternator Output Voltage

Tester Range	Connections		Reading at 4 000 rpm
	Tester (+) to	Tester (–) to	
250 V AC	One Black lead	Another Black lead	42 V or more

★If the output voltage shows the value in the table, the alternator operates properly.
★If the output voltage shows a much higher than the value in the table, the regulator/rectifier is damaged. A much lower reading than that given in the table indicates that the alternator is defective.

- Check the stator coil resistance as follows.

○Stop the engine.
○Connect the hand tester as shown in the table 2.
○Note the readings (total 3 measurement).

Table 2 Stator Coil Resistance

Tester Range	Connections		Reading
	Tester (+) to	Tester (–) to	
× 1 Ω	One Black lead	Another Black lead	0.18 ~ 0.27 Ω

http://mototh.com

Charging System

★If there is more resistance than shown in the table, or no hand tester reading (infinity) for any two leads, the stator has an open lead and must be replaced. Much less than this resistance means the stator is shorted, and must be replaced.

- Using the highest resistance range of the hand tester, measure the resistance between each of the black leads and chassis ground.

★Any hand tester reading less than infinity (∞) indicates a short, necessitating stator replacement.

★If the stator coils have normal resistance, but the voltage check showed the alternator to be defective; then the rotor magnets have probably weakened, and the rotor must be replaced.

Special Tool - Hand Tester: 57001-1394

Regulator/Rectifier Inspection

- Remove:
  Bolts [A]

- Disconnect the connector [A].
- Remove the regulator/rectifier [B].

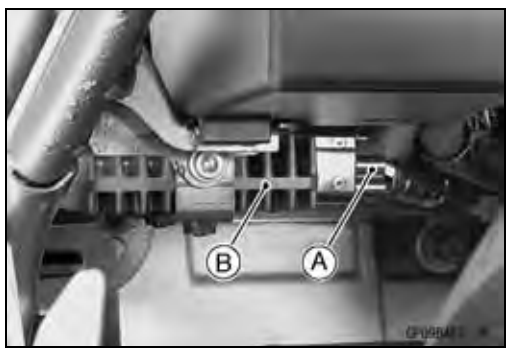

Rectifier Circuit Check

- Check conductivity of the following pair of terminals.

Rectifier Circuit Inspection

Tester connection	W/BL-BK1,	W/BL-BK2,	W/BL-BK3
	BK/Y-BK1,	BK/Y-BK2,	BK/Y-BK3

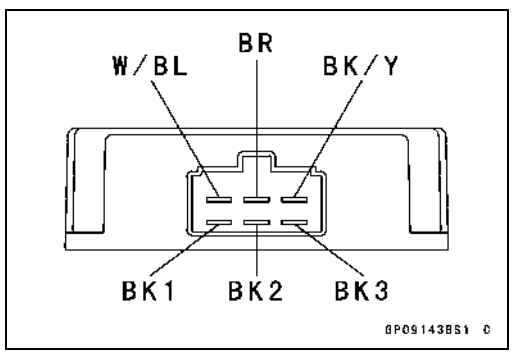

★The resistance should be low in one direction and more than ten times as much in the other direction. If any two leads are low or high in both directions, the rectifier is defective and the regulator/rectifier must be replaced.

NOTE

○*The actual meter reading varies with the meter used and the individual rectifier, but, generally speaking the lower reading should be from zero to one half the scale.*

Charging System

Regulator Circuit Check

To test the regulator out of circuit, use three 12 V batteries and a test light (12 V 3 ~ 6 W bulb in a socket with leads).

CAUTION

The test light works as an indicator and also a current limiter to protect the regulator/rectifier from excessive current. Do not use an ammeter instead of a test light.

● Check to be sure the rectifier circuit is normal before continuing.

● Do the 1st step regulator circuit test.
○Connect the test light and the 12 V battery to the regulator/rectifier as shown.
○Check the BK1, BK2 and BK3 terminal respectively.
★If the test light turns on, the regulator/rectifier is defective. Replace it.
★If the test light does not turn on, continue the test.

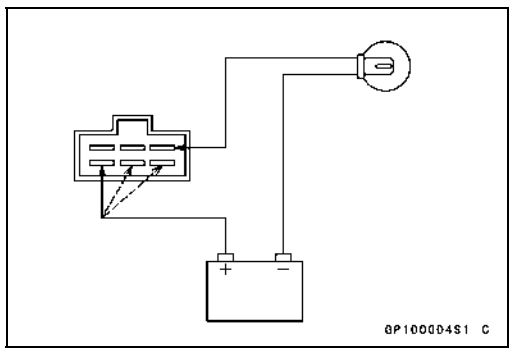

● Do the 2nd step regulator circuit test.
○Connect the test light and the 12 V battery in the same manner as specified in the “Regulator Circuit Test-1st Step”.
○Apply 12 V to the voltage BR terminal.
○Check the BK1, BK2 and BK3 terminal respectively.
★If the test light turns on, the regulator/rectifier is defective. Replace it.
★If the test light does not turn on, continue the test.

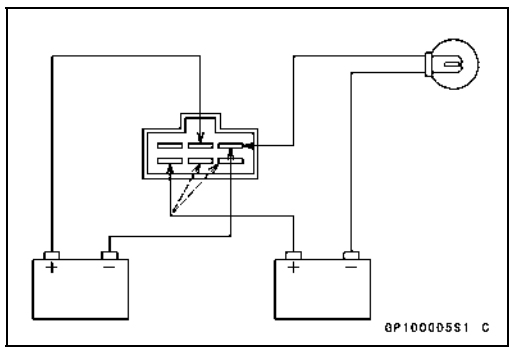

● Do the 3rd step regulator circuit test.
○Connect the test light and the 12 V battery in the same manner as specified in the “Regulator Circuit Test-1st Step”.
○Momentarily apply 24 V to the voltage BR terminal by adding a 12 V battery.
○Check the BK1, BK2 and BK3 terminals respectively.

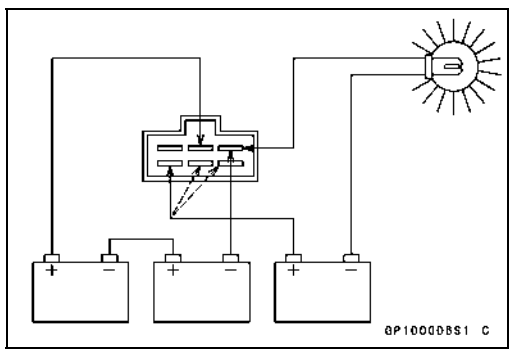

CAUTION

Do not apply more than 24 V. If more than 24 V is applied, the regulator/rectifier may be damaged. Do not apply 24 V more than a few seconds. If 24 V is applied for more than a few seconds, the regulator/rectifier may be damaged.

★If the test light did not light when the 24 V was applied momentarily to the voltage monitoring terminal, the regulator/rectifier is defective. Replace it.
★If the regulator/rectifier passes all of the tests described, it may still be defective. If the charging system still does not work properly after checking all of the components and the battery, test the regulator/rectifier by replacing it with a known good unit.

http://mototh.com

Charging System

Charging Voltage Inspection

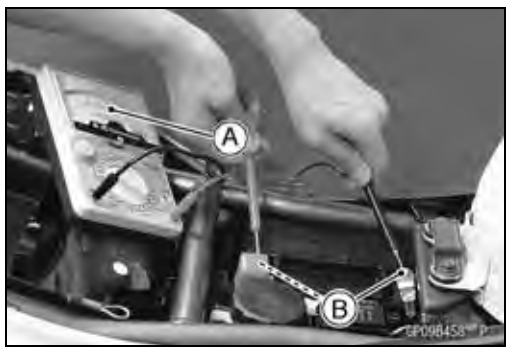

- Check the battery condition (see Charging Condition Inspection).
- Warm up the engine to obtain actual alternator operating conditions.
- Remove the seat (see Seat Removal in the Frame chapter).
- Check that the ignition switch is turned off, and connect the hand tester [A] to the battery terminals [B].

  Special Tool - Hand Tester: 57001-1394

- Start the engine, and note the voltage readings at various engine speeds with the headlight turned on and then turned off (To turn off the headlight, disconnect the headlight connector on the headlight unit.). The readings should show nearly battery voltage when the engine speed is low, and, as the engine speed rises, the readings should also rise. But they must be kept under the specified voltage.

Charging Voltage

Tester Range	Connections		Reading
	Tester (+) to	Tester (–) to	
25 V DC	Battery (+)	Battery (–)	14.2 ~ 15.2 V

- Turn off the ignition switch to stop the engine, and disconnect the hand tester.

★If the charging voltage is kept between the values given in the table, the charging system is considered to be working normally.

★If the charging voltage is much higher than the values specified in the table, the regulator/rectifier is defective or the regulator/rectifier leads are loose or open.

★If the charging voltage does not rise as the engine speed increases, then the regulator/rectifier is defective or the alternator output is insufficient for the loads. Check the alternator and regulator/rectifier to determine which part is defective.

http://mototh.com

Charging System

Charging System Circuit

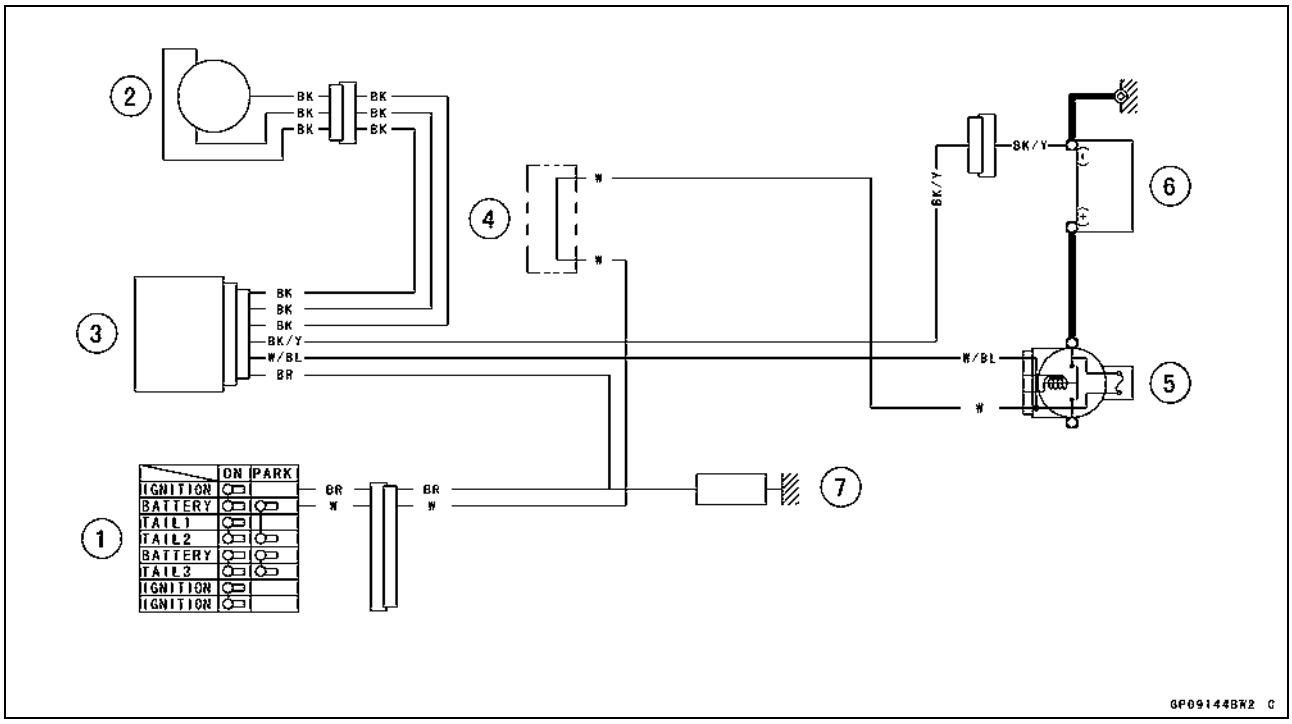

1. Ignition Switch
2. Alternator
3. Regulator/Rectifier
4. Water-proof Joint C
5. Main Fuse 30 A
6. Battery 12 V 10 Ah
7. Load

Starter Motor Clutch

Starter Motor Clutch Removal/Installation

- Refer to the Alternator Rotor Removal/Installation.

Starter Motor Clutch Inspection

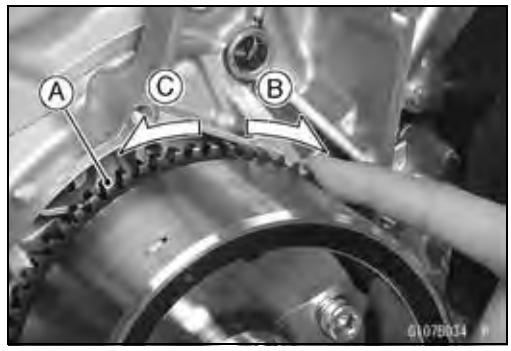

- Remove:
  Alternator Cover (see Alternator Cover Removal)
  Starter Idle Gear and Torque Limiter
  Shafts
- Turn the starter motor clutch gear [A] by hand. The starter motor clutch gear should turn clockwise [B] freely, but should not turn counterclockwise [C].

★If the starter motor clutch does not operate as it should or if it makes noise, go to the next step.

- Disassemble the starter motor clutch, and visually inspect the clutch parts.

★If there is any worn or damaged part, replace it.

NOTE

○*Examine the starter motor clutch gear as well. Replace it if it worn or damaged.*

Starter Motor Clutch Disassembly

- Remove:
  Alternator Rotor (see Alternator Rotor Removal)
  Starter Motor Clutch Bolts [A]

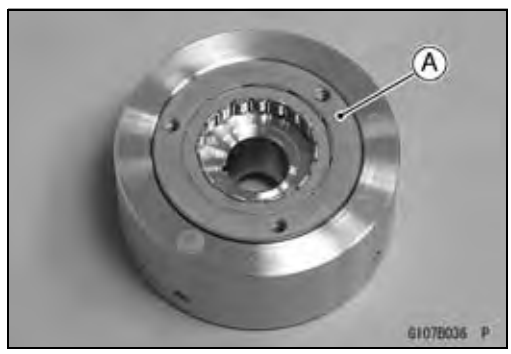

- Remove:
  Starter Motor Clutch [A]

Starter Motor Clutch Assembly

- Apply a non-permanent locking agent to the threads of the starter motor clutch bolts and tighten them.

Torque - Starter Motor Clutch Bolts: 34 N·m (3.5 kgf·m, 25 ft·lb)

Ignition System

⚠ WARNING

The ignition system produces extremely high voltage. Do not touch the spark plugs or stick coils while the engine is running, or you could receive a severe electrical shock.

CAUTION

Do not disconnect the battery cables or any other electrical connections when the ignition switch is on, or while the engine is running. This is to prevent ECU (Electric Control Unit) damage.
Do not install the battery backwards. The negative side is grounded. This is to prevent damage to the ECU.

Crankshaft Sensor Removal

- Remove:
  Lower Fairing (see Lower Fairing Removal in the Frame chapter)
  Right Frame Cover (see Frame Cover Removal in the Frame chapter)
  Crankshaft Sensor Lead Connector [A]

- Remove:
  Rubber Boot (Slide Out) [A]
  Oil Pressure Switch Lead Terminal [B]
  Clutch Cover (see Clutch Cover Removal in the Clutch chapter)

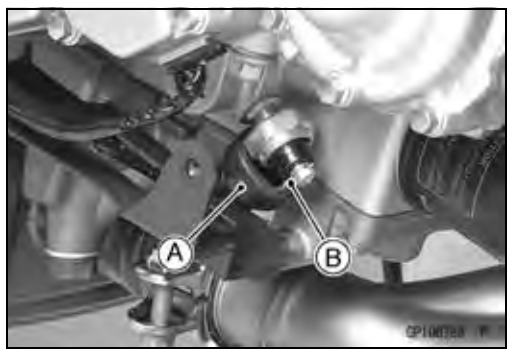

- Remove:
  Bolts [A]
  Crankshaft Sensor [B]
- Pull out the grommet [C].

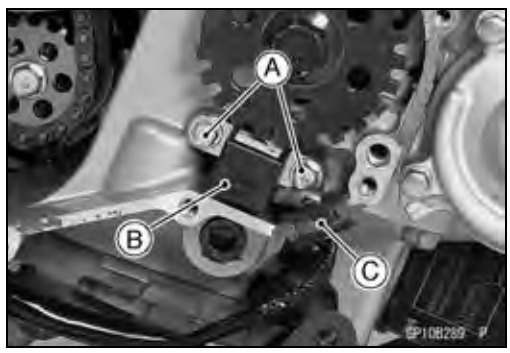

Ignition System

Crankshaft Sensor Installation

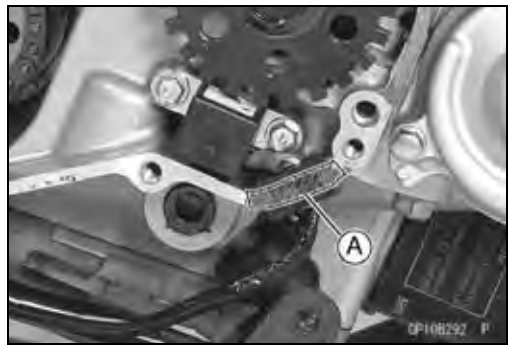

- Route the crankshaft sensor lead correctly (see Cable, Wire, and Hose Routing section in the Appendix chapter).
- Tighten:

  Torque - Crankshaft Sensor Bolts: 6.0 N·m (0.60 kgf·m, 53 in·lb)

- Apply silicone sealant [A] to the crankshaft sensor lead grommet.

  Sealant - Kawasaki Bond (Silicone Sealant): 92104-0004

- Install the removed parts (see appropriate chapters).

Crankshaft Sensor Inspection

- Remove:
  Right Frame Cover (see Frame Cover Removal in the Frame chapter)
  Crankshaft Sensor Lead Connector [A]
- Set the hand tester to the × 100 Ω range and connect (+) lead to the black lead and (–) lead to the yellow lead in the connector.

  Special Tool - Hand Tester: 57001-1394

★If there is more resistance than the specified value, the coil has an open lead and must be replaced. Much less than this resistance means the coil is shorted, and must be replaced.

  Crankshaft Sensor Resistance: 376 ~ 564 Ω

- Using the highest resistance range of the tester, measure the resistance between the crankshaft sensor leads and chassis ground.

★Any tester reading less than infinity (∞) indicates a short, necessitating replacement of the crankshaft sensor assembly.

Crankshaft Sensor Peak Voltage Inspection

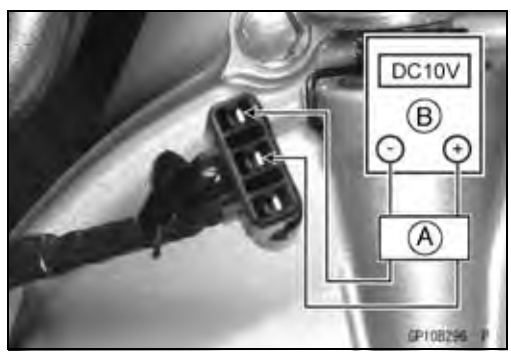

NOTE

○*Be sure the battery is fully charged.*

○*Using the peak voltage adapter [A] is a more reliable way to determine the condition of the crankshaft sensor than crankshaft sensor internal resistance measurements.*

- Remove:
  Crankshaft Sensor Lead Connector (see Crankshaft Sensor Removal)
- Set the hand tester [B] to the × DC 10 V range, and connect it peak voltage adapter.
- Connect the black lead of the adapter to yellow lead and red lead to black lead in the crankshaft sensor connector.
- Turn the ignition switch and engine stop switch ON.

- Pushing the starter button, turn the engine 4 ~ 5 seconds with the transmission gear in neutral to measure the crankshaft sensor peak voltage.
- Repeat the measurement 5 or more times.

Crankshaft Sensor Peak Voltage
Standard: 1.9 V or more

Special Tools - Hand Tester: 57001-1394
Peak Voltage Adapter: 57001-1415
Type: KEK-54-9-B

★If the tester reading is not specified one, check the crankshaft sensor.

Timing Rotor Removal

- Remove:
  Clutch Cover (see Clutch Cover Removal in the Clutch chapter)
  Crankshaft Sensor (see Crankshaft Sensor Removal)
- Remove the timing rotor [A].

○Holding the timing rotor with the flywheel & pulley holder [B] and unscrew the rotor bolt [C].

Special Tool - Flywheel & Pulley Holder: 57001-1605

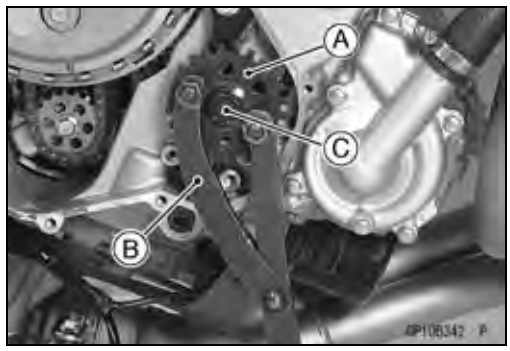

Timing Rotor Installation

- Fit the rotor to the crankshaft.
- Tighten the rotor bolt.

Torque - Timing Rotor Bolt: 40 N·m (4.1 kgf·m, 30 ft·lb)

- Install the removed parts (see appropriate chapters).

Stick Coil (Ignition Coil together with Spark Plug Cap) Removal

- Remove the air cleaner housing (see Air Cleaner Housing Removal in the Fuel System (DFI) chapter).
- Disconnect the stick coil connectors [A].
- Pull the stick coils [B] off the spark plugs.

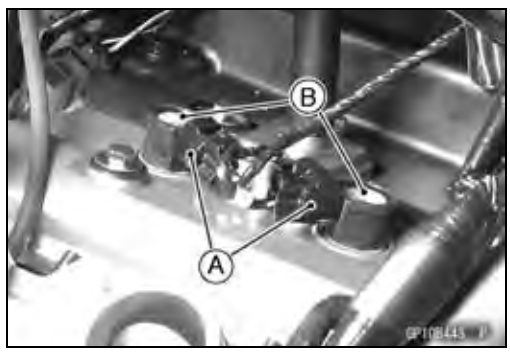

CAUTION
Do not pry the connector part of the coil while removing the coil.

Stick Coil (Ignition Coil together with Spark Plug Cap) Installation

- Insert the coil as shown being careful of the coil heads [A] direction.
- Connect the connectors.

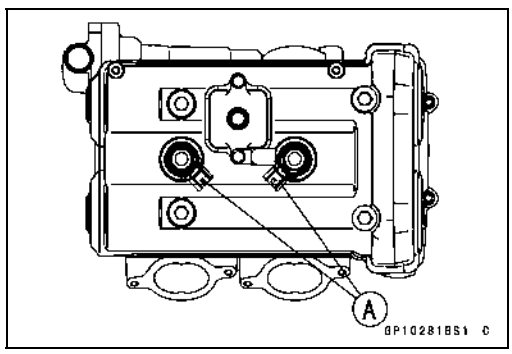

CAUTION
Do not tap the coil head while installing the coil.

- Run the hoses and harness correctly (see Cable, Wire, and Hose Routing section in the Appendix chapter).
- Install the removed parts (see appropriate chapters).

Ignition System

Stick Coil (Ignition Coil together with Spark Plug Cap) Inspection

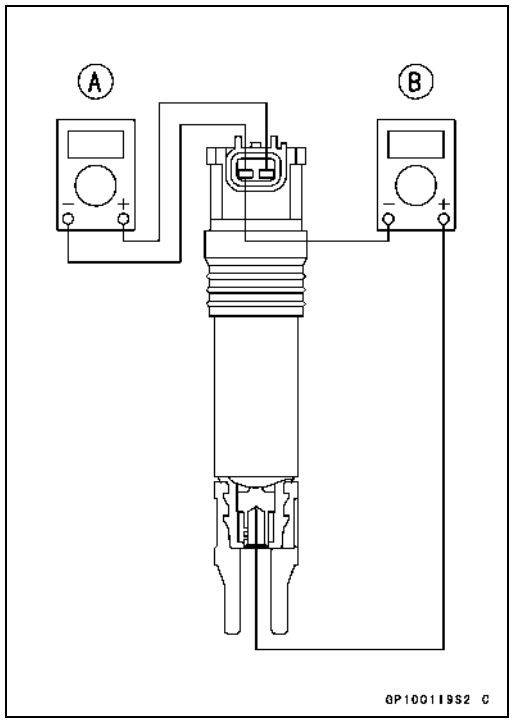

- Remove the stick coils (see Stick Coil (Ignition Coil together with Spark Plug Cap) Removal).
- Measure the primary winding resistance [A] as follows.

○Connect the hand tester between the coil terminals.
○Set the tester to the × 1 Ω range, and read the tester.

- Measure the secondary winding resistance [B] as follows.

○Connect the tester between the plug terminal and (–) coil terminal.
○Set the tester to the × 1 kΩ range and read the tester.

Ignition Coil Winding Resistance

Primary Windings:	**1.1 ~ 1.5 Ω**
Secondary Windings:	**10.8 ~ 16.2 kΩ**

★If the tester does not read as specified, replace the coil.

Stick Coil Primary Peak Voltage

NOTE

○*Be sure the battery is fully charged.*

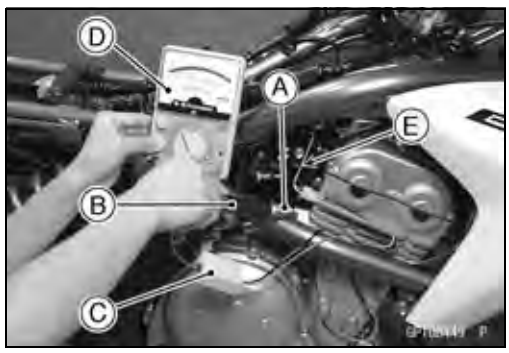

- Remove the stick coils (see Stick Coil (Ignition Coil together with Spark Plug Cap) Removal), but do not remove the spark plugs.
- Measure the primary peak voltage as follows.

○Install the new spark plug [A] into each stick coil [B], and ground them onto the engine.
○Connect the peak voltage adapter [C] into the hand tester [D] which is set to the × DC 250 V range.
○Connect the adapter to the lead wire-peak voltage adapter [E] which is connected between the stick coil connector and stick coil.
ECU [F]
Battery [G]

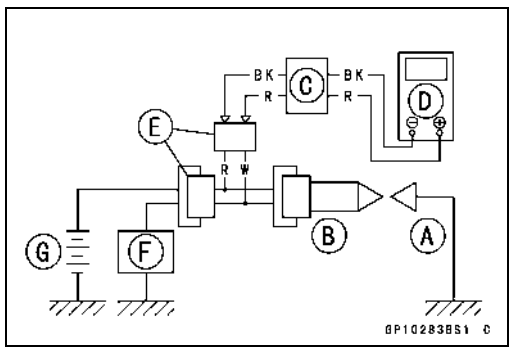

Special Tools - Hand Tester: 57001-1394
Peak Voltage Adapter: 57001-1415
Type: KEK-54-9-B
Lead Wire-Peak Voltage Adapter: 57001-1449

Primary Lead Connection
Adapter (R, +) to lead wire-peak voltage adapter (W)
Adapter (BK, –) to lead wire-peak voltage adapter (R)

http://mototh.com

Ignition System

⚠ WARNING

To avoid extremely high voltage shocks, do not touch the spark plugs or tester connections.

- Turn the ignition switch and the engine stop switch ON.
- Pushing the starter button, turn the engine 4 ~ 5 seconds with the transmission in neutral to measure the primary peak voltage.
- Repeat the measurements 5 times for one stick coil.

Stick Coil Primary Peak Voltage
Standard: 88 V or more

- Repeat the test for the other stick coil.

★If the reading is less than the specified value, check the following.
Stick Coils (see Stick Coil (Ignition Coil together with Spark Plug Cap) Inspection)
Crankshaft Sensor (see Crankshaft Sensor Inspection)
ECU (see ECU Power Supply Inspection in the Fuel System (DFI) chapter)

Spark Plug Removal

- Refer to the Spark Plug Replacement in the Periodic Maintenance chapter.

Spark Plug Installation

- Refer to the Spark Plug Replacement in the Periodic Maintenance chapter.

Spark Plug Condition Inspection

- Refer to the Spark Plug Condition Inspection in the Periodic Maintenance chapter.

http://mototh.com

Ignition System

Interlock Operation Inspection

● Raise the rear wheel off the ground with stand.

1st Check

● Start the engine to the following conditions.

Condition

Transmission Gear → 1st Position

Clutch Lever → Release

Sidestand → Down or Up

○Turn the ignition switch ON and push the starter button.

○Then the starter motor should not turn when the starter system circuit is normality.

★If the engine is start, inspect the starter lockout switch, neutral switch and relay box.

★If their parts are normality replace the ECU.

2nd Check

● Start the engine to the following conditions.

Condition

Transmission Gear → 1st Position

Clutch Lever → Pulled in

Sidestand → Up

○Turn the ignition switch ON and push the starter button.

○Then the starter motor should turn when the starter system circuit is normality.

★If the starter motor is not turn, inspect the starter lockout switch, neutral switch and relay box.

★If their parts are normality replace the ECU.

3rd Check

● Inspect the engine for its secure stop after the following operations are completed.

● Run the engine to the following conditions.

Condition

Transmission Gear → 1st Position

Clutch Lever → Pulled in

Sidestand → Up

● Set the sidestand on the ground, then the engine will stop.

★If whichever may not be stopped, inspect the neutral switch, starter lockout switch, sidestand switch and relay box.

★If their parts are normality, replace the ECU.

http://mototh.com

Ignition System

IC Igniter Inspection

○The IC igniter is built in the ECU [A].

- Refer to the Interlock Operation Inspection, Ignition System Troubleshooting chart and Fuel System (DFI) chapter for ECU Power Supply Inspection.

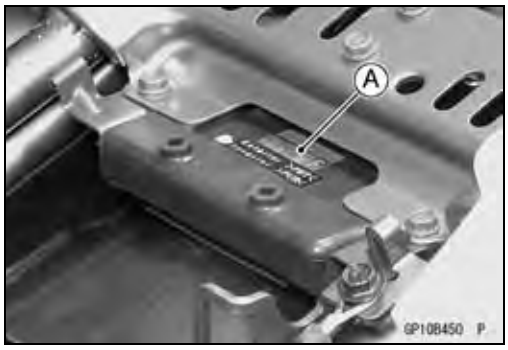

Ignition System

Ignition System Troubleshooting

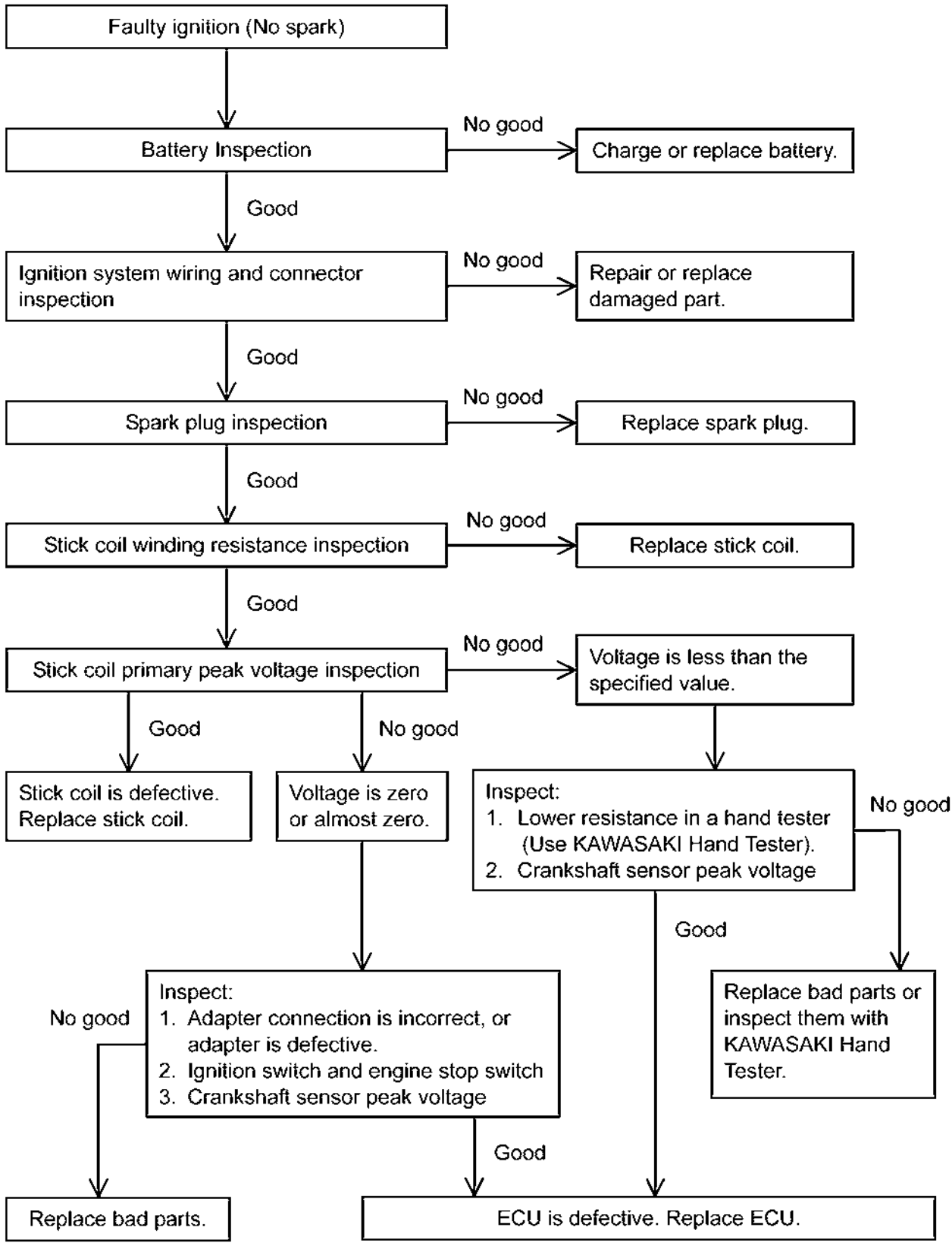

http://mototh.com

Ignition System

Ignition System Circuit

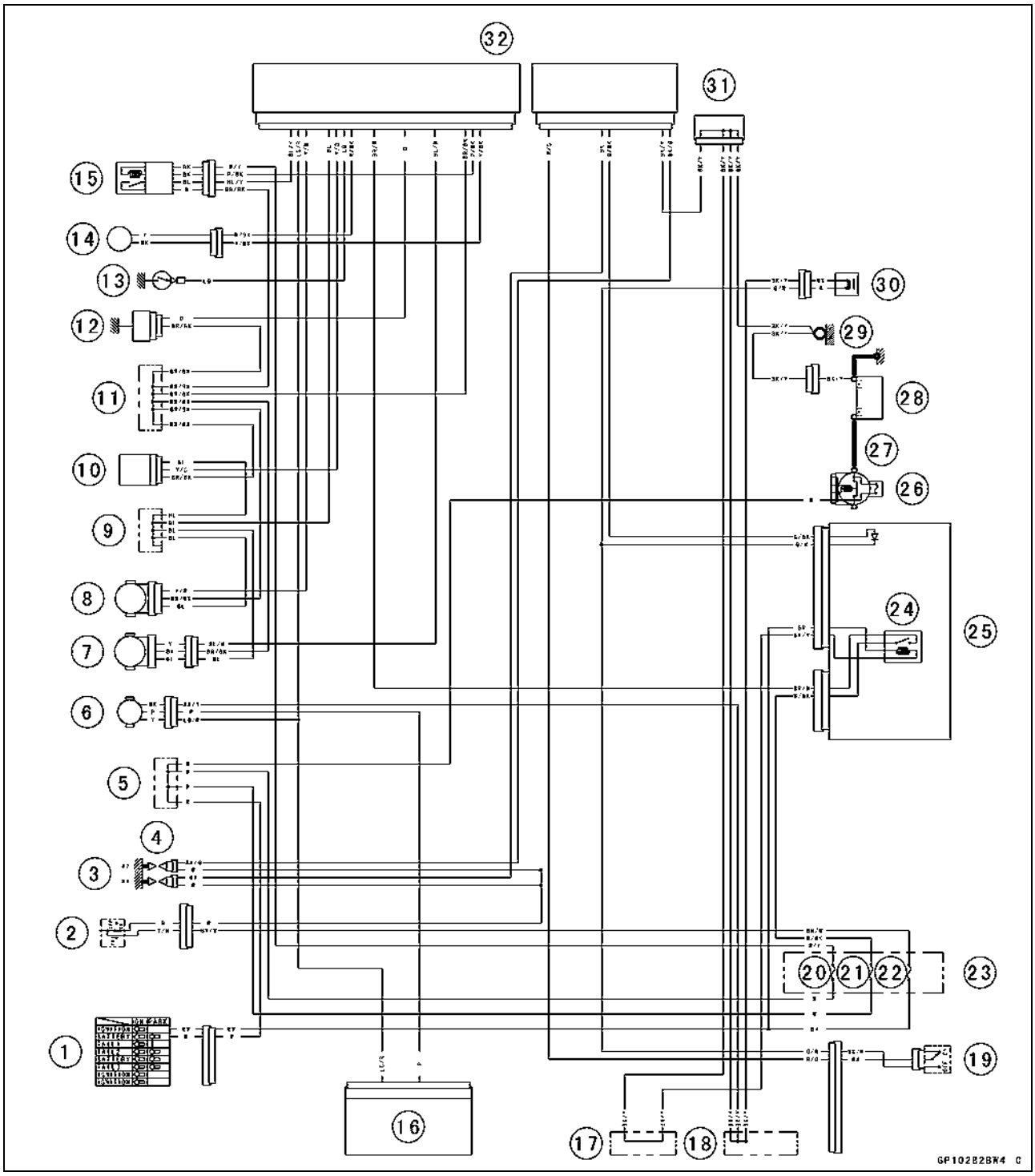

1. Ignition Switch
2. Engine Stop Switch
3. Spark Plugs
4. Stick Coils
5. Water-proof Joint C
6. Speed Sensor
7. Subthrottle Sensor
8. Main Throttle Sensor
9. Water-proof Joint D
10. Vehicle-down Sensor
11. Water-proof Joint E
12. Water Temperature Sensor
13. Neutral Switch
14. Crankshaft Sensor
15. Oxygen Sensor
16. Meter Unit
17. Water-proof Joint A
18. Water-proof Joint B
19. Starter Lockout Switch
20. Oxygen Sensor Heater Fuse 10 A
21. ECU Fuse 15 A
22. Ignition Fuse 10 A
23. Fuse Box
24. ECU Main Relay
25. Relay Box
26. Main Fuse 30 A
27. Starter Relay
28. Battery 12 V 10 Ah
29. Frame Ground
30. Sidestand Switch
31. Joint Connector
32. ECU

http://mototh.com

Electric Starter System

Starter Motor Removal

CAUTION

Do not tap the starter motor shaft or body. Tapping the shaft or body could damage the motor.

- Remove the fuel tank (see Fuel Tank Removal in the Fuel System (DFI) chapter).
- Slide back the rubber cap [A].
- Remove the starter motor cable terminal nut [B].

- Remove the mounting bolts [A].
- Pull out the starter motor [B].

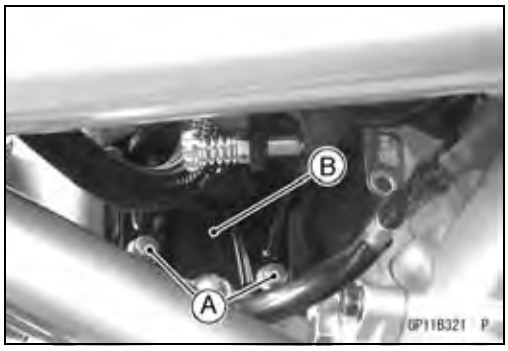

Starter Motor Installation

CAUTION

Do not tap the starter motor shaft or body. Tapping the shaft or body could damage the motor.

- When installing the starter motor, clean the starter motor legs [A] and crankcase [B] where the starter motor is grounded.

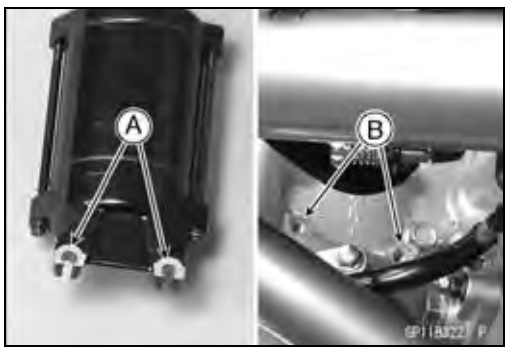

- Replace the O-ring [A] with a new one.
- Apply grease to the O-ring.
- Apply a non-permanent locking agent to the threads of the bolts and tighten the bolts.

  Torque - Starter Motor Mounting Bolts: 9.8 N·m (1.0 kgf·m, 87 in·lb)

- Install the starter motor cable.
- Tighten:

  Torque - Starter Motor Cable Terminal Nut: 6.0 N·m (0.60 kgf·m, 53 in·lb)

Starter Motor Disassembly

- Remove the starter motor (see Starter Motor Removal).
- Take off the starter motor through bolts [A] and remove the both end covers [B] and pull the armature out of the yoke [C].

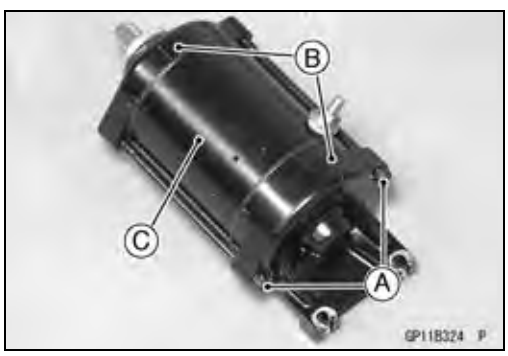

http://mototh.com

Electric Starter System

- Remove:
  Terminal Locknut and Washers
  O-ring
- Remove the brush plate assy [A] from the yoke [B].

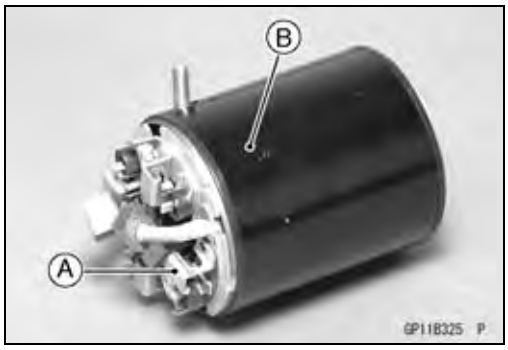

- Remove the brush plate [A] from the plate cover [B].

NOTE

○*Do not remove the negative carbon brushes form the brush plate.*

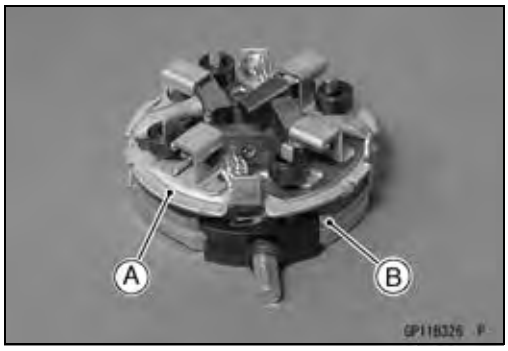

Starter Motor Assembly

- Install the brush plate [A] to the plate cover [B] as shown.
- Install the brush plate assy to the yoke.

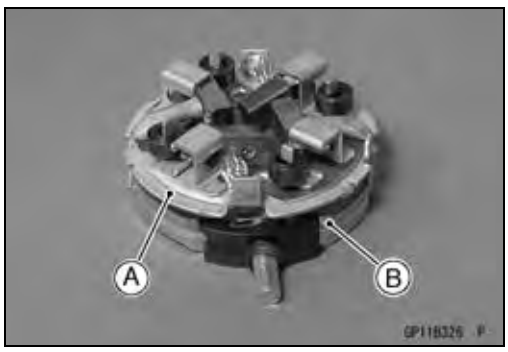

- Clamp the springs [A] with the clips [B].
- Fit the armature [C] to the brush plate assy [D].
- Remove the clips.

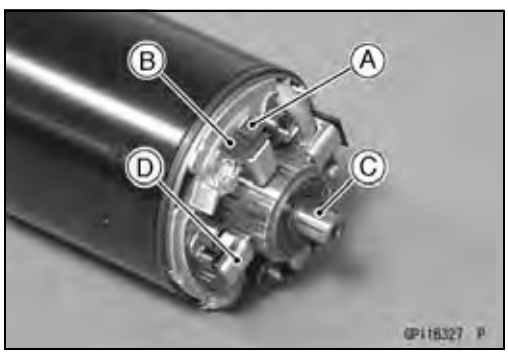

- Install the new O-ring [A] as shown.
- Install:
  Washers [B] and Terminal Locknut [C]
- Tighten:

Torque - Starter Motor Terminal Locknut: 11 N·m (1.1 kgf·m, 97 in·lb)

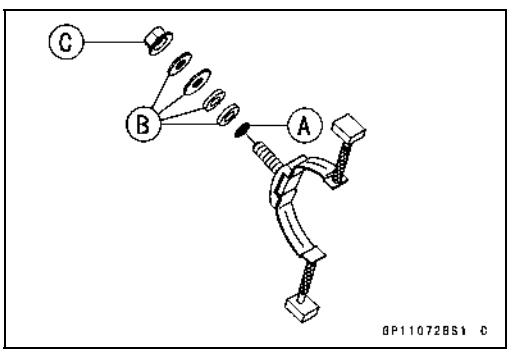

http://mototh.com

Electric Starter System

- Align the lines [A] on the yoke with the end cover lines [B].
- Tighten the through bolts.

Torque - Starter Motor Through Bolts: 4.9 N·m (0.50 kgf·m, 43 in·lb)

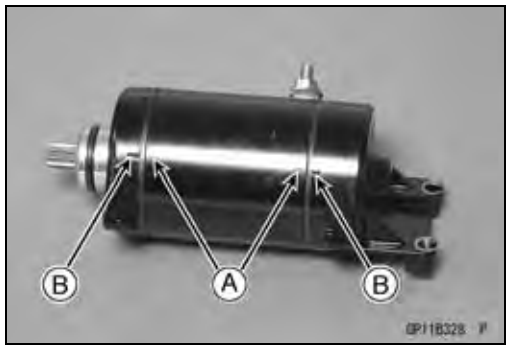

Brush Inspection

- Measure the length of each brush [A].

★If any is worn down to the service limit, replace the brush plate assy [B] and the terminal bolt assy [C].

Starter Motor Brush Length

Standard: 12 mm (0.47 in.)

Service Limit: 6.0 mm (0.24 in.)

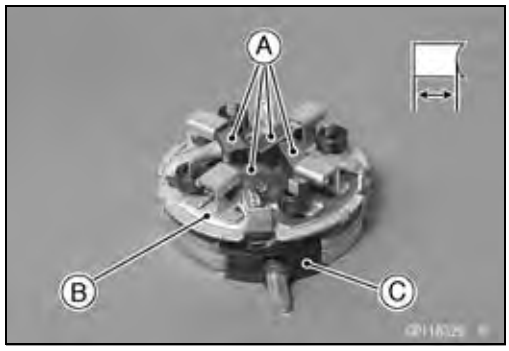

Commutator Cleaning and Inspection

- Smooth the commutator surface [A] if necessary with fine emery cloth [B], and clean out the grooves.

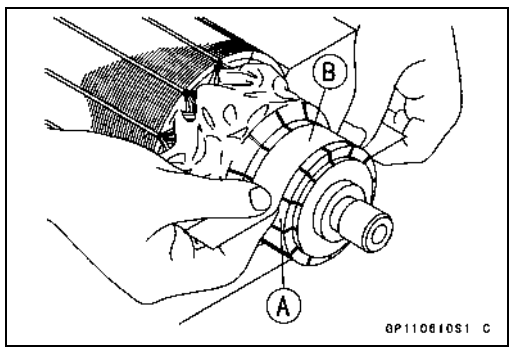

- Measure the diameter [A] of the commutator [B].

★If the commutator diameter is less than the service limit, replace the starter motor with a new one .

Commutator Diameter

Standard: 28 mm (1.10 in.)

Service Limit: 27 mm (1.06 in.)

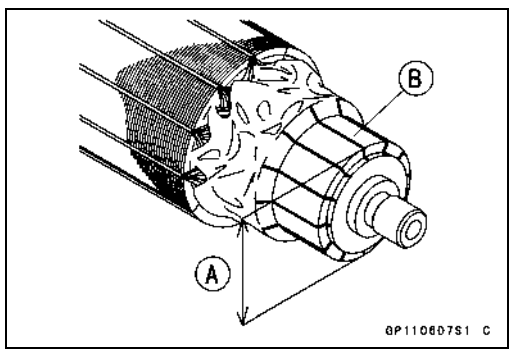

Armature Inspection

- Using the × 1 Ω hand tester range, measure the resistance between any two commutator segments [A].

Special Tool - Hand Tester: 57001-1394

★If there is a high resistance or no reading (∞) between any two segments, a winding is open and the starter motor must be replaced.

- Using the highest hand tester range, measure the resistance between the segments and the shaft [B].

★If there is any reading at all, the armature has a short and the starter motor must be replaced.

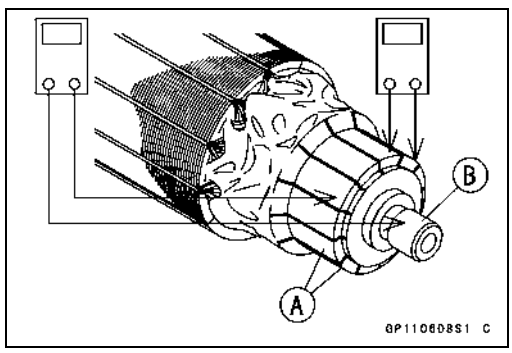

NOTE

○*Even if the foregoing checks show the armature to be good, it may be defective in some manner not readily detectable with the hand tester. If all other starter motor and starter motor circuit components check good, but the starter motor still does not turn over or only turns over weakly, replace the starter motor with a new one.*

Brush Lead Inspection

- Using the × 1 Ω hand tester range, measure the resistance as shown.
  Terminal Bolt and Positive Brushes [A]
  Brush Plate and Negative Brushes [B]

  Special Tool - Hand Tester: 57001-1394

★If there is not close to zero ohms, the brush lead has an open. Replace the terminal bolt assy and/or the brush plate assy.

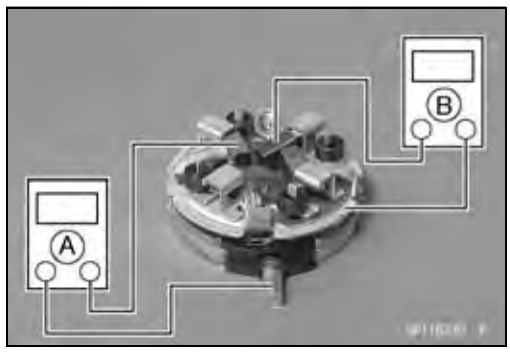

Brush Plate and Terminal Bolt Inspection

- Using the highest hand tester range, measure the resistance as shown.
  Terminal Bolt and Brush Plate [A]
  Terminal Bolt and Negative Brush Holders [B]
  Terminal Bolt and Yoke [C]

  Special Tool - Hand Tester: 57001-1394

★If there is any reading, the brush plate assy and/or terminal bolt assy have a short. Replace the brush plate assy and the terminal bolt assy.

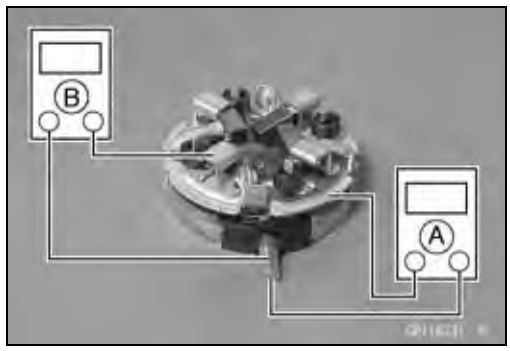

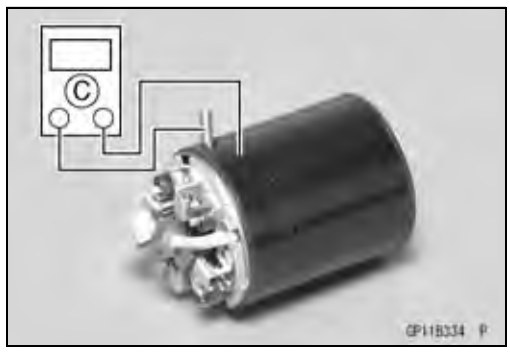

Starter Relay Inspection

- Remove:
  Bolt [A] and Cover [B]

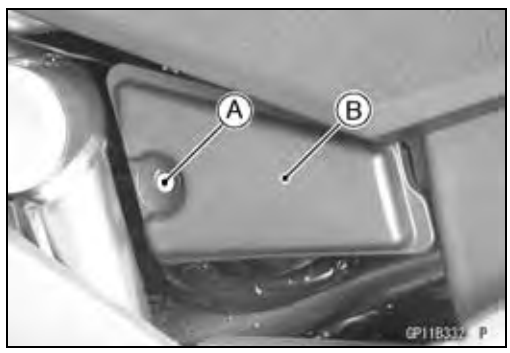

Electric Starter System

- Disconnect the connector [A].
- Disconnect the starter motor cable [B] and battery positive (+) cable [C] from the starter relay [D].

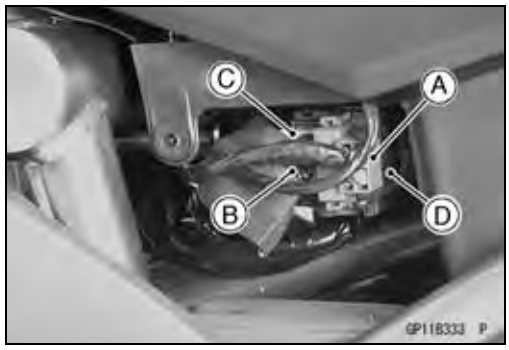

CAUTION
The battery positive (+) cable with the rubber cap is connected directly to the battery positive (+) terminal even when the ignition switch off, so take care not to short the removed cable to chassis ground.

- Connect the hand tester [A] and 12 V battery [B] to the starter relay [C] as shown.

  Special Tool - Hand Tester: 57001-1394

★If the relay does not work as specified, the relay is defective. Replace the relay.

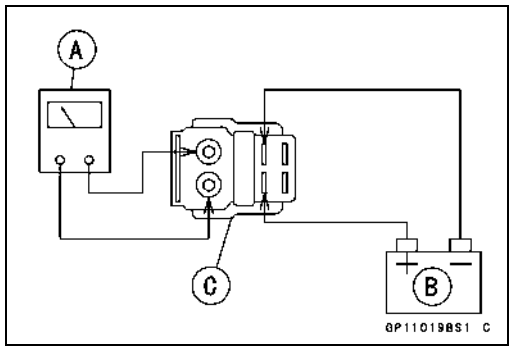

Testing Relay

Tester Range:	**× 1 Ω range**
Criteria:	**When battery is connected → 0 Ω**
	When battery is disconnected → ∞ Ω

Electric Starter System

Electric Starter Circuit

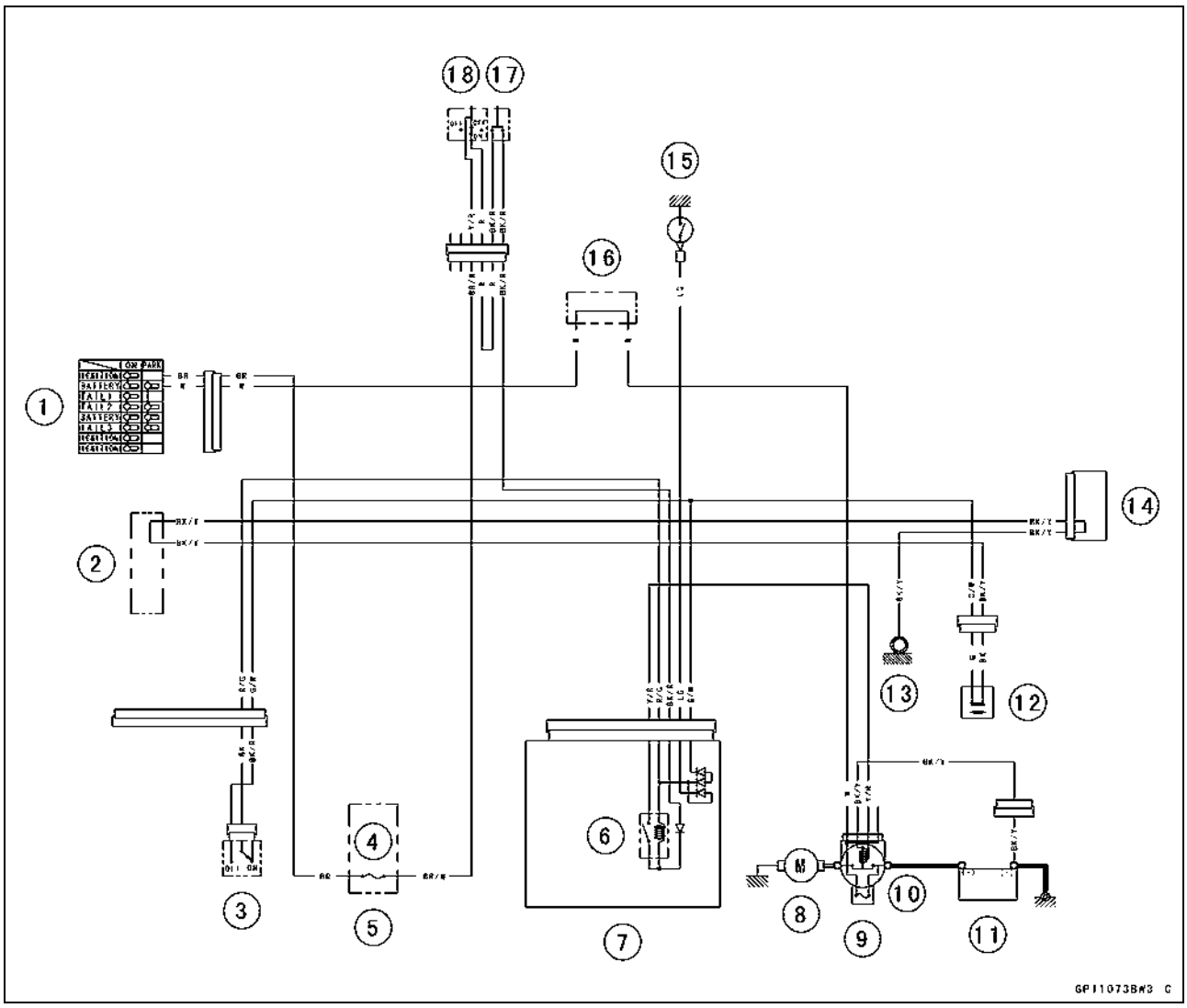

1. Ignition Switch
2. Water-proof Joint B
3. Starter Lockout Switch
4. Ignition Fuse 10 A
5. Fuse Box
6. Starter Circuit Relay
7. Relay Box
8. Starter Motor
9. Starter Relay
10. Main Fuse 30 A
11. Battery 12 V 10 Ah
12. Sidestand Switch
13. Frame Ground
14. Joint Connector
15. Neutral Switch
16. Water-proof Joint C
17. Starter Button
18. Engine Stop Switch

http://mototh.com

Lighting System

This motorcycle adopt the daylight system and have a headlight relay in the relay box. The headlight does not go on when the ignition switch and the engine stop switch are first turned on. The headlight comes on after the starter button is released and stays on until the ignition switch is turned off. The headlight will go out momentarily whenever the starter button is pressed and come back on when the button is released.

Headlight Beam Horizontal Adjustment

- Refer to the Headlight Aiming Inspection in the Periodic Maintenance chapter.

Headlight Beam Vertical Adjustment

- Refer to the Headlight Aiming Inspection in the Periodic Maintenance chapter.

Headlight Bulb Replacement

- Remove:
  Headlight Assy (see Headlight Removal/Installation)
  Headlight Bulb Dust Cover [A]

- Remove:
  Hook [A]
  Headlight Bulb [B]

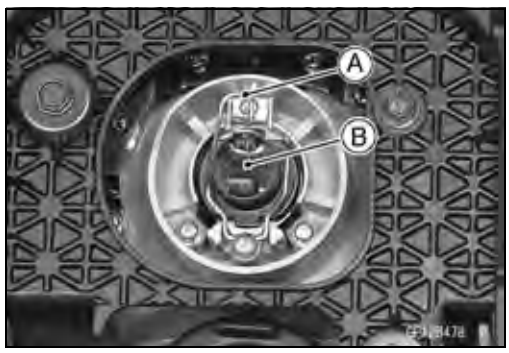

CAUTION

When handling the quartz-halogen bulb, never touch the glass portion with bare hands. Always use a clean cloth. Oil contamination from hands or dirty rags can reduce bulb life or cause the bulb to explode.

NOTE

○*Clean off any contamination that inadvertently gets on the bulb with alcohol or soap and water solution.*

- Replace the headlight bulb.
- Fit the projection [A] of the bulb in the hollow [B] of the headlight.
- Install the hook [C].

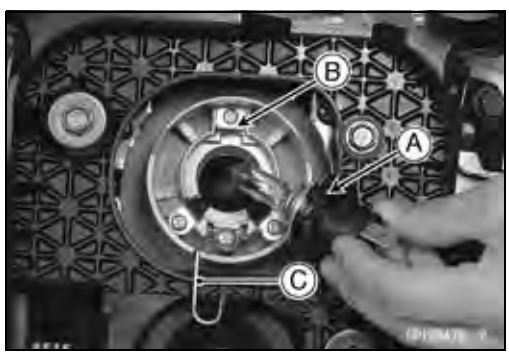

Lighting System

- Fit the dust cover [A] with the “Top” mark upward onto the bulb [B] firmly as shown.
  Good [C]
  Bad [D]
  Top Mark [E]
- After installation, adjust the headlight aim (see Headlight Aiming Inspection in the Periodic Maintenance chapter).

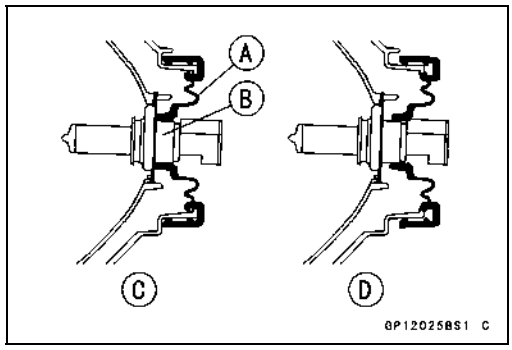

City Light Bulb Replacement

- Remove the headlight assy (see Headlight Removal/Installation).
- Pull out the socket [A] together with the bulb.

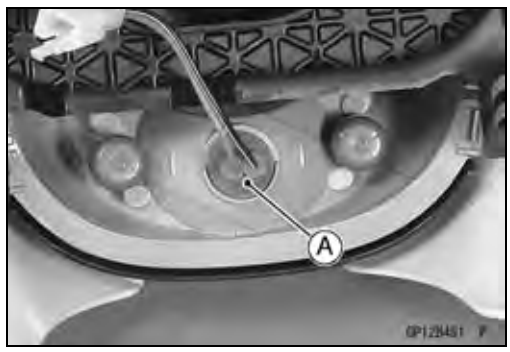

- Pull the bulb [A] out of the socket.

CAUTION
Do not turn the bulb. Pull the bulb out to prevent damage to the bulb. Do not use bulb rated for greater wattage then the specified valve.

- Replace the bulb with a new one.

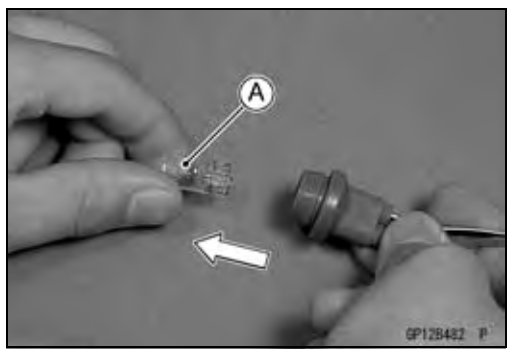

Lighting System

Headlight Removal/Installation

- Remove:
  Mounting Bolts [A]

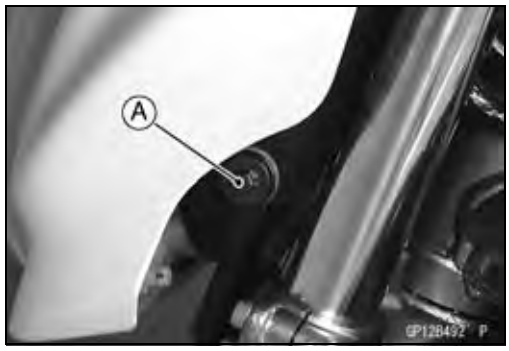

- Disconnect the headlight connectors [A] and city light connector [B].
- Remove the headlight assy.
- Remove the upper fairings (see Upper Fairing Removal in the Frame chapter).
- Installation is the reverse of removal.

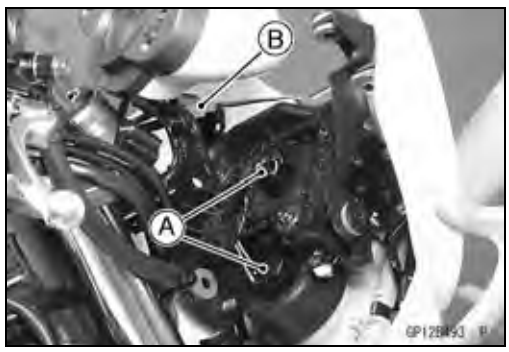

Tail/Brake Light Removal

- Remove:
  Seat Covers (see Seat Cover Removal in the Frame chapter)
- Disconnect the connector [A].
- Unscrew the mounting bolts [B].
- Remove the tail/brake light [C].

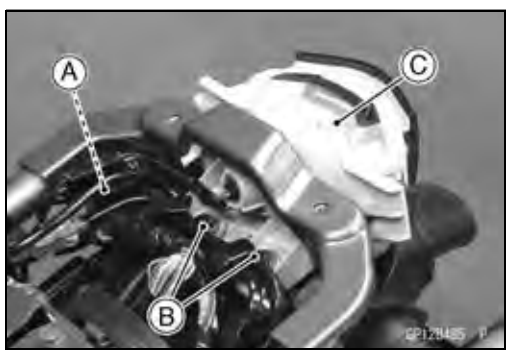

Tail/Brake Light Installation

- Installation is the reverse of removal.

Lighting System

License Plate Light Bulb Replacement

- Remove:
  Screws [A]
  License Plate Light Cover [B]
- Push and turn the bulb counterclockwise and remove it.

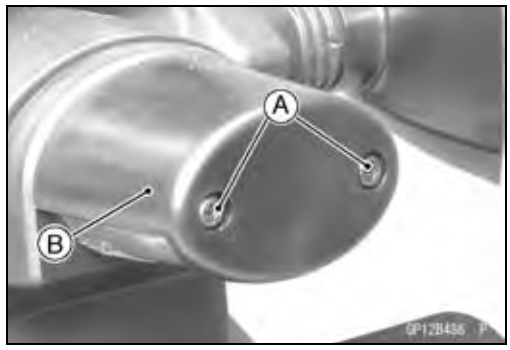

- Insert the new bulb [A] by aligning its upper and lower pins [B] with the upper and lower grooves [C] in the socket, and turn the bulb clockwise.

○Turn the bulb about 15°.

- Install the license plate light cover.
- Tighten:

Torque - License Plate Light Cover Screws: 0.90 N·m (0.090 kgf·m, 8 in·lb)

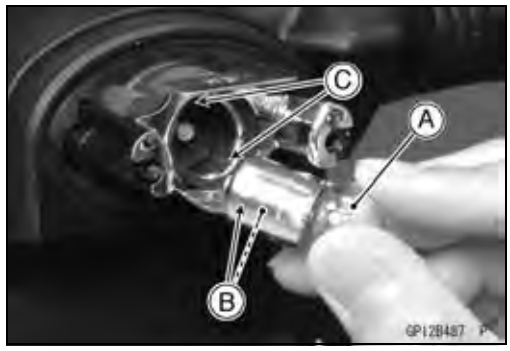

Lighting System

Headlight/Tail Light Circuit

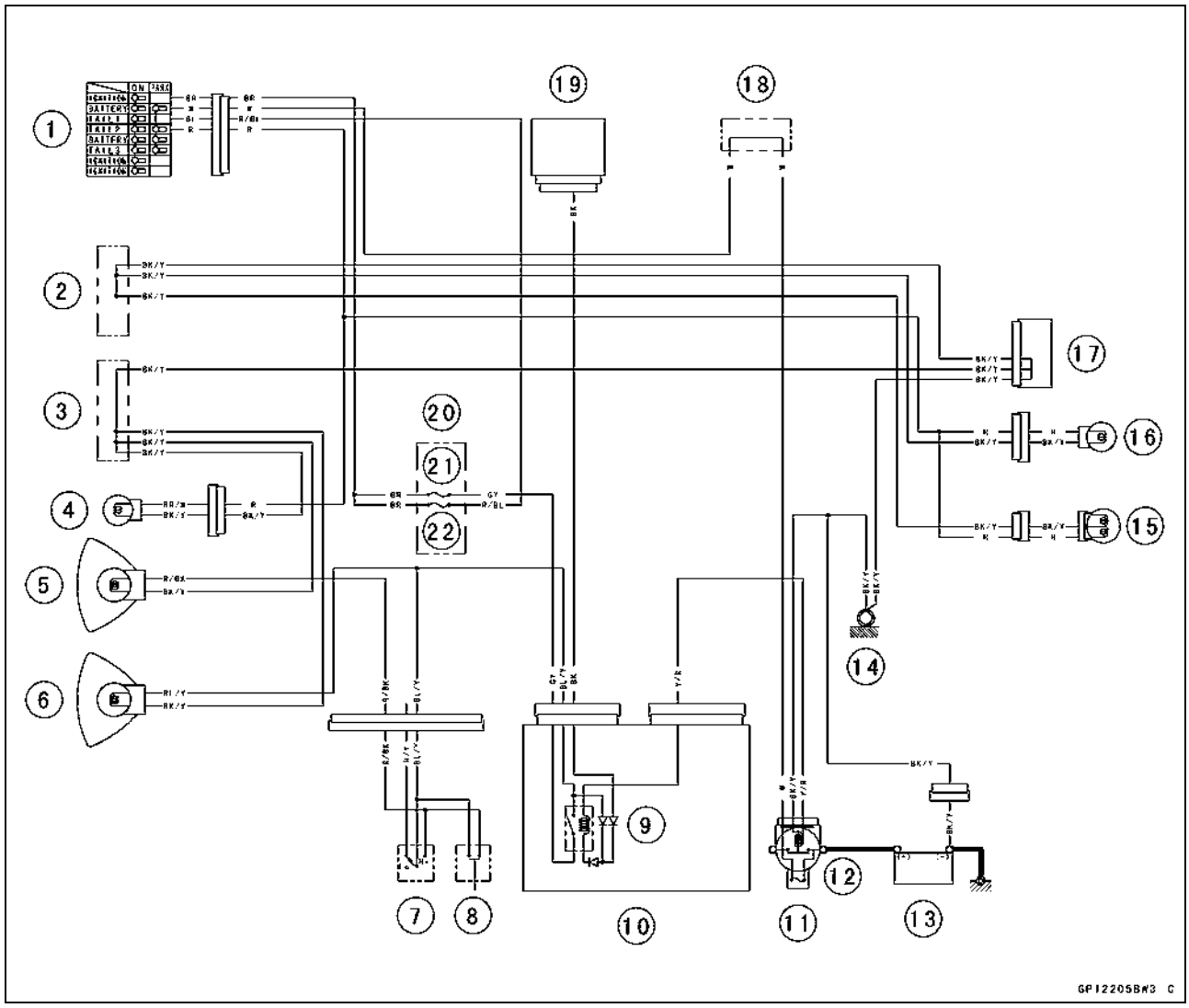

1. Ignition Switch
2. Water-proof Joint A
3. Water-proof Joint B
4. Position Light
5. Headlight (High Beam)
6. Headlight (Low Beam)
7. Dimmer Switch
8. Passing Switch
9. Headlight Relay
10. Relay Box
11. Starter Relay
12. Main Fuse 30 A
13. Battery 12 V 10 Ah
14. Frame Ground
15. Tail/Brake Light
16. License Plate Light 12 V 5 W
17. Joint Connector
18. Water-proof Joint C
19. Regulator/Rectifier
20. Fuse Box
21. Headlight Fuse 10 A
22. Tail Light Fuse 10 A

Turn Signal Light Bulb Replacement

● Unscrew the screw [A] and remove the lens [B].

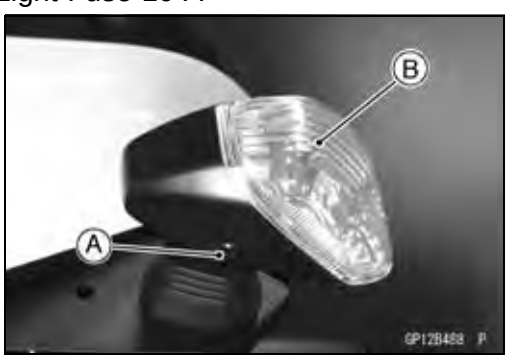

Lighting System

- Push and turn the bulb [A] counterclockwise and remove it.

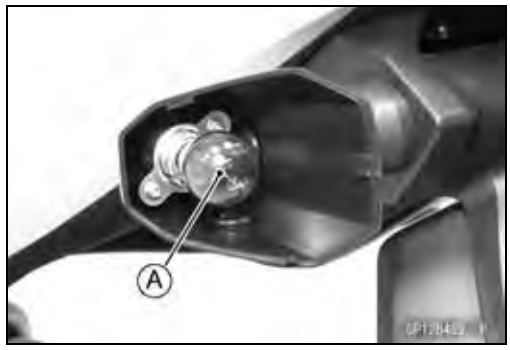

- Insert the new bulb [A] by aligning its upper and lower pins [B] with the upper and lower grooves [C] in the socket, and turn the bulb clockwise.

○Turn the bulb about 15°.

- Install the projections of the lens to the dints of the turn signal light.

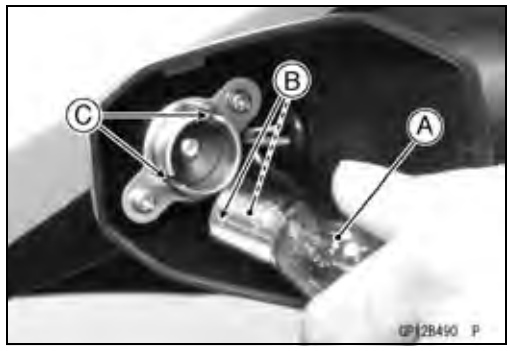

Turn Signal Relay Inspection

- Remove:
  Left Center Fairing (see Center Fairing Removal in the Frame chapter)
  Turn Signal Relay [A]

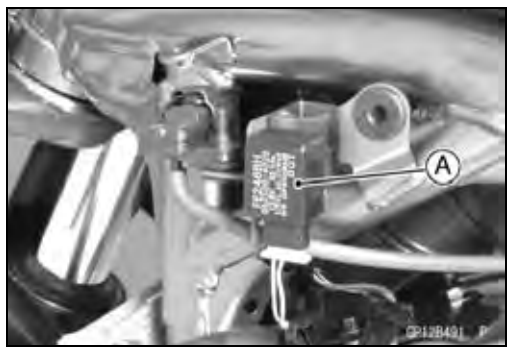

- Connect one 12 V battery and turn signal lights as indicated in the figure, and count how may times the lights flash for one minute.
  Turn Signal Relay [A]
  Turn Signal Lights [B]
  12 V Battery [C]

★If the lights do not flash as specified, replace the turn signal relay.

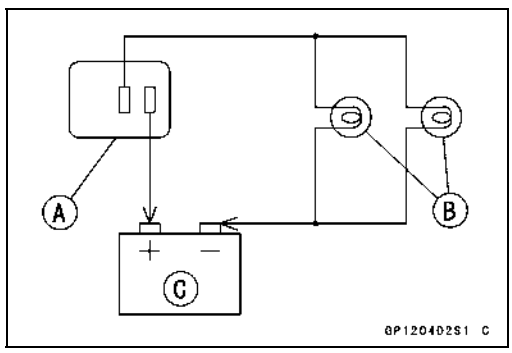

Testing Turn Signal Relay

Load		Flashing Times (c/m*)
The Number of Turn Signal Lights	Wattage (W)	
1**	21 or 23	140 ~ 250
2	42 or 46	75 ~ 95

(*): Cycle(s) per minute
(**): Corrected to “one light burned out”.

Lighting System

Turn Signal Light Circuit

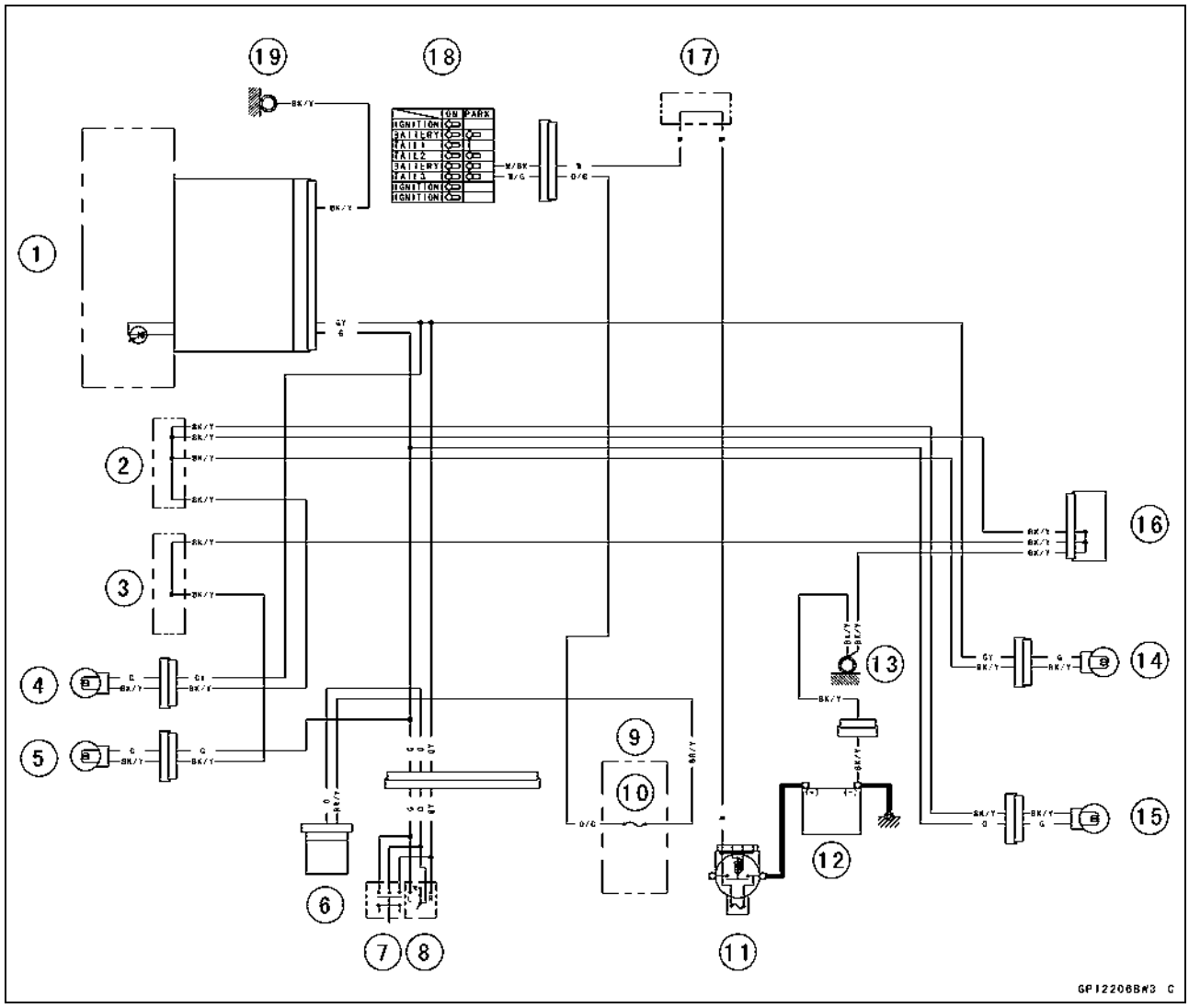

1. Meter Unit
2. Water-proof Joint A
3. Water-proof Joint B
4. Front Right Turn Signal Light
5. Front Left Turn Signal Light
6. Turn Signal Relay
7. Hazard Button
8. Turn Signal Switch
9. Fuse Box
10. Turn Signal Relay Fuse 10 A
11. Main Fuse 30 A
12. Battery 12 V 10 Ah
13. Frame Ground
14. Rear Right Turn Signal Light
15. Rear Left Turn Signal Light
16. Joint Connector
17. Water-proof Joint C
18. Ignition Switch
19. Frame Ground

http://mototh.com

Air Switching Valve

Air Switching Valve Operation Test

- Remove the fuel tank (see Fuel Tank Removal in the Fuel System (DFI) chapter).
- Pull the air switching valve hose [A] out of the air cleaner base.

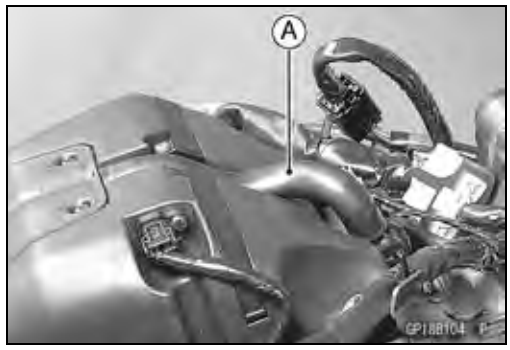

- Take the air switching valve hose end outside of the frame.
- Reinstall the fuel tank (see Fuel Tank Installation in the Fuel System (DFI) chapter).
- Start the engine and run it at idle speed.
- Plug [A] the air switching valve hose [B] end with your finger and feel vacuum pulsing in the hose.

★If there is no vacuum pulsation, check the hose line for leak. If there is no leak, check the air switching valve (see Air Switching Valve Unit Test).

- Apply a soap and water solution or rubber lubricant to the end of the air switching hose and install the hose on the fitting.

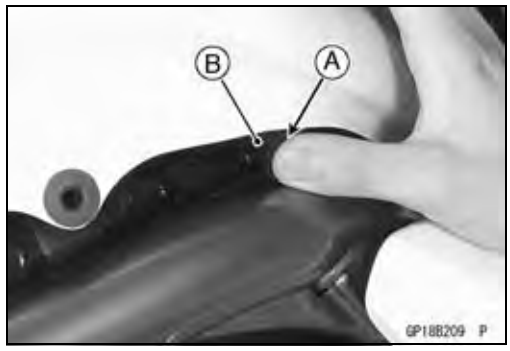

Air Switching Valve Unit Test

- Remove the air switching valve (see Air Switching Valve Removal in the Engine Top End chapter).
- Set the hand tester [A] to the × Ω range and connect it to the air switching valve terminals as shown.

Special Tool - Hand Tester: 57001-1394

Air Switching Valve Resistance
Standard: 18 ~ 22 Ω at 20°C (68°F)

★If the resistance reading is except the specified value, replace it with a new one.

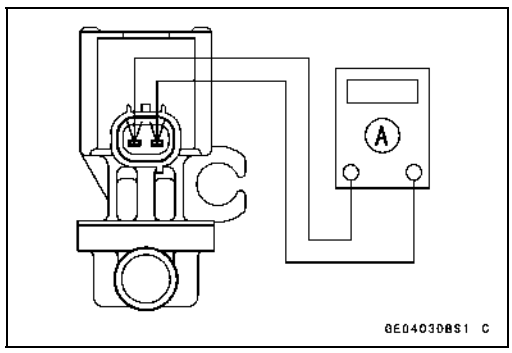

- Connect the 12 V battery [A] to the air switching valve terminals as shown.

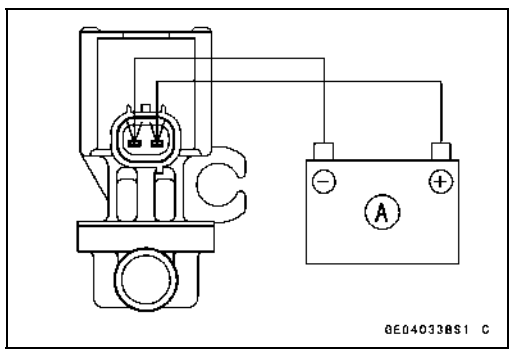

Air Switching Valve

- Blow the air to the inlet air duct [A], and make sure does not flow the blown air from the outlet air duct [B].

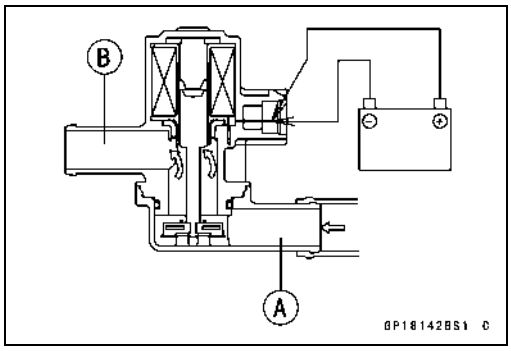

- Disconnect the 12 V battery.
- Blow the air to the inlet air duct [A], and make sure does not flow the blown air from the outlet air duct [B].

★If the air switching value does not operate as described, replace it with a new one.

NOTE

○*To check air flow through the air switching valve, just blow through the air cleaner hose [C].*

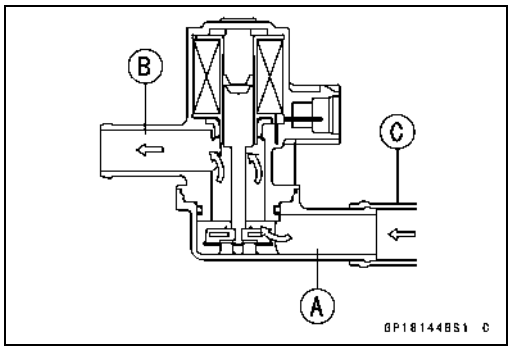

Radiator Fan System

Fan Motor Inspection

- Disconnect the connector [A].
- Using an auxiliary leads, supply battery power to the fan motor.

★If the fan does not rotate, the fan motor is defective and must be replaced.

Radiator Fan Circuit

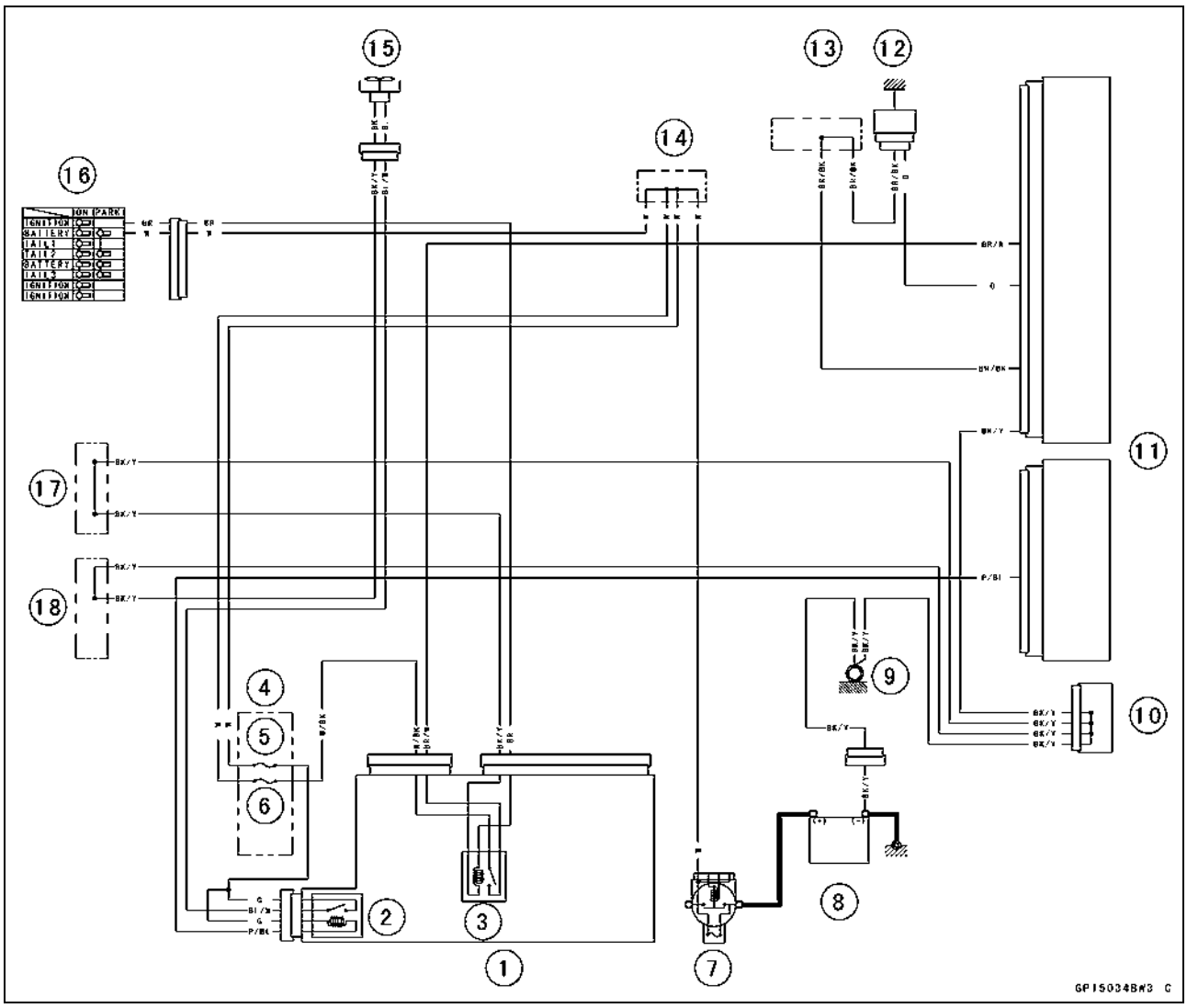

1. Relay Box
2. Radiator Fan Relay
3. ECU Main Relay
4. Fuse Box
5. Fan Fuse 15 A
6. ECU Fuse 15 A
7. Main Fuse 30 A
8. Battery 12 V 10 Ah
9. Frame Ground
10. Joint Connector
11. ECU
12. Water Temperature Sensor
13. Water-proof Joint E
14. Water-proof Joint C
15. Radiator Fan
16. Ignition Switch
17. Water-proof Joint A
18. Water-proof Joint B

http://mototh.com

Meter, Gauge, Indicator Unit

Meter Unit Removal

- Remove:
  Headlight Assy (see Headlight Removal/Installation)
  Screws [A] and Cover [B]

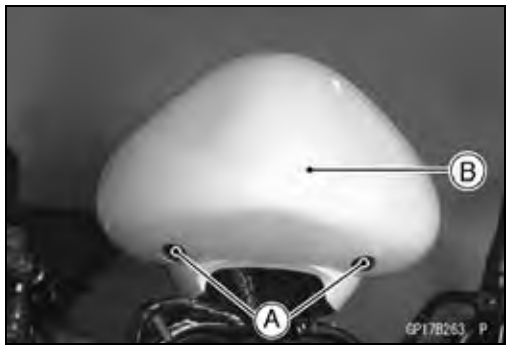

- Slide the dust cover [A] and remove the connector [B].
- Remove the meter unit by taking off the mounting screws [C] with the washers.

CAUTION
Place the meter unit so that the face is up. If a meter unit is left upside down or sideways for any length of time, it will malfunction.

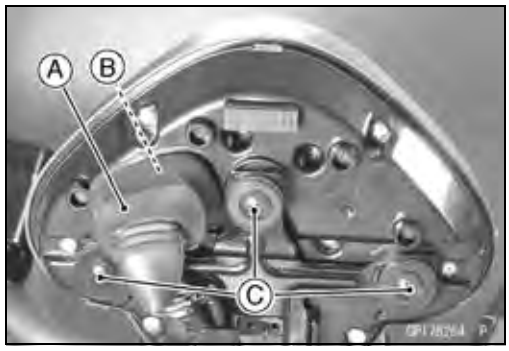

Meter, Gauge Disassembly

- Remove:
  Meter Unit (see Meter Unit Removal)
  Screws [A]
  Lower Meter Cover [B]

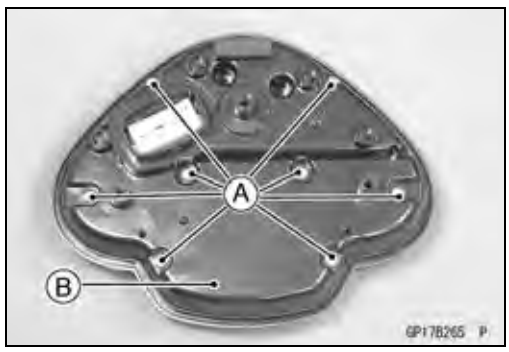

- Separate the meter assembly [A] and upper meter cover [B].

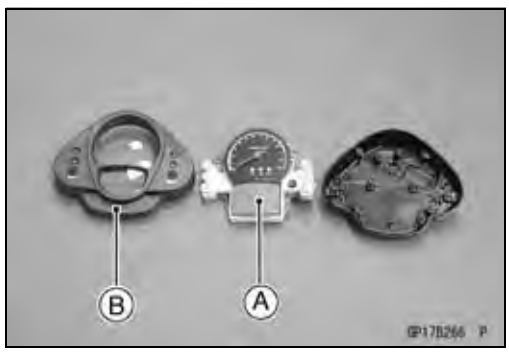

http://mototh.com

Meter, Gauge, Indicator Unit

Electronic Combination Meter Unit Inspection

- Remove the meter unit [A] (see Meter Unit Removal).
  [1] Battery (+)
  [2] Ignition
  [3] Ground (–)
  [4] Unused
  [5] Speed Sensor Signal
  [6] Tachometer Signal
  [7] Water Temperature Sensor (–)
  [8] Oil Pressure Warning Indicator Light (LED) (–)
  [9] Fuel Level Warning Indicator Light (LED) (–)
  [10] Speed Sensor Supply Voltage
  [11] High Beam Indicator Light (LED) (+)
  [12] Neutral Indicator Light (LED) (–)
  [13] Unused
  [14] Right Turn Signal Indicator Light (LED) (+)
  [15] Left Turn Signal Indicator Light (LED) (+)
  [16] FI Indicator Light (LED) (–)

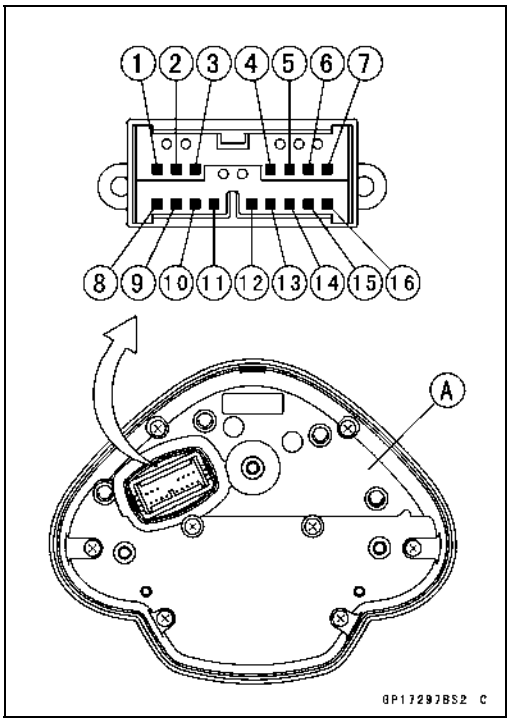

CAUTION

Do not drop the meter unit. Place the meter unit so that it faces upward. If the meter unit is left upside down or sideways for a long time or dropped, it will malfunction. Do not short each terminals.

Liquid Crystal Display (LCD) Segments Check

- Using the auxiliary wires, connect the 12 V battery to the meter unit connector as follows.

○Connect the battery positive terminal to the terminal [1].
○Connect the battery negative terminal to the terminal [3].

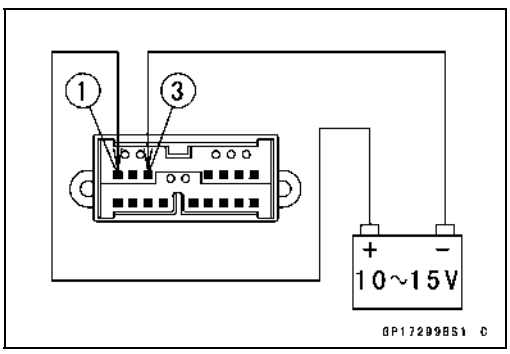

- Connect the terminal [2] to the terminal [1].

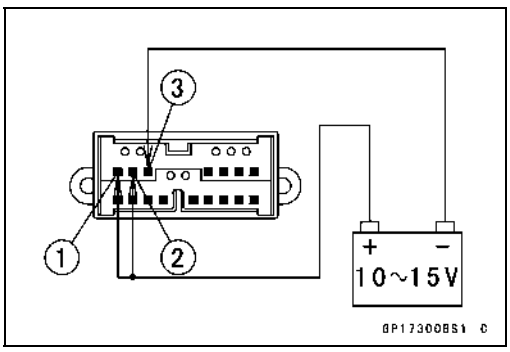

Meter, Gauge, Indicator Unit

○When the terminals are connected, all the LCD segments [A] and LED warning lights [B] appear (FI warning light appear for two seconds).
★If the LCD segments and LED warning lights will not appear, replace the meter assembly.
● Disconnect the terminal [2].
○All the LCD segments and LED warning light disappear.
★If the segments do not disappear, replace the meter assembly.

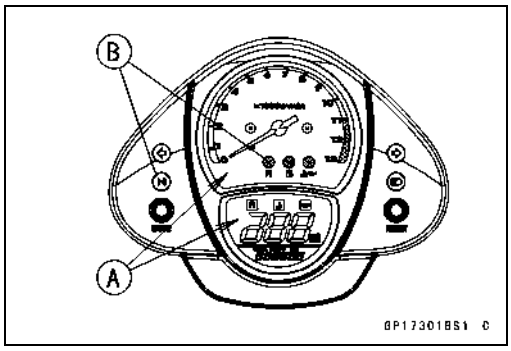

MODE AND RESET BUTTON Operation Check
● Connect the 12 V battery and terminals in the same manner as specified in the “Liquid Crystal Display (LCD) Segments Check”.
● Check that the display change to the CLOCK, ODO, TRIP A and TRIP B displays each time the MODE button [A] is pressed.
○If the fuel level gauge flashed, display change to CLOCK, ODO, TRIP A , TRIP B and FUEL.
★If the display function does not work, replace the meter assembly.

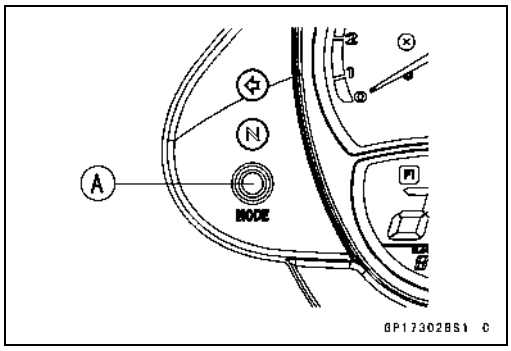

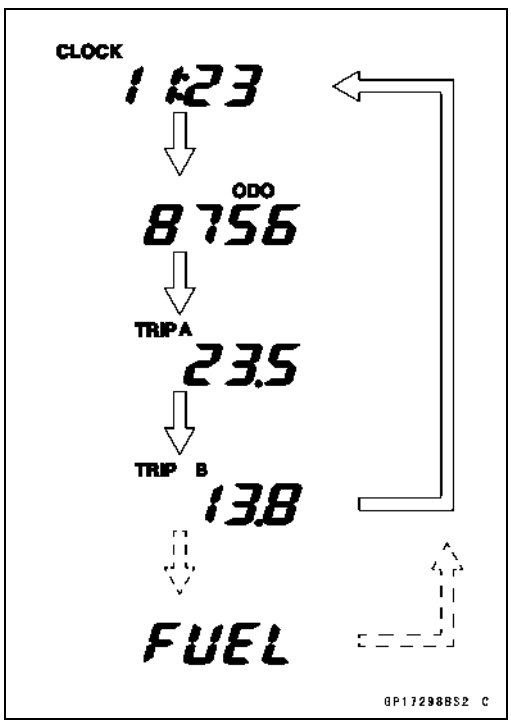

● Indicate the clock mode.
● Check that when the RESET button in CLOCK mode is pushed for more than two seconds, the meter display turns to the clock set mode.
○Both the hour and minute display start flashing.

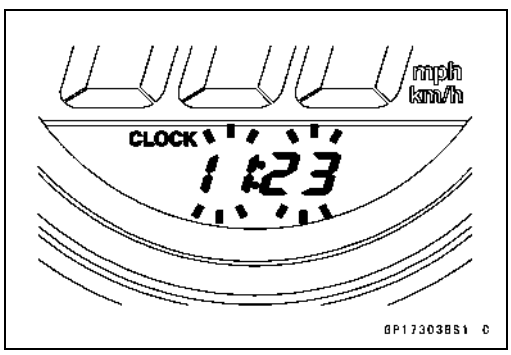

Meter, Gauge, Indicator Unit

- In the HOUR/MINUTE setting mode, press the RESET button again to effect the HOUR setting mode.
○The hour display flashes on the display.
- Press the MODE button to set the hour.

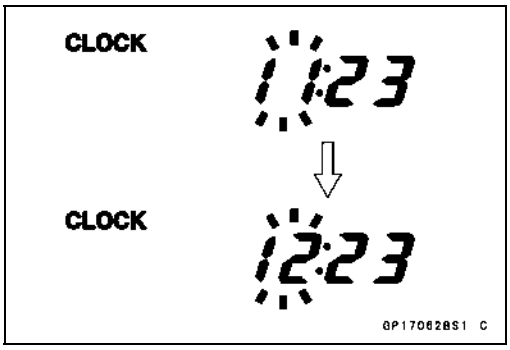

- In the HOUR setting mode, press the RESET button to effect the MINUTE setting mode.
○The minute display flashes on the display.
- Press the MODE button to set the minute.

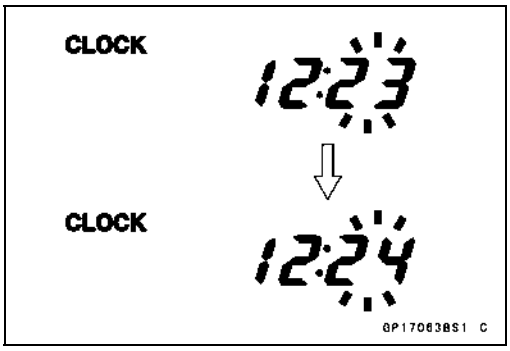

- In the MINUTE setting mode, press the RESET button to return to the HOUR/MINUTE setting mode.
- Press the MODE button to complete the time setting process.
○The clock starts counting the seconds as soon as the MODE button is pressed.

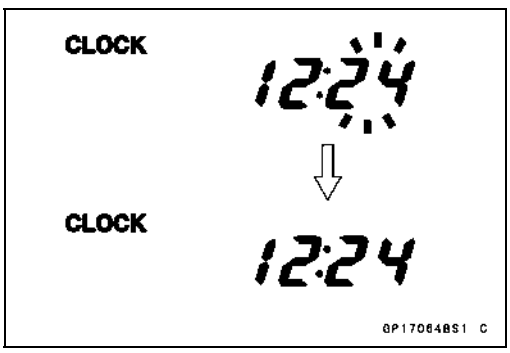

- Indicate the ODO mode.
- Check that the display [A] change to the mile and km display each time by pushing the RESET button while MODE button pushed in.

NOTE

○*Mile/Km display can alternate between English and metric modes (mile and km) in the digital meter. Make sure that km or mile according to local regulations is correctly displayed before riding.*

★If the display function does not work and adjust, replace the meter assembly.

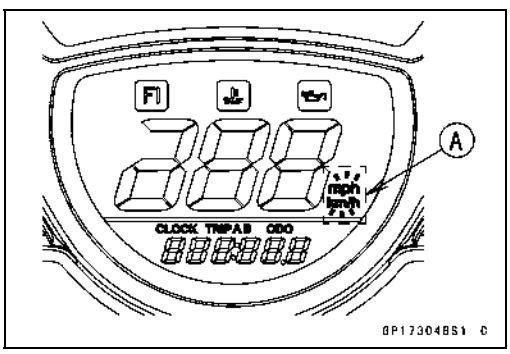

Speedometer Check

- Connect the 12 V battery and terminals in the same manner as specified in the “Liquid Crystal Display (LCD) Segments Check”.
- The speed equivalent to the input frequency is indicated in the oscillator [A], if the square wave (illustrated as shown) would be input into the terminal [5].
○Indicates approximately 60 mph in case the input frequency would be approximately 169.0 Hz.
○Indicates approximately 60 km/h in case the input frequency would be approximately 105.6 Hz.

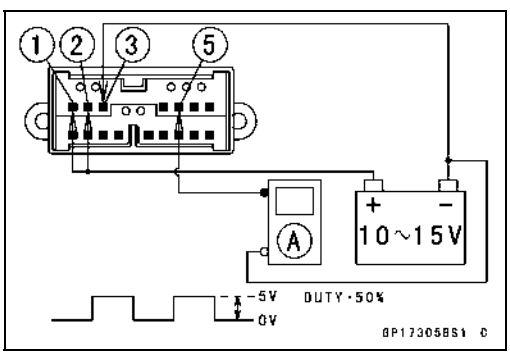

Meter, Gauge, Indicator Unit

- If the oscillator is not available, the speedometer can be checked as follows.

○Install the meter unit.
○Raise the rear wheel off the ground with stand.
○Turn on the ignition switch.
○Rotate the rear wheel by hand.
○Check that the speedometer shows the speed.
★If the speedometer does not work, check the speed sensor electric source voltage and speed sensor.
★The electric source voltage and speed sensor are normal, replace the meter assembly.

Speed Sensor Electric Source Check

- Connect the 12 V battery and terminals in the same manner as specified in the “Liquid Crystal Display (LCD) Segments Check”.
- Set the hand tester to the DC 25 V range and connect it to the terminals [10] and [3].

★If the voltage is less than 8 V, replace the meter assembly.

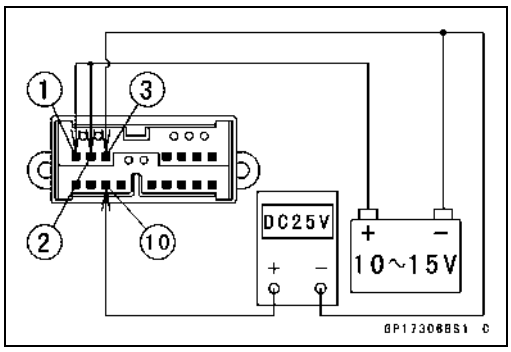

Odometer Check

- Check the odometer with the speedometer in the same way.

★If value indicated in the odometer is not added, replace the meter assembly.

NOTE

○*The data is maintained even if the battery is disconnected.*
○*When the figures come to 999999, they are stopped and locked.*

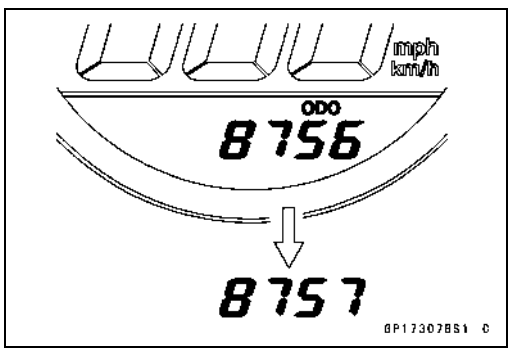

Trip A/B Meter Check

- Check the trip A or B meters with the speedometer in the same way.

★If value indicated in the trip A/B meters is not added, replace the meter assembly.

- Check that when the RESET button is pushed for more than two seconds, the figure display turns to 0.0.

★If the figure display does not indicate 0.0, replace the meter assembly.

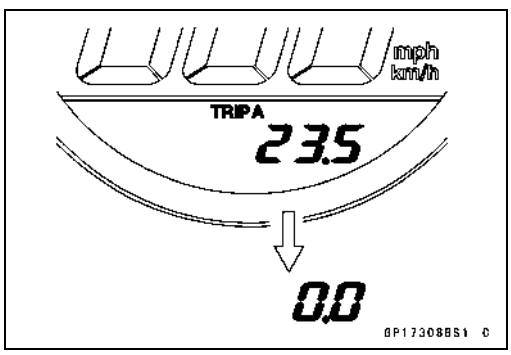

Tachometer Check

- Connect the 12 V battery and terminals in the same manner as specified in the “Liquid Crystal Display (LCD) Segments Check”.
- The revolutions per minute (rpm) equivalent to the input frequency is indicated in the oscillator [A] if the square wave (illustrated as shown) would be input into the terminal [6].

○Indicates approximately 6 000 rpm in case the input frequency would be approximately 200 Hz.

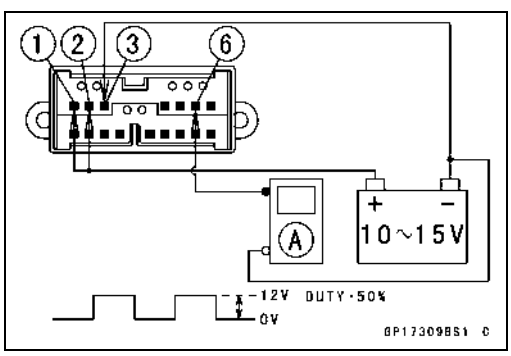

Meter, Gauge, Indicator Unit

- If the oscillator is not available, the tachometer can be checked as follows.

○Connect the 12 V battery and terminals in the same manner as specified in the “Liquid Crystal Display (LCD) Segments Check”.

○Using an auxiliary wire, quick open and connect the terminal [2] to the terminal [6] repeatedly.

○Then the tachometer needle [A] should flick [B].

★If the needle does not flick, replace the meter assembly.

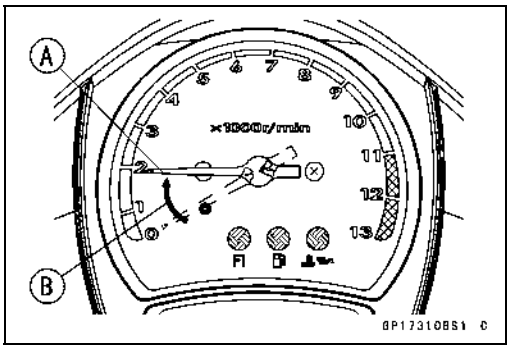

Indicator Lights Inspection

- Connect the 12 V battery and terminals in the same manner as specified in the “Liquid Crystal Display (LCD) Segments check”.

  Neutral Indicator Light (LED) [A]
  FI Indicator Light (LED) [B]
  Oil Pressure/Water Temperature Warning Indicator Light (LED) [C]
  Right Turn Signal Indicator Light (LED) [D]
  Left Turn Signal Indicator Light (LED) [E]
  High Beam Indicator Light (LED) [F]
  Fuel Level Warning Indicator Light (LED) [G]

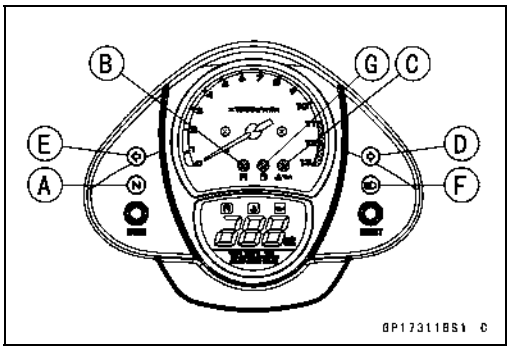

- Using the auxiliary leads, connect a 12 V battery to the meter unit connector as follows.

Water Temperature Warning Indicator Light (LED)

Battery Negative (–) Terminal to Terminal [7]

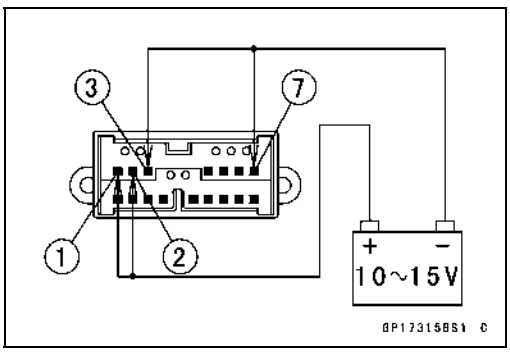

Oil Pressure Warning Indicator Light (LED)

Battery Negative (–) Terminal to Terminal [8]

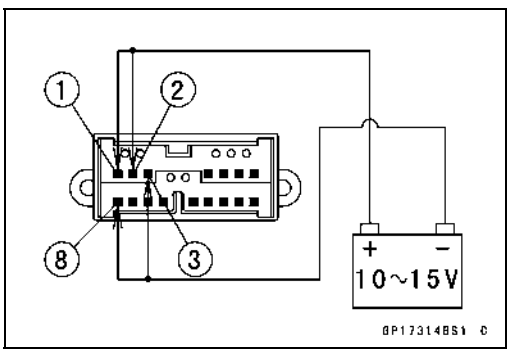

Meter, Gauge, Indicator Unit

Fuel Level Warning Indictor Light (LED)
Battery Negative (–) Terminal to Terminal [9]

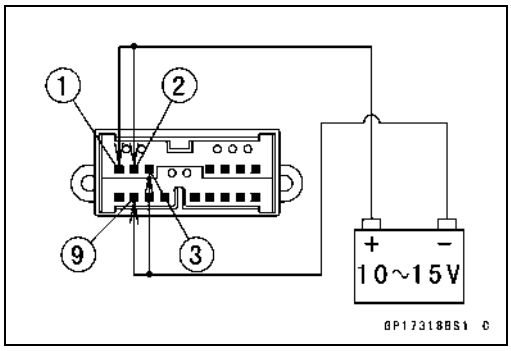

High Beam Indicator Light (LED)
Battery Positive (+) Terminal to Terminal [11]

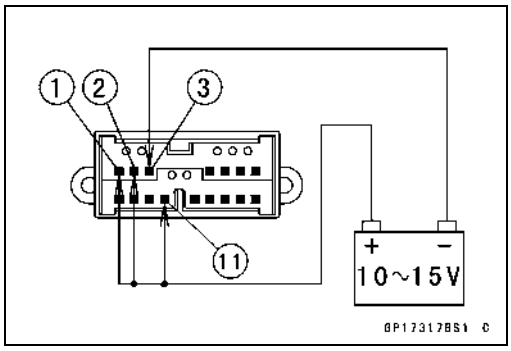

Neutral Indicator Light (LED)
Battery Negative (–) Terminal to Terminal [12]

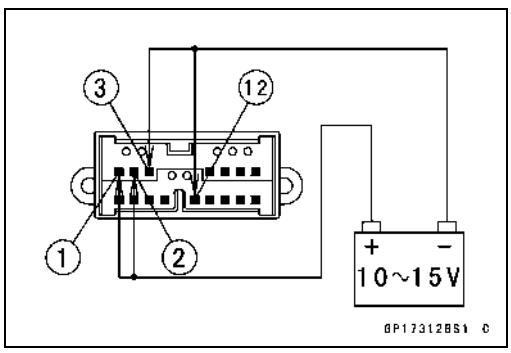

Right and Left Turn Signal Indicator Light (LED)
For Right Turn Signal Indicator Light (LED)
Battery Positive (+) Terminal to Terminal [14]

For Left Turn Signal Indicator Light (LED)
Battery Positive (+) Terminal to Terminal [15]

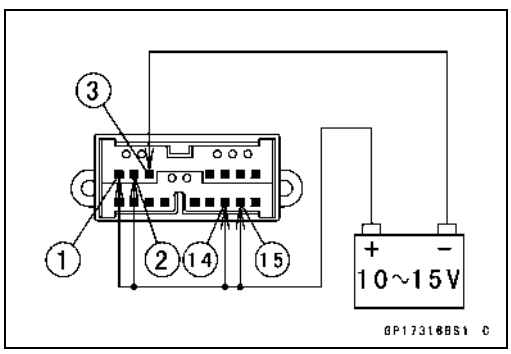

FI Indicator Light (LED)
Battery Negative (–) Terminal to Terminal [16]

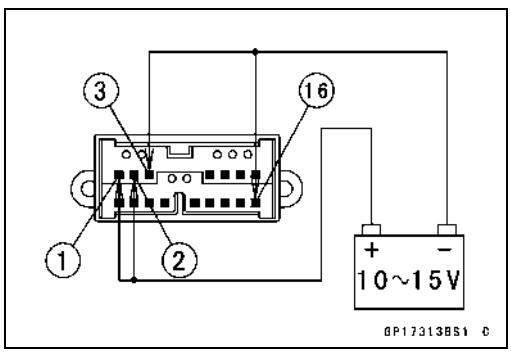

- If each lights (LED) does not go on, replace the meter assembly.

Meter, Gauge, Indicator Unit

Meter Circuit

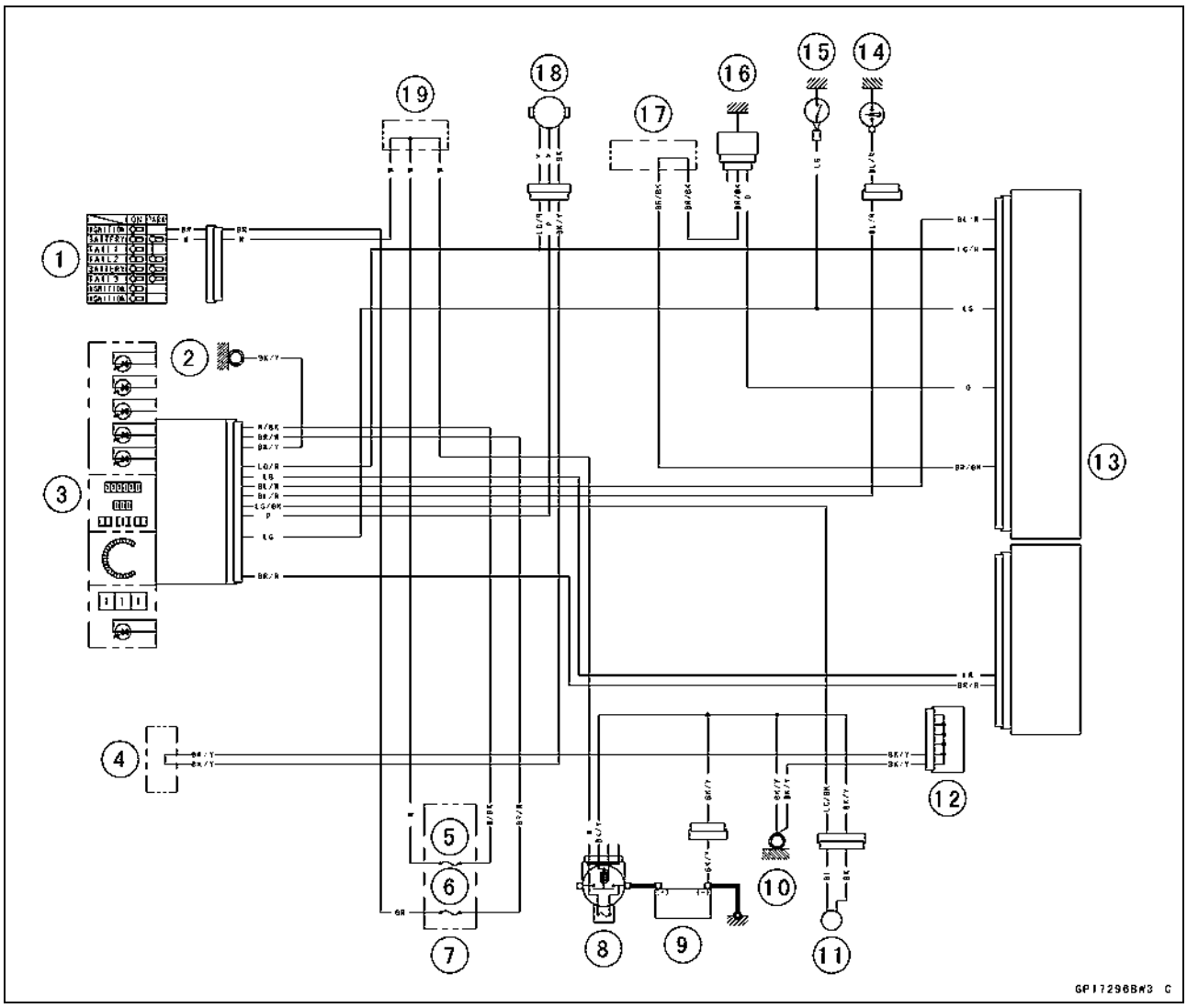

1. Ignition Switch
2. Frame Ground
3. Meter Unit
4. Water-proof Joint B
5. ECU Fuse 15 A
6. Ignition Fuse 10 A
7. Fuse Box
8. Main Fuse 30 A
9. Battery 12 V 10 Ah
10. Frame Ground
11. Fuel Reserve Switch
12. Joint Connector
13. ECU
14. Oil Pressure Switch
15. Neutral Switch
16. Water Temperature Sensor
17. Water-proof Joint E
18. Speed Sensor
19. Water-proof Joint C

Switches and Sensors

Brake Light Timing Inspection

- Refer to the Brake Light Switch Operation Inspection in the Periodic Maintenance chapter.

Brake Light Timing Adjustment

- Refer to the Brake Light Switch Operation Inspection in the Periodic Maintenance chapter.

Switch Inspection

- Using a hand tester, check to see that only the connections shown in the table have continuity (about zero ohms).

○For the switch housings and the ignition switch, refer to the tables in the Wiring Diagram.

★If the switch has an open or short, repair it or replace it with a new one.

Special Tool - Hand Tester: 57001-1394

Rear Brake Light Switch Connections

Rear Brake Light Switch Connections		
Color	BR	BL
When brake pedal is pushed down	○	○
When brake pedal is released		

Sidestand Switch Connections

Sidestand Switch Connections		
Color	BK	G
When sidestand is down		
When sidestand is up	○	○

Neutral Switch Connections

Neutral Switch Connections		
Color	SW. Terminal	Ground
When transmission is in neutral	○	○
When transmission is not in neutral		

Oil Pressure Switch Connections*

Oil Pressure Switch Connections *		
Color	SW. Terminal	Ground
When engine is stopped	○	○
When engine is running		

*: Engine lubrication system is in good condition.

http://mototh.com

Water Temperature Sensor Inspection

- Remove the water temperature sensor (see Removal/Installation in the Fuel System (DFI) chapter).
- Suspend the sensor [A] in a container of coolant so that the temperature-sensing projection [C] and threaded portion [C] are submerged.
- Suspend an accurate thermometer [B] with temperature -sensing projection located in almost the same depth.

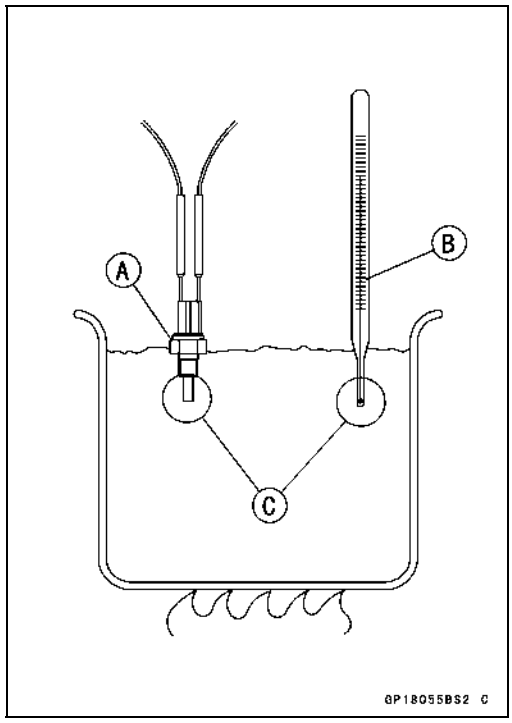

NOTE

○*The sensor and thermometer must not touch the container side or bottom.*

- Place the container over a source of heat and gradually raise the temperature of the coolant while stirring the coolant gently.
- Using the hand tester, measure the internal resistance of the sensor.

★If the hand tester does not show the specified values, replace the sensor.

Water Temperature Sensor Resistance

Temperature	Resistance (kΩ)
–20°C (–4°F)	*18.80 ±2.37
0°C (32°F)	*(about 6.544)
40°C (104°F)	1.136 ±0.095
100°C (212°F)	0.1553 ±0.0070

*: Reference Information

Speed Sensor Removal

- Disconnect the speed sensor lead connector [A].
- Remove the engine sprocket cover (see Engine Sprocket Removal in the Final Drive chapter).

- Remove:
  Bolt [A]
  Speed Sensor [B]

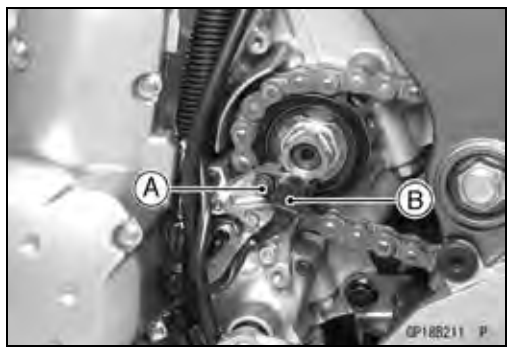

Speed Sensor Installation

- Installation is the reverse of removal.
- Apply a non-permanent locking agent to the sensor bolt, and tighten it.

Torque - Speed Sensor Bolt: 7.8 N·m (0.80 kgf·m, 69 in·lb)

http://mototh.com

Switches and Sensors

Speed Sensor Inspection

- Remove the speed sensor (see Speed Sensor Removal).
- Connect the speed sensor connector [A] with the battery [B], 10 kΩ resistor [C] and hand tester [D] as shown.
- Set the tester to the DC 25 V range.

Special Tool - Hand Tester: 57001-1394

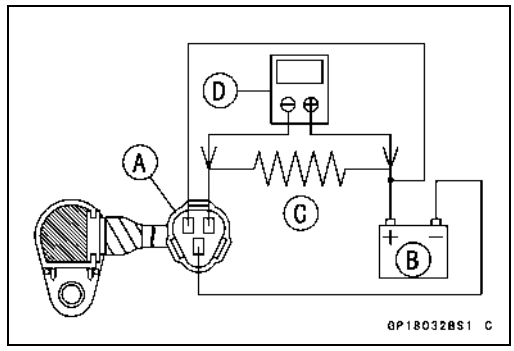

- Trace [A] each side of the speed sensor surface with the screw driver.

○Then the tester indicator should flick [B].

★If the tester indicator does not flick, replace the speed sensor.

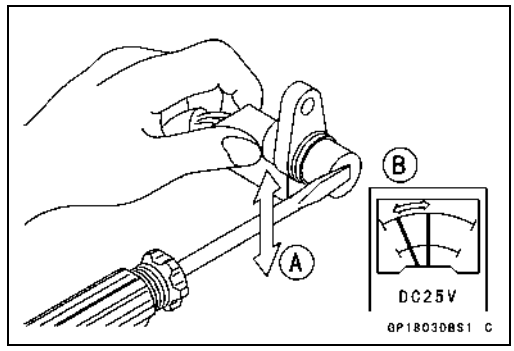

Oxygen Sensor Removal (Europe Models)

- Remove:
  Lower Fairing (see Lower Fairing Removal in the Frame chapter)
- Disconnect the oxygen sensor lead connector [A].

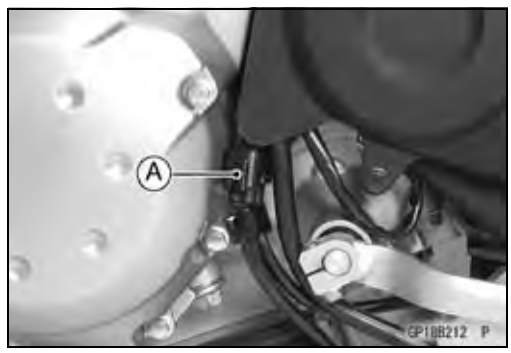

- Remove the oxygen sensor [A].

Oxygen Sensor Installation (Europe Models)

CAUTION

Never drop the oxygen sensor [A], especially on a hard surface. Such a shock to the unit can damage it. Do not touch the sensing part [B] and filter holes [C] of the sensor to prevent oil contact. Oil contamination from hands can reduce sensor performance.

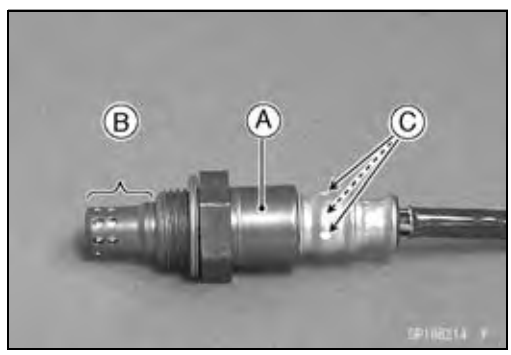

- Tighten:

Torque - Oxygen Sensor: 44.1 N·m (4.50 kgf·m, 32.5 ft·lb)

- Run the oxygen sensor lead correctly (see Cable, Wire, and Hose Routing section in the Appendix chapter).

http://mototh.com

Switches and Sensors

Oxygen Sensor Inspection (Europe Models)

- Refer to the Oxygen Sensor Inspection in the Fuel System (DFI) chapter.

Fuel Reserve Switch Inspection

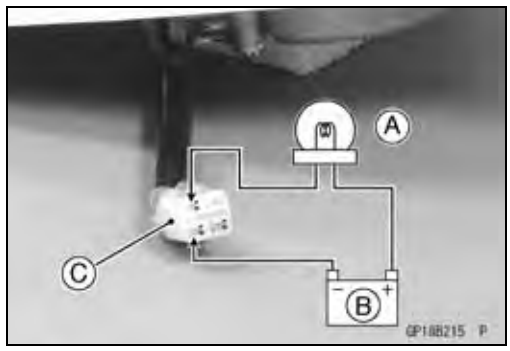

- Fill the fuel tank with fuel.
- Close the fuel tank cap surely.
- Remove the fuel tank (see Fuel Tank Removal in the Fuel System (DFI) chapter).
- Connect the test light [A] (12 V 3.4 W bulb a socket with leads) and the 12 V battery [B] to the fuel pump connector [C].

Connections:

Battery (+) → 12 V 3.4 W Bulb (One Side)

12 V 3.4 W Bulb (Other Side) → BL Lead Terminal

Battery (–) → BK Lead Terminal

★If the test light turn on, the reserve switch is defective. Replace the fuel level sensor.

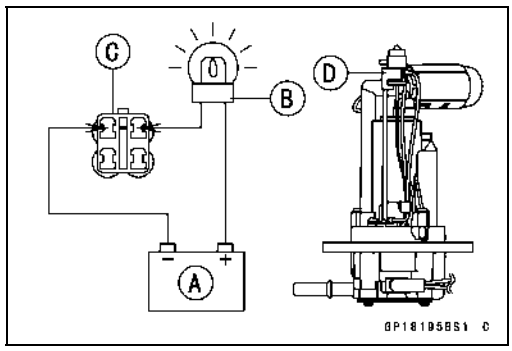

- Remove the fuel pump (see Fuel Pump Removal in the Fuel System (DFI) chapter).
- Connect the test light (12 V 3.4 W bulb in a socket with leads) and the 12 V battery to the fuel pump connector as shown.

  12 V Battery [A]
  Test Light [B]
  Fuel Pump Connector [C]
  Fuel Reserve Switch [D]

★If the test light doesn't light, replace the fuel pump.

NOTE

○*It may take a long time to turn on the test light in case that the fuel reserve switch is inspected just after the fuel pump is removed. Leave the fuel reserve switch with leads for inspection connected for few minutes.*

http://mototh.com

Relay Box

The relay box [A] has relays and diodes. The relays and diodes can not be removed.

Relay Box Removal

- Remove:
  Fuel Tank (see Fuel Tank Removal in the Fuel System (DFI) chapter)
- Take out the relay box [A] and disconnect the connectors [B].

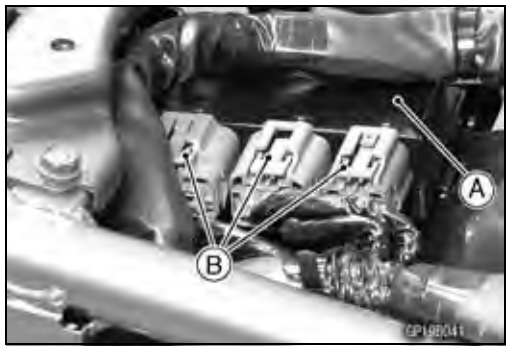

Relay Circuit Inspection

- Remove the relay box (see Relay Box Removal).
- Check conductivity of the following numbered terminals by connecting the hand tester and one 12 V battery to the relay box as shown (see Relay Box Internal Circuit in this section).

★If the tester does not read as specified, replace the relay box.

Relay Circuit Inspection (with the battery disconnected)

	Tester Connection	Tester Reading (Ω)
Headlight Relay	1-3	∞
ECU Main Relay	7-6	∞
	4-5	Not ∞*
Fuel Pump Relay	7-8	∞
	9-10	Not ∞*
Starter Circuit Relay	11-16	∞
	11-12	∞
Fan Relay	17-20	∞
	18-19	Not ∞*

*: The actual reading varies with the hand tester used.

http://mototh.com

Relay Box

Relay Circuit Inspection (with the battery connected)

	Battery Connection (+) (–)	Tester Connection	Tester Reading (Ω)
ECU Main Relay	2-11	1-3	0
	4-5	7-6	0
Fuel Pump Relay	9-10	7-8	0
Fan Relay	18-19	17-20	0

	Battery Connection (+) (–)	Tester Connection DC 25 V Range	Tester Reading (V)
Starter Circuit Relay	16-12	11-12	Battery Voltage

(+): Apply positive lead.
(–): Apply negative lead.

Diode Circuit Inspection

- Remove the relay box (see Relay Box Removal).
- Check conductivity of the following pairs of terminals (see Relay Box Internal Circuit in this section).

Diode Circuit Inspection

Tester Connection	1-11, 2-11, 12-13, 12-15, 12-16, 13-14, 13-15

★The resistance should be low in one direction and more than ten times as much in the other direction. If any diode shows low or high in both directions, the diode is defective and the relay box must be replaced.

NOTE

○*The actual meter reading varies with the meter or tester used and the individual diodes, but generally speaking, the lower reading should be from zero to one half the scale.*

http://mototh.com

Relay Box

Relay Box Internal Circuit

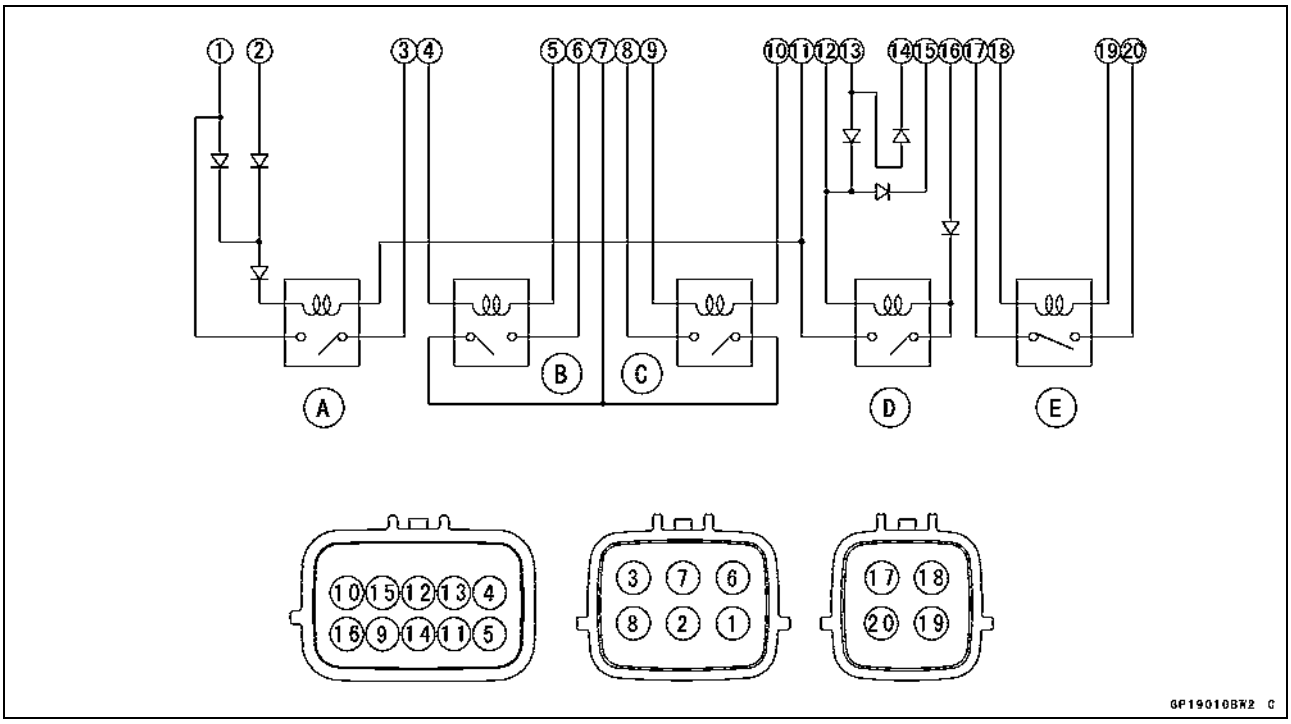

A: Headlight Relay
B: ECU Main Relay
C: Fuel Pump Relay
D: Starter Circuit Relay
E: Fan Relay

Fuse

30 A Main Fuse Removal

- Remove:
  Left Side Cover (see Side Cover Removal in the Frame chapter)
  Cover (see Starter Relay Inspection)
  Connector [A]
- Pull out the main fuse [B] from the starter relay with needle nose pliers.

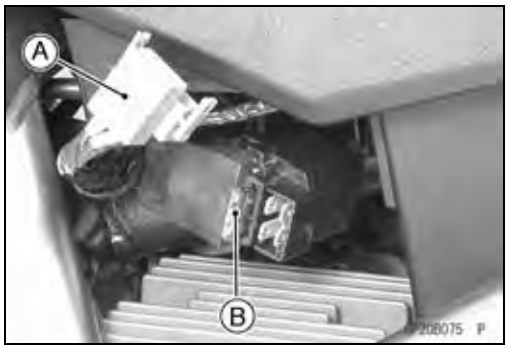

Fuse Box Fuse Removal

- Remove the seat (see Seat Removal in the Frame chapter).
- Unlock the hook [A] to lift up the lid [B].

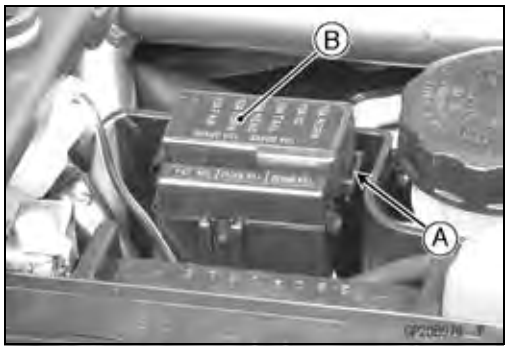

- Pull the fuses [A] straight out of the fuse box with needle nose pliers.

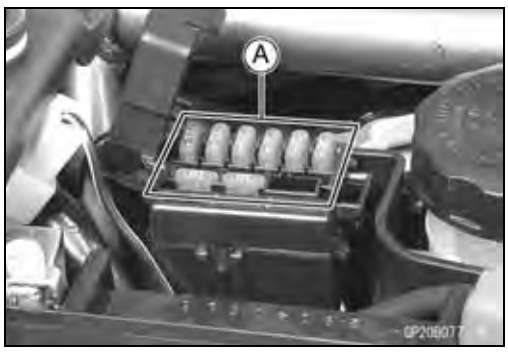

15 A ECU Fuse Removal

- Remove:
  Seat (see Seat Removal in the Frame chapter)
- Unlock the hook [A] to pull the lid [B].

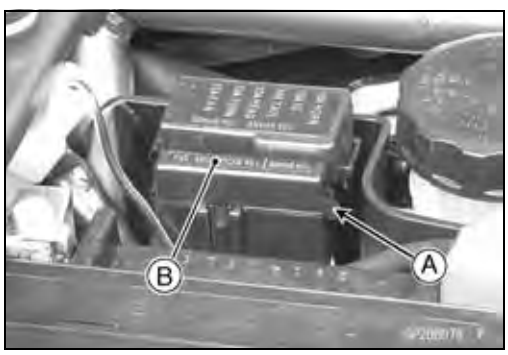

- Pull out the ECU fuse [A] from the fuse box.

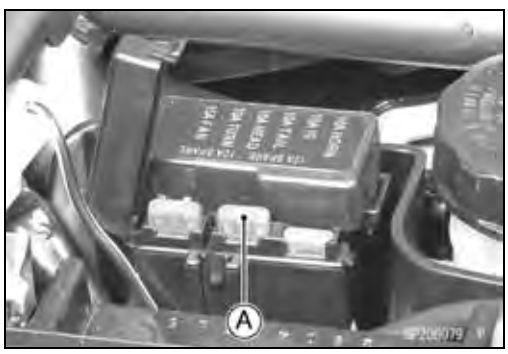

Fuse

Fuse Installation

- If a fuse fails during operation, inspect the electrical system to determine the cause, and then replace it with a new fuse of proper amperage.
- Install the fuse box fuses on the original position as specified on the lid.

Fuse Inspection

- Remove the fuse (see 30 A Main/Fuse Box /15 A ECU Fuse Removal).
- Inspect the fuse element.

★If it is blown out, replace the fuse. Before replacing a blown fuse, always check the amperage in the affected circuit. If the amperage is equal to or greater than the fuse rating, check the wiring and related components for a short circuit.

Housing [A]
Fuse Element [B]
Terminals [C]
Blown Element [D]

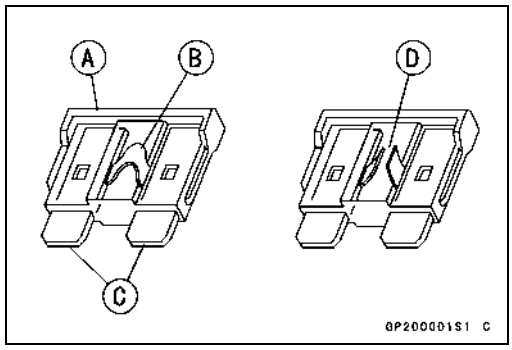

CAUTION
When replacing a fuse, be sure the new fuse matches the specified fuse rating for that circuit. Installation of a fuse with a higher rating may cause damage to wiring and components.

http://mototh.com

http://mototh.com

Appendix

Table of Contents

Cable, Wire, and Hose Routing 17-2
Troubleshooting Guide 17-26

http://mototh.com

Cable, Wire, and Hose Routing

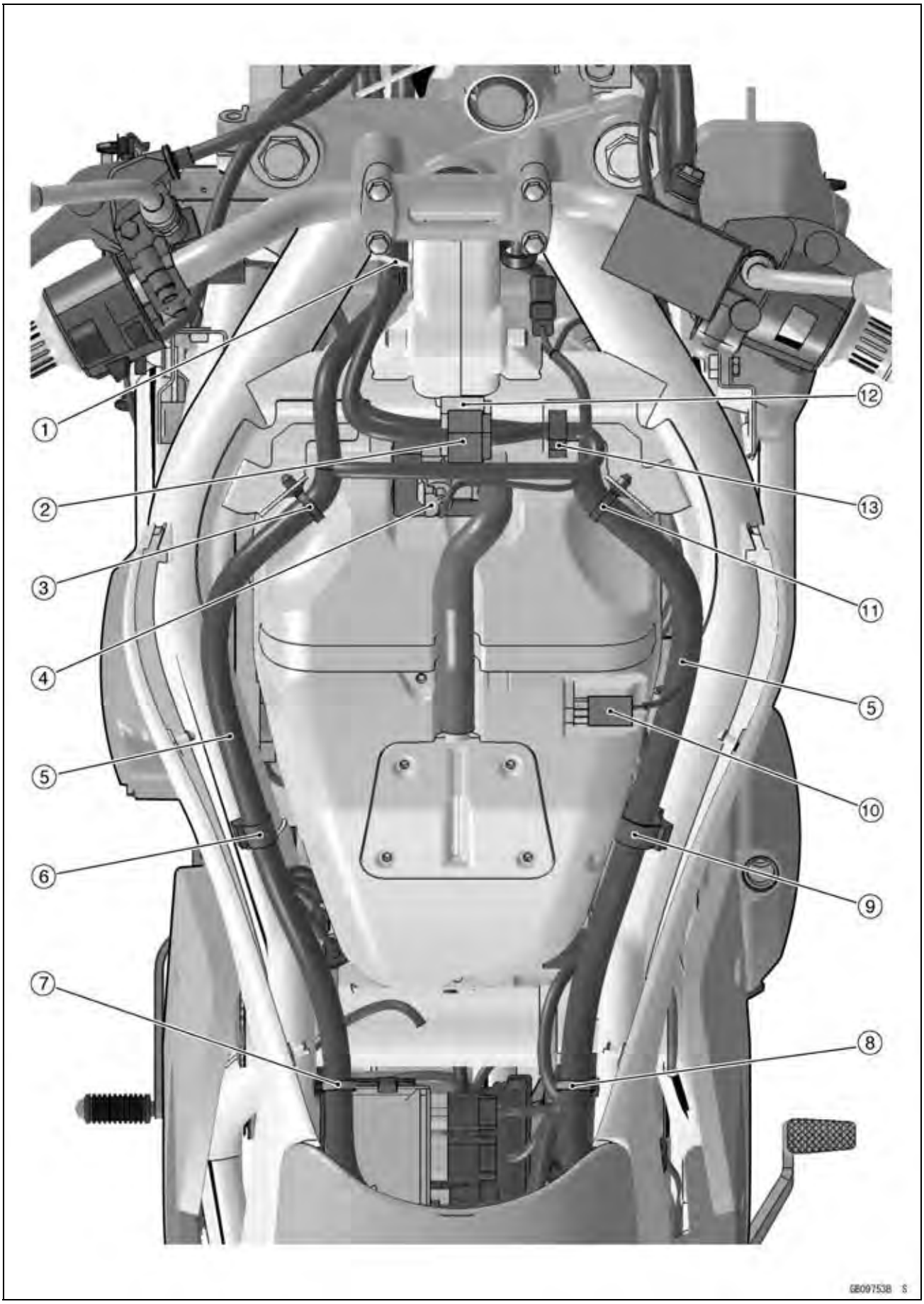

Cable, Wire, and Hose Routing

1. Clamp (From the on sequentially, through the left switch housing lead, ignition switch lead and main harness.)
2. Left Switch Housing Lead Connector
3. Clamp (Insert the clamp from air cleaner side.)
4. Air Switching Valve Lead Connector
5. Main Harness
6. Clamp
7. Clamp (Insert the clamp in the frame.)
8. Clamp (Insert the clamp in the frame.)
9. Clamp
10. Inlet Temperature Sensor Lead Connector
11. Clamp (Insert the clamp from air cleaner side.)
12. Ignition Switch Lead Connector
13. Clamp (Clamp the left switch housing lead (main harness side) and ignition switch lead (main harness side).)

http://mototh.com

Cable, Wire, and Hose Routing

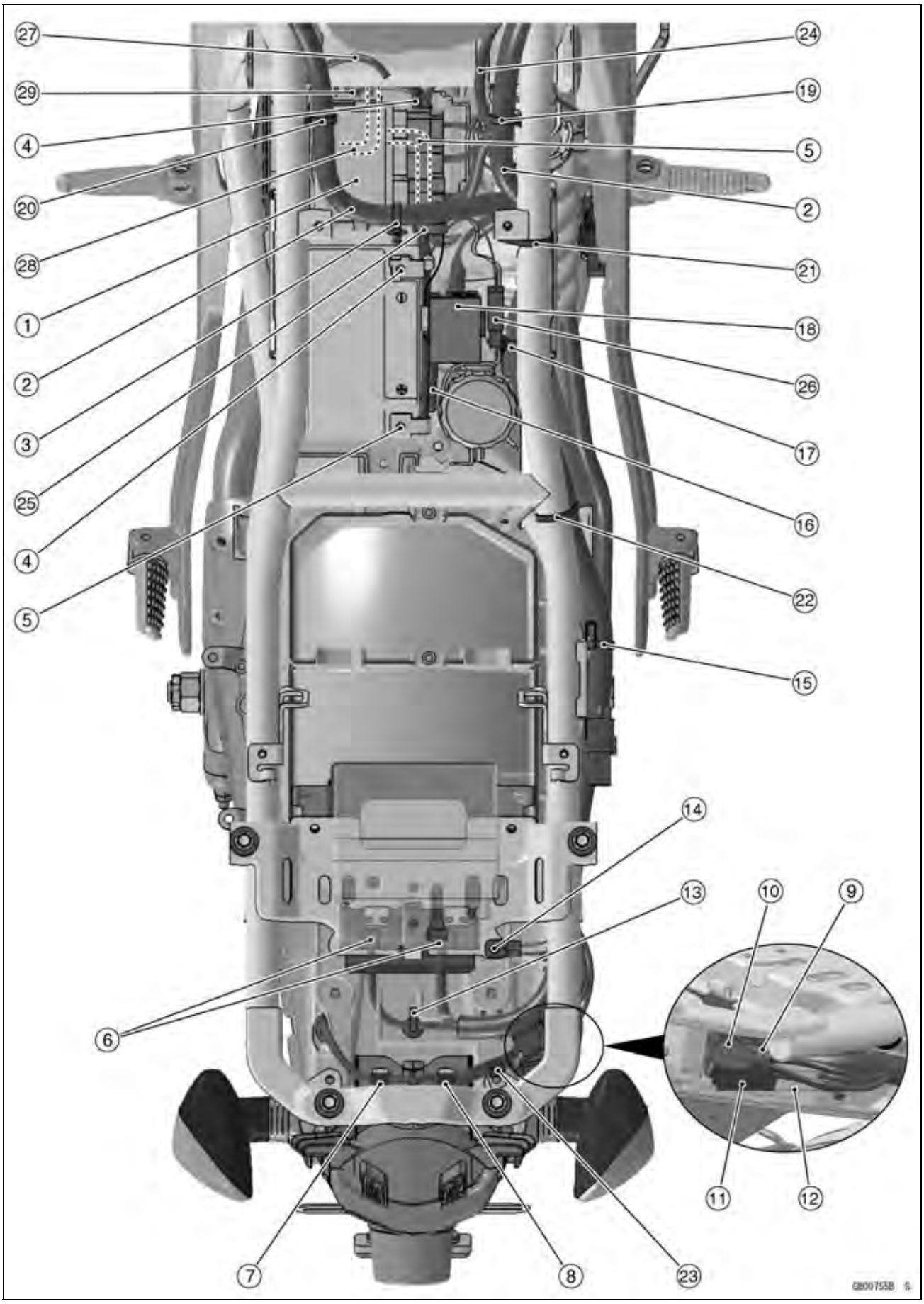

Cable, Wire, and Hose Routing

1. Relay Box
2. Main Harness
3. Clamp (Insert the clamp in the bracket.)
4. Battery Negative Cable
5. Battery Positive Cable
6. ECU Connectors
7. Clamp
8. Clamp
9. Tail Light Connector
10. License Plate Light Connector
11. Rear Left Turn Signal Light Connector
12. Rear Right Turn Signal Light Connector
13. Clamp (Insert the clamp in the rear fender rear.)
14. Frame Ground
15. Clamp
16. Water-proof Joint
17. Clamp
18. Fuse Box
19. Clamp
20. Clamp
21. Band
22. Band
23. Clamp
24. To the Vehicle-down Sensor, Crankshaft Sensor and Rear Brake Switch
25. Clamp (Clamp the regulator/rectifier lead and battery negative cable, and insert the clamp in the rear fender front.)
26. Battery Negative Lead Connector
27. Fuel Pump Lead
28. Starter Motor Cable
29. To Starter Relay

http://mototh.com

Cable, Wire, and Hose Routing

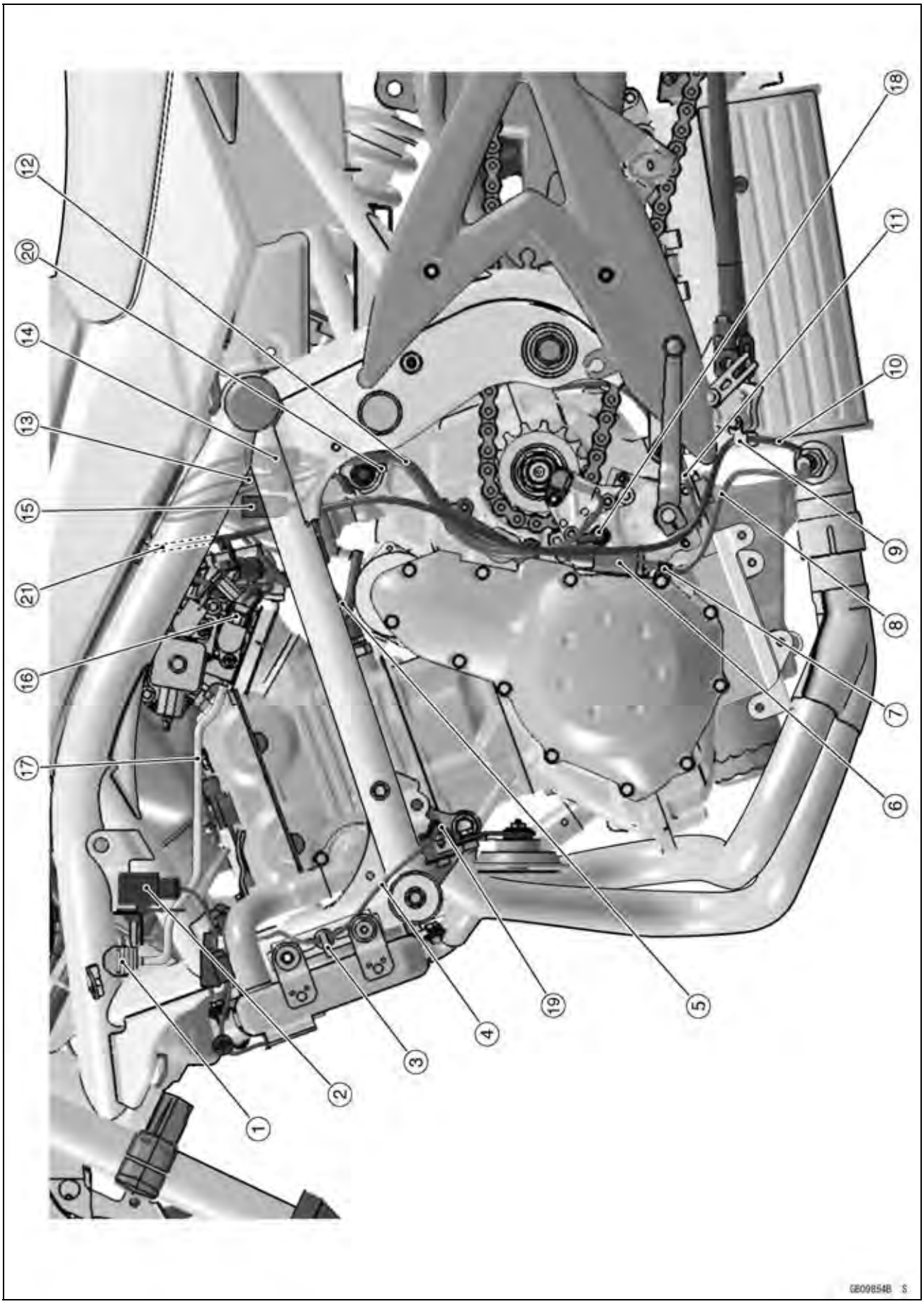

Cable, Wire, and Hose Routing

1. Inlet Pressure Sensor
2. Turn Signal Relay
3. Clamp (Insert the clamp in the frame.)
4. Horn Lead
5. To the Water Temperature Sensor
6. Oxygen Sensor Lead Connector
7. Clamp (Through the sidestand switch lead and oxygen sensor lead in the clamp.)
8. Oxygen Sensor Lead
9. Clamp (Through the drain hose in the clamp.)
10. Drain Hose
11. Sidestand Switch Lead
12. Corrugated Tube
13. Alternator Lead Connector
14. Sidestand Switch Lead Connector
15. Speed Sensor Lead Connector
16. Main Throttle Sensor Lead Connector
17. Tube
18. Neutral Switch Lead
19. Clamp (Insert the clamp in the engine bracket.)
20. Clamp (Insert the clamp in the cross pipe.)
21. Drain Hose (Through the drain hose between main harness and air cleaner.)

http://mototh.com

Cable, Wire, and Hose Routing

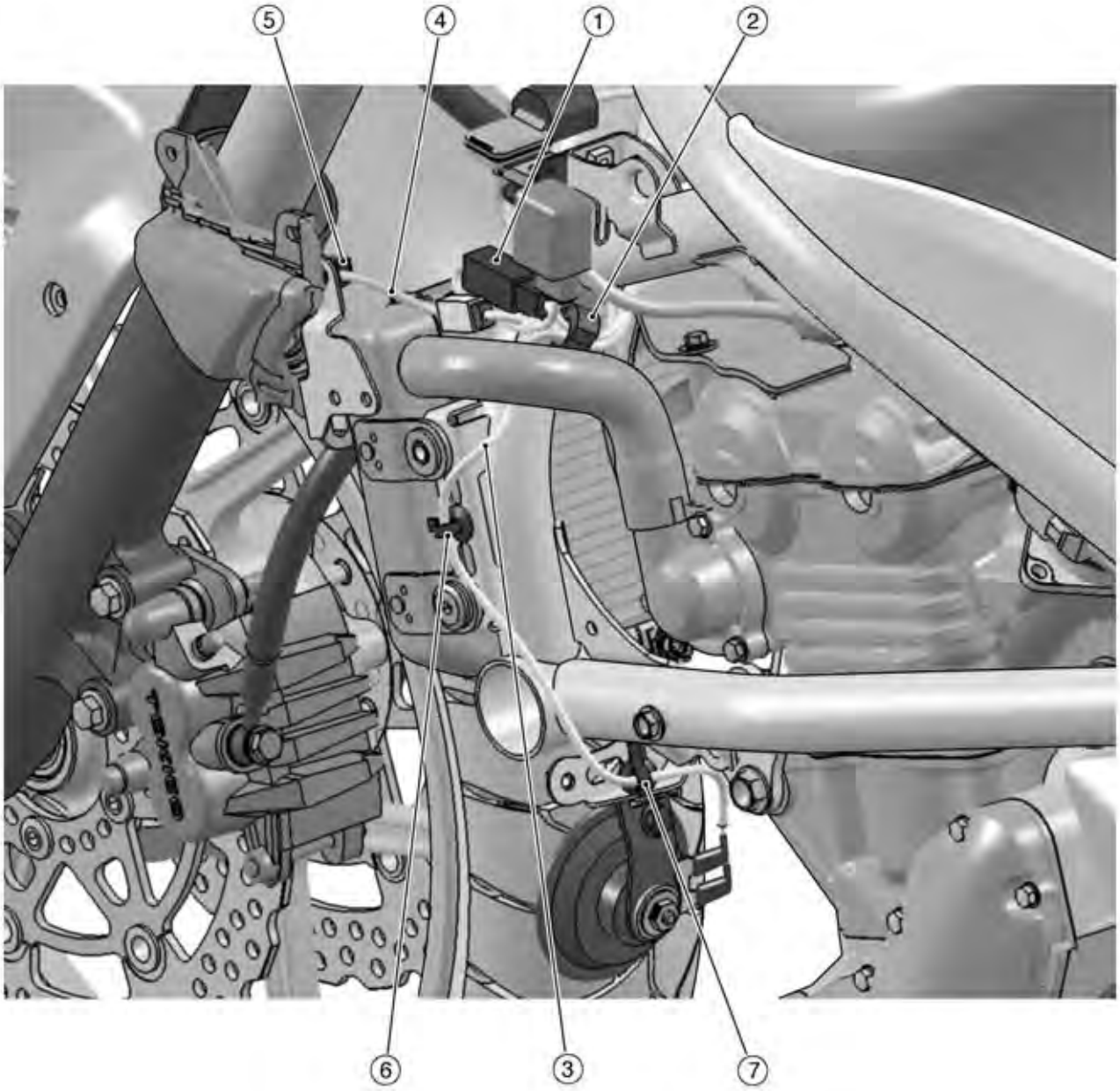

GE09803B S

http://mototh.com

Cable, Wire, and Hose Routing

1. Radiator Fan Connector
2. Clamp (Through the main harness and radiator fan lead, and insert the clamp in the frame.)
3. Through the horn lead between water pipe and frame.
4. To Front Left Turn Signal Light
5. Clamp (Insert the clamp in the bracket.)
6. Clamp (Insert the clamp in the frame.)
7. Clamp (Insert the clamp in the engine bracket.)

http://mototh.com

Cable, Wire, and Hose Routing

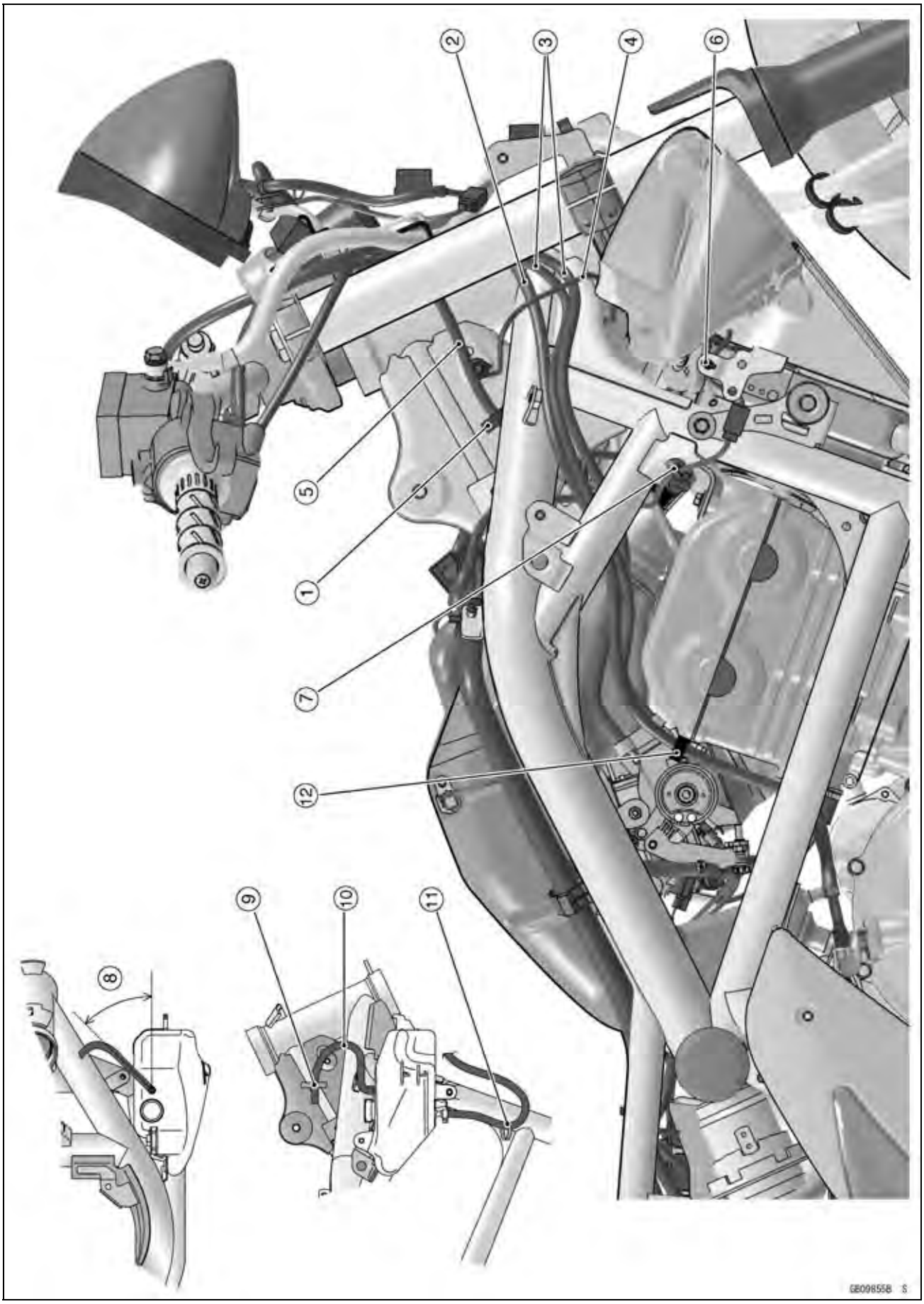

Cable, Wire, and Hose Routing

1. Clamp (Through the right switch housing lead, and insert the clamp in the frame.)
2. Clutch Cable
3. Throttle Cables
4. Clamp
5. Right Switch Housing Lead
6. Clamp (Insert the clamp in the bracket.)
7. Clamp (Insert the clamp in the frame.)
8. About 45°
9. Clamp (Insert the clamp in the frame.)
10. Coolant Hose
11. Clamp
12. Clamp (Through the clutch cable in the clamp.)

http://mototh.com

Cable, Wire, and Hose Routing

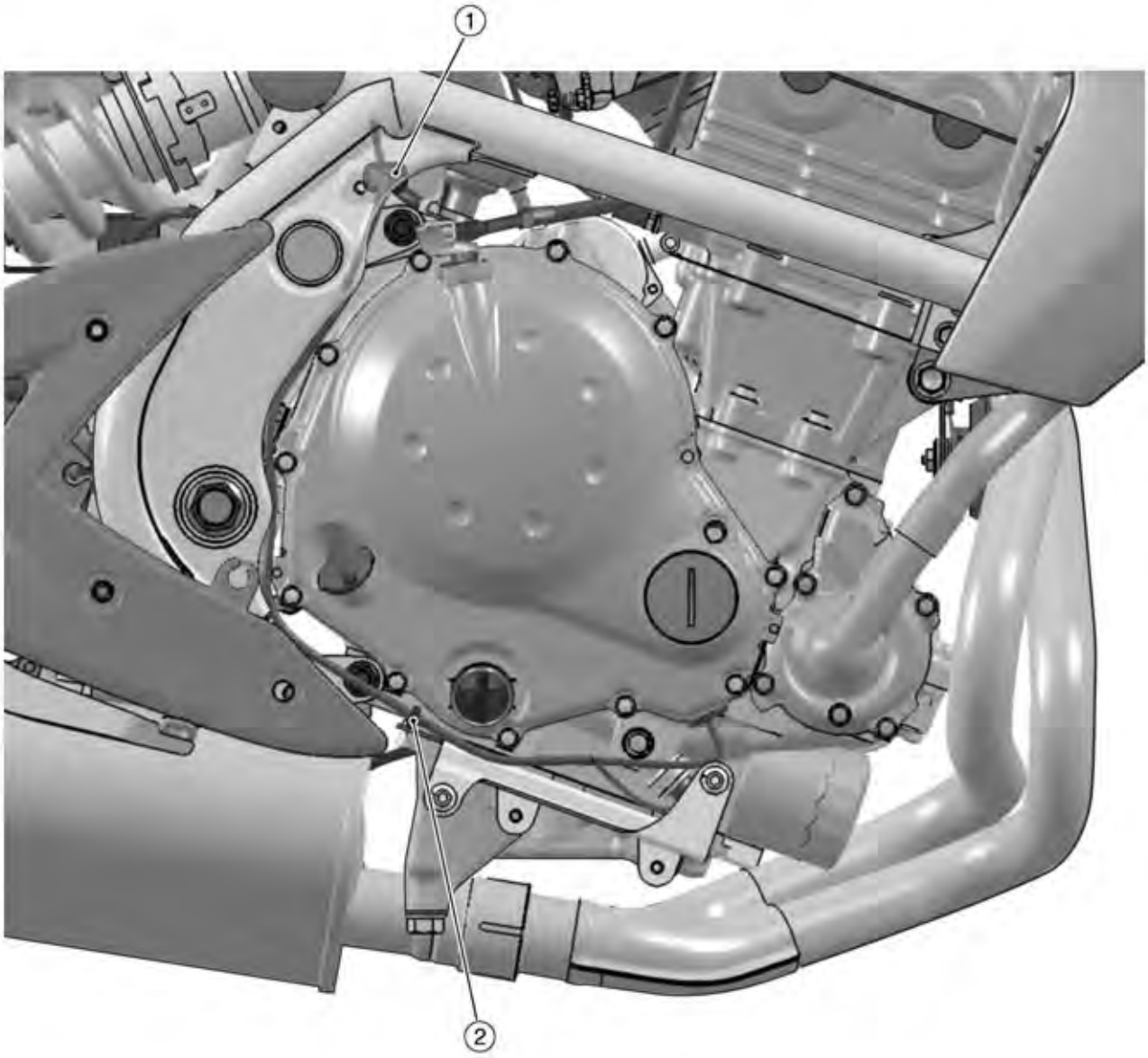

GE09860B S

http://mototh.com

Cable, Wire, and Hose Routing

1. Crankshaft Sensor Lead Connector
2. Clamp (Insert the clamp in the bracket.)

Cable, Wire, and Hose Routing

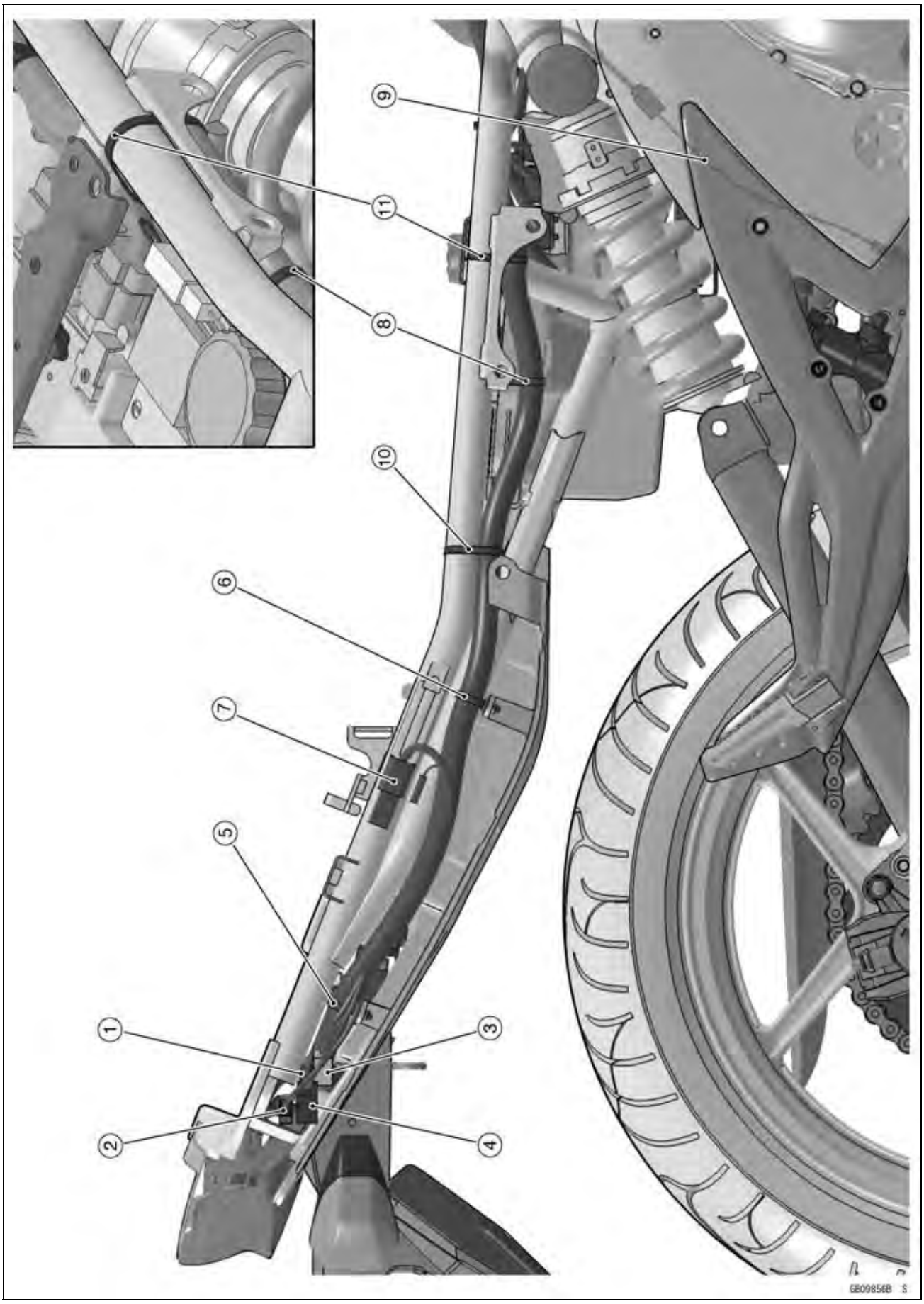

Cable, Wire, and Hose Routing

1. Tail Light Connector
2. License Plate Light Connector
3. Rear Right Turn Signal Light Connector
4. Rear Left Turn Signal Light Connector
5. Clamp (Insert the clamp in the rear fender rear.)
6. Clamp (Insert the clamp in the rear fender rear.)
7. Diagnosis Connector
8. Clamp (Insert the clamp in the rear fender front.)
9. Rear Brake Light Switch Lead
10. Band (Clamp the main harness with the frame.)
11. Band

http://mototh.com

Cable, Wire, and Hose Routing

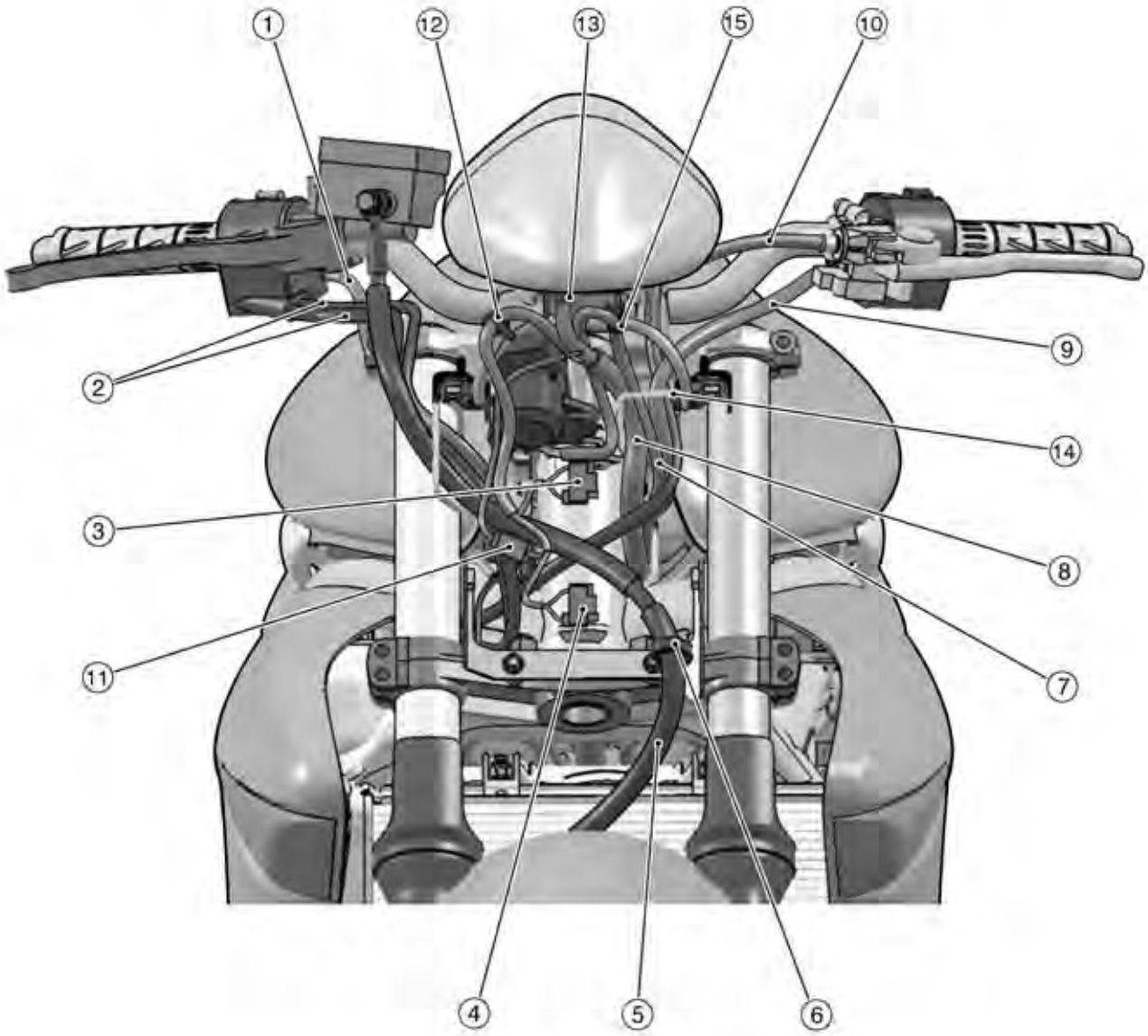

Cable, Wire, and Hose Routing

1. Right Switch Housing Lead
2. Throttle Cables
3. Headlight (LO) Connector
4. Headlight (HI) Connector
5. Brake Hose
6. Clamp
7. Ignition Switch Lead
8. Main Harness
9. Left Switch Housing Lead
10. Clutch Cable
11. City Light Connector
12. Clamp (Insert the clamp in the bracket.)
13. Clamp (Aligh the clamp with the white tape of the harness.)
14. From the left sequentially, through the clutch cable, left switch housing lead, ignition switch lead and main harness.
15. Clamp (Through the ignition switch lead, and insert the clamp in the bracket.)

http://mototh.com

Cable, Wire, and Hose Routing

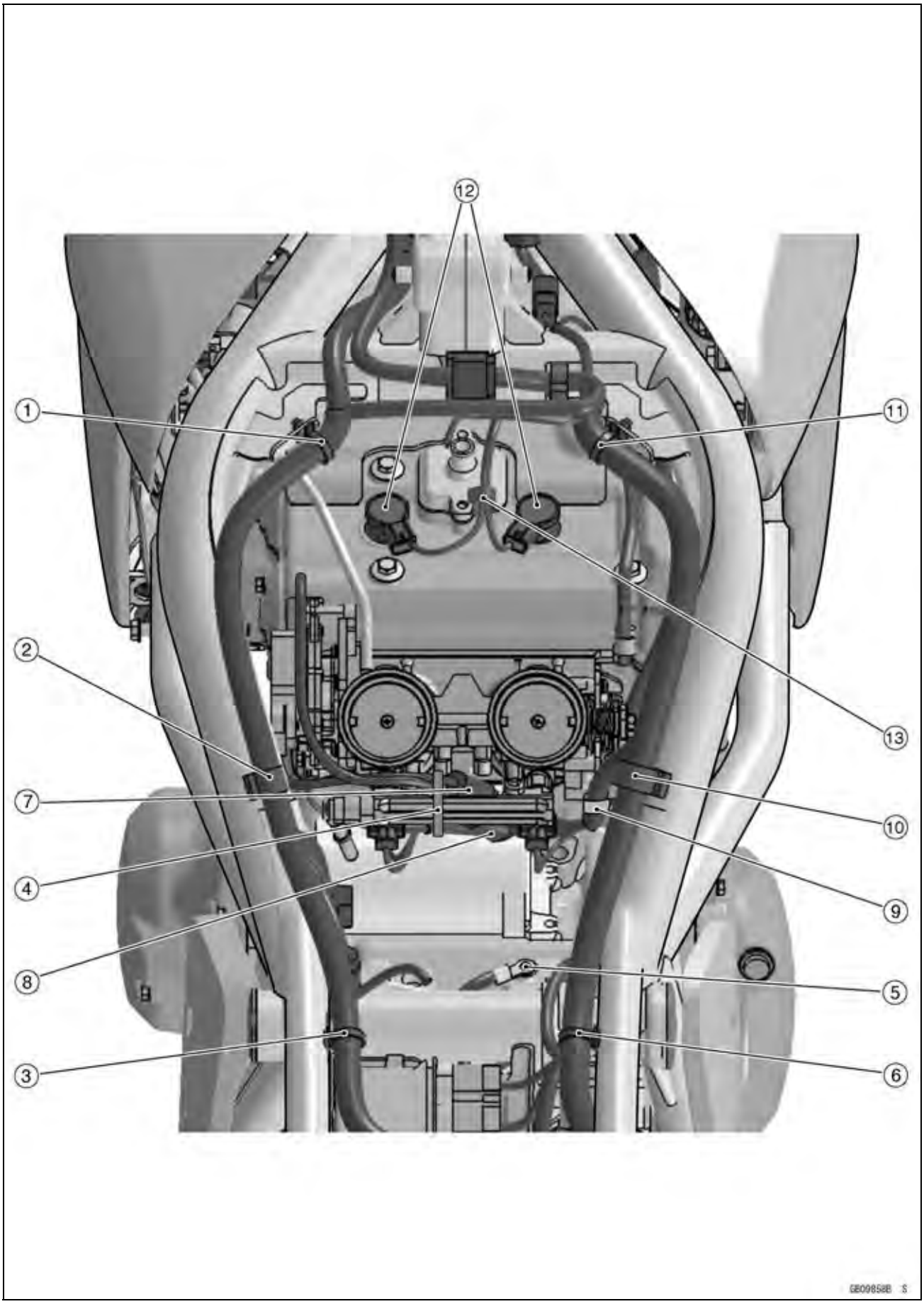

Cable, Wire, and Hose Routing

1. Clamp
2. Clamp
3. Clamp
4. Clamp (Clamp the main harness, subthrottle sensor lead and subthrottle valve actuator lead to the delivery pipe.)
5. Ground Lead
6. Clamp
7. Subthrottle Sensor Lead Connector
8. Subthrottle Valve Actuator Lead Connector
9. Clamp (Clamp the harness.)
10. Clamp
11. Clamp
12. Stick Coil Lead Connector
13. Clamp (Clamp the stick coil lead.)

http://mototh.com

Cable, Wire, and Hose Routing

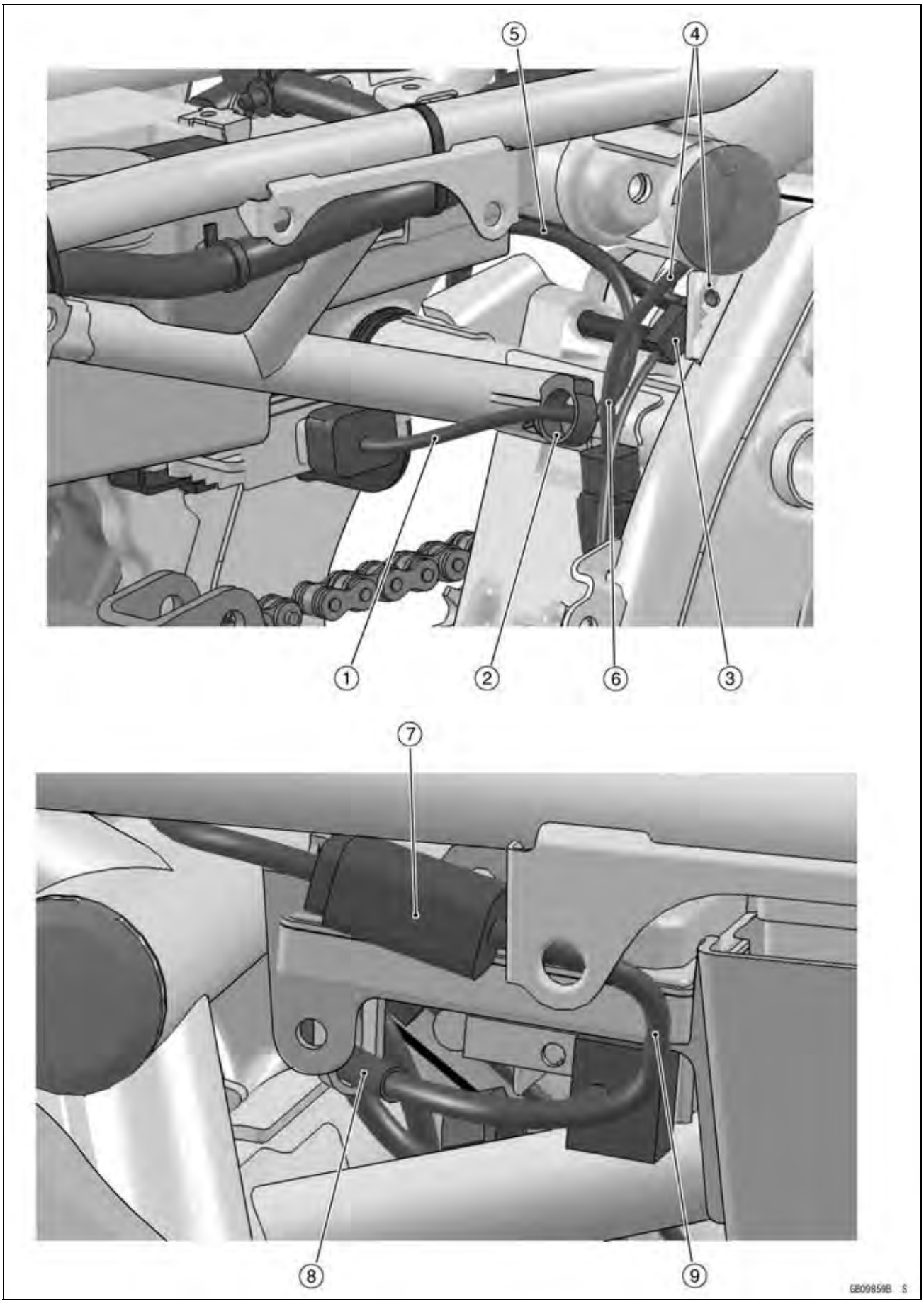

Cable, Wire, and Hose Routing

1. Regulator/Rectifier Lead
2. Clamp (Insert the clamp in the frame.)
3. Rear Brake Light Switch Lead Connector
4. Through the rear brake light switch lead and vehicle-down sensor lead from the front side of the rear shockabsorber installation part.
5. Through the regulator/rectifier lead to the front opening of the rear fender front.
6. Vehicle-down Sensor Lead
7. Fuel Pump Lead Connector
8. Through the fuel pump lead to the hook of the rear fender front.
9. Through the fuel pump lead to the slit of the cover.

http://mototh.com

Cable, Wire, and Hose Routing

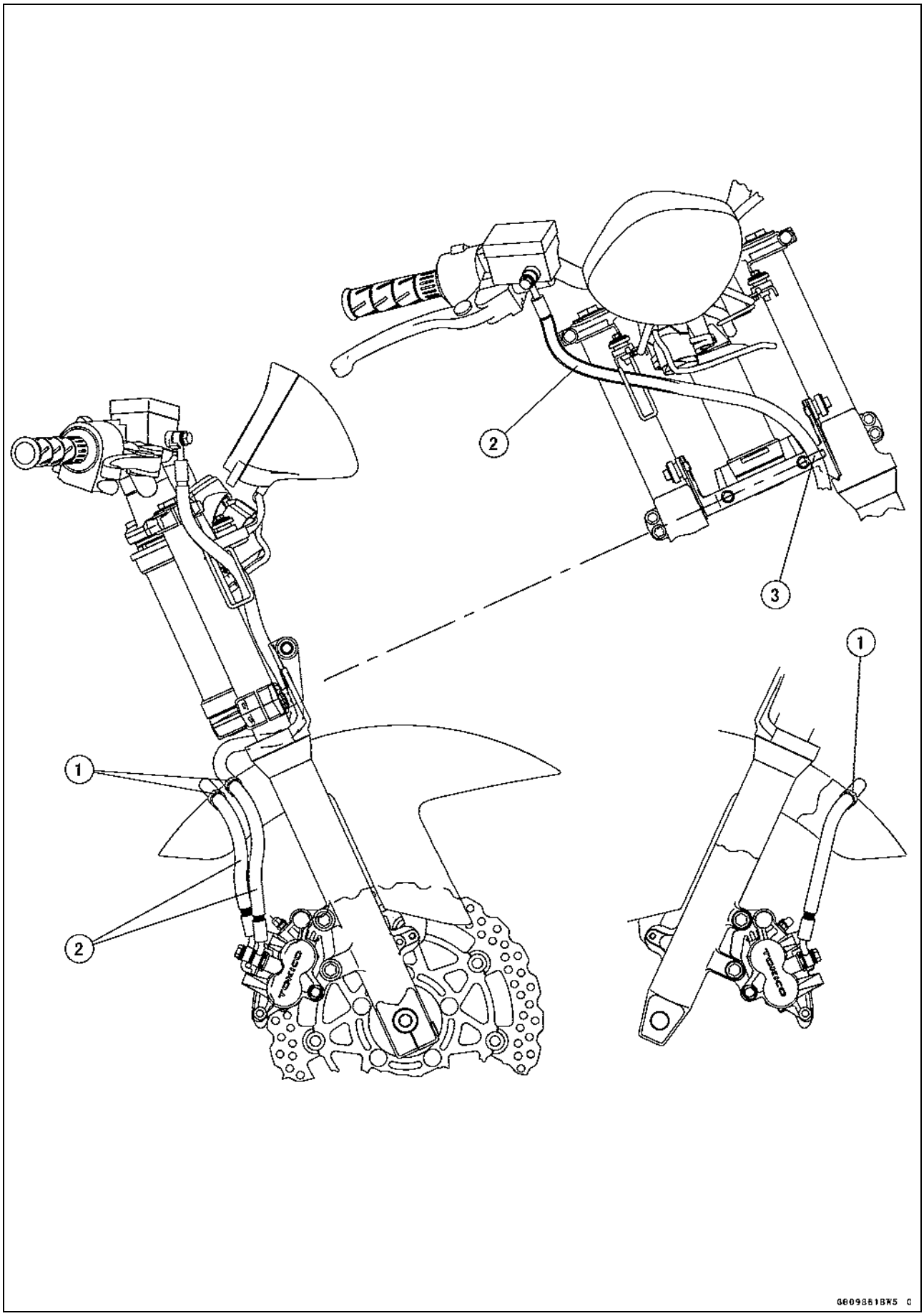

Cable, Wire, and Hose Routing

1. Clamp (Insert the clamp in the front fender.)
2. Brake Hose
3. Clamp

Cable, Wire, and Hose Routing

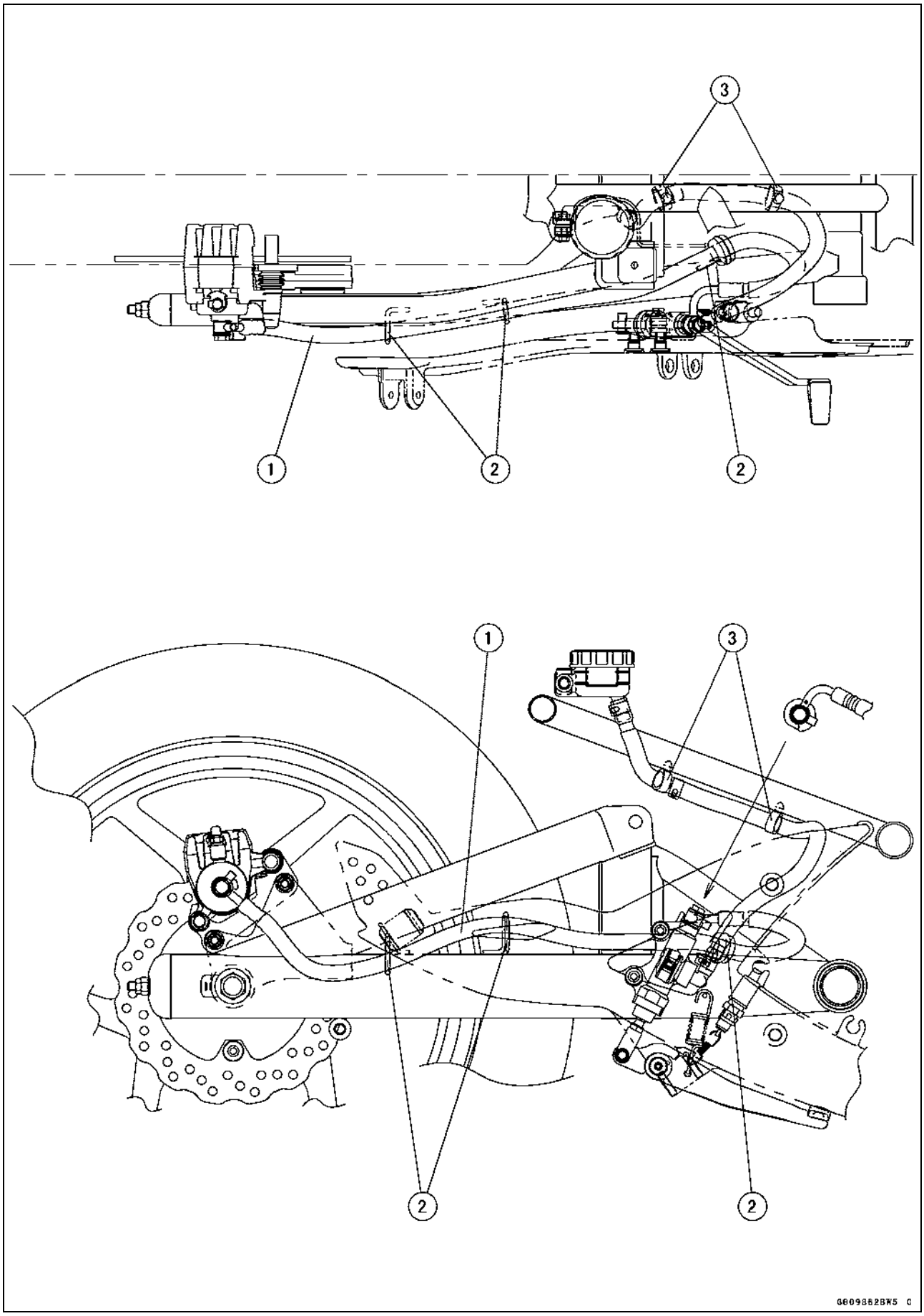

Cable, Wire, and Hose Routing

1. Brake Hose
2. Clamp
3. Clamp

Troubleshooting Guide

NOTE

○*Refer to the Fuel System chapter for most of DFI trouble shooting guide.*

○*This is not an exhaustive list, giving every possible cause for each problem listed. It is meant simply as a rough guide to assist the troubleshooting for some of the more common difficulties.*

Engine Doesn't Start, Starting Difficulty:

Starter motor not rotating:
- Starter lockout switch or neutral switch trouble
- Starter motor trouble
- Battery voltage low
- Starter relay not contacting or operating
- Starter button not contacting
- Wiring open or shorted
- Ignition switch trouble
- Engine stop switch trouble
- Fuse blown

Starter motor rotating but engine doesn't turn over:
- Starter clutch trouble
- Vehicle-down sensor (DFI) coming off

Engine won't turn over:
- Valve seizure
- Valve lifter seizure
- Cylinder, piston seizure
- Crankshaft seizure
- Connecting rod small end seizure
- Connecting rod big end seizure
- Transmission gear or bearing seizure
- Camshaft seizure
- Starter idle gear seizure

No fuel flow:
- No fuel in tank
- Fuel pump trouble
- Fuel tank air vent obstructed
- Fuel filter clogged
- Fuel line clogged

Engine flooded:
- Clean spark plug and adjust plug gap
- Starting technique faulty
- (When flooded, do not crank the engine with the throttle fully opened. This promotes engine flood because more fuel is supplied automatically by DFI.)

No spark; spark weak:
- Vehicle-down sensor (DFI) coming off
- Ignition switch not ON
- Engine stop switch turned OFF
- Clutch lever not pulled in or gear not in neutral
- Battery voltage low
- Spark plug dirty, broken, or gap maladjusted
- Stick coil shorted or not in good contact
- Stick coil trouble
- Spark plug incorrect
- IC igniter in ECU trouble
- Neutral, starter lockout, or side stand switch trouble
- Crankshaft sensor trouble
- Ignition switch or engine stop switch shorted
- Wiring shorted or open
- Fuse blown

Fuel/air mixture incorrect:
- Bypass screw and/or idle adjusting screw maladjusted
- Air passage clogged
- Air cleaner clogged, poorly sealed, or missing

Compression Low:
- Spark plug loose
- Cylinder head not sufficiently tightened down
- No valve clearance
- Cylinder, piston worn
- Piston ring bad (worn, weak, broken, or sticking)
- Piston ring/groove clearance excessive
- Cylinder head gasket damaged
- Cylinder head warped
- Valve spring broken or weak
- Valve not seating properly (valve bent, worn, or carbon accumulation on the seating surface)

Poor Running at Low Speed:

Spark weak:
- Battery voltage low
- Spark plug dirty, broken, or maladjusted
- Stick coil wiring trouble
- Stick coil not in good contact
- Spark plug incorrect
- IC igniter in ECU trouble
- Crankshaft sensor trouble
- Stick coil trouble

Fuel/air mixture incorrect:
- Bypass screw maladjusted
- Air passage clogged
- Air bleed pipe bleed holes clogged
- Pilot passage clogged
- Air cleaner clogged, poorly sealed, or missing
- Fuel tank air vent obstructed
- Fuel pump trouble
- Throttle body assy holder loose
- Air cleaner duct loose

http://mototh.com

Troubleshooting Guide

Compression low:
- Spark plug loose
- Cylinder head not sufficiently tightened down
- No valve clearance
- Cylinder, piston worn
- Piston ring bad (worn, weak, broken, or sticking)
- Piston ring/groove clearance excessive
- Cylinder head warped
- Cylinder head gasket damaged
- Valve spring broken or weak
- Valve not seating properly (valve bent, worn, or carbon accumulation on the seating surface)

Other:
- IC igniter in ECU trouble
- Throttle body assy not synchronizing
- Engine oil viscosity too high
- Drive train trouble
- Brake dragging
- Air suction valve trouble
- Air switching valve trouble
- Engine overheating
- Clutch slipping

Poor Running or No Power at High Speed:

Firing incorrect:
- Spark plug dirty, broken, or maladjusted
- Stick coil wiring trouble
- Stick coil not in good contact
- Spark plug incorrect
- Camshaft position trouble
- IC igniter in ECU trouble
- Crankshaft sensor trouble
- Stick coil trouble

Fuel/air mixture incorrect:
- Air cleaner clogged, poorly sealed, or missing
- Air cleaner O-ring damaged
- Air cleaner duct loose
- Water or foreign matter in fuel
- Throttle body assy holder loose
- Fuel to injector insufficient (DFI)
- Fuel tank air vent obstructed
- Fuel line clogged
- Fuel pump trouble

Compression low:
- Spark plug loose
- Cylinder head not sufficiently tightened down
- No valve clearance
- Cylinder, piston worn
- Piston ring bad (worn, weak, broken, or sticking)
- Piston ring/groove clearance excessive
- Cylinder head gasket damaged
- Cylinder head warped
- Valve spring broken or weak
- Valve not seating properly (valve bent, worn, or carbon accumulation on the seating surface)

Knocking:
- Carbon built up in combustion chamber
- Fuel poor quality or incorrect
- Spark plug incorrect
- IC igniter in ECU trouble
- Crankshaft sensor trouble

Miscellaneous:
- Throttle valve won't fully open
- Brake dragging
- Clutch slipping
- Engine overheating
- Engine oil level too high
- Engine oil viscosity too high
- Drive train trouble
- Air suction valve trouble
- Air switching valve trouble
- Catalytic converter melt down due to muffler overheating (KLEEN)

Overheating:

Firing incorrect:
- Spark plug dirty, broken, or maladjusted
- Spark plug incorrect
- IC igniter in ECU trouble

Muffler overheating:
- For KLEEN, do not run the engine even if with only one cylinder misfiring or poor running (Request the nearest service facility to correct it)
- For KLEEN, do not push-start with a dead battery (Connect another full-charged battery with jumper cables, and start the engine using the electric starter)
- For KLEEN, do not start the engine under misfire due to spark plug fouling or poor connection of the stick coil
- For KLEEN, do not coast the motorcycle with the ignition switch off (Turn the ignition switch ON and run the engine)
- IC igniter in ECU trouble

Fuel/air mixture incorrect:
- Throttle body assy holder loose
- Air cleaner duct loose
- Air cleaner poorly sealed, or missing
- Air cleaner O-ring damaged
- Air cleaner clogged

Compression high:
- Carbon built up in combustion chamber

Engine load faulty:
- Clutch slipping
- Engine oil level too high

http://mototh.com

Engine oil viscosity too high
Drive train trouble
Brake dragging

Lubrication inadequate:
Engine oil level too low
Engine oil poor quality or incorrect

Gauge incorrect:
Water temperature gauge broken
Water temperature sensor broken

Coolant incorrect:
Coolant level too low
Coolant deteriorated
Wrong coolant mixed ratio

Cooling system component incorrect:
Radiator fin damaged
Radiator clogged
Thermostat trouble
Radiator cap trouble
Radiator fan relay trouble
Fan motor broken
Fan blade damaged
Water pump not turning
Water pump impeller damaged

Over Cooling:

Gauge incorrect:
Water temperature gauge broken
Water temperature sensor broken

Cooling system component incorrect:
Radiator fan relay trouble
Thermostat trouble

Clutch Operation Faulty:

Clutch slipping:
Friction plate worn or warped
Steel plate worn or warped
Clutch spring broken or weak
Clutch hub or housing unevenly worn
No clutch lever play
Clutch inner cable trouble
Clutch release mechanism trouble

Clutch not disengaging properly:
Clutch plate warped or too rough
Clutch spring compression uneven
Engine oil deteriorated
Engine oil viscosity too high
Engine oil level too high
Clutch housing frozen on drive shaft
Clutch hub nut loose
Clutch hub spline damaged
Clutch friction plate installed wrong
Clutch lever play excessive
Clutch release mechanism trouble

Gear Shifting Faulty:

Doesn't go into gear; shift pedal doesn't return:
Clutch not disengaging
Shift fork bent or seized
Gear stuck on the shaft
Gear positioning lever binding
Shift return spring weak or broken
Shift return spring pin loose
Shift mechanism arm spring broken
Shift mechanism arm broken
Shift pawl broken

Jumps out of gear:
Shift fork ear worn, bent
Gear groove worn
Gear dogs and/or dog holes worn
Shift drum groove worn
Gear positioning lever spring weak or broken
Shift fork guide pin worn
Drive shaft, output shaft, and/or gear splines worn

Overshifts:
Gear positioning lever spring weak or broken
Shift mechanism arm spring broken

Abnormal Engine Noise:

Knocking:
IC igniter in ECU trouble
Carbon built up in combustion chamber
Fuel poor quality or incorrect
Spark plug incorrect
Overheating

Piston slap:
Cylinder/piston clearance excessive
Cylinder, piston worn
Connecting rod bent
Piston pin, piston pin hole worn

Valve noise:
Valve clearance incorrect
Valve spring broken or weak
Camshaft bearing worn
Valve lifter worn

Other noise:
Connecting rod small end clearance excessive
Connecting rod big end clearance excessive
Piston ring/groove clearance excessive
Piston ring worn, broken, or stuck
Piston ring groove worn
Piston seizure, damage
Cylinder head gasket leaking
Exhaust pipe leaking at cylinder head connection
Crankshaft runout excessive

http://mototh.com

Engine mount loose
Crankshaft bearing worn
Primary gear worn or chipped
Camshaft chain tensioner trouble
Camshaft chain, sprocket, guide worn
Air suction valve damaged
Air switching valve damaged
Alternator rotor loose
Catalytic converter melt down due to muffler overheating (KLEEN)

Abnormal Drive Train Noise:

Clutch noise:
Clutch housing/friction plate clearance excessive
Clutch housing gear worn
Wrong installation of outside friction plate

Transmission noise:
Bearings worn
Transmission gear worn or chipped
Metal chips jammed in gear teeth
Engine oil insufficient

Drive line noise:
Drive chain adjusted improperly
Drive chain worn
Rear and/or engine sprocket worn
Chain lubrication insufficient
Rear wheel misaligned

Abnormal Frame Noise:

Front fork noise:
Oil insufficient or too thin
Spring weak or broken

Rear shock absorber noise:
Shock absorber damaged

Disc brake noise:
Pad installed incorrectly
Pad surface glazed
Disc warped
Caliper trouble

Other noise:
Bracket, nut, bolt, etc. not properly mounted or tightened

Oil Pressure Warning Light Goes On:

Engine oil pump damaged
Engine oil screen clogged
Engine oil filter clogged
Engine oil level too low
Engine oil viscosity too low
Camshaft bearing worn
Crankshaft bearing worn
Oil pressure switch damaged
Wiring faulty
Relief valve stuck open
O-ring at the oil passage in the crankcase damaged

Exhaust Smokes Excessively:

White smoke:
Piston oil ring worn
Cylinder worn
Valve oil seal damaged
Valve guide worn
Engine oil level too high

Black smoke:
Air cleaner clogged

Brown smoke:
Air cleaner duct loose
Air cleaner O-ring damaged
Air cleaner poorly sealed or missing

Handling and/or Stability Unsatisfactory:

Handlebar hard to turn:
Cable routing incorrect
Hose routing incorrect
Wiring routing incorrect
Steering stem nut too tight
Steering stem bearing damaged
Steering stem bearing lubrication inadequate
Steering stem bent
Tire air pressure too low

Handlebar shakes or excessively vibrates:
Tire worn
Swingarm pivot bearing worn
Rim warped, or not balanced
Wheel bearing worn
Handlebar holder bolt loose
Steering stem nut loose
Front, rear axle runout excessive
Engine mounting bolt loose

Handlebar pulls to one side:
Frame bent
Wheel misalignment
Swingarm bent or twisted
Swingarm pivot shaft runout excessive
Steering maladjusted
Front fork bent
Right and left front fork oil level uneven

Shock absorption unsatisfactory:
(Too hard)
Front fork oil excessive
Front fork oil viscosity too high
Rear shock absorber adjustment too hard
Tire air pressure too high
Front fork bent
(Too soft)
Tire air pressure too low
Front fork oil insufficient and/or leaking
Front fork oil viscosity too low

http://mototh.com

Rear shock adjustment too soft
Front fork, rear shock absorber spring weak
Rear shock absorber oil leaking

Brake Doesn't Hold:

Air in the brake line
Pad or disc worn
Brake fluid leakage
Disc warped
Contaminated pad
Brake fluid deteriorated
Primary or secondary cup damaged in master cylinder
Master cylinder scratched inside

Battery Trouble:

Battery discharged:
Charge insufficient
Battery faulty (too low terminal voltage)
Battery lead making poor contact
Load excessive (e.g., bulb of excessive wattage)
Ignition switch trouble
Alternator trouble
Wiring faulty
Regulator/rectifier trouble

Battery overcharged:
Alternator trouble
Regulator/rectifier trouble
Battery faulty

http://mototh.com

MODEL APPLICATION

Year	Model	Beginning Frame No.
2006	ER650A6F	JKAEREA1□6A000001 ER650A-000001
2006	ER650A6S	JKAER650AAA000001

□:This digit in the frame number changes from one machine to another.

Kawasaki
KAWASAKI HEAVY INDUSTRIES, LTD.
Consumer Products & Machinery Company

Part No.99924-1360-01

Printed in Japan

http://mototh.com