RENAULT

3 Chassis

30A GENERAL INFORMATION

31A FRONT AXLE COMPONENTS

33A REAR AXLE COMPONENTS

35A WHEELS AND TYRES

35B TYRE PRESSURE MONITOR

36A STEERING ASSEMBLY

37A MECHANICAL COMPONENT CONTROLS

37B ELECTRONIC PARKING BRAKE

38C ANTI-LOCK BRAKING SYSTEM

X84, and J84

77 11 322 062 **MARCH 2009** **Edition Anglaise**

"The repair methods given by the manufacturer in this document are based on the technical specifications current when it was prepared.

The methods may be modified as a result of changes introduced by the manufacturer in the production of the various component units and accessories from which his vehicles are constructed."

All copyrights reserved by Renault.

The reproduction or translation in part of whole of the present document, as well as the use of the spare parts reference numbering system, are prohibited without the prior written consent of Renault.

© Renault s.a.s 2008

Scénic II - Section 3

Contents

Page

30A GENERAL INFORMATION

Brake circuit Operating diagram 30A-1

Brake circuit Bleeding 30A-2

Brake circuit Tightening torque 30A-4

Brake fluid: Specifications 30A-5

Brake: Specifications 30A-6

Steering: Tightening torque 30A-7

Axle assemblies: Check 30A-8

Underbody height: Adjustment values 30A-9

Front axle: Tightening torque 30A-12

Front axle: Adjustment values 30A-14

Front axle: Adjusting 30A-16

Rear axle: Tightening torque 30A-17

Rear axle: Adjustment values 30A-18

Rear axle: Adjusting 30A-20

31A FRONT AXLE COMPONENTS

Front brake pads: Removal - Refitting 31A-1

Front brake hose: Removal - Refitting 31A-3

31A FRONT AXLE COMPONENTS

Front brake calliper: Removal - Refitting 31A-5

Front brake calliper: Repair 31A-7

Front brake calliper support: Removal - Refitting 31A-9

Front brake disc: Description 31A-10

Front brake disc: Removal - Refitting 31A-11

Front driveshaft hub carrier: Removal - Refitting 31A-12

Front hub carrier bearing: Removal - Refitting 31A-15

Spring and front shock absorber: Removal - Refitting 31A-18

Front driveshaft lower arm: Removal - Refitting 31A-22

Front driveshaft lower arm ball joint: Check 31A-25

Front axle sub-frame: Removal - Refitting 31A-26

Front anti-roll bar: Removal - Refitting 31A-37

Contents

33A REAR AXLE COMPONENTS

Rear brake pads: Removal - Refitting 33A-1

Rear brake caliper: Removal - Refitting 33A-3

Rear brake calliper mounting: Removal - Refitting 33A-5

Rear brake disc: Description 33A-7

Rear brake disc: Removal - Refitting 33A-8

Brake pipe: Removal - Refitting 33A-11

Bearing: Removal - Refitting 33A-13

Rear suspension spring: Removal - Refitting 33A-15

Shock absorber: Removal - Refitting 33A-17

Rear axle rubber bearing: Removal - Refitting 33A-19

Complete rear axle: Removal - Refitting 33A-21

35A WHEELS AND TYRES

Wheel: Removal - Refitting 35A-1

Wheel: Balancing 35A-4

Tyres: Identification 35A-7

Tyres: Removal - Refitting 35A-8

Tyre inflation pressure: Identification 35A-10

Wheel rim: Identification 35A-13

Spare wheel winch: Removal - Refitting 35A-14

Run flat tyres: Identification 35A-16

Run flat wheel rim: Identification 35A-18

Run flat tyres: Repair 35A-19

35A WHEELS AND TYRES

Run flat tyres: Specifications 35A-20

Run flat tyres 35A-21

35B TYRE PRESSURE MONITOR

SSPP: List and location of components 35B-1

Pressure sensor: Removal - Refitting 35B-2

36A STEERING ASSEMBLY

Steering rack: Removal - Refitting 36A-1

Track rod: Removal - Refitting 36A-3

Axial ball joint linkage: Removal - Refitting 36A-4

Steering column: Removal - Refitting 36A-8

Steering rack gaiter: Removal - Refitting 36A-15

Bulkhead seal: Removal - Refitting 36A-16

Intermediate shaft: Removal - Refitting 36A-17

Steering wheel: Removal - Refitting 36A-21

37A MECHANICAL COMPONENT CONTROLS

Master cylinder: Removal - Refitting 37A-1

Brake servo: Removal - Refitting 37A-5

Brake servo non-return valve: Removal - Refitting 37A-9

Contents

37A MECHANICAL COMPONENT CONTROLS

Vacuum pump: Removal - Refitting 37A-14

Accelerator pedal: Removal - Refitting 37A-18

Brake pedal: Removal - Refitting 37A-19

Brake pedal bell crank rod: Removal - Refitting 37A-30

Brake pedal switch: Removal - Refitting 37A-31

Parking brake cables: Removal - Refitting 37A-33

Parking brake lever: Removal - Refitting 37A-37

Clutch control: Description 37A-39

Clutch master cylinder: Removal - Refitting 37A-43

Clutch pedal switch: Removal - Refitting 37A-51

Manual gearbox selector cable: Removal - Refitting 37A-54

Gear control unit: Removal - Refitting 37A-55

Clutch pedal: Removal - Refitting 37A-59

Clutch pedal position sensor: Removal - Refitting 37A-64

Clutch circuit: Removal - Refitting 37A-65

Clutch circuit: Bleeding 37A-73

37B ELECTRONIC PARKING BRAKE

Emergency handle: Removal - Refitting 37B-1

Control unit: Removal - Refitting 37B-3

Handle: Removal - Refitting 37B-8

38C ANTI-LOCK BRAKING SYSTEM

Introduction 38C-1

Hydraulic unit: Introduction 38C-2

Brake hydraulic assembly: Removal - Refitting 38C-3

ABS with ESP: Description 38C-22

Yaw speed and transversal acceleration sensor: Removal - Refitting 38C-23

Braking computer: Removal - Refitting 38C-25

« X » braking system with ABS

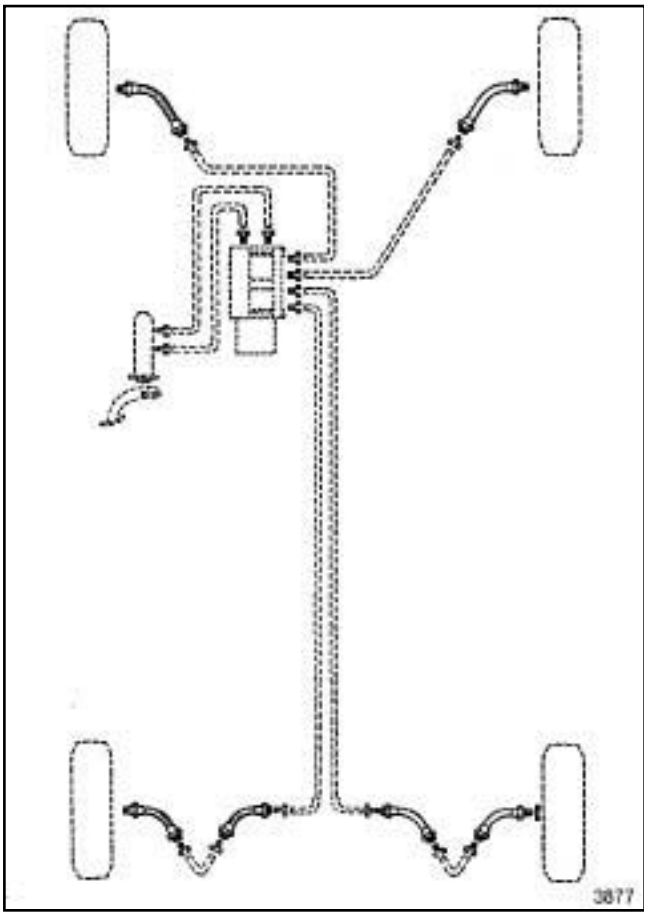

3877

IMPORTANT

This is a diagram of the general principle, do not use it as a reference for take-off points or circuit allocation. When replacing components in a vehicle's braking circuit, always mark the pipes before removing them.

Essential equipment
pedal press
brake circuit bleeding device

IMPORTANT
To avoid all risk of damage to the systems, apply the safety and cleanliness instructions and operation recommendations before carrying out any repair (see **Brake circuit Precautions for repair**) .

This procedure must be applied after one of the following components has been removed or replaced:

- the master cylinder,
- the brake fluid,
- the hydraulic unit,
- a rigid pipe,
- a hose,
- the reservoir,
- a calliper.

WARNING
Switch off the vehicle ignition so as not to activate the hydraulic unit solenoid valves when bleeding the brake circuit.

WARNING
The level must be between the «MIN» and « MAX » markings on the reservoir.

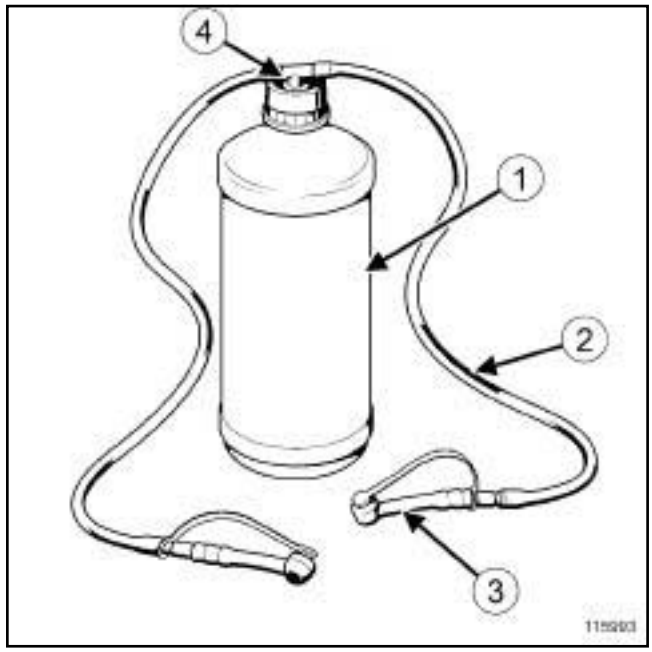

115993

❑ Use locally produced containers to collect the used brake fluid.

Front and rear callipers:

- 2 washer fluid containers (**1**) (1 litre),
- **4 mm** diameter transparent pipes (**2**) ,
- 4 pipettes (**3**) (part no: 00 00 081 501),
- 2 T-unions (**4**) .

Note:

The new hydraulic unit is pre-filled.

When working on one of the following components, position a **pedal press** to limit the outflow of brake fluid and prevent any air from entering the master cylinder and the circuits downstream of the master cylinder:

- hydraulic unit,
- pipes between the hydraulic unit and brake callipers,
- brake hoses,
- brake calliper.

Remove the **pedal press** before carrying out the braking system bleeding procedure.

❑ Position the vehicle on a two-post lift (see **Vehicle: Towing and lifting**) (02A, Lifting equipment).

❑ Switch off the vehicle ignition.

- ❑ Connect the **brake circuit bleeding device** (after having received Renault approval) to the master cylinder reservoir (see the instructions for the equipment).
- ❑ Pressurise the brake circuit.
- ❑ Adjust the pressure to between **1.5 bar** < P < **2 bar** for **3 minutes** to stabilise it in the braking circuit.
- ❑ Close the circuit between the bleed screw and brake fluid reservoir without dumping the pressure.

> Note:
>
> The circuit between the bleed screw and brake fluid reservoir is closed in different ways depending on the type of equipment used:
>
> - valve,
> - switch.

- ❑ Fit the bleed containers to the four bleed screws of the callipers.
- ❑ Undo the calliper bleed screws:
  - front left-hand,
  - front right-hand,
  - rear left-hand,
  - rear right-hand.
- ❑ Open the circuit between the bleed screw and brake fluid reservoir and allow the liquid to run until all the air bubbles have been released.
- ❑ Tighten the bleed screws in the following order:
  - front left-hand,
  - front right-hand,
  - rear left-hand,
  - rear right-hand.
- ❑ Undo the calliper bleed screw:
  - front left-hand,
  - allow the fluid to run until all the air bubbles have been released,
  - tighten the bleed screw on the calliper.
- ❑ Carry out the previous operation on the callipers:
  - front right-hand,
  - rear left-hand,
  - rear right-hand.
- ❑ Close the bleed screw to dump the pressure in the brake circuit.
- ❑ Remove the **brake circuit bleeding device** from the master cylinder reservoir.
- ❑ Check pedal travel and resistance. If it is not correct, finish bleeding the brake circuit with the help of a second operator. Start the bleed operation by bleeding the calliper that is the furthest away from the master cylinder:
  - hold down the brake pedal,
  - open the circuit bleed screw to release the air from the brake circuit,
  - close the circuit bleed screw,
  - release the brake pedal.
- ❑ Top up the brake fluid level in the reservoir, if necessary. Check the sealing of the front and rear bleed screws and ensure that the sealing covers are in place (see **30A**, **General information**, **Brake circuit Tightening torque**, page **30A-4**) .
- ❑ During a road test, trigger braking regulation to confirm that the brake pedal travel is correct.
- ❑ Clean off any traces of brake fluid on the vehicle using **BRAKE CLEANING PRODUCT** (see **Vehicle: Parts and ingredients for the repairwork**)

I - FRONT AND REAR BRAKES

Description	Tightening torque (N.m)
Front calliper bleed screw	6.5
Rear calliper bleed screw	14
Front calliper inlet brake hose	17
Rear calliper inlet brake hose	14
Brake hose on brake pipe	14
Front brake guide pin bolt	32
Calliper support bolt	105
Rear brake guide pin bolt	36
Disc mounting bolt	15

II - BRAKE CONTROL

Description	Tightening torque (N.m)
Brake servo mounting bolts	21
Master cylinder mounting nuts	50
Master cylinder outlet pipe	14
Hydraulic unit mounting bolt	8
Hydraulic unit pipe unions	14
Parking brake control mounting nuts	8
Bolts mounting hydraulic unit support on vehicle body	6.5

BRAKE FLUID REPLACEMENT INTERVAL

Our braking technology, and in particular the disc brakes (hollow pistons which conduct little heat, have a low volume of fluid in the cylinder, sliding callipers avoiding the need for a fluid reserve in the least cooled area of the wheel), has allowed us to prevent the risk of « vapour lock» as far as possible, even with heavy braking (mountainous area). However, current brake fluids are subject to minor deterioration during the first months of use due to slight humidity intake. This is why it is recommended that you change the brake fluid: see **maintenance booklet for the vehicle**.

1 - Topping up the level

Wear of the brake pads will result in a gradual drop in the fluid level in the reservoir.

Do not top up the fluid, as the level will rise again when the pads are next changed. The brake fluid level must not fall below the minimum mark.

2 - Approved brake fluid

Mixing two incompatible brake fluids in the brake circuit may lead to:

- serious risk of leakage due mainly to deterioration of the cups,
- deterioration in the operation of the ESP system.

To prevent such risks, it is essential to use only brake fluids that comply with the RENAULT standard (see **Vehicle: Parts and ingredients for the repairwork**) .

	Engine	
	K4J, K4M, K9K	**F9Q, F4R, M9R**
Front brakes (mm)		
Piston diameter	54	54
Disc diameter	280 (1) 300 (2)	300
Disc thickness	24	24
Minimum disc thickness (3)	21.8	21.8
Maximum disc run-out	0.07	0.07
Brake pad thickness (including backplate)	18	18
Minimum pad thickness (including backplate)	6	6
Rear brakes (mm)		
Piston diameter	34	
Disc diameter	270 (1) 274 (2)	
Disc thickness	10	
Minimum disc thickness (3)	9 (1) 9.5 (2)	
Maximum disc run-out	0.07	
Brake pad thickness (including backplate)	16	
Minimum pad thickness (including backplate)	6	
Master cylinder (mm)		
Diameter	23.8	
Stroke	36	

(1) Scenic.

(2) Long Scenic.

(3) Brake discs cannot be reground. If they are too heavily worn or scratched they must be replaced.

I -

DOCUMENT PHASE 2 – M9R, and DOCUMENT PHASE 1

Description	Tightening torque (Nm)
Steering wheel bolt	**44**
Intermediate shaft bolt on steering column	**44**
Universal joint bolt	**44**

II -

F4R or F9Q or K4J or K4M or K9K, and DOCUMENT PHASE 1

Description	Tightening torque (Nm)
Steering wheel bolt	**44**
Intermediate shaft bolt on steering column	**44**
Universal joint bolt	**26**

- ❏ Lock the slip plates of the lift.
- ❏ Position the vehicle on a lift (see **Vehicle: Towing and lifting**) .
- ❏ Check the condition of the following components:
  - track rods,
  - axial ball joint linkages,
  - subframe,
  - lower arm rubber bushes,
  - lower arm ball joints (see **31A**, **Front axle components**, **Front driveshaft lower arm ball joint: Check**, page **31A-25**) ,
  - shock absorbers,
  - tyres,
- ❏ Check:
  - the tyre size (see **35A**, **Wheels and tyres**, **Tyres: Identification**, page **35A-7**) ,
  - the tyre inflation pressure (see **35A**, **Wheels and tyres**, **Tyre inflation pressure: Identification**, page **35A-10**) .
- ❏ Put the vehicle in the VODM position (vehicle in running order) (see **30A**, **General information**, **Underbody height: Adjustment values**, page **30A-9**) :
  - tank full,
  - vehicle empty (without luggage, etc.).
- ❏ Consult:
  - the front axle geometry values (see **30A**, **General information**, **Front axle: Adjustment values**, page **30A-14**) ,
  - the rear axle geometry values (see **30A**, **General information**, **Rear axle: Adjustment values**, page **30A-18**) .
- ❏ Refer to the user manual for the geometry tester.
- ❏ Check the geometry using the geometry tester.
- ❏ If there is an inconsistency between the manufacturer's values and the measured values:
- ❏ Adjust the front axle (see **30A**, **General information**, **Front axle: Adjusting**, page **30A-16**)

I - MEASURING POINTS

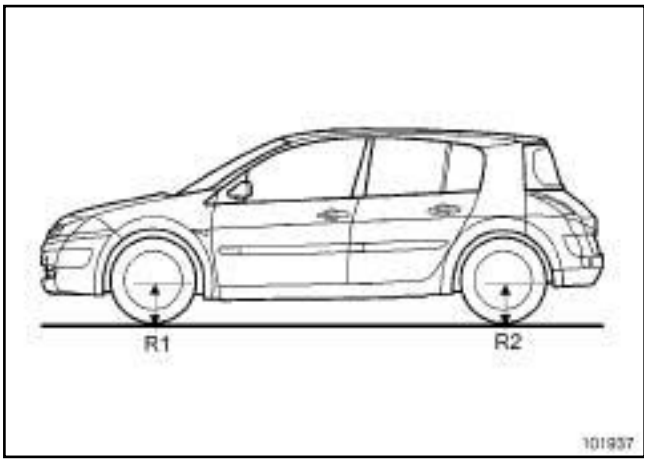

101937

Radius under load:

- (**R1**) : Distance between the ground and the front wheel centre line
- (**R2**) : Height between the ground and the rear wheel centre line

1 - Front height (W1)

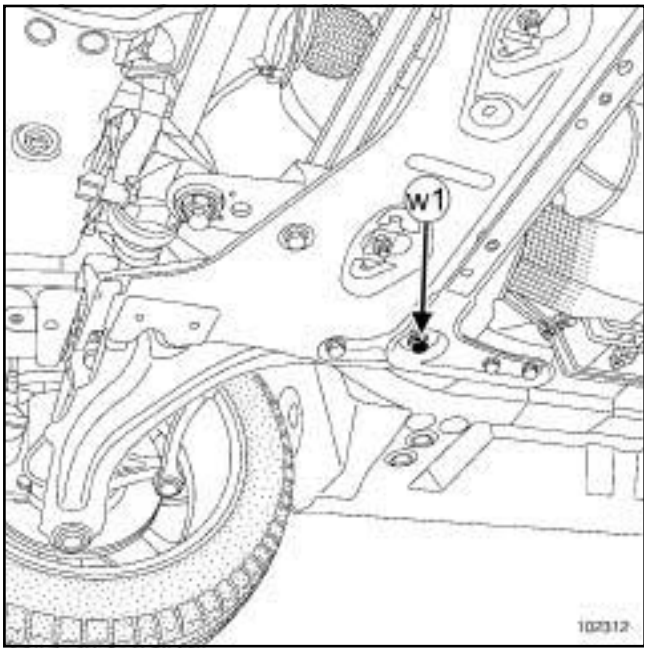

102312

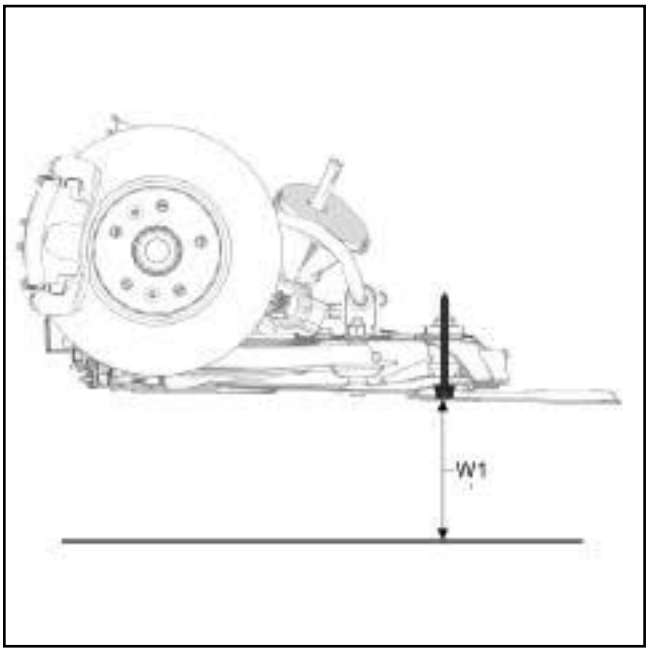

139129

(**W1**) : Height between the ground and the rear cross member bolt head.

2 - Rear height (W2)

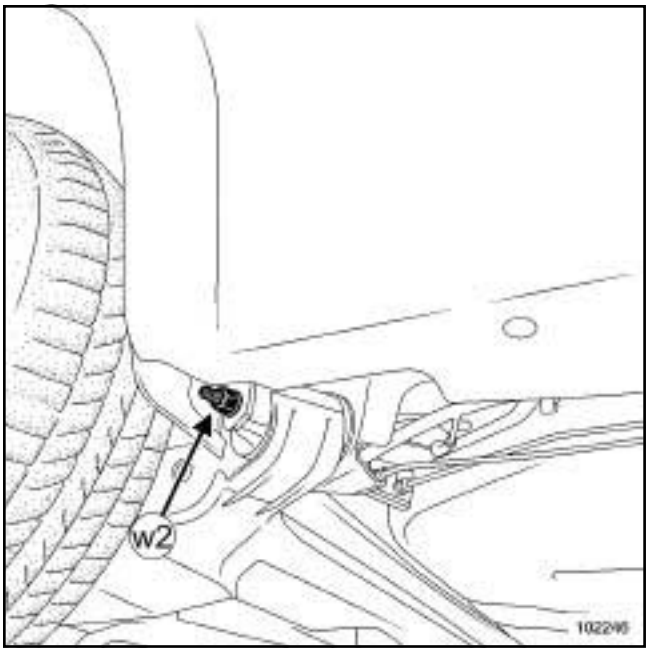

102246

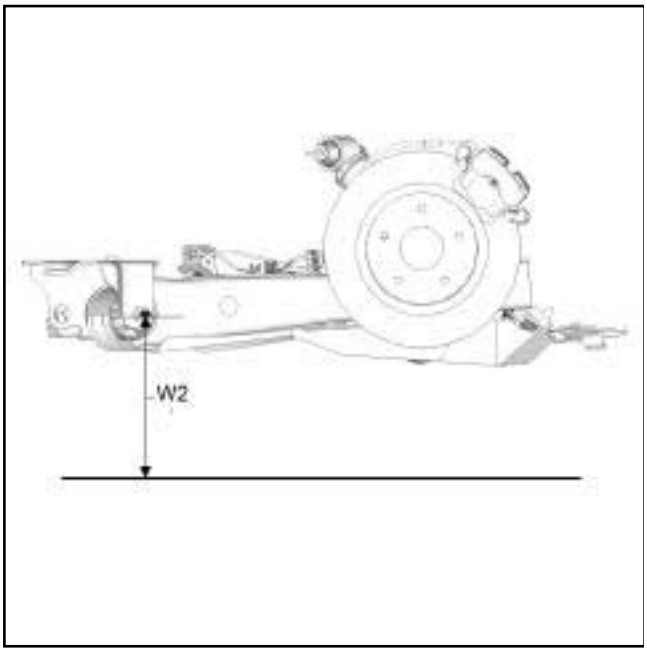

139128

(**W2**) : Height between the ground and the shaft of the rubber bush on the bearing.

II - MEASURING METHODS

> Note:
>
> For measurements ***(W1)*** and ***(W2)*** , take into account the height difference between the plates and the lift.

Measure the heights:

- R1,
- R2,
- W1 right-hand and left-hand,
- W2 right-hand and left-hand.

> Note:
>
> The value of Wx to be entered into the geometry bench is the average of the W1 heights, right-hand and left-hand and of the W2 heights, right-hand and left-hand.

Special cases:

> Note:
>
> If the measuring points are located in empty space (between the rails of the lift), use a bar.

Fit a bar across the lift.

1 - Plate higher than the lift:

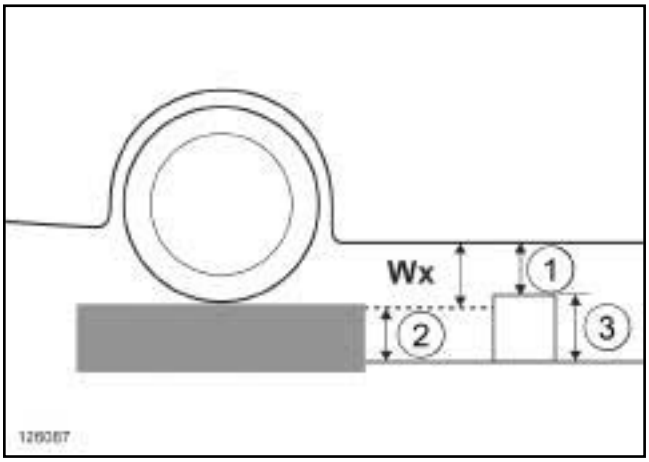

126087

Measure the heights (**1**) , (**2**) and (**3**) .

Example: (**1**) = **13 cm**, (**2**) = **8 cm**, (**3**) = **10 cm**

Calculate the height Wx:

Wx = height (**1**) + height (**3**) - height (**2**)

Wx = **15 cm**

2 - Plate lower than the lift:

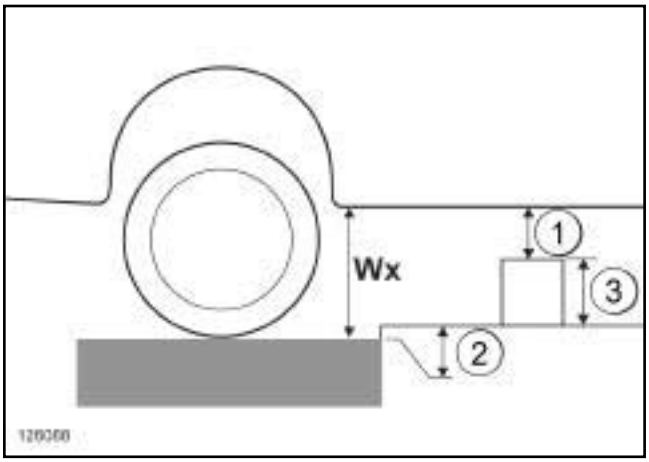

126088

Measure the heights (**1**) , (**2**) and (**3**) .

Example: (**1**) = **8 cm**, (**2**) = **10 cm**, (**3**) = **4 cm**

Calculate the height Wx:

Wx = height (**1**) + height (**2**) + height (**3**)

Wx = **22 cm**

III - VEHICLE IN RUNNING ORDER POSITION

VODM (Vehicle in working order) position:

- tank full,
- vehicle empty (without luggage, etc.).

Note:

The position of the vehicle varies according to:

- the weight of the engine,
- the springs and shock absorbers,
- the tyres,
- the amount of fuel in the tank.

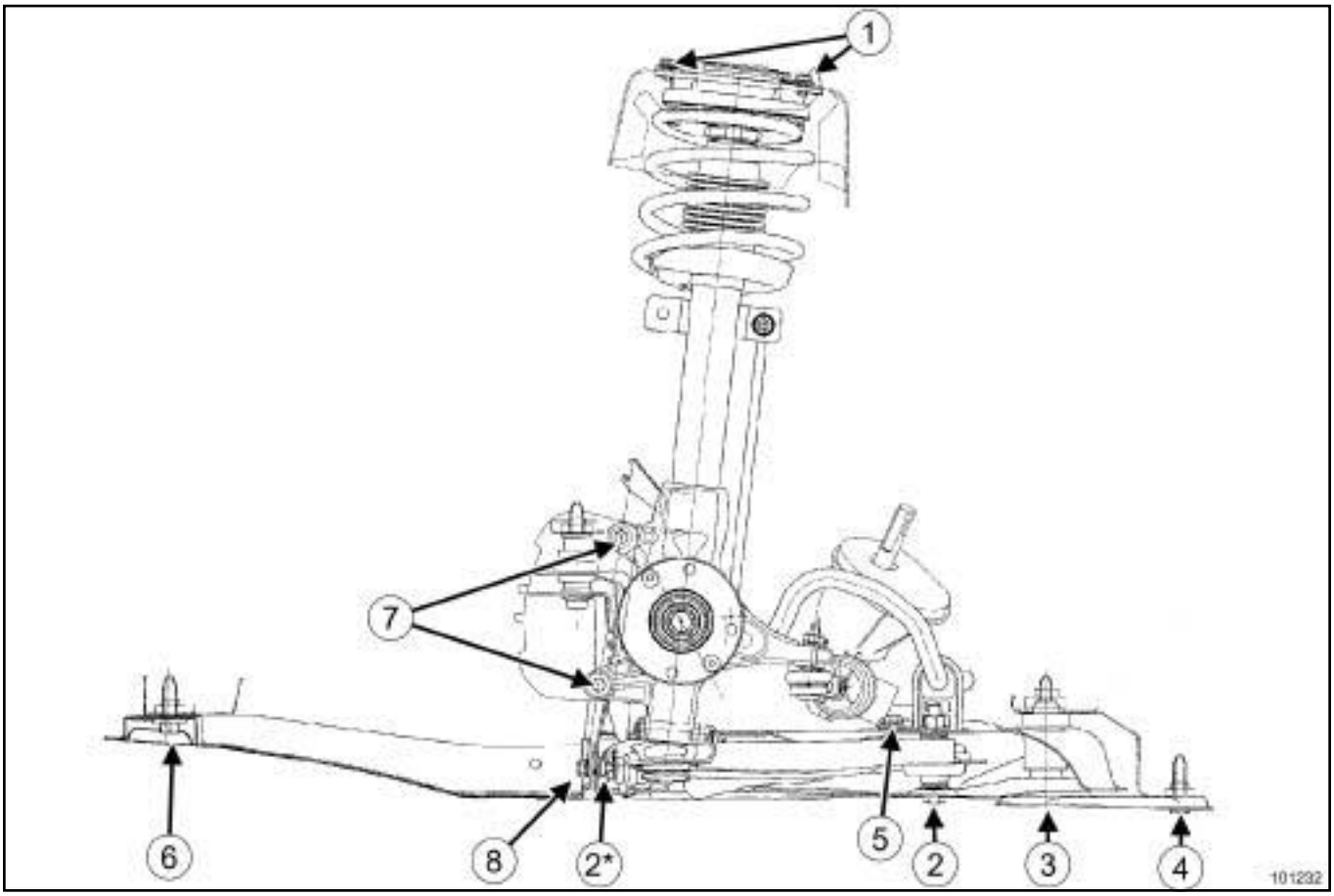

101232

Mark	Description	Tightening torque (Nm)
(**1**)	« spring - shock absorber » assembly bolt on the body	17
(**2**)	Lower arm rear bolt	105
(**2***)	Lower arm front bolt	70
(**3**)	Sub-frame stud bolt	105
(**4**)	Rear cross member bolt	62
(**5**)	Anti-roll bar bolt on the subframe	21
(**6**)	Radiator cross member front bolt	105
(**7**)	Calliper support bolt	105
(**8**)	Radiator cross member rear nut	21
	Steering box bolt on the subframe	105

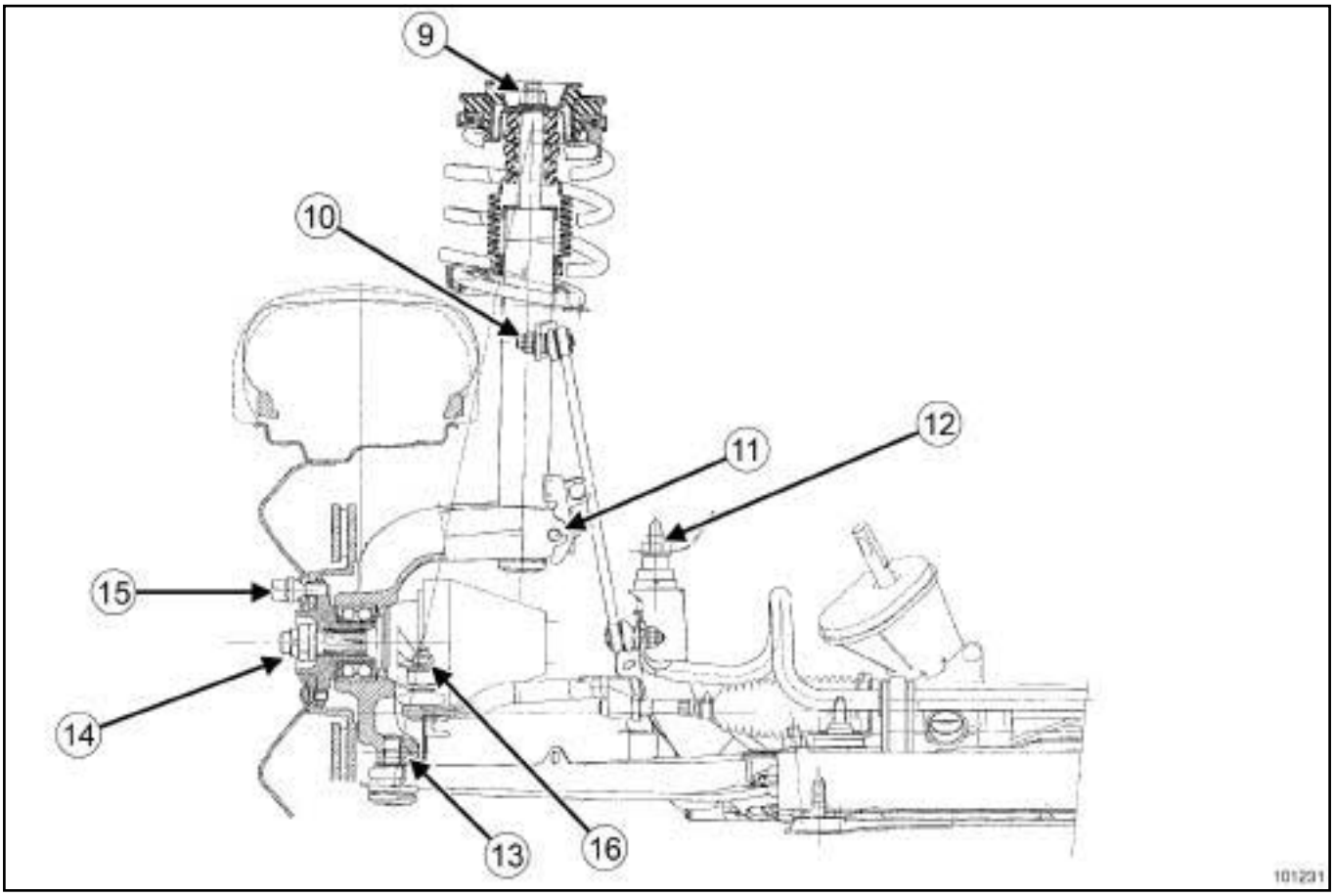

101231

Mark	Description	Tightening torque (Nm)
(**9**)	Shock absorber nut	62
(**10**)	Anti-roll bar tie-rod ball joint nut	44
(**11**)	Shock absorber base bolt	105
(**12**)	Sub-frame tie-rod bolt	105
(**13**)	Lower arm ball joint bolt	60
(**14**)	driveshaft nut	280
(**15**)	Wheel bolts (except M9R)	130
	Wheel bolts (M9R)	110
(**16**)	Track rod end nut	37
	Side stiffener bolt on the radiator cross member	21

I - CHECK

Check the settings of the axle assemblies (see **30A**, **General information**, **Axle assemblies: Check**, page **30A-8**)

II - CASTOR ANGLE

Not adjustable.

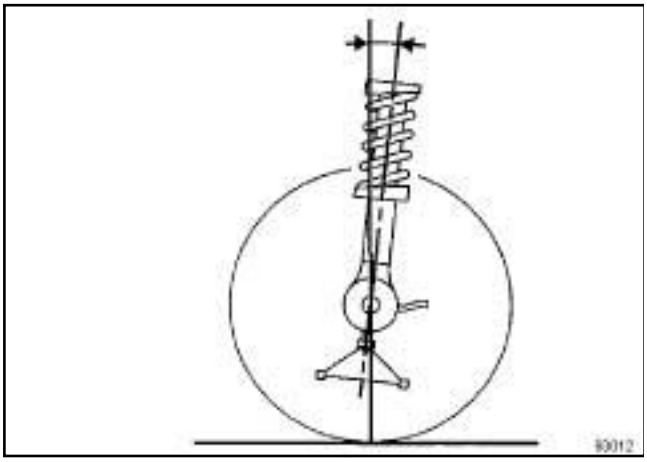

93012

Value	Position of front axle (mm)
+ 4° 54' ± 30'	W2 - W1 = 84
+ 5° 12' ± 30'	W2 - W1 = 74
+ 6° 00' ± 30'	W2 - W1 = 50
+ 6° 12' ± 30'	W2 - W1 = 47
Maximum left - right difference = 30'	

III - CAMBER

Not adjustable.

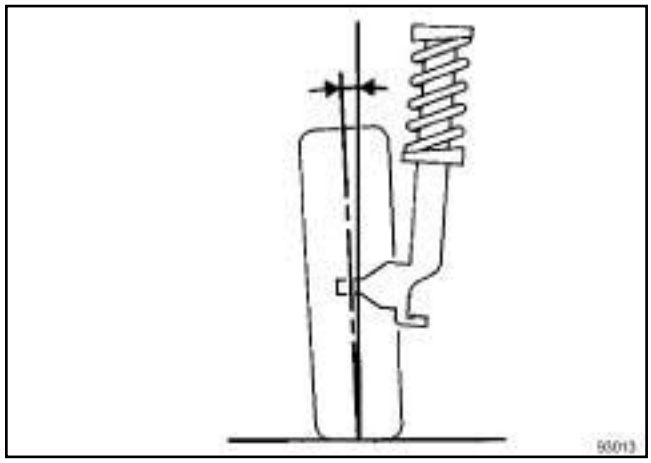

93013

Value	Position of front axle (mm)
0° 00' ± 30'	R1 - W1 = 124
- 0° 02' ± 30'	R1 - W1 = 130
- 0° 10' ± 30'	R1 - W1 = 149
- 0° 13' ± 30'	R1 - W1 = 155
Maximum left - right difference = 30'	

IV - PIVOT

Not adjustable.

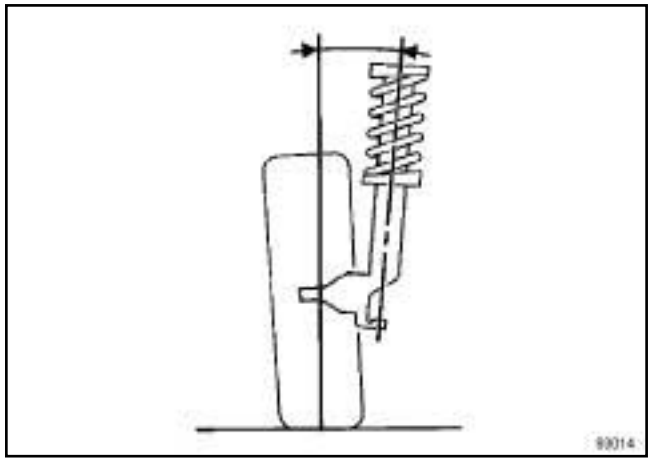

93014

Value	Position of front axle (mm)
+ 10° 52' ± 30'	R1 - W1 = 124
+ 11° 00' ± 30'	R1 - W1 = 130
+ 11° 18' ± 30'	R1 - W1 = 149
+ 11° 28' ± 30'	R1 - W1 = 155
Maximum left - right difference = 30'	

V - WHEEL ALIGNMENT

WARNING

Symbols used by RENAULT:

- toe-out: -
- toe-in: +

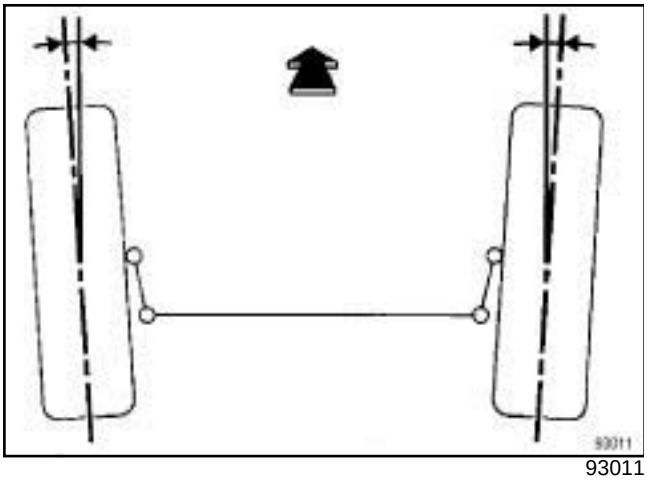

93011

Value (for two wheels)	Position of vehicle
- 0° 10' ± 10'	Vehicle in running order

Essential equipment
steering wheel lock

Tightening torques ▽	
wheel alignment adjustment lock nuts	**53 N.m**

I - ADJUSTMENT PREPARATION STAGE

❑

> Note:
>
> Throughout the axle assembly checking and adjustment process:
>
> - the Renault Card must remain in the reader,
>
> - do not press the « START » button.

❑ Check the geometry (see **30A**, **General information**, **Axle assemblies: Check**, page **30A-8**) .

II - ADJUSTMENT OPERATION

1 - Wheel alignment

❑ Set the wheels straight ahead.

❑ Lock the steering wheel using a **steering wheel lock**.

❑ Adjust the wheel alignment by rotating the track rod sleeves.

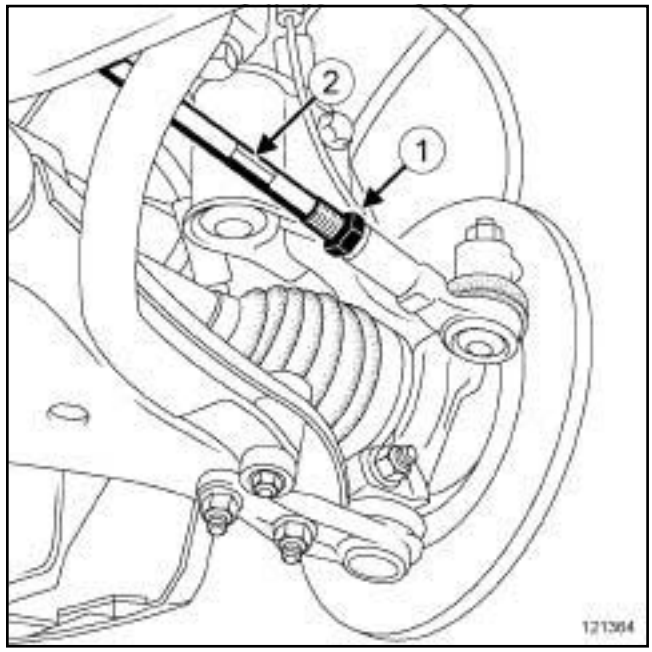

121364

❑ Loosen the wheel alignment adjustment lock nut (**1**) .

❑ Turn the track rod sleeve (**2**) to the required value.

❑ After adjustment, torque tighten the **wheel alignment adjustment lock nuts (53 N.m)**.

2 - Castor angle

❑ Not adjustable.

3 - Camber

❑ Not adjustable.

4 - Pivot

❑ Not adjustable.

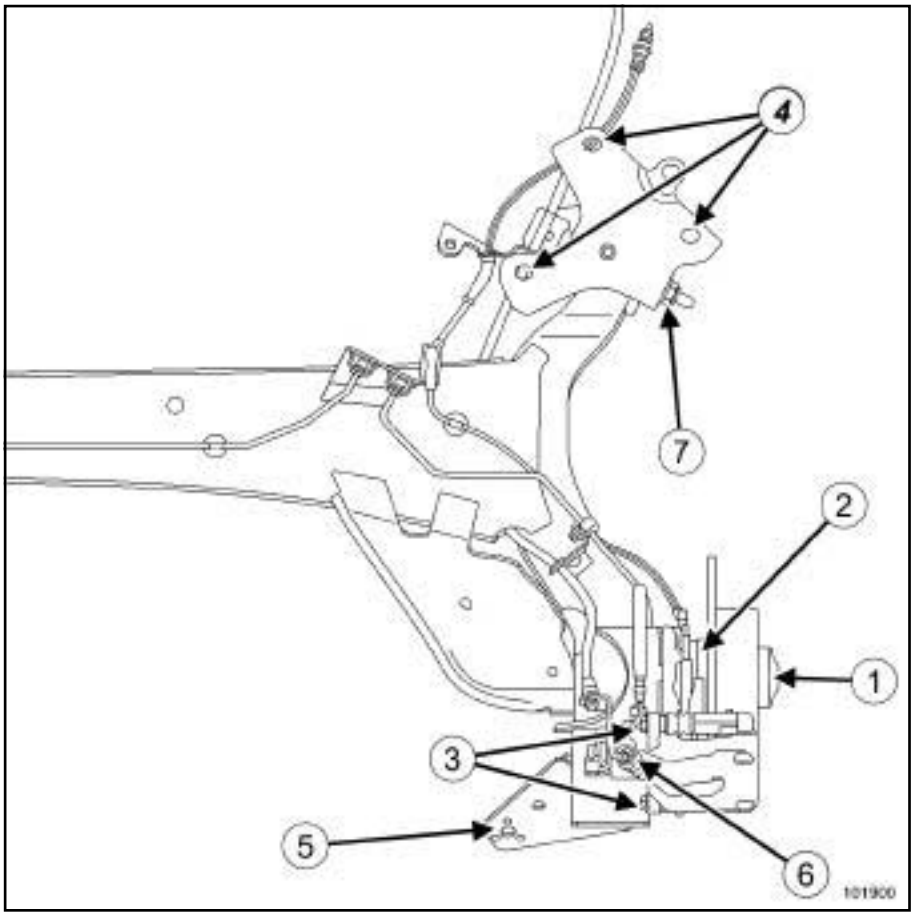

101900

Mark	Description	Tightening torque (Nm)
(**1**)	Stub-axle nut (standard chassis)	**220**
(**1**)	Stub-axle nut (long chassis)	**280**
(**2**)	Calliper support bolt	**105**
(**3**)	Guide pin bolt	**36**
(**4**)	Bearing mounting bolt	**62**
(**5**)	Shock absorber lower mounting bolt	**105**
	Shock absorber upper mounting bolt	**62**
(**6**)	Brake pipe nut	**14**
(**7**)	Bearing - rear axle mounting bolt nut	**125**
	Mounting bolt on guard beneath rear axle	**8**

I - CHECK

Check the settings of the axle assemblies (see **30A**, **General information**, **Axle assemblies: Check**, page **30A-8**)

II - CAMBER

Not adjustable.

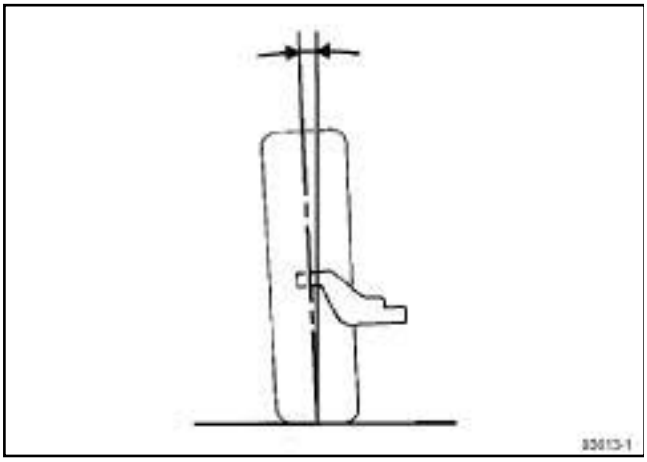

93013-1

Value	Position of vehicle
- 1° 25' ± 20'	Vehicle in running order

III - WHEEL ALIGNMENT

WARNING
Meaning of symbols used in this document,
-: toe-out
+: toe-in

Not adjustable.

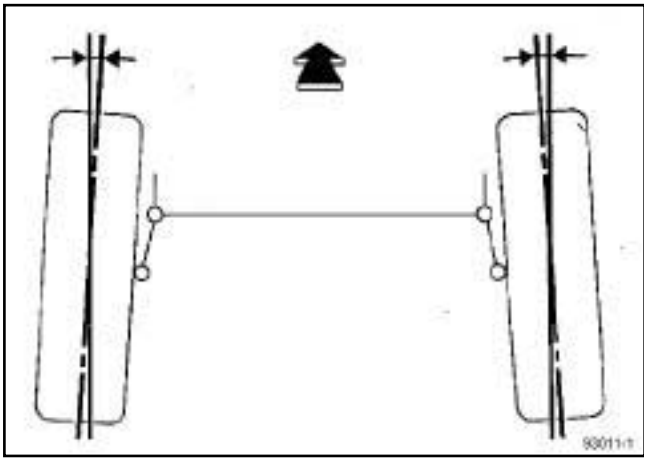

93011-1

Axle part number	Value	Position of vehicle
77 01 475 149 77 01 475 150 77 01 475 706	Toe-in: +0°40' ± 25'	Vehicle in running order
77 01 476 341 77 01 476 344 77 01 476 345	Toe-in: +0°35' ± 25'	

STANDARD CHASSIS, and ADJUSTED SUSPENSION

Axle part number	Value	Position of vehicle
77 01 476 509 77 01 476 512 77 01 477 073 77 01 477 077	Toe-in: -0°29' ± 25'	Vehicle in running order

LONG CHASSIS, and ADJUSTED SUSPENSION

Axle part number	Value	Position of vehicle
77 01 476 513 77 01 477 079	Toe-in: -0°25' ± 20'	Vehicle in running order

EQT LEVEL EA6

Axle part number	Value	Position of vehicle
77 01 476 509 77 01 476 512 77 01 477 073 77 01 477 077	Toe-in: -0°29' ± 25'	Vehicle in running order

STANDARD CHASSIS, and NORMAL SUSPENSION – EQT LEVEL E3 PLUS or EQT LEVEL EA1 or EQT LEVEL EA2 or EQT LEVEL EA3 or EQT LEVEL EA4, and STANDARD CHASSIS, and DOCUMENT PHASE 2

Axle part number	Value	Position of vehicle
77 01 476 509 77 01 476 512 77 01 477 073 77 01 477 077	Toe-in: -0°32' ± 30'	Vehicle in running order

LONG CHASSIS, and NORMAL SUSPENSION – EQT LEVEL E3 PLUS or EQT LEVEL EA1 or EQT LEVEL EA2 or EQT LEVEL EA3 or EQT LEVEL EA4, and LONG CHASSIS, and DOCUMENT PHASE 2

Axle part number	Value	Position of vehicle
77 01 476 513 77 01 477 079	Toe-in: -0°31' ± 20'	Vehicle in running order

Essential equipment
safety strap(s)

Tightening torques ▽	
mounting bolt joints	**12.5 daNm**

WARNING
Never use the rear axle as support for a lifting system.

❑ Position the vehicle on a two-post lift (see **Vehicle: Towing and lifting**) (MR 370, 02A, Lifting equipment).

Note:
- During this operation, strap the vehicle to the lift using a **safety strap(s)**, to avoid any imbalance.
- For the procedure to fit the **safety strap(s)** (see **Vehicle: Towing and lifting**) (MR 370, 02A, Lifting equipment).

The operation is carried out with the shock absorber lower mounting removed.

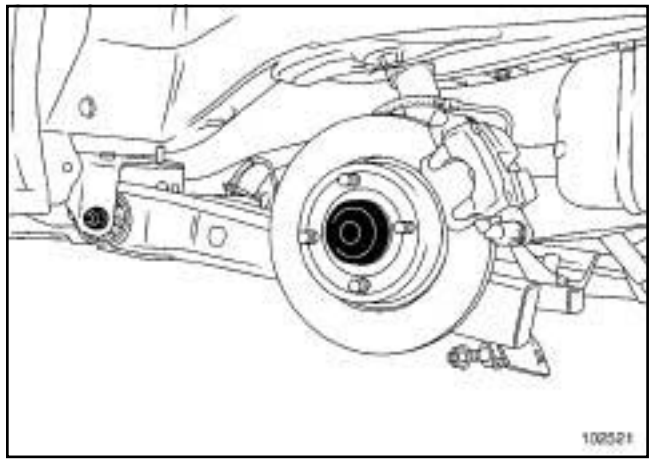

102521

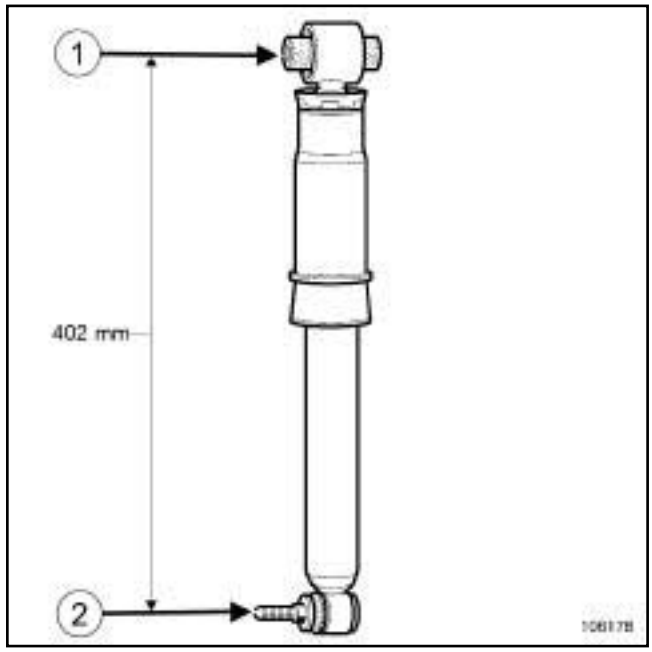

106178

❑ Adjust the height of the pads to obtain a centre-to-centre distance between the shock absorber mounting points (body mounting (**1**) , axle mounting (**2**)) corresponding to a length of **402 mm**.

❑ Torque tighten the **mounting bolt joints (12.5 daNm)**.

Essential special tooling	
Fre. 1190-01	Brake calliper piston return tool.

Tightening torques ▽	
bolts of the calliper guide pins	**27 N.m**

This procedure concerns **TEVES** type brake pads.

WARNING

In order not to damage the brake hose:

- do not tension the hose,
- do not twist the hose,
- check that there is no contact with the surrounding components.

When replacing brake pads, it is essential to replace the pads on the opposite side.

REMOVAL

I - REMOVAL PREPARATION OPERATION

❑ Position the vehicle on a two-post lift (see **Vehicle: Towing and lifting**) (02A, Lifting equipment).

❑ Remove the front wheel (see **35A**, **Wheels and tyres**, **Wheel: Removal - Refitting**, page **35A-1**) .

II - OPERATION FOR REMOVAL OF PART CONCERNED

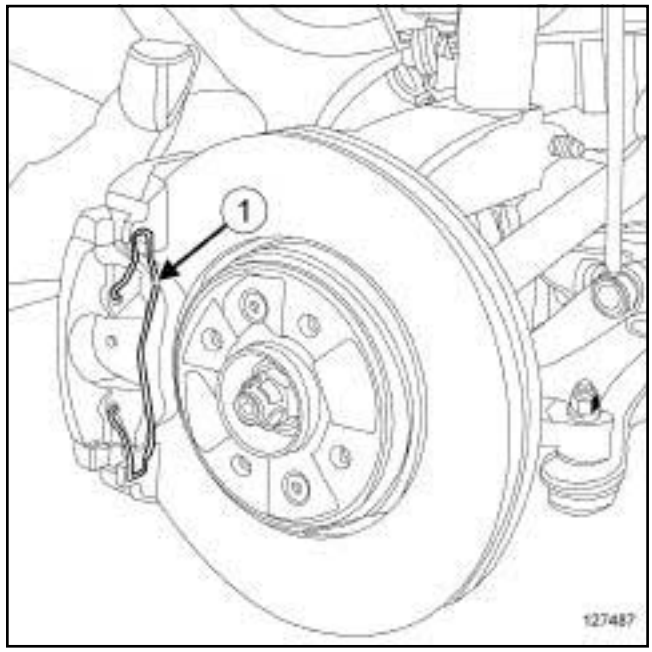

127487

❑ Unclip the brake hose from the shock absorber.

❑ Remove the retaining spring (**1**) from the brake calliper using a flat-blade screwdriver.

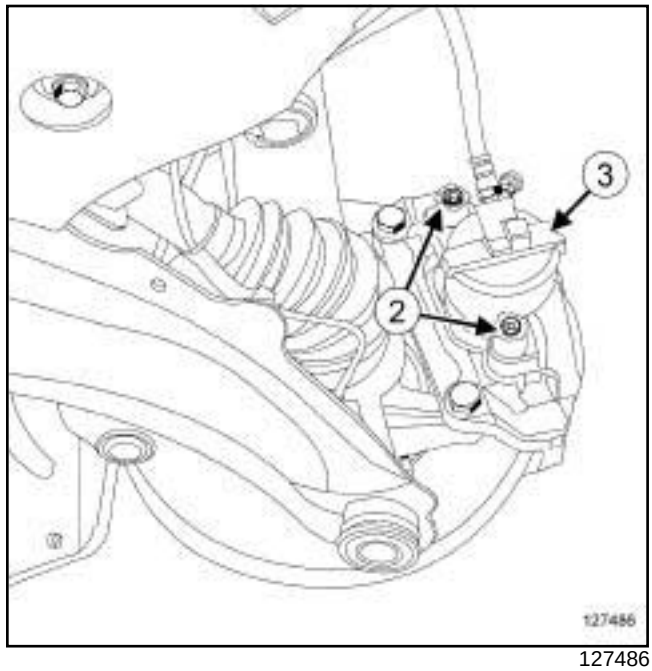

127486

❑ Remove:

- the caps (**2**) from the guide pin bolts,
- the calliper guide pin bolts (**2**) ,
- the calliper (**3**) from its support.

❑ Attach the calliper (**3**) to the shock absorber spring.

❑ Remove the brake pads.

REFITTING

I - REFITTING PREPARATION OPERATION

- **parts always to be replaced: Front brake calliper guide pin bolt (13,03,03,07)**.
- Measure the thickness of the pads and then compare them to the minimum values (see **30A**, **General information**, **Brake: Specifications**, page **30A-6**) .
- Do not allow friction materials to come into contact with grease, oil or other lubricants and cleaning products which are mineral oil based.
- Clean using a wire brush and **BRAKE CLEANER** (see **Vehicle: Parts and ingredients for the repairwork**) (04B, Consumables - Products):
  - the calliper supports,
  - the callipers.
- Push the piston with the tool **(Fre. 1190-01)**.

II - REFITTING OPERATION FOR PART CONCERNED

- Refit:
  - the brake pads,
  - the brake calliper,
  - the calliper retaining spring.
- Torque tighten the **bolts of the calliper guide pins (27 N.m)**.
- Refit the guide pin bolt caps.
- Attach the brake hose to the shock absorber.

> **IMPORTANT**
> To avoid any accident, bring the pistons, brake pads and brake discs into contact by depressing the brake pad several times.

III - FINAL OPERATION

- Refit the front wheel (see **35A**, **Wheels and tyres**, **Wheel: Removal - Refitting**, page **35A-1**) .

Essential equipment
pedal press

Tightening torques ▽	
brake hose on the calliper	**1.7 daNm**
brake hose on the union	**1.4 daNm**
bleed screw	**0.65 daNm**

IMPORTANT
Be sure to follow the order of operations in the procedure described below.

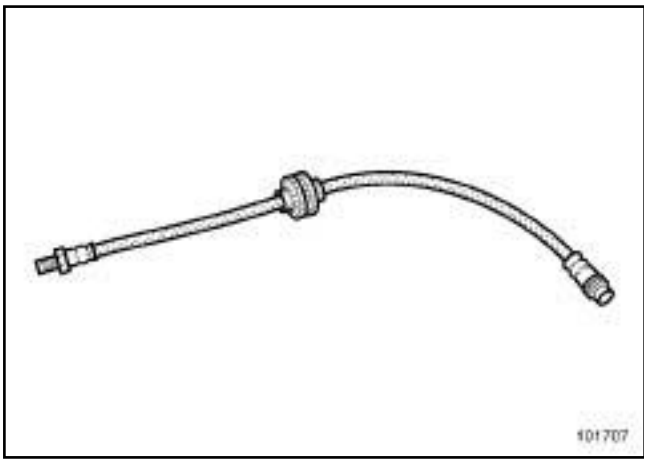

101707

REMOVAL

❑

WARNING
Drain the brake fluid to prevent damage to the mechanical parts and bodywork around the braking system.

❑ Fit the **pedal press** to the brake pedal to limit the outflow of brake fluid.

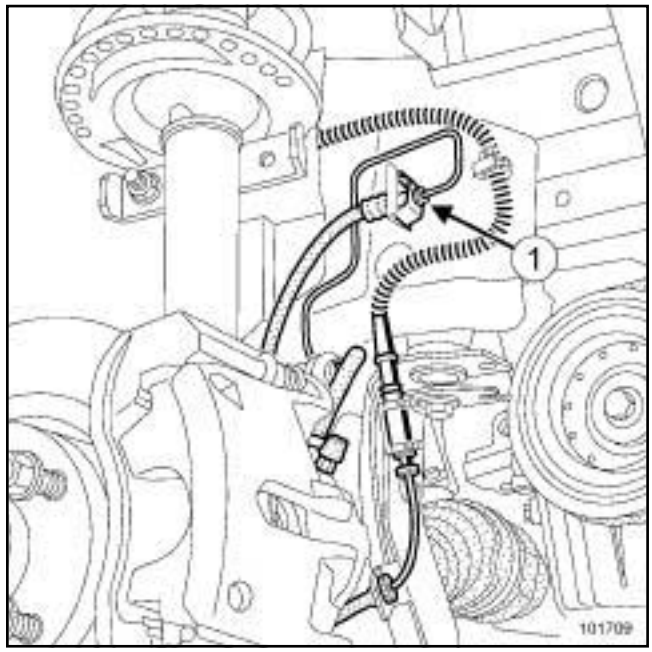

101709

❑ Unscrew:

- the pipe union (**1**) ,
- the calliper hose.

REFITTING

❑

WARNING
Do not twist the brake pipe, and straighten the wheels as steering lock makes it easier for the unit to become twisted.

Make sure that there is no contact between the brake pipe and the surrounding components.

Note:
The pipe supplied as spare parts are encased in a spring to prevent them from being twisted during fitting.

❑ Refit the brake hose at the calliper end.

❑ Torque tighten:

- the **brake hose on the calliper (1.7 daNm)**,
- the **brake hose on the union (1.4 daNm)**.

❑ Position the female end of the brake pipe on the retaining bracket without straining it by twisting.

❑ Make sure that the end piece engages freely into the bracket splines.

- ❑ Fit:
  - the spring,
  - the rigid pipe on the brake hose, making sure that the hose does not twist when screwing on the rigid pipe.
- ❑ Bleed the brake circuit ((see **30A**, **General information**)).
- ❑ Torque tighten the **bleed screw (0.65 daNm)**.

Essential special tooling	
Fre. 1190-01	Brake calliper piston return tool.

Essential equipment
pedal press

Tightening torques ▽	
guide pin bolts	**3.2 daNm**
brake hose	**1.7 daNm**
bleed screw	**0.65 daNm**
wheel bolts	**13 daNm**

Note:

The callipers supplied as replacement parts are pre-filled.

❏ When replacing brake pads or a disc, be sure to replace the pads or disc on the opposite side.

REMOVAL

❏ Position the vehicle on a two-post lift.

WARNING
Prepare for brake fluid outflow, to prevent damage to the mechanical parts and bodywork around the braking system.

❏ Fit the **pedal press** to the brake pedal to limit the outflow of brake fluid.

❏ Unlock the steering wheel.

❏ Remove the front wheels.

❏ Release the brake hose from the brake calliper.

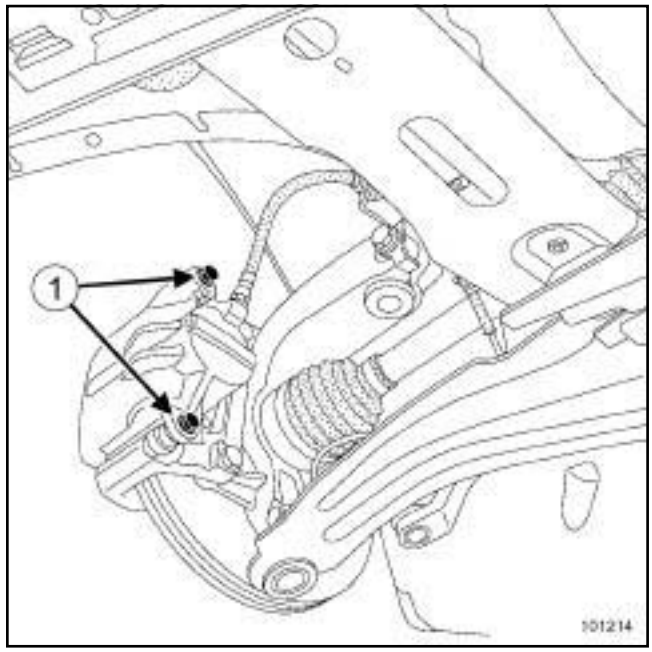

101214

❏ Remove:

- the two guide pin bolts (**1**) ,
- the brake calliper,
- the brake pads.

❏ Check the condition of the braking components (replace defective parts).

❏ Clean the calliper supports and callipers.

REFITTING

❏ Push the piston back using the **(Fre. 1190-01)** until it is at the end of its bore.

❏ Fit the pads, starting from the inside.

❏ Refit:

- the calliper,
- the guide pin bolt.

❏ Torque tighten:

- the **guide pin bolts (3.2 daNm)**,
- the **brake hose (1.7 daNm)**.

WARNING
- Refasten the brake hose and wheel speed sensor wiring, if they have been unclipped.
- Do not twist the brake hose.

- ❏ Refit the wheels.
- ❏ Torque tighten:
  - the **bleed screw (0.65 daNm)**,
  - the **wheel bolts (13 daNm)**.
- ❏ Bleed the brake circuit partially if the compensation reservoir is not completely emptied during the procedure. Otherwise, carry out a full bleed ((see **30A**, **General information**)).
- ❏ Check the brake fluid level.

Essential special tooling	
Fre. 1190-01	Brake calliper piston return tool.

Essential equipment
pedal press

IMPORTANT
Consult the safety and cleanliness advice and operation recommendations before carrying out any repair (see **Front axle assemblies: Precautions for repair**) .

WARNING
Prepare for the flow of fluid, and protect the surrounding components.

REPAIR

I - REPAIR PREPARATION OPERATION

❑ Position the vehicle on a two-post lift (see **Vehicle: Towing and lifting**) (02A, Lifting equipment).

❑ Position the **pedal press** on the brake pedal to limit the outflow of brake fluid.

❑ Remove:

- the front wheel (see **35A**, **Wheels and tyres**, **Wheel: Removal - Refitting**, page **35A-1**) ,
- the front brake calliper (see **31A**, **Front axle components**, **Front brake calliper: Removal - Refitting**, page **31A-5**) .

II - REPAIR OPERATION FOR PART CONCERNED

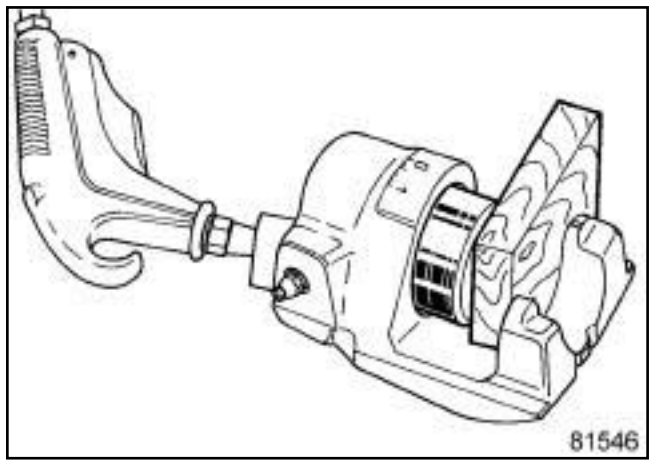

81546

❑ Remove the piston using compressed air, making sure to insert a wooden block between the calliper and the piston to avoid damaging it. Any trace of impact on the end panel will render the piston unfit for use.

❑ Remove the dust seal.

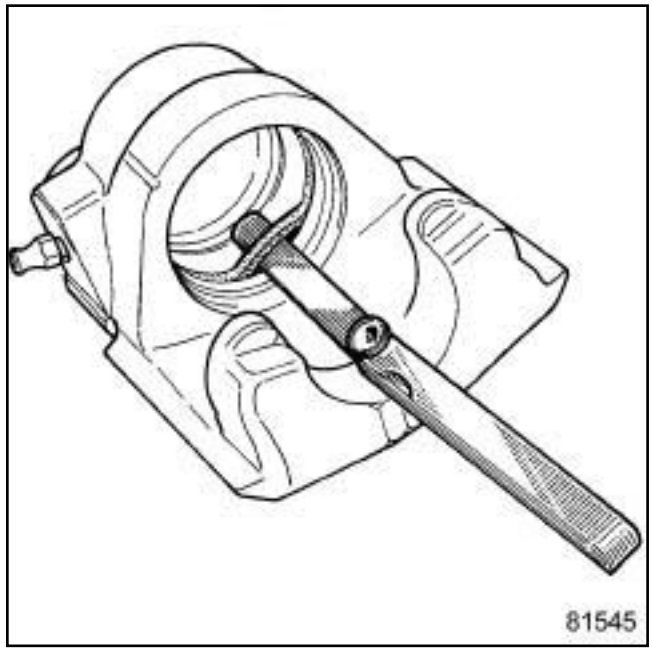

81545

❑ Remove the rectangular section seal from the calliper groove with a round edged spring blade (feeler gauge).

WARNING
The whole calliper must systematically be replaced if there are any scratches in the calliper bore.

❑ Clean the parts using methylated spirit.

REFITTING

I - REFITTING OPERATION FOR PART CONCERNED

❑ Refit:

- the new rectangular section seal in the calliper groove,
- the piston (after having smeared it with the grease supplied in the repair kit) using the **(Fre. 1190-01)**,
- the dust seal.

II - FINAL OPERATION.

❑ Refit:

- the brake calliper (see **31A**, **Front axle components**, **Front brake calliper: Removal - Refitting**, page **31A-5**) ,
- the front wheel (see **35A**, **Wheels and tyres**, **Wheel: Removal - Refitting**, page **35A-1**) .

❑ Remove the **pedal press**.

> **IMPORTANT**
> To avoid any accident, bring the pistons, brake pads and brake discs into contact by depressing the brake pad several times.

❑ Bleed the brake circuit (see **30A**, **General information**, **Brake circuit Bleeding**, page **30A-2**) .

Essential special tooling	
Fre. 1190-01	Brake calliper piston return tool.

Tightening torques ▽	
calliper mounting bolts	**10.5 daNm**
guide pin bolts	**3.2 daNm**

❑ When replacing brake pads or a disc, it is essential to change the pads and disc on the opposite side.

REMOVAL

❑ Position the vehicle on a two-post lift (see **Vehicle: Towing and lifting**) (MR 370, 02A, Lifting equipment).

❑ Remove the front wheels (see **35A**, **Wheels and tyres**, **Wheel: Removal - Refitting**, page **35A-1**) .

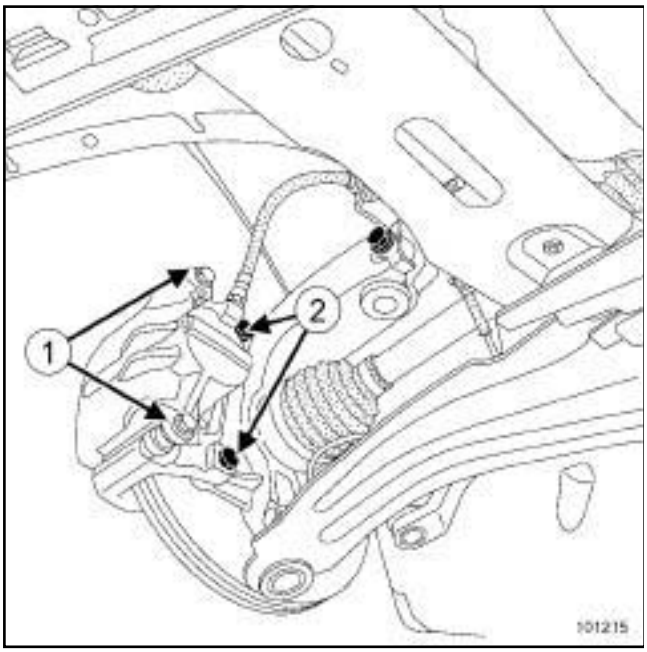

101215

❑ Remove the guide pin bolts (**1**) .

❑ Hang the brake calliper from the suspension spring.

❑ Remove:

- the brake pads,
- the two calliper mounting bolts (**2**) ,
- the calliper mounting.

❑ Check the condition of the braking components (replace defective parts).

❑ Clean the calliper supports and callipers.

REFITTING

❑ Push the piston back using the **(Fre. 1190-01)** until it is at the end of its housing.

The calliper mounting bolts and the guide pin bolts must be coated with **FRENBLOC** type product before being fitted.

❑ Refit:

- the calliper mounting,
- the calliper mounting bolts.

❑ Torque tighten the **calliper mounting bolts (10.5 daNm)**.

❑ Fit the pads, starting from the inside.

❑ Refit:

- the calliper,
- the guide pin bolts.

WARNING

- Reattach the brake hose and wheel speed sensor wire if they have been detached.
- Do not twist the brake hose.

❑ Check the brake fluid level.

❑ Torque tighten the **guide pin bolts (3.2 daNm)**.

❑ Refit the wheels (see **35A**, **Wheels and tyres**, **Wheel: Removal - Refitting**, page **35A-1**) .

❑

IMPORTANT

Depress the brake pedal several times to bring the pistons, brake pads and discs into contact.

❑ Check the brake fluid level.

I - PREPARATION OPERATION FOR CHECK

Position the vehicle on a two-post lift (see **Vehicle: Towing and lifting**) (02A, Lifting equipment).

Remove the wheel (see **35A**, **Wheels and tyres**, **Wheel: Removal - Refitting**, page **35A-1**) .

II - CHECKING OPERATION FOR PART CONCERNED

Note:

Use a Palmer type tool to check the thickness of the disc.

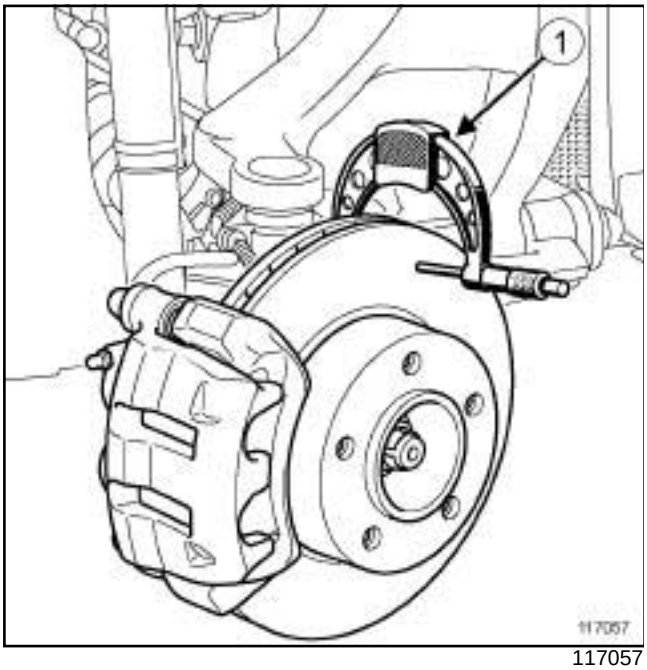

117057

Position the Palmer tool (**1**) to measure the disc thickness.

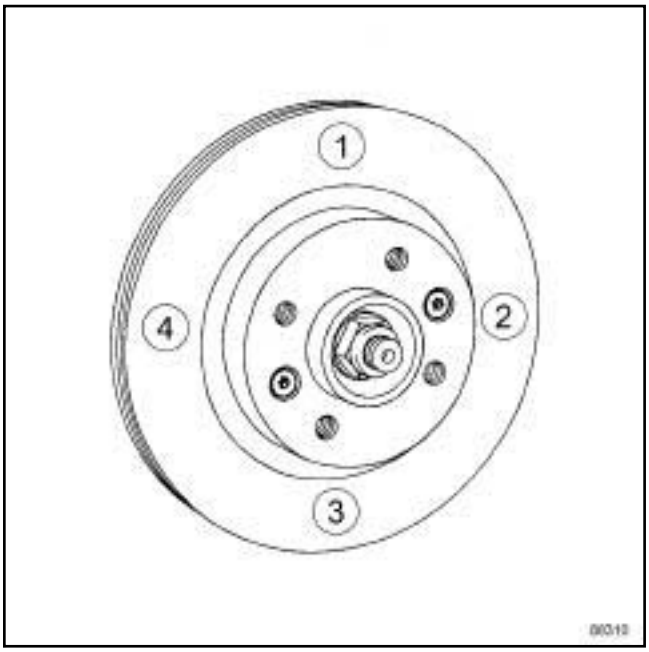

88310

Measure the thickness of the disc at 4 points in order (90˚ apart).

Compare the values with those recommended by the manufacturer (see **30A**, **General information**, **Brake: Specifications**, page **30A-6**) .

III - FINAL OPERATION

Replace the discs if necessary (see **31A**, **Front axle components**, **Front brake disc: Removal - Refitting**, page **31A-11**) .

Refit the wheel (see **35A**, **Wheels and tyres**, **Wheel: Removal - Refitting**, page **35A-1**) .

Tightening torques ▽	
disc bolts	**15 Nm**
calliper bracket bolts	**105 Nm**

REMOVAL

- ❑ Brake discs cannot be reground. If there is excessive scoring or wear, they will need to be replaced.
- ❑ When replacing a brake disc, be sure to replace the disc on the opposite side.
- ❑ Be sure to replace the brake pads if the brake discs are being replaced.
- ❑ Position the vehicle on a two-post lift (see **Vehicle: Towing and lifting**) (MR 370, 02A, Lifting equipment).
- ❑ Unlock the steering wheel.
- ❑ Remove the front wheels (see **35A**, **Wheels and tyres**, **Wheel: Removal - Refitting**, page **35A-1**) .

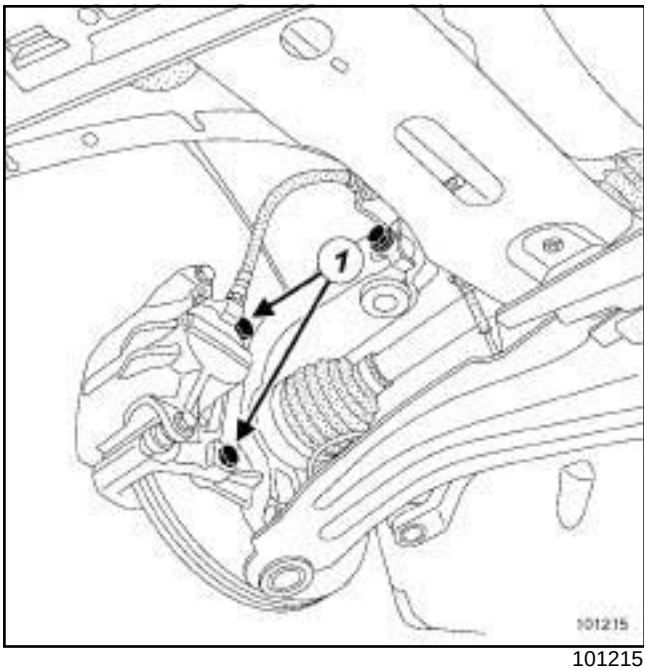

101215

- ❑ Remove both calliper bracket bolts (**1**) .
- ❑ Suspend the calliper-calliper support assembly.

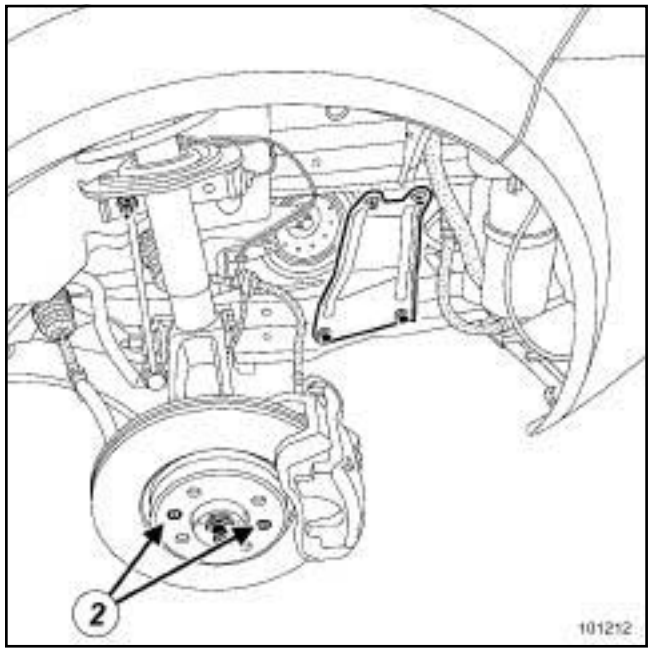

101212

- ❑ Remove
  - the calliper mounting,
  - the two disc bolts (**2**) ,
  - the disc.

REFITTING

- ❑

> **WARNING**
> - Attach the wheel speed sensor wiring and hose if they were detached.
> - Do not twist the brake hose.

- ❑ Clean the calliper mountings and callipers.
- ❑ Proceed in the reverse order to removal.
- ❑ Torque tighten:
  - the **disc bolts (15 Nm)**,
  - the **calliper bracket bolts (105 Nm)**.
- ❑ The calliper bracket bolts must be coated with a product such as **FRENBLOC** before they are fitted.
- ❑ Refit the wheels (see **35A**, **Wheels and tyres**, **Wheel: Removal - Refitting**, page **35A-1**) .

Essential special tooling	
Rou. 604-01	Hub locking tool.
Tav. 476	Ball joint extractor.
Sus. 1731	Front shock absorber removal tool.

Essential equipment
diagnostic tool

Tightening torques ▽	
shock absorber lower bolt	**105 Nm**
lower ball joint nut	**62 Nm**
track rod end nut	**37 Nm**
front brake disc bolts	**15 Nm**
front wheel driveshaft nut	**280 Nm**
front brake calliper mounting bolts	**105 Nm**
wheel bolts	**130 Nm**

REMOVAL

❑ Position the vehicle on a two-post lift (see **Vehicle: Towing and lifting**) (MR 370, 02A, Lifting equipment).

❑ Disconnect the battery (see **Battery: Removal - Refitting**) (MR 370, 80A, Battery).

❑ Remove the front wheel (see **35A**, **Wheels and tyres**, **Wheel: Removal - Refitting**, page **35A-1**) .

❑ Unclip:

- the wheel speed sensor from the hub carrier,
- the xenon bulb sensor (if fitted to the vehicle).

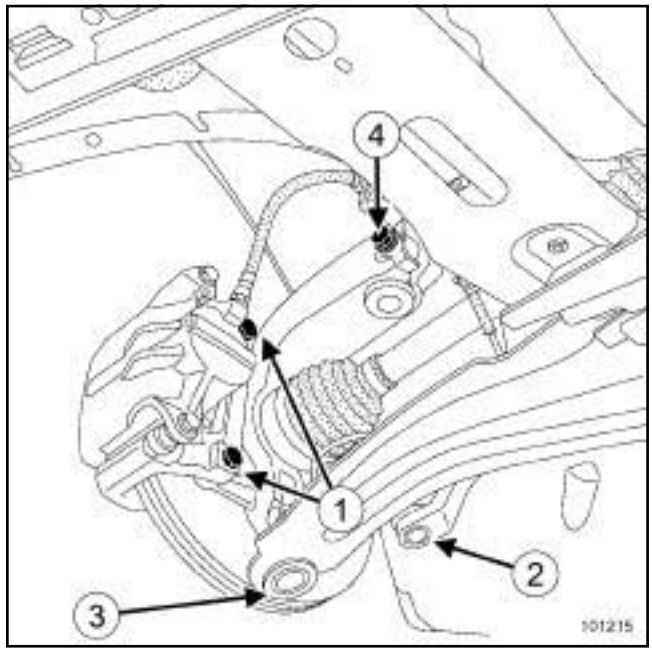

101215

❑ Remove:

- the front brake calliper mounting bolts (**1**) .
- the track rod end nut (**2**) ,
- the lower ball joint nut (**3**) ,
- the lower bolt (**4**) from the shock absorber.

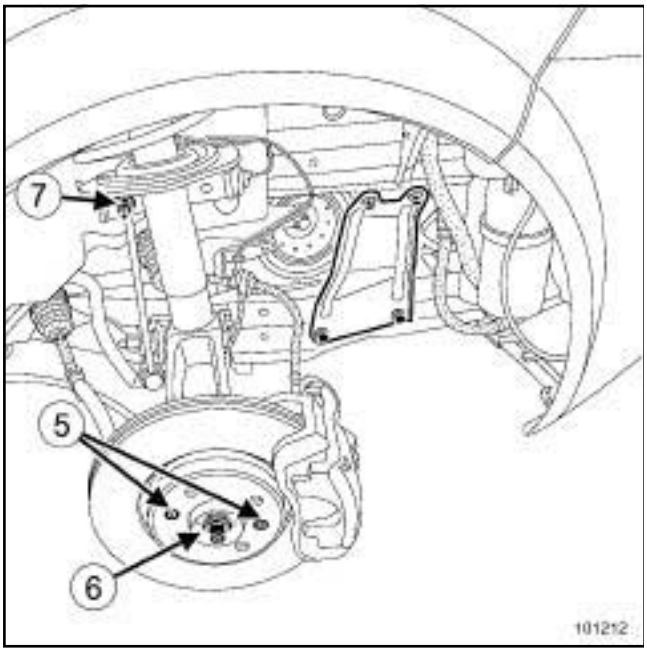

101212

❑ Hang the « front brake calliper - front brake calliper mounting » assembly on the suspension spring.

WARNING

In order to prevent irreversible damage to the front hub bearing:

- Do not loosen or tighten the driveshaft nut when the wheels are on the ground.
- Do not place the vehicle with its wheels on the ground when the driveshaft has been loosened or removed.

❑ Remove:

- the front brake disc bolts (**5**) ,
- the nut (**6**) from the front wheel driveshaft using the **(Rou. 604-01)**,
- the front brake disc,
- the anti-roll bar tie rod upper nut (**7**) ,
- the anti-roll bar tie-rod.

❑ Extract the ball joints using the **(Tav. 476)**.

❑ Remove the front wheel driveshaft from the front driveshaft hub carrier, taking care not to extract the driveshaft from the front wheel.

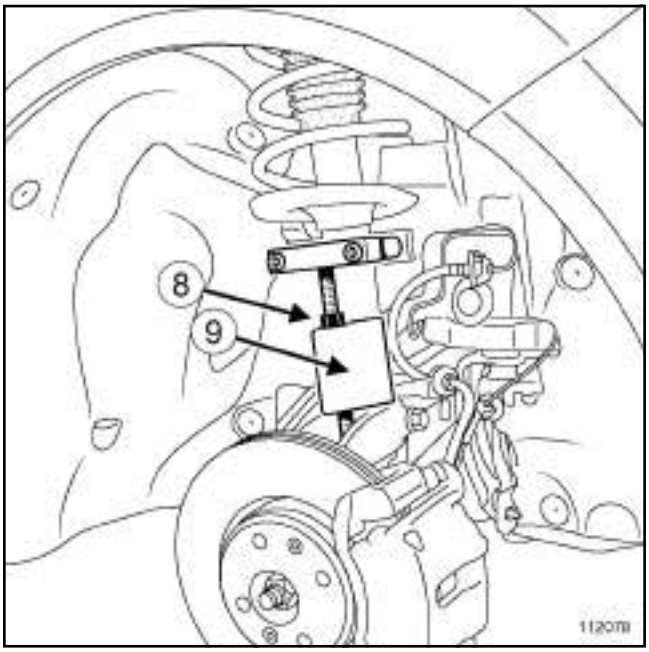

112078

❑ Position the **(Sus. 1731)**.

❑ Tighten the bolt (**8**) of the **(Sus. 1731)** to remove the hub carrier from the front driveshaft while holding it.

Note:

Take care not to drop the hub carrier.

❑ Check that section (**9**) of the **(Sus. 1731)** is pressed firmly against the shock absorber base.

REFITTING

❑ Proceed in the reverse order to removal.

Note:

The calliper mounting bolts must be coated with a product such as **HIGH RESISTANCETHREAD LOCK** before being refitted.

- Torque tighten:
  - the **shock absorber lower bolt (105 Nm)**,
  - the **lower ball joint nut (62 Nm)**,
  - the **track rod end nut (37 Nm)**,
  - the **front brake disc bolts (15 Nm)**,
  - the **front wheel driveshaft nut (280 Nm)**,
  - the **front brake calliper mounting bolts (105 Nm)**,
  - the **wheel bolts (130 Nm)**.

IMPORTANT
To avoid any accident, bring the pistons, brake pads and brake discs into contact by depressing the brake pad several times.

- Connect the battery (see **Battery : Removal - Refitting**) (MR 370, 80A, Battery).
- Adjust the axle assemblies (see **30A**, **General information**, **Front axle: Adjustment values**, page **30A-14**) .
- When adjusting the axle assemblies, program the steering wheel torque and angle sensor **diagnostic tool** (see **Fault finding - Replacement of components**) (MR 372, 36B, Power-assisted steering).
- Adjust the xenon headlights, if fitted to the vehicle (see **Xenon headlights: Adjustment**) (MR 370, 80C, Xenon bulbs).

REMOVAL

❑ Position the vehicle on a two-post lift (see **Vehicle: Towing and lifting**) (MR 370, 02A, Lifting equipment).

❑ Remove the front driveshaft hub carrier (see **31A**, **Front axle components**, **Front driveshaft hub carrier: Removal - Refitting**, page **31A-12**) .

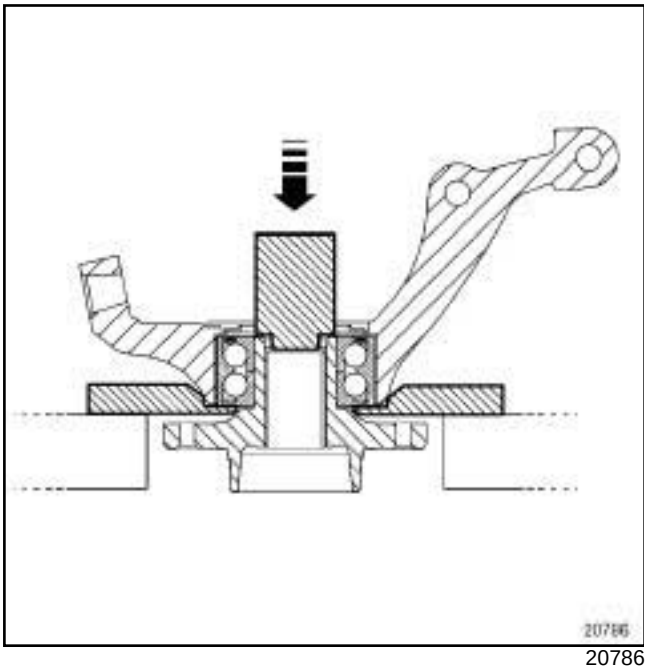

20786

❑ Remove:

- the hub, with the press, applying pressure with a **41 mm** diameter tube,
- the circlip.

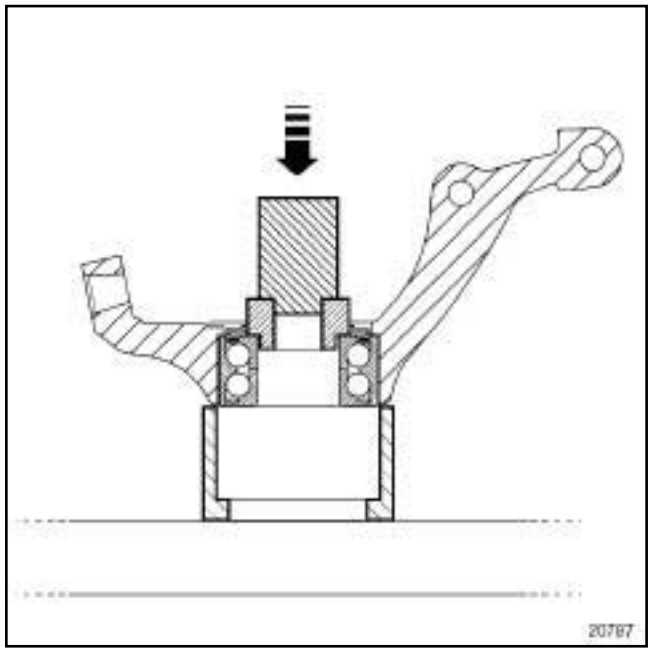

20787

❑ Remove the bearing, applying pressure to the inner bearing bush with a **46 mm** diameter tube.

REFITTING

❑

> **WARNING**
> To ensure that the wheel speed sensor works properly, do not mark the sensor target on the bearing.

❑ It is essential to check the condition of the hub surface and the hub carrier bore before refitting the bearing.

❑ Replace the front driveshaft hub carrier if it is faulty.

❑ Clean:

- the inner and outer surfaces of the new bearing in contact with the front driveshaft hub carrier and the hub,
- the surfaces of the front driveshaft hub carrier in contact with the new bearing,
- the hub surfaces in contact with the new bearing.

❑

> **WARNING**
> Do not press the bearing's internal bush so as to avoid damaging the bearing (very high shrink-fitting force).

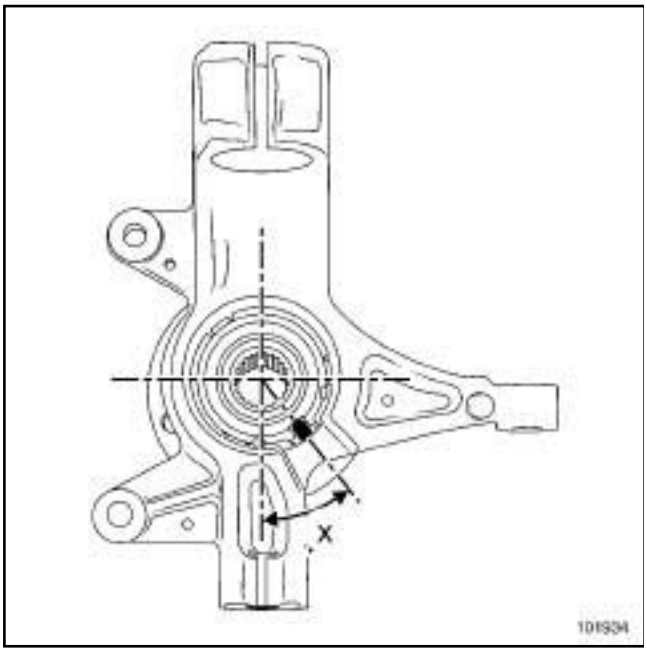

101934

- ❑ Refit the sensor holder.
- ❑ Position the sensor holder at (**x**) = **35° ± 5°** from vertical. This position corresponds to the centre of the housing.

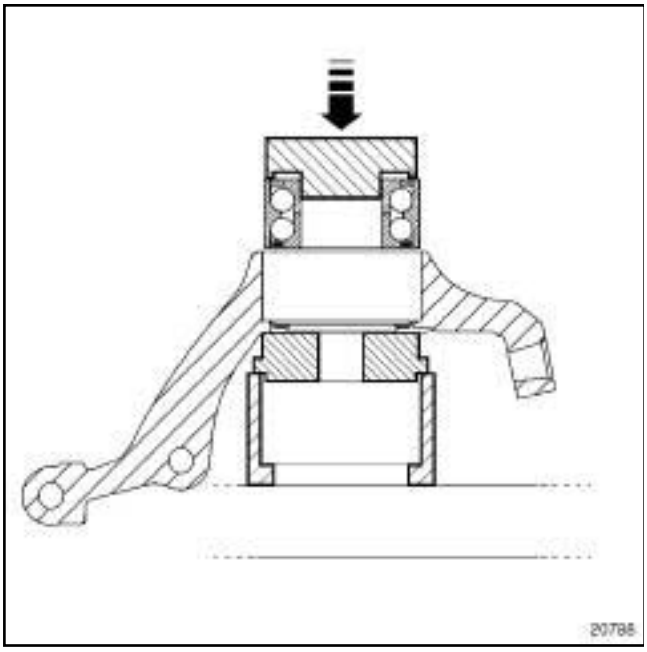

20788

- ❑ Apply force to the external bearing bush using a pipe with an outer diameter of **77 mm** and bore diameter of **70 mm**.

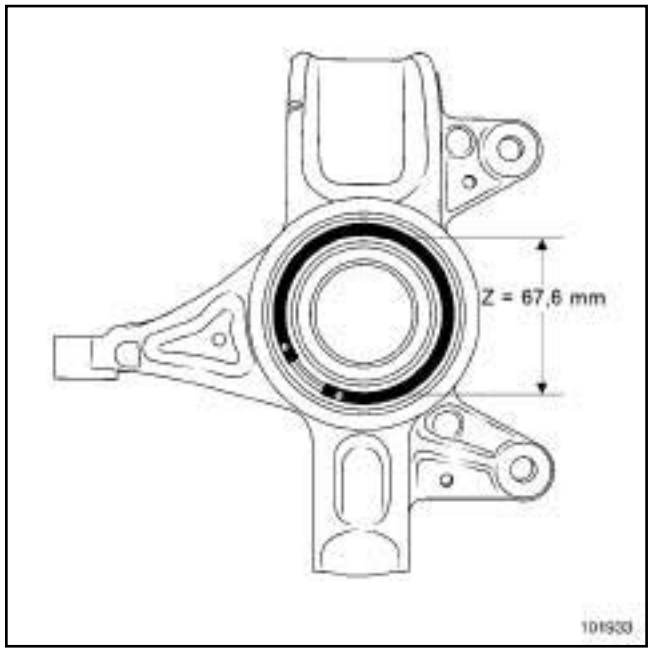

101933

- ❑ Refit the circlip.
- ❑ Check that the circlips are correctly positioned by measuring the inner diameter (**Z = 67.6 mm**) for a bearing with an outer diameter of **77 mm**.

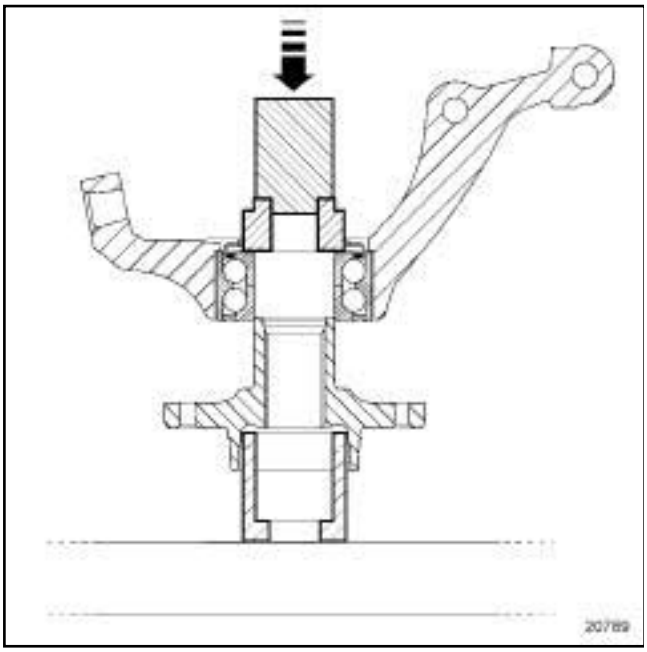

20789

❑

WARNING

In order to prevent irreversible damage to the front hub bearing:

- Do not loosen or tighten the driveshaft nut when the wheels are on the ground.
- Do not place the vehicle with its wheels on the ground when the driveshaft has been loosened or removed.

❑ Refit:

- the hub,
- the front driveshaft hub carrier (see **31A**, **Front axle components**, **Front driveshaft hub carrier: Removal - Refitting**, page **31A-12**) .

Essential special tooling	
Sus. 1731	Front shock absorber removal tool.

Essential equipment
spring compressor
spanner for shock absorber rod nut

Tightening torques ▽	
shock absorber rod nut	**62 Nm**
shock absorber turret mounting bolts	**17 Nm**
shock absorber base mounting bolt	**105 Nm**
anti-roll bar tie-rod ball joint mounting nut	**44 Nm**

REMOVAL

❑ Position the vehicle on a two-post lift (see **Vehicle: Towing and lifting**) (MR 370, 02A, Lifting equipment).

❑ Disconnect the battery (see **Battery: Removal - Refitting**) (MR 370, 80A, Battery).

❑ Remove the front wheels (see **35A**, **Wheels and tyres**, **Wheel: Removal - Refitting**, page **35A-1**) .

❑ Unclip the brake hose from the shock absorber and the wheel speed sensor cable.

❑ Remove:

- the anti-roll bar tie-rod ball joint,
- the windscreen wiper mechanism (see **Windscreen wiper mechanism: Removal - Refitting**) (MR 370, 85A, Wiping - Washing).

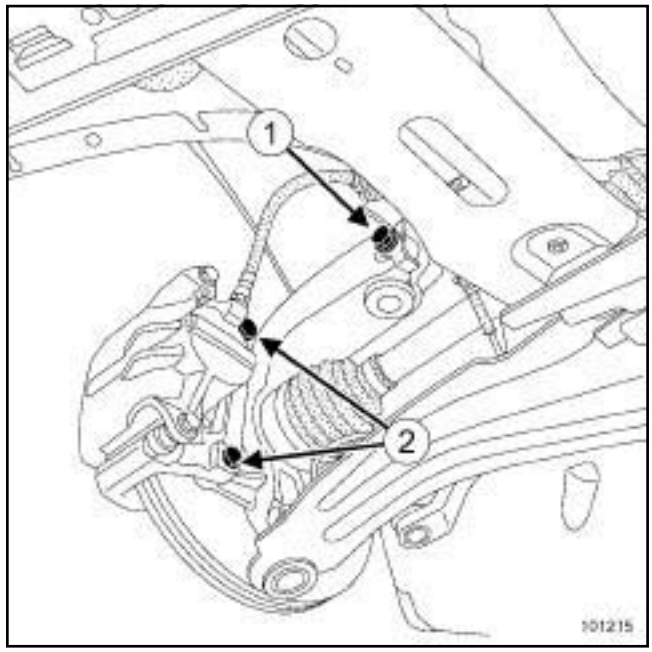

101215

❑ Remove:

- the shock absorber base mounting bolt (**1**) ,
- the front brake calliper mounting bolt (**2**) .

❑ Suspend the « front brake calliper mounting - calliper » assembly.

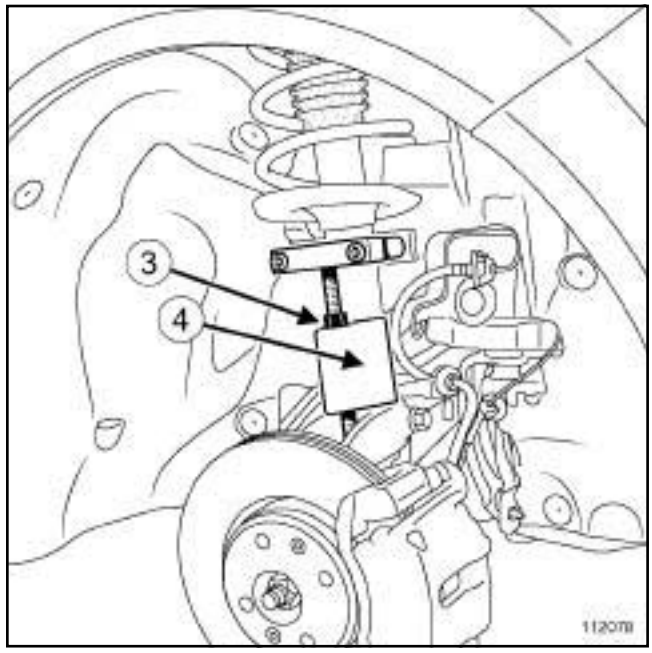

112078

❑ Position the **(Sus. 1731)**.

❑ Tighten the bolt (**3**) of the **(Sus. 1731)** to separate the shock absorber base from the hub carrier.

❑ Ensure that the section (**4**) of the **(Sus. 1731)** is pressed firmly against the shock absorber base.

❑ Suspend the hub carrier

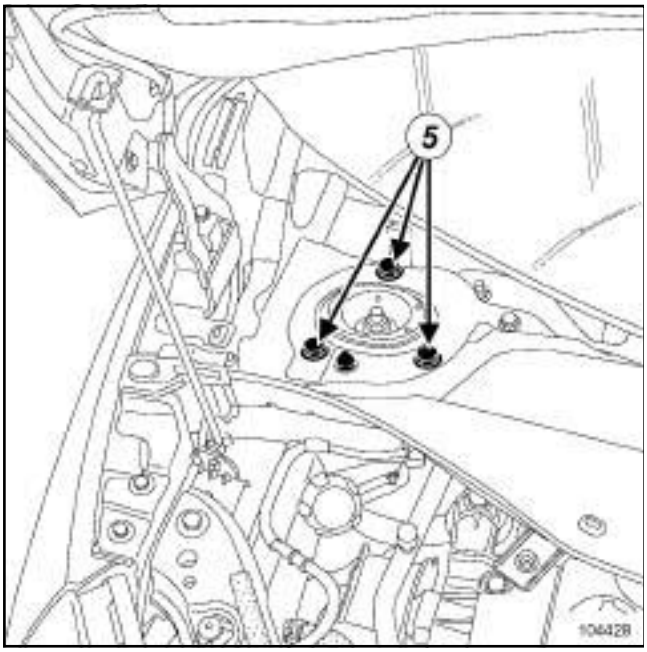

104428

❑ Remove:

- the shock absorber turret mounting bolts (**5**) ,
- the « spring/shock absorber » assembly.

❑ Place the appropriate cups on the **spring compressor** and position the assembly on the spring.

❑ Detach the spring from the cups by compressing the spring.

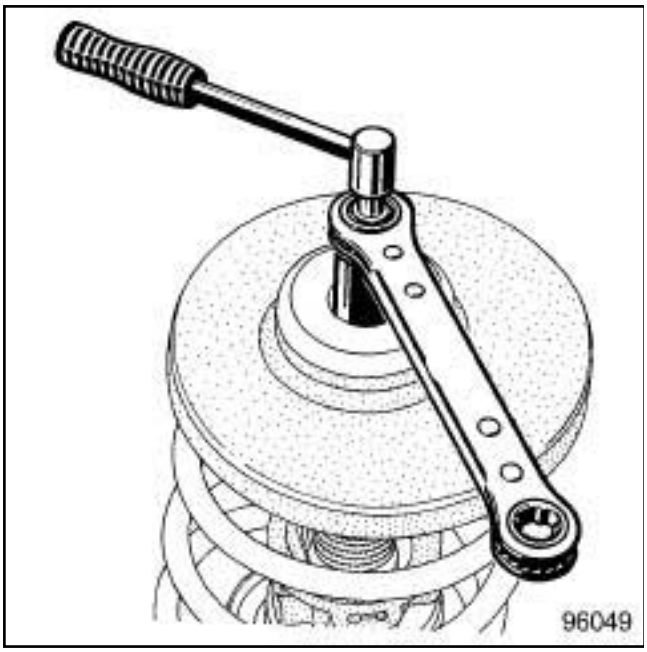

96049

❑ Remove the shock absorber rod nut using the **spanner for shock absorber rod nut**.

❑ Separate the various components of the spring-shock absorber assembly.

REFITTING

❑ Fit the **spring compressor** in a vice.

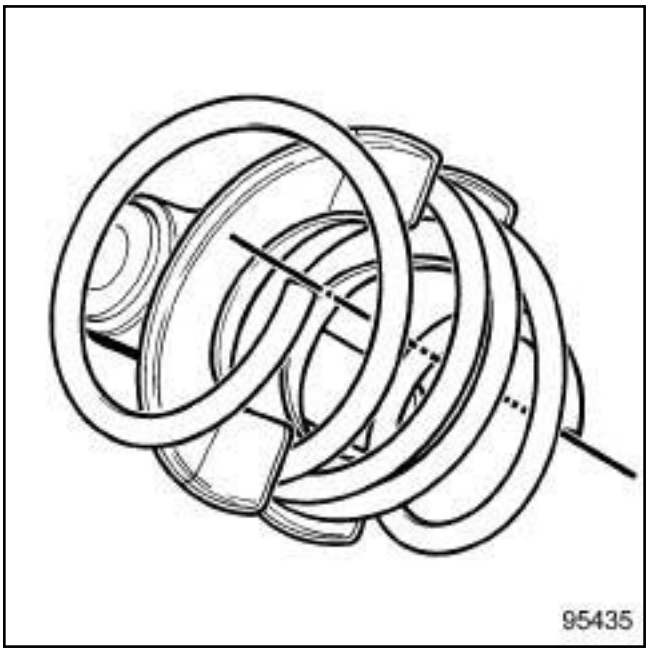

95435

❑

> Note:
>
> When replacing the spring for easier fitting, ensure that the positioning and orientation of the spring and the tool cups are correct.

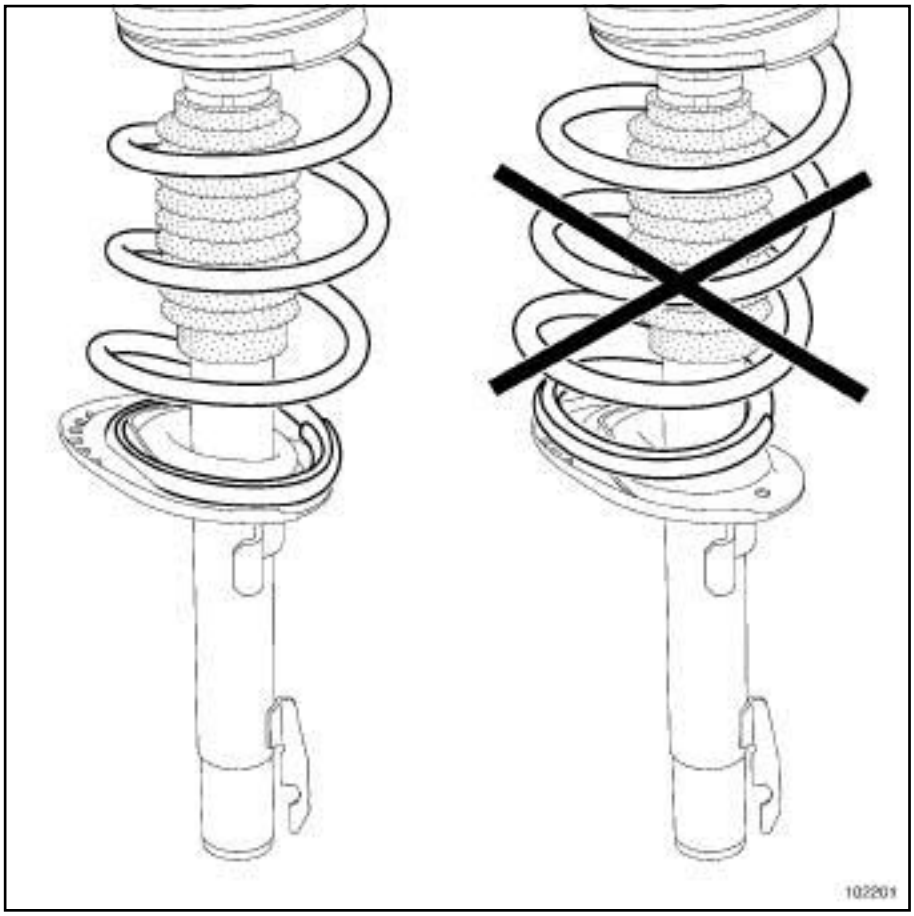

102201

- Position the spring in the cup groove, smooth sheath above, and grooved sheath below.

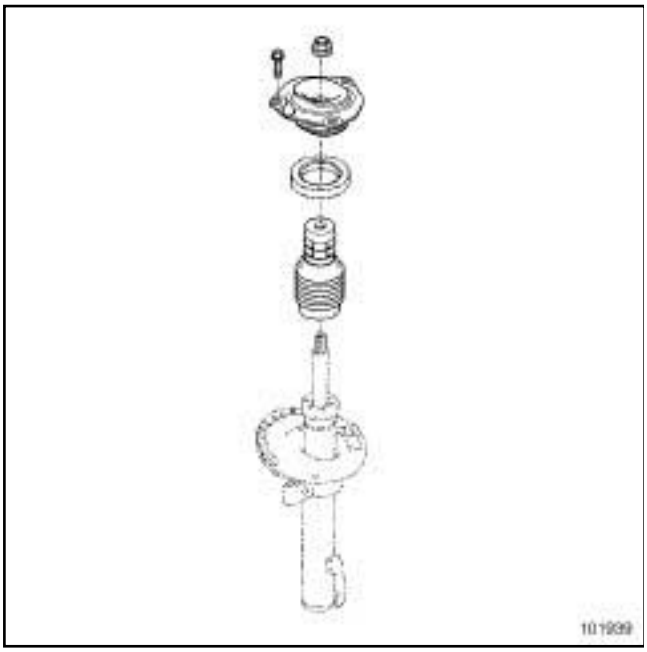

101939

❑ Respect the order and direction of fitting for the constituent parts.

> Note:
>
> Make sure that the rotary stop is correctly oriented to facilitate refitting above and below.

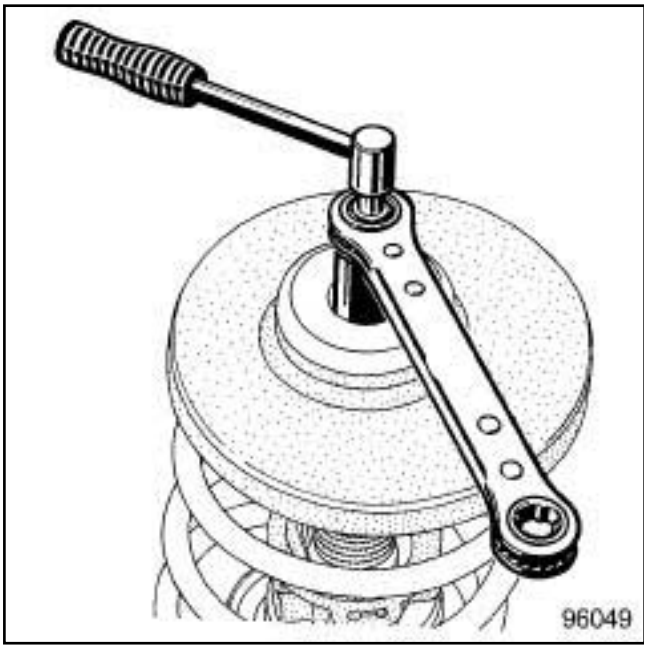

96049

❑ The shock absorber rod nut must be replaced.

❑ Torque tighten the **shock absorber rod nut (62 Nm)**.

❑ Decompress the spring.

❑ Remove the spring compressor.

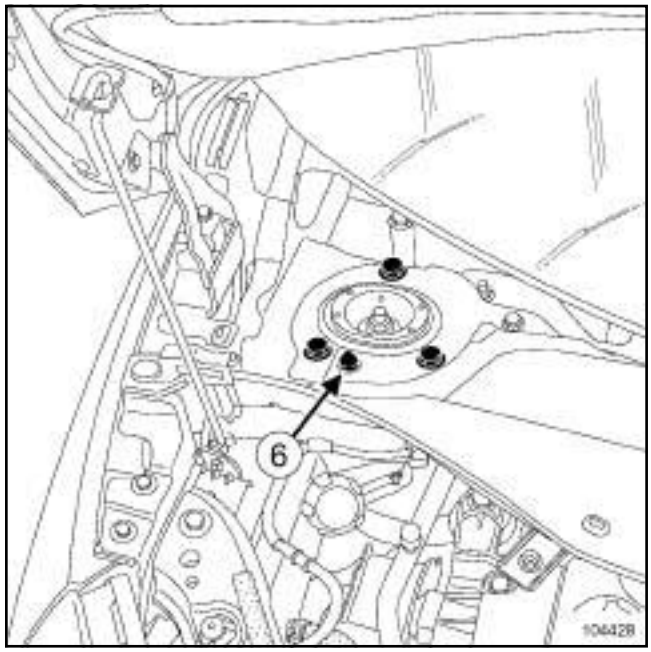

104428

❑ Fit the index bolt (**6**) in its housing.

❑ Proceed in the reverse order to removal.

❑ Torque tighten:

- the **shock absorber turret mounting bolts (17 Nm)**,
- the **shock absorber base mounting bolt (105 Nm)**,
- the **anti-roll bar tie-rod ball joint mounting nut (44 Nm)**.

❑ Refit:

- the anti-roll bar tie-rod ball joint,
- the windscreen wiper mechanism (see **Windscreen wiper mechanism: Removal - Refitting**) (MR 370, 85A, Wiping - Washing).

> **WARNING**
>
> Refasten the brake hose and wheel speed sensor wiring if they have been unclipped.
>
> Do not twist the brake hose.

❑ Refit the front wheels (see **35A**, **Wheels and tyres**, **Wheel: Removal - Refitting**, page **35A-1**) .

❑ Connect the battery (see **Battery : Removal - Refitting**) (MR 370, 80A, Battery).

Essential equipment
component jack

Tightening torques ▽	
rear bolt mounting the lower arm on the sub-frame	**105 Nm**
front bolts mounting the lower arm on the sub-frame	**70 Nm**
track rod end nut	**37 Nm**
anti-roll bar linkage ball joint nuts	**44 Nm**
lower ball joint nut	**110 Nm**
radiator cross member front mounting bolts	**105 Nm**
radiator cross member rear bolts	**21 Nm**
side stiffener lower bolts	**21 Nm**

WARNING
Do not use the lower arm for support with a lifting system.

REMOVAL

- ❑ Position the vehicle on a two-post lift (see **Vehicle: Towing and lifting**) (MR 370, 02A, Lifting equipment).
- ❑ Unlock the steering wheel.
- ❑ Strap the radiator to the radiator grille.

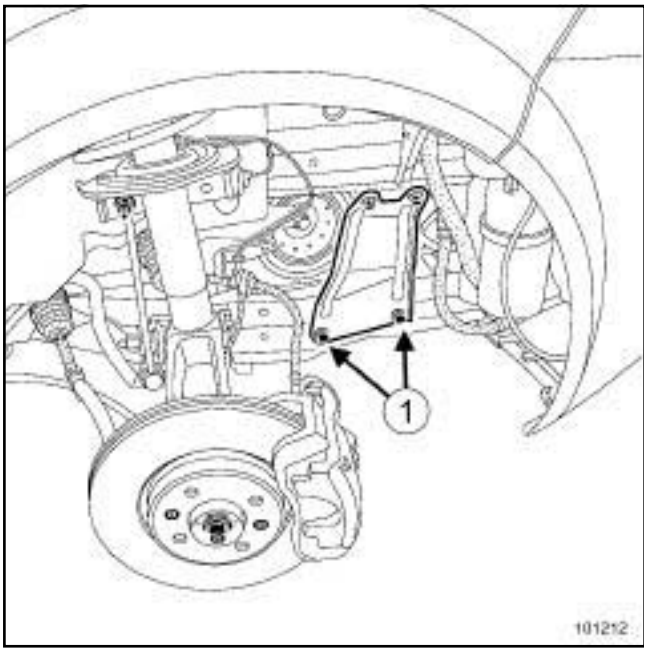

101212

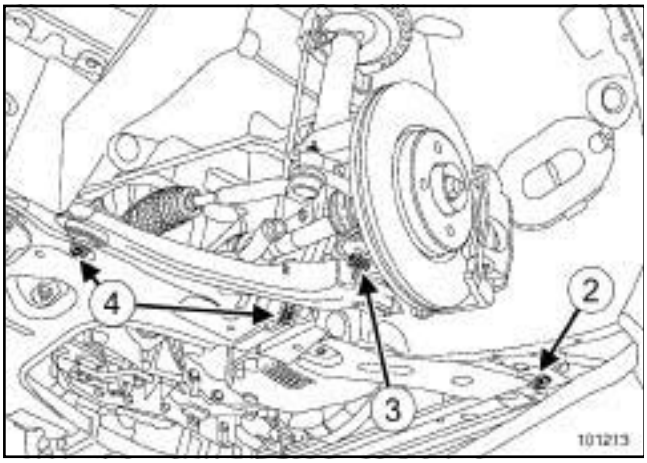

101213

❑ Remove:

- the front wheel concerned (see **35A**, **Wheels and tyres**, **Wheel: Removal - Refitting**, page **35A-1**) ,
- the wheel arch protectors,
- the engine undertray,
- the side stiffener lower bolts (**1**) ,
- the radiator cross member rear nuts,
- the radiator cross member front bolts (**2**) ,
- the radiator cross member.

❑ Unpick the wheel speed sensor harness.

❑ Disconnect the wheel sensor connector in the wheel arch.

❑ Remove the lower ball joint bolt (**3**) .

❑ Remove:

- the lower ball joint,
- the height sensor ball joint (if fitted to the vehicle).

❑ Remove:

- the lower arm front and rear bolts (**4**) ,
- the lower arm.

REFITTING

❑ Be sure to replace the sub-frame and arm mountings.

❑ Proceed in the reverse order to removal.

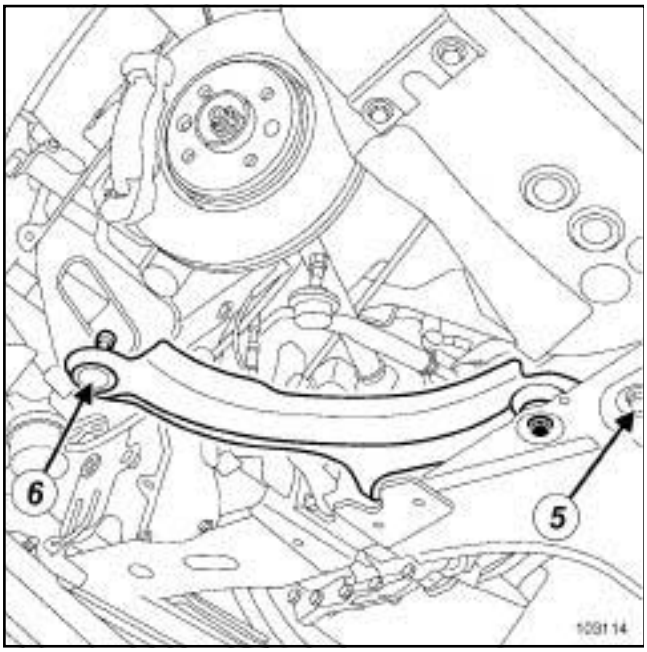

103114

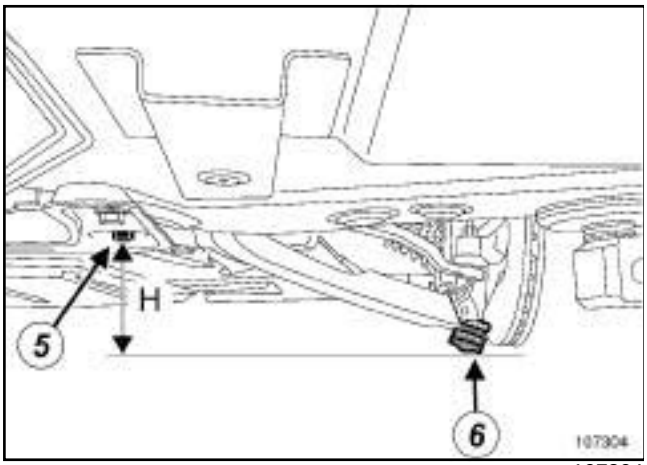

107304

❑ Place the **component jack** against the subframe rear bolt head (**5**) .

> **WARNING**
> When refitting, position the lower arm below the subframe rear bolt head (**H**) = **10 mm** to tighten the rubber bushes freely.

❑ Lower the **component jack** by (**H**) = **10 mm**.

❑ Rest the lower arm ball joint (**6**) on the **component jack** without adjusting the settings.

❑ In this position, tighten to torque:

- the **rear bolt mounting the lower arm on the subframe (105 Nm)**,
- the **front bolts mounting the lower arm on the subframe (70 Nm)**.

❑ Remove the **component jack**.

❑ Refit the lower ball joint into the hub carrier.

> **WARNING**
> A **10mm** shim must be placed between the radiator cross member and the subframe to tighten the radiator cross member mountings to torque.

❑ Refit and tighten to torque:

- the **track rod end nut (37 Nm)**,
- the **anti-roll bar linkage ball joint nuts (44 Nm)**,
- the **lower ball joint nut (110 Nm)**,
- the radiator cross member and the **radiator cross member front mounting bolts (105 Nm)**,
- the **radiator cross member rear bolts (21 Nm)**,
- the **side stiffener lower bolts (21 Nm)**,
- the front wheel concerned (see **35A**, **Wheels and tyres**, **Wheel: Removal - Refitting**, page **35A-1**) .

> **WARNING**
> Refasten the brake hose and wheel speed sensor wiring if they have been unclipped.
>
> Do not twist the brake hose.

❑ Adjust the axle assemblies (see **30A**, **General information**, **Front axle: Adjustment values**, page **30A-14**) .

❑ Initialise the xenon bulb system (see **Fault finding - Configurations and programming**) (MR 372, 80C, Xenon bulbs).

CHECKING

CHECKING THE FRONT DRIVESHAFT LOWER ARM BALL JOINT

❑ Position the vehicle on a two-post lift (see **Vehicle: Towing and lifting**) (MR 370, 02A, Lifting equipment).

1 - Checking the condition

❑ Check:

- the crimping of the gaiter on the lower ball joint,
- that the gaiter is not torn.

❑ If the front driveshaft lower arm ball joint gaiter is in poor condition or not crimped, replace the front driveshaft lower arm (see **31A**, **Front axle components**, **Front driveshaft lower arm: Removal - Refitting**, page **31A-22**) .

2 - Check the fitting of the lower arm ball joint

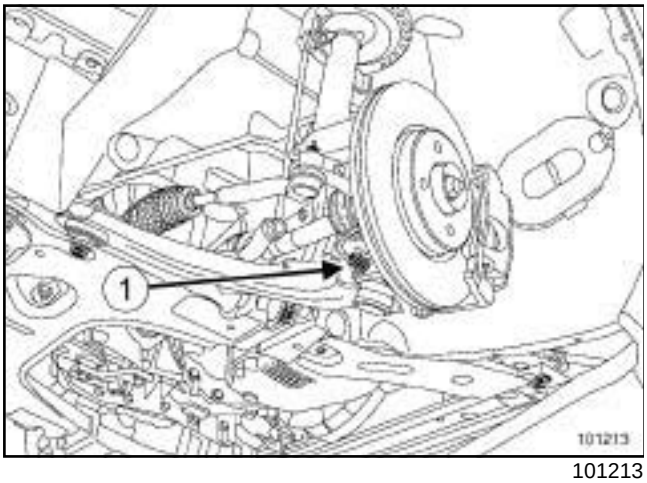

101213

❑ Check:

- the "front driveshaft lower arm ball joint - front driveshaft lower arm bolt" assembly is correctly positioned,
- the tightening torque of the stud (**1**) on the front driveshaft lower arm ball joint (see **31A**, **Front axle components**, **Front driveshaft lower arm: Removal - Refitting**, page **31A-22**) .

3 - Checking the play of the lower arm ball joint

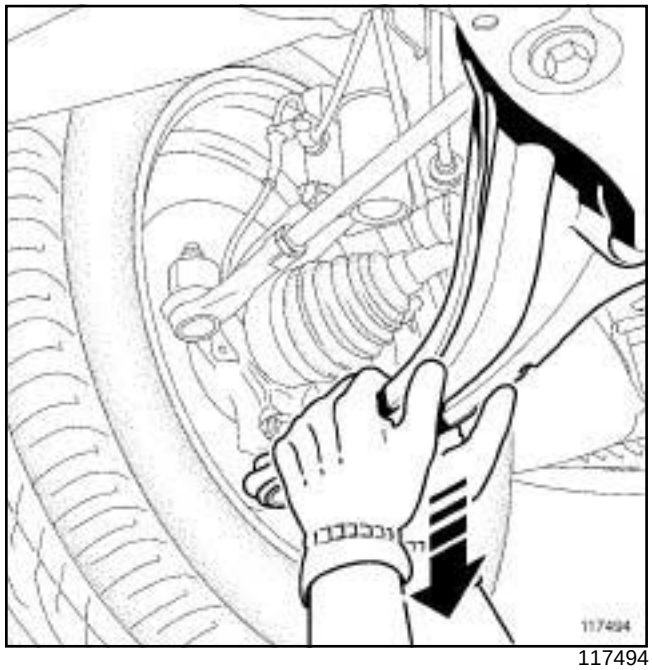

117494

❑ Check that there is no play in the front driveshaft lower arm ball joint:

- from a position underneath the vehicle,
- using both hands, hold the front driveshaft lower arm as close as possible to the wheel,
- push downwards several times.

❑ If there is play in the front driveshaft lower arm ball joint, replace the front driveshaft lower arm (see **31A**, **Front axle components**, **Front driveshaft lower arm: Removal - Refitting**, page **31A-22**) .

Essential equipment
steering wheel lock
component jack

Tightening torques ▽	
sub-frame linkage bolt	**105 Nm**
rear cross member bolts on the subframe	**62 Nm**
bolts to the sub-frame tie-rod	**105 Nm**
radiator cross member rear bolts	**21 Nm**
front mountings of the radiator cross member	**105 Nm**
lower ball joint bolts	**60 Nm**
engine tie-bar bolts on the subframe	**105 Nm**
anti-roll bar tie rod ball joint nuts	**44 Nm**
track rod end nuts	**37 Nm**
side stiffener bolts	**21 Nm**
universal joint bolt (TRW column)	**30 Nm**
universal joint bolt (NSK column)	**44 Nm**
engine tie-bar bolts on the F or M engine support	**180Nm**
engine tie-bar bolts on the K engine	**105Nm**

WARNING

Do not use the lower arm for support with a lifting system.

REMOVAL

❑ Position the vehicle on a two-post lift (see **Vehicle: Towing and lifting**) (MR 370, 02A, Lifting equipment).

❑ Set the wheels straight ahead.

❑ Centre the steering wheel.

❑ Lift the floor carpet to access the universal joint.

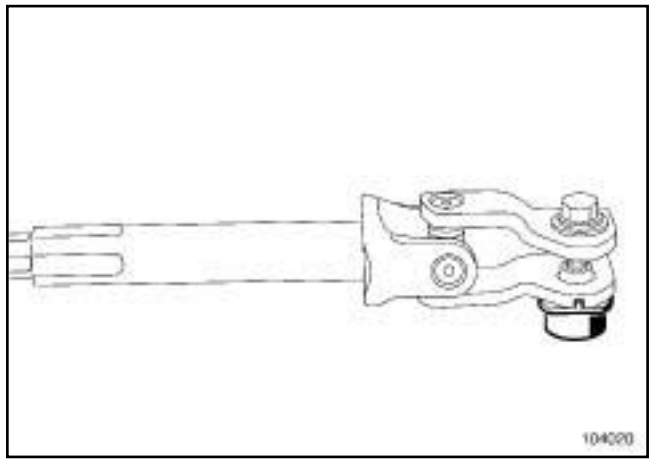

104020

❑ Discard the cover (do not keep it).

❑ Remove:

- the universal joint bolt (do not keep),
- the universal joint cam nut (do not keep).

❑ Position the **steering wheel lock**.

❑ Strap the radiator to the radiator grille.

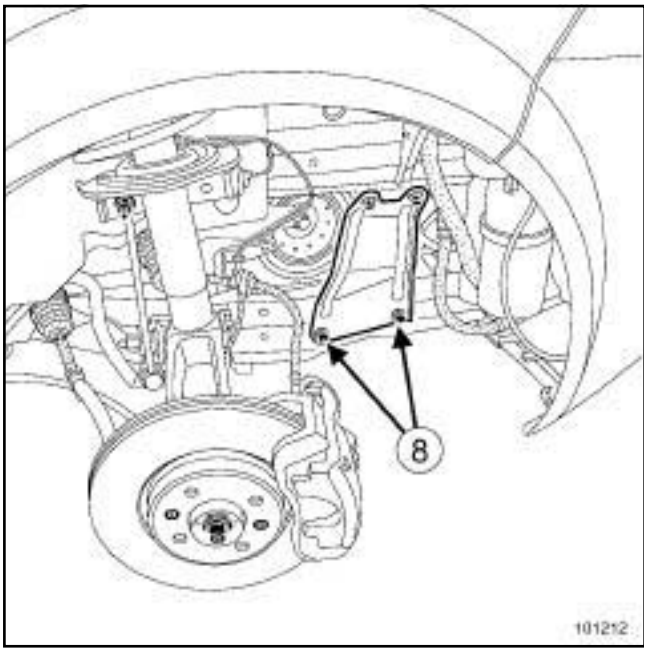

101212

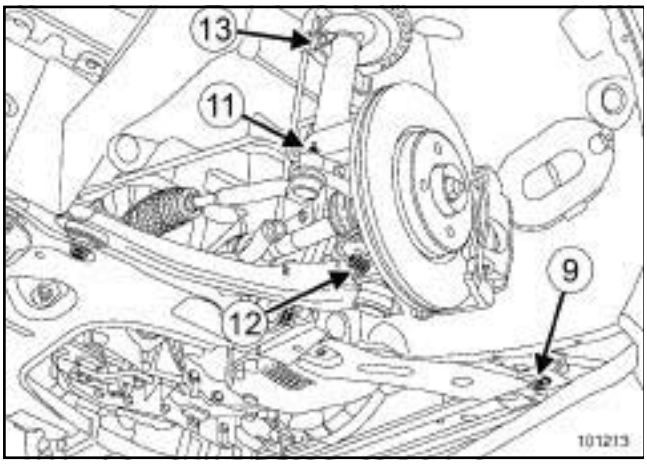

101213

❑ Remove:

- the front wheels (see **35A**, **Wheels and tyres**, **Wheel: Removal - Refitting**, page **35A-1**) ,
- the wheel arch liners,
- the engine undertray,
- the side stiffener lower bolts (**8**) ,
- the radiator cross member front bolt (**9**) ,
- the radiator cross member rear nuts,
- the radiator cross member.

❑ Unpick the wheel speed sensor harness.

❑ Disconnect the wheel speed sensor connector from the wheel arch.

❑ Remove:

- the track rod end nuts (**11**) ,
- the lower ball joint bolts (**12**) ,
- the anti-roll bar tie-rod upper ball joint nuts (**13**) .

❑ Remove:

- the track rod ends,
- the anti-roll bar tie-rod upper ball joints.

K4J or K4M or K9K

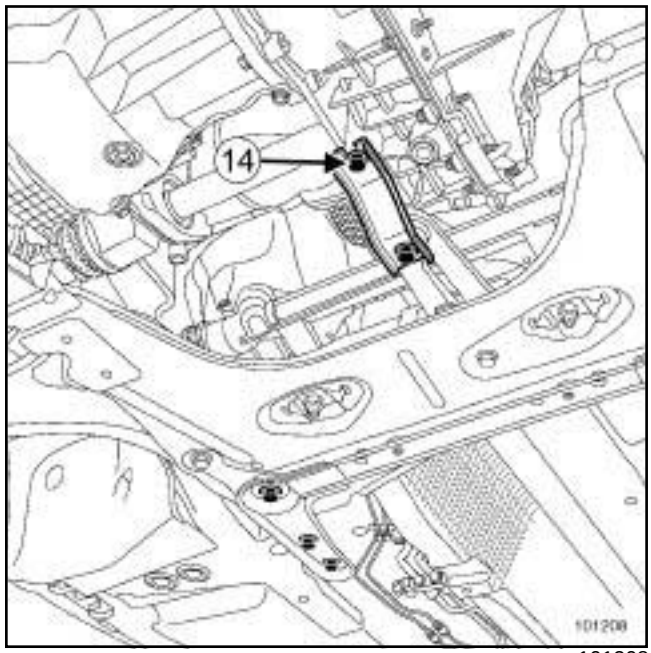

101208

❑ Remove the engine tie-bar bolt (**14**) on the engine.

F4R or F9Q

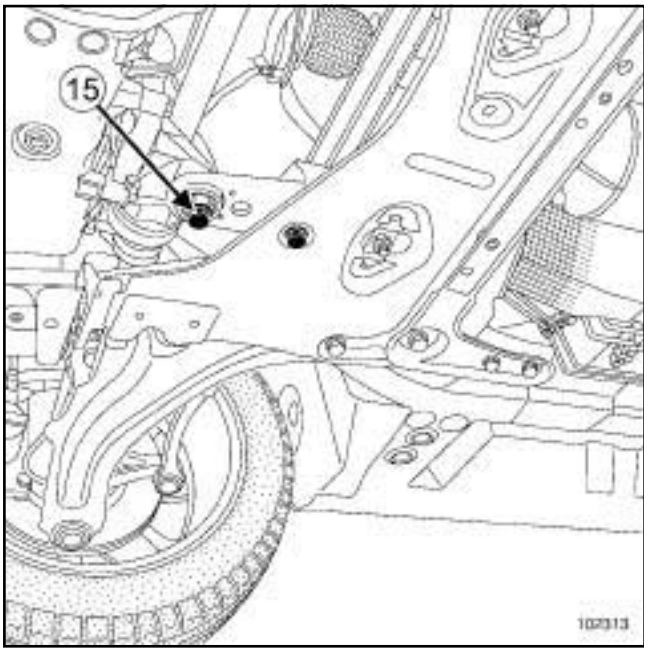

102313

❏ Remove the engine tie-bar bolt (**15**) on the engine.

M9R

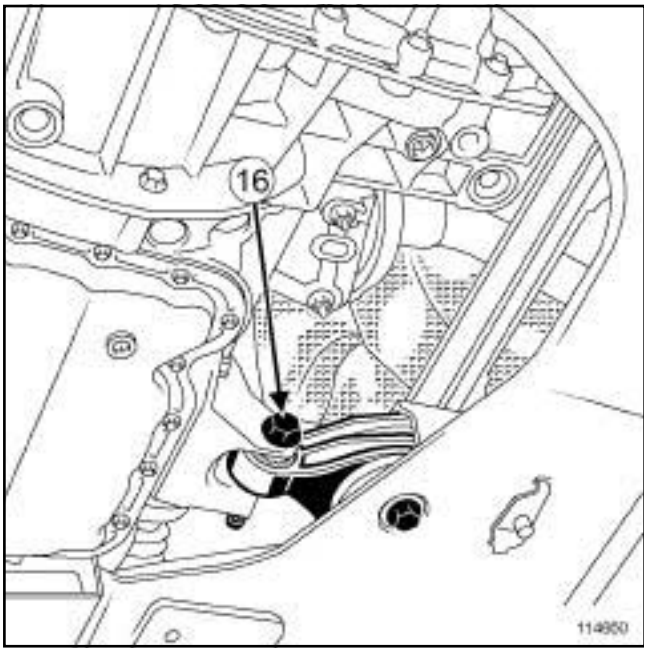

114650

❏ Remove the engine tie-bar bolt (**16**) on the engine mounting.

❏ Fit the **component jack** underneath the sub-frame.

❏ Strap the sub-frame to the **component jack**.

❏ Remove the lower arm ball joints.

❏ Remove the wheel speed sensor wiring support.

❏ Remove:

- the rear cross member bolts,
- the subframe bolts on the body,
- the rear cross member,
- the sub-frame.

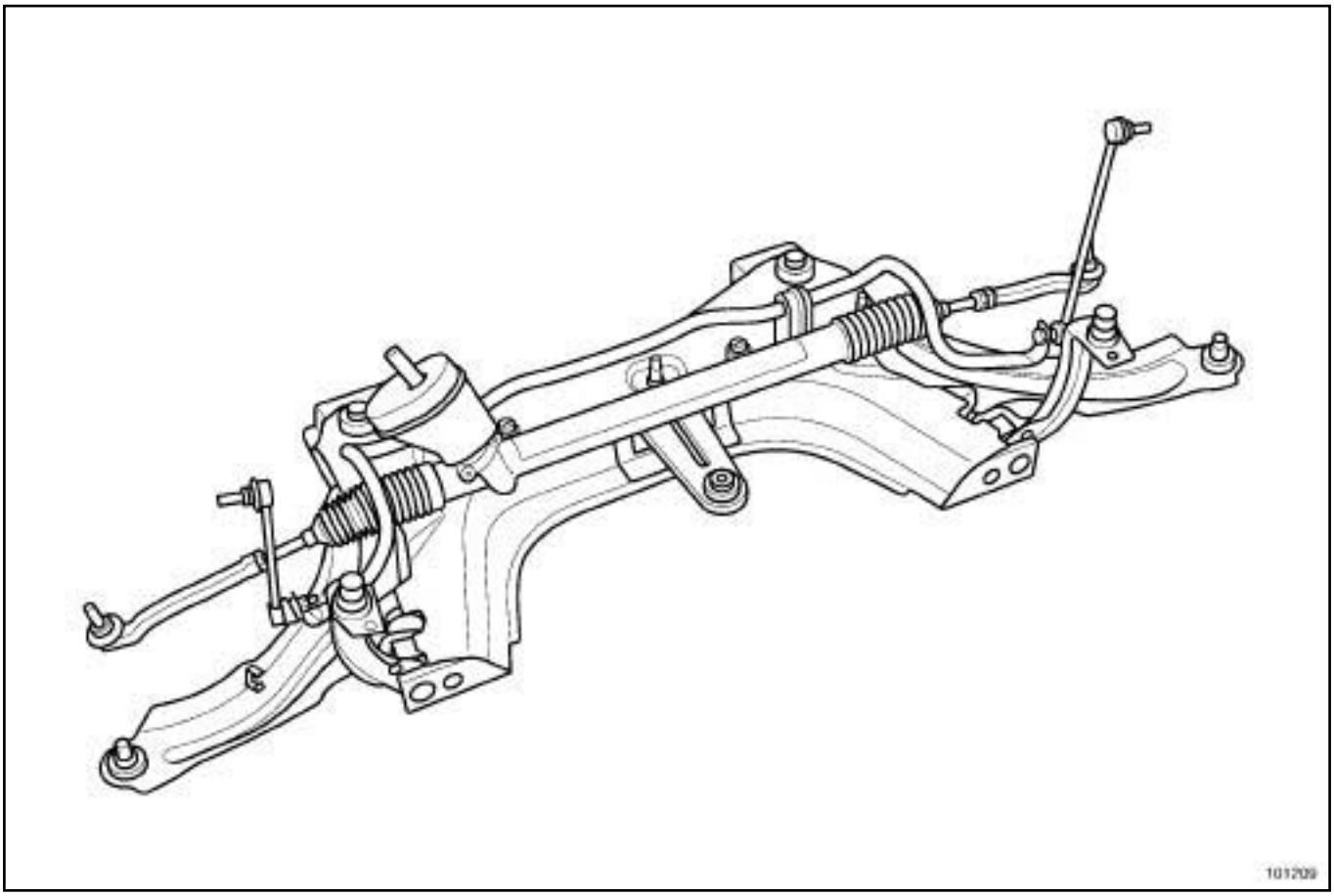

101209

❑ Remove the sub-frame fittings.

REFITTING

❑ Be sure to replace the sub-frame and arm mountings.

❑ Degrease the surfaces on the body that make contact with the subframe and cross member using some **SURFACE CLEANER**.

❑ Torque tighten and in order:

- the **sub-frame linkage bolt (105 Nm)**,
- the **rear cross member bolts on the subframe (62 Nm)**,
- the **bolts to the sub-frame tie-rod (105 Nm)**.

> **WARNING**
> Be sure to follow the sub-frame tightening order.

❑ Torque tighten the lower arm bolts (see **31A**, **Front axle components**, **Front driveshaft lower arm: Removal - Refitting**, page **31A-22**) .

❑ Proceed in the reverse order to removal.

> **WARNING**
> A shim of **10 mm** in thickness must be placed between the radiator cross member and the sub-frame. Centre the radiator cross member pin in the subframe hole at the level of the lower arm front mounting, to torque tighten the radiator cross member mountings.

❑ Torque tighten:

- the **radiator cross member rear bolts (21 Nm)**,
- the **front mountings of the radiator cross member (105 Nm)**.
- the **lower ball joint bolts (60 Nm)**,
- the **engine tie-bar bolts on the subframe (105 Nm)**,
- the **anti-roll bar tie rod ball joint nuts (44 Nm)**,
- the **track rod end nuts (37 Nm)**,
- the **side stiffener bolts (21 Nm)**.

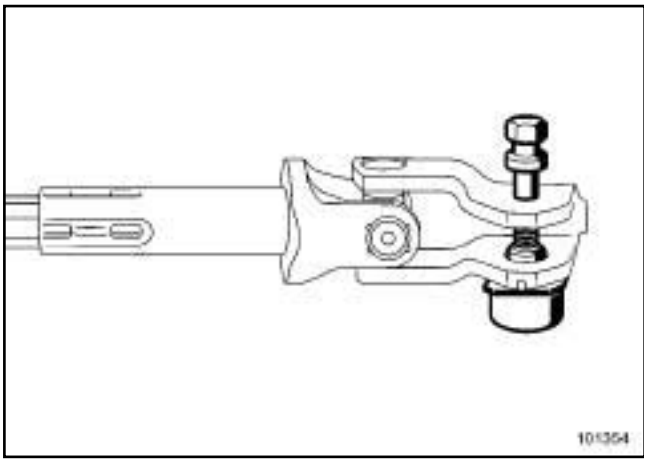

101354

- ❑ Observe the direction of fitting for the universal joint cam nut and bolt.
- ❑ Refit the universal joint.
- ❑ Refit the universal joint cam nut and bolt.
- ❑ Position the universal joint cam nut and bolt.
- ❑ Lock the cam nut in its housing (on the universal joint).
- ❑ Pretighten the universal joint cam nut and bolt.

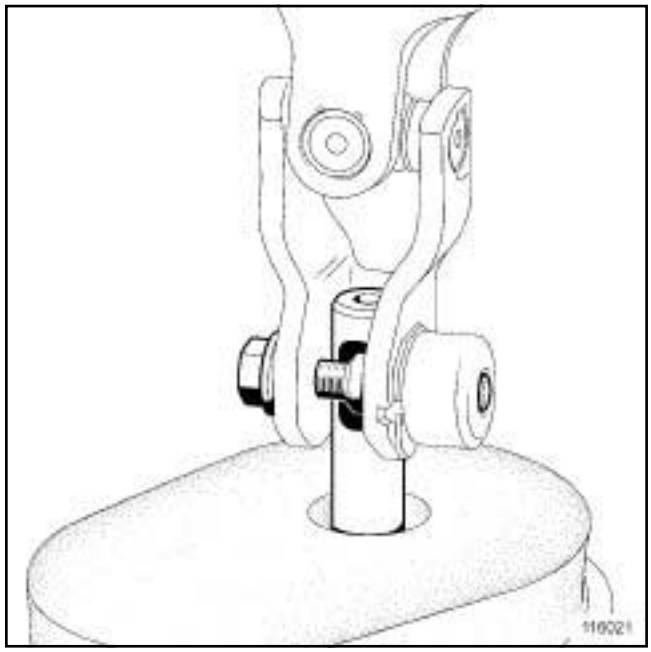

116021

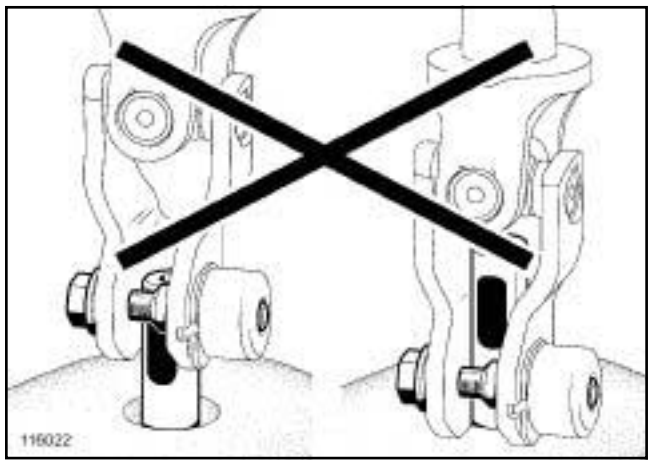

116022

- ❑ Identify the make of the steering column (see **36A**, **Steering assembly**, **Steering column: Removal - Refitting**, page **36A-8**) .
- ❑ Torque tighten:

  - the **universal joint bolt (TRW column) (30 Nm)**,

  - the **universal joint bolt (NSK column) (44 Nm)**
- ❑ Check that the universal joint is in the correct position.

WARNING
Refasten the brake hose and wheel speed sensor wiring if they have been unclipped.

Do not twist the brake hose.

F4R or F9Q or M9R

- ❑ Torque tighten the **engine tie-bar bolts on the F or M engine support (180Nm)**.

K4J or K4M or K9K

- ❑ Torque tighten the **engine tie-bar bolts on the K engine (105Nm)**.

- ❑ Refit the wheels (see **35A**, **Wheels and tyres**, **Wheel: Removal - Refitting**, page **35A-1**) .
- ❑ Refit the floor carpet.

> Note:
>
> Check that the floor carpet reaches under the accelerator pedal end-stop.

- ❑ Adjust the axle assemblies (see **30A**, **General information**, **Front axle: Adjustment values**, page **30A-14**) .
- ❑ Initialise the xenon bulb system (if fitted to the vehicle) (see **Fault finding - Configurations and programming**) (MR 372, 80C, Xenon bulbs).

EQT LEVEL SPORT

Essential special tooling	
Tav. 476	Ball joint extractor.

Essential equipment
steering wheel lock
component jack
safety strap(s)

Tightening torques ▽	
subframe bracket bolts	**62 Nm**
subframe tie-rod bolts	**105 Nm**
engine tie-bar bolts on the engine	**180 Nm**
engine tie-bar bolts on the subframe	**105 Nm**
pivot bolts	**72 Nm**
subframe stiffener strut bolts	**62 Nm**
anti-roll bar tie bar nuts	**44 Nm**
track rod end nuts	**37 Nm**
lower ball joint nuts	**100 Nm**
radiator cross member front bolts	**105 Nm**
radiator cross member rear nuts	**21 Nm**
side panel bolts	**21 Nm**
universal joint bolt	**24 Nm**

REMOVAL

I - REMOVAL PREPARATION OPERATION

❑ Position the vehicle on a two-post lift (see **Vehicle: Towing and lifting**) (02A, Lifting equipment).

❑ Set the wheels straight ahead.

❑ Centre the steering wheel.

❑ Position the **steering wheel lock**.

❑ In the passenger compartment, remove the steering column universal joint bolt and nut.

❑ Strap the radiator to the radiator grille.

❑ Remove:

- the front wheels (see **35A**, **Wheels and tyres**, **Wheel: Removal - Refitting**, page **35A-1**) ,
- the front wheel arch liners (see **Front wheel arch liner: Removal - Refitting**) (55A, Exterior protection),
- the engine undertray.

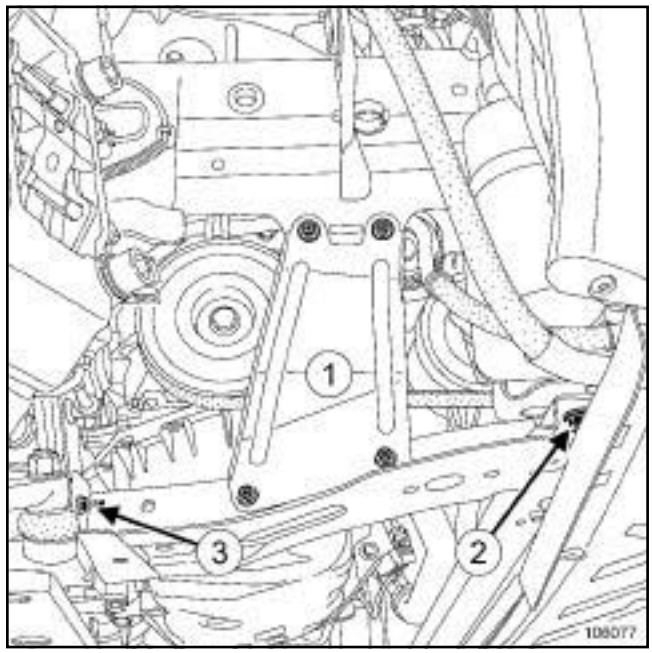

106077

❑ Remove:

- the side panels (**1**) ,
- the radiator cross member front bolts (**2**) ,
- the radiator cross member rear nuts (**3**) ,
- the radiator cross member.

❑ Extract the height sensor ball joint.

❑ Unclip the wheel speed sensors wiring.

❑ Disconnect the wheel speed sensor connector from the wheel arch.

EQT LEVEL SPORT

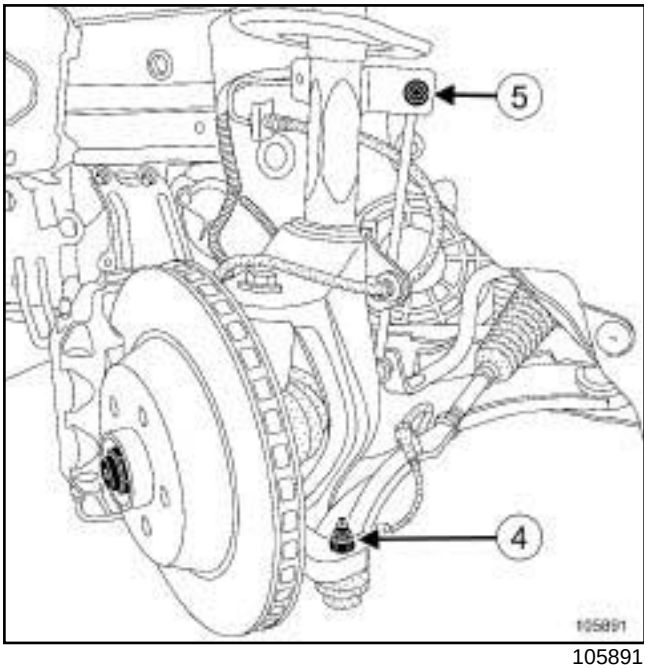

105891

❑ Remove:

- the track rod end nuts (**4**) ,
- the upper ball joint nuts (**5**) from the anti-roll bar tie-rods.

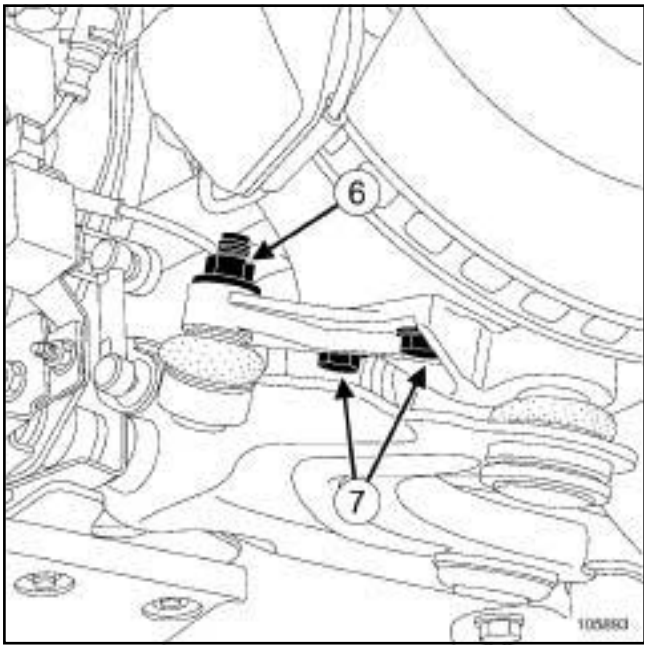

105893

❑ Remove the lower tie-bar nuts (**6**) .

❑ Extract the ball joints using the **(Tav. 476)**.

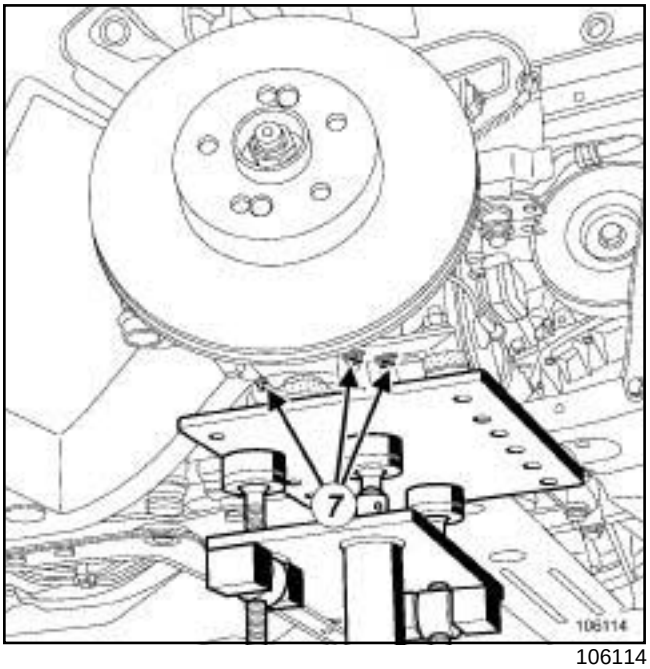

106114

❑ Compress the driveshaft by approximately **10 cm**.

❑ Remove the three bolts (**7**) from the pivot support.

❑ Relax the driveshaft by raising the lift by **50 cm**.

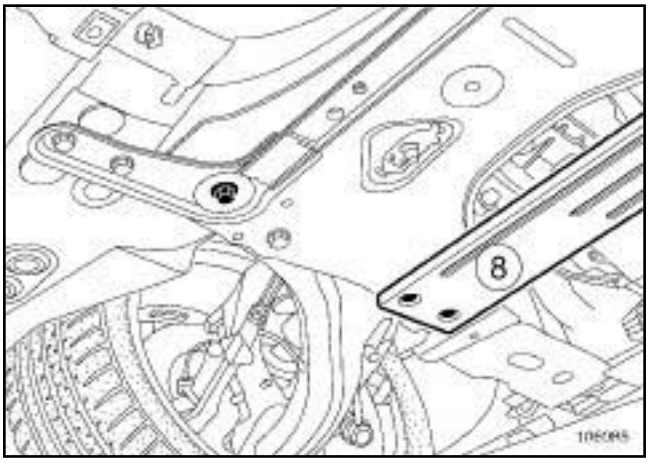

106085

❑ Remove the sub-frame stiffener strut (**8**) .

EQT LEVEL SPORT

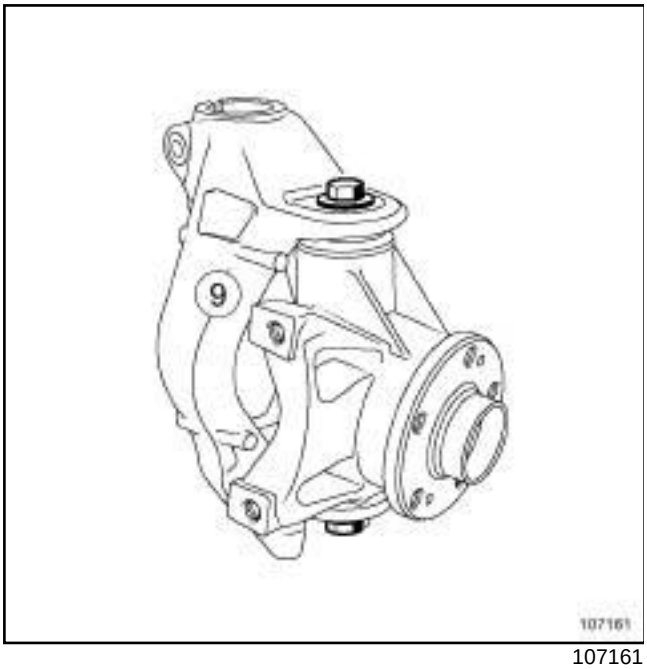

107161

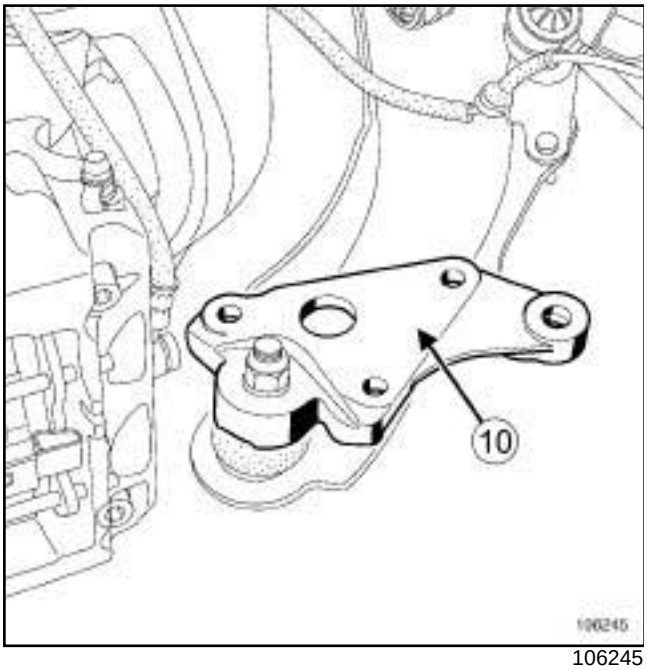

106245

❑ Remove the pivots (**9**) from their support (**10**) using a hammer.

II - OPERATION FOR REMOVAL OF PART CONCERNED:

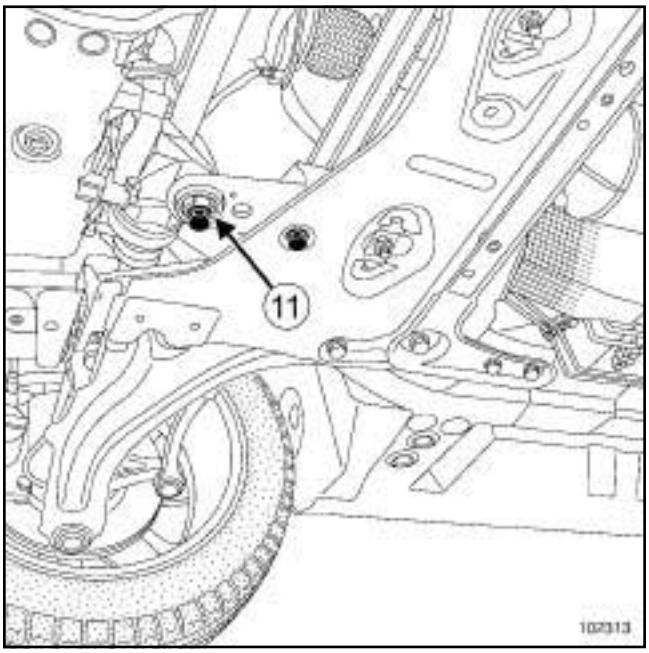

102313

❑ Remove the engine tie-bar (**11**) .

❑ Fit the **component jack** underneath the subframe.

❑ Strap the subframe to the **component jack**.

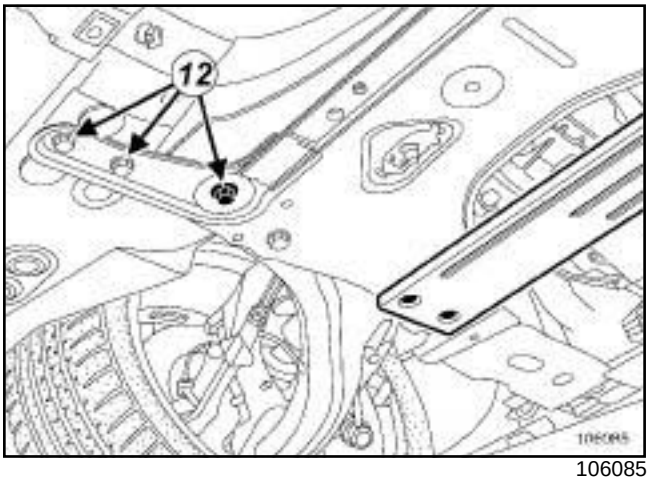

106085

❑ Remove:

- the bolts (**12**) from the subframe bracket,
- the bracket.

EQT LEVEL SPORT

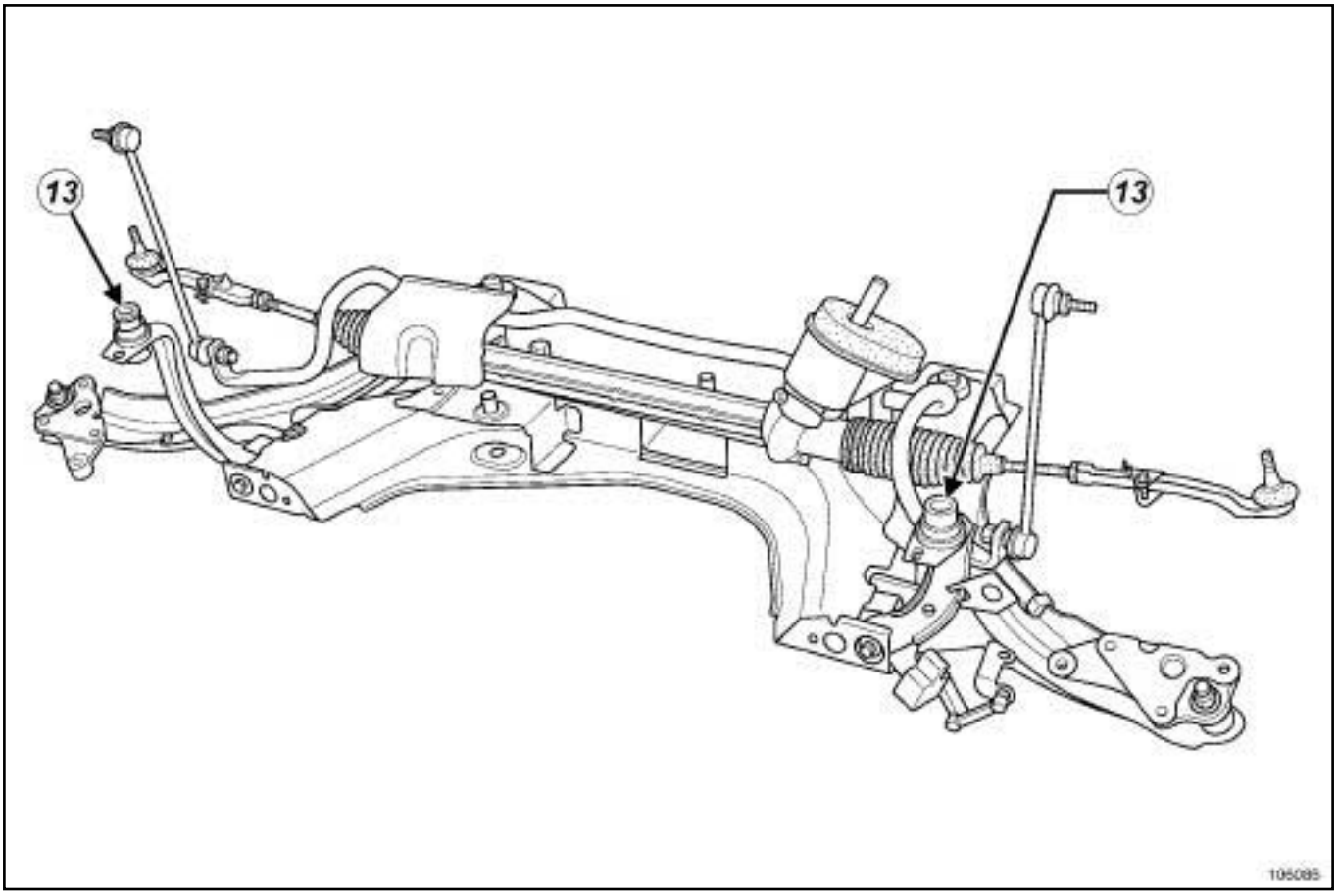

106086

- ❑ Remove:
  - the subframe tie rod bolts (**13**) ,
  - the sub-frame.
- ❑ Remove the subframe fittings.

REFITTING

I - REFITTING PREPARATION OPERATION

- ❑ Degrease the body surfaces that make contact with the sub-frame and cross member using **SURFACE CLEANER** (see **Vehicle: Parts and ingredients for the repairwork**) (04B, Consumables - Products).
- ❑ Always replace the subframe and arm mountings.

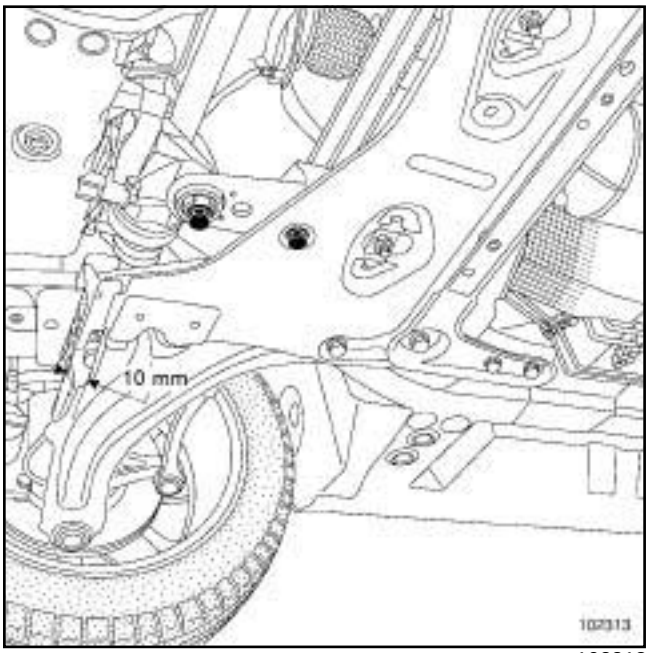

102313

- ❑ A shim **10 mm** thick must be placed between the radiator cross member and the sub-frame.
- ❑ Set the wheels straight ahead; centre the steering wheel.

EQT LEVEL SPORT

II - REFITTING OPERATION FOR PART CONCERNED

❏ Refit the subframe equipment.

❏ Strap the sub-frame onto the **component jack**.

❏ Refit:

- the sub-frame,
- the bracket,
- the engine tie-bar .

❏ Tighten to torque:

- the **subframe bracket bolts (62 Nm)**,
- the **subframe tie-rod bolts (105 Nm)**,
- the **engine tie-bar bolts on the engine (180 Nm)**,
- the **engine tie-bar bolts on the subframe (105 Nm)**.

III - FINAL OPERATION.

❏ Refit:

- the pivots on their support,
- the subframe stiffener strut,
- the anti-roll bar tie bars,
- the ball joints.

❏ Tighten to torque:

- the **pivot bolts (72 Nm)**,
- the **subframe stiffener strut bolts (62 Nm)**,
- the **anti-roll bar tie bar nuts (44 Nm)**.
- the **track rod end nuts (37 Nm)**,
- the **lower ball joint nuts (100 Nm)**.

❏ Connect the wheel speed sensor connector.

❏ Clip the wheel speed sensor wiring.

❏ Refit:

- the height sensor ball joint,
- the radiator cross member,
- the side panels.

❏ Tighten to torque:

- the **radiator cross member front bolts (105 Nm)**,
- the **radiator cross member rear nuts (21 Nm)**,
- the **side panel bolts (21 Nm)**.

❏ Refit:

- the engine undertray,
- the front wheel arch liners (see **Front wheel arch liner: Removal - Refitting**) (55A, Exterior protection),
- the front wheels (see **35A**, **Wheels and tyres**, **Wheel: Removal - Refitting**, page **35A-1**) ,
- the universal joint.

❏ Torque tighten the **universal joint bolt (24 Nm)**.

❏ Remove the **safety strap(s)** from the radiator.

❏ Adjust the axle assemblies (see **30A**, **General information**, **Axle assemblies: Check**, page **30A-8**) .

Tightening torques ▽	
anti-roll bar - sub-frame mounting bolts	**2.1 daNm**
steering rack - sub-frame mounting bolts	**10.5 daNm**

REMOVAL

❏ Mount the vehicle on a two post lift.

❏ Remove:

- the front axle sub-frame (see **31A**, **Front axle components**, **Front axle sub-frame: Removal - Refitting**, page **31A-26**) ,
- the steering rack - sub-frame mounting bolts,
- the steering rack,
- the anti-roll bar - sub-frame mounting bolts,
- the anti-roll bar.

REFITTING

❏ Proceed in the reverse order to removal.

WARNING
Make sure the anti-roll bar mounting bracket lugs are correctly positioned in the sub-frame apertures.

❏ Torque tighten:

- the **anti-roll bar - sub-frame mounting bolts (2.1 daNm)**,
- the **steering rack - sub-frame mounting bolts (10.5 daNm)**.

Essential special tooling	
Fre. 1190-01	Brake calliper piston return tool.

Tightening torques ▽	
calliper guide pin lower bolt	**36 N.m**

When replacing brake pads, be sure to replace the pads on the opposite side.

WARNING
To avoid damaging the parking brake cable protectors and causing premature wear of the system, do not handle the cables with a tool.

REMOVAL

I - REMOVAL PREPARATION OPERATION

❏ Position the vehicle on a two-post lift (see **Vehicle: Towing and lifting**) (02A, Lifting equipment).

❏ Release the parking brake.

❏ Remove the rear wheels (see **35A**, **Wheels and tyres**, **Wheel: Removal - Refitting**, page **35A-1**) .

II - OPERATION FOR REMOVAL OF PART CONCERNED

❏ Unclip the parking brake cable.

❏ Remove the calliper guide pin lower bolt (discard it).

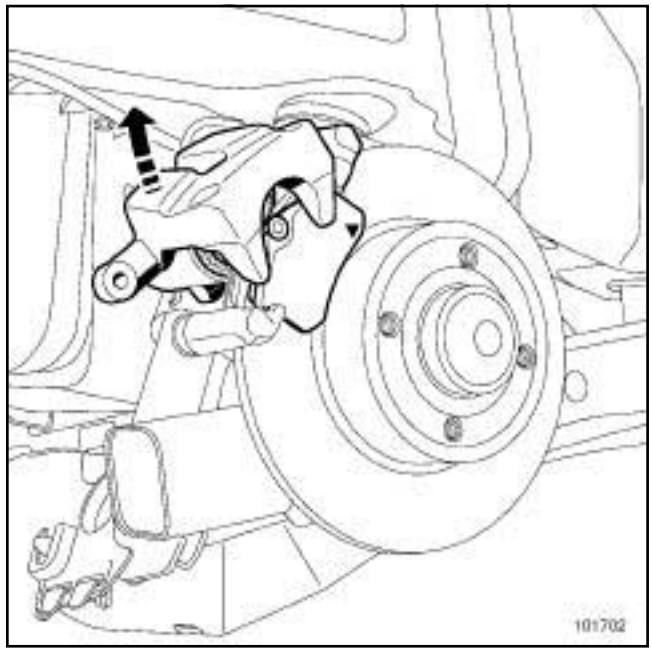

101702

❏ Rotate the calliper upwards.

❏ Remove the brake pads.

REFITTING

I - REFITTING PREPARATION OPERATION

❏ Measure the thickness of the brake pads and compare them with the minimum values (see **30A**, **General information**, **Brake: Specifications**, page **30A-6**) .

❏ Clean using a wire brush and **BRAKE CLEANER** (see **Vehicle: Parts and ingredients for the repairwork**) (04B, Consumables - Products):

- the calliper supports,

- the callipers.

❏ **parts always to be replaced: Rear brake calliper guide pin bolt (13,03,04,10)**.

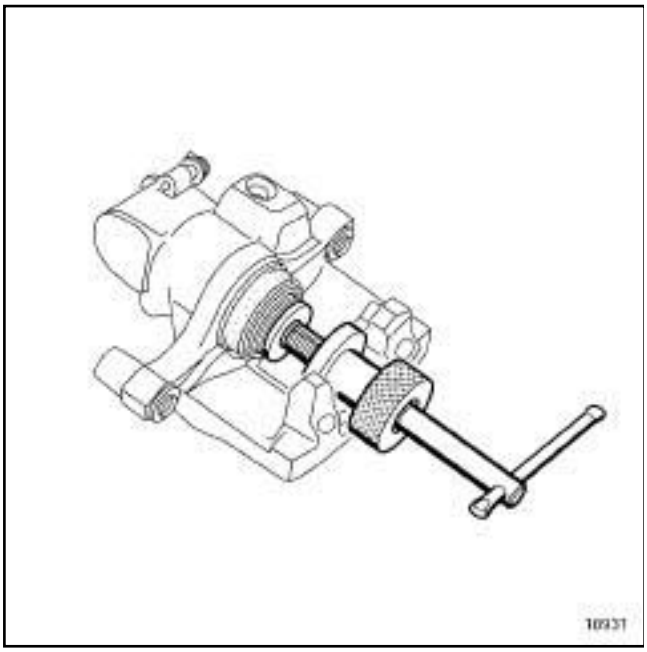

18931

❑ Push the calliper piston back using the **(Fre. 1190-01)** until it reaches the end of its bore.

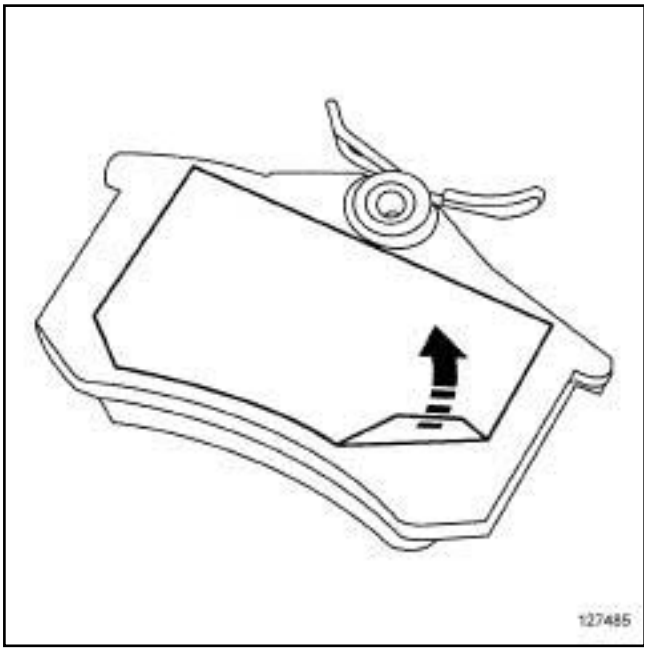

127485

❑ Remove the protective film from the brake pad.

II - REFITTING OPERATION FOR PART CONCERNED

❑ Refit:

- the new brake pads,
- the brake calliper.

❑ Torque tighten the **calliper guide pin lower bolt (36 N.m)**.

❑ Refit the parking brake cable.

> **IMPORTANT**
> To avoid any accident, bring the pistons, brake pads and brake discs into contact by depressing the brake pad several times.

❑ Operate the parking brake control several times to activate the locking and unlocking function and the calliper self-adjustment.

III - FINAL OPERATION

❑ Refit the rear wheels (see **35A**, **Wheels and tyres**, **Wheel: Removal - Refitting**, page **35A-1**) .

Essential special tooling	
Fre. 1190-01	Brake calliper piston return tool.

Essential equipment
pedal press

Tightening torques ▽	
guide pin bolts	**36 Nm**
brake hose	**17 Nm**

Note:

The callipers supplied as spare parts are supplied pre-filled.

WARNING

Prepare for brake fluid outflow, to prevent damage to the mechanical parts and bodywork around the braking system.

REMOVAL

❑ Position the vehicle on a two-post lift.

❑ Release the automatic parking brake (see **Parking brake**) .

❑ Fit the **pedal press** to the brake pedal to limit the outflow of brake fluid.

❑ Remove the rear wheel.

❑ Detach the parking brake cable.

❑ Note the parking brake cable routing for refitting.

❑ Undo the brake hose.

❑ Remove:

- the guide pin mounting bolts,
- the calliper,
- the brake pads.

❑ Cap the hose.

❑ Check the condition of the braking components (replace the faulty parts), (see **30A**, **General information**, **Brake: Specifications**, page **30A-6**) .

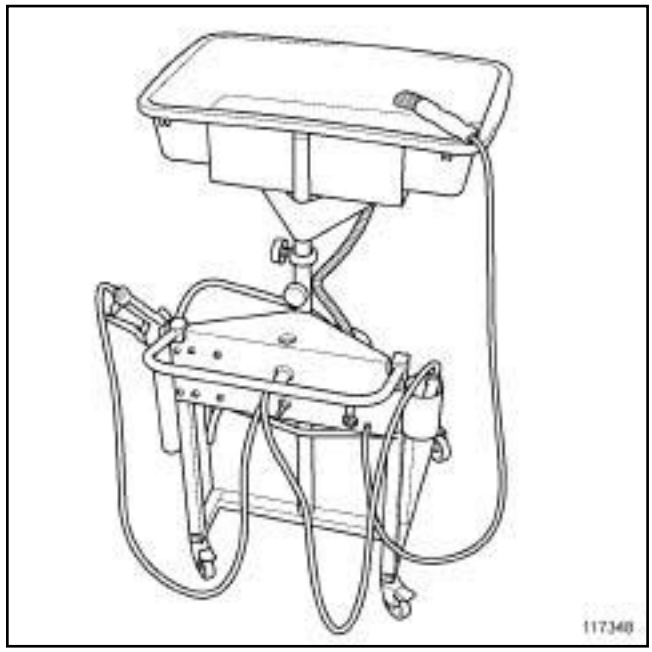

117348

❑ Clean the calliper and calliper mounting using the cleaning station.

REFITTING

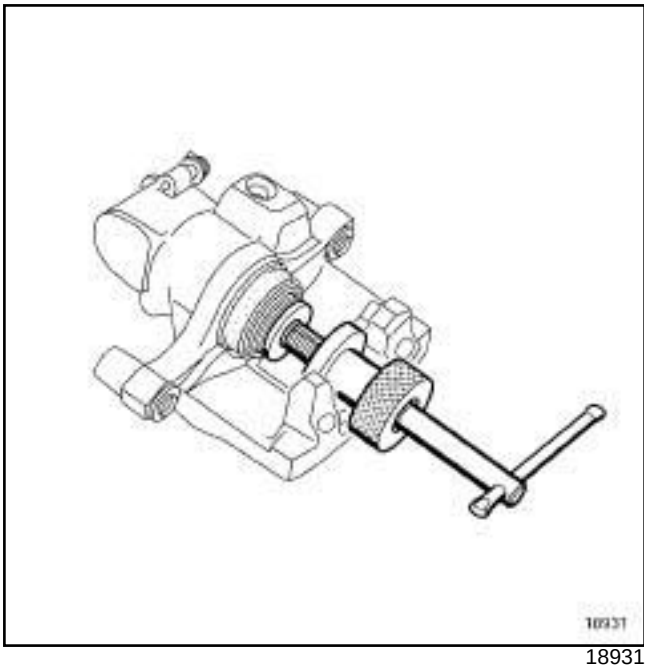

18931

- ❑ Push the calliper piston back using the **(Fre. 1190-01)** until it reaches the end of its bore.
- ❑ Refit:
  - the brake pads,
  - the calliper,
  - the guide pin bolts.

> Note:
>
> Coat the guide pin bolts with **HIGH RESISTANCE THREAD LOCK** product before fitting.

- ❑ Torque tighten:
  - the **guide pin bolts (36 Nm)**,
  - the **brake hose (17 Nm)**.

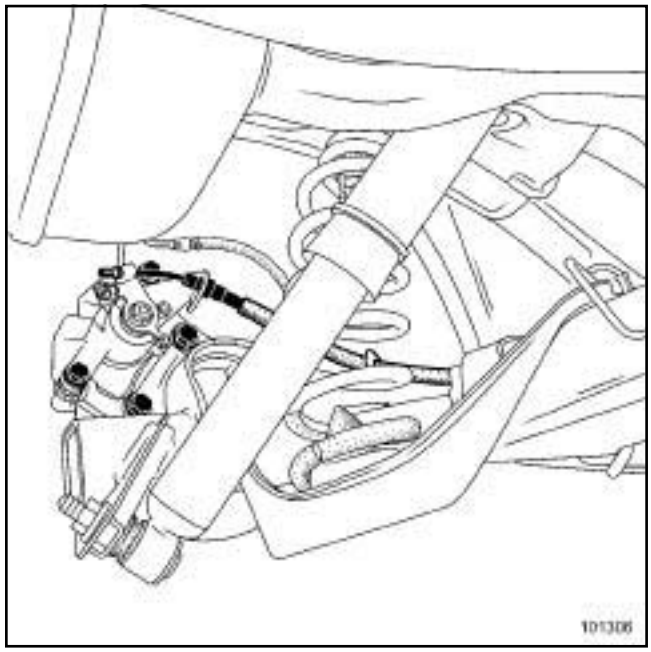

101306

- ❑ Refit the parking brake cable.
- ❑ Check that the parking brake cable stop is properly engaged in its housing.
- ❑ Bleed the brake circuit (see **30A**, **General information**, **Brake circuit Bleeding**, page **30A-2**) .
- ❑ Check the brake fluid level.
- ❑ Apply the parking brake control several times to activate the locking - unlocking function and to activate the calliper automatic play compensation.
- ❑ Refit the wheel (see **35A**, **Wheels and tyres**, **Wheel: Removal - Refitting**, page **35A-1**) .

Essential special tooling	
Fre. 1190-01	Brake calliper piston return tool.

Tightening torques ▽	
calliper mounting bolts	**105 Nm**
guide pin bolts	**36 Nm**

REMOVAL

- ❑ Position the vehicle on a two-post lift.
- ❑ Release the parking brake (see **Parking brake**) .
- ❑ Refit the rear wheel (see **35A**, **Wheels and tyres**, **Wheel: Removal - Refitting**, page **35A-1**) .
- ❑ Detach the parking brake cable.
- ❑ Note the parking brake cable routing for refitting.
- ❑ Remove:
  - the guide pin bolts,
  - the calliper.
- ❑ Suspend the calliper.
- ❑ Remove:
  - the brake pads,
  - the calliper mounting bolts,
  - the calliper mounting.
- ❑ Check the condition of the braking components (replace the faulty parts), (see **30A**, **General information**, **Brake: Specifications**, page **30A-6**) .

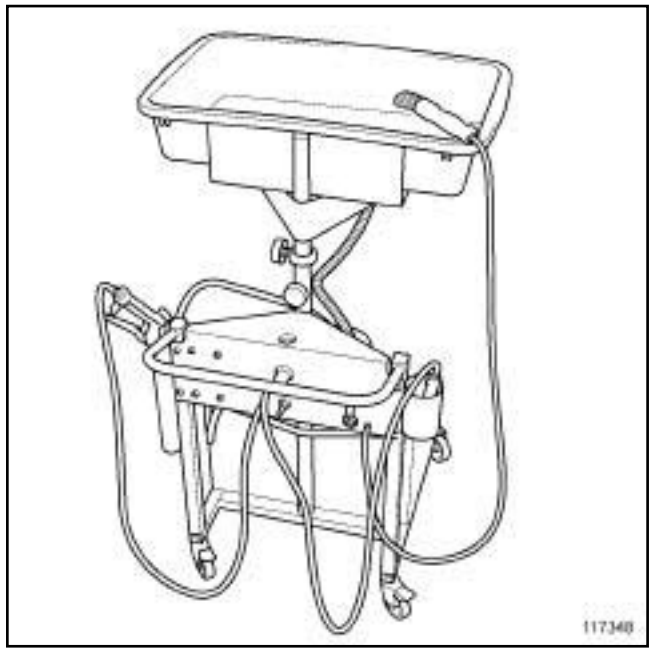

117348

- ❑ Clean the calliper and calliper mounting using the cleaning station.

REFITTING

- ❑ Refit:
  - the calliper mounting,
  - the calliper mounting bolts.

> Note:
>
> Coat the calliper mounting and guide pin bolts with **HIGH RESISTANCE THREAD LOCK** product before fitting them.

- ❑ Torque tighten the **calliper mounting bolts (105 Nm)**.

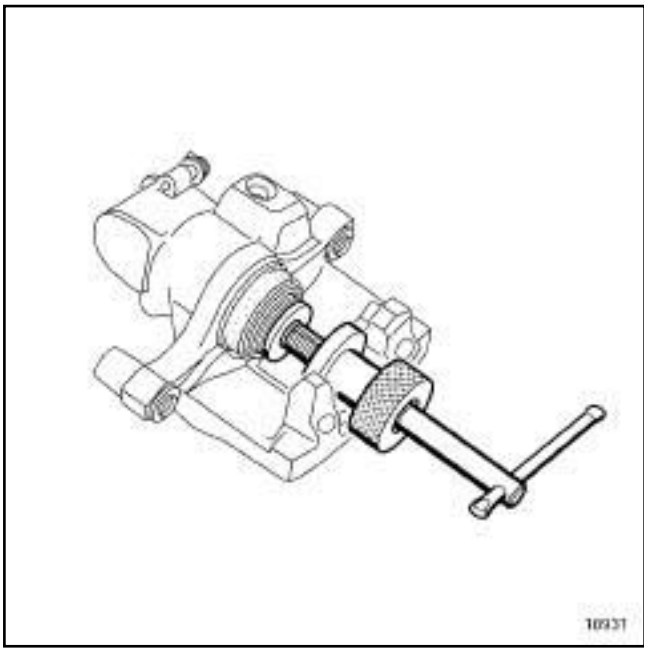

18931

- ❑ Push the calliper piston back using the **(Fre. 1190-01)** until it reaches the end of its bore.
- ❑ Refit:
  - the brake pads,
  - the calliper,
  - the guide pin bolts.
- ❑ Torque tighten the **guide pin bolts (36 Nm)**.
- ❑ Refit the parking brake cables.

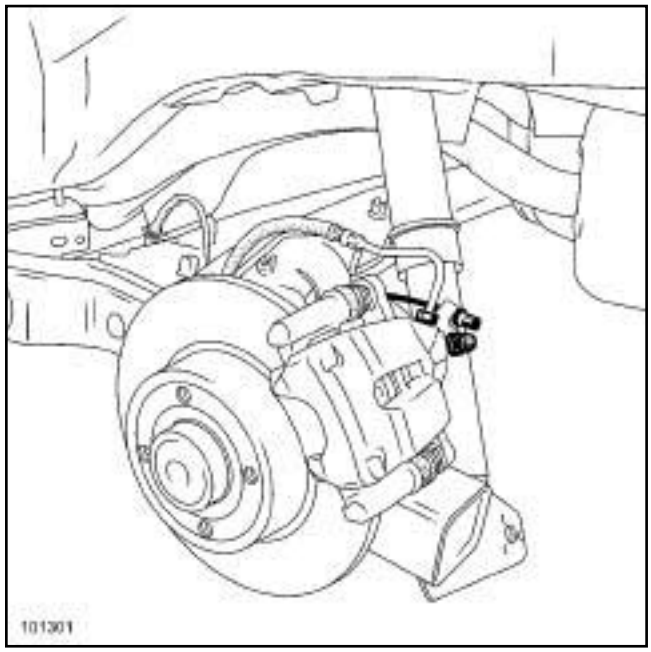

101301

- ❑ Check that the parking brake cable stop is properly engaged in its housing.
- ❑ Apply the parking brake control several times to activate the locking and unlocking function and to activate the calliper automatic play compensation.
- ❑ Refit the wheel (see **35A**, **Wheels and tyres**, **Wheel: Removal - Refitting**, page **35A-1**) .

I - PREPARATION OPERATION FOR CHECK

Position the vehicle on a two-post lift (see **Vehicle: Towing and lifting**) (02A, Lifting equipment).

Remove the rear wheel concerned (see **35A**, **Wheels and tyres**, **Wheel: Removal - Refitting**, page **35A-1**) .

II - CHECKING OPERATION FOR PART CONCERNED

Note:

Use a Palmer type tool to check the thickness of the disc.

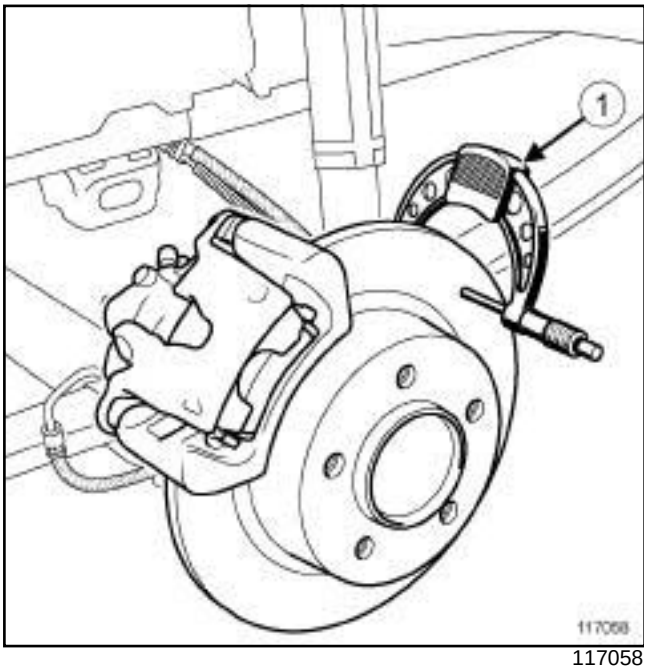

117058

Position the Palmer tool (**1**) to measure the disc thickness.

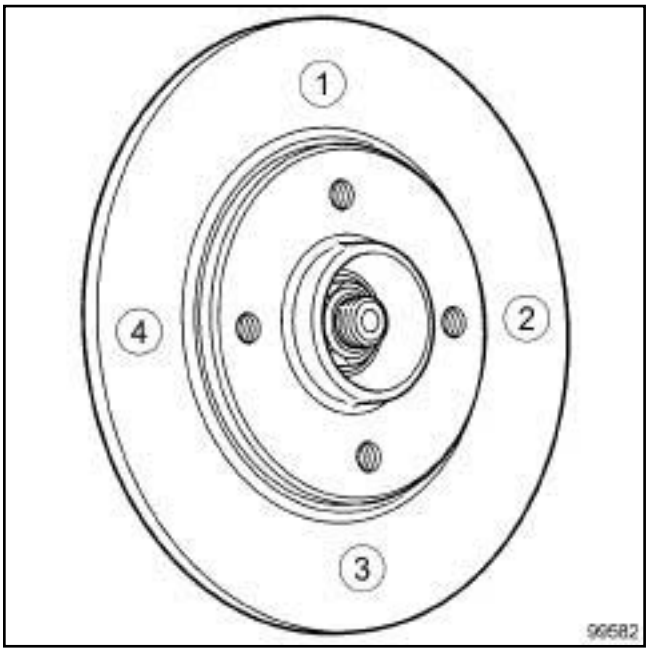

99582

Measure the thickness of the disc at 4 points in order (90˚ apart).

Compare the values with those recommended by the manufacturer (see **30A**, **General information**, **Brake: Specifications**, page **30A-6**) .

III - FINAL OPERATION

Replace the discs if necessary (see **33A**, **Rear axle components**, **Rear brake disc: Removal - Refitting**, page **33A-8**) .

Refit the rear wheel concerned (see **35A**, **Wheels and tyres**, **Wheel: Removal - Refitting**, page **35A-1**) .

Essential special tooling	
Fre. 1190-01	Brake calliper piston return tool.

Tightening torques ▽	
stub-axle nuts (standard chassis)	**220 Nm**
stub-axle nuts (long chassis)	**280 Nm**
calliper mounting bolts	**105 Nm**
guide pin bolts	**36 Nm**

Brake discs cannot be reground. If there is excessive wear or scoring, the brake discs must be replaced (see **30A**, **General information**, **Brake: Specifications**, page **30A-6**) .

When replacing a brake disc, be sure to replace the disc on the opposite side.

When replacing a brake disc, be sure to replace the brake pads.

REMOVAL

❑ Position the vehicle on a two-post lift (see **Vehicle: Towing and lifting**) (MR 370, 02A, Lifting equipment).

❑ Remove the wheels (see **35A**, **Wheels and tyres**, **Wheel: Removal - Refitting**, page **35A-1**) .

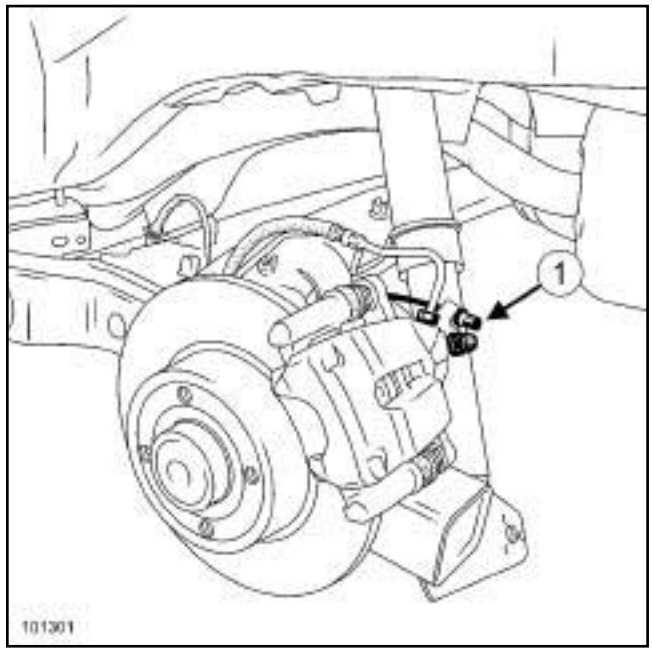

101301

❑ Unclip the parking brake cables (**1**) .

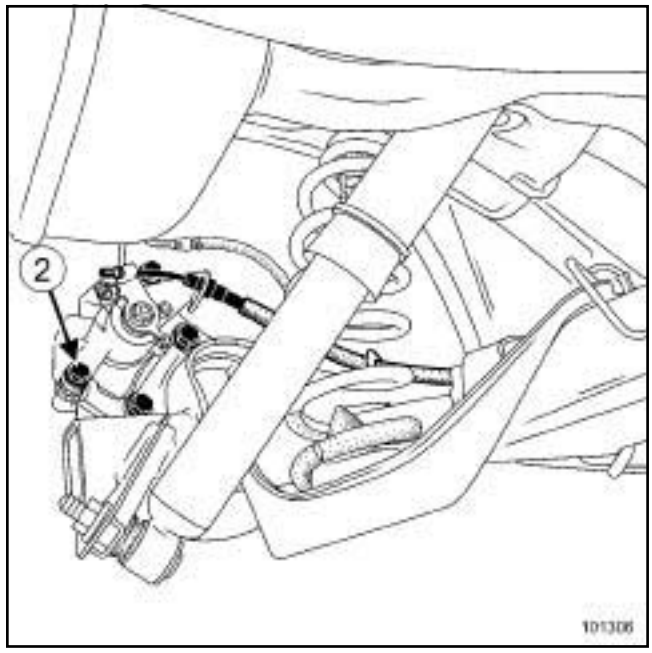

101306

❑ Remove the brake calliper lower bolts (**2**) .

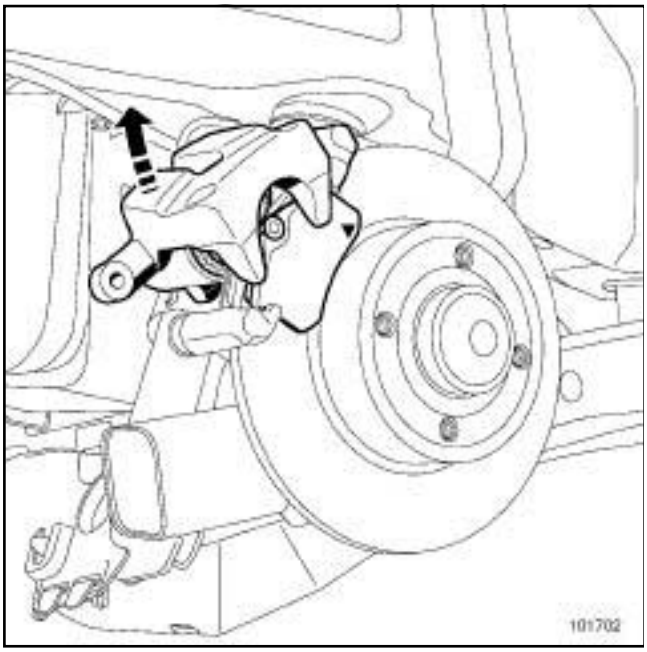

101702

❑ Turn the brake callipers upwards.

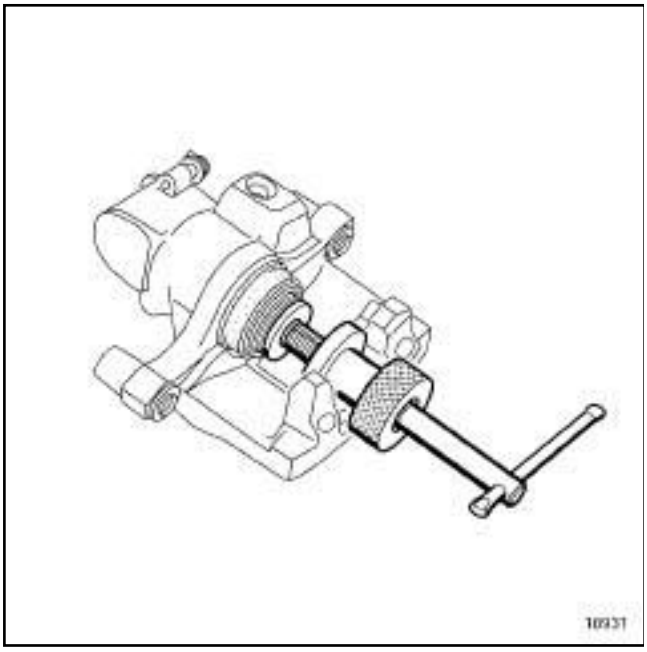

18931

❑ Push back the brake calliper pistons using **(Fre. 1190-01)** until they reach the end of their bore.

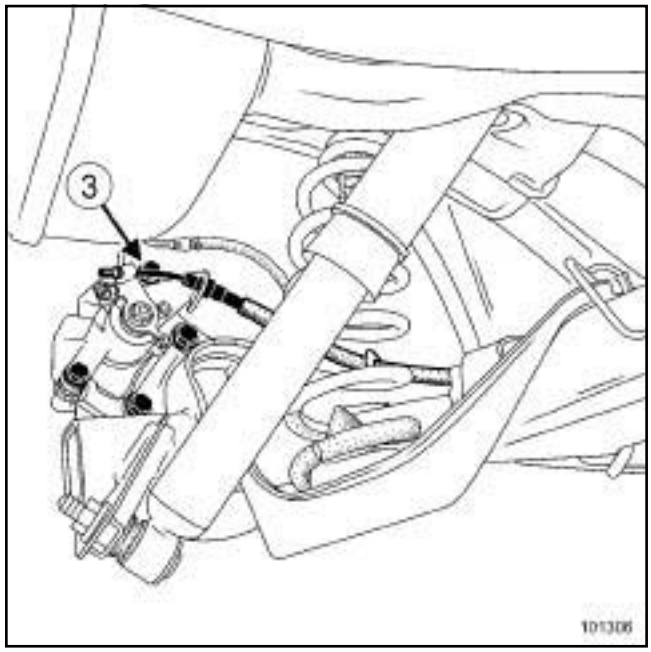

101306

❑ Remove the brake calliper upper bolts (**3**) .

❑ Suspend the brake callipers from the suspension springs.

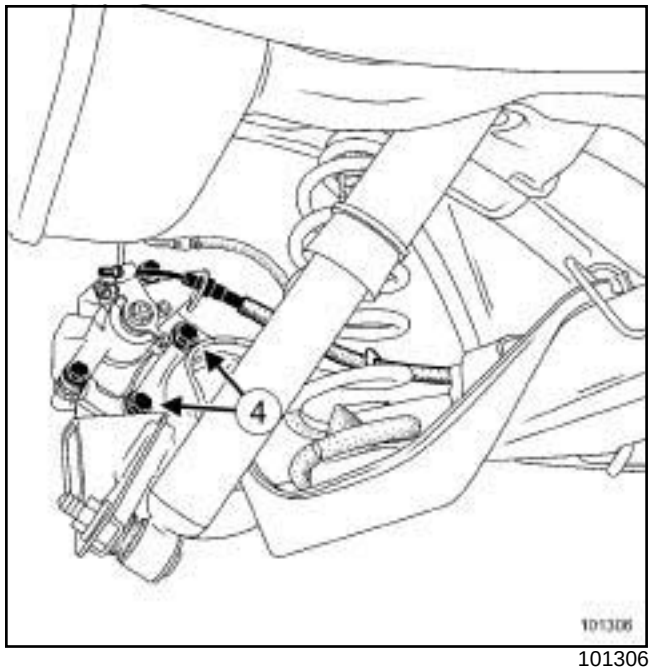

101306

❑ Remove:

- the brake pads,
- the calliper mounting bolts (**4**) ,
- the calliper mountings,
- the hub caps,
- the stub-axle nuts,
- the « disc - bearing » assemblies.

❏ Check the condition of the braking components (replace the faulty parts), (see **30A**, **General information**, **Brake: Specifications**, page **30A-6**) .

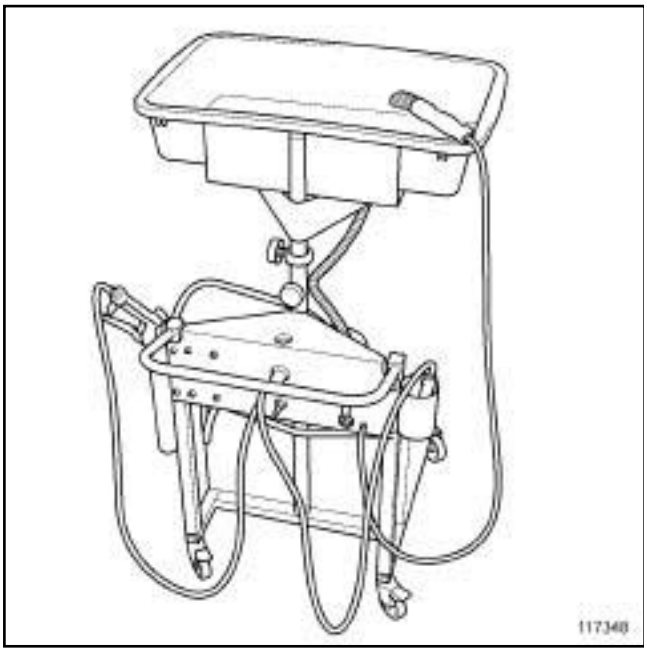

117348

❏ Clean the callipers and calliper mountings using the cleaning station.

REFITTING

❏

> Note:
>
> Coat the calliper mounting and guide pin bolts with **HIGH RESISTANCE THREAD LOCK** product before fitting them.

❏ Torque tighten:

- the **stub-axle nuts (standard chassis) (220 Nm)**,
- the **stub-axle nuts (long chassis) (280 Nm)**,
- the **calliper mounting bolts (105 Nm)**,
- the **guide pin bolts (36 Nm)**.

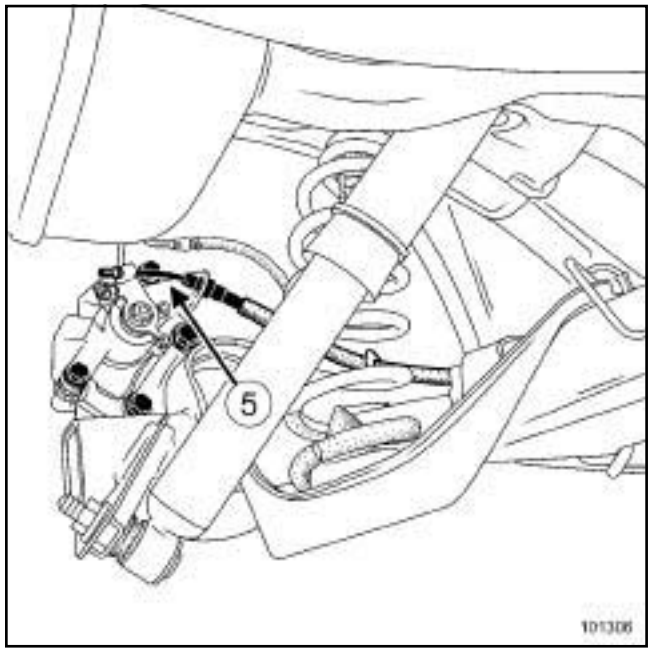

101306

❏ Refit the parking brake cables (**5**) .

❏ Check that the parking brake cable stops are properly engaged in their housing.

> Note:
>
> Depress the brake pedal several times to bring the pistons, brake pads and discs into contact.

❏ Check the brake fluid level.

❏ Apply the parking brake control several times to activate the locking and unlocking function and to activate the calliper automatic play compensation.

❏ Refit the wheels (see **35A**, **Wheels and tyres**, **Wheel: Removal - Refitting**, page **35A-1**) .

Essential equipment
pedal press

Tightening torques ▽	
rigid brake pipe on the rear axle	**1.4 daNm**
rigid brake pipe on the calliper	**1.4 daNm**

The pipes have a rigid and a flexible section.

WARNING
Prepare for brake fluid outflow, to prevent damage to the mechanical parts and bodywork around the braking system.

REMOVAL

❑ Position the vehicle on a two-post lift (see **Vehicle: Towing and lifting**) (MR 370, 02, Lifting equipment).

❑ Fit the **pedal press** to the brake pedal to limit the outflow of brake fluid.

❑ Raise the vehicle.

I - REAR LEFT-HAND BRAKE RIGID PIPE

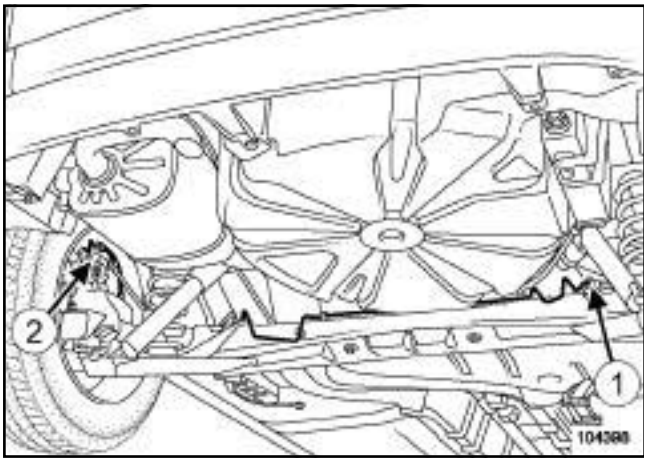

104398

❑ Unscrew:

- the rigid brake pipe at the rear axle (**1**) ,
- the rigid pipe at the calliper (**2**) .

❑ Unclip the rear axle rigid brake pipe.

❑ Remove the rigid brake pipe.

II - REAR RIGHT-HAND RIGID BRAKE PIPE

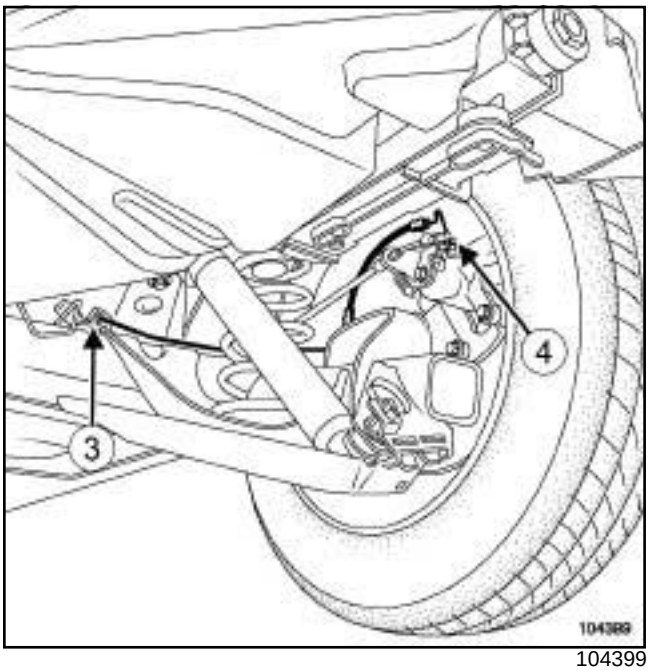

104399

❑ Unscrew:

- the rigid brake pipe at the rear axle (**3**) ,
- the rigid pipe at the calliper (**4**) .

❑ Unclip the rear axle rigid brake pipe.

❑ Remove the rigid brake pipe.

REFITTING

❑

WARNING
Do not twist the brake pipe.

Make sure that there is no contact between the brake pipe and the surrounding components.

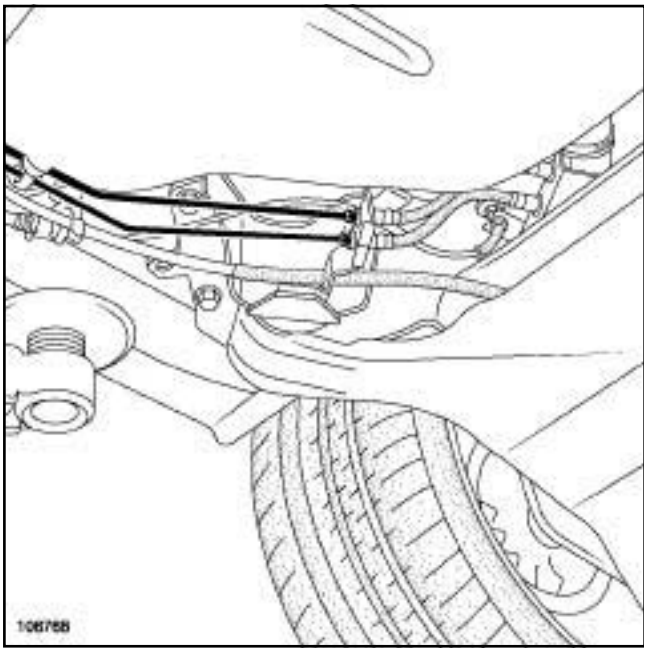

106768

❑ To refit, proceed in the reverse order of removal.

> **IMPORTANT**
> Make sure that the underbody brake pipes are not under any strain at all the clips, and that they are not crossed. If the brake pipes are crossed, the ABS and ESP systems will not work properly.

❑ Torque tighten:

- the **rigid brake pipe on the rear axle (1.4 daNm)**,
- the **rigid brake pipe on the calliper (1.4 daNm)**.

❑ Bleed the brake circuit (see **30A**, **General information**, **Brake circuit Bleeding**, page **30A-2**) .

REMOVAL

❑ Remove the brake disc (see **33A**, **Rear axle components**, **Rear brake disc: Removal - Refitting**, page **33A-8**) .

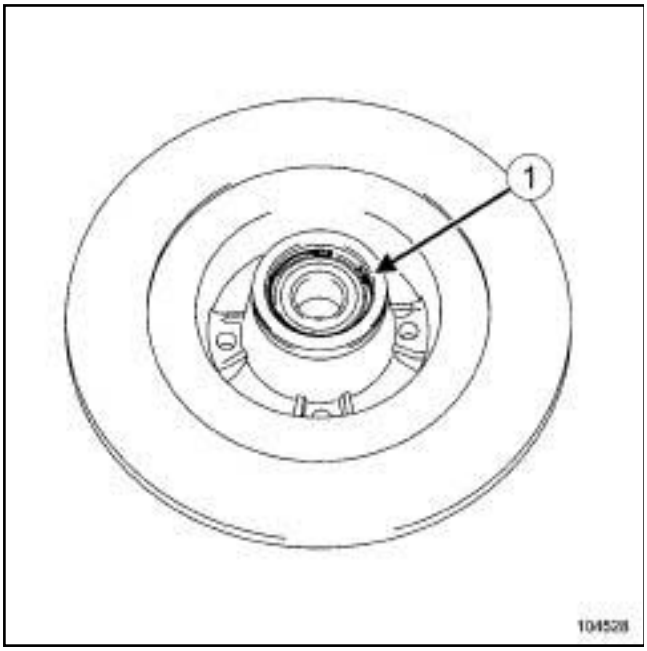

104528

❑ Remove the circlip (**1**)

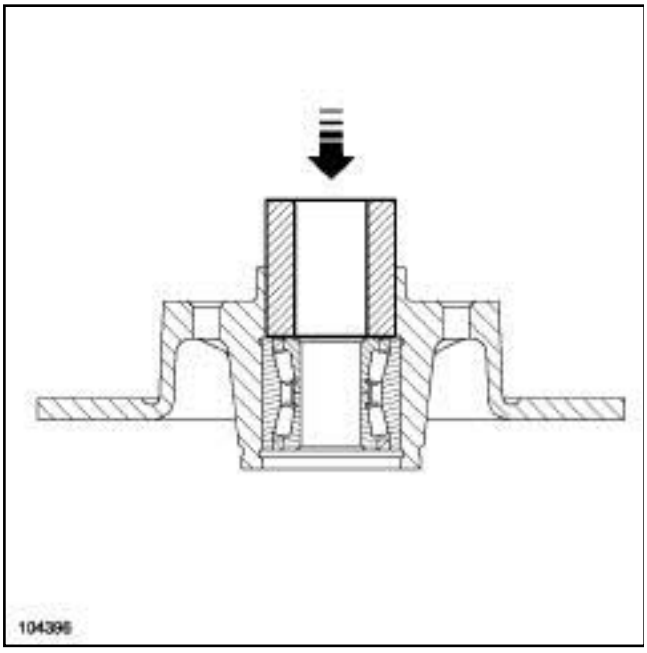

104396

❑ Remove the bearing with a press, applying pressure with a **49 mm** diameter tube.

REFITTING

❑

WARNING
Take care not to mark the wheel speed sensor target on the bearing fitted with it when refitting.

WARNING

Clean:

- the internal and external surfaces of the new bearing in contact with the hub carrier and the stub-axle,
- the hub carrier surfaces in contact with the new bearing,
- the stub-axle surfaces in contact with the new bearing,

WARNING
Before refitting the bearing, the condition of the stub-axle surface and the bore of the hub carrier must be checked. Replace the hub carrier if it is faulty.

WARNING
Do not apply pressure to the inner bearing bush, to avoid damaging the bearing (significant force is required for fitting).

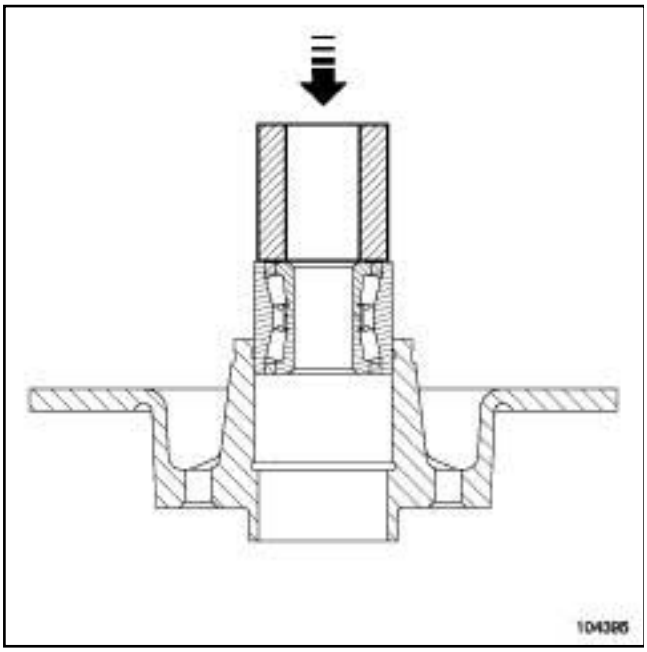

104395

- Refit the bearing with a press, applying pressure with a **49 mm** diameter tube.
- Refit the circlip.
- To refit, proceed in the reverse order of removal.

Essential equipment
component jack

Tightening torques ▽	
wheel mounting bolts	**13 daNm**
shock absorber lower mounting bolts	**10.5 daNm**

During removal, note the colours of the shock absorbers and springs to be sure that the parts for refitting are compliant.

WARNING
Never use the rear axle as support for a lifting system.

REMOVAL

❑ Position the vehicle on a two-post lift (see **Vehicle: Towing and lifting**) (MR 370, 02A, Lifting equipment).

❑ Remove:

- the rear wheels (see **35A**, **Wheels and tyres**, **Wheel: Removal - Refitting**, page **35A-1**) ,
- the clips from the rear axle protective fairing using unclipping pliers,
- the rear axle protective cowling.

1 - Left side

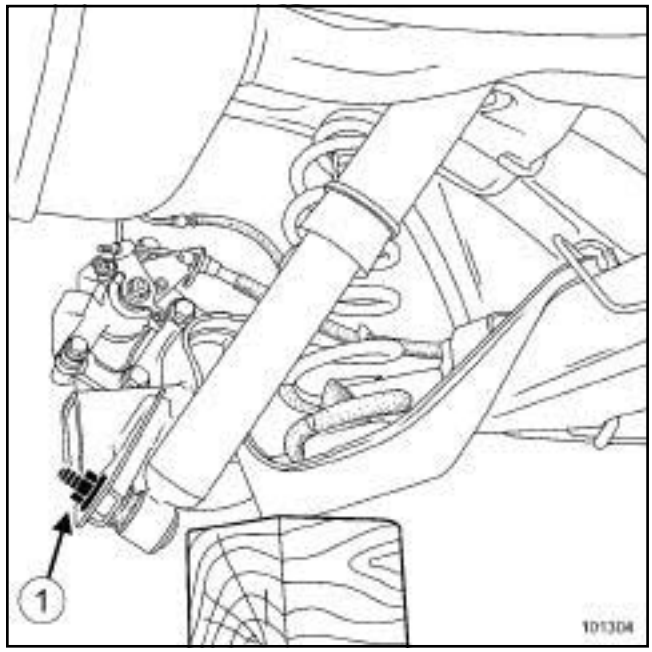

101304

❑ Fit the **component jack**, with a shim, under the left spring cup.

❑ Mark the position where the left spring is fitted.

❑ Remove the left-hand shock absorber lower mounting (**1**) using a long socket.

❑ Release the left shock absorber lower mounting.

❑ Remove the **component jack**.

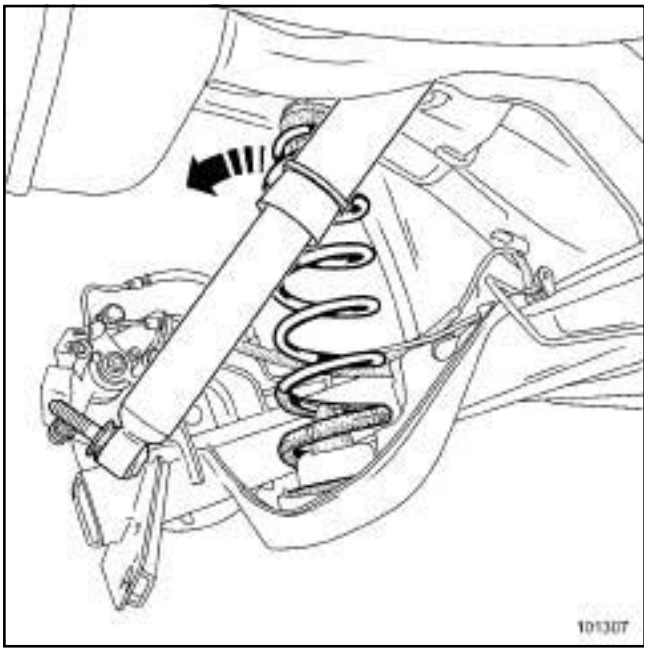

101307

❑ Remove the left spring with its lower support.

> **WARNING**
> If the upper support is unclipped, replace it with a new one.

2 - Right-hand side

❑ Repeat these operations on the right side of the vehicle.

❑ Leave the rear axle suspended.

REFITTING

❑ Refit:

- the two lower supports on the springs,
- the springs in their housing.

❑ Mount the bump stops on the axle assembly, with the marking towards the rear and in the longitudinal axis of the vehicle.

1 - Left side

❑ Bring the **component jack** into contact, using a shim, under the spring cup.

❑ Insert the spring into its bump stops, starting at the top.

❑ Compress the rear axle.

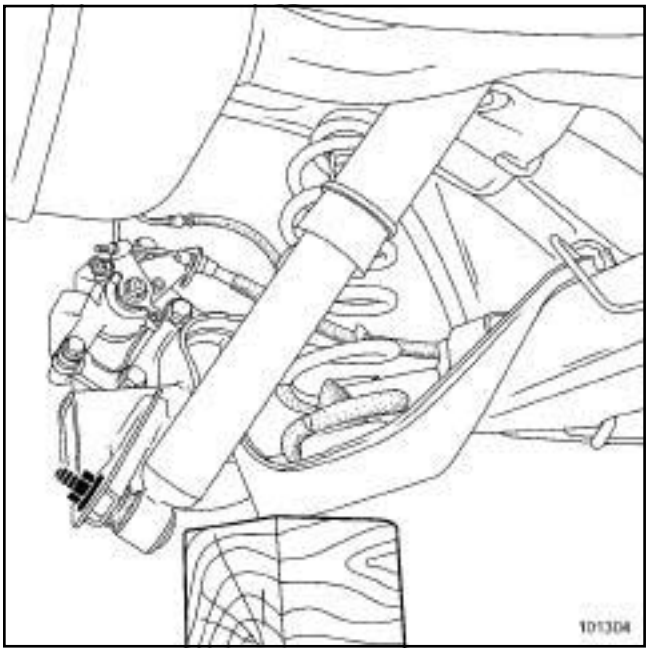

101304

❑

> **WARNING**
> Make sure that the shock absorber lower mounting is fitted the right way round.

❑ Refit the shock absorber lower mounting.

❑ Pre-tighten the shock absorber lower mounting.

> **WARNING**
> The shock absorber mountings are only to be tightened with the vehicle wheels on the ground.

❑ Remove the **component jack**.

2 - Right-hand side

❑ Repeat these operations on the right side of the vehicle.

❑ Refit the rear wheels (see **35A**, **Wheels and tyres**, **Wheel: Removal - Refitting**, page **35A-1**) .

❑ Torque tighten the **wheel mounting bolts (13 daNm)**.

❑ Lower the lift until the wheels touch the ground.

❑ Torque tighten the **shock absorber lower mounting bolts (10.5 daNm)**.

❑ Raise the lift again.

❑ Refit the rear axle aerodynamic fairing, replacing any damaged plastic clips.

Tightening torques ▽	
shock absorber upper mounting bolts	**6.2 daNm**
shock absorber lower mounting bolts	**10.5 daNm**

During removal, note the colours of the shock absorbers and springs to be sure that the parts for refitting are compliant.

WARNING
- Never use the rear axle as support for a lifting system.
- When replacing a shock absorber, the shock absorber on the opposite side must be replaced.

REMOVAL

❑ Position the vehicle on a two-post lift (see **Vehicle: Towing and lifting**) (MR 370, 02A, Lifting equipment).

❑ Lift up the carpet in the boot.

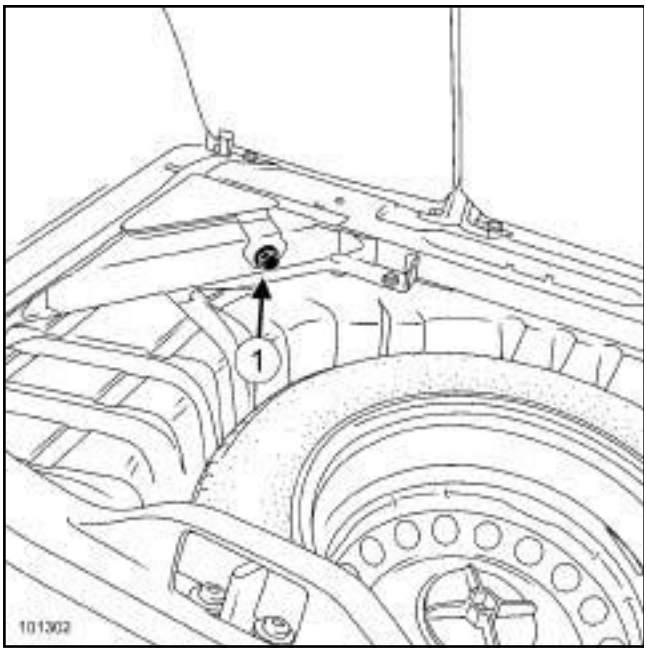

101302

❑ Remove the shock absorber head upper mounting bolt (**1**) .

❑ Raise the lift.

❑ Remove:

- the protective fairing cover clip,
- the shock absorber lower mounting nut,
- the shock absorber.

REFITTING

❑ Refit:

- the shock absorber,
- the shock absorber lower mounting.

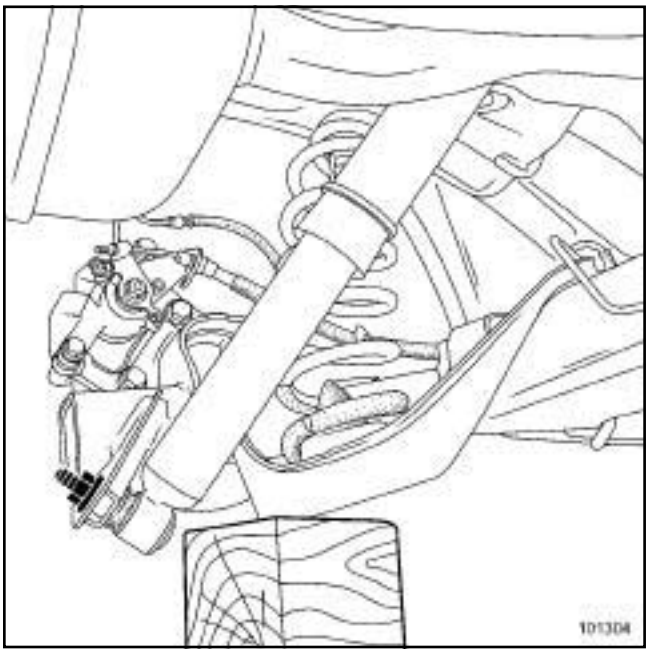

101304

❑

WARNING
Make sure that the shock absorber lower mounting is fitted the right way round.

❑ Pretighten the shock absorber lower mounting.

WARNING
The shock absorber mountings are only to be tightened with the vehicle wheels on the ground.

❑ Cut the retaining wire.

❑ Position the shock absorber head in its housing.

❑ Lower the lift until the wheels touch the ground.

❑ Align the shock absorber head with the drill hole in the boot.

❑ Refit the shock absorber upper mounting bolt.

❑ Pretighten the shock absorber upper mounting bolt.

❑ Repeat the operation on the opposite side.

❑ Torque tighten:

- the **shock absorber upper mounting bolts (6.2 daNm)**,

- the **shock absorber lower mounting bolts (10.5 daNm)** while holding the bolt heads.

❑ Refit the shock absorber lower mounting protective fairing covers, replacing any damaged plastic clips.

Essential special tooling	
Tar. 1838	Tool for removing and refitting rear axle rubber bushes

Tightening torques ▽	
the nut of the cover B	**16 Nm**
new bolts of the rubber bearings	**130 Nm**

REMOVAL

I - REFITTING PREPARATION OPERATION

❑ Position the vehicle on a two-post lift (see **Vehicle: Towing and lifting**) (02A, Lifting equipment).

❑ Remove:

- the rear wheels (see **35A**, **Wheels and tyres**, **Wheel: Removal - Refitting**, page **35A-1**) ,
- the rear axle (see **33A**, **Rear axle components**, **Complete rear axle: Removal - Refitting**, page **33A-21**) .

II - OPERATION FOR REMOVAL OF PART CONCERNED

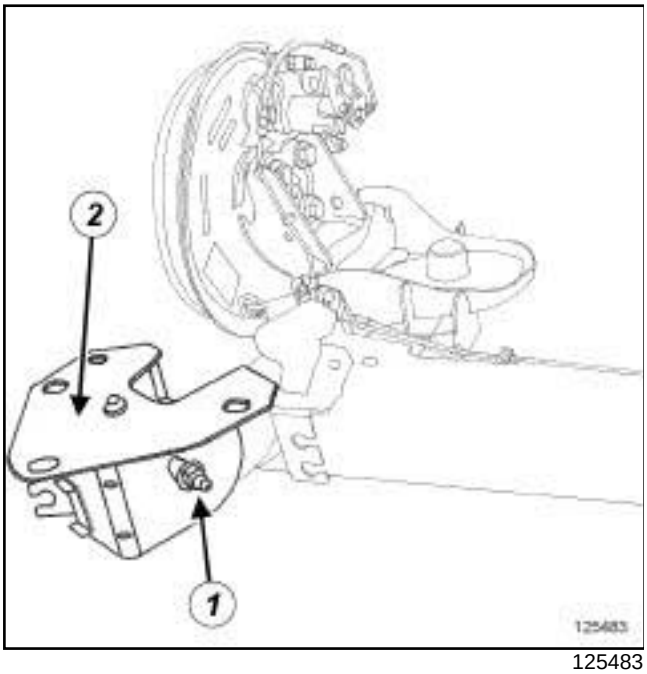

125483

❑ Remove:

- the bearings bolt (**1**) ,
- the bearings (**2**) .

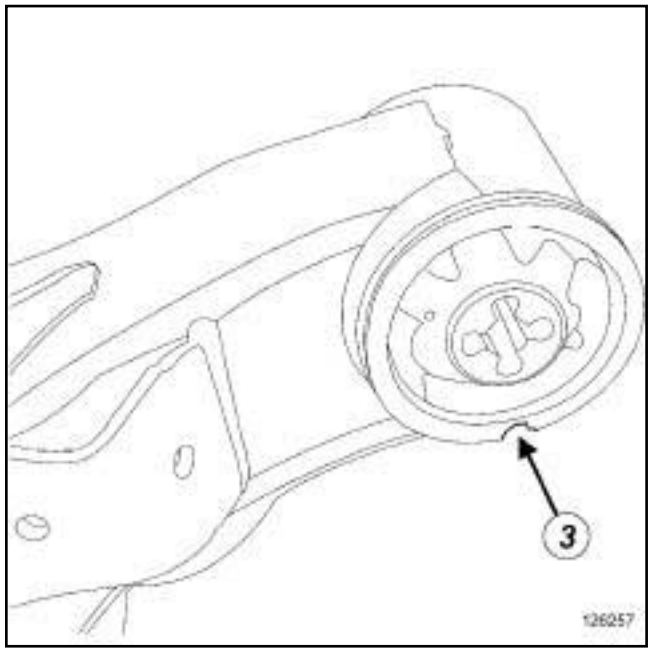

126257

❑ Mark the position of the rubber bush on the rear axle, take the notch (**3**) on the rubber bush as a mark.

❑ Mark the rear axle aligning it with the notch.

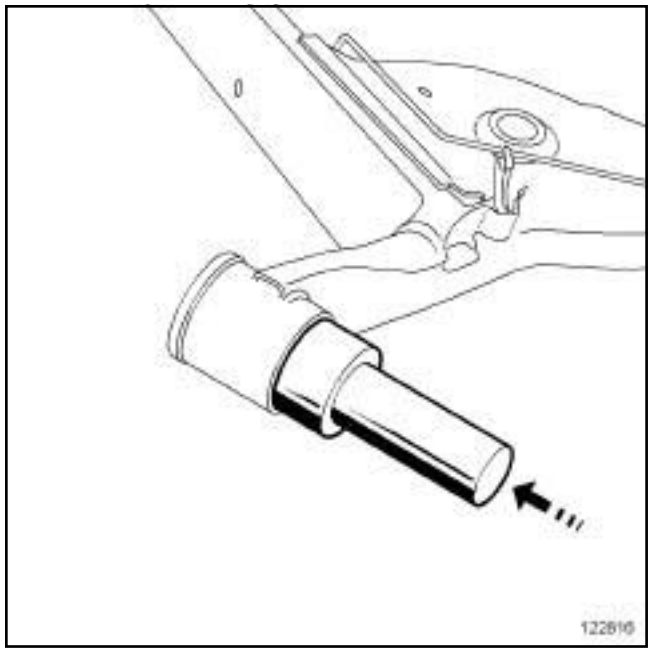

122816

❑ Remove the rubber bushes by hitting them with a hammer or the bush castor of the tool **(Tar. 1838)**.

REFITTING

I - REFITTING PREPARATION OPERATION

❑ Always replace:

- the rubber bushes,
- the nuts of the rear axle elastic bearings,
- the rear axle bolts.

II - REFITTING OPERATION FOR PART CONCERNED

❑ Position the rubber bush so as to to align the notch of the new rubber bush and the mark made previously on the rear axle.

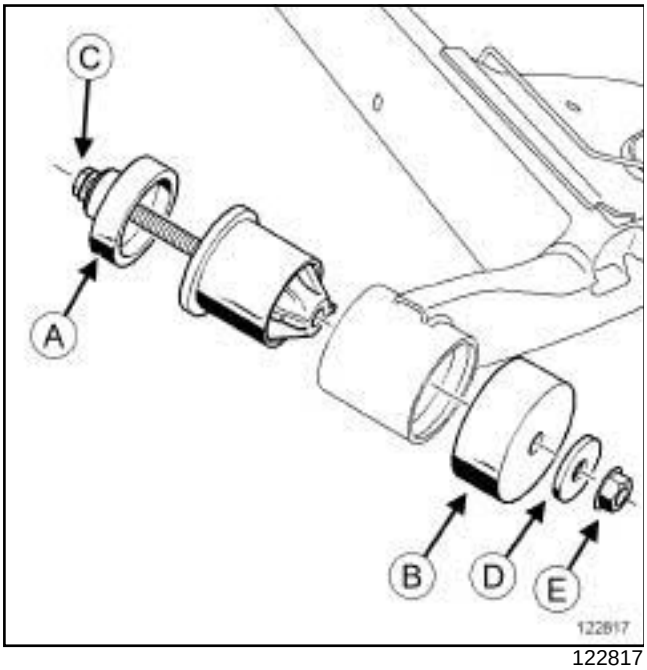

122817

❑ Fit:

- the covers (**A**) and (**B**) of the tool **(Tar. 1838)**,
- the threaded rod (**C**) of the tool **(Tar. 1838)**,
- the washer (**D**) of the tool **(Tar. 1838)**,
- the nut (**E**) of the tool **(Tar. 1838)**.

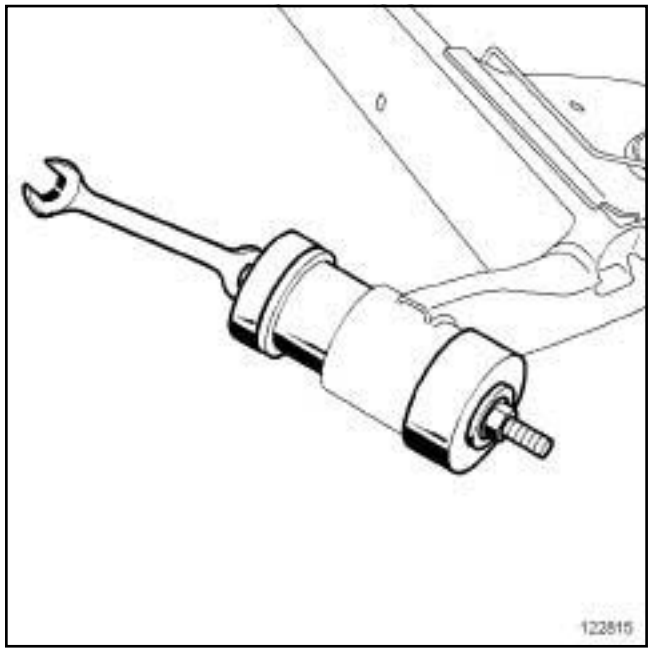

122815

❑ Tighten the tool rod **(Tar. 1838)** until the cover comes into contact with the rear axle.

❑ Check that the notch is always aligned with the mark.

❑ Torque tighten **the nut of the cover B (16 Nm)**.

❑ Remove the **(Tar. 1838)**.

❑ Refit the bearings.

❑ Torque tighten the **new bolts of the rubber bearings (130 Nm)**.

III - FINAL OPERATION.

❑ Refit:

- the rear axle (see **33A**, **Rear axle components**, **Complete rear axle: Removal - Refitting**, page **33A-21**) ,
- the rear wheels (see **35A**, **Wheels and tyres**, **Wheel: Removal - Refitting**, page **35A-1**) .

❑ Adjust the rear axle (see **30A**, **General information**, **Rear axle: Adjusting**, page **30A-20**) .

Essential special tooling	
Mot. 1390	Support for removing/refitting the engine - gearbox assembly.

Essential equipment
pedal press
component jack

Tightening torques ▽	
bearing mounting bolts	**6.2 daNm**
brake hose bolts	**1.4 daNm**
shock absorber lower mountings	**10.5 daNm**
wheel bolts	**13 daNm**

WARNING
Never use the rear axle as support for a lifting system.

REMOVAL

❑ Release the automatic parking brake (see **Parking brake**) .

❑ Position the vehicle on a two-post lift (see **Vehicle: Towing and lifting**) (MR 370, 02A, Lifting equipment).

Note:
- During this operation, secure the vehicle to the lift with a strap to prevent it from becoming unbalanced.
- For the strap fitting procedure, (see **Vehicle: Towing and lifting**) (MR 370, 02A, Lifting equipment).

❑ Fit the **pedal press** to the brake pedal to limit the outflow of brake fluid.

❑ Remove the rear wheels (see **35A**, **Wheels and tyres**, **Wheel: Removal - Refitting**, page **35A-1**) .

❑ Unclip the parking brake cables.

❑ Note the parking brake cable routing for refitting.

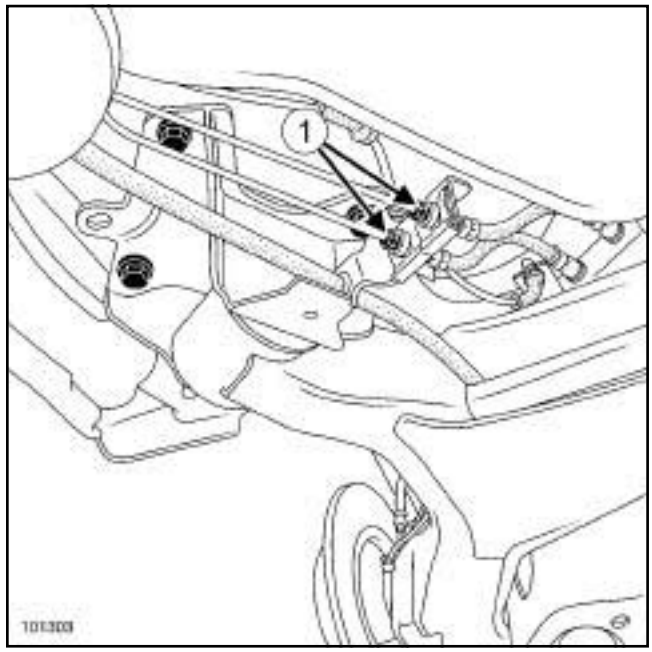

101303

❑ Undo the brake hose nuts (**1**) .

❑ Disconnect the wheel speed sensor connectors on each side member.

❑ Remove:
- the clips from the rear axle protective fairing using unclipping pliers,
- the rear axle protective cowling.

1 - Left side

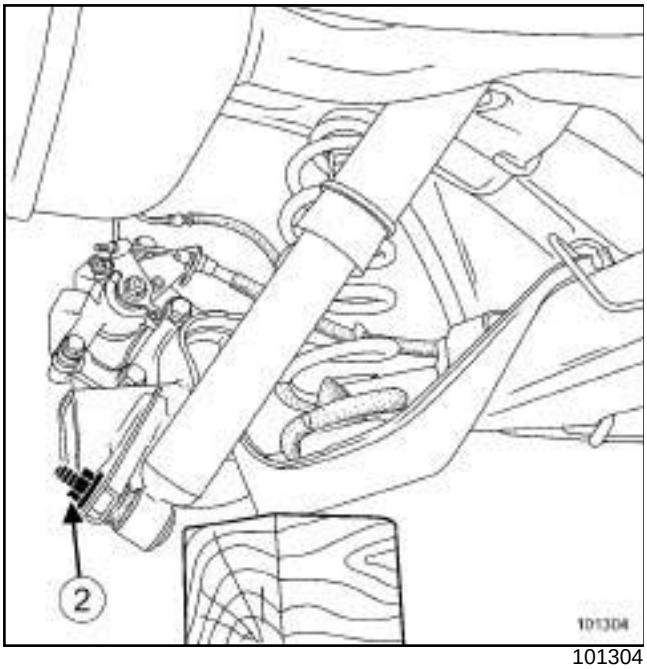

101304

- ❑ Fit the **component jack** with a shim, under the left spring cup.
- ❑ Mark the position where the left spring is fitted.
- ❑ Remove the left shock absorber lower mounting (**2**) using a long socket.
- ❑ Put aside the left shock absorber lower mounting.
- ❑ Remove the **component jack**.

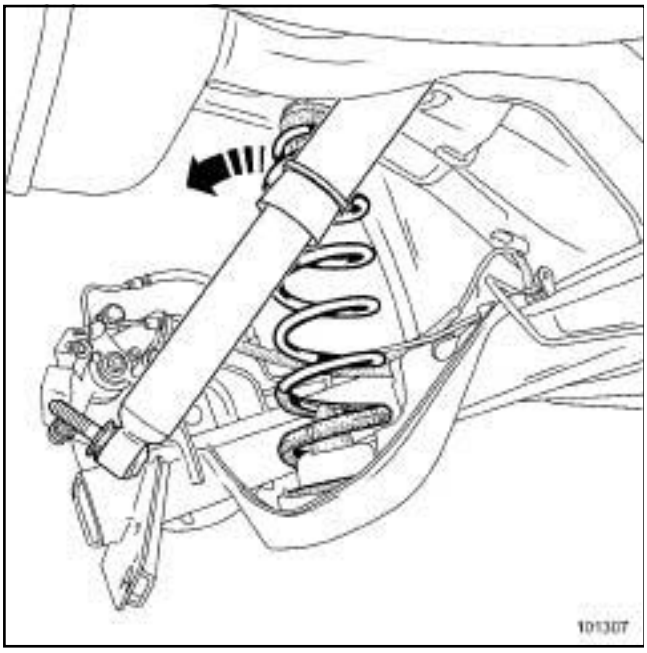

101307

- ❑ Remove the left spring and its supports.

2 - Right-hand side

- ❑ Repeat these operations on the right side of the vehicle.

AUTOMATIC PARKING BRAKE

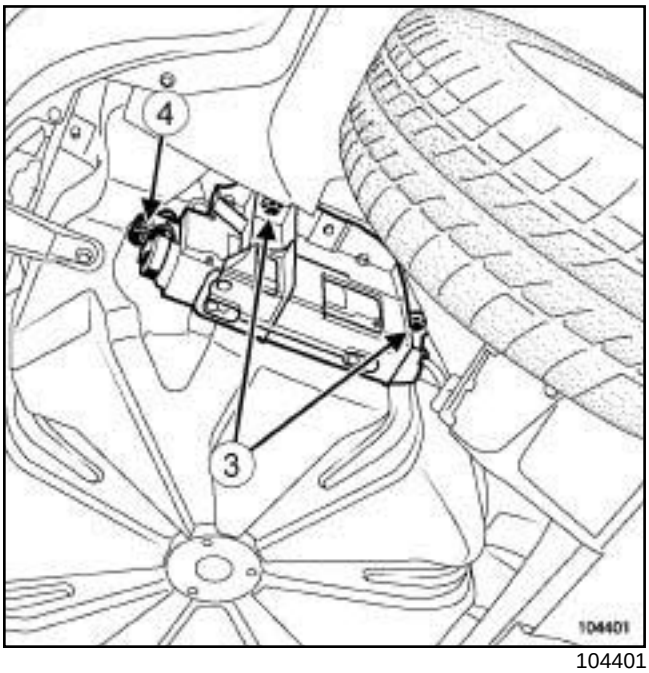

104401

- ❑ Remove both mounting bolts (**3**) from the automatic parking brake control unit support.
- ❑ Take out the automatic parking brake control unit downwards.
- ❑ Disconnect the automatic parking brake control unit wiring (**4**) .
- ❑ Hang the automatic parking brake control unit on the rear axle.

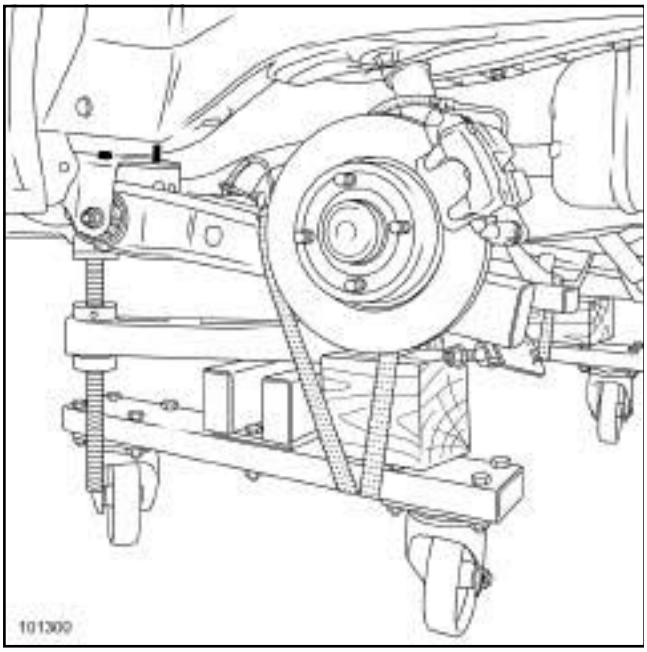

101300

❑ Fit the **(Mot. 1390)** on the rear axle jacking points.

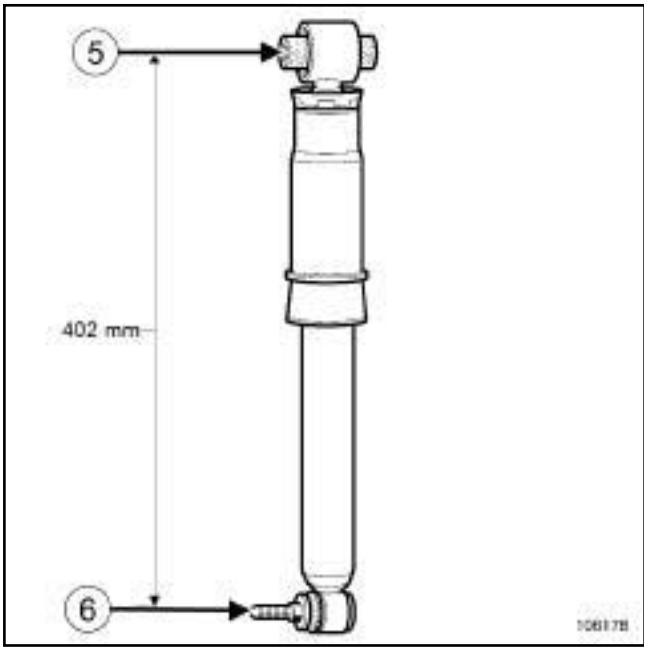

106178

❑ Adjust the height of the pads to obtain a centre-to-centre distance between the shock absorber mounting points (body mounting (**5**) , axle mounting (**6**)) corresponding to a length of **402 mm**.

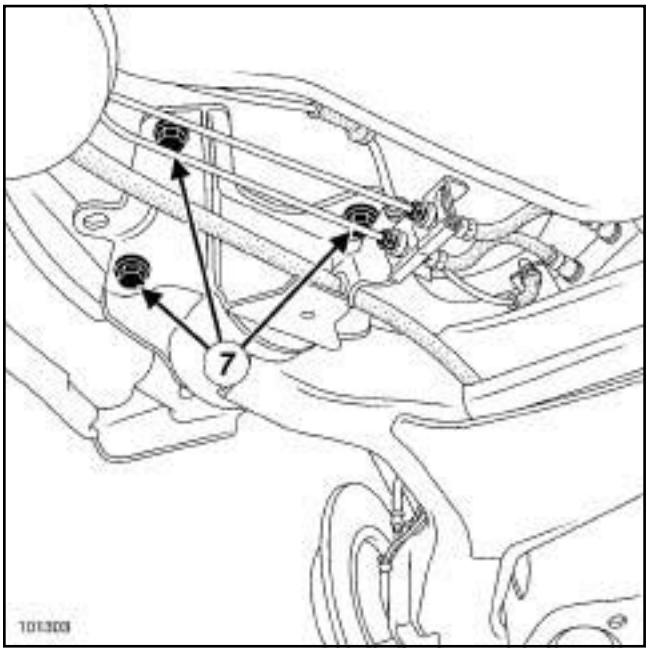

101303

❑ Loosen the bearing bolts.

❑ Position the pads of the **(Mot. 1390)** in contact with the rear axle.

❑ Strap the rear axle.

❑ Remove the bearing bolts.

❑ Raise the vehicle.

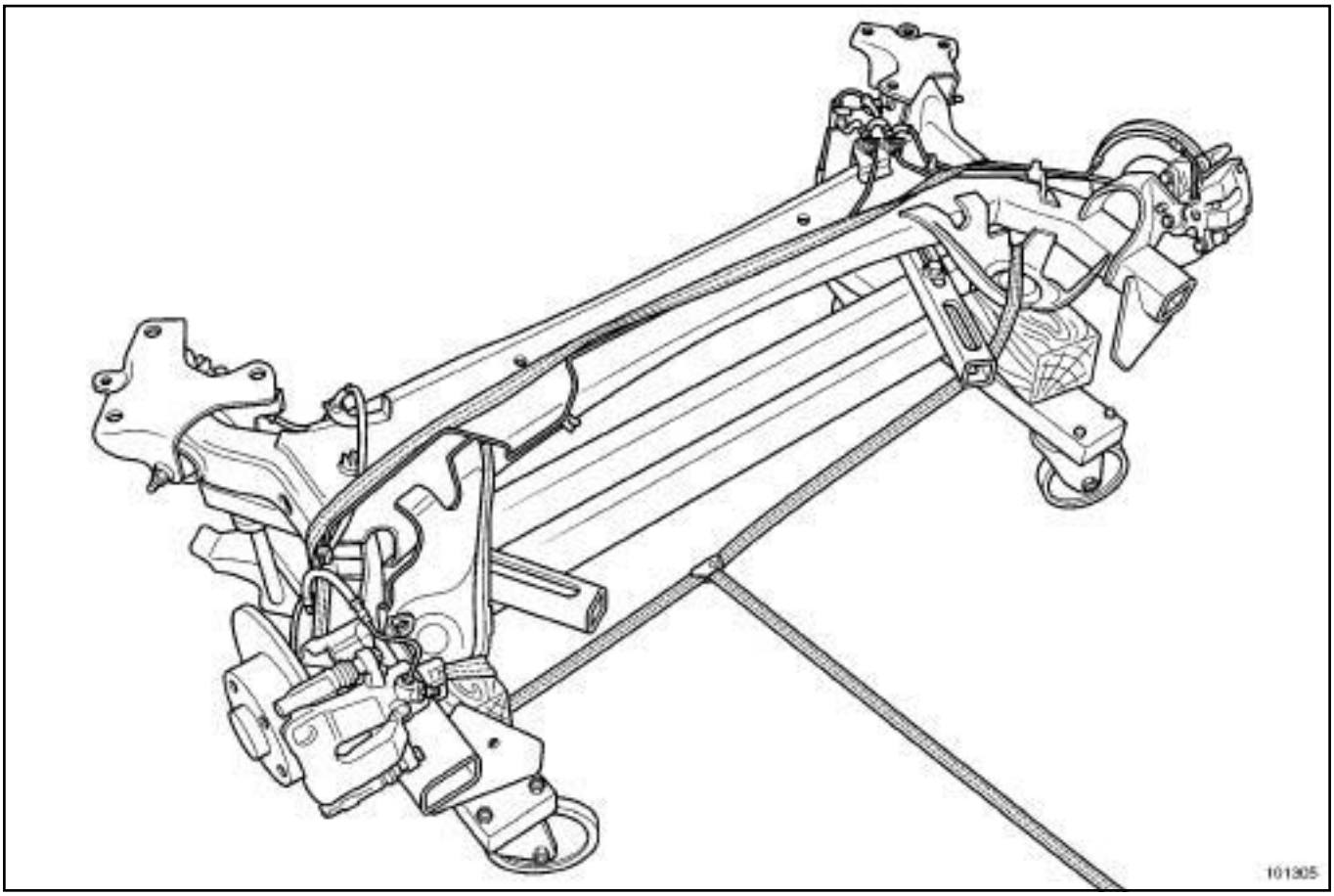

101305

❏ Remove the rear axle equipment.

REFITTING

❏ Refit the rear axle equipment.

❏ Strap the rear axle onto the **(Mot. 1390)**.

❏ Position the axle under the vehicle.

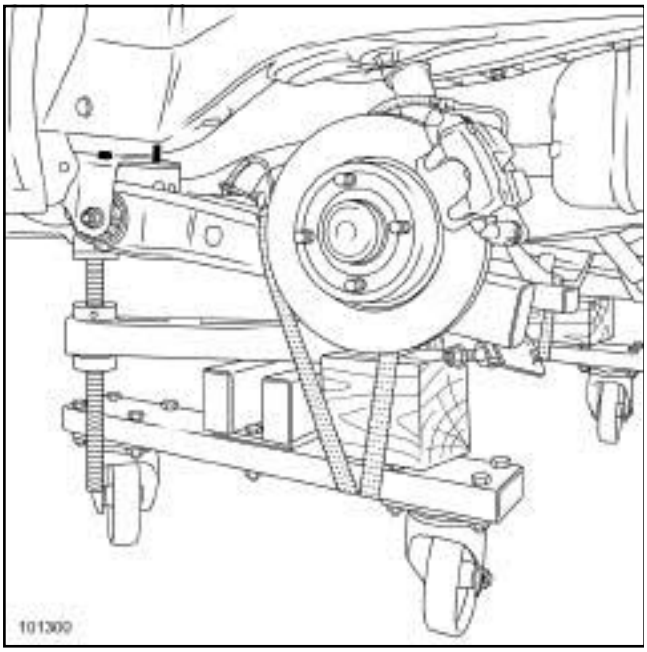

101300

- ❑ Lower the lift.
- ❑ Position the bearing locators opposite the centring holes.
- ❑ Refit the mountings, starting with the left-hand bearing.
- ❑ Insert the brake pipes into their housing.
- ❑ Remove the strap.
- ❑ Raise the lift.
- ❑ Remove the **(Mot. 1390)**.
- ❑ Torque tighten:
  - the **bearing mounting bolts (6.2 daNm)**,
  - the **brake hose bolts (1.4 daNm)**.
- ❑ Reconnect the ABS system connectors.
- ❑ Refit the parking brake cables.

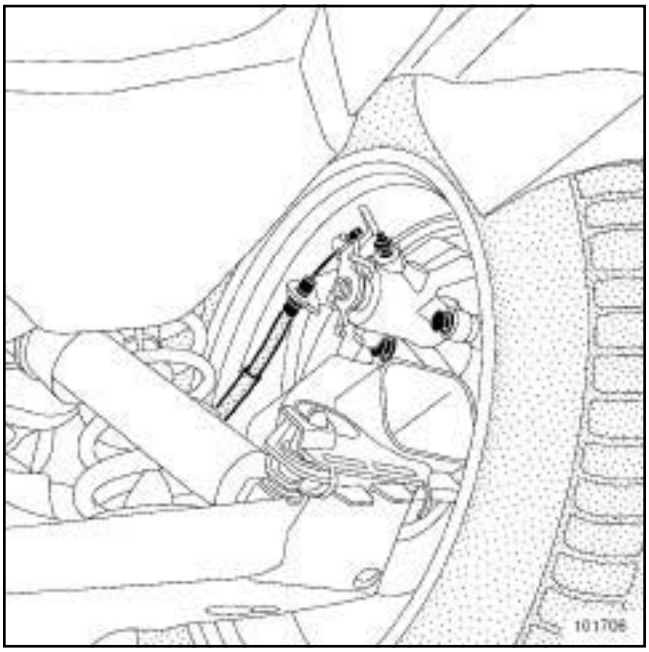

101706

- ❑ Check that the parking brake cable stops are properly inserted in their housing.
- ❑ Refit:
  - the supports on the springs,
  - the springs in their housing.
- ❑ Mount the bump stops on the axle assembly, with the marking towards the rear and in the longitudinal axis of the vehicle.

J84, and AUTOMATIC PARKING BRAKE

- ❑ Reconnect the parking brake control unit wiring.
- ❑ Refit the parking brake control unit bracket mounting bolts.

1 - Left side

- ❑ Fit the **component jack** with a shim, under the spring cup.
- ❑ Compress the rear axle.
- ❑ Refit the shock absorber lower mounting.

WARNING
The shock absorber mountings are only to be tightened with the vehicle wheels on the ground.

- ❑ Remove the **component jack**.

2 - Right-hand side

- ❑ Fit the **component jack** with a shim, under the spring cup.
- ❑ Check the position of the bump stop on the axle assembly.
- ❑ Compress the rear axle.
- ❑ Refit the shock absorber lower mounting.
- ❑ Remove the **component jack**.
- ❑ Lower the lift.
- ❑ Torque tighten the **shock absorber lower mountings (10.5 daNm)**.
- ❑ Raise the lift again.
- ❑ Refit the rear axle protective cowling, replacing the damaged plastic clips.
- ❑ Refit the rear wheels (see **35A**, **Wheels and tyres**, **Wheel: Removal - Refitting**, page **35A-1**) .
- ❑ Torque tighten the **wheel bolts (13 daNm)**.

Tightening torques ▽	
wheel bolts	**130 N.m**

The removal - refitting procedure is the same for alloy and steel wheels.

REMOVAL

I - REMOVAL PREPARATION OPERATION

❏ Position the vehicle on a two-post lift (see **Vehicle: Towing and lifting**) (02A, Lifting equipment).

❏ Release the parking brake.

❏ Remove the trim.

❏ Position the wheel so that the valve is at the top.

❏ Mark the position of the wheel on the hub.

> Note:
>
> This mark is necessary for:
>
> - marking the initial position of the wheel rim on the hub,
> - perform the balancing operation.

II - OPERATION FOR REMOVAL OF PART CONCERNED

❏ Loosen the wheel bolts with the wheel on the ground.

> Note:
>
> Use sockets with protective sheaths in order to avoid scratching the alloy wheel rims.

❏ Raise the lift.

❏ Remove:

- the wheel bolts,
- the wheel.

If the wheel cannot be removed after the bolt has been undone:

❏ Position all the wheel bolts.

❏ Tighten the wheel bolts to bring all the bolt heads into contact with the wheel.

❏ Undo the wheel bolts by one turn.

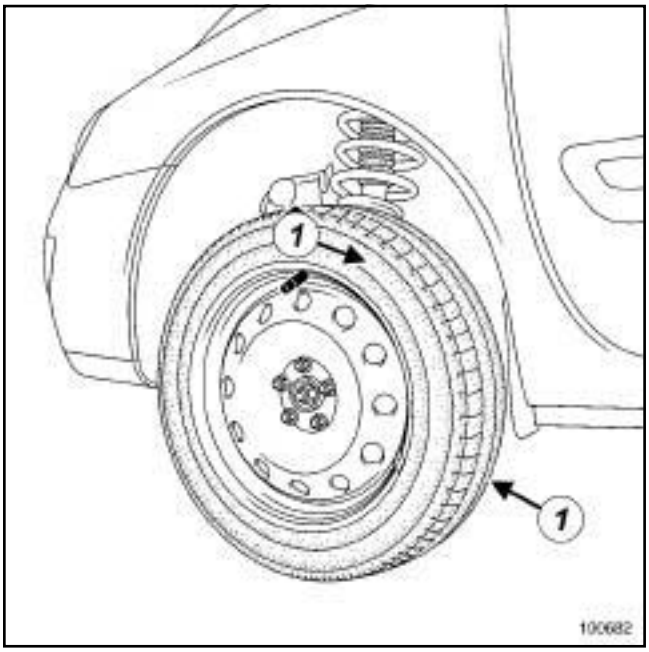

100682

❏ Strike around the edge of the tyre walls (**1**) several times using a mallet on the inner and outer surfaces of the wheel to detach the wheel.

❏ Remove:

- the wheel bolts,
- the wheel.

If this procedure does not work:

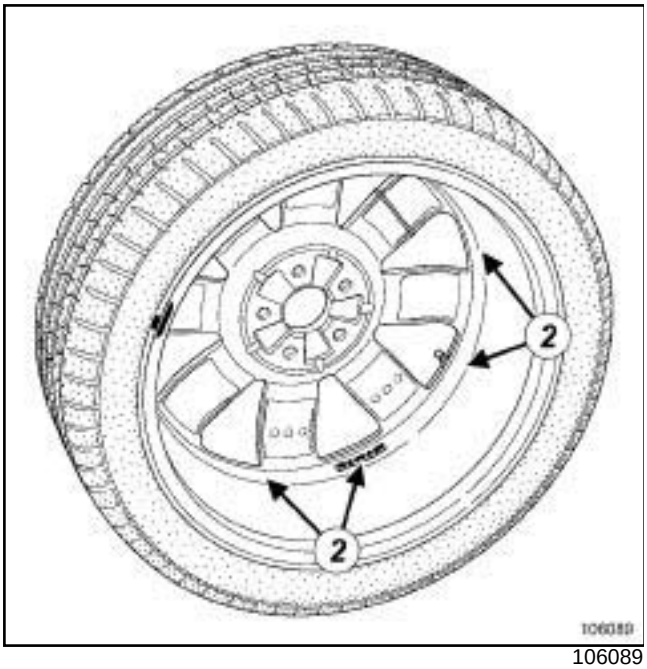

106089

❑ Strike the inner surface of the wheel (**2**) using a mallet and a wooden block to detach it.

> Note:
>
> Do not strike the surface of the wheel using excessive force as this may damage it.

❑ Remove:

- the wheel bolts,
- the wheel.

REFITTING

I - REFITTING PREPARATION OPERATION

❑ Clean the hub carrier using a wire brush.

> Note:
>
> There are two types of wheel bolts for aluminium and steel wheel rims; do not swap them.

❑ Check the condition of the tyre.

❑ Do not move or remove the balance weights.

II - REFITTING OPERATION FOR PART CONCERNED

❑ Clean the "wheel - hub carrier" contact surfaces using a wire brush.

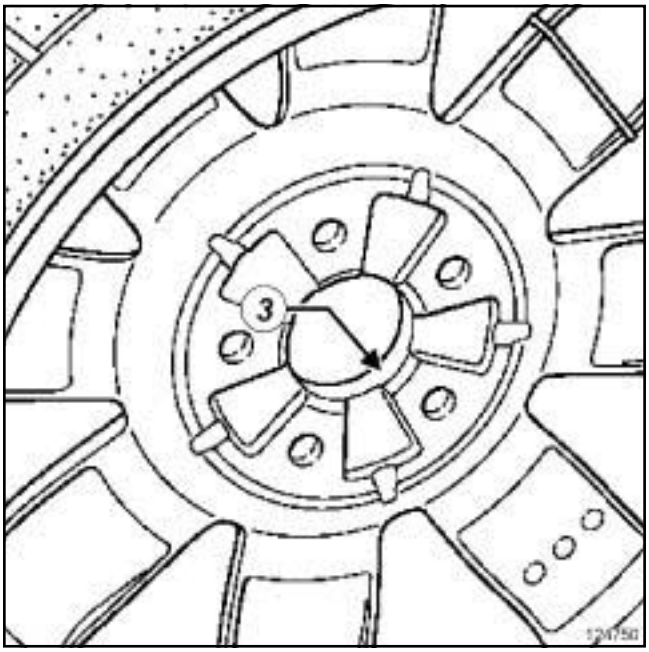

124750

❑ Coat the wheel-mating face (**3**) with **COPPER ANTI-SEIZE AGENT** (see **Vehicle: Parts and ingredients for the repairwork**) (04B, Consumables - Products).

❑ Align the mark on the wheel with the mark made on the hub when it was removed.

❑ Fit the wheel to the vehicle, positioning the valve at the top.

❑ Insert the wheel bolts.

M9R, and STANDARD CHASSIS

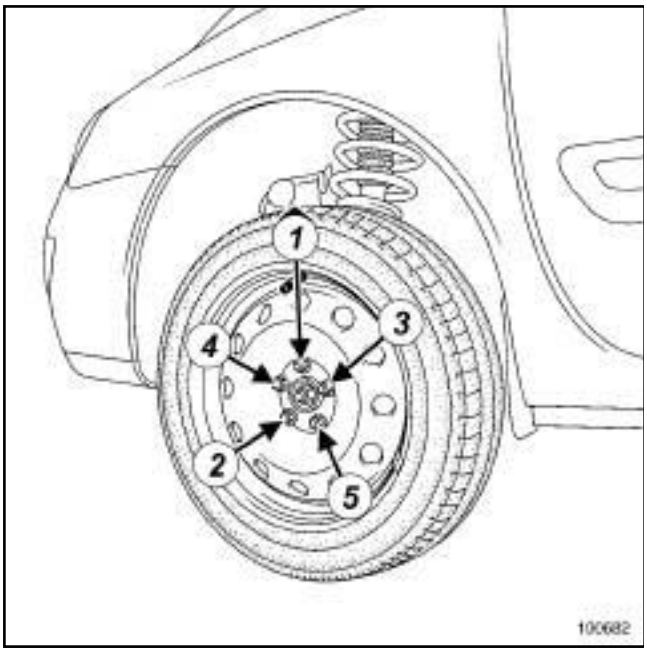

100682

- ❑ Tighten the wheel bolts to bring all the bolt heads into contact with the wheel.

F4R or F9Q or K4J or K4M or K9K, and STANDARD CHASSIS

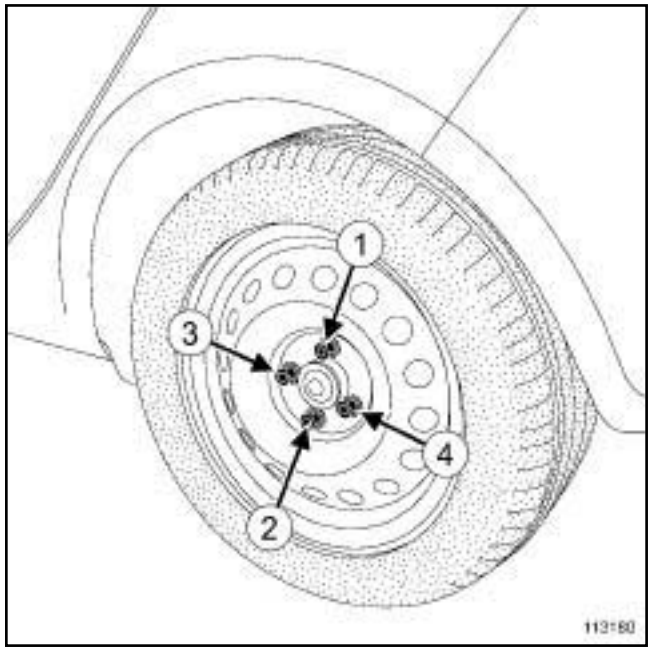

113180

- ❑ Tighten the wheel bolts to bring all the bolt heads into contact with the wheel.

- ❑ Pre-tighten the wheel bolts to **30 N.m**, with the wheel hanging, starting with the bottom bolts.
- ❑ Rotate the wheel through **180°** to bring the valve into the bottom position.
- ❑ Position the vehicle on its wheels.
- ❑ Tighten in order and to torque the **wheel bolts (130 N.m)**.
- ❑ Refit the trim piece.

I - PREREQUISITES FOR WHEEL BALANCING

❑ Wheel balancing is a measurement operation.

Several conditions must be met to achieve a reliable result in a single operation.

The wheel balancer must be installed in accordance with the manufacturer's instructions.

It is essential to calibrate the balancer according to the frequency recommended by the manufacturer.

Do not grease the threaded shaft.

Check the condition of the supports, centring components and mountings.

Replace any faulty parts (see manufacturer's instructions).

The wheel and the wheel balancer must be clean.

Driver's perception

❑ If the wheels are not correctly balanced this causes the steering wheel and/or the vehicle floor to vibrate.

These vibrations appear between **54 mph (90 km/h)** and **90 mph (150 km/h)**.

II - BALANCING PREPARATION OPERATION

❑ Adjust the tyre pressure (see **35A**, **Wheels and tyres**, **Tyre inflation pressure: Identification**, page **35A-10**) .

❑ Always carry out a road test for a minimum distance of **1 mile (2 km)** before balancing the wheels, in order to remove any flat spots on the tread caused by the vehicle being immobilised.

❑ Actions to be carried out immediately after the test drive:

- Position the vehicle on a two-post vehicle lift (see **Vehicle: Towing and lifting**) ,
- raise the vehicle,
- leave the four wheels hanging free,
- release the parking brake.

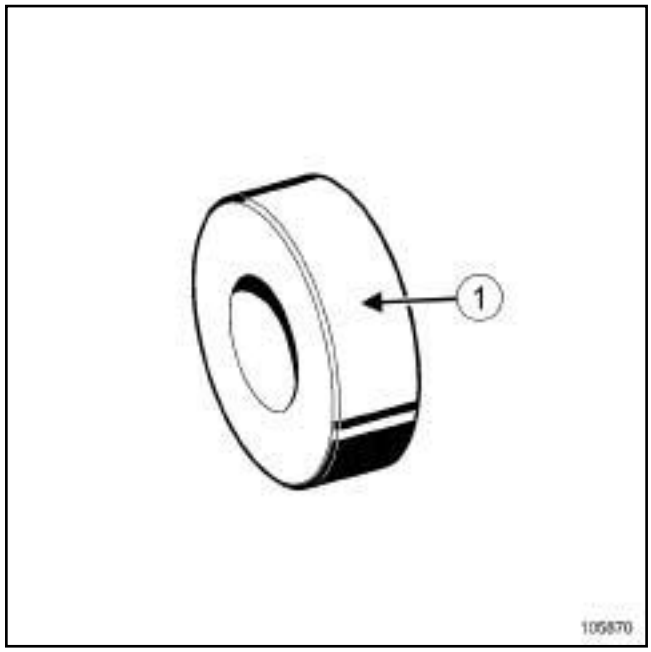

105870

❑

> Note:
>
> The ring is available from the supplier of the equipment used.

To reproduce the exact vehicle wheel assembly, use a ring (**1**) of diameter:

❑ **60 mm**

❑ There are three types of weight:

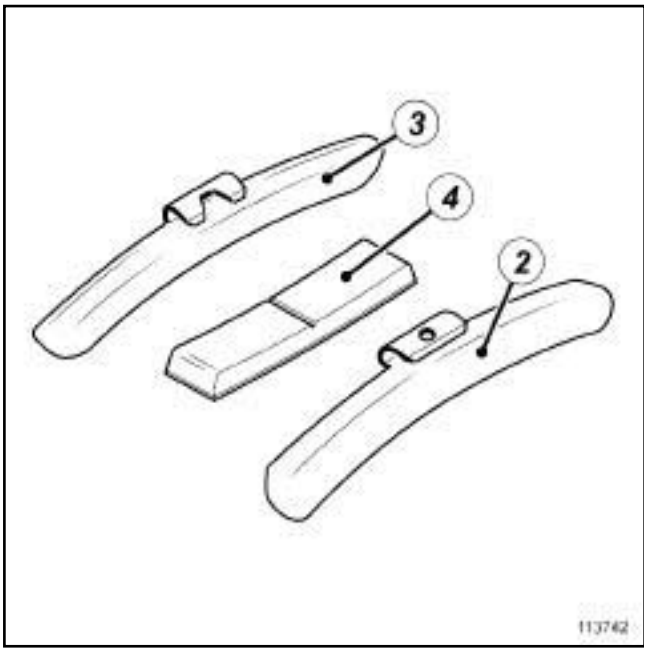

113742

(**2**) Steel wheel with flange

(**3**) Alloy wheel with flange

(**4**) Alloy wheel without flange

❑ In some countries, the use of lead weights is forbidden; in this case it is recommended to use **ZAMAK** weights instead.

Only use weights provided by the Parts Department.

❑ Remove the wheels (see **35A**, **Wheels and tyres**, **Wheel: Removal - Refitting**, page **35A-1**) .

❑ Always clean the wheel, disc, and hub bearing surfaces.

III - PROCEDURE FOR BALANCING THE WHEEL IN QUESTION

❑ Make sure that the wheel balancer bearing surface and all the centring equipment (ring, thrust plate, etc.) are kept clean.

❑ Try not to scratch the (alloy) wheel rim with the wheel tightening device.

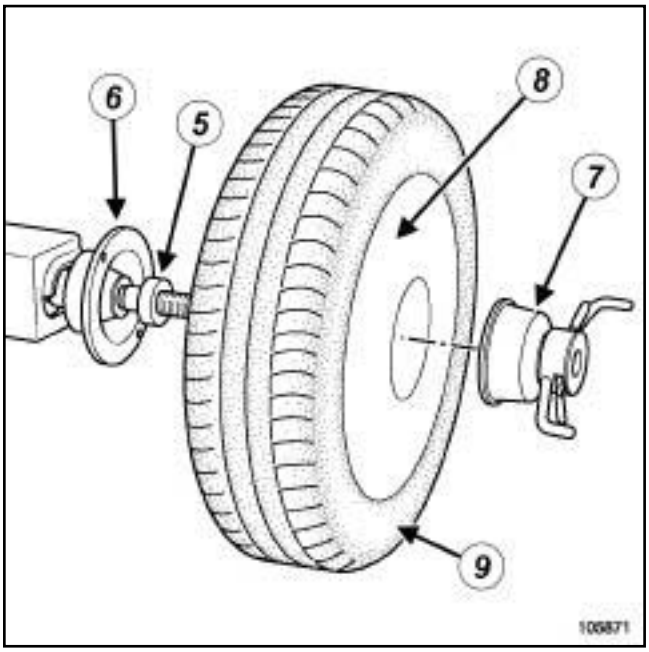

105871

❑ The wheel is fitted on the wheel balancer as follows:

- (**5**) ring,
- (**6**) wheel balancer back-plate,
- (**7**) wheel tightening device (certain alloy wheels require a device 200 mm in diameter to ensure that the wheel has been correctly tightened),
- (**8**) outer wheel plane,
- (**9**) wheel.

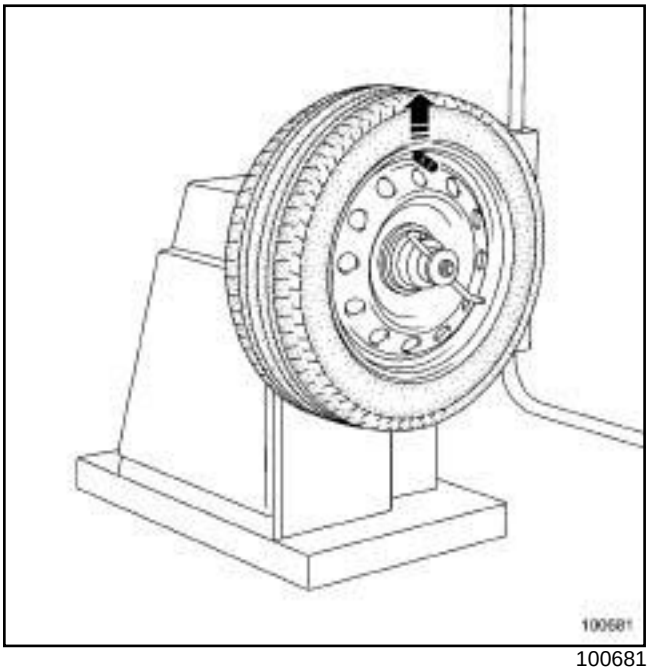

100681

❑ Place the wheel on the wheel balancer, with the valve at the top, then lock the wheel in place.

❑ Remove any stones trapped in the tyre tread.

- ❑ Enter the specific wheel parameters when starting the wheel balancer.
- ❑ Start the wheel balancer and check the wheel balance, which should be **0 g** on each plane of the wheel.
- ❑ If this is not the case, remove the old wheel balancing weights and repeat the wheel balancing procedure, checking that the wheel balance equals **0** on each wheel plane.

> **WARNING**
> To avoid detachment of the balance weights, use only weights which correspond to the vehicle wheel rims.

IV - FINAL OPERATION

- ❑ Refit the wheel (see **35A**, **Wheels and tyres**, **Wheel: Removal - Refitting**, page **35A-1**) .

Example of a tyre identification mark: **205/65 R 15 91 V**.

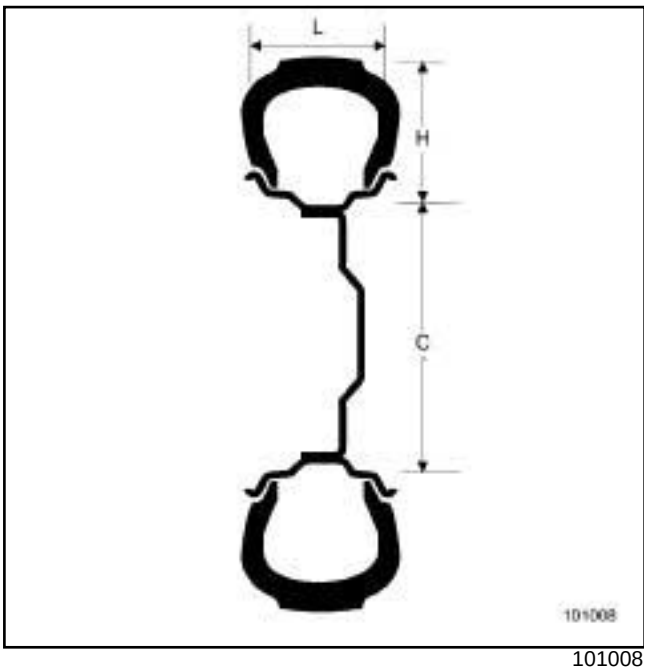

101008

123448

205	Tyre width in mm (L)
65	Height/width ratio
R	Radial structure
15	Internal diameter in inches (c)
91	Load index
V	Speed code

Speed code table:

Code	Maximum speed in mph (km/h)
R	**170**
S	**180**
T	**190**
U	**200**
H	**210**
V	**240**
ZR	above **240**
W	**270**
Y	**300**

REMOVAL

I - REMOVAL PREPARATION OPERATION

❑ Position the vehicle on a two-post lift (see **Vehicle: Towing and lifting**) (02A, Lifting equipment).

❑ Remove:

- the wheel in question (see **35A**, **Wheels and tyres**, **Wheel: Removal - Refitting**, page **35A-1**) ,
- the balance weights,
- the valve mechanism.

II - OPERATION FOR REMOVAL OF PART CONCERNED

TYRE PRESSURE SENS.

❑

WARNING
To avoid any damage to the sensor, make sure the tyre bead never presses on the sensor.

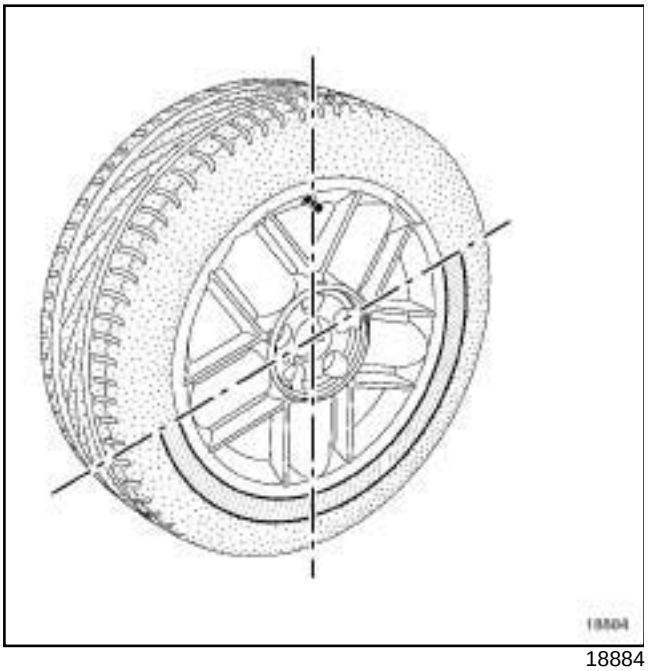

18884

❑ Detach:

- the bead from the outside of the tyre, starting with the side opposite the valve,
- the bead from the inside of the tyre.

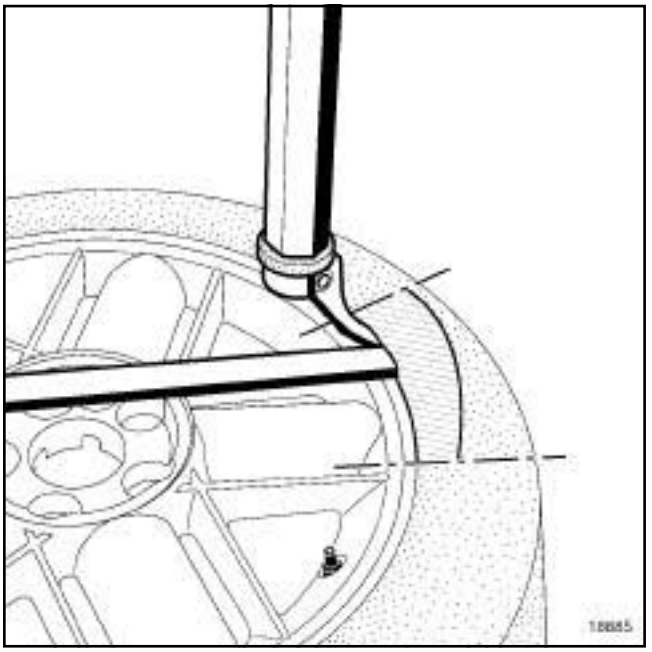

18885

❑ Position the tyre lever approximately **15 cm** from the valve on the outside of the wheel rim in order to remove the exterior bead from the tyre.

❑ Remove the exterior bead of the tyre, finishing at the valve.

❑ Position the tyre lever approximately **15 cm** from the valve on the outside of the wheel rim in order to remove the bead from inside the tyre.

❑ Remove the interior bead of the tyre, finishing at the valve.

REFITTING

I - REFITTING PREPARATION OPERATION

WITHOUT TYRE PRESSURE SENS.

❑ **parts always to be replaced: Tyre valve (13,05, 02,02)**

❑ Lubricate the two tyre beads correctly using the **TYRE PASTE** (see **Vehicle: Parts and ingredients for the repairwork**) (04B, Consumables - Products).

II - REFITTING OPERATION FOR PART CONCERNED

❑ Engage the lower tyre bead approximately **15 cm** after the valve.

- ❑ Finish fitting the tyre at the valve.
- ❑ Fit the exterior bead approximately **15 cm** after the valve using the tyre lever.
- ❑ Inflate the tyre to **3.5 bar** to press the tyre beads against the wheel rim.

III - FINAL OPERATION

- ❑ Refit the valve mechanism.
- ❑ Inflate the tyre to the recommended pressure (see **35A**, **Wheels and tyres**, **Tyre inflation pressure: Identification**, page **35A-10**) .

> Note:
>
> It is not necessary to drive the vehicle before and after a new wheel is balanced.

- ❑ Balance the wheel (see **35A**, **Wheels and tyres**, **Wheel: Balancing**, page **35A-4**) .
- ❑ Refit the wheel in question (see **35A**, **Wheels and tyres**, **Wheel: Removal - Refitting**, page **35A-1**) .

I - INFLATION

STANDARD CHASSIS

Tyre pressure when cold (bar), for the tyre pressure monitoring system (SSPP)

WARNING
If checking the tyre pressure when hot, increase the tyre inflation pressure by **0.2** to **0.3** bar above the recommended pressure.

Engine	Wheel rim	Tyre	Tyre inflation pressure when cold (bar)				
			Front		Rear		Emergency spare wheel
			Normal	Motorway	Normal	Motorway	
K4J	6.5 J 15	**195/65 R 15 T**	**2.4**	**2.4**	**2.2**	**2.2**	**2.4**
	6.5 J 16*	**205/55 R16H** **205/55 R16 V**	**2.2**	**2.4**	**2**	**2.1**	**2.4**
	195/440 (49)	**205-650 R440** (1)	**2.3**	**2.3**	**2.1**	**2.1**	**2.3**
K4M	6.5 J 15	**195/65 R 15 T**	**2.4**	**2.4**	**2.2**	**2.2**	**2.4**
	6.5 J 16*	**205/55 R16H** **205/55 R16 V**	**2.2**	**2.4**	**2**	**2.1**	**2.4**
	195/440 (49)	**205/650 R440** (1)	**2.3**	**2.3**	**2.1**	**2.1**	**2.3**
K9K	6.5 J 15	**195/65 R 15 T**	**2.4**	**2.4**	**2.2**	**2.2**	**2.4**
	6.5 J 16*	**205/55 R16 V**	**2.2**	**2.4**	**2**	**2.1**	**2.4**
	6.5 J 16*	**205/55 R16H**	**2.2**	**2.4**	**2**	**2.1**	**2.4**
	6.5 J 16	**205/60 R16H**	**2.3**	**2.5**	**2.1**	**2.3**	**2.5**
	195/440 (49)	**205/650 R440** (1)	**2.3**	**2.3**	**2.1**	**2.1**	**2.3**

Engine	Wheel rim	Tyre	Tyre inflation pressure when cold (bar)				
			Front		Rear		Emergency spare wheel
			Normal	Motorway	Normal	Motorway	
F4R	6.5 J 17*	**205/55 R17V**	**2.4**	**2.5**	**2.2**	**2.3**	**2.5**
	6.5 J 16*	**205/60 R16H**	**2.3**	**2.5**	**2.1**	**2.3**	**2.5**
	6.5 J 17	**205/55 R17V** (2)	**2.4**	**2.6**	**2.2**	**2.4**	**2.6**
	6.5 J 17	**205/55 R17V**	**2.4**	**2.5**	**2.2**	**2.3**	**2.5**
	6.5 J 16	**205/60 R16H** (2)	**2.3**	**2.5**	**2.1**	**2.3**	**2.5**
	6.5 J 16	**205/60 R16V**	**2.3**	**2.5**	**2.1**	**2.3**	**2.5**
	195/440 (49)	**205-650 R440** (1)	**2.3**	**2.3**	**2.1**	**2.1**	**2.3**
	195/440 (49)	**205-650 R440** (1) (2)	**2.4**	**2.4**	**2.2**	**2.2**	**2.4**
F9Q	6.5 J 17*	**205/65 R17V**	**2.4**	**2.5**	**2.2**	**2.3**	**2.5**
	6.5 J 16*	**205/60 R16V**	**2.3**	**2.5**	**2.1**	**2.3**	**2.5**
	6.5 J 17	**205/55 R17V**	**2.4**	**2.5**	**2.2**	**2.3**	**2.5**
	6.5 J 16	**205/60 R16H**	**2.3**	**2.5**	**2.1**	**2.3**	**2.5**
	195/440 (49)	**205-650 R440** (1)	**2.3**	**2.3**	**2.1**	**2.1**	**2.3**
M9R	6.5 J 16	**205/60 R16V**	**2.5**	**2.7**	**2.2**	**2.2**	**2.7**
	6.5 J 17	**205/55 R17V**	**2.6**	**2.7**	**2.2**	**2.2**	**2.7**

LONG CHASSIS

Engine	Wheel rims	Tyre	Load condition 5 persons maximum		Load condition 5 to 7 persons		
			Roads and motorways		Roads and motorways		Emergency spare wheel
			Front	Rear	Front	Rear	
K4M	6.5 J 17	**205/55 R17V**	**2.4**	**2.2**	**2.6**	**2.5**	**2.6**
	6.5 J 16	**205/60 R16H**	**2.2**	**2.2**	**2.4**	**2.5**	**2.5**

Engine	Wheel rims	Tyre	Load condition 5 persons maximum		Load condition 5 to 7 persons		
			Roads and motorways		Roads and motorways		Emergency spare wheel
			Front	Rear	Front	Rear	
F4R	6.5 J 17	**205/55 R17V**	**2.4**	**2.2**	**2.6**	**2.6**	**2.6**
	6.5 J 16	**205/60 R16H**	**2.3**	**2.2**	**2.5**	**2.6**	**2.6**
K9K	6.5 J 17	**205/55 R17V**	**2.4**	**2.2**	**2.6**	**2.5**	**2.6**
	6.5 J 16	**205/60 R16H**	**2.2**	**2.2**	**2.4**	**2.5**	**2.5**
F9Q	6.5 J 17	**205/55 R17V**	**2.4**	**2.2**	**2.6**	**2.5**	**2.6**
	6.5 J 16	**205/60 R16H**	**2.3**	**2.2**	**2.5**	**2.5**	**2.5**
M9R	6.5 J 17	**205/55 R17V**	**2.7**	**2.2**	**2.7**	**2.6**	**2.7**
	6.5 J 16	**205/60 R16V**	**2.6**	**2.2**	**2.6**	**2.6**	**2.6**
All types	6.5 J 16	**175/70 R16M**	**2.5**	**2.5**	**2.5**	**2.5**	**2.5**

* Alloy wheel rim

The tyre pressure values given are the recommended pressures for the tyres when cold.

(1) Run-flat tyre

(2) Turbocharged engine

II - CONFORMITY CHECK AND ADJUSTMENT

WARNING
If the size of the tyres is changed, calibrate the Electric Power-assisted Steering computer and the tyre pressure monitoring system (see **MR 372 Fault finding, 36B, Electric power-assisted steering, Configuration and programming**).

Wheel rim offset:

- steel wheel rim: **45 mm**,

- alloy wheel rim: **49 mm**.

For information on fitting chains, see «Driver's handbook » .

IDENTIFICATION

1 - Marking

There are two types of identification marking on the wheel rims:

- engraved marking for steel wheel rims,

- cast marking for alloy wheel rims.

The marking gives the main dimensional specifications of the wheel rim.

This marking may be:

- complete, for example **6 J 15 5 CH 36,**

- simplified, for example **6 J 15**.

	Wheel type	**6 J 15**
1	Width (in inches)	6
2	Rim edge profile	J
3	Nominal diameter (in inches)	15
4	Number of holes	5
5	Anchorage profile of the tyre	CH
6	Offset (in mm)	36

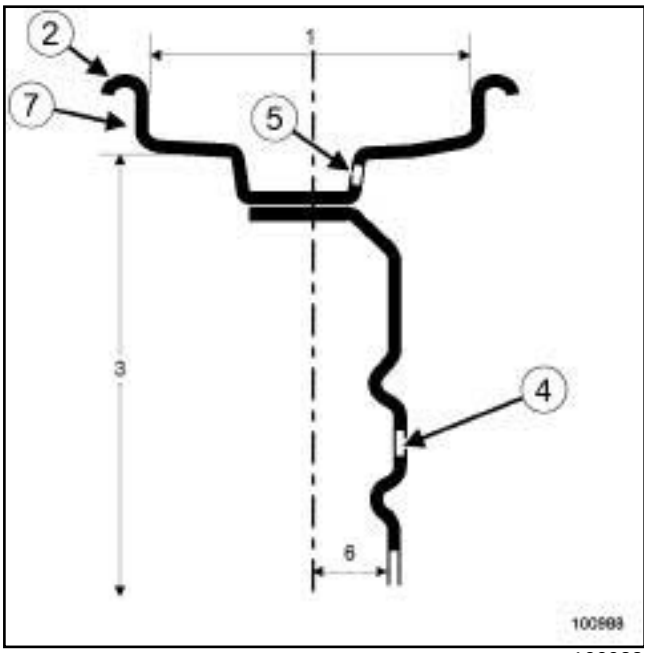

100988

There are 3 types of wheel rim edges (**2**) :

- those with two flat edges,

- those with two raised edges,

- those with one flat edge and one raised edge.

2 - Installation diameter for the wheel bolts

The wheel bolts are positioned with a pitch circle diameter of:

- 5 holes: **108 mm**,

- 4 holes: **100 mm**.

3 - Rim run-out

The maximum run-out is measured at the wheel rim edge ***(7)*** .

Steel wheel rims: **0.8 mm**

Alloy wheel rims: **0.3 mm**

4 - Out-of-roundness

The maximum out-of-round value is measured on the tyre bead bearing surface.

0.7 mm

Tightening torques ▽	
emergency spare wheel winch bolts	**21 Nm**

WARNING

Take care not to insert the tool between the unlocking mechanism and the screw head.

This could lead to the destruction of the emergency spare wheel winch mechanism.

REMOVAL

- ❑ Lower the luggage cover (if necessary).
- ❑ Remove the floor carpet.
- ❑ Tilt the rear right-hand seat to base position (if necessary).

IMPORTANT

To remove the emergency wheel:

- do not work on an inspection pit,
- do not lift the vehicle.

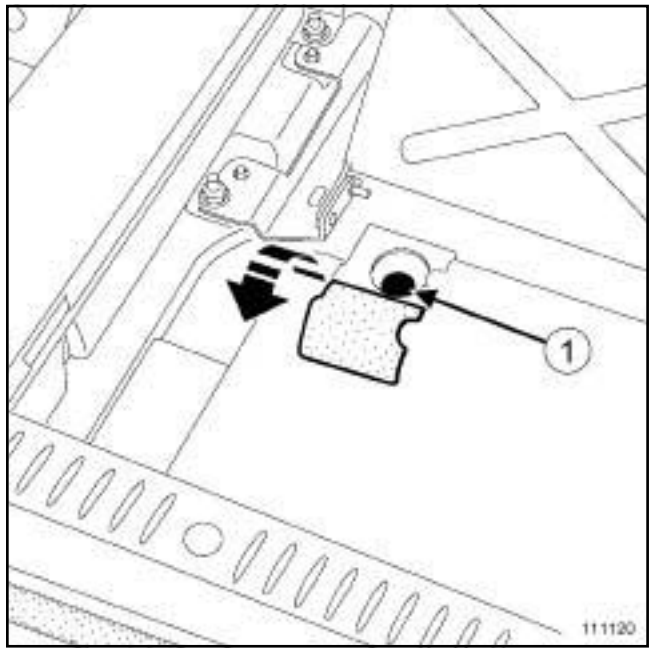

111120

- ❑ Remove the blanking cover.

WARNING

Do not use an air tool.

- ❑ Loosen the bolt (**1**) .
- ❑ Press the emergency spare wheel lock.
- ❑ Rotate the emergency spare wheel lock a quarter of a turn.
- ❑ Remove the emergency wheel.
- ❑ Position the vehicle on a two-post lift (see **02A, Lifting equipment, Underbody lift**).

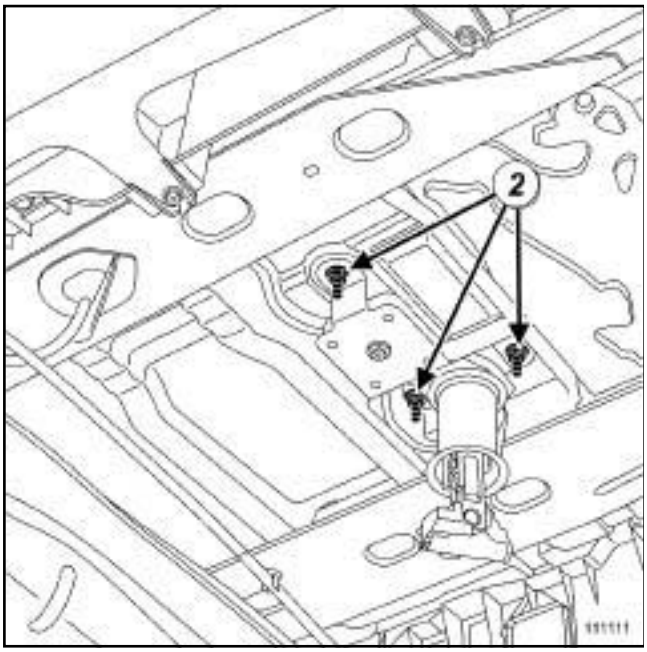

111111

❑ Remove:

- the emergency spare wheel winch mounting nuts (**2**) ,
- the emergency spare wheel winch.

REFITTING

❑ Proceed in the reverse order to removal.

❑ Tighten to torque the **emergency spare wheel winch bolts (21 Nm)**.

I - TYRE IDENTIFICATIONS

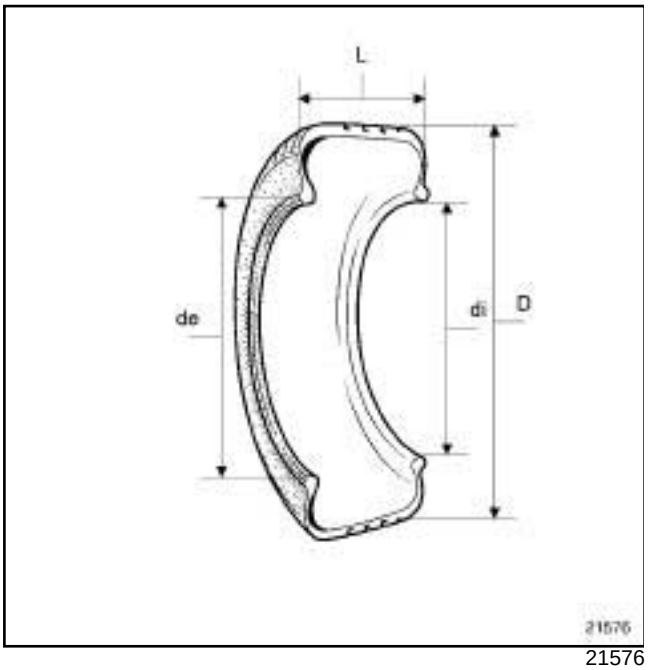

21576

The marking on these tyres differs from that on conventional product ranges.

Example of marking read on sidewall: **195-620 R 420 A 90 H**

Illustration reference	Example	Meaning
(**L**)	195	Width in mm
(**D**)	620	External diameter in mm
	R	Type of structure (R = radial)
	420	Nominal diameter on seat in mm
	A	Asymmetric
	90	Load index (90 = 600 kg)
	H	Speed code (H = 130 mph [210 km/h] maximum)

Note:

The internal diameter (**di**) is always greater than the external diameter (**de**) .

II - SUPPORT IDENTIFICATIONS

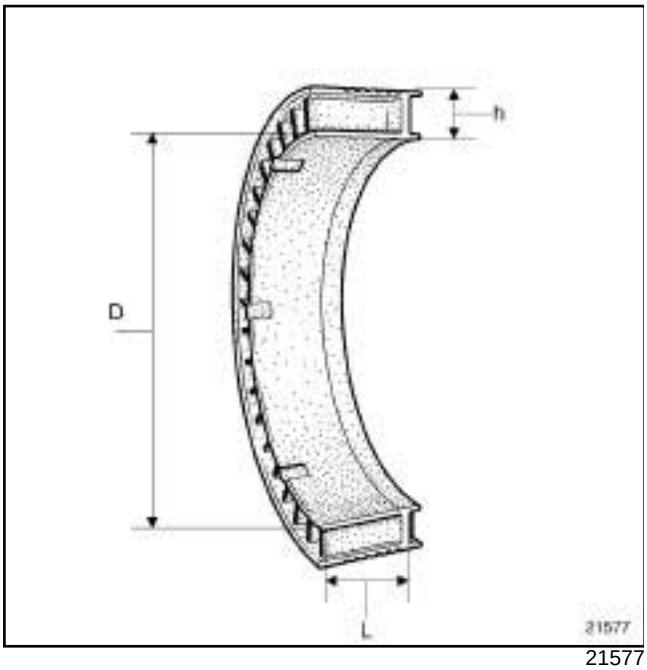

21577

Example of markings read: **195-440 (49)**

Illustration reference	Example	Meaning
(**L**)	195	Nominal width in mm
(**D**)	440	Nominal diameter on seat in mm
(**h**)	49	Support height in mm

WHEEL RIM IDENTIFICATIONS

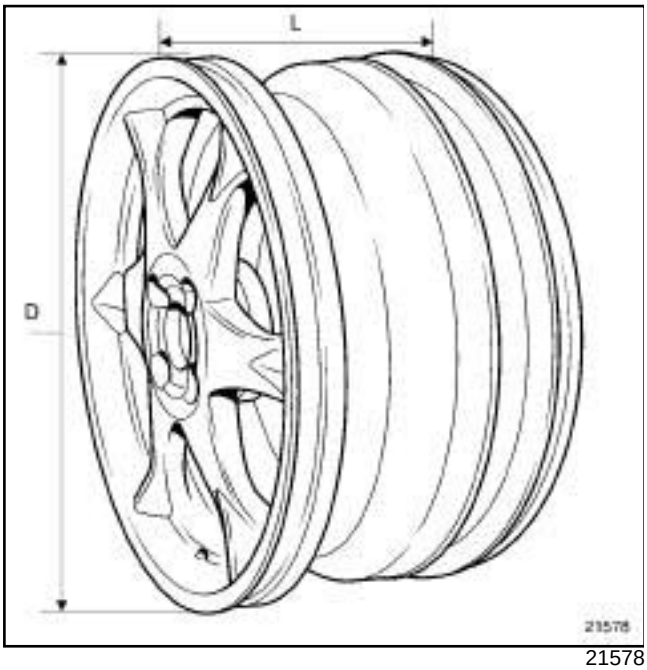

21578

Example of markings read: **185-420 A-4-43**

Illustration reference	Example	Meaning
(**L**)	185	Nominal width in mm
(**D**)	420	Nominal diameter on seat in mm
	A	Asymmetric
	4	Number of mounting holes
	43	Offset in mm

REPAIR AFTER PUNCTURE OR FLAT RUNNING

❑

> **WARNING**
> No repair can be carried out without removing the tyre and support.

❑ Remove the tyre and the support (consulting the corresponding method).

❑ With a rag, remove most of the gel present in the tyre and the support.

❑ Inspect the inside of the tyre to detect any sign of the following possible types of damage:

- chafing or overheating marks on the inner rubber characteristic of prolonged running at an inadequate pressure,
- detachment of rubber or plies,
- visible or deformed bead wires,
- damage to the bead laying bare the plies.

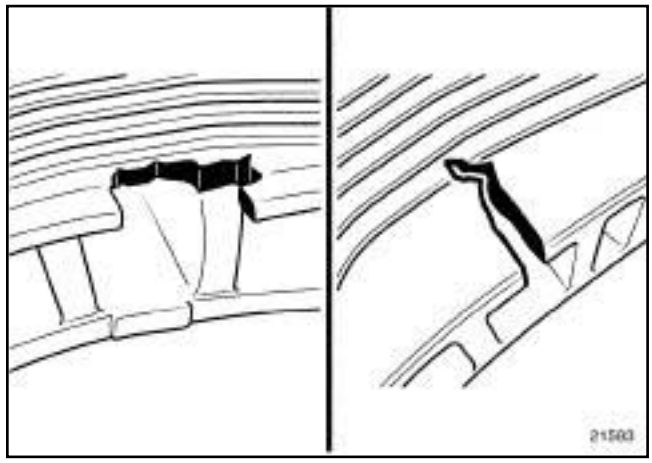

21593

❑ Inspect the support to detect any sign of the following possible types of damage:

- missing pieces;
- cracks in the partitions or the crown,
- visible blistering.

> **WARNING**
> Be sure to replace any components damaged in any of the specified ways.

If the tyre is not damaged in any of the specified ways, it may be repaired by a PRP (tyre repair patch) on condition that the perforations or holes meet the following conditions:

- on the sidewalls, the perforation must be less than **3 mm**, up to speed code T inclusive (codes H, V, W, Y and Z with a perforated sidewall must be replaced),
- in the crown region for perforations below **6 mm** for all speed codes.

> **WARNING**
> Hot repair is strictly prohibited.

❑ Refit the tyre and support (consult the corresponding method).

❑ Inflate the tyre. The pressure values given in the manuals and Technical Notes are values for a fully laden vehicle or for motorway travel.

The tyre inflation pressure must be checked when cold.

> Note:
> Always use a source of dry compressed air.

WHEEL COMPOSITION

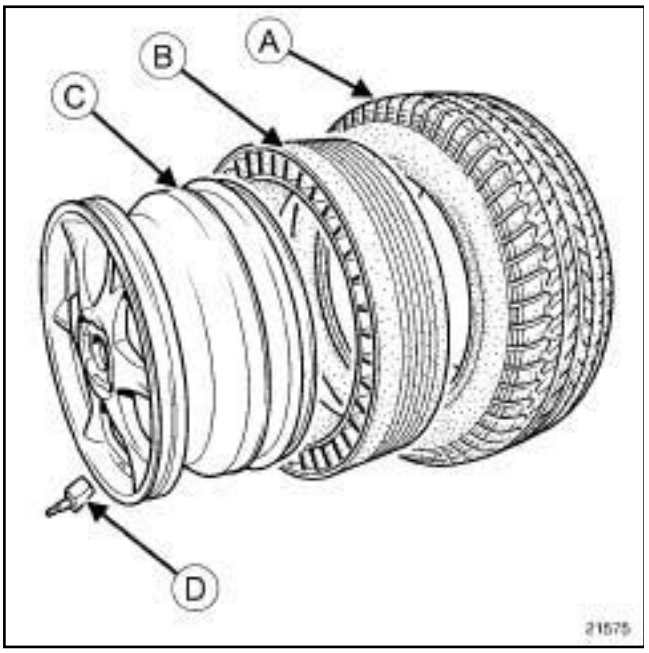

21575

A wheel comprises four components:

- a tyre (**A**) (also known as the cover),

- a support (**B**) ,

- a wheel rim (**C**) ,

- a pressure detector (**D**) with a built-in valve.

The tyre, the support and the wheel rim are asymmetric.

The pressure detector has a coloured marking determining the wheel's position on the vehicle.

Marking colour	Wheel position
Green	Front left
Yellow	Front right
Red	Rear left
Black	Rear right

The spare wheel (depending on equipment level) does not have an active pressure detector.

It should be used only in case of emergency.

The wheels should be refitted in their respective positions on the vehicle after a servicing operation. Accordingly, operations such as swapping wheels over are strictly prohibited.

REMOVAL

❑ Remove:

- the valve cap;
- the valve insert.

❑ Empty the air from the tyre.

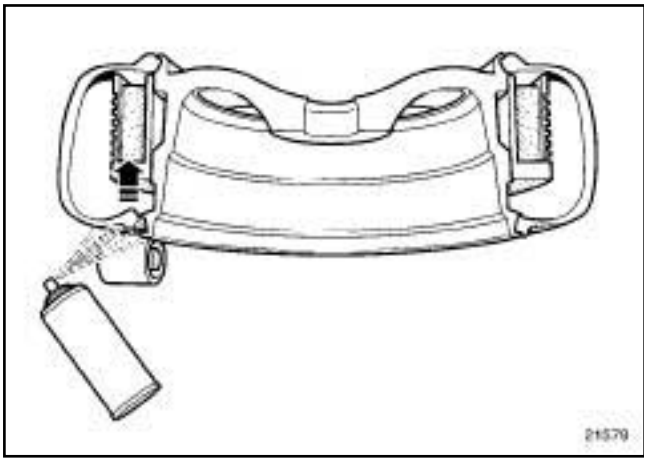

21579

❑ Push the bead slightly inside the wheel rim with the roller to lubricate the inner edge of the wheel rim and bead.

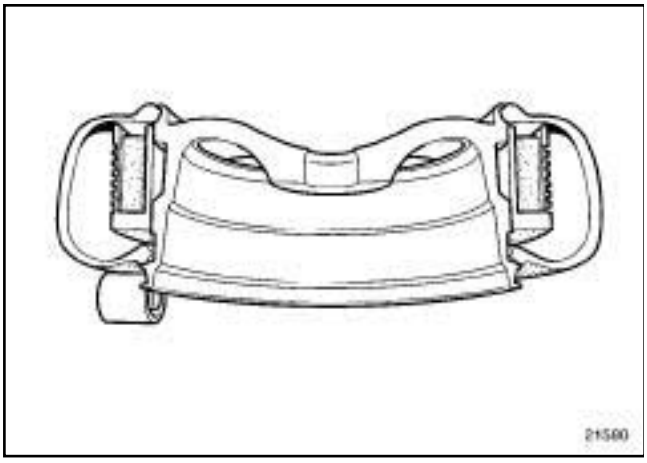

21580

❑ Gradually push the tyre bead towards the inside of the tyre, the wheel rim groove using the roller and turning the assembly.

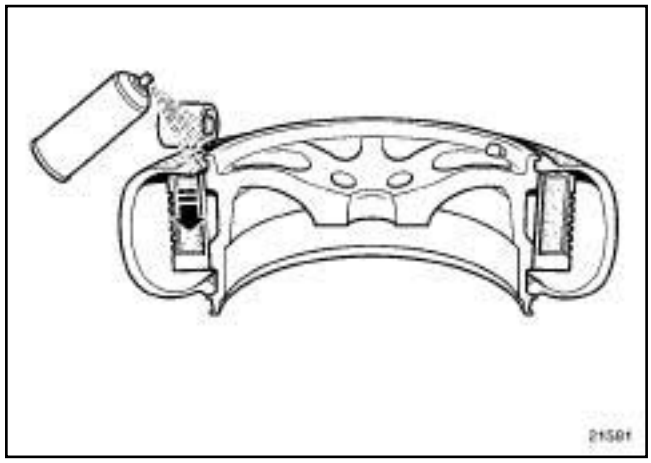

21581

❑ Push the bead slightly towards the outside of the wheel rim with the roller to lubricate the outer edge of the wheel rim and bead.

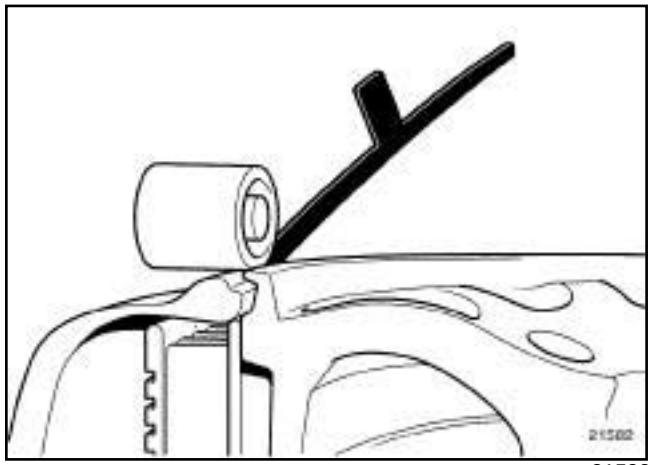

21582

❑ Rotate the assembly to insert the rule into the space created by the roller between the tyre and the wheel rim. Make sure the rule is fitted the right way round, with the badge facing the tyre sidewall.

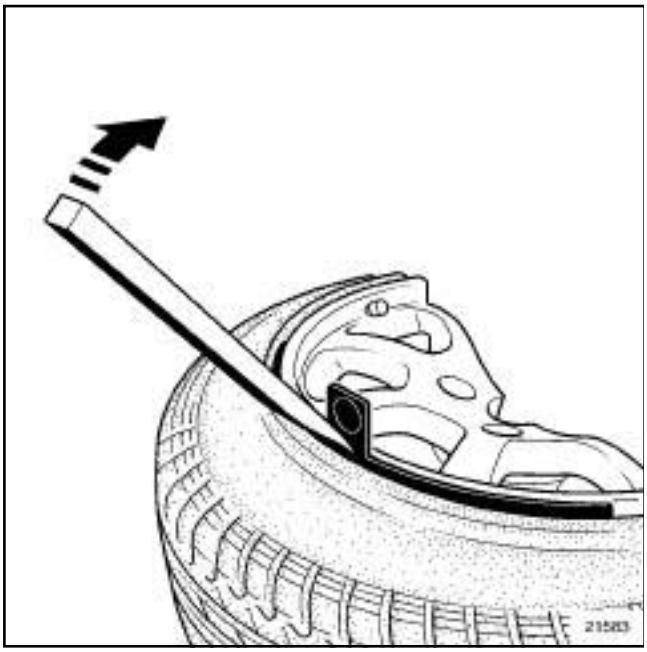

21583

❑ Insert the lever in the rule slot and remove the outer bead. Do not forget the rule in the tyre.

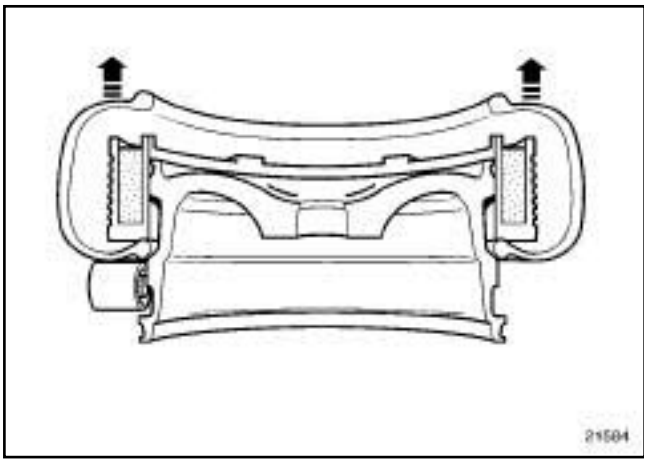

21584

❑ Pull off the tyre and support by pushing the roller and rotating the assembly, without damaging the pressure detector.

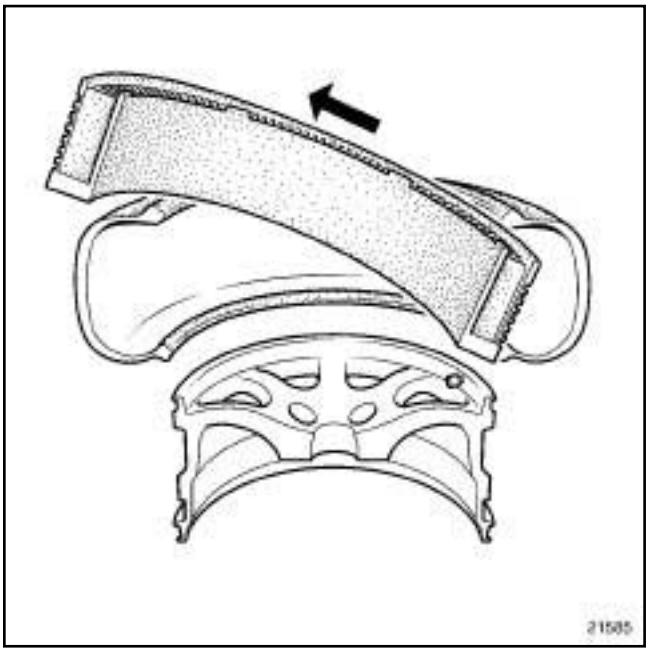

21585

❑ Extract the support by hand or with a lever.

REFITTING

21587

- For a new tyre, empty out the dose of gel inside the tyre and spread with the scraper. Never apply the dose of gel on the tyre beads.
- For a tyre previously removed for repair or checking, remove the gel from the tyre.
- Empty out the corresponding quantity of recommended gel (**consult the manuals or Technical Notes in section 35 for details**) inside the tyre and spread with the scraper. Never apply the dose of gel on the tyre beads.

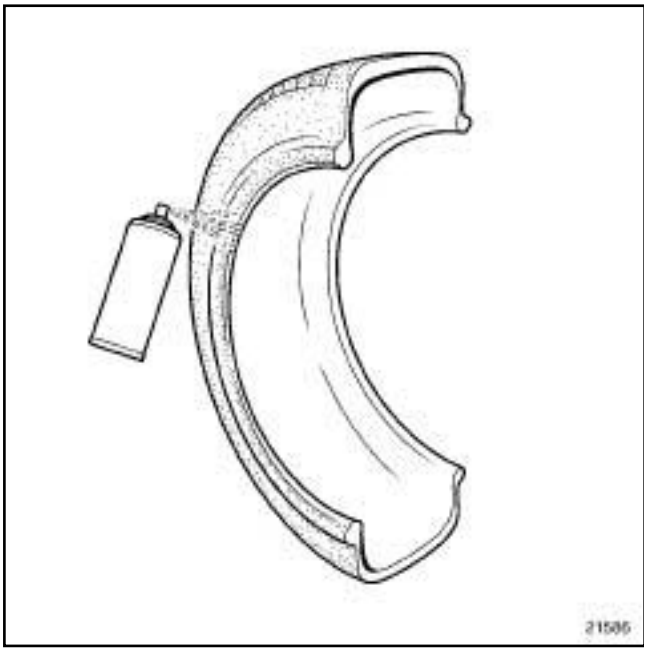

21586

- Lubricate the tyre beads with a lubricant solution for passenger car tyres.

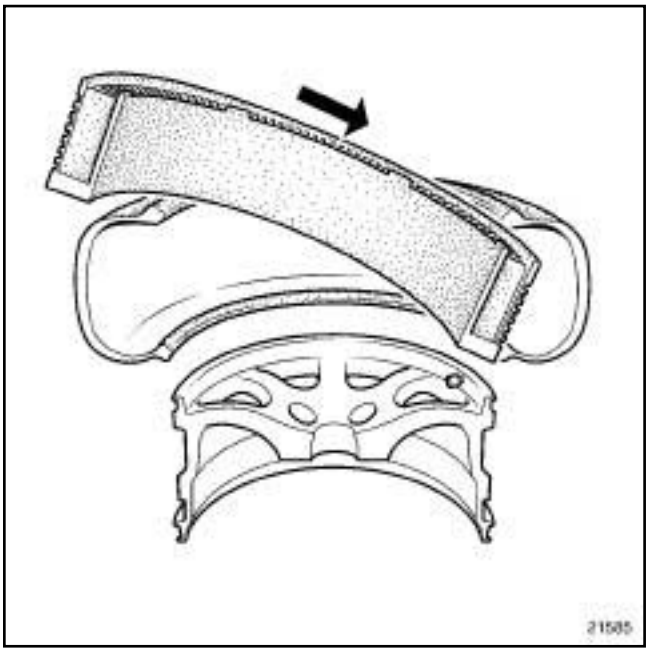

21585

- Remove the size label from the support, if present. Insert the support, clean and free of gel, into the tyre making sure to fit it the right way round.

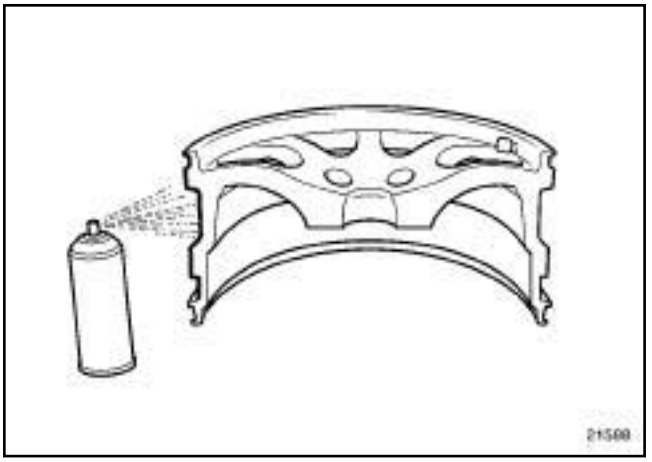

21588

- Lubricate the wheel rim over its entire width.

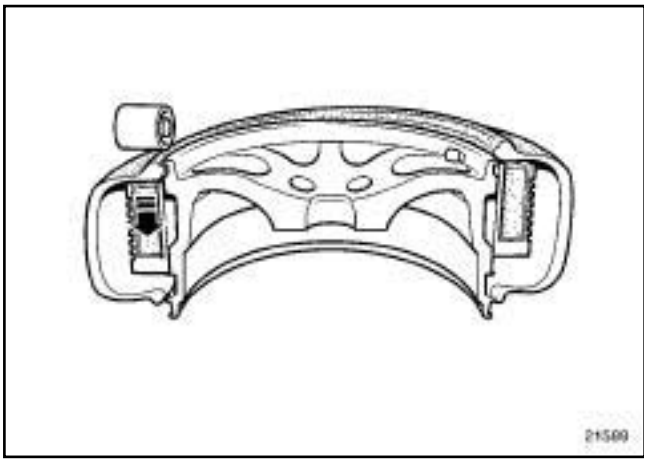

21589

❏ Mount the support up to the wheel stop by pushing the roller and rotating the assembly. Make sure the support is properly positioned against the wheel stop, without damaging the pressure detector.

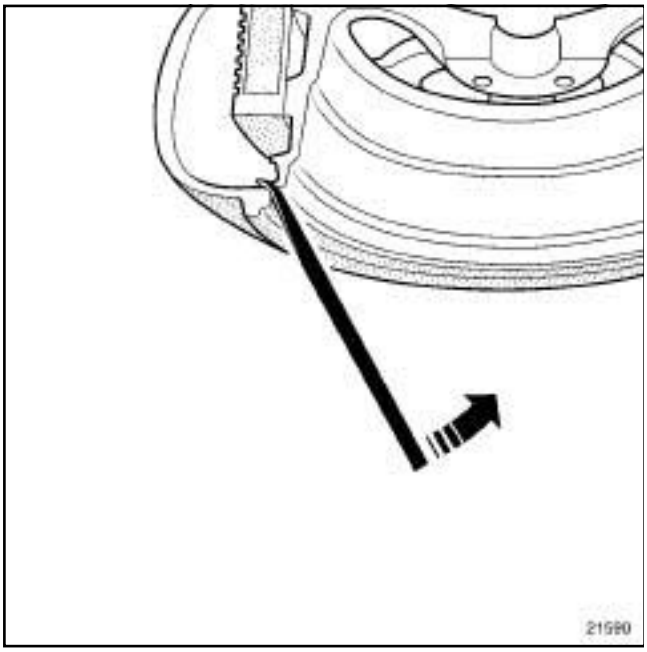

21590

❏ Remove the tyre's inner bead from the wheel rim groove using the lever.

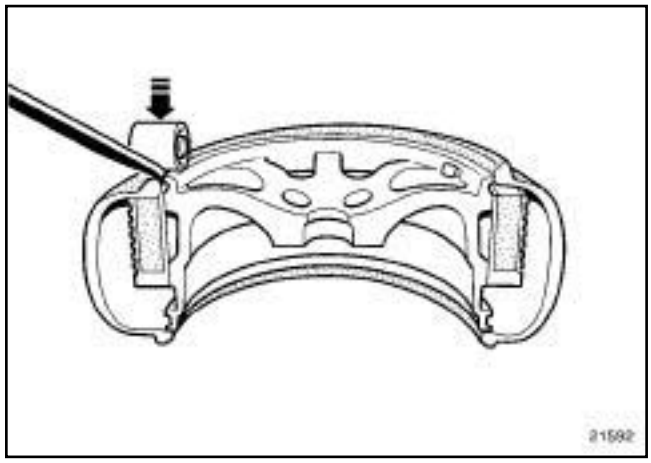

21592

❏ Position the roller to bear against the wheel rim.

❏ Mount the tyre's outer bead on the wheel rim seat.

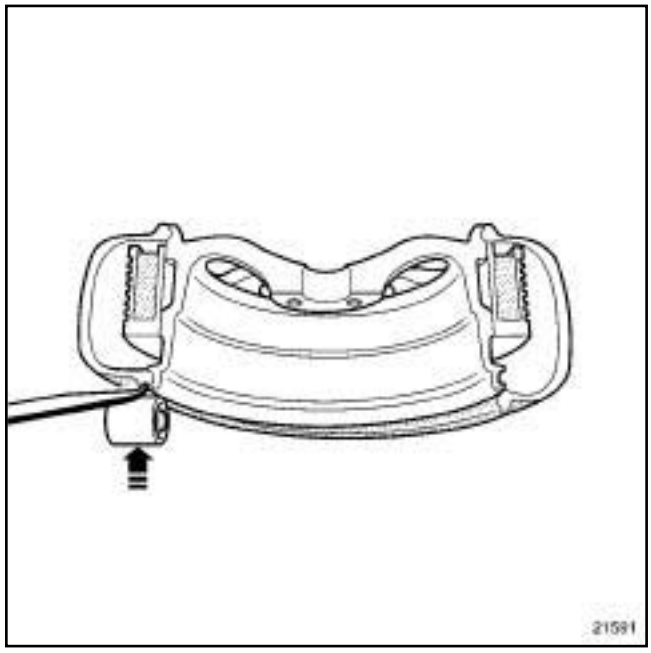

21591

❏ Fit the tyre's inner bead in the same way as before.

❏ Make sure that the tyre is correctly fitted when inflating, and then screw on the valve cap.

Note:

Always use a source of dry compressed air.

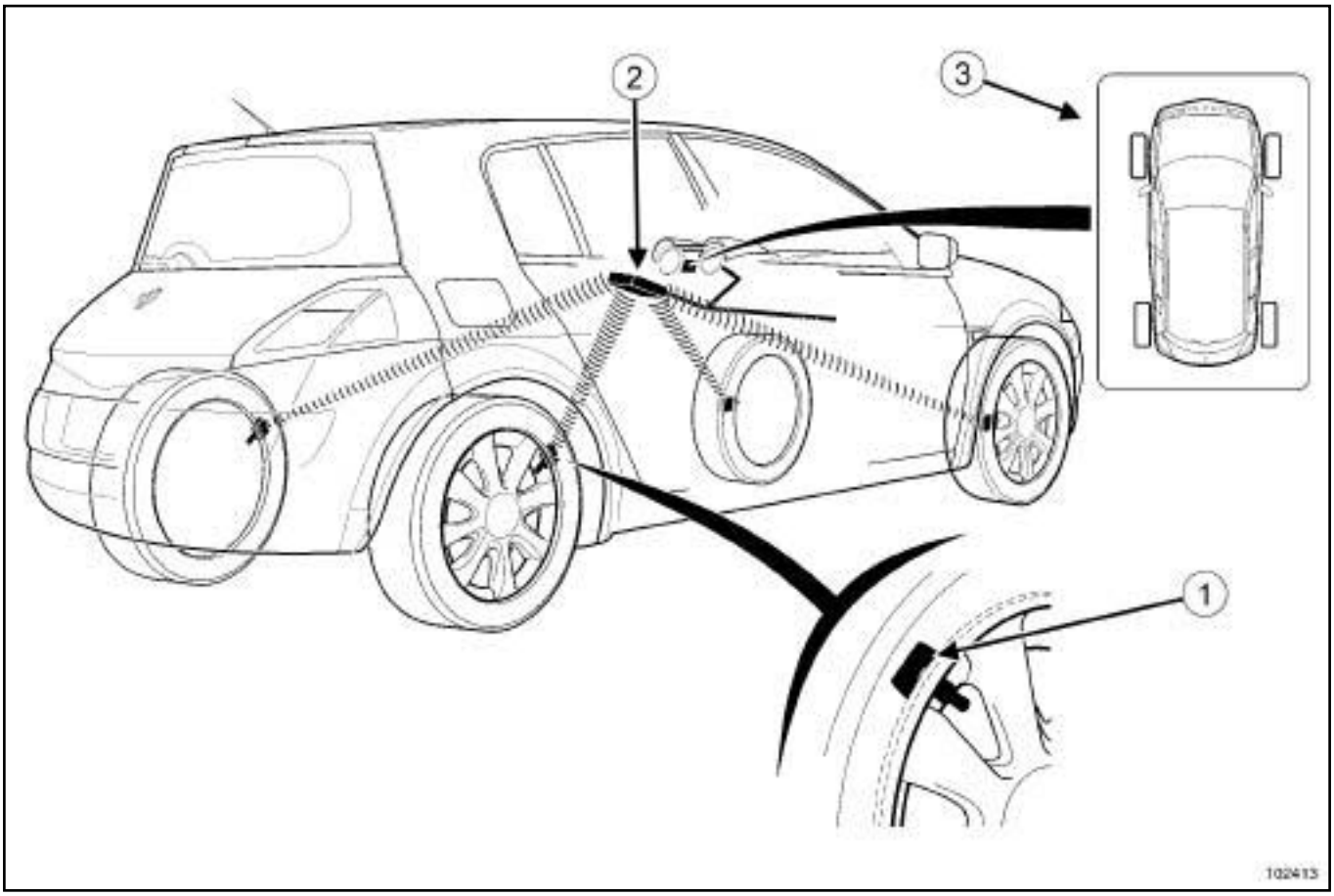

102413

The system consists of:

- four pressure sensors (**1**) built into the valves (one per wheel); the sensors transmit a radio signal,
- a computer (**2**) which collects, decodes and processes sensor signals, and then determines which message to display,
- a display (**3**) integrated to the instrument panel.

Note:

Each sensor is identified by a coloured marking around the valve:

- green = front left,
- yellow = front right,
- red = rear left-hand,
- black = rear right-hand.

Essential equipment
diagnostic tool

Tightening torques ▽	
tyre pressure monitor rigid sensor retaining nut	**7.5 Nm**
tyre pressure monitor hinged sensor retaining nut	**8.5 Nm**

REMOVAL

❑ Position the vehicle on a two-post lift (see **Vehicle: Towing and lifting**) (MR 364, 02A, Lifting equipment).

❑ Remove:

- the wheels (see **35A**, **Wheels and tyres**, **Wheel: Removal - Refitting**, page **35A-1**) ,
- the tyres (see **35A**, **Wheels and tyres**, **Tyres: Removal - Refitting**, page **35A-8**) .

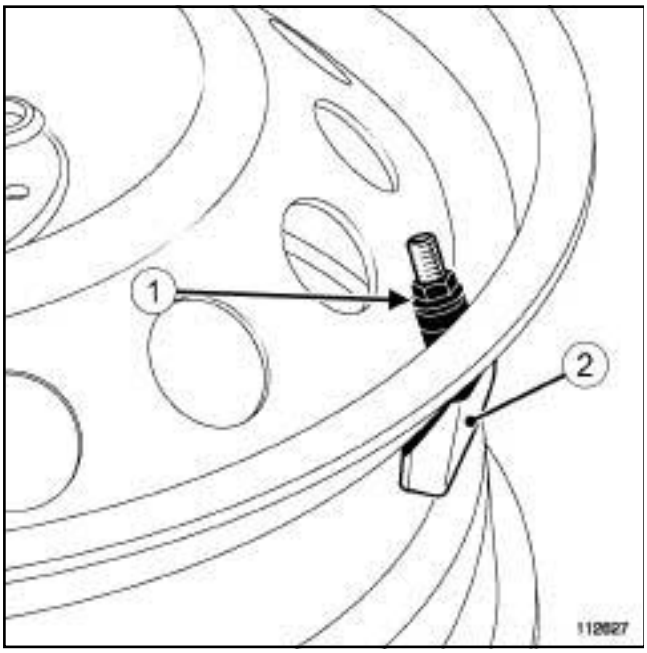

112627

❑ Remove:

- the retaining nut (**1**) , holding the pressure sensor (**2**) on the wheel,
- the pressure sensor (**2**) .

I - RIGID TYRE PRESSURE MONITOR VALVE

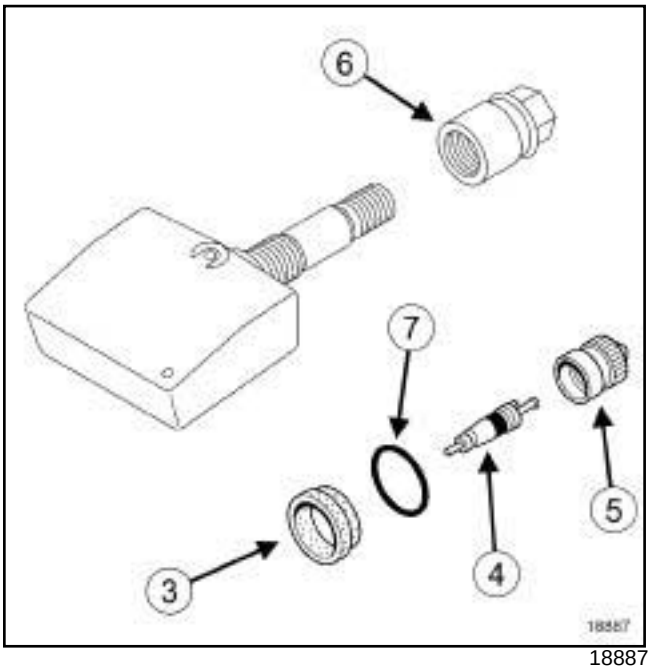

18887

❑ The following parts must be replaced:

- the seal (**3**) ,
- the mechanism (**4**) ,
- the cap (**5**) ,
- the retaining nut (**6**) .

❑ If necessary, replace:

- the coloured marker (**7**) .

II - HINGED TYRE PRESSURE MONITOR VALVE

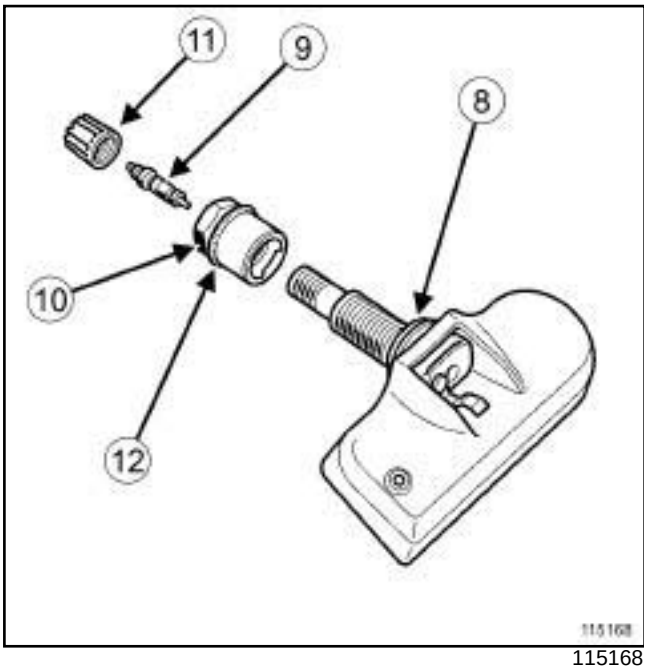

115168

- ❑ The following parts must be replaced:
  - the seal with the metal ring (**8**) ,
  - the mechanism (**9**) ,
  - the retaining nut (**10**) ,
  - the cap (**11**) .
- ❑ If necessary, replace:
  - the coloured marker (**12**) .

III - ALL TYPES

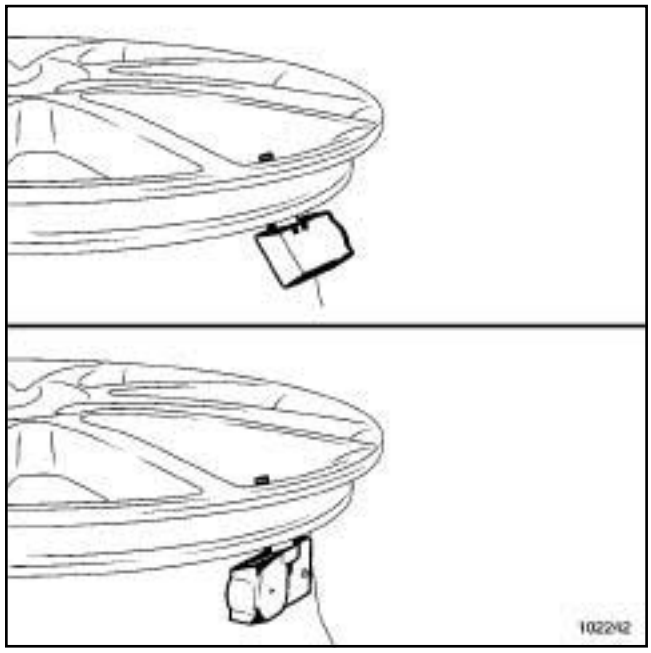

102242

- ❑ Make sure that the sensor is correctly positioned on the wheel rim:
  - figure 1 = fitted incorrectly,
  - figure 2 = fitted correctly.
- ❑ Position the sensor in the valve opening, checking that the seal is attached all around the edge of the opening.

> Note:
>
> After using a tyre repair aerosol, remove the product residue from the valve with a dry cloth or air gun before refitting it on the wheel rim.

- ❑ Manually tighten the retaining nut, holding the pressure sensor in contact with the rim.
- ❑ For hinged tyre pressure monitor valves, gently press the cap towards the centre of the wheel, keeping the sensor support on the rim to modify the valve/sensor angle to the rim profile.

  Tighten the nut manually.
- ❑ Tighten to the following torques:
  - the **tyre pressure monitor rigid sensor retaining nut (7.5 Nm)**,
  - the **tyre pressure monitor hinged sensor retaining nut (8.5 Nm)**.
- ❑ Refit the tyres (see **35A**, **Wheels and tyres**, **Tyres: Removal - Refitting**, page **35A-8**) .
- ❑ Balance the wheels (see **35A**, **Wheels and tyres**, **Wheel: Balancing**, page **35A-4**) .

- Refit the wheels (see **35A**, **Wheels and tyres**, **Wheel: Removal - Refitting**, page **35A-1**) .
- If replacing a pressure sensor, carry out the necessary operations using the **diagnostic tool** (see **MR 372 Fault finding, 35B, Tyre pressure monitor, Replacement of components**).

Tightening torques ▽	
steering box bolts	**105 N.m**

IMPORTANT
To avoid all risk of damage to the systems, apply the safety and cleanliness instructions and operation recommendations before carrying out any repair (see **Steering: Precautions for repair**) .

REMOVAL

I - REMOVAL PREPARATION OPERATION

❑ Position the vehicle on a two-post lift (see **Vehicle: Towing and lifting**) (02A, Lifting equipment).

❑ Remove:

- the front wheels (see **35A**, **Wheels and tyres**, **Wheel: Removal - Refitting**, page **35A-1**) ,
- the engine undertray bolts,
- the engine undertray,
- the front axle subframe (see **31A**, **Front axle components**, **Front axle sub-frame: Removal - Refitting**, page **31A-26**) .

II - OPERATION FOR REMOVAL OF PART CONCERNED

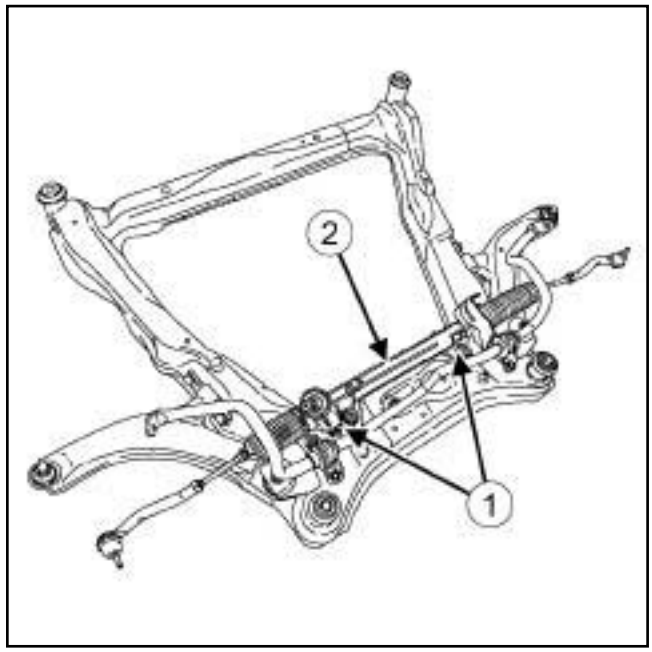

132716

❑ Remove:

- the steering box bolts (**1**) ,
- the steering box (**2**) .

REFITTING

I - REFITTING PREPARATION OPERATION

❑ **parts always to be replaced: Steering rack bolt (13,04,03,05)**.

WARNING
- A **10 mm** thick shim must be placed between the radiator cross member and the sub-frame to torque tighten the radiator cross member mountings to the recommended torque.
- The wheels must be set straight ahead; centre the steering wheel.

II - REFITTING OPERATION FOR PART CONCERNED

❑ Refit the steering box.

❑ Torque tighten the **steering box bolts (105 N.m)**.

III - FINAL OPERATION

❑ Refit the front axle subframe (see **31A**, **Front axle components**, **Front axle sub-frame: Removal - Refitting**, page **31A-26**) .

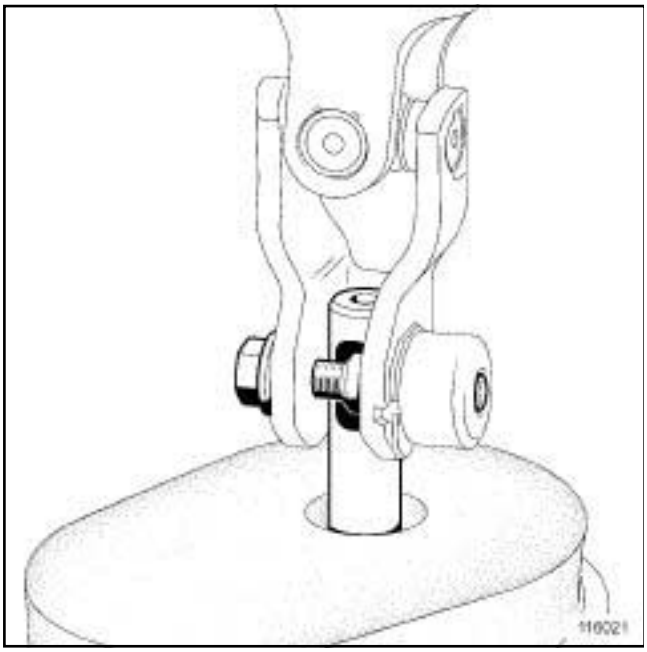

116021

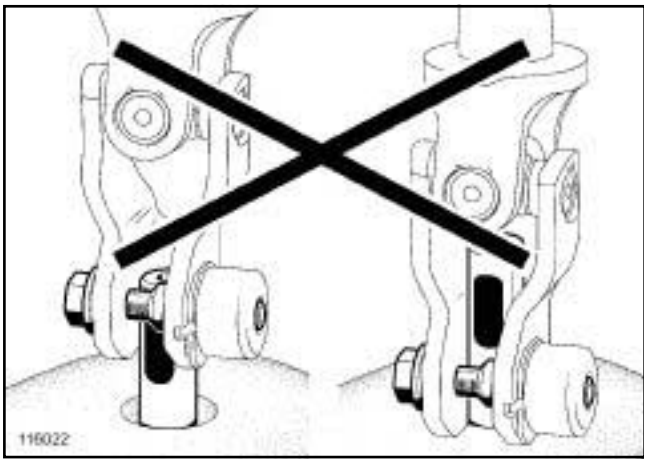

116022

- ❑ Check that the universal joint is in the correct position.
- ❑ Refit:
  - the engine undertray,
  - the front wheels (see **35A**, **Wheels and tyres**, **Wheel: Removal - Refitting**, page **35A-1**) .
- ❑ Check the axle geometry (see **30A**, **General information**, **Axle assemblies: Check**, page **30A-8**) .
- ❑ If necessary, adjust the geometry of the axle assemblies (see **30A**, **General information**, **Front axle: Adjusting**, page **30A-16**) .

Essential special tooling	
Tav. 476	Ball joint extractor.

Tightening torques ▽	
track rod ball joint nut	**37 N.m**
wheel alignment adjusting lock nut	**53 N.m**

IMPORTANT
Consult the safety and cleanliness advice and operation recommendations before carrying out any repair (see **Steering: Precautions for repair**) .

REMOVAL

I - REMOVAL PREPARATION OPERATION

❑ Position the vehicle on a two-post lift (see **Vehicle: Towing and lifting**) (02A, Lifting equipment).

❑ Remove the front wheel (see **35A**, **Wheels and tyres**, **Wheel: Removal - Refitting**, page **35A-1**) .

II - OPERATION FOR REMOVAL OF PART CONCERNED

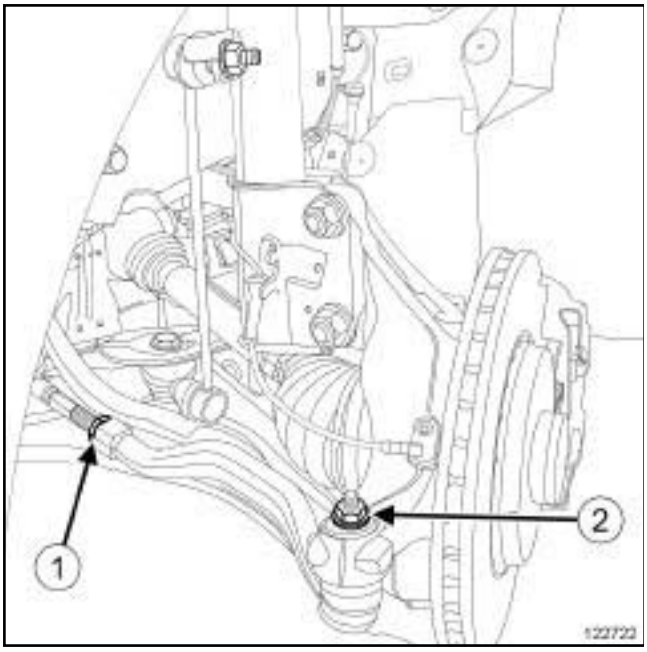

122722

❑ Loosen the wheel alignment adjustment lock nut (**1**) .

❑ Remove the track rod ball joint nut (**2**) .

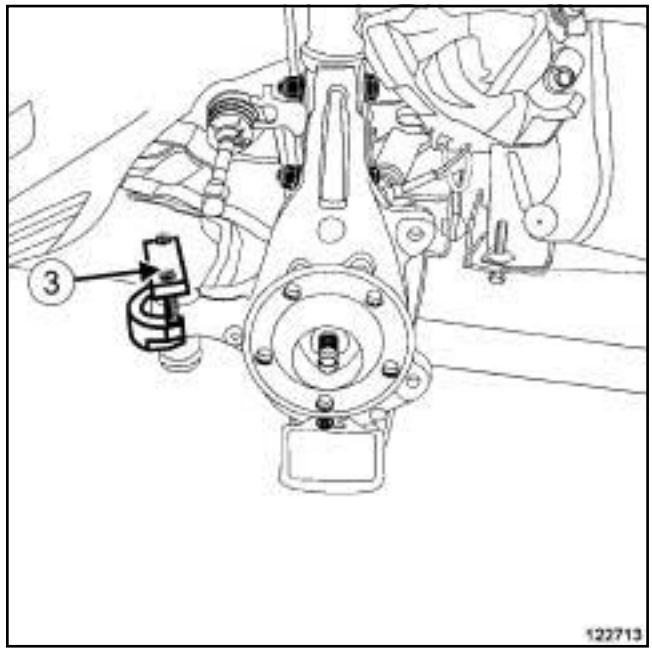

122713

❑ Extract the ball joint using (**3**) **(Tav. 476)**.

❑ Unscrew the track rod anti-clockwise and note the number of turns for refitting.

❑ Remove the track rod.

REFITTING

I - REFITTING OPERATION FOR PART CONCERNED

❑ Screw the track rod back in place by the number of turns noted during removal.

❑ Fit the track rod end in the hub carrier.

❑ Refit the track rod ball joint nut.

❑ Tighten to torque:

- the **track rod ball joint nut (37 N.m)**,
- the **wheel alignment adjusting lock nut (53 N.m)**.

II - FINAL OPERATION

❑ Refit the wheel (see **35A**, **Wheels and tyres**, **Wheel: Removal - Refitting**, page **35A-1**) .

❑ Check the axle geometry (see **30A**, **General information**, **Axle assemblies: Check**, page **30A-8**) .

❑ If necessary, adjust the geometry of the axle assemblies (see **30A**, **General information**, **Front axle: Adjusting**, page **30A-16**) .

Axial ball joint linkage: Removal - Refitting

EQT LEVEL E3 PLUS or EQT LEVEL EA1 or EQT LEVEL EA2 or EQT LEVEL EA3 or EQT LEVEL EA4 or EQT LEVEL EA5 or EQT LEVEL EA6 or EQT LEVEL EAG

Essential special tooling	
Dir. 1306-04	Tool for locking steering rack.
Dir. 1305-01	Tool for removing/refitting 35 mm to 41 mm diameter axial ball joints.

Tightening torques ▽	
axial ball joint	**80 N.m**

REMOVAL

I - REMOVAL PREPARATION OPERATION

- ❑ Position the vehicle on a two-post lift (see **Vehicle: Towing and lifting**) .
- ❑ Remove the front wheel (see **35A**, **Wheels and tyres**, **Wheel: Removal - Refitting**, page **35A-1**) .
- ❑ Remove the track rod (see **36A**, **Steering assembly**, **Track rod: Removal - Refitting**, page **36A-3**) .
- ❑ Remove the steering rack gaiter (see **36A**, **Steering assembly**, **Steering rack gaiter: Removal - Refitting**, page **36A-15**) .
- ❑ Unlock the steering column.

Note:

During this operation, the steering rack must be in place on the vehicle.

II - OPERATION FOR REMOVAL OF PART CONCERNED

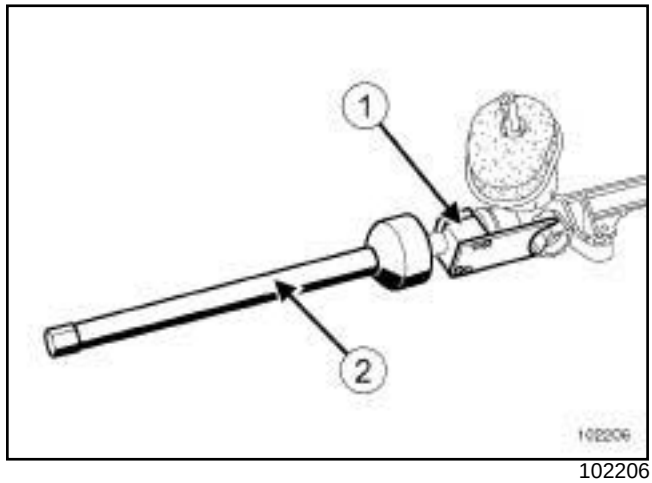

102206

- ❑ Set up the **(Dir. 1306-04)** (**1**) on the steering rack, at the pinion end.
- ❑ Unlock the axial ball joint using tool **(Dir. 1305-01)** (**2**) .
- ❑ Remove the axial ball joint.

REFITTING

I - REFITTING PREPARATION OPERATION

- ❑ **parts always to be replaced: Steering axial ball joint washer (13,04,02,04)**

EQT LEVEL E3 PLUS or EQT LEVEL EA1 or EQT LEVEL EA2 or EQT LEVEL EA3 or EQT LEVEL EA4 or EQT LEVEL EA5 or EQT LEVEL EA6 or EQT LEVEL EAG

II - REFITTING OPERATION FOR PART CONCERNED

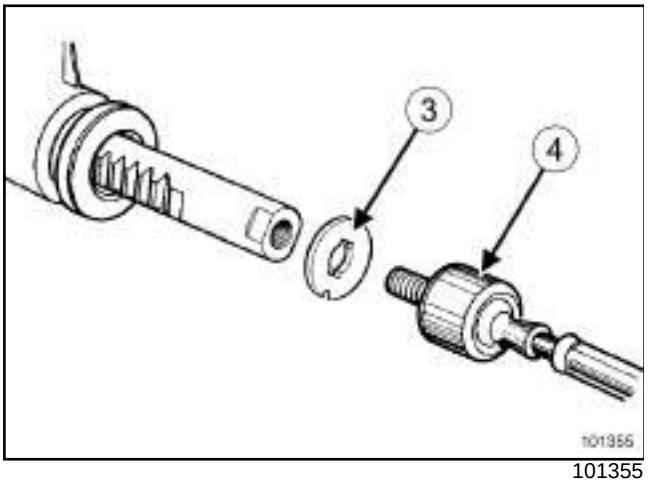

101355

- Refit:
  - a new washer (**3**) ,
  - the axial ball joint (**4**) .
- Torque tighten the **axial ball joint (80 N.m)** using the tool **(Dir. 1305-01)**.
- Coat with **SILICONE GREASE** (see **Vehicle: Parts and ingredients for the repairwork**) :
  - the steering rack,
  - the axial ball joint.

III - FINAL OPERATION

- Refit the steering box gaiter (see **36A**, **Steering assembly**, **Steering rack gaiter: Removal - Refitting**, page **36A-15**) .
- Refit the track rod (see **36A**, **Steering assembly**, **Track rod: Removal - Refitting**, page **36A-3**) .
- Refit the wheel (see **35A**, **Wheels and tyres**, **Wheel: Removal - Refitting**, page **35A-1**) .
- Check the axle geometry (see **30A**, **General information**, **Axle assemblies: Check**, page **30A-8**) .
- If necessary, adjust the geometry of the axle assemblies (see **30A**, **General information**, **Front axle: Adjusting**, page **30A-16**) .

EQT LEVEL SPORT

Essential special tooling	
Tav. 476	Ball joint extractor.
Dir. 1306-04	Tool for locking steering rack.
Dir. 1305-01	Tool for removing/refitting 35 mm to 41 mm diameter axial ball joints.

Essential equipment
diagnostic tool

Tightening torques ▽	
axial ball joint	**80 N.m**
wheel alignment adjusting lock nut	**53 N.m**
track rod end nut	**37 N.m**
wheel mounting bolts	**130 N.m**
battery cover bolts	**4 N.m**

REMOVAL

❑ Position the vehicle on a two-post lift.

❑ Unlock the steering column lock using the **diagnostic tool**.

> Note:
>
> During this operation, the steering rack must be in place on the vehicle.

❑ Disconnect the battery, starting with the negative terminal.

❑ Extract the track rod end using the **(Tav. 476)**.

❑ Loosen the wheel alignment adjusting lock nut.

❑ Remember the number of thread turns made in order to preset the wheel alignment when refitting.

❑ Remove:

- the ball joint housing,
- the lock nut,
- the gaiter retaining clips,
- the gaiter.

> **WARNING**
>
> Be careful not to damage the gaiters: risk of irreversible damage.

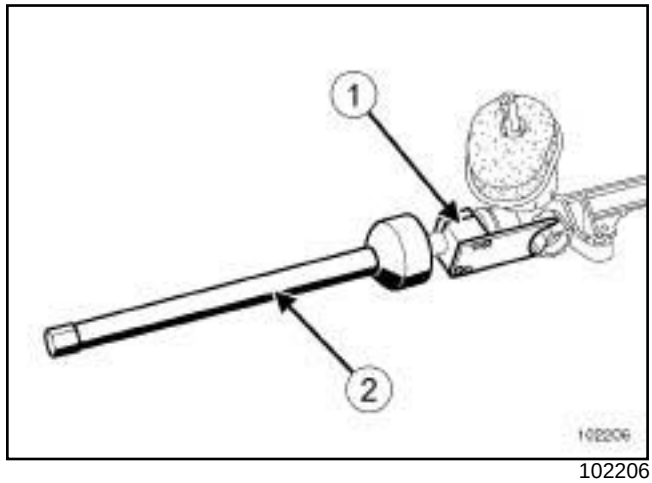

102206

❑ Set up the **(Dir. 1306-04)** (**1**) on the steering rack, at the pinion end.

❑ Unlock the axial ball joint using tool **(Dir. 1305-01)** (**2**) .

EQT LEVEL SPORT

REFITTING

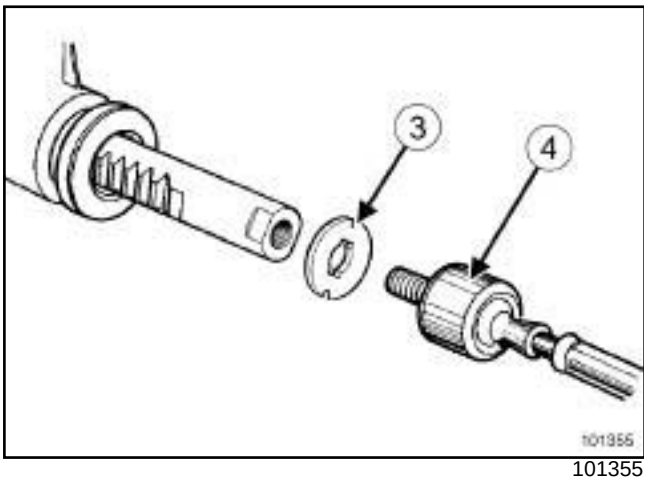

101355

- ❑ Always replace washer (**3**) with a new one.
- ❑ Refit:
  - the stop (**3**) (**13 mm** thick),
  - the axial ball joint (**4**) (specific length: **230 mm**).
- ❑ Torque tighten the **axial ball joint (80 N.m)** using the tool **(Dir. 1305-01)**.
- ❑ Coat the following parts with lithium grease:
  - the steering rack,
  - the axial ball joint.
- ❑ Refit:
  - the gaiter,
  - the metal clip,
  - the new plastic clip, the same as the original fitting,
  - the lock nut,
  - the ball joint housing.
- ❑ Retighten the track rod end housing by the number of rotations noted during removal.
- ❑ Refit the track rod end.
- ❑ Tighten to torque:
  - the **wheel alignment adjusting lock nut (53 N.m)**,
  - the **track rod end nut (37 N.m)**,
  - the **wheel mounting bolts (130 N.m)**.

> **WARNING**
> Connect the battery, starting with the positive terminal; carry out the necessary programming (see **80A, Battery, Battery: Removal - Refitting**).

- ❑ Torque tighten the **battery cover bolts (4 N.m)**.
- ❑ Adjust the axle assemblies.

> **WARNING**
> Program the torque and angle sensor using the **diagnostic tool**.

> Note:
>
> It is essential to initialise the xenon bulb system (see **MR 364, Electrical equipment, 80C, Xenon bulbs**).
>
> Adjust the headlights.

Tightening torques ▽	
steering column nuts	**21 N.m**
steering column lock bolt	**8 N.m**
steering column nuts	**21 N.m**
electric steering column lock bolt	**8 N.m**
universal joint bolt (TRW column)	**30 N.m**
universal joint bolt (NSK column)	**44 N.m**

IDENTIFYING THE STEERING COLUMN

NSK steering column

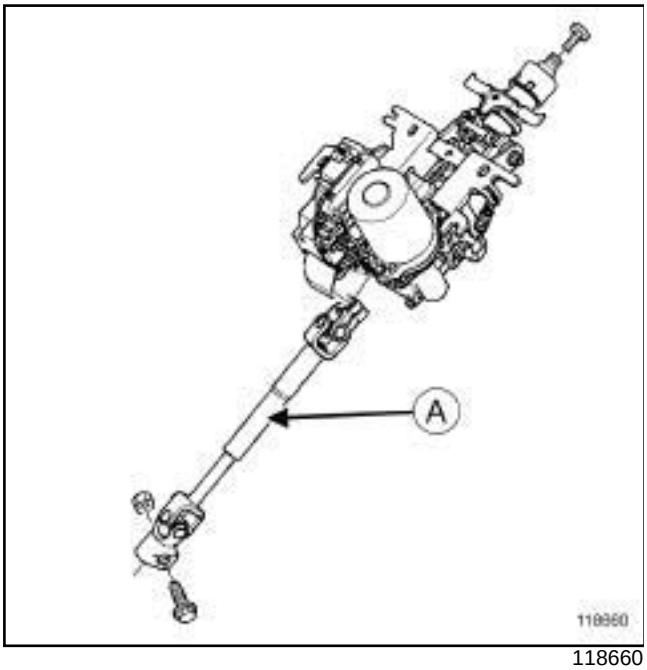

118660

(**A**) Black intermediate shaft

TRW steering column

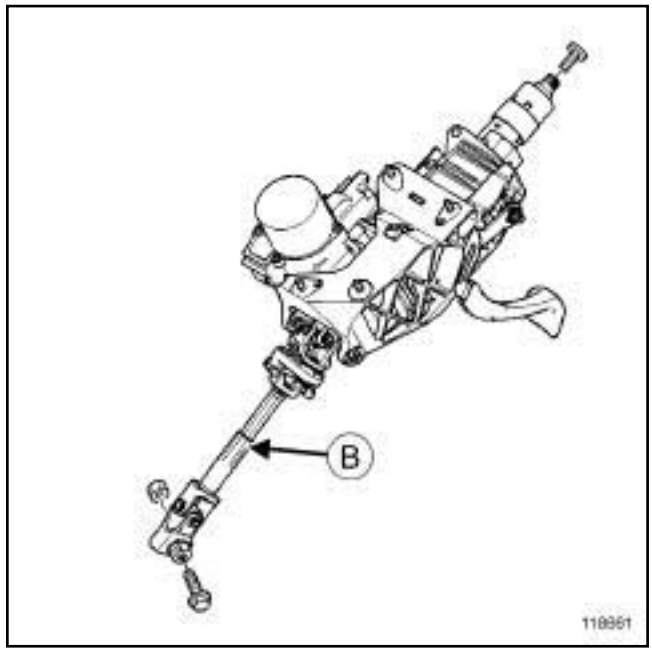

118661

(**B**) Silver intermediate shaft

IMPORTANT
Never handle the pyrotechnic systems (pretensioners or airbags) near to a source of heat or naked flame - they may be triggered.

These operations do not require a lift.

IMPORTANT
To avoid any risk of triggering when working on or near a pyrotechnic component (airbags or pretensioners), lock the airbag computer using the diagnostic tool.

When this function is activated, all the trigger lines are inhibited and the airbag warning light on the instrument panel lights up continuously (ignition on).

REMOVAL

I - REMOVAL PREPARATION OPERATION

❑ Lock the airbag computer (see **Fault finding - Replacement of components**) (88C, Airbags and pretensioners).

❑ Disconnect the battery (see **Battery: Removal - Refitting**) (80A, Battery).

❑ Move the steering column to low position and pull it out as far as possible.

❏ Remove:

- the steering wheel (see **36A**, **Steering assembly**, **Steering wheel: Removal - Refitting**, page **36A-21**) ,
- the steering column switch assembly (see **Steering wheel controls assembly: Removal - Refitting**) (84A, Control - Signals),
- the centre panel (see **Centre front panel: Removal - Refitting**) (57A, Interior equipment),
- the dashboard lower trim (see **Lower section of dashboard trim: Removal - Refitting**) (57A, Interior equipment),
- the front left-hand air distribution duct (see **Front air distribution duct: Removal - Refitting**) (61A, Heating system).

II - OPERATION FOR REMOVAL OF PART CONCERNED

❏ Lift the floor carpet to access the universal joint.

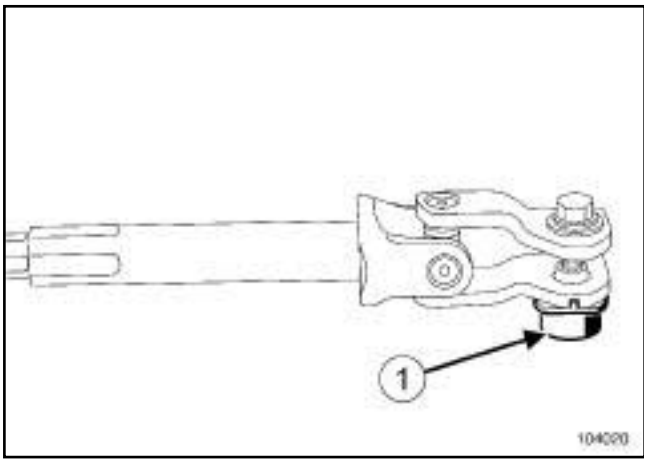

104020

❏ Discard the cover (**1**) (do not keep it).

❏ Remove:

- the universal joint bolt (do not keep),
- the universal joint cam nut (do not keep).

1 - TRW column

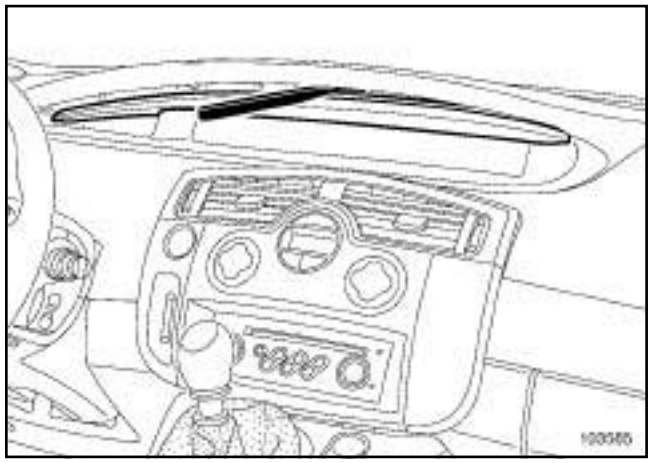

103585

❏ Unclip the dashboard upper trim.

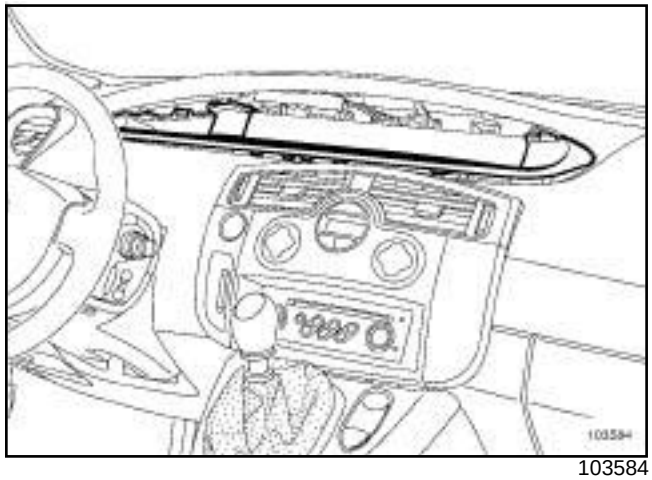

103584

❏ Unclip the dashboard lower trim.

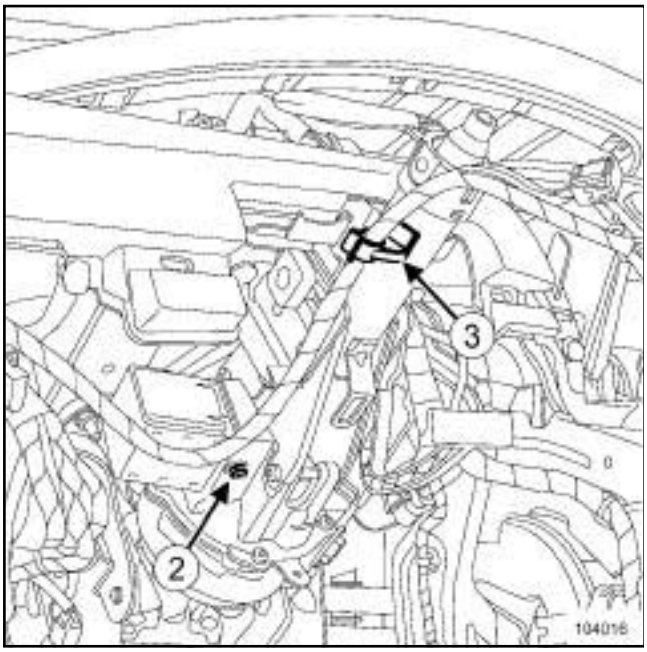

104016

❑

WARNING
The bolt for the electric steering column lock has a left-hand thread. It unscrews in a clockwise direction.

❑ Remove the column lock bolt (**2**) .

❑ Disconnect the column lock connector.

❑ Remove the column lock.

❑ Unclip the rotary switch wiring harness (**3**) from the steering column.

Note:
Do not remove any power-assisted steering column component.

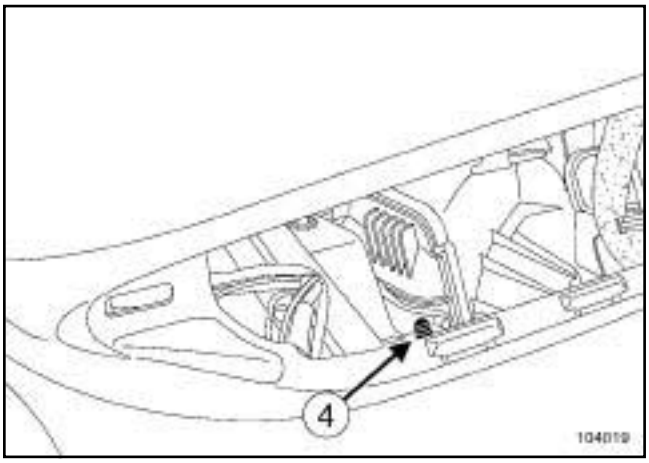

104019

❑ Remove the steering column upper nut (**4**) .

❑ Disconnect:

- the electric power-assisted steering computer power connector using a **4 mm** wide and **0.5 mm** thick screwdriver,
- the electric power-assisted steering computer signal connector using a **4 mm** wide and **0.5 mm** thick screwdriver.

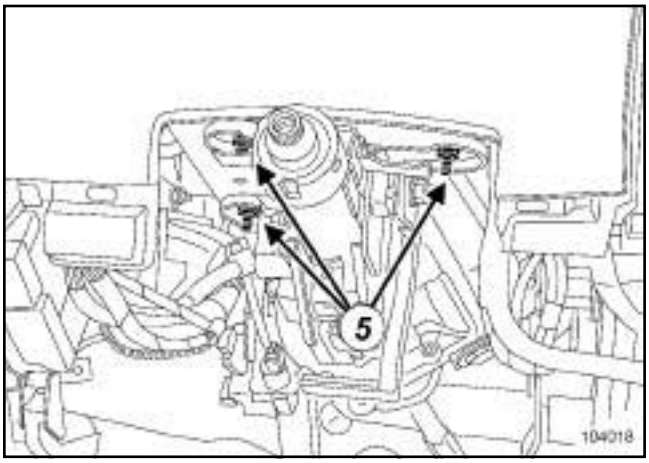

104018

❑ Remove:

- the steering column lower nuts (**5**) ,
- the steering column.

2 - NSK column

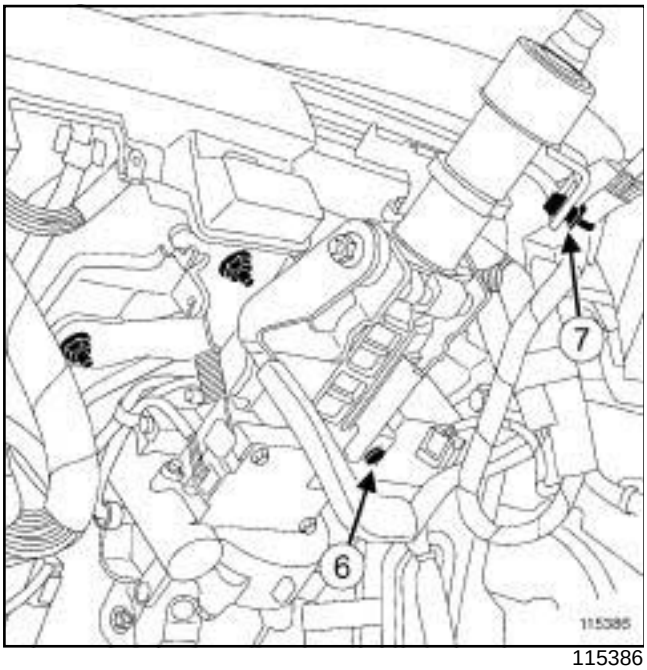

115386

❑

> **WARNING**
> The bolt for the electric steering column lock has a left-hand thread. It unscrews in a clockwise direction.

❑ Remove the column lock bolt (**6**) .

❑ Disconnect the column lock connector.

❑ Remove the column lock.

❑ Unclip the rotary switch wiring harness (**7**) from the steering column.

> Note:
> Do not remove any power-assisted steering column component.

❑ Fit a shim approximately **20cm** thick on the floor under the steering column in order to fit the column before disconnecting the connections.

❑ Remove:

- the steering column nuts,
- the steering column.

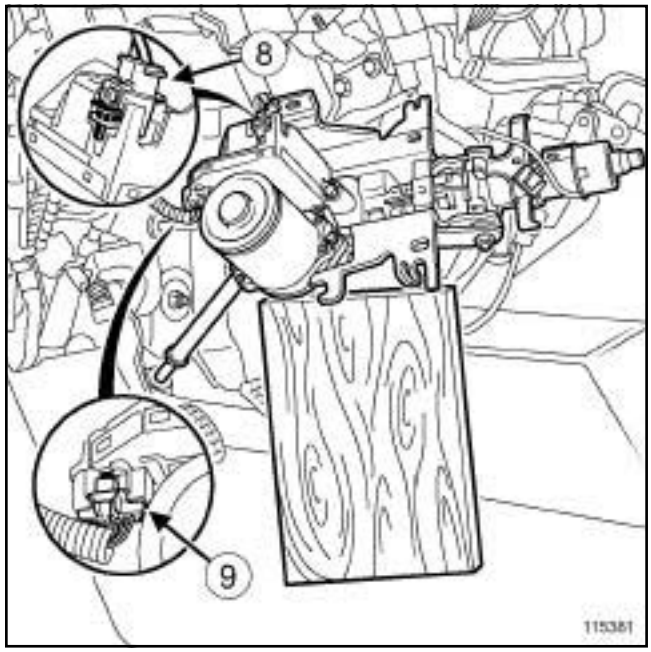

115381

❑ Rest the steering column on the shim.

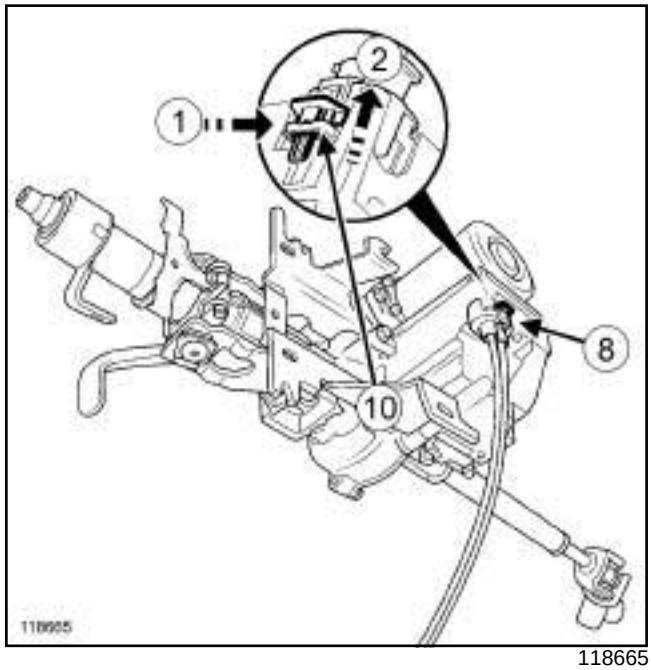

118665

❑ Disconnect:

- the connector (**8**) by pressing ***(1)*** while pulling ***(2)*** ,
- the connector ***(9)*** .

> **WARNING**
> To ensure the electronic systems work properly, do not damage the locking system (**10**) of the connector (**8**) .

❑ Remove the steering column.

REFITTING

I - REFITTING PREPARATION OPERATION

❑ **parts always to be replaced: Steering shaft yoke bolt (13,04,01,07)**.

parts always to be replaced: Steering shaft yoke nut (13,04,01,08).

parts always to be replaced: Steering wheel bolt (13,04,01,09).

❑

> Note:
>
> When replacing an NSK type steering column on vehicles not equipped with ESP, do not remove the steering wheel angle sensor located on the new steering column.

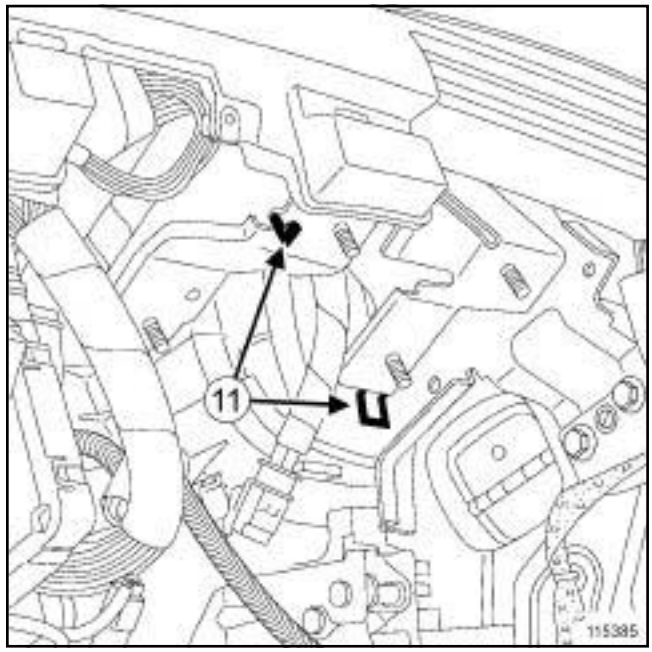

115385

❑ When refitting, the steering column must stay in place using the retainers (**11**) ,

❑ Push and pull on the electric power-assisted steering computer power and signal connectors to check that they are properly secured (risk of loss of assistance).

> Note:
>
> The steering wheel should enter the splines freely (the splines have foolproofing devices).
>
> Do not damage the foolproofing splines.

> Note:
>
> - Do not refit the housing.
> - On a new steering column, the universal joint cam nut is pre-fitted.

II - REFITTING OPERATION FOR PART CONCERNED

1 - NSK column

❏

> Note:
>
> When replacing an NSK type steering column on vehicles not equipped with ESP, do not remove the steering wheel angle sensor located on the new steering column.

❏ Refit:

- the steering column,
- the steering column nuts.

❏ Torque tighten the **steering column nuts (21 N.m)**.

❏ Clip the steering column rotary switch wiring harness.

❏ Refit the column lock.

❏ Connect the column lock connector.

❏ Refit the column lock bolt.

❏ Torque tighten the **steering column lock bolt (8 N.m)**.

2 - TRW column

❏ Refit the steering column.

❏ Connect the connectors.

❏ Refit the steering column nuts, starting with the lower threaded stud the furthest away and finishing with the upper threaded stud.

❏ Torque tighten the **steering column nuts (21 N.m)**.

❏ Clip the steering column rotary switch wiring harness.

❏ Connect:

- the electric power-assisted steering computer power connector using a **4 mm** wide and **0.5 mm** thick screwdriver,
- the electric power-assisted steering computer signal connector using a **4 mm** wide and **0.5 mm** thick screwdriver.

❏ Refit the column lock.

❏ Connect the column lock connector.

❏ Refit the electric steering column lock bolt.

❏ Torque tighten the **electric steering column lock bolt (8 N.m)**.

❏ Clip on:

- the instrument panel lower trim piece,
- the instrument panel upper trim piece.

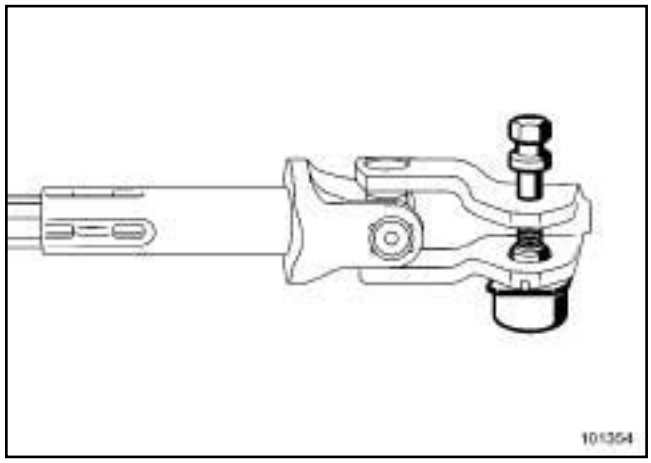

101354

❏ Respect the direction of fitting for the universal joint cam bolt and nut.

❏ Refit the universal joint.

❏ Refit the cam nut and the fork bolt.

❏ Finger tighten the cam nut and the yoke bolt.

❏ Immobilise the cam nut in its housing (on the universal joint).

❏ Pretighten the universal joint nut and bolt.

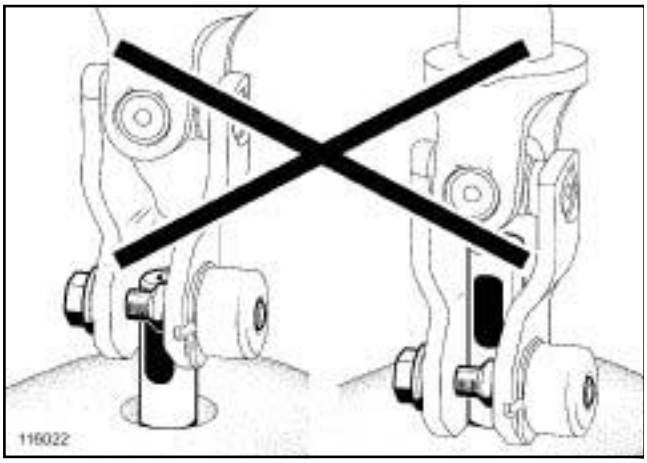

116022

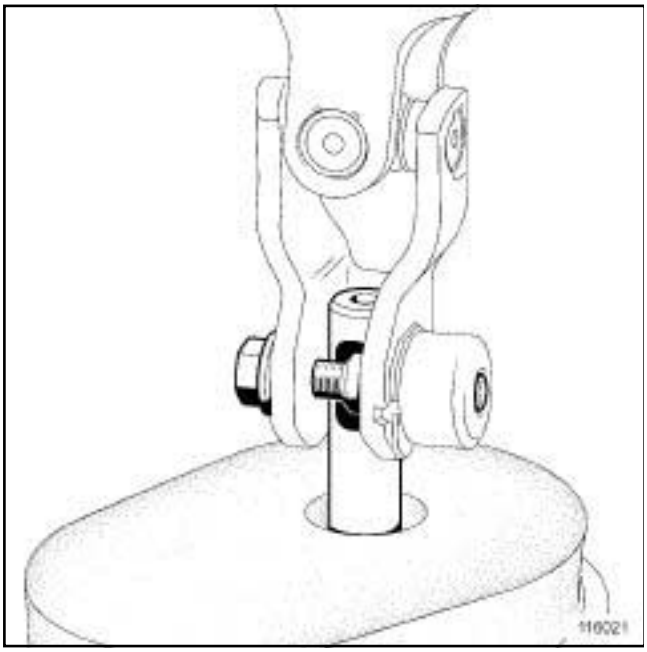

116021

- ❑ Check that the universal joint is in the correct position.
- ❑ Torque tighten:
  - the **universal joint bolt (TRW column) (30 N.m)**,
  - the **universal joint bolt (NSK column) (44 N.m)**.
- ❑ Refit the floor carpet.

> Note:
>
> Check that the floor carpet reaches under the accelerator pedal end-stop.

III - FINAL OPERATION

- ❑ Refit:
  - the front left-hand air distribution duct (see **Front air distribution duct: Removal - Refitting**) (61A, Heating system),
  - the dashboard lower trim (see **Lower section of dashboard trim: Removal - Refitting**) (57A, Interior equipment),
  - the centre front panel (see **Centre front panel: Removal - Refitting**) (57A, Interior equipment),
  - the steering column switch assembly (see **Steering wheel controls assembly: Removal - Refitting**) (84A, Control - Signals),
  - the steering wheel (see **36A**, **Steering assembly**, **Steering wheel: Removal - Refitting**, page **36A-21**) .
- ❑ Connect the battery (see **Battery : Removal - Refitting**) (80A, Battery).
- ❑ Unlock the airbag computer (see **Fault finding - Replacement of components**) (88C, Airbag and pretensioners).

REMOVAL

I - REMOVAL PREPARATION OPERATION

❏ Position the vehicle on a two-post lift (see **Vehicle: Towing and lifting**) (02A, Lifting equipment).

❏ Remove:

- the front wheel (see **35A**, **Wheels and tyres**, **Wheel: Removal - Refitting**, page **35A-1**) ,
- the track rod, (see **36A**, **Steering assembly**, **Track rod: Removal - Refitting**, page **36A-3**)
- the wheel alignment adjusting lock nut.

II - OPERATION FOR REMOVAL OF PART CONCERNED

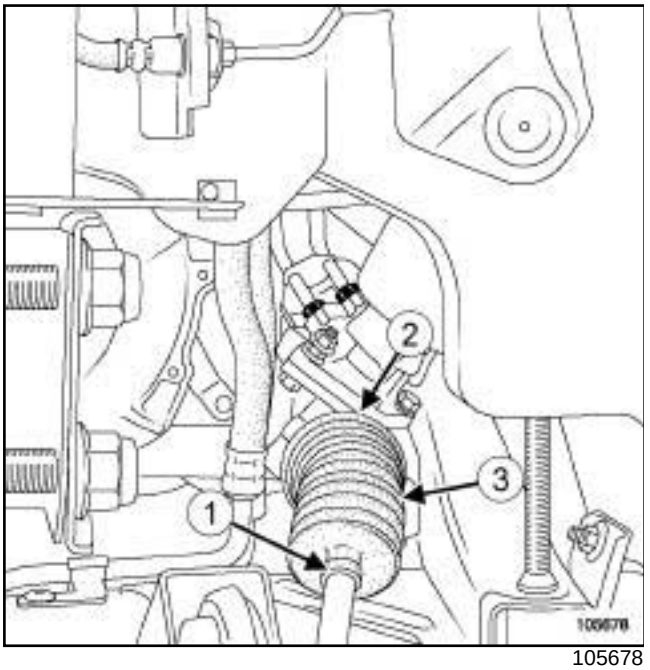

105678

❏

> Note:
>
> When removing the steering gaiter, blast the gaiter surfaces with compressed air to eliminate any impurities that could enter the steering box.

❏ Remove the gaiter retaining clip (**1**)

❏ Cut the gaiter retaining clip (**2**) .

❏ Remove the gaiter (**3**) .

REFITTING

I - REFITTING PREPARATION OPERATION

❏ Always replace:

- the steering box gaiter,
- the retaining clips.

❏ Clean the contact surfaces between the steering box and the gaiter using **SURFACE CLEANER** (see **Vehicle: Parts and ingredients for the repairwork**) .

❏ Coat the gaiter bearing face on the axial ball joint with **SILICONE LUBRICANT** (see **Vehicle: Parts and ingredients for the repairwork**) to prevent the gaiter from twisting.

> Note:
>
> Be sure to centre the steering to ensure the air in the gaiters is equalised.

> Note:
>
> Be careful not to damage the gaiters: risk of irreversible damage.

II - REFITTING OPERATION FOR PART CONCERNED

❏ Refit:

- a new steering box gaiter,
- new retaining clips.

III - FINAL OPERATION.

❏ Refit:

- the wheel alignment adjustment lock nut,
- the track rod, (see **36A**, **Steering assembly**, **Track rod: Removal - Refitting**, page **36A-3**)
- the front wheel (see **35A**, **Wheels and tyres**, **Wheel: Removal - Refitting**, page **35A-1**) .

❏ Check the axle geometry (see **30A**, **General information**, **Axle assemblies: Check**, page **30A-8**) .

❏ If necessary, adjust the axle assemblies' geometry (see **30A**, **General information**, **Front axle: Adjusting**, page **30A-16**) .

Essential equipment
diagnostic tool

REMOVAL

❑ Remove the front axle subframe (see **31A**, **Front axle components**, **Front axle sub-frame: Removal - Refitting**, page **31A-26**) .

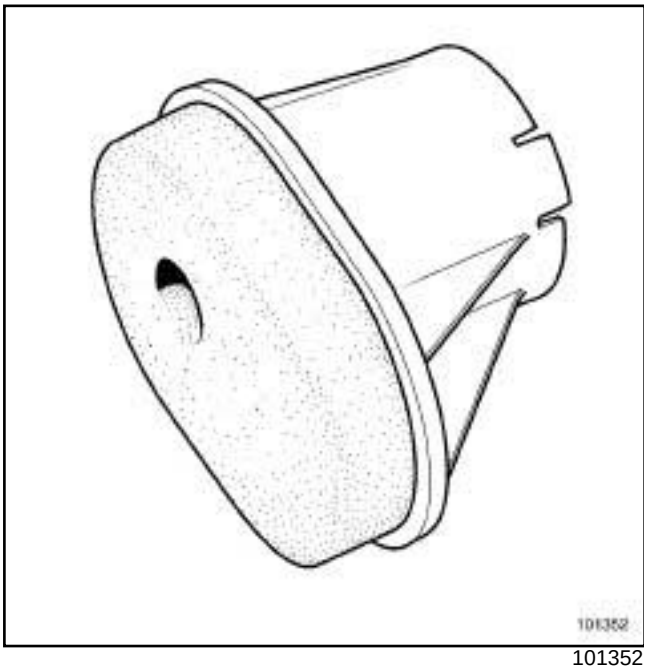

101352

❑ Unclip the bulkhead seal using a screwdriver.

REFITTING

❑ To refit, proceed in the reverse order of removal.

❑

Note:

- The universal joint cam bolt and nut must be replaced.

WARNING

Connect the battery.

- carry out the necessary programming ((see **80A**, **Battery**)).
- Program the torque and angle sensor and make the necessary configurations using the **diagnostic tool** (see the **fault finding manual**).

Tightening torques ▽	
steering column intermediate shaft bolt	**30 Nm**
universal joint bolt	**44 Nm**

The removal of the intermediary shaft is only authorized on NSK columns.

NSK column

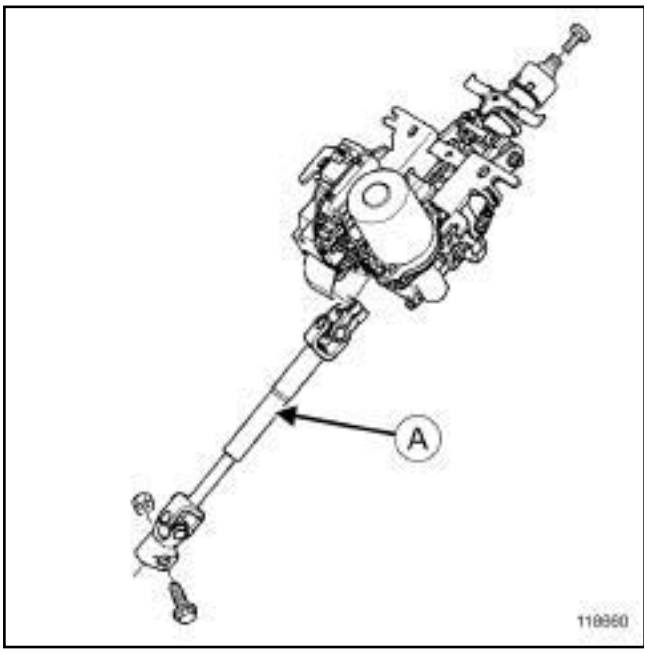

118660

(**A**) Black coloured intermediary shaft.

REMOVAL

I - REMOVAL PREPARATION OPERATION

❑ Unblock then loosen the intermediate shaft on the steering column side, without removing it.

❑ Put the steering wheel straight with the axle in line.

❑ Lock the steering wheel.

❑ Disconnect the battery (see **Battery: Removal - Refitting**) (80A, Battery).

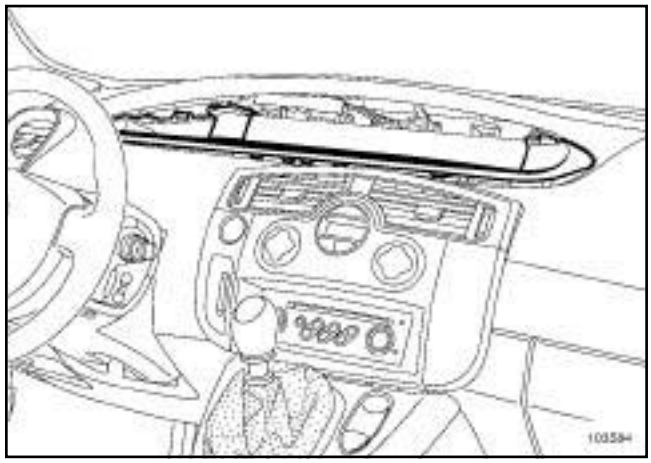

103584

❑ Remove:

- the centre front panel (see **Centre front panel: Removal - Refitting**) (57A, Interior equipment),
- the dashboard lower trim (see **Lower section of dashboard trim: Removal - Refitting**) (57A, Interior equipment),
- the front left-hand air distribution duct (see **Front air distribution duct: Removal - Refitting**) (61A, Heating system).

II - OPERATION FOR REMOVAL OF PART CONCERNED

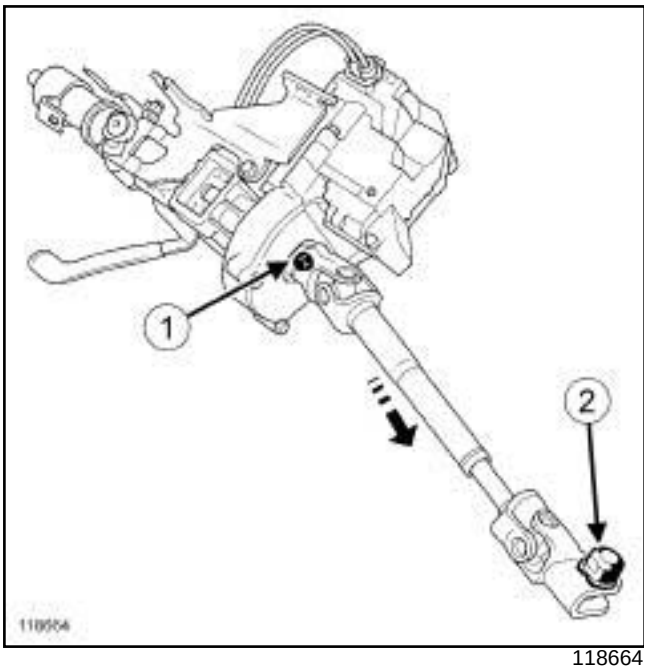

118664

- ❑ Remove the bolt (**1**) from the intermediate shaft side of the steering column.
- ❑ Mark the position of the intermediate shaft on the column.
- ❑ Separate the intermediate shaft by pulling it in the direction of the arrow.
- ❑ Lift the floor carpet to access the universal joint.

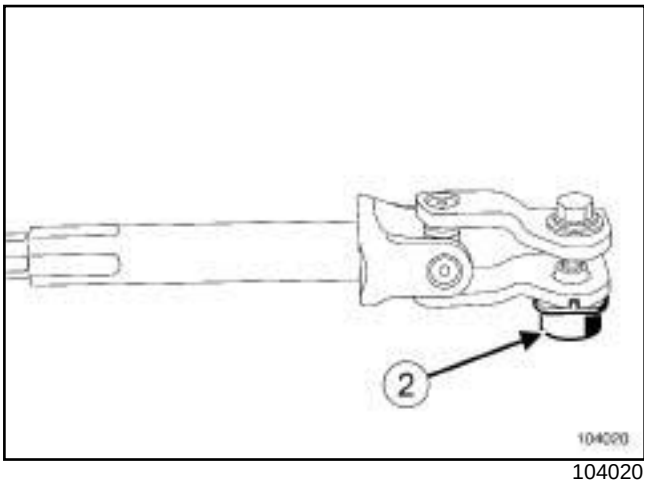

104020

- ❑ Discard the cover (**2**) using a hammer (do not keep it).
- ❑ Remove:
  - the universal joint bolt (do not keep),
  - the universal joint cam nut (do not keep it).
  - the intermediate shaft.

REFITTING

I - REFITTING PREPARATION OPERATION

- ❑ Always replace the universal joint bolt and nut.
- ❑ Refit the cam nut on the universal joint.
- ❑ Crimp the cover on the universal joint.

II - REFITTING OPERATION FOR PART CONCERNED

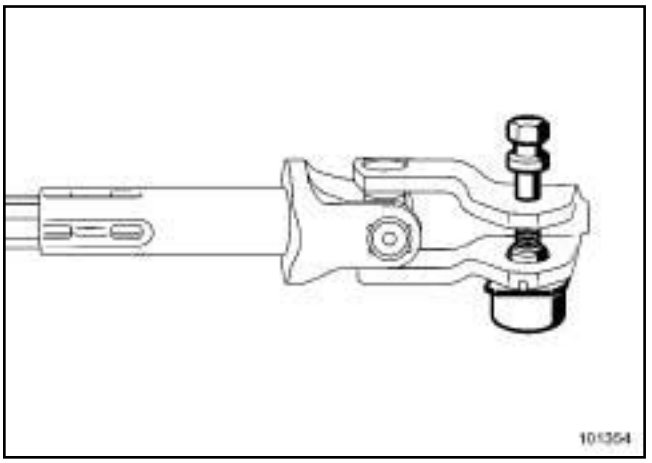

101354

- ❑ Observe the direction of fitting for the universal joint cam nut.
- ❑ Refit the universal joint.
- ❑ Refit the universal joint bolt and cam nut.
- ❑ Fit on the universal joint bolt without tightening it.
- ❑ Lock the cam nut in its housing (on the universal joint).

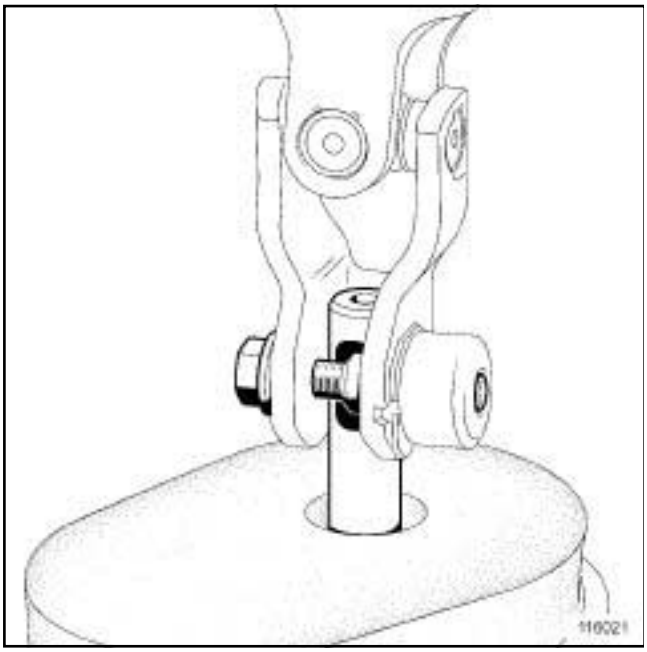

116021

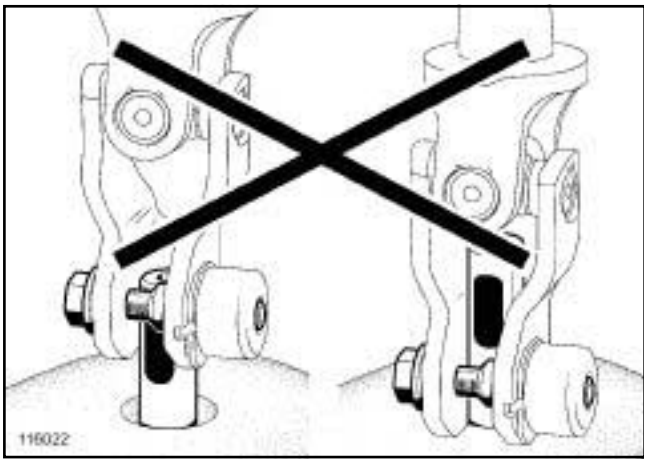

116022

- ❑ Check that the universal joint is in the correct position on the steering rack attack pinion stem.
- ❑ Fit the intermediate shaft on the steering column while taking care not to shift it more than one tooth in relation to its initial position.

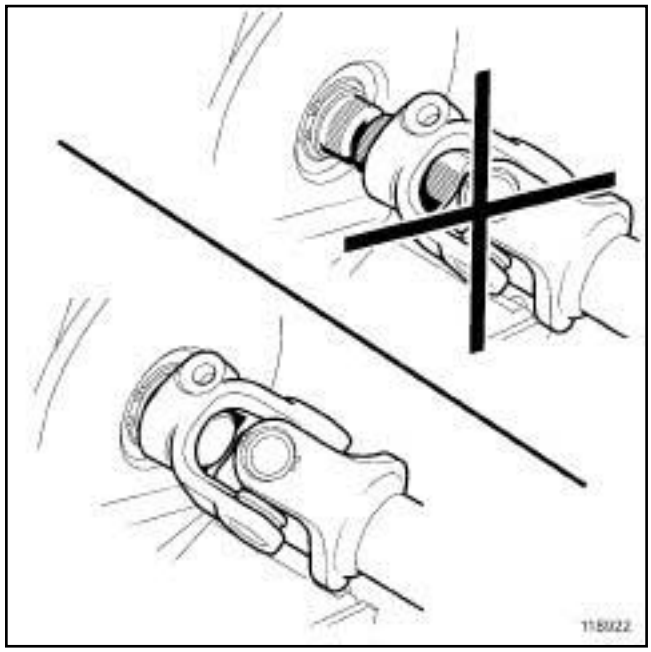

118922

- ❑ Check that the intermediary shaft on the steering column side is in the correct position.
- ❑ Fit the intermediary shaft bolt on the steering column side without tightening it.

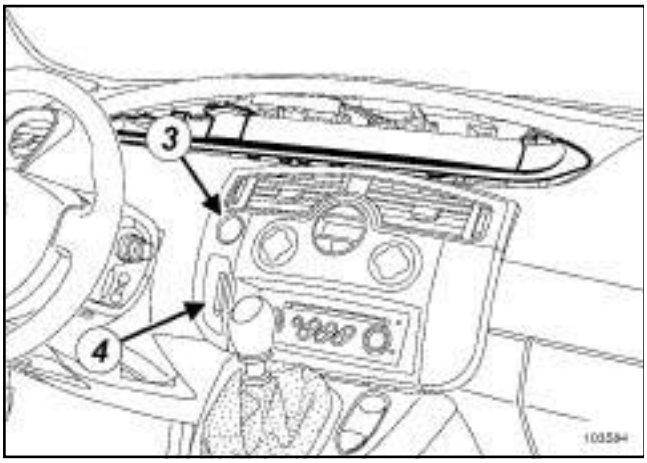

103584

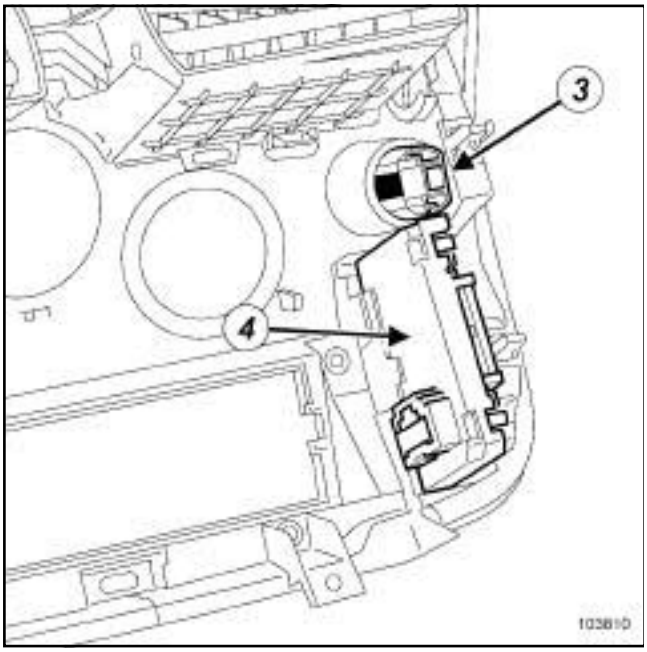

103810

❑ Connect:

- the start button (**3**) .
- the RENAULT card reader (**4**) .

❑ Connect the battery (see **Battery: Removal - Refitting**) (80A, Battery).

❑ Unlock the steering wheel.

❑ Tighten to torque:

- the **steering column intermediate shaft bolt (30 Nm)**,
- the **universal joint bolt (44 Nm)**.

❑ Refit the floor carpet.

> Note:
>
> Check that the floor carpet reaches under the accelerator pedal end-stop.

III - FINAL OPERATION.

❑ Disconnect the battery (see **Battery: Removal - Refitting**) (80A, Battery).

❑ Refit:

- the front left-hand air distribution duct (see **Front air distribution duct: Removal - Refitting**) (61A, Heating system),
- the dashboard lower trim (see **Lower section of dashboard trim: Removal - Refitting**) (57A, Interior equipment),
- the centre front panel (see **Centre front panel: Removal - Refitting**) (57A, Interior equipment).

❑ Connect the battery (see **Battery : Removal - Refitting**) (80A, Battery).

❑ Check that the steering wheel is straight.

❑ Adjust, if necessary, the geometry of the front axle (see **30A**, **General information**, **Front axle: Adjustment values**, page **30A-14**) .

❑ Perform steering wheel angle sensor programming (see **Fault finding - Configurations and programming**) (36B, Power-assisted steering).

Essential equipment
diagnostic tool

Tightening torques ▽	
steering wheel mounting bolt	**44 Nm**

IMPORTANT

It is essential to lock the airbag computer using the **diagnostic tool** before starting the removal. When this function is activated, all the trigger lines are inhibited and the airbag warning light on the instrument panel is continuously lit (with the ignition on). Locking the airbag computer also unlocks the electric steering column lock.

IMPORTANT

It is not permitted to handle the pyrotechnic systems (airbags and pretensioners) near a source of heat or flame since there is a risk of these being triggered.

REMOVAL

❑ Lock the airbag computer (see **Fault finding - Replacement of components**) (MR 372, 88C, Airbag and pretensioners).

❑ Disconnect the battery (see **Battery: Removal - Refitting**) (MR 370, 80A, Battery).

❑ Remove the driver's front airbag (see **Driver's front airbag: Removal - Refitting**) (MR 370, 88C, Airbags and seat belt pretensioners).

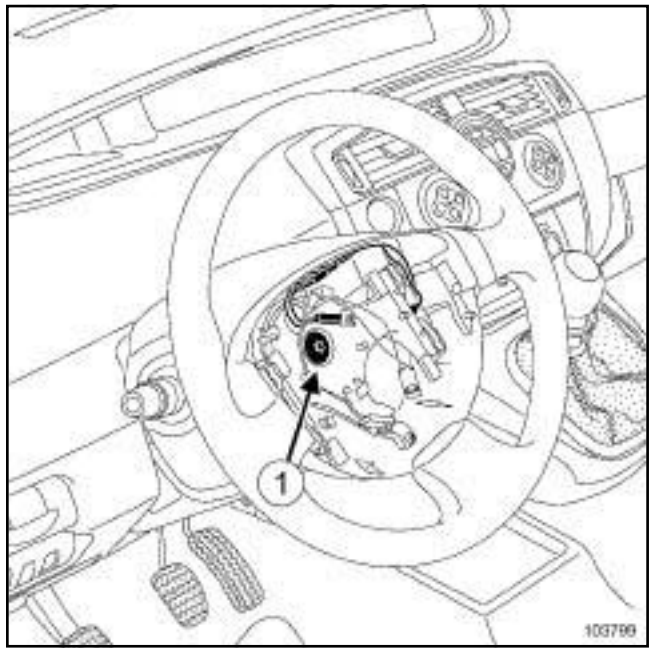

103799

❑ Set the wheels straight ahead.

❑ Disconnect the connectors (depending on equipment level).

❑ Remove the steering wheel mounting bolt (**1**) .

❑ Remove the steering wheel carefully to avoid disconnecting the rotary switch connectors.

REFITTING

❑ The steering wheel bolt must be replaced each time it is removed.

❑ Proceed in the reverse order to removal.

WARNING

- Push and pull on the electric power-assisted steering computer power and signal connectors to check that they are properly secured (risk of loss of assistance).
- The column switch should enter the splines freely (the splines have location notches).
- Do not damage the spline location notches.

❑ Torque tighten the **steering wheel mounting bolt (44 Nm)**.

❑ Refit the driver's front airbag (see **Driver's front airbag: Removal - Refitting**) (MR 370, 88C, Airbags and seat belt pretensioners).

❑ Connect the battery (see **Battery : Removal - Refitting**) (MR 370, 80A, Battery).

- If all is correct, unlock the airbag computer (see **Fault finding - Replacement of components**) (MR 366, 88C, Airbags and seat belt pretensioners).

Master cylinder: Removal - Refitting

F4R or F9Q or K4J or K4M or K9K or M9R

Tightening torques ▽	
master cylinder reservoir mounting bolt	**8.5 Nm**
master cylinder mounting nuts	**50 Nm**
brake pipe nuts	**17 Nm**

WARNING

Prepare for brake fluid outflow, to prevent damage to the mechanical parts and bodywork around the braking system.

REMOVAL

❑ Position the vehicle on a two-post lift (see **Vehicle: Towing and lifting**) (MR 370, 02A, Lifting equipment).

❑ Disconnect the battery (see **Battery: Removal - Refitting**) (MR 370, 80A, Battery).

❑ Remove:

- the wiper arms,
- the scuttle panel grille (see **Scuttle panel grille: Removal - Refitting**) (MR 371, 55A, Exterior protection).

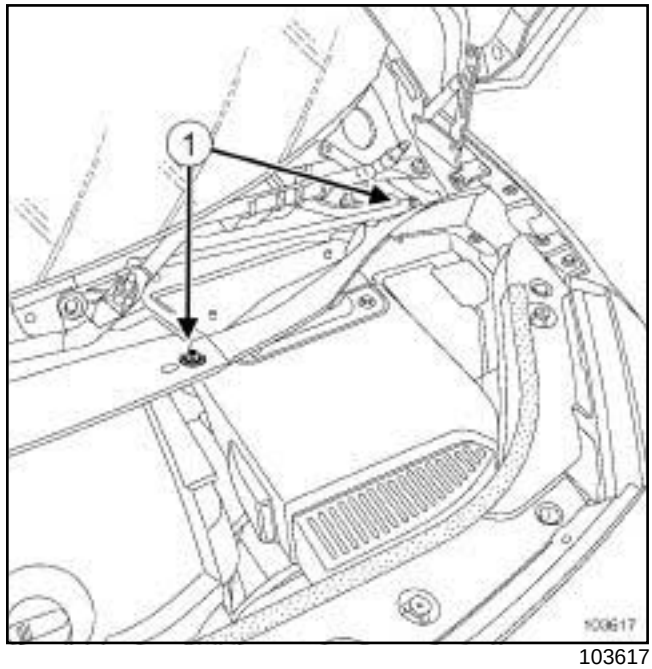

103617

❑ Remove:

- the air filter access panel mounting bolts (**1**) ,
- the air filter access panel,
- the battery (see **Battery: Removal - Refitting**) (MR 370, 80A, Battery),
- the battery tray (see **Battery tray: Removal - Refitting**)

F4R or F9Q or K4J or K4M or K9K or M9R

F9Q or M9R

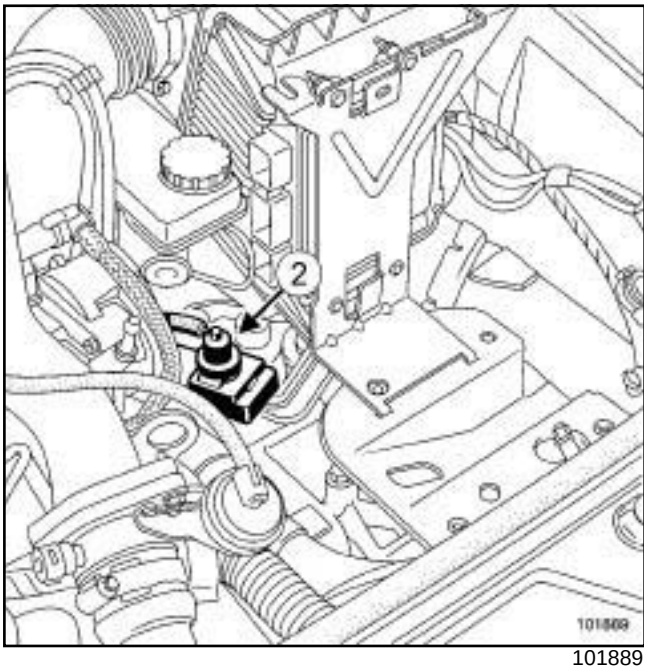

101889

❑ Remove the turbocharger regulation solenoid valve (**2**) .

F4R or K4M

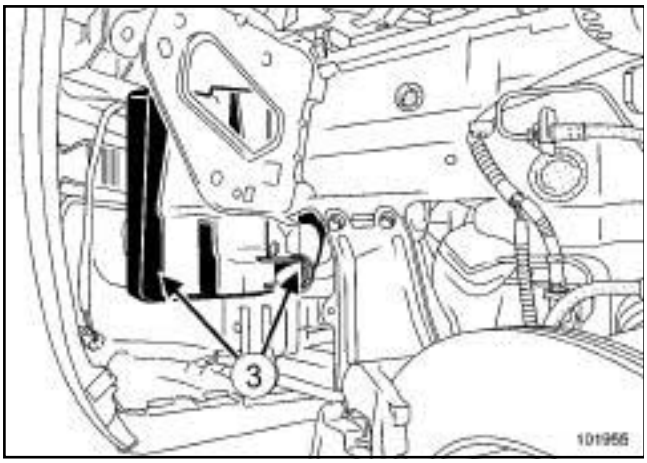

101955

❑ Remove:

- the front left-hand wheel (see **35A**, **Wheels and tyres**, **Wheel: Removal - Refitting**, page **35A-1**) ,
- the wheel arch liner,
- both air resonators (**3**) .

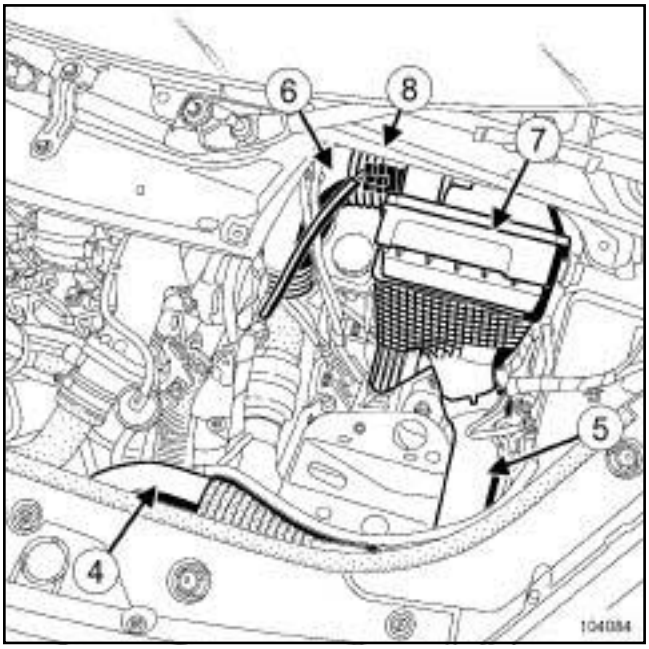

104084

❑ Remove:

- the air inlet sleeve (**4**) ,
- the inlet trunking (**5**) ,
- the inlet trunking downstream of the air unit (**6**) ,
- the air unit (**7**) (see **Air filter unit: Removal - Refitting**) (particularly for M9R)).

F9Q or M9R

❑ Disconnect the air flowmeter connector ***(8)*** .

F4R or F9Q or K4J or K4M or K9K or M9R

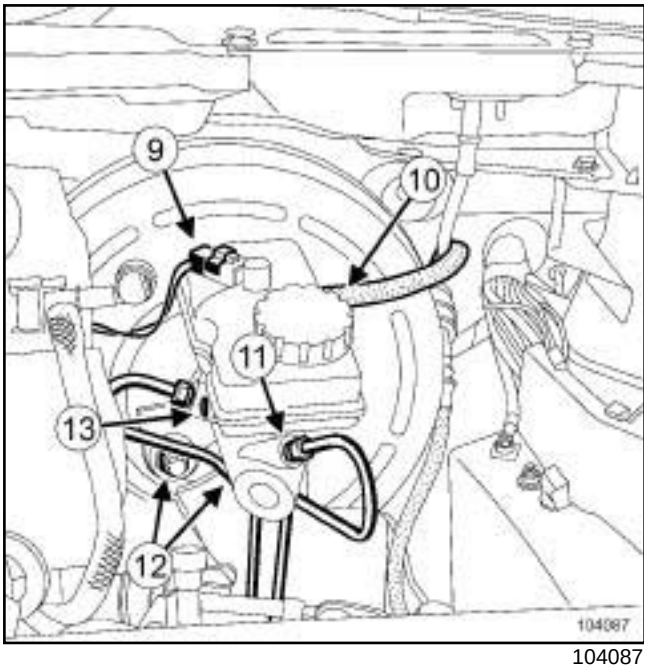

104087

- ❑ Disconnect the electrical connector (**9**) on the master cylinder reservoir.
- ❑ Drain the master cylinder reservoir with a syringe.
- ❑ Remove:
  - the clutch master cylinder pipe (**10**) ,
  - the brake pipes (**11**) on the master cylinder,
  - the master cylinder mounting nuts (**12**) on the brake servo,
  - the « master cylinder/master cylinder reservoir» assembly,
  - the master cylinder reservoir mounting bolt (**13**) on the master cylinder,
  - the master cylinder reservoir.

REFITTING

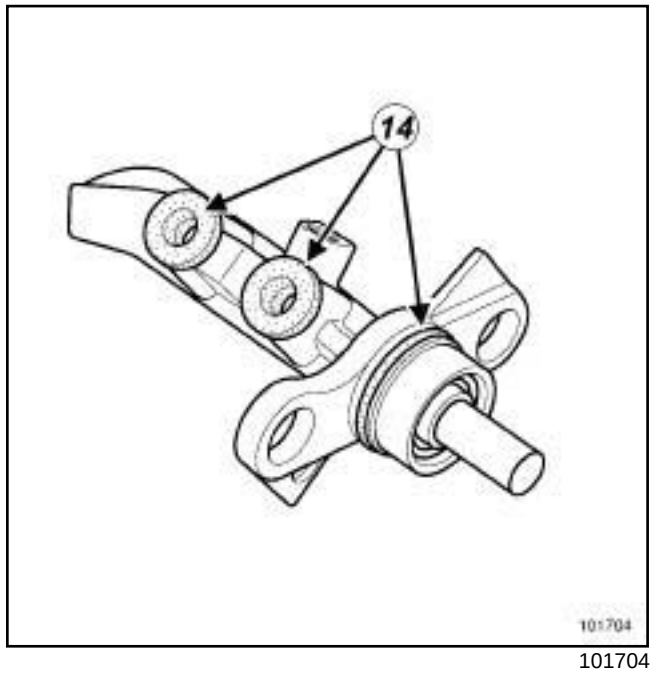

101704

- ❑

> **WARNING**
> The master cylinder seals (**14**) must be replaced.

- ❑ Clip the master cylinder reservoir onto the master cylinder correctly.
- ❑ Refit the master cylinder reservoir mounting bolt on the master cylinder.
- ❑ Torque tighten the **master cylinder reservoir mounting bolt (8.5 Nm)**.

F4R or F9Q or K4J or K4M or K9K or M9R

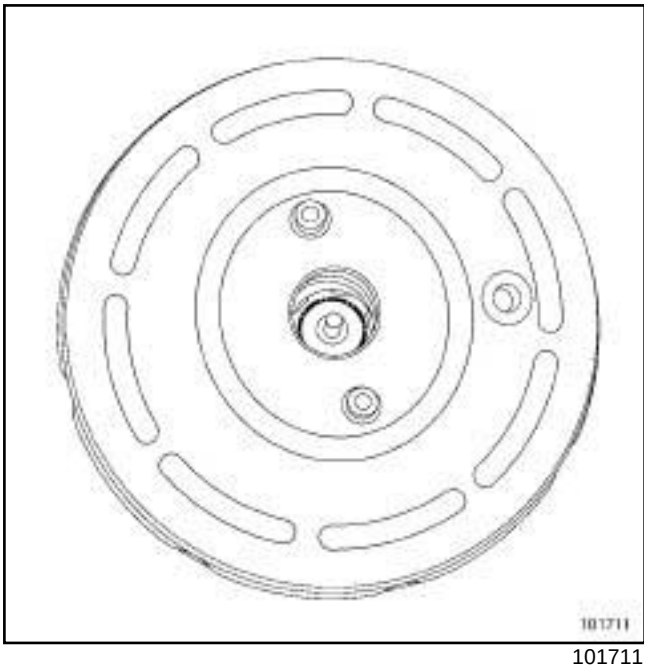

101711

- Line up the master cylinder with the brake servo so that the pushrod goes into the master cylinder housing.

> **WARNING**
> When refitting the master cylinder, be sure that the cup is centred in the brake servo.

- Refit the nuts securing the master cylinder to the brake servo.
- Torque tighten the **master cylinder mounting nuts (50 Nm)** on the servo.
- Proceed in the reverse order to removal.
- Torque tighten the **brake pipe nuts (17 Nm)** on the master cylinder.
- Bleed the brake circuit (see **30A**, **General information**, **Brake circuit Bleeding**, page **30A-2**) .
- Connect the battery (see **Battery : Removal - Refitting**) (MR 370, 80A, Battery).

F4R or F9Q or K4J or K4M or K9K or M9R

Tightening torques ▽	
servo mounting nuts	**21 Nm**
brake servo mounting bolts	**21 Nm**
gear lever sheath mounting bolts	**21 Nm**

This procedure is for the TRW brake servo.

WARNING

Prepare for brake fluid outflow, to prevent damage to the mechanical parts and bodywork around the braking system.

REMOVAL

❑ Position the vehicle on a two-post lift (see **Vehicle: Towing and lifting**) (MR 370, 02, Lifting equipment).

❑ Remove:

- the engine cover,
- the scuttle panel grille (see **Scuttle panel grille: Removal - Refitting**) (MR 371, 56A, Exterior equipment),
- the battery (see **Battery: Removal - Refitting**) (MR 370, 80A, Battery),
- the air filter unit and the injection computer (see **Air filter unit: Removal - Refitting**) (MR 370, 12A, Fuel mixture).

M9R

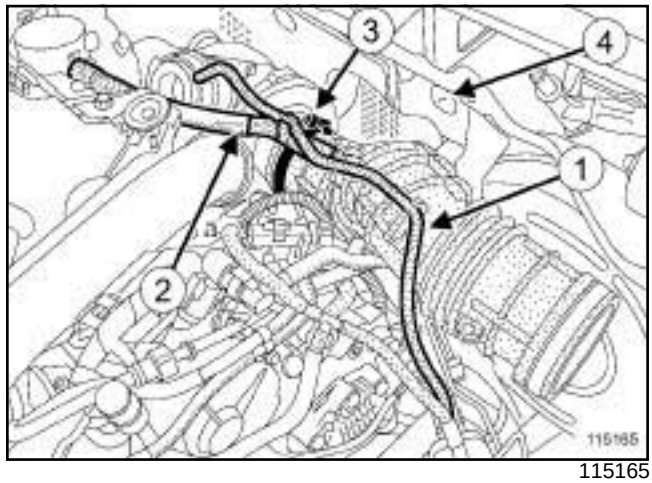

115165

❑ Unclip the vacuum pipe (**1**) from the air inlet duct.

❑ Disconnect the oil vapour rebreathing pipe (**2**) .

❑ Undo the clip (**3**) securing the air inlet duct on the turbocharger.

❑ Remove:

- the air inlet duct,
- the clip (**4**) .

❑ Remove the master cylinder (see **37A**, **Mechanical component controls**, **Master cylinder: Removal - Refitting**, page **37A-1**) .

F4R or F9Q or K4J or K4M or K9K or M9R

F4R or F9Q

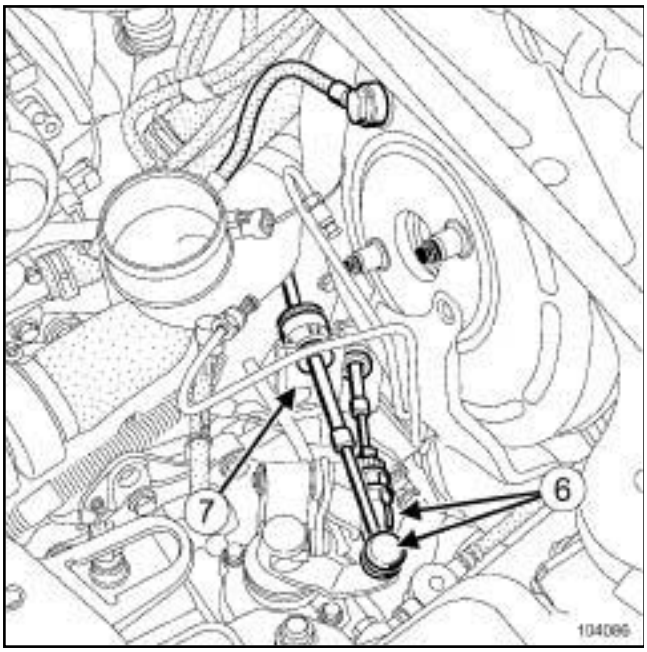

104086

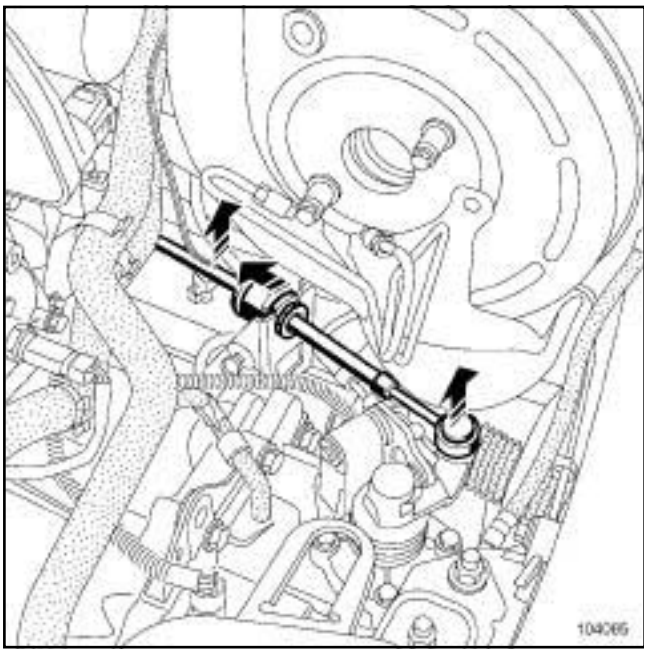

104085

❑

WARNING
Do not touch the gearbox control rack.

❑ Remove:

- the gearbox control ball joints (**6**) ,
- the control cables from the sheath stops
- the sheath stop support mounting bolts,
- the sleeve stop support (**7**) .

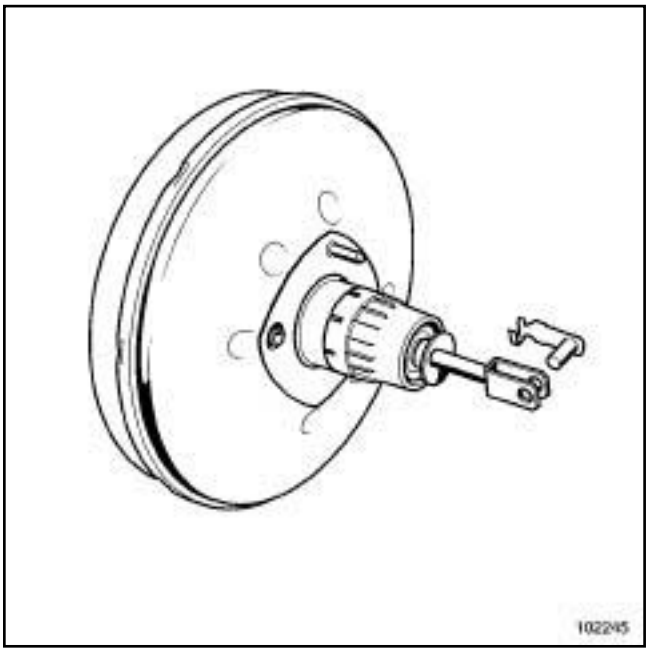

102245

❑ On the passenger compartment side, remove the shaft connecting the brake servo pushrod and the brake pedal, after removing the circlip from the end of the connecting shaft.

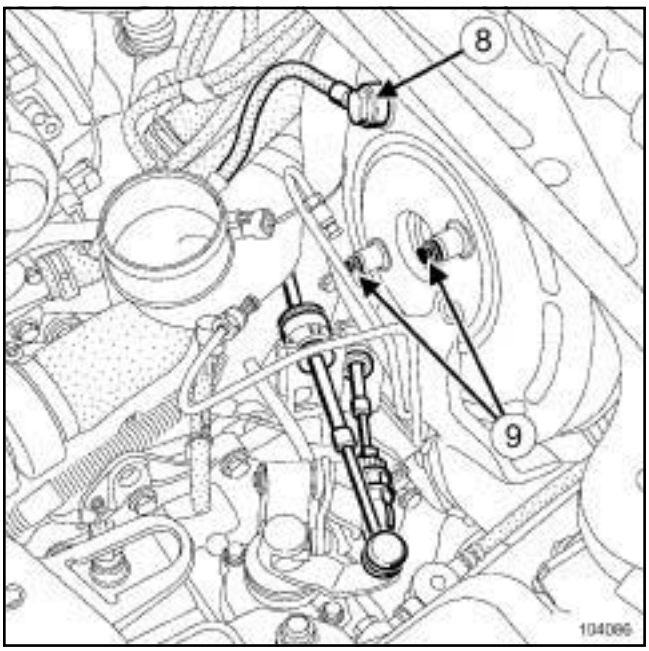

104086

❑ Remove:

- the brake servo valve (**8**) ,
- the brake servo mounting bolts (**9**) , on the engine compartment side.

F4R or F9Q or K4J or K4M or K9K or M9R

F4R or F9Q or K4J or K4M or K9K

❏ Removing the servo.

M9R

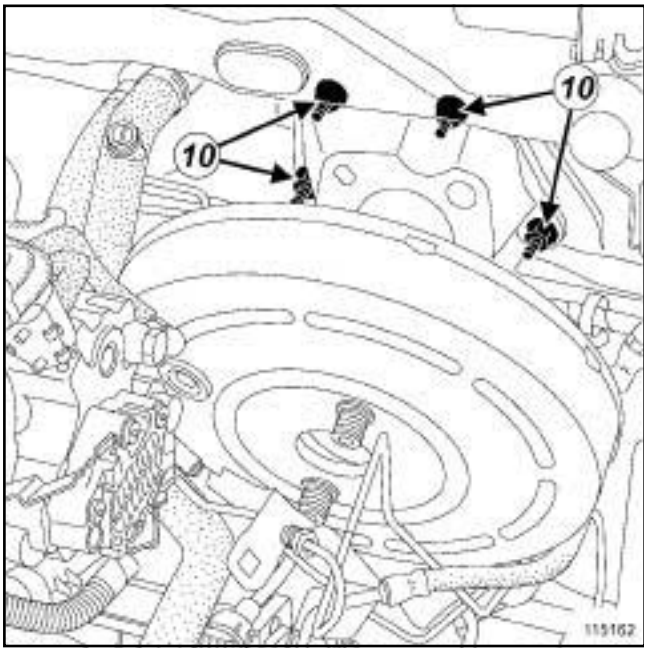

115162

❏ Move the servo forwards.

❏ Remove the nuts (**10**) from the servo support.

M9R

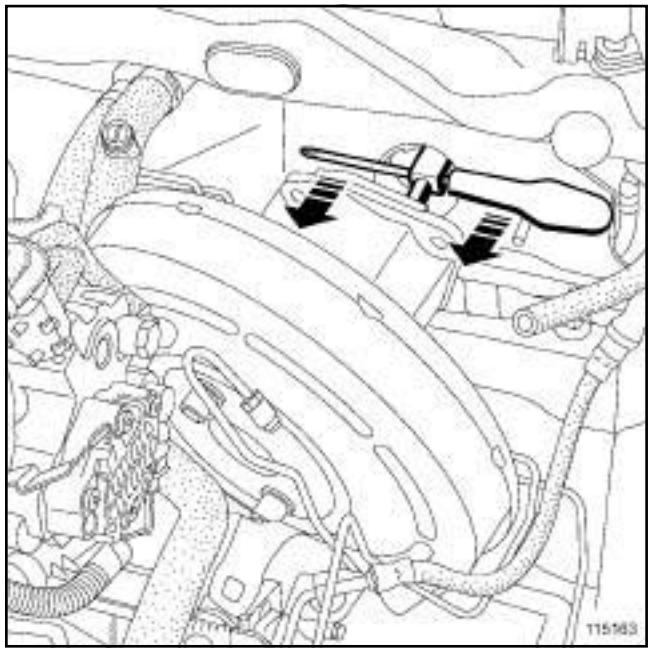

115163

❏ Position the servo support on the servo.

❏ Compress the servo pushrod using a screwdriver in order to remove the pushrod from its opening.

❏ Remove:

- the servo with its support,
- the servo support.

F4R or F9Q or K4J or K4M or K9K or M9R

REFITTING

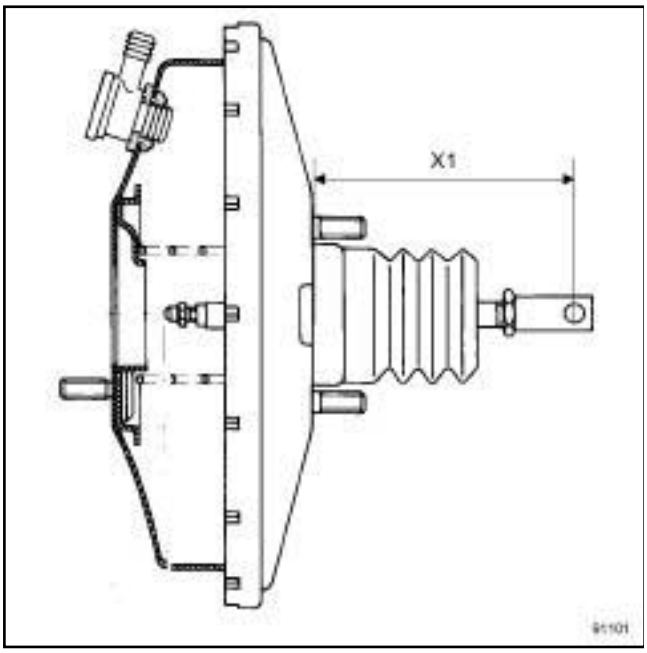

91101

- Check the following dimensions before refitting:
  - for left-hand drive vehicles: (**X1**) = **163.7 mm**,
  - for right-hand drive vehicles: (**X1**) = **133.2 mm**.
- Proceed in the reverse order to removal.

> **IMPORTANT**
> Check that the connecting shaft between the brake servo pushrod and the brake pedal is locked in place.

- Torque tighten:
  - the **servo mounting nuts (21 Nm)**,
  - the **brake servo mounting bolts (21 Nm)**,
  - the **gear lever sheath mounting bolts (21 Nm)**.
- Refit:
  - the master cylinder (see **37A**, **Mechanical component controls**, **Master cylinder: Removal - Refitting**, page **37A-1**) ,
  - the air filter unit and the injection computer (see **Air filter unit: Removal - Refitting**) (MR 370, 12A, Fuel mixture),
  - the battery (see **80A, Battery, Battery: Removal - Refitting**),
  - the scuttle panel grille (see **Scuttle panel grille: Removal - Refitting**) (MR 371, 56A, Exterior equipment),
  - the engine cover.
- Bleed the brake circuit (see **30A**, **General information**, **Brake circuit Bleeding**, page **30A-2**) .
- Connect the battery (see **Battery : Removal - Refitting**) (MR 370, 80A, Battery).
- Adjust the brake pedal position switch (see **37A**, **Mechanical component controls**, **Brake pedal switch: Removal - Refitting**, page **37A-31**) .

M9R, and LEFT-HAND DRIVE

REMOVAL

❑ Remove:

- the wiper arms,
- the scuttle panel grille (see **Scuttle panel grille: Removal - Refitting**) (MR 371, 55A, Exterior protection).

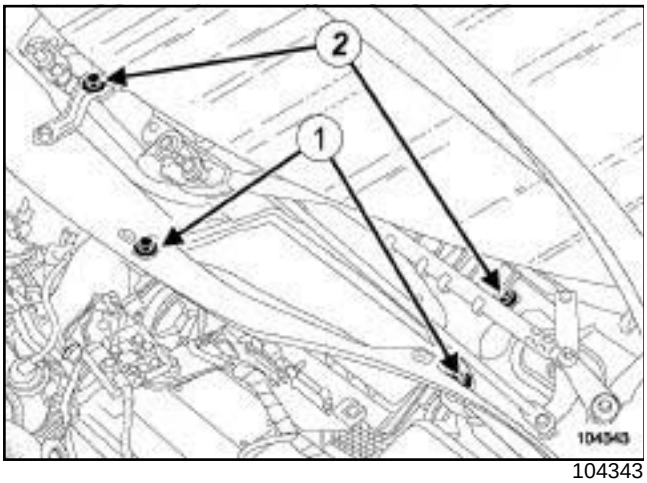

104343

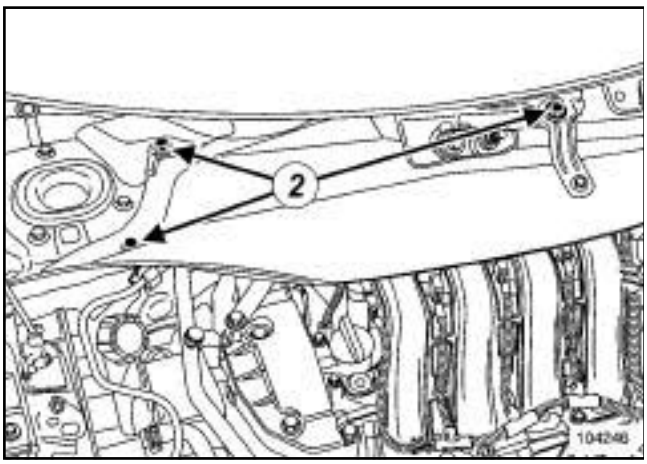

104246

❑ Remove:

- the air filter access panel mounting bolts (**1**) ,
- the air filter access panel,
- the scuttle panel partition mounting bolts (**2**) ,
- the scuttle panel partition.

❑ Remove the front engine cover.

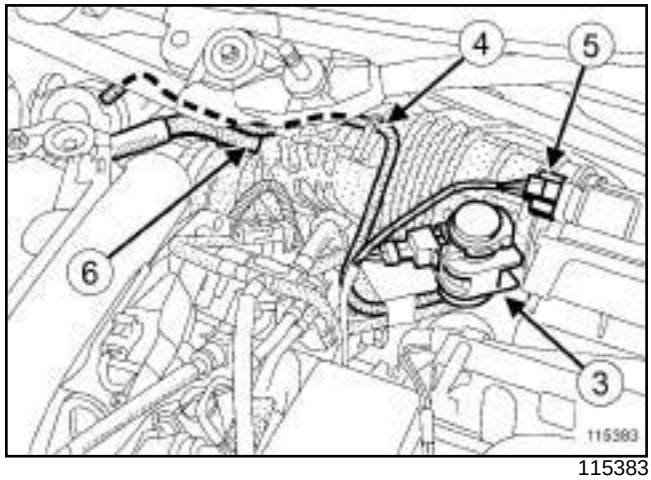

115383

❑ Unclip:

- the turbocharger regulation solenoid valve (**3**) ,
- the vacuum pipe (**4**) from the air inlet duct.

❑ Disconnect:

- the air flow sensor connector (**5**) ,
- the oil vapour rebreathing pipe (**6**) .

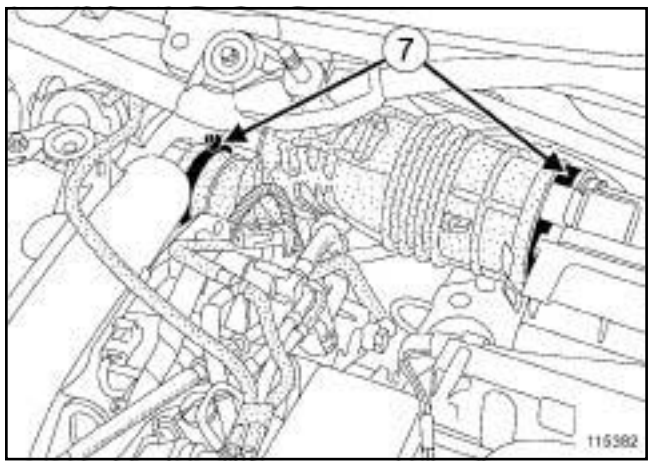

115382

❑ Undo the retaining clips (**7**) on the air inlet duct.

❑ Remove the air inlet duct.

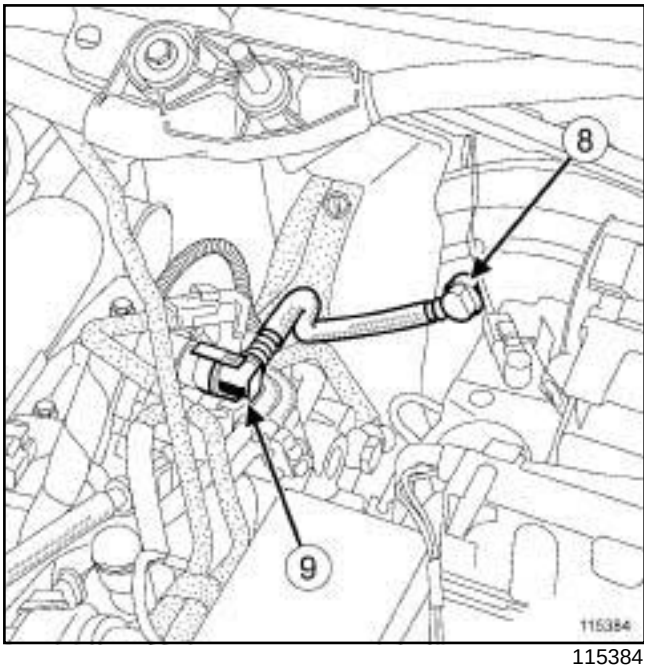

115384

- ❑ Disconnect the non-return valve (**8**) at the brake servo.
- ❑ Pull and turn the non-return valve to release it from the rubber sealing washer.
- ❑ Disconnect the non-return valve (**9**) at the vacuum pump.
- ❑ Remove the non-return valve.

REFITTING

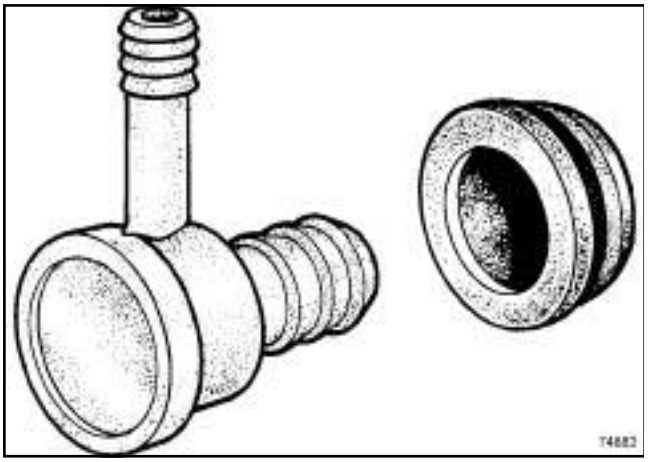

74883

- ❑ Check the condition of the sealing washer and the non-return valve.
- ❑ Replace any faulty parts.
- ❑ Proceed in the reverse order to removal.

F4R or K4J or K4M

REMOVAL

❏ Remove the engine covers.

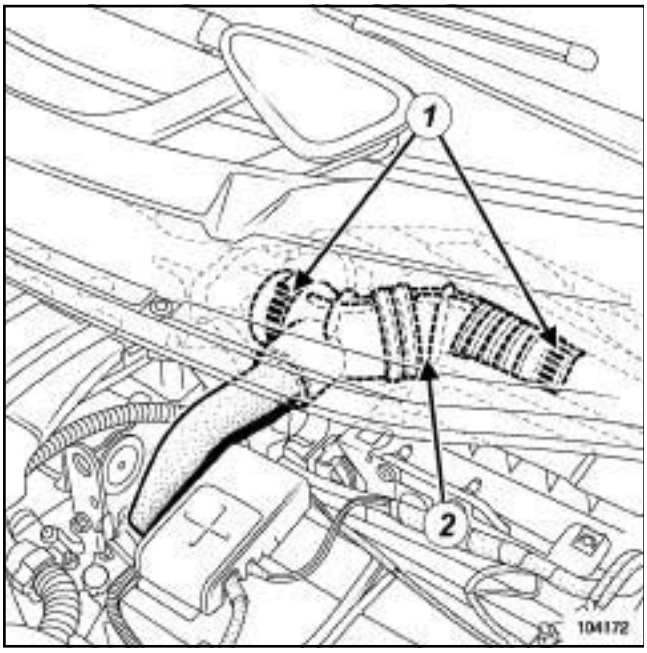

104172

❏ Undo the air duct clips (**1**) .

❏ Remove the air duct (**2**) .

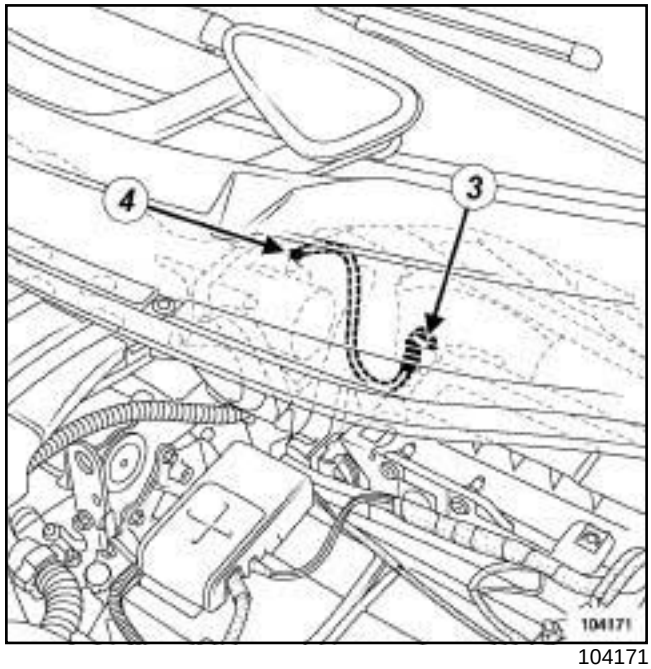

104171

❏ Disconnect the vacuum pipe on the brake servo side (**3**) on the brake servo.

❏ Pull and turn the non-return valve to release it from the rubber sealing washer.

> Note:
>
> Do not damage the vacuum tube on the plenum chamber. If it is damaged, the plenum chamber will have to be replaced.

❏ Disconnect the vacuum pipe on the inlet distributor side (**4**) .

REFITTING

❏ Check the condition of the sealing washer and the non-return valve.

❏ Replace any faulty parts.

❏ To refit, proceed in the reverse order of removal.

F9Q

REMOVAL

❏ Remove the engine covers.

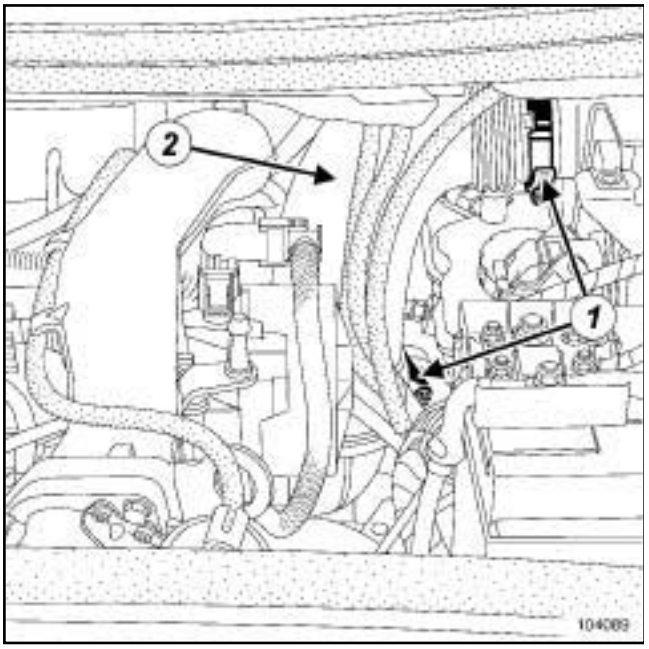

104089

❏ Undo the air duct clips (**1**) .

❏ Remove the air duct (**2**) .

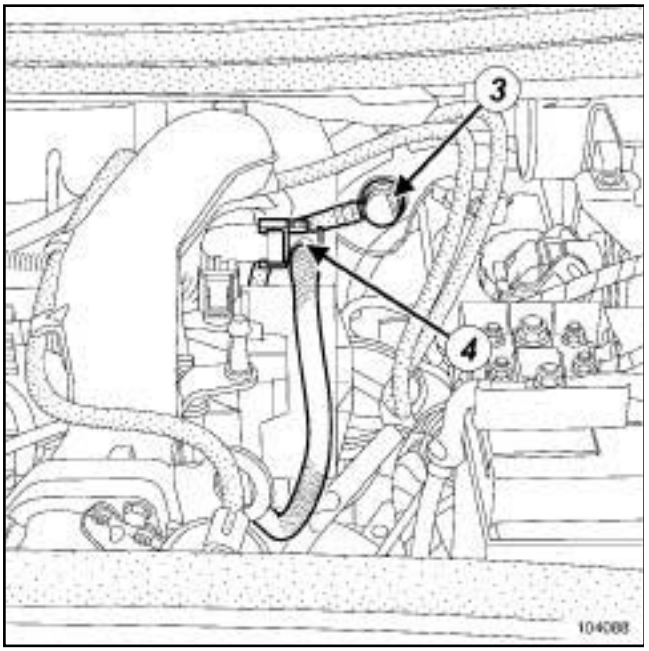

104088

❏ Disconnect the vacuum pipe on the brake servo side (**3**) on the brake servo.

❏ Pull and turn the non-return valve to release it from the rubber sealing washer.

❏ Disconnect the vacuum pipe on the vacuum pump side (**4**) .

REFITTING

❏ Check the condition of the sealing washer and the non-return valve.

❏ Replace any faulty parts.

❏ To refit, proceed in the reverse order of removal.

K9K

REMOVAL

❑ Remove the engine covers.

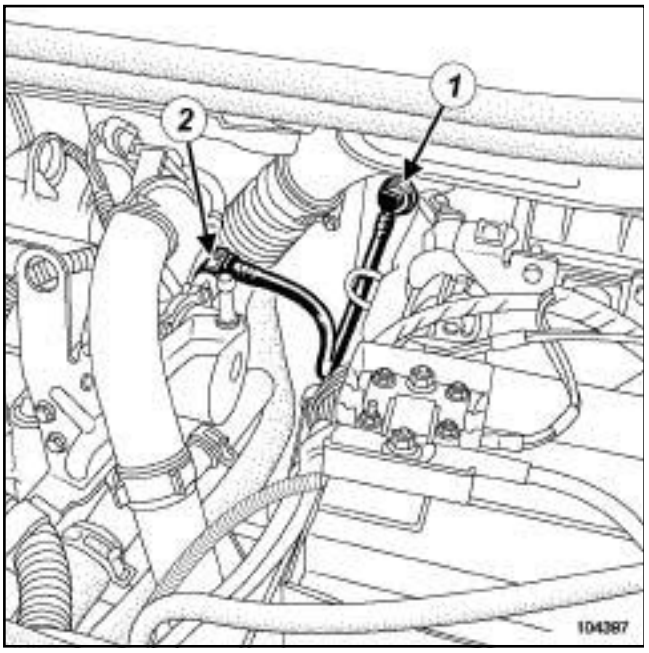

104397

❑ Disconnect the vacuum pipe at the brake servo end (**1**) .

❑ Pull and turn the non-return valve to release it from the rubber sealing washer.

❑ Disconnect the vacuum pipe at the vacuum pump end (**2**) .

REFITTING

❑ Check the condition of the sealing washer and the non-return valve.

❑ Replace any faulty parts.

❑ To refit, proceed in the reverse order of removal.

K9K

Tightening torques ▽	
vacuum pump mounting bolts	**2.1 daNm**

REMOVAL

❑ Remove the engine covers.

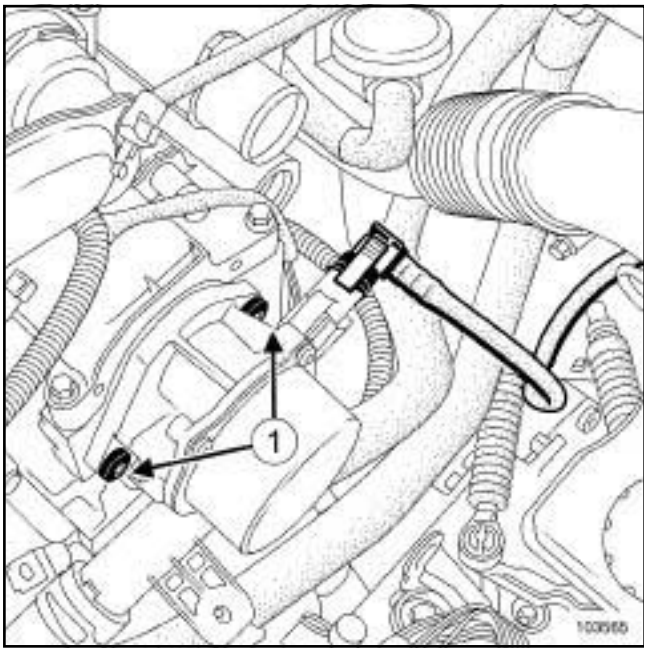

103565

❑ Remove:

- the hose connected to the brake servo,
- the vacuum pump mounting bolts (**1**) ,
- the vacuum pump.

REFITTING

❑ To refit, proceed in the reverse order of removal.

❑ Torque tighten the **vacuum pump mounting bolts (2.1 daNm)**.

F9Q

Tightening torques ▽	
vacuum pump mounting bolts	**2.1 daNm**
inlet duct mounting bolts	**0.8 daNm**

REMOVAL

❑ Remove the engine covers.

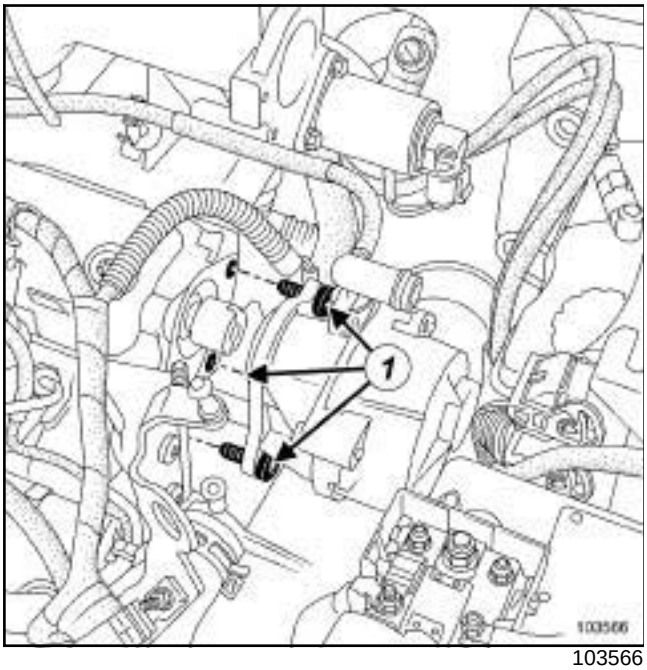

103566

❑ Remove:

- the inlet duct mounting bolts,
- the inlet duct,
- the hose connected to the brake servo,
- the vacuum pump mounting bolts (**1**) ,
- the vacuum pump.

REFITTING

❑ To refit, proceed in the reverse order of removal.

❑ Torque tighten:

- the **vacuum pump mounting bolts (2.1 daNm)**,
- the **inlet duct mounting bolts (0.8 daNm)**.

M9R

Tightening torques ▽	
vacuum pump bolts	**21 Nm**
diesel pipe retaining bracket bolt	**14 Nm**
battery tray bolts	**21 Nm**

REMOVAL

❑ Remove:

- the engine cover,
- the battery (see **Battery: Removal - Refitting**) (MR 364, 80A, Battery).

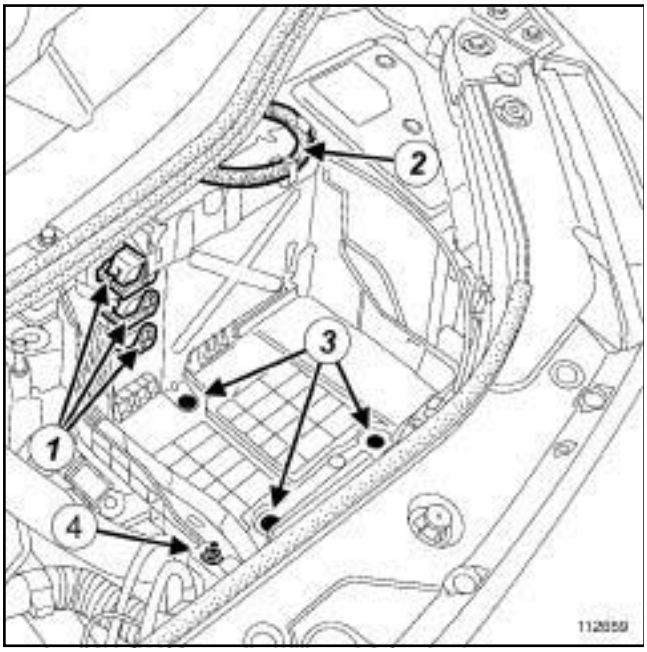

112659

❑ Disconnect:

- the computer connectors (**1**) ,
- the air flowmeter connector.

❑ Unclip:

- the wiring harness (**2**) from the computer connector,
- the wiring harness to the battery negative terminal,
- the air filter unit turbocharger regulation solenoid valve,
- the wiring harness.

❑ Remove:

- the battery tray bolts (**3**) ,
- the nut (**4**) from the wiring harness.

❑ Move the wiring harness to one side.

❑ Remove the battery tray with the injection computer support.

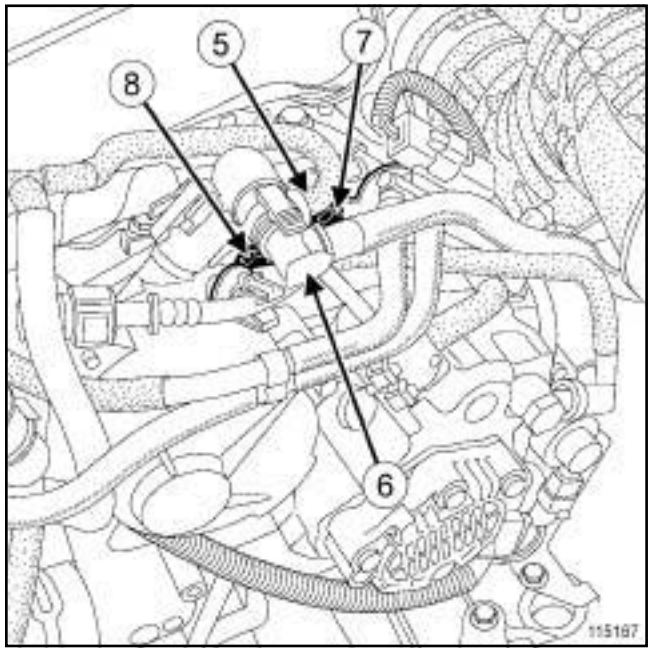

115167

❑ Disconnect:

- the vacuum pipe (**5**) ,
- the non-return valve (**6**) .

❑ Remove:

- the bolt (**7**) from the diesel pipe retaining bracket,
- the diesel pipe retaining bracket,
- the vacuum pump bolt (**8**) .

M9R

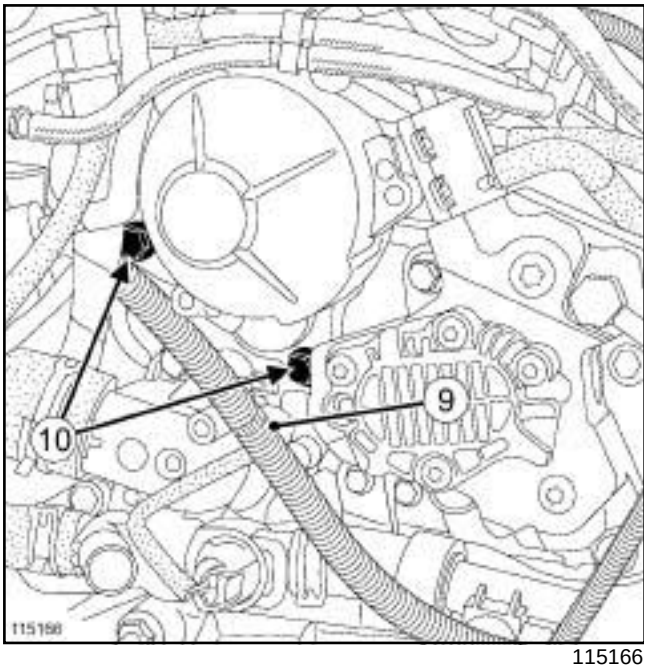

115166

❑ Unclip the harness at (**9**) .

❑ Remove:

- the vacuum pump bolts (**10**) ,
- the vacuum pump.

REFITTING

❑ Be sure to replace the vacuum pump seal.

❑ Proceed in the reverse order to removal.

❑ Torque tighten:

- the **vacuum pump bolts (21 Nm)**,
- the **diesel pipe retaining bracket bolt (14 Nm)**.

❑ Refit the battery tray with the injection computer support.

❑ Fit the wiring harness.

❑ Refit:

- the wiring harness nut,
- the battery tray bolts,

❑ Tighten to torque the **battery tray bolts (21 Nm)**.

❑ Fit the wiring harness.

❑ Refit the turbocharger regulation solenoid valve on the air filter unit.

❑ Fit:

- the wiring harness to the battery negative terminal,
- the wiring harness for the computer connector.

❑ Connect the injection computer connectors.

❑ Refit:

- the battery (see **Battery : Removal - Refitting**) (MR 364, 80A, Battery),
- the engine cover.

Tightening torques ▽	
accelerator pedal nuts	**8 Nm**

REMOVAL

❑ Switch off the vehicle ignition.

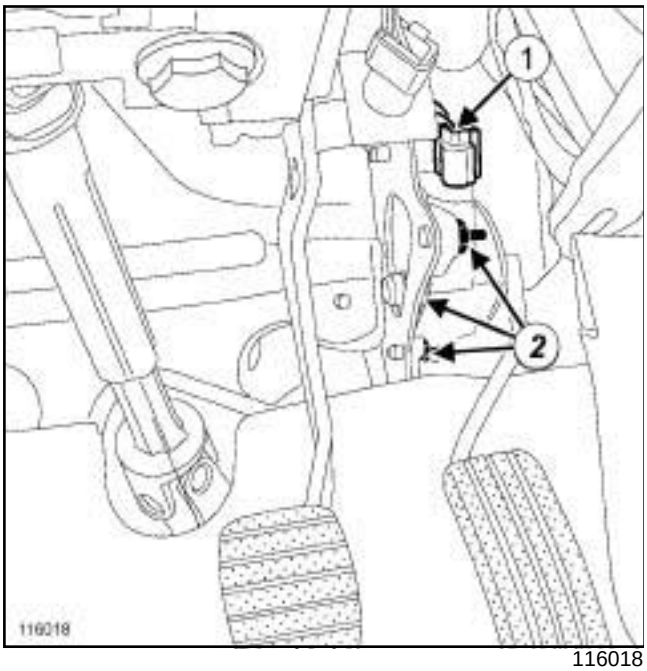

116018

❑ Disconnect the accelerator pedal potentiometer connector (**1**) .

❑ Remove:

- the accelerator pedal nuts (**2**) ,
- the accelerator pedal.

REFITTING

❑ Refit the accelerator pedal.

❑ Torque tighten the **accelerator pedal nuts (8 Nm)**.

❑ Connect the accelerator pedal potentiometer connector.

LEFT-HAND DRIVE

Essential special tooling	
Fre. 1752	Safety pin
Ms. 1373	Tool for removing radio or chronotachograph.
Ms. 1639	CD changer extractor - Alpine and Cabasse.

Tightening torques ▽	
brake pedal yoke mounting nuts	**21 Nm**

WARNING

When the brake pedal is replaced, the pedal is supplied fitted with a pin. **(Fre. 1752)**.

When removing and refitting (without replacing the brake pedal), always fit the pin **(Fre. 1752)** during the removal - refitting procedure.

REMOVAL

❑ Disconnect the battery, starting with the negative terminal.

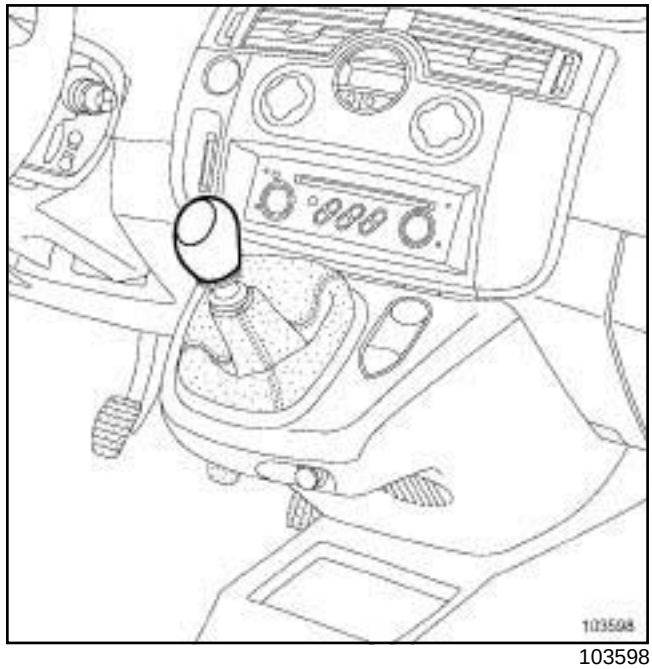

103598

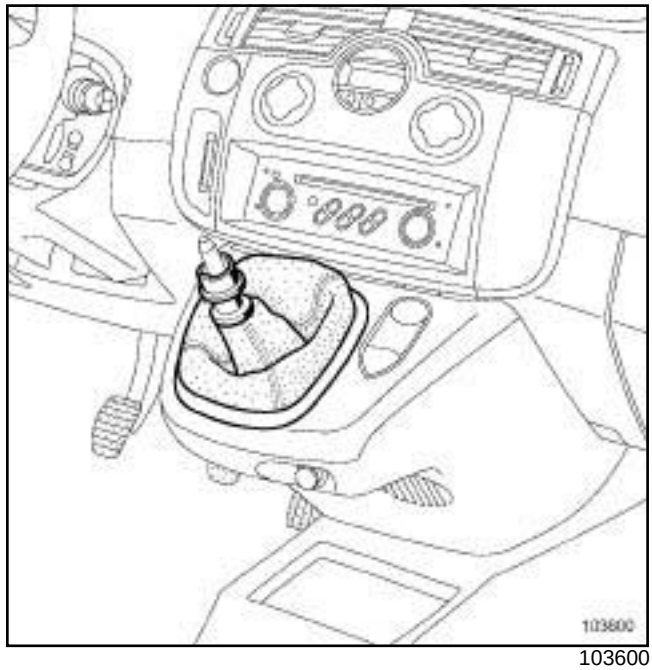

103600

❑ Unclip the « knob - gear lever gaiter » assembly.

LEFT-HAND DRIVE

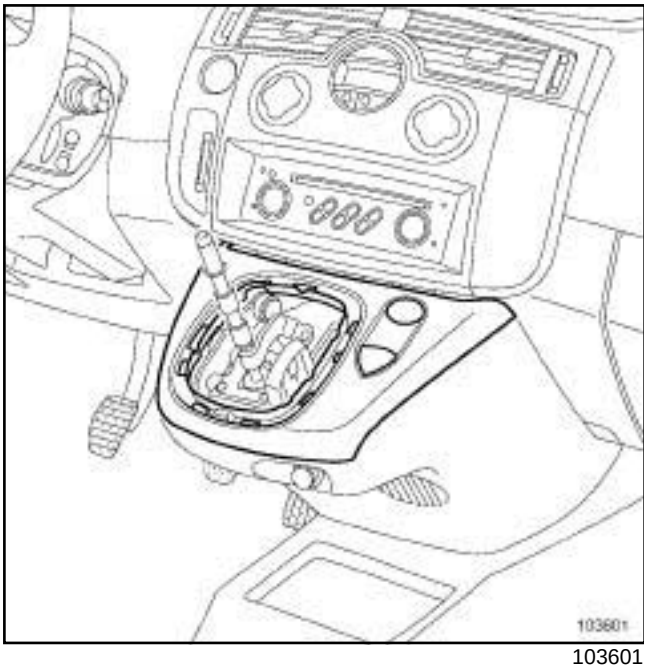

103601

❑ Unclip the upper trim from the gear lever.

❑ Disconnect:

- the hazard warning lights switch connector,
- the cigarette lighter connector,
- the voice synthesiser speaker connector.

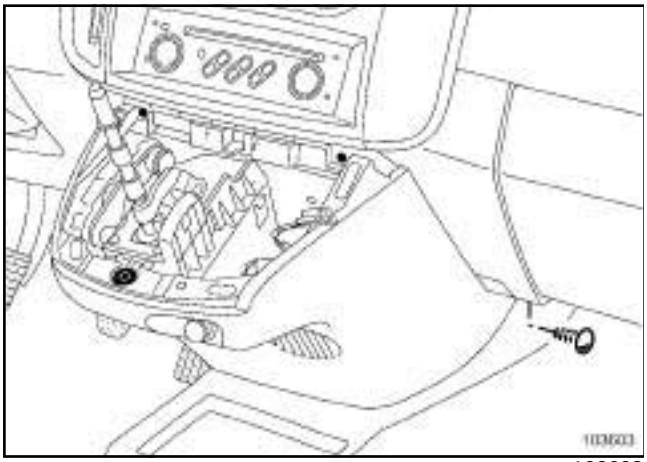

103603

❑ Remove the gear lever lower trim mountings.

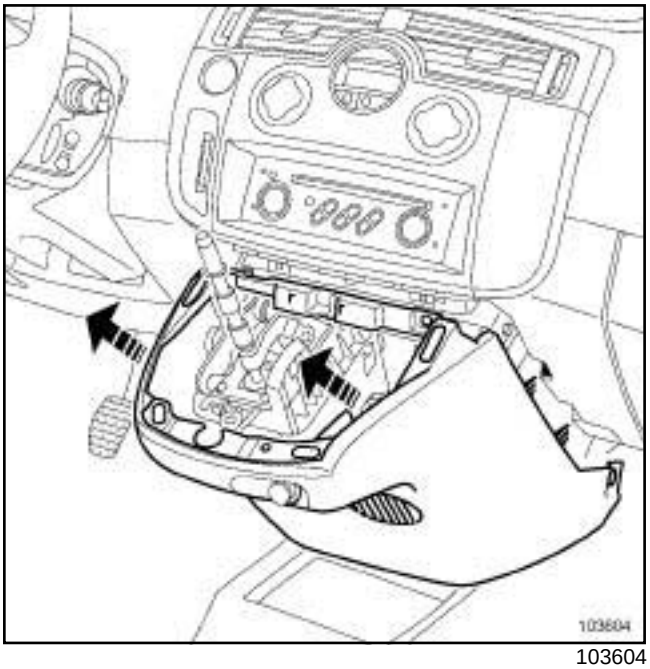

103604

❑ Remove:

- the gear lever lower trim,
- the radio using the **(Ms. 1373)** and the **(Ms. 1639)**,
- the air conditioning control panel fascia.

LEFT-HAND DRIVE

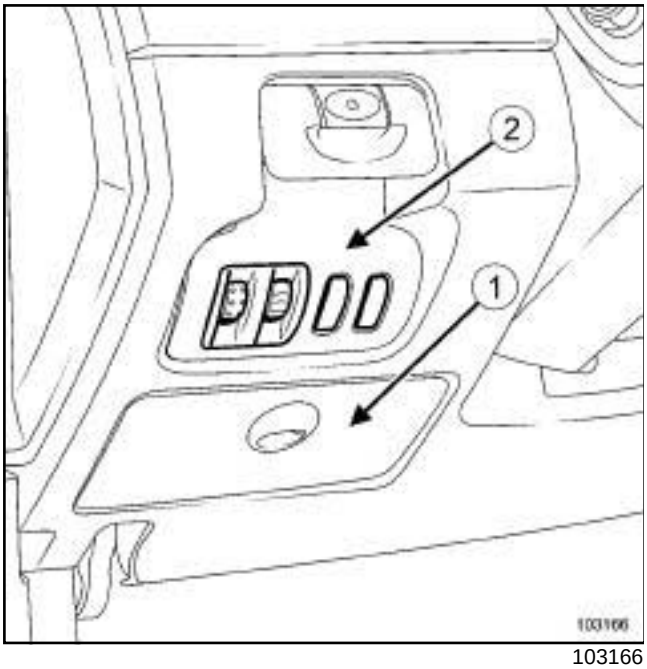

103166

❑ Unclip:

- the glovebox (**1**) ,
- the headlight beam adjustment control (**2**) from the rear (see **80B, Headlights, Headlight beam adjustment and lighting dimmer control**).

❑ Disconnect the remote adjustment control connectors.

AUTOMATIC PARKING BRAKE

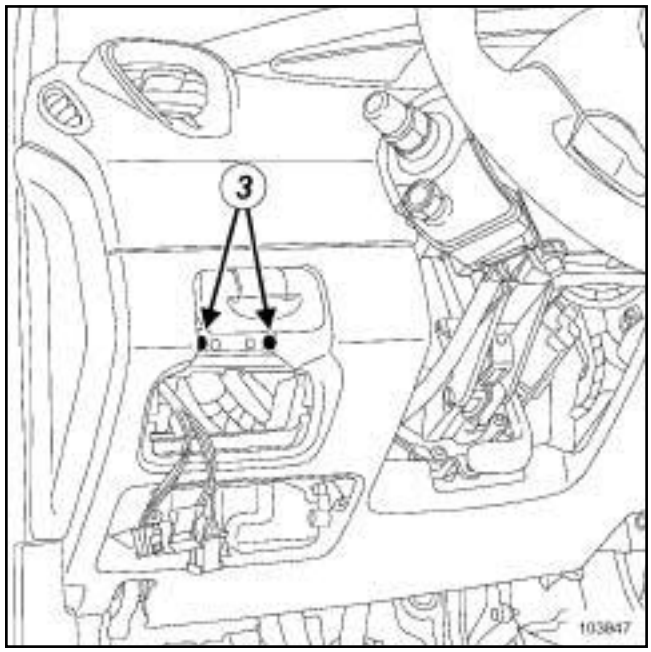

103847

❑ Remove the automatic parking brake control lever mounting bolts (**3**) .

❑ Disconnect the automatic parking brake control lever connector.

❑ Remove the lever.

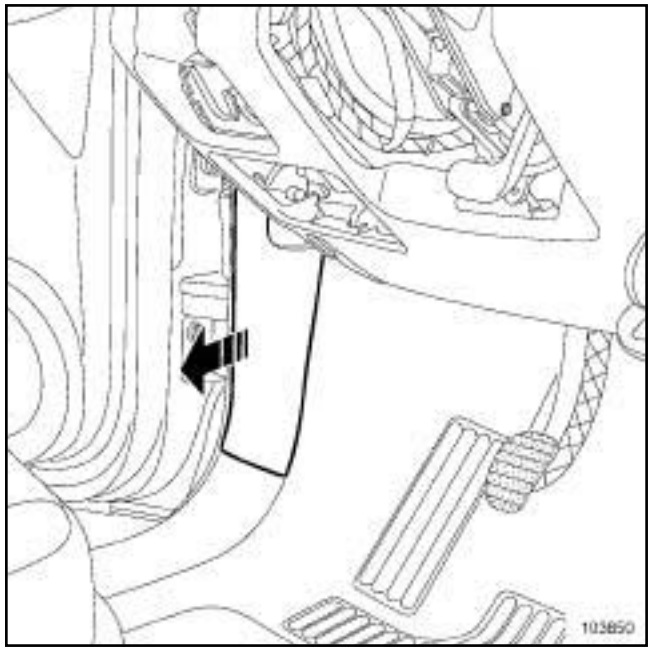

103850

❑ Unclip the front left-hand trim.

LEFT-HAND DRIVE

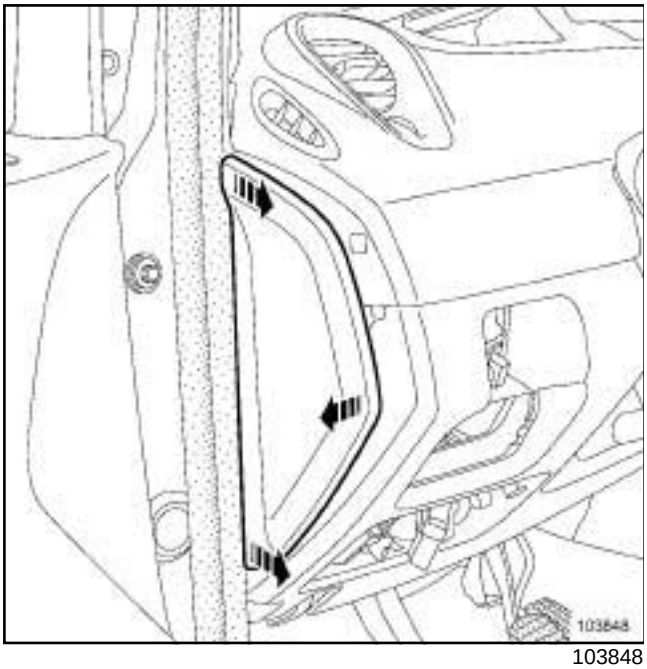

103848

❑ Unclip the front left-hand side panel.

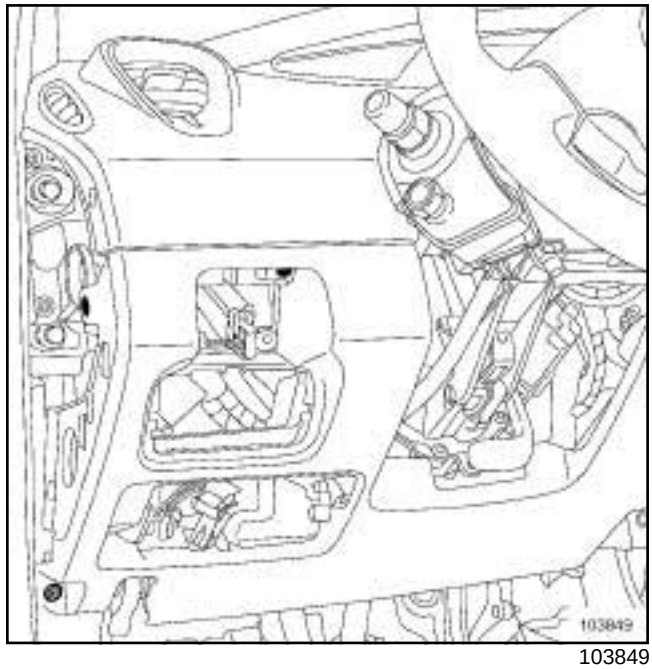

103849

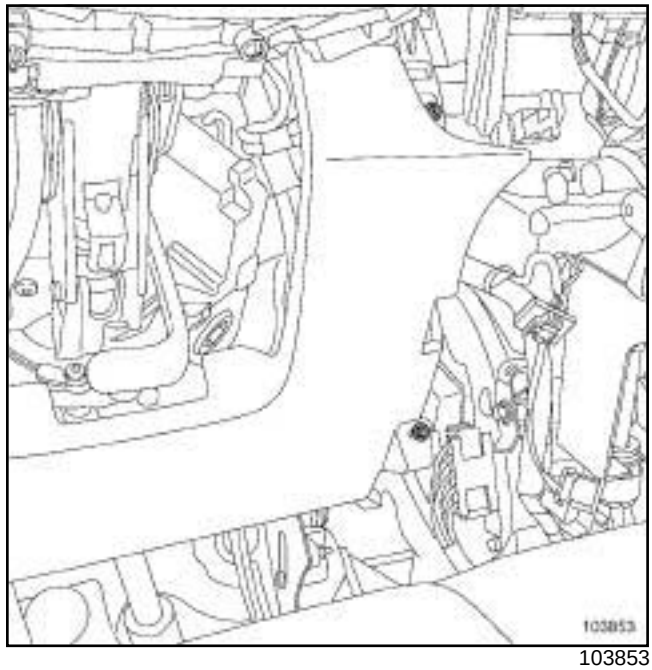

103853

❑ Remove:

- the dashboard lower section mounting bolts,
- the lower section of the dashboard,

LEFT-HAND DRIVE

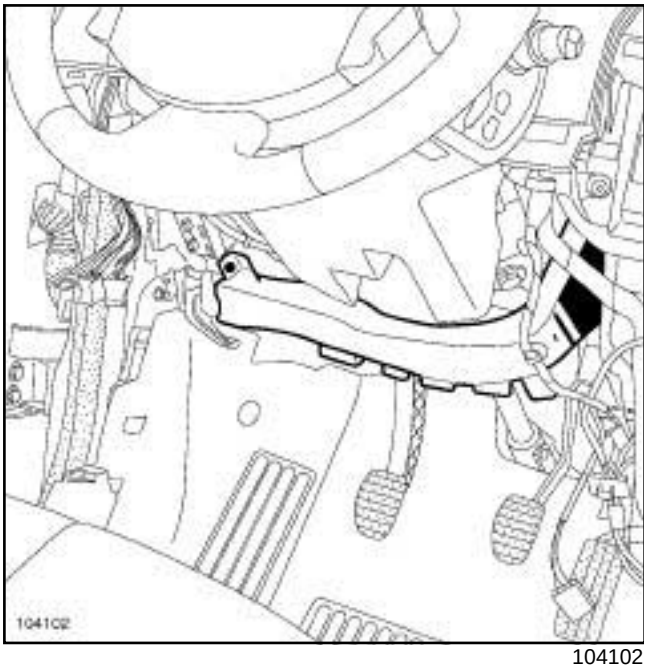

104102

- ❑ Remove:
  - the air duct,
  - the « brake pedal - idler bar » assembly connecting shaft.
- ❑ Disconnect the potentiometer from the accelerator pedal.
- ❑ Disconnect the brake switch.
- ❑ Turn the brake pedal switch one quarter of turn in an anti-clockwise direction.

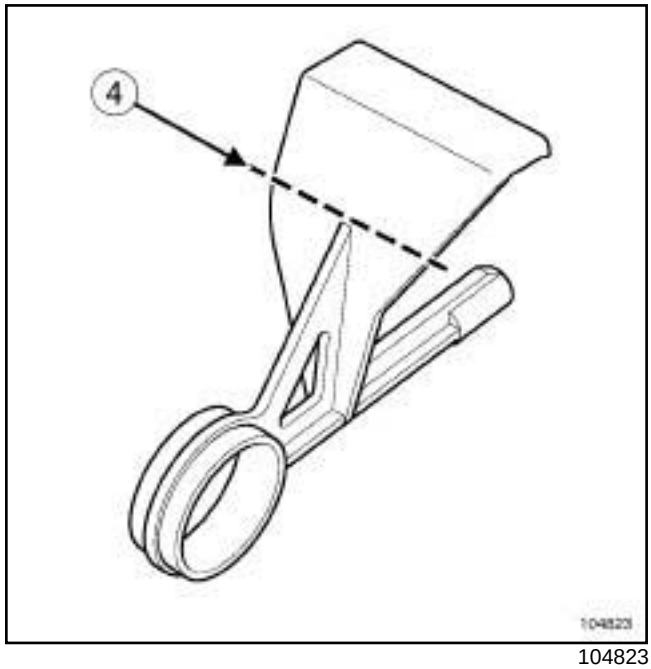

104823

- ❑ Cut pin (**4**) .
- ❑ Insert the pin **(Fre. 1752)** moving from left to right (when not replacing the pedal).

LEFT-HAND DRIVE

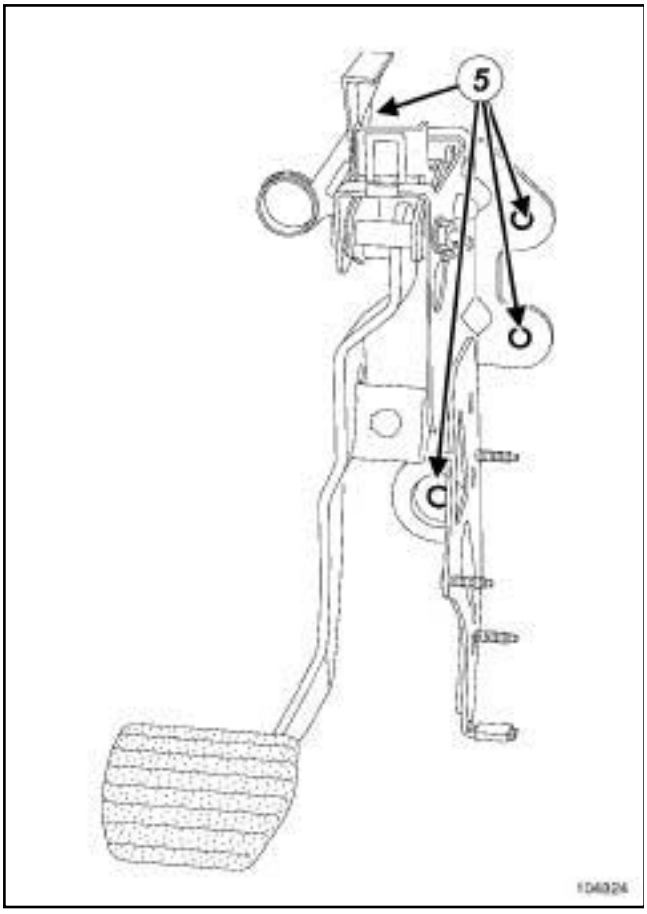

104824

❑ Remove:

- the brake pedal yoke mounting nuts (**5**) ,
- the « brake pedal - accelerator pedal » assembly,
- the accelerator pedal securing nuts,
- the accelerator pedal.

REFITTING

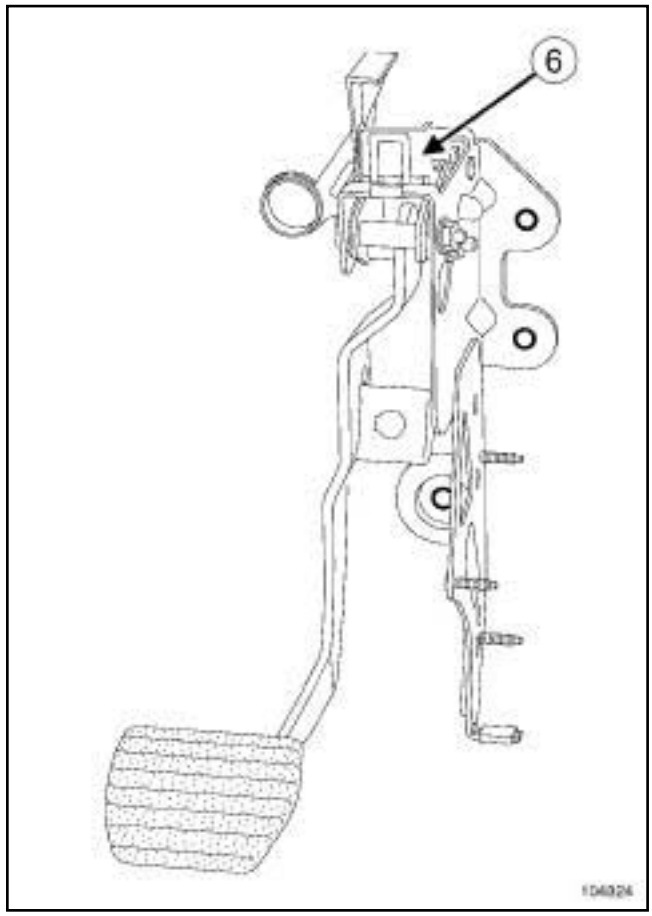

104824

❑

IMPORTANT

The pedal is fitted with an unlocking system in the event an impact. Do not strike the pedal system (**6**) (this could fully depress the pedal inadvertently).

Note:

- Do not remove the pin before refitting and locking the pedal assembly.

LEFT-HAND DRIVE

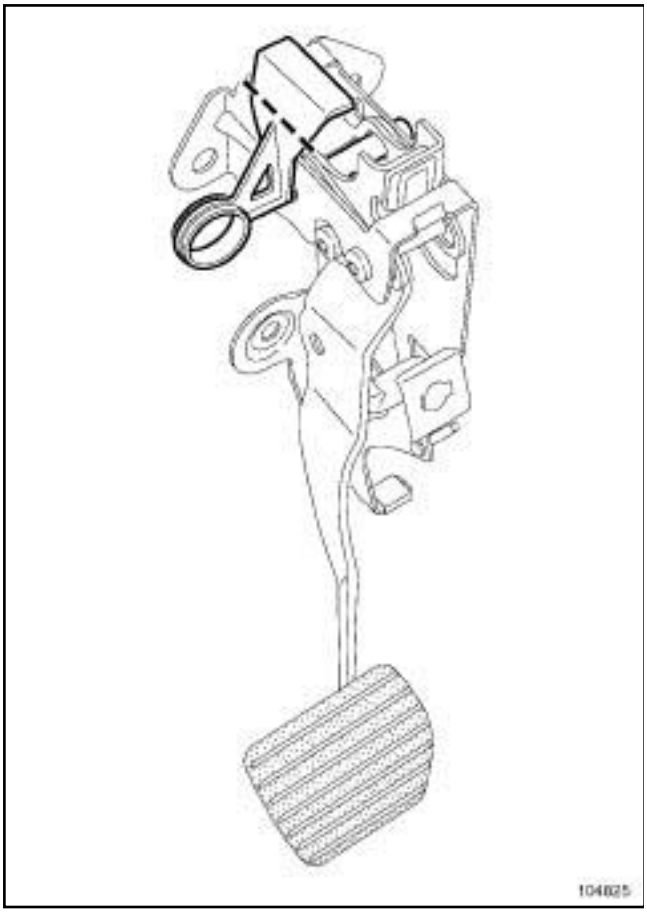

104825

- ❑ Cut the pin along the dotted line.
- ❑ Proceed in the reverse order to removal.
- ❑ Torque tighten the **brake pedal yoke mounting nuts (21 Nm)**.

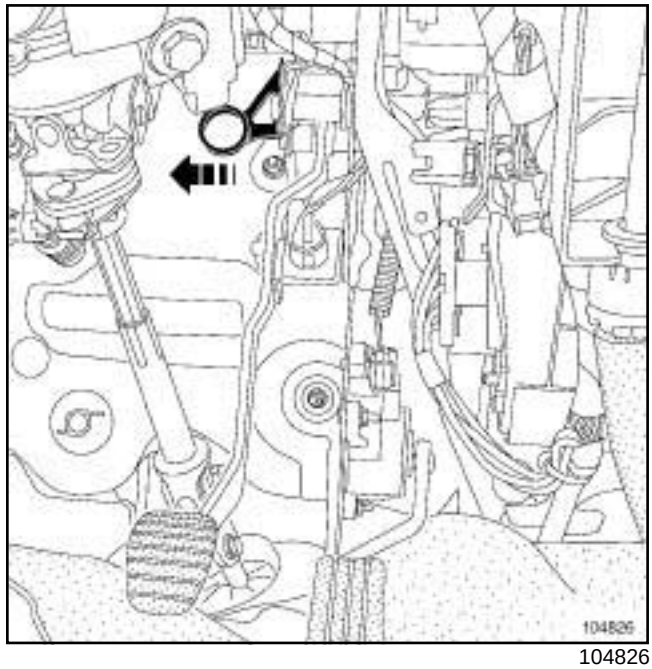

104826

- ❑ Remove the pin from the pedal.

IMPORTANT

Check that the connecting shaft between the brake servo pushrod and the brake pedal is locked in place.

- ❑ Adjust the brake pedal position switch (see **37A, Mechanical component controls, Brake light switch**).
- ❑ Connect the battery, starting with the positive terminal.

WARNING

Carry out the necessary programming (see **80A, Battery: Removal - Refitting**).

RIGHT-HAND DRIVE

Essential special tooling	
Fre. 1752	Safety pin

Essential equipment
diagnostic tool

Tightening torques ▽	
brake pedal yoke mounting nuts	**21 Nm**

IMPORTANT

- Before carrying out any work on a safety system component, lock the airbag computer using **diagnostic tool** (see **88C, Airbags and pretensioners, Airbag computer locking procedure**).
- When this function is activated, all the trigger lines are inhibited and the airbag warning light on the instrument panel is continuously lit (with the ignition on).
- Handling pyrotechnic systems (airbags or pretensioners) near to a source of heat or flame is forbidden: there is a risk of triggering the airbags or pretensioners.

WARNING

When the brake pedal is replaced, the pedal is supplied fitted with a pin. **(Fre. 1752)**.

When removing and refitting (without replacing the brake pedal), always fit the pin **(Fre. 1752)** during removal.

REMOVAL

❑ Disconnect the battery, starting with the negative terminal.

❑ Remove:

- the dashboard (see **83A, Instrument Panel, Dashboard**),
- the steering column (see **36B, Power-assisted steering, Steering column**),
- the dashboard cross member (see **MR 371 Bodywork, 42A, Upper front structure, Dashboard cross member**).

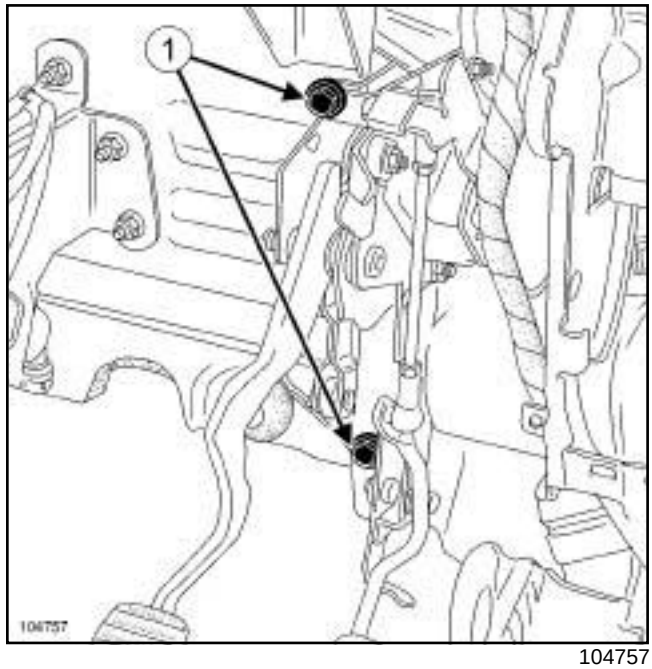

104757

❑ Disconnect the connector from the accelerator pedal position potentiometer.

❑ Remove:

- the mounting bolts (**1**) from the accelerator pedal,
- the accelerator pedal.

RIGHT-HAND DRIVE

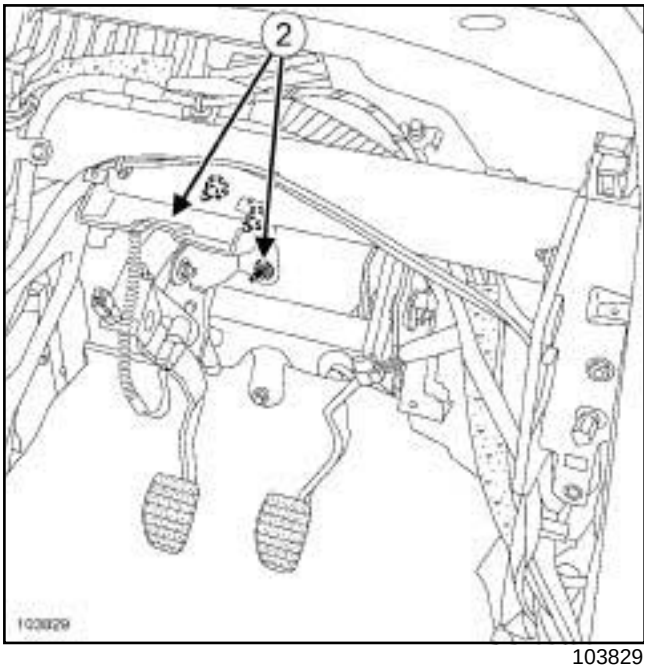

103829

- ❑ Disconnect the brake switch.
- ❑ Remove the clutch pedal mounting bolts (**2**) .
- ❑ Remove the clutch pedal assembly from its housing without removing the master cylinder pipes.

WARNING
Do not damage the clutch master cylinder pipes.

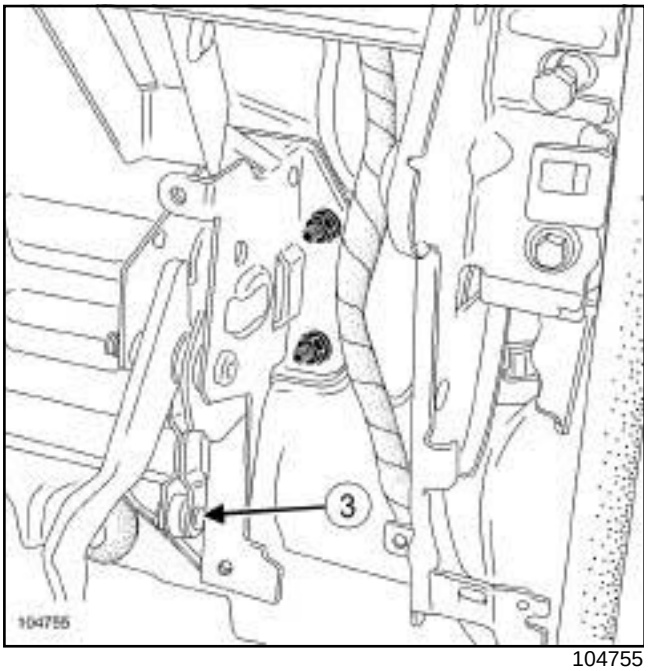

104755

- ❑ Remove the connecting shaft (**3**) from the « brake pedal and idler bar » assembly.

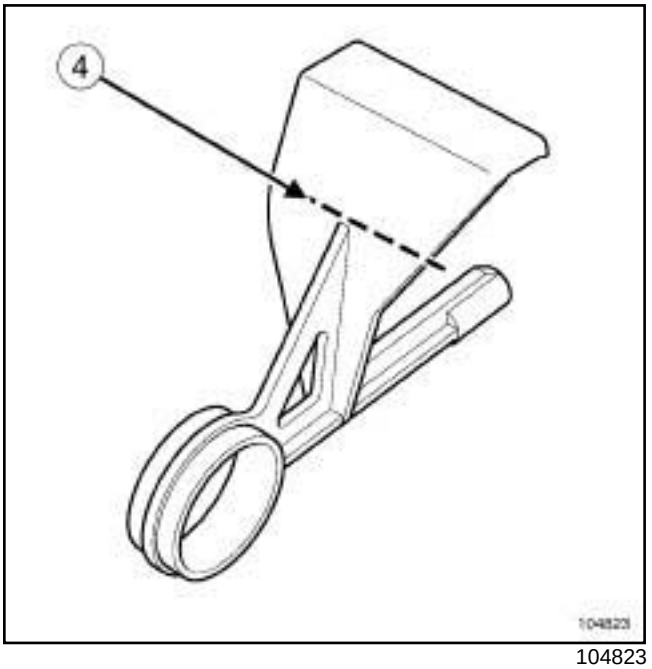

104823

- ❑ Cut pin (**4**) .
- ❑ Insert the pin **(Fre. 1752)** moving from left to right (when not replacing the pedal).

RIGHT-HAND DRIVE

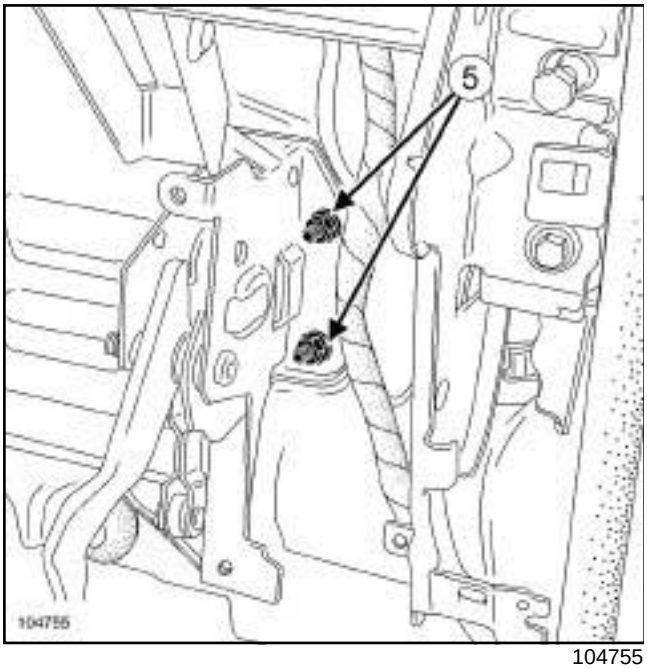

104755

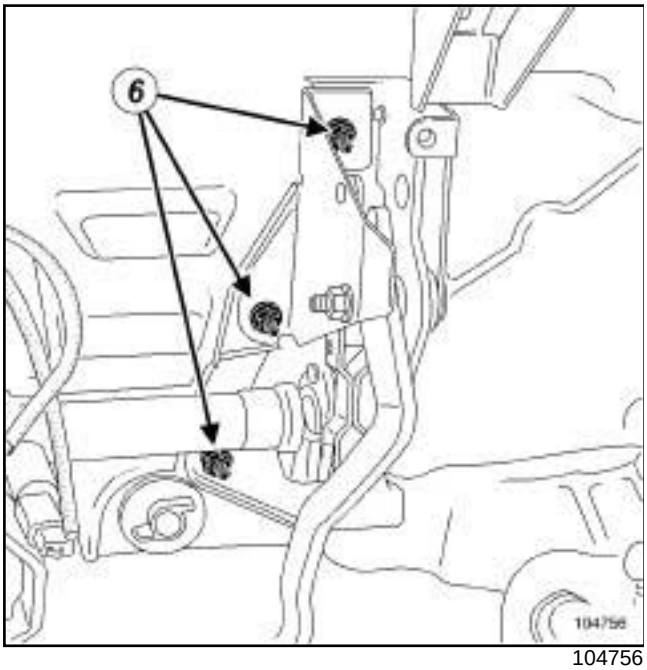

104756

❑ Remove:

- the brake pedal mounting bolts (**5**) and (**6**) ,
- the brake pedal assembly by rotating it to release it from the idler bar.

REFITTING

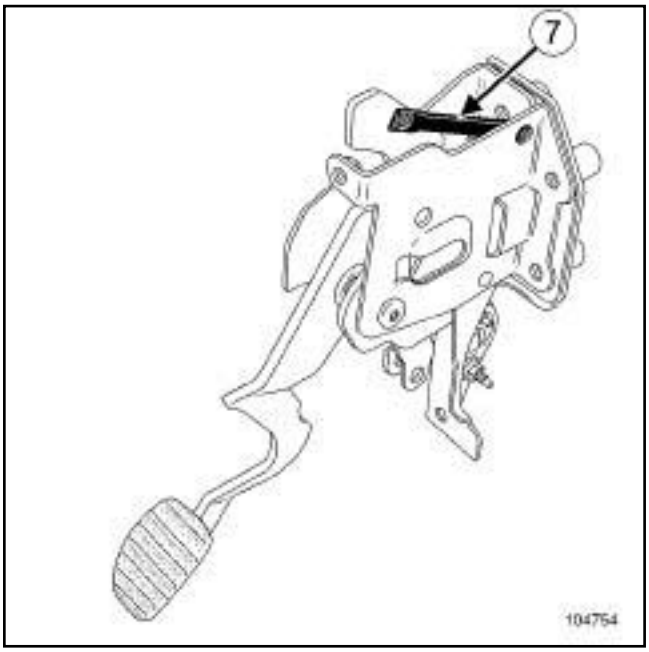

104754

❑

WARNING

Before refitting the brake pedal, the fuse plate (**7**) must be checked for deformation. If there is any deformation to the fuse board, the brake pedal must be replaced.

Note

- Do not remove the pin before refitting and locking the pedal assembly.

RIGHT-HAND DRIVE

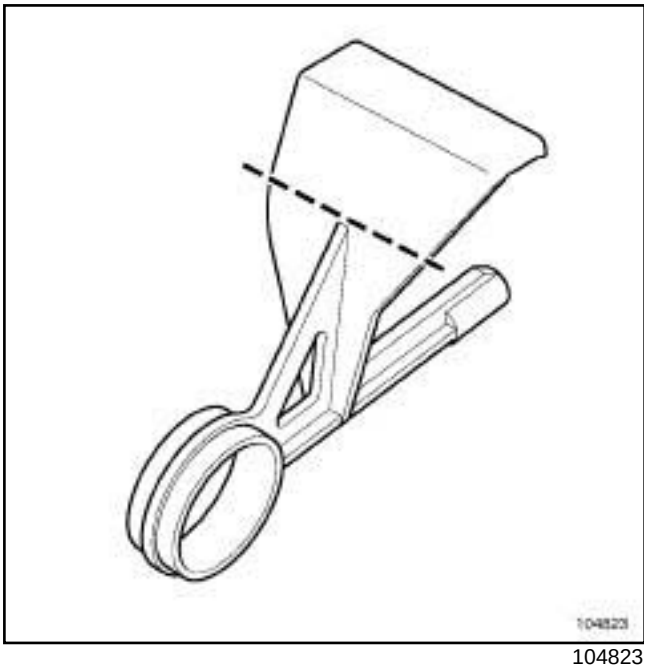

104823

- Cut the pin along the dotted line. (do not remove the pin from the pedal).
- Proceed in the reverse order to removal.
- Torque tighten the **brake pedal yoke mounting nuts (21 Nm)**.
- Remove the pin from the pedal.
- Adjust the brake pedal position switch (see **37A, Mechanical component controls, Brake light switch**).

IMPORTANT

Unlock the computer using the **diagnostic tool** (see **88C, Airbags and pretensioners, Airbag computer locking procedure**).

Connect the battery, starting with the positive terminal.

WARNING

Carry out the necessary programming (see **80A, Battery: Removal - Refitting**).

RIGHT-HAND DRIVE

When the brake pedal is replaced, the pedal is supplied fitted with a pin.

REMOVAL

❑ Remove the brake pedal (see **37A**, **Mechanical component controls**, **Brake pedal: Removal - Refitting**, page **37A-19**) .

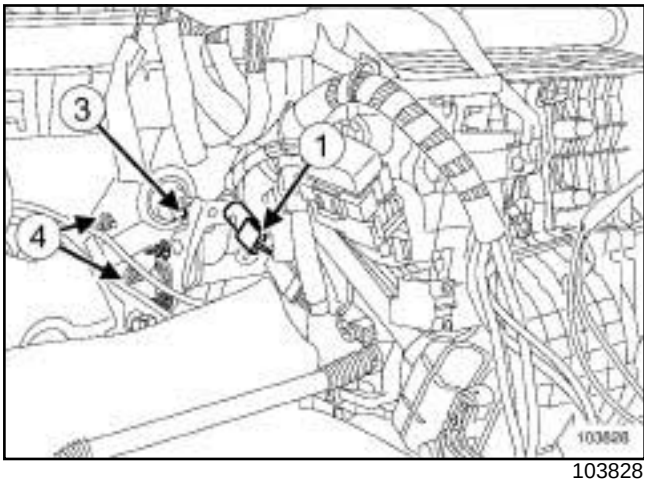

103828

❑ Turn the brake pedal sensor (**1**) a quarter of a turn anti-clockwise.

❑ Remove:

- the brake pedal sensor (**1**) ,
- the two nuts (**4**) from the idler bar retaining ring,
- idler bar securing ring,
- the shaft (**3**) connecting the « brake servo pushrod and idler bar » assembly.
- the circlips at the ends of the idler bar.

WARNING
Do not damage the clutch master cylinder pipes.

❑ Remove the idler bar through the passenger side of the vehicle.

REFITTING

❑ To refit, proceed in the reverse order of removal.

❑ If replacing the pedal, (see **37A**, **Mechanical component controls**, **Brake pedal: Removal - Refitting**, page **37A-19**) .

❑ Adjust the brake pedal position switch (see **37A**, **Mechanical component controls**, **Brake pedal switch: Removal - Refitting**, page **37A-31**) .

WARNING
The switch must be replaced if the brake pedal position switch piston is extracted completely.

WARNING
The switch must be replaced if handling of the piston results in three adjustments being made.

REMOVAL

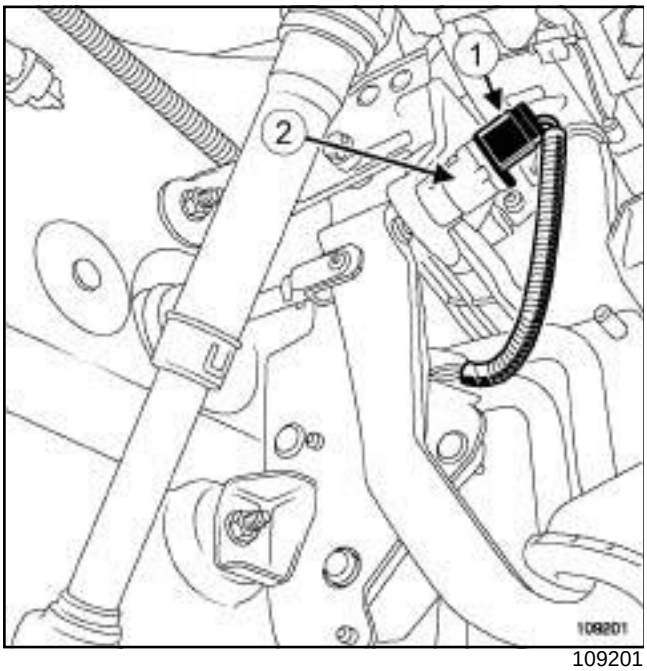

109201

- ❑ Disconnect the brake light switch connector (**1**) .
- ❑ Turn the brake light switch (**2**) a quarter of a turn anti-clockwise.
- ❑ Remove the brake light switch.

REFITTING

WHEN REMOVING AND REFITTING OR REPLACING THE BRAKE LIGHT SWITCH

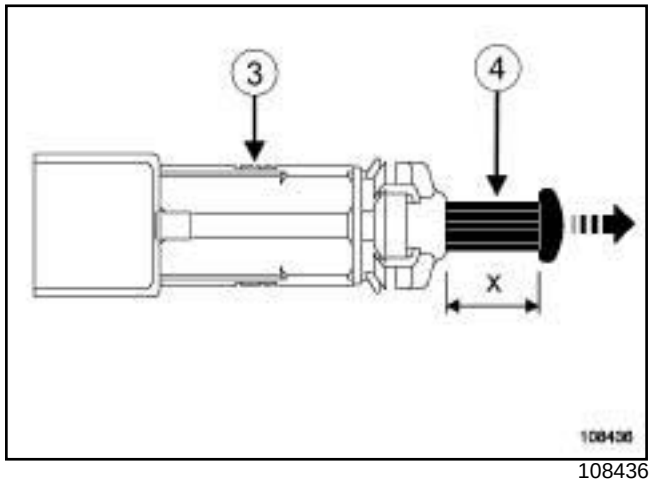

108436

❑

WARNING
Handle the switch (**3**) with care.

Only operate the piston (**4**) to adjust the dimension (**X**) .

The switch must be replaced:

- if the piston (**4**) is separated from the switch (**3**) ,
- if more than three adjustments to dimension (**X**) are necessary during the operation.

- ❑ Measure dimension (**X**) of the piston (**4**) . If dimension (**X**) is less than **17 mm**, carefully pull on the end of the piston to adjust the dimension (**X**) between the values: minimum **17 mm** and maximum **18 mm**.
- ❑ Depress the brake pedal by hand.
- ❑ Position the brake light switch on the pedal assembly.
- ❑ Lock the brake light switch by turning it a quarter of a turn clockwise.
- ❑ Carefully follow the return of the brake pedal.

Note:

The brake pedal switch has an automatic adjustment which adapts to the pedal position.

The automatic adjustment makes a clicking noise when in operation.

- ❑ Connect the connector.

- Check that the brake light switch is operating correctly:
  - depress the brake pedal to switch on the lights,
  - release the brake pedal to switch off the lights.

WITHOUT AUTOMATIC PARKING BRAKE

Tightening torques ▽	
parking brake control lever mountings	**0.8 daNm**
centre console mountings	**0.2 daNm**

REMOVAL

❑ Put the vehicle on a two-post lift.

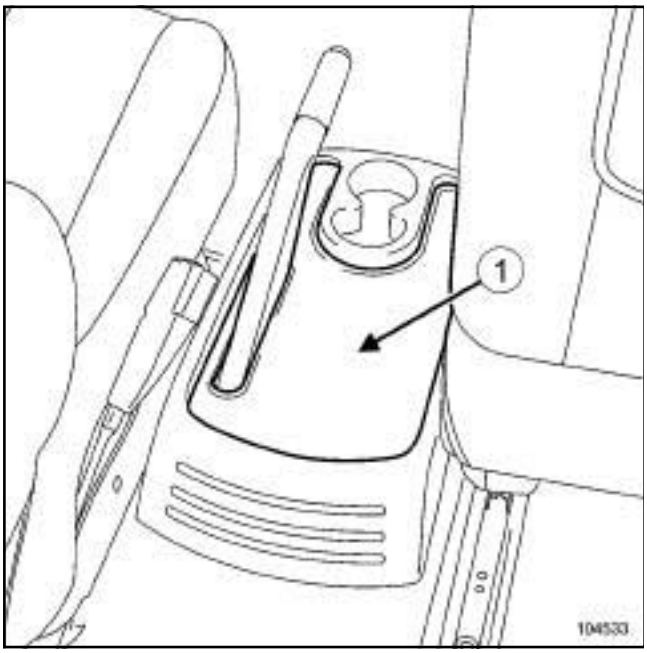

104533

❑ Remove the centre console cover (**1**) .

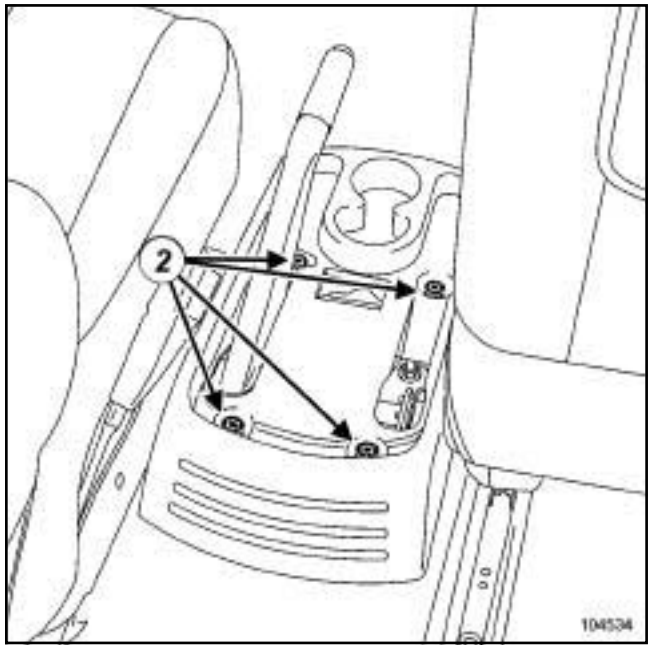

104534

❑ Remove:

- the centre console mountings (**2**) ,
- the centre console.

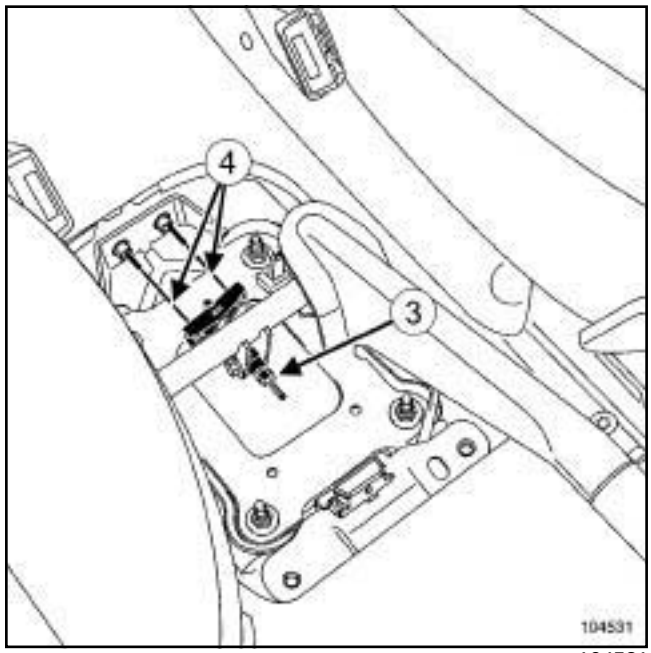

104531

❑ Unscrew the adjusting nut (**3**) .

❑ Pull out the parking brake control cables (**4**) from the control lever.

❑ Thread the parking brake control cables into their sheaths.

❑ Raise the vehicle.

WITHOUT AUTOMATIC PARKING BRAKE

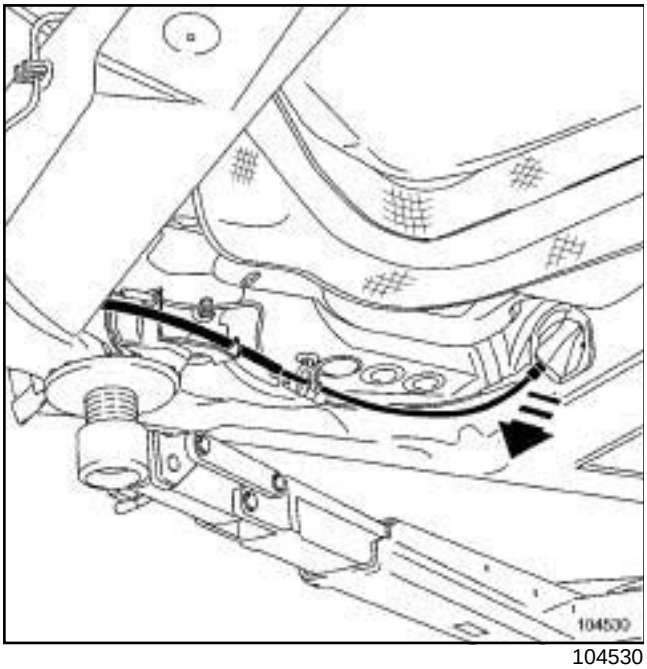

104530

- ❑ Pull the parking brake control cables out via the vehicle underbody.
- ❑ Remember the routing for refitting.
- ❑ Unhook the parking brake control cables:
  - from the callipers,
  - from their guides.

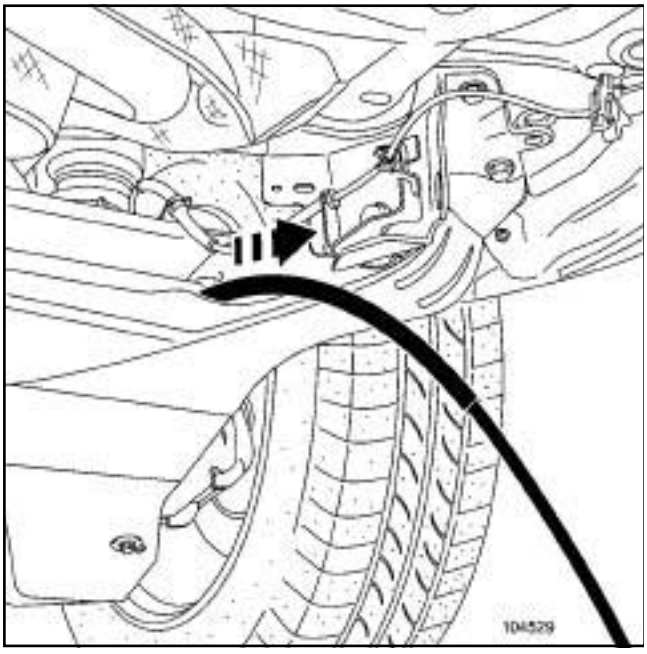

104529

- ❑ Remove the parking brake control cables from the rear axle.
- ❑ Remove the parking brake control cables.

REFITTING

- ❑ Follow the routing noted during removal.
- ❑ To refit, proceed in the reverse order of removal.

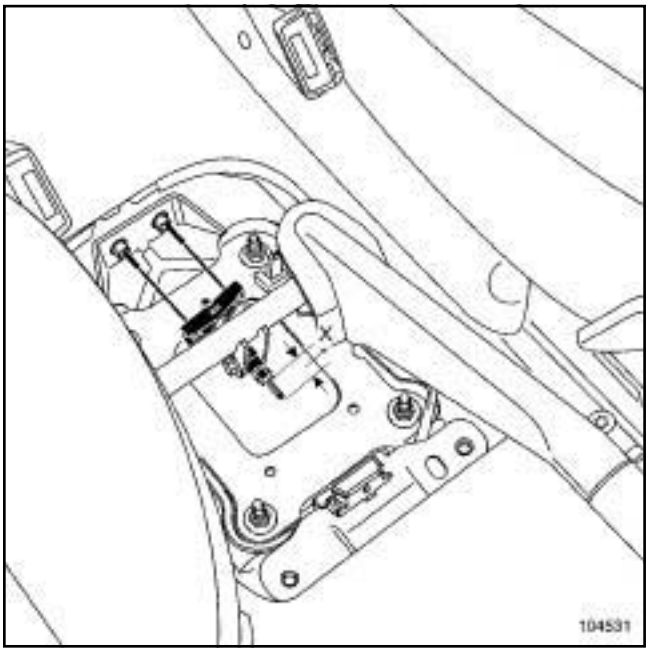

104531

- ❑ Screw the adjusting nut to obtain a measurement (**X**) of **17 mm**.
- ❑ Tighten the adjusting nut so that the brake pads are rubbing lightly against the brake discs.
- ❑ Check the parking brake lever stroke.
- ❑ Refit:
  - the centre console,
  - the centre console mountings,
  - the centre console carpet.
- ❑ Torque tighten:
  - the **parking brake control lever mountings (0.8 daNm)**,
  - the **centre console mountings (0.2 daNm)**.

Essential equipment
diagnostic tool

This procedure only deals with removing - refitting the secondary brake cables.

The primary brake cable cannot be removed. It is sold complete with the automatic parking brake control unit (see **37B**, **Electronic parking brake**, **Control unit: Removal - Refitting**, page **37B-3**) .

REMOVAL

I - REMOVAL PREPARATION OPERATION

- ❑ Position the vehicle on a two-post lift (see **Vehicle: Towing and lifting**) (02A, Lifting equipment).
- ❑ Switch on the + after ignition feed.
- ❑ Release the parking brake using the handle.
- ❑ Switch off the ignition.
- ❑ Disconnect the battery (see **Battery: Removal - Refitting**) (80A, Battery).

II - OPERATION FOR REMOVAL OF PART CONCERNED

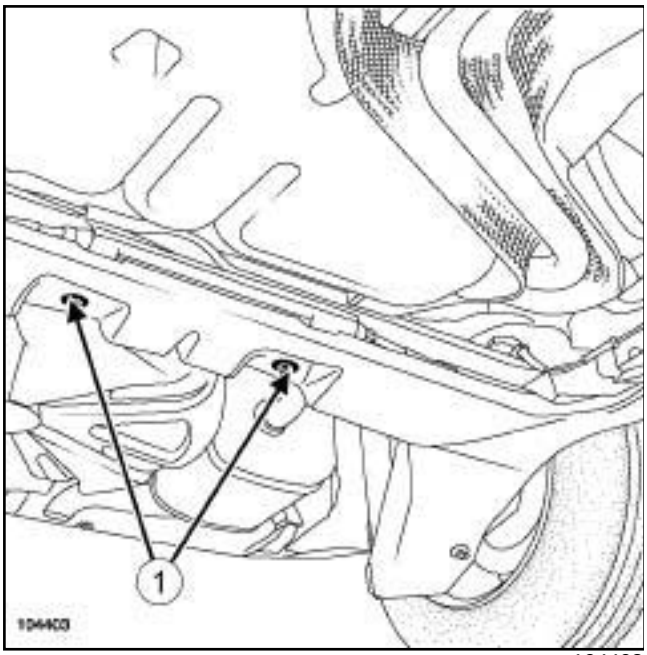

104403

- ❑ Note the brake cable routing for refitting.
- ❑ Remove the bolts ***(1)*** from the brake cable anchorage support.

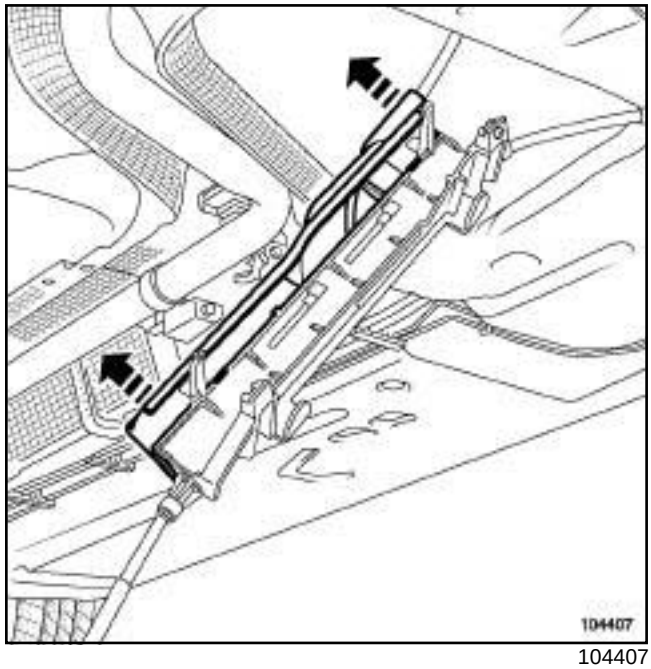

104407

- ❑ Unclip the anchorage guard.

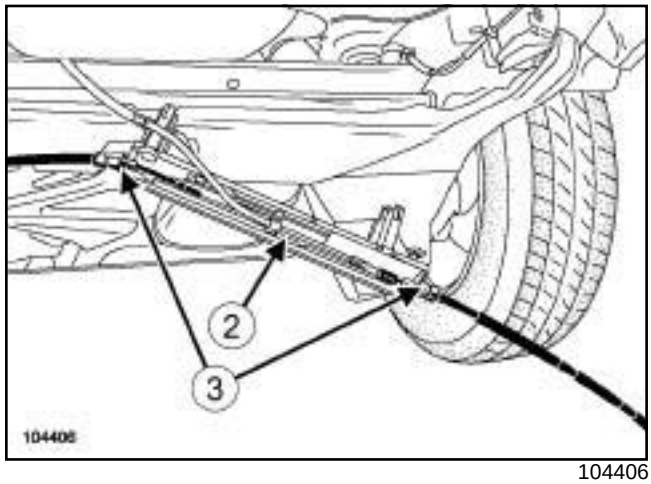

104406

- ❑ Remove the primary cable (**2**) from the anchorage.
- ❑ Remove the secondary cables (**3**) from the anchorage.

REFITTING

I - REFITTING OPERATION FOR PART CONCERNED

- ❑ Refit the secondary cables to the anchorage.
- ❑ Clip on the secondary cables.
- ❑ Refit the primary cable to the anchorage
- ❑ Clip on the anchorage guard.
- ❑ Refit the anchorage on the rear axle.

- ❑ Position the brake cables in the position marked during removal.

II - FINAL OPERATION

- ❑ Connect the battery (see **Battery : Removal - Refitting**) (80A, Battery).
- ❑ Switch on the + after ignition feed.
- ❑ Activate the handle several times to adjust the brake cables.
- ❑ Clear the faults using the **diagnostic tool**.

Tightening torques ▽	
parking brake control lever mountings	**0.8 daNm**
centre console mountings	**0.2 daNm**

REMOVAL

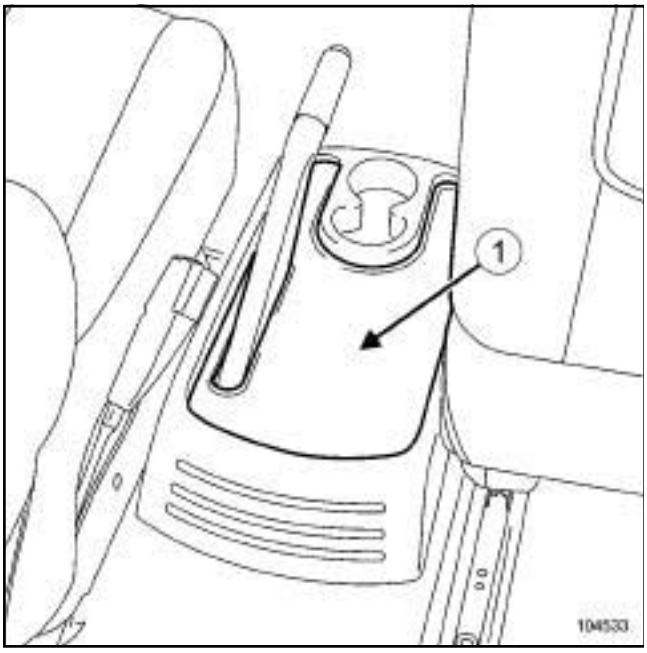

104533

❑ Remove the centre console carpet (**1**) .

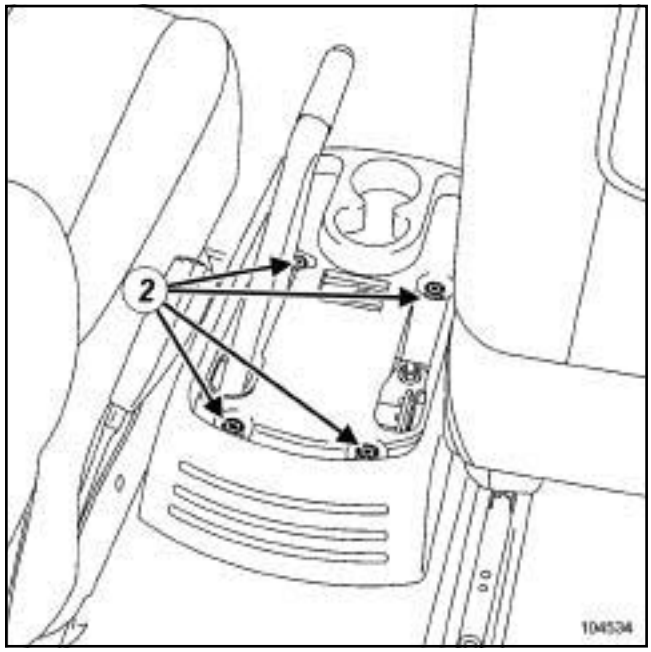

104534

❑ Remove:

- the centre console mountings (**2**) ,
- the centre console.

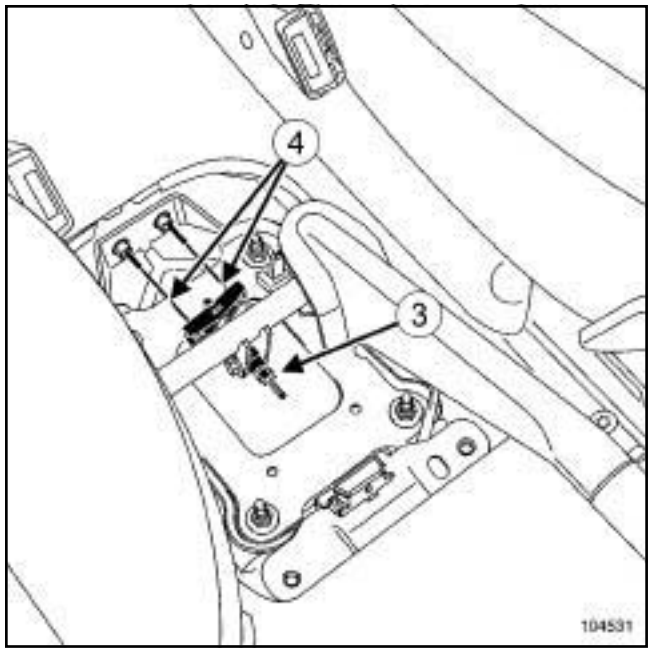

104531

❑ Unscrew the adjusting nut (**3**) .

❑ Remove the parking brake control cables (**4**) .

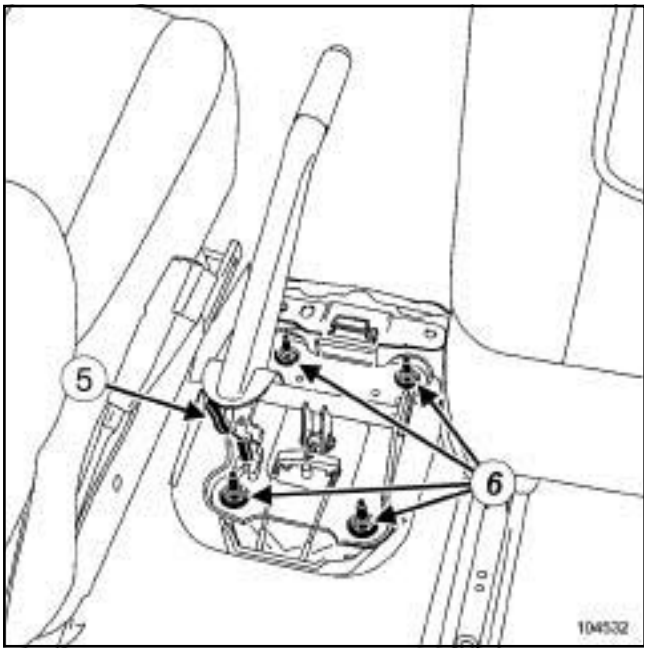

104532

- ❑ Disconnect the parking brake control lever switch connector (**5**) .
- ❑ Remove:
  - the parking brake control lever mountings (**6**) ,
  - the parking brake lever.

REFITTING

- ❑ Refit:
  - the parking brake lever,
  - the parking brake lever mountings.
- ❑ Torque tighten the **parking brake control lever mountings (0.8 daNm)**.
- ❑ Reconnect the parking brake lever switch connector.

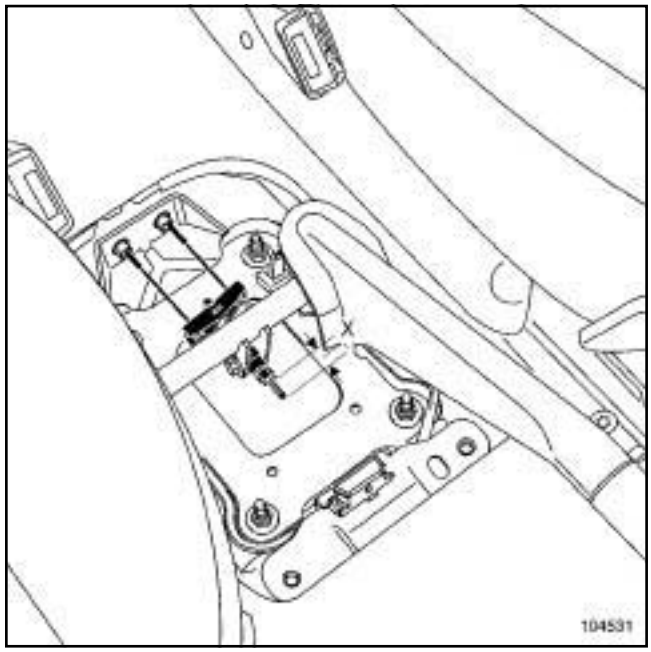

104531

- ❑ Screw the adjusting nut to obtain a measurement (**X**) of **17 mm**.
- ❑ Tighten the adjusting nut so that the brake pads are rubbing lightly against the brake discs.
- ❑ Check the parking brake lever stroke.
- ❑ Refit:
  - the centre console,
  - the centre console mountings,
  - the centre console carpet.
- ❑ Torque tighten the **centre console mountings (0.2 daNm)**.

RIGHT-HAND DRIVE or LEFT-HAND DRIVE

LEFT-HAND DRIVE

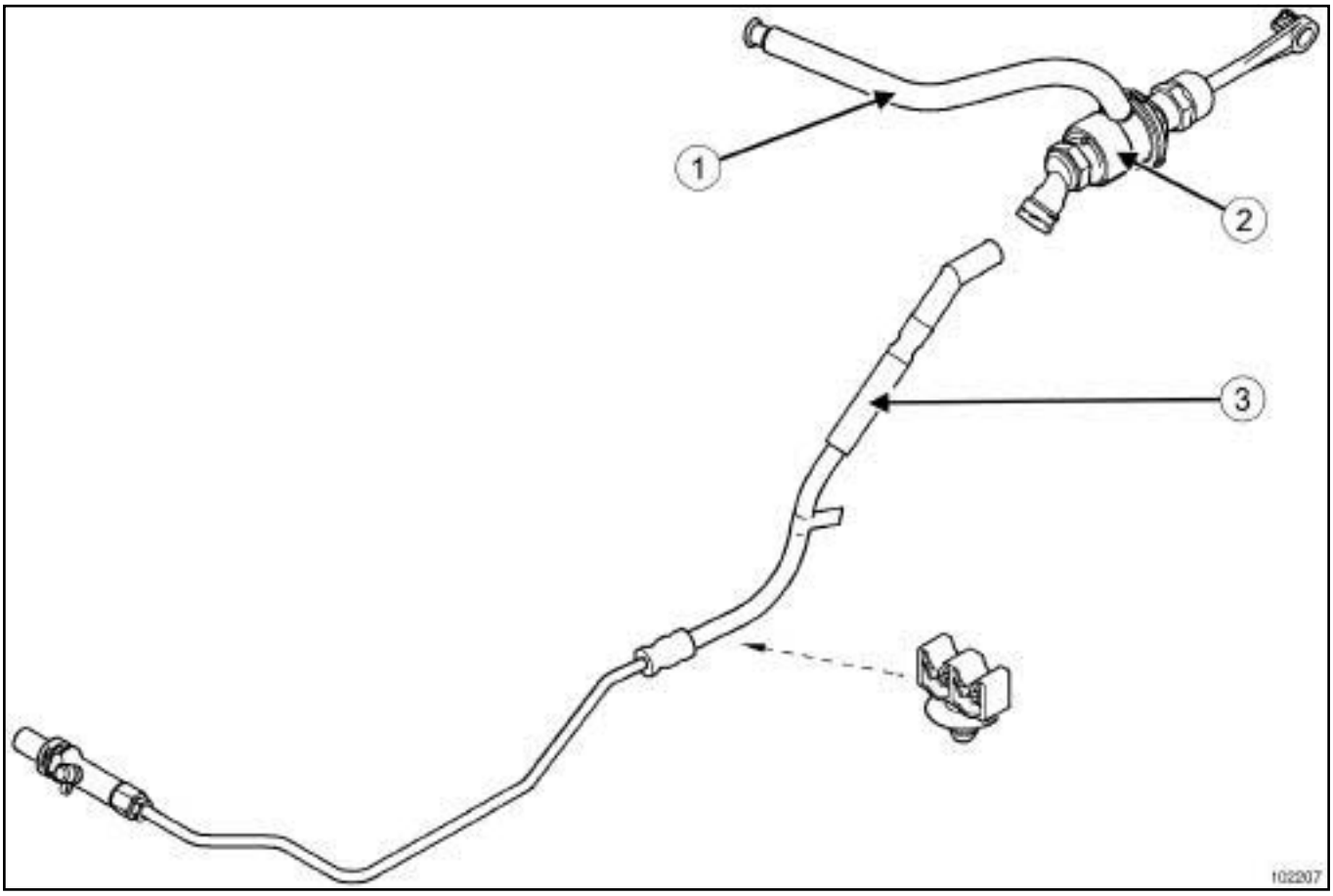

102207

(**1**) Master cylinder supply pipe (engine compartment)

(**2**) Master cylinder (engine compartment - passenger compartment connection)

(**3**) Slave cylinder supply pipe (engine compartment)

RIGHT-HAND DRIVE or LEFT-HAND DRIVE

RIGHT-HAND DRIVE

RIGHT-HAND DRIVE or LEFT-HAND DRIVE

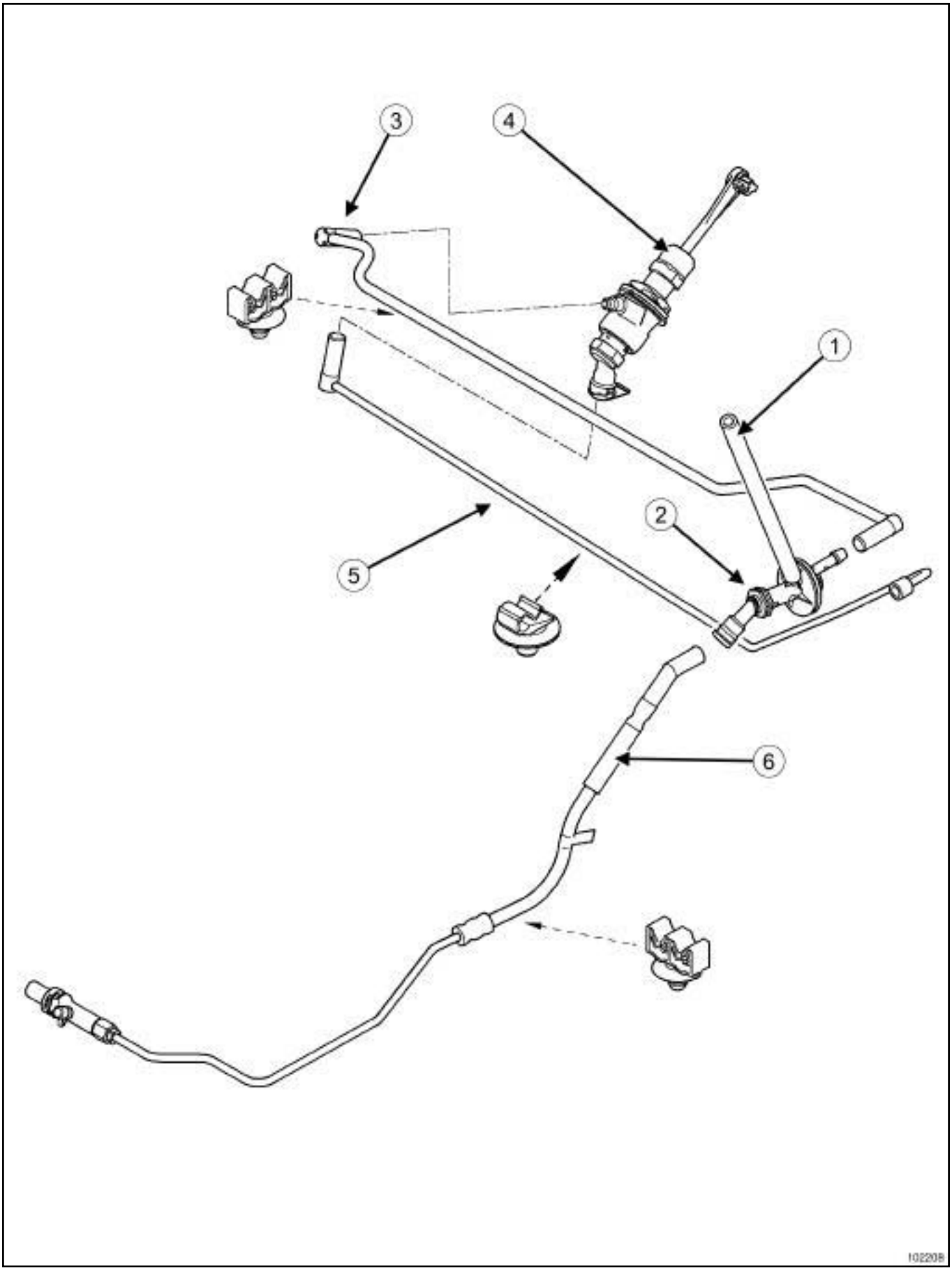

RIGHT-HAND DRIVE or LEFT-HAND DRIVE

102208

(**1**)	Master cylinder supply pipe (engine compartment)
(**2**)	Master cylinder return (engine compartment - passenger compartment connection)
(**3**)	Master cylinder supply pipe (passenger compartment)
(**4**)	Master cylinder (passenger compartment)
(**5**)	Slave cylinder supply pipe (passenger compartment)
(**6**)	Slave cylinder supply pipe (engine compartment)

JH3 or JR5 or ND0 or PK4, and RIGHT-HAND DRIVE

Essential special tooling	
Emb. 1797	24 mm socket for removing and refitting clutch master cylinder

Tightening torques ▽	
clutch pedal plate nuts	**21 Nm**

REMOVAL

PK4

❑ Position the vehicle on a two-post lift (see **Vehicle: Towing and lifting**) (MR 370, 02A, Lifting equipment).

❑ Disconnect the battery (see **Battery: Removal - Refitting**) (MR 370, 80A, Battery).

❑ Remove:

- the engine cover,
- the scuttle panel grille (see **Scuttle panel grille: Removal - Refitting**) (MR 371, 55A, Exterior protection).

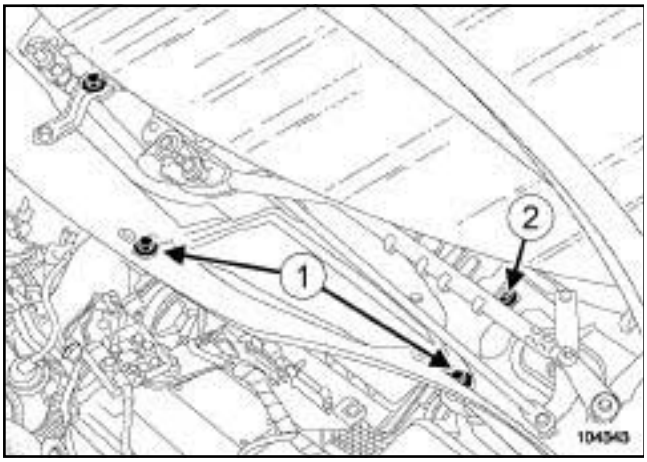

104343

❑ Remove:

- the two air filter access panel mounting bolts (**1**) ,
- the air filter access panel,
- the scuttle panel partition mounting bolt (**2**) .

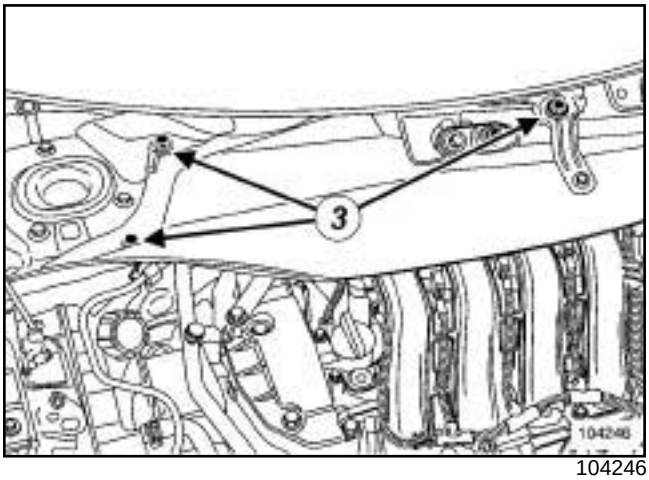

104246

❑ Remove:

- the scuttle panel partition mounting bolts (**3**) ,
- the scuttle panel partition,
- the battery (see **Battery: Removal - Refitting**) (MR 370, 80A, Battery),
- the battery tray with the injection computer,
- the air filter box (see **Air filter unit: Removal - Refitting**) (MR 370, 12A, Fuel mixture).

❑ Drain the brake fluid reservoir using a syringe until the level is below the master cylinder supply orifice.

JH3 or JR5 or ND0 or PK4, and RIGHT-HAND DRIVE

JH3 or JR5

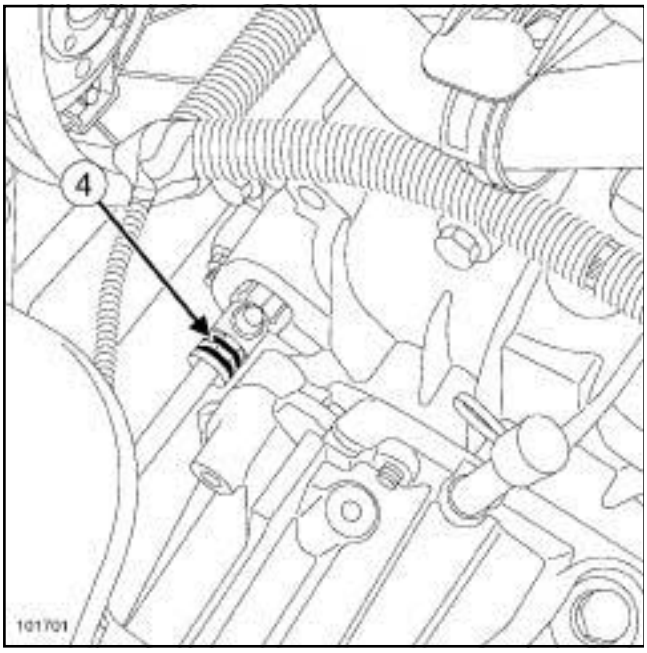

101701

- ❑ Lift up clip (**4**) .
- ❑ Pull out the clutch control pipe one notch.

ND0

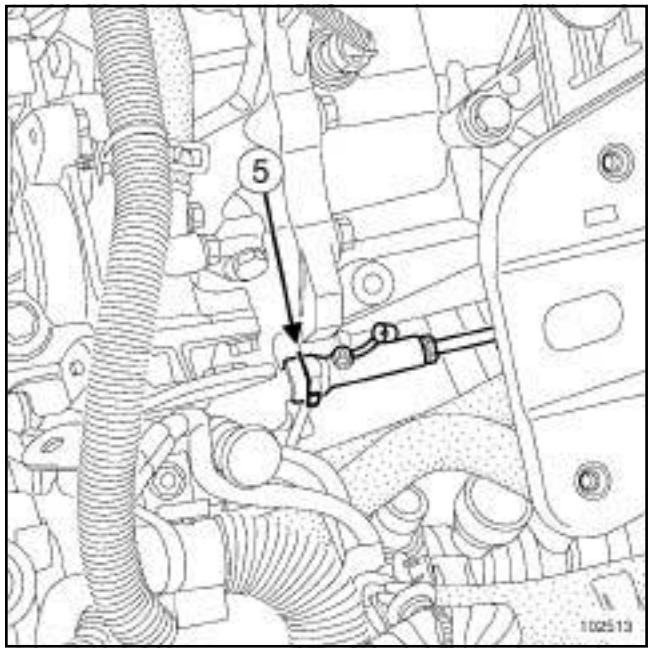

102513

- ❑ Apply pressure to the clip (**5**) manually, whilst pulling on the pipe.

WARNING
Do not pull the clip. If it is incorrectly handled in any way, the pipe will need to be replaced.

- ❑ Pull out the clutch control pipe one notch.

JH3 or JR5 or ND0 or PK4, and RIGHT-HAND DRIVE

PK4

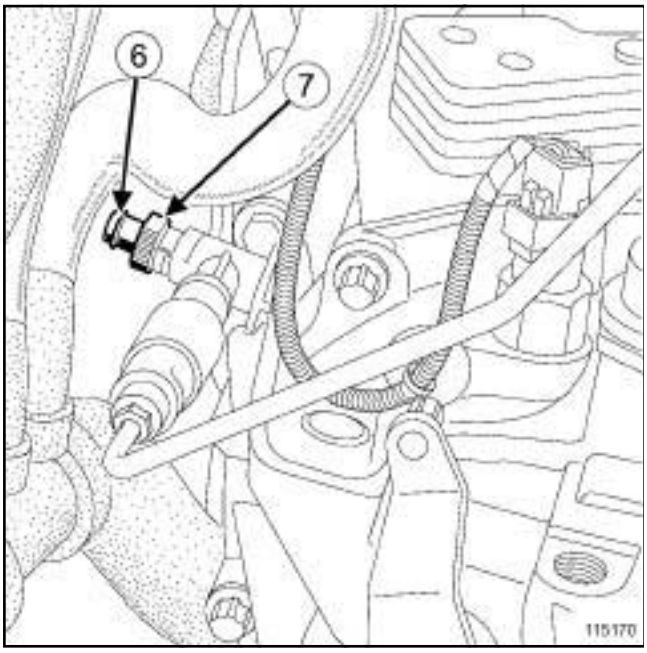

115170

- Remove:
  - the engine undertray,
  - the bleed plug (**6**) .
- Turn the end (**7**) of the slave cylinder anticlockwise as far as it will go.

- Connect a transparent pipe to the bleed hole running to an empty container placed under the bleed hole.
- Place a cloth under the bleed hole.
- Depress the pedal using your hand (to drain the master cylinder and the pipe).
-

> Note:
>
> The clutch master cylinder is mounted on the clutch pedal assembly. Remove the « pedal - master cylinder » assembly to remove the pedal and master cylinder.

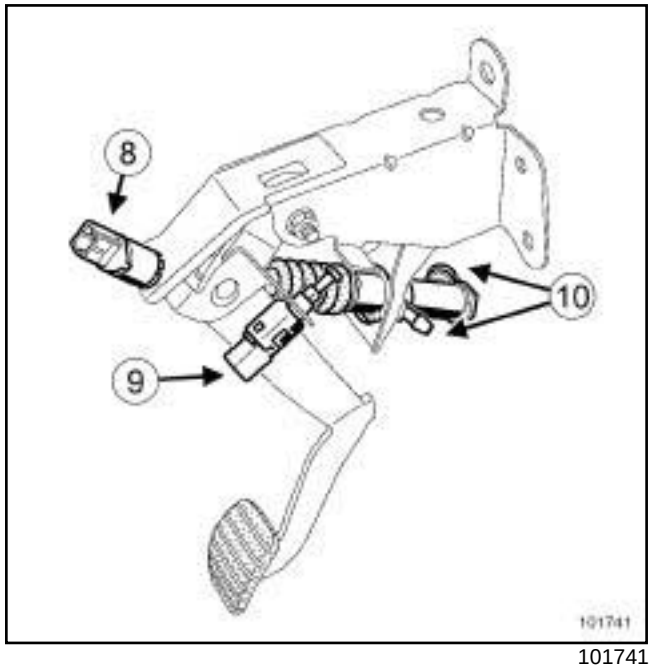

101741

- Remove the grey start of travel switch (**8**) by turning it a quarter of a turn (see **37A**, **Mechanical component controls**, **Clutch pedal position sensor: Removal - Refitting**, page **37A-64**) .
- Disconnect the switch connector (**8**) .
- Remove the green end of travel switch (**9**) by turning it a quarter of a turn (see **37A**, **Mechanical component controls**, **Brake pedal switch: Removal - Refitting**, page **37A-31**) .
- Disconnect the switch connector (**9**) .
- Place a cloth under the master cylinder.
- Remove the union clips from the master cylinder (**10**) .
- Disconnect the pipes.
- Fit plugs into the openings.
- Remove the clutch master cylinder ball joint from the pedal.
- Remove the four nuts from the « pedal » assembly.
- Extract the « pedal - master cylinder » assembly.
- Remove the master cylinder from the bulkhead by turning it a quarter turn clockwise (bayonet type mounting) using the **(Emb. 1797)**.

REFITTING

- Visually check the condition of the seals.

JH3 or JR5 or ND0 or PK4, and RIGHT-HAND DRIVE

- Proceed in the reverse order to removal.

> **WARNING**
> Do not use the take-off pipes as a support when fitting.

- Torque tighten the **clutch pedal plate nuts (21 Nm)**.
- Bleed the clutch control (see **37A**, **Mechanical component controls**, **Clutch circuit: Bleeding**, page **37A-73**) .
- Check that the clutch system is operating correctly.
- Adjust and refit:
  - the brake switch (see **37A**, **Mechanical component controls**, **Brake pedal switch: Removal - Refitting**, page **37A-31**) ,
  - the clutch switch (see **37A**, **Mechanical component controls**, **Clutch pedal position sensor: Removal - Refitting**, page **37A-64**) .
- Connect the battery (see **Battery : Removal - Refitting**) (MR 370, 80A, Battery).

JH3 or JR5 or ND0 or PK4, and LEFT-HAND DRIVE

Essential special tooling	
Emb. 1797	24 mm socket for removing and refitting clutch master cylinder

REMOVAL

❑ Disconnect the battery (see **Battery: Removal - Refitting**) (MR 370, 80A, Battery).

❑ Remove:

- the engine cover,
- the scuttle panel grille (see **Scuttle panel grille: Removal - Refitting**) (MR 371, 55A, Exterior protection).

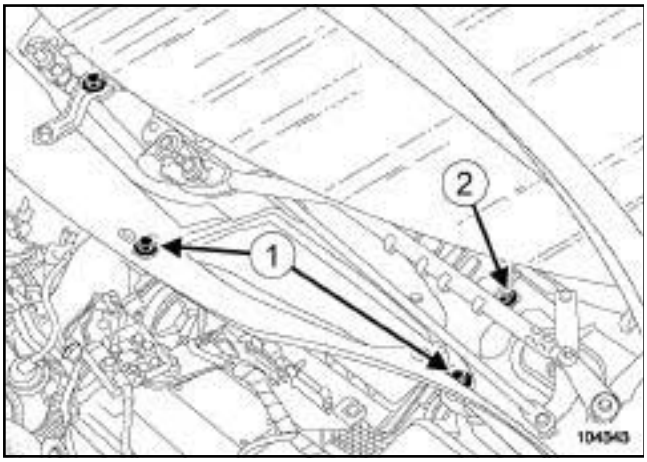

104343

❑ Remove:

- the two air filter access panel mounting bolts (**1**) ,
- the air filter access panel,
- the scuttle panel partition mounting bolt (**2**) .

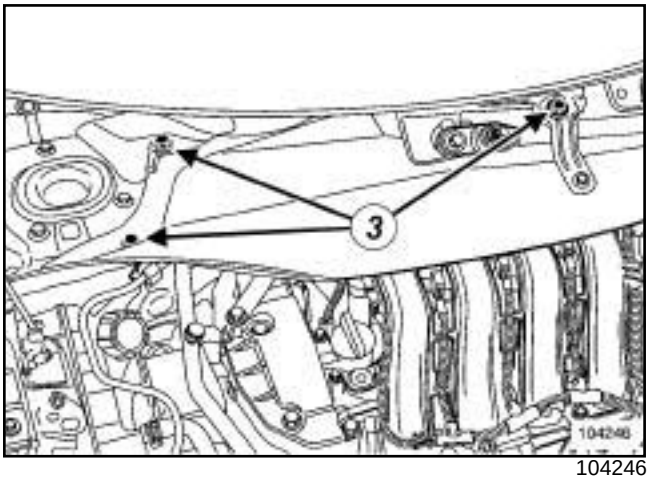

104246

❑ Remove:

- the scuttle panel partition mounting bolts (**3**) ,
- the scuttle panel partition,
- the battery (see **Battery: Removal - Refitting**) (MR 370, 80A, Battery),
- the battery tray with the injection computer,
- the air filter box (see **Air filter unit: Removal - Refitting**) (MR 370, 12A, Fuel mixture).

❑ Drain the brake fluid reservoir using a syringe until the level is below the master cylinder supply orifice.

JH3 or JR5 or ND0 or PK4, and LEFT-HAND DRIVE

JH3 or JR5

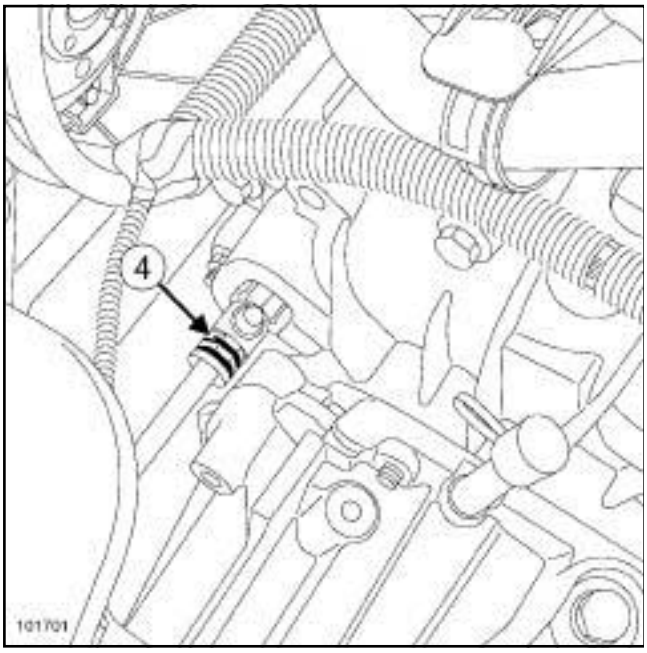

101701

❑ Lift up clip (**4**) .

❑ Pull out the clutch control pipe one notch.

ND0

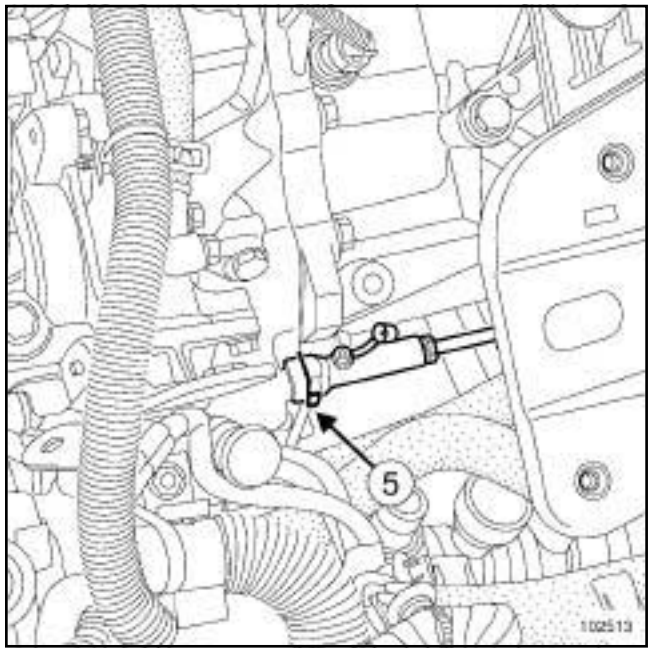

102513

❑ Apply pressure to the clip (**5**) manually, whilst pulling on the pipe.

WARNING

Do not pull the clip. If it is incorrectly handled in any way, the pipe will need to be replaced.

❑ Pull out the clutch control pipe one notch.

JH3 or JR5 or ND0 or PK4, and LEFT-HAND DRIVE

PK4

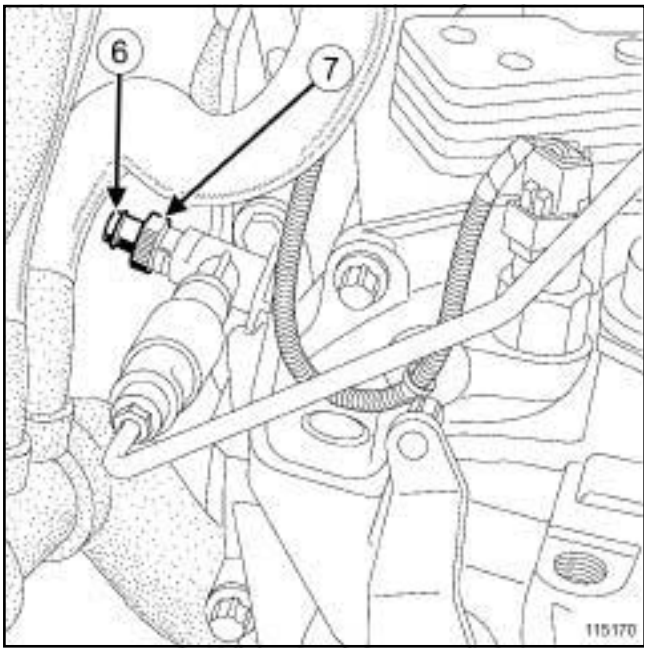

115170

- ❑ Remove:
  - the engine undertray,
  - the bleed plug (**6**) .
- ❑ Turn the end (**7**) of the slave cylinder anticlockwise as far as it will go.

- ❑ Connect a transparent pipe to the bleed hole running to an empty container placed under the bleed hole.
- ❑ Place a cloth under the bleed hole.
- ❑ Depress the pedal using your hand (to drain the master cylinder and the pipe).

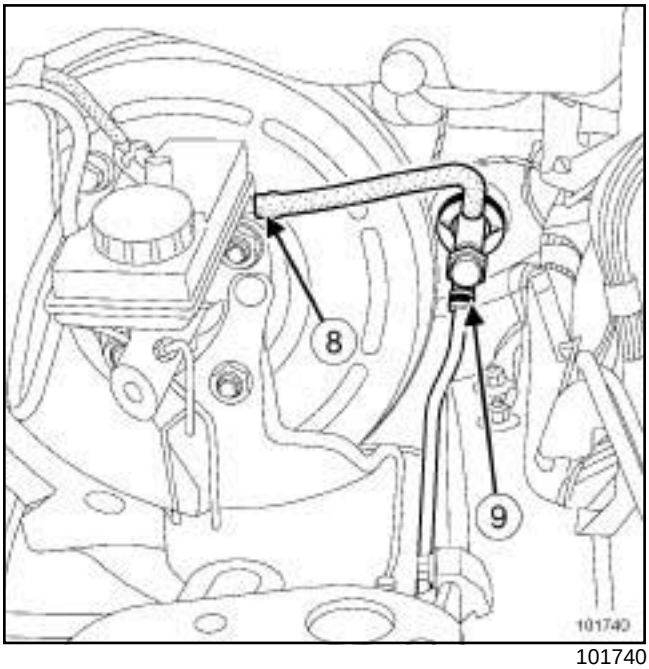

101740

- ❑ Place a cloth under the hole (**8**) .
- ❑ Disconnect the brake fluid reservoir pipe.
- ❑ Fit plugs into the openings.
- ❑ Place a cloth under the master cylinder.
- ❑ Remove the union clip from the master cylinder (**9**) .
- ❑ Disconnect the pipes.
- ❑ Fit plugs into the openings.
- ❑ Disconnect the master cylinder ball joint from the clutch pedal in the passenger compartment.

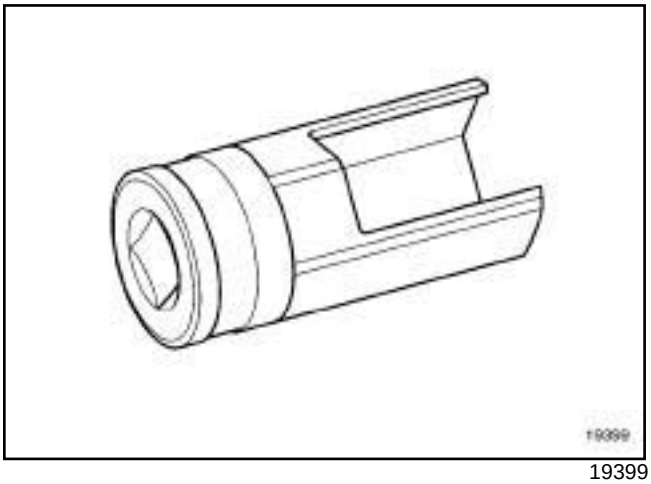

19399

- ❑ Remove the master cylinder from the bulkhead in the engine compartment by turning it a quarter turn clockwise (bayonet type mounting) using the **(Emb. 1797)**.

JH3 or JR5 or ND0 or PK4, and LEFT-HAND DRIVE

REFITTING

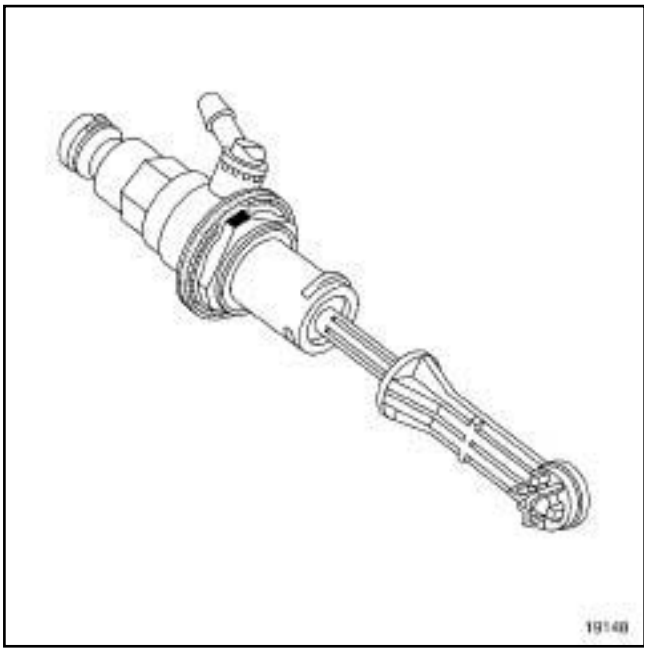

19148

- ❑ Check the condition of the seals.
- ❑ Proceed in the reverse order to removal.

Note:

- Lubricate both ends of the supply pipe with brake fluid to facilitate fitting on the brake fluid reservoir take-off pipe.
- The master cylinder has a foolproofing device, it only fits in one position.

WARNING

Do not use the take-off pipes as a support when fitting.

- ❑ Bleed the clutch control (see **37A**, **Mechanical component controls**, **Clutch circuit: Bleeding**, page **37A-73**) .
- ❑ Check that the clutch system is operating correctly.
- ❑ Adjust the clutch pedal position switch (see **37A**, **Mechanical component controls**, **Clutch pedal position sensor: Removal - Refitting**, page **37A-64**) .
- ❑ Connect the battery (see **Battery : Removal - Refitting**) (MR 370, 80A, Battery).

5 SPEED MANUAL GBOX or 6 SPEED MANUAL GBOX

Essential equipment
diagnostic tool

REMOVAL

LOCATION AND REMOVAL OF THE VARIOUS CLUTCH PEDAL SWITCHES

DOOR OPEN SYST. 433 NML

LEFT-HAND DRIVE

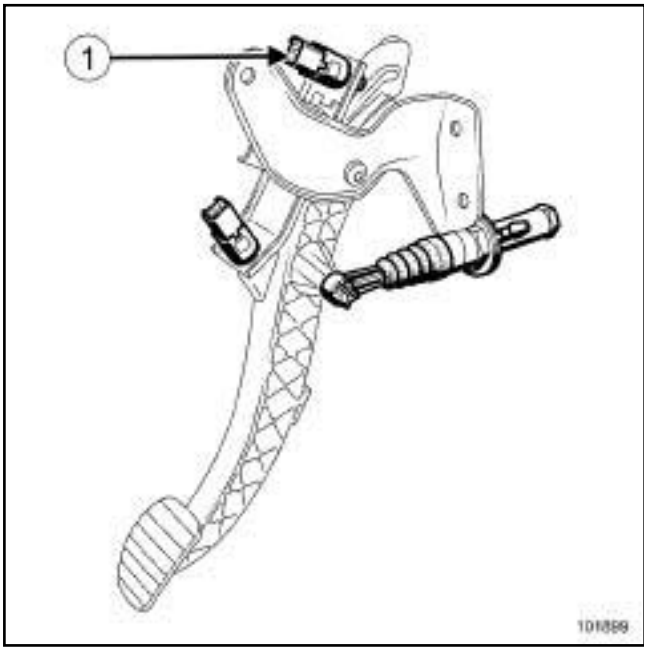

101899

(**1**) End of travel switch.

- ❑ Disconnect the connector from the clutch end of travel switch (**1**) .
- ❑ Turn the end of travel switch (**1**) one quarter of a turn anticlockwise.
- ❑ Remove the end of travel switch.

RIGHT-HAND DRIVE

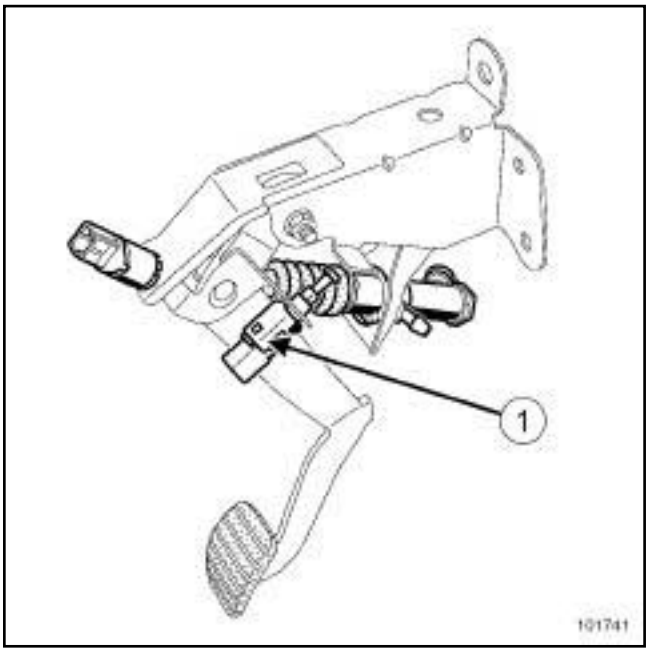

101741

(**1**) End of travel switch.

- ❑ Disconnect the connector from the end of travel switch (**1**) .
- ❑ Turn the end of travel switch (**1**) one quarter of a turn anticlockwise.
- ❑ Remove the clutch switch.

5 SPEED MANUAL GBOX or 6 SPEED MANUAL GBOX

CRUISE CONTROL

LEFT-HAND DRIVE

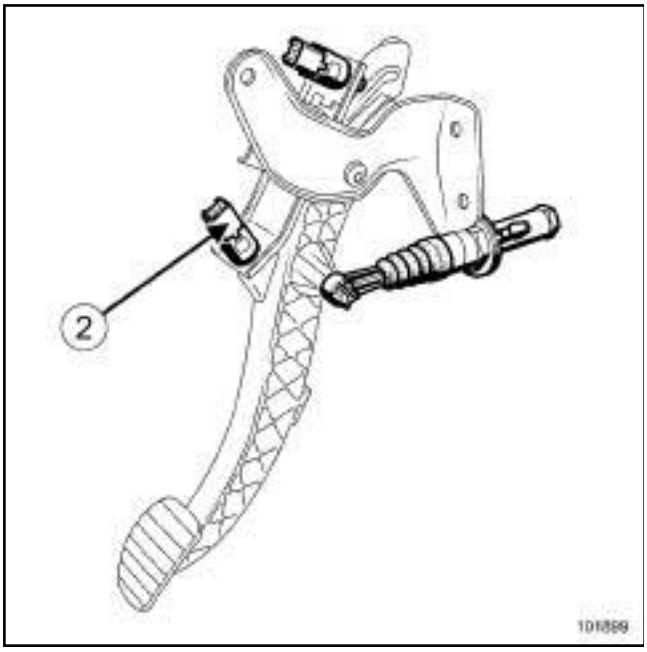

101899

(**2**) Start of travel switch.

- ❑ Disconnect the connector from the start of travel switch (**2**) .
- ❑ Turn the start of travel switch (**2**) one quarter of a turn anticlockwise.
- ❑ Remove the clutch switch.

RIGHT-HAND DRIVE

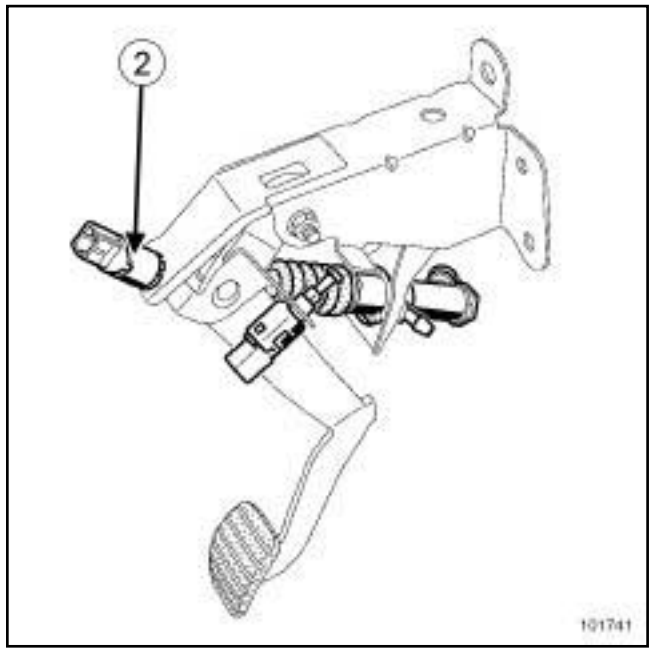

101741

(**2**) Start of travel switch

- ❑ Disconnect the connector from the start of travel switch (**2**) .
- ❑ Turn the start of travel switch (**2**) one quarter of a turn anticlockwise.
- ❑ Remove the clutch switch.

5 SPEED MANUAL GBOX or 6 SPEED MANUAL GBOX

REFITTING

I - WHEN REMOVING AND REFITTING OR WHEN REPLACING A CLUTCH PEDAL SWITCH

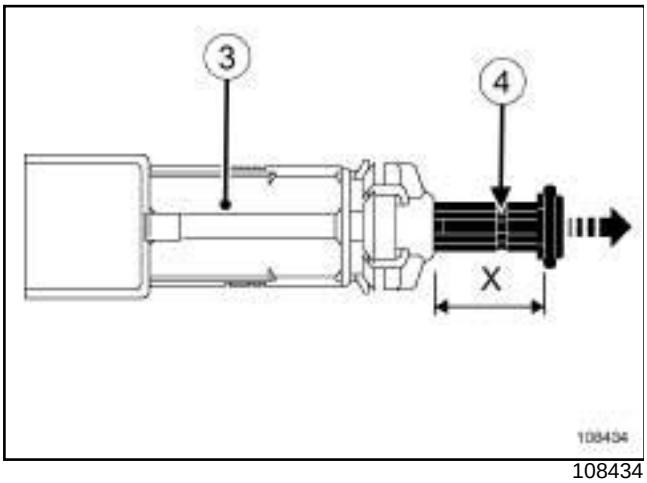

108434

❑

WARNING

Handle the switch (**3**) with care.

Only operate the piston (**4**) to adjust the dimension (**X**) .

The switch must be replaced:

- if the piston (**4**) is separated from the switch (**3**) ,
- if more than three adjustments to the dimension (**X**) are necessary during the operation.

❑ Measure dimension (**X**) of the piston (**4**) . If the dimension (**X**) is less than **17 mm**, carefully pull on the end of the piston (**4**) to adjust the dimension (**X**) between the values **17 mm** minimum and **18 mm** maximum.

II - REFITTING THE CLUTCH PEDAL SWITCHES

CRUISE CONTROL

❑ Depress the clutch pedal by hand.

❑ Position the start of travel switch on the pedal assembly.

❑ Lock the start of travel switch by turning it one quarter of a turn clockwise.

❑ Support the return of the clutch pedal.

Note:

The clutch pedal switch has an automatic adjustment feature, adapting to the pedal position.

The automatic adjustment makes a clicking noise when in operation.

❑ Connect clutch switch connector.

DOOR OPEN SYST. 433 NML

❑ Position the end of travel switch on the pedal assembly.

❑ Lock the end of travel switch by turning it one quarter of a turn clockwise.

❑ Depress the clutch pedal by hand.

Note:

The clutch pedal switch has an automatic adjustment feature, adapting to the pedal position.

The automatic adjustment makes a clicking noise when in operation.

❑ Support the return of the clutch pedal.

❑ Connect clutch switch connector.

III - FINAL OPERATION

❑ Be sure to carry out a repair check using **diagnostic tool**.

AJ0 or DP0 or JH3 or JR5 or ND0 or PK4 or TL4

I - REMOVAL

❑ Precautions to be taken when removing and refitting the gear cable end pieces to avoid tearing the plastic guide tube and damaging the ball joints.

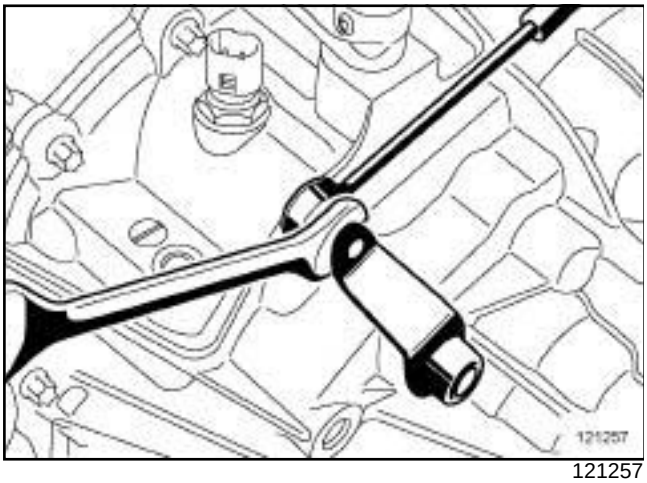

121257

❑ To remove the gear control cables from their ball joints, use an open-ended spanner as shown above. This prevents the control cables from being damaged.

II - REFITTING

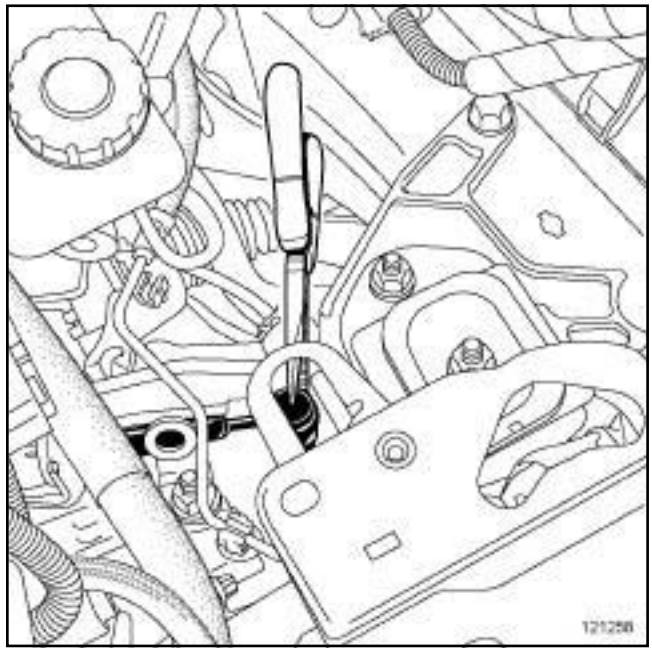

121258

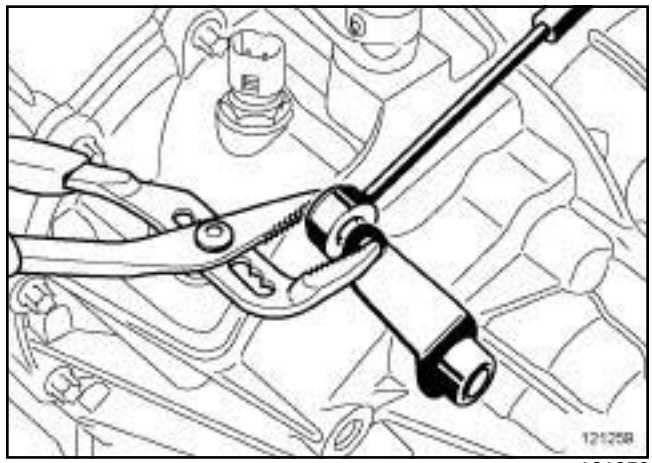

121259

❑ To refit, use pliers to clip the gear control cables to the ball joints.

❑ Perform rapid gearchanges for all gears for 20 seconds.

Check that the cables are not unclipped.

AJ0

Tightening torques ▽	
automatic gearbox control unit nuts	**21 Nm**

REMOVAL

I - REMOVAL PREPARATION OPERATION

❑

> Note:
>
> It is essential that the passenger compartment gear lever and the multifunction switch lever on the gearbox are in **D**.

❑ Position the vehicle on a two-post lift (see **Vehicle: Towing and lifting**) (02A, Lifting equipment).

❑ Move the gear lever to position D.

❑ Switch off the ignition.

❑ Remove:

- the central console (see **Centre console: Removal - Refitting**) (57A, Interior equipment),
- the engine cover,
- the engine undertray bolts,
- the engine undertray.
- the scuttle panel grille (see **Scuttle panel grille: Removal - Refitting**) (55A, Exterior protection).

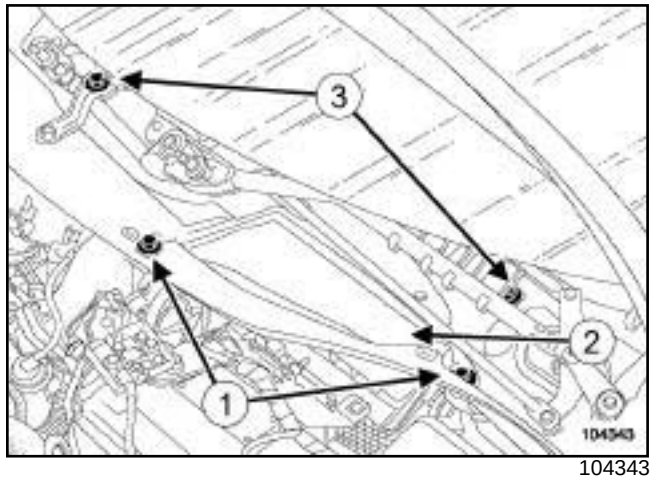

104343

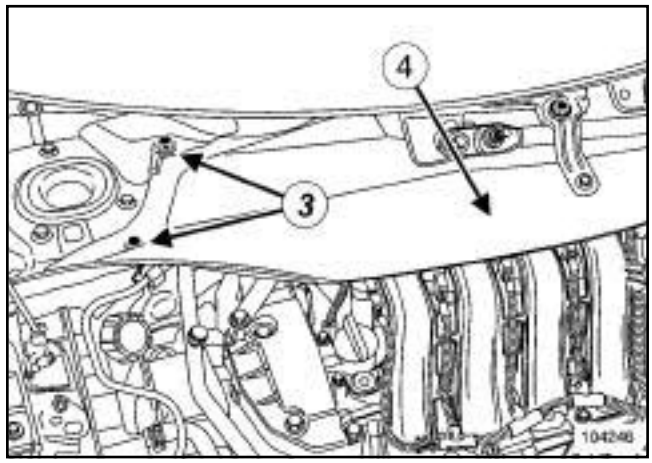

104246

❑ Remove:

- the air filter access panel bolts (**1**) ,
- the air filter access panel (**2**) ,
- the bolts (**3**) from the scoop under the scuttle panel grille,
- the scoop under the scuttle panel grille (**4**) .
- the battery (see **Battery: Removal - Refitting**) (80A, Battery)
- the battery tray (see **Battery tray: Removal - Refitting**) (80A, Battery),
- the injection computer (see **Diesel injection computer: Removal - Refitting**) (13B, Diesel injection),
- the air pipe at the air filter box outlet.

AJ0

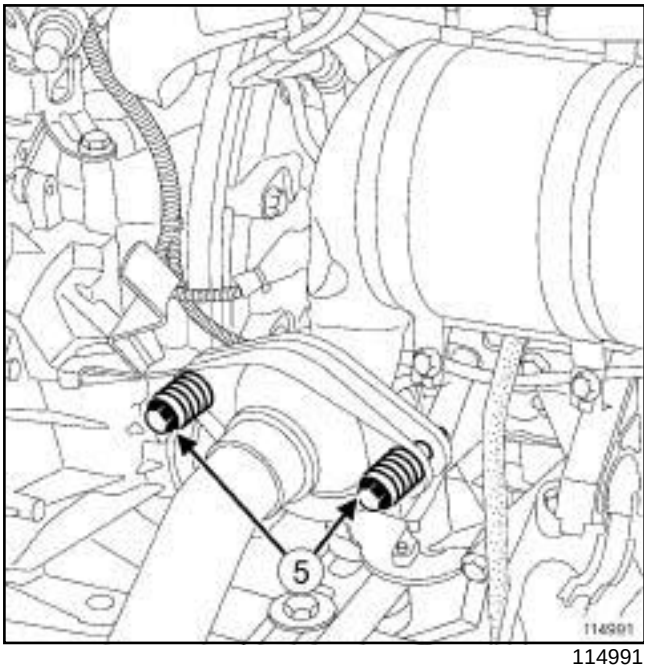

114991

- ❑ Remove the bolts (**5**) from the exhaust bracket.
- ❑ Move the exhaust pipe to one side.
- ❑ Disconnect the oxygen sensor connector.
- ❑ Remove the bolts from the heat shield.
- ❑ Move the heat shield towards the back of the vehicle.

II - OPERATION FOR REMOVAL OF PART CONCERNED

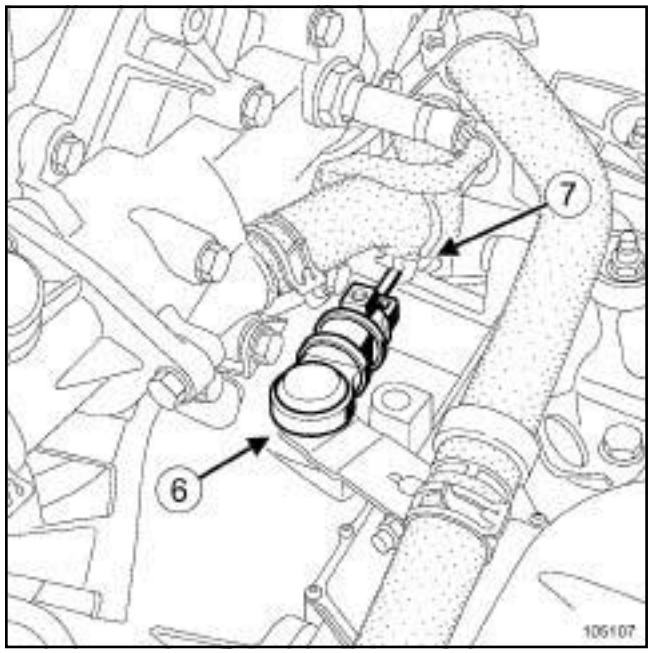

105107

- ❑ Unclip the control cable on the gearbox at:
  - the anchoring ball joint (**6**) using an open-jawed spanner,
  - from the cable sleeve stop (**7**) .

AJ0

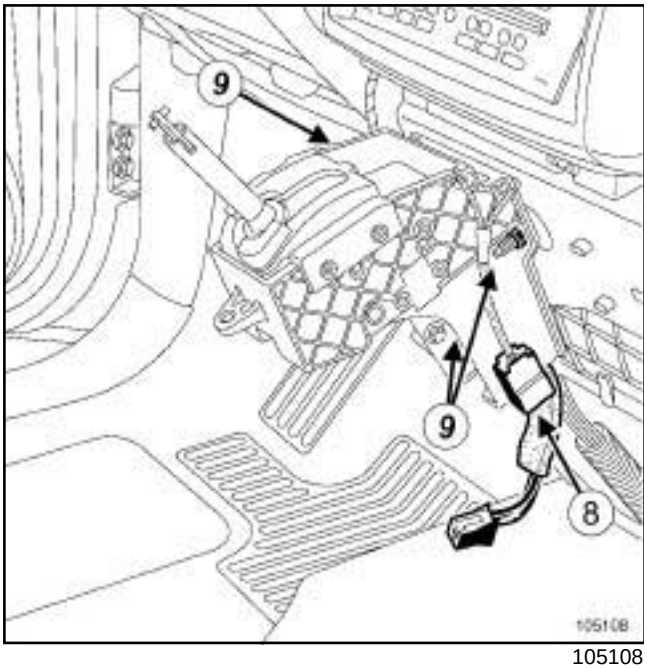

105108

- ❑ Disconnect the automatic gearbox control unit connector (**8**) .
- ❑ Remove:
  - the automatic gearbox control unit nuts (**9**) .
  - the bulkhead seal bolts.

> Note:
>
> Do not open the automatic gearbox control unit, it could cause damage (infrared system).

- ❑ Remove the "unit - automatic gearbox control cable" assembly through the passenger compartment.

REFITTING

I - REFITTING OPERATION FOR PART CONCERNED

- ❑ Refit:
  - the « unit - automatic gearbox control cable » assembly,
  - the bulkhead seal bolts.
- ❑ Torque tighten the **automatic gearbox control unit nuts (21 Nm)**.
- ❑ Connect the automatic gearbox control unit connector.
- ❑ Clip the control cable on the gearbox at the sleeve stop level.

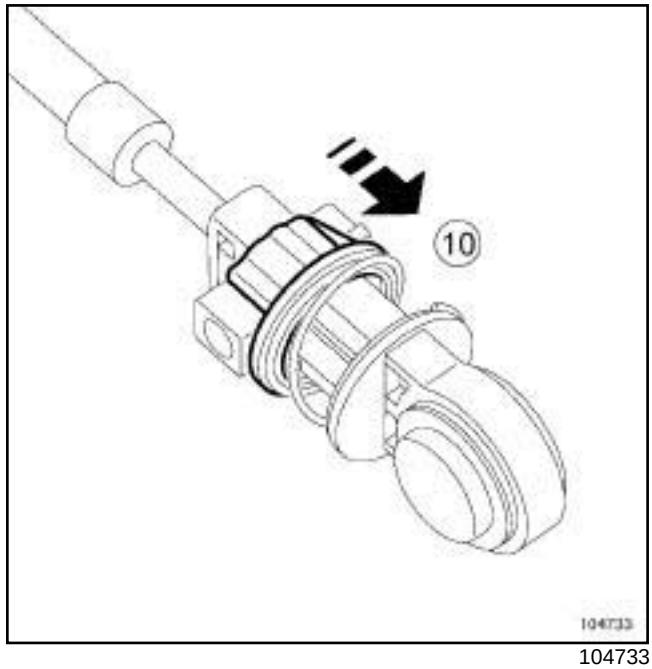

104733

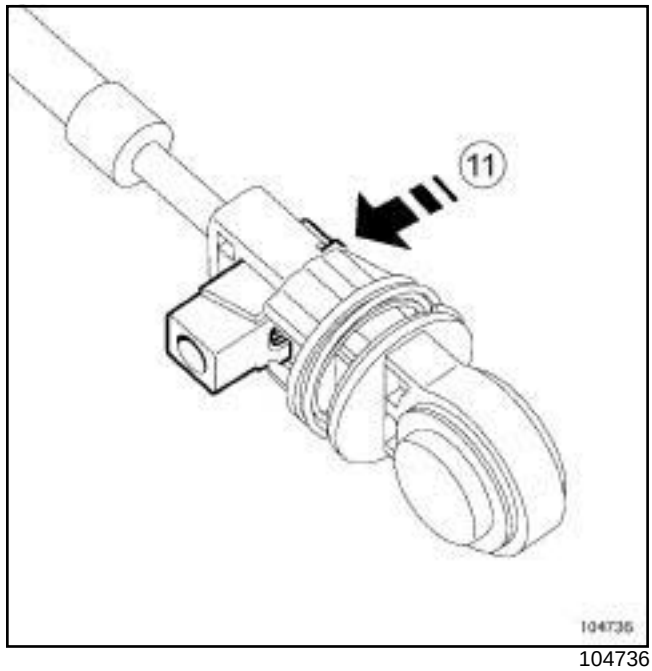

104736

- ❑ Compress the spring of the automatic gearbox control cable at (**10**) .
- ❑ Unlock the adjustment mechanism by pressing on the catch (**11**) .
- ❑ Adjust the length of the automatic gearbox control cable.
- ❑ Clip the automatic gearbox control cable anchoring ball joint on the automatic gearbox.
- ❑ Lock the adjustment mechanism while pushing back the catch to its initial position.

AJ0

II - FINAL OPERATION.

❏ Refit the heat shield.

❏ Connect the oxygen sensor connector.

❏ Refit:

- the exhaust pipe,
- the air pipe at the air filter box outlet,
- the injection computer (see **Diesel injection computer: Removal - Refitting**) (13B, Diesel injection),
- the battery tray (see **Battery tray: Removal - Refitting**) (80A, Battery),
- the battery (see **Battery: Removal - Refitting**) (80A, Battery)
- the scuttle panel grille scoop,
- the air filter access panel,
- the scuttle panel grille (see **Scuttle panel grille: Removal - Refitting**) (55A, Exterior protection),
- the engine undertray,
- the engine cover,
- the central console (see **Centre console: Removal - Refitting**) (57A, Interior equipment).

❏ Check that the system and gear selection are working correctly.

LEFT-HAND DRIVE

Tightening torques ▽	
clutch pedal plate nuts	**2.1 daNm**

REMOVAL

❑ Disconnect the battery, starting with the negative terminal.

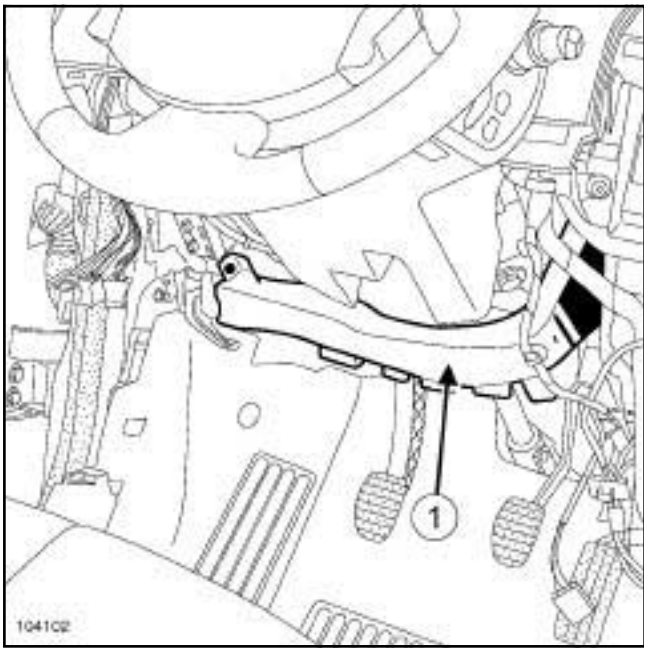

104102

❑ Remove:

- the lower left-hand cover (see (see **5**, **Mechanisms and accessories**)),
- the air duct (**1**) .

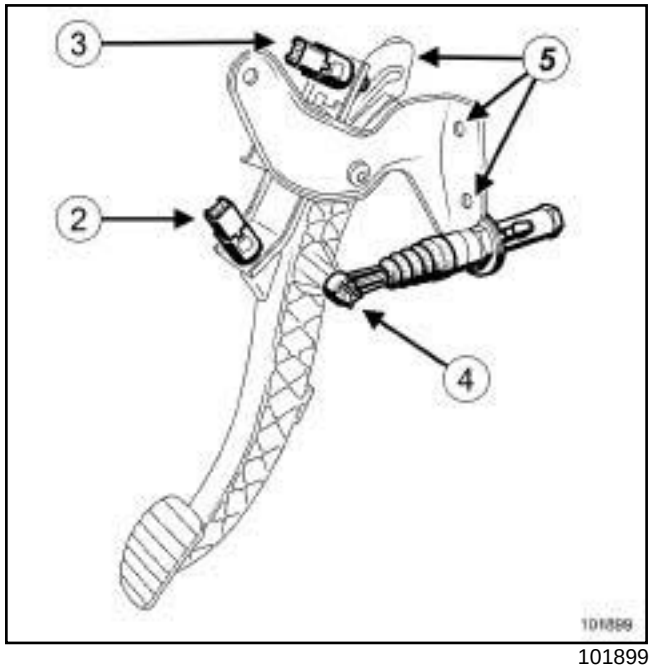

101899

❑ Remove the grey start of travel switch (**2**) by turning it a quarter of a turn.

❑ Disconnect the connector from the switch (**2**) .

❑ Remove the green end of travel switch (**3**) by turning it a quarter of a turn.

❑ Disconnect the connector from the switch (**3**) .

❑ Remove the clutch master cylinder ball joint from the pedal (**4**) .

❑ Disconnect the clutch pedal position sensor connector.

❑ Remove the clutch pedal position sensor.

❑ Remove the three clutch pedal nuts (**5**) .

❑ Withdraw the clutch pedal assembly.

REFITTING

❑ To refit, proceed in the reverse order of removal.

❑ Torque tighten the **clutch pedal plate nuts (2.1 daNm)**.

❑ It is essential that the sensors are pulled to the end stop to position them at the minimum.

The clutch pedal position sensors have an automatic adjustment function which adjusts in accordance with the position of the pedal.

LEFT-HAND DRIVE

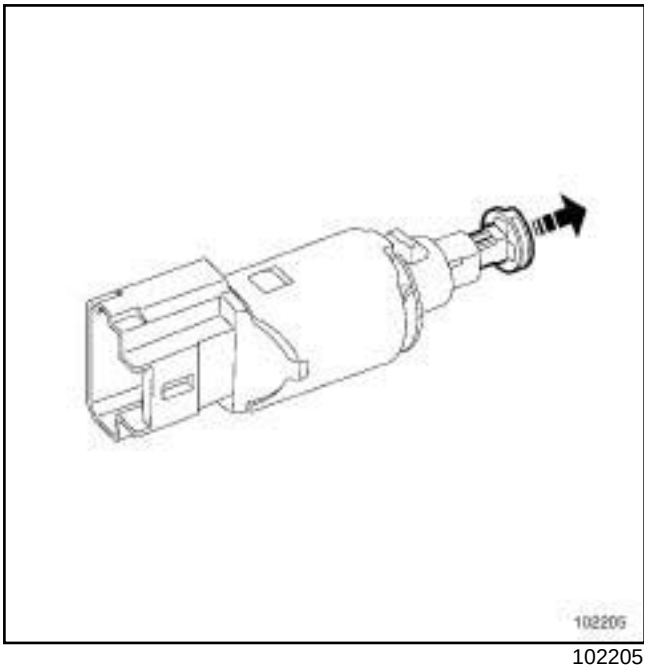

102205

- ❑ Position the switches in their housing.
- ❑ Turn them one quarter turn clockwise.
- ❑ Reconnect the two clutch pedal switches.

WARNING
Connect the battery. carry out the necessary programming (see (see **8**, **Electrical equipment**)).

RIGHT-HAND DRIVE

Tightening torques ▽	
clutch pedal plate nuts	**2.1 daNm**

REMOVAL

❑ Disconnect the battery, starting with the negative terminal.

> Note:
>
> The clutch master cylinder is mounted on the clutch pedal assembly. Remove the « pedal - master cylinder » assembly to extract the pedal or master cylinder.

❑ Drain the brake fluid reservoir until the level is below the master cylinder supply port.

❑ Remove:

- the engine covers,
- the scuttle panel grill ((see **85A**, **Wiping - Washing**)).

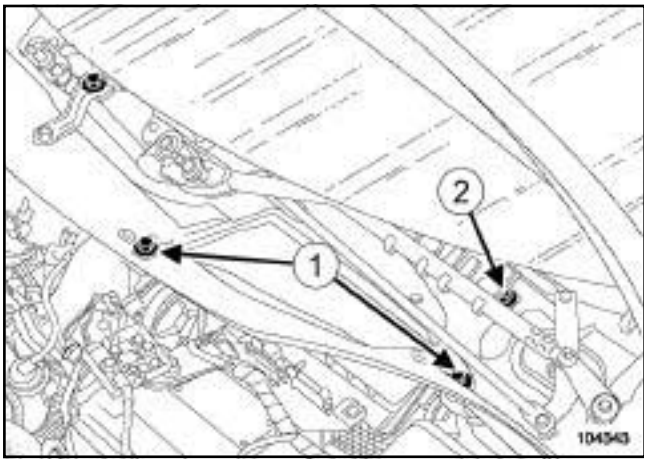

104343

❑ Remove:

- the two air filter access panel mounting bolts (**1**) ,
- the air filter access panel,
- the mounting bolt (**2**) from the scuttle panel partition.

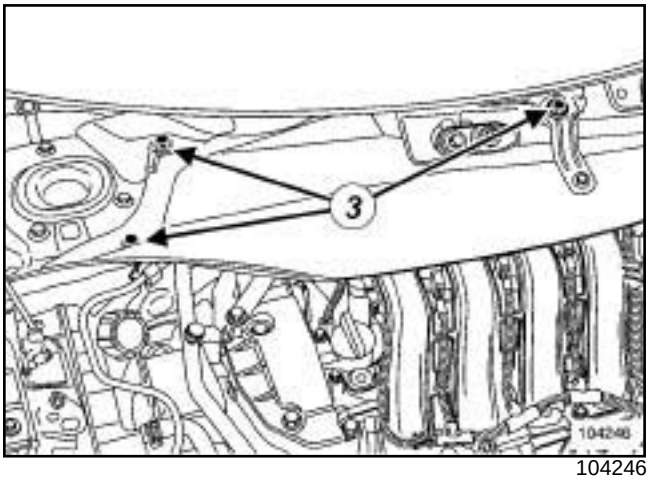

104246

❑ Remove:

- the radiator tank partition mounting bolts (**3**) ,
- the scuttle panel partition.

❑ Remove:

- the battery,
- the battery tray,
- the computer with its mounting,
- the air filter outlet duct.

❑ Drain the brake fluid reservoir until the level is below the master cylinder supply port.

RIGHT-HAND DRIVE

JH3 or JR5

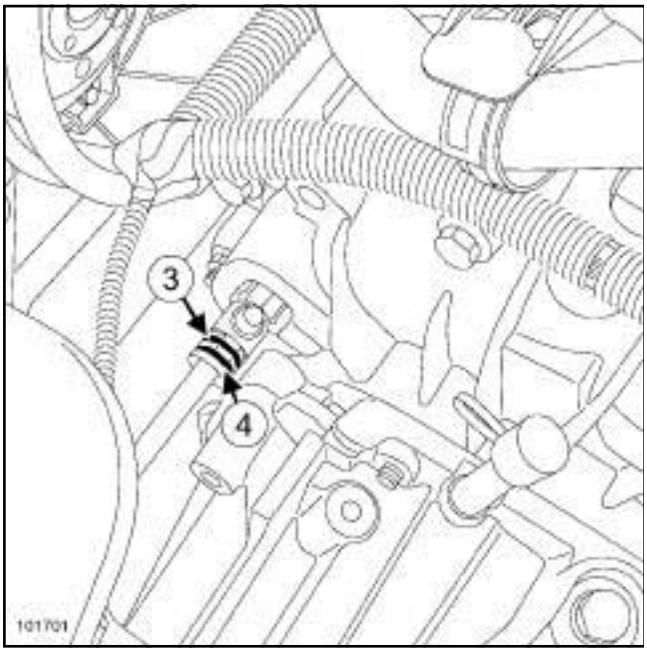

101701

- ❑ Lift up the clip (**3**) .
- ❑ Pull out the clutch control pipe by one notch.
- ❑ Place a cloth under the bleed port.
- ❑ Operate the pedal by hand to empty the master cylinder and the pipes.
- ❑ Lift up the clip (**4**) .
- ❑ Disconnect the pipes from the slave cylinder.
- ❑ Fit plugs into the openings.

ND0

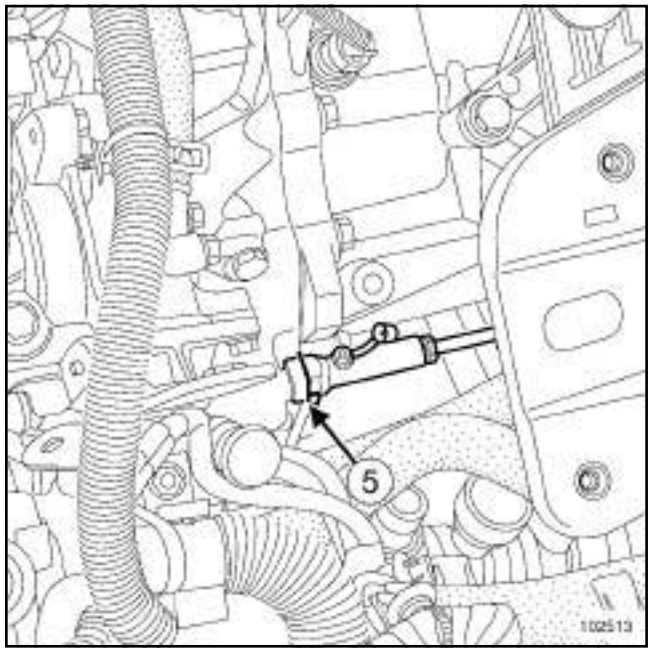

102513

- ❑ Apply pressure to the clip (**5**) manually, whilst pulling on the pipe.

> **WARNING**
> Do not pull the clip. If it is incorrectly handled in any way, the pipe will need to be replaced.

- ❑ Pull out the pipes on the clutch control by one position.
- ❑ Place a cloth under the bleed port.
- ❑ Operate the pedal by hand to empty the master cylinder and the pipes.
- ❑ Remove clip (**5**) .
- ❑ Disconnect the pipes from the slave cylinder.
- ❑ Fit plugs into the openings.

RIGHT-HAND DRIVE

In the passenger compartment

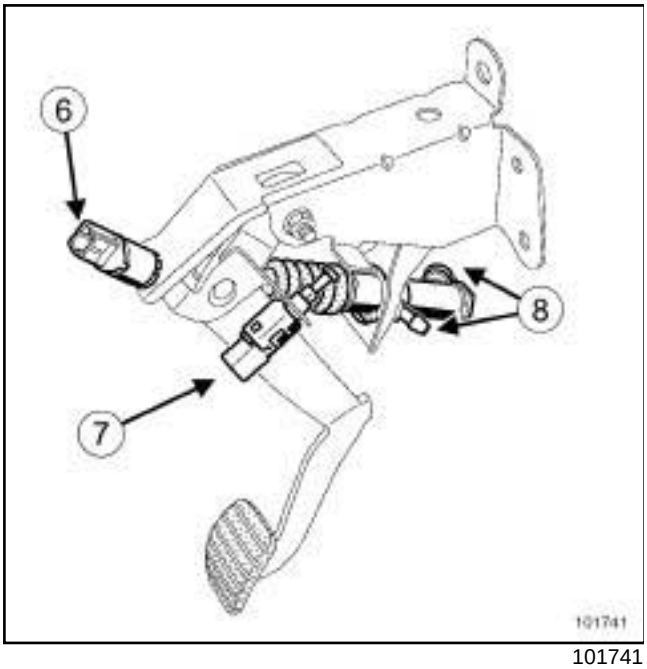

101741

- ❑ Remove the grey start of travel switch (**6**) by turning it a quarter of a turn.
- ❑ Disconnect the connector from the switch (**6**) .
- ❑ Remove the green end of travel switch (**7**) by turning it a quarter of a turn.
- ❑ Disconnect the connector from the switch (**7**) .
- ❑ Place a cloth under the master cylinder.
- ❑ Remove the union clips on the master cylinder (**8**) .
- ❑ Disconnect the pipes.
- ❑ Fit plugs into the openings.
- ❑ Remove the clutch master cylinder ball joint from the pedal.
- ❑ Disconnect the clutch pedal position sensor connector.
- ❑ Remove the clutch pedal position sensor.
- ❑ Remove the four clutch plate nuts.
- ❑ Extract the « pedal - master cylinder » assembly.
- ❑ Remove the master cylinder from the pedal assembly by turning it clockwise a quarter of a turn (bayonet type mounting).

REFITTING

- ❑ Check the condition of the seals.
- ❑ To refit, proceed in the reverse order of removal.
- ❑ Torque tighten the **clutch pedal plate nuts (2.1 daNm)**.
- ❑ It is essential that the sensors are pulled to the end stop to position them at the minimum.

  The clutch pedal position sensors have an automatic adjustment function which adjusts in accordance with the position of the pedal.

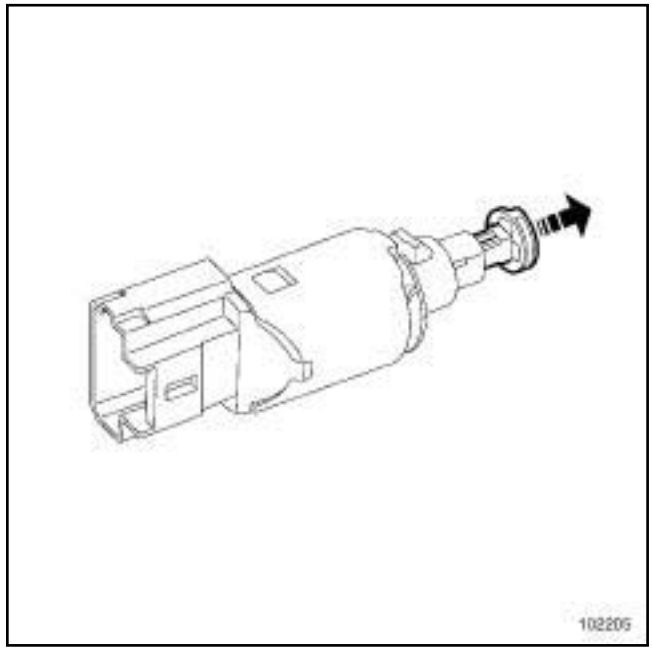

102205

- ❑ Position the switches in their housing.
- ❑ Turn them one quarter turn clockwise.
- ❑ Reconnect the two clutch pedal switches.
- ❑ Bleed the clutch control (see **37A**, **Mechanical component controls**, **Clutch circuit: Bleeding**, page **37A-73**) .

WARNING

Connect the battery. carry out the necessary programming (see (see **8**, **Electrical equipment**)).

AUTOMATIC PARKING BRAKE, and 5 SPEED MANUAL GBOX or 6 SPEED MANUAL GBOX

Essential equipment
diagnostic tool

REMOVAL

I - REMOVAL PREPARATION OPERATION

❑ Switch off the ignition.

❑ Disconnect the battery (see **Battery: Removal - Refitting**) (80A, Battery).

❑ Remove the dashboard lower trim.

II - OPERATION FOR REMOVAL OF PART CONCERNED

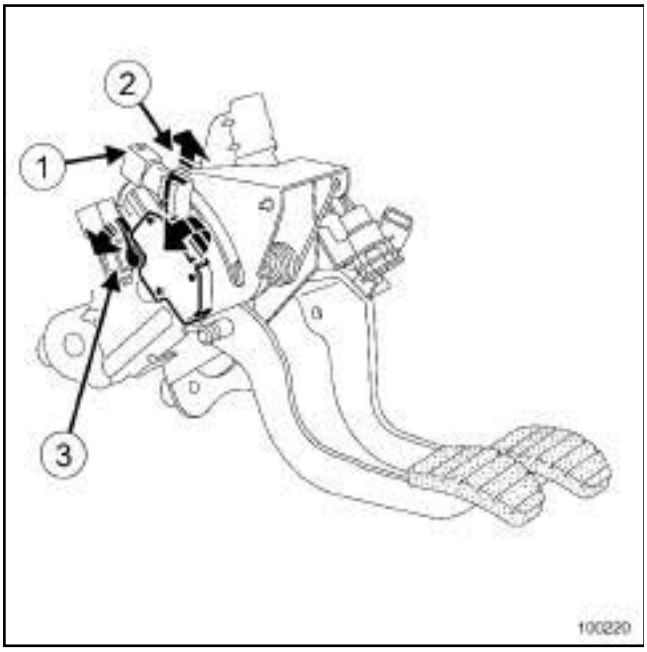

100220

❑ Disconnect the position sensor connector (**1**) from the clutch pedal.

❑ Unlock:

- the section connected to the pedal by undoing lock (**2**) ,
- the sensor body by moving the lock (**3**) .

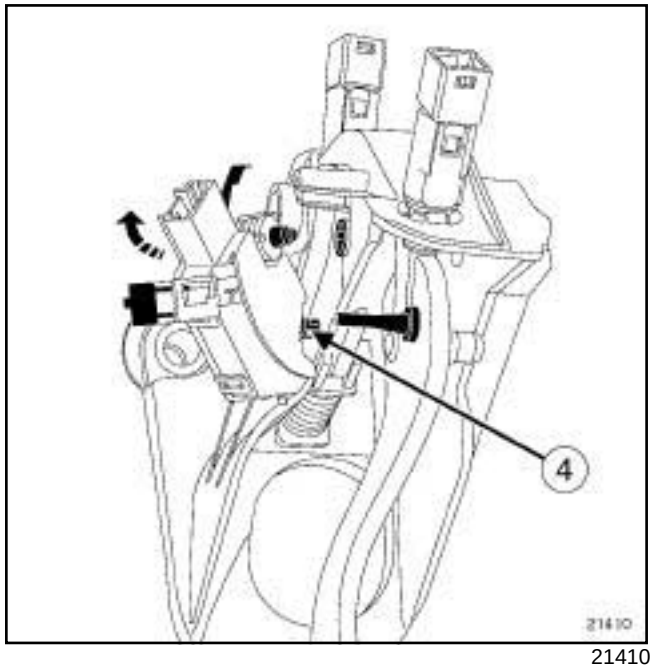

21410

❑ Tilt the clutch pedal position sensor, taking care not to damage the sensor lower mounting bracket.

REFITTING

I - REFITTING OPERATION FOR PART CONCERNED

❑ Refit the clutch pedal position sensor.

❑ Lock the sensor body.

❑ Connect the clutch pedal position sensor connector.

❑ Refit the dashboard lower trim.

II - FINAL OPERATION

❑ Connect the battery (see **Battery : Removal - Refitting**) (80A, Battery).

❑ Switch on the + after ignition feed.

❑ Always ensure that the operation of the clutch pedal position sensor is checked using the **diagnostic tool**.

JH3 or JR5 or ND0 or PK4, and LEFT-HAND DRIVE

REMOVAL

❑ Position the vehicle on a two-post lift (see **Vehicle: Towing and lifting**) (MR 370, 02A, Lifting equipment).

❑ Disconnect the battery (see **Battery: Removal - Refitting**) (MR 370, 80A, Battery).

❑ Remove:

- the engine cover,
- the scuttle panel grille (see **Scuttle panel grille: Removal - Refitting**) (MR 371, 55A, Exterior protection).

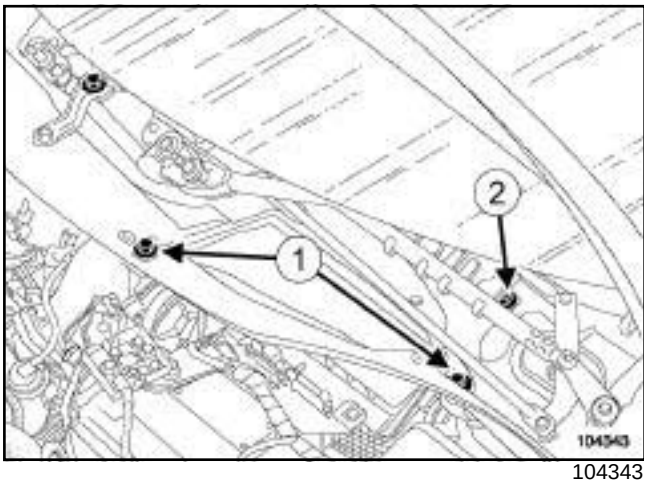

104343

❑ Remove:

- the two air filter access panel mounting bolts (**1**) ,
- the air filter access panel,
- the scuttle panel partition mounting bolt (**2**) .

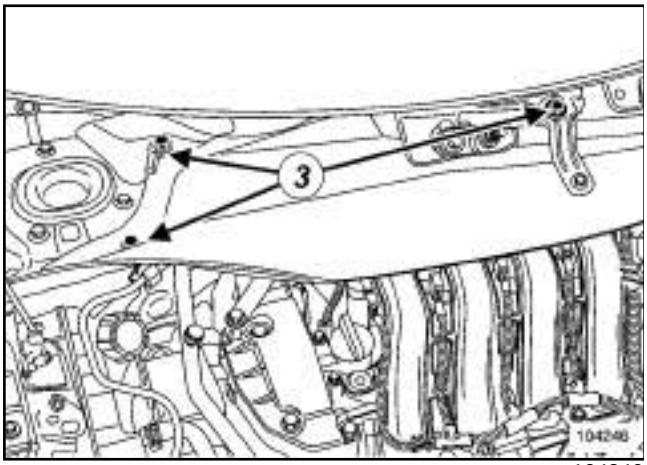

104246

❑ Remove:

- the scuttle panel partition mounting bolts (**3**) ,
- the scuttle panel partition,
- the battery (see **Battery: Removal - Refitting**) (MR 370, 80A, Battery),
- the battery tray with the injection computer,
- the air filter box (see **Air filter unit: Removal - Refitting**) (MR 370, 12A, Fuel mixture).

❑ Drain the brake fluid reservoir using a syringe until the level is below the master cylinder supply orifice.

JH3 or JR5

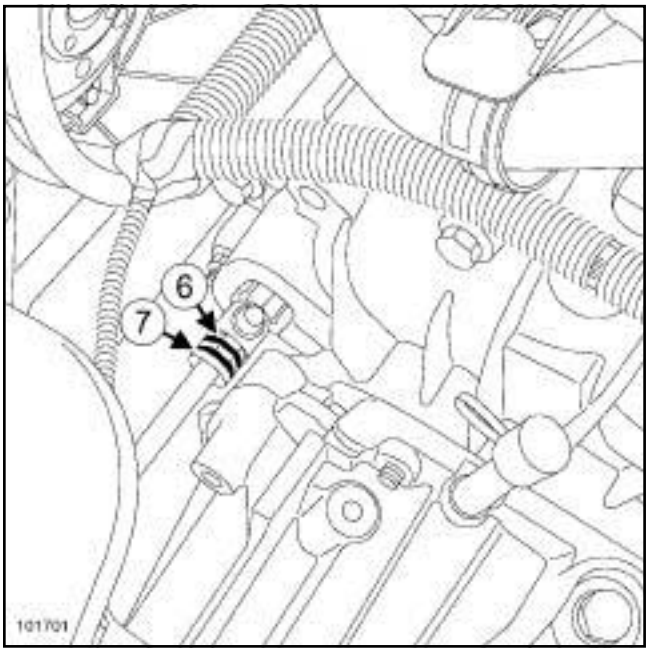

101701

❑ Lift up clip (**6**) .

❑ Pull out the master cylinder control pipe by one notch.

❑ Place a cloth under the bleed hole.

❑ Operate the pedal by hand to empty the master cylinder and the pipe.

❑ Lift up clip (**7**) .

❑ Disconnect the pipes from the slave cylinder.

❑ Fit plugs into the openings.

JH3 or JR5 or ND0 or PK4, and LEFT-HAND DRIVE

ND0

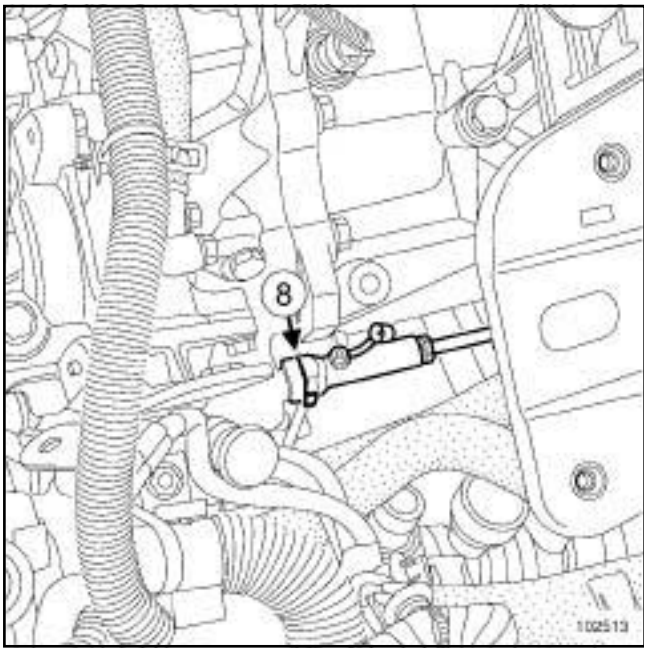

102513

- ❑ Apply pressure to the clip (**8**) manually, whilst pulling on the pipe.

> **WARNING**
> Do not pull the clip. If it is incorrectly handled in any way, the pipe will need to be replaced.

- ❑ Pull out the master cylinder control pipe by one notch.
- ❑ Place a cloth under the bleed hole.
- ❑ Depress the pedal using your hand (to drain the master cylinder and the pipe).
- ❑ Press the clip (**8**) .
- ❑ Disconnect the pipes from the slave cylinder.
- ❑ Fit plugs into the openings.

PK4

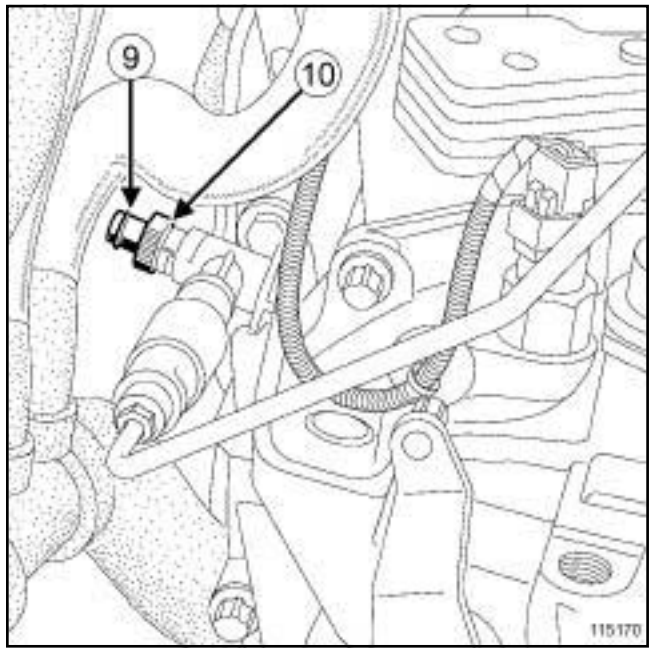

115170

- ❑ Remove:
  - the engine undertray,
  - the bleed plug (**9**) .
- ❑ Connect a transparent pipe to the bleed hole running to an empty container placed under the bleed hole.
- ❑ Turn the end (**10**) of the slave cylinder anticlockwise as far as it will go.
- ❑ Depress the pedal using your hand (to drain the master cylinder and the pipe).

JH3 or JR5 or ND0 or PK4, and LEFT-HAND DRIVE

PK4

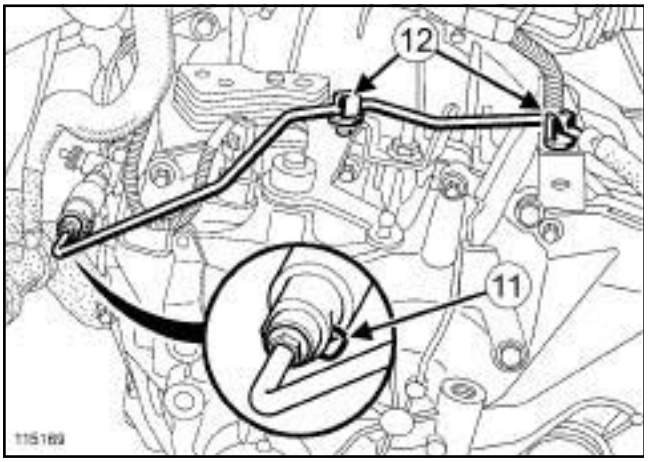

115169

- ❑ Lift up clip (**11**) .
- ❑ Disconnect the pipes from the slave cylinder.
- ❑ Fit plugs into the openings.
- ❑ Unclip the pipe at (**12**) .

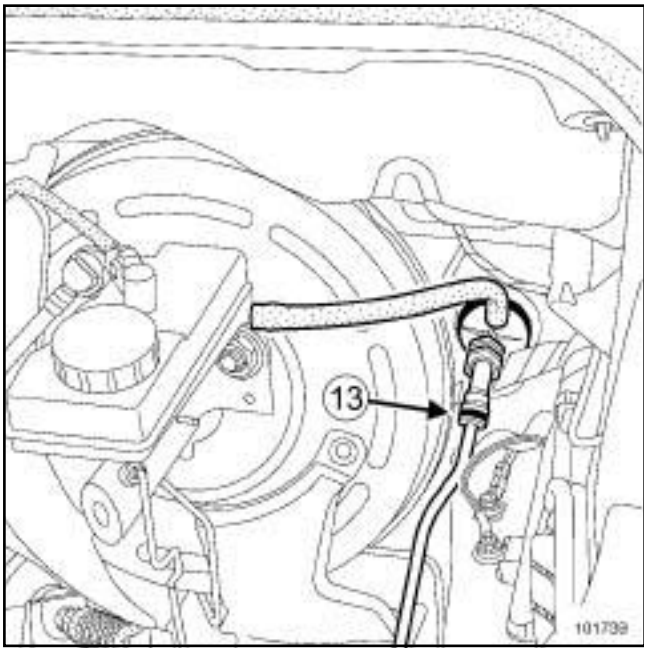

101739

- ❑ Place a cloth under the master cylinder.
- ❑ Remove the clip (**13**) from the union on the master cylinder return.
- ❑ Disconnect the pipes from the slave cylinder.
- ❑ Fit plugs into the openings.
- ❑ Withdraw the slave cylinder supply pipe.

REFITTING

- ❑ Check the condition of the seals.
- ❑ Proceed in the reverse order to removal.
- ❑ Bleed the clutch control (see **37A**, **Mechanical component controls**, **Clutch circuit: Bleeding**, page **37A-73**) .
- ❑ Check that the clutch system is operating correctly.
- ❑ Connect the battery (see **Battery : Removal - Refitting**) (MR 370, 80A, Battery).

JH3 or JR5 or ND0 or PK4, and RIGHT-HAND DRIVE

Essential special tooling	
Emb. 1797	24 mm socket for removing and refitting clutch master cylinder

REMOVAL

❑ Position the vehicle on a two-post lift (see **Vehicle: Towing and lifting**) (MR 370, 02A, Lifting equipment).

❑ Disconnect the battery (see **Battery: Removal - Refitting**) (MR 370, 80A, Battery).

❑ Remove:

- the engine cover,
- the scuttle panel grille (see **Scuttle panel grille: Removal - Refitting**) (MR 371, 55A, Exterior protection).

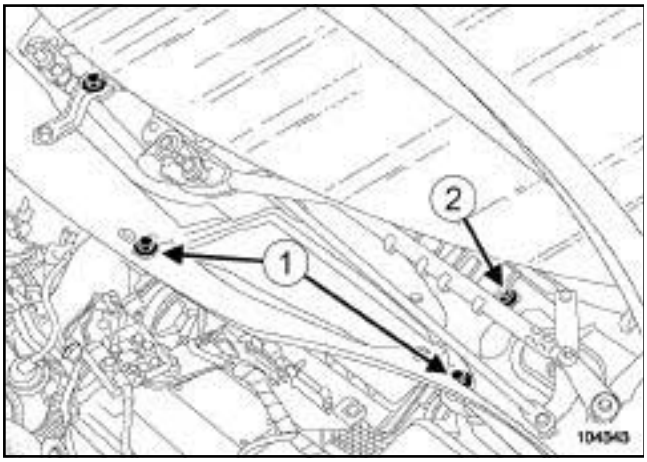

104343

❑ Remove:

- the two air filter access panel mounting bolts (**1**) ,
- the air filter access panel,
- the scuttle panel partition mounting bolt (**2**) .

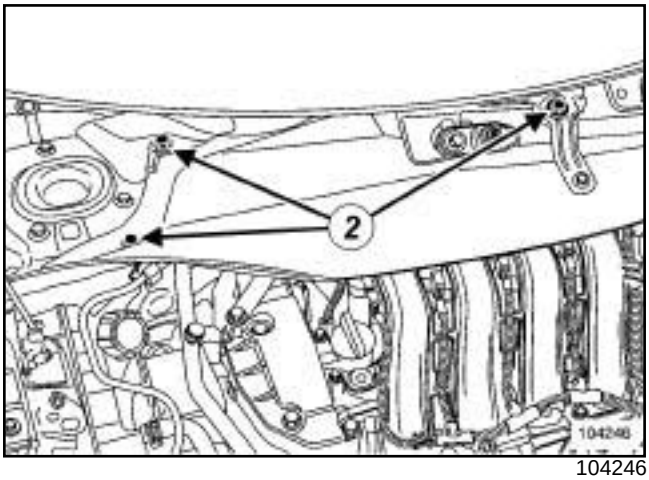

104246

❑ Remove:

- the scuttle panel partition mounting bolts (**2**) ,
- the scuttle panel partition,
- the battery (see **Battery: Removal - Refitting**) (MR 370, 80A, Battery),
- the battery tray with the injection computer,
- the air filter box (see **Air filter unit: Removal - Refitting**) (MR 370, 12A, Fuel mixture).

❑ Drain the brake fluid reservoir using a syringe until the level is below the master cylinder supply orifice.

JH3 or JR5 or ND0 or PK4, and RIGHT-HAND DRIVE

JH3 or JR5

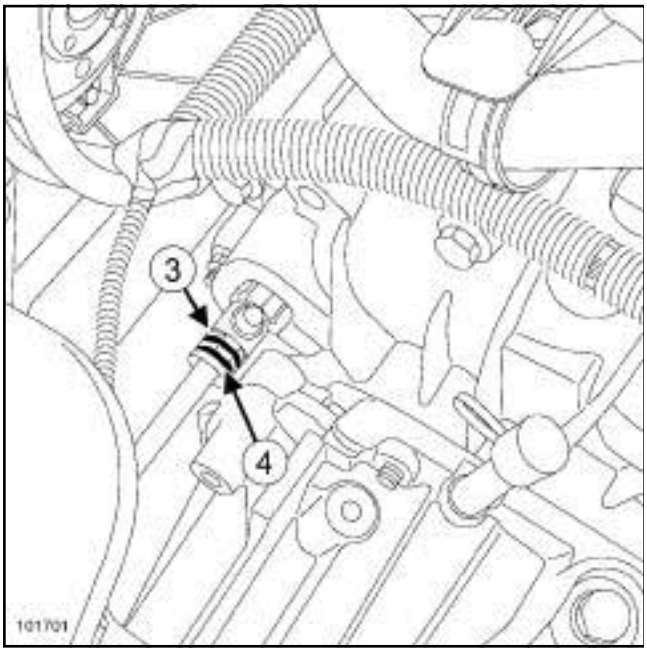

101701

- ❑ Lift up clip (**3**) .
- ❑ Pull out the master cylinder control pipe by one notch.
- ❑ Place a cloth under the bleed hole.
- ❑ Operate the pedal by hand to empty the master cylinder and the pipe.
- ❑ Lift up clip (**4**) .
- ❑ Disconnect the pipes from the slave cylinder.
- ❑ Fit plugs into the openings.

ND0

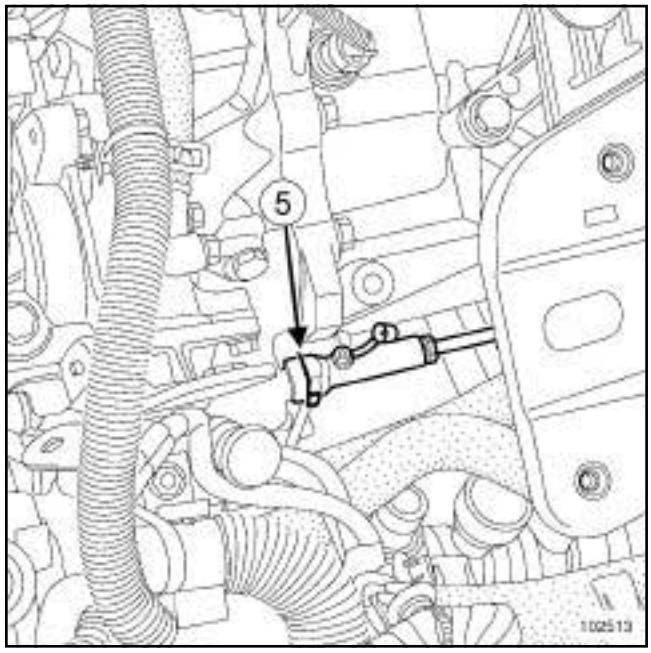

102513

- ❑ Apply pressure to the clip (**5**) manually, whilst pulling on the pipe.

WARNING
Do not pull the clip. If it is incorrectly handled in any way, the pipe will need to be replaced.

- ❑ Pull out the master cylinder control pipe by one notch.
- ❑ Place a cloth under the bleed hole.
- ❑ Depress the pedal using your hand (to drain the master cylinder and the pipe).
- ❑ Press the clip (**5**) .
- ❑ Disconnect the pipes from the slave cylinder.
- ❑ Fit plugs into the openings.

JH3 or JR5 or ND0 or PK4, and RIGHT-HAND DRIVE

PK4

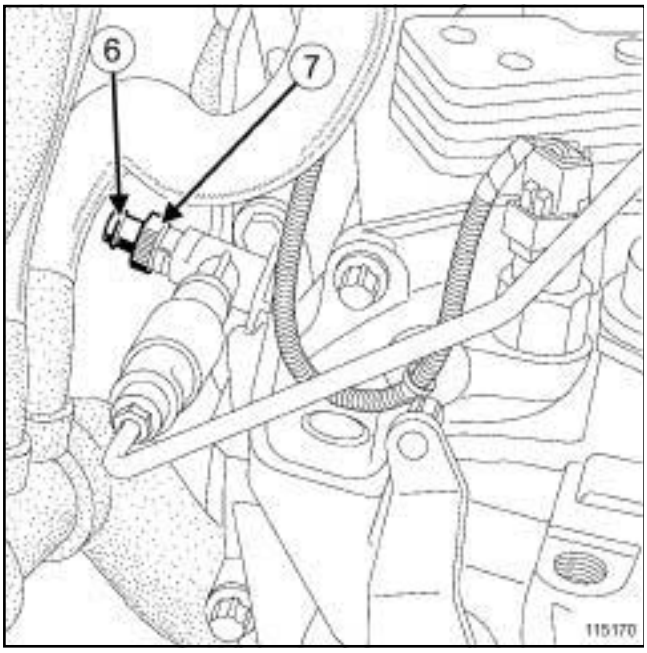

115170

- ❑ Remove:
  - the engine undertray,
  - the bleed plug (**6**) .
- ❑ Connect a transparent pipe to the bleed hole running to an empty container placed under the bleed hole.
- ❑ Turn the end (**7**) of the slave cylinder anticlockwise as far as it will go.
- ❑ Depress the pedal using your hand (to drain the master cylinder and the pipe).

PK4

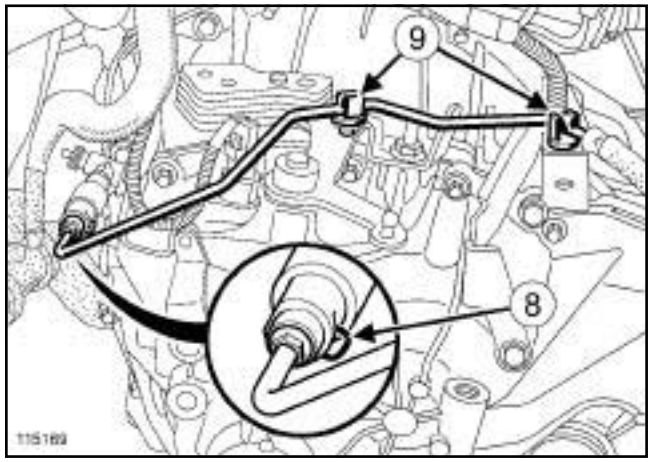

115169

- ❑ Pull out clip (**8**) .
- ❑ Disconnect the pipes from the slave cylinder.
- ❑ Fit plugs into the openings.
- ❑ Unclip the pipe at (**9**) .

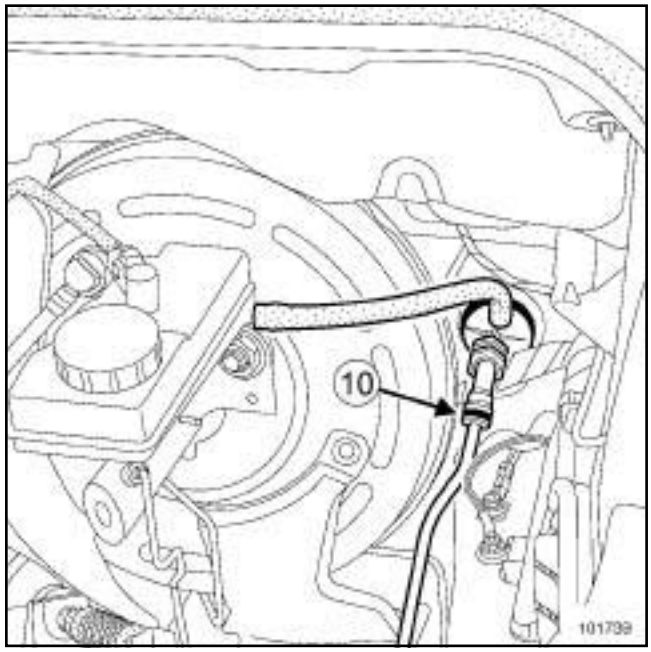

101739

- ❑ Place a cloth under the master cylinder.
- ❑ Remove the clip (**10**) from the union on the master cylinder return.
- ❑ Disconnect the pipes from the slave cylinder.
- ❑ Fit plugs into the openings.
- ❑ Take out the slave cylinder supply pipe.

JH3 or JR5 or ND0 or PK4, and RIGHT-HAND DRIVE

❏ Remove:

- the left-hand glove compartment,
- the left-hand air duct.

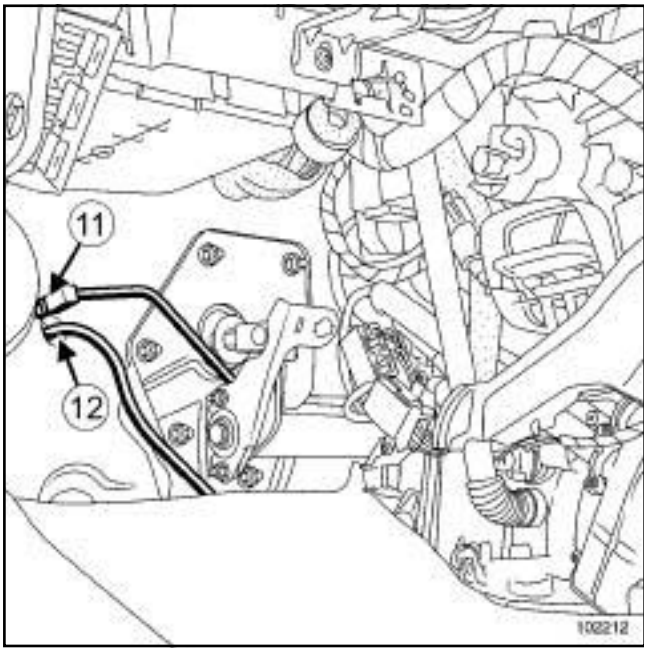

102212

❏ Place a cloth under the pipe unions.

❏ Remove the clip (**11**) from the master cylinder union on the master cylinder return.

❏ Disconnect the pipes.

❏ Fit plugs into the openings.

❏ Remove the clip (**12**) from the slave cylinder supply union on the master cylinder return.

❏ Disconnect the pipes.

❏ Fit plugs into the openings.

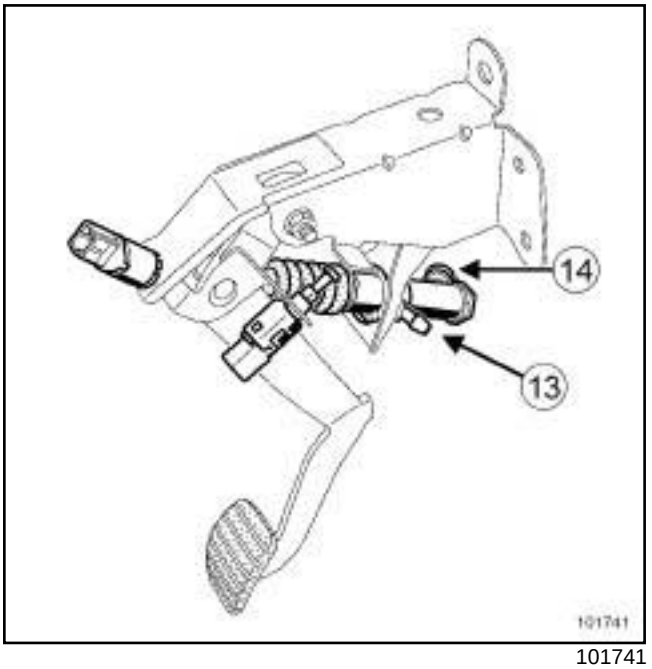

101741

❏ Place a cloth under the master cylinder.

❏ Remove the clip (**13**) from the master cylinder supply union on the master cylinder return.

❏ Disconnect the pipes.

❏ Fit plugs into the openings.

❏ Withdraw the master cylinder supply pipe from the left-hand side.

❏ Remove the clip (**14**) from the slave cylinder supply union on the master cylinder return.

❏ Disconnect the pipes.

❏ Fit plugs into the openings.

❏ Withdraw the slave cylinder supply pipe from the left-hand side.

JH3 or JR5 or ND0 or PK4, and RIGHT-HAND DRIVE

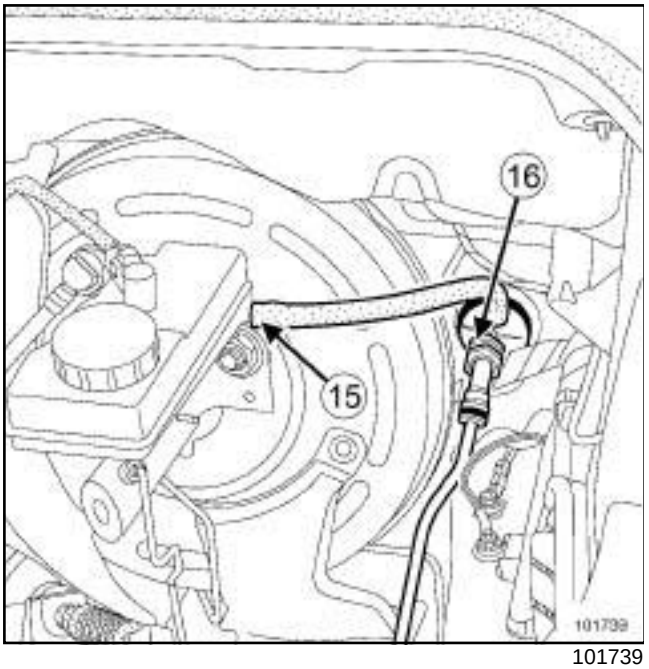

101739

- ❑ Place a cloth under the hole (**15**) .
- ❑ Remove the brake fluid reservoir pipe.
- ❑ Fit plugs into the openings.
- ❑ Remove the master cylinder return (**16**) from the bulkhead by turning it clockwise a quarter of a turn (bayonet type mounting) using the **(Emb. 1797)**.

REFITTING

- ❑ Check the condition of the seals.
- ❑ Proceed in the reverse order to removal.
- ❑ Bleed the clutch control (see **37A**, **Mechanical component controls**, **Clutch circuit: Bleeding**, page **37A-73**) .
- ❑ Check that the clutch system is operating correctly.
- ❑ Connect the battery (see **Battery : Removal - Refitting**) (MR 370, 80A, Battery).

Clutch circuit: Bleeding

JH3 or JR5 or ND0 or PK4 or TL4

Essential equipment
brake circuit bleeding device
hydraulic circuit bleed syringe

Bleed in the event of:

- dead travel,
- pedal at mid-travel,
- pedal to the floor,
- poor gear changing.

I - PRECAUTIONS DURING REPAIR

Risks relating to contamination.

❑ The hydraulic clutch system is very sensitive to contamination. The risks caused by contamination are:

- impossible to change gears,
- damage to or destruction of the clutch system,
- leaks on the hydraulic circuit.

All the operations on the hydraulic clutch circuit system must be carried out under excellent cleanliness conditions. This ensures that no impurities enter the hydraulic circuit during the operation.

The cleanliness principles apply to all components of the hydraulic clutch circuit.

Items causing contamination are:

- metal or plastic swarf,
- fibres:
  - cardboard,
  - brushes,
  - paper,
  - clothing,
  - cloth,
  - dust and particles in the air,
  - etc.

Cleaning cloths.

❑ Use lint-free cleaning cloths (see **Recommended products for repairwork**) (04B, Consumables - Products).

Each cloth must only be used once.

There are two types of equipment used to bleed the clutch circuit:

❑ ARC50 via the brake fluid reservoir.

❑ Syringe via the bleed hole located on the clutch slave cylinder.

There are two procedures used to bleed the clutch circuit:

❑ If no parts of the clutch hydraulic circuit are removed:

- Carry out the bleed operation using the ARC50 via the brake fluid reservoir or using a new syringe via the bleed hole located on the clutch slave cylinder.

❑ If no parts of the clutch hydraulic circuit are removed:

- Only carry out the bleed operation using a new syringe by injecting the brake fluid via the bleed hole on the clutch slave cylinder.

Note:

- Even the tiniest air bubble in the circuit can cause faulty operation (pedal failing to return properly, crunching sound when changing gear, etc.).
- Incorrect bleeding can lead to incorrect detection of faults and unnecessary part replacements.

Consumables required for the repair:

❑ Bleed the clutch circuit using approved (see **Vehicle: Parts and ingredients for the repairwork**) brake fluid (04B, consumables - products).

II - PREPARATION STAGE

❑ Position the vehicle on a two-post lift (see **Vehicle: Towing and lifting**) (02A, Lifting equipment).

❑ Remove the engine undertray.

JH3 or JR5 or ND0 or PK4 or TL4

There are several versions of bleed screw:

Screw type bleed screw.

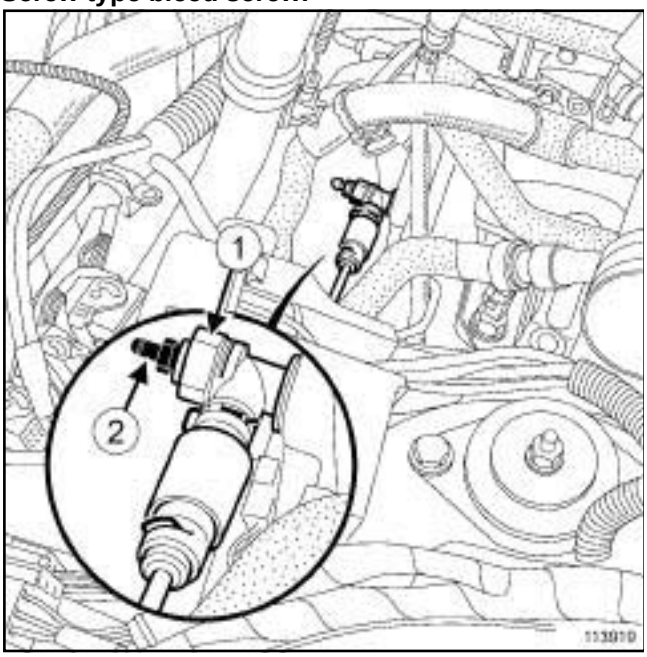

113919

❑ To open the bleed screw, hold the plastic union (**1**) using a ring spanner and undo the bleed screw (**2**) .

Half-turn bleed screw.

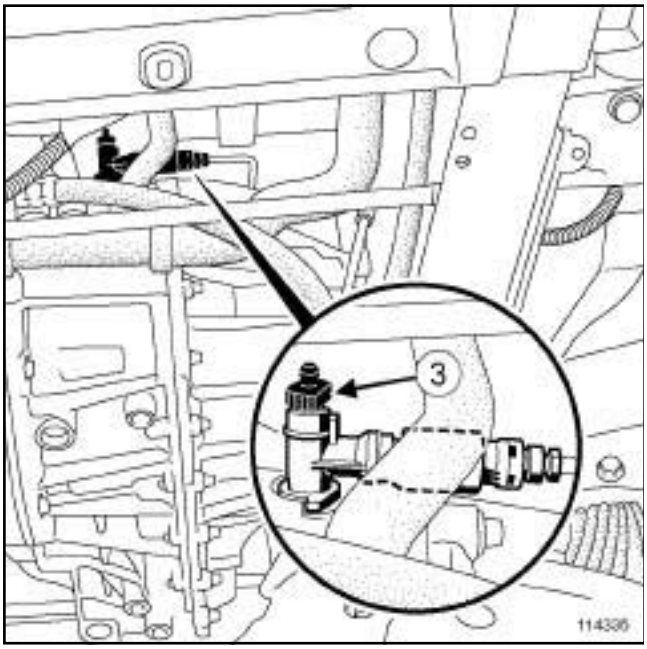

114335

❑ To open the bleed screw, fully turn the bleed screw (**3**) by hand.

Bleed screw with a clip.

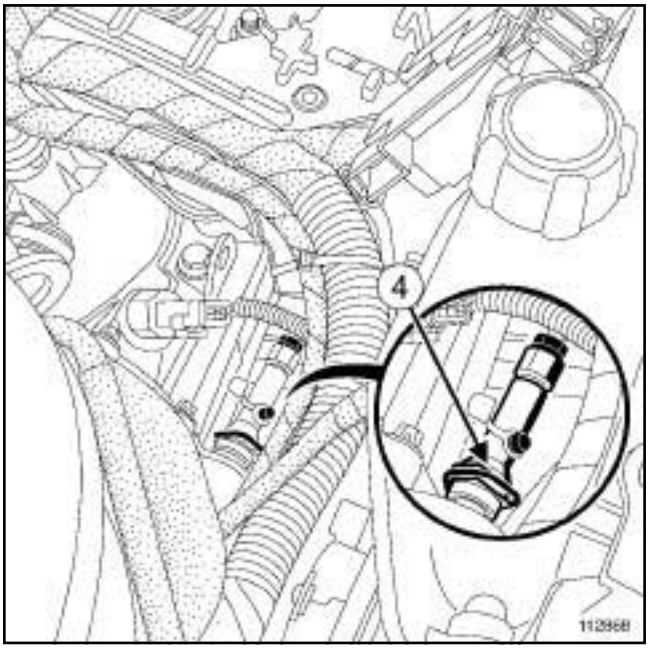

112868

❑ To open the bleed screw, press and hold the clip (**4**) while pulling by one notch.

Bleed screw with a clip.

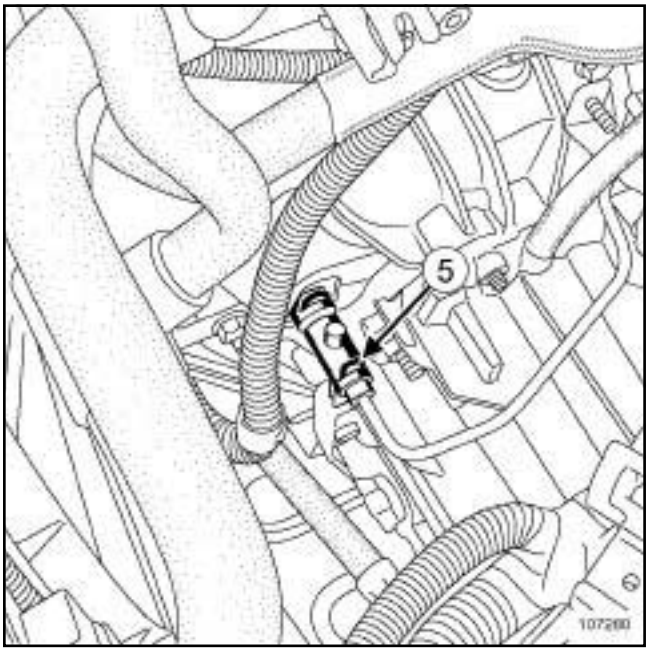

107280

❑ To open the bleed screw, lift the clip (**5**) while pulling by one notch.

JH3 or JR5 or ND0 or PK4 or TL4

Bleed screw with two clips.

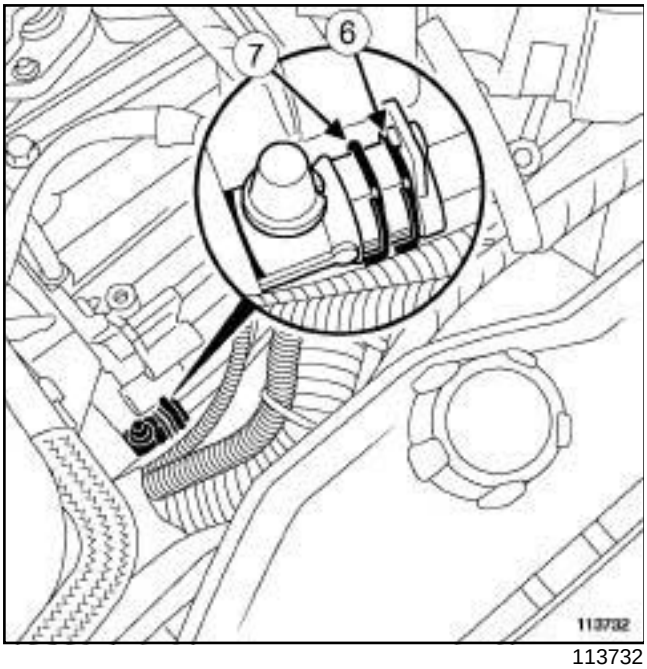

113732

❑ To open the bleed screw, lower the clip (**6**) and lift the clip (**7**) while pulling by one notch.

III - BLEED PROCEDURE IF NO PARTS OF THE HYDRAULIC CIRCUIT ARE REMOVED

1 - Bleed using the ARC50.

❑ Keep the clutch pedal in the upper position using a strap attached to the steering wheel to ensure continuity of the hydraulic circuit during the bleed operation.

> Note:
>
> Take care not to disrupt the adjustment of the clutch start of travel switch.

❑ Connect the **brake circuit bleeding device** (after having received Renault approval) to the master cylinder reservoir (see the instructions for the equipment).

❑ Remove the bleed plug from the clutch slave cylinder.

❑ Connect a transparent pipe to the bleed hole running to an empty container placed under the bleed hole.

❑ Open the bleed screw.

❑ Open the circuit between the bleeding device and the brake fluid reservoir.

❑ Let the brake fluid run until all air bubbles have been released.

❑ Stop the bleeding device to dump the pressure in the clutch circuit.

❑ Close the bleed screw.

❑ Remove the transparent pipe from the bleed hole.

❑ Refit the bleed plug.

❑ Top up the brake fluid level in the master cylinder reservoir after disconnecting the bleed device.

❑ Disengage and engage the clutch quickly around twenty times.

❑ Check that the clutch system is operating correctly.

❑ Repeat the bleed operation if necessary.

❑ Check the adjustment of the switch. (see **37A**, **Mechanical component controls**, **Clutch pedal switch: Removal - Refitting**, page **37A-51**) (37A, mechanical control elements).

JH3 or JR5 or ND0 or PK4 or TL4

2 - Bleed using a new syringe.

❑ Keep the clutch pedal in the upper position using a strap attached to the steering wheel to ensure continuity of the hydraulic circuit during the bleed operation.

> Note:
>
> Take care not to disrupt the adjustment of the clutch start of travel switch.

❑ Remove the bleed plug from the clutch slave cylinder.

❑ Connect a transparent pipe of sufficient length to the bleed hole (at least thirty centimeters) in order to place it at the same height as the reservoir.

❑ Open the bleed screw.

❑ Fill the brake fluid master cylinder reservoir until brake fluid flows out of the bleed screw.

> Note:
>
> The transparent pipe must remain at the same height as the master cylinder reservoir to prevent air from entering inside the clutch circuit.

❑ Connect a new **hydraulic circuit bleed syringe** filled with a useful volume of **60 ml** of approved brake fluid to the end of the transparent pipe.

❑ Slowly inject the entire contents of the syringe into the hydraulic clutch circuit without injecting any of the air from the top section of the syringe.

❑ Close the bleed screw.

❑ Remove the transparent pipe from the bleed hole.

❑ Refit the bleed plug.

❑ Top up the brake fluid level in the master cylinder reservoir.

❑ Disengage and engage the clutch quickly around twenty times.

❑ Check that the clutch system is operating correctly.

❑ Repeat the bleed operation if necessary.

❑ Check the adjustment of the switch. (see **37A**, **Mechanical component controls**, **Clutch pedal switch: Removal - Refitting**, page **37A-51**) (37A, mechanical control elements).

IV - BLEED PROCEDURE IF PARTS OF THE HYDRAULIC CIRCUIT ARE REMOVED.

❑

> **WARNING**
>
> The master cylinder pipe must be disconnected from its take-off point on the brake fluid reservoir, to avoid any foreign matter penetrating inside the brake system hydraulic circuit.

> **WARNING**
>
> Prepare for the flow of fluid and protect the surrounding components.

> Note:
>
> Prefill the hydraulic circuit pipe equipped with a filter.
>
> Position the filter head facing downwards to ensure that it fills.

JH3 or JR5 or ND0 or PK4 or TL4

There are several versions of pipe with and without a filter:

Pipe without filter.

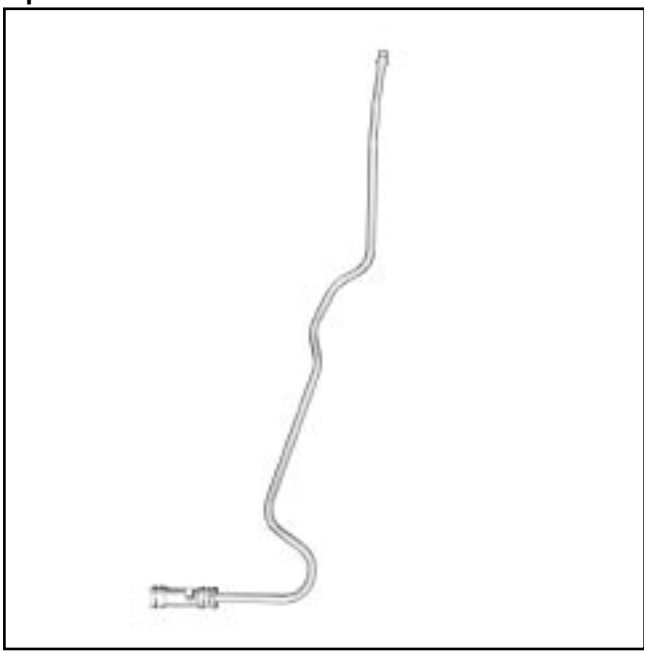

141812

Filling position for pipe with filter.

141811

Filling position for pipe with filter.

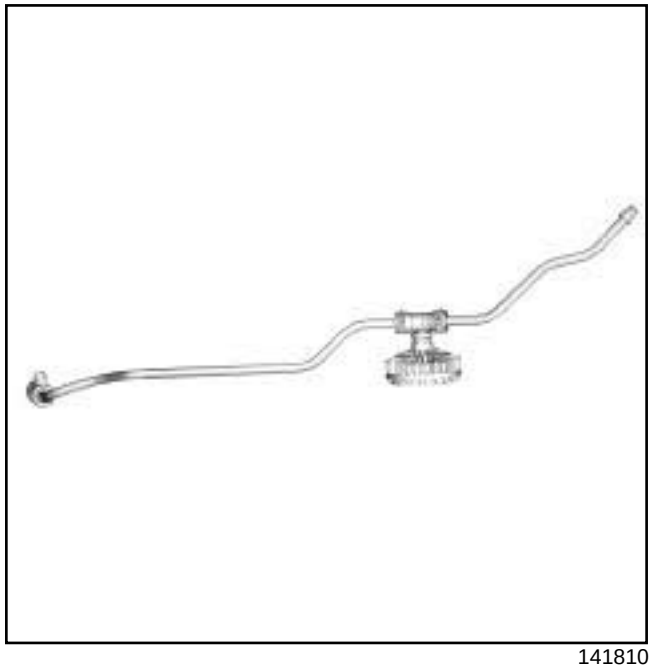

141810

Filling position for pipe with filter.

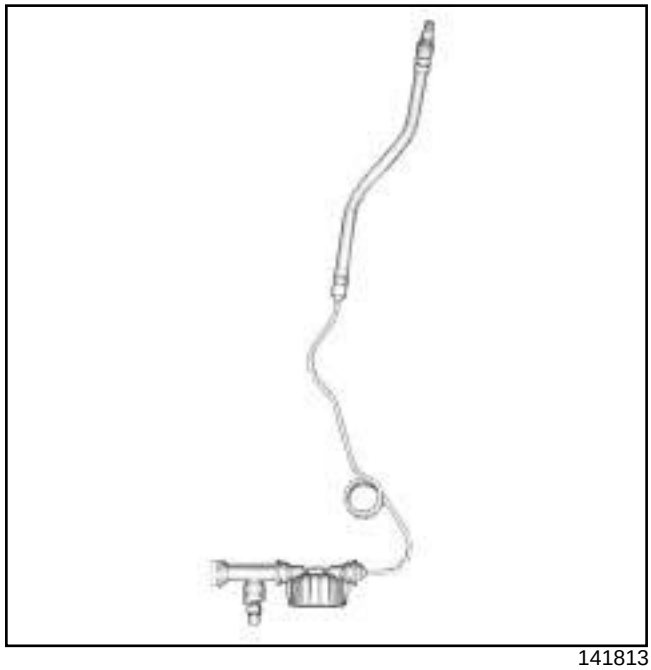

141813

- ❑ Prefill the clutch pipe using the syringe.
- ❑ Plug the prefilled pipe on the master cylinder end to stop any brake fluid from escaping.

JH3 or JR5 or ND0 or PK4 or TL4

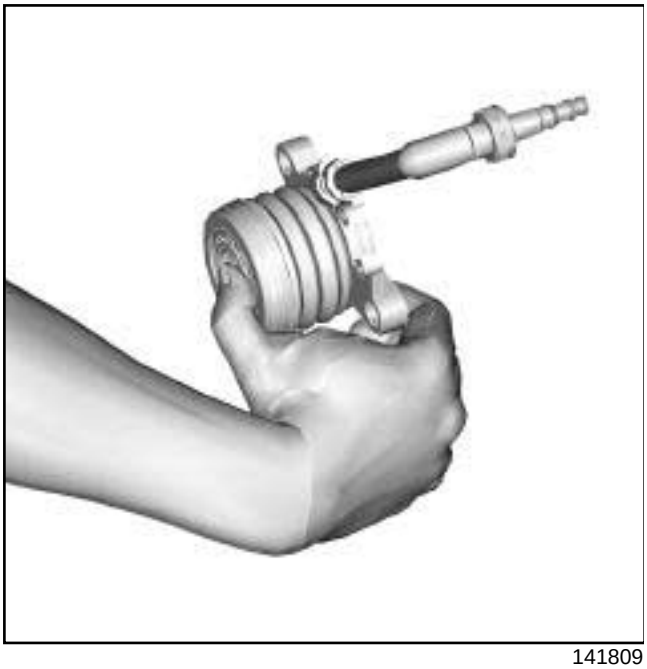

141809

- ❑ Prefill the hydraulic tappet using the new syringe (by gravity).
- ❑ Refit the part(s) concerned.

V - BLEED PROCEDURE AFTER A REMOVING A COMPONENT OF THE HYDRAULIC CIRCUIT.

- ❑ Keep the clutch pedal in the upper position using a strap attached to the steering wheel to ensure continuity of the hydraulic circuit during the bleed operation.

> Note:
>
> Take care not to disrupt the adjustment of the clutch start of travel switch.

- ❑ Remove the bleed plug from the clutch slave cylinder.
- ❑ Connect a transparent pipe of sufficient length to the bleed hole (at least thirty centimeters) in order to place it at the same height as the reservoir.
- ❑ Open the bleed screw.
- ❑ Fill the brake fluid master cylinder reservoir until brake fluid flows out of the bleed screw.

> Note:
>
> The transparent pipe must remain at the same height as the master cylinder reservoir to prevent air from entering inside the clutch circuit.

- ❑ Connect a new syringe containing **60 ml** of approved brake fluid to the end of the transparent pipe.
- ❑ Slowly inject the entire contents of the syringe into the hydraulic clutch circuit without injecting any of the air from the top section of the syringe.
- ❑ Close the bleed screw.
- ❑ Remove the transparent pipe from the bleed hole.
- ❑ Refit the bleed plug.
- ❑ Top up the brake fluid level in the master cylinder reservoir.
- ❑ Disengage and engage the clutch quickly around twenty times.
- ❑ Check that the clutch system is operating correctly.
- ❑ Repeat the bleed operation if necessary.
- ❑ Check the adjustment of the switch. (see **37A**, **Mechanical component controls**, **Clutch pedal switch: Removal - Refitting**, page **37A-51**) (37A, mechanical control elements).

JH3 or JR5 or ND0 or PK4 or TL4

VI - FINAL OPERATION

- ❑ Refit the engine undertray.
- ❑ Remove the vehicle from the two-post lift (see **Vehicle: Towing and lifting**) (02A, Lifting equipment).

AUTOMATIC PARKING BRAKE

Essential equipment
diagnostic tool

REMOVAL

I - REMOVAL PREPARATION OPERATION

STANDARD CHASSIS

Vehicles manufactured up to 14/05/07

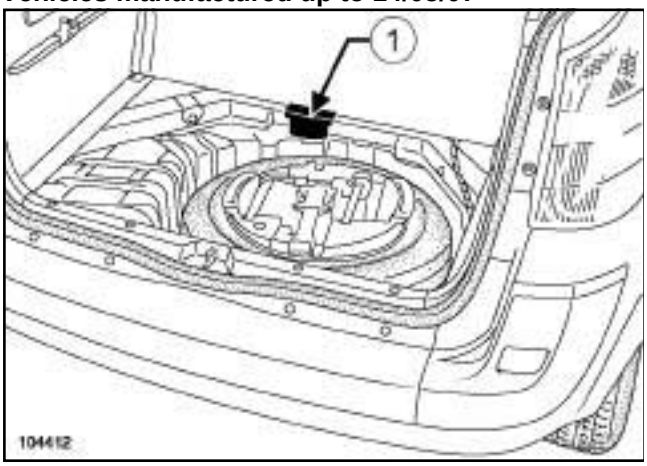

104412

❑ Remove the guard (**1**) .

LONG CHASSIS

Vehicles manufactured up to 28/05/07

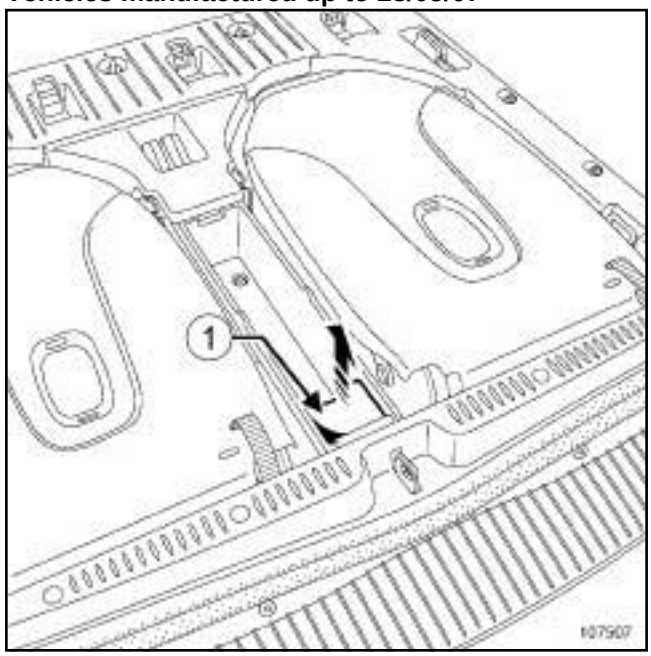

107507

❑ Remove the guard (**1**) .

II - REMOVAL OPERATION FOR PART CONCERNED

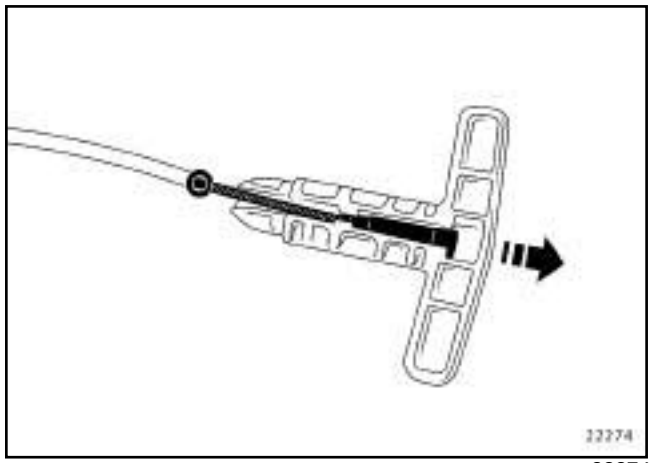

22274

❑ Pull out the emergency handle and the cable slightly, by less than **2 cm**.

❑ Remove the emergency handle.

AUTOMATIC PARKING BRAKE

REFITTING

I - REFITTING PREPARATIONS OPERATION

STANDARD CHASSIS

❏ Always replace the guard.

II - REFITTING OPERATION FOR PART CONCERNED

❏ Pull out the cable slightly, by less than **2 cm**.

❏ Refit the emergency handle.

III - FINAL OPERATION.

❏ Refit the guard.

❏ Carry out a complete check and clear the fault generated using the **diagnostic tool**.

AUTOMATIC PARKING BRAKE

Essential equipment
diagnostic tool

STANDARD CHASSIS

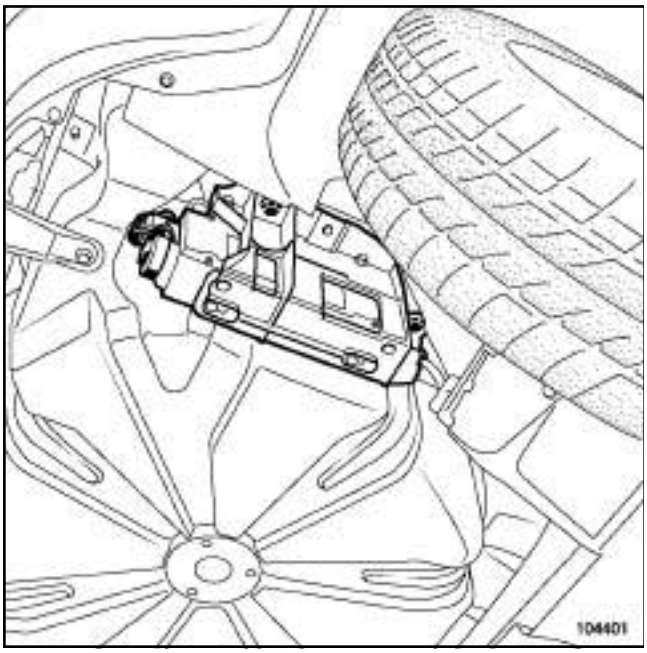

104401

❑ The control unit is located behind the offside rear wheel.

LONG CHASSIS

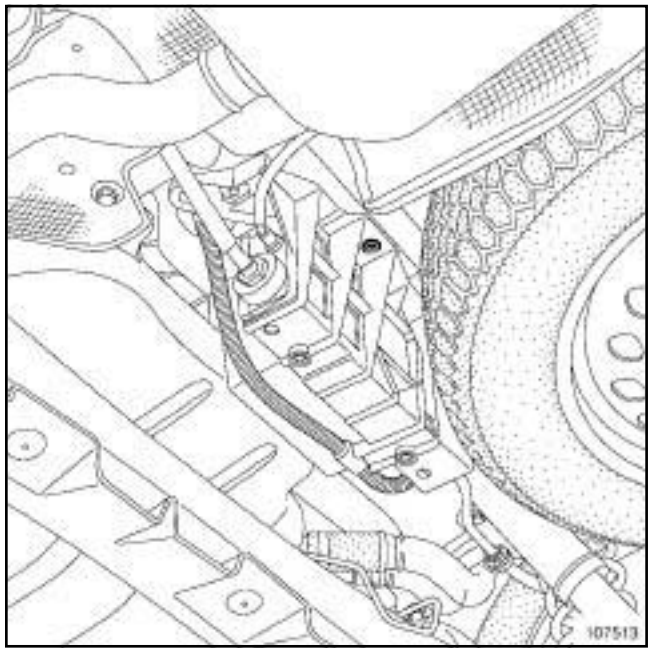

107513

❑ The control unit is located in centre section of the rear axle.

REMOVAL

I - REMOVAL PREPARATION OPERATION

❑ Position the vehicle on a two-post lift (see **Vehicle: Towing and lifting**) (02A, Lifting equipment).

❑ Switch on the + after ignition feed.

❑ Save the data using the **diagnostic tool** (see **Fault finding - Replacement of components**) (37B, Electronic parking brake).

❑ Release the parking brake using the handle.

❑ Switch off the ignition.

❑ Disconnect the battery (see **Battery: Removal - Refitting**) (80A, Battery).

❑ If fitted to the vehicle, remove the emergency handle (see **37B**, **Electronic parking brake**, **Emergency handle: Removal - Refitting**, page **37B-1**) .

AUTOMATIC PARKING BRAKE

II - REMOVAL OPERATION FOR PART CONCERNED

STANDARD CHASSIS

❑

Note:

the primary brake cable cannot be removed. It is sold as part of the control unit.

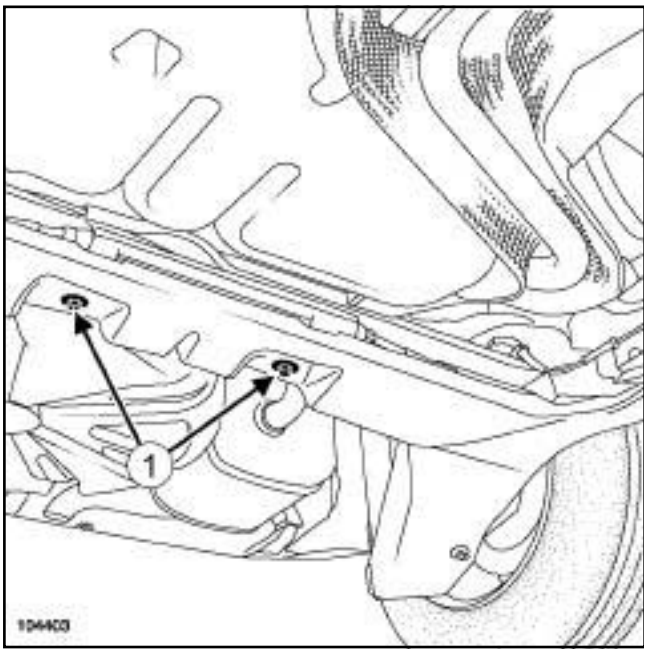

104403

❑ Note the brake cable routing for refitting.

❑ Remove the bolts (**1**) from the brake cable anchorage support.

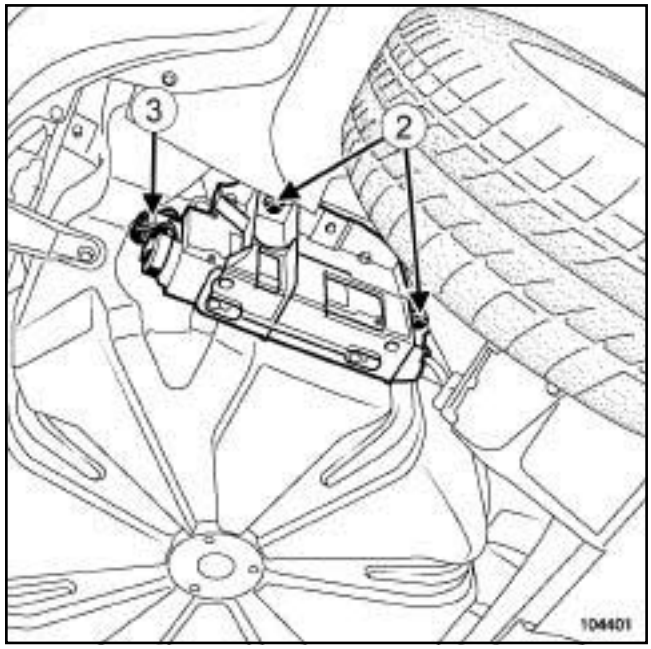

104401

❑ Remove:

- the bolts (**2**) from the control unit mounting,

- the control unit from the bottom (partially).

❑ Disconnect the wiring (**3**) from the control unit.

❑ Slide the « control unit - rear axle anchorage support » assembly towards the left-hand side of the vehicle.

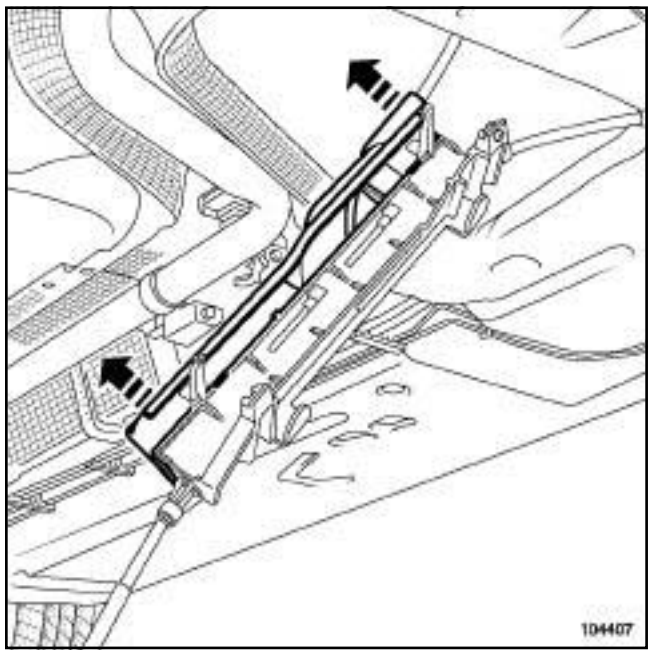

104407

❑ Unclip the anchorage guard.

AUTOMATIC PARKING BRAKE

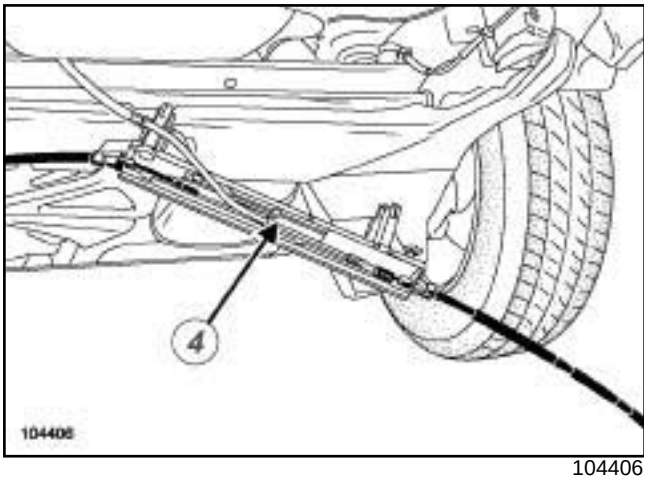

104406

❏ Remove the primary cable from the rear axle anchorage.

❏ Remove the « control unit - primary cable » assembly.

III -

LONG CHASSIS

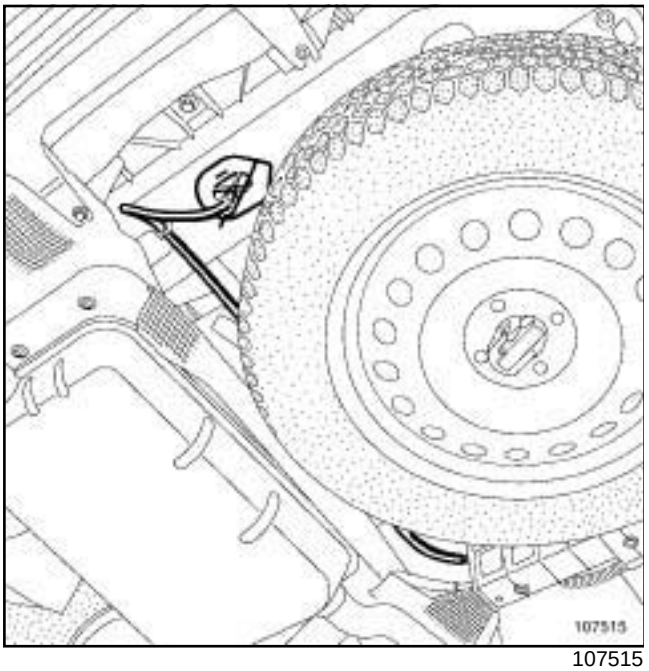

107515

❏ Pull out the emergency control cable via the vehicle underbody.

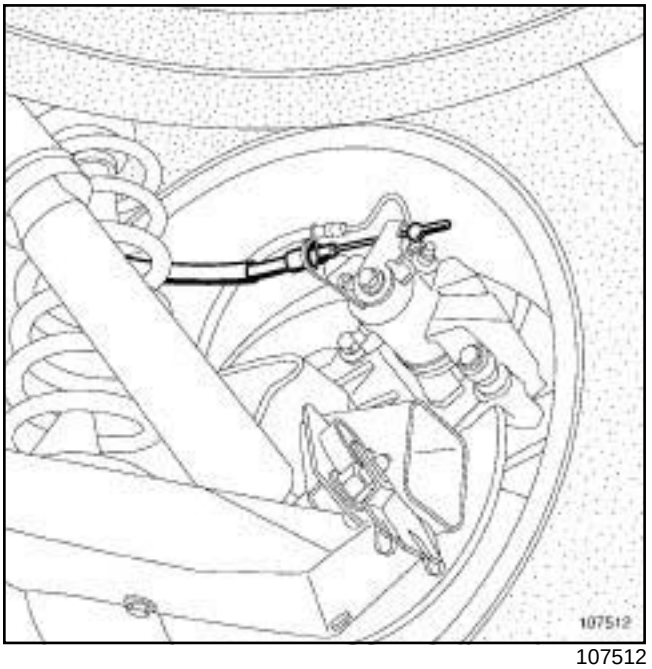

107512

❏ Note the brake cable routing for refitting.

❏ Remove:

- the brake cables from the callipers,
- the cables from their guides.

❏ Let the parking brake cables hang freely.

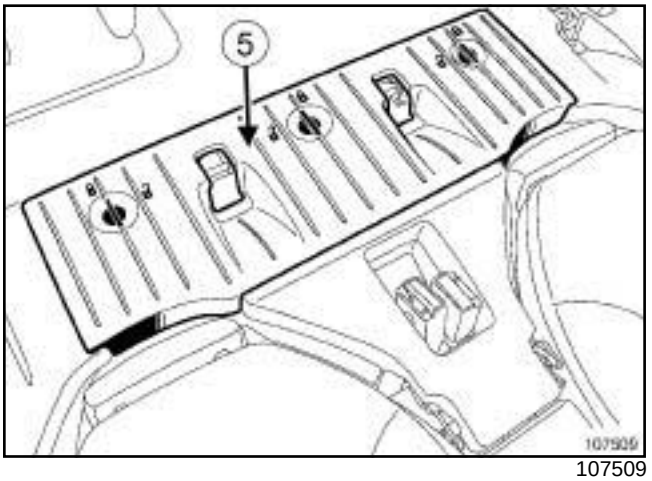

107509

❏ Remove the luggage compartment trim (**5**) .

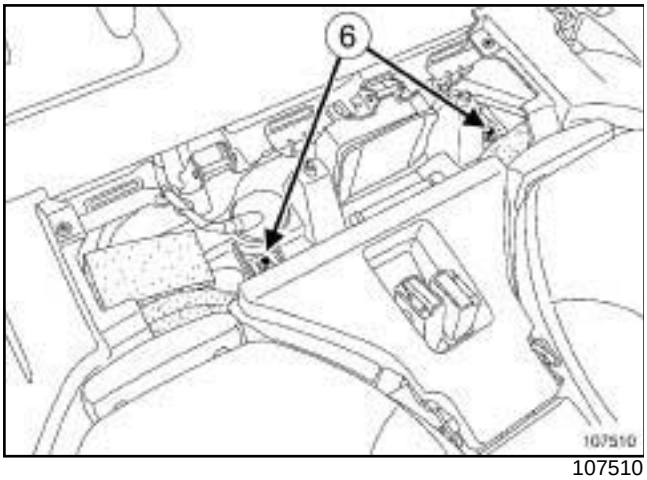

107510

❑ Remove the bolts (**6**) from the control unit.

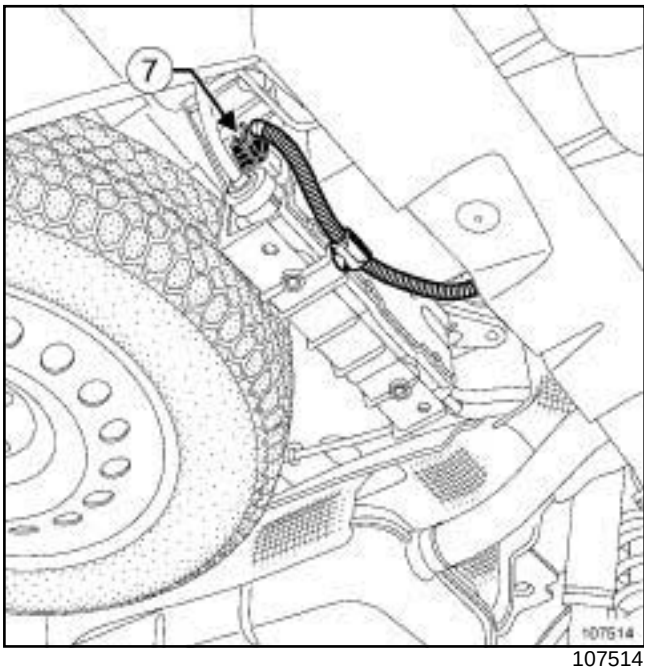

107514

❑ Disconnect the wiring (**7**) from the control unit.

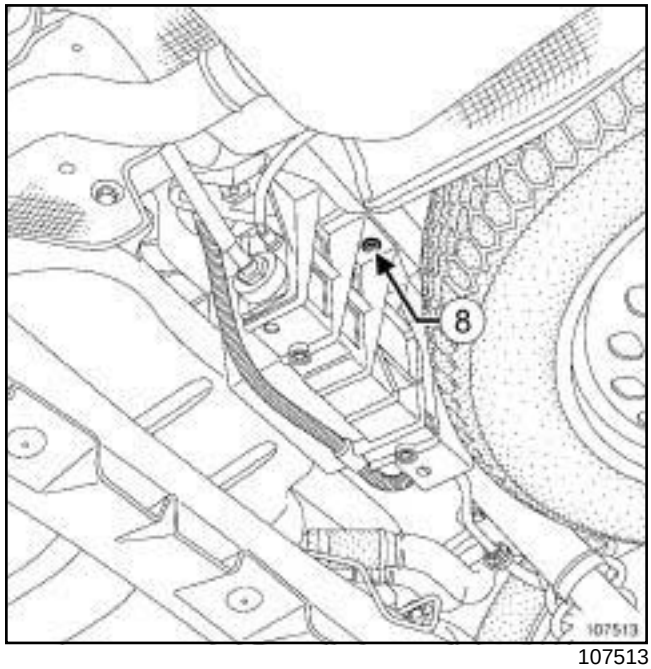

107513

❑ Remove:

- the control unit pre-retaining bolt (**8**) ,
- the control unit with its cables.

REFITTING

I - REFITTING OPERATION FOR PART CONCERNED

STANDARD CHASSIS

❑ Refit the « control unit - primary cable » assembly.

❑ Fit the primary cable to the rear axle anchorage.

❑ Refit the anchorage guard.

❑ Refit the anchorage on the rear axle.

❑ Position the brake cables in the position marked during removal.

❑ Connect the control unit wiring.

LONG CHASSIS

- ❑ Refit the control unit.
- ❑ Position the brake cables in the position marked during removal.
- ❑ Connect the control unit wiring.
- ❑ refit:
  - the luggage compartment trim,
  - the brake cables to the callipers.

II - FINAL OPERATION.

- ❑ If fitted to the vehicle, refit the emergency handle (see **37B**, **Electronic parking brake**, **Emergency handle: Removal - Refitting**, page **37B-1**) .
- ❑ Connect the battery (see **Battery : Removal - Refitting**) (80A, Battery).
- ❑ Switch on the + after ignition feed.
- ❑ Activate the handle several times to adjust the brake cables.
- ❑ Write the data saved before removal using the **diagnostic tool** (see **Fault finding - Replacement of components**) (37B, Electronic parking brake).
- ❑ Clear the faults using the **diagnostic tool**.

Essential equipment
diagnostic tool

REMOVAL

I - REMOVAL PREPARATION OPERATION

❏ Switch off the ignition.

❏ Disconnect the battery (see **Battery: Removal - Refitting**) (80A, Battery).

❏ Remove:

- the glove compartment, driver's side,
- the remote adjustment control mounting.

II - REMOVAL OPERATION FOR PART CONCERNED

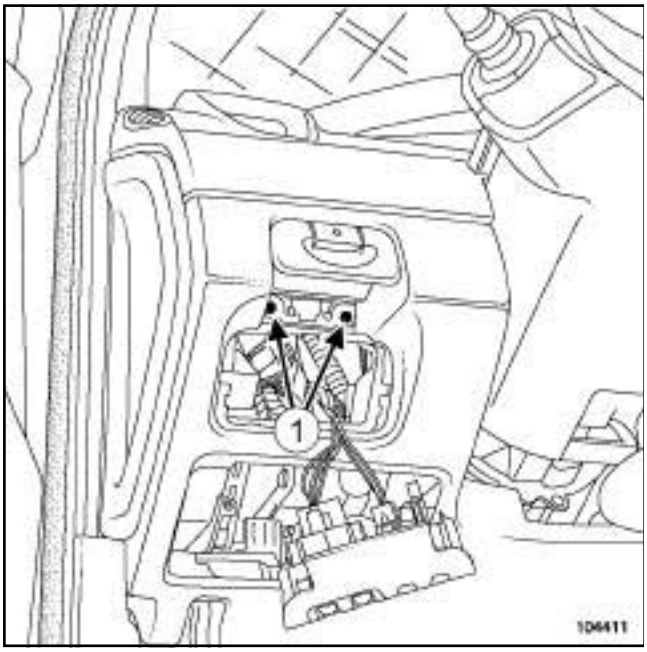

104411

❏ Remove the bolts (**1**) from the lever.

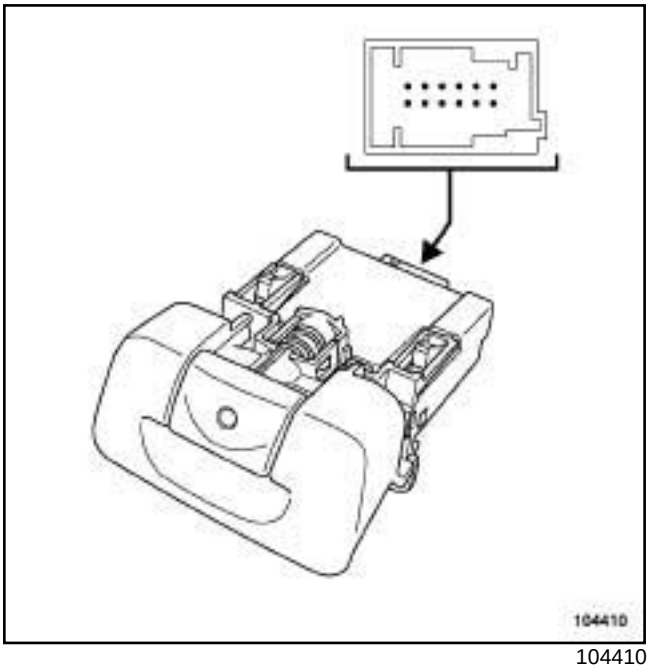

104410

❏ Remove the lever.

❏ Disconnect the connector from the lever.

REFITTING

I - REFITTING OPERATION FOR PART CONCERNED

❏ Connect the lever connector.

❏ Refit the lever.

II - FINAL OPERATION.

❏ Refit:

- the remote adjustment control mounting.
- the glove compartment, driver's side,

❏ Connect the battery (see **Battery : Removal - Refitting**) (80A, Battery).

❏ Switch on the + after ignition feed.

❏ Clear the faults using the **diagnostic tool**.

Essential equipment
diagnostic tool

The vehicle is fitted with a BOSCH 8.0. ABS system.

Depending on the vehicle equipment, the BOSCH 8.0 system consists of the ABS system only or the Anti-lock Braking System in conjunction with the Electronic Stability Program (ESP).

IMPORTANT
After any operation on the ESP system, it is essential to confirm the repair with a road test and a check with the **diagnostic tool** (CLIP).

I - DESCRIPTION OF THE ABS SYSTEM WITH ELECTRONIC STABILITY PROGRAM

The ABS system / Electronic Stability Program comprises:

- a brake servo assembly,
- a pump assembly comprising:
  - a hydraulic pump,
  - a pressure modulation unit (twelve solenoid valves),
  - a computer,
  - a pressure sensor,
- a steering wheel angle sensor built into the electric power assisted steering,
- a combined yaw speed and transverse acceleration sensor,
- four wheel speed sensors,
- aneElectronic stability program deactivation pressure button.

II - PRINCIPLE OF OPERATION OF THE ABS SYSTEM WITH ELECTRONIC STABILITY PROGRAM

The reference status is calculated continuously from wheel speed and steering wheel angle measurements. The reference status represents the desired correct behaviour.

This reference status is compared to the actual status of the vehicle from the yaw speed and transverse acceleration measurements.

Where there is a difference between the desired trajectory and the actual trajectory, the appropriate wheel is braked. In certain cases, the understeer monitoring brakes two wheels at the same time. The torque generated sets the vehicle on the desired trajectory.

In some cases, the anti-skid control modifies the engine torque.

III - ELECTRONIC STABILITY PROGRAM OPERATION SPECIAL FEATURES

The ESP function can be disconnected via the switch located on the dashboard.

This function can not be deactivated above a threshold of approximately **50 km per hour**.

This function is automatically reactivated when the vehicle is switched on, or at speeds above approximately **50 km/h**.

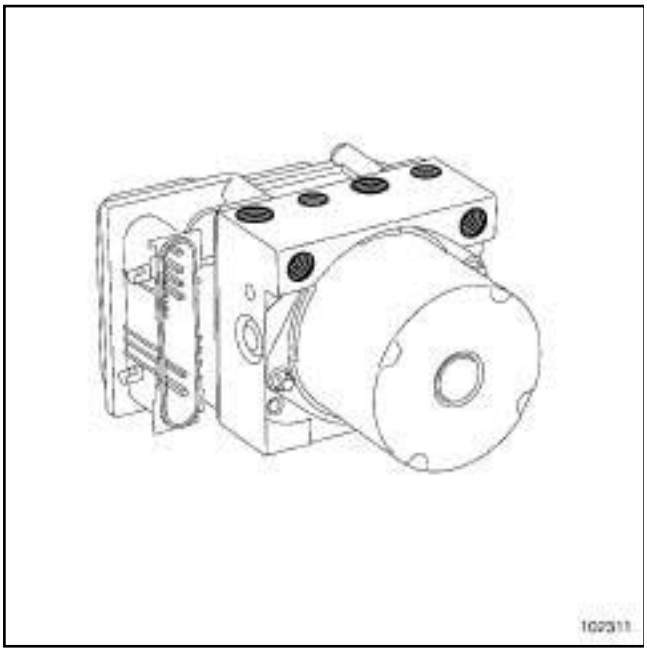

102311

The anti-lock braking system pump assembly is equipped with a **26-track** computer.

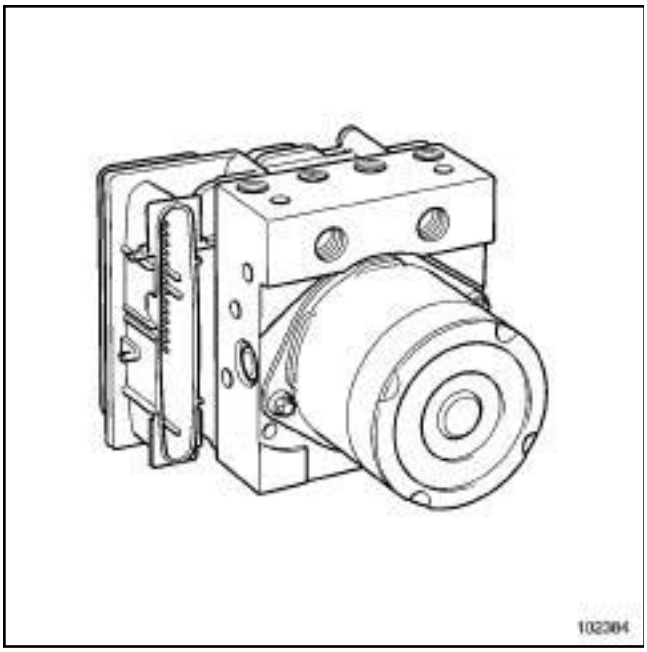

102384

The ABS System and Electronic Stability Program pump assembly is equipped with a **46-track** computer.

Note:

The computer cannot be separated from the pump assembly.

K4J

Essential equipment
pedal press
refrigerant charging station
diagnostic tool

Tightening torques ▽	
hydraulic unit support mounting bolts	**6.5 Nm**
bolts mounting the pipes on the hydraulic unit	**14 Nm**
air distributor mounting bolts	**9 Nm**
bolts mounting the hydraulic unit on its support	**8 Nm**

REMOVAL

❑ Position the vehicle on a two-post lift (see **Vehicle: Towing and lifting**) (MR 370, 02, Lifting equipment).

❑ Disconnect the battery (see **Battery: Removal - Refitting**) (MR 370, 80A, Battery).

❑ Fit the **pedal press** to the brake pedal to reduce the amount of brake fluid running out.

AIR CONDITIONING or CLIMATE CONTROL

❑ Drain the refrigerant circuit using the **refrigerant charging station**.

❑ Remove the scuttle panel grille (see **Scuttle panel grille: Removal - Refitting**) (MR 371, 56A, Exterior equipment).

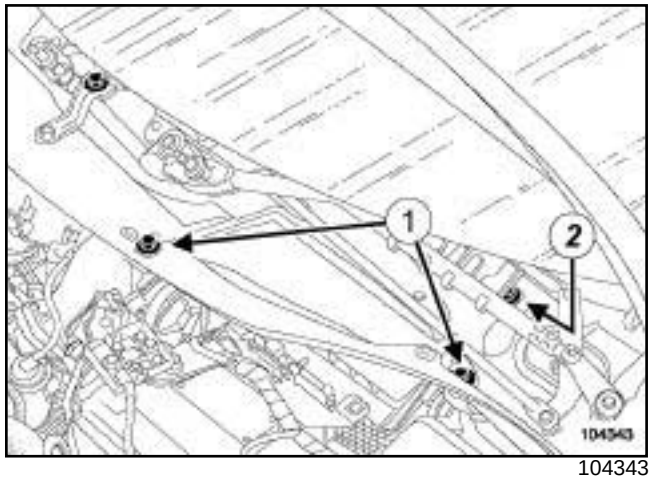

104343

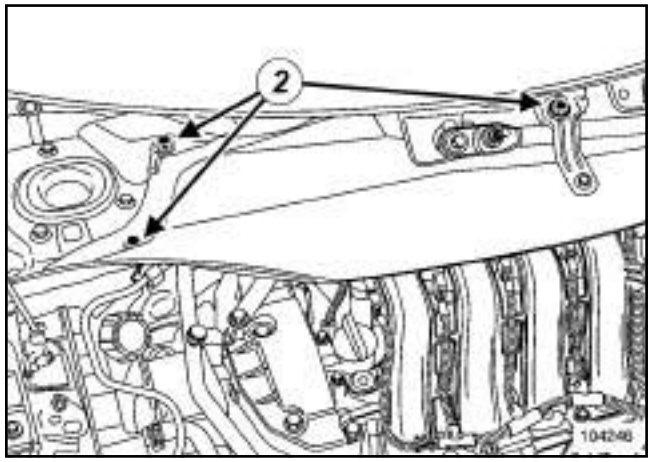

104246

❑ Remove:

- the engine covers,
- the two air filter access panel mounting bolts (**1**) ,
- the scuttle panel partition mounting bolts (**2**) ,
- the scuttle panel partition.

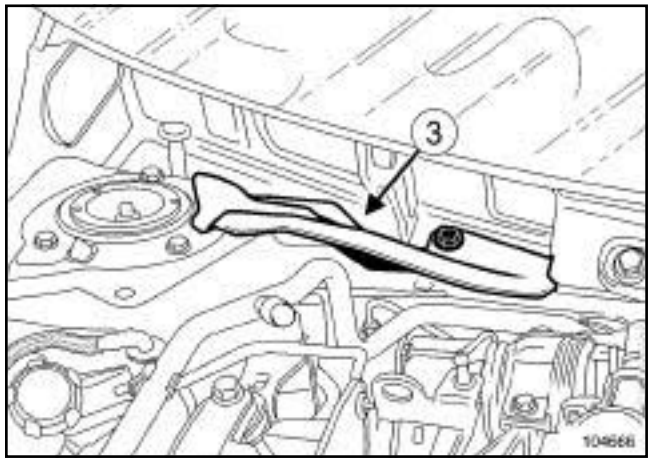

104666

❑ Remove the scuttle panel bracket (**3**)

K4J

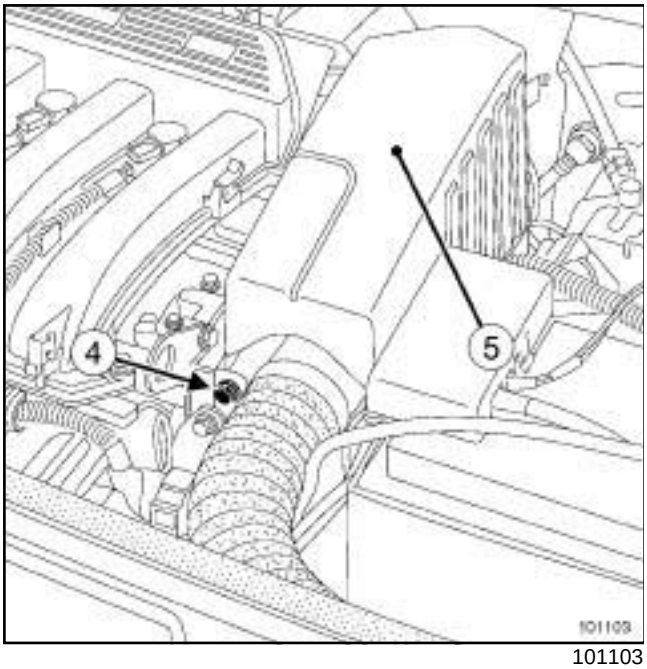

101103

❑ Remove:

- the air resonator mounting bolt (**4**) ,
- the air resonator unit (**5**) .

WARNING
Do not damage the vacuum outlet on the plenum chamber. If it is damaged, the inlet manifold will have to be replaced.

❑ Disconnect:

- the brake servo vacuum pipe inlet manifold end,
- the ignition coil connectors,
- the throttle valve connector.

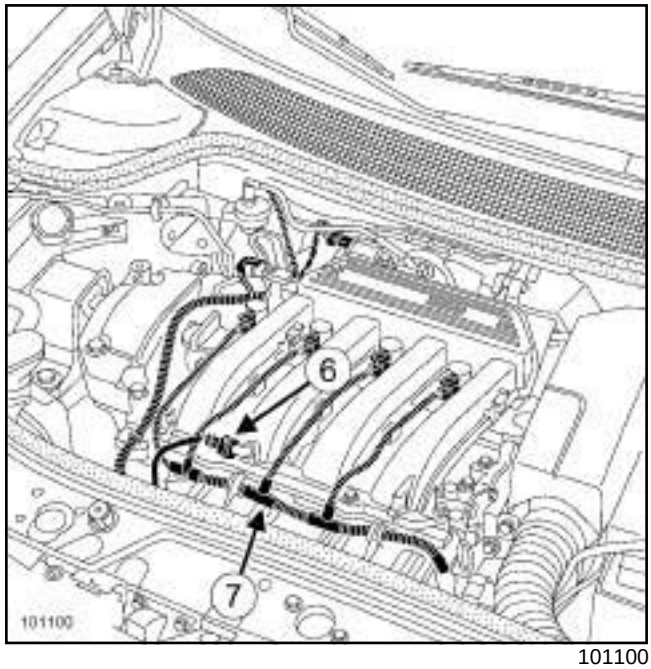

101100

❑ Disconnect the air temperature sensor (**6**) .

❑ Unclip the engine wiring harness (**7**) .

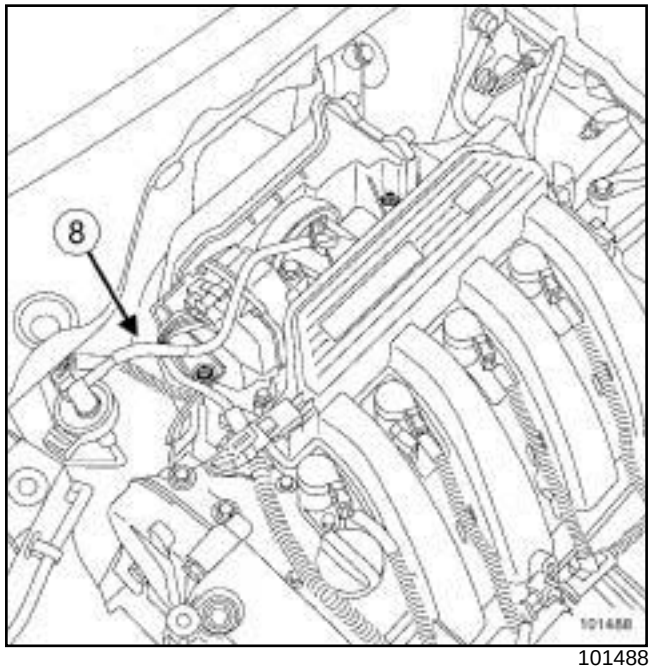

101488

❑ Unclip the fuel vapour recirculation pipe (**8**) .

❑ Loosen the air filter box mountings without removing it from the engine compartment.

K4J

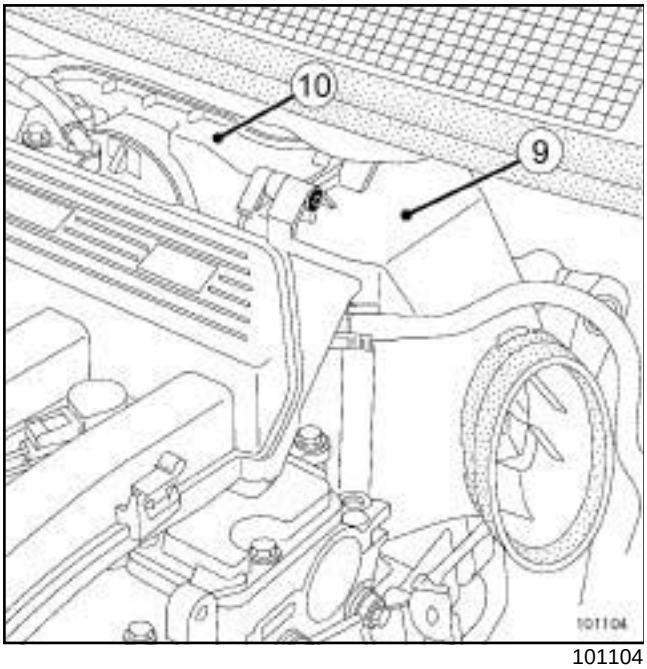

101104

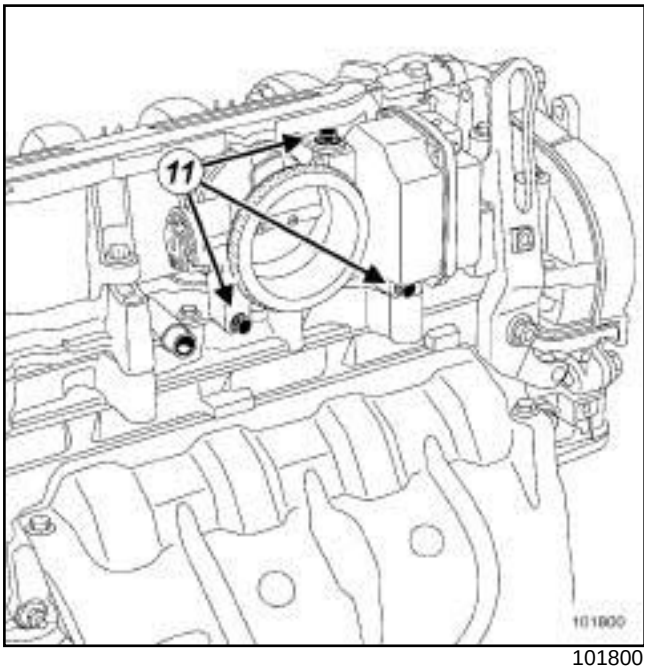

101800

❑ Remove:

- the filter element (**9**) ,
- the throttle valve mounting bolts (**11**) ,
- the throttle valve (see **Throttle valve: Removal - Refitting**) (MR 370, 12A, Fuel mixture),
- the air filter box (**10**) (see **Air filter unit: Removal - Refitting**) (MR 370, 12A, Fuel mixture).

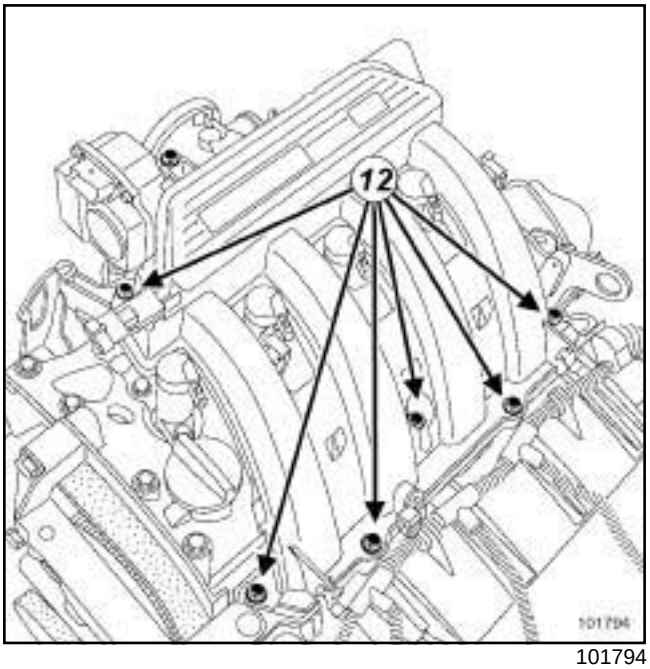

101794

❑ Remove:

- the plenum chamber unit mounting bolts (**12**) ,
- the plenum chamber unit,
- the soundproofing screen mountings.

❑ Remove the soundproofing screen.

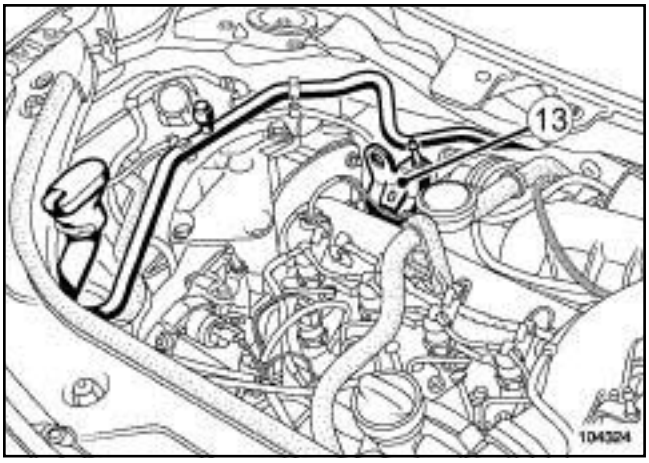

104324

❑ Remove the lifting eye (**13**) .

AIR CONDITIONING or CLIMATE CONTROL

❑ Remove the air-conditioning hose between the bulkhead bracket and the dehydrator reservoir (see **Dehydration canister - evaporator connecting pipe: Removal - Refitting**) (MR 370, 62A, Air conditioning).

K4J

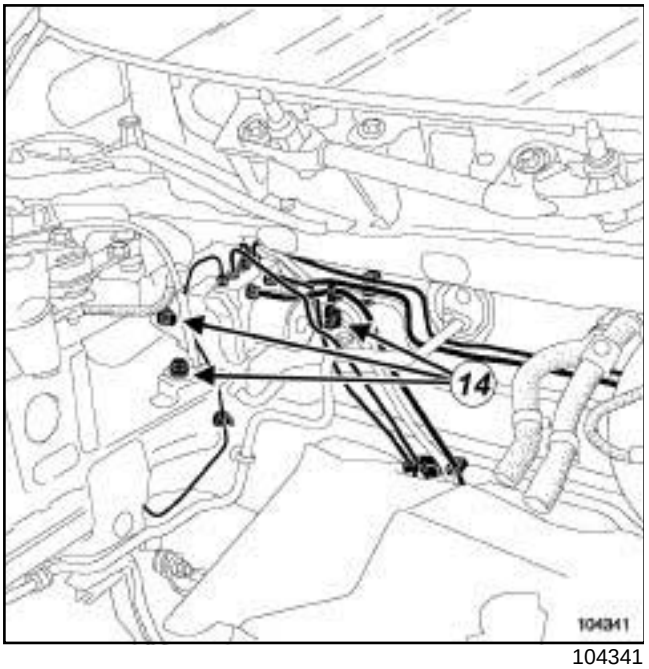

104341

- ❑ Remove the ABS computer earth terminal mounting bolt.
- ❑ Disconnect the computer connector.
- ❑ Undo the pipes from the hydraulic unit.
- ❑ Unclip the pipes from the hydraulic unit.
- ❑ Remove:
  - the mounting bolts ***(14)*** from the hydraulic unit support,
  - the « hydraulic unit - support » assembly,
  - the bolts securing the hydraulic unit on the support,
  - the hydraulic unit.

REFITTING

- ❑ Proceed in the reverse order to removal.

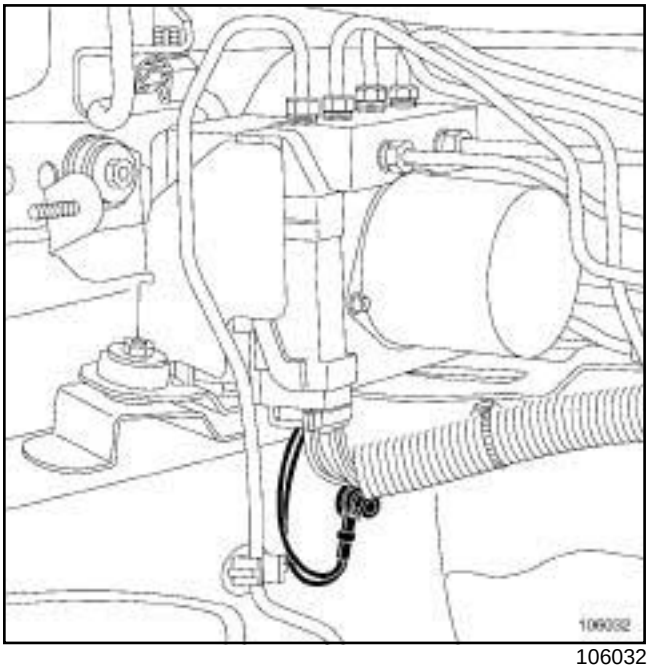

106032

- ❑

WARNING
Set up the earth terminal wires facing downwards, to optimise the hydraulic unit computer connector sealing.

AIR CONDITIONING or CLIMATE CONTROL

- ❑ Refit the air-conditioning hose (see **Dehydration canister - evaporator connecting pipe: Removal - Refitting**) (MR 370, 62A, Air conditioning).

- ❑ Torque tighten:
  - the **hydraulic unit support mounting bolts (6.5 Nm)**,
  - the **bolts mounting the pipes on the hydraulic unit (14 Nm)**,
  - the **air distributor mounting bolts (9 Nm)**,
  - the **bolts mounting the hydraulic unit on its support (8 Nm)**.

Note:
- Replace the seal every time the throttle valve is removed,
- The seals at the ends of the air conditioning pipe must be replaced.

K4J

- Bleed the brake circuit using the **diagnostic tool** (see **30A**, **General information**, **Brake circuit Bleeding**, page **30A-2**) .
- Connect the battery (see **Battery : Removal - Refitting**) (MR 370, 80A, Battery).
- Reinitialise the programming of the stops (see **Fault finding - Replacement of components**) (MR 372, 17B, Petrol injection).

AIR CONDITIONING or CLIMATE CONTROL

- Fill the refrigerant circuit using the **refrigerant charging station**.
- Make sure the air conditioning is working properly with the fan assembly at top speed.

  If there is no cold air, check for leaks (see **Coolant circuit check**) (MR 370, 62A, Air conditioning).

K4M

Essential equipment
pedal press
refrigerant charging station
diagnostic tool

Tightening torques ▽	
hydraulic unit support mounting bolts	**6.5 Nm**
bolts mounting the hydraulic unit on its support	**8 Nm**
bolts mounting the pipes on the hydraulic unit	**14 Nm**
plenum chamber mounting bolts	**9 Nm**

REMOVAL

❑ Position the vehicle on a two-post lift (see **Vehicle: Towing and lifting**) (MR 370, 02, Lifting equipment).

❑ Disconnect the battery (see **Battery: Removal - Refitting**) (MR 370, 80A, Battery).

❑ Fit the **pedal press** to the brake pedal to reduce the amount of brake fluid running out.

AIR CONDITIONING or CLIMATE CONTROL

❑ Drain the refrigerant circuit using the **refrigerant charging station**.

❑ Remove the scuttle panel grille (see **Scuttle panel grille: Removal - Refitting**) (MR 371, 56A, Exterior equipment).

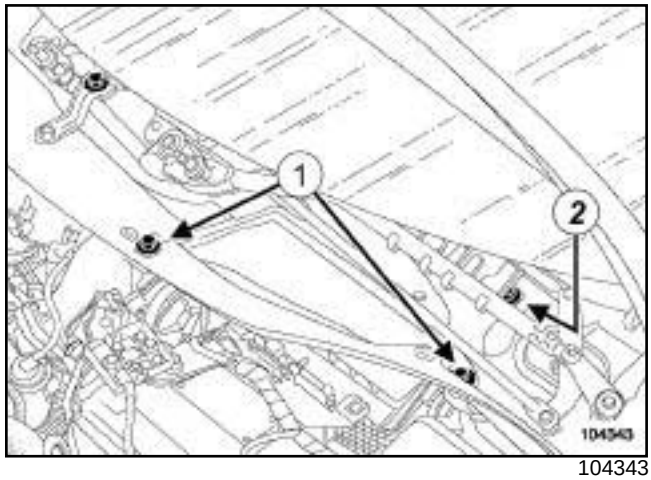

104343

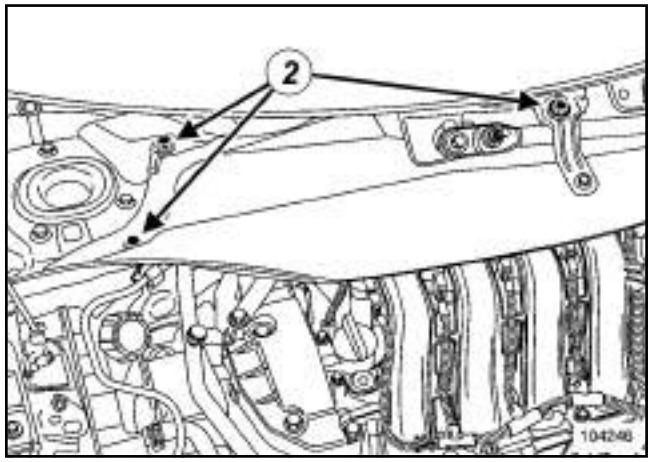

104246

❑ Remove:

- the engine covers,
- the two air filter access panel mounting bolts (**1**) ,
- the radiator tank partition mounting bolts (**2**) ,
- the scuttle panel partition.

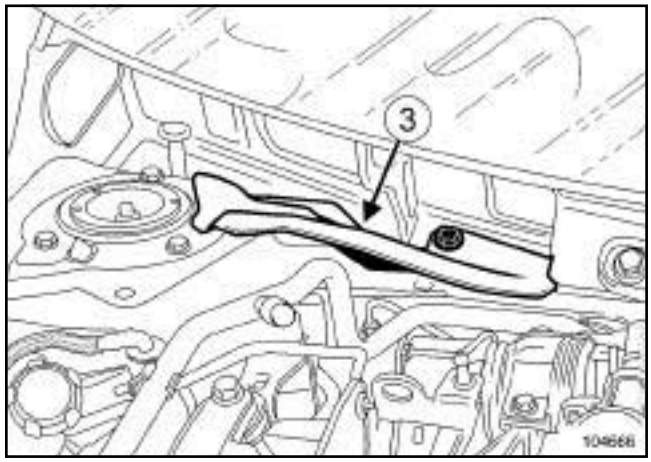

104666

❑ Remove the scuttle panel bracket (**3**)

K4M

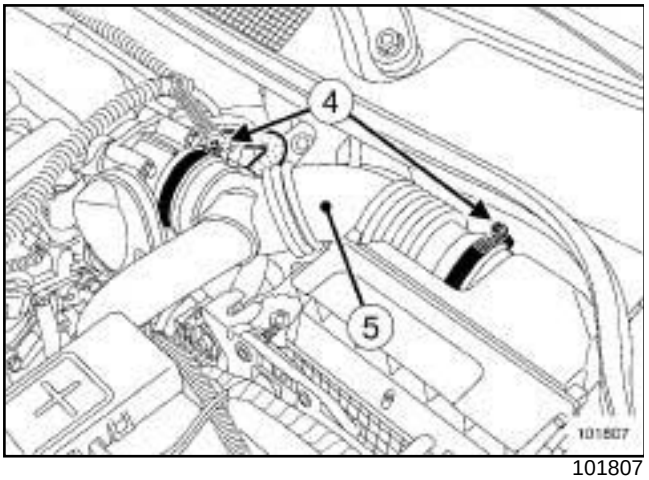

101807

❏ Loosen the air duct clips (**4**) .

❏ Remove the air duct (**5**) .

> Note:
>
> Do not damage the vacuum outlet on the plenum chamber. If it is damaged, the inlet manifold will have to be replaced.

❏ Disconnect:

- the brake servo vacuum pipe inlet manifold end,
- the ignition coil connectors.

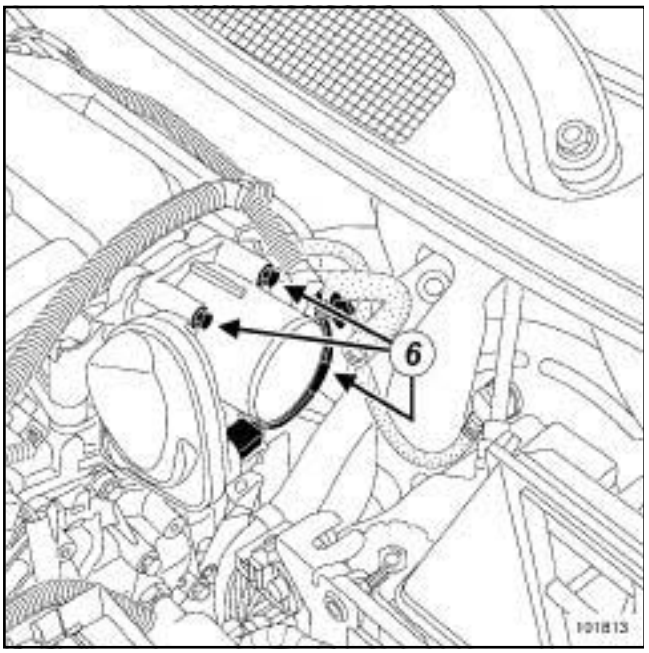

101813

❏ Disconnect the throttle valve connector.

❏ Remove:

- the throttle valve mounting bolts ***(6)*** ,
- the throttle valve (see **Throttle valve: Removal - Refitting**) (MR 370, 12A, Fuel mixture).

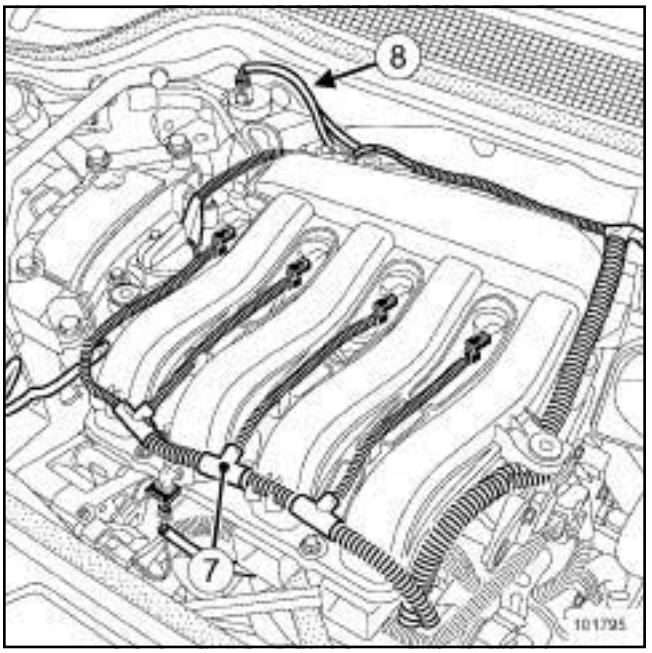

101795

❏ Unclip the fuel vapour recirculation pipe (**8**) .

❏ Disconnect the air temperature sensor.

❏ Remove the engine wiring harness ***(7)*** .

K4M

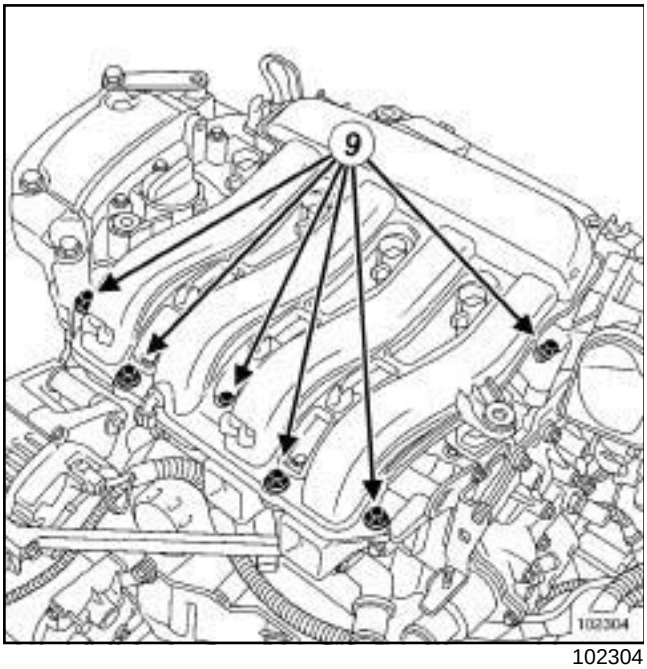

102304

❑ Remove:

- the air distribution unit mounting bolts (**9**) ,
- the air distribution unit (see **Inlet manifold: Removal - Refitting**) (MR 370, 12A, Fuel mixture),
- the soundproofing screen mountings.

❑ Remove the soundproofing screen.

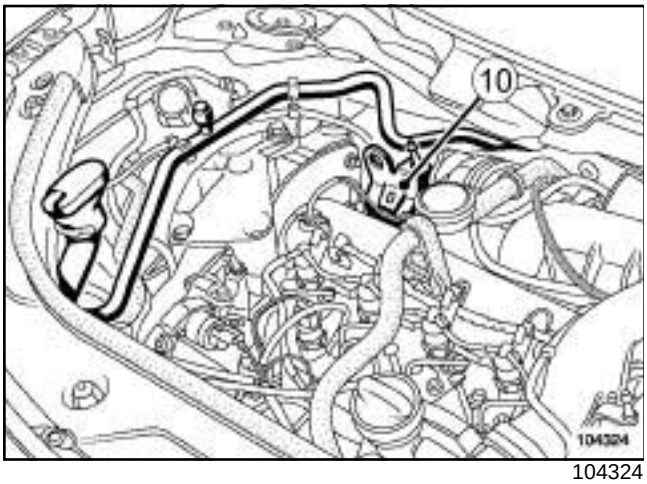

104324

❑ Remove the lifting eye (**10**) .

AIR CONDITIONING or CLIMATE CONTROL

❑ Remove the air-conditioning hose between the bulkhead bracket and the dehydrator reservoir (see **Dehydration canister - evaporator connecting pipe: Removal - Refitting**) (MR 370, 62A, Air conditioning).

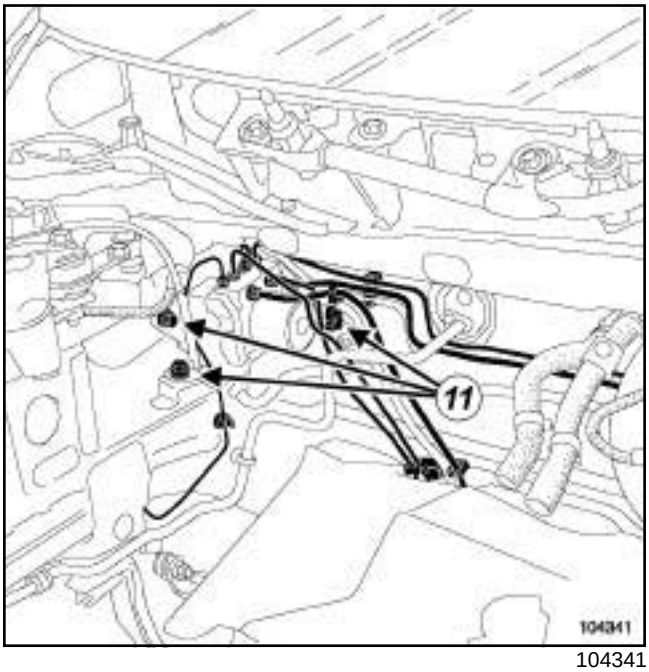

104341

❑ Remove the ABS computer earth terminal mounting bolt.

❑ Disconnect the computer connector.

❑ Unscrew the pipes from the hydraulic unit.

❑ Unclip the pipes from the hydraulic unit.

❑ Remove:

- the mounting bolts ***(11)*** from the hydraulic unit support,
- the « hydraulic unit - support » assembly,
- the hydraulic unit.

REFITTING

❑ Proceed in the reverse order to removal.

K4M

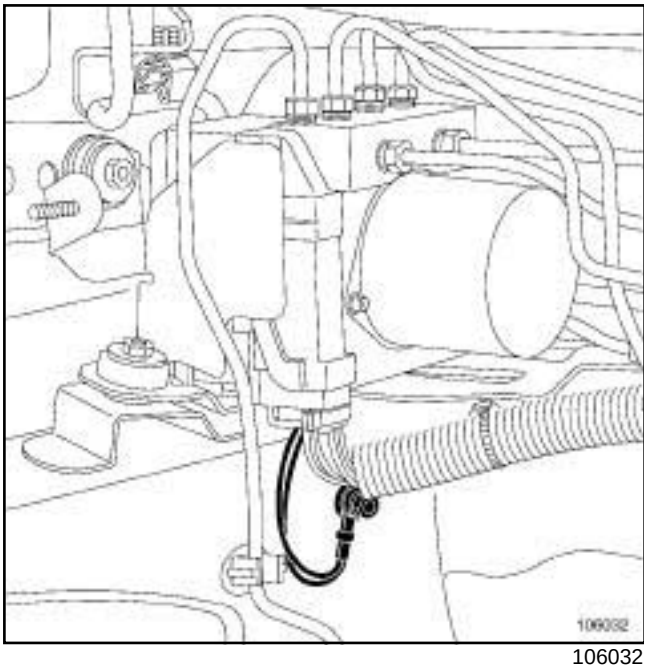

106032

❑

WARNING

Set up the earth terminal wires facing downwards, to optimise the hydraulic unit computer connector sealing.

AIR CONDITIONING or CLIMATE CONTROL

❑ Refit the air-conditioning hose (see **Dehydration canister - evaporator connecting pipe: Removal - Refitting**) (MR 370, 62A, Air conditioning).

❑ Torque tighten:

- the **hydraulic unit support mounting bolts (6.5 Nm)**,
- the **bolts mounting the hydraulic unit on its support (8 Nm)**,
- the **bolts mounting the pipes on the hydraulic unit (14 Nm)**,
- the **plenum chamber mounting bolts (9 Nm)**.

Note:

- Replace the seal every time the throttle valve is removed,
- The seals at the ends of the air conditioning pipe must be replaced.

❑ Bleed the brake circuit using the **diagnostic tool** (see **30A**, **General information**, **Brake circuit Bleeding**, page **30A-2**) .

❑ Connect the battery (see **Battery : Removal - Refitting**) (MR 370, 80A, Battery).

❑ Reinitialise the programming of the stops (see **Fault finding - Replacement of components**) (MR 372, 17B, Petrol injection).

AIR CONDITIONING or CLIMATE CONTROL

❑ Fill the refrigerant circuit using the **refrigerant charging station**.

❑ Make sure the air conditioning is working properly with the fan assembly at top speed.

If there is no cold air, check for leaks (see **Coolant circuit check**) (MR 370, 62A, Air conditioning).

F9Q or K9K

Essential equipment
pedal press
refrigerant charging station
diagnostic tool

Tightening torques ▽	
hydraulic unit support mounting bolts	**6.5 Nm**
bolts mounting the hydraulic unit on its support	**8 Nm**
bolts mounting the pipes on the hydraulic unit	**14 Nm**

REMOVAL

❏ Position the vehicle on a two-post lift (see **Vehicle: Towing and lifting**) (MR 370, 02, Lifting equipment).

❏ Disconnect the battery (see **Battery: Removal - Refitting**) (MR 370, 80A, Battery).

❏ Fit the **pedal press** to the brake pedal to reduce the amount of brake fluid running out.

AIR CONDITIONING or CLIMATE CONTROL

❏ Drain the refrigerant circuit using the **refrigerant charging station**.

❏ Remove the scuttle panel grille (see **Scuttle panel grille: Removal - Refitting**) (MR 371, 56A, Exterior equipment).

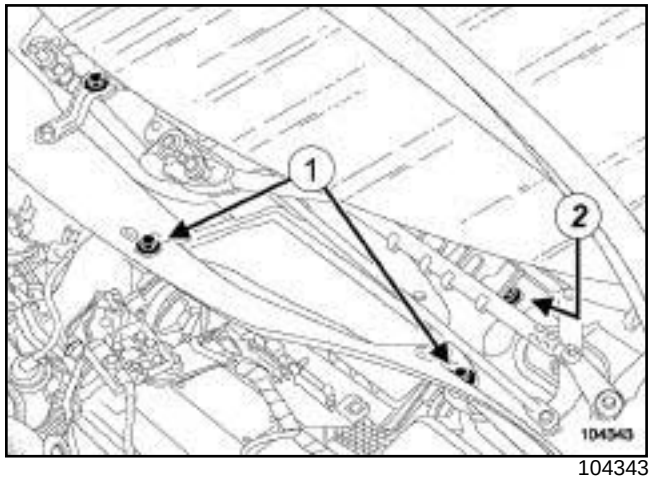

104343

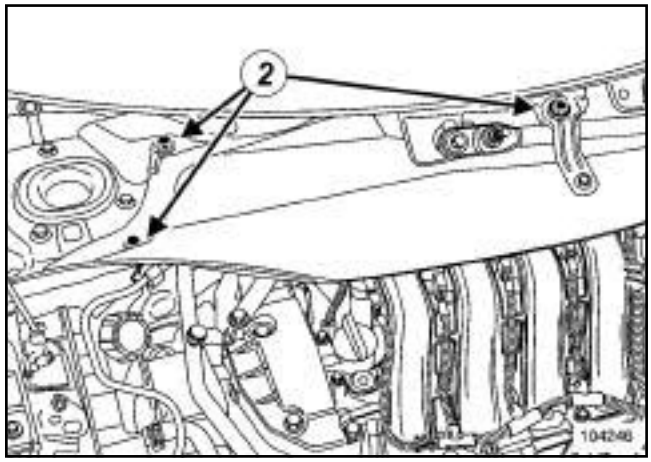

104246

❏ Remove:

- the engine covers,
- the two air filter access panel mounting bolts (**1**) ,
- the scuttle panel partition mounting bolts (**2**) ,
- the scuttle panel partition.

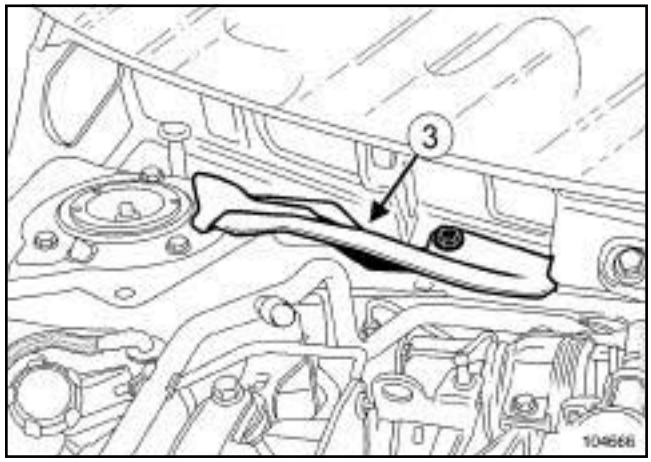

104666

❏ Remove the scuttle panel bracket (**3**) .

F9Q or K9K

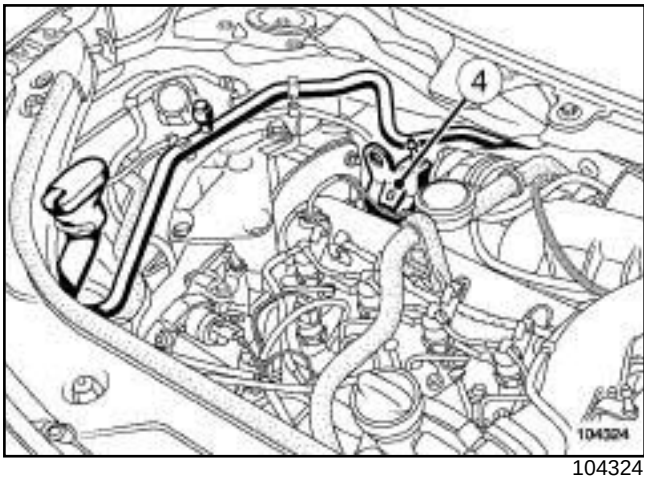

104324

❑ Remove:

- the lifting eye (**4**) ,
- the soundproofing screen mountings.

❑ Remove the soundproofing padding.

AIR CONDITIONING or CLIMATE CONTROL

❑ Remove the air-conditioning hose between the bulkhead bracket and the dehydrator reservoir (see **Dehydration canister - evaporator connecting pipe: Removal - Refitting**) (MR 370, 62A, Air conditioning).

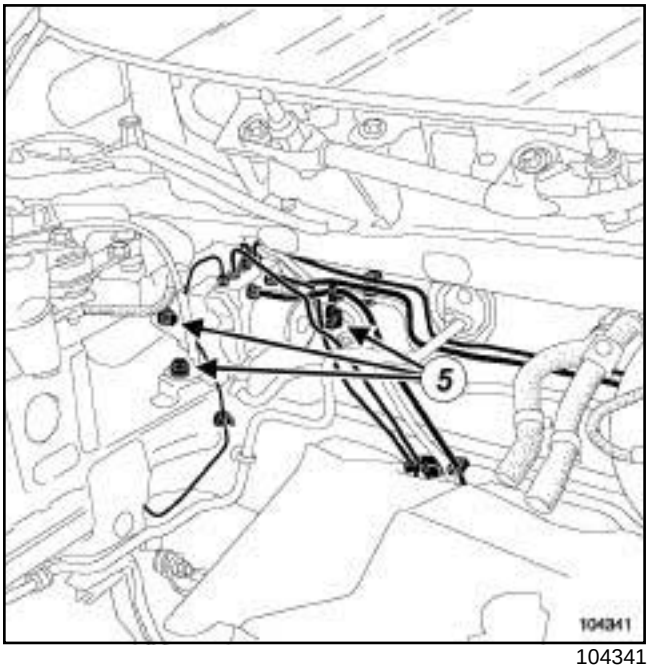

104341

❑ Remove the ABS computer earth terminal mounting bolt.

❑ Disconnect the computer connector.

❑ Unscrew the six pipes on the hydraulic unit.

❑ Unclip the six pipes on the hydraulic unit.

❑ Remove:

- the mounting bolts ***(5)*** from the hydraulic unit support,
- the « hydraulic unit - support » assembly,
- the bolts securing the hydraulic unit on the support,
- the hydraulic unit.

REFITTING

❑

WARNING
Ensure the hydraulic unit earth terminal wire is facing downwards to optimise the computer connector sealing.

Proceed in the reverse order to removal.

F9Q or K9K

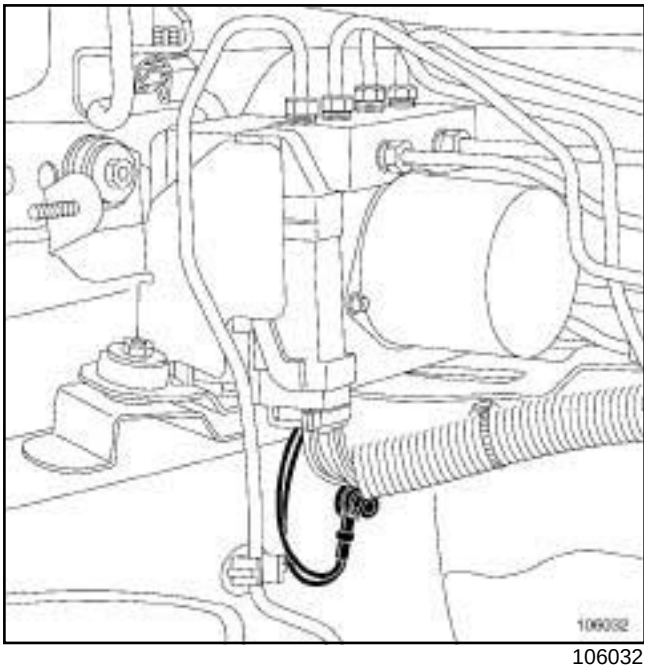

106032

❑

WARNING
Set up the earth terminal wires facing downwards, to optimise the hydraulic unit computer connector sealing.

AIR CONDITIONING or CLIMATE CONTROL

❑ Refit the air-conditioning hose (see **Dehydration canister - evaporator connecting pipe: Removal - Refitting**) (MR 370, 62A, Air conditioning).

Note:
The seals at the ends of the air conditioning pipe must be replaced.

❑ Torque tighten:

- the **hydraulic unit support mounting bolts (6.5 Nm)**,
- the **bolts mounting the hydraulic unit on its support (8 Nm)**,
- the **bolts mounting the pipes on the hydraulic unit (14 Nm)**.

❑ Connect the battery (see **Battery : Removal - Refitting**) (MR 370, 80A, Battery).

❑ Bleed the brake circuit using the **diagnostic tool**

(see **30A**, **General information**, **Brake circuit Bleeding**, page **30A-2**) .

AIR CONDITIONING or CLIMATE CONTROL

❑ Fill the refrigerant circuit using the **refrigerant charging station**.

❑ Make sure the air conditioning is working properly with the fan assembly at top speed.

If there is no cold air, check for leaks (see **Coolant circuit check**) (MR 370, 62A, Air conditioning).

F4R

Essential equipment
pedal press
refrigerant charging station
diagnostic tool

Tightening torques ▽	
hydraulic unit support mounting bolts	**65 Nm**
bolts mounting the hydraulic unit on its support	**8 Nm**
bolts mounting the pipes on the hydraulic unit	**14 Nm**
plenum chamber mounting bolts	**9 Nm**

REMOVAL

❑ Position the vehicle on a two-post lift (see **Vehicle: Towing and lifting**) (MR 370, 02, Lifting equipment).

❑ Disconnect the battery (see **Battery: Removal - Refitting**) (MR 370, 80A, Battery).

❑ Fit the **pedal press** to the brake pedal to reduce the amount of brake fluid running out.

AIR CONDITIONING or CLIMATE CONTROL

❑ Drain the refrigerant circuit using the **refrigerant charging station**.

❑ Remove the scuttle panel grille (see **Scuttle panel grille: Removal - Refitting**) (MR 371, 56A, Exterior equipment).

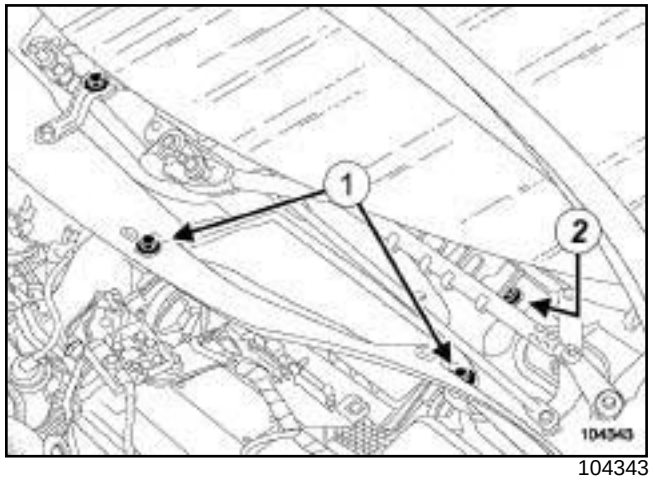

104343

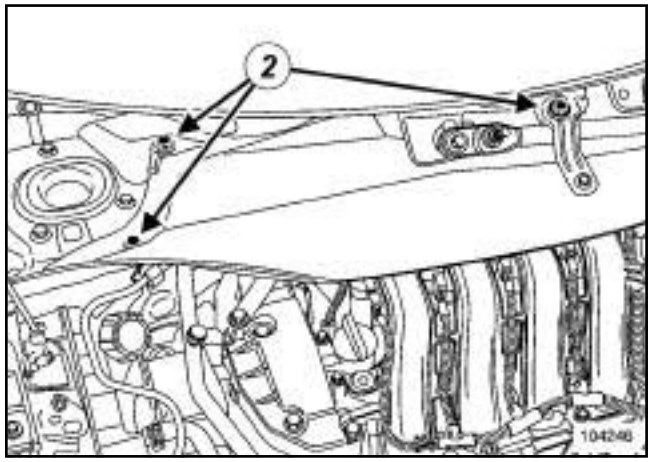

104246

❑ Remove:

- the engine covers,
- the two air filter access panel mounting bolts (**1**) ,
- the radiator tank partition mounting bolts (**2**) ,
- the scuttle panel partition.

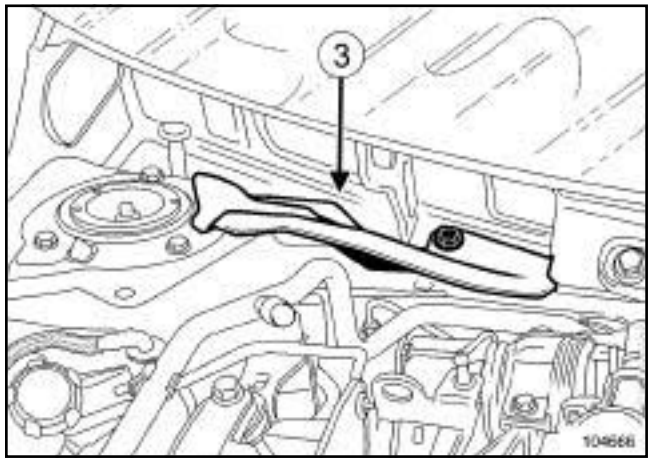

104666

❑ Remove the scuttle panel bracket (**3**) .

F4R

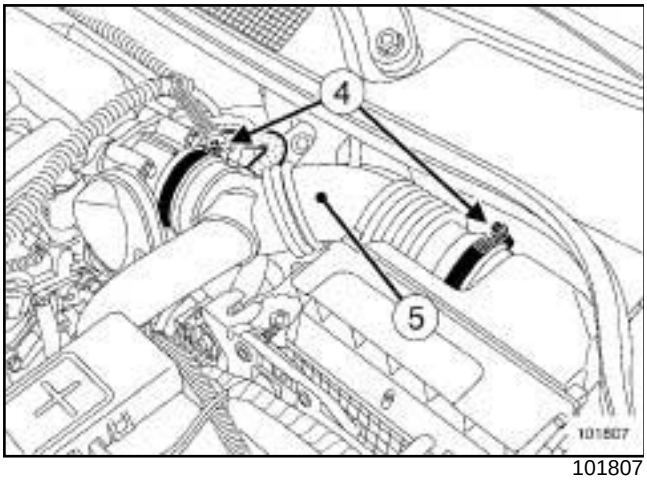

101807

❑ Loosen the air duct clips (**4**) .

❑ Remove the air duct (**5**) .

> Note:
>
> Do not damage the vacuum outlet on the plenum chamber. If it is damaged, the inlet manifold will have to be replaced.

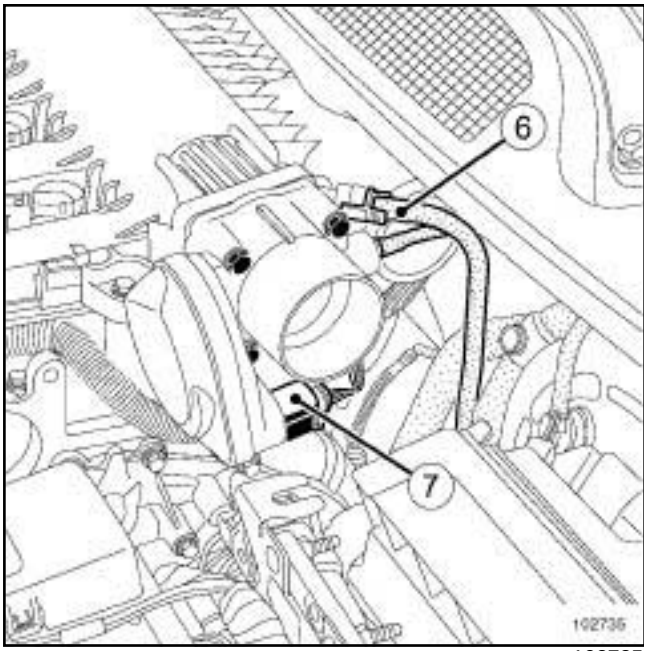

102735

❑ Disconnect:

- the brake servo vacuum pipe (**6**) from the air distributor side,
- the ignition coil connectors,
- the throttle valve connector (**7**) .

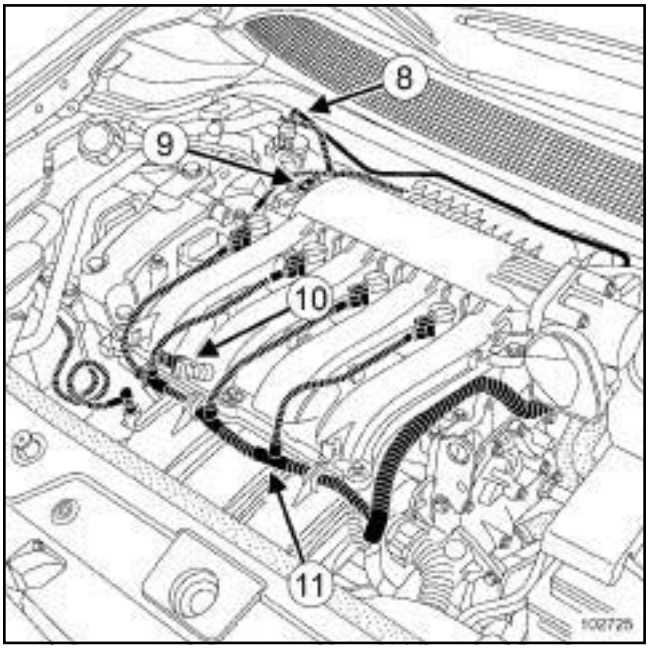

102725

❑ Unclip the fuel vapour recirculation pipe on the solenoid valve side (**8**) .

❑ Disconnect:

- the air pressure sensor ***(9)*** ,
- the air temperature sensor ***(10)*** .

❑ Remove the engine wiring harness ***(11)*** .

F4R

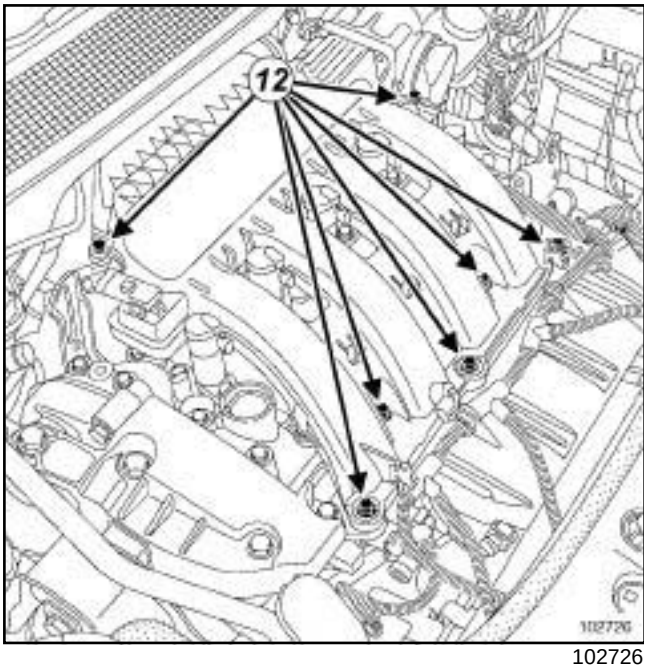

102726

❑ Remove:

- the air distribution unit mounting bolts (**12**) ,
- the air distribution unit (see **Inlet manifold: Removal - Refitting**) (MR 370, 12A, Fuel mixture),
- the soundproofing screen mountings.

❑ Remove the soundproofing screen.

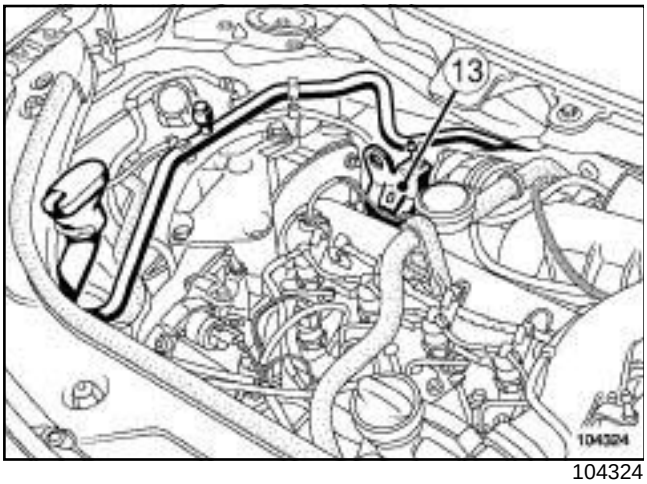

104324

❑ Remove the lifting eye (**13**) .

AIR CONDITIONING or CLIMATE CONTROL

❑ Remove the air-conditioning hose between the bulkhead bracket and the dehydrator reservoir (see **Dehydration canister - evaporator connecting pipe: Removal - Refitting**) (MR 370, 62A, Air conditioning).

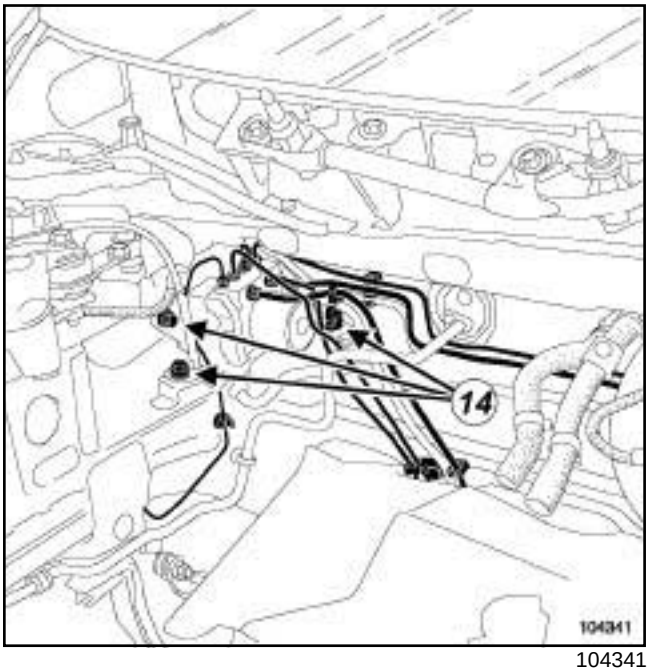

104341

❑ Remove the ABS computer earth terminal mounting bolt.

❑ Disconnect the computer connector.

❑ Unscrew the six pipes from the hydraulic unit.

❑ Unclip the six pipes from the hydraulic unit.

❑ Remove:

- the mounting bolts ***(14)*** from the hydraulic unit support,
- the « hydraulic unit - support » assembly,
- the bolts securing the hydraulic unit on the support,
- the hydraulic unit.

REFITTING

❑ Proceed in the reverse order to removal.

F4R

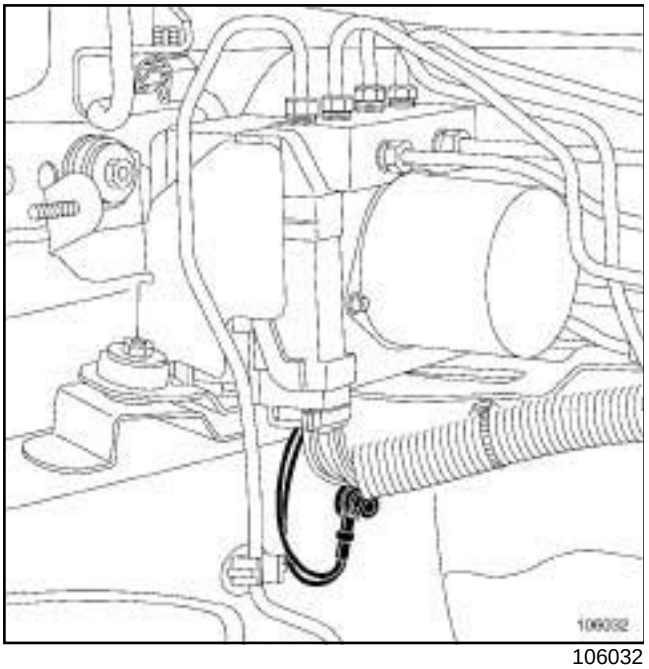

106032

❑

WARNING

Set up the earth terminal wires facing downwards, to optimise the hydraulic unit computer connector sealing.

AIR CONDITIONING or CLIMATE CONTROL

❑ Refit the air-conditioning hose (see **Dehydration canister - evaporator connecting pipe: Removal - Refitting**) (MR 370, 62A, Air conditioning).

❑ Torque tighten:

- the **hydraulic unit support mounting bolts (65 Nm)**,
- the **bolts mounting the hydraulic unit on its support (8 Nm)**,
- the **bolts mounting the pipes on the hydraulic unit (14 Nm)**,
- the **plenum chamber mounting bolts (9 Nm)**.

Note:

- Replace the seal every time the throttle valve is removed,
- The seals at the ends of the air conditioning pipe must be replaced.

❑ Bleed the brake circuit using the **diagnostic tool** (see **30A**, **General information**, **Brake circuit Bleeding**, page **30A-2**) .

❑ Connect the battery (see **Battery : Removal - Refitting**) (MR 370, 80A, Battery).

❑ Reinitialise the programming of the stops (see **Fault finding - Replacement of components**) (MR 372, 17B, Petrol injection).

AIR CONDITIONING or CLIMATE CONTROL

❑ Fill the refrigerant circuit using the **refrigerant charging station**.

❑ Make sure the air conditioning is working properly with the fan assembly at top speed.

If there is no cold air, check for leaks (see **Coolant circuit check**) (MR 370, 62A, Air conditioning).

M9R, and LEFT-HAND DRIVE

Essential equipment
pedal press

Tightening torques ▽	
bolts mounting the hydraulic unit on its support	**8 Nm**
bolts mounting the pipes on the hydraulic unit	**17 Nm**
bolts for the hydraulic unit mounting on the body	**6.5 Nm**

WARNING
Drain the brake fluid to prevent damage to the mechanical parts and bodywork around the braking system.

REMOVAL

❑ Position the vehicle on a two-post lift (see **Vehicle: Towing and lifting**) (MR 370, 02, Lifting equipment).

❑ Disconnect the battery (see **Battery: Removal - Refitting**) (MR 370, 80A, Battery).

❑ Fit the **pedal press** to the brake pedal to reduce the amount of brake fluid running out.

❑ Remove the scuttle panel grille (see **Scuttle panel grille: Removal - Refitting**) (MR 371, 56A, Exterior equipment).

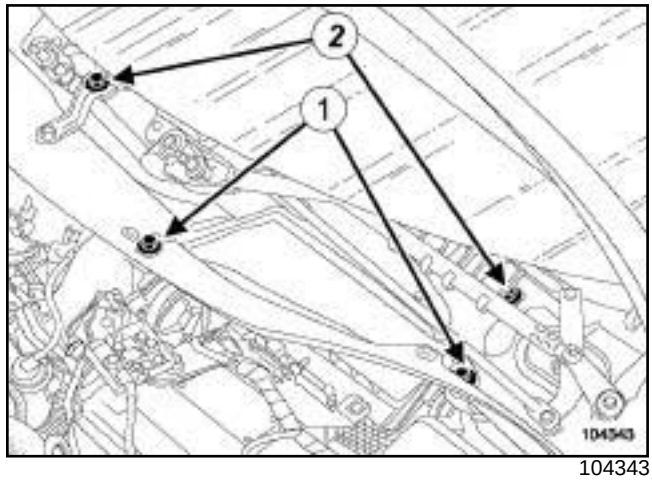

104343

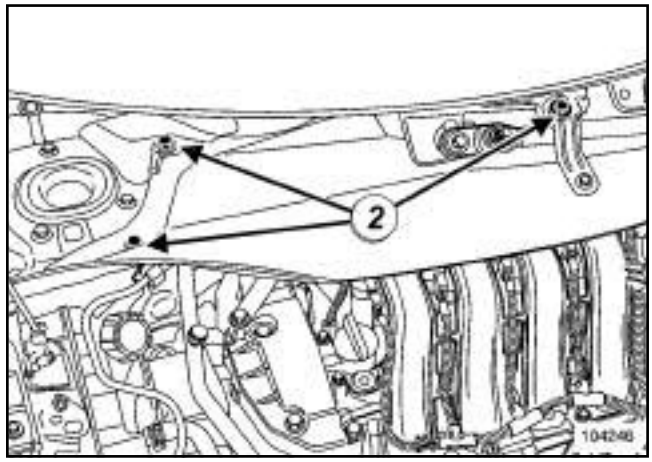

104246

❑ Remove:

- the two air filter access panel mounting bolts (**1**) ,
- the air filter access panel,
- the radiator tank partition mounting bolts (**2**) ,
- the scuttle panel partition.

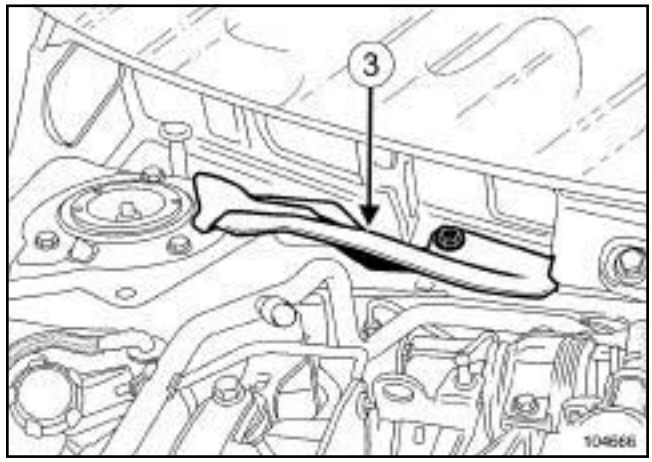

104666

❑ Remove the scuttle panel bracket (**3**)

M9R, and LEFT-HAND DRIVE

❏ Remove:

- the engine cover,
- the catalytic converter (see **Catalytic converter: Removal - Refitting**) (MR 370, 19B, Exhaust),
- the bulkhead heat shield clips,
- the bulkhead heat shield bolt,
- the lifting eye mounting bolts,
- the lifting eye.

❏ Remove the heat shield.

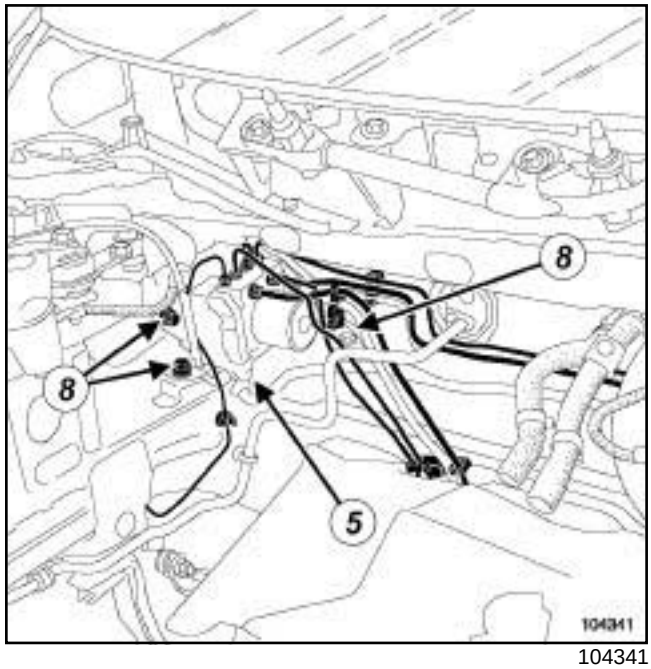

104341

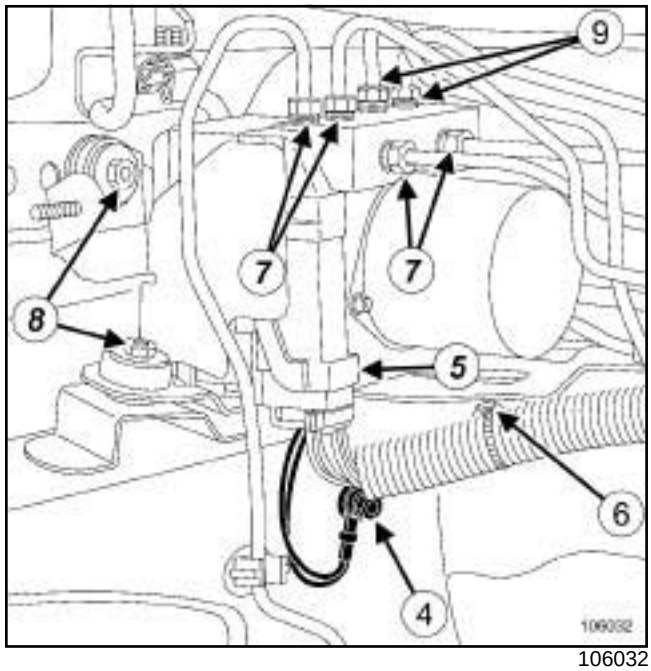

106032

❏ Remove the ABS computer earth terminal mounting nut (**4**) .

❏ Disconnect the computer connector by lifting bracket (**5**) .

❏ Unpick the wiring harness at (**6**) from the hydraulic unit on its support.

❏ Undo the brake pipe unions (**7**) .

❏ Remove the hydraulic unit support mounting bolts (**8**) .

❏ Undo the brake pipe unions (**9**) by moving the hydraulic unit forward slightly.

M9R, and LEFT-HAND DRIVE

❑ Remove:

- the hydraulic unit and support assembly,
- the bolts securing the support onto the hydraulic unit,
- the hydraulic unit.

REFITTING

❑ Proceed in the reverse order to removal.

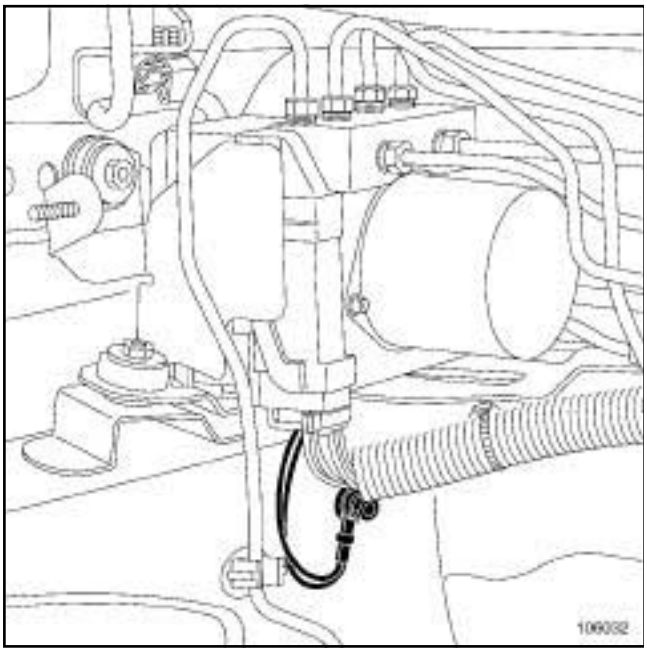

106032

❑

WARNING
Set up the earth terminal with the wires facing downwards to optimise the hydraulic unit computer connector sealing.

❑ Torque tighten:

- the **bolts mounting the hydraulic unit on its support (8 Nm)**,
- the **bolts mounting the pipes on the hydraulic unit (17 Nm)**,
- the **bolts for the hydraulic unit mounting on the body (6.5 Nm)**.

❑ Bleed the brake circuit (see **30A**, **General information**, **Brake circuit Bleeding**, page **30A-2**) .

❑ Connect the battery (see **Battery : Removal - Refitting**) (MR 370, 80A, Battery).

Pump assembly

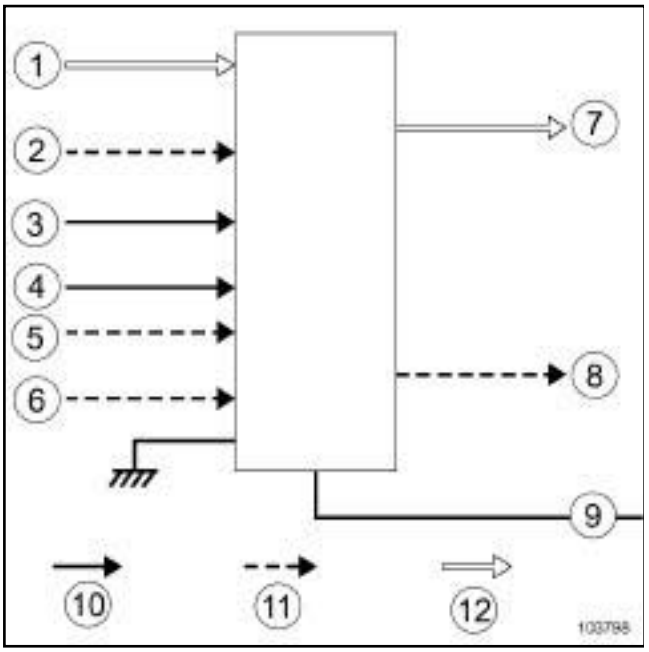

103798

No.	Type of connection
10	Multiplex network
11	Wire connection
12	Hydraulic connection

No.		Description
Inputs	1	Braking pressure from the master cylinder
	2	Combined lateral acceleration and yaw sensor signal
	3	Wheel speed sensor signals
	4	Steering wheel angle sensor signal
	5	Diagnostic socket
	6	Supply (+ after ignition)
Outputs	7	Regulated braking pressure on wheel(s) concerned
	8	Diagnostic socket
	9	ASR and ESP deactivation push-button

The steering wheel angle sensor is built into the electric power assisted steering. This sensor cannot be removed.

Note:

Two types of pump assemblies are fitted, either ABS or ABS - ESP. The ABS computer has **26 tracks**. The ABS/ESP computer has **46 tracks**.

Essential equipment
diagnostic tool

Tightening torques ▽	
lateral acceleration and yaw sensor mounting nuts	**8 Nm**

REMOVAL

❑ Disconnect the battery (see **Battery: Removal - Refitting**) (MR 370, 80A, Battery).

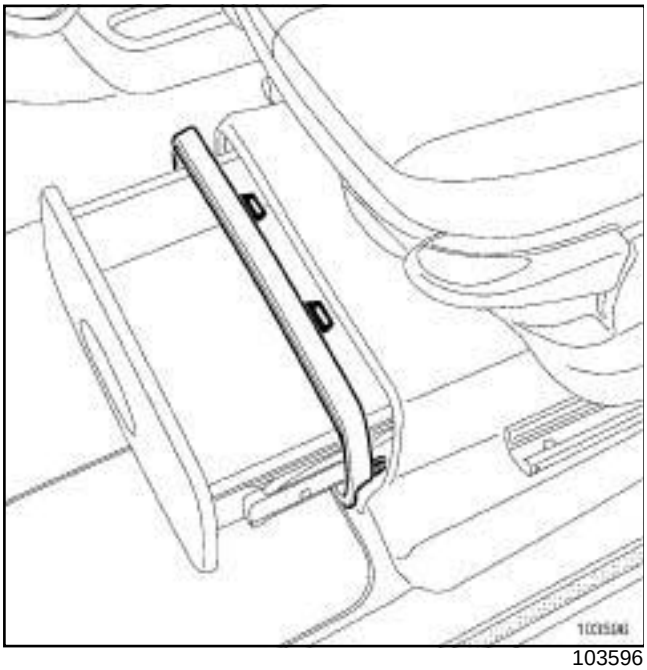

103596

❑ Unclip the drawer surround.

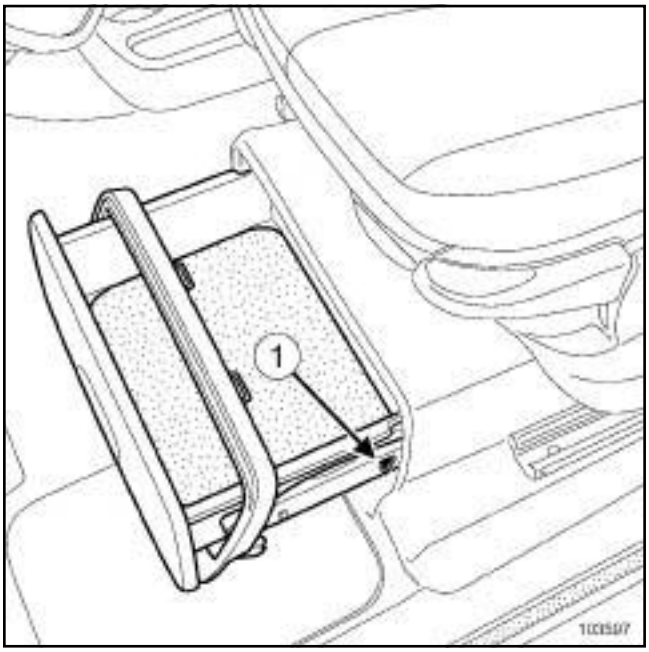

103597

❑ Remove the slide by pressing on the clip (**1**) with a flat-blade screwdriver.

❑ Disconnect the yaw speed and transverse acceleration sensor connector.

WARNING
Handle this sensor with care.

❑ Remove:

- the sensor mounting nuts,
- the sensor.

REFITTING

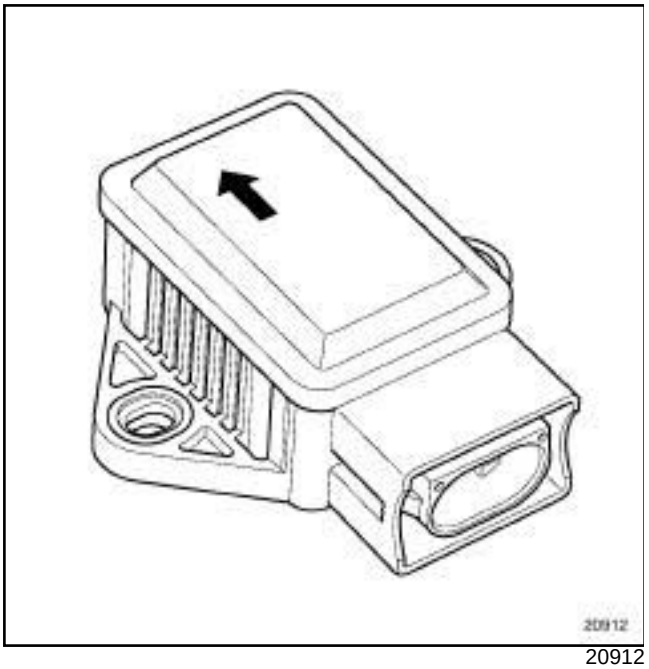

20912

- The sensor must be fitted facing the vehicle's direction of travel (as shown by the arrow).

> Note:
>
> Be sure to replace any sensor which has suffered an impact.

- Proceed in the reverse order to removal.
- Torque tighten the **lateral acceleration and yaw sensor mounting nuts (8 Nm)**.
- Connect the battery (see **Battery : Removal - Refitting**) (MR 370, 80A, Battery).
- If replacing the lateral acceleration and yaw sensor, carry out the necessary operations using the **diagnostic tool** (see **Fault finding - Replacement of components**) (MR 372, 38C, ABS).

Essential special tooling	
Mot. 1608	Torque screwdriver 1 to 6.6 N.m.

Essential equipment
diagnostic tool

Tightening torques ▽	
computer mounting bolts	**3 Nm**

Removal of the ESP or ABS computer is allowed.

REMOVAL

❑ Position the vehicle on a two-post lift (see **Vehicle: Towing and lifting**) (MR 370, 02A, Lifting equipment).

❑ Remove the entire hydraulic unit (see **38C**, **Anti-lock braking system**, **Brake hydraulic assembly: Removal - Refitting**, page **38C-3**) .

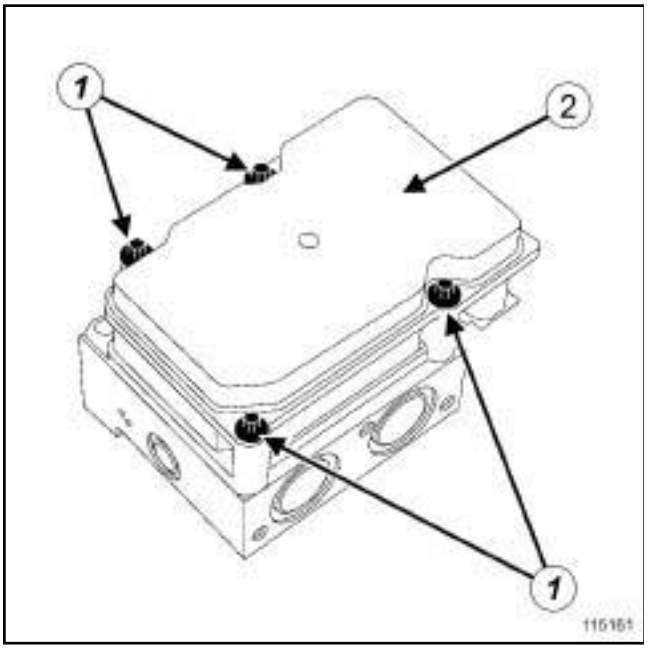

115161

❑ Remove:

- the bolts mounting the computer (**1**) on the pressure modulation unit,
- the computer (**2**) .

REFITTING

❑ Do not clean the pressure modulation unit ***(4)*** .

❑ Always replace the computer mounting bolts.

❑ Refit the computer, holding it by its edge.

> Note:
>
> Do not try to force the computer into place when refitting, it should fit in without any resistance.

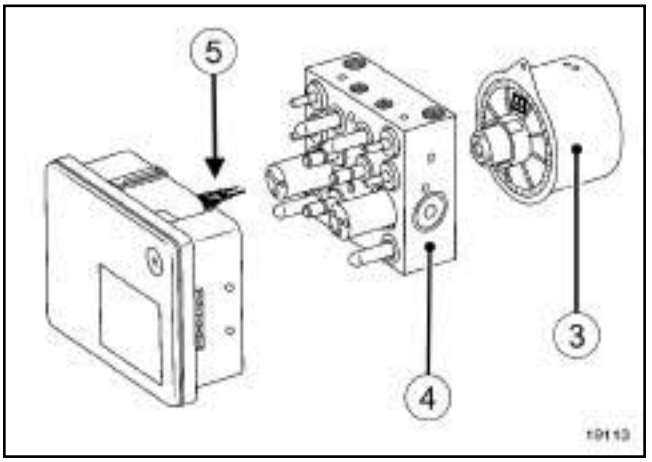

19113

❑ The hydraulic pump (**3**) must be pressed against the pressure modulation unit (**4**) .

When a new computer is being fitted, remember to attach the interconnection fork (**5**) between the pressure modulation unit and the computer.

❑ Refit the bolts securing the computer on the pressure modulation unit.

❑ Torque tighten the **computer mounting bolts (3 Nm)** using the **(Mot. 1608)**.

❑ Refit the entire hydraulic unit (see **38C**, **Anti-lock braking system**, **Brake hydraulic assembly: Removal - Refitting**, page **38C-3**) .

❑ Configure the tachometric index using the **diagnostic tool** (see **Fault finding - Replacement of components**) (MR 372, 38C, Anti-lock braking system).

❑ Clear any faults that have been stored in the computer.

❑ Carry out a road test to confirm the repair.