YAMAHA

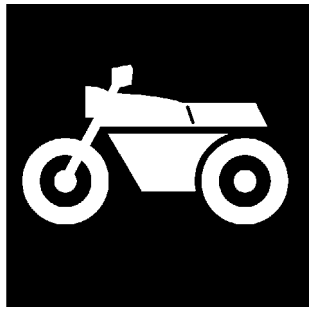

PARTS CATALOGUE
CATALOGO DE REPUESTOS

XTZ125E (1SB4) MEXICO

1N1SB-210S1

( )

YAMAHA GENUINE Parts & Accessories

XTZ125E
CATALOGO DE REPUESTOS
©2013 por Yamaha Motor Co., Ltd.
1ª edición, agosto 2013
Todos los derechos reservados.
Toda reproducción o uso no autorizado
sin el consentimiento escrito de
Yamaha Motor Co., Ltd.
quedan expresamente prohibidos
Impreso en Japón.

XTZ125E
PARTS CATALOGUE
©2013 by Yamaha Motor Co., Ltd.
1st edition, August 2013
All rights reserved.
Any reprinting or unauthorized use
without the written permission of
Yamaha Motor Co., Ltd.
is expressly prohibited.
Printed in Japan.

PROLOGO

Este catálogo de repuestos corresponde a las piezas para el o los modelos que figuran en la página de portada. Al formular el pedido de repuestos, se ruega citar este catálogo y especificar correctamente el número y el nombre de las piezas.

1. Las modificaciones y agregados que se hayan realizado después de la edición de este Catálogo de Repuestos, serán anunciados en las Informaciones de Recambios.
   Es recomendable que se hagan las correcciones necesarias en el Catálogo de Repuestos de acuerdo con las Informaciones de Recambios.

2. Abreviaciones
   En este. Catálogo de Repuestos se emplean las siguientes abreviaciones.

   "UR" Usar el número de partes especificado
   "UN" Usar la cantidad necesaria
   "AP" Piezas sustitutivas
   "LM" Fabricación local (Hay que pedir los repuestos en las cercanías)
   "F#" Nº de bastidor (Nº aplicable a la máquina)
   "O/S" Sobredimensionado

3. La cantidad de componentes para el montaje
   - Los componentes, suministrados como conjunto, se describen con un punto (.) que precede al nombre del parte como se indica a continuación.
   - La numeración que aparece a la derecha de cada descripción indica la cantidad de partes por cada unidad de conjunto.

CODIGO Nº	DESCRIPCION	CANT.	OBSERVACIONES
2F5–83310–60	ENSAMBLAJE DE LA LUZ	2	
115–83311–60	.BOMBILLA (6V–18W)	1	

4. Los colores de los componentes se indican como sigue en la columna de "OBSERVACIONES".

CODIGO Nº	DESCRIPCION	CANT.	OBSERVACIONES
2N4–24110–00–X5	COMP. DEL TANQUE	2	MXR
3J1–24240–10	.GRAFICO, DEL TANQUE	1	PARA MXR

5. Debe tenerse en cuenta que las ilustraciones sirven como guia para la búsqueda de los números de partes y no deben usarse para el montaje. Durante el montaje, se recomienda usar el manual de taller correspondiente.

6. EL asterisco (*) antes del número de referencia indica los elementos modificados después de la primera edición.

FOREWORD

This Parts Catalogue is related to the parts for the model(s) on the cover page. When you are ordering replacement parts, please refer to this Parts Catalogue and quote both part numbers and part names correctly.

1. Modifications or additions which have been made after the issue of the Parts Catalogue will be announced in the Parts News.
   It is advisable that you make the necessary corrections to the Parts Catalogue according to the Parts News.

2. Abbreviations
   The following abbreviations are used in this Parts Catalogue.

   “UR” Use specified parts number.
   “UN” Use as many as needed.
   “AP” Alternate Parts
   “LM” Locally Made (Parts need to be ordered locally)
   “F#” Frame No. (Applicable machine No.)
   “O/S” Over Size

3. The number of components for assembly
   - Parts, which are to be supplied in an assembly, are listed with a dot (.) in front of the part name as shown below.
   - The numeral appearing to the right of each component part indicates the quantity of parts for each assembly unit.

PART NO.	DESCRIPTION	Q’TY	REMARKS
2F5–83310–60	FRONT FLASHER LIGHT ASSY	2	
115–83311–60	.BULB (6V–18W)	1	

4. Applicable colours of graphics are represented in the “REMARKS” as shown below.

PART NO.	DESCRIPTION	Q’TY	REMARKS
2N4–24110–00–X5	FUEL TANK COMP.	2	MXR
3J1–24240–10	.GRAPHIC, FUEL TANK	1	FOR MXR

5. Note that the illustrations for reference in finding parts numbers are not to be used for assembling. When assembling, please use the applicable service manual.

6. The asterisk (*) before a reference number indicates modified items after the first edition.

7. Números de serie

Nº de Serie del bastidor

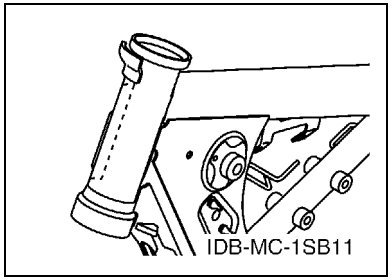

Nº de Serie del motor

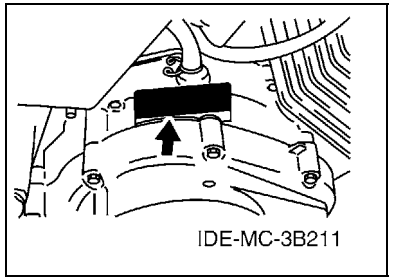

8. Códigos de color aplicables (El símbolo (*) muestra el color de modelo.)

Abreviatura	Nombre de color	Código de color
DPBSE(*)	DEEP PURPLISH BLUE SOLID E	0583
PWS1(*)	PURPLISH WHITE SOLID 1	0206
YB(*)	YAMAHA BLACK	0033

9. Nº de serie inicial aplicable

Nº de Serie del bastidor

Nº de serie	Nombre de la columna de cantidades	Código de Modelo

Nº de Serie del motor

Nº de serie	Nombre de la columna de cantidades	Código de Modelo

7. Applicable Serial No.

Frame Serial No.

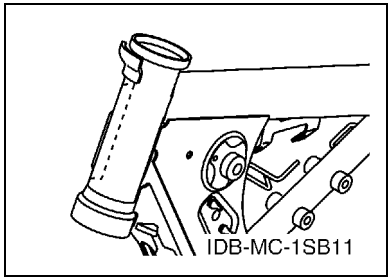

Engine Serial No.

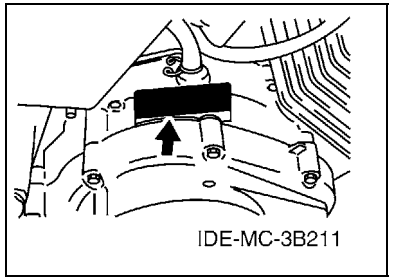

8. Applicable Colour Code (The (*) mark shows Model colour.)

Abbreviation	Colour Name	Colour Code
DPBSE(*)	DEEP PURPLISH BLUE SOLID E	0583
PWS1(*)	PURPLISH WHITE SOLID 1	0206
YB(*)	YAMAHA BLACK	0033

9. Applicable Starting Serial No.

Frame Serial No.

Serial No.	Name Of Q'ty Column	Model Code

Engine Serial No.

Serial No.	Name Of Q'ty Column	Model Code

CONTENIDO

MOTOR

CILINDRO 1
CIGUENAL & PISTON 2
VALVULA 3
ARBOL DE LEVAS & CADENA 4
BOMBA DE ACEITE 5
ADMISION 6
CARBURADOR 8
DESCARGA 10
CARTER 11
CUBIERTA DE CARTER 1 12
ARRANQUE 13
EMBRAGUE DEL ARRANQUE 14
EMBRAGUE 15
TRANSMISION 16
LEVA DE CAMBIO & HORQUILLA 18
EJE DE CAMBIO & PEDAL 19

SHASIS

CUADRO 20
GUARDABARRO 21
CUBIERTA LATERAL 23
BRAZO TRASERO & SUSPENSION 25
DIRECCION 26
HORQUILLA DELANTERA 27
DEPOSITO DE COMBUSTIBLE 30
ASIENTO 33
RUEDA DELANTERA 34
CALIBRE FRENO DELANTERA 35
RUEDA TRASERA 36
MANILLAR & CABLE 38
CILINDRO MAESTRO DELANTERO 39
SOPORTE & APOYAPIE 40
GENERADOR 42
MOTOR DE ARRANQUE 43
LUZ DE DESTELLADOR 44
MEDIDOR 45
FARO DELANTERO 46
LUZ DE COLA 47
INTERRUPTOR DE MANILLAR&PALANC 48
EQUIPO ELECTRICO 1 49
EQUIPO ELECTRICO 2 50

INDICE

INDICE NUMERICO 51

CONTENTS

ENGINE

CYLINDER 1
CRANKSHAFT & PISTON 2
VALVE 3
CAMSHAFT & CHAIN 4
OIL PUMP 5
INTAKE 6
CARBURETOR 8
EXHAUST 10
CRANKCASE 11
CRANKCASE COVER 1 12
STARTER 13
STARTER CLUTCH 14
CLUTCH 15
TRANSMISSION 16
SHIFT CAM & FORK 18
SHIFT SHAFT 19

CHASSIS

FRAME 20
FENDER 21
SIDE COVER 23
REAR ARM & SUSPENSION 25
STEERING 26
FRONT FORK 27
FUEL TANK 30
SEAT 33
FRONT WHEEL 34
FRONT BRAKE CALIPER 35
REAR WHEEL 36
STEERING HANDLE & CABLE 38
FRONT MASTER CYLINDER 39
STAND & FOOTREST 40
GENERATOR 42
STARTING MOTOR 43
FLASHER LIGHT 44
METER 45
HEADLIGHT 46
TAILLIGHT 47
HANDLE SWITCH & LEVER 48
ELECTRICAL 1 49
ELECTRICAL 2 50

INDEX

NUMERICAL INDEX 51

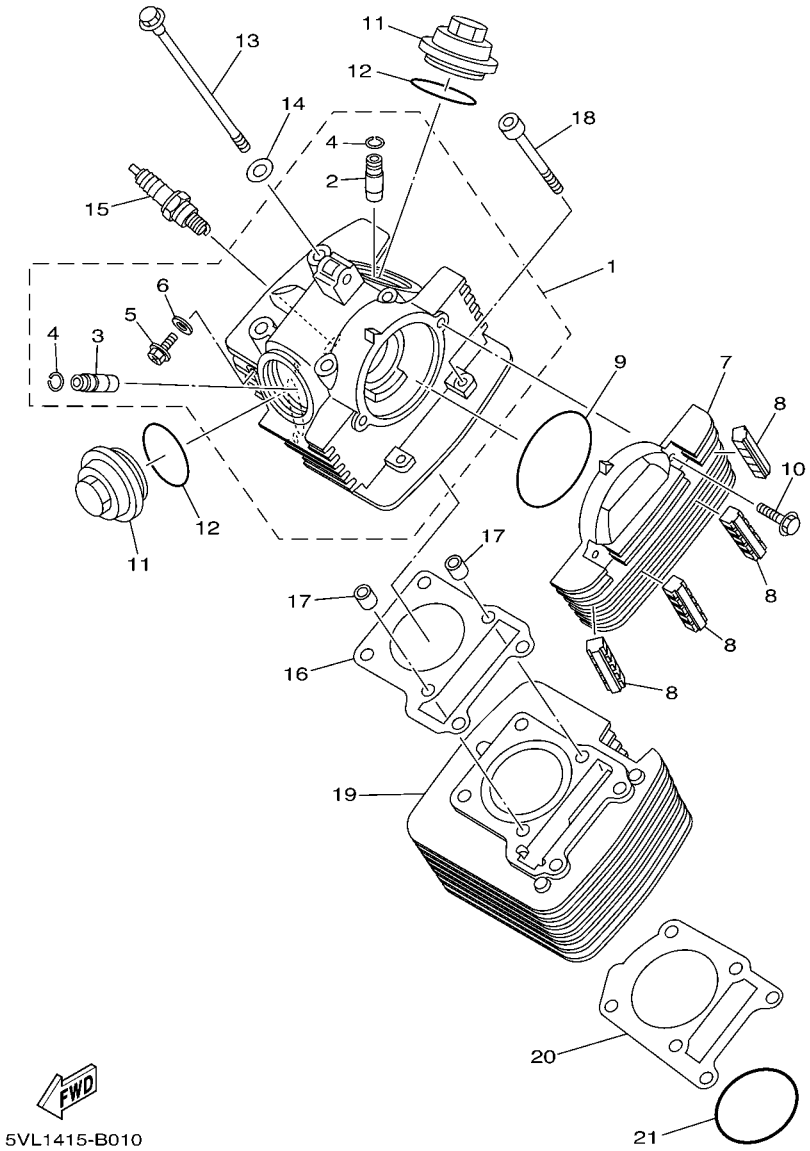

FIG. 1 CILINDRO — CYLINDER

REF. Nº	CODIGO Nº PART NO.	DESCRIPCION DESCRIPTION	1SB4					OBSERVACIONES REMARKS
1	5VL–E1111–01	CULATA CILINDRO 1 HEAD, CYLINDER 1	1					
2	2UJ–11133–10	.GUIA DE VALVULA 1 .GUIDE, VALVE 1	1					
3	22F–11134–10	.GUIA DE VALVULA 2 .GUIDE, VALVE 2	1					
4	93440–10109	.SEGURO .CIRCLIP	2					
5	90153–06803	.TORNILLO HEXAGONAL .SCREW, HEXAGON	1					
6	90430–06817	.JUNTA .GASKET	1					
7	5VL–E1185–00	CUBIERTA CULATA CIL.LAT.3 COVER, CYLINDER HEAD SIDE 3	1					
8	5VL–E1161–00	AMORTIGUADOR 1 ABSORBER 1	4					
9	93210–71801	ANILLO O O-RING	1					
10	95022–06020	PERNO, DE BRIDA BOLT, FLANGE	2					
11	5VL–E1186–00	CUBIERTA CULATA CIL.LAT.2 COVER, CYLINDER HEAD SIDE 2	2					
12	93210–44889	ANILLO O O-RING	2					
13	90105–08724	TORNILLO BOLT, FLANGE	4					
14	90201–088C3	ARANDELA PLANA WASHER, PLATE	4					
15	94700–00869	BUJIA (NGK CR6HSA) PLUG SPARK (NGK CR6HSA)	1					
16	5VL–E1181–00	JUNTA, DE CULATA 1 GASKET, CYLINDER HEAD 1	1					
17	99530–10114	PASADOR, DE ESPIGA PIN, DOWEL	2					
18	91312–06090	TORNILLO BOLT	2					
19	5VL–E1310–00	CILINDRO CYLINDER	1					
20	5VL–E1351–10	JUNTA, DE CILINDRO GASKET, CYLINDER	1					
21	93210–57897	ANILLO O O-RING	1					

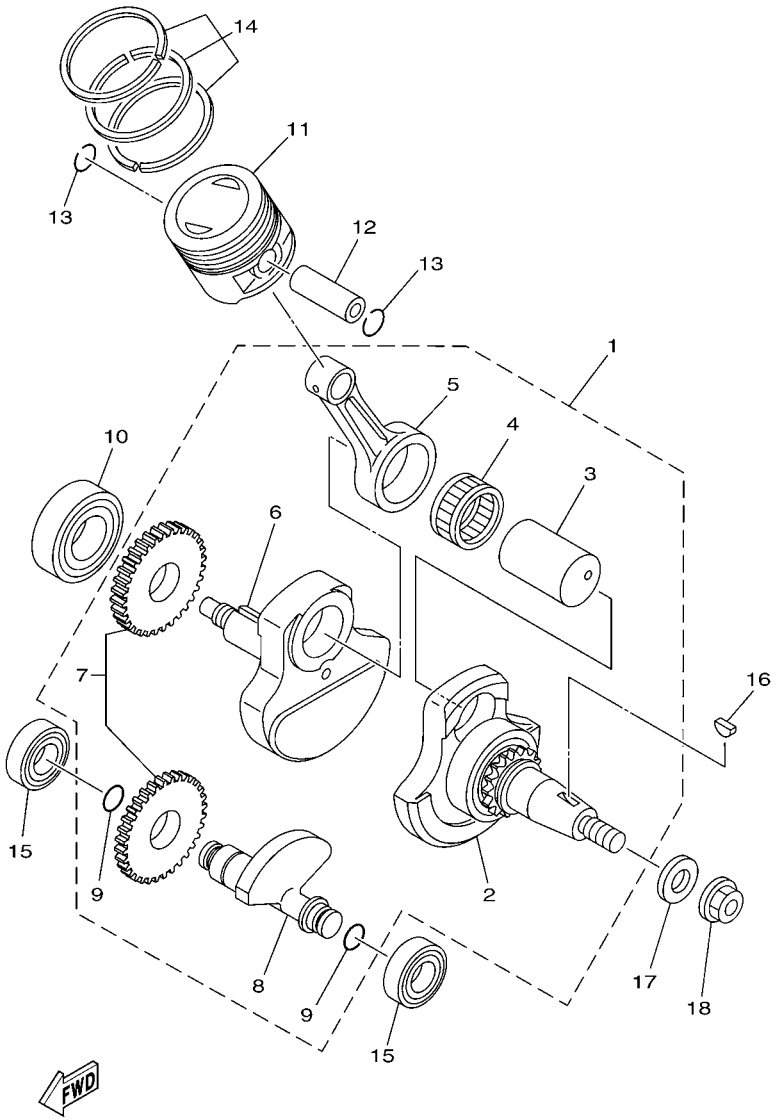

4P26200-G020

FIG. 2 CIGUENAL & PISTON — CRANKSHAFT & PISTON

REF. Nº	CODIGO Nº PART NO.	DESCRIPCION DESCRIPTION	1SB4					OBSERVACIONES REMARKS
1	2D0–W1140–00	CIGUENAL COMPLETO CRANKSHAFT ASSY	1					
2	2D0–W1141–00	.MANIVELA SEMI-ARMADA 1 .CRANK SUB ASSY 1	1					
3	5VL–E1681–00	.PASADOR MANIVELA 1 .PIN, CRANK 1	1					
4	93310–629Y3	.COJINETE DE RODILLOS .BEARING	1					
5	5VL–E1651–00	.BIELA .ROD, CONNECTING	1					
6	5VL–E1422–00	.MANIVELA 2 .CRANK 2	1					
7	5VL–Y1153–00	.ENGRANAJE TRACCION .GEAR, BALANCE WEIGHT ASSY.	1					
8	5VL–E1454–00	.PESO 1 .WEIGHT 1	1					
9	93210–11800	.ANILLO O .O-RING	2					
10	93306–205XJ	COJINETE BEARING	1					
11	5VL–E1631–00	PISTON (NORMA) PISTON (STD)	1					
	4LS–11636–01	PISTON (0.50MM O/S) PISTON (0.50MM O/S)	1					AP AP
	4LS–11638–01	PISTON (1.00MM O/S) PISTON (1.00MM O/S)	1					AP AP
12	5VL–E1633–00	PASADOR, PISTON PIN, PISTON	1					
13	93450–16812	SEGURO CIRCLIP	2					
14	5VL–W1161–00	JUEGO DE AROS (NORMA) PISTON RING SET (STD)	1					
	4LS–11605–00	JUEGO DE ANILLOS (0.50MM O/S) PISTON RING SET (0.50MM O/S)	1					AP AP
	4LS–11607–00	JUEGO DE ANILLOS (1.00MM O/S) PISTON RING SET (1.00MM O/S)	1					AP AP
15	93306–202XN	COJINETE BEARING	2					
16	90280–03017	CUNA WOODRUFF KEY, WOODRUFF	1					
17	90201–122H1	ARANDELA PLANA WASHER, PLATE	1					
18	90179–12863	TUERCA NUT	1					

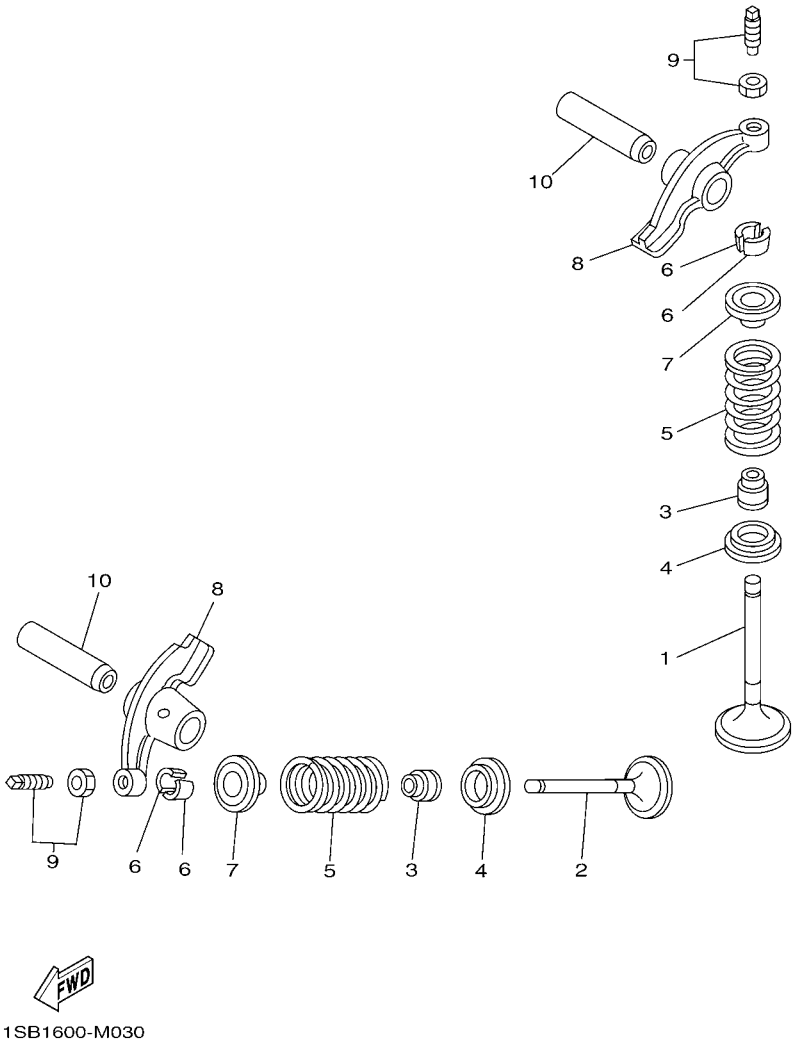

FIG. 3 VALVULA VALVE

REF. Nº	CODIGO Nº PART NO.	DESCRIPCION DESCRIPTION	1SB4					OBSERVACIONES REMARKS
1	5VL–E2111–00	VALVULA DE ADMISION VALVE, INTAKE	1					
2	5VL–E2121–00	VALVULA DE ESCAPE VALVE, EXHAUST	1					
3	5VL–E2119–00	SELLO DE ACEITE VALVULA SEAL, VALVE STEM	2					
4	5VL–E2116–01	ASIENTO RESORTE DE VALVULA SEAT, VALVE SPRING	2					
5	5HH–12113–00	RESORTE VALVULA INTERNA SPRING, VALVE INNER	2					
6	5VL–E2118–00	SEGURO DE VALVULA LOCK, VALVE SPRING RETAINER	4					
7	5VL–E2117–01	RETEN RESORTE DE VALVULA RETAINER, VALVE SPRING	2					
8	5HH–E2151–00	BRAZO DE BALANCIN DE VALVULA ARM, VALVE ROCKER	2					
9	5VL–Y1215–00	TORNILLO DE AJUSTE DE VALVULA SCREW, VALVE ADJUSTING	2					
10	5VL–E2156–00	EJE DE BALANCIN SHAFT, ROCKER 2	2					

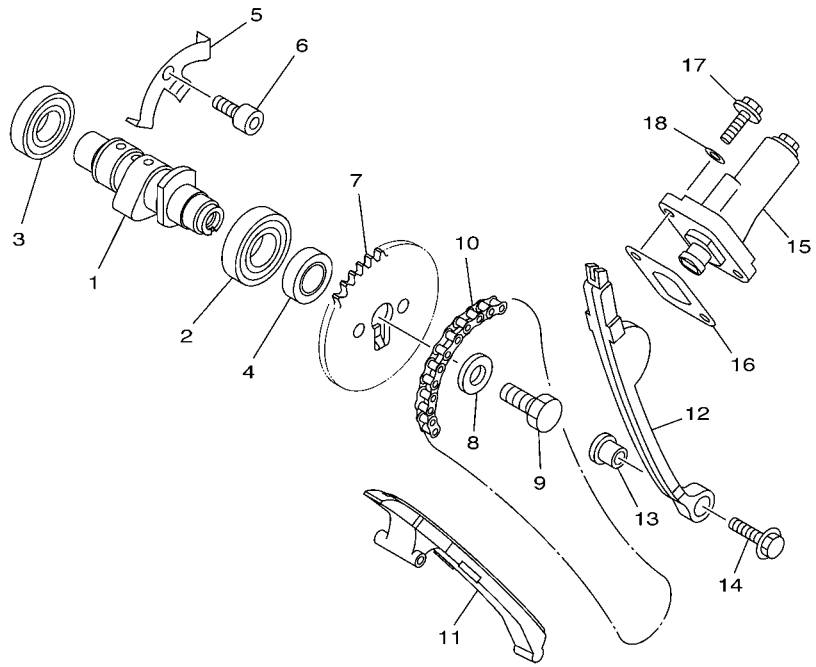

5VL1415-B040

FIG. 4 ARBOL DE LEVAS & CADENA CAMSHAFT & CHAIN

REF. Nº	CODIGO Nº PART NO.	DESCRIPCION DESCRIPTION	1SB4					OBSERVACIONES REMARKS
1	1SB–E2171–00	ARBOL DE LEVAS 1 CAMSHAFT 1	1					
2	93306–003X6	COJINETE BEARING	1					
3	93306–002Y1	COJINETE BEARING	1					
4	90387–167L5	ESPACIADOR COLLAR	1					
5	5VL–E111F–00	PLACA PLATE	1					
6	91312–06012	TORNILLO BOLT	1					
7	5VL–E2176–00	CATALINA DE CADENA (34T) SPROCKET, CAM CHAIN (34T)	1					
8	90201–08326	ARANDELA PLANA WASHER, PLATE	1					
9	90101–08820	TORNILLO BOLT	1					
10	94580–25088	CADENA CHAIN	1					
11	5VL–E2231–00	TOPE DE GUIA 1 GUIDE, STOPPER 1	1					
12	5VL–E2241–00	TOPE DE GUIA 2 GUIDE, STOPPER 2	1					
13	5VL–E5598–00	COLLAR COLLAR	1					
14	95802–06020	TORNILLO DE REBORDE BOLT, FLANGE	1					
15	5VL–E2210–01	TENSOR CADENA DE LEVA TENSIONER ASSY, CAM CHAIN	1					
16	5VL–E2213–10	EMPAQUE DE CAJA TENSOR GASKET, TENSIONER CASE	1					
17	95022–06016	PERNO, DE BRIDA BOLT, FLANGE	2					
18	90430–06817	JUNTA GASKET	2					

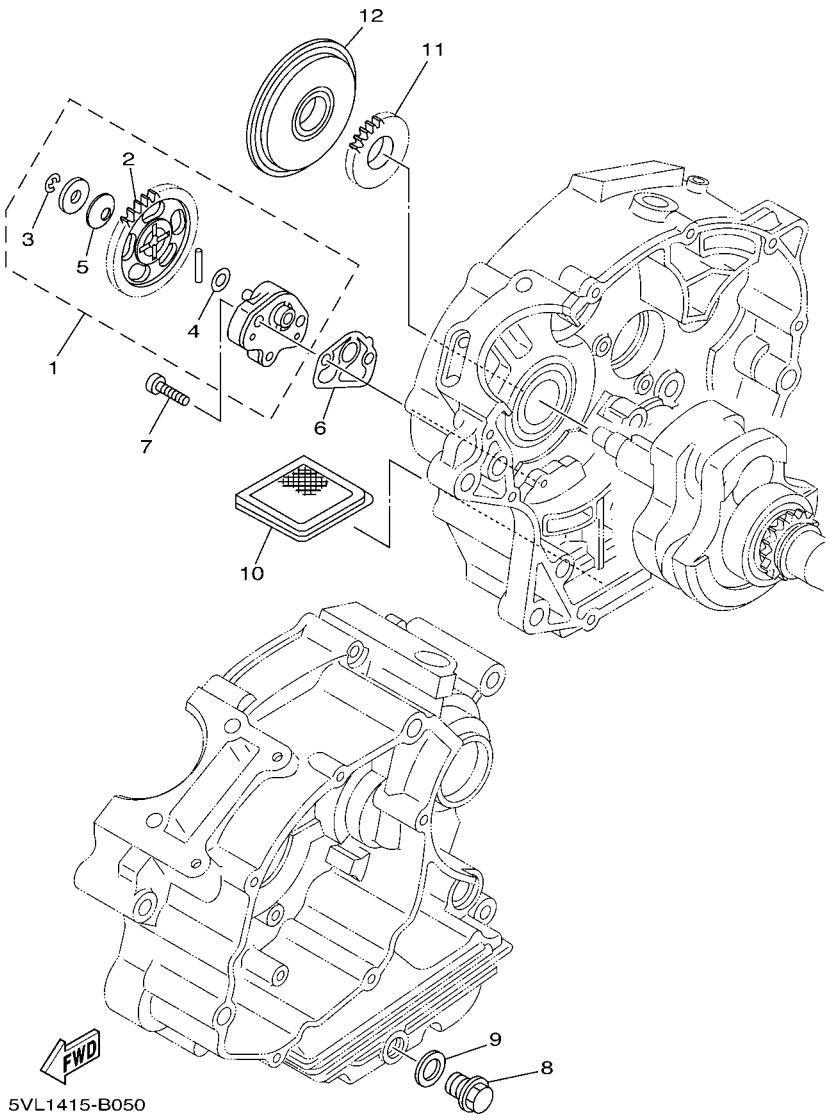

FIG. 5 BOMBA DE ACEITE OIL PUMP

REF. Nº	CODIGO Nº PART NO.	DESCRIPCION DESCRIPTION	1SB4					OBSERVACIONES REMARKS
1	5VL–E3300–01	BOMBA DE ACEITE COMPLETA OIL PUMP ASSY	1					
2	5VL–E3325–00	.ENGRANAJE IMPULSOR DE BOMBA 1 .GEAR, PUMP DRIVEN	1					
3	99002–05600	.PRESILLA REDONDA .CLIP	1					
4	90201–07641	.ARANDELA PLANA .WASHER, PLATE	1					
5	90208–07052	.ARANDELA DE RESORTE CONICO .WASHER, CONICAL SPRING	1					
6	5VL–E3329–00	EMPAQUE TAPA DE BOMBA GASKET, PUMP COVER	1					
7	90155–06800	TORNILLO CABEZA PLANA RAN. SCREW, FLAT FILLISTER	2					
8	90340–12097	TORNILLO, DE DRENAJE PLUG, STRAIGHT SCREW	1					
9	90430–12227	JUNTA GASKET	1					
10	4FP–E3411–00	FILTRO DE ACEITE STRAINER, OIL	1					
11	5VL–E3324–00	ENGRANAJE TRACC. DE BOMBA GEAR, PUMP DRIVE	1					
12	5VL–E3451–00	FILTRE ROTATIVO FILTER,ROTARY	1					

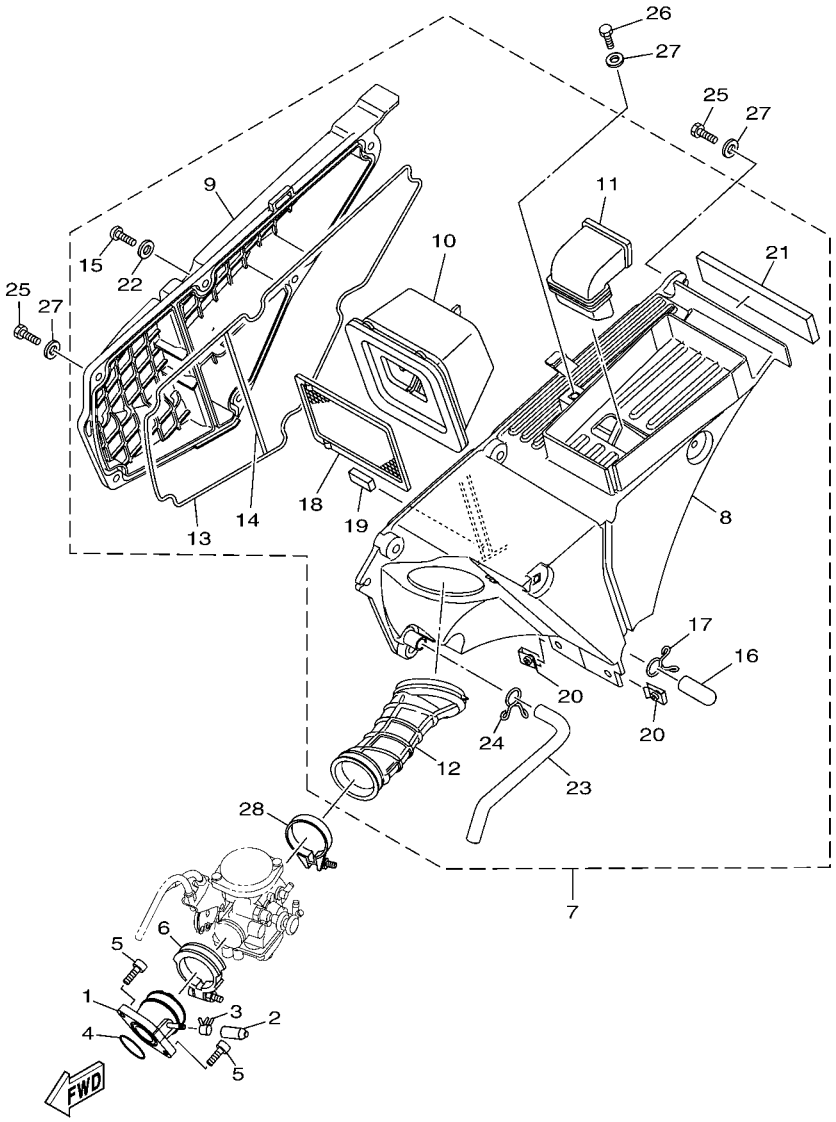

1SB1600-M060

FIG. 6 ADMISION INTAKE

REF. Nº	CODIGO Nº PART NO.	DESCRIPCION DESCRIPTION	1SB4					OBSERVACIONES REMARKS
1	1SB–E3586–00	TOBERA DE CARBURADOR 1 JOINT, CARBURETOR 1	1					
2	4FP–E3569–00	TAPON CIEGO PLUG, BLIND	1					
3	90467–10819	PRESILLA CLIP	1					
4	93210–30611	ANILLO O O-RING	1					
5	91312–06020	TORNILLO BOLT	2					
6	90450–44804	BRIDA, MANGUERA HOSE CLAMP ASSY	1					
7	1SB–E4410–00	FILTRO DE AIRE COMPLETO AIR CLEANER ASSY.	1					
8	1SB–E4411–00	.CAJA FILTRO DEL AIRE 1 .CASE, AIR CLEANER 1	1					
9	1SB–E4412–00	.TAPA CAJA DEL FILTRO 1 .CAP, CLEANER CASE 1	1					
10	1SB–E4450–00	.ELEMENTO COMP.FILTRO DE AIRE .ELEMENT ASSY, AIR CLEANER	1					
11	1SB–E4437–00	.CONDUCTO .DUCT	1					
12	1SB–E4453–00	.UNION DEL FILTRO DEL AIRE 1 .JOINT, AIR CLEANER 1	1					
13	1SB–E4452–00	.SELLO .SEAL	1					
14	1SB–E4462–00	.SELLO .SEAL	1					
15	98512–06020	.TORNILLO .SCREW, PAN HEAD	6					
16	5VL–E443E–00	.TUBO, DRENAJE .PIPE, DRAIN	1					
17	5VL–E4424–01	.PRESILLA ACCESORIO DE TAPA .CLIP, CAP FITTING	1					
18	1SB–E4472–00	.PLACA DE ELEMENTO .PLATE, ELEMENT	1					
19	1SB–E446R–00	.SELLO .SEAL	1					
20	90183–06802	.TUERCA DE RESORTE .NUT, SPRING	2					
21	1SB–E4425–00	.AMORTIGUADOR 1 .DAMPER 1	1					
22	92902–06600	.ARANDELA .WASHER, PLATE	6					
23	1SB–E1166–00	.TUBO RESPIRADERO 1 .PIPE, BREATHER 1	1					
24	90467–12828	.PRESILLA .CLIP	1					
25	97002–06016	PERNO BOLT	2					
26	97002–06012	PERNO BOLT	1					
27	90201–068F8	ARANDELA PLANA WASHER, PLATE	3					

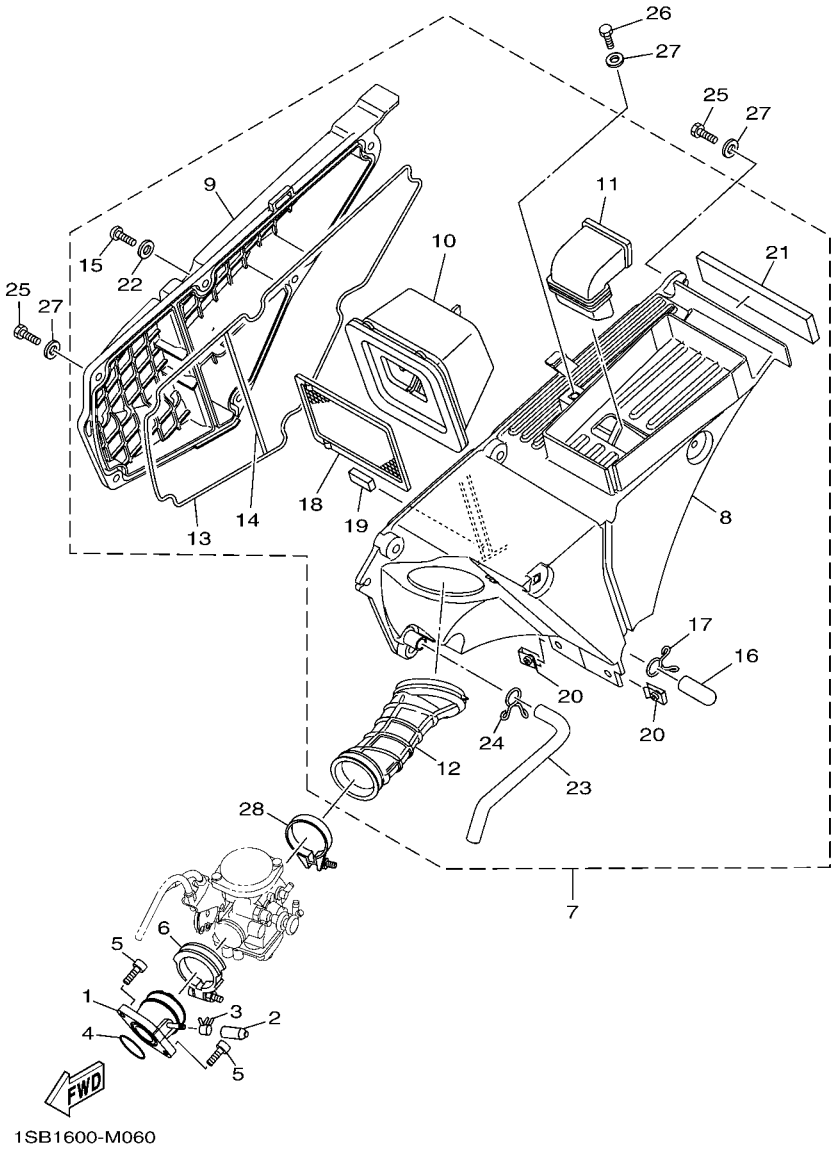

FIG. 6 ADMISION INTAKE

REF. Nº	CODIGO Nº PART NO.	DESCRIPCION DESCRIPTION	1SB4					OBSERVACIONES REMARKS
28	90450–51802	BRIDA, MANGUERA HOSE CLAMP ASSY	1					

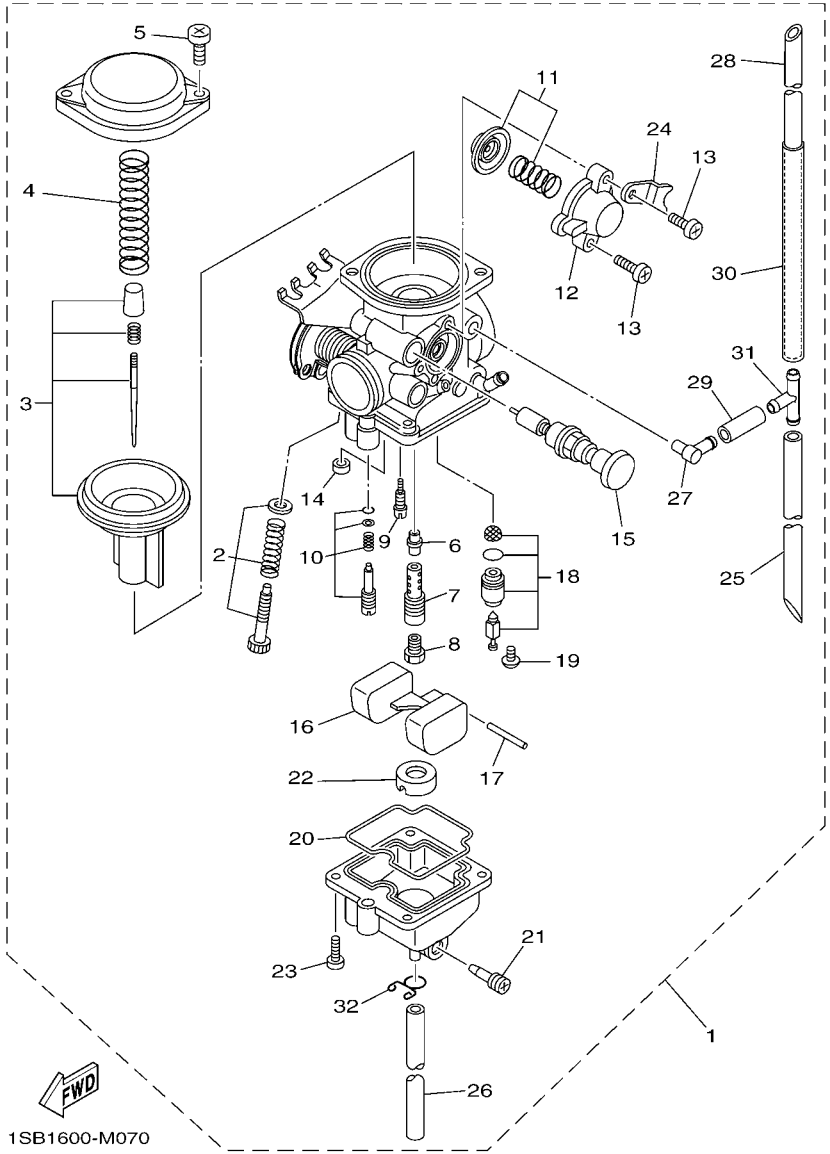

FIG. 7 CARBURADOR CARBURETOR

REF. Nº	CODIGO Nº PART NO.	DESCRIPCION DESCRIPTION	1SB4					OBSERVACIONES REMARKS
1	1SB–E4301–00	CARBURADOR COMPLETO 1 CARBURETOR ASSY 1	1					
2	4P2–W149K–00	.CJTO. TORNILLO DEL RALENTI .THROTTLE SCREW SET	1					
3	1SB–W149J–00	.CJTO. AGUJA .NEEDLE SET	1					
4	4P2–E4286–00	.RESORTE .SPRING	1					
5	5LB–E4214–00	.TORNILLO DE CABEZA CON PLANA .SCREW, PAN HEAD	2					
6	5RS–E4341–00	.BOQUILLA PRINCIPAL .NOZZLE, MAIN	1					
7	5RS–E4341–10	.BOQUILLA PRINCIPAL .NOZZLE, MAIN	1					
8	1SB–E4343–63	.INYECTOR PRINCIPAL (#125) .JET, MAIN (#125)	1					
9	5LB–E4342–17	.ESPREA DE PILOTO (# 34) .JET, PILOT (# 34)	1					
10	1SB–W1415–00	.JUEGO DE AJUSTADOR .ADJUSTER SET	1					
11	4P2–W149A–00	.CONTROL REMOTO .DIAPHRAGM SET 1	1					
12	5LB–E4293–00	.CUBIERTA .COVER 1	1					
13	97801–04010	.TORNILLO DE MUESCA .SCREW, PAN HEAD	2					
14	50M–E4355–00	.ASIENTO .NOZZLE, MAIN 2	1					
15	4P2–E4371–00	.EMBOLO DE ARRANQUE .PLUNGER, STARTER	1					
16	5LB–E4385–00	.BOIA .FLOAT	1					
17	5LB–E4386–00	.PASADOR DE BOIA .PIN, FLOAT	1					
18	1BV–E4390–00	.VALVULA DE AGUJA COMPLETA .NEEDLE VALVE ASSY	1					
19	30S–14325–00	.TORNILLO CABEZA REDONDA .SCREW, PAN HEAD	1					
20	5LB–E4384–00	.EMPAQUE DE CAMARA DE BOIA .GASKET, FLOAT CHAMBER	1					
21	4JP–E4323–00	.TORNILLO DE AJUSTE DE AIRE .SCREW, AIR ADJUSTING	1					
22	5LB–E4153–00	.PLACA,BAFFLE .PLATE,BAFFLE	1					
23	5LB–E4592–00	.TORNILLO .SCREW	4					
24	5LB–E4292–00	.SOPORTE 2 .BRACKET 2	1					
25	1SB–E4197–00	.TUBO RESPIRADERO .PIPE	1					
26	1SB–E4196–00	.TUBO DE DRENASE .PIPE, OVER FLOW 1	1					
27	5FY–E4251–00	.NIPLE .NIPPLE	1					

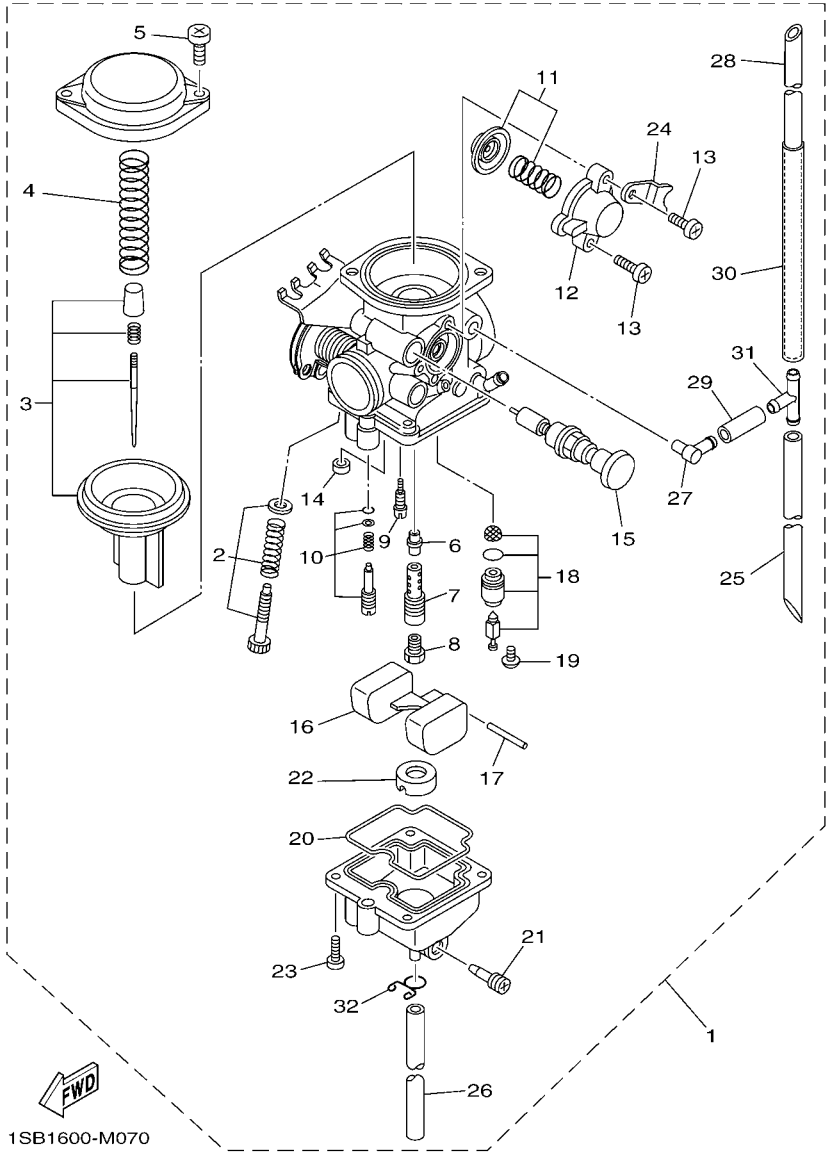

FIG. 7 CARBURADOR CARBURETOR

REF. Nº	CODIGO Nº PART NO.	DESCRIPCION DESCRIPTION	1SB4					OBSERVACIONES REMARKS
28	1SB–E4197–10	.TUBO RESPIRADERO .PIPE	1					
29	4GY–14149–00	.TUBO .PIPE	1					
30	1SB–E442F–00	.PROTECTOR .PROTECTOR	1					
31	1SB–E4251–00	.NIPLE .NIPPLE	1					
32	1SB–E4139–00	.PRESILLA TUBO .CLIP, PIPE	1					

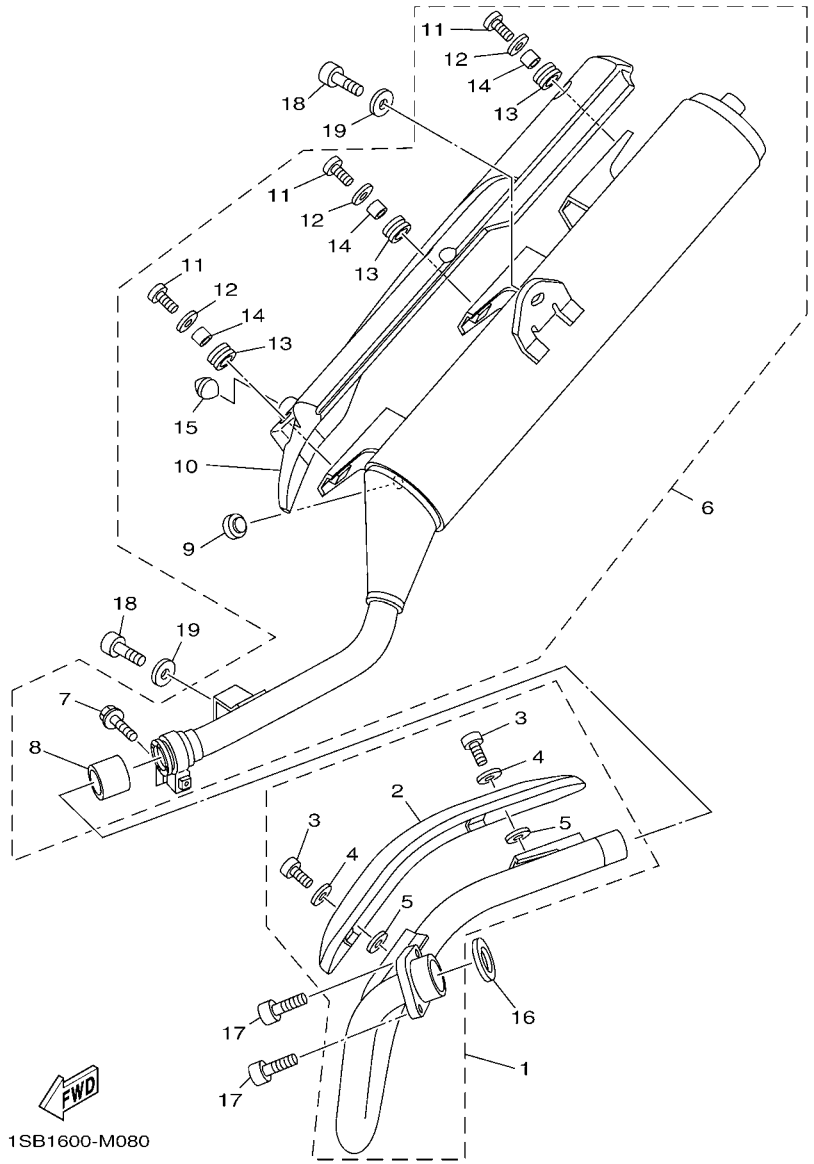

FIG. 8 DESCARGA EXHAUST

REF. Nº	CODIGO Nº PART NO.	DESCRIPCION DESCRIPTION	1SB4					OBSERVACIONES REMARKS
1	1SB–E4610–00	TUBO DE ESCAPE COMPLETO 1 EXHAUST PIPE ASSY 1	1					
2	1SB–E4628–00	.PROTECTOR DE TUBO DE ESCAPE .PROTECTOR, EXHAUST PIPE	1					
3	98980–06010	.TORNILLO DE LIGAR .SCREW, BIND	2					
4	90201–05809	.ARANDELA PLANA .WASHER, PLATE	2					
5	90201–05804	.ARANDELA PLANA .WASHER, PLATE	2					
6	1SB–E4710–00	TUBO DE ESCAPE COMPLETO 1 MUFFLER ASSY 1	1					
7	95022–08035	.PERNO, DE BRIDA .BOLT, FLANGE	1					
8	1SB–E4714–00	.EMPAQUE DE SILENCIADOR .GASKET, MUFFLER	1					
9	2TY–F4181–00	.AMORTIGUADOR DE MONTAJE 1 .DAMPER, LOCATING 1	1					
10	1SB–E4708–00	.PROTECTOR COMPLETA .PROTECTOR ASSY	1					
11	98980–06014	.TORNILLO DE LIGAR .SCREW, BIND	3					
12	90201–062G3	.ARANDELA PLANA .WASHER, PLATE	3					
13	90480–12581	.TAPON .GROMMET	3					
14	90387–06023	.ESPACIADOR .COLLAR	3					
15	1SB–E4757–00	.AMORTIGUADOR SILENCIADOR 2 .DAMPER, MUFFLER 2	1					
16	5VL–E4613–00	JUNTA, TUBO DE ESCAPE GASKET, EXHAUST PIPE	1					
17	91312–06020	TORNILLO BOLT	2					
18	91312–08016	TORNILLO BOLT	2					
19	90201–08824	ARANDELA PLANA WASHER, PLATE	2					

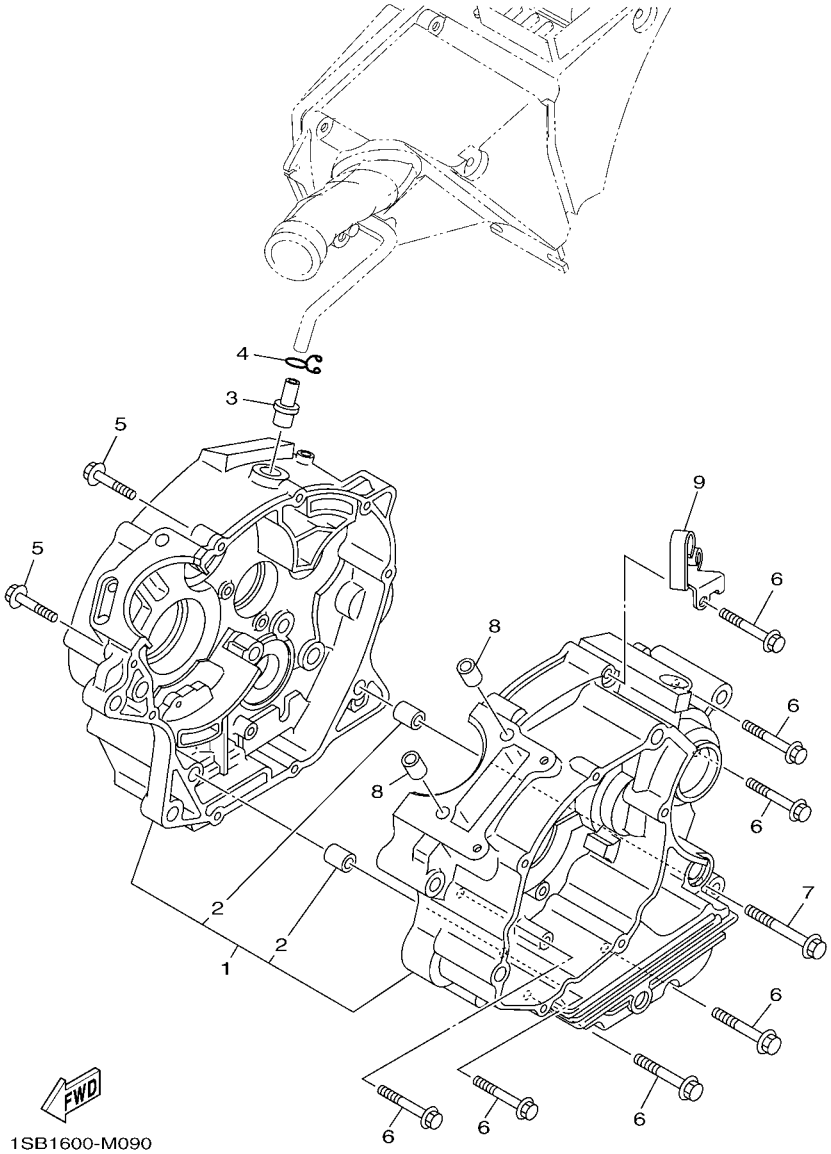

FIG. 9 CARTER — CRANKCASE

REF. Nº	CODIGO Nº PART NO.	DESCRIPCION DESCRIPTION	1SB4					OBSERVACIONES REMARKS
1	5VL–W1510–11	CARTER COMPLETO CRANKCASE ASSY	1					
2	99530–10114	.PASADOR, DE ESPIGA .PIN, DOWEL	2					
3	4FP–E1167–00	CUBIERTA RESPIRADERO 2 PIPE, BREATHER 2	1					
4	90467–12828	PRESILLA CLIP	1					
5	95022–06030	PERNO, DE BRIDA BOLT, FLANGE	2					
6	95022–06045	PERNO, DE BRIDA BOLT, FLANGE	7					
7	95022–06055	PERNO, DE BRIDA BOLT, FLANGE	1					
8	99530–10114	PASADOR, DE ESPIGA PIN, DOWEL	2					
9	1SB–E5441–00	SOSTEN DE CABLE DE EMBRAGUE HOLDER, CLUTCH CABLE	1					

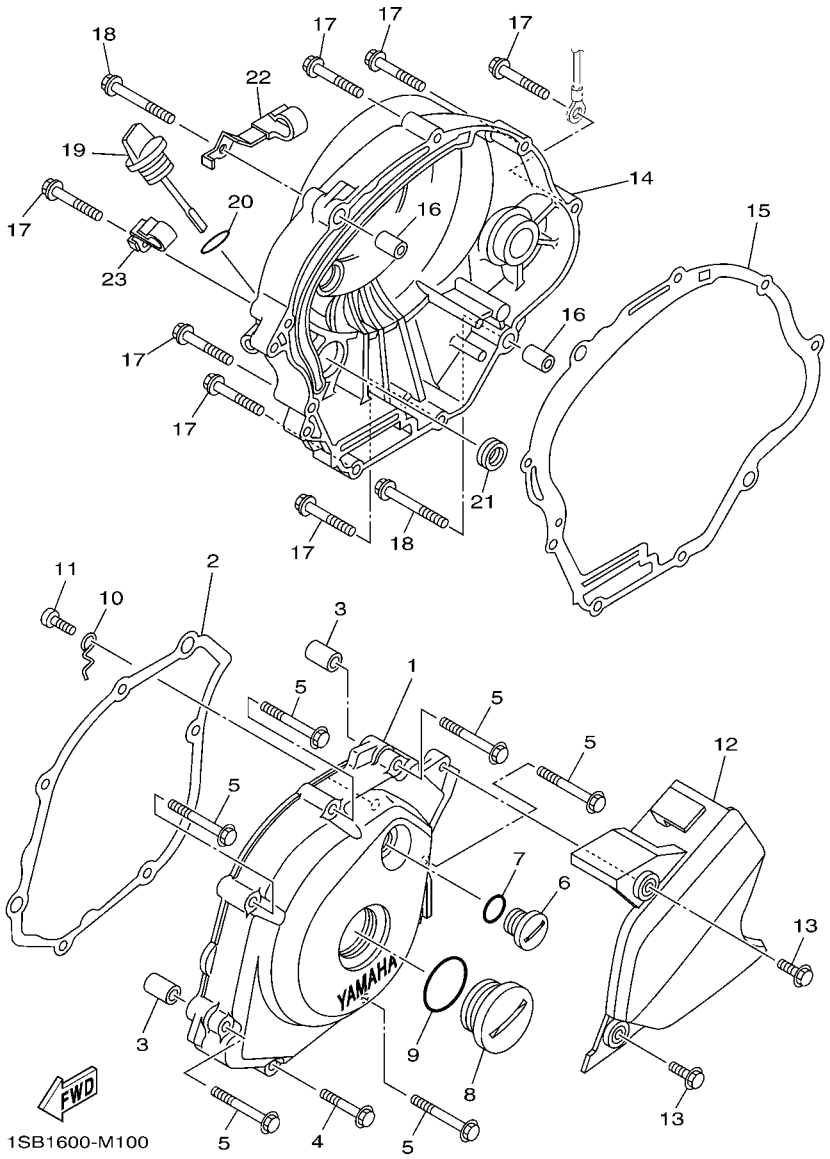

FIG. 10 CUBIERTA DE CARTER 1 CRANKCASE COVER 1

REF. Nº	CODIGO Nº PART NO.	DESCRIPCION DESCRIPTION	1SB4					OBSERVACIONES REMARKS
1	5VL–E5411–10	CUBIERTA DE CARTER 1 COVER, CRANKCASE 1	1					
2	5VL–E5451–10	EMPAQ DE CUBIERTA DE CARTER GASKET, CRANKCASE COVER 1	1					
3	99530–10114	PASADOR, DE ESPIGA PIN, DOWEL	2					
4	95022–06035	PERNO, DE BRIDA BOLT, FLANGE	1					
5	95022–06050	PERNO, DE BRIDA BOLT, FLANGE	6					
6	90340–14810	TORNILLO, DE DRENAJE PLUG,STRAIGHT SCREW	1					
7	93210–14899	ANILLO O O-RING	1					
8	90340–32812	TORNILLO, DE DRENAJE PLUG,STRAIGHT SCREW	1					
9	93210–328A4	ANILLO O O-RING	1					
10	5VL–E5191–00	PLACA PLATE	1					
11	98512–06010	TORNILLO SCREW, PAN HEAD	1					
12	1SB–E5418–00	CUBIERTA CAJA DE CADENA COVER, CHAIN CASE	1					
13	95812–06016	TORNILLO DE REBORDE BOLT, FLANGE	2					
14	5VL–E5421–00	TAPA DE CARTER DERECHA COVER, CRANKCASE 2	1					
15	5VL–E5461–10	JUNTA TAPA CARTER DERECHO 2 GASKET, CRANKCASE COVER 2	1					
16	99530–10114	PASADOR, DE ESPIGA PIN, DOWEL	2					
17	95022–06035	PERNO, DE BRIDA BOLT, FLANGE	7					
18	95022–06045	PERNO, DE BRIDA BOLT, FLANGE	2					
19	5VL–E5362–00	TAPON DEL NIVEL DE ACEITE PLUG, OIL LEVEL	1					
20	93210–19809	ANILLO O O-RING	1					
21	93101–10800	SELLO ACEITE OIL SEAL	1					
22	90465–08802	BRIDA CLAMP	1					
23	90465–08043	BRIDA CLAMP	1					

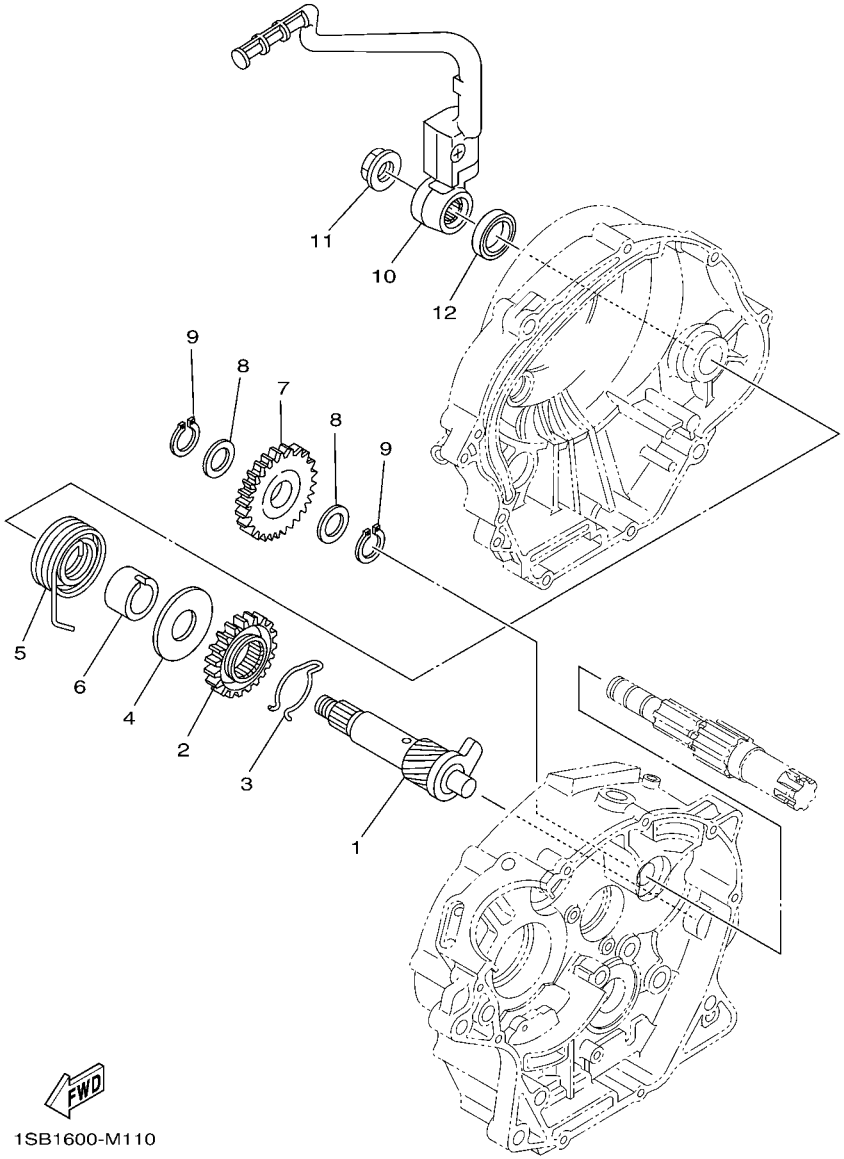

FIG. 11 ARRANQUE STARTER

REF. Nº	CODIGO Nº PART NO.	DESCRIPCION DESCRIPTION	1SB4					OBSERVACIONES REMARKS
1	1SB–E5660–00	EJE DEL PEDAL DE ARRAN.COMPLET KICK AXLE ASSY	1					
2	4FP–E5641–00	ENGRANAJE PEDAL ARRANQUE GEAR, KICK	1					
3	90468–26813	PRESILLA CLIP	1					
4	90201–208D5	ARANDELA PLANA WASHER, PLATE	1					
5	90508–26836	RESORTE DE TORSION SPRING, TORSION	1					
6	4FP–E5666–00	SEPARADOR SPACER	1					
7	5VL–E5651–00	PINON LIBRE, PEDAL ARRANQUE GEAR, KICK IDLE	1					
8	90201–152H7	ARANDELA PLANA WASHER, PLATE	2					
9	99009–15400	PRESILLA REDONDA CIRCLIP	2					
10	1SB–E5620–00	PEDAL DE ARRANQUE COMPLETO KICK CRANK ASSY	1					
11	90179–12813	TUERCA NUT	1					
12	93109–20806	SELLO ACEITE OIL SEAL	1					

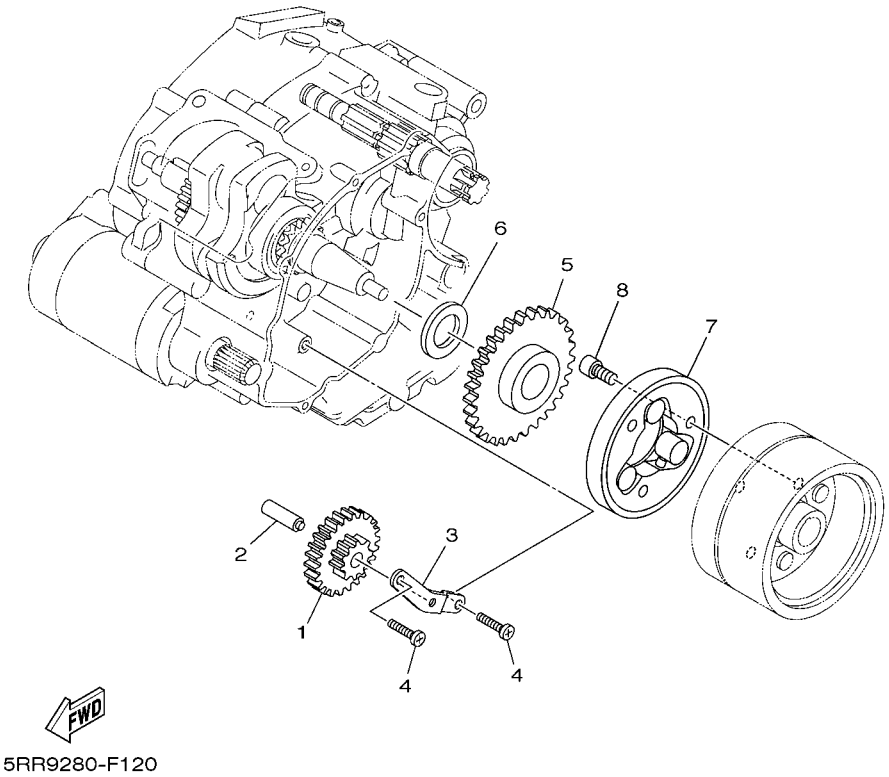

FIG. 12 EMBRAGUE DEL ARRANQUE STARTER CLUTCH

REF. Nº	CODIGO Nº PART NO.	DESCRIPCION DESCRIPTION	1SB4					OBSERVACIONES REMARKS
1	5VL–E5512–00	ENGRENAJE NEUTRO GEAR, IDLER 1	1					
2	5VL–E5521–00	EJE 1 SHAFT 1	1					
3	5VL–E5532–00	PLACA DE ENGRENAJE NEUTRO PLATE, IDLE GEAR	1					
4	98512–06012	TORNILLO SCREW, PAN HEAD	2					
5	5VL–E5517–00	ENGRENAJE POSICION 2DA GEAR, IDLER 2	1					
6	90201–258D7	ARANDELA PLANA WASHER, PLATE	1					
7	4FP–E5580–00	ENSAMBLE EXT.EMBRAGUE ARRANQUE STARTER CLUTCH OUTER ASSY	1					
8	91312–08016	TORNILLO BOLT	3					

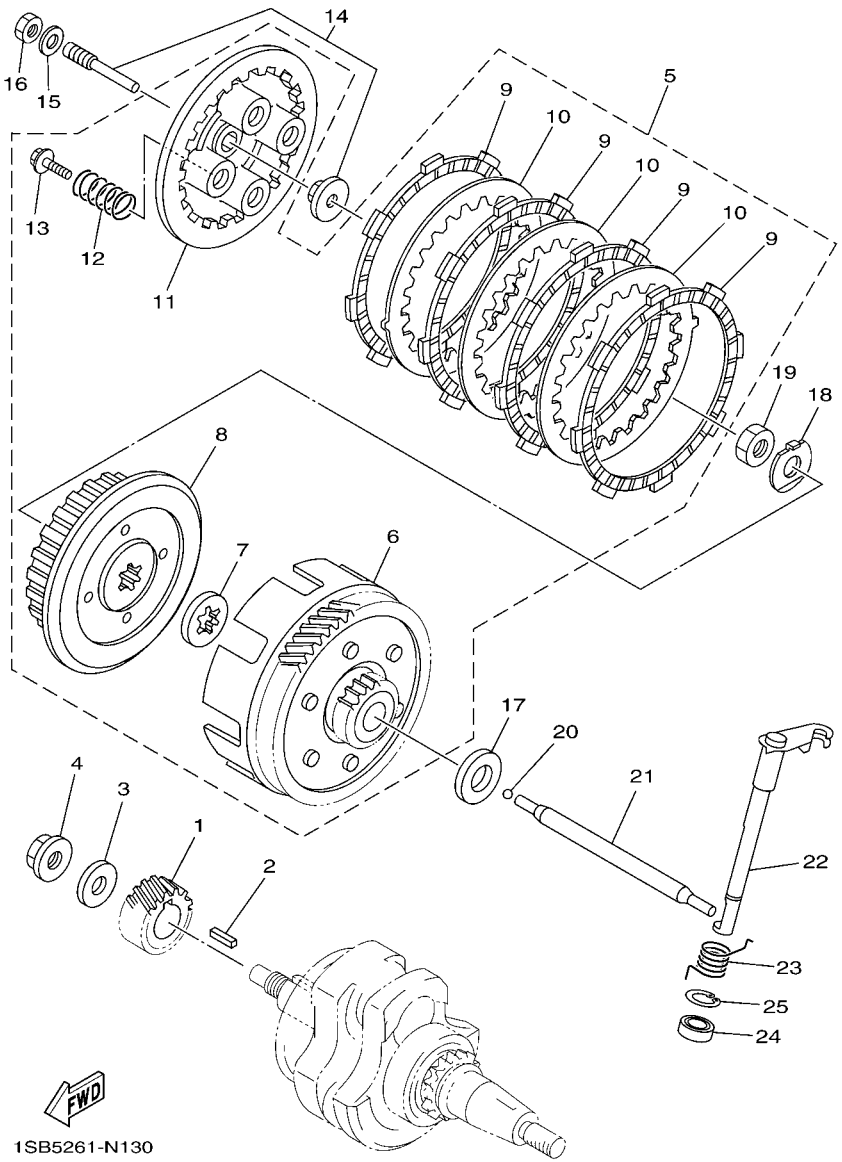

FIG. 13 EMBRAGUE CLUTCH

REF. Nº	CODIGO Nº PART NO.	DESCRIPCION DESCRIPTION	1SB4					OBSERVACIONES REMARKS
1	5VL–E6111–00	ENGRANAJE TRACC.PRIMARIA GEAR, PRIMARY DRIVE	1					
2	90282–05001	CHAVETA, RECTA (5MMX16MM) KEY, STRAIGHT (5MMX16MM)	1					
3	90201–122H1	ARANDELA PLANA WASHER, PLATE	1					
4	90179–12813	TUERCA NUT	1					
5	1SB–E6300–00	EMBRAGUE COMPLETO CLUTCH ASSY	1					
6	5VL–E6150–00	.CAMPANA DE EMBRAGUE .PRIMARY DRIVEN GEAR COMP.	1					
7	5VL–E6154–00	.ARANDELA, DE EMPUJE 1 .PLATE, THRUST 1	1					
8	5VL–E6371–10	.CUBO, DE EMBRAGUE .BOSS, CLUTCH	1					
9	50C–E6321–00	.PLACA DE FRICCION .PLATE, FRICTION	4					
10	5VL–E6324–00	.PLACA DE EMBRAGUE .PLATE, CLUTCH 1	3					
11	5VL–E6351–00	.PLATO DE PRESION .PLATE, PRESSURE 1	1					
12	5VL–E6333–10	.RESORTE DE EMBRAGUE 1 .SPRING, CLUTCH 1	4					
13	5VL–E6337–00	.TORNILLO DE RESORTE .SCREW, SPRING	4					
14	5VL–Y1635–10	CONJ. PALANCA DE EMPUJE PUSH LEVER COMP.	1					
15	92902–06200	ARANDELA WASHER	1					
16	95302–06600	TUERCA NUT	1					
17	5VL–E6164–10	PLACA DE EMPUJE 2 PLATE, THRUST 2	1					
18	90215–12211	ARANDELA DE CIERRE WASHER, LOCK	1					
19	90170–12060	TUERCA NUT	1					
20	93503–16824	ESFERA BALL	1					
21	5VL–E6357–01	VARILLA DE EMPUJE 2 ROD, PUSH 2	1					
22	5VL–E6381–02	CONJ. PALANCA DE EMPUJE PUSH LEVER COMP.	1					
23	90508–16800	RESORTE DE TORSION SPRING, TORSION	1					
24	93102–12802	SELLO ACEITE OIL SEAL	1					
25	99009–20500	PRESILLA REDONDA CIRCLIP	1					

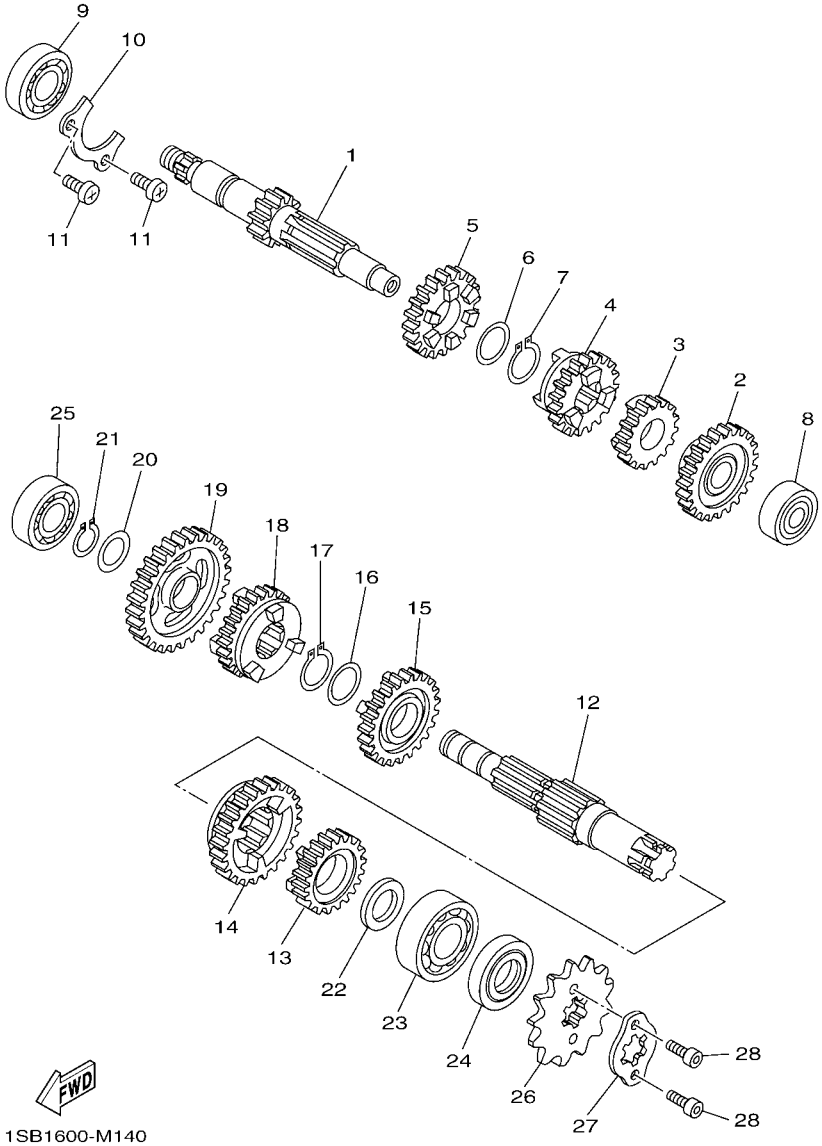

FIG. 14 TRANSMISION — TRANSMISSION

REF. Nº	CODIGO Nº PART NO.	DESCRIPCION DESCRIPTION	1SB4					OBSERVACIONES REMARKS
1	5VL–E7411–00	EJE PRIMARIO (14T) AXLE, MAIN (14T)	1					
2	5VL–E7151–00	ENGRANAJE PINON DE 5TA (24T) GEAR, 5TH PINION (24T)	1					
3	5VL–E7121–00	ENGRANAJE DE PINON DE 2DA(18T) GEAR, 2ND PINION (18T)	1					
4	5RM–17131–00	ENGRANAJE PINON DE 3RA (19D) GEAR, 3RD PINION (19T)	1					
5	5RM–17141–00	ENGRANAJE PINON DE 4TA (22T) GEAR, 4TH PINION (22T)	1					
6	90201–20266	ARANDELA, PLACA (T=1.0) WASHER, PLATE (T=1.0)	1					
7	93410–20809	SEGURO CIRCLIP	1					
8	93306–201Y8	COJINETE BEARING	1					
9	93306–203YT	COJINETE BEARING	1					
10	5VL–E7471–00	PLACA, DE CUBIERTA PLATE, COVER	1					
11	98512–06012	TORNILLO SCREW, PAN HEAD	2					
12	5VL–E7402–00	EJE DE TRACCION COMPLETO DRIVE AXLE ASSY	1					
13	5VL–E7251–00	ENGRANAJE RUEDA DE 5TA (21T) GEAR, 5TH WHEEL (21T)	1					
14	5VL–E7221–00	ENGRANAJE RUEDA DE 2DA (32T) GEAR, 2ND WHEEL (32T)	1					
15	5VL–E7231–00	ENGRANAJE RUEDA DE 3RA (25T) GEAR, 3RD WHEEL (25T)	1					
16	90201–20266	ARANDELA, PLACA (T=1.0) WASHER, PLATE (T=1.0)	1					
17	93410–20809	SEGURO CIRCLIP	1					
18	5VL–E7241–00	ENGRANAJE DE RUEDA 4TA (23T) GEAR, 4TH WHEEL (23T)	1					
19	5VL–E7211–00	ENGRANAJE RUEDA DE 1 RA (37T) GEAR, 1ST WHEEL (37T)	1					
20	90201–15700	ARANDELA PLANA WASHER, PLATE	1					
21	99009–15400	PRESILLA REDONDA CIRCLIP	1					
22	90201–20272	ARANDELA PLANA WASHER, PLATE	1					
23	93306–204YD	COJINETE BEARING	1					
24	93102–20854	SELLO ACEITE OIL SEAL	1					
25	93306–202XP	COJINETE BEARING	1					
26	93822–14813	CORONA (14T) SPROCKET, DRIVE (14T)	1					
27	3D9–E7456–01	SOPORTE DE CORONA HOLDER, SPROCKET	1					

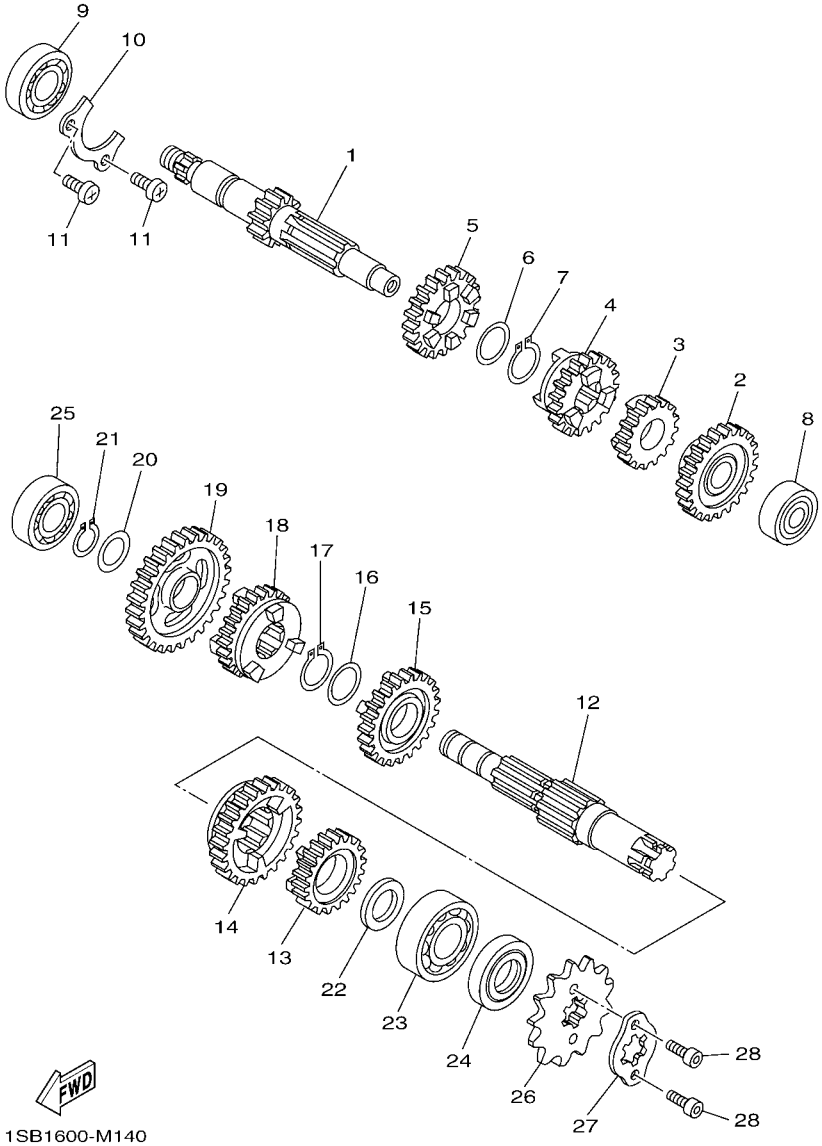

FIG. 14 TRANSMISION — TRANSMISSION

REF. Nº	CODIGO Nº PART NO.	DESCRIPCION DESCRIPTION	1SB4					OBSERVACIONES REMARKS
28	91312–05010	TORNILLO BOLT	2					

FIG. 15 LEVA DE CAMBIO & HORQUILLA SHIFT CAM & FORK

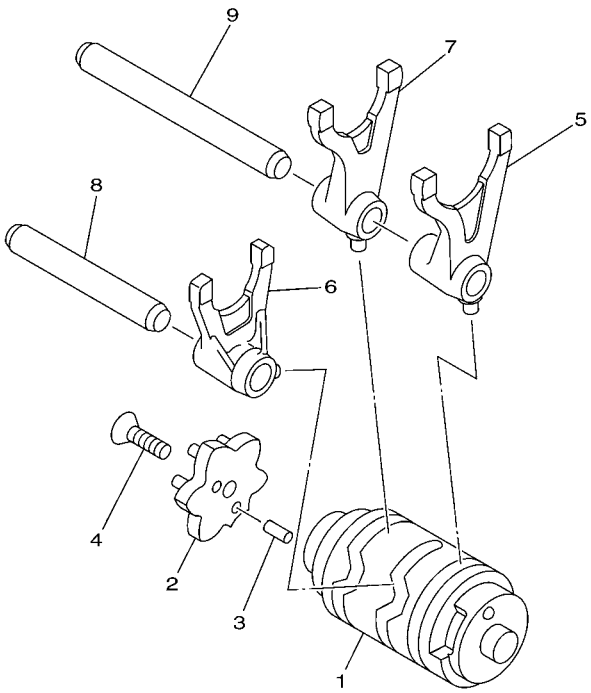

5HP1100-0140

REF. Nº	CODIGO Nº PART NO.	DESCRIPCION DESCRIPTION	1SB4					OBSERVACIONES REMARKS
1	5VL–Y1854–01	LEVADEL CAMBIO COMPLETA SHIFT CAM ASSY	1					
2	2D0–E8185–00	SEGMENTO DE RETENCION SEGMENT	1					
3	93604–10837	PASADOR DE CLAVIJA PIN, DOWEL	2					
4	90151–06818	TORNILLO EMBUTIDO SCREW, COUNTERSUNK	1					
5	5VL–E8511–00	HORQUILLA DEL CAMBIO 1 FORK, SHIFT 1	1					
6	5VL–E8512–00	HORQUILLA DEL CAMBIO 2 FORK, SHIFT 2	1					
7	5VL–E8513–00	HORQUILLA DEL CAMBIO 3 FORK, SHIFT 3	1					
8	5VL–E8531–00	BARRA GUIA HORQ. CAMBIO 1 BAR, SHIFT FORK GUIDE 1	1					
9	5VL–E8535–00	BARRA GUIA HORQ .CAMBIO 2 BAR, SHIFT FORK GUIDE 2	1					

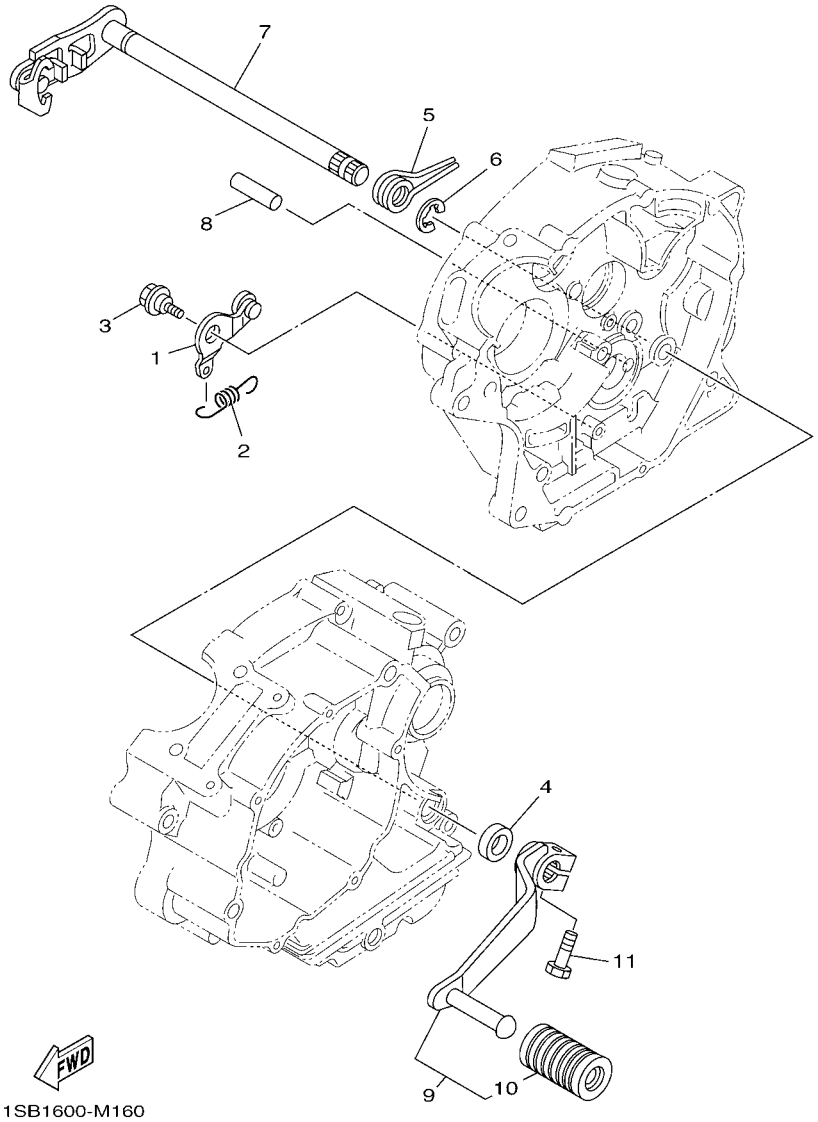

FIG. 16 EJE DE CAMBIO & PEDAL SHIFT SHAFT

REF. Nº	CODIGO Nº PART NO.	DESCRIPCION DESCRIPTION	1SB4					OBSERVACIONES REMARKS
1	5VL–E8140–00	PALANCA DE TOPE COMPLETA STOPPER LEVER ASSY	1					
2	5VL–E8337–00	RESORTE SPRING	1					
3	4FP–E8177–00	TORNILLO DE TOPE BOLT, STOPPER	1					
4	93101–12812	SELLO ACEITE OIL SEAL	1					
5	90508–32801	RESORTE DE TORSION SPRING, TORSION	1					
6	99002–10600	PRESILLA REDONDA CLIP	1					
7	5VL–E8101–02	EJE SELECTOR COMPLETO SHIFT SHAFT ASSY	1					
8	93608–30839	PASADOR DE CLAVIJA PIN, DOWEL	1					
9	1SB–E8110–00	PEDAL DE CAMBIO COMPLETO SHIFT PEDAL ASSY	1					
10	1KL–E8113–00	.FUNDA DEL PEDAL DEL CAMBIO .COVER, SHIFT PEDAL	1					
11	97022–06020	PERNO BOLT, HEXAGON	1					

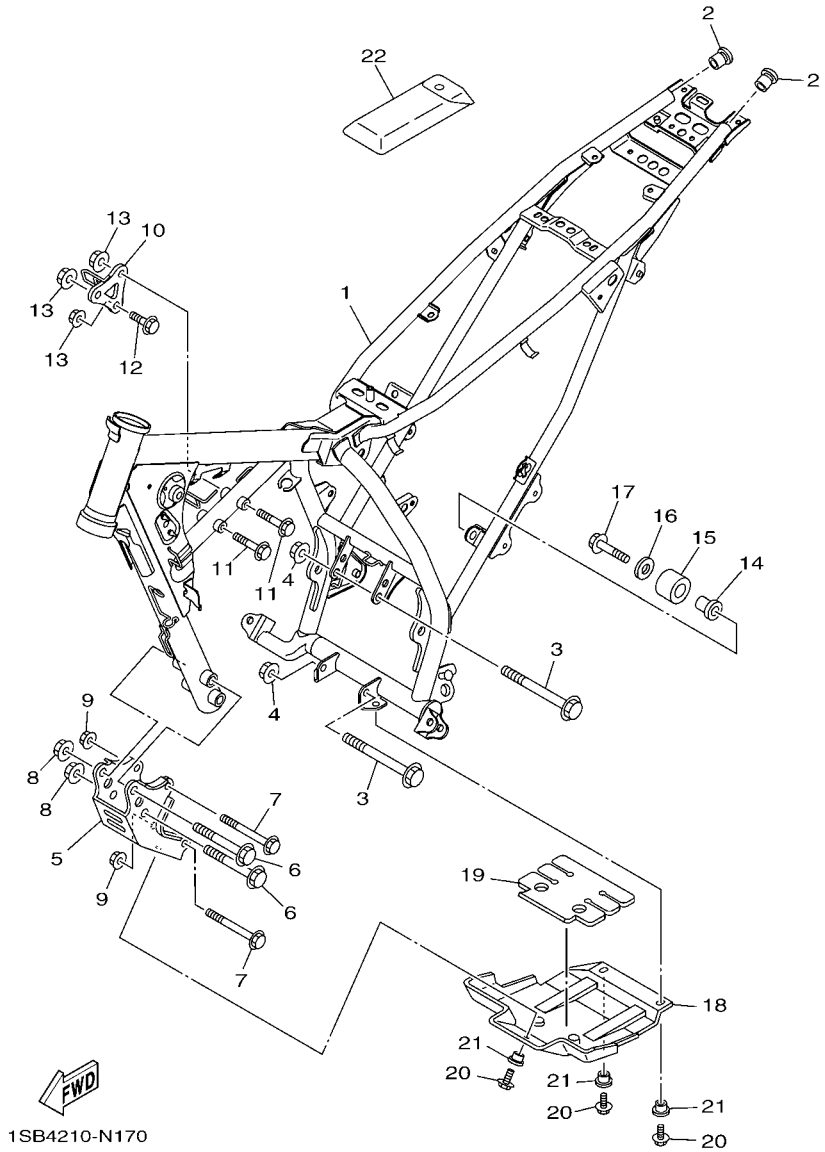

FIG. 17 CUADRO FRAME

REF. Nº	CODIGO Nº PART NO.	DESCRIPCION DESCRIPTION	1SB4					OBSERVACIONES REMARKS
1	1SB–F1110–02	ARMAZON COMPLETO FRAME COMP.	1					
2	90338–16148	TAPON PLUG	2					
3	90105–08873	TORNILLO BOLT, FLANGE	2					
4	90185–08008	TUERCA AUTOBLOCANTE NUT, SELF-LOCKING	2					
5	1SB–F1316–00	SOPORTE DE MOTOR 3 STAY, ENGINE 3	1					
6	95812–10080	TORNILLO DE REBORDE BOLT, FLANGE	2					
7	90105–088F4	TORNILLO BOLT, FLANGE	2					
8	95602–10200	TUERCA DE AUTO-CIERRE NUT, U FLANGE	2					
9	90185–08008	TUERCA AUTOBLOCANTE NUT, SELF-LOCKING	2					
10	1SB–F1317–00	SOPORTE DE MOTOR 3 STAY, ENGINE 3	1					
11	90105–088F3	TORNILLO BOLT, FLANGE	2					
12	90105–08229	TORNILLO BOLT, FLANGE	1					
13	90185–08008	TUERCA AUTOBLOCANTE NUT, SELF-LOCKING	3					
14	1SB–F2184–00	BUJE BUSH	1					
15	1SB–F2178–00	TENSOR TENSIONER	1					
16	90201–08835	ARANDELA PLANA WASHER, PLATE	1					
17	95022–08012	PERNO, DE BRIDA BOLT, FLANGE	1					
18	1SB–F1471–00	PROTECTOR DE MOTOR PROTECTOR, ENGINE	1					
19	1SB–F1485–00	AMORTIGUADOR DE GOMA 1 DAMPER, RUBBER 1	1					
20	95802–06016	TORNILLO DE REBORDE BOLT, FLANGE	3					
21	90387–06857	ESPACIADOR COLLAR	3					
22	1SB–F8100–00	JUEGO DE HERRAMIENTAS TOOL KIT	1					

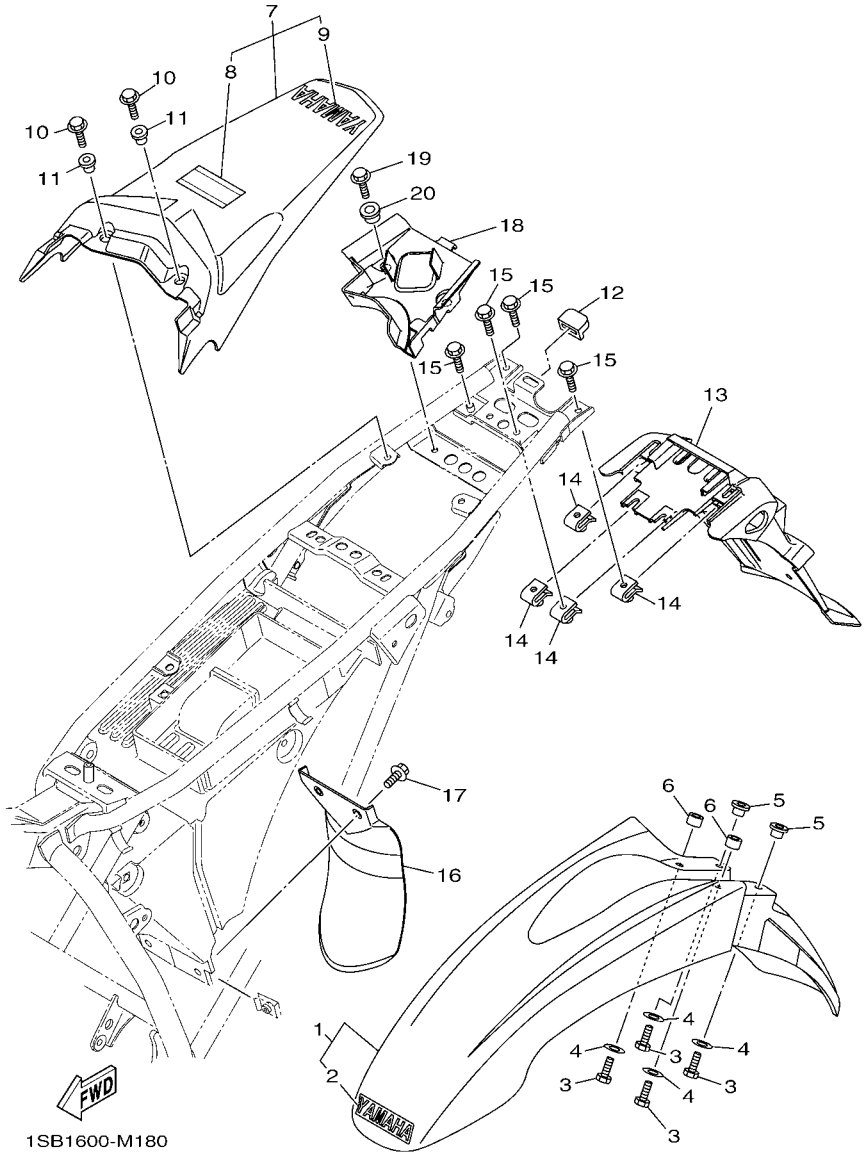

FIG. 18 GUARDABARRO FENDER

REF. Nº	CODIGO Nº PART NO.	DESCRIPCION DESCRIPTION	1SB4					OBSERVACIONES REMARKS
1	1SB–Y2151–01	GUARDABARRO DELANTERO COMPL. FRONT FENDER ASSY	1					UR PARA PWS1 UR FOR PWS1
	1SB–Y2151–02	GUARDABARRO DELANTERO COMPL. FRONT FENDER ASSY	1					UR PARA YB UR FOR YB
	1SB–Y2151–00	GUARDABARRO DELANTERO COMPL. FRONT FENDER ASSY	1					UR PARA DPBSE UR FOR DPBSE
2	1SB–F153E–10	.EMBLEMA, YAMAHA .EMBLEM, YAMAHA	1					UR PARA PWS1 UR FOR PWS1
	1SB–F153E–20	.EMBLEMA, YAMAHA .EMBLEM, YAMAHA	1					UR PARA YB UR FOR YB
	1SB–F153E–00	.EMBLEMA, YAMAHA .EMBLEM, YAMAHA	1					UR PARA DPBSE UR FOR DPBSE
3	97002–06020	PERNO BOLT	4					
4	90201–06861	ARANDELA PLANA WASHER, PLATE	4					
5	90387–06238	ESPACIADOR COLLAR	2					
6	90387–06023	ESPACIADOR COLLAR	2					
7	1SB–Y2161–04	GUARDABARRO TRASERO COMPLETO REAR FENDER COMP.	1					UR PARA PWS1 UR FOR PWS1
	1SB–Y2161–05	GUARDABARRO TRASERO COMPLETO REAR FENDER COMP.	1					UR PARA YB UR FOR YB
	1SB–Y2161–03	GUARDABARRO TRASERO COMPLETO REAR FENDER COMP.	1					UR PARA DPBSE UR FOR DPBSE
8	1SB–F816K–10	.ETIQUETA, ADVIRTIENDO PORTADOR .LABEL, WARNING CARRIER 2	1					
9	1SB–F153E–10	.EMBLEMA, YAMAHA .EMBLEM, YAMAHA	1					UR PARA PWS1 UR FOR PWS1
	1SB–F153E–20	.EMBLEMA, YAMAHA .EMBLEM, YAMAHA	1					UR PARA YB UR FOR YB
	1SB–F153E–00	.EMBLEMA, YAMAHA .EMBLEM, YAMAHA	1					UR PARA DPBSE UR FOR DPBSE
10	95802–06014	TORNILLO DE REBORDE BOLT, FLANGE	2					
11	90387–068K9	ESPACIADOR COLLAR	2					
12	1SB–F1719–00	ANILLO PROTECTOR GROMMET	1					
13	1SB–F1685–00	SOPORTE DE LICENCIA BRACKET, LICENSE	1					
14	90183–06820	TUERCA DE RESORTE NUT, SPRING	4					
15	95802–06014	TORNILLO DE REBORDE BOLT, FLANGE	4					
16	1SB–F1642–00	GUARDA DE CHARNELA GUARD, FLAP	1					
17	90119–06869	TORNILLO CON ARANDELA BOLT, WITH WASHER	2					
18	1SB–F160E–00	CAJA BOX	1					
19	95802–06014	TORNILLO DE REBORDE BOLT, FLANGE	2					

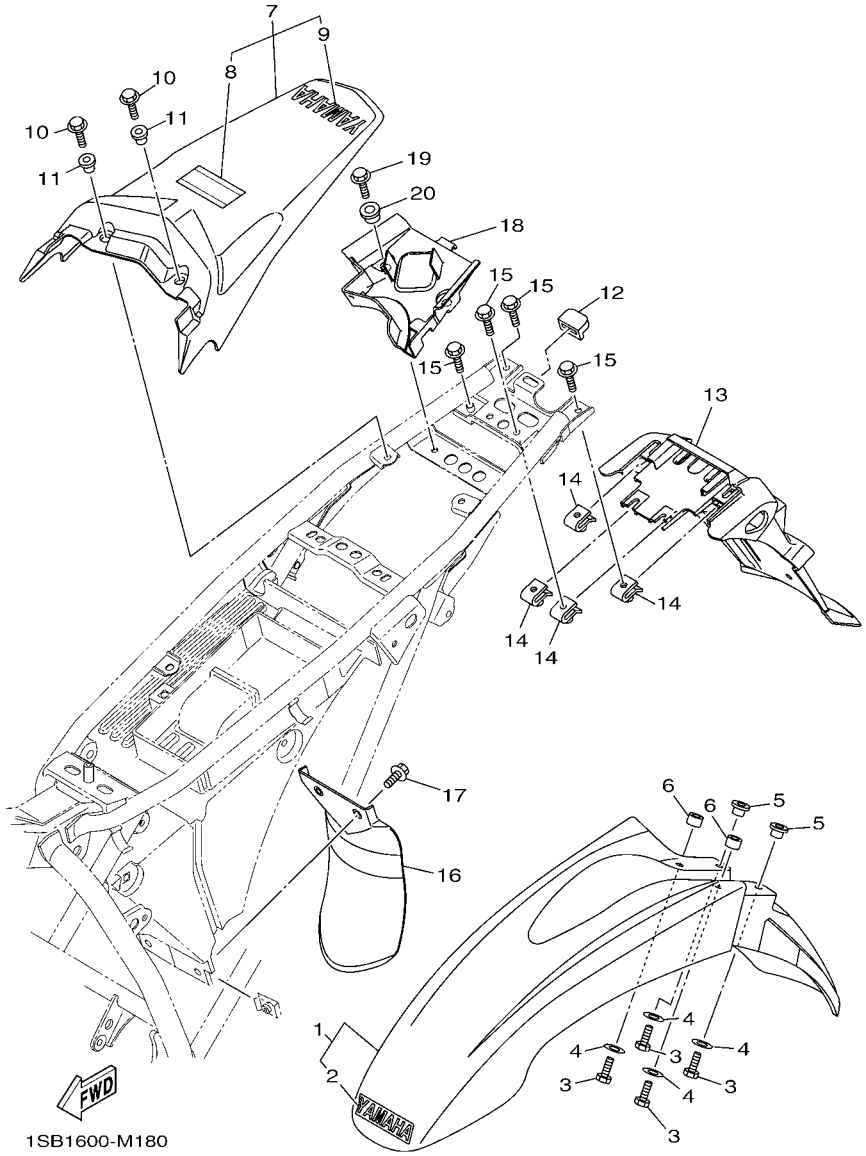

FIG. 18 GUARDABARRO FENDER

REF. Nº	CODIGO Nº PART NO.	DESCRIPCION DESCRIPTION	1SB4					OBSERVACIONES REMARKS
20	90387–068K9	ESPACIADOR COLLAR	2					

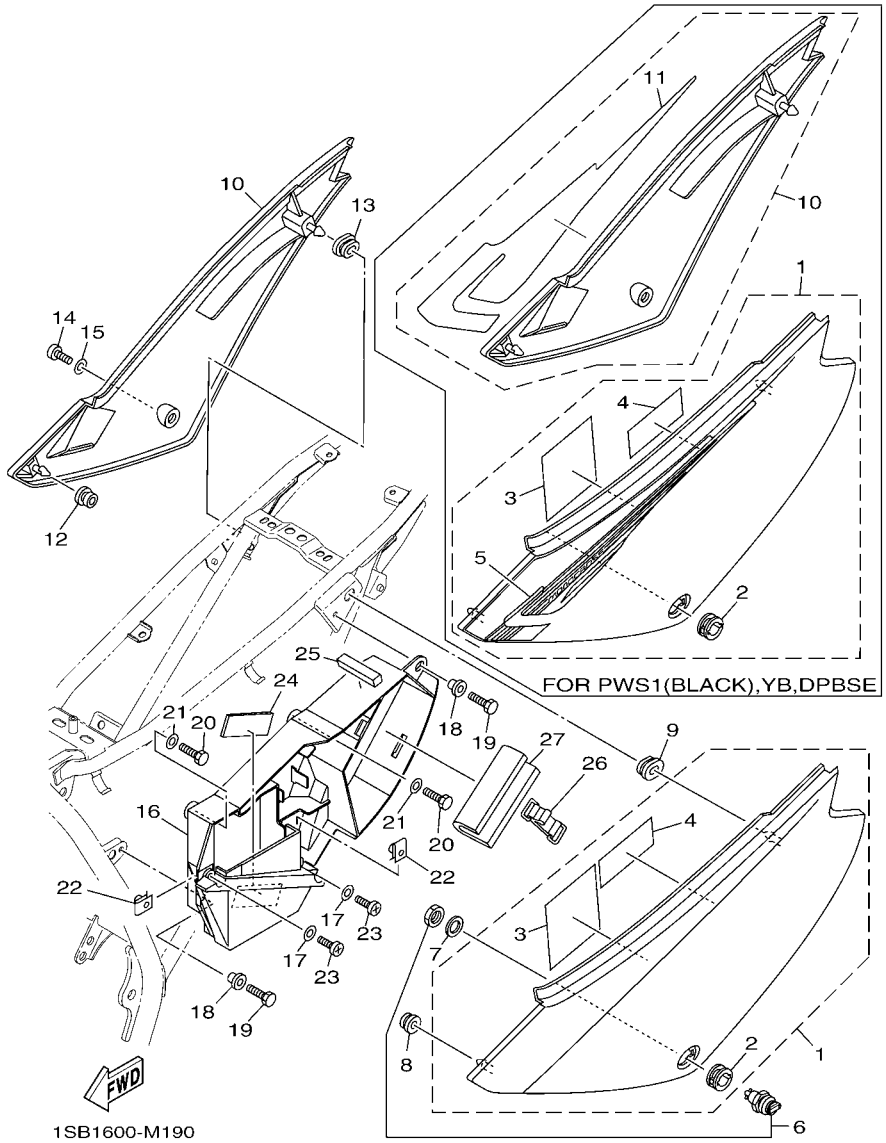

FIG. 19 CUBIERTA LATERAL SIDE COVER

REF. Nº	CODIGO Nº PART NO.	DESCRIPCION DESCRIPTION	1SB4					OBSERVACIONES REMARKS
1	1SB–Y2171–07	CUBIERTA, LATERAL 1 COVER, SIDE 1	1					PARA PWS1(WHITE) FOR PWS1(WHITE)
	1SB–Y2171–05	CUBIERTA, LATERAL 1 COVER, SIDE 1	1					PARA PWS1(BLACK) FOR PWS1(BLACK)
	1SB–Y2171–06	CUBIERTA, LATERAL 1 COVER, SIDE 1	1					PARA YB FOR YB
	1SB–Y2171–04	CUBIERTA, LATERAL 1 COVER, SIDE 1	1					PARA DPBSE FOR DPBSE
2	90480–24186	.TAPON .GROMMET	1					
3	1SB–F8179–10	.ETIQUETA PRECAUSION BAT. .LABEL, BATTERY CAUTION	1					
4	1SB–F8177–10	.ETIQUETA PRECAUCION BAT. .EMBLEM	1					
5	1SB–F173E–10	.GRAFICO, 1 .GRAPHIC 1	1					UR PARA PWS1 UR FOR PWS1
	1SB–F173E–20	.GRAFICO, 1 .GRAPHIC 1	1					UR PARA YB UR FOR YB
	1SB–F173E–00	.GRAFICO, 1 .GRAPHIC 1	1					UR PARA DPBSE UR FOR DPBSE
6	5VL–F1780–01	CERRADURA COMPLETA LOCK ASSY	1					
7	90201–225A4	ARANDELA PLANA (T=1.0) WASHER, PLATE (T=1.0)	1					
8	90480–13567	TAPON GROMMET	1					
9	90480–01868	TAPON GROMMET	1					
10	1SB–F1721–10	CUBIERTA LATERAL 2 COVER, SIDE 2	1					PARA PWS1(WHITE) FOR PWS1(WHITE)
	1SB–Y2172–01	CUBIERTA, LATERAL 2 COVER, SIDE 2	1					PARA PWS1(BLACK) FOR PWS1(BLACK)
	1SB–Y2172–02	CUBIERTA, LATERAL 2 COVER, SIDE 2	1					PARA YB FOR YB
	1SB–Y2172–00	CUBIERTA, LATERAL 2 COVER, SIDE 2	1					PARA DPBSE FOR DPBSE
11	1SB–F173F–10	.GRAFICO 2 .GRAPHIC 2	1					UR PARA PWS1 UR FOR PWS1
	1SB–F173F–20	.GRAFICO 2 .GRAPHIC 2	1					UR PARA YB UR FOR YB
	1SB–F173F–00	.GRAFICO 2 .GRAPHIC 2	1					UR PARA DPBSE UR FOR DPBSE
12	90480–13567	TAPON GROMMET	1					
13	90480–01868	TAPON GROMMET	1					
14	98902–06016	TORNILLO DE LIGAR SCREW, BIND	1					
15	90201–06861	ARANDELA PLANA WASHER, PLATE	1					
16	1SB–F177G–00	CAJA DE BATERIA BOX, BATTERY	1					
17	90201–06861	ARANDELA PLANA WASHER, PLATE	2					

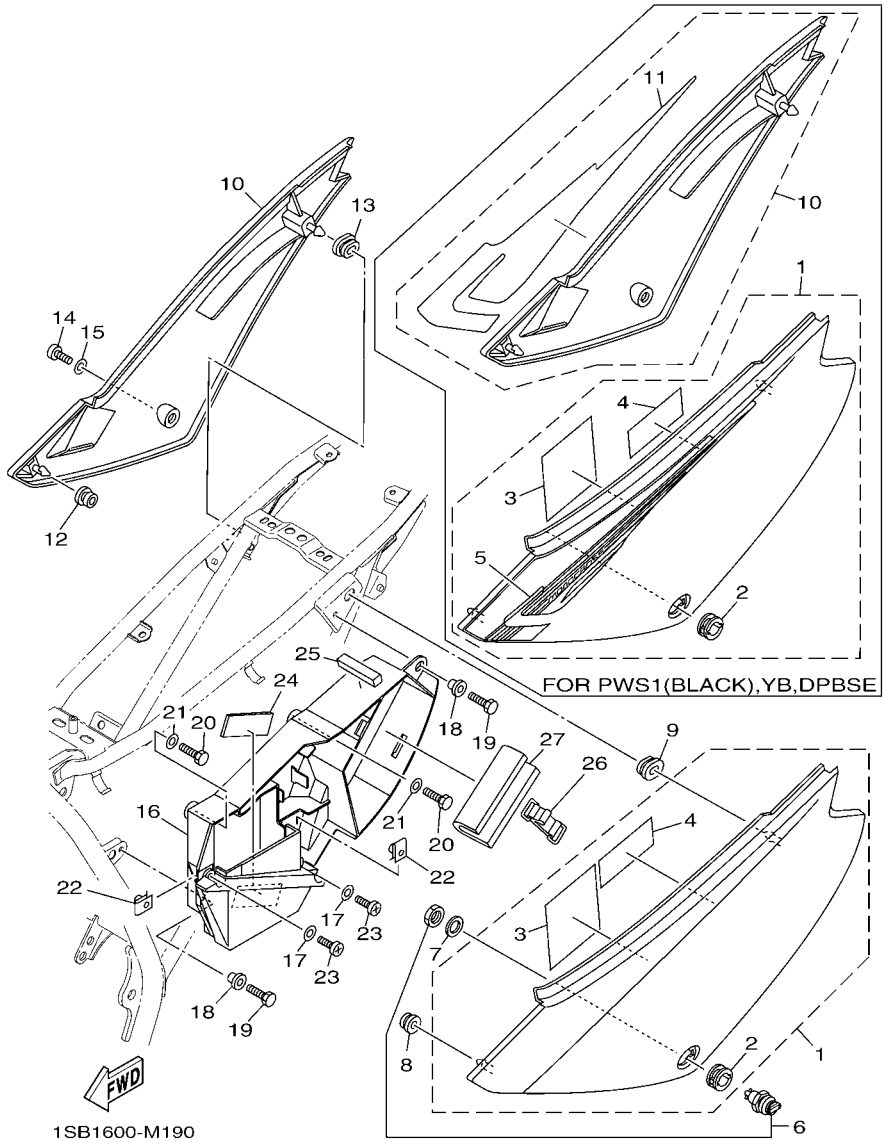

FIG. 19 CUBIERTA LATERAL SIDE COVER

REF. Nº	CODIGO Nº PART NO.	DESCRIPCION DESCRIPTION	1SB4					OBSERVACIONES REMARKS
18	90387–068K9	ESPACIADOR COLLAR	2					
19	97002–06016	PERNO BOLT	2					
20	97002–06012	PERNO BOLT	2					
21	90201–068F8	ARANDELA PLANA WASHER, PLATE	2					
22	90183–06820	TUERCA DE RESORTE NUT, SPRING	2					
23	98902–06016	TORNILLO DE LIGAR SCREW, BIND	2					
24	90520–07801	EQUILIBRIO, CUBIERTA DAMPER, PLATE	1					
25	90520–10818	EQUILIBRIO, CUBIERTA DAMPER, PLATE	1					
26	1SB–F811G–00	CINTA BAND	1					
27	1SB–F8267–00	AMORTIGUAFDOR 5 DAMPER 5	1					

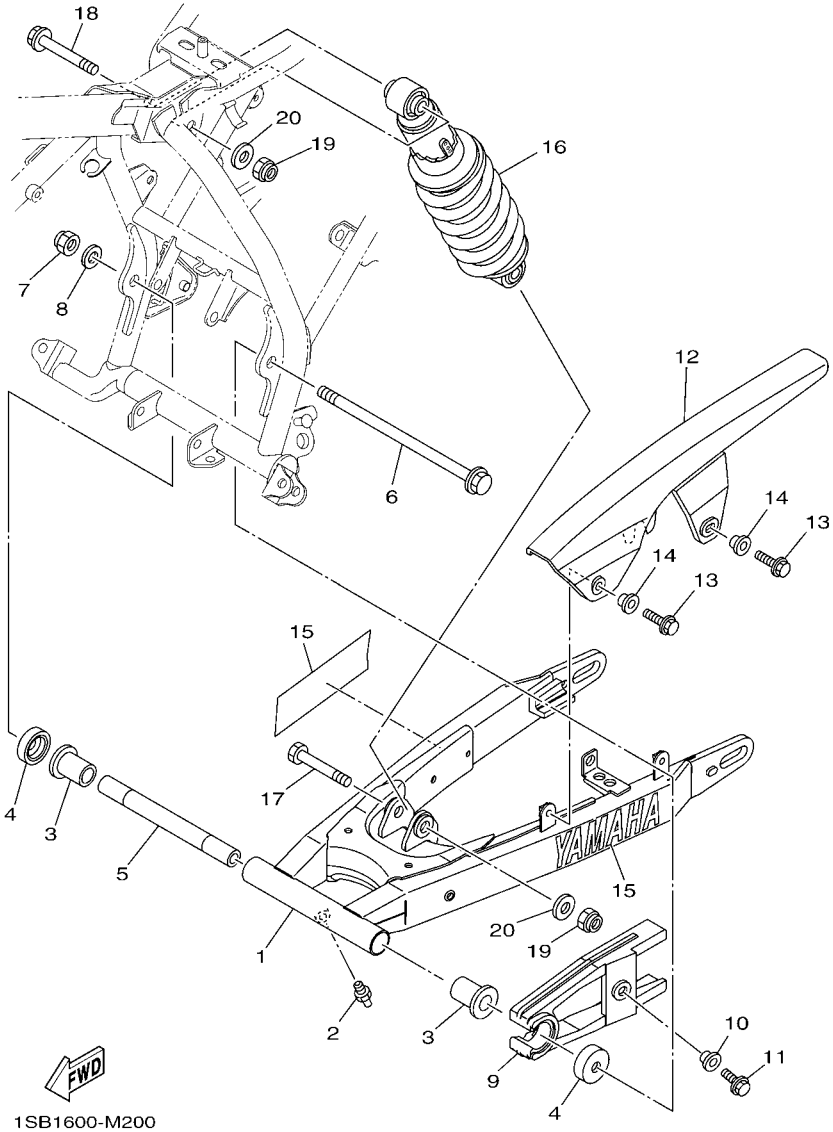

FIG. 20 BRAZO TRASERO & SUSPENSION REAR ARM & SUSPENSION

REF. Nº	CODIGO Nº PART NO.	DESCRIPCION DESCRIPTION	1SB4					OBSERVACIONES REMARKS
1	1SB–F2110–00	BRAZO TRASERO COMPLETO REAR ARM COMP.	1					
2	93700–06801	BOQUILLA DE ENGRASAR NIPPLE, GREASE	1					
3	90386–18801	BUJE BUSH	2					
4	4FP–F2129–01	TAPA DE EMPUJE 2 COVER, THRUST 2	2					
5	1SB–F2126–00	COLLAR DISTANCIADOR COLLAR, DISTANCE	1					
6	1SB–F2141–00	EJE DEL BARCULANTE SHAFT, PIVOT	1					
7	90185–12007	TUERCA AUTOBLOCANTE NUT, SELF-LOCKING	1					
8	90201–12030	ARANDELA PLANA WASHER, PLATE	1					
9	1SB–F2151–00	SELLO DE GUARDA SEAL, GUARD	1					
10	90387–068K0	ESPACIADOR COLLAR	1					
11	95802–06012	TORNILLO DE REBORDE BOLT, FLANGE	1					
12	1SB–F2311–00	CABRECADENA CASE, CHAIN	1					
13	95802–06014	TORNILLO DE REBORDE BOLT, FLANGE	2					
14	90387–068K9	ESPACIADOR COLLAR	2					
15	1SB–F1781–00	EMBLEMA 1 EMBLEM 1	2					
16	1SB–F2210–00	AMORTIGUADOR TRASERO COMPLETO SHOCK ABSORBER ASSY, REAR	1					
17	90101–12033	TORNILLO BOLT	1					
18	90105–12085	TORNILLO BOLT, FLANGE	1					
19	95612–12100	TUERCA U NUT, U	2					
20	90201–12032	ARANDELA PLANA WASHER, PLATE	2					

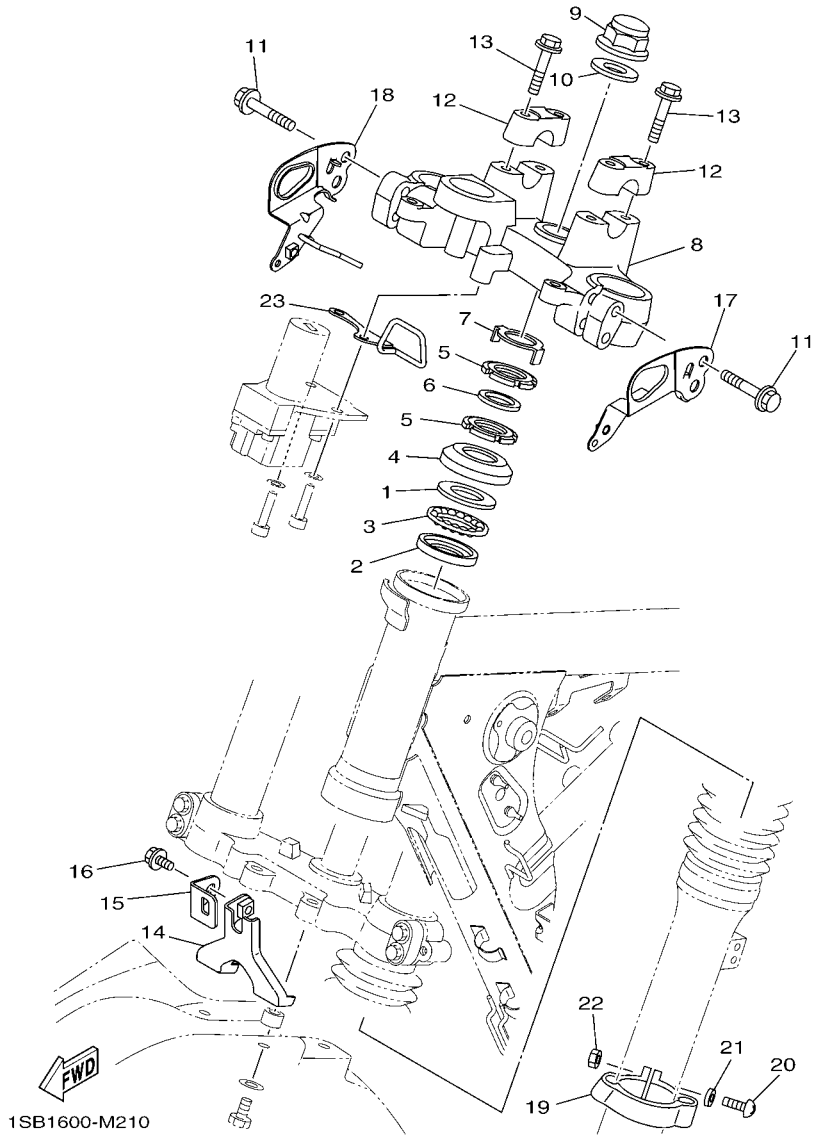

FIG. 21 DIRECCION STEERING

REF. Nº	CODIGO Nº PART NO.	DESCRIPCION DESCRIPTION	1SB4					OBSERVACIONES REMARKS
1	4FP–F3411–00	PISTA DE BOLAS 1 RACE, BALL 1	1					
2	4FP–F3412–00	PISTA DE BOLAS 2 RACE, BALL 2	1					
3	5VL–F341E–00	RETEN DE COJINETE RETAINER, BALL BEARING	1					
4	4GU–F3416–00	CUBIERTA DE BASE DE BOLA 2 COVER, BALL RACE 2	1					
5	90179–25806	TUERCA NUT	2					
6	90202–26142	ARANDELA DE PLANA WASHER, PLATE	1					
7	5VL–F3418–01	ARANDELA ESPECIAL WASHER, SPECIAL	1					
8	1SB–F3435–00	PLATINA SUPERIOR CROWN, HANDLE	1					
9	90176–22801	TUERCA CORONA NUT, CROWN	1					
10	5VL–F3165–01	ARANDELA DE FIELTRO WASHER, FELT	1					
11	95022–08040	PERNO, DE BRIDA BOLT, FLANGE	4					
12	3S9–F3441–00	SOPORTE DE MANUBRIO HOLDER, HANDLE UPPER	2					
13	95022–08035	PERNO, DE BRIDA BOLT, FLANGE	4					
14	1SB–F3174–00	SOPORTE DEL FARO DELANTERO STAY, HEADLIGHT	1					
15	1SB–F3486–00	SOPORTE DE PLACA STAY, PLATE	1					
16	95802–06010	TORNILLO DE REBORDE BOLT, FLANGE	1					
17	1SB–H4318–00	APOYO DE FARO DELANTERO 1 STAY, HEADLIGHT 1	1					
18	1SB–H4319–00	APOYO DE FARO DELANTERO 2 STAY, HEADLIGHT 2	1					
19	1SB–F3317–00	SOSTEN DE CABLE HOLDER, CABLE	1					
20	98512–05020	TORNILLO SCREW, PAN HEAD	1					
21	92902–05600	ARANDELA WASHER, PLATE	1					
22	95302–05600	TUERCA NUT	1					
23	1SB–F3389–00	GUIA DE CABLE GUIDE, CABLE	1					

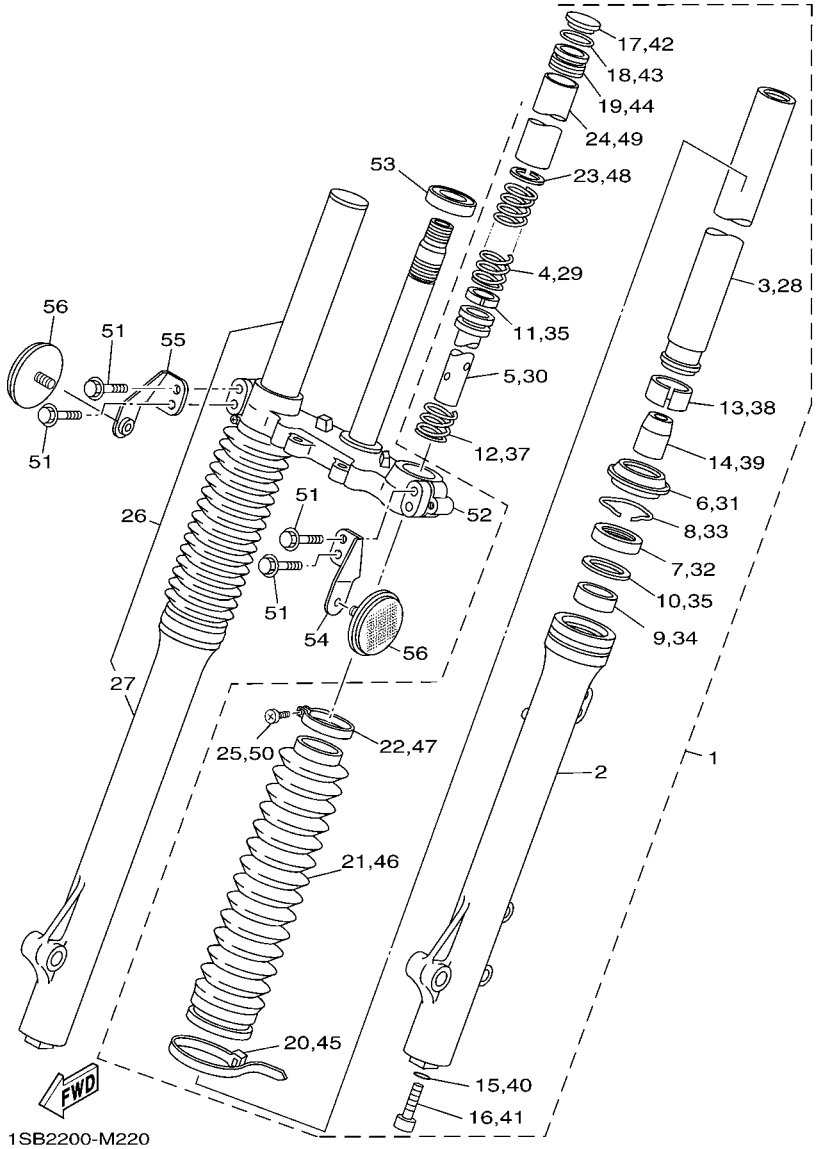

FIG. 22 HORQUILLA DELANTERA FRONT FORK

REF. Nº	CODIGO Nº PART NO.	DESCRIPCION DESCRIPTION	1SB4					OBSERVACIONES REMARKS
1	1SB–F3102–00	HORQUILLA DELANTERA COMPL.(MI) FRONT FORK ASSY (L.H)	1					
2	1SB–F3126–00	.TUBO EXTERIOR (IZQUIERDO) .TUBE, OUTER (L.H)	1					
3	1SB–F3110–00	.TUBO INTERIOR COMPLETO 1 .INNER TUBE COMP.1	1					
4	1SB–F3351–00	.RESORTE .SPRING	1					
5	1SB–F3171–00	.PISTON HORQUILLA DELANT. .PISTON, FRONT FORK	1					
6	1SB–F3144–00	.GUARDAPOLVO .SEAL, DUST	1					
7	1SB–F3145–00	.RETEN DE ACEITE .OIL SEAL	1					
8	1SB–F3156–00	.ANILLO DE ENGANCHE .RING, SNAP	1					
9	1SB–F3125–00	.METAL CORREDIZO 1 .METAL, SLIDE 1	1					
10	1SB–F3165–00	.ARANDELA DE FIELTRO .WASHER, FELT	1					
11	1SB–F3157–00	.ANILLO DEL PISTON .RING, PISTON	1					
12	1SB–F3151–00	.RESORTE DE REBOTE .SPRING, REBOUND	1					
13	1SB–F3135–00	.METAL CORREDIZO 2 .METAL, SLIDE 2	1					
14	1SB–F3166–00	.SEPARADOR CIERRE DE ACEITE .SPACER, OIL LOCK	1					
15	1SB–F3158–00	.EMPAQUE .GASKET	1					
16	1SB–F3181–00	.TORNILLO CABEZAHEXAGONAL .BOLT, HEXAGON SOCKET HEAD	1					
17	1SB–F3154–00	.TAPON TUBO INTERIOR .CAP	1					
18	1SB–F3188–00	.ANILLO O .O-RING	1					
19	1SB–F3111–00	.PERNO DE TAPA .BOLT, CAP	1					
20	1SB–F3192–00	.BANDA .BAND	1					
21	1SB–F3191–00	.FUNDA .BOOT	1					
22	1SB–F3192–10	.BANDA .BAND	1					
23	1SB–F3149–00	.ARANDELA DE RESORTE SUPERIOR .WASHER, SPRING UPPER	1					
24	1SB–F3118–00	.SEPARADOR .SPACER	1					
25	1SB–F3194–00	.TORNILLO DE BANDA DE FUNDA .SCREW, BOOT BAND	1					
26	1SB–F3103–00	HORQUILLA DELANTERA COMPL.(MD) FRONT FORK ASSY (R.H)	1					
27	1SB–F3136–00	.TUBO EXTERIOR 2 .TUBE, OUTER (R.H)	1					

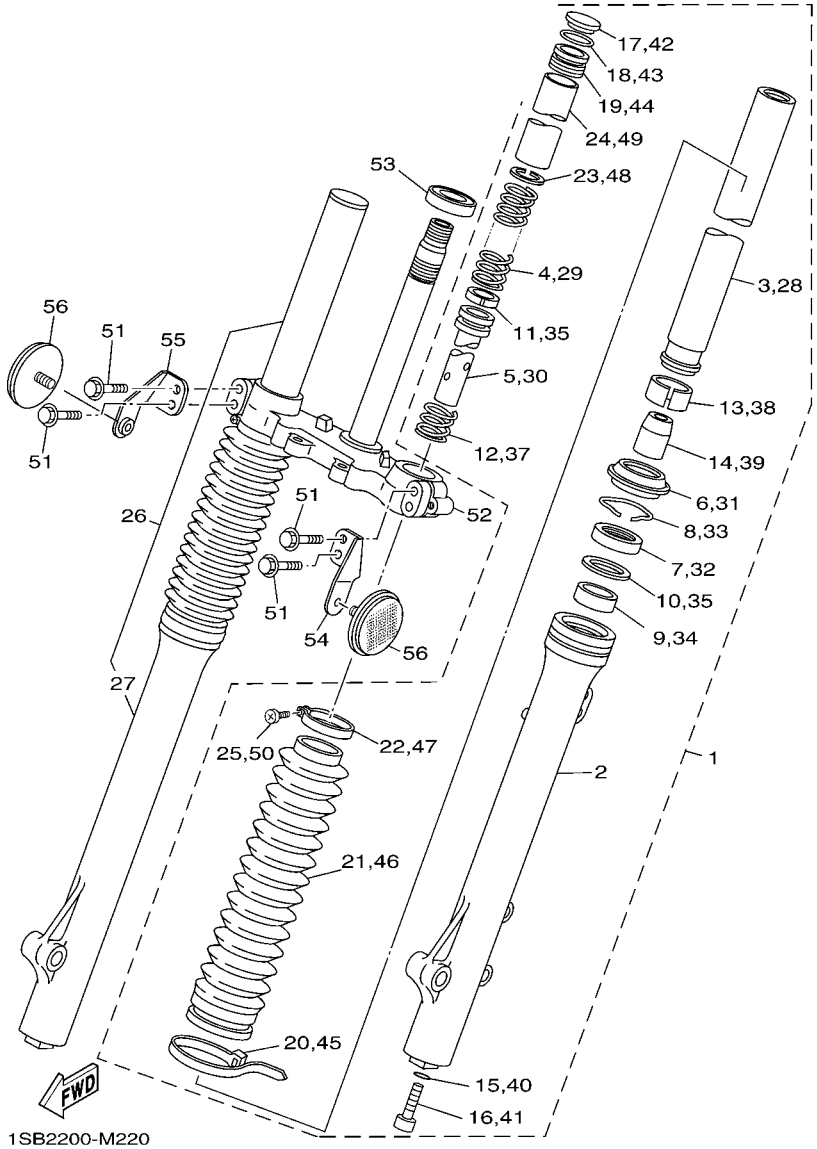

FIG. 22 HORQUILLA DELANTERA FRONT FORK

REF. Nº	CODIGO Nº PART NO.	DESCRIPCION DESCRIPTION	1SB4					OBSERVACIONES REMARKS
28	1SB–F3110–00	.TUBO INTERIOR COMPLETO 1 .INNER TUBE COMP.1	1					
29	1SB–F3351–00	.RESORTE .SPRING	1					
30	1SB–F3171–00	.PISTON HORQUILLA DELANT. .PISTON, FRONT FORK	1					
31	1SB–F3144–00	.GUARDAPOLVO .SEAL, DUST	1					
32	1SB–F3145–00	.RETEN DE ACEITE .OIL SEAL	1					
33	1SB–F3156–00	.ANILLO DE ENGANCHE .RING, SNAP	1					
34	1SB–F3125–00	.METAL CORREDIZO 1 .METAL, SLIDE 1	1					
35	1SB–F3165–00	.ARANDELA DE FIELTRO .WASHER, FELT	1					
36	1SB–F3157–00	.ANILLO DEL PISTON .RING, PISTON	1					
37	1SB–F3151–00	.RESORTE DE REBOTE .SPRING, REBOUND	1					
38	1SB–F3135–00	.METAL CORREDIZO 2 .METAL, SLIDE 2	1					
39	1SB–F3166–00	.SEPARADOR CIERRE DE ACEITE .SPACER, OIL LOCK	1					
40	1SB–F3158–00	.EMPAQUE .GASKET	1					
41	1SB–F3181–00	.TORNILLO CABEZAHEXAGONAL .BOLT, HEXAGON SOCKET HEAD	1					
42	1SB–F3154–00	.TAPON TUBO INTERIOR .CAP	1					
43	1SB–F3188–00	.ANILLO O .O-RING	1					
44	1SB–F3111–00	.PERNO DE TAPA .BOLT, CAP	1					
45	1SB–F3192–00	.BANDA .BAND	1					
46	1SB–F3191–00	.FUNDA .BOOT	1					
47	1SB–F3192–10	.BANDA .BAND	1					
48	1SB–F3149–00	.ARANDELA DE RESORTE SUPERIOR .WASHER, SPRING UPPER	1					
49	1SB–F3118–00	.SEPARADOR .SPACER	1					
50	1SB–F3194–00	.TORNILLO DE BANDA DE FUNDA .SCREW, BOOT BAND	1					
51	1SB–F3346–00	PERNO 1 BOLT 1	4					
52	1SB–F3340–00	PLATINA INFERIOR COMPLETA UNDER BRACKET COMP.	1					
53	93332–000Y7	COJINETE BEARING	1					
54	1SB–F317E–00	SOPORTE 1 STAY 1	1					

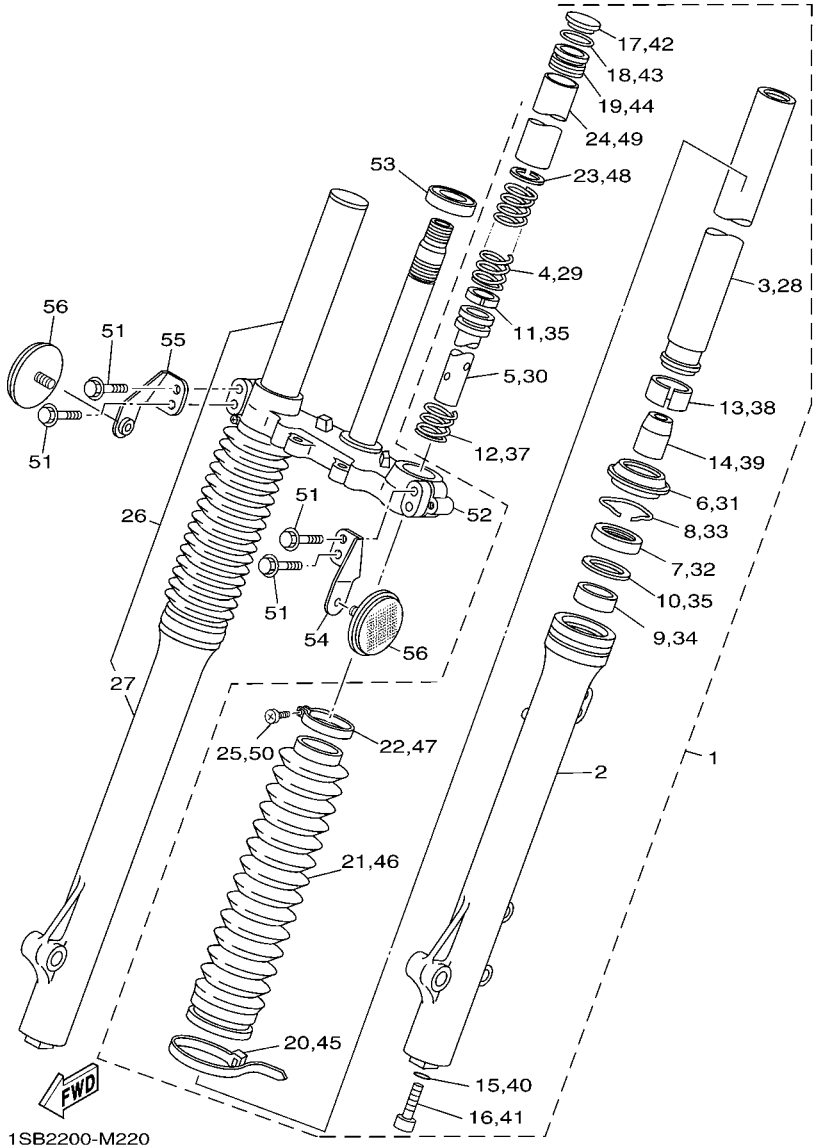

FIG. 22 HORQUILLA DELANTERA FRONT FORK

REF. Nº	CODIGO Nº PART NO.	DESCRIPCION DESCRIPTION	1SB4					OBSERVACIONES REMARKS
55	1SB–F317F–00	SOPORTE 2 STAY 2	1					
56	4KL–H5131–12	REFLECTOR TRASERO 1 REFLECTOR, REAR 1	2					

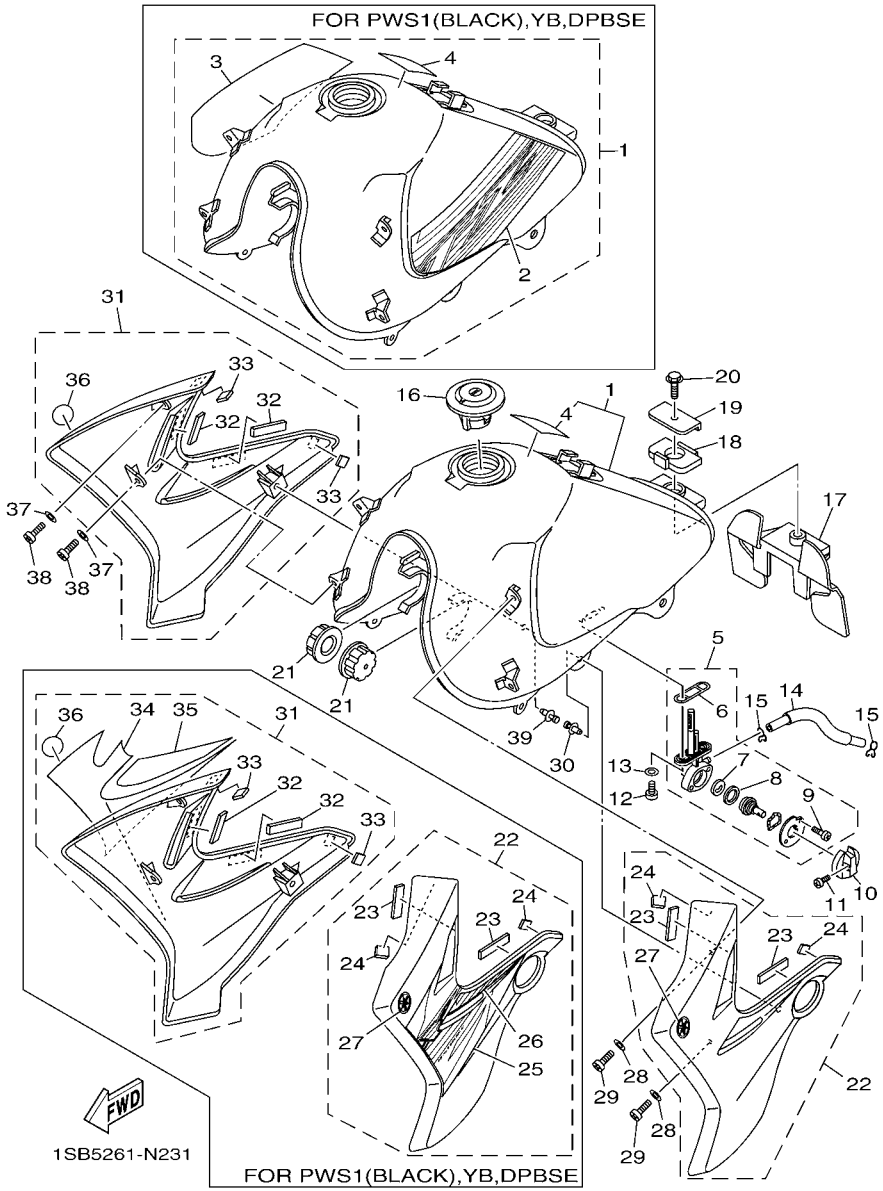

FIG. 23 DEPOSITO DE COMBUSTIBLE FUEL TANK

REF. Nº	CODIGO Nº PART NO.	DESCRIPCION DESCRIPTION	1SB4					OBSERVACIONES REMARKS
1	1SB–W2411–00–P0	DEPOSITO DE COMBUSTIBLE COMP. FUEL TANK ASSY	1					PARA PWS1(WHITE) FOR PWS1(WHITE)
	1SB–W2411–01–P1	DEPOSITO DE COMBUSTIBLE COMP. FUEL TANK ASSY	1					PARA PWS1(BLACK) FOR PWS1(BLACK)
	1SB–W2411–02–P1	DEPOSITO DE COMBUSTIBLE COMP. FUEL TANK ASSY	1					PARA YB FOR YB
	1SB–W2411–00–P1	DEPOSITO DE COMBUSTIBLE COMP. FUEL TANK ASSY	1					PARA DPBSE FOR DPBSE
2	1SB–F4244–10	.CALCOMANIA DEPOSITO COMBUST.1 .GRAPHIC, FUEL TANK 1	1					PARA PWS1(BLACK) FOR PWS1(BLACK)
	1SB–F4244–00	.CALCOMANIA DEPOSITO COMBUST.1 .GRAPHIC, FUEL TANK 1	1					PARA DPBSE FOR DPBSE
	1SB–F4244–20	.CALCOMANIA DEPOSITO COMBUST.1 .GRAPHIC, FUEL TANK 1	1					PARA YB FOR YB
3	1SB–F4245–10	.CALCOMANIA DEPOSITO COMBUST.2 .GRAPHIC, FUEL TANK 2	1					PARA PWS1(BLACK) FOR PWS1(BLACK)
	1SB–F4245–20	.CALCOMANIA DEPOSITO COMBUST.2 .GRAPHIC, FUEL TANK 2	1					PARA YB FOR YB
	1SB–F4245–00	.CALCOMANIA DEPOSITO COMBUST.2 .GRAPHIC, FUEL TANK 2	1					PARA DPBSE FOR DPBSE
4	1SB–F1568–00	.ETIQUETA DE PRECAUCION .LABEL, WARNING	1					
5	1SB–F4500–00	GRIFO DE COMBUSTIBLE 1 FUEL COCK ASSY 1	1					
6	1SB–F4512–00	.EMPAQUE .GASKET	1					
7	1SB–F4523–00	.VALVULA .VALVE	1					
8	1SB–F4534–00	.SELLO DE GRIFO .SEAL, COCK	1					
9	98580–03008	.TORNILLO DE CABEZA CRUZADA .SCREW, PAN HEAD	2					
10	5VL–F4524–01	LLAVE DEL GRIFO LEVER, COCK	1					
11	90157–03800	TORNILLO CABEZA CONICA PLANA SCREW, PAN HEAD	1					
12	98902–06016	TORNILLO DE LIGAR SCREW, BIND	2					
13	90430–05800	JUNTA GASKET	2					
14	90445–10831	TUBO HOSE	1					
15	90467–09854	PRESILLA CLIP	2					
16	5VL–F4610–11	TAPA COMPLETA CAP ASSY	1					
17	1SB–F4182–00	AMORTIGUADOR DE MONTAJE 2 DAMPER, LOCATING 2	1					
18	1SB–F4183–00	AMORTIGUADOR DE MONTAJE 3 DAMPER, LOCATING 3	1					
19	1SB–F4186–00	ARANDELA ESPECIAL WASHER, SPECIAL	1					
20	95822–06012	TORNILLO DE REBORDE BOLT, FLANGE	1					

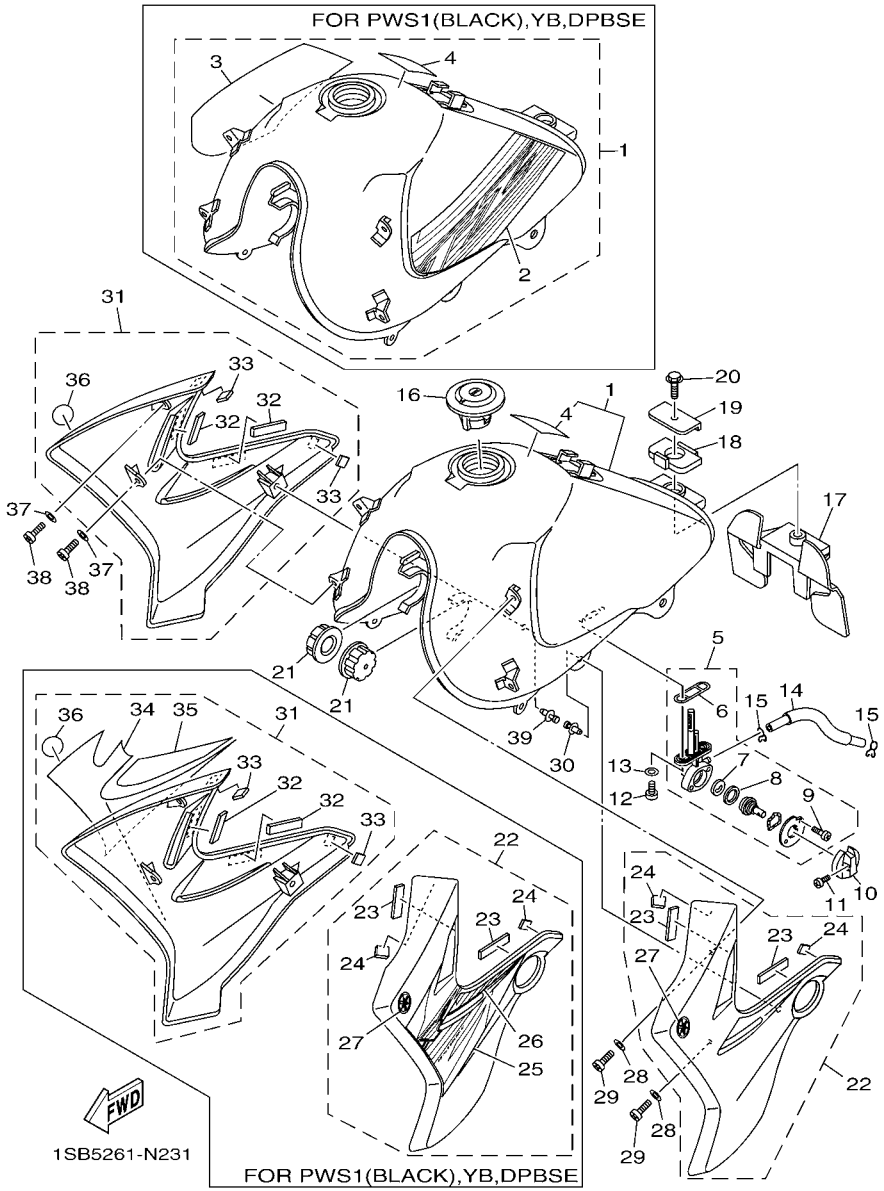

FIG. 23 DEPOSITO DE COMBUSTIBLE FUEL TANK

REF. Nº	CODIGO Nº PART NO.	DESCRIPCION DESCRIPTION	1SB4					OBSERVACIONES REMARKS
21	4FP–F4181–00	AMORTIGUADOR DE MONTAJE 1 DAMPER, LOCATING 1	2					
22	1SB–Y137W–03	CUBIERTA DE GUIA DE AIRE 1 SCOOP, AIR 1	1					PARA PWS1(WHITE) FOR PWS1(WHITE)
	1SB–Y137W–01	CUBIERTA DE GUIA DE AIRE 1 SCOOP, AIR 1	1					PARA PWS1(BLACK) FOR PWS1(BLACK)
	1SB–Y137W–02	CUBIERTA DE GUIA DE AIRE 1 SCOOP, AIR 1	1					PARA YB FOR YB
	1SB–Y137W–00	CUBIERTA DE GUIA DE AIRE 1 SCOOP, AIR 1	1					PARA DPBSE FOR DPBSE
23	90520–02817	.EQUILIBRIO, CUBIERTA .DAMPER, PLATE	2					
24	90520–03807	.EQUILIBRIO, CUBIERTA .DAMPER, PLATE	2					
25	1SB–F4246–10	.CALCOMANIA 3 .GRAPHIC 3	1					PARA PWS1(BLACK) FOR PWS1(BLACK)
	1SB–F4246–20	.CALCOMANIA 3 .GRAPHIC 3	1					PARA YB FOR YB
	1SB–F4246–00	.CALCOMANIA 3 .GRAPHIC 3	1					PARA DPBSE FOR DPBSE
26	1SB–F4247–10	.CALCOMANIA DEP. .GRAPHIC	1					PARA PWS1(BLACK) FOR PWS1(BLACK)
	1SB–F4247–20	.CALCOMANIA DEP. .GRAPHIC	1					PARA YB FOR YB
	1SB–F4247–00	.CALCOMANIA DEP. .GRAPHIC	1					PARA DPBSE FOR DPBSE
27	52C–F411B–00	.EMBLEMA .EMBLEM	1					
28	90201–06861	ARANDELA PLANA WASHER, PLATE	2					
29	98902–06012	TORNILLO DE LIGAR SCREW, BIND	2					
30	90269–07804	REMACHE RIVET	1					
31	1SB–Y137X–03	CUBIERTA DE GUIA DE AIRE 2 SCOOP, AIR 2	1					PARA PWS1(WHITE) FOR PWS1(WHITE)
	1SB–Y137X–01	CUBIERTA DE GUIA DE AIRE 2 SCOOP, AIR 2	1					PARA PWS1(BLACK) FOR PWS1(BLACK)
	1SB–Y137X–02	CUBIERTA DE GUIA DE AIRE 2 SCOOP, AIR 2	1					PARA YB FOR YB
	1SB–Y137X–00	CUBIERTA DE GUIA DE AIRE 2 SCOOP, AIR 2	1					PARA DPBSE FOR DPBSE
32	90520–02817	.EQUILIBRIO, CUBIERTA .DAMPER, PLATE	2					
33	90520–03807	.EQUILIBRIO, CUBIERTA .DAMPER, PLATE	2					
34	1SB–F4248–10	.CALCOMANIA DEP. COMBUSTIBLE 5 .GRAPHIC, FUEL TANK 5	1					PARA PWS1(BLACK) FOR PWS1(BLACK)
	1SB–F4248–20	.CALCOMANIA DEP. COMBUSTIBLE 5 .GRAPHIC, FUEL TANK 5	1					PARA YB FOR YB
	1SB–F4248–00	.CALCOMANIA DEP. COMBUSTIBLE 5 .GRAPHIC, FUEL TANK 5	1					PARA DPBSE FOR DPBSE
35	1SB–F4249–10	.CALCOMANIA DEP. COMBUSTIBLE 6 .GRAPHIC, FUEL TANK 6	1					PARA PWS1(BLACK) FOR PWS1(BLACK)

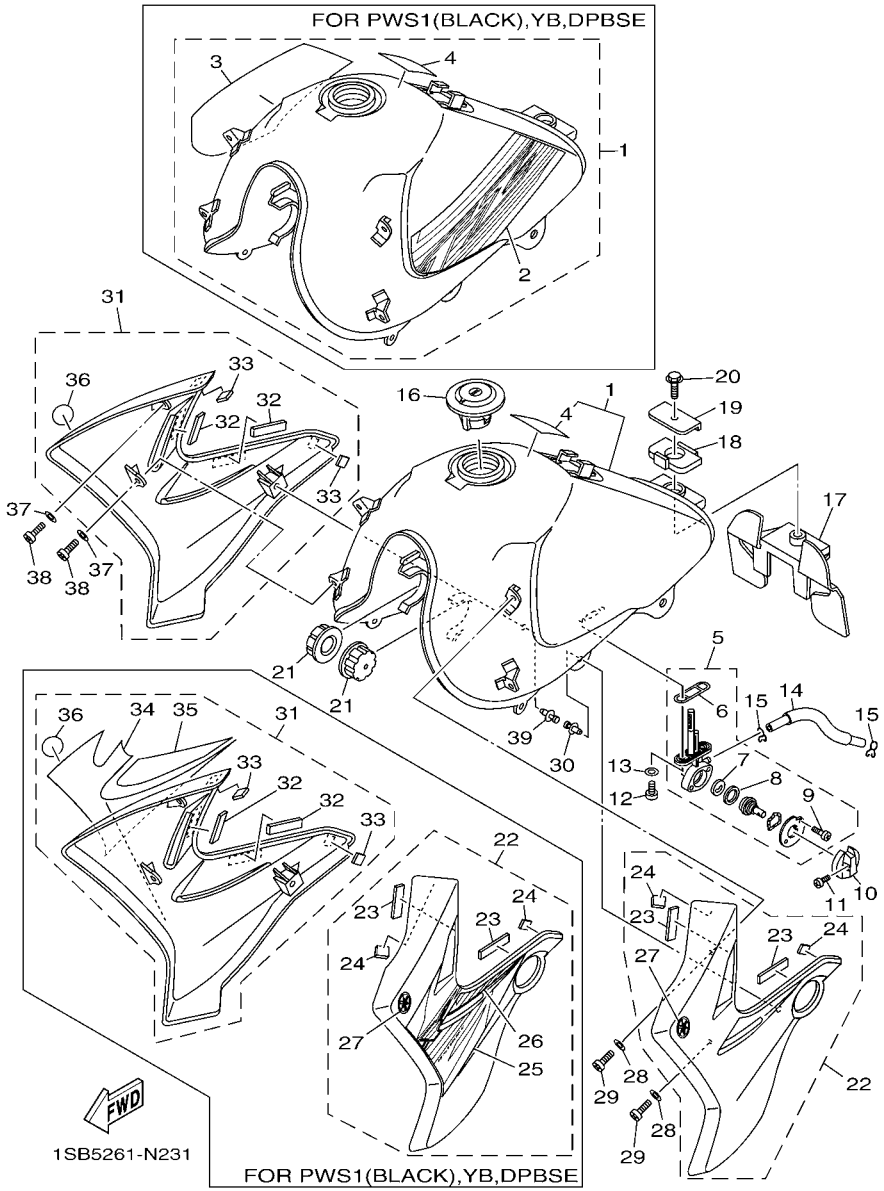

FIG. 23 DEPOSITO DE COMBUSTIBLE FUEL TANK

REF. Nº	CODIGO Nº PART NO.	DESCRIPCION DESCRIPTION	1SB4					OBSERVACIONES REMARKS
35	1SB–F4249–20	.CALCOMANIA DEP. COMBUSTIBLE 6 .GRAPHIC, FUEL TANK 6	1					PARA YB FOR YB
	1SB–F4249–00	.CALCOMANIA DEP. COMBUSTIBLE 6 .GRAPHIC, FUEL TANK 6	1					PARA DPBSE FOR DPBSE
36	52C–F411B–00	.EMBLEMA .EMBLEM	1					
37	90201–06861	ARANDELA PLANA WASHER, PLATE	2					
38	98902–06012	TORNILLO DE LIGAR SCREW, BIND	2					
39	90269–07804	REMACHE RIVET	1					

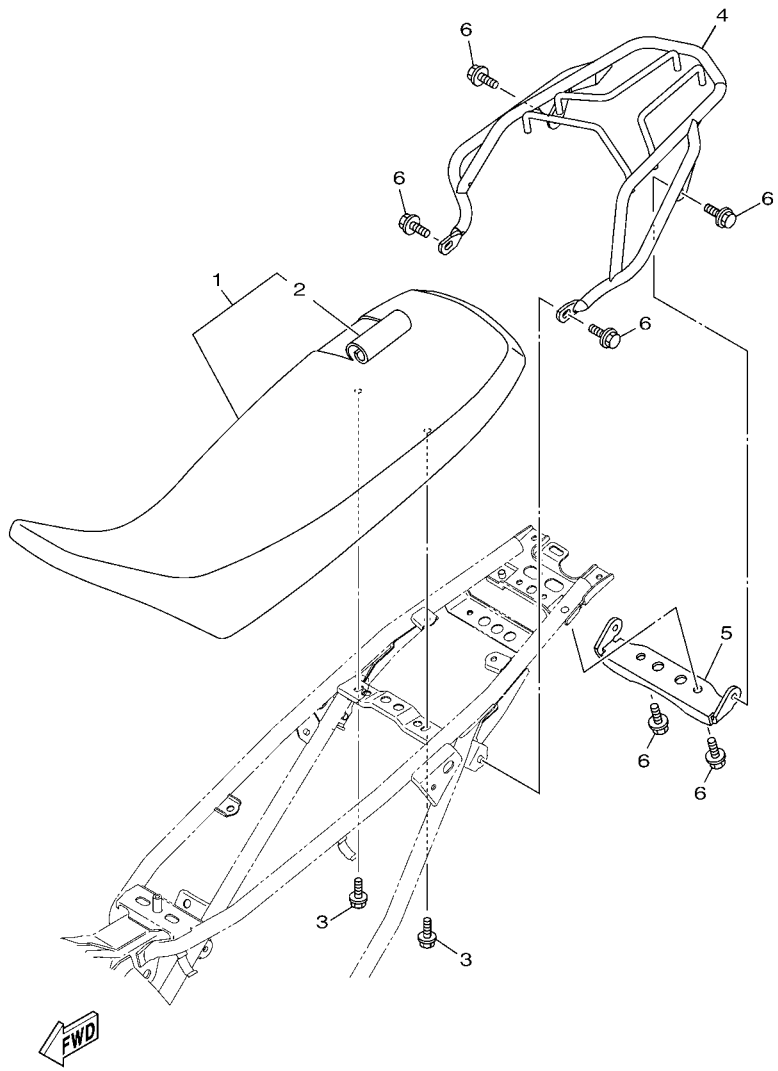

1SB1600-M240

FIG. 24 ASIENTO SEAT

REF. Nº	CODIGO Nº PART NO.	DESCRIPCION DESCRIPTION	1SB4					OBSERVACIONES REMARKS
1	1SB–F4730–00	SILLIN DOBLE COMPLETO DOUBLE SEAT ASSY	1					
2	1SB–F4731–00	.FUNDA DE SILLIN .COVER, SEAT	1					
3	95802–06012	TORNILLO DE REBORDE BOLT, FLANGE	2					
4	1SB–F4830–00	SUBPORTADOR COMPLETO SUB CARRIER ASSY	1					
5	1SB–F4832–00	SOPORTE DE PORTADOR 1 BRACKET, CARRIER 1	1					
6	95822–08014	TORNILLO DE REBORDE BOLT, FLANGE	6					

FIG. 25 RUEDA DELANTERA FRONT WHEEL

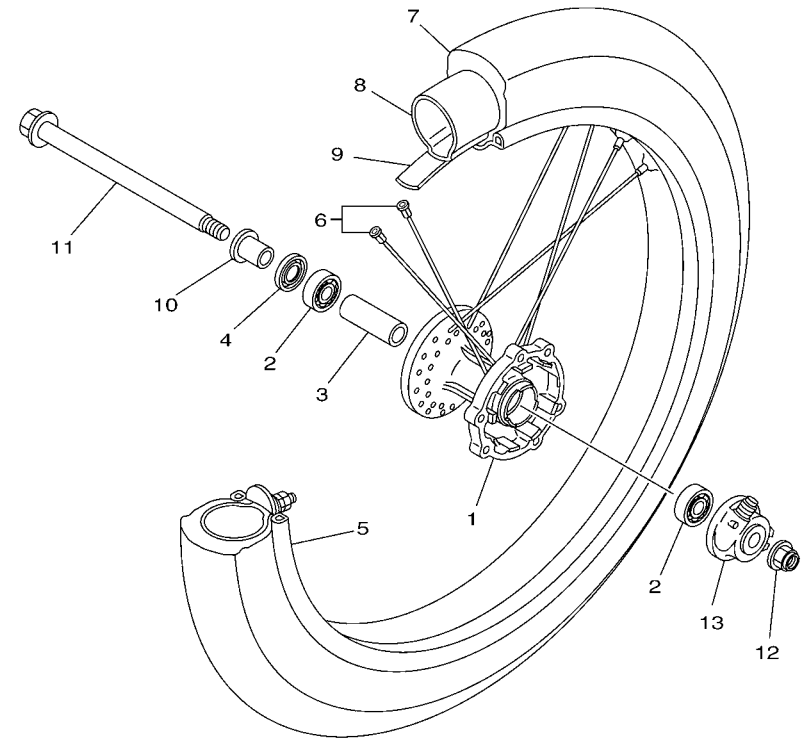

1SB1600-M250

REF. Nº	CODIGO Nº PART NO.	DESCRIPCION DESCRIPTION	1SB4					OBSERVACIONES REMARKS
1	1SB–F5111–00	MASA DELANTERA HUB, FRONT	1					
2	93306–252YD	COJINETE BEARING	2					
3	90387–15826	ESPACIADOR COLLAR	1					
4	93106–20813	SELLO ACEITE OIL SEAL	1					
5	94416–21802	ARO (1.60-21) RIM (1.60-21)	1					
6	1SB–F5104–00	JUEGO DE RAYOS DELANTERO SPOKE SET, FRONT	1					
7	94108–21803	NEUMATICO (80/90-21 48P TT) TIRE (80/90-21 CM706 48P TT)	1					CHENG SHIN CHENG SHIN
8	94208–21800	TUBO (80/100-21) TUBE (80/100-21)	1					CHENG SHIN CHENG SHIN
9	94308–21800	BANDA DE ARO BAND, RIM	1					
10	90387–15600	ESPACIADOR COLLAR	1					
11	1SB–F5181–00	EJE DE LA RUEDA AXLE, WHEEL	1					
12	95602–14200	TUERCA DE AUTO-CIERRE NUT, SELF-LOCKING	1					
13	1SB–F5190–00	UNIDAD DE ENGRANAJE COMPLETA GEAR UNIT ASSY	1					

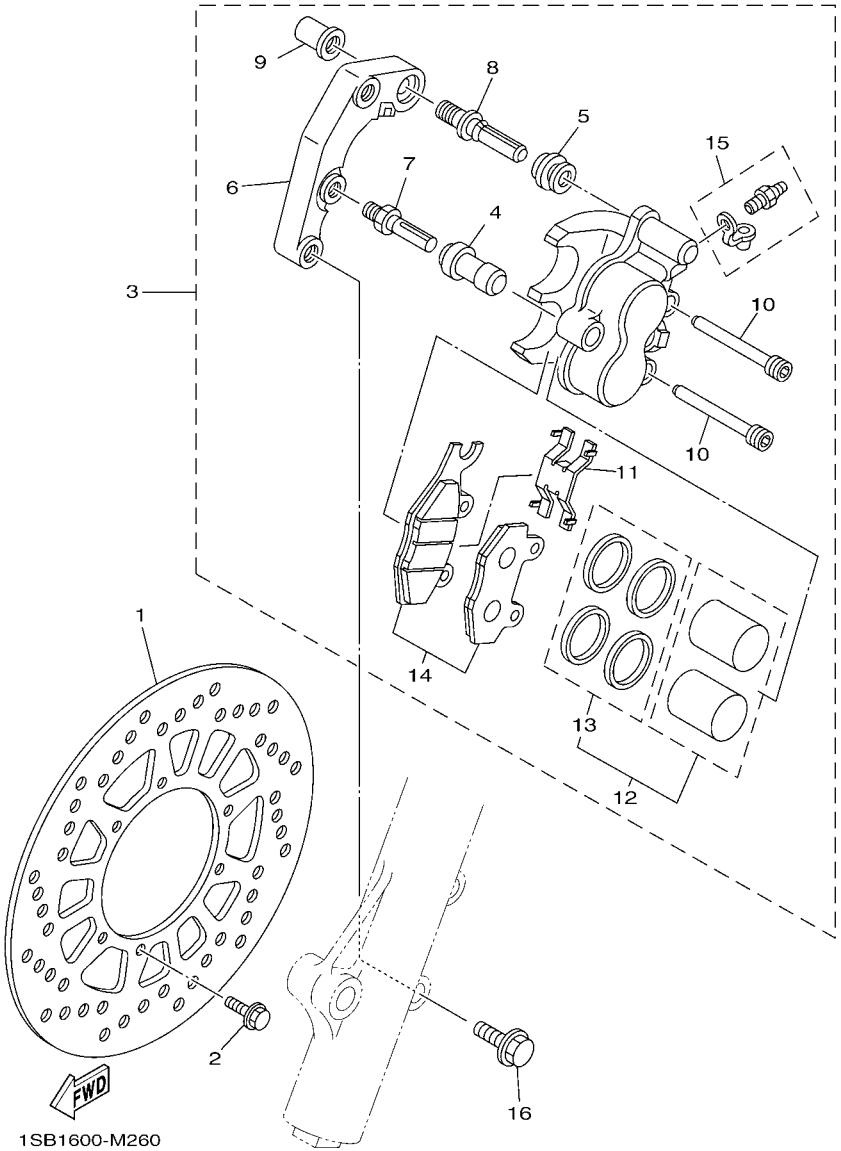

FIG. 26 CALIBRE FRENO DELANTERA FRONT BRAKE CALIPER

REF. Nº	CODIGO Nº PART NO.	DESCRIPCION DESCRIPTION	1SB4					OBSERVACIONES REMARKS
1	1SB–F582T–00	DISCO DE FRENO (IZQUIERDO) DISC, BRAKE (LEFT)	1					
2	90105–06813	TORNILLO BOLT, FLANGE	6					
3	1SB–F580T–00	CALIBRE COMPLETO (IZQUIERDO) CALIPER ASSY (LEFT)	1					
4	1SB–F5937–00	.FUNDA .BOOT 2	1					
5	1SB–F5917–00	.FUNDA DE CALIBRE .BOOT, CALIPER	1					
6	1SB–F5921–00	.MENSULA DE SOPORTE .BRACKET, SUPPORT	1					
7	1SB–F5926–00	.PERNO .BOLT	1					
8	1SB–F536G–00	.PASADOR .PIN	1					
9	1SB–F5961–00	.TUERCA .NUT	1					
10	1SB–F5924–00	.PASADOR .PIN, PAD	2					
11	1SB–F5934–00	.RESORTE, COJIN .SPRING, PAD	1					
12	1SB–W0057–00	.PISTON COMPLETO PINZA .PISTON ASSY, CALIPER	1					
13	1SB–W0047–00	..JUEGO DE RETENES DE PINZA ..CALIPER SEAL KIT	1					
14	1SB–W0045–00	.JUEGO DE COJIN DE FRENO .BRAKE PAD KIT	1					
15	1SB–W0048–00	.CJTO TORNILLO DE PURGA .BLEED SCREW KIT	1					
16	90105–10852	TORNILLO BOLT, FLANGE	2					

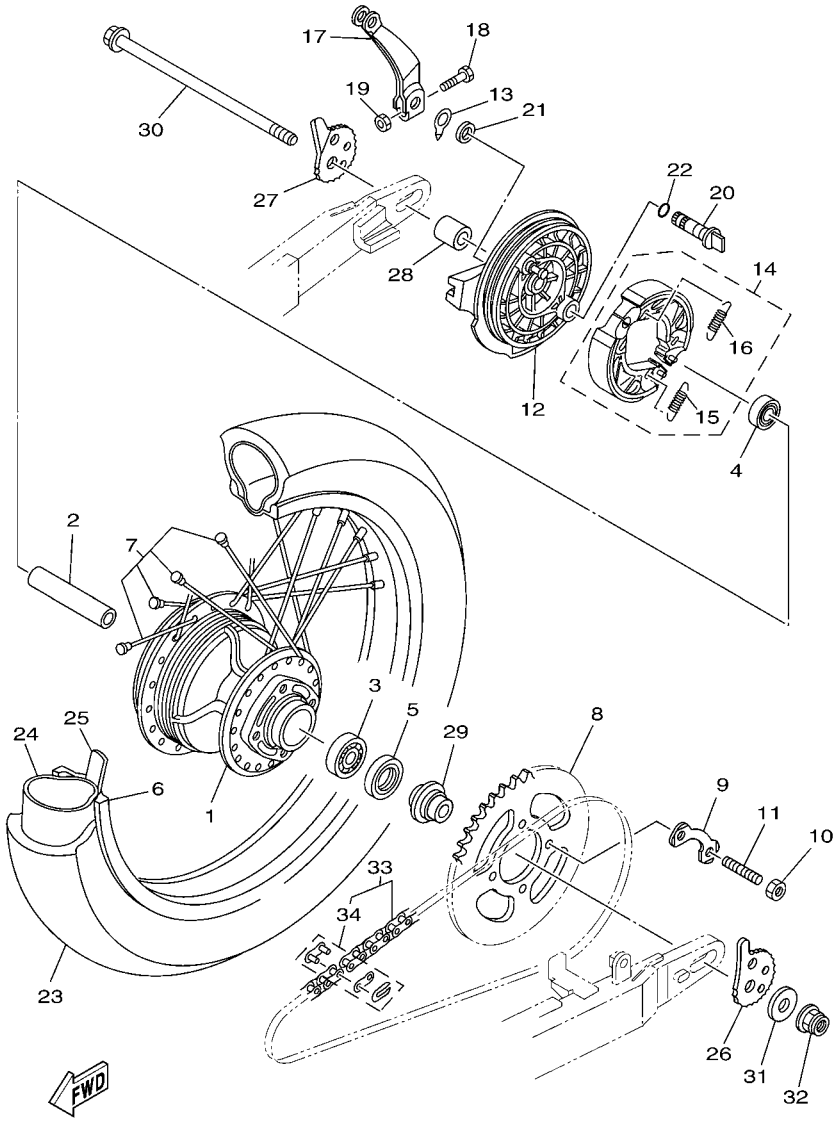

1SB1600-M270

FIG. 27 RUEDA TRASERA REAR WHEEL

REF. Nº	CODIGO Nº PART NO.	DESCRIPCION DESCRIPTION	1SB4					OBSERVACIONES REMARKS
1	1SB–F5311–00	MASA TRASERA HUB, REAR	1					
2	90387–15827	ESPACIADOR COLLAR	1					
3	93306–302YD	COJINETE BEARING	1					
4	93306–252YD	COJINETE BEARING	1					
5	93106–26804	SELLO ACEITE OIL SEAL	1					
6	94421–18802	ARO (2.15-18) RIM (2.15-18)	1					
7	1SB–F5304–00	JUEGO DE RAYOS TRASEROS SPOKE SET, REAR	1					
8	1SB–F5448–00	CORONA (48D) SPROCKET, DRIVEN (48T)	1					
9	1SB–F5412–00	ARANDELA WASHER	2					
10	95312–10600	TUERCA HEXAGONAL NUT	4					
11	90116–10805	ESPARRAGO BOLT, STUD	4					
12	1SB–F5321–00	PLACA DE ZAPATA DE FRENO PLATE, BRAKE SHOE	1					
13	4GU–F533A–01	PLACA INDICADOR PLATE, INDICATOR	1					
14	12B–W2533–00	JUEGO DE ZAPATA DE FRENO BRAKE SHOE SET	1					
15	90506–12801	.RESORTE DE TENSION .SPRING, TENSION	1					
16	90506–15802	.RESORTE DE TENSION .SPRING, TENSION	1					
17	1SB–F5355–00	PALANCA DE ARBOL DE LEVAS LEVER, CAMSHAFT	1					
18	90101–06821	TORNILLO BOLT	1					
19	95302–06600	TUERCA NUT	1					
20	1SB–F5351–00	ARBOL DE LEVAS CAMSHAFT	1					
21	93109–14801	SELLO ACEITE OIL SEAL	1					
22	93210–14813	ANILLO O O-RING	1					
23	94111–18801	NEUMATICO (110/80-18 58P TT) TIRE (110/80-18 CM707 58P TT)	1					CHENG SHIN CHENG SHIN
24	94211–18800	TUBO (110/80-18) TUBE (110/80-18)	1					CHENG SHIN CHENG SHIN
25	94311–18800	BANDA DE ARO BAND, RIM	1					
26	1SB–F5388–00	TIRADOR DE CADENA 1 PULLER, CHAIN 1	1					
27	1SB–F5389–00	TIRADOR DE CADENA 2 PULLER, CHAIN 2	1					

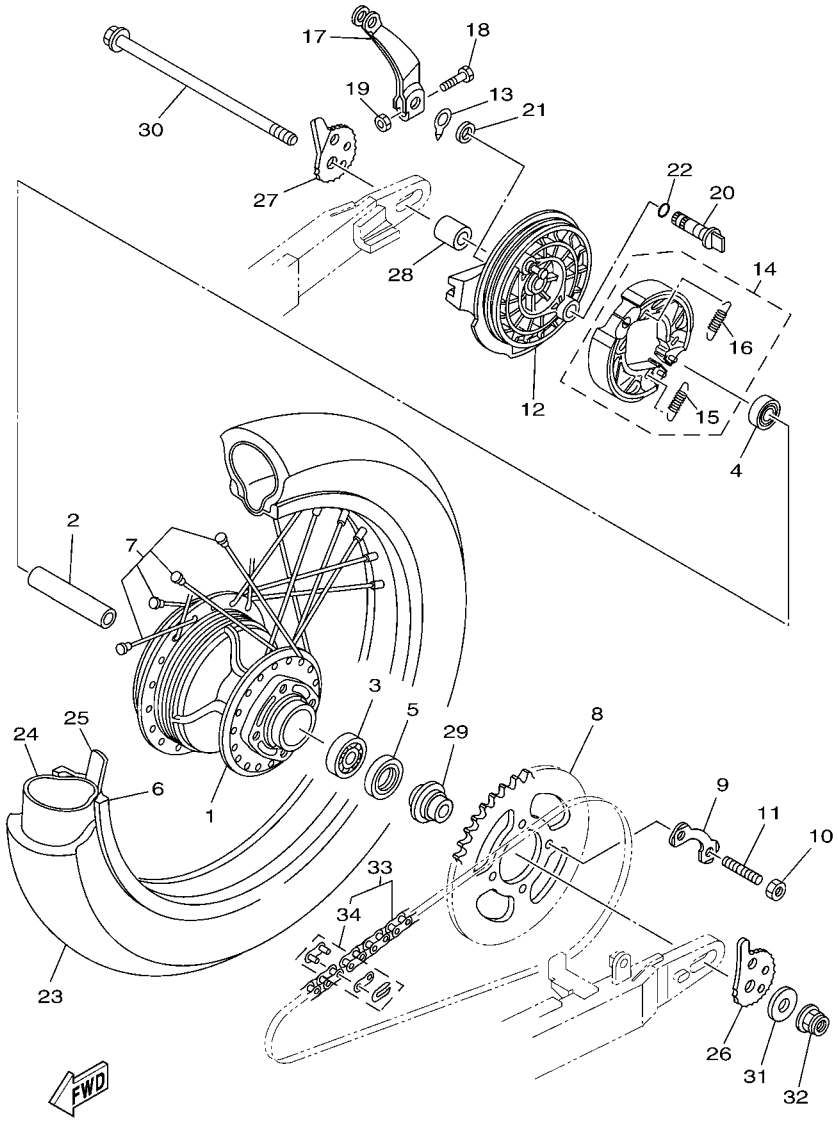

1SB1600-M270

FIG. 27 RUEDA TRASERA REAR WHEEL

REF. Nº	CODIGO Nº PART NO.	DESCRIPCION DESCRIPTION	1SB4					OBSERVACIONES REMARKS
28	90387–15802	ESPACIADOR COLLAR	1					
29	1SB–F5383–00	COLLAR DE RUEDA COLLAR, WHEEL	1					
30	1SB–F5381–00	EJE DE RUEDA AXLE, WHEEL	1					
31	90201–15843	ARANDELA PLANA WASHER, PLATE	1					
32	95602–14200	TUERCA DE AUTO-CIERRE NUT, SELF-LOCKING	1					
33	1SB–F53C0–00	CADENA CHAIN	1					
34	94608–35001	.CONECTOR DE CADENA (DID428HG) .JOINT, CHAIN (DID428HG(I)-RJ)	1					

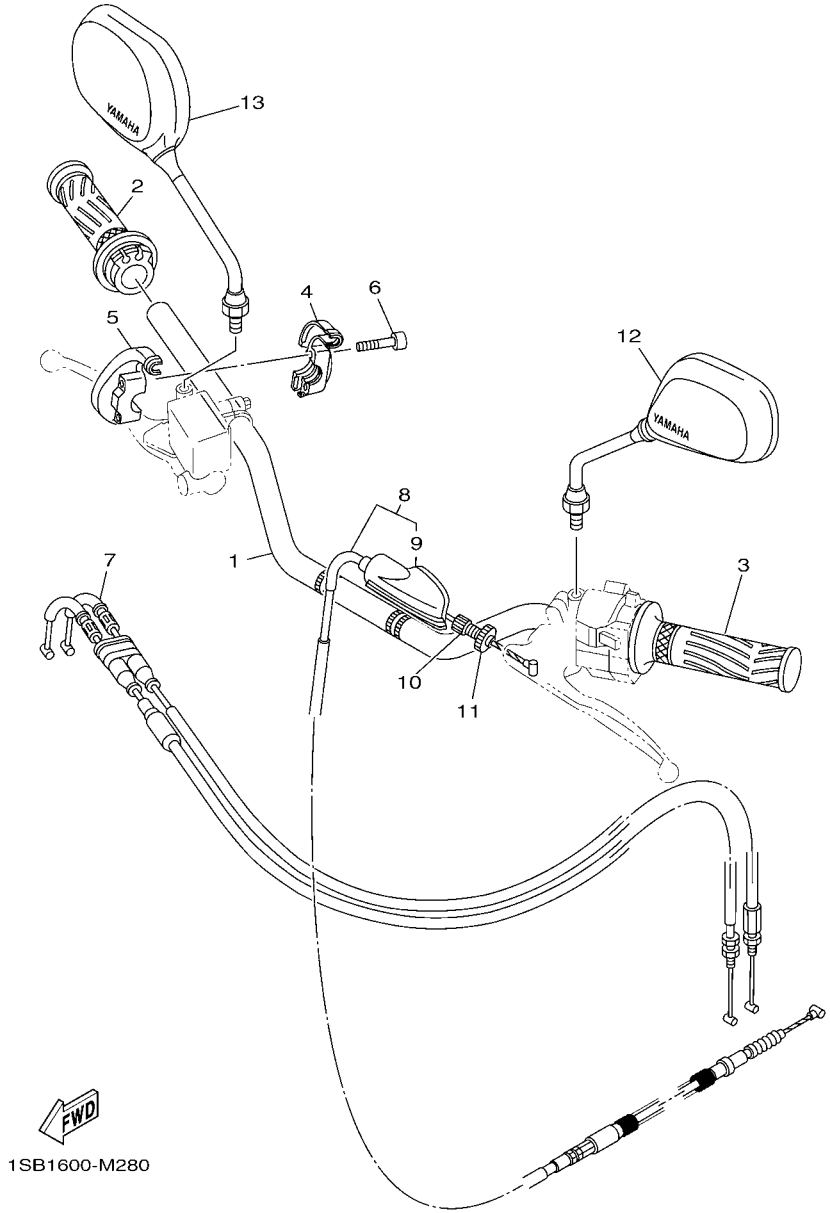

FIG. 28 MANILLAR & CABLE — STEERING HANDLE & CABLE

REF. Nº	CODIGO Nº PART NO.	DESCRIPCION DESCRIPTION	1SB4					OBSERVACIONES REMARKS
1	1SB–F6111–00	MANUBRIO HANDLEBAR	1					
2	1SB–F6240–00	EMPUNADURA COMPLETA GRIP ASSY	1					
3	5VL–F6241–00	EMPUNADURA GRIP	1					
4	1SB–F6281–00	TAPA DE EMPUNADURA SUPERIOR CAP, GRIP UPPER	1					
5	1SB–F6282–00	TAPA, EMPUNADURA INFERIOR CAP, GRIP UNDER	1					
6	98502–05020	TORNILLO SCREW, PAN HEAD	2					
7	1SB–F6302–00	CABLE DE ACELERADOR COMPLETO THROTTLE CABLE ASSY	1					
8	1SB–F6335–00	CABLE DE EMBRAGUE CABLE, CLUTCH	1					
9	5VL–F6372–01	.CUBIERTA DE PALANCA DE MANUB 1 .COVER, HANDLE LEVER 1	1					
10	90123–08813	PERNO BOLT	1					
11	90179–08862	TUERCA NUT	1					
12	41S–F6280–00	ESPEJO COMPLETO (IZQUIERDO) REAR VIEW MIRROR ASSY (LEFT)	1					
13	41S–F6290–00	ESPEJO COMPLETO (DERECHO) REAR VIEW MIRROR ASSY (RIGHT)	1					

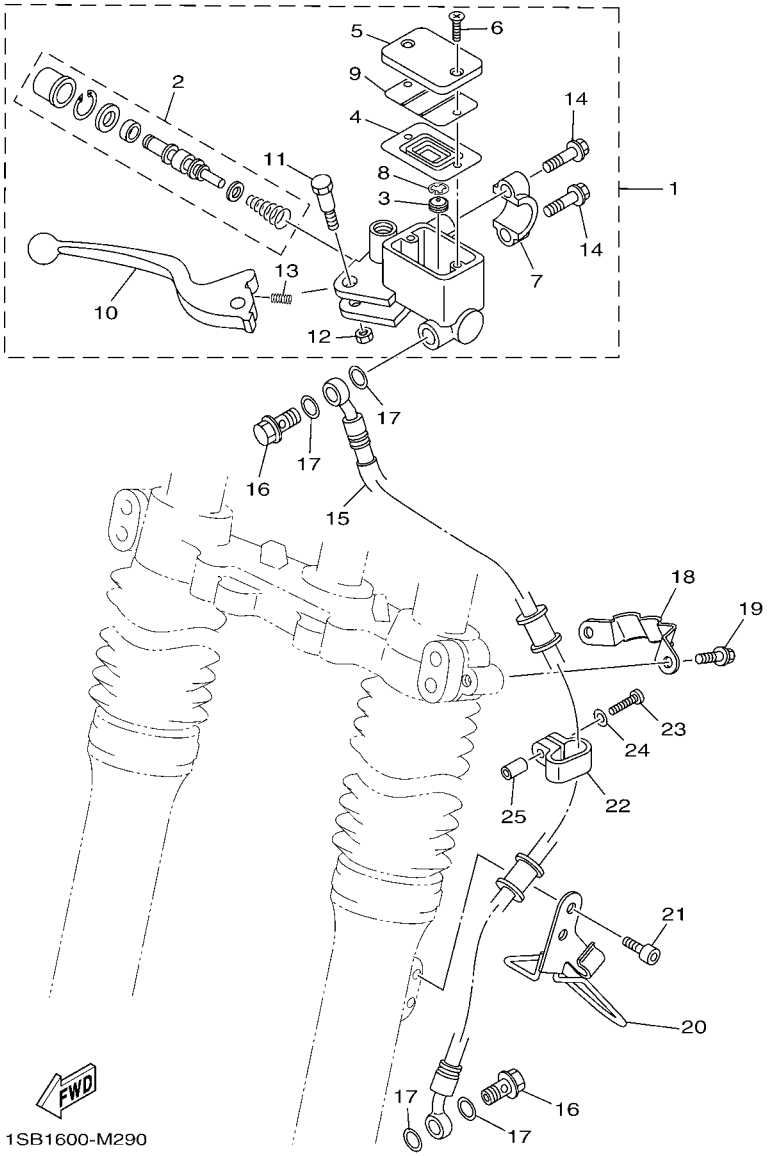

FIG. 29 CILINDRO MAESTRO DELANTERO FRONT MASTER CYLINDER

REF. Nº	CODIGO Nº PART NO.	DESCRIPCION DESCRIPTION	1SB4					OBSERVACIONES REMARKS
1	1SB–F583T–00	CILINDRO MAESTRO COMPLETO MASTER CYLINDER ASSY	1					
2	1SB–W0041–00	.JUEGO DE CILINDRO MAESTRO .CYLINDER KIT, MASTER	1					
3	5CG–25715–00	.SEPARADOR .SEPARATOR ASSY	1					
4	1SB–F5854–00	.EMPAQUE,DIAFRAGMA .DIAPHRAGM, RESERVOIR	1					
5	1SB–F5852–00	.TAPA DE TANQUE DE RESERVA .CAP, RESERVOIR	1					
6	98706–04012	.TORNILLO DE CABEZA PLANA .SCREW, FLAT HEAD	2					
7	1SB–F5867–00	.SOPORTE DE CILINDRO MAESTRO .BRACKET, MASTER CYLINDER	1					
8	5CG–2585G–00	.PRECILLA REDONDA .CIRCLIP	1					
9	1SB–F585B–00	.PLACA, DIAFRAGMA .PLATE, DIAPHRAGM	1					
10	1SB–H3922–00	.PALANCA 2 .LEVER 2	1					
11	90109–06577	.PERNO .BOLT	1					
12	95602–06100	.TUERCA U .NUT, U	1					
13	90501–10312	.RESORTE DE COMPRESION .SPRING, COMPRESSION	1					
14	5MV–25833–00	.PERNO ACCESORIO .BOLT, FITTING	2					
15	1SB–F5872–01	MANGUERA DE FRENO 1 HOSE, BRAKE 1	1					
16	90401–10015	PERNO DE UNION BOLT, UNION	2					
17	90201–108J9	ARANDELA PLANA WASHER, PLATE	4					
18	1SB–F5875–00	SOPORTE DE MANGUERA FRENO 1 HOLDER, BRAKE HOSE 1	1					
19	95022–06010	PERNO, DE BRIDA BOLT, FLANGE	2					
20	1SB–F3318–00	SOSTEN DE CABLE 1 HOLDER, CABLE 1	1					
21	91312–06010	TORNILLO BOLT	2					
22	1SB–F3467–00	GRAMPA CLAMP	1					
23	98512–04016	TORNILLO SCREW, PAN HEAD	1					
24	92902–04600	ARANDELA WASHER, PLATE	1					
25	90445–05807	TUBO HOSE	1					

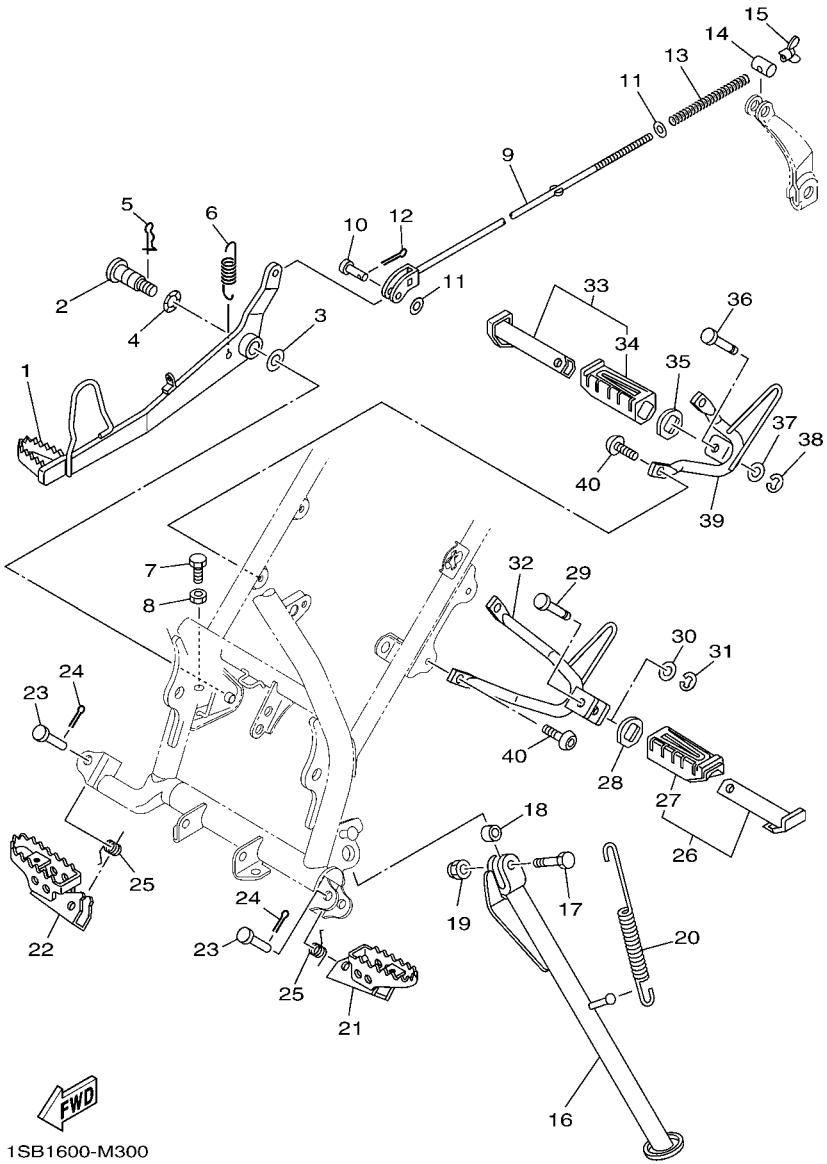

FIG. 30 SOPORTE & APOYAPIE STAND & FOOTREST

REF. Nº	CODIGO Nº PART NO.	DESCRIPCION DESCRIPTION	1SB4					OBSERVACIONES REMARKS
1	1SB–F7211–00	PEDAL DE FRENO PEDAL, BRAKE	1					
2	1SB–F7261–00	EJE SHAFT	1					
3	90201–10061	ARANDELA PLANA WASHER, PLATE	1					
4	90206–14001	ARANDELA ONDULADA WASHER, WAVE	1					
5	1SB–F411M–00	PRESILLA CLIP	1					
6	90506–23801	RESORTE DE TENSION SPRING, TENSION	1					
7	97002–06016	PERNO BOLT	1					
8	95302–06700	TUERCA NUT	1					
9	1SB–F7231–00	VARILLA DE FRENO ROD, BRAKE	1					
10	91702–06020	PASADOR DE ADRAZADERA PIN, CLEVIS	1					
11	92902–06200	ARANDELA WASHER	2					
12	91402–20012	CHAVETA PIN, COTTER	1					
13	90501–10802	RESORTE DE COMPRESION SPRING, COMPRESSION	1					
14	90249–12808	PASADOR PIN	1					
15	90175–06013	TUERCA MARIPOSA NUT, WING	1					
16	1SB–F7311–00	PUNTAL LATERAL STAND, SIDE	1					
17	90101–10805	TORNILLO BOLT	1					
18	90387–10003	ESPACIADOR COLLAR	1					
19	90185–10023	TUERCA AUTOBLOCANTE NUT, SELF-LOCKING	1					
20	90506–35474	RESORTE DE TENSION SPRING, TENSION	1					
21	1P6–F7451–01	APOYAPIE FOOTREST	1					
22	1P6–F7461–01	APOYAPIE FOOTREST	1					
23	90240–10804	PASADOR CON HOYO PIN, CLEVIS	2					
24	91402–25015	CHAVETA PIN, COTTER	2					
25	1P6–F7456–01	RESORTE DE RETORNO SPRING, RETURN	2					
26	5VL–F7430–01	APOYAPIE POSTERIOR COMPLETO 1 REAR FOOTREST ASSY 1	1					
27	5VL–F7433–00	.CUBIERTA APOYAPIE TRASERO .COVER, REAR FOOTREST	1					

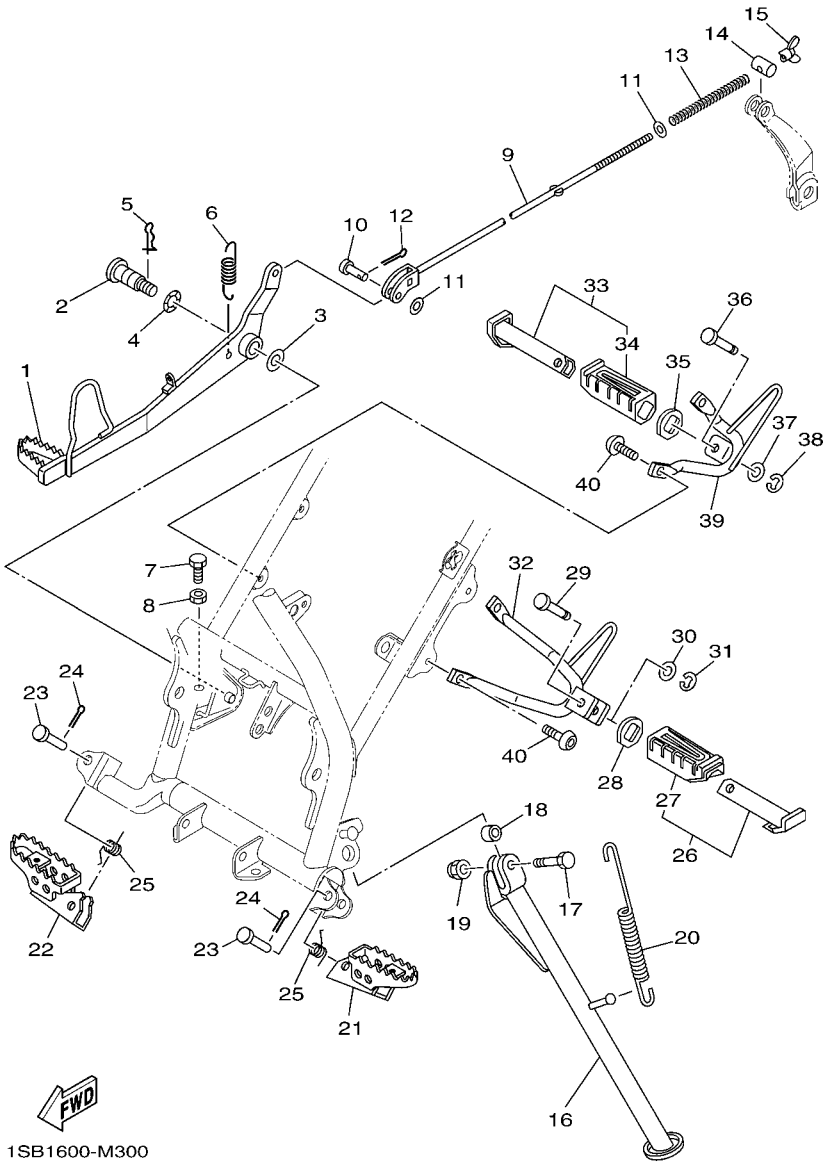

FIG. 30 SOPORTE & APOYAPIE STAND & FOOTREST

REF. Nº	CODIGO Nº PART NO.	DESCRIPCION DESCRIPTION	1SB4					OBSERVACIONES REMARKS
28	5VL–F7445–01	PLACE 1 PLATE 1	1					
29	90249–06800	PASADOR PIN	1					
30	92902–06200	ARANDELA WASHER	1					
31	99001–05600	PRESILLA REDONDA CIRCLIP	1					
32	1SB–F7432–00	SOPORTE 1 BRACKET 1	1					
33	5VL–F7440–01	APOYAPIE POSTERIOR COMPLETO 2 REAR FOOTREST ASSY 2	1					
34	5VL–F7444–00	.CUBIERTA APOYAPIE TRASERO .COVER, REAR FOOTREST	1					
35	5VL–F7445–01	PLACE 1 PLATE 1	1					
36	90249–06800	PASADOR PIN	1					
37	92902–06200	ARANDELA WASHER	1					
38	99001–05600	PRESILLA REDONDA CIRCLIP	1					
39	1SB–F7442–00	SOPORTE 2 BRACKET 2	1					
40	92012–08020	PERNO BOLT, BUTTON HEAD	4					

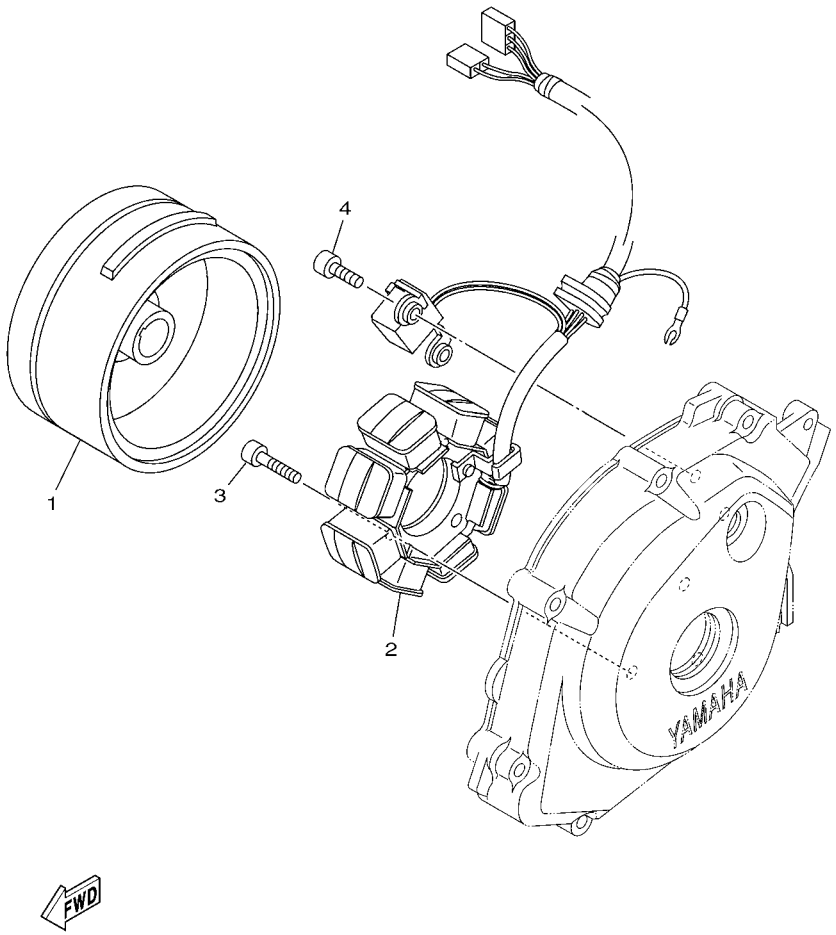

FIG. 31 GENERADOR GENERATOR

REF. Nº	CODIGO Nº PART NO.	DESCRIPCION DESCRIPTION	1SB4					OBSERVACIONES REMARKS
1	2D0–H1450–11	ROTOR COMPLETO ROTOR ASSY	1					
2	2D0–H1410–01	ESTATOR COMPLETO STATOR ASSY	1					
3	91312–06025	TORNILLO BOLT	3					
4	91312–06014	TORNILLO BOLT	2					

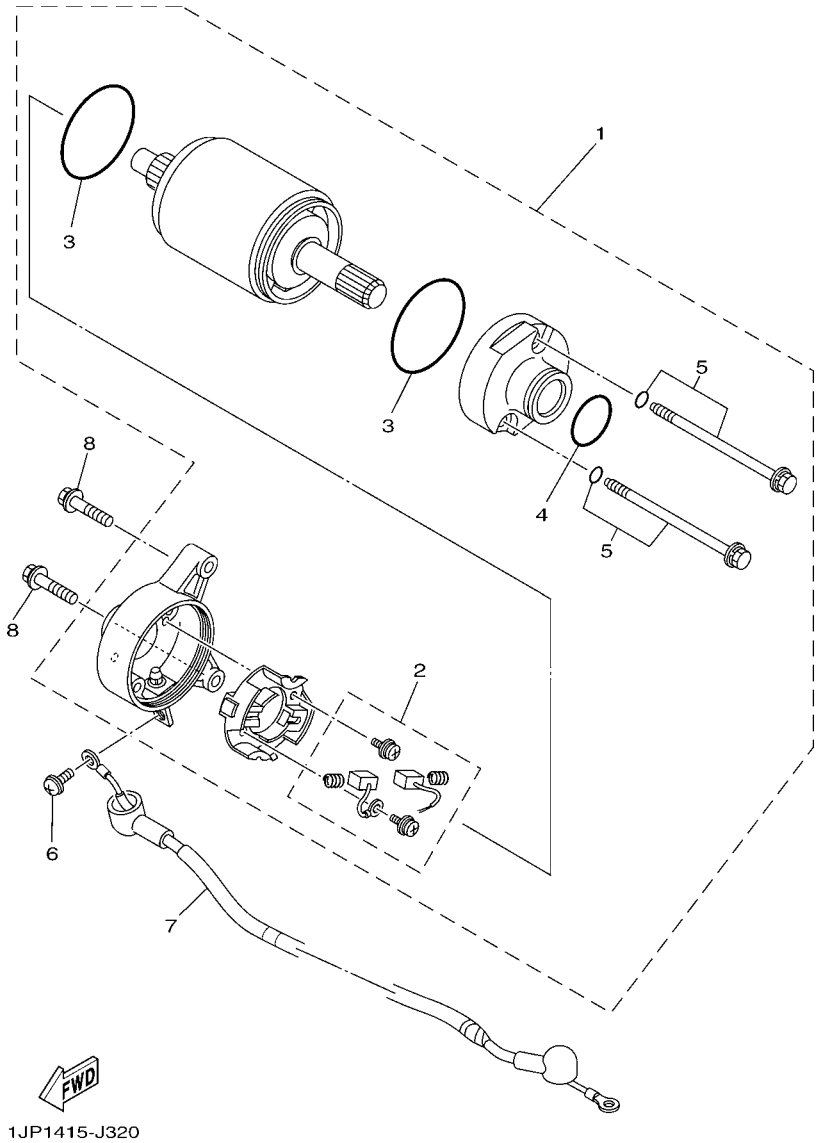

FIG. 32 MOTOR DE ARRANQUE STARTING MOTOR

REF. Nº	CODIGO Nº PART NO.	DESCRIPCION DESCRIPTION	1SB4					OBSERVACIONES REMARKS
1	5VL–H1890–00	MOTOR DE ARRANQUE COMPLETO MOTOR ASSY	1					
2	4FP–H1801–00	.JUEGO DE ESCOBILLA .BRUSH SET	1					
3	93210–55669	.ANILLO O .O-RING	2					
4	4FP–H182L–00	.ANILLO EN O .O-RING 1	1					
5	4FP–H1828–01	.TORNILLO DE EMPUJE 2 .SCREW 2	2					
6	98902–05008	TORNILLO DE LIGAR SCREW, BIND	1					
7	5VL–H183G–01	CABLE DEL MOTOR COMPL. CORD COMP.	1					
8	95022–06025	PERNO, DE BRIDA BOLT, FLANGE	2					

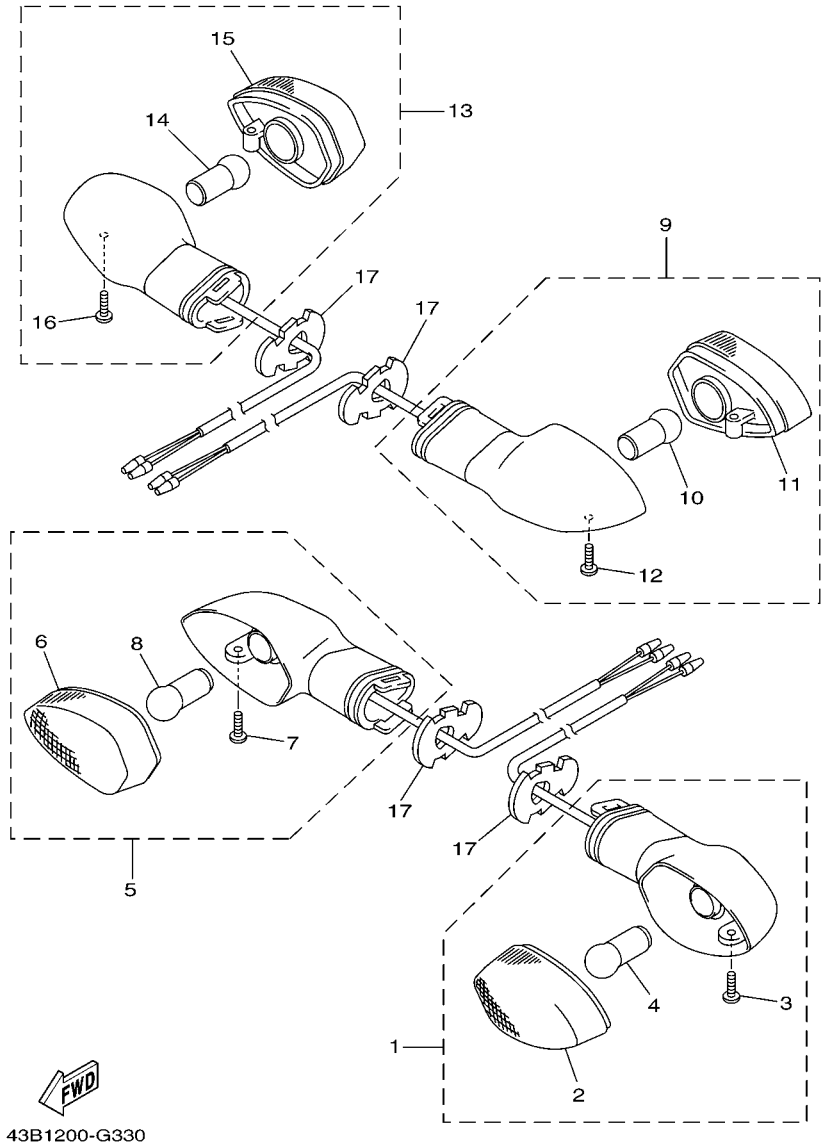

FIG. 33 LUZ DE DESTELLADOR FLASHER LIGHT

REF. Nº	CODIGO Nº PART NO.	DESCRIPCION DESCRIPTION	1SB4					OBSERVACIONES REMARKS
1	5D1–H3310–00	DESTELLADOR DE LUZ DELANT. FRONT FLASHER LIGHT ASSY 1	1					
2	3D9–H333A–00	.LENTES COMPLETO 1 .LENS COMP 1	1					
3	3D9–H3333–10	.TORNILLO ACCESORIO DE LENTE .SCREW, LENS FITTING	1					
4	3D9–H3311–10	.BOMBILLA (12V-10W) .BULB, FLASHER (12V-10W)	1					
5	5D1–H3320–00	DESTELLADOR DE LUZ DELANT. FRONT FLASHER LIGHT ASSY 2	1					
6	3D9–H334A–00	.LENTES COMPLETO 2 .LENS COMP 2	1					
7	3D9–H3333–10	.TORNILLO ACCESORIO DE LENTE .SCREW, LENS FITTING	1					
8	3D9–H3311–10	.BOMBILLA (12V-10W) .BULB, FLASHER (12V-10W)	1					
9	1SB–H3330–00	DESTELLADOR DE LUZ TRAS.COMPL. REAR FLASHER LIGHT ASSY 1	1					
10	3D9–H3311–10	.BOMBILLA (12V-10W) .BULB, FLASHER (12V-10W)	1					
11	3D9–H334A–00	.LENTES COMPLETO 2 .LENS COMP 2	1					
12	3D9–H3333–10	.TORNILLO ACCESORIO DE LENTE .SCREW, LENS FITTING	1					
13	1SB–H3340–00	DESTELLADOR DE LUZ TRAS.COMPL. REAR FLASHER LIGHT ASSY 2	1					
14	3D9–H3311–10	.BOMBILLA (12V-10W) .BULB, FLASHER (12V-10W)	1					
15	3D9–H333A–00	.LENTES COMPLETO 1 .LENS COMP 1	1					
16	3D9–H3333–10	.TORNILLO ACCESORIO DE LENTE .SCREW, LENS FITTING	1					
17	3D9–H3318–10	SOPORTE DE DESTELLADOR 1 STAY, FLASHER 1	4					

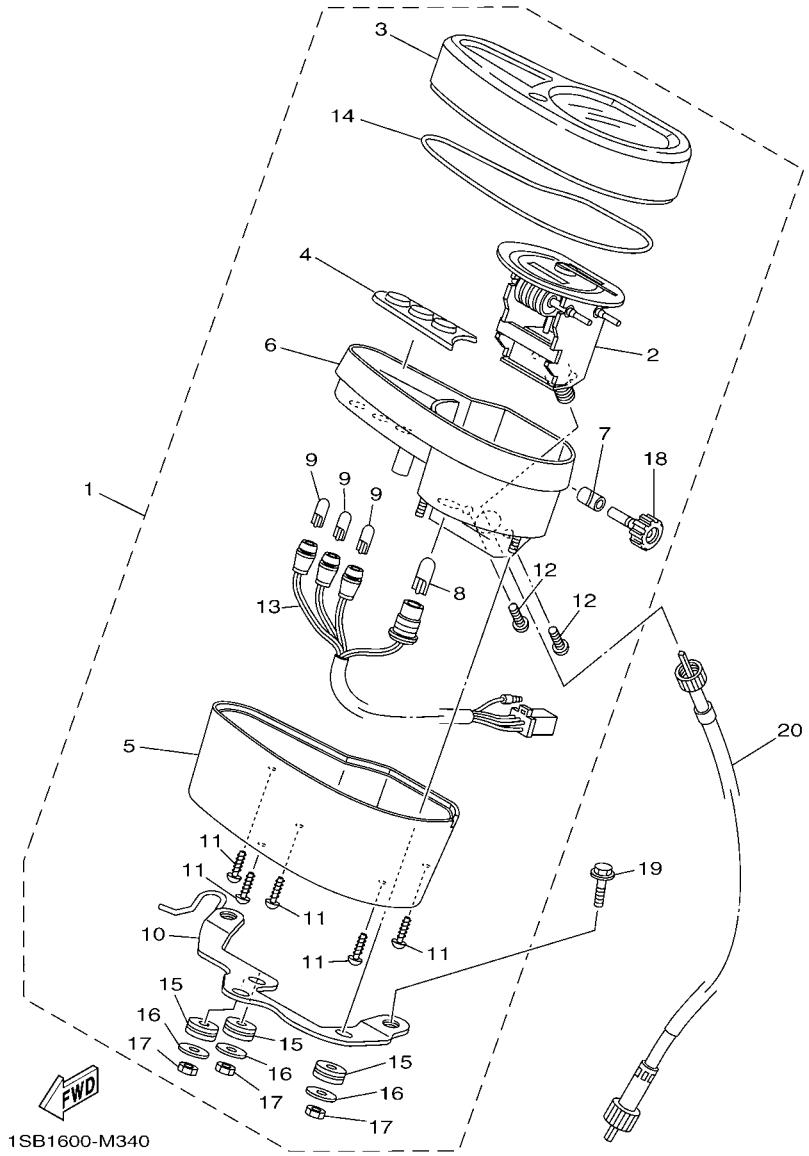

FIG. 34 MEDIDOR METER

REF. Nº	CODIGO Nº PART NO.	DESCRIPCION DESCRIPTION	1SB4					OBSERVACIONES REMARKS
1	1SB–H3500–00	METRO COMPLETO METER ASSY	1					
2	1SB–H3570–00	.VELOCIMETRO COMPLETO .SPEEDOMETER ASSY	1					
3	1SB–H3559–00	.CUBIERTA DE MEDIDOR .COVER, METER	1					
4	1SB–H357X–00	.REFLECTOR .PANEL ASSY	1					
5	1SB–H353H–00	.CAJA INFERIOR .CASE, UNDER	1					
6	1SB–H353R–00	.CAJA SUPERIOR COMPLETA .CASE COMP., UPPER	1					
7	1SB–H357L–00	.EMPAQUE, METRO 2 .PACKING, METER 2	1					
8	1SB–H3518–00	.AMPOLLETA (12V-3.4W) .BULB, METER (12V-3.4W)	1					
9	1SB–H3517–00	.AMPOLLETA (12V-1.7W) .BULB (12V-1.7W)	3					
10	1SB–H350E–00	.SOPORTE .BRACKET	1					
11	1SB–H3616–00	.TORNILLO .SCREW, TAPPING	8					
12	1SB–H362Y–00	.TORNILLO ESPECIAL .SCREW, SPECIAL	2					
13	1SB–H3509–00	.ENCASTRE DE CABLE COMPLETO .SOCKET CORD ASSY	1					
14	1SB–H357K–00	.JUNTA, MEDIDOR .PACKING,METER	1					
15	1SB–H3634–00	.ARANDELA DE REFUERZO .GROMMET	3					
16	1SB–H3524–00	.ARANDELA ESPECIAL .WASHER, SPECIAL	3					
17	1SB–H366W–00	.TUERCA .NUT	3					
18	1SB–H3578–00	.PERILLA MEDIDOR DE RECORRIDO .KNOB, TRIP METER	1					
19	95022–06020	PERNO, DE BRIDA BOLT, FLANGE	2					
20	1SB–H3550–00	CABLE DE VELOCIMETRO COMPLETO SPEEDOMETER CABLE ASSY	1					

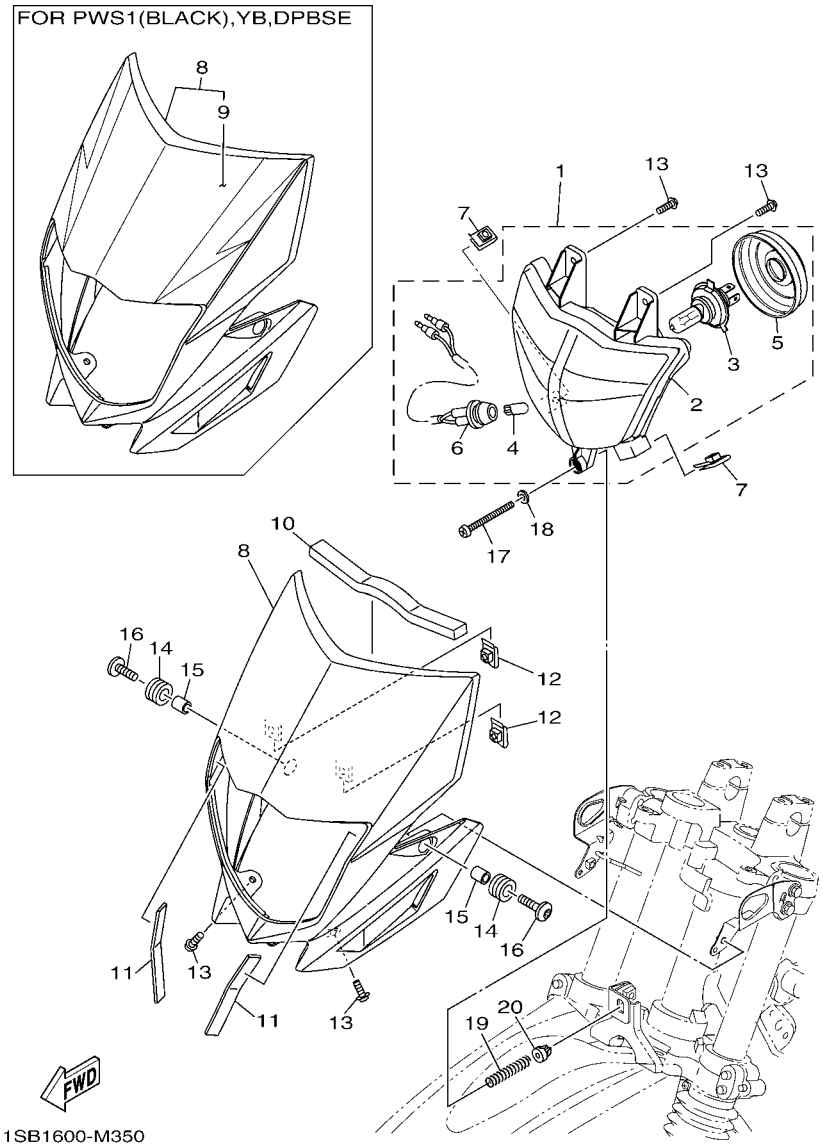

FIG. 35 FARO DELANTERO HEADLIGHT

REF. Nº	CODIGO Nº PART NO.	DESCRIPCION DESCRIPTION	1SB4					OBSERVACIONES REMARKS
1	1SB–H4310–00	UNIDAD DE FARO DELANTERO COMPL HEADLIGHT UNIT ASSY	1					
2	1SB–H4320–00	.LENTE COMPLETO .LENS ASSY	1					
3	1SB–H4314–00	.BOMBILLA (12V-35/35W) .BULB, HEADLIGHT (12V-35/35W)	1					
4	1JD–H4347–00	.BOMBILLA (W3W-12V) .BULB (W3W-12V)	1					
5	1SB–H4397–00	.CUBIERTA DE ENCASTRE .COVER, SOCKET	1					
6	1SB–H4312–00	.CABLE COMPLETA .CORD ASSY	1					
7	90183–05819	TUERCA DE RESORTE NUT, SPRING	2					
8	1SB–H4311–10	CUERPO DE FARO DELANTERO BODY, HEADLIGHT	1					PARA PWS1(WHITE) FOR PWS1(WHITE)
	1SB–W8431–01	CUERPO DE FARO DELANTERO BODY, HEADLIGHT	1					PARA PWS1(BLACK) FOR PWS1(BLACK)
	1SB–W8431–02	CUERPO DE FARO DELANTERO BODY, HEADLIGHT	1					PARA YB FOR YB
	1SB–W8431–00	CUERPO DE FARO DELANTERO BODY, HEADLIGHT	1					PARA DPBSE FOR DPBSE
9	1SB–F8391–10	.CALCOMANIA 1 .GRAPHIC 1	1					PARA PWS1(BLACK) FOR PWS1(BLACK)
	1SB–F8391–20	.CALCOMANIA 1 .GRAPHIC 1	1					PARA YB FOR YB
	1SB–F8391–00	.CALCOMANIA 1 .GRAPHIC 1	1					PARA DPBSE FOR DPBSE
10	90520–10813	EQUILIBRIO, CUBIERTA DAMPER, PLATE	1					
11	90520–02818	EQUILIBRIO, CUBIERTA DAMPER, PLATE	2					
12	90183–05819	TUERCA DE RESORTE NUT, SPRING	2					
13	90159–05861	TORNILLO CON VALONA SCREW, WITH WASHER	4					
14	90480–14003	TAPON GROMMET	2					
15	90387–06113	ESPACIADOR COLLAR	2					
16	90111–06140	TORNILLO BOLT,HEX. SOCKET BUTTON	2					
17	90157–04804	TORNILLO CABEZA CONICA PLANA SCREW, PAN HEAD	1					
18	90201–04815	ARANDELA PLANA WASHER, PLATE	1					
19	90501–11800	RESORTE DE COMPRESION SPRING, COMPRESSION	1					
20	90480–07801	TAPON GROMMET	1					

FIG. 36 LUZ DE COLA — TAILLIGHT

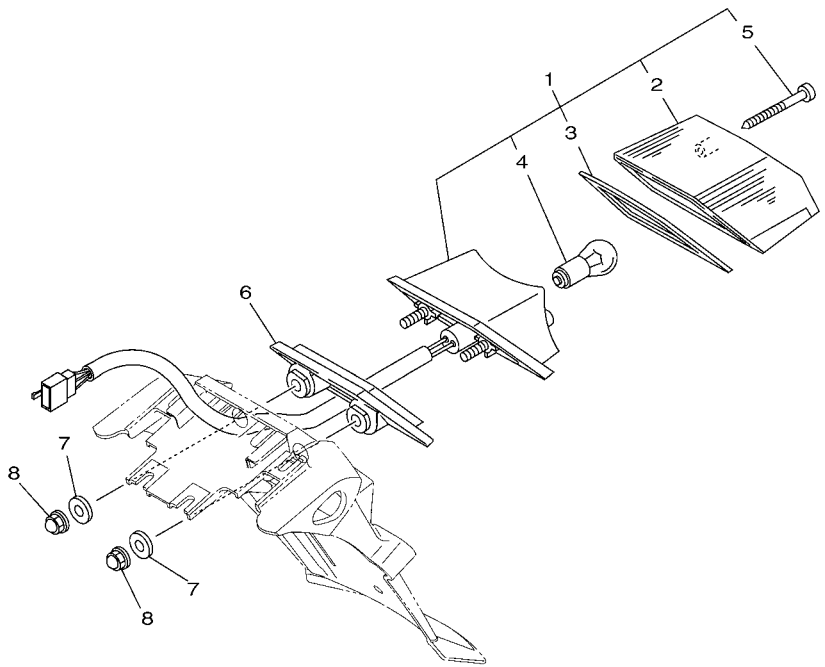

1SB1600-M360

REF. Nº	CODIGO Nº PART NO.	DESCRIPCION DESCRIPTION	1SB4					OBSERVACIONES REMARKS
1	1SB–H4710–00	UNIDAD FARO TRASERO COMPL. TAILLIGHT UNIT ASSY	1					
2	1SB–H4721–00	.LENTE DE FARO TRASERO .LENS, TAILLIGHT	1					
3	1SB–H4723–00	.EMPAQUE LENTE FARO TRASERO .GASKET, TAIL LENS	1					
4	3D9–H4714–10	.BOMBILLA (12V-21/5W) .BULB (12V-21/5W)	1					
5	1SB–H4724–00	.TORNILLO ACCESORIO DE LENTE .SCREW, LENS FITTING	2					
6	1SB–H4527–00	AMORTIGUADOR DAMPER	1					
7	90201–068F8	ARANDELA PLANA WASHER, PLATE	2					
8	90176–06808	TUERCA CORONA NUT, CROWN	2					

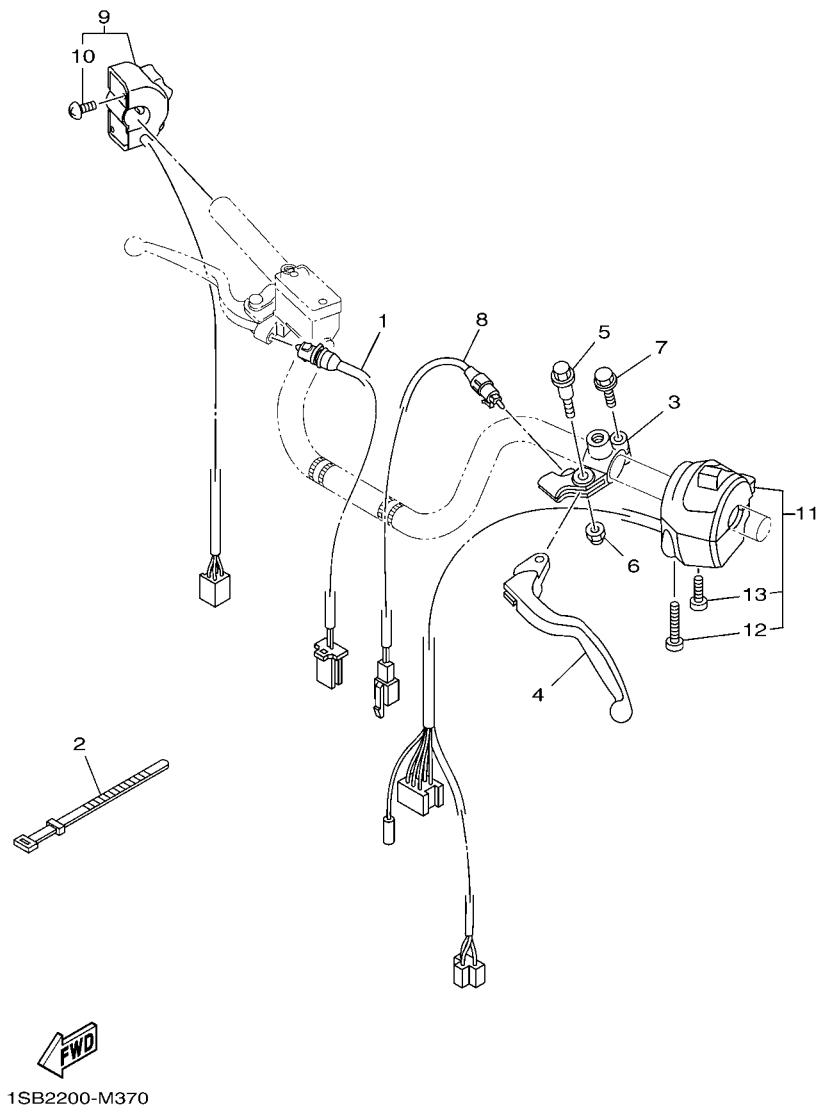

FIG. 37 INTERRUPTOR DE MANILLAR&PALANC HANDLE SWITCH & LEVER

REF. Nº	CODIGO Nº PART NO.	DESCRIPCION DESCRIPTION	1SB4					OBSERVACIONES REMARKS
1	5VL–H3980–01	INTERRUP. DE PARADA DELANTERO FRONT STOP SWITCH ASSY	1					
2	4TU–H3936–00	BANDA DE CABLE DE INTERRUPTOR BAND, SWITCH CORD	3					
3	4FP–H2911–00	SOPORTE DE LEVA 1 HOLDER, LEVER 1	1					
4	3D9–H3912–30	PALANCA 1 LEVER 1	1					
5	90109–06850	PERNO BOLT	1					
6	95602–06100	TUERCA U NUT, U	1					
7	97590–06522	PERNO CON ARANDELA BOLT, WITH WASHER	1					
8	5VL–H2917–11	INTERRUPTOR SWITCH	1					
9	1SB–H3975–00	INTERRUPTOR DE MANIJA 2 SWITCH, HANDLE 2	1					
10	98507–05018	.TORNILLO DE CABEZA PLANA .SCREW, PAN HEAD	2					
11	1SB–H3973–00	INTERRUPTOR DE MANIJA 3 SWITCH, HANDLE 3	1					
12	98507–05043	.TORNILLO DE CABEZA PLANA .SCREW, PAN HEAD	1					
13	98507–05025	.TORNILLO DE CABEZA PLANA .SCREW, PAN HEAD	1					

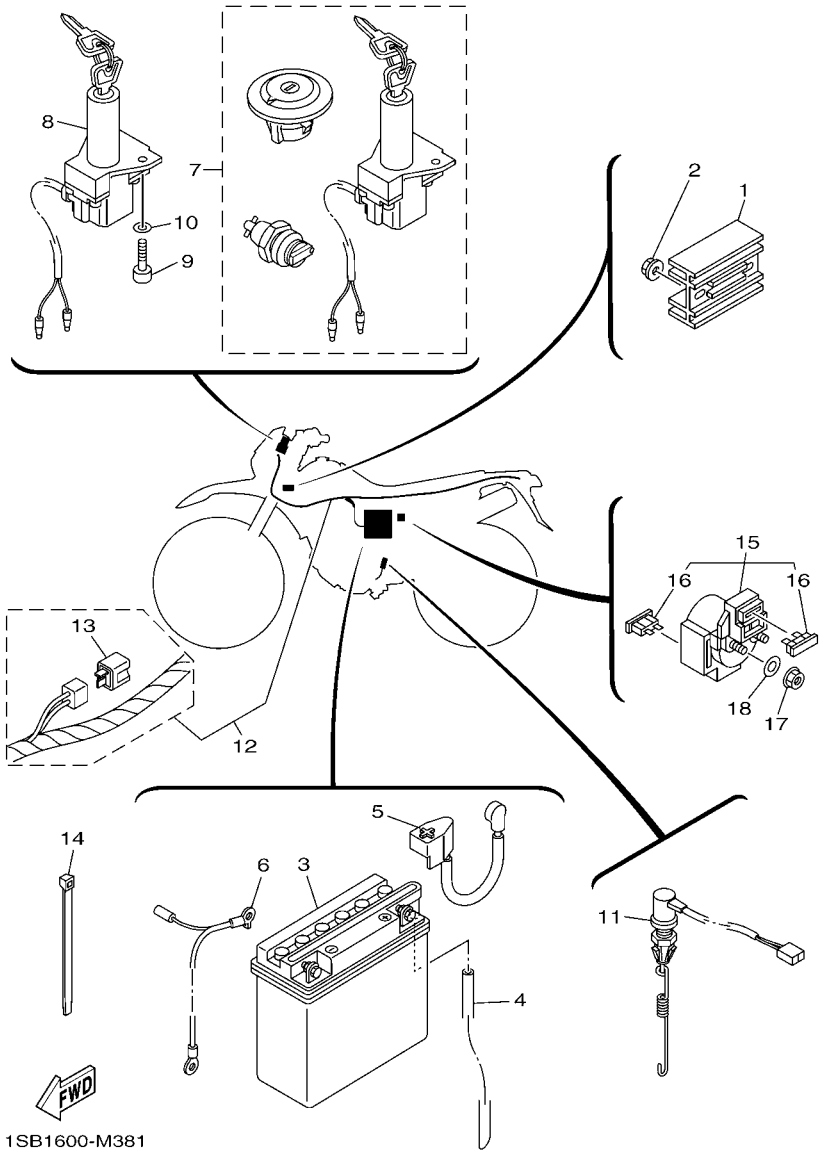

FIG. 38 EQUIPO ELECTRICO 1 ELECTRICAL 1

REF. Nº	CODIGO Nº PART NO.	DESCRIPCION DESCRIPTION	1SB4					OBSERVACIONES REMARKS
1	2D0–H1960–00	RECTIFICADOR Y REGULADOR RECTIFIER & REGULATOR ASSY	1					
2	95702–06500	TUERCA DE BRIDA NUT, FLANGE	2					
3	1SB–H2110–00	BATERIA COMPLETA (12N6-3B) BATTERY ASSY (12N6-3B)	1					
4	90446–07809	TUBO RESEIRADERO HOSE	1					
5	5VL–H2115–00	CABLE CONDUCTOR POSITIVO WIRE, PLUS LEAD	1					
6	1SB–H2116–00	CABLE CONDUCTOR NEGATIVO WIRE, MINUS LEAD	1					
7	1SB–Y8250–01	CONJUNTO DE LLAVE IGNICION SWITCH ASSY	1					AP AP
8	1SB–H2501–00	LLAVE DE IGNICION COMPLT MAIN SWITCH STEERING LOCK	1					
9	91312–06020	TORNILLO BOLT	2					
10	92902–06600	ARANDELA WASHER, PLATE	2					
11	1SB–H2530–00	INTERRUPTOR DE PARADA COMPLETO STOP SWITCH ASSY	1					
12	1SB–H2590–10	CONJUNTO DE CABLES WIRE HARNESS ASSY	1					
13	5VL–H1980–10	.CONJUNTO DIODO .DIODE ASSY	1					
14	90465–13152	BRIDA CLAMP	9					
15	5VL–H1940–01	CONJUNTO ARRANCADOR RELEVO STARTER RELAY ASSY	1					
16	4FP–H2151–00	.FUSIBLE (15A) .FUSE (15A)	2					
17	95302–06600	TUERCA NUT	2					
18	90201–068C2	ARANDELA PLANA WASHER, PLATE	2					

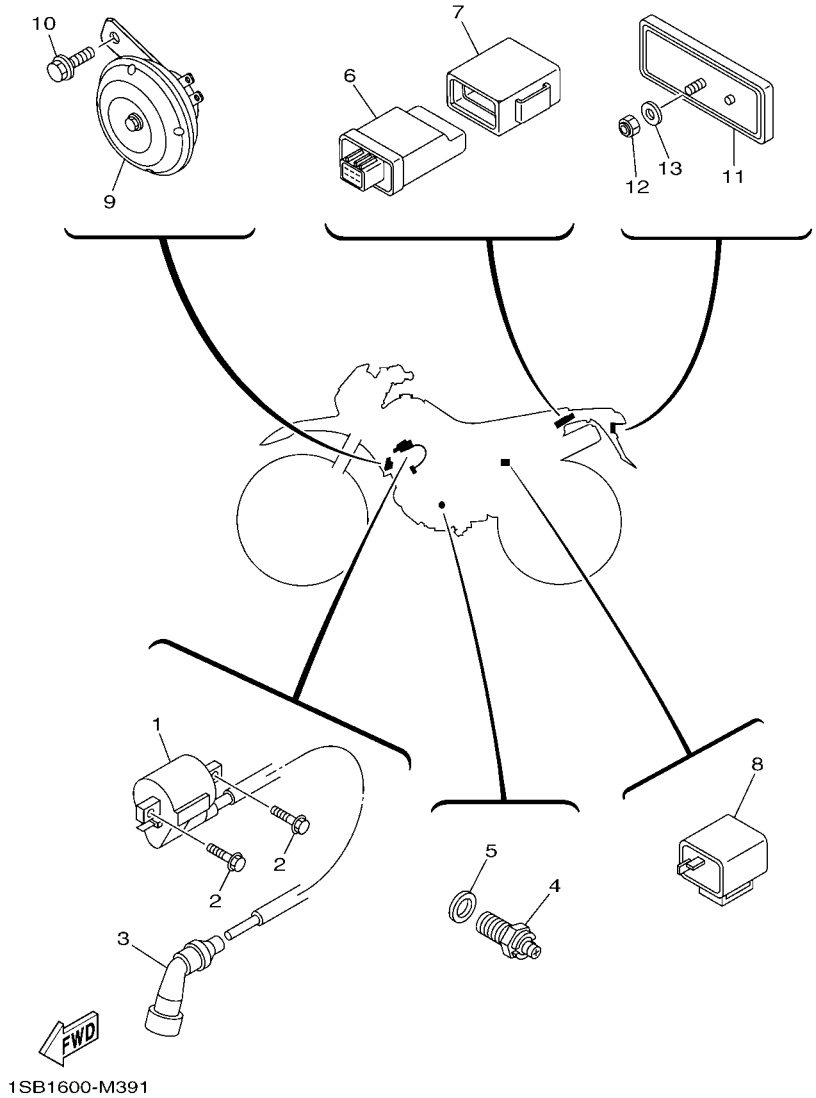

FIG. 39 EQUIPO ELECTRICO 2 ELECTRICAL 2

REF. Nº	CODIGO Nº PART NO.	DESCRIPCION DESCRIPTION	1SB4					OBSERVACIONES REMARKS
1	5VL–H2310–01	BOBINA DE ENCENDIDO COMPLETA IGNITION COIL ASSY	1					
2	95022–06016	PERNO, DE BRIDA BOLT, FLANGE	2					
3	4FP–H2370–01	TAPON DE BUJIA COMPLT PLUG CAP ASSY	1					
4	5VL–H2540–01	INTERRUPTOR NEUTRAL COMPL NEUTRAL SWITCH ASSY	1					
5	90430–10819	JUNTA GASKET	1					
6	1SB–H5540–00	UNIDAD C.D.I. COMPLETA C.D.I. UNIT ASSY	1					
7	1SB–H5546–00	BANDA BAND	1					
8	18C–H3350–01	RELE DE DESTELLADOR COMPL. FLASHER RELAY ASSY	1					
9	1SB–H3371–10	BOCINA HORN	1					
10	95802–06010	TORNILLO DE REBORDE BOLT, FLANGE	1					
11	4FP–H5130–21	REFLECTOR TRASERO COMPLETO REAR REFLECTOR ASSY	1					
12	95602–05100	TUERCA U NUT, U	1					
13	90201–05802	ARANDELA PLANA WASHER, PLATE	1					

INDICE NUMERICO
NUMERICAL INDEX

CODIGO Nº PART NO.	REF. Nº
2UJ–11133–10	1 – 2
22F–11134–10	1 – 3
4LS–11605–00	2 – 14
4LS–11607–00	2 – 14
4LS–11636–01	2 – 11
4LS–11638–01	2 – 11
5HH–12113–00	3 – 5
4GY–14149–00	7 – 29
30S–14325–00	7 – 19
5RM–17131–00	14 – 4
5RM–17141–00	14 – 5
5CG–25715–00	29 – 3
5MV–25833–00	29 – 14
5CG–2585G–00	29 – 8
5VL–E1111–01	1 – 1
5VL–E111F–00	4 – 5
5VL–E1161–00	1 – 8
1SB–E1166–00	6 – 23
4FP–E1167–00	9 – 3
5VL–E1181–00	1 – 16
5VL–E1185–00	1 – 7
5VL–E1186–00	1 – 11
5VL–E1310–00	1 – 19
5VL–E1351–10	1 – 20
5VL–E1422–00	2 – 6
5VL–E1454–00	2 – 8
5VL–E1631–00	2 – 11
5VL–E1633–00	2 – 12
5VL–E1651–00	2 – 5
5VL–E1681–00	2 – 3
5VL–E2111–00	3 – 1
5VL–E2116–01	3 – 4
5VL–E2117–01	3 – 7
5VL–E2118–00	3 – 6
5VL–E2119–00	3 – 3
5VL–E2121–00	3 – 2
5HH–E2151–00	3 – 8
5VL–E2156–00	3 – 10
1SB–E2171–00	4 – 1
5VL–E2176–00	4 – 7
5VL–E2210–01	4 – 15
5VL–E2213–10	4 – 16
5VL–E2231–00	4 – 11
5VL–E2241–00	4 – 12
5VL–E3300–01	5 – 1
5VL–E3324–00	5 – 11
5VL–E3325–00	5 – 2
5VL–E3329–00	5 – 6

CODIGO Nº PART NO.	REF. Nº
4FP–E3411–00	5 – 10
5VL–E3451–00	5 – 12
4FP–E3569–00	6 – 2
1SB–E3586–00	6 – 1
1SB–E4139–00	7 – 32
5LB–E4153–00	7 – 22
1SB–E4196–00	7 – 26
1SB–E4197–00	7 – 25
1SB–E4197–10	7 – 28
5LB–E4214–00	7 – 5
1SB–E4251–00	7 – 31
5FY–E4251–00	7 – 27
4P2–E4286–00	7 – 4
5LB–E4292–00	7 – 24
5LB–E4293–00	7 – 12
1SB–E4301–00	7 – 1
4JP–E4323–00	7 – 21
5RS–E4341–00	7 – 6
5RS–E4341–10	7 – 7
5LB–E4342–17	7 – 9
1SB–E4343–63	7 – 8
50M–E4355–00	7 – 14
4P2–E4371–00	7 – 15
5LB–E4384–00	7 – 20
5LB–E4385–00	7 – 16
5LB–E4386–00	7 – 17
1BV–E4390–00	7 – 18
1SB–E4410–00	6 – 7
1SB–E4411–00	6 – 8
1SB–E4412–00	6 – 9
5VL–E4424–01	6 – 17
1SB–E4425–00	6 – 21
1SB–E442F–00	7 – 30
1SB–E4437–00	6 – 11
5VL–E443E–00	6 – 16
1SB–E4450–00	6 – 10
1SB–E4452–00	6 – 13
1SB–E4453–00	6 – 12
1SB–E4462–00	6 – 14
1SB–E446R–00	6 – 19
1SB–E4472–00	6 – 18
5LB–E4592–00	7 – 23
1SB–E4610–00	8 – 1
5VL–E4613–00	8 – 16
1SB–E4628–00	8 – 2
1SB–E4708–00	8 – 10
1SB–E4710–00	8 – 6
1SB–E4714–00	8 – 8

CODIGO Nº PART NO.	REF. Nº
1SB–E4757–00	8 – 15
5VL–E5191–00	10 – 10
5VL–E5362–00	10 – 19
5VL–E5411–10	10 – 1
1SB–E5418–00	10 – 12
5VL–E5421–00	10 – 14
1SB–E5441–00	9 – 9
5VL–E5451–10	10 – 2
5VL–E5461–10	10 – 15
5VL–E5512–00	12 – 1
5VL–E5517–00	12 – 5
5VL–E5521–00	12 – 2
5VL–E5532–00	12 – 3
4FP–E5580–00	12 – 7
5VL–E5598–00	4 – 13
1SB–E5620–00	11 – 10
4FP–E5641–00	11 – 2
5VL–E5651–00	11 – 7
1SB–E5660–00	11 – 1
4FP–E5666–00	11 – 6
5VL–E6111–00	13 – 1
5VL–E6150–00	13 – 6
5VL–E6154–00	13 – 7
5VL–E6164–10	13 – 17
1SB–E6300–00	13 – 5
50C–E6321–00	13 – 9
5VL–E6324–00	13 – 10
5VL–E6333–10	13 – 12
5VL–E6337–00	13 – 13
5VL–E6351–00	13 – 11
5VL–E6357–01	13 – 21
5VL–E6371–10	13 – 8
5VL–E6381–02	13 – 22
5VL–E7121–00	14 – 3
5VL–E7151–00	14 – 2
5VL–E7211–00	14 – 19
5VL–E7221–00	14 – 14
5VL–E7231–00	14 – 15
5VL–E7241–00	14 – 18
5VL–E7251–00	14 – 13
5VL–E7402–00	14 – 12
5VL–E7411–00	14 – 1
3D9–E7456–01	14 – 27
5VL–E7471–00	14 – 10
5VL–E8101–02	16 – 7
1SB–E8110–00	16 – 9
1KL–E8113–00	16 – 10
5VL–E8140–00	16 – 1

CODIGO Nº PART NO.	REF. Nº
4FP–E8177–00	16 – 3
2D0–E8185–00	15 – 2
5VL–E8337–00	16 – 2
5VL–E8511–00	15 – 5
5VL–E8512–00	15 – 6
5VL–E8513–00	15 – 7
5VL–E8531–00	15 – 8
5VL–E8535–00	15 – 9
1SB–F1110–02	17 – 1
1SB–F1316–00	17 – 5
1SB–F1317–00	17 – 10
1SB–F1471–00	17 – 18
1SB–F1485–00	17 – 19
1SB–F153E–00	18 – 2
	18 – 9
1SB–F153E–10	18 – 2
	18 – 9
1SB–F153E–20	18 – 2
	18 – 9
1SB–F1568–00	23 – 4
1SB–F160E–00	18 – 18
1SB–F1642–00	18 – 16
1SB–F1685–00	18 – 13
1SB–F1719–00	18 – 12
1SB–F1721–10	19 – 10
1SB–F173E–00	19 – 5
1SB–F173E–10	19 – 5
1SB–F173E–20	19 – 5
1SB–F173F–00	19 – 11
1SB–F173F–10	19 – 11
1SB–F173F–20	19 – 11
1SB–F177G–00	19 – 16
5VL–F1780–01	19 – 6
1SB–F1781–00	20 – 15
1SB–F2110–00	20 – 1
1SB–F2126–00	20 – 5
4FP–F2129–01	20 – 4
1SB–F2141–00	20 – 6
1SB–F2151–00	20 – 9
1SB–F2178–00	17 – 15
1SB–F2184–00	17 – 14
1SB–F2210–00	20 – 16
1SB–F2311–00	20 – 12
1SB–F3102–00	22 – 1
1SB–F3103–00	22 – 26
1SB–F3110–00	22 – 3
	22 – 28
1SB–F3111–00	22 – 19

CODIGO Nº PART NO.	REF. Nº
1SB–F3111–00	22 – 44
1SB–F3118–00	22 – 24
	22 – 49
1SB–F3125–00	22 – 9
	22 – 34
1SB–F3126–00	22 – 2
1SB–F3135–00	22 – 13
	22 – 38
1SB–F3136–00	22 – 27
1SB–F3144–00	22 – 6
	22 – 31
1SB–F3145–00	22 – 7
	22 – 32
1SB–F3149–00	22 – 23
	22 – 48
1SB–F3151–00	22 – 12
	22 – 37
1SB–F3154–00	22 – 17
	22 – 42
1SB–F3156–00	22 – 8
	22 – 33
1SB–F3157–00	22 – 11
	22 – 36
1SB–F3158–00	22 – 15
	22 – 40
1SB–F3165–00	22 – 10
	22 – 35
5VL–F3165–01	21 – 10
1SB–F3166–00	22 – 14
	22 – 39
1SB–F3171–00	22 – 5
	22 – 30
1SB–F3174–00	21 – 14
1SB–F317E–00	22 – 54
1SB–F317F–00	22 – 55
1SB–F3181–00	22 – 16
	22 – 41
1SB–F3188–00	22 – 18
	22 – 43
1SB–F3191–00	22 – 21
	22 – 46
1SB–F3192–00	22 – 20
	22 – 45
1SB–F3192–10	22 – 22
	22 – 47
1SB–F3194–00	22 – 25
	22 – 50
1SB–F3317–00	21 – 19

CODIGO Nº PART NO.	REF. Nº
1SB–F3318–00	29 – 20
1SB–F3340–00	22 – 52
1SB–F3346–00	22 – 51
1SB–F3351–00	22 – 4
	22 – 29
1SB–F3389–00	21 – 23
4FP–F3411–00	21 – 1
4FP–F3412–00	21 – 2
4GU–F3416–00	21 – 4
5VL–F3418–01	21 – 7
5VL–F341E–00	21 – 3
1SB–F3435–00	21 – 8
3S9–F3441–00	21 – 12
1SB–F3467–00	29 – 22
1SB–F3486–00	21 – 15
52C–F411B–00	23 – 27
	23 – 36
1SB–F411M–00	30 – 5
2TY–F4181–00	8 – 9
4FP–F4181–00	23 – 21
1SB–F4182–00	23 – 17
1SB–F4183–00	23 – 18
1SB–F4186–00	23 – 19
1SB–F4244–00	23 – 2
1SB–F4244–10	23 – 2
1SB–F4244–20	23 – 2
1SB–F4245–00	23 – 3
1SB–F4245–10	23 – 3
1SB–F4245–20	23 – 3
1SB–F4246–00	23 – 25
1SB–F4246–10	23 – 25
1SB–F4246–20	23 – 25
1SB–F4247–00	23 – 26
1SB–F4247–10	23 – 26
1SB–F4247–20	23 – 26
1SB–F4248–00	23 – 34
1SB–F4248–10	23 – 34
1SB–F4248–20	23 – 34
1SB–F4249–00	23 – 35
1SB–F4249–10	23 – 35
1SB–F4249–20	23 – 35
1SB–F4500–00	23 – 5
1SB–F4512–00	23 – 6
1SB–F4523–00	23 – 7
5VL–F4524–01	23 – 10
1SB–F4534–00	23 – 8
5VL–F4610–11	23 – 16
1SB–F4730–00	24 – 1

INDICE NUMERICO
NUMERICAL INDEX

CODIGO Nº PART NO.	REF. Nº
1SB–F4731–00	24 – 2
1SB–F4830–00	24 – 4
1SB–F4832–00	24 – 5
1SB–F5104–00	25 – 6
1SB–F5111–00	25 – 1
1SB–F5181–00	25 – 11
1SB–F5190–00	25 – 13
1SB–F5304–00	27 – 7
1SB–F5311–00	27 – 1
1SB–F5321–00	27 – 12
4GU–F533A–01	27 – 13
1SB–F5351–00	27 – 20
1SB–F5355–00	27 – 17
1SB–F536G–00	26 – 8
1SB–F5381–00	27 – 30
1SB–F5383–00	27 – 29
1SB–F5388–00	27 – 26
1SB–F5389–00	27 – 27
1SB–F53C0–00	27 – 33
1SB–F5412–00	27 – 9
1SB–F5448–00	27 – 8
1SB–F580T–00	26 – 3
1SB–F582T–00	26 – 1
1SB–F583T–00	29 – 1
1SB–F5852–00	29 – 5
1SB–F5854–00	29 – 4
1SB–F585B–00	29 – 9
1SB–F5867–00	29 – 7
1SB–F5872–01	29 – 15
1SB–F5875–00	29 – 18
1SB–F5917–00	26 – 5
1SB–F5921–00	26 – 6
1SB–F5924–00	26 – 10
1SB–F5926–00	26 – 7
1SB–F5934–00	26 – 11
1SB–F5937–00	26 – 4
1SB–F5961–00	26 – 9
1SB–F6111–00	28 – 1
1SB–F6240–00	28 – 2
5VL–F6241–00	28 – 3
41S–F6280–00	28 – 12
1SB–F6281–00	28 – 4
1SB–F6282–00	28 – 5
41S–F6290–00	28 – 13
1SB–F6302–00	28 – 7
1SB–F6335–00	28 – 8
5VL–F6372–01	28 – 9
1SB–F7211–00	30 – 1

CODIGO Nº PART NO.	REF. Nº
1SB–F7231–00	30 – 9
1SB–F7261–00	30 – 2
1SB–F7311–00	30 – 16
5VL–F7430–01	30 – 26
1SB–F7432–00	30 – 32
5VL–F7433–00	30 – 27
5VL–F7440–01	30 – 33
1SB–F7442–00	30 – 39
5VL–F7444–00	30 – 34
5VL–F7445–01	30 – 28
	30 – 35
1P6–F7451–01	30 – 21
1P6–F7456–01	30 – 25
1P6–F7461–01	30 – 22
1SB–F8100–00	17 – 22
1SB–F811G–00	19 – 26
1SB–F816K–10	18 – 8
1SB–F8177–10	19 – 4
1SB–F8179–10	19 – 3
1SB–F8267–00	19 – 27
1SB–F8391–00	35 – 9
1SB–F8391–10	35 – 9
1SB–F8391–20	35 – 9
2D0–H1410–01	31 – 2
2D0–H1450–11	31 – 1
4FP–H1801–00	32 – 2
4FP–H1828–01	32 – 5
4FP–H182L–00	32 – 4
5VL–H183G–01	32 – 7
5VL–H1890–00	32 – 1
5VL–H1940–01	38 – 15
2D0–H1960–00	38 – 1
5VL–H1980–10	38 – 13
1SB–H2110–00	38 – 3
5VL–H2115–00	38 – 5
1SB–H2116–00	38 – 6
4FP–H2151–00	38 – 16
5VL–H2310–01	39 – 1
4FP–H2370–01	39 – 3
1SB–H2501–00	38 – 8
1SB–H2530–00	38 – 11
5VL–H2540–01	39 – 4
1SB–H2590–10	38 – 12
4FP–H2911–00	37 – 3
5VL–H2917–11	37 – 8
5D1–H3310–00	33 – 1
3D9–H3311–10	33 – 4
	33 – 8

CODIGO Nº PART NO.	REF. Nº
3D9–H3311–10	33 – 10
	33 – 14
3D9–H3318–10	33 – 17
5D1–H3320–00	33 – 5
1SB–H3330–00	33 – 9
3D9–H3333–10	33 – 3
	33 – 7
	33 – 12
	33 – 16
3D9–H333A–00	33 – 2
	33 – 15
1SB–H3340–00	33 – 13
3D9–H334A–00	33 – 6
	33 – 11
18C–H3350–01	39 – 8
1SB–H3371–10	39 – 9
1SB–H3500–00	34 – 1
1SB–H3509–00	34 – 13
1SB–H350E–00	34 – 10
1SB–H3517–00	34 – 9
1SB–H3518–00	34 – 8
1SB–H3524–00	34 – 16
1SB–H353H–00	34 – 5
1SB–H353R–00	34 – 6
1SB–H3550–00	34 – 20
1SB–H3559–00	34 – 3
1SB–H3570–00	34 – 2
1SB–H3578–00	34 – 18
1SB–H357K–00	34 – 14
1SB–H357L–00	34 – 7
1SB–H357X–00	34 – 4
1SB–H3616–00	34 – 11
1SB–H362Y–00	34 – 12
1SB–H3634–00	34 – 15
1SB–H366W–00	34 – 17
3D9–H3912–30	37 – 4
1SB–H3922–00	29 – 10
4TU–H3936–00	37 – 2
1SB–H3973–00	37 – 11
1SB–H3975–00	37 – 9
5VL–H3980–01	37 – 1
1SB–H4310–00	35 – 1
1SB–H4311–10	35 – 8
1SB–H4312–00	35 – 6
1SB–H4314–00	35 – 3
1SB–H4318–00	21 – 17
1SB–H4319–00	21 – 18
1SB–H4320–00	35 – 2

CODIGO Nº PART NO.	REF. Nº
1JD–H4347–00	35 – 4
1SB–H4397–00	35 – 5
1SB–H4527–00	36 – 6
1SB–H4710–00	36 – 1
3D9–H4714–10	36 – 4
1SB–H4721–00	36 – 2
1SB–H4723–00	36 – 3
1SB–H4724–00	36 – 5
4FP–H5130–21	39 – 11
4KL–H5131–12	22 – 56
1SB–H5540–00	39 – 6
1SB–H5546–00	39 – 7
1SB–W0041–00	29 – 2
1SB–W0045–00	26 – 14
1SB–W0047–00	26 – 13
1SB–W0048–00	26 – 15
1SB–W0057–00	26 – 12
2D0–W1140–00	2 – 1
2D0–W1141–00	2 – 2
5VL–W1161–00	2 – 14
1SB–W1415–00	7 – 10
4P2–W149A–00	7 – 11
1SB–W149J–00	7 – 3
4P2–W149K–00	7 – 2
5VL–W1510–11	9 – 1
1SB–W2411–00–P0	23 – 1
1SB–W2411–00–P1	23 – 1
1SB–W2411–01–P1	23 – 1
1SB–W2411–02–P1	23 – 1
12B–W2533–00	27 – 14
1SB–W8431–00	35 – 8
1SB–W8431–01	35 – 8
1SB–W8431–02	35 – 8
5VL–Y1153–00	2 – 7
5VL–Y1215–00	3 – 9
1SB–Y137W–00	23 – 22
1SB–Y137W–01	23 – 22
1SB–Y137W–02	23 – 22
1SB–Y137W–03	23 – 22
1SB–Y137X–00	23 – 31
1SB–Y137X–01	23 – 31
1SB–Y137X–02	23 – 31
1SB–Y137X–03	23 – 31
5VL–Y1635–10	13 – 14
5VL–Y1854–01	15 – 1
1SB–Y2151–00	18 – 1
1SB–Y2151–01	18 – 1
1SB–Y2151–02	18 – 1

CODIGO Nº PART NO.	REF. Nº
1SB–Y2161–03	18 – 7
1SB–Y2161–04	18 – 7
1SB–Y2161–05	18 – 7
1SB–Y2171–04	19 – 1
1SB–Y2171–05	19 – 1
1SB–Y2171–06	19 – 1
1SB–Y2171–07	19 – 1
1SB–Y2172–00	19 – 10
1SB–Y2172–01	19 – 10
1SB–Y2172–02	19 – 10
1SB–Y8250–01	38 – 7
90101–06821	27 – 18
90101–08820	4 – 9
90101–10805	30 – 17
90101–12033	20 – 17
90105–06813	26 – 2
90105–08229	17 – 12
90105–08724	1 – 13
90105–08873	17 – 3
90105–088F3	17 – 11
90105–088F4	17 – 7
90105–10852	26 – 16
90105–12085	20 – 18
90109–06577	29 – 11
90109–06850	37 – 5
90111–06140	35 – 16
90116–10805	27 – 11
90119–06869	18 – 17
90123–08813	28 – 10
90151–06818	15 – 4
90153–06803	1 – 5
90155–06800	5 – 7
90157–03800	23 – 11
90157–04804	35 – 17
90159–05861	35 – 13
90170–12060	13 – 19
90175–06013	30 – 15
90176–06808	36 – 8
90176–22801	21 – 9
90179–08862	28 – 11
90179–12813	11 – 11
	13 – 4
90179–12863	2 – 18
90179–25806	21 – 5
90183–05819	35 – 7
	35 – 12
90183–06802	6 – 20
90183–06820	18 – 14

CODIGO Nº PART NO.	REF. Nº
90183–06820	19 – 22
90185–08008	17 – 4
	17 – 9
	17 – 13
90185–10023	30 – 19
90185–12007	20 – 7
90201–04815	35 – 18
90201–05802	39 – 13
90201–05804	8 – 5
90201–05809	8 – 4
90201–062G3	8 – 12
90201–06861	18 – 4
	19 – 15
	19 – 17
	23 – 28
	23 – 37
90201–068C2	38 – 18
90201–068F8	6 – 27
	19 – 21
	36 – 7
90201–07641	5 – 4
90201–08326	4 – 8
90201–08824	8 – 19
90201–08835	17 – 16
90201–088C3	1 – 14
90201–10061	30 – 3
90201–108J9	29 – 17
90201–12030	20 – 8
90201–12032	20 – 20
90201–122H1	2 – 17
	13 – 3
90201–152H7	11 – 8
90201–15700	14 – 20
90201–15843	27 – 31
90201–20266	14 – 6
	14 – 16
90201–20272	14 – 22
90201–208D5	11 – 4
90201–225A4	19 – 7
90201–258D7	12 – 6
90202–26142	21 – 6
90206–14001	30 – 4
90208–07052	5 – 5
90215–12211	13 – 18
90240–10804	30 – 23
90249–06800	30 – 29
	30 – 36
90249–12808	30 – 14

INDICE NUMERICO
NUMERICAL INDEX

CODIGO Nº PART NO.	REF. Nº
90269–07804	23 – 30
	23 – 39
90280–03017	2 – 16
90282–05001	13 – 2
90338–16148	17 – 2
90340–12097	5 – 8
90340–14810	10 – 6
90340–32812	10 – 8
90386–18801	20 – 3
90387–06023	8 – 14
	18 – 6
90387–06113	35 – 15
90387–06238	18 – 5
90387–06857	17 – 21
90387–068K0	20 – 10
90387–068K9	18 – 11
	18 – 20
	19 – 18
	20 – 14
90387–10003	30 – 18
90387–15600	25 – 10
90387–15802	27 – 28
90387–15826	25 – 3
90387–15827	27 – 2
90387–167L5	4 – 4
90401–10015	29 – 16
90430–05800	23 – 13
90430–06817	1 – 6
	4 – 18
90430–10819	39 – 5
90430–12227	5 – 9
90445–05807	29 – 25
90445–10831	23 – 14
90446–07809	38 – 4
90450–44804	6 – 6
90450–51802	6 – 28
90465–08043	10 – 23
90465–08802	10 – 22
90465–13152	38 – 14
90467–09854	23 – 15
90467–10819	6 – 3
90467–12828	6 – 24
	9 – 4
90468–26813	11 – 3
90480–01868	19 – 9
	19 – 13
90480–07801	35 – 20
90480–12581	8 – 13

CODIGO Nº PART NO.	REF. Nº
90480–13567	19 – 8
	19 – 12
90480–14003	35 – 14
90480–24186	19 – 2
90501–10312	29 – 13
90501–10802	30 – 13
90501–11800	35 – 19
90506–12801	27 – 15
90506–15802	27 – 16
90506–23801	30 – 6
90506–35474	30 – 20
90508–16800	13 – 23
90508–26836	11 – 5
90508–32801	16 – 5
90520–02817	23 – 23
	23 – 32
90520–02818	35 – 11
90520–03807	23 – 24
	23 – 33
90520–07801	19 – 24
90520–10813	35 – 10
90520–10818	19 – 25
91312–05010	14 – 28
91312–06010	29 – 21
91312–06012	4 – 6
91312–06014	31 – 4
91312–06020	6 – 5
	8 – 17
	38 – 9
91312–06025	31 – 3
91312–06090	1 – 18
91312–08016	8 – 18
	12 – 8
91402–20012	30 – 12
91402–25015	30 – 24
91702–06020	30 – 10
92012–08020	30 – 40
92902–04600	29 – 24
92902–05600	21 – 21
92902–06200	13 – 15
	30 – 11
	30 – 30
	30 – 37
92902–06600	6 – 22
	38 – 10
93101–10800	10 – 21
93101–12812	16 – 4
93102–12802	13 – 24

CODIGO Nº PART NO.	REF. Nº
93102–20854	14 – 24
93106–20813	25 – 4
93106–26804	27 – 5
93109–14801	27 – 21
93109–20806	11 – 12
93210–11800	2 – 9
93210–14813	27 – 22
93210–14899	10 – 7
93210–19809	10 – 20
93210–30611	6 – 4
93210–328A4	10 – 9
93210–44889	1 – 12
93210–55669	32 – 3
93210–57897	1 – 21
93210–71801	1 – 9
93306–002Y1	4 – 3
93306–003X6	4 – 2
93306–201Y8	14 – 8
93306–202XN	2 – 15
93306–202XP	14 – 25
93306–203YT	14 – 9
93306–204YD	14 – 23
93306–205XJ	2 – 10
93306–252YD	25 – 2
	27 – 4
93306–302YD	27 – 3
93310–629Y3	2 – 4
93332–000Y7	22 – 53
93410–20809	14 – 7
	14 – 17
93440–10109	1 – 4
93450–16812	2 – 13
93503–16824	13 – 20
93604–10837	15 – 3
93608–30839	16 – 8
93700–06801	20 – 2
93822–14813	14 – 26
94108–21803	25 – 7
94111–18801	27 – 23
94208–21800	25 – 8
94211–18800	27 – 24
94308–21800	25 – 9
94311–18800	27 – 25
94416–21802	25 – 5
94421–18802	27 – 6
94580–25088	4 – 10
94608–35001	27 – 34
94700–00869	1 – 15

CODIGO Nº PART NO.	REF. Nº
95022–06010	29 – 19
95022–06016	4 – 17
	39 – 2
95022–06020	1 – 10
	34 – 19
95022–06025	32 – 8
95022–06030	9 – 5
95022–06035	10 – 4
	10 – 17
95022–06045	9 – 6
	10 – 18
95022–06050	10 – 5
95022–06055	9 – 7
95022–08012	17 – 17
95022–08035	8 – 7
	21 – 13
95022–08040	21 – 11
95302–05600	21 – 22
95302–06600	13 – 16
	27 – 19
	38 – 17
95302–06700	30 – 8
95312–10600	27 – 10
95602–05100	39 – 12
95602–06100	29 – 12
	37 – 6
95602–10200	17 – 8
95602–14200	25 – 12
	27 – 32
95612–12100	20 – 19
95702–06500	38 – 2
95802–06010	21 – 16
	39 – 10
95802–06012	20 – 11
	24 – 3
95802–06014	18 – 10
	18 – 15
	18 – 19
	20 – 13
95802–06016	17 – 20
95802–06020	4 – 14
95812–06016	10 – 13
95812–10080	17 – 6
95822–06012	23 – 20
95822–08014	24 – 6
97002–06012	6 – 26
	19 – 20
97002–06016	6 – 25

CODIGO Nº PART NO.	REF. Nº
97002–06016	19 – 19
	30 – 7
97002–06020	18 – 3
97022–06020	16 – 11
97590–06522	37 – 7
97801–04010	7 – 13
98502–05020	28 – 6
98507–05018	37 – 10
98507–05025	37 – 13
98507–05043	37 – 12
98512–04016	29 – 23
98512–05020	21 – 20
98512–06010	10 – 11
98512–06012	12 – 4
	14 – 11
98512–06020	6 – 15
98580–03008	23 – 9
98706–04012	29 – 6
98902–05008	32 – 6
98902–06012	23 – 29
	23 – 38
98902–06016	19 – 14
	19 – 23
	23 – 12
98980–06010	8 – 3
98980–06014	8 – 11
99001–05600	30 – 31
	30 – 38
99002–05600	5 – 3
99002–10600	16 – 6
99009–15400	11 – 9
	14 – 21
99009–20500	13 – 25
99530–10114	1 – 17
	9 – 2
	9 – 8
	10 – 3
	10 – 16

CODIGO Nº PART NO.	REF. Nº