YAMAHA 2008

SERVICE MANUAL

YZF-R15

20P-F8197-E0

YZF-R15
SERVICE MANUAL

NOTICE

This manual was produced by YMIS. primarily for use by YMIS dealers and their qualified mechanics. It is not possible to include all the knowledge of a mechanic in one manual. Therefore, anyone who uses this book to perform maintenance and repairs on Yamaha vehicles should have a basic understanding of mechanics and the techniques to repair these types of vehicles. Repair and maintenance work attempted by anyone without this knowledge is likely to render the vehicle unsafe and unfit for use.
India Yamaha Motor Pvt. Ltd. is continually striving to improve all of its models. Modifications and significant changes in specifications or procedures will be forwarded to all authorized YMIS dealers and will appear in future editions of this manual where applicable.

NOTE:
Designs and specifications are subject to change without notice.

IMPORTANT MANUAL INFORMATION

Particularly important information is distinguished in this manual by the following.

⚠ The Safety Alert Symbol means ATTENTION! BECOME ALERT! YOUR SAFETY IS INVOLVED!

⚠WARNING Failure to follow WARNING instructions could result in severe injury or death to the vehicle operator, a bystander or a person checking or repairing the vehicle.

CAUTION : A CAUTION indicates special precautions that must be taken to avoid damage to the vehicle.

NOTE : A NOTE provides key information to make procedures easier or clearer.

HOW TO USE THIS MANUAL

This manual is intended as a handy, easy-to-read reference book for the mechanic. Comprehensive explanations of all installation, removal, disassembly, assembly, repair and check procedures are laid out with the individual steps in sequential order.

- The manual is divided into chapters and each chapter is divided into sections. The current section title "1" is shown at the top of each page.
- Sub-section titles "2" appear in smaller print than the section title.
- To help identify parts and clarify procedure steps, there are exploded diagrams "3" at the start of each removal and disassembly section.
- Numbers "4" are given in the order of the jobs in the exploded diagram. A number indicates a disassembly step.
- Symbols "5" indicate parts to be lubricated or replaced. Refer to "SYMBOLS".
- A job instruction chart "6" accompanies the exploded diagram, providing the order of jobs, names of parts, notes in jobs, etc.
- Jobs "7" requiring more information (such as special tools and technical data) are described sequentially.

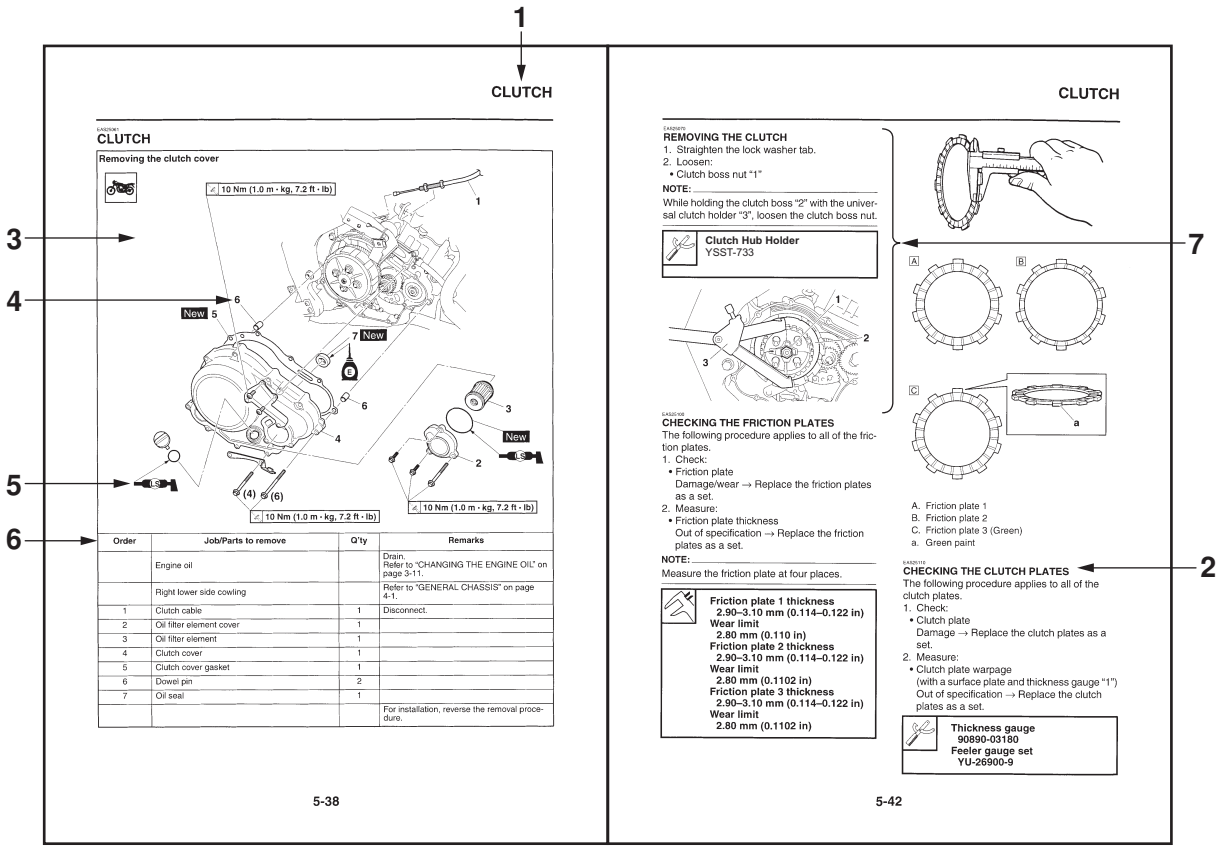

SYMBOLS

The following symbols are used in this manual for easier understanding.

NOTE:

The following symbols are not relevant to every vehicle.

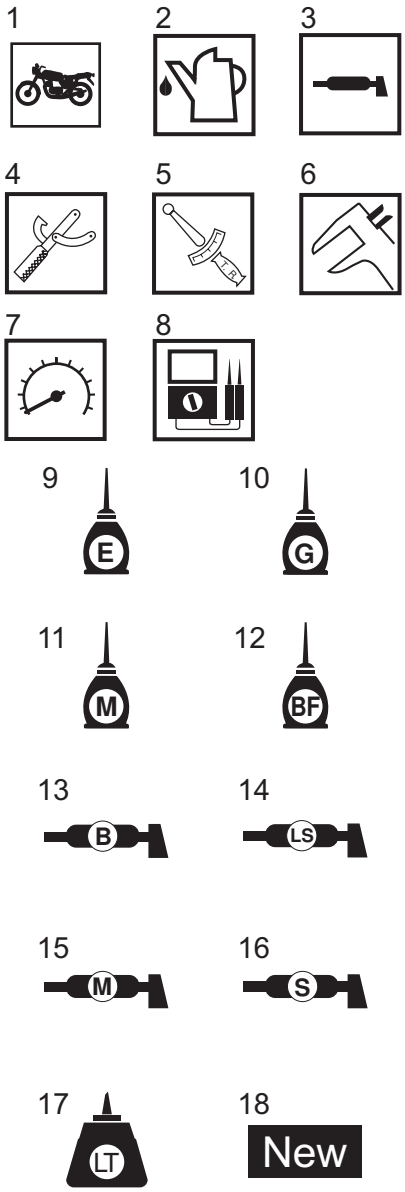

1. Serviceable with engine mounted
2. Filling fluid
3. Lubricant
4. Special tool
5. Tightening torque
6. Wear limit, clearance
7. Engine speed
8. Electrical data
9. Engine oil
10. Gear oil
11. Molybdenum disulfide oil
12. Brake fluid
13. Wheel bearing grease
14. Lithium-soap-based grease
15 Molybdenum disulfide grease
16. Silicone grease
17 Apply locking agent (LOCTITE®).
18 Replace the part with a new one.

TABLE OF CONTENTS

GENERAL INFORMATION

IDENTIFICATION

VEHICLE IDENTIFICATION NUMBER (FRAME NO.)

The vehicle identification number “1” is stamped into the frame.

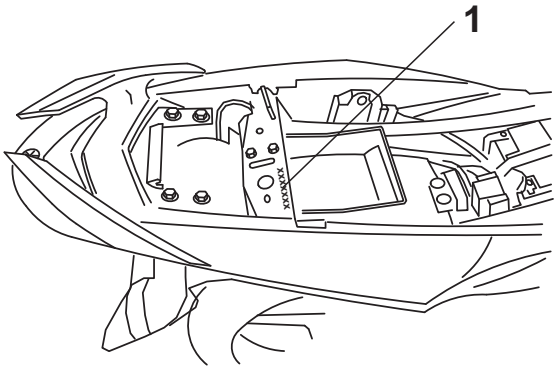

ENGINE SERIAL NUMBER

The engine serial number “1” is stamped into the crankcase.

NOTE:

Designs and specifications are subject to change without notice.

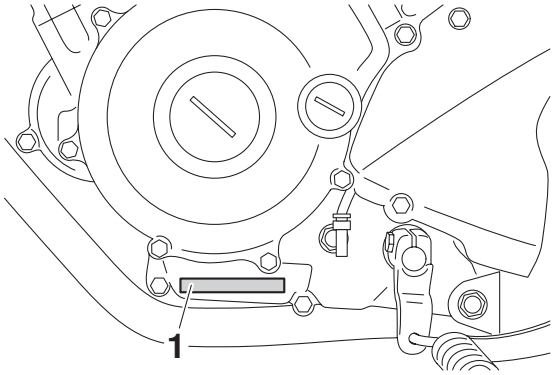

FEATURES

OUTLINE OF THE FI SYSTEM

The main function of a fuel supply system is to provide fuel to the combustion chamber at the optimum air-fuel ratio in accordance with the engine operating conditions and the atmospheric temperature. In the conventional carburetor system, the air-fuel ratio of the mixture that is supplied to the combustion chamber is created by the volume of the intake air and the fuel that is metered by the jet used in the respective carburetor.

Despite the same volume of intake air, the fuel volume requirement varies by the engine operating conditions, such as acceleration, deceleration, or operating under a heavy load. Carburetors that meter the fuel through the use of jets have been provided with various auxiliary devices, so that an optimum airfuel ratio can be achieved to accommodate the constant changes in the operating conditions of the engine.

As the requirements for the engine to deliver more performance and cleaner exhaust gases increase, it becomes necessary to control the air-fuel ratio in a more precise and finely tuned manner. To accommodate this need, this model has adopted an electronically controlled fuel injection (FI) system, in place of the conventional carburetor system. This system can achieve an optimum air-fuel ratio required by the engine at all times by using a microprocessor that regulates the fuel injection volume according to the engine operating conditions detected by various sensors. The adoption of the FI system has resulted in a highly precise fuel supply, improved engine response, better fuel economy, and reduced exhaust emissions.

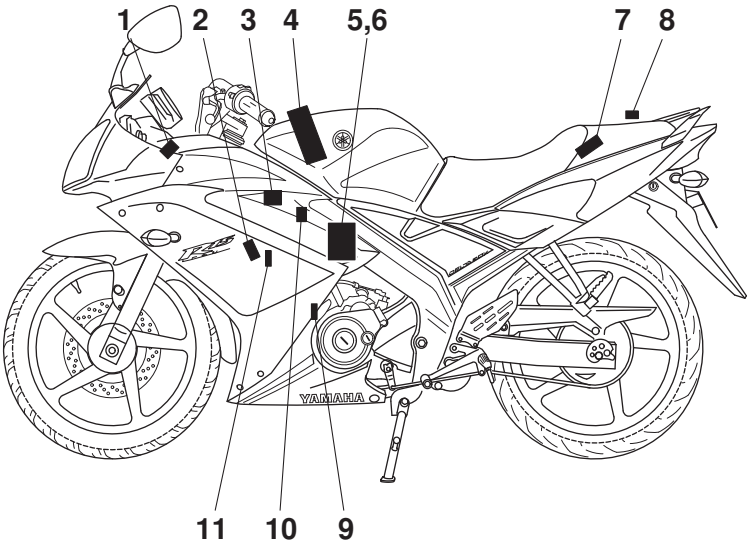

1. Engine trouble warning light
2. Spark plug
3. Ignition coil
4. Fuel pump
5. FID (fast idle solenoid)
6. Throttle body sensor assembly (consisting of throttle position sensor, intake air pressure sensor, intake air temperature sensor)
7. ECU (engine control unit)
8. Lean angle sensor
9. Crankshaft position sensor
10. Fuel injector
11. Coolant temperature sensor

FI SYSTEM

The fuel pump delivers fuel to the fuel injector via the fuel filter. The pressure regulator maintains the fuel pressure that is applied to the fuel injector at only 250 kPa (2.50 kg/cm², 35.6 psi). Accordingly, when the energizing signal from the ECU energizes the fuel injector, the fuel passage opens, causing the fuel to be injected into the intake manifold only during the time the passage remains open. Therefore, the longer the length of time the fuel injector is energized (injection duration), the greater the volume of fuel that is supplied. Conversely, the shorter the length of time the fuel injector is energized (injection duration), the lesser the volume of fuel that is supplied.

The injection duration and the injection timing are controlled by the ECU. Signals that are input from the throttle position sensor, crankshaft position sensor, intake air pressure sensor, intake air temperature sensor, lean angle sensor and coolant temperature sensor enable the ECU to determine the injection duration. The injection timing is determined through the signals from the crankshaft position sensor. As a result, the volume of fuel that is required by the engine can be supplied at all times in accordance with the driving conditions.

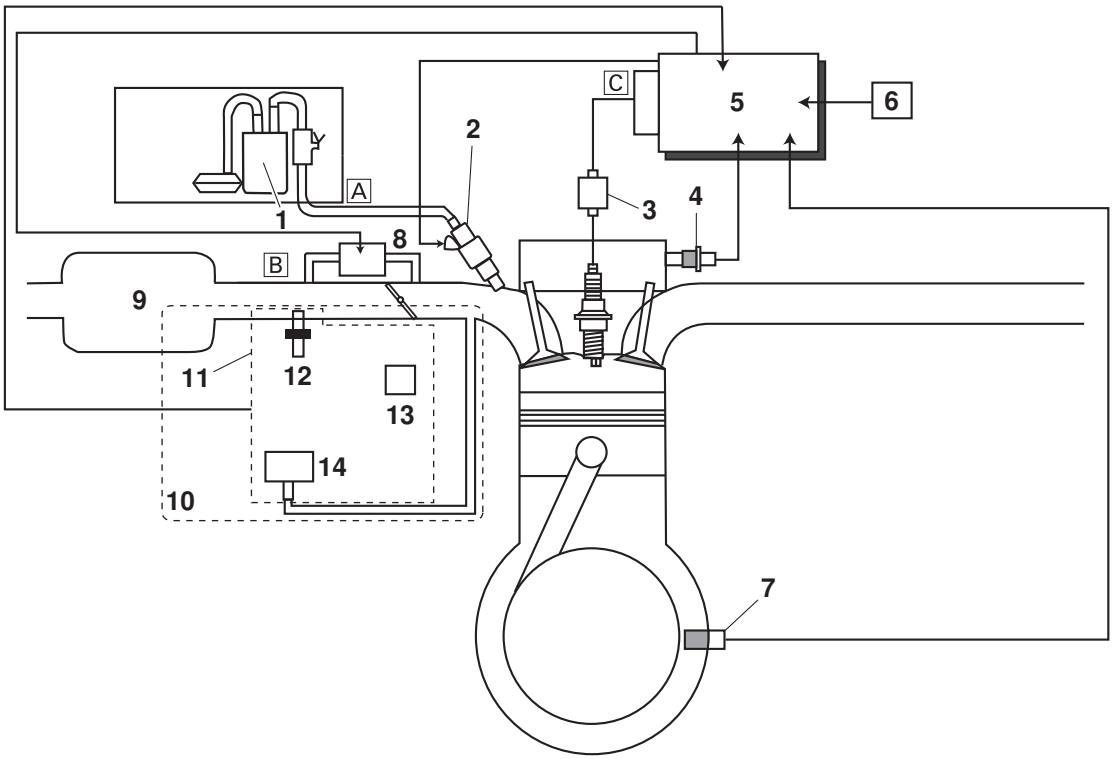

1. Fuel pump
2. Fuel injector
3. Ignition coil
4. Coolant temperature sensor
5. ECU (engine control unit)
6. Lean angle sensor
7. Crankshaft position sensor
8. FID (fast idle solenoid)
9. Air filter case
10. Throttle body
11. Throttle body sensor assembly
12. Intake air temperature sensor
13. Throttle position sensor
14. Intake air pressure sensor

A. Fuel system
B. Air system
C. Control system

MULTI-FUNCTION DISPLAY

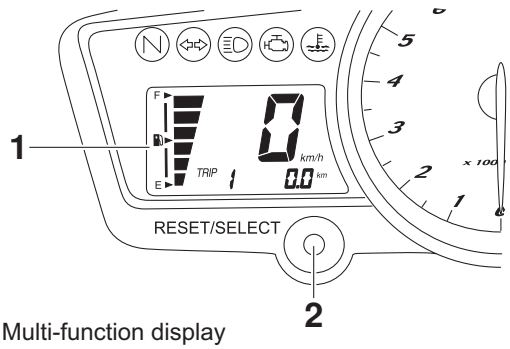

1. Multi-function display
2. “RESET/SELECT” button

The multi-function display is equipped with the following:

- a speedometer (which shows the riding speed)
- an odometer (which shows the total distance traveled)
- two tripmeters (which show the distance traveled since they were last set to zero)
- a fuel reserve tripmeter (which shows the distance traveled since the fuel level warning light came on)
- a fuel meter

Odometer and tripmeter modes

A brief push (less than one second) on the “ RESET/ SELECT” button switches the display between the odometer mode “ ODO” and the tripmeter modes “ TRIP 1” and “ TRIP 2” in the following order:

ODO→TRIP 1→TRIP 2→ODO

When approximately 1.9 L of fuel remains in the fuel tank, the odometer display will automatically change to the fuel reserve tripmeter mode “ F-TRIP” and start counting the distance traveled from that point, and the last segment of the fuel meter will start flashing. In that case, pushing the “ RESET/ SELECT” button switches the display between the various tripmeter and odometer modes in the following order:

F-TRIP→TRIP 1→TRIP 2→ODO→F-TRIP

Tripmeter will reset itself automatically and the display will return to the prior mode after refueling and traveling 5 km (3 mi).

Fuel meter

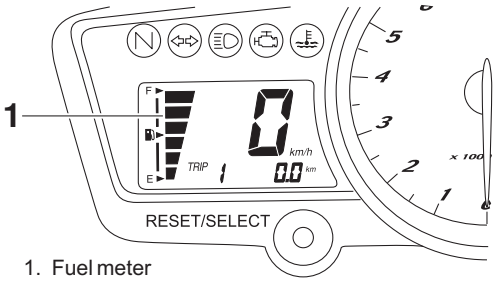

1. Fuel meter

The fuel meter indicates the amount of fuel in the fuel tank. The display segments of the fuel meter disappear towards “E” (Empty) as the fuel level decreases. When the last fuel meter segment starts flashing, refuel as soon as possible.

IMPORTANT INFORMATION

PREPARATION FOR REMOVAL AND DISASSEMBLY

1. Before removal and disassembly, remove all dirt, mud, dust and foreign material.

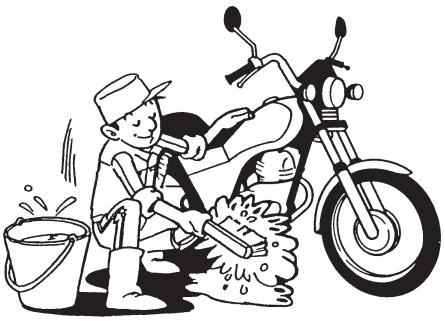

2. Use only the proper tools and cleaning equipment.
   Refer to “SPECIAL TOOLS” on page 1-8.
3. When disassembling, always keep mated parts together. This includes gears, cylinders, pistons and other parts that have been “mated” through normal wear. Mated parts must always be reused or replaced as an assembly.

4. During disassembly, clean all of the parts and place them in trays in the order of disassembly. This will speed up assembly and allow for the correct installation of all parts.
5. Keep all parts away from any source of fire.

REPLACEMENT PARTS

Use only genuine Yamaha parts for all replacements. Use oil and grease recommended by Yamaha for all lubrication jobs. Other brands may be similar in function and appearance, but inferior in quality.

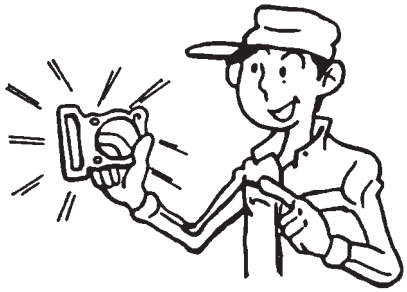

GASKETS, OIL SEALS AND O-RINGS

1. When overhauling the engine, replace all gaskets, seals and O-rings. All gasket surfaces, oil seal lips and O-rings must be cleaned.
2. During reassembly, properly oil all mating parts and bearings and lubricate the oil seallips with grease.

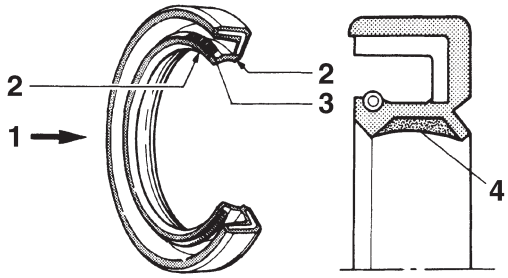

LOCK WASHERS/PLATES AND COTTER PINS

After removal, replace all lock washers/plates “1” and cotter pins. After the bolt or nut has been tightened to specification, bend the lock tabs along a flat of the bolt or nut.

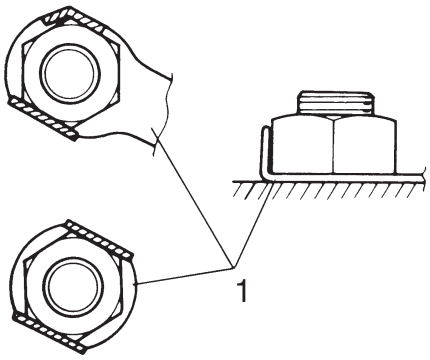

BEARINGS AND OIL SEALS

Install bearings and oil seals so that the manufacturer's marks or numbers are visible. When installing oil seals "1", lubricate the oil seal lips with a light coat of lithium-soap-based grease. Oil bearings liberally when installing, if appropriate.

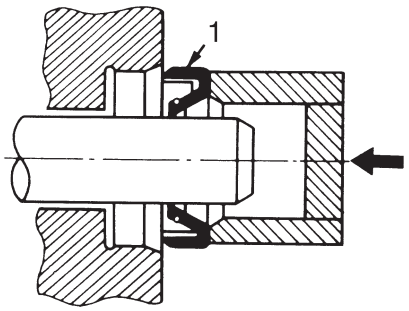

CAUTION :

Do not spin the bearing with compressed air because this will damage the bearing surfaces.

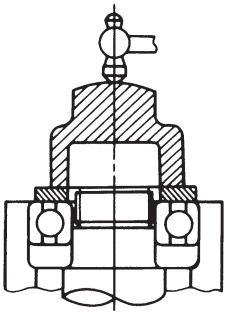

CIRCLIPS

Before reassembly, check all circlips carefully and replace damaged or distorted circlips. Always replace piston pin clips after one use. When installing a circlip "1", make sure the sharp-edged corner "2" is positioned opposite the thrust "3" that the circlip receives.

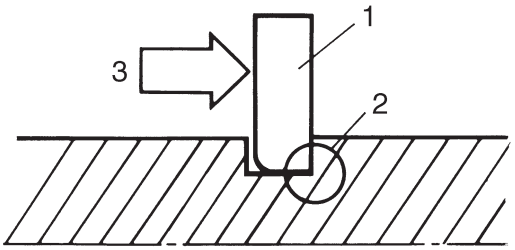

CHECKING THE CONNECTIONS

Check the leads, couplers, and connectors for stains, rust, moisture, etc.

1. Disconnect:
   - Lead
   - Coupler
   - Connector
2. Check:
   - Lead
   - Coupler
   - Connector

Moisture →Dry with an air blower.

Rust/stains → Connect and disconnect several times.

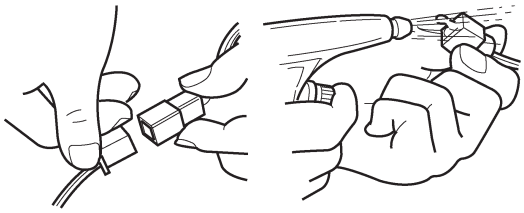

3. Check:
   - All connections
     Loose connection →Connect properly.

NOTE:

If the pin "1" on the terminal is flattened, bend it up.

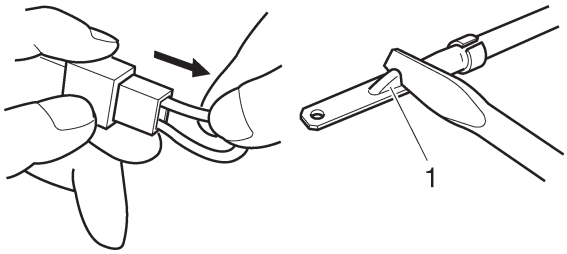

4. Connect:
   - Lead
   - Coupler
   - Connector

NOTE:

Make sure all connections are tight.

5. Check:
   - Continuity
     (with the multimeter)

NOTE:

- If there is no continuity, clean the terminals.
- When checking the wire harness, perform steps (1) to (3).
- As a quick remedy, use a contact revitalizer available at most part stores.

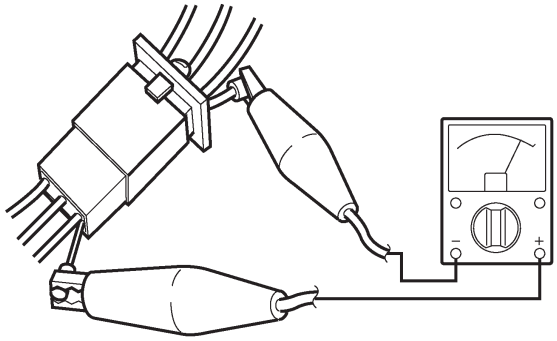

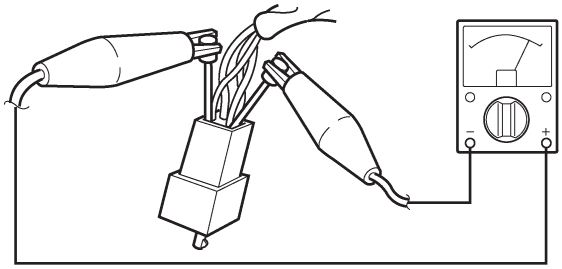

SPECIAL TOOLS

The following special tools are necessary for complete and accurate tune-up and assembly. Use only the appropriate special tools as this will help prevent damage caused by the use of inappropriate tools or improvised techniques.

Tool name/Tool No.	Illustration
Tappet screw holder YSST-706 This tool is used to loosen and tighten tappet adjusting nut.	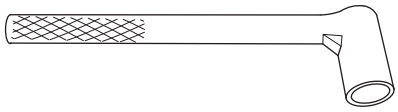
Tappet adjusting socket YSST-706A This tool is used to adjust the valve clearance by tappet adjusting screw	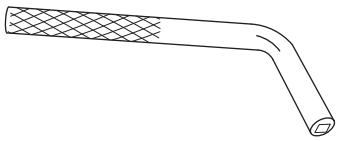
Feeler gauge YSST-715 This tool is used to adjust the valve clearance in an engine	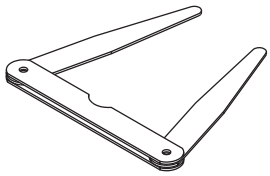
Valve spring compressor YSST-603 This tool is used to remove and install Valve & Spring Assemblies.	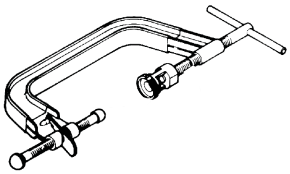
Magneto holder YSST-701 This tool is used to hold the magneto when removing or installing the magneto securing Nut and Primary Drive Gear Nut	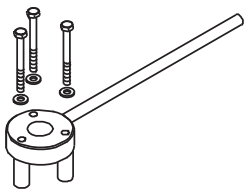
Magneto puller YSST-702 This tool is used to remove the magneto with the help of magneto holder.	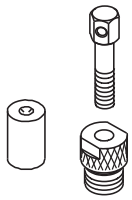

Tool name/Tool No.	Illustration
Crank Shaft Installing Tool with Spacer (a) YSST-266 (b) YSST-267 These tools are used for installation of Crank Shaft.	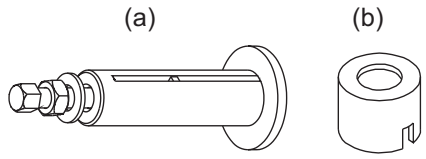
Crankshaft removing tool YSST-265 This tool is used to remove the Crank Shaft from the Crank Case.	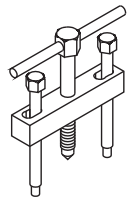
Clutch hub holder YSST-733 This tool is used to hold the Clutch Hub while removing or installing Clutch Main Shaft Nut.	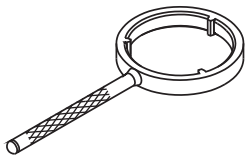
Timing light This instrument is used to reset the ignition timing.	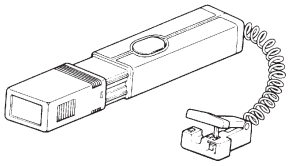
Compression gauge This instrument is used to measure the engine compression.	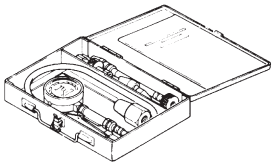
FI diagnostic tool This instrument is used to diagnose the electrical faults in fuel injection system	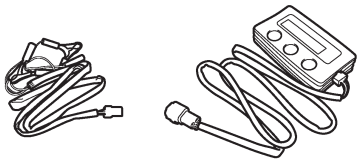
Scraper YSST-612 This tool is used for scraping the sealent from Crankcase joining surface.	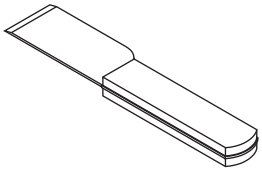

Tool name/Tool No.	Illustration
Radiator cap tester This instrument is used to test the radiator cap functionality.	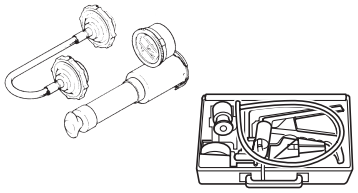
Radiator cap tester adapter This adapter is used to connect the radiator cap tester with radiator cap for radiator cap testing.	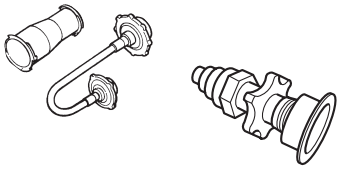
Fuel Pressure gauge This instrument is used to measure the fuel pressure.	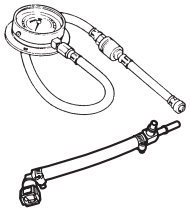
Vacuum/pressure pump gauge set This instrument is used to offer the vacuum to air induction system for checking.	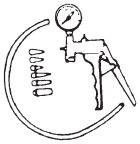
Steering nut wrench YSST-721 This tool is used to loosen and tighten the steering nut.	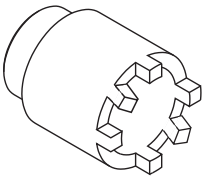
T-handle YSST-713 This tool is used to hold the TFF plunger for loosening and tightening of Hex Socket Head Bolt	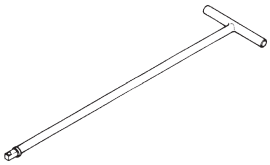
TFF Oil Seal Installation Tool YSST-775 This tool assists to install the TFF Oil Seal.	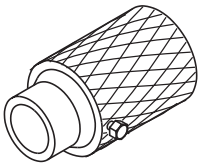

Tool name/Tool No.	Illustration	Reference
Mechanical seal/bearing Installer YSST-722 This tool is used to install the seal and bearing in water pump assy.	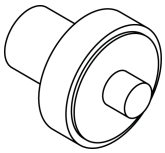	
Ignition checker This instrument is used to check the effficiency of ignition at spark plug.	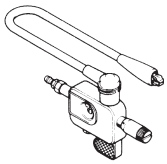	
Multimeter This instrument is used to check the electrical circuits or components.	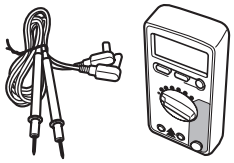	
Yamaha bond No. 1215 This adhesive is used on mating surfaces while assembling Crankcase#1 and #2.	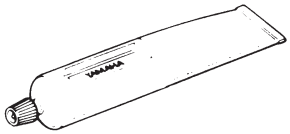	
LOCTITE Three Bond 1322 This adhesive is used for tightening of Torx Screw.		

SPECIFICATIONS

GENERAL SPECIFICATIONS

Model	
Model	20 P1
Dimensions	
Overall length	1995 mm
Overall width	670 mm
Overall height	1070 mm
Seat height	790 mm
Wheelbase	1290 mm
Ground clearance	160 mm
Minimum turning radius	2500 mm
Weight	
With oil and fuel	131 kg
Maximum load	199 kg

ENGINE SPECIFICATIONS

Engine	
Engine type	Liquid cooled 4-stroke, SOHC
Displacement	149.8 cm
Cylinder arrangement	Forward-inclined single cylinder
Bore x stroke	57.0 x 58.7 mm
Compression ratio	10.40 :1
Compression pressure	55Psi (3.866 kgf/cm^2)
Starting system	Electric starter
Fuel	
Recommended fuel	Regular unleaded gasoline only
Fuel tank capacity	12.0 L
Engine oil	
Lubrication system	Wet sump
Type	SAE20W40
Recommended engine oil grade	YAMALUBE (Grade-SG)
Engine oil quantity	
Total amount	1.15 L
Without oil filter element replacement	0.95 L
With oil filter element replacement	1.00 L
Oil filter	
Oil filter type	Paper
Oil pump	
Oil pump type	Gear pump
Inner-rotor-to-outer-rotor-tip clearance	Less than 0.15 mm
Limit	0.23 mm
Outer-rotor-to-oil-pump-housing clearance	0.13–0.18 mm
Limit	0.25 mm
Oil-pump-housing-to-inner-and-outer-rotor clearance	0.06–0.11 mm
Limit	0.18 mm
Rotor thickness	9.95–9.98 mm
Relief valve operating pressure	39.2–78.4 kPa (5.7–11.4 psi) (0.39–0.78 kgf/cm^2)
Cooling system	
Radiator capacity (including all routes)	0.59L
Coolant reservoir capacity (up to the maximum level mark)	0.25 L
Radiator cap opening pressure	107.9-137.3 kPa
Valve relief pressure	4.9 kPa
Thermostat	
Manufacturer	NIPPON THERMOSTAT

Valve opening temperature	80.5–83.5 °C
Valve full open temperature	95.0 °C
Valve lift (full open)	3.0 mm
Radiator core	
Width	198.0 mm
Height	128.0 mm
Depth	24.0 mm
Water pump	
Water pump type	Single suction centrifugal pump
Reduction ratio	½ (0.500)

Spark plug (s)

Manufacturer/model	NGK/CR8E
Manufacturer/model	DENSO/U24ESR-N
Spark plug gap	0.7–0.8 mm

Cylinder head

Volume	9.90–10.50 cm³
Warpage limit	0.03 mm

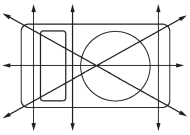

Camshaft

Drive system	Chain drive (left)
Camshaft lobe dimensions	
Intake A	25.177 ± 0.05 mm
Limit	25.027 mm
Intake B	30.275 ± 0.05 mm
Limit	30.125 mm
Exhaust A	25.115 ± 0.05 mm
Limit	24.965 mm
Exhaust B	30.282 ± 0.05 mm
Limit	30.132 mm

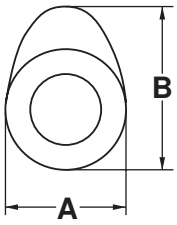

Camshaft runout limit 0.03 mm

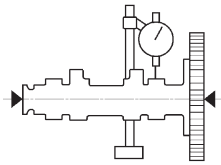

Timing chain	
Model/number of links	SILENT CHAIN/96
Tensioning system	Automatic
Rocker arm/rocker arm shaft	
Rocker arm inside diameter	9.985–10.000 mm
Limit	10.030 mm
Rocker arm shaft outside diameter	9.966–9.976 mm
Limit	9.950 mm
Rocker-arm-to-rocker-arm-shaft clearance	0.009–0.034 mm
Limit	0.08 mm
Valve, valve seat, valve guide	
Valve clearance (cold)	
Intake	0.10–0.14 mm
Exhaust	0.20–0.24 mm
Valve dimensions	
Valve head diameter A (intake)	19.40–19.60 mm
Valve head diameter A (exhaust)	16.90–17.10 mm

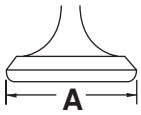

Valve face width B (intake)	1.538–2.138 mm
Valve face width B (exhaust)	1.538–2.138 mm

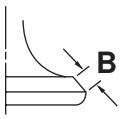

Valve seat width C (intake)	0.90–1.10 mm
Valve seat width C (exhaust)	0.90–1.10 mm

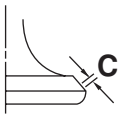

Valve margin thickness D (intake)	0.50–0.90 mm
Valve margin thickness D (exhaust)	0.50–0.90 mm

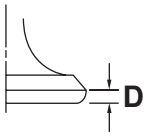

Valve stem diameter (intake)	4.475–4.490 mm
Limit	4.450 mm
Valve stem diameter (exhaust)	4.460–4.475 mm
Limit	4.435 mm
Valve guide inside diameter (intake)	3.950–4.050 mm
Valve guide inside diameter (exhaust)	3.950–4.050 mm
Valve-stem-to-valve-guide clearance (intake)	0.010–0.037 mm

Limit	0.080 mm
Valve-stem-to-valve-guide clearance (exhaust)	0.025–0.052 mm
Limit	0.100 mm
Valve stem runout	0.010 mm

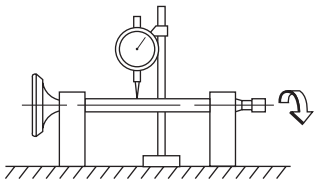

Valve spring

Free length (intake)	41.71 mm
Limit	39.62 mm
Free length (exhaust)	41.71 mm
Limit	39.62 mm
Installed length (intake)	35.30 mm
Installed length (exhaust)	35.30 mm
Spring rate K1 (intake)	23.54 N/mm
Spring rate K2 (intake)	36.58 N/mm
Spring rate K1 (exhaust)	23.54 N/mm
Spring rate K2 (exhaust)	36.58 N/mm
Installed compression spring force (intake)	140–162 N
Installed compression spring force (exhaust)	140–162 N
Spring tilt (intake)	2.5°/1.8 mm
Spring tilt (exhaust)	2.5°/1.8 mm

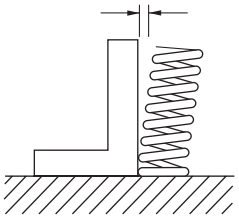

Winding direction (intake)	Clockwise
Winding direction (exhaust)	Clockwise

Cylinder

Bore 56.985–57.010 mm
Taper limit 0.05 mm
Out of round limit 0.05 mm

Piston

Piston-to-cylinder clearance	0.020–0.045 mm
Limit	0.15 mm
Diameter D	56.965–56.990 mm

Height H	5.0 mm

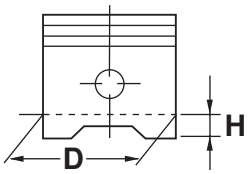

Offset	0.25 mm
Offset direction	Intake side
Piston pin bore inside diameter	14.002–14.013 mm
Limit	14.043 mm
Piston pin outside diameter	13.995–14.000 mm
Limit	13.975 mm
Piston-pin-to-piston-pin-bore clearance	0.002–0.018 mm
Limit	0.068 mm

Piston ring

Top ring

Ring type	Barrel
Dimensions(B x T)	0.80 x 2.10 mm

End gap (installed)	0.10–0.25 mm
Limit	0.40 mm
Ring side clearance	0.030–0.065 mm
Limit	0.100 mm

2nd ring

Ring type Taper	
Dimensions (B x T)	0.80 x 2.00 mm

End gap (installed)	0.10–0.25 mm
Limit	0.40 mm
Ring side clearance	0.020–0.055 mm
Limit	0.100 mm

Oil ring

Dimensions (B x T)	1.50 x 1.52 mm

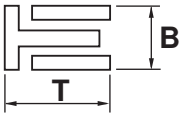

End gap (installed)	0.20–0.70 mm
Ring side clearance	0.040–0.160 mm

Connecting rod	
Small end inside diameter	14.015–14.028 mm
Connected Rod Length	99.90–100.10 mm
Crankshaft	
Width A	47.95–48.00 mm
Runout limit C	0.030 mm
Big end side clearance D	0.110–0.410 mm
Big end radial clearance E	0.004–0.014 mm

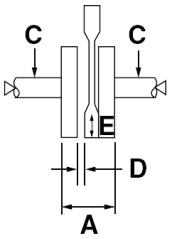

Balancer	
Balancer drive method	Gear
Clutch	
Clutch type	Wet, multiple-disc
Clutch release method	Inner push, cam push
Clutch lever free play	10.0–15.0 mm
Friction plate thickness	2.90–3.10 mm
Wear limit	2.80 mm
Plate quantity	1 pc
Friction plate 2 thickness	2.90–3.10 mm
Wear limit	2.80 mm
Plate quantity	4 pc
Clutch plate thickness	1.45–1.75 mm
Plate quantity	4 pcs
Warpage limit	0.20 mm
Clutch spring free length	39.00 mm
Minimum length	36.80 mm
Spring quantity	4 pcs
Push rod bending limit	0.500 mm
Transmission	
Transmission type	Constant mesh 6-speed
Primary reduction system	spur gear
Primary reduction ratio	73/24 (3.042)
Secondary reduction system	Chain drive
Secondary reduction ratio	42/14 (3.000)
Operation	Left foot operation
Gear ratio	
1st	34/12 (2.833)

2nd	30/16 (1.875)
3rd	30/22 (1.364)
4th	24/21 (1.143)
5th	22/23 (0.957)
6th	21/25 (0.840)
Shifting mechanism	
Shift mechanism type	Shift drum and guide bar
Shift fork-L thickness	5.76–5.89 mm
Decompression device	
Device type	Auto Decompression
Air filter	
Air filter element	Dry element
Fuel injector	
Model/quantity	1100–87H10/1
Throttle body	
Type/quantity	AC28/1
Manufacturer	MIKUNI
Throttle valve size	#50
Fuel injection sensor	
Crankshaft position sensor resistance	248–372 Ω at 20°C
Intake air pressure sensor output voltage	0.789–4.000 V at 20.00–101.32 kPa
Intake air temperature sensor resistance	5.7–6.3 kΩ
Coolant temperature sensor resistance	310–326 Ω at 80°C
Idling condition	
Engine idling speed	1300–1500 r/min
Water temperature	85.0–95.0 °C (185.00-203.00°F)
Oil temperature	50.0–70.0 °C–(112.00-158.00 °F
Throttle cable free play	3.0–5.0 mm

CHASSIS SPECIFICATIONS

Chassis	
Frame type	Delta Box
Caster angle	26.00
Trail	100.0 mm
Front wheel	
Wheel type	Cast wheel
Rim size	17 x 1.60.
Rim material	Aluminum
Wheel travel	115.0 mm
Radial wheel runout limit	1.0 mm
Lateral wheel runout limit	0.5 mm
Rear wheel	
Wheel type	Cast wheel
Rim size	17 M/C x MT 2.15
Rim material	Aluminum
Wheel travel	105.0 mm
Radial wheel runout limit	1.0 mm
Lateral wheel runout limit	0.5 mm
Front tyre	
Type	Tubeless
Size	80/90-17M/C 44P
Manufacturer/model	MRF / ZAPPER
Rear tyre	
Type	Tubeless
Size	100/80−17M/C 52P
Manufacturer/model	MRF / ZAPPER
Tyre air pressure (**measured on cold tyres**)	
Front	200 kPa
Rear	225 kPa
Front brake	
Type	Single disc brake
Operation	Right hand operation

Front disc brake	
Disc outside diameter & thickness	267.0 x 4.0 mm
Brake disc thickness limit	3.5 mm
Brake disc deflection limit	0.10 mm
Brake pad lining thickness (inner)	5.3 mm
Limit	0.8 mm
Brake pad lining thickness (outer)	5.3 mm
Limit	0.8 mm
Master cylinder inside diameter	11.00 mm
Caliper cylinder inside diameter	25.40 mm x 2
Recommended fluid	DOT 3 or DOT 4
Rear brake	
Type	Disk brake
Operation	Right foot operation
Brake pedal position	44 mm
Rear disc brake	
Disc outside diameter & thickness	203.0 x 4.5 mm
Brake disc thickness limit	4.0 mm
Brake disc deflection limit	0.1 mm
Brake pad lining thickness (inner)	7.0 mm
Limit	1.5 mm
Brake pad lining thickness (outer)	7.0 mm
Limit	1.5 mm
Master cylinder inside diameter	12.7 mm
Caliper cylinder inside diameter	32.0 mm
Recommended fluid	DOT 3 or DOT 4
Steering	
Steering bearing type	Ball and angular bearing
Center to lock angle (left)	35.0°
Center to lock angle (right)	35.0°
Front suspension	
Type	Telescopic fork
Spring/shock absorber type	Coil spring/oil damper
Front fork travel	130.0 mm
Fork spring free length	384.8 mm
Limit	381.8 mm
Collar length	88.0 mm
Installed length	381.8 mm
Spring rate K1	5 N/mm
Spring rate K2	6.75 N/mm
Spring stroke K1	0–75.0 mm
Spring stroke K2	75.0–130 mm
Inner tube outer diameter	33.0 mm
Optional spring available	No
Recommended oil	Fork oil 10W or equivalent
Quantity	240 cm^3
Level	126.0 mm
Rear suspension	
Type	Swingarm (Link suspension)
Spring/shock absorber type	Coil spring/oil damper
Rear shock absorber assembly travel	50.0 mm

Spring free length	166.8 mm
Installed length	156.5 mm
Spring rate K1	90.00 N/mm
Spring stroke K1	0.0–50.0 mm
Optional spring available	No
Swingarm	
Swingarm end free play limit (axial)	2.4 mm
Drive chain	
Type/manufacturer	428VI3/DAIDO
Link quantity	120
Drive chain slack	20–40 mm
15-link length limit	190.5 mm

ELECTRICAL SPECIFICATIONS

Voltage	
System voltage	12 V
Ignition system	
Ignition system	Transistorized coil ignition (digital)
Advancer type	Digital
Ignition timing (B.T.D.C.)	5.0^{0}/1400 r/min
Engine control unit	
Model/manufacturer	3C100/MORIC
Ignition coil	
Primary coil resistance	2.16–2.64 Ω at 20 ^{0}C
Secondary coil resistance	8.64–12.96 kΩ at 20 ^{0}C
Spark plug cap	
Material	Resin
Resistance	5 Kohms
AC magneto	
Model/manufacturer	F3C1/PT MORIC
Standard output	14.0 V 160 W @ 5000 rpm
Stator coil resistance	0.448–0.672 Ω at 20 ^{0}C
Rectifier/regulator	
Regulator type	Semi conductor-short circuit
Regulated voltage (DC)	14.1–14.9 V
Rectifier capacity	14.0 A
Withstand voltage	200.0 V
Battery	
Model	VRLA
Voltage, capacity	12 V, 3.5 Ah
Ten hour rate amperage	3.50 A
Headlight	
Bulb type	Halogen bulb
Bulb voltage, wattage & qty.	
Headlight	12 V, 35 x2
Tail/brake light	12 V, 5.0 W/21.0 W x 1
Front turn signal light	12 V, 10.0 W x 2
Rear turn signal light	12 V, 10.0 W x 2
Meter lighting	L.E.D.
Position light	12V, 5.0Wx2

Indicator light	
Neutral indicator light	LED
Turn signal indicator light	LED
High beam indicator light	LED
Coolant temperature warning light	LED
Engine trouble warning light	LED
Electric starting system	
System type	Constant mesh
Starter motor	
Model/manufacturer	3C1/PT. MORIC
Power output	0.20 kW
Armature coil resistance	0.0315–0.0385 Ω
Brush overall length	7.0 mm
Limit	3.50 mm
Brush spring force	3.92–5.88 N
Commutator diameter	17.6 mm
Limit	16.6 mm
Mica undercut (depth)	1.35 mm
Starter relay	
Model/manufacturer	5TP/OMRON-LOCAL
Amperage	100 A
Coil resistance	3.42–4.18 Ω
Horn	
Horn type	Plane
Quantity	1 pc
Model/manufacturer	Local Made
Maximum amperage	1.5 A
Coil resistance	4.30–4.80 Ω at 20 °C
Performance	108–115 dB/2 m
Turn signal relay	
Relay type	Full Transistor
Model/manufacturer	Local Made
Built-in, self-canceling device	No
Turn signal blinking frequency	70-100 cycles/min
Fuel sender	
Model/manufacturer	Local Made
Sender unit resistance (full)	4.0–10.0 Ω at 20 °C
Sender unit resistance (empty)	90.0–100.0 Ω at 20 °C
Starting circuit cut-off relay	
Model/manufacturer	Local Made
Coil resistance	90.0–110.0 Ω
Fan motor relay	
Model/manufacturer	Local Made

Coil resistance	54.0–66.0 Ω
Fuse	
Fuse	20.0 A

TIGHTENING TORQUES

GENERAL TIGHTENING TORQUE SPECIFICATIONS

This chart specifies tightening torques for standard fasteners with a standard ISO thread pitch. Tightening torque specifications for special components or assemblies are provided for each chapter of this manual. To avoid warpage, tighten multi-fastener assemblies in a crisscross pattern and progressive stages until the specified tightening torque is reached. Unless otherwise specified, tightening torque specifications require clean, dry threads. Components should be at room temperature.

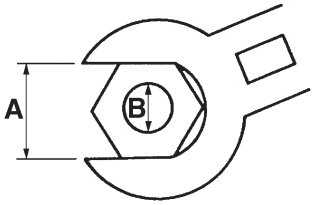

A. Distance between flats
B. Outside thread diameter

A (nut)	B (bolt)	General tightening torques		
		Nm	m·kg	ft·lb
10 mm	6 mm	6	0.6	4.3
12 mm	8 mm	15	1.5	11
14 mm	10 mm	30	3.0	22
17 mm	12 mm	55	5.5	40
19 mm	14 mm	85	8.5	61
22 mm	16 mm	130	13.0	94

ENGINE TIGHTENING TORQUES

Item	Thread size	Qty	Tightening torque	Remarks
Cylinder head bolt	M8	4	22 Nm (2.2 m·kg, 16 ft·lb)	E
Cylinder head bolt	M6	2	10 Nm (1.0 m·kg, 7.2 ft·lb)	E
Spark plug	M10	1	13 Nm (1.3 m·kg, 9.4 ft·lb)	
Cylinder head cover bolt	M6	5	10 Nm (1.0 m·kg, 7.2 ft·lb)	
Air cut-off valve assembly bolt	M6	2	10 Nm (1.0 m·kg, 7.2 ft·lb)	
Oil check bolt	M6	1	7 Nm (0.7 m·kg, 5.1 ft·lb)	
Cylinder head stud bolt (exhaust pipe)	M8	2	15 Nm (1.5 m·kg, 11 ft·lb)	
Coolant drain bolt	M6	1	7 Nm (0.7 m·kg, 5.1 ft·lb)	
Balancer driven gear nut	M10	1	50 Nm (5.0 m·kg, 36 ft·lb)	
Valve adjusting screw locknut	M5	4	7 Nm (0.7 m·kg, 5.1 ft·lb)	
Camshaft sprocket bolt	M8	1	30 Nm (3.0 m·kg, 22 ft·lb)	
Camshaft retainer bolt	M6	2	7 Nm (0.7 m·kg, 5.1 ft·lb)	
Timing chain guide bolt	M6	1	10 Nm (1.0 m·kg, 7.2 ft·lb)	
Timing chain tensioner bolt	M6	2	10 Nm (1.0 m·kg, 7.2 ft·lb)	Yamaha bond No. 1215 (Three bond 1215®)
Water pump assembly bolt	M6	3	10 Nm (1.0 m·kg, 7.2 ft·lb)	
Water pump housing cover bolt	M6	4	10 Nm (1.0 m·kg, 7.2 ft·lb)	
Impeller shaft retainer bolt	M6	2	10 Nm (1.0 m·kg, 7.2 ft·lb)	LT
Thermostat cover bolt	M6	2	10 Nm (1.0 m·kg, 7.2 ft·lb)	
Oil pump assembly screw	M5	2	4 Nm (0.4 m·kg, 2.9 ft·lb)	
Engine oil drain plug	M35	1	32 Nm (3.2 m·kg, 23 ft·lb)	
Oil filter element cover bolt	M6	3	10 Nm (1.0 m·kg, 7.2 ft·lb)	
Oil baffle plate bolt	M6	2	10 Nm (1.0 m·kg, 7.2 ft·lb)	LT
Intake manifold bolt	M6	2	10 Nm (1.0 m·kg, 7.2 ft·lb)	
Injector bolt	M6	1	12 Nm (1.2 m·kg, 8.7 ft·lb)	LT
Throttle body joint clamp screw	M4	2	2 Nm (0.2 m·kg, 1.4 ft·lb)	
Air filter case joint clamp screw	M4	1	2 Nm (0.2 m·kg, 1.4 ft·lb)	
Air filter case bolt	M6	2	10 Nm (1.0 m·kg, 7.2 ft·lb)	
Resonator bolt	M6	2	10 Nm (1.0 m·kg, 7.2 ft·lb)	LT
Locknut (throttle cable)	M6	1	7 Nm (0.7 m·kg, 5.1 ft·lb)	LT
Muffler nut	M8	2	15 Nm (1.5 m·kg, 11 ft·lb)	
Muffler bolt	M8	2	20 Nm (2.0 m·kg, 14 ft·lb)	
Exhaust pipe protector screw	M6	2	8 Nm (0.8 m·kg, 5.8 ft·lb)	LT

Item	Thread size	Qty	Tightening torque	Remarks
Muffler protector screw	M6	2	8 Nm (0.8 m·kg, 5.8 ft·lb)	
Crankcase bolt	M6	12	10 Nm (1.0 m·kg, 7.2 ft·lb)	
Magneto cover bolt	M6	8	10 Nm (1.0 m ·kg, 7.2 ft·lb)	
Clutch cover bolt	M6	10	10 Nm (1.0 m·kg, 7.2 ft·lb)	
Drive sprocket cover bolt	M6	2	10 Nm (1.0 m·kg, 7.2 ft·lb)	
Starter clutch bolt	M6	3	14 Nm (1.4 m·kg, 10 ft·lb)	Stake
Primary drive gear nut	M12	1	60 Nm (6.0 m·kg, 43 ft·lb)	
Clutch spring bolt	M6	4	12 Nm (1.2 m·kg, 8.7 ft·lb)	
Locknut short clutch push rod	M6	1	8 Nm (0.8 m·kg, 5.8 ft·lb)	
Clutch boss nut	M14	1	70 Nm (7.0 m·kg, 50 ft·lb)	
Clutch cable locknut	M8	1	9 Nm (0.9 m·kg, 6.5 ft·lb)	
Clutch lever nut	M6	1	7 Nm (0.7 m·kg, 5.1 ft·lb)	
Clutch lever holder bolt	M6	1	7 Nm (0.7 m·kg, 5.1 ft·lb)	
Drive sprocket retainer bolt	M6	2	10 Nm (1.0 m·kg, 7.2 ft·lb)	
Bearing retainer screw	M6	2	7 Nm (0.7 m·kg, 5.1 ft·lb)	
Shift drum segment bolt	M6	1	12 Nm (1.2 m·kg, 8.7 ft·lb)	
Stopper lever bolt	M6	1	10 Nm (1.0 m·kg, 7.2 ft·lb)	
Stator coil bolt	M6	3	10 Nm (1.0 m·kg, 7.2 ft·lb)	
Crankshaft position sensor bolt	M6	2	10 Nm (1.0 m·kg, 7.2 ft·lb)	
Magneto rotor nut	M12	1	70 Nm (7.0 m·kg, 50 ft·lb)	
Neutral switch	M10	1	20 Nm (2.0 m·kg, 14 ft·lb)	
Starter motor bolt	M6	2	10 Nm (1.0 m·kg, 7.2 ft·lb)	
Coolant temperature sensor	M12	1	18 Nm (1.8 m·kg, 13 ft·lb)	

Cylinder head tightening sequence:

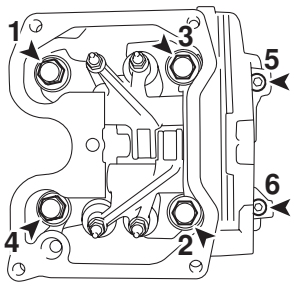

Magneto cover tightening sequence:

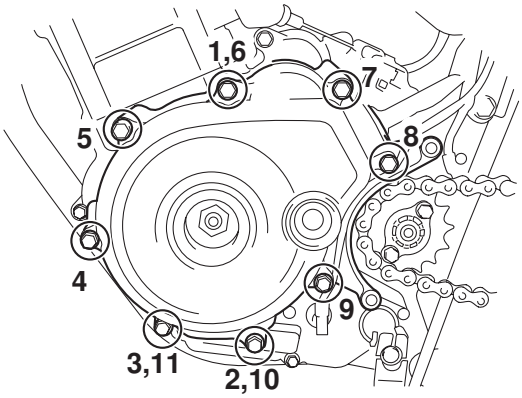

Clutch cover tightening sequence:

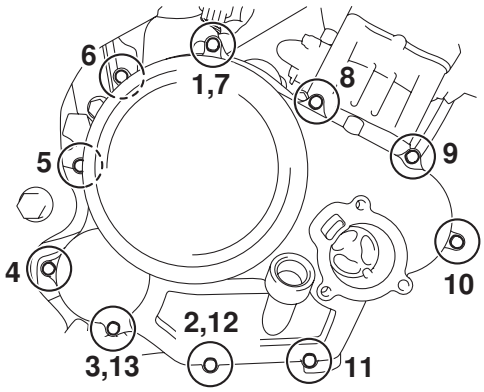

Crankcase tightening sequence:

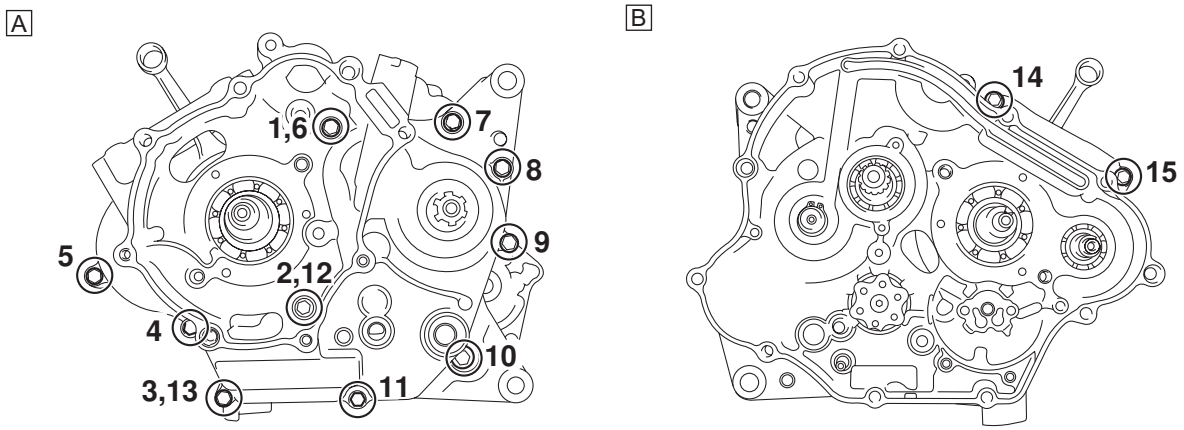

A. Left crankcase
B. Right crankcase

CHASSIS TIGHTENING TORQUES

Item	Thread size	Qty	Tightening torque	Remarks
Ignition coil bolt	M6	2	9 Nm (0.9 m·kg, 6.5 ft·lb)	
Engine mounting nut (front side)	M10	1	49 Nm (4.9 m·kg, 35 ft·lb)	LS
Engine mounting nut (rear lower side)	M10	1	49 Nm (4.9 m·kg, 35 ft·lb)	LS
Engine mounting nut (rear upper side)	M10	1	49 Nm (4.9 m·kg, 35 ft·lb)	LS
Rear fender bolt	M6	6	9 Nm (0.9 m·kg, 6.5 ft·lb)	
Seat lock bracket	M6	2	7 Nm (0.7 m·kg, 5.1 ft·lb)	
Rectifier/regulator bolt	M6	2	7 Nm (0.7 m·kg, 5.1 ft·lb)	
Rear shock absorber assembly upper nut	M10	1	44 Nm (4.4 m·kg, 32 ft·lb)	
Rear wheel axle nut	M14	1	110 Nm (11.0 m·kg, 80 ft·lb)	LS
Relay arm nut	M10	2	44 Nm (4.4 m·kg, 32 ft·lb)	LS
Rear shock absorber assembly lower connecting arm nut	M10	1	44 Nm (4.4 m·kg, 32 ft·lb)	LS
Rear shock absorber assembly lower nut	M10	1	44 Nm (4.4 m·kg, 32 ft·lb)	
Swingarm pivot shaft nut	M12	1	70 Nm (7.0 m·kg, 50 ft·lb)	LS
Drive chain cover bolt	M6	2	10 Nm (1.0 m·kg, 7.2 ft·lb)	
Brake hose union bolt	M10	2	26 Nm (2.6 m·kg, 19 ft·lb)	
Front brake caliper bolt	M10	2	35 Nm (3.5 m·kg, 25 ft·lb)	
Front wheel axle nut	M12	1	60 Nm (6.0 m·kg, 43 ft·lb)	
Front brake disc bolt	M8	5	23 Nm (2.3 m·kg, 17 ft·lb)	LT
Bleed screw (front brake caliper)	M7	1	6 Nm (0.6 m·kg, 4.3 ft·lb)	
Brake hose holder bolt	M6	1	7 Nm (0.7 m·kg, 5.1 ft·lb)	
Front fender bolt	M6	4	9 Nm (0.9 m·kg, 6.5 ft·lb)	
Lower ring nut (initial tightening torque)	M25	1	48 Nm (4.8 m·kg, 35 ft·lb)	See NOTE.
Lower ring nut (final tightening torque)	M25	1	13 Nm (1.3 m·kg, 9.4 ft·lb)	See NOTE.
Steering stem bolt	M10	1	35 Nm (3.5 m·kg, 25 ft·lb)	
Meter assembly nut	M6	3	7 Nm (0.7 m·kg, 5.1 ft·lb)	
Headlight housing and front turn signal light assembly nut	M8	2	17 Nm (1.7 m·kg, 12 ft·lb)	
Main switch bolt	M6	2	7 Nm (0.7 m·kg, 5.1 ft·lb)	
Upper bracket pinch bolt	M8	2	23 Nm (2.3 m·kg, 17 ft·lb)	
Lower bracket pinch bolt	M10	2	28 Nm (2.8 m·kg, 20 ft·lb)	
Front fork cap bolt	M30	2	23 Nm (2.3 m·kg, 17 ft·lb)	
Head light mounting bolt	M12	2	33 Nm (3.3 m.kg, 22 ft.lb)	

Item	Thread size	Qty	Tightening torque	Remarks
Damper rod bolt	M10	2	28 Nm (2.8 m·kg, 20 ft·lb)	
Front turn signal light assembly and meter assembly bracket bolt	M6	4	7 Nm (0.7 m·kg, 5.1 ft·lb)	
Horn bolt	M6	1	7 Nm (0.7 m·kg, 5.1 ft·lb)	
Fuel tank and frame bolt	M6	2	10 Nm (1.0 m·kg, 7.2 ft·lb)	
Fuel tank bracket and frame bolt	M6	2	10 Nm (1.0 m·kg, 7.2 ft·lb)	
Fuel tank and fuel tank bracket bolt	M6	2	10 Nm (1.0 m·kg, 7.2 ft·lb)	
Fuel pump retainer bolt	M5	6	4 Nm (0.4 m·kg, 2.9 ft·lb)	
Rear side cover bolt	M6	2	7 Nm (0.7 m·kg, 5.1 ft·lb)	
Rear side cover and rear panel bolt	M6	2	7 Nm (0.7 m·kg, 5.1 ft·lb)	
Seat Handle	M8	4	26 Nm (2.6 m·kg, 19 ft·lb)	
Coolant reservoir bolt	M6	2	7 Nm (0.7 m·kg, 5.1 ft·lb)	
Radiator bolt	M6	2	10 Nm (1.0 m·kg, 7.2 ft·lb)	
Radiator fan bolt	M6	2	8 Nm (0.8 m·kg, 5.8 ft·lb)	
Grip end screw	M6	2	7 Nm (0.7 m·kg, 5.1 ft·lb)	
Front brake master cylinder holder bolt	M6	2	7 Nm (0.7 m·kg, 5.1 ft·lb)	
Front brake lever bolt	M6	1	6 Nm (0.6 m·kg, 4.3 ft·lb)	
Front brake lever nut	M6	1	6 Nm (0.6 m·kg, 4.3 ft·lb)	
Front panel bolt	M6	4	7 Nm (0.7 m·kg, 5.1 ft·lb)	
Side cover bolt	M6	2	7 Nm (0.7 m·kg, 5.1 ft·lb)	
Rear wheel sprocket nut	M8	6	43 Nm (4.3 m·kg, 31 ft·lb)	
Brake pedal bolt	M6	2	22 Nm (1.0 m·kg, 7.2 ft·lb)	
Right footrest and right heel plate bolt	M10	2	30 Nm (4.5 m·kg, 32 ft·lb)	LT
Shift arm bolt	M6	2	10 Nm (1.0 m·kg, 7.2 ft ·lb)	
Heel plate bolt	M8		30 Nm (3.0 m·kg, 22 ft ·lb)	
Side stand bolt	M10	1	44 Nm (4.4 m·kg, 32 ft·lb)	

NOTE:

1. First, tighten the lower ring nut to approximately 48 Nm (4.8 m·kg, 35 ft·lb) with a torque wrench, then loosen the lower ring nut completely.
2. Retighten the lower ring nut to 13 Nm (1.3 m·kg, 9.4 ft·lb) with a torque wrench.

LUBRICATION POINTS AND LUBRICANT TYPES

ENGINE

Lubrication point	Lubricant
Oil seal lips	LS
Bearings	E
O-rings	LS
Cylinder head bolts and washers	E
Connecting rod big end thrust surface	E
Piston, Piston rings, and cylinder inner surface	E
Balancer driven gear inner surface	E
Camshaft lobes	M
Decompression cam	E
Valve stem seal	M
Valve stem (intake and exhaust)	M
Valve stem ends (intake and exhaust)	M
Rocker arm shaft	E
Rocker arm inner surfaces	M
Decompression lever pin	M
Oil seal (clutch cover)	E
Oil pump driven gear	E
Oil pump rotors (inner and outer)	E
Starter clutch idle gear thrust surface	E
Starter clutch idle gear shaft	E
Starter clutch gear inner surface and thrust surface	E
Starter clutch rollers	E
Clutch push lever	E
Primary driven gear inner surface	E
Clutch push rod (short and long) and ball	E
Clutch boss nut and lock washer contact surface	E
Transmission gears (wheel and pinion) and collar	M
Shift forks and shift fork guide bar	E
Shift drum	E
Shift shaft	E

Lubrication point	Lubricant
Crankshaft position sensor/stator assembly lead grommet	Yamaha bond No. 1215 (Three Bond No.1215®)
Crankcase mating surface	Yamaha bond No. 1215 (Three Bond No.1215®)
Timing chain tensioner bolts	Yamaha bond No. 1215 (Three Bond No.1215®)

CHASSIS

Lubrication point	Lubricant
Front wheel oil seal lip	LS
Front wheel axle outer surface	LS
Speed sensor unit	LS
Rear wheel drive hub oil seal lip	LS
Rear wheel drive hub mating surface	LS
Rear wheel axle outer surface	LS
Rear wheel axle and nut threads	LS
Brake pedal pivoting point	S
Brake caliper bracket boots inner surface	S
Throttle grip tube guide inner surface and throttle cable end	LS
Clutch cable end at the clutch lever	LS
Brake lever pivot bolt outer surface	S
Steering head bearings and upper bearing cover lip	LS
Steering head dust seal	LS
Bolt and nut threads (relay arm and flame)	LS
Bolt and nut threads (connecting rod and relay arm)	LS
Bolt and nut threads (rear shock absorber and relay arm)	LS
Bolt and nut threads (connecting rod and swingarm)	LS
Bearing inner surface (relay arm and swingarm)	LS
Oil seal lips (relay arm and swingarm)	LS
Collars (relay arm and swingarm)	LS
Pivot shaft and nut threads	LS
Pivot shaft outer surface	LS
Swingarm bushing outer surface	LS
Swingarm dust cover lips	LS
Sidestand pivoting point and metal-to-metal moving point	LS
Footrest pivoting point	LS
Passenger footrest pivoting point	LS
Shift pedal pivoting point	LS
Engine mounting bolts and nuts	E

LUBRICATION SYSTEM CHART AND DIAGRAMS

ENGINE OIL LUBRICATION CHART

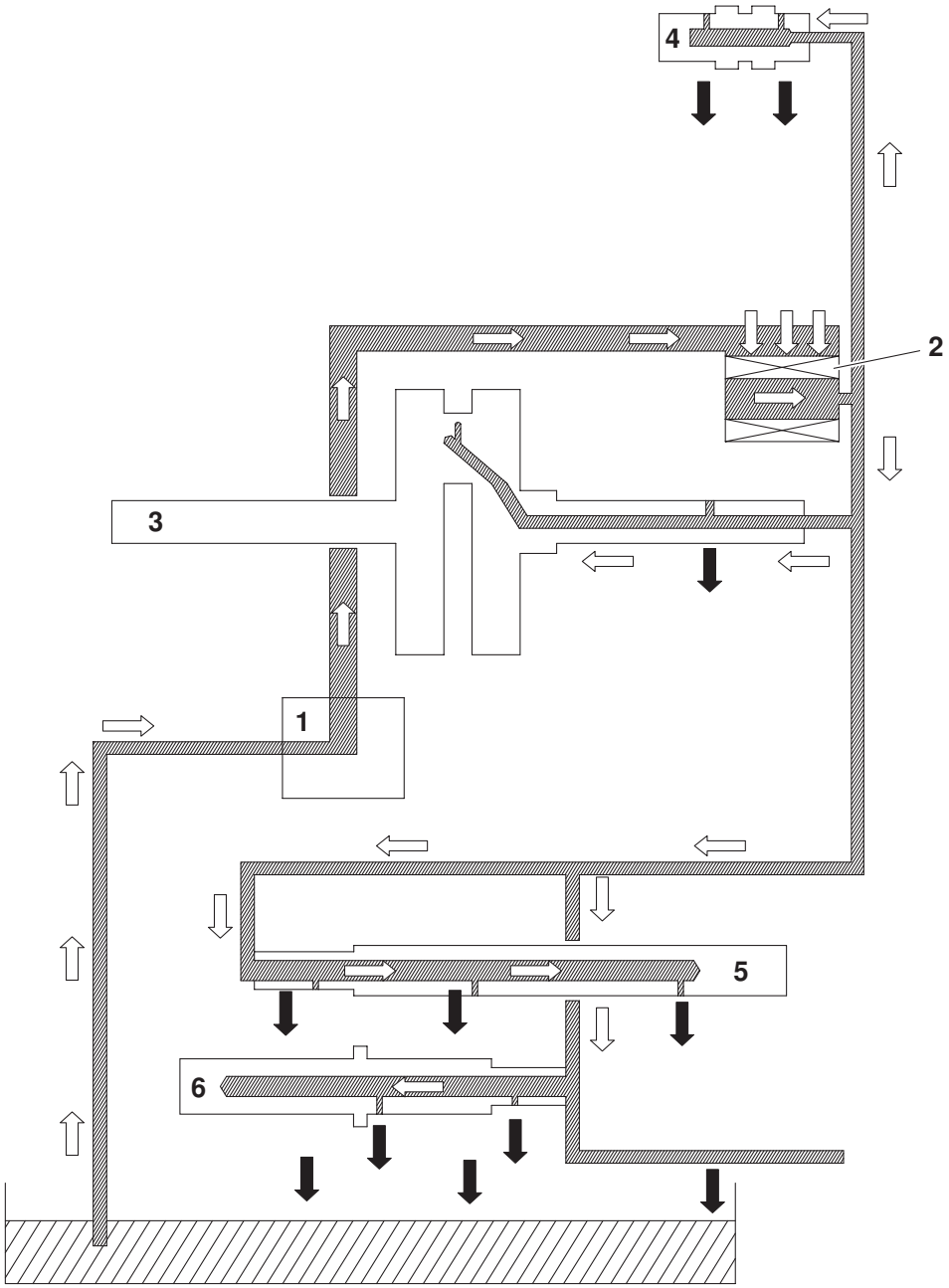

1. Oil pump
2. Oil filter element
3. Crankshaft
4. Camshaft
5. Main axle
6. Drive axle

LUBRICATION DIAGRAMS

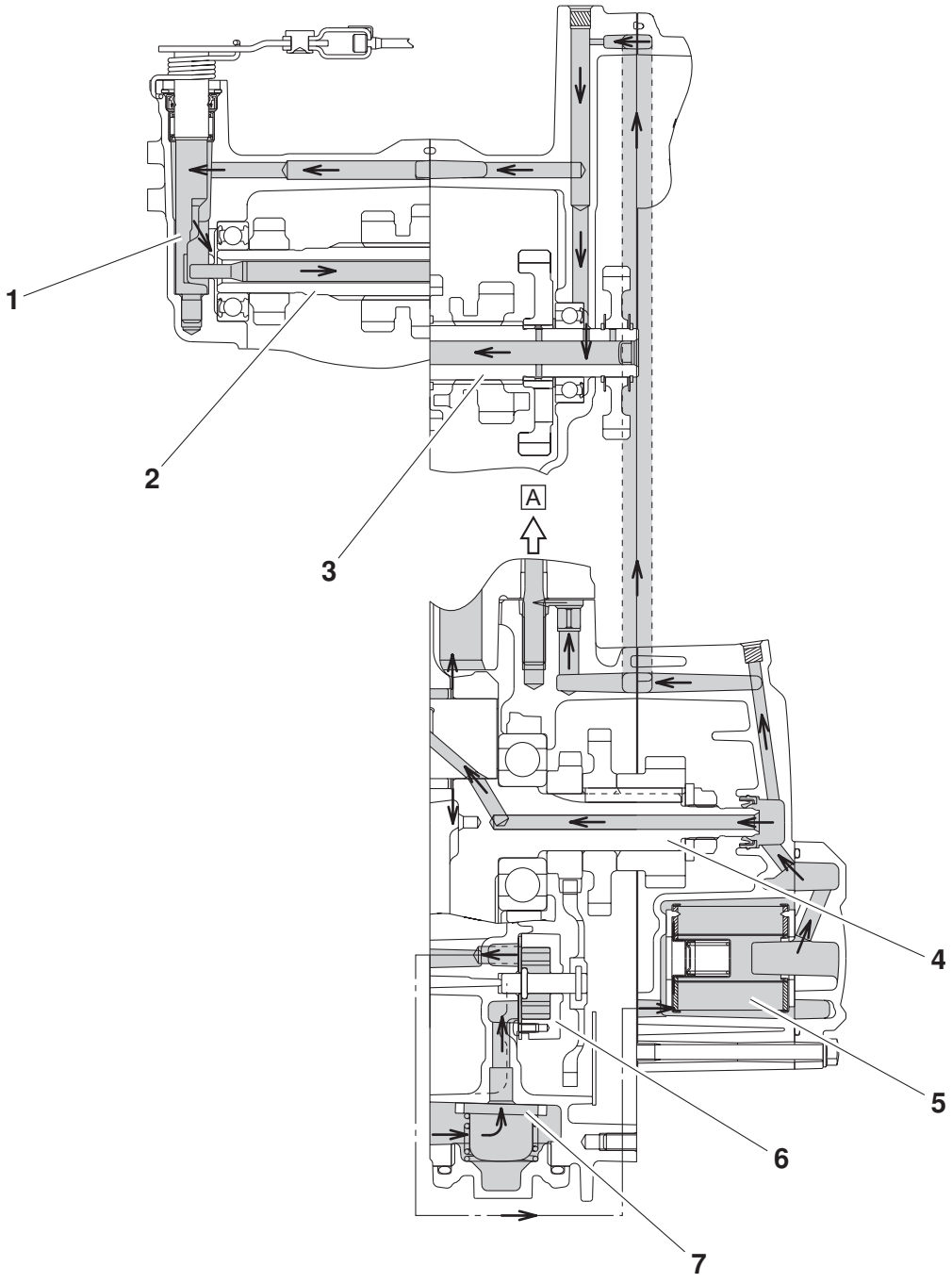

1. Clutch push lever
2. Main axle
3. Drive axle
4. Crankshaft
5. Oil filter
6. Oil pump assembly
7. Oil strainer

A. To cylinder head

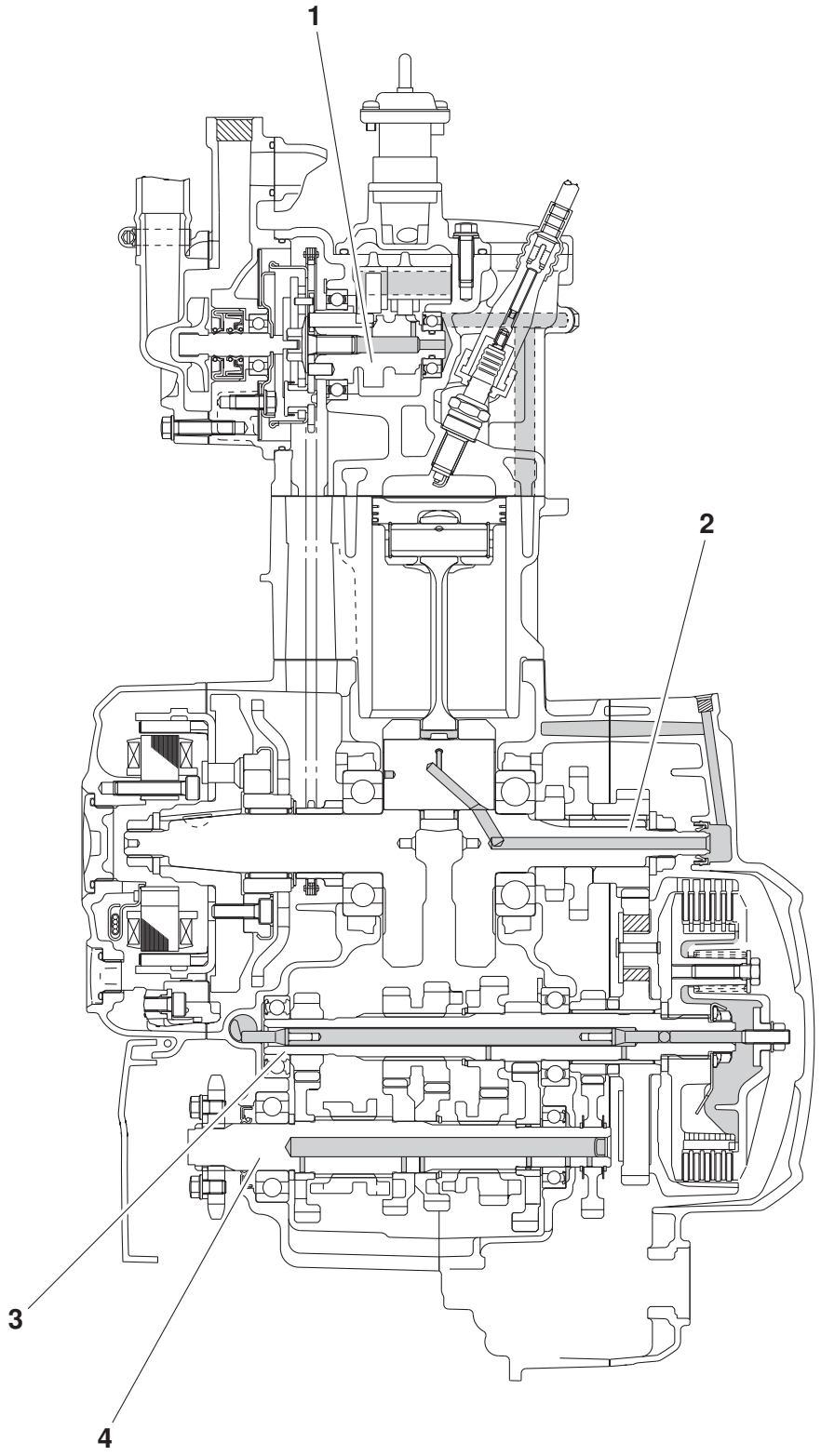
1
2
3
4

1. Camshaft
2. Crankshaft
3. Main axle
4. Drive axle

COOLING SYSTEM DIAGRAMS

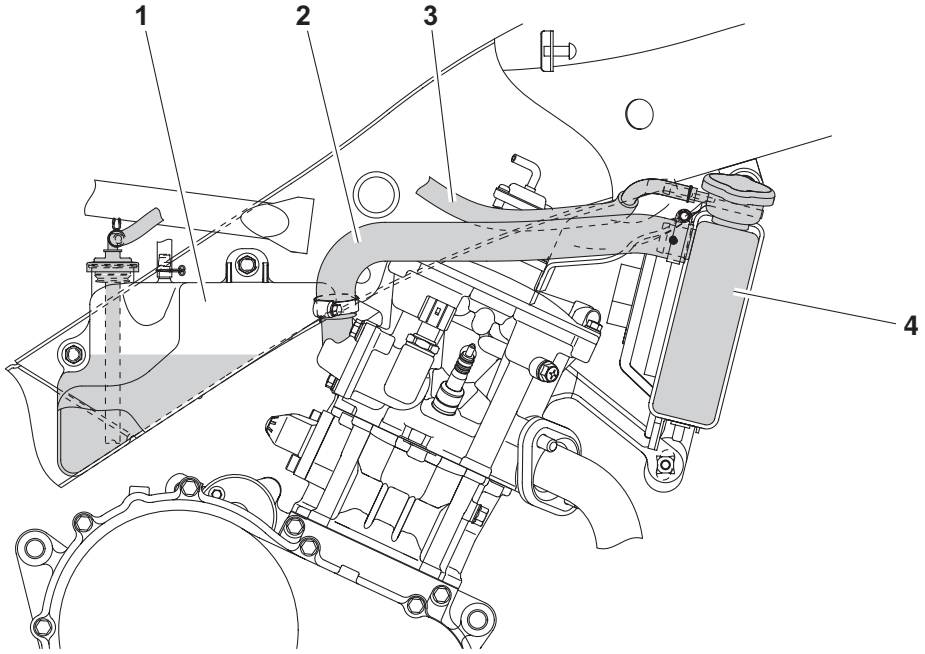

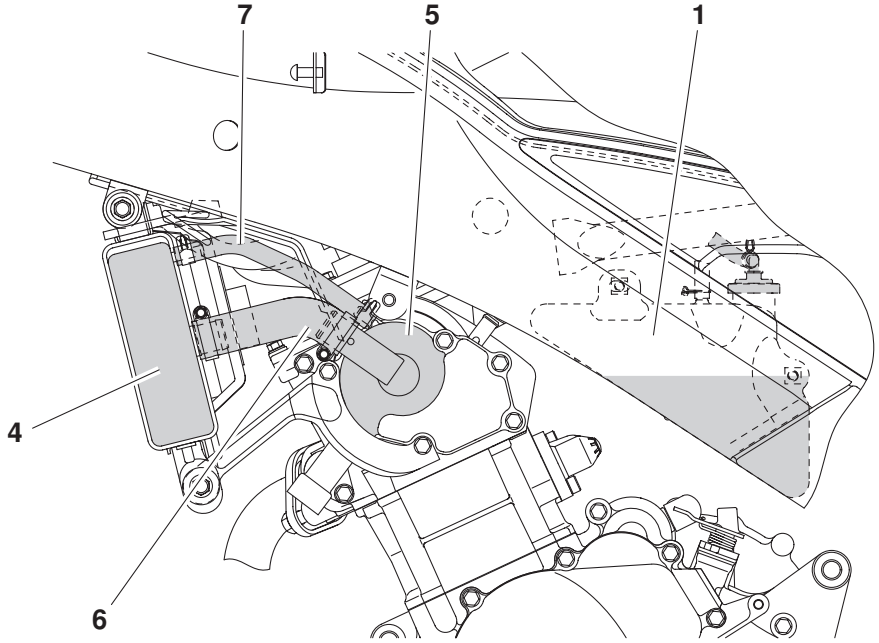

1. Coolant reservoir
2. Radiator inlet hose
3. Coolant reservoir hose
4. Radiator
5. Water pump
6. Radiator outlet hose
7. Water pump breather hose

CABLE ROUTING

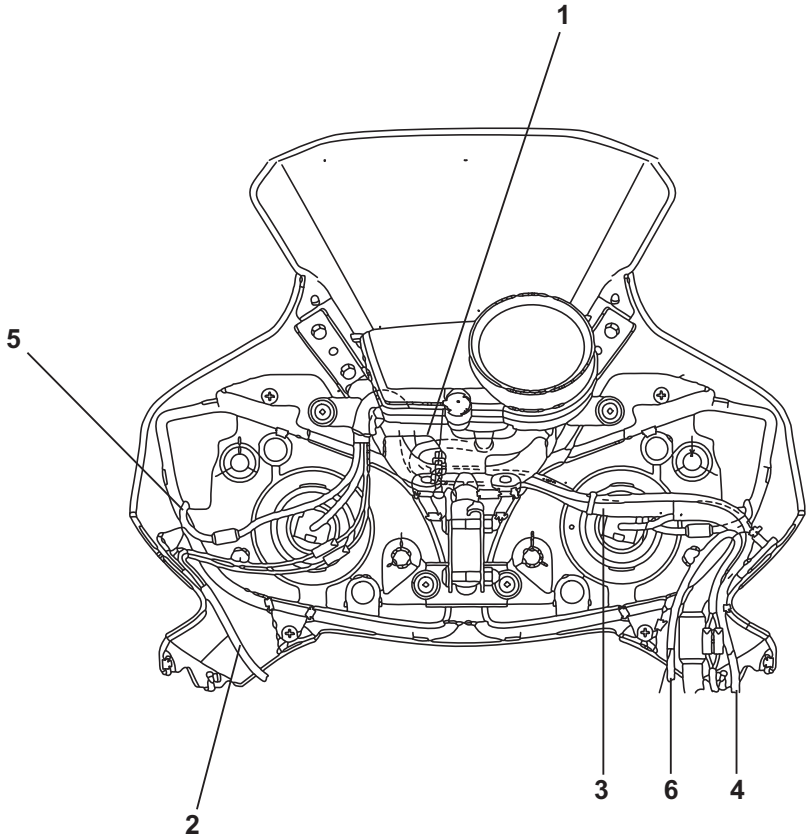

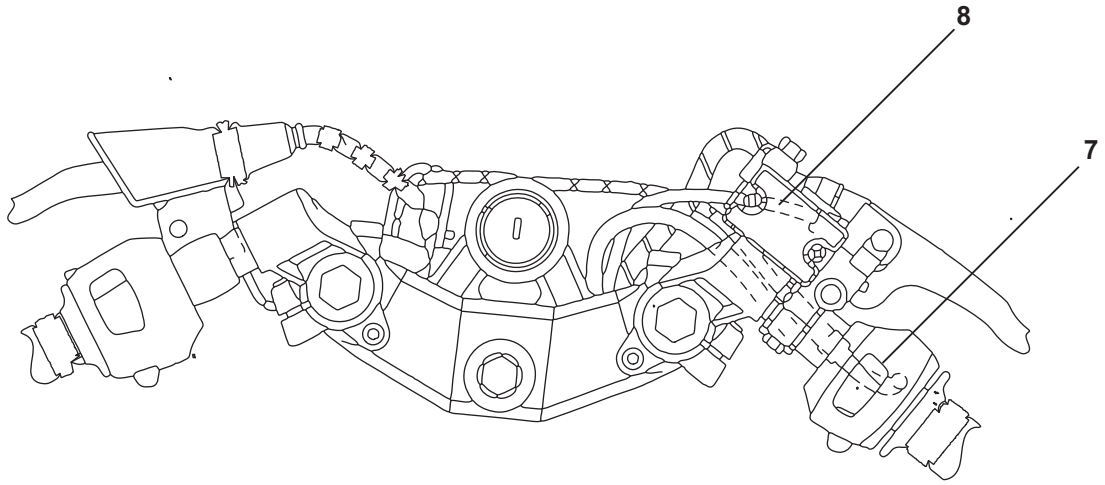

1. Head Light lead wire clamp.
2. Front flasher lead wire (left)
3. Head light lead wire
4. Meter harness
5. Auxiliary harness
6. Front flasher lead wire (right)
7. Right Handle bar switch lead wire
8. Brake switch lead wire

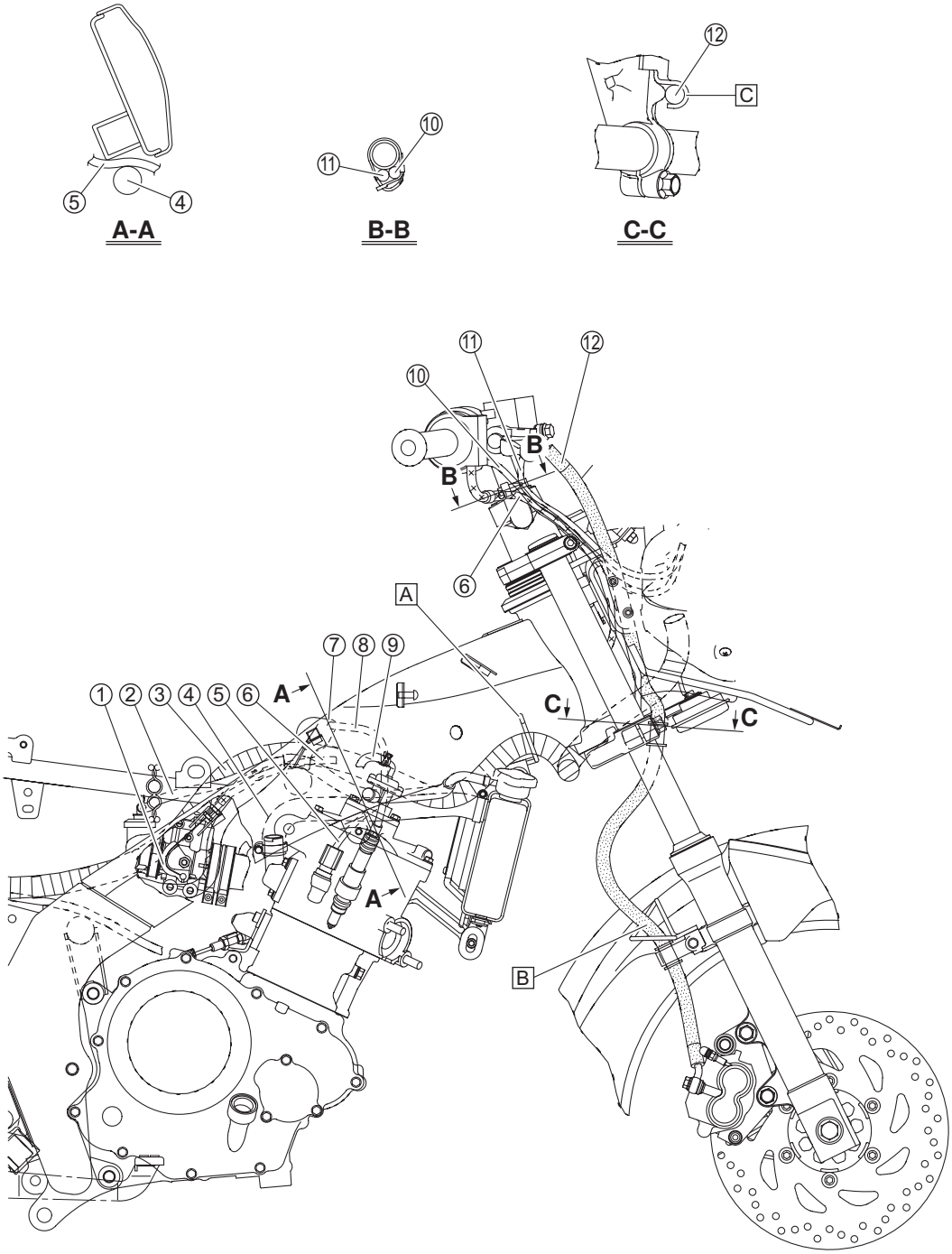
⑤
④
A-A
⑪
⑩
B-B
⑫
C
C-C
⑪
⑫
⑩
B
B
⑥
A
⑦ ⑧ ⑨
① ② ③ ④ ⑤ ⑥
A
C
C
A
B

1. Throttle body
2. Coolant reservoir hose
3. Wire harness
4. Radiator inlet hose
5. Coolant temperature sensor lead
6. Throttle cable
7. Ignition coil
8. Spark plug lead
9. Air induction system vacuum hose
10. Right handlebar switch lead
11. Front brake light switch lead
12. Front brake hose

A. Pass the wire harness through the guide.
B. Pass the front brake hose through the guide.
C. Fasten the grommet of front brake hose on position between lower bracket and headlight bracket.

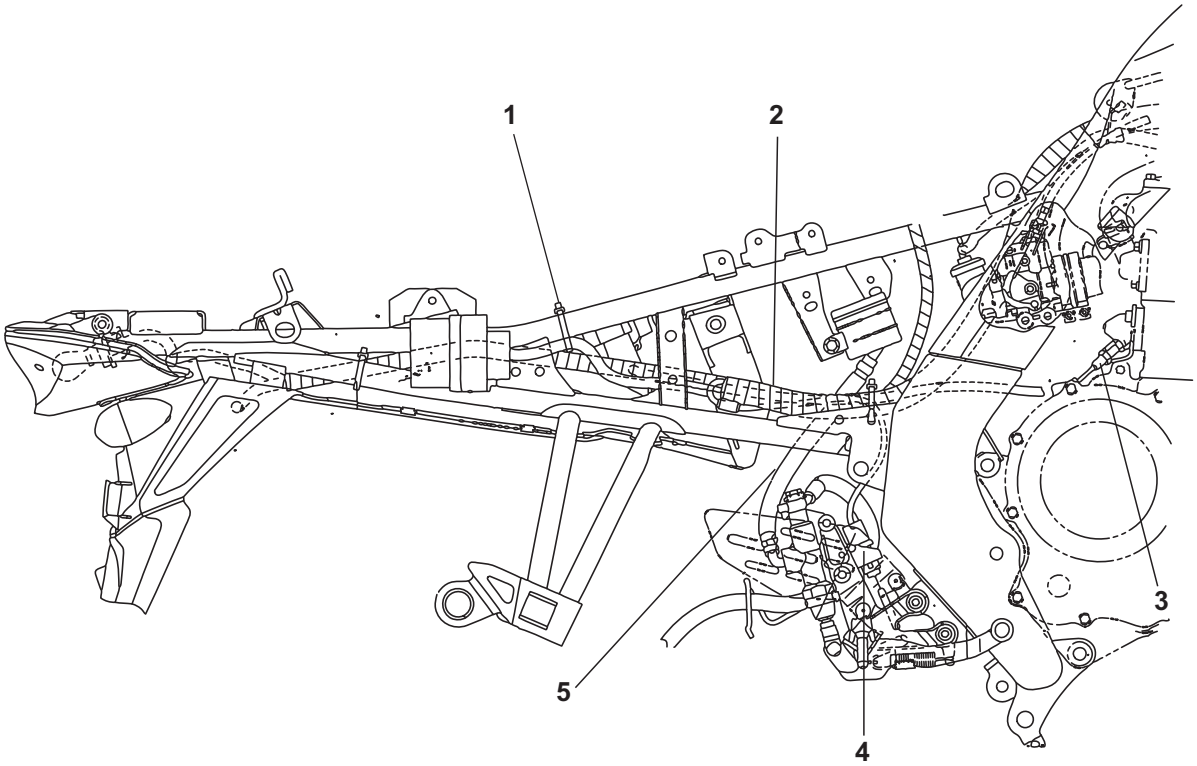
1
2
3
4
5

1. ECU wiring harness clamp
2. Wire harness
3. Starter motor lead
4. Rear brake light switch lead
5. Rear brake hose

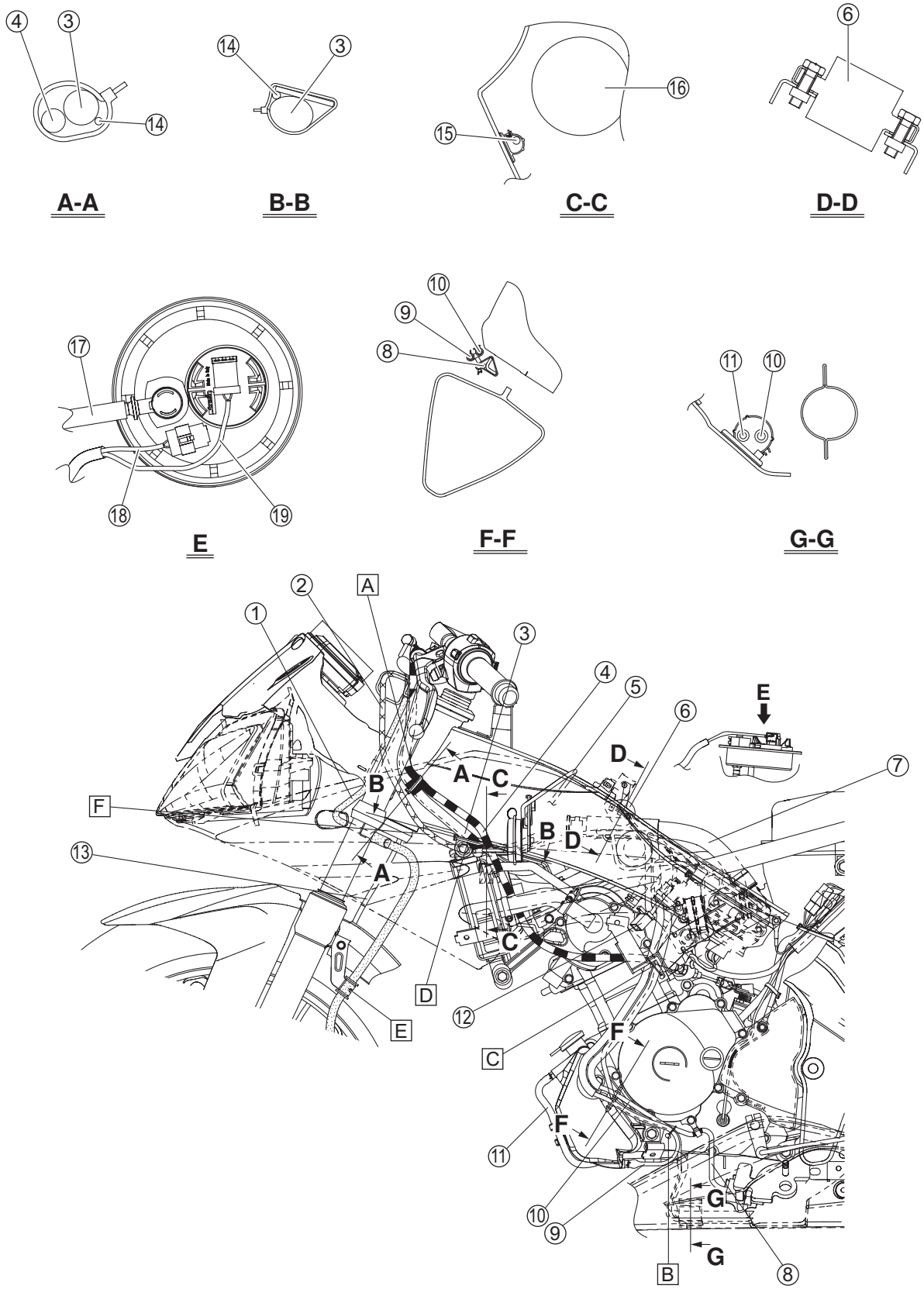
A-A
B-B
C-C
D-D
E
F-F
G-G

1. Front brake hose
2. Throttle cable
3. Left handlebar switch lead
4. Clutch cable
5. Wire harness (to horn)
6. Ignition coil
7. Air filter case silencer hose
8. Sidestand switch lead
9. Coolant reservoir hose
10. Fuel tank breather hose
11. Coolant reservoir breather hose
12. Front left turn signal light coupler
13. Speed sensor lead
14. Wire harness (to clutch switch)
15. Front left turn signal light lead
16. Horn
17. Fuel hose
18. Fuel pump lead
19. Fuel sender lead

A. Fasten the left handlebar switch lead, wire harness (to clutch switch), and clutch cable with a plastic locking tie, making sure to align the white tape on the leads and cable with the tie.

B. Fasten the sidestand switch lead, coolant reservoir hose, and fuel tank breather hose with the plastic clamp.

C. Fasten the sidestand switch lead, coolant reservoir hose, and fuel tank breather hose to the left side cowling bracket with the plastic clamp.

D. Fasten the wire harness (to clutch switch) and left handlebar switch lead to the left radiator bracket with a plastic locking tie, making sure to align the white tape on the harness and lead with the tie, and then route the harness and lead to the inside of the clutch cable guide.

E. Fasten the grommet on the front brake hose with the holder.

F. Route the throttle cable to the inside of the radiator bracket and pass the cable through the guide on the radiator cover.

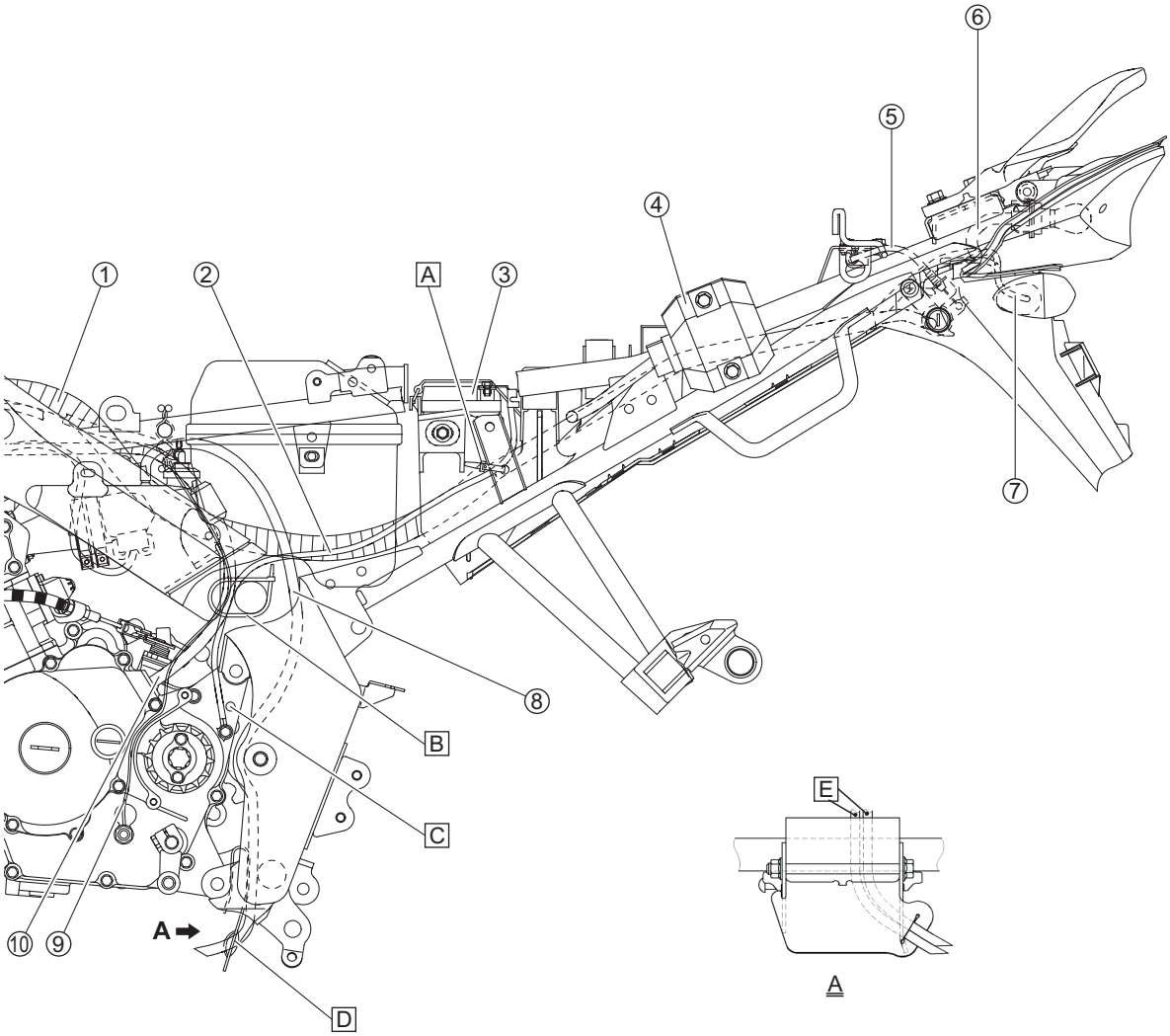
①
②
A
③
④
⑤
⑥
⑦
⑧
B
C
⑨
⑩
A ➡
D
E
A

1. Wire harness
2. Negative battery lead
3. Battery
4. Rectifier/regulator
5. Seat lock cable
6. Tail/brake light lead
7. Rear left turn signal light lead
8. Coolant reservoir breather hose
9. Neutral switch lead
10. Crankshaft position sensor/stator coil lead

A. Fasten the negative battery lead to the frame with the plastic locking tie. Do not cut off the excess end of the plastic locking tie.
B. Fasten the crankshaft position sensor/stator coil lead, neutral switch lead, and negative battery lead to the frame with the plastic locking tie. Do not cut off the excess end of the plastic locking tie.
C. Route the negative battery lead, along the front of the pin.
D. Pass the coolant reservoir breather hose and fuel drain pipe through the slit of the mud guard.
E. Pass the coolant reservoir breather hose and fuel drain pipe between the lower engine bracket.

ROUTING OF FUEL DRAIN PIPE

While servicing of the vehicle, pay attention to route the fuel drain pipe. It should not have any bend during fitment, any bend may result the poor performance of an engine caused by water entry into the fuel tank. To avoid the bend, follow the below mentioned sequence.

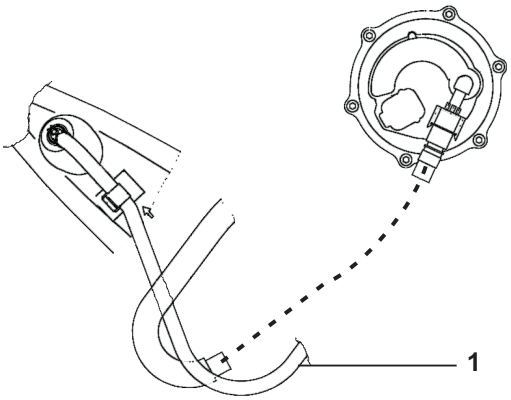

1. Pass the drain ”1” pipe across the fuel hose “2” as shown in illustration.

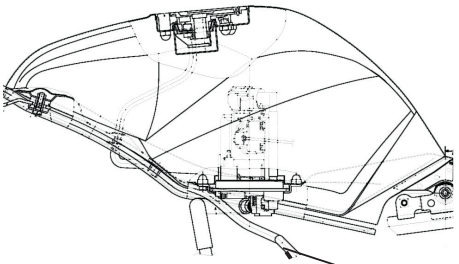

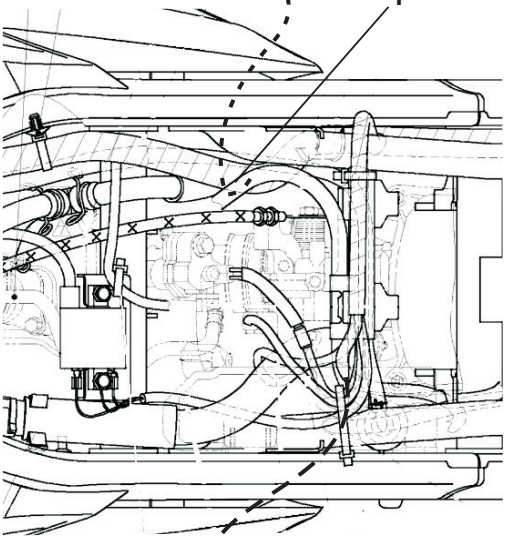

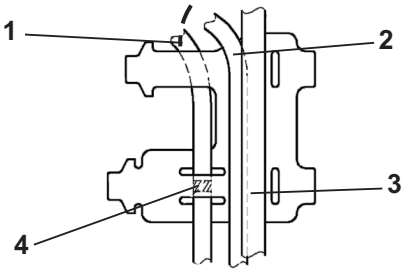

Pass the drain pipe “1” along with the recovery tank breather hose “2” from the slit at the frame comp “3” and adjust white paint “4” of fuel drain pipe “1” between these slits.

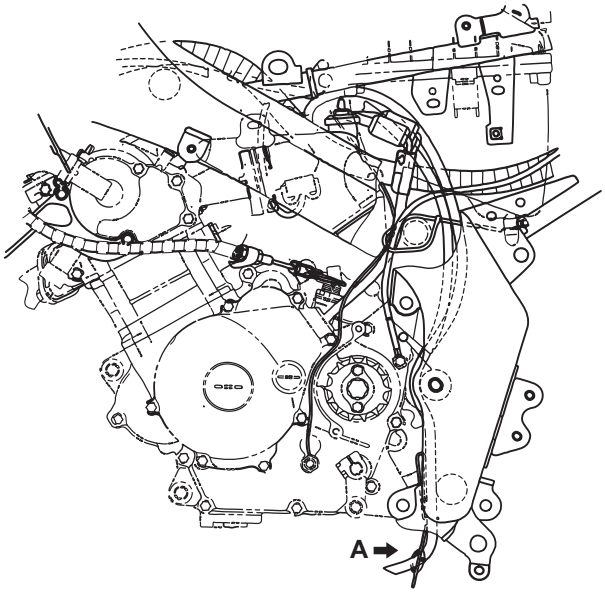

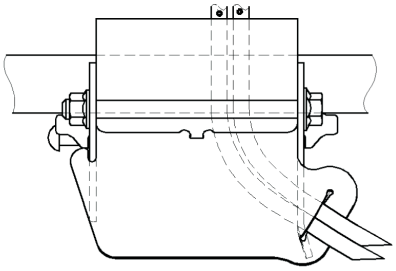

A

3. Pass the fuel drain pipe and recovery tank breather hose from the slit of the mud guard

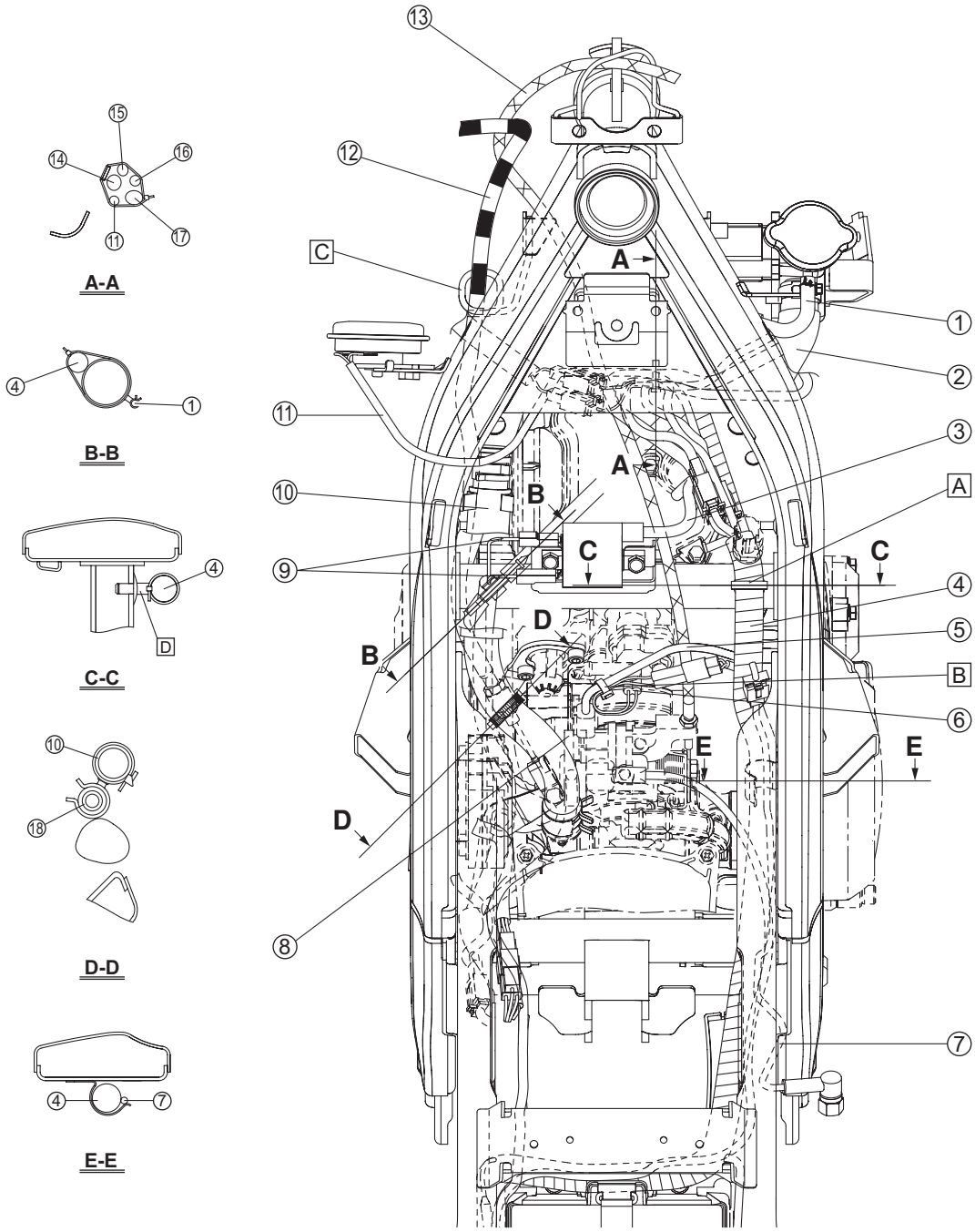
A-A
B-B
C-C
D-D
E-E
A
B
C
D
E
1
2
3
4
5
6
7
8
9
10
11
12
13
14
15
16
17
18

1. Coolant reservoir hose
2. Radiator inlet hose
3. Spark plug lead
4. Wire harness
5. FID (fast idle solenoid) lead
6. Fuel injector lead
7. Rear brake light switch lead
8. Throttle body sensor assembly
9. Ignition coil leads
10. Air filter case silencer hose
11. Wire harness (to horn)
12. Clutch cable
13. Throttle cable
14. Wire harness (to left handlebar switch)
15. Front brake light switch lead
16. Right handlebar switch lead
17. Main switch lead
18. Cylinder head breather hose

A. Fasten the wire harness with the plastic locking tie.
B. Fasten the fuel injector lead and FID (fast idle solenoid) lead with a plastic locking tie.
C. Pass the clutch cable through the guide.
D. Secure the plastic locking tie by inserting the projection on the tie into the hole in the frame.

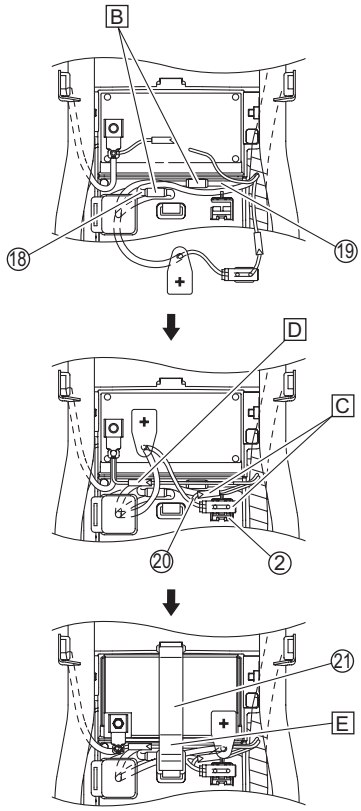
B
18
19
D
C
20
2
21
E

A

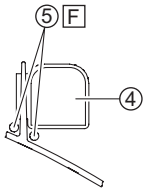
5
F
4

B-B

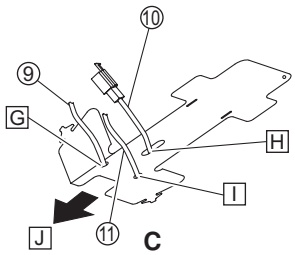
10
9
G
H
I
J
11
C

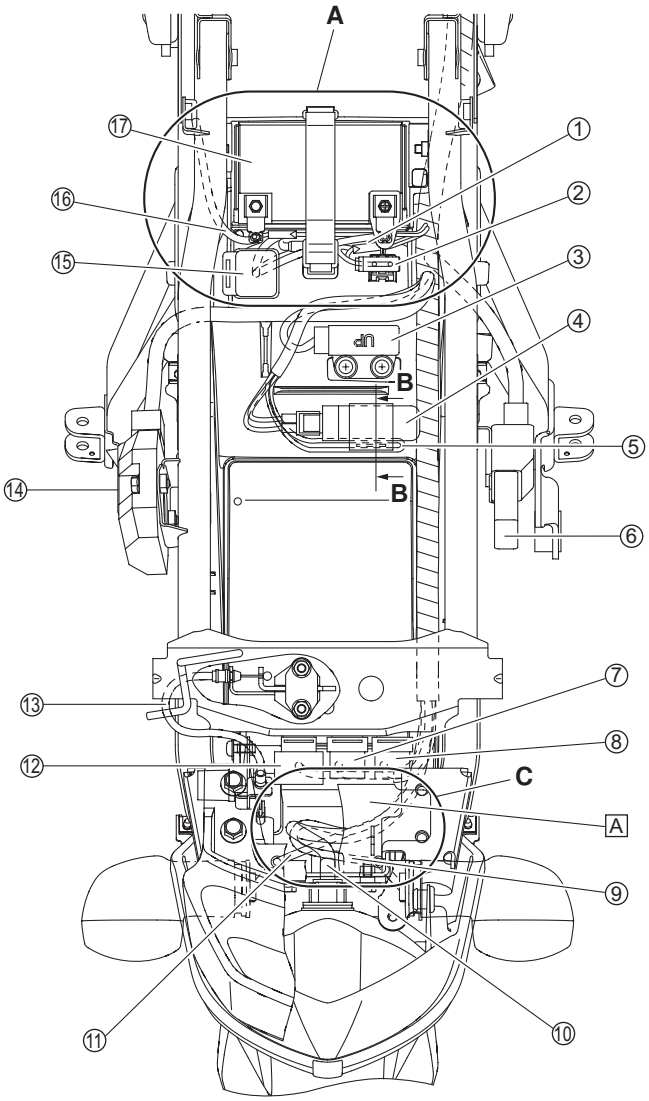
A
17
16
15
1
2
3
4
B
5
14
B
6
13
7
8
12
C
A
9
11
10

1. Positive battery lead
2. Fuse box
3. Lean angle sensor
4. Condenser
5. Self-diagnosis signal lead
6. ECU (engine control unit)
7. Radiator fan motor relay
8. Starting circuit cut-off relay
9. Rear right turn signal light lead
10. Tail/brake light lead
11. Rear left turn signal light lead
12. Turn signal relay
13. Seat lock cable
14. Rectifier/regulator
15. Starter relay
16. Negative battery lead
17. Battery
18. Starter relay lead
19. Starter motor lead
20. Fuse box lead
21. Battery band

A. Cover the tail/brake light lead and rear turn signal leads with the connector cover.
B. Push the starter motor lead and starter relay lead down into the space between the battery and the fender.
C. Install the fuse box, and then route the fuse box lead on top of the starter motor lead and starter relay lead.
D. Connect the negative battery lead to the wire harness, and then position the connector in the location shown in the illustration.
E. Install the battery, and then fasten all of the leads and the battery with the battery band.
F. Route the self-diagnosis signal lead under the condenser and around the condenser bracket.
G. Pass the rear right turn signal light lead through the hole in the connector cover.
H. Pass the tail/brake light lead through the hole in the connector cover.
I. Pass the rear left turn signal light lead through the hole in the connector cover.
J. Forward

PERIODIC CHECKS AND ADJUSTMENTS

PERIODIC MAINTENANCE

INTRODUCTION

This chapter includes all information necessary to perform recommended checks and adjustments. If followed, these preventive maintenance procedures will ensure more reliable vehicle operation, a longer service life and reduce the need for costly overhaul work. This information applies to vehicles already in service as well as to new vehicles that are being prepared for sale. All service technicians should be familiar with this entire chapter.

PERIODIC MAINTENANCE AND LUBRICATION INTERVALS

NO.		ITEM	CHECK OR MAINTENANCE JOB	ODOMETER READING (x 1000 km)					
				1	3	6	9	12	15
1	*	**Fuel line**	• Check fuel hoses for cracks or damage.		√	√	√	√	√
2		**Spark plug**	• Check condition. • Clean and reset the gap			√		√	
			• Replace.	**Every 12000 km**					
3	*	**Valves**	• Check valve clearance. • Adjust.			√		√	
4	*	**Air filter element**	• Clean.		√	√	√	√	√
			• Replace.	**Every 12000 km**					
5	*	**Battery**	• Check Battery output voltage		√	√	√	√	√
6		**Clutch**	• Check operation. • Adjust. • Lubricate Lever	√	√	√	√	√	√
7	*	**Front brake**	• Check operation, fluid level and vehicle for fluid leakage.	√	√	√	√	√	√
			• Replace brake pads.	Whenever worn to the limit					
8		**Rear brake**	• Check operation, fluid level and vehicle for fluid leakage.	√	√	√	√	√	√
			• Replace brake pads.	Whenever worn to the limit					
9	*	**Brake lines**	• Check for cracks or damage.		√	√	√	√	√
			• Replace.	Every 4 years					
10	*	**Wheels**	• Check runout and for damage.		√	√	√	√	√
11	*	**Tyres**	• Check tread depth and for damage. • Replace if necessary. • Check air pressure. • Correct if necessary.		√	√	√	√	√
12	*	**Wheel bearings**	• Check bearing for looseness or damage.		√	√	√	√	√
13	*	**Swingarm**	• Check operation and for excessive play.	√	√	√	√	√	√
			• Lubricate with lithium-soap-based grease.	Every 12000 km					
14		**Drive chain**	• Check chain slack, alignment and condition. • Adjust and thoroughly lubricate chain.	Every 500 km and after washing the motorcycle or riding in the rain					

NO.		ITEM	CHECK OR MAINTENANCE JOB	ODOMETER READING (x 1000 km)					
				1	3	6	9	12	15
15	*	Steering bearings	• Check bearing play and steering for roughness.	√	√	√	√	√	√
			• Lubricate with lithium-soap-based grease.		Every 12000 km				
16	*	Chassis fasteners	• Make sure that all nuts, bolts and screws are properly tightened.		√	√	√	√	√
17		Sidestand	• Check operation. • Lubricate.		√	√	√	√	√
18	*	Front fork	• Check operation and for oil leakage		√	√	√	√	√
19	*	Shock absorber assembly	• Check operation and shock absorber for oil leakage.		√	√	√	√	√
20	*	Injector	• Check operation. • Adjust engine idling speed.	√	√	√	√	√	√
21	*	Engine oil	• Change. • Check oil level and vehicle for oil leakage.	√	√	√	√	√	√
22		Engine oil filter element	• Replace.	√	Every 10000 km (on odometer)				
23		Cooling system	• Check coolant level and vehicle for coolant leakage.	√	√	√	√	√	√
			• Change coolant	Every 2 Years					
24		Front and rear brake switches	• Check operation	√	√	√	√	√	√
25	*	Moving parts and cables	• Lubricate.		√	√	√	√	√
26	*	Throttle grip housing and cable	• Check operation and free play. • Adjust the throttle cable free play if necessary. • Lubricate the throttle grip housing and cable.		√	√	√	√	√
27	*	Air induction system	• Check the air cut-off valve, reed valve, and hose for damage. • Replace any damaged parts if necessary.		√	√	√	√	√
28	*	Lights, signals and switches	• Check operation. • Adjust headlight beam (if necessary).	√	√	√	√	√	√

NOTE:

- The air filter needs more frequent service if you are riding in unusually wet or dusty areas.
- Hydraulic brake service
  - Regularly check and, if necessary, correct the brake fluid level.
  - Every two years replace the internal components of the brake master cylinder and caliper, and change the brake fluid.
  - Replace the brake hoses every four years and if cracked or damaged.

ENGINE

ADJUSTING THE VALVE CLEARANCE

The following procedure applies to all of the valves.

NOTE:

- Valve clearance adjustment should be made on a cold engine, at room temperature.
- When the valve clearance is to be measured or adjusted, the piston must be at top dead center (TDC) on the compression stroke.

1. Remove:
   - Front panels
   - Seat
     Refer to “GENERAL CHASSIS” on page 4-1.
   - Fuel tank
     Refer to “FUEL TANK” on page 7-1.
2. Disconnect:
   - Spark plug cap
   - Air induction system vacuum hose
   - Air induction system hose (3-way joint to air cut-off valve)
     Refer to “AIR INDUCTION SYSTEM” on page 7-9.
3. Remove:
   - Air cut-off valve
   - Reed valve
   - Reed valve plate
     Refer to “AIR INDUCTION SYSTEM” on page 7-9.
   - Cylinder head cover
   - Cylinder head cover gasket
     Refer to “CYLINDER HEAD” on page 5-6.
4. Remove:
   - Timing mark accessing screw “1”
   - Crankshaft end accessing screw “2”

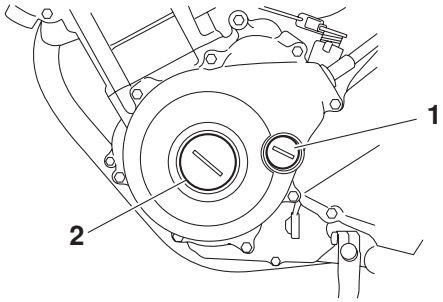

5. Measure:
   - Valve clearance
     Out of specification → Adjust.

Valve clearance (cold)
Intake
0.10–0.14 mm
Exhaust
0.20–0.24 mm

a. Turn the crankshaft counterclockwise.
b. Align the TDC mark “a” on the magnero rotor with the stationary pointer “b” on the magneto cover.

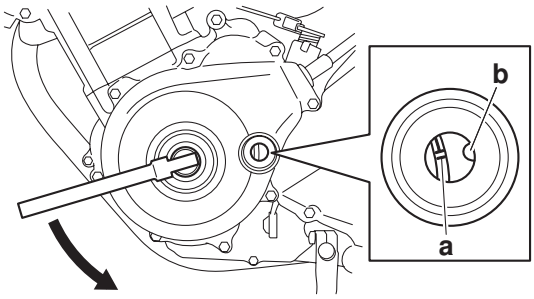

c. Check that the cam lobes are positioned as shown in the illustration.

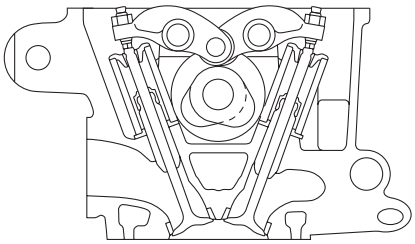

d. Measure the valve clearance with a thickness gauge “1”.
   Out of specification → Adjust.

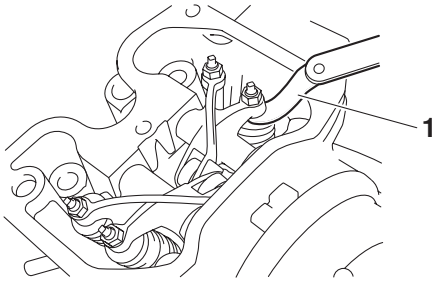

6. Adjust:
   - Valve clearance

a. Loosen the locknut “1”.
b. Insert a thickness gauge “2” between the end of the adjusting screw and the valve tip.

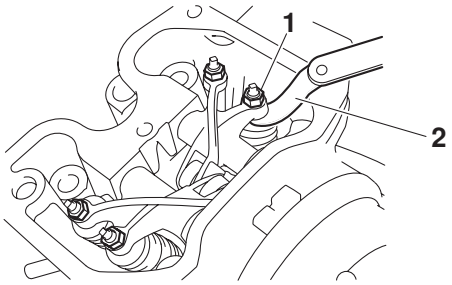

c. Turn the adjusting screw “3” in direction “a” or “b” until the specified valve clearance is obtained.

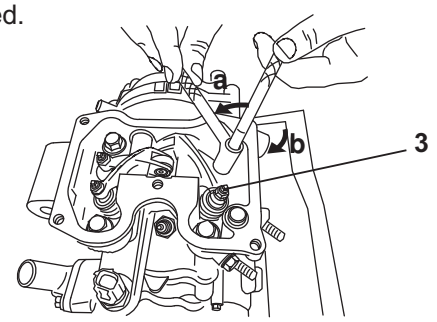

Direction “a”
Valve clearance is increased.
Direction “b”
Valve clearance is decreased.

Tappet screw holder
YSST-706
Tappet adjusting socket
YSST-706A

- Hold the adjusting screw to prevent it from moving and tighten the locknut to specification.

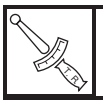

Locknut
7 Nm (0.7 m·kg, 5.1 ft·lb)

d. Measure the valve clearance again.
e. If the valve clearance is still out of specification, repeat all of the valve clearance adjustment steps until the specified clearance is obtained.

▼▼▼▼▼▼▼▼▼▼▼▼▼▼▼▼▼▼▼▼▼▼▼▼▼▼▼▼

7. Install:
   - Crankshaft end accessing screw (along with the O-ring New)
   - Timing mark accessing screw (along with the O-ring New)
8. Install:
   - Cylinder head cover gasket New
   - Cylinder head cover
     Refer to “CYLINDER HEAD” on page 5-6.
   - Reed valve plate
   - Reed valve
   - Air cut-off valve
     Refer to “AIR INDUCTION SYSTEM” on page 7-9.
9. Connect:
   - Air induction system hose (3-way joint to air cut-off valve)
   - Air induction system vacuum hose
     Refer to “AIR INDUCTION SYSTEM” on page 7-9.
   - Spark plug cap
10. Install:
   - Fuel tank
     Refer to “FUEL TANK” on page 7-1.
   - Seat
   - Front panels
     Refer to “GENERAL CHASSIS” on page 4-1.

ADJUSTING THE ENGINE IDLING SPEED

NOTE:

Prior to adjusting the engine idling speed, the air filter element should be clean, and the engine should have adequate compression.

1. Start the engine and let it warm up for several minutes.
2. Remove:
   - Seat
     Refer to “GENERAL CHASSIS” on page 4-1.
3. Lift the front of the fuel tank. (Do not disconnect the fuel hose.)
4. Install:
   - Digital tachometer
     (onto the spark plug lead)
5. Check:
   - Engine idling speed
     Out of specification → Adjust.

Engine idling speed
1300–1500 r/min

6. Remove:
   - Right side panel
     Refer to “GENERAL CHASSIS” on page 4-1.
7. Adjust:
   - Engine idling speed

▼▼▼▼▼▼▼▼▼▼▼▼▼▼▼▼▼▼▼▼▼▼▼▼▼▼

a. Turn the pilot screw “1” in direction “a” or “b” until the specified engine idling speed is obtained.

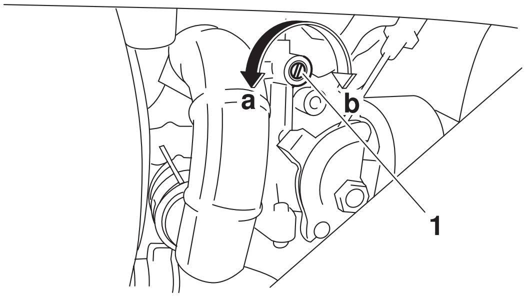

Direction “a”
Engine idling speed is increased.
Direction “b”
Engine idling speed is decreased.

▲▲▲▲▲▲▲▲▲▲▲▲▲▲▲▲▲▲▲▲▲▲▲▲▲▲

8. Remove:
   - Digital tachometer
9. Install:
   - Fuel tank
     Refer to “FUEL TANK” on page 7-1.
   - Seat
     Refer to “GENERAL CHASSIS” on page 4-1.
10. Install:
    - Right side panel
      Refer to “GENERAL CHASSIS” on page 4-1.
11. Adjust:
    - Throttle cable free play
      Refer to “ADJUSTING THE THROTTLE CABLE FREE PLAY” on page 3-6.

Throttle cable free play
3.0–5.0 mm

ADJUSTING THE EXHAUST GAS VOLUME

NOTE:

Be sure to set the CO density level to standard, and then adjust the exhaust gas volume.

1. Remove:
   - Seat
     Refer to “GENERAL CHASSIS” on page 4-1.
2. Turn the main switch to “OFF”.
3. Disconnect:
   - Self-diagnosis signal connector “1”
4. Connect:
   - FI diagnostic tool “2”

FI diagnostic tool

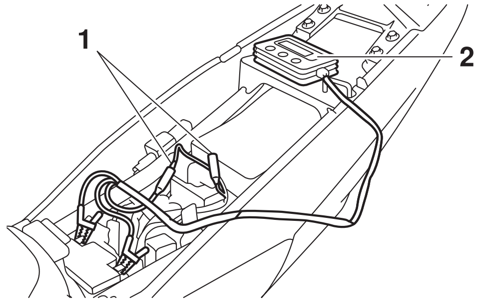

5. While press the “MODE” button “1”, turn the main switch to “ON”.

NOTE:

- “DIAG” appears on the LCD “2” of the FI diagnostic tool.
- “POWER” LED (Green) “3” comes on.

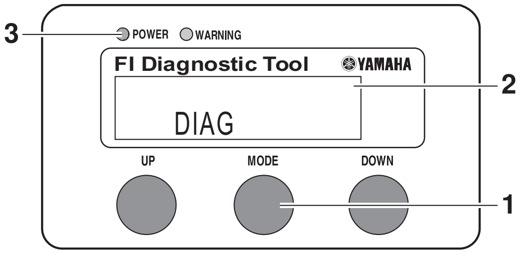

6. Press the “UP” button to select the CO adjustment mode “CO” or the diagnostic mode “DIAG”.
7. After selecting “CO”, press the “MODE” button.
8. Check that “C1” appears on the LCD of the FI diagnostic tool, and then press the “MODE” button.
9. Start the engine.

CAUTION:

Perform the adjustment after the battery has been sufficiently charged.

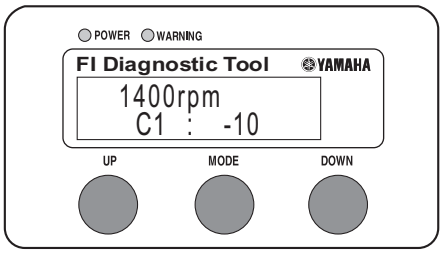

10. Change the CO adjustment volume by pressing the “UP” and “DOWN” buttons.

NOTE:

The CO adjustment volume and engine idling speed appears on the LCD of the FI diagnostic tool.

- To decrease the CO adjustment volume, press the “DOWN” button.
- To increase the CO adjustment volume, press the “UP” button.

11. Release the “DOWN” and “UP” buttons to execute the selection.
12. Set the main switch to “OFF” to cancel the mode.
13. Disconnect:
    - FI diagnostic tool
14. Connect:
    - Self-diagnosis signal connector
15. Install:
    - Seat
      Refer to “GENERAL CHASSIS” on page 4-1.

ADJUSTING THE THROTTLE CABLE FREE PLAY

NOTE:

Prior to adjusting the throttle cable free play, the engine idling speed should be adjusted.

1. Check:
   - Throttle cable free play “a”
     Out of specification → Adjust.

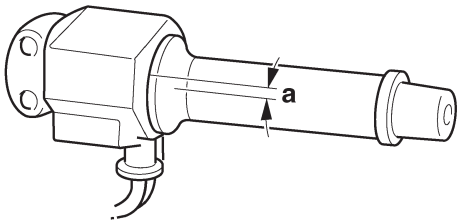

Throttle cable free play
3.0–5.0 mm

2. Adjust:
   - Throttle cable free play

▼▼▼▼▼▼▼▼▼▼▼▼▼▼▼▼▼▼▼▼▼▼▼▼▼▼

Throttle body side

a. Loosen the locknut “1” on the accelerator cable.
b. Turn the adjusting nut “2” in direction “a” or “b” until the specified throttle cable free play is obtained.

Direction “a”
Throttle cable free play is increased.
Direction “b”
Throttle cable free play is decreased.

c. Tighten the locknut.

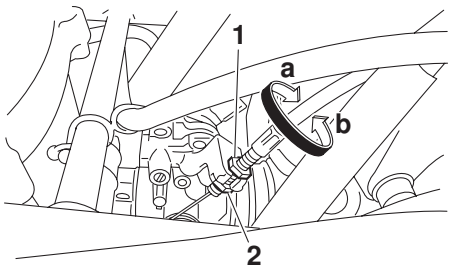

NOTE:

If the specified throttle cable free play cannot be obtained on the throttle body side of the cable, use the adjusting nut on the handlebar side.

▲▲▲▲▲▲▲▲▲▲▲▲▲▲▲▲▲▲▲▲▲▲▲▲▲▲

▼▼▼▼▼▼▼▼▼▼▼▼▼▼▼▼▼▼▼▼▼▼▼▼▼▼

Handlebar side

a. Slide back the rubber cover “1”
b. Loosen the locknut “2”.
c. Turn the adjusting nut “3” in direction “a” or “b” until the specified throttle cable free play is obtained.

Direction “a”
Throttle cable free play is increased.
Direction “b”
Throttle cable free play is decreased.

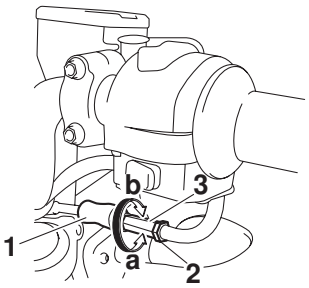

d. Tighten the locknut
e. Slide the rubber cover to its original position.

WARNING

After adjusting the throttle cable free play, start the engine and turn the handlebar to the right or left to ensure that this does not cause the engine idling speed to change.

▲▲▲▲▲▲▲▲▲▲▲▲▲▲▲▲▲▲▲▲▲▲▲▲▲▲

CHECKING THE SPARK PLUG

1. Remove:
   - Right front panel
     Refer to “GENERAL CHASSIS” on page 4-1.
2. Disconnect:
   - Spark plug cap
3. Remove:
   - Spark plug

CAUTION:

Before removing the spark plug, blow away any dirt accumulated in the spark plug well with compressed air to prevent it from falling into the cylinder.

4. Check:
   - Spark plug type
     Incorrect → Change.
5. Check:
   - Electrode “1”
     Damage/wear → Replace the spark plug.
   - Insulator “2”
     Abnormal color → Replace the spark plug.
     Normal color is medium-to-light tan.
6. Clean:
   - Spark plug
     (with a spark plug cleaner or wire brush)
7. Measure:
   - Spark plug gap “a”
     (with a wire thickness gauge)
     Out of specification → Regap.

	**Spark plug gap** **0.7–0.8 mm**

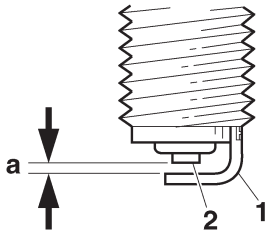

8. Install:
   - Spark plug

	**Spark plug** **13 Nm (1.3 m·kg, 9.4 ft·lb)**

NOTE:

Before installing the spark plug, clean the spark plug and gasket surface.

9. Connect:
   - Spark plug cap
10. Install:
    - Right front panel
      Refer to “GENERAL CHASSIS” on page 4-1.

CHECKING THE IGNITION TIMING

NOTE:

Prior to checking the ignition timing, check the wiring connections of the entire ignition system. Make sure all connections are tight and free of corrosion.

1. Remove:
   - Timing mark accessing screw “1”

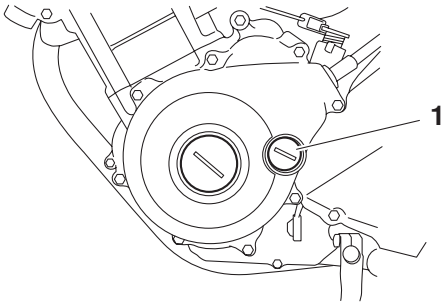

2. Remove:
   - Seat
     Refer to “GENERAL CHASSIS” on page 4-1.
3. Lift the front of the fuel tank. (Do not disconnect the fuel hose.)
4. Connect:
   - Timing light “1”
   - Digital tachometer

Timing light

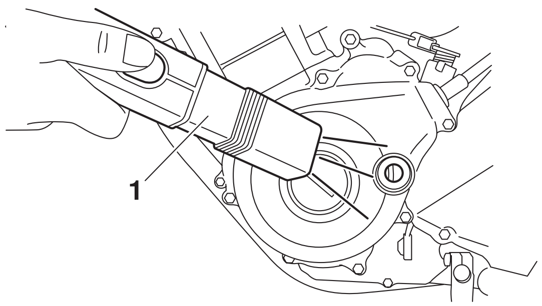

5. Check:
   - Ignition timing

▼▼▼▼▼▼▼▼▼▼▼▼▼▼▼▼▼▼▼▼▼▼▼▼▼▼

a. Start the engine, warm it up for several minutes, and then let it run at the specified engine idling speed.

Engine idling speed
1300–1500 r/min

b. Check that stationary pointer “a” in the magneto cover is within the firing range “b” on the magneto rotor.
   Incorrect firing range → Check the ignition system.

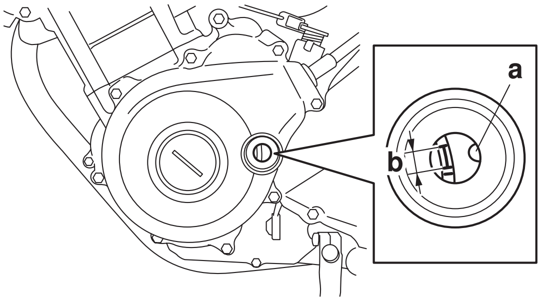

NOTE:

The ignition timing is not adjustable.

▲▲▲▲▲▲▲▲▲▲▲▲▲▲▲▲▲▲▲▲▲▲▲▲▲▲

6. Remove:
   - Digital tachometer
   - Timing light
7. Install:
   - Fuel tank
     Refer to “FUEL TANK” on page 7-1.
   - Seat
     Refer to “GENERAL CHASSIS” on page 4-1.
8. Install:
   - Timing mark accessing screw
     (along with the O-ring New)

MEASURING THE COMPRESSION PRESSURE

NOTE:

Insufficient compression pressure will result in a loss of performance.

1. Measure:
   - Valve clearance
     Out of specification → Adjust.
     Refer to “ADJUSTING THE VALVE CLEARANCE” on page 3-3.
2. Start the engine, warm it up for several minutes, and then turn it off.
3. Remove:
   - Right front panel
     Refer to “GENERAL CHASSIS” on page 4-1.
4. Disconnect:
   - Spark plug cap
5. Remove:
   - Spark plug

CAUTION:

Before removing the spark plug, use compressed air to blow away any dirt accumulated in the spark plug wells to prevent it from falling into the cylinder.

6. Remove:
   - Seat
     Refer to “GENERAL CHASSIS” on page 4-1.
7. Lift the front of the fuel tank. (Do not disconnect the fuel hose.)
8. Install:
   - Compression gauge “1”

Compression gauge

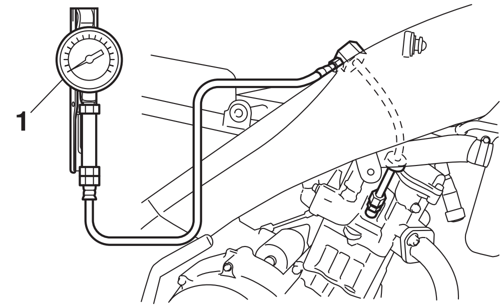

9. Measure:
   - Compression pressure
     Out of specification → Refer to steps (c) and (d).

Standard compression pressure
55 Psi (3.866 kg/cm²)

▼▼▼▼▼▼▼▼▼▼▼▼▼▼▼▼▼▼▼▼▼▼▼▼▼▼▼▼▼

a. Set the main switch to ON”.
b. With the throttle wide open, crank the engine until the reading on the compression gauge stabilizes.
c. If the compression pressure is above the maximum specification, check the cylinder head, valve surfaces and piston crown for carbon deposits.
   Carbon deposits → Eliminate.
d. If the compression pressure is below the minimum specification, pour a teaspoonful of engine oil into the spark plug bore and measure again.
   Refer to the following table.

Compression pressure (with oil applied into the cylinder)	
Reading	Diagnosis
Higher than without oil	Piston ring(s) wear or damage → Repair.
Same as without oil	Piston, valves, cylinder head gasket or piston possibly defective → Repair.

▲▲▲▲▲▲▲▲▲▲▲▲▲▲▲▲▲▲▲▲▲▲▲▲▲▲▲▲▲

10. Remove:
    - Compression gauge
11. Install:
    - Fuel tank
      Refer to “FUEL TANK” on page 7-1.
    - Seat
      Refer to “GENERAL CHASSIS” on page 4-1.
12. Install:
    - Spark plug

Spark plug
13 Nm (1.3 m·kg, 9.4 ft·lb)

13. Connect:
    - Spark plug cap
14. Install:
    - Right front panel
      Refer to “GENERAL CHASSIS” on page 4-1.

CHECKING THE ENGINE OIL LEVEL

1. Stand the vehicle on a level surface.

NOTE:
- Place the vehicle on the centerstand.
- Make sure the vehicle is upright.

2. Start the engine, warm it up for several minutes, and then turn it off.
3. Check:
   - Engine oil level
     The engine oil level should be between the minimum level mark “a” and maximum level mark “b”.
     Below the minimum level mark → Add the recommended engine oil to the proper level.

NOTE:
- Before checking the engine oil level, wait a few minutes until the oil has settled.
- Do not screw the dipstick “1” in when checking the oil level.

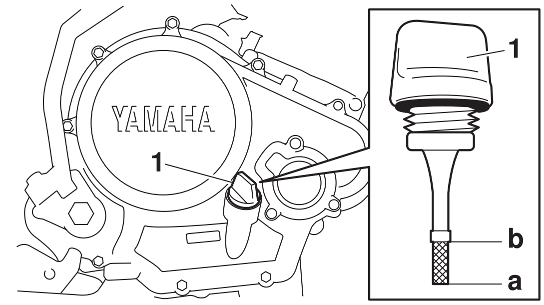

Type
SAE20W40 (YAMALUBE-4 stroke motor oil)

CAUTION:

Do not allow foreign materials to enter the crankcase.

4. Start the engine, warm it up for several minutes, and then turn it off.
5. Check the engine oil level again.

NOTE:

Before checking the engine oil level, wait a few minutes until the oil has settled.

CHANGING THE ENGINE OIL

1. Start the engine, warm it up for several minutes, and then turn it off.
2. Place a container under the engine oil drain bolt.
3. Remove:
   - Engine oil filler cap “1”
   - Engine oil drain plug “2”
   - O-ring “3”
   - Spring “4”
   - Engine oil strainer “5”

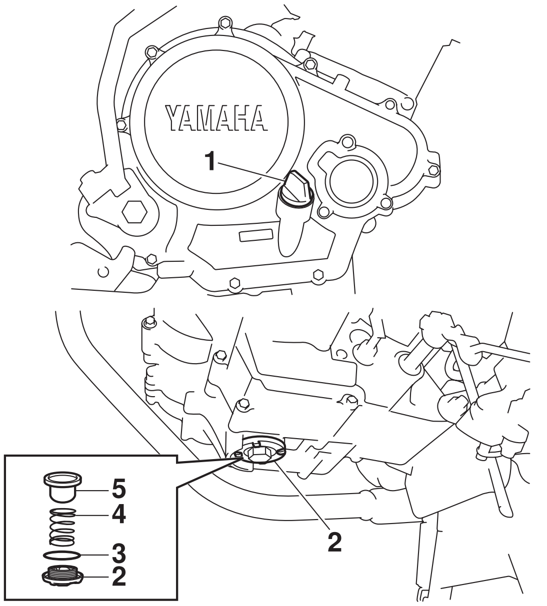

4. Drain:
   - Engine oil
     (completely from the crankcase)
5. If the oil filter element is also to be replaced, perform the following procedure.

▼▼▼▼▼▼▼▼▼▼▼▼▼▼▼▼▼▼▼▼▼▼▼▼▼▼▼

a. Remove the oil filter element cover “1” and oil filter element “2”.
b. Install new O-ring “3”.

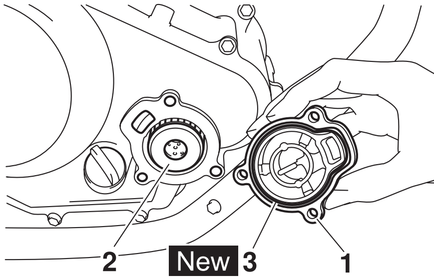

c. Install the new oil filter element and the oil filter element cover.

Oil filter element cover bolt
10 Nm (1.0 m·kg, 7.2 ft·lb)

▲▲▲▲▲▲▲▲▲▲▲▲▲▲▲▲▲▲▲▲▲▲▲▲▲▲▲

6. Check:
   - Engine oil strainer
     Dirt → Clean
7. Install:
   - Engine oil strainer
   - Spring
   - O-ring New
   - Engine oil drain plug

Engine oil drain plug
32 Nm (3.2 m·kg, 23 ft·lb)

8. Fill:
   - Crankcase
     (with the specified amount of the recommended engine oil)

Engine oil quantity
Total amount
1.15 L
Without oil filter element replacement
0.95 L
With oil filter element replacement
1.00 L

9. Install:
   - Engine oil filler cap
10. Start the engine, warm it up for several minutes, and then turn it off.
11. Check:
    - Engine
      (for engine oil leaks)

12. Check:
- Engine oil level
  Refer to “CHECKING THE ENGINE OIL LEVEL” on page 3-9.

13. Check:
- Engine oil pressure

▼▼▼▼▼▼▼▼▼▼▼▼▼▼▼▼▼▼▼▼▼▼▼▼▼▼

a. Slightly loosen the oil check bolt “1”.

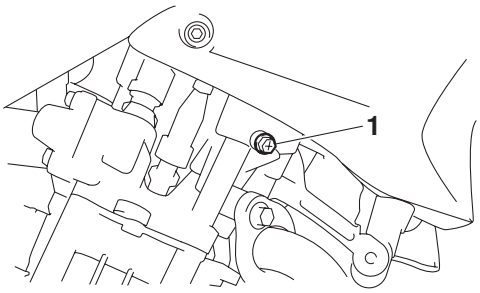

b. Start the engine and keep it idling until engine oil starts to seep from the oil check bolt. If no engine oil comes out after one minute, turn the engine off so that it will not seize.
c. Check the engine oil passages, the oil filter element and the oil pump for damage or leakage. Refer to “OIL PUMP” on page 5-49.
d. Start the engine after solving the problem(s) and check the engine oil pressure again.
e. Tighten the oil check bolt to specification.

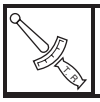	**Oil check bolt** **7 Nm (0.7 m·kg, 5.1 ft·lb)**

▲▲▲▲▲▲▲▲▲▲▲▲▲▲▲▲▲▲▲▲▲▲▲▲▲▲

ADJUSTING THE CLUTCH CABLE FREE PLAY

1. Check:
- Clutch cable free play “a”
  Out of specification → Adjust.

	**Clutch lever free play** **10.0–15.0 mm**

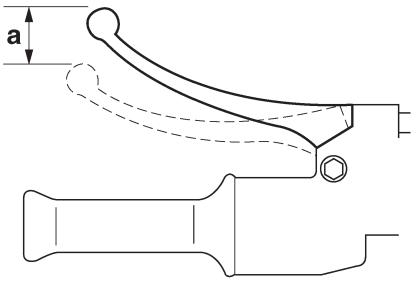

2. Adjust:
- Clutch cable free play

Handlebar side

a. Pull back the rubber cover “1”
b. Loosen the locknut “2”.
c. Turn the adjusting bolt “3” in direction “a” or “b” until the specified clutch cable free play is obtained.

Direction “a”
Clutch cable free play is increased.
Direction “b”
Clutch cable free play is decreased.

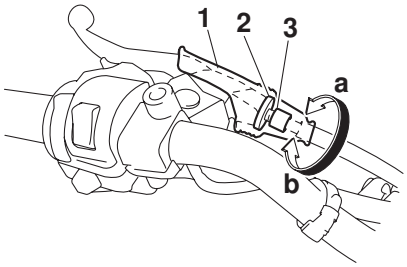

d. Tighten the locknut.
e. Place the rubber cover in its original position.

NOTE:

If the specified clutch cable free play cannot be obtained on the handlebar side of the cable, use the adjusting nut on the engine side.

▲▲▲▲▲▲▲▲▲▲▲▲▲▲▲▲▲▲▲▲▲▲▲▲▲▲

▼▼▼▼▼▼▼▼▼▼▼▼▼▼▼▼▼▼▼▼▼▼▼▼▼▼

Engine side

a. Loosen the locknut “1”.
b. Turn the adjusting nut “2” in direction “a” or “b” until the specified clutch cable free play is obtained.

Direction “a”
Clutch cable free play is increased.
Direction “b”
Clutch cable free play is decreased.

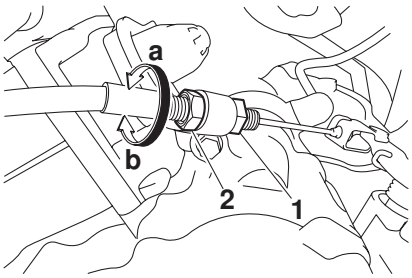

c. Tighten the locknut.

	**Locknut** **7 Nm (0.7 m·kg, 5.1 ft·lb)**

▲▲▲▲▲▲▲▲▲▲▲▲▲▲▲▲▲▲▲▲▲▲▲▲▲

CLEANING THE AIR FILTER ELEMENT

NOTE:

There is a check hose "1" at the bottom of the air filter case. If dust and/or water collects in this hose, clean the air filter element and air filter case.

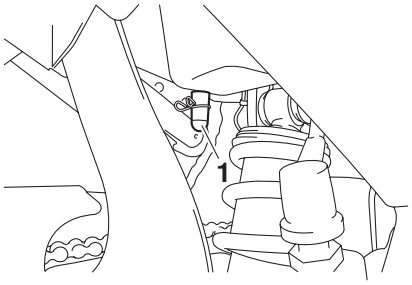

1. Remove:
   - Seat
     Refer to "GENERAL CHASSIS" on page 4-1.
   - Fuel tank
     Refer to "FUEL TANK" on page 7-1.
2. Remove:
   - Air filter case cover "1"
   - Air filter element

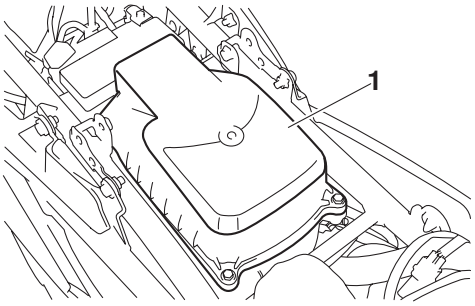

3. Clean:
   - Air filter element "1"
     Apply compressed air to the outer surface of the air filter element.

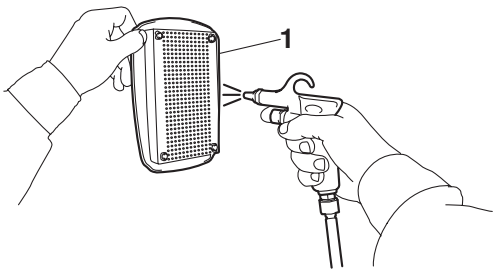

4. Check:
   - Air filter element
     Damage → Replace.
5. Install:
   - Air filter element
   - Air filter case cover
     (along with a gaskets)

CAUTION:

Never operate the engine without the air filter element installed. Unfiltered air will cause rapid wear of engine parts and may damage the engine. Operating the engine without the air filter element will also affect throttle body turning, leading to poor engine performance and possible overheating.

NOTE:

Make sure the air filter element is properly installed in the air filter case.

6. Install:
   - Fuel tank
     Refer to "FUEL TANK" on page 7-1.
   - Seat
     Refer to "GENERAL CHASSIS" on page 4-1.

CHECKING THE THROTTLE BODY JOINT AND AIR FILTER CASE JOINT

1. Remove:
   - Seat
     Refer to "GENERAL CHASSIS" on page 4-1.
   - Fuel tank
     Refer to "FUEL TANK" on page 7-1.
2. Check:
   - Throttle body joint "1"
   - Air filter case joint "2"
     Cracks/damage → Replace.

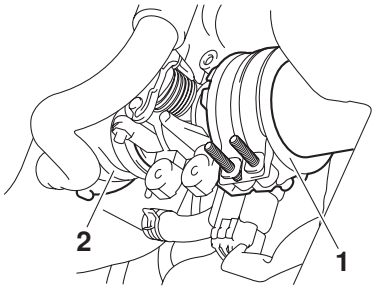

3. Install:
   - Fuel tank
     Refer to “FUEL TANK” on page 7-1.
   - Seat
     Refer to “GENERAL CHASSIS” on page 4-1.

CHECKING THE FUEL LINE

1. Remove:
   - Seat
     Refer to “GENERAL CHASSIS” on page 4-1.
   - Fuel tank
     Refer to “FUEL TANK” on page 7-1.
2. Check:
   - Fuel hose “1”
     Cracks/damage → Replace.
     Loose connection → Connect properly.

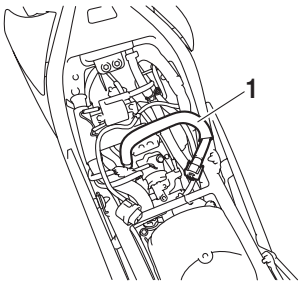

3. Install:
   - Fuel tank
     Refer to “FUEL TANK” on page 7-1.
   - Seat
     Refer to “GENERAL CHASSIS” on page 4-1.

CHECKING THE CYLINDER HEAD BREATHER HOSE

1. Remove:
   - Seat
     Refer to “GENERAL CHASSIS” on page 4-1.
   - Fuel tank
     Refer to “FUEL TANK” on page 7-1.
2. Check:
   - Cylinder head breather hose “1”
     Cracks/damage → Replace.
     Loose connection → Connect properly.

CAUTION:

Make sure the cylinder head breather hose is routed correctly.

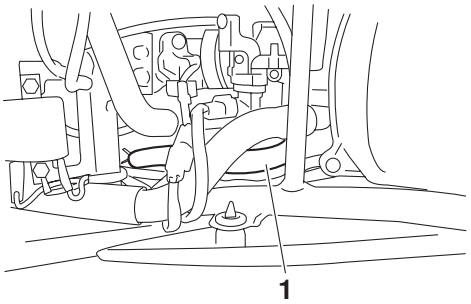

3. Install:
   - Fuel tank
     Refer to “FUEL TANK” on page 7-1.
   - Seat
     Refer to “GENERAL CHASSIS” on page 4-1.

CHECKING THE EXHAUST SYSTEM

1. Check:
   - Muffler “1”
     Cracks/damage → Replace.
   - Exhaust pipe gasket “2”
     Exhaust gas leaks → Replace.
2. Check:
   - Tightening torque
   - Muffler nuts “3”
   - Muffler bolt “4”

Muffler nut
15 Nm (1.5m.kg,11ft.lb)
Muffler bolt
20 Nm (2.0m.kg,15ft.lb)

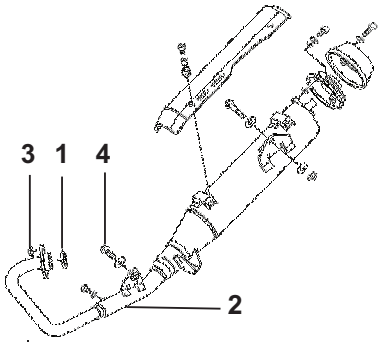

CHECKING THE COOLANT LEVEL

1. Stand the vehicle on a level surface.

NOTE:

- Place the vehicle on the centerstand.

- Make sure the vehicle is upright.

2. Check:
   - Coolant level
     The coolant level should be between the maximum level mark “a” and minimum level mark “b”.
     Below the minimum level mark → Add the recommended coolant to the proper level.

NOTE:

To access the coolant reservoir cap “1”, remove the left side cover. Refer to “GENERAL CHASSIS” on page 4-1.

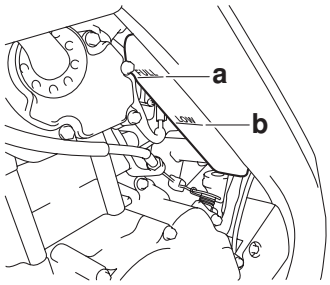

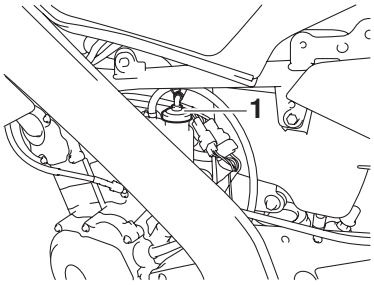

CAUTION:

- **Adding water instead of coolant lowers the antifreeze content of the coolant. If water is used instead of coolant check, and if necessary, correct the antifreeze concentration of the coolant.**
- **Use only distilled water. However, if distilled water is not available, soft water may be used.**

3. Start the engine, warm it up for several minutes, and then turn it off.
4. Check:
   - Coolant level

NOTE:

Before checking the coolant level, wait a few minutes until it settles.

CHECKING THE COOLING SYSTEM

1. Remove:
   - Front panels
   - Seat
     Refer to “GENERAL CHASSIS” on page 4-1.
   - Fuel tank
     Refer to “FUEL TANK” on page 7-1.
2. Check:
   - Radiator “1”
   - Radiator inlet hose “2”
   - Radiator outlet hose “3”
   - Coolant reservoir hose “4”
   - Water pump breather hose “5”
     Cracks/damage → Replace.
     Refer to “RADIATOR” on page 6-1.

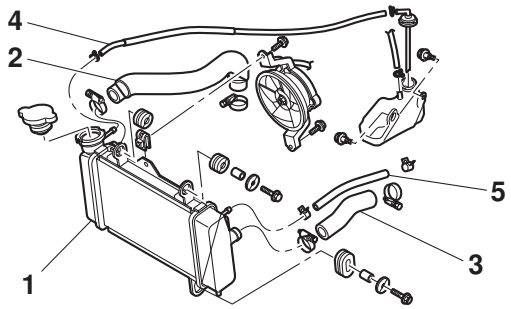

3. Install:
   - Fuel tank
     Refer to “FUEL TANK” on page 7-1.
   - Seat
   - Front panels
     Refer to “GENERAL CHASSIS” on page 4-1.

CHANGING THE COOLANT

1. Remove:
   - Right front panel
     Refer to “GENERAL CHASSIS” on page 4-1.
   - Side panels
     Refer to “GENERAL CHASSIS” on page 4-1.
   - Seat
     Refer to “GENERAL CHASSIS” on page 4-1.
   - Fuel tank
     Refer to “FUEL TANK” on page 7-1.
   - Air filter case
     Refer to “GENERAL CHASSIS” on page 4-1.
2. Remove:
   - Radiator cap “1”

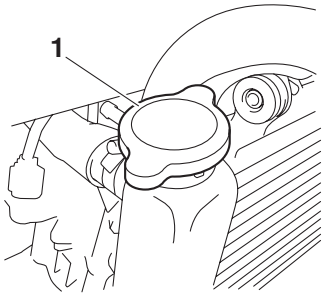

WARNING

A hot radiator is under pressure. Therefore, do not remove the radiator cap when the engine is hot. Scalding hot fluid and steam may be blown out, which could cause serious injury. When the engine has cooled, open the radiator cap as follows:
Place a thick rag or a towel over the radiator cap and slowly turn the radiator cap counterclockwise toward the detent to allow any residual pressure to escape. When the hissing sound has stopped, press down on the radiator cap and turn it counterclockwise to remove.

3. Remove:
   - Coolant drain bolt "1"
     (along with the copper washer)

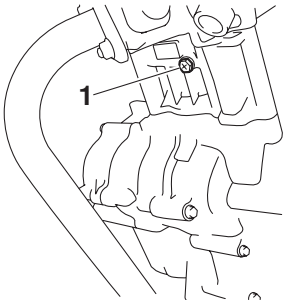

4. Drain:
   - Coolant
     (from the engine and radiator)
5. Disconnect:
   - Coolant reservoir hose "1"
6. Remove:
   - Coolant reservoir "2"
   - Coolant reservoir cap "3"

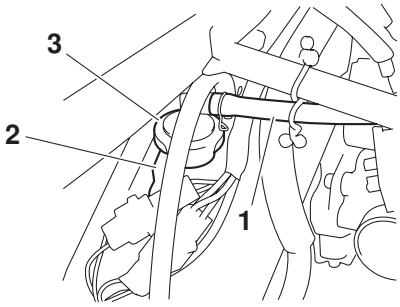

7. Drain:
   - Coolant
     (from the coolant reservoir)
8. Install:
   - Coolant reservoir

	**Coolant reservoir bolt** **7 Nm (0.7 m·Kg, 5.1 ft·lb)**

9. Connect:
   - Coolant reservoir hose
10. Install:
    - Coolant drain bolt
      (along with the copper washer New)

	**Coolant drain bolt** **7 Nm (0.7 m·Kg, 5.1 ft·lb)**

11. Fill:
    - Cooling system
      (with the specified amount of the recommended coolant)

Recommended antifreeze
High-quality ethylene glycol antifreeze containing corrosion inhibitors for aluminum engines
Mixing ratio
1:1 (antifreeze:water)
Radiator capacity (including all routes)
0.59 L
Coolant reservoir capacity (up to the maximum level mark)
0.25 L

Handling notes for coolant
Coolant is potentially harmful and should be handled with special care.

WARNING

- **If coolant splashes in your eyes, thoroughly wash them with water and consult a doctor.**

- **If coolant splashes on your clothes, quickly wash it away with water and then with soap and water.**
- **If coolant is swallowed, induce vomiting and get immediate medical attention.**

CAUTION:

- **Adding water instead of coolant lowers the antifreeze content of the coolant. If water is used instead of coolant check, and if necessary, correct the antifreeze concentration of the coolant.**
- **Use only distilled water. However, if distilled water is not available, soft water may be used.**
- **If coolant comes into contact with painted surfaces, immediately wash them with water.**
- **Do not mix different types of antifreeze.**

12. Install:
    - Radiator cap
13. Fill:
    - Coolant reservoir
      (with the recommended coolant to the maximum level mark “a”)

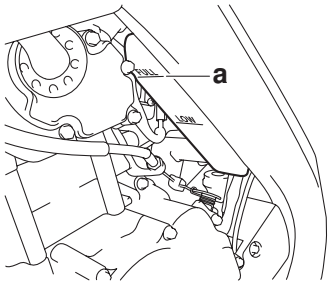

14. Install:
    - Coolant reservoir cap
15. Install:
    - Air filter case
      Refer to “GENERAL CHASSIS” on page 4-1.
    - Fuel tank
      Refer to “FUEL TANK” on page 7-1.
16. Start the engine, warm it up for several minutes, and then stop it.
17. Check:
    - Coolant level
      Refer to “CHECKING THE COOLANT LEVEL” on page 3-13.

NOTE:

Before checking the coolant level, wait a few minutes until the coolant has settled.

18. Install:
    - Seat
      Refer to “GENERAL CHASSIS” on page 4-1.
    - Side panels
      Refer to “GENERAL CHASSIS” on page 4-1.
    - Right front panel
      Refer to “GENERAL CHASSIS” on page 4-1.

CHASSIS

ADJUSTING THE REAR DISC BRAKE

1. Check:
   - Brake pedal position
     (distance “a” from the center of the rider footrest to the center of the brake pedal)
     Out of specification → Adjust.

	**Brake pedal position** **44.0 mm**

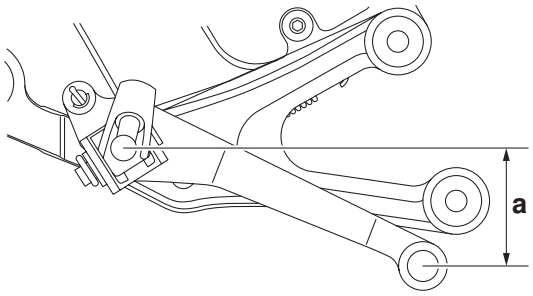

2. Adjust:
   - Brake pedal position

a. Loosen the locknut “1”.
b. Remove the cotter pin “2”, washer “3”, and pin “4”.
c. Turn the adjusting nut “5” in direction “a” or “b” until the specified brake pedal position is obtained.

Direction “a” **Brake pedal is raised.** **Direction “b”** **Brake pedal is lowered.**

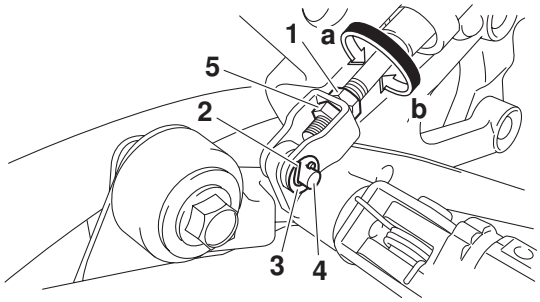

d. Tighten the locknut “1” to specification.

	**Locknut** **17 Nm (1.7 m·kg, 12 ft·lb)**

WARNING

A soft or spongy feeling in the brake pedal can indicate the presence of air in the brake system. Before the vehicle is operated, the air must be removed by bleeding the brake system. Air in the brake system will considerably reduce braking performance.

CAUTION:

After adjusting the brake pedal position, make sure there is no brake drag.

e. Install the pin, washer, and cotter pin.

WARNING

Always use a new cotter pin.

CHECKING THE BRAKE FLUID LEVEL

1. Stand the vehicle on a level surface.

NOTE:

- Place the vehicle on a suitable stand.
- Make sure the vehicle is upright.

2. Check:
   - Brake fluid level
     Below the minimum level mark “a” → Add the recommended brake fluid to the proper level.

	**Recommended fluid** **DOT 3 or DOT 4**

A

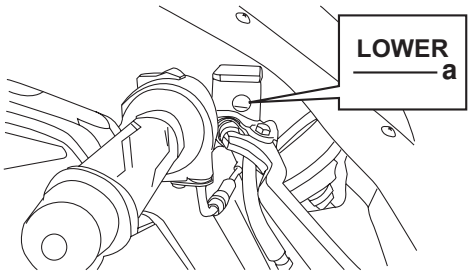

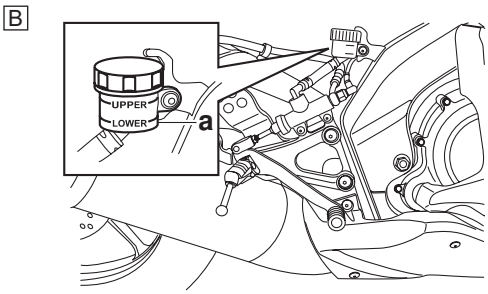

A. Front brake
B. Rear brake

WARNING

Use only the designated brake fluid. Other brake fluids may cause the rubber seals to deteriorate, causing leakage and poor brake performance.
Refill with the same type of brake fluid that is already in the system. Mixing brake fluids may result in a harmful chemical reaction, leading to poor brake performance.
When refilling, be careful that water does not enter the brake fluid reservoir. Water will significantly lower the boiling point of the brake fluid and could cause vapor lock.

CAUTION:

Brake fluid may damage painted surfaces and plastic parts. Therefore, always clean up any spilt brake fluid immediately.

NOTE:

In order to ensure a correct reading of the brake fluid level, make sure the top of the brake fluid reservoir is horizontal.

CHECKING THE FRONT BRAKE PADS

The following procedure applies to all of the brake pads.

1. Operate the brake.
2. Check:
   - Front brake pad
     Wear indicator grooves “a” have almost disappeared → Replace the brake pads as a set.
     Refer to “FRONT BRAKE” on page 4-15.

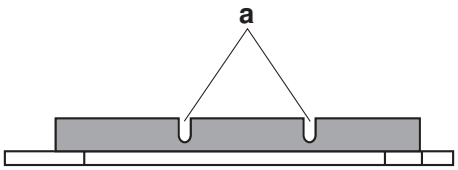

CHECKING THE REAR BRAKE PADS

The following procedure applies to all of the brake pads.

1. Operate the brake.
2. Check:
   - Rear brake pad
     Wear indicator groove “a” has almost disappeared → Replace the brake pads as a set.
     Refer to “REAR BRAKE” on page 4-25.

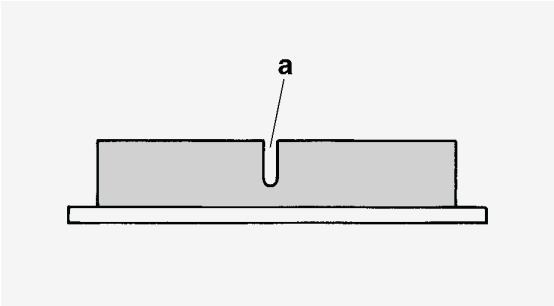

CHECKING THE FRONT BRAKE HOSE

1. Check:
   - Brake hose “1”
     Cracks/damage/wear → Replace.
2. Check:
   - Brake hose holder “2”
     Loose connection → Tighten the holder bolt.

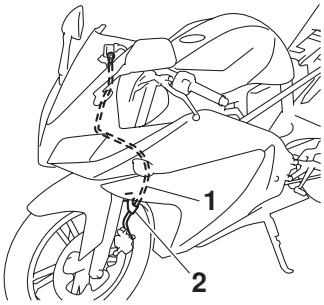

3. Hold the vehicle upright and apply the front brake several times.
4. Check:
   - Brake hose
     Brake fluid leakage → Replace the damaged hose.
     Refer to “FRONT BRAKE” on page 4-15.

CHECKING THE REAR BRAKE HOSE

1. Check:
   - Brake hoses “1”
     Cracks/damage/wear → Replace.
2. Check:
   - Brake hose holder “2”
     Loose connection → Tighten the holder bolt.
     Loose or open holder → Fasten properly.

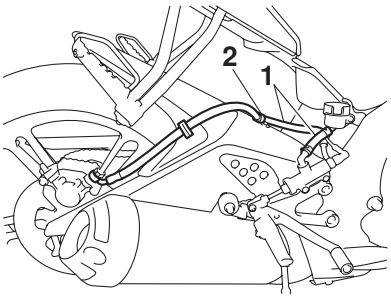

3. Hold the vehicle upright and apply the rear brake several times.
4. Check:
   - Brake hoses
     Brake fluid leakage → Replace the damaged hose.
     Refer to “REAR BRAKE” on page 4-25.

BLEEDING THE HYDRAULIC BRAKE SYSTEM

WARNING

Bleed the hydraulic brake system whenever:
the system is disassembled.
a brake hose is loosened, disconnected or replaced.
the brake fluid level is very low.
brake operation is faulty.

NOTE:

- Be careful not to spill any brake fluid or allow the brake master cylinder reservoir or brake fluid reservoir to overflow.
- When bleeding the hydraulic brake system, make sure there is always enough brake fluid before applying the brake. Ignoring this precaution could allow air to enter the hydraulic brake system, considerably lengthening the bleeding procedure.
- If bleeding is difficult, it may be necessary to let the brake fluid settle for a few hours. Repeat the bleeding procedure when the tiny bubbles in the hose have disappeared.

1. Bleed:
   - Hydraulic brake system

a. Fill the brake fluid reservoir to the proper level with the recommended brake fluid.
b. Install the diaphragm (brake master cylinder reservoir or brake fluid reservoir).
c. Connect a clear plastic hose “1” tightly to the bleed screw “2”.

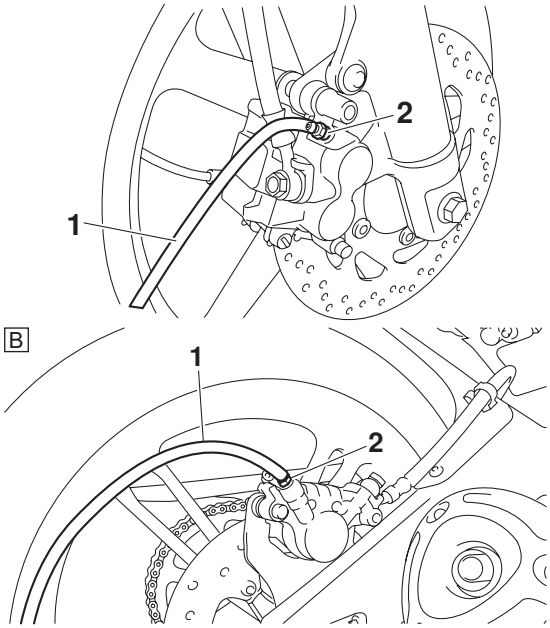

A. Front
B. Rear

d. Place the other end of the hose into a container.
e. Slowly apply the brake several times.

f. Fully pull the brake lever or fully press down the brake pedal and hold it in position.
g. Loosen the bleed screw.

NOTE:

Loosening the bleed screw will release the pressure and cause the brake lever to contact the throttle grip or the brake pedal to fully extend.

h. Tighten the bleed screw and then release the brake lever or brake pedal.
i. Repeat steps (e) to (h) until all of the air bubbles have disappeared from the brake fluid in the plastic hose.
j. Tighten the bleed screw to specification.

Front brake caliper bleed screw
6 Nm (0.6 m · kg, 4.5 ft · lb)
Rear brake caliper bleed screw
6 Nm (0.6 m · kg, 4.5 ft · lb)

k. Fill the brake fluid reservoir to the proper level with the recommended brake fluid.
Refer to "CHECKING THE BRAKE FLUID LEVEL" on page 3-17.

WARNING

After bleeding the hydraulic brake system, check the brake operation.

▲▲▲▲▲▲▲▲▲▲▲▲▲▲▲▲▲▲▲▲▲▲▲▲▲

ADJUSTING THE DRIVE CHAIN SLACK

NOTE:

The drive chain slack must be checked at the tightest point on the chain.

CAUTION:

A drive chain that is too tight will overload the engine and other vital parts, and one that is too loose can skip and damage the swingarm or cause an accident. Therefore, keep the drive chain slack within the specified limits.

1. Stand the vehicle on a level surface.

WARNING

Securely support the vehicle so that there is no danger of it falling over.

NOTE:

Place the vehicle on the centerstand so that the rear wheel is elevated.

2. Spin the rear wheel several times and find the tightest position of drive chain.
3. Check:
   - Drive chain slack "a"
     Out of specification → Adjust.

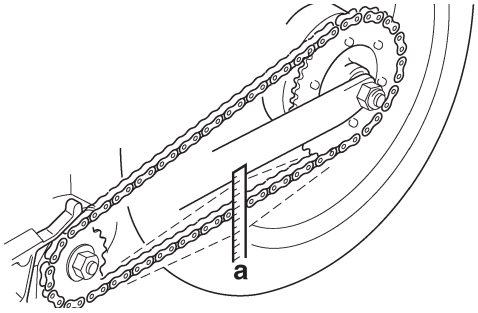

Drive chain slack
20–40 mm

NOTE:

Measure the drive chain slack halfway between the drive axle and the rear wheel axle.

4. Adjust:
   - Drive chain slack

▼▼▼▼▼▼▼▼▼▼▼▼▼▼▼▼▼▼▼▼▼▼▼▼▼

a. Loosen the wheel axle nut "4"
b. Turn the drive chain adjusting plate "5" in direction "a" or "b" until the specified drive chain slack is obtained.

Direction "a"
Drive chain is tightened.
Direction "b"
Drive chain is loosened.

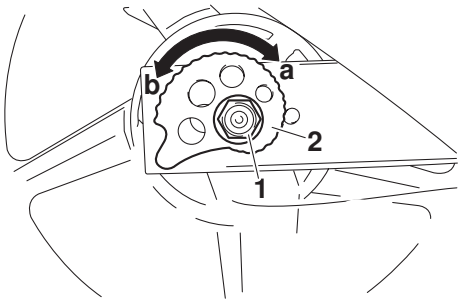

NOTE:

To maintain the proper wheel alignment, adjust both sides evenly.

f. Tighten the wheel axle nut.

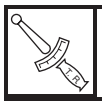

Wheel axle nut
110 Nm (11.0 m·kg, 80 ft·lb)

▲▲▲▲▲▲▲▲▲▲▲▲▲▲▲▲▲▲▲▲▲▲▲▲▲

LUBRICATING THE DRIVE CHAIN

The drive chain consists of many interacting parts. If the drive chain is not maintained properly, it will wear out quickly. Therefore, the drive chain should be serviced, especially when the vehicle is used in dusty areas.
Use recomended chain cleaner and lubricant lubricant that is suitable for non-O-ring chains.

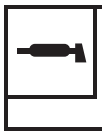

Recommended lubricant
Chain lubricant suitable for O-ring chains

▼▼▼▼▼▼▼▼▼▼▼▼▼▼▼▼▼▼▼▼▼▼▼▼▼

1. Remove all deposits of dust, soil, mud , oil etc during washing and dry it with air blow..
2. Spray the chain cleaning solvent to remove grease deposition for 5 minutes.
3. Wipe the chain with clean cloth

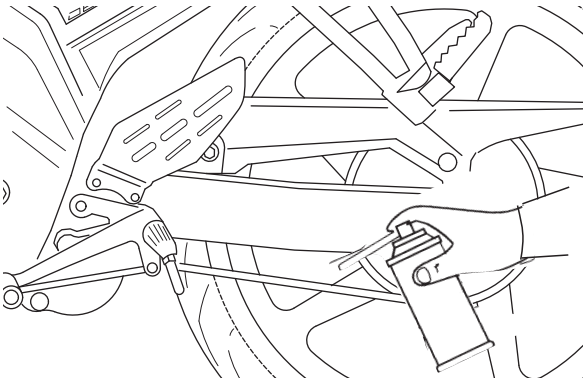

4 Spray the Lubricant inside the chain between inner/ outer plates, roller and bushes.
5 After spraying wait for 15 minutes.
6 Excess lubricant should be wiped with a clean cloth before riding.

CHECKING AND ADJUSTING THE STEERING HEAD

1. Stand the vehicle on a level surface.

⚠ WARNING

Securely support the vehicle so that there is no danger of it falling over.

NOTE:

Place the vehicle on a suitable stand so that the front wheel is elevated.

2. Check:
   - Steering head
     Grasp the bottom of the front fork legs and gently rock the front fork.
     Blinding/looseness → Adjust the steering head.

CHECKING AND ADJUSTING THE STEERING HEAD

1. Stand the vehicle on a level surface.

⚠ WARNING

Securely support the vehicle so that there is no danger of it falling over.

NOTE:

Place the vehicle on a suitable stand so that the front wheel is elevated.

2. Check:
   - Steering head
     Grasp the bottom of the front fork legs and gently rock the front fork.
     Binding/looseness → Adjust the steering head.
3. Remove:
   - Upper bracket
     Refer to “STEERING HEAD” on page 4-49.

4. Adjust:
   - Steering head

a. Remove the lock washer “1”, the upper ring nut “2”, and the rubber washer “3”.

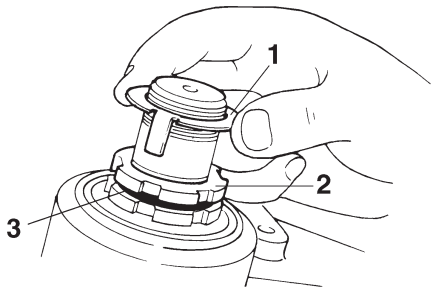

b. Tighten the lower ring nut “4” with a steering nut wrench “5”.

NOTE:
Set the torque wrench at a right angle to the steering nut wrench.

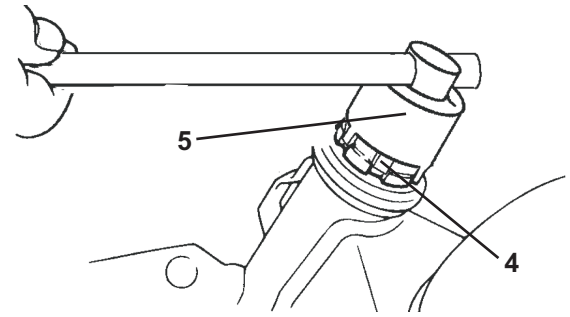

	**Steering nut socket** **YSST-721**

	**Lower ring nut (initial tightening torque)** **48 Nm (4.8 m·kg, 35 ft·lb)**

c. Loosen the lower ring nut “4” completely, and then tighten it to specification with a steering nut wrench.

WARNING
Do not overtighten the lower ring nut.

	**Lower ring nut (final tightening torque)** **13 Nm (1.3 m·kg, 9.4 ft·lb)**

d. Check the steering head for looseness or binding by turning the front fork all the way in both directions. If any binding is felt, remove the lower bracket and check the upper and lower bearings.
   Refer to “STEERING HEAD” on page 4-49.
e. Install the rubber washer “3”.
f. Install the upper ring nut “2”.
g. Finger tighten the upper ring nut “2”, and then align the slots of both ring nuts. If necessary, hold the lower ring nut and tighten the upper ring nut until their slots are aligned.

NOTE:
Make sure the lock washer tabs “a” sit correctly in the ring nut slots “b”.

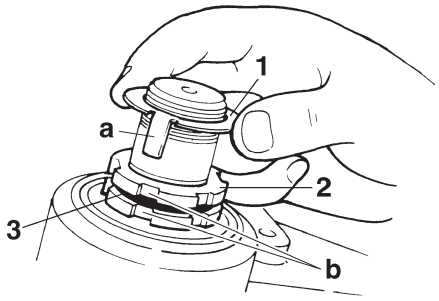

5. Install:
   - Upper bracket
     Refer to “STEERING HEAD” on page 4-49.

CHECKING THE FRONT FORK
1. Stand the vehicle on a level surface.

WARNING
Securely support the vehicle so that there is no danger of it falling over.

2. Check:
   - Inner tube
     Damage/scratches → Replace.
   - Oil seal
     Oil leakage → Replace.
3. Hold the vehicle upright and apply the front brake.
4. Check:
   - Front fork operation
     Push down hard on the handlebar several times and check if the front fork rebounds smoothly.
     Rough movement → Repair.
     Refer to “FRONT FORK” on page 4-41.

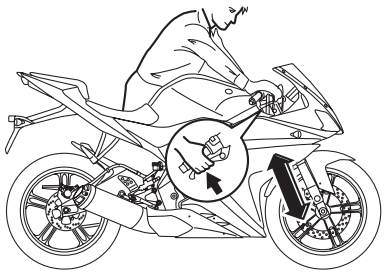

CHECKING THE TYRES
The following procedure applies to both of the tyres.
1. Check:
   - Tyre pressure
     Out of specification → Regulate.

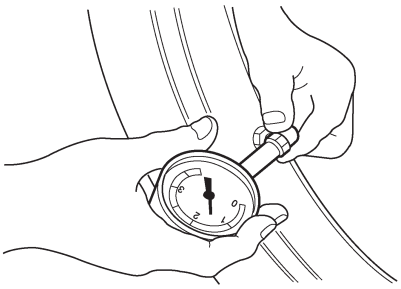

WARNING

The tyre pressure should only be checked and regulated when the tyre temperature equals the ambient air temperature.
The tyre pressure must be adjusted according to the total weight (including cargo, rider, passenger and accessories) and the anticipated riding speed.
Operation of an overloaded vehicle could cause tyre damage, an accident or an injury.
NEVER OVERLOAD THE VEHICLE.

Tyre air pressure (measured on cold tyres)

Front
200 kPa (28 psi) (2.00 kgf/cm²)
Rear
225 kPa (33 psi) (2.25 kgf/cm²)

WARNING

It is dangerous to ride with a worn-out tyre. When the tyre tread reaches the wear limit, replace the tyre immediately.

2. Check:
   - Tyre surfaces
     Damage/wear → Replace the tyre.

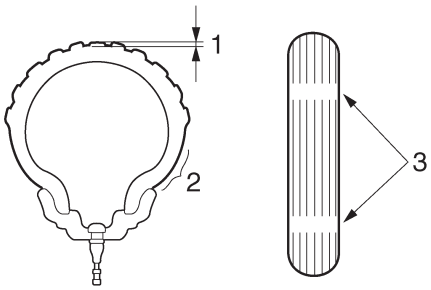

1. Tyre tread depth
2. Side wall
3. Wear indicator

WARNING

Do not use a tube tyre on a wheel designed only for tubeless tyres to avoid tyre fail-ure and personal injury from sudden deflation.

After extensive tests, the tires listed below have been approved by YAMAHA for this model. The front and rear tyres should always be by the same manufacturer and of the same design. No guarantee concerning handling characteristics can be given if a tyre combination other than one approved by YAMAHA is used on this vehicle.

Front tyre
Size
80/90 –17 M/C 44P
Manufacturer/model
MRF/ZAPPER

Rear tyre
Size
100/80–17 M/C 52P
Manufacturer/model
MRF/ZAPPER

WARNING

New tyres have a relatively low grip on the road surface until they have been slightly worn. Therefore, approximately 100 km should be traveled at normal speed before any high-speed riding is done.

NOTE:

For tyres with a direction of rotation mark“1”:
- Install the tyre with the mark pointing in the direction of wheel rotation.
- Align the mark “2” with the valve installation point.

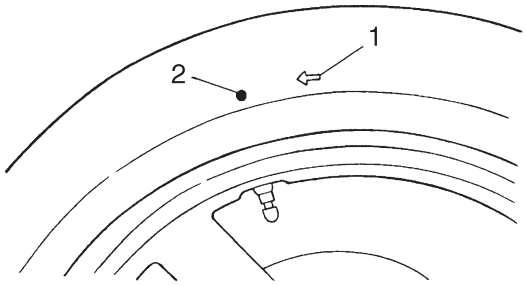

CHECKING THE WHEELS

The following procedure applies to both of the wheels.

1. Check:
   - Wheel
     Damage/out-of-round → Replace.

WARNING

Never attempt to make any repairs to the wheel.

NOTE:

After a tyre or wheel has been changed or replaced, always balance the wheel.

CHECKING AND LUBRICATING THE CABLES

The following procedure applies to all of the inner and outer cables.

WARNING

Damaged outer cable may cause the cable to corrode and interfere with its movement. Replace damaged outer cable and inner cables as soon as possible.

1. Check:
   - Outer cable
     Damage → Replace.
2. Check:
   - Cable operation
     Rough movement → Lubricate.

Recommended lubricant
Engine oil or a suitable cable lubricant

NOTE:

Hold the cable end upright and pour a few drops of lubricant into the cable sheath or use a suitable lubricating device.

LUBRICATING THE CLUTCH LEVER

Lubricate the pivoting point and metal-to-metal moving parts of the lever.

Recommended lubricant
Lithium-soap-based grease

LUBRICATING THE BRAKE LEVER
Lubricate the pivoting point and metal-to-metal moving parts of the lever.

	Recommended lubricant **Silicone grease**

LUBRICATING THE PEDALS
Lubricate the pivoting point and metal-to-metal moving parts of the pedals.

	Recommended lubricant **Lithium-soap-based grease**

LUBRICATING THE SIDESTAND
Lubricate the pivoting point and metal-to-metal moving parts of the sidestand.

	Recommended lubricant **Lithium-soap-based grease**

LUBRICATING THE REAR SUSPENSION
Lubricate the pivoting point and metal-to-metal moving parts of the rear suspension.

	Recommended lubricant **Lithium-soap-based grease**

ELECTRICAL SYSTEM

CHECKING AND CHARGING THE BATTERY
Refer to “ELECTRICAL COMPONENTS” on page 8-61

CHECKING THE FUSES
Refer to “ELECTRICAL COMPONENTS” on page 8-61

REPLACING THE HEADLIGHT BULBS
The following procedure applies to the low beam headlight bulb.

1. Remove:
   - Headlight bulb cover “1”

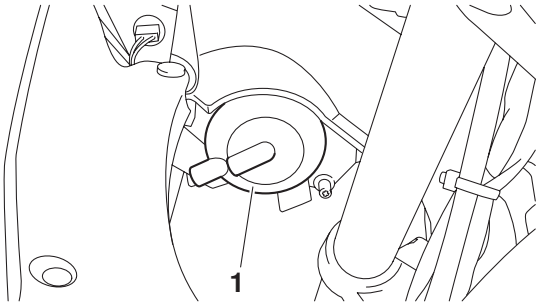

2. Remove:
   - Headlight bulb holder “1”

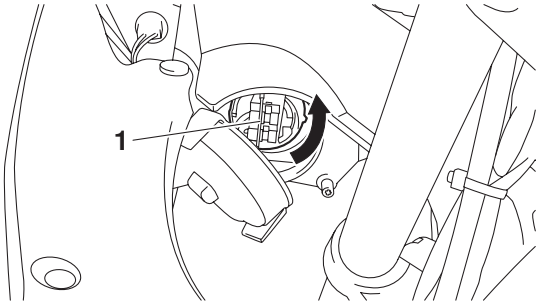

3. Remove:
   - Headlight bulb “1”

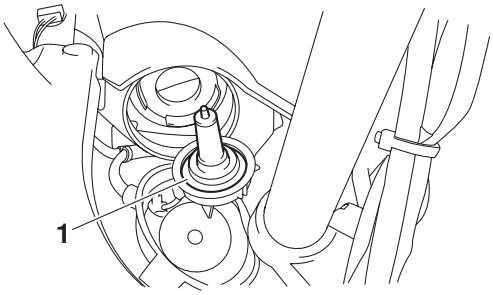

WARNING

Since the headlight bulb gets extremely hot, keep flammable products and your hands away from the bulb until it has cooled down.

4. Install:
   - Headlight bulb New
     Secure the new headlight bulb with the headlight bulb holder.

CAUTION:

Avoid touching the glass part of the headlight bulb to keep it free from oil, otherwise the transparency of the glass, the life of the bulb and the luminous flux will be adversely affected. If the headlight bulb gets soiled, thoroughly clean it with a cloth moistened with alcohol or lacquer thinner.

5. Install:
   - Headlight bulb holder
6. Install:
   - Headlight bulb cover

The following procedure applies to the high beam headlight bulb.

1. Remove:
   - Headlight bulb cover “1”

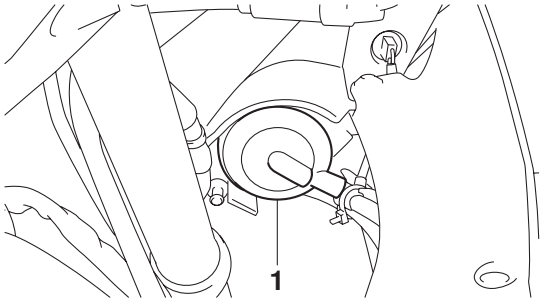

2. Disconnect:
   - Headlight coupler “1”

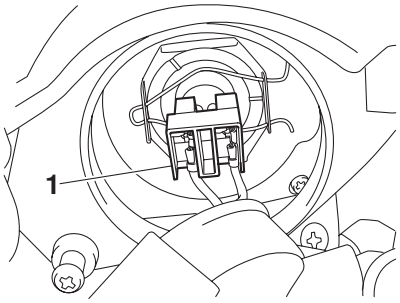

3. Remove:
   - Headlight bulb holder “1”

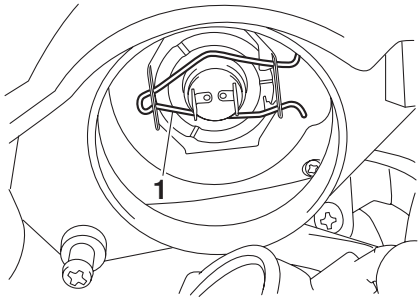

4. Remove:
   - Headlight bulb “1”

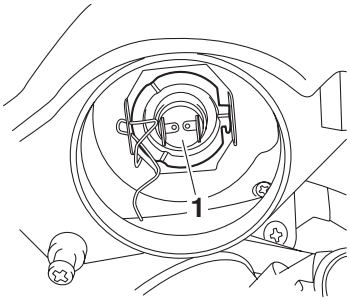

WARNING

Since the headlight bulb gets extremely hot, keep flammable products and your hands away from the bulb until it has cooled down.

5. Install:
   - Headlight bulb New
     Secure the new headlight bulb with the headlight bulb holder.

CAUTION:

Avoid touching the glass part of the headlight bulb to keep it free from oil, otherwise the transparency of the glass, the life of the bulb and the luminous flux will be adversely affected. If the headlight bulb gets soiled, thoroughly clean it with a cloth moistened with alcohol or lacquer thinner.

6. Install:
   - Headlight bulb holder
7. Connect:
   - Headlight coupler
8. Install:
   - Headlight bulb cover

ADJUSTING THE HEADLIGHT BEAMS

The following procedure applies to both of the headlights.

1. Adjust:
   - Headlight beam (vertically)

a. Turn the adjusting screw “1” in direction “a” or “b”.

Direction “a”
Headlight beam is lowered.
Direction “b”
Headlight beam is raised.

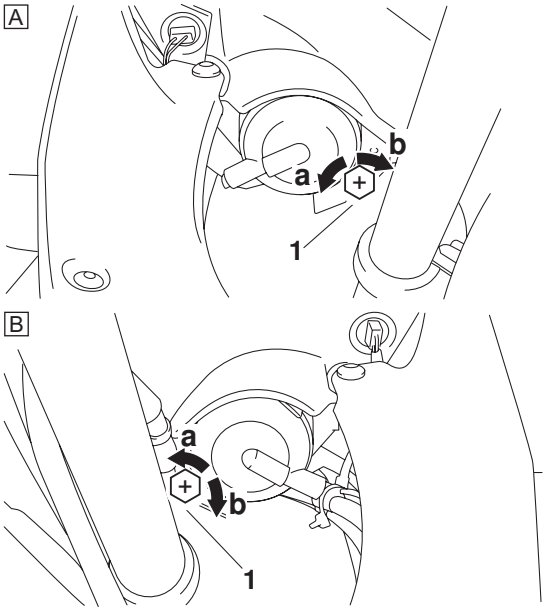

A. Left headlight
B. Right headlight

CHASSIS

CHASSIS

GENERAL CHASSIS

Removing the seat and covers

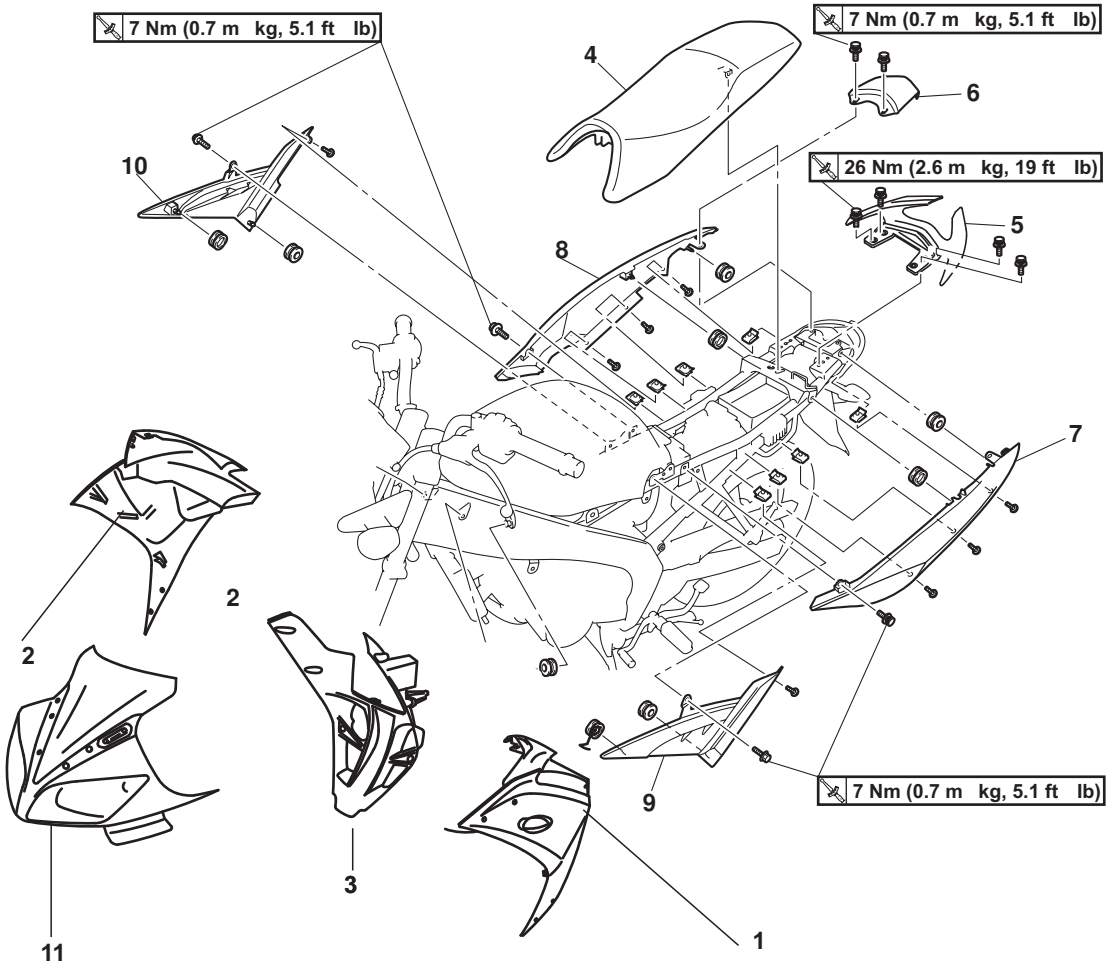

Order	Job/Parts to remove	Qty	Remarks
1	Left front panel	1	
2	Right front panel	1	
3	Lower cowling	1	
4	Seat	1	
5	Handle Seat	1	
6	Rear panel	1	
7	Left rear side cover	1	
8	Right rear side cover	1	
9	Left side cover	1	
10	Right side cover	1	
11	Head Light	1	
			For installation, reverse the removal procedure.

Removing the air filter case

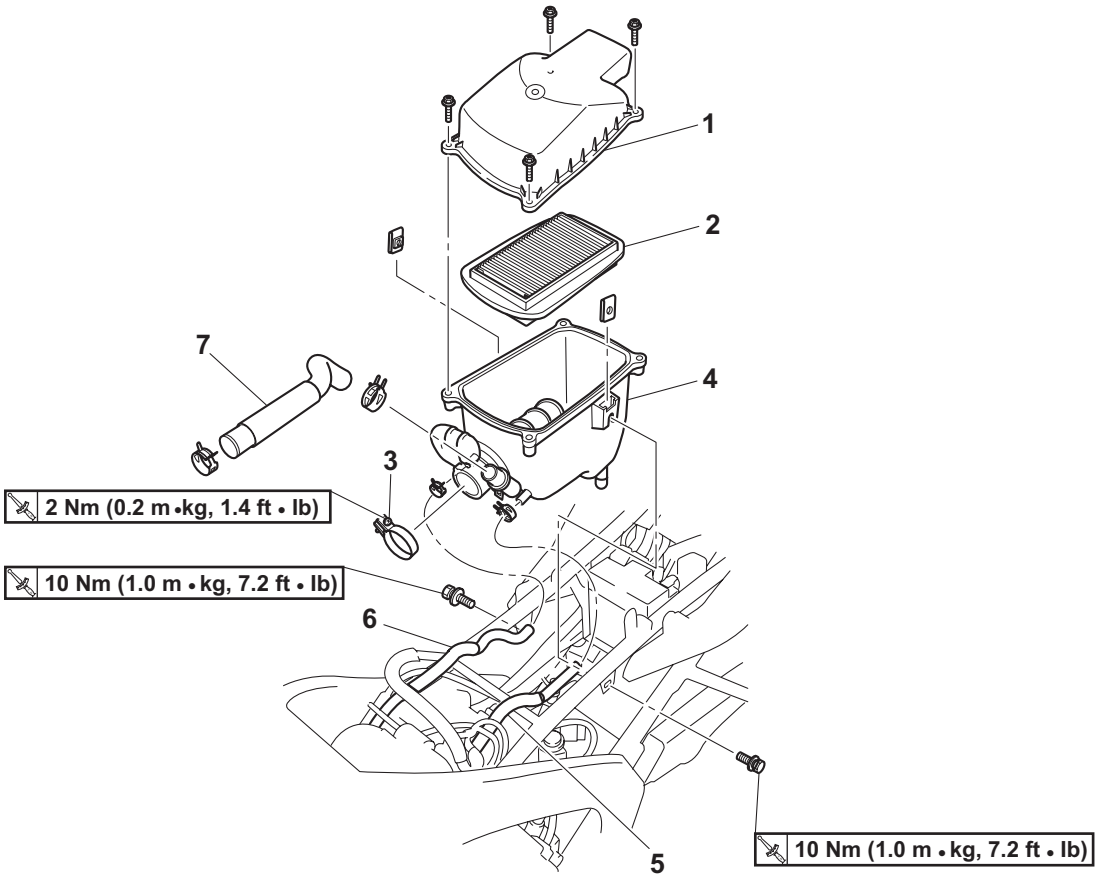

Order	Job/Parts to remove	Qty	Remarks
	Seat/Left and Right side cover		Refer to “GENERAL CHASSIS” on page 4-1.
	Fuel tank		Refer to “FUEL TANK” on page 7-1.
1	Air filter case cover	1	
2	Air filter element	1	
3	Air filter case joint clamp screw	1	Loosen.
4	Air filter case	1	
5	Cylinder head breather hose	1	Disconnect.
6	Air induction system hose (air filter case to 3-way joint)	1	Disconnect.
7	Air filter case silencer	1	
			For installation, reverse the removal procedure.

INSTALLING THE AIR FILTER CASE

1. Install:
   - Air filter case joint clamp

NOTE:

Align the projection “a” on the air filter case with the slot “b” in the air filter case joint clamp.

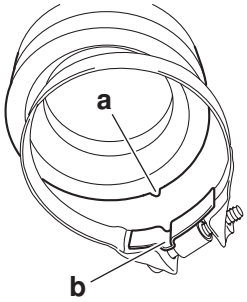

FRONT WHEEL

Removing the front wheel and brake discs

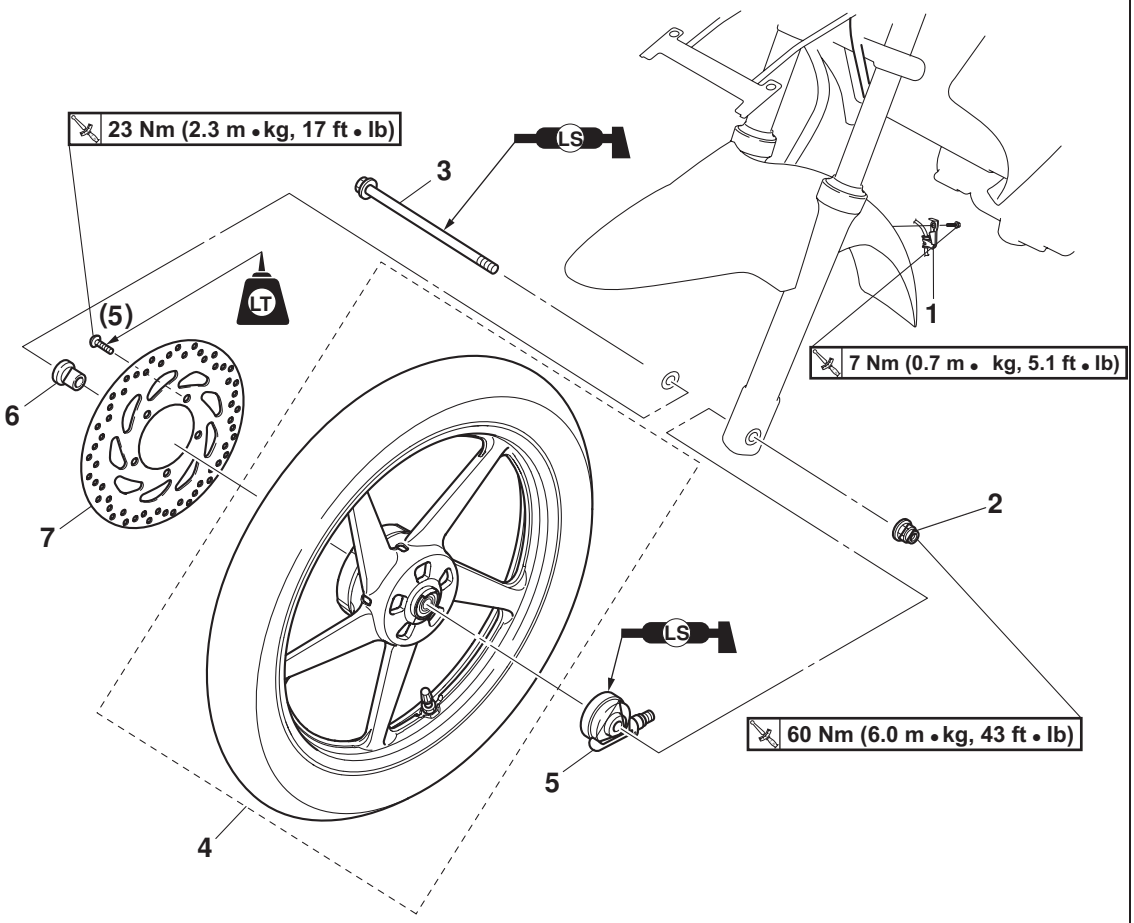

Order	Job/Parts to remove	Qty	Remarks
1	Speed sensor lead holder	1	
2	Front wheel axle nut	1	
3	Front wheel axle	1	
4	Front wheel	1	
5	Speed sensor	1	
6	Collar	1	
7	Brake disc	1	
			For installation, reverse the removal procedure.

Disassembling the front wheel

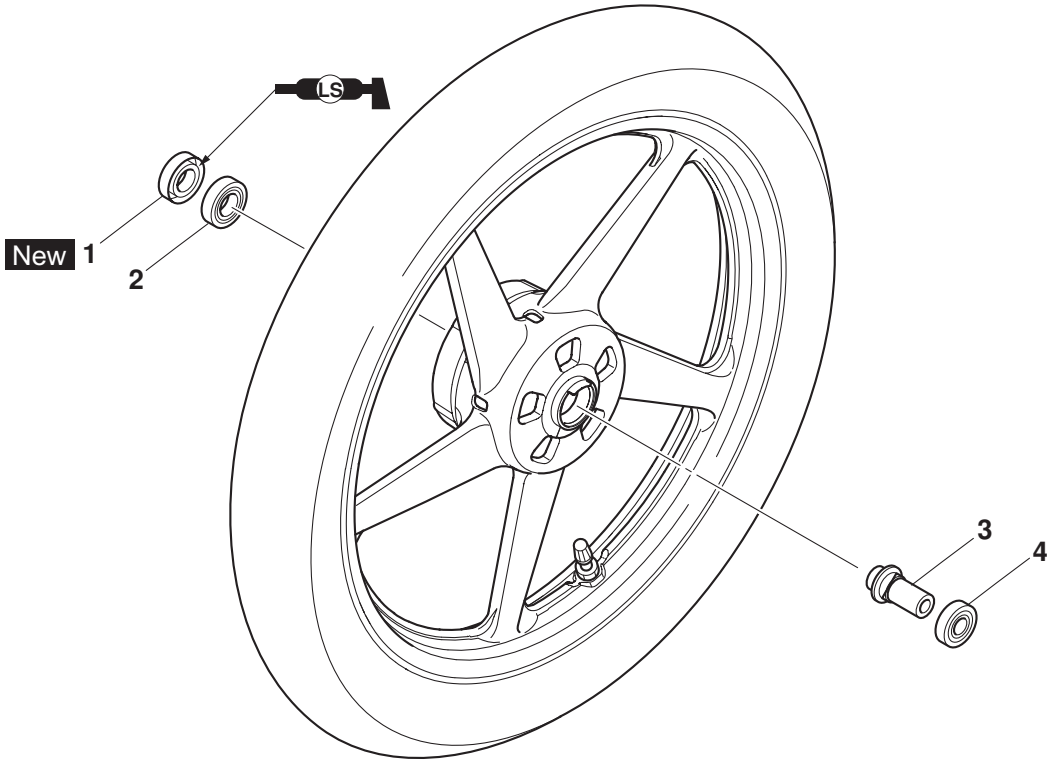

Order	Job/Parts to remove	Qty	Remarks
1	Oil seal	1	
2	Bearing	1	
3	Spacer	1	
4	Bearing	1	
			For assembly, reverse the disassembly procedure.

REMOVING THE FRONT WHEEL

1. Stand the vehicle on a level surface.

WARNING

Securely support the vehicle so that there is no danger of it falling over.

2. Elevate:
   - Front wheel

NOTE:

Place the vehicle on a suitable stand so that the front wheel is elevated.

3. Remove:
   - Front wheel
   - Speed sensor unit
   - Collar

NOTE:

Do not squeeze the brake lever when removing the front wheel.

DISASSEMBLING THE FRONT WHEEL

1. Remove:
   - Oil seal
   - Wheel bearings

▼▼▼▼▼▼▼▼▼▼▼▼▼▼▼▼▼▼▼▼▼▼▼▼▼▼▼▼▼▼▼▼▼▼▼▼▼▼

a. Clean the outside of the front wheel hub.
b. Remove the oil seal “1” with a flat-head screwdriver.

NOTE:

To prevent damaging the wheel, place a rag “2” between the screwdriver and the wheel surface.

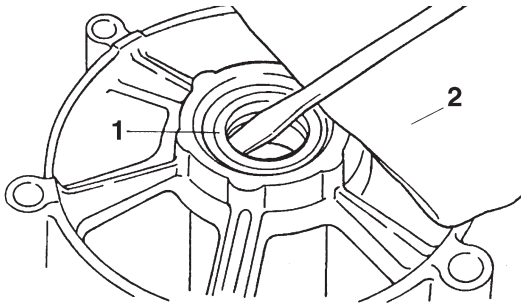

c. Remove the wheel bearings with a bearing puller.

▲▲▲▲▲▲▲▲▲▲▲▲▲▲▲▲▲▲▲▲▲▲▲▲▲▲▲▲▲▲▲▲▲▲▲▲▲▲

CHECKING THE FRONT WHEEL

1. Check:
   - Wheel axle
   Roll the wheel axle on a flat surface.
   Bends → Replace.

WARNING

Do not attempt to straighten a bent wheel axle.

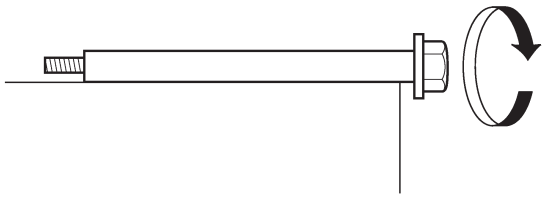

2. Check:
   - Tyre
   - Front wheel
   Damage/wear → Replace.
   Refer to “CHECKING THE TYRES” on page 3-22 and “CHECKING THE WHEELS” on page 3-23.
3. Measure:
   - Radial wheel runout “1”
   - Lateral wheel runout “2”
   Over the specified limits → Replace.

Radial wheel runout limit
1.0 mm
Lateral wheel runout limit
0.5 mm

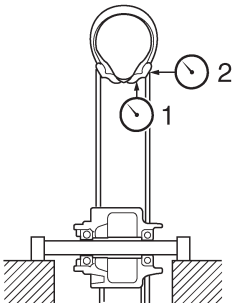

4. Check:
   - Wheel bearings
     Front wheel turns roughly or is loose → Replace the wheel bearings.
   - Oil seal
     Damage/wear → Replace.

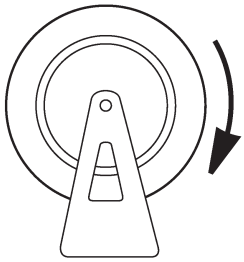

ASSEMBLING THE FRONT WHEEL

1. Install:
   - Wheel bearings New
   - Oil seal New

▼▼

a. Install the new wheel bearings and oil seal in the reverse order of disassembly.

CAUTION:

Do not contact the wheel bearing inner race "1" or balls "2". Contact should be made only with the outer race "3".

NOTE:

Use a socket "4" that matches the diameter of the wheel bearing outer race and oil seal.

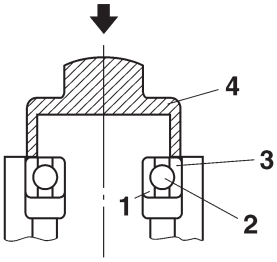

ADJUSTING THE FRONT WHEEL STATIC BALANCE

NOTE:

- After replacing the tyre, wheel or both, the front wheel static balance should be adjusted.
- Adjust the front wheel static balance with the brake discs installed.

1. Remove:
   - Balancing weight(s)
2. Find:
   - Front wheel's heavy spot

NOTE:

Place the front wheel on a suitable balancing stand.

▼▼

a. Spin the front wheel.
b. When the front wheel stops, put an "X_1" mark at the bottom of the wheel.

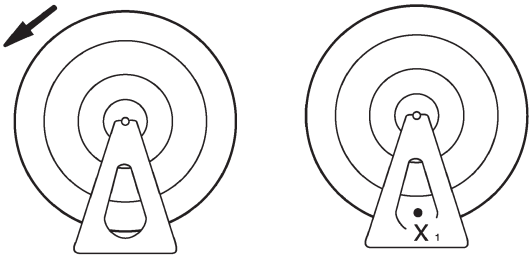

c. Turn the front wheel 90° so that the "X_1" mark is positioned as shown.
d. Release the front wheel.
e. When the wheel stops, put an "X_2" mark at the bottom of the wheel.

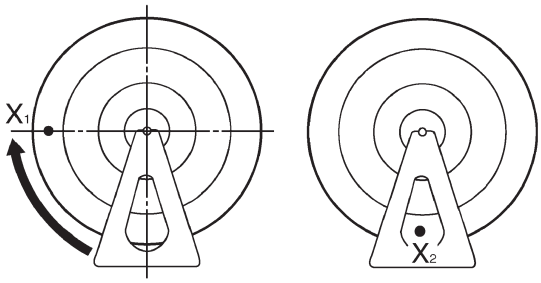

f. Repeat steps (c) through (e) several times until all the marks come to rest at the same spot.
g. The spot where all the marks come to rest is the front wheel's heavy spot "X".

▲▲▲▲▲▲▲▲▲▲▲▲▲▲▲▲▲▲▲▲▲▲▲▲▲▲▲▲▲▲▲▲▲▲▲▲

3. Adjust:
   • Front wheel static balance

▼▼▼▼▼▼▼▼▼▼▼▼▼▼▼▼▼▼▼▼▼▼▼▼▼▼▼▼▼▼▼▼▼▼▼▼

a. Install a balancing weight "1" onto the rim exactly opposite the heavy spot "X".

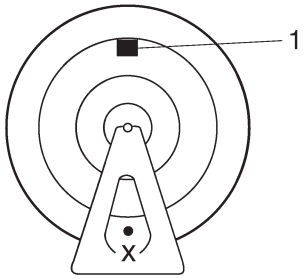

NOTE:

Start with the lightest weight.

b. Turn the front wheel 90° so that the heavy spot is positioned as shown.

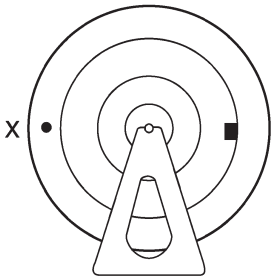

c. If the heavy spot does not stay in that position, install a heavier weight.
d. Repeat steps (b) and (c) until the front wheel is balanced.

▲▲▲▲▲▲▲▲▲▲▲▲▲▲▲▲▲▲▲▲▲▲▲▲▲▲▲▲▲▲▲▲▲▲▲▲

4. Check:
   • Front wheel static balance

▼▼▼▼▼▼▼▼▼▼▼▼▼▼▼▼▼▼▼▼▼▼▼▼▼▼▼▼▼▼▼▼▼▼▼▼

a. Turn the front wheel and make sure it stays at each position shown.

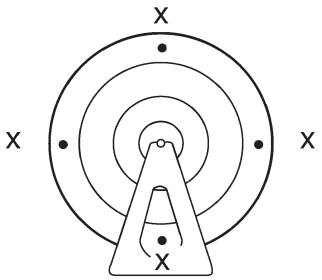

b. If the front wheel does not remain stationary at all of the positions, rebalance it.

▲▲▲▲▲▲▲▲▲▲▲▲▲▲▲▲▲▲▲▲▲▲▲▲▲▲▲▲▲▲▲▲▲▲▲▲

INSTALLING THE FRONT WHEEL (DISC)

1. Install:
   • Front brake disc

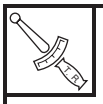	**Front brake disc bolt** **23 Nm (2.3 m·kg, 17 ft·lb)** **LOCTITE®**

NOTE:

Tighten the brake disc bolts in stages and in a crisscross pattern.

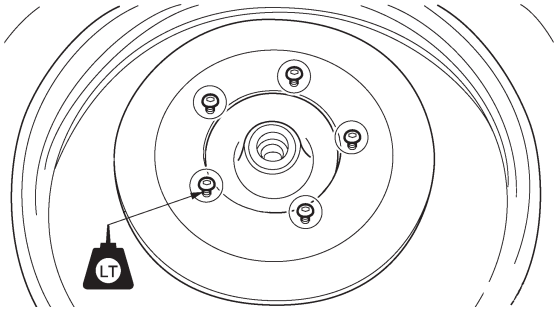

2. Check:
   • Front brake disc
   Refer to "CHECKING THE FRONT BRAKE DISC" on page 4-19.
3. Lubricate:
   • Wheel axle
   • Oil seal lip
   • Speed sensor lip

	**Recommended lubricant** **Lithium-soap-based grease**

4. Install:
   • Front wheel

NOTE:

Install the tyre and wheel with the mark“1” pointing in the direction of wheel rotation.

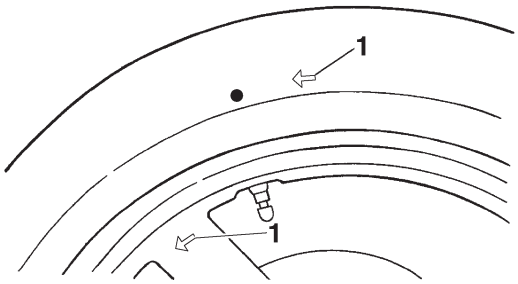

5. Install:
   - Speed sensor unit

NOTE:

Make sure the speed sensor and the wheel hub are installed with the two projections meshed into the two slots respectively.

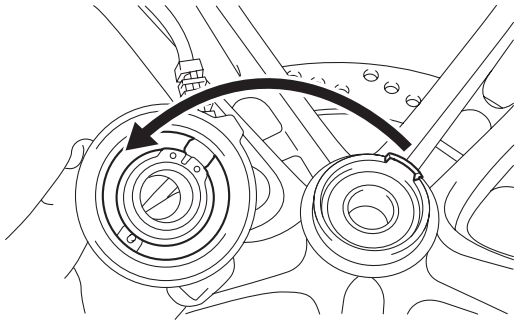

6. Install:
   - Front wheel

NOTE:

Make sure the slot “a” in the outer tube fits over the stopper “b” on the speed sensor unit.

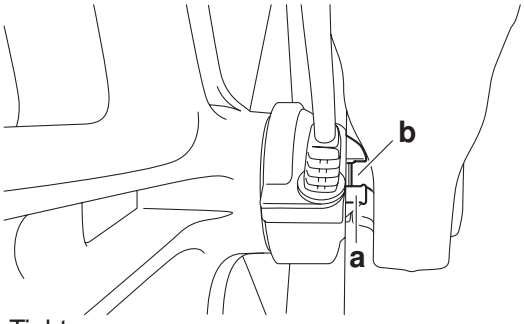

7. Tighten:
   - Wheel axle

	Wheel axle **60 Nm (6.0 m·kg, 43 ft·lb)**

WARNING

Make sure the brake hose is routed properly.

CAUTION:

Before tightening the wheel axle nut, push down hard on the handlebar(s) several times and check if the front fork rebounds smoothly.

REAR WHEEL

Removing the rear wheel assembly

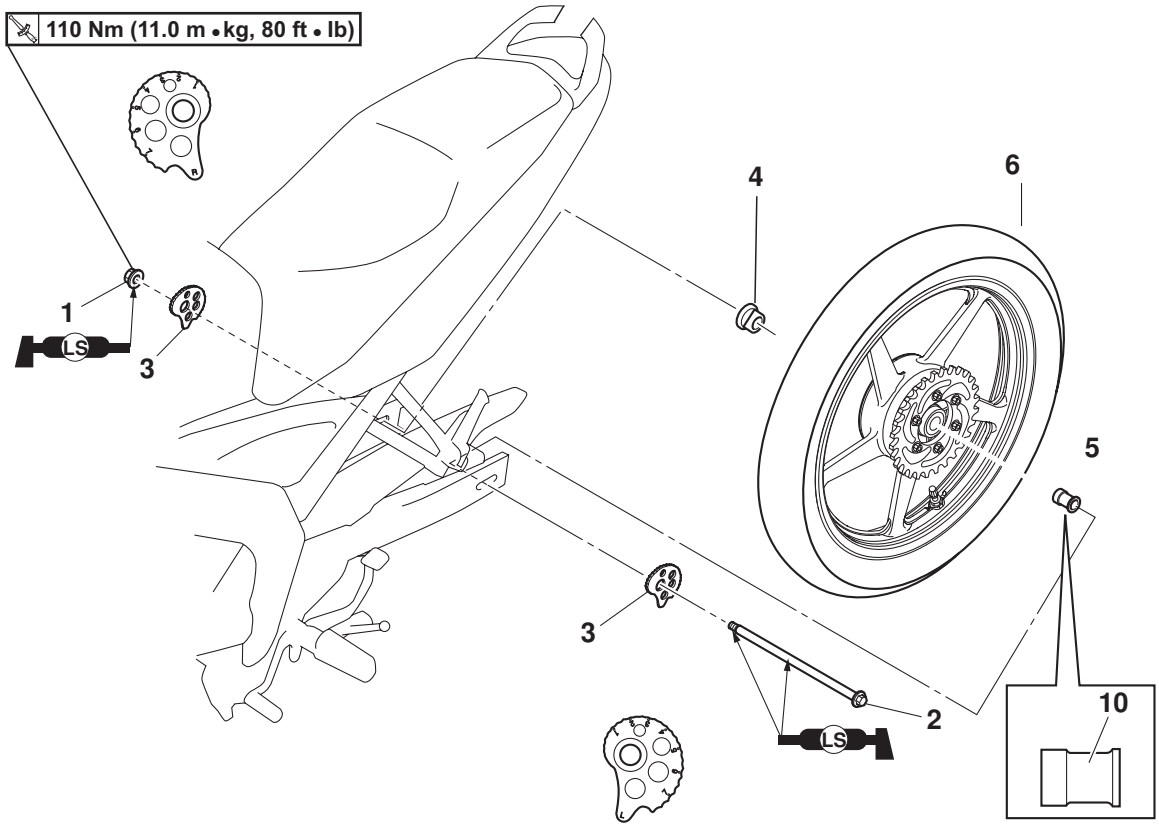

Order	Job/Parts to remove	Qty	Remarks
1	Rear wheel axle nut	1	
2	Rear wheel axle	1	
3	Drive chain puller	2	
4	Collar	1	
5	Collar	1	
6	Rear wheel	1	
			For installation, reverse the removal procedure.

Removing the brake disc and rear wheel sprocket

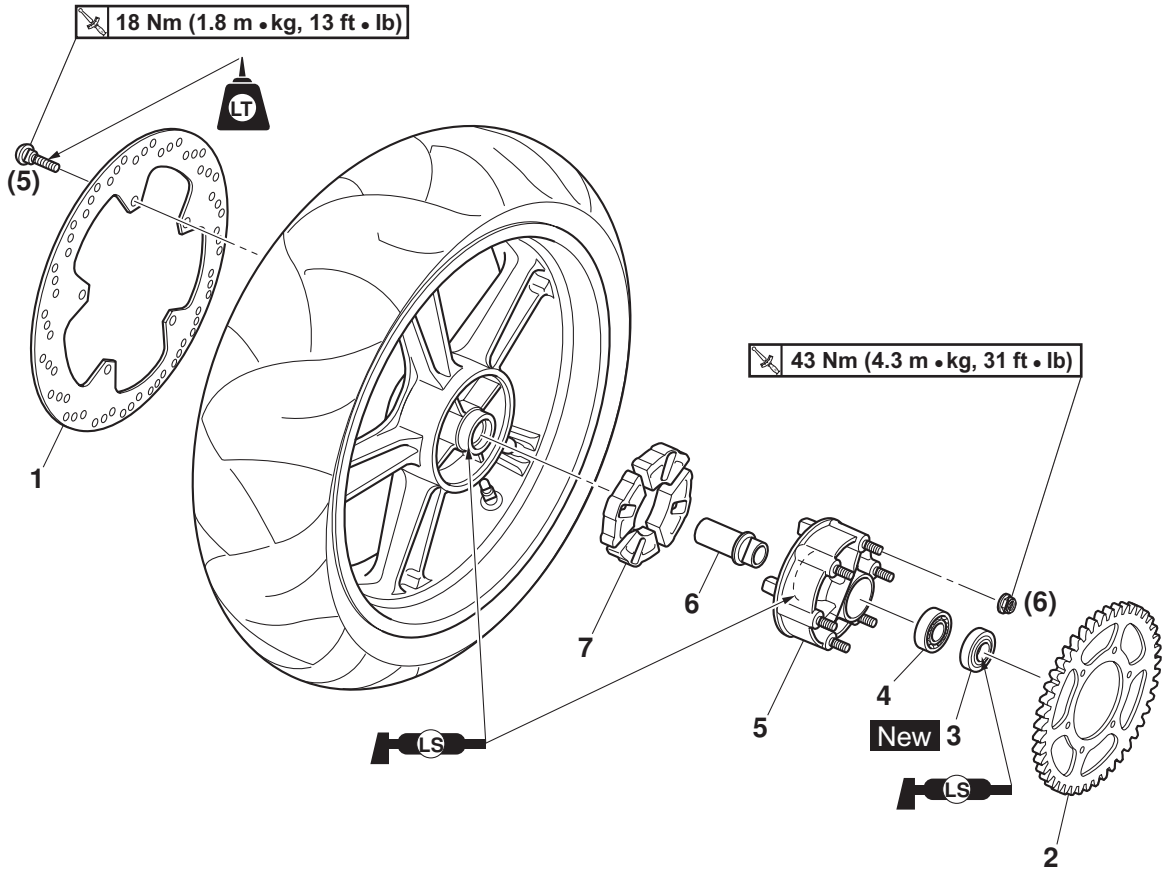

Order	Job/Parts to remove	Q'ty	Remarks
1	Rear brake disc	1	
2	Rear wheel sprocket	1	
3	Oil seal	1	
4	Bearing	1	
5	Rear wheel drive hub	1	
6	Collar	1	
7	Rear wheel drive hub damper	4	
			For installation, reverse the removal procedure.

Disassembling the rear wheel

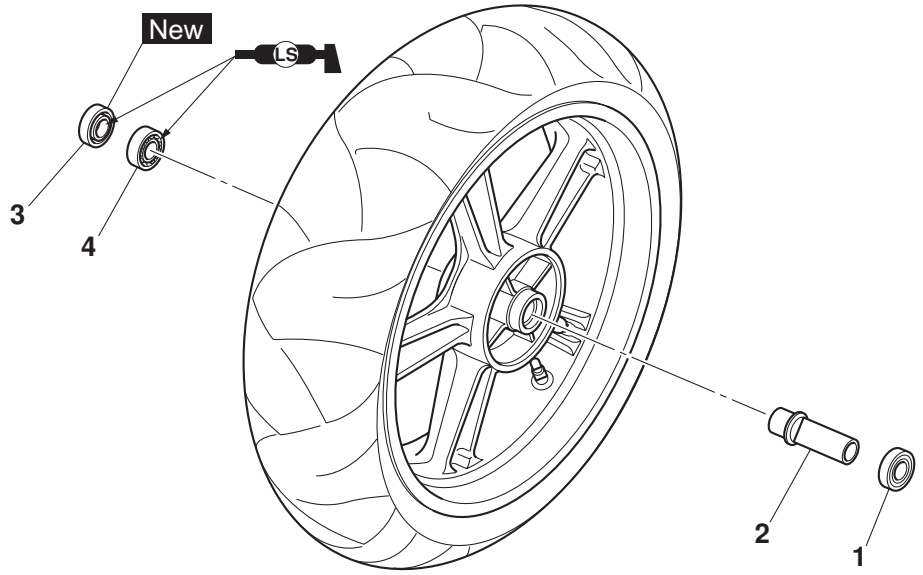

Order	Job/Parts to remove	Qty	Remarks
1	Bearing	1	
2	Spacer	1	
3	Oil seal	1	
4	Bearing	1	
			For assembly, reverse the disassembly procedure.

REMOVING THE REAR WHEEL (DISC)

1. Stand the vehicle on a level surface.

WARNING

Securely support the vehicle so that there is no danger of it falling over.

2. Elevate:
   - Rear wheel

NOTE:

Place the vehicle on a suitable stand so that the rear wheel is elevated.

3. Remove:
   - Rear brake caliper

NOTE:

Do not depress the brake pedal when removing the rear wheel.

6. Remove:
   - Rear wheel axle nut
   - Rear wheel axle
   - Drive chain pullers
   - Collars
   - Rear wheel

NOTE:

Push the rear wheel forward and remove the drive chain from the rear wheel sprocket.

DISASSEMBLING THE REAR WHEEL

1. Remove:
   - Oil seals
   - Wheel bearings
     Refer to “DISASSEMBLING THE FRONT WHEEL” on page 4-8.

CHECKING THE REAR WHEEL

1. Check:
   - Rear wheel axle
   - Rear wheel
   - Wheel bearings
   - Oil seals
     Refer to “CHECKING THE FRONT WHEEL” on page 4-8.
2. Check:
   - Tyre
   - Rear wheel
     Damage/wear → Replace.
     Refer to “CHECKING THE TYRES” on page 3-23 and “CHECKING THE WHEELS” on page 3-25.
3. Measure:
   - Radial wheel runout
   - Lateral wheel runout
     Refer to “CHECKING THE FRONT WHEEL” on page 4-8.

Radial wheel runout limit
1.0 mm
Lateral wheel runout limit
0.5 mm

CHECKING THE REAR BRAKE CALIPER BRACKET

1. Check:
   - Rear brake caliper bracket
     Cracks/damage → Replace.

CHECKING THE REAR WHEEL DRIVE HUB

1. Check:
   - Rear wheel drive hub
     Cracks/damage → Replace.
   - Rear wheel drive hub dampers
     Damage/wear → Replace.

CHECKING AND REPLACING THE REAR WHEEL SPROCKET

1. Check:
   - Rear wheel sprocket
     More than 1/4 tooth “a” wear → Replace the rear wheel sprocket.
     Bent teeth → Replace the rear wheel sprocket.

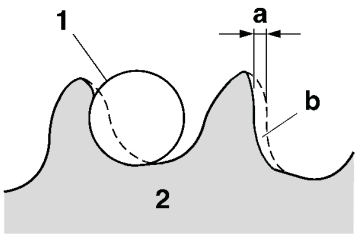

b. Correct
1. Drive chain roller
2. Rear wheel sprocket

2. Replace:
   - Rear wheel sprocket

a. Remove the self-locking nuts and the rear wheel sprocket.
b. Clean the rear wheel drive hub with a clean cloth, especially the surfaces that contact the sprocket.
c. Install the new rear wheel sprocket.

Rear wheel sprocket self-locking nut
43 Nm (4.3 m·kg, 31 ft·lb)

NOTE:
Tighten the self-locking nuts in stages and in a crisscross pattern.

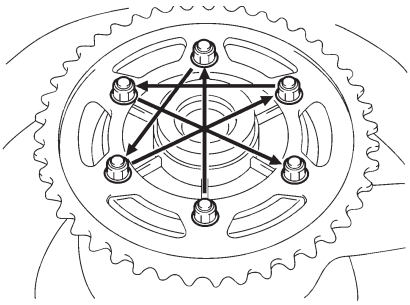

ASSEMBLING THE REAR WHEEL

1. Install:
   - Wheel bearings New
   - Oil seals New
     Refer to “ASSEMBLING THE FRONT WHEEL” on page 4-9.

ADJUSTING THE REAR WHEEL STATIC BALANCE

NOTE:
- After replacing the tyre, wheel or both, the rear wheel static balance should be adjusted.
- Adjust the rear wheel static balance with the brake disc and rear wheel drive hub installed.

1. Adjust:
   - Rear wheel static balance
     Refer to “ADJUSTING THE FRONT WHEEL STATIC BALANCE” on page 4-9.

INSTALLING THE REAR WHEEL (DISC)

1. Install:
   - Rear brake disc

Rear brake disc bolt
18 Nm (1.8 m·kg, 13 ft·lb)
LOCTITE®

NOTE:
Tighten the brake disc bolts in stages and in a crisscross pattern.

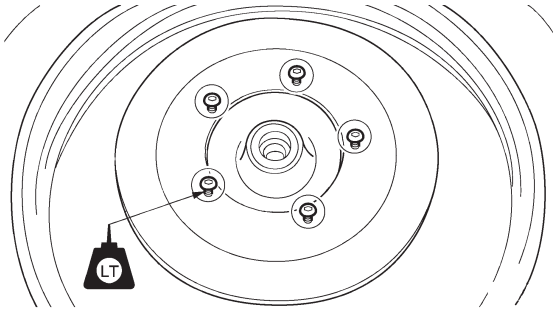

2. Check:
   - Rear brake disc
     Refer to “CHECKING THE REAR BRAKE DISC” on page 4-33.
3. Lubricate:
   - Rear wheel axle
   - Contact surface of rear wheel hub and rear wheel
   - Wheel bearings
   - Oil seal lips

Recommended lubricant
Lithium-soap-based grease

4. Adjust:
   - Drive chain slack
     Refer to “ADJUSTING THE DRIVE CHAIN SLACK” on page 3-21.

Drive chain slack
20.0–40.0 mm

FRONT BRAKE

Removing the front brake pads

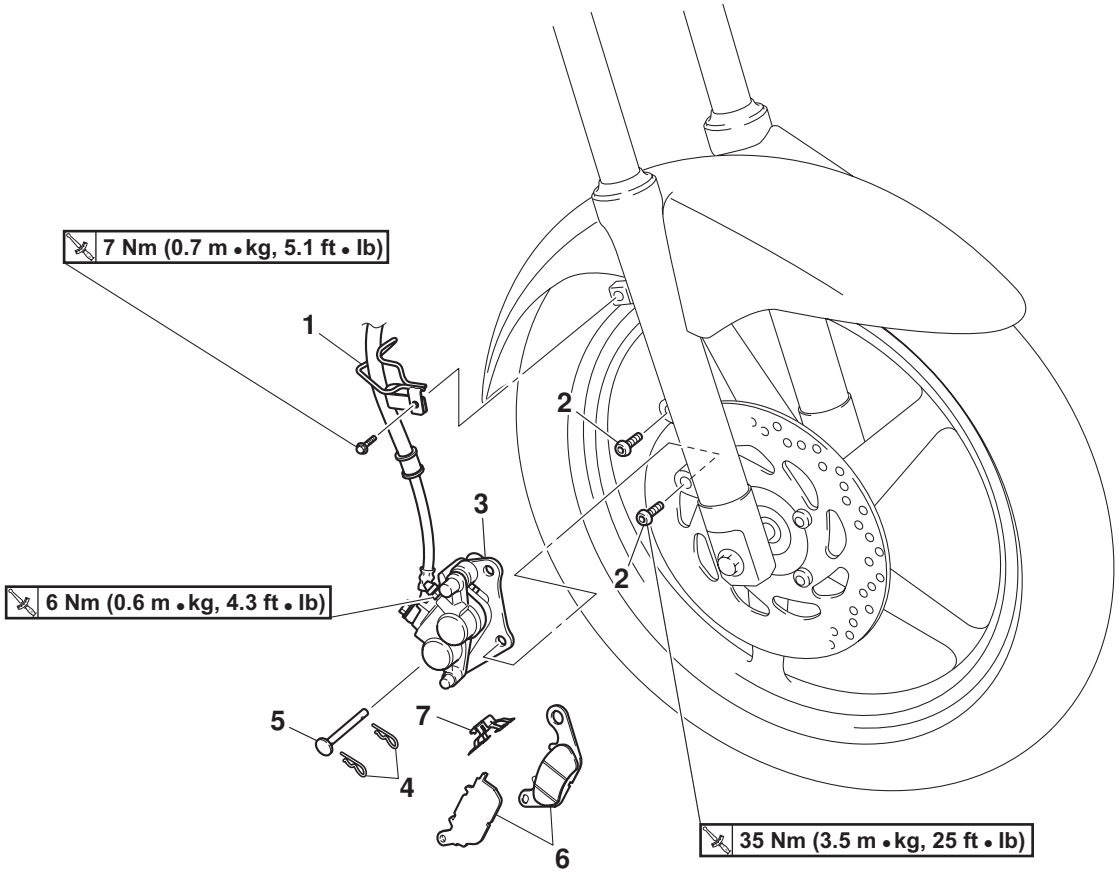

Order	Job/Parts to remove	Qty	Remarks
			The following procedure applies to both of the front brake calipers.
1	Brake hose holder	1	
2	Front brake caliper bolt	2	
3	Front brake caliper	1	
4	Brake pad clip	2	
5	Brake pad pin	1	
6	Front brake pad	2	
7	Brake pad spring	1	
			For installation, reverse the removal procedure.

Removing the front brake master cylinder

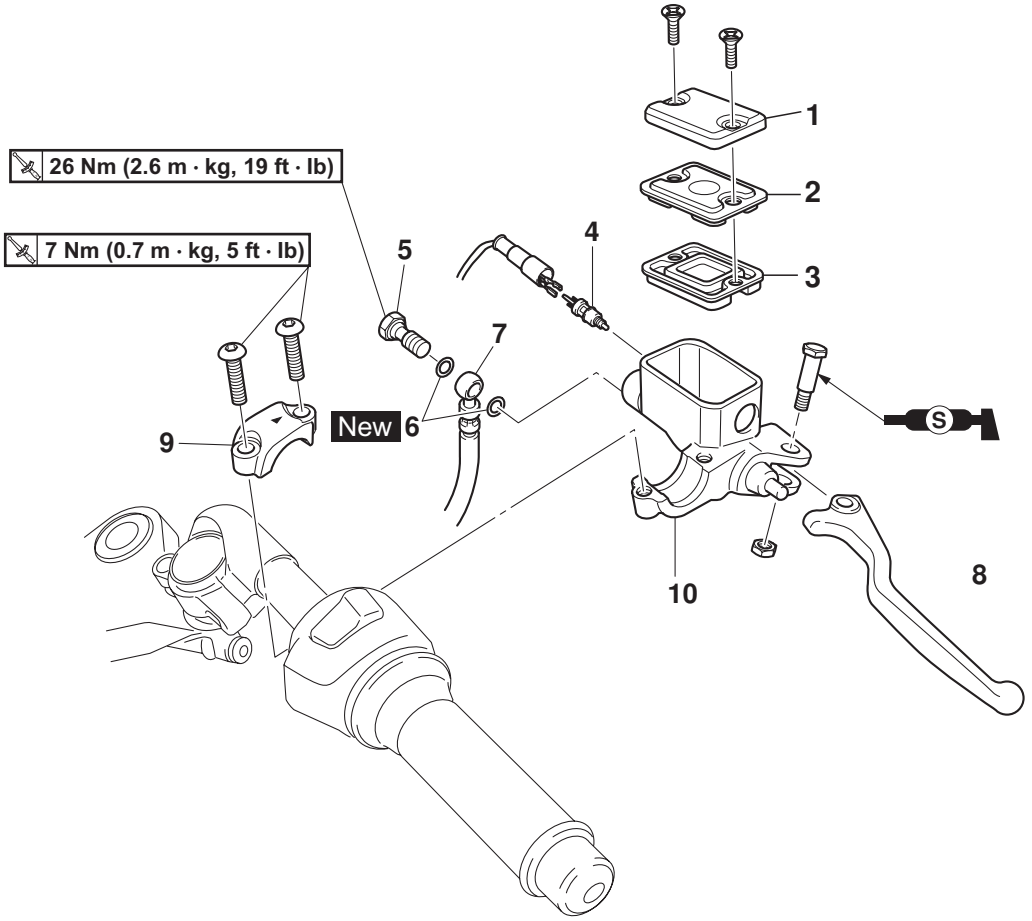

Order	Job/Parts to remove	Qty	Remarks
	Brake fluid		Drain. Refer to “BLEEDING THE HYDRAULIC BRAKE SYSTEM” on page 3-20.
1	Brake master cylinder reservoir cap	1	
2	Brake master cylinder reservoir diaphragm holder	1	
3	Brake master cylinder reservoir diaphragm	1	
4	Front brake light switch	1	
5	Brake hose union bolt	1	
6	Copper washer	2	
7	Front brake hose	1	
8	Brake Lever	1	
9	Front brake master cylinder holder	1	
10	Front brake master cylinder	1	
			For installation, reverse the removal procedure.

Disassembling the front brake master cylinder

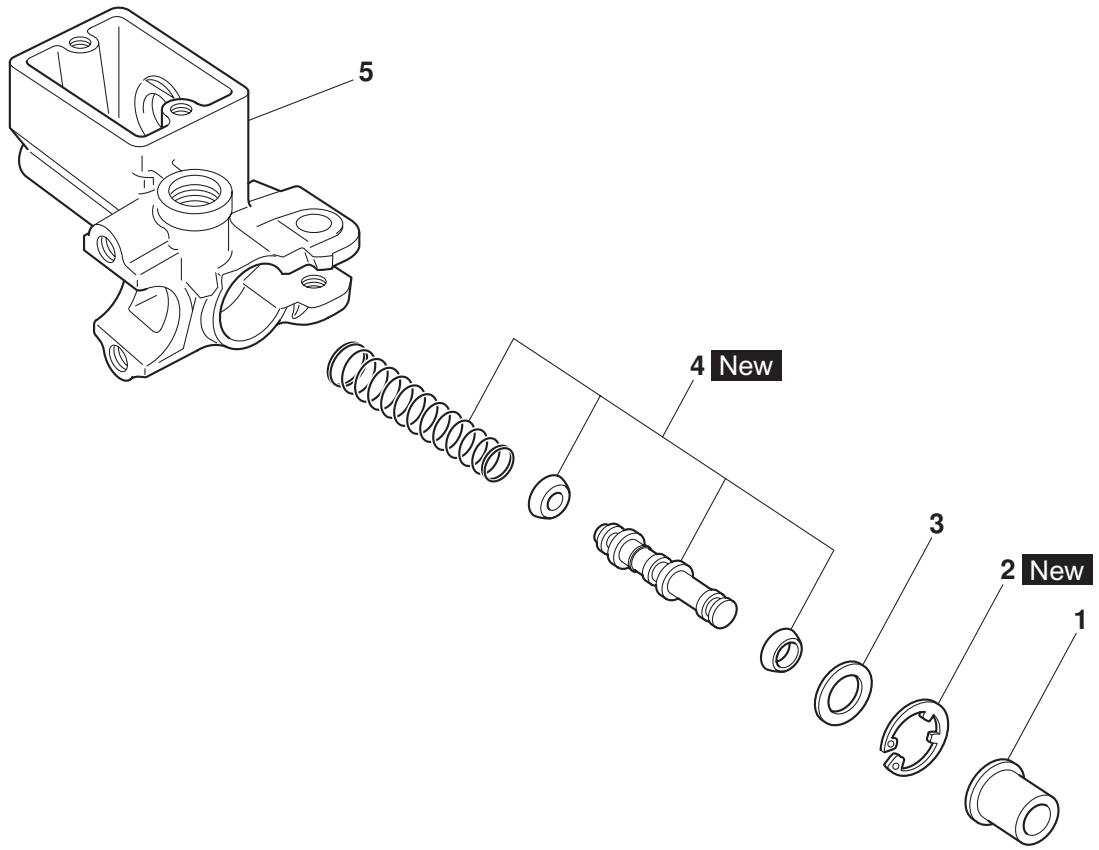

Order	Job/Parts to remove	Qty	Remarks
1	Dust boot	1	
2	Circlip	1	
3	Washer	1	
4	Brake master cylinder kit	1	
5	Brake master cylinder body	1	
			For assembly, reverse the disassembly procedure.

INTRODUCTION

WARNING

Disc brake components rarely require disassembly. Therefore, always follow these preventive measures:

Never disassemble brake components unless absolutely necessary.

If any connection on the hydraulic brake system is disconnected, the entire brake system must be disassembled, drained, cleaned, properly filled, and bled after reassembly.

Never use solvents on internal brake components.

Use only clean or new brake fluid for cleaning brake components.

Brake fluid may damage painted surfaces and plastic parts. Therefore, always clean up any spilt brake fluid immediately.

Avoid brake fluid coming into contact with the eyes as it can cause serious injury.

FIRST AID FOR BRAKE FLUID ENTERING THE EYES:

Flush with water for 15 minutes and get immediate medical attention.

CHECKING THE FRONT BRAKE DISC

1. Remove:
   Front wheel
   Refer to “FRONT WHEEL” on page 4-4.
2. Check:
   Brake disc
   Damage/galling → Replace.
3. Measure:
   Brake disc deflection
   Out of specification → Correct the brake disc deflection or replace the brake disc.

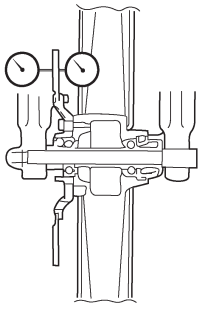

Brake disc deflection limit
0.10 mm

▼▼▼▼▼▼▼▼▼▼▼▼▼▼▼▼▼▼▼▼▼▼▼▼▼▼▼▼▼▼▼▼▼▼▼▼▼▼

a. Place the vehicle on a suitable stand so that the front wheel is elevated.
b. Before measuring the front brake disc deflection, turn the handlebar to the left or right to ensure that the front wheel is stationary.
c. Remove the brake caliper.
d. Hold the dial gauge at a right angle against the brake disc surface.
e. Measure the deflection 5 mm below the edge of the brake disc.

▲▲▲▲▲▲▲▲▲▲▲▲▲▲▲▲▲▲▲▲▲▲▲▲▲▲▲▲▲▲▲▲▲▲▲▲▲▲

4. Measure:
   Brake disc thickness
   Measure the brake disc thickness at a few different locations.
   Out of specification → Replace.

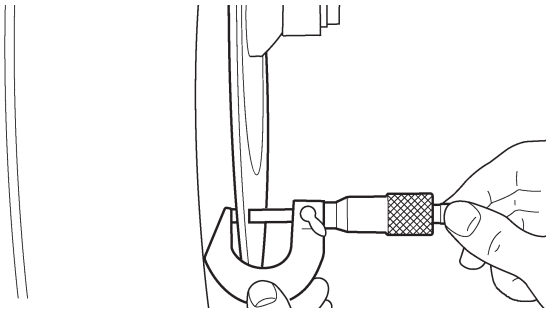

Brake disc thickness limit
3.5 mm

5. Adjust:
   Brake disc deflection

▼▼▼▼▼▼▼▼▼▼▼▼▼▼▼▼▼▼▼▼▼▼▼▼▼▼▼▼▼▼▼▼▼▼▼▼▼▼

a. Remove the brake disc.
b. Rotate the brake disc by one bolt hole.
c. Install the brake disc.

Front brake disc bolt
23 Nm (2.3 m·kg, 17 ft·lb)
LOCTITE®

NOTE:

Tighten the brake disc bolts in stages and in a crisscross pattern.

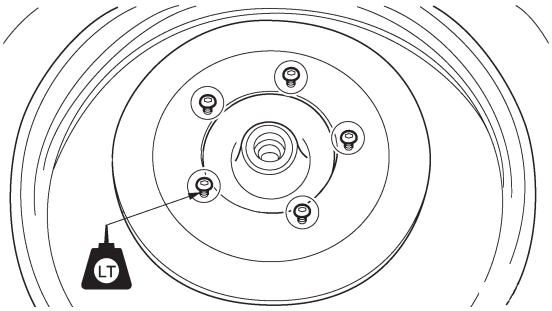

d. Measure the brake disc deflection.
e. If out of specification, repeat the adjustment steps until the brake disc deflection is within specification.
f. If the brake disc deflection cannot be brought within specification, replace the brake disc.

▲▲

6. Install:
   Front wheel
   Refer to “FRONT WHEEL” on page 4-4.

REPLACING THE FRONT BRAKE PADS

NOTE:

When replacing the brake pads, it is not necessary to disconnect the brake hose or disassemble the brake caliper.

1. Measure:
   Brake pad wear limit“a”
   Out of specification → Replace the brake pads as a set.

	Brake pad lining thickness (inner) **5.3 mm** **Limit** **0.8 mm** **Brake pad lining thickness (outer)** **5.3 mm** **Limit** **0.8 mm**

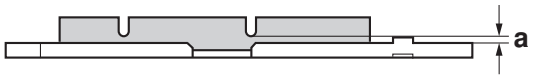

2. Install:
   Brake pads
   Brake pad spring

NOTE:

Always install new brake pads and a new brake pad spring as a set.

▼▼

a. Connect a clear plastic hose “1” tightly to the bleed screw “2”. Put the other end of the hose into an open container.

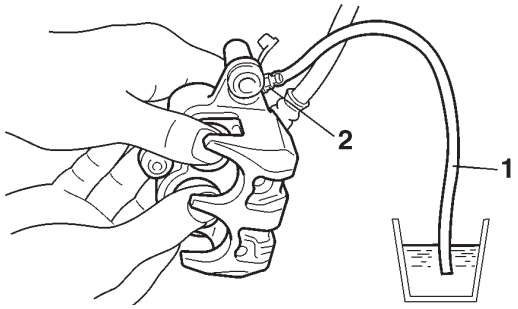

b. Loosen the bleed screw and push the brake caliper pistons into the brake caliper with your finger.
c. Tighten the bleed screw.

	Bleed screw **6 Nm (0.6 m·kg, 4.3 ft·lb)**

d. Install new brake pads and a new brake pad spring.

▲▲

3. Check:
   Brake fluid level
   Below the minimum level mark “a” → Add the recommended brake fluid to the proper level.
   Refer to “CHECKING THE BRAKE FLUID LEVEL” on page 3-17.

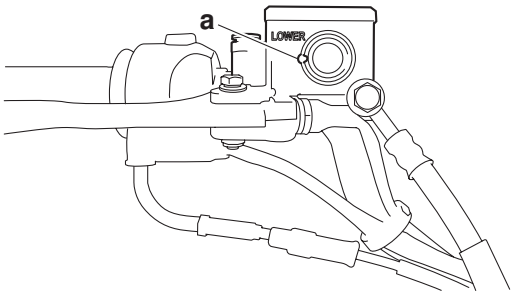

4. Check:
   Brake lever operation
   Soft or spongy feeling → Bleed the brake system.
   Refer to “BLEEDING THE HYDRAULIC BRAKE SYSTEM” on page 3-18.

REMOVING THE FRONT BRAKE CALIPER

NOTE:

Before disassembling the brake caliper, drain the brake fluid from the entire brake system.

1. Remove:
   Brake hose union bolt
   Copper washers
   Brake hose

NOTE:

Put the end of the brake hose into a container and pump out the brake fluid carefully.

DISASSEMBLING THE FRONT BRAKE CALIPER

1. Remove:
   Brake caliper pistons "1"
   Brake caliper piston seals "2"
   Brake caliper dust seals "3"

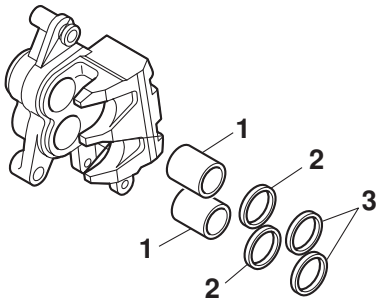

a. Blow compressed air into the brake hose joint opening "a" to force out the pistons from the brake caliper.

WARNING

Cover the brake caliper piston with a rag. Be careful not to get injured when the piston is expelled from the brake caliper. Never try to pry out the brake caliper piston.

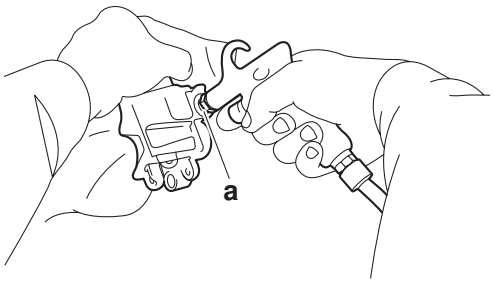

b. Remove the brake caliper piston seals and dust seals.

CHECKING THE FRONT BRAKE CALIPER

Recommended brake component replacement schedule	
Brake pads	If necessary
Piston seals	Every two years
Dust seals	Every two years
Brake hose	Every four years
Brake fluid	Every two years and whenever the brake is disassembled

1. Check:
   Brake caliper pistons "1"
   Rust/scratches/wear → Replace the brake caliper pistons.
   Brake caliper cylinders "2"
   Scratches/wear → Replace the brake caliper assembly.
   Brake caliper body "3"
   Cracks/damage → Replace the brake caliper assembly.
   Brake fluid delivery passages
   (brake caliper body)
   Obstruction → Blow out with compressed air.

WARNING

Whenever a brake caliper is disassembled, replace the piston seals and dust seals.

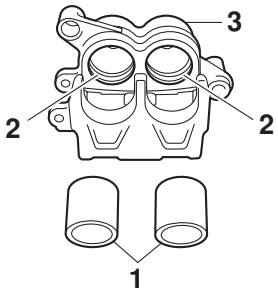

2. Check:
   Brake caliper bracket
   Cracks/damage → Replace.

ASSEMBLING THE FRONT BRAKE CALIPER

WARNING

Before installation, all internal brake components should be cleaned and lubricated with clean or new brake fluid.
Never use solvents on internal brake components as they will cause the piston seals and dust seals to swell and distort.
Whenever a brake caliper is disassembled, replace the brake caliper piston seals and dust seals.

Recommended fluid
DOT 3 or DOT 4

INSTALLING THE FRONT BRAKE CALIPER

1. Install:
   Brake caliper
   (temporarily)
   Copper washers New
   Brake hose
   Brake hose union bolt

Brake hose union bolt
26 Nm (2.6 m·kg, 19 ft·lb)

CAUTION:

When installing the brake hose onto the brake caliper "1", make sure the brake pipe "a" touches the projection "b" on the brake caliper.

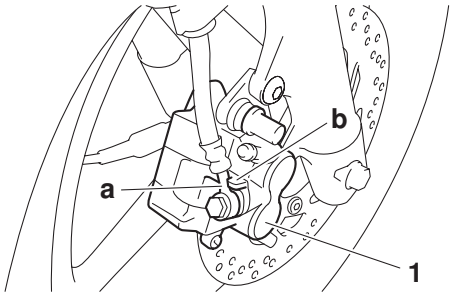

2. Remove:
   Brake caliper
3. Install:
   Brake pad spring
   Brake pads
   Brake caliper
   Brake hose holder

Brake caliper bolt
35 Nm (3.5 m·kg, 25 ft·lb)
Brake hose holder
7 Nm (0.7 m·kg, 5.1 ft·lb)

Refer to "REPLACING THE FRONT BRAKE PADS" on page 4-20.

4. Fill:
   Brake master cylinder reservoir
   (with the specified amount of the recommended brake fluid)

Recommended fluid
DOT 3 or DOT 4

WARNING

Use only the designated brake fluid. Other brake fluids may cause the rubber seals to deteriorate, causing leakage and poor brake performance.
Refill with the same type of brake fluid that is already in the system. Mixing brake fluids may result in a harmful chemical reaction, leading to poor brake performance.
When refilling, be careful that water does not enter the brake fluid reservoir. Water will significantly lower the boiling point of the brake fluid and could cause vapor lock.

CAUTION:

Brake fluid may damage painted surfaces and plastic parts. Therefore, always clean up any spilt brake fluid immediately.

5. Bleed:
   Brake system
   Refer to "BLEEDING THE HYDRAULIC BRAKE SYSTEM" on page 3-18.
6. Check:
   Brake fluid level
   Below the minimum level mark "a" → Add the recommended brake fluid to the proper level.
   Refer to "CHECKING THE BRAKE FLUID LEVEL" on page 3-17.

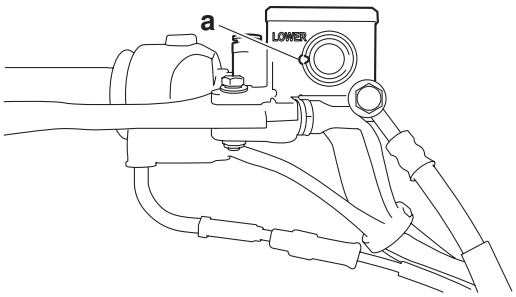

7. Check:
   Brake lever operation
   Soft or spongy feeling → Bleed the brake system.
   Refer to "BLEEDING THE HYDRAULIC BRAKE SYSTEM" on page 3-18.

REMOVING THE FRONT BRAKE MASTER CYLINDER

NOTE:

Before removing the front brake master cylinder, drain the brake fluid from the entire brake system.

1. Disconnect:
   Front brake light switch"1"

NOTE:

Push the fastener to remove the front brake light switch from the brake master cylinder.

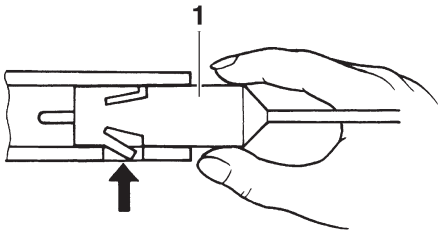

2. Remove:
   Brake hose union bolt
   Copper washers
   Brake hose

NOTE:

To collect any remaining brake fluid, place a container under the master cylinder and the end of the brake hose.

CHECKING THE FRONT BRAKE MASTER CYLINDER

1. Check:
   Brake master cylinder"1"
   Damage/scratches/wear → Replace.
   Brake fluid delivery passages"2"
   (brake master cylinder body)
   Obstruction → Blow out with compressed air.

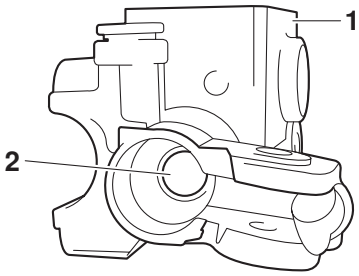

2. Check:
   Brake master cylinder kit
   Damage/scratches/wear → Replace.
3. Check:
   Brake master cylinder reservoir
   Cracks/damage → Replace.
   Brake master cylinder reservoir diaphragm
   Damage/wear → Replace.
4. Check:
   Brake hose
   Cracks/damage/wear → Replace.

ASSEMBLING THE FRONT BRAKE MASTER CYLINDER

WARNING

Before installation, all internal brake components should be cleaned and lubricated with clean or new brake fluid.
Never use solvents on internal brake components.

	**Recommended fluid** **DOT 3 or DOT 4**

INSTALLING THE FRONT BRAKE MASTER CYLINDER

1. Install:
   Brake master cylinder"1"
   Brake master cylinder holder"2"

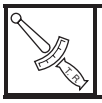	**Brake master cylinder holder bolt** **7 Nm (0.7 m·kg, 5.1 ft·lb)**

NOTE:

Install the brake master cylinder holder with the "UP" mark facing up.
Align the end of the brake master cylinder holder with the punch mark "a" on the handlebar.
First, tighten the upper bolt, then the lower bolt.

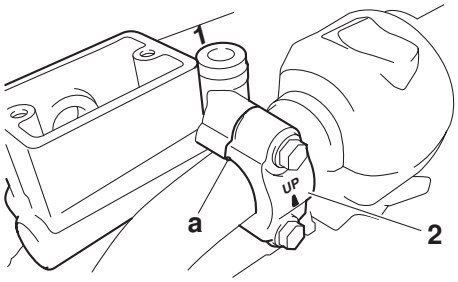

2. Install:
   Copper washers "1" New
   Brake hose "2"
   Brake hose union bolt "3"

	Brake hose union bolt 26 Nm (2.6 m·kg, 19 ft·lb)

WARNING

Proper brake hose routing is essential to insure safe vehicle operation. Refer to "CABLE ROUTING" on page 2-33.

NOTE:

Install the brake hose to the front brake master cylinder within the angle shown in the illustration.
While holding the brake hose, tighten the brake hose union bolt as shown.
Turn the handlebar to the left and right to make sure the brake hose does not touch other parts (e.g., wire harness, cables, leads). Correct if necessary.

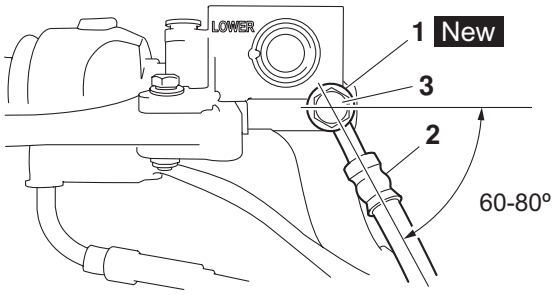

3. Fill:
   Brake master cylinder reservoir
   (with the specified amount of the recommended brake fluid)

	Recommended fluid DOT 3 or DOT 4

WARNING

Use only the designated brake fluid. Other brake fluids may cause the rubber seals to deteriorate, causing leakage and poor brake performance.
Refill with the same type of brake fluid that is already in the system. Mixing brake fluids may result in a harmful chemical reaction, leading to poor brake performance.
When refilling, be careful that water does not enter the brake master cylinder reservoir. Water will significantly lower the boiling point of the brake fluid and could cause vapor lock.

CAUTION:

Brake fluid may damage painted surfaces and plastic parts. Therefore, always clean up any spilt brake fluid immediately.

4. Bleed:
   Brake system
   Refer to "BLEEDING THE HYDRAULIC BRAKE SYSTEM" on page 3-18.
5. Check:
   Brake fluid level
   Below the minimum level mark "a" → Add the recommended brake fluid to the proper level.
   Refer to "CHECKING THE BRAKE FLUID LEVEL" on page 3-17.

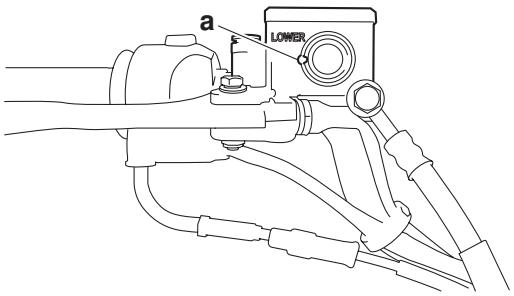

6. Check:
   Brake lever operation
   Soft or spongy feeling → Bleed the brake system.

Refer to “BLEEDING THE HYDRAULIC BRAKE SYSTEM” on page 3-18.

REAR BRAKE

Removing the rear brake pads

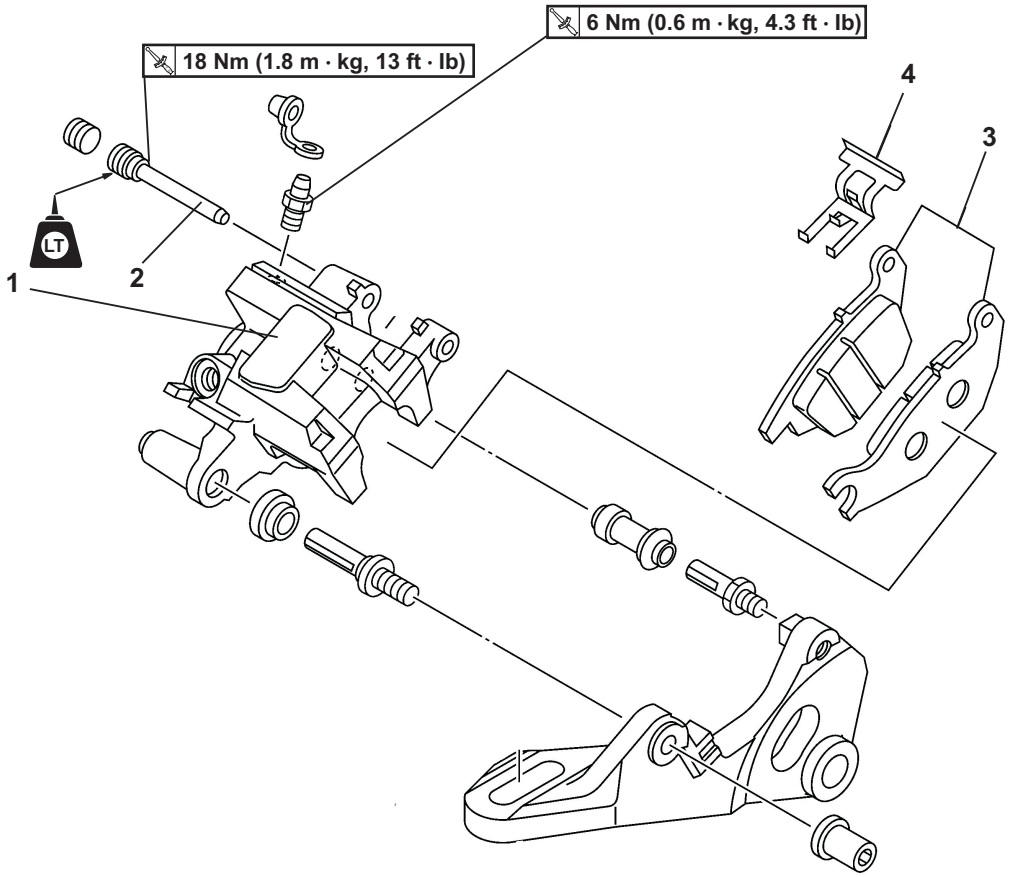

Order	Job/Parts to remove	Qty	Remarks
	Rear wheel		Refer to “REAR WHEEL” on page 4-10.
1	Rear brake caliper	1	
2	Brake pad retaining bolt	2	
3	Rear brake pad	2	
4	Brake pad spring	1	
			For installation, reverse the removal procedure.

Removing the rear brake master cylinder

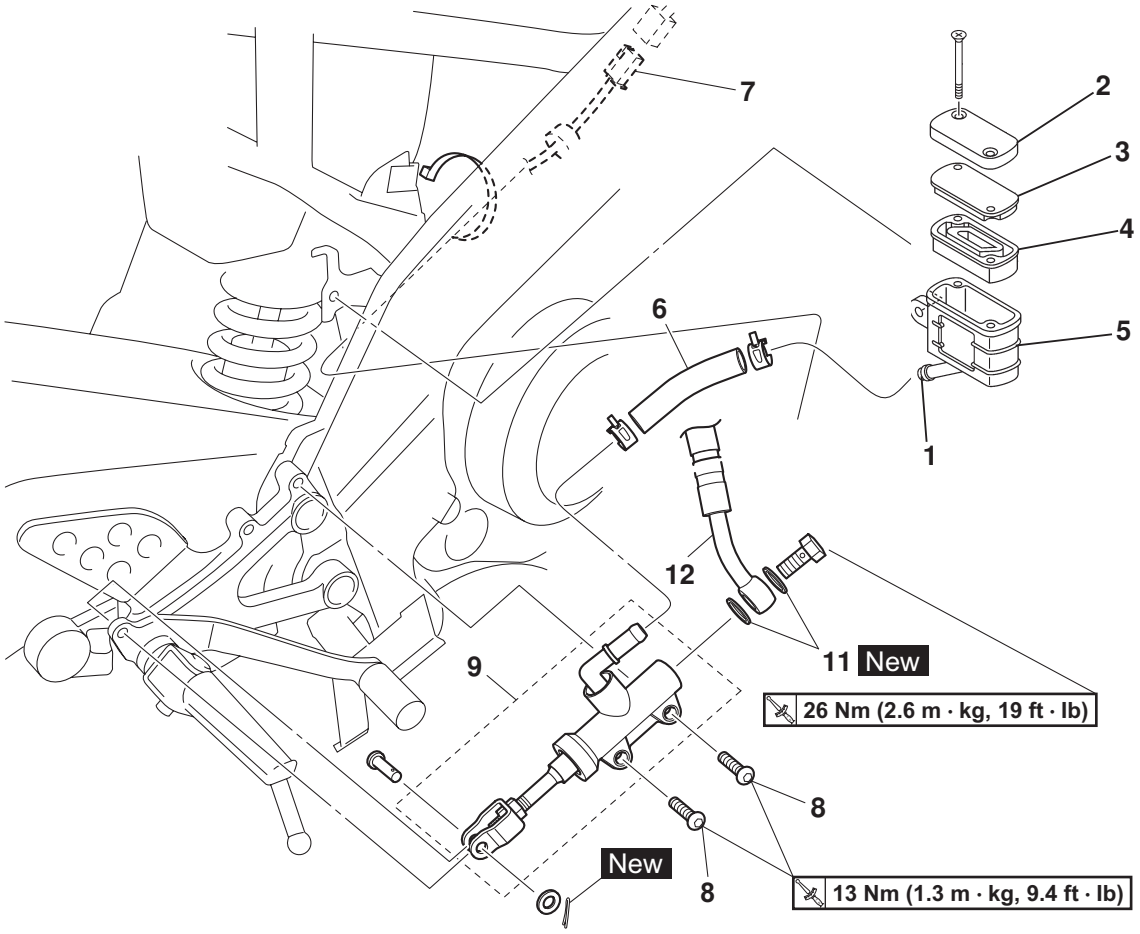

Order	Job/Parts to remove	Qty	Remarks
	Right side panel		Refer to “GENERAL CHASSIS” on page 4-1.
	Brake fluid		Drain. Refer to “BLEEDING THE HYDRAULIC BRAKE SYSTEM” on page 3-19.
1	Brake fluid reservoir bolt	1	
2	Brake fluid reservoir cap	1	
3	Brake fluid reservoir diaphragm holder	1	
4	Brake fluid reservoir diaphragm	1	
5	Brake fluid reservoir	1	
6	Brake fluid reservoir hose	1	
7	Rear brake light switch coupler	1	Disconnect.
8	Rear brake master cylinder bolt	2	
9	Rear brake master cylinder	1	
10	Brake hose union bolt	1	
11	Copper washer	2	
12	Rear brake hose	1	
			For installation, reverse the removal procedure.

Disassembling the rear brake master cylinder

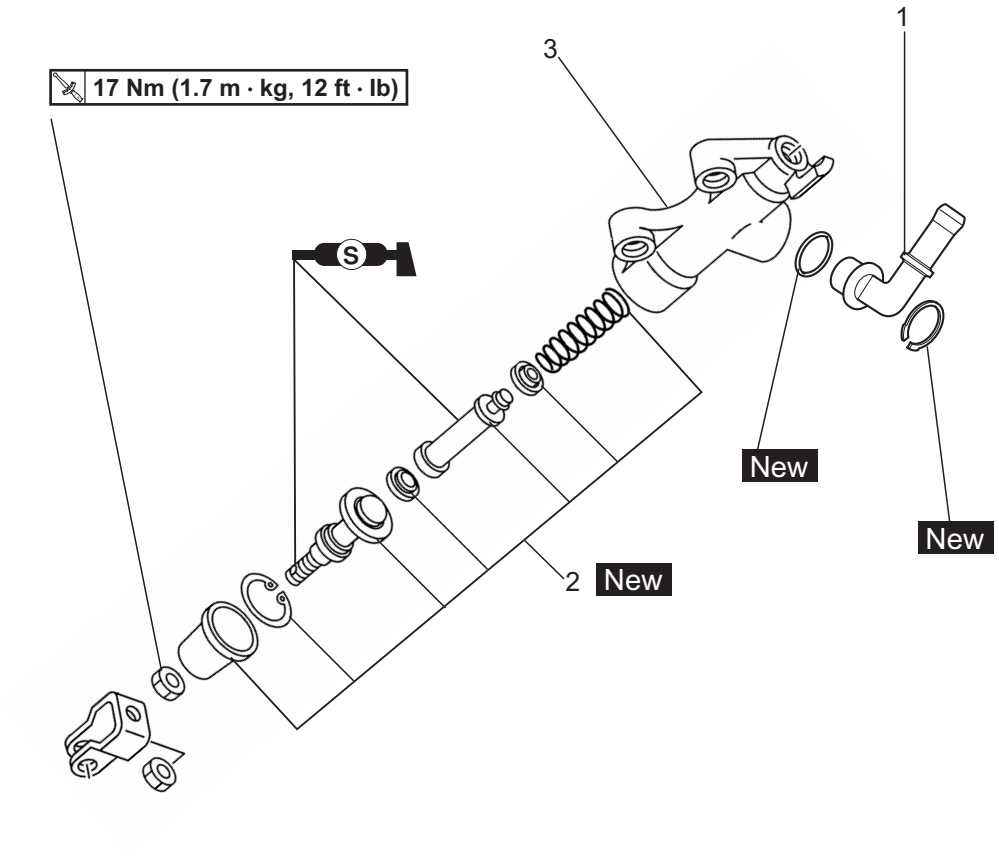

Order	Job/Parts to remove	Qty	Remarks
1	Brake hose joint	1	
2	Brake master cylinder kit	1	
3	Brake master cylinder body	1	
			For assembly, reverse the disassembly procedure.

Removing the rear brake caliper

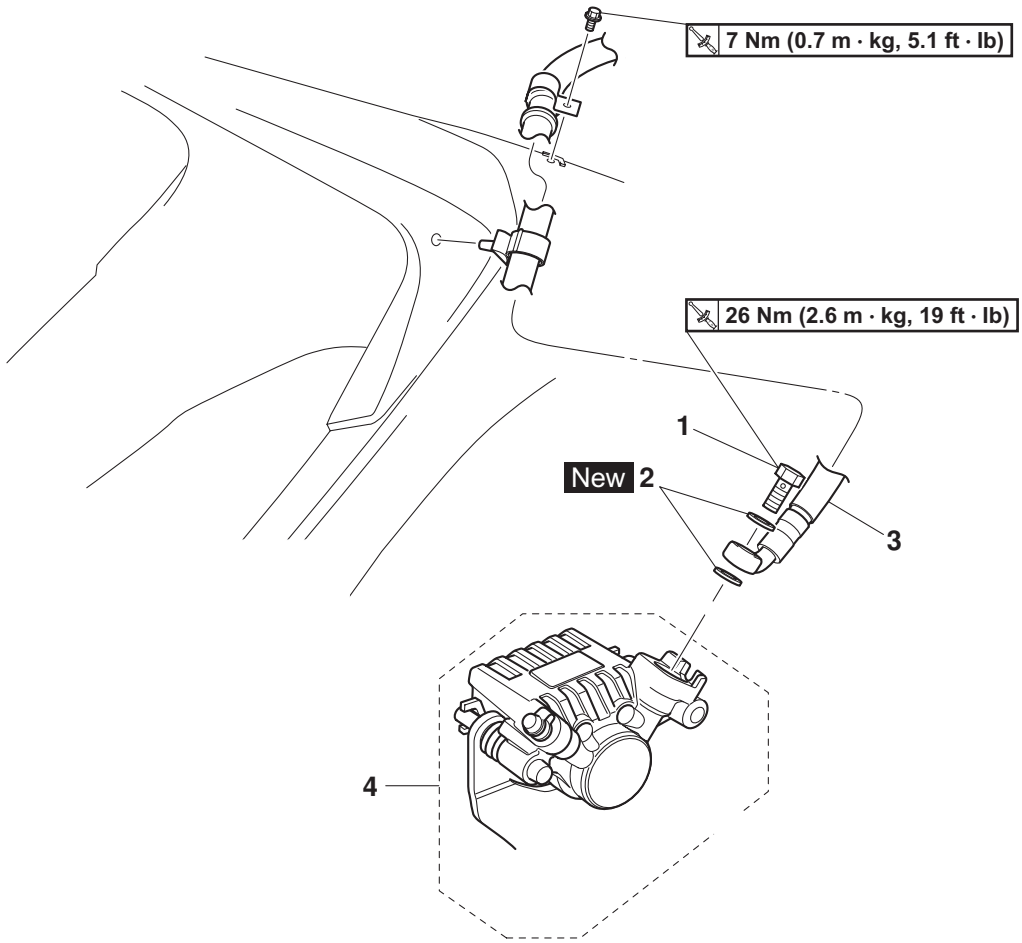

Order	Job/Parts to remove	Qty	Remarks
	Brake fluid		Drain. Refer to “BLEEDING THE HYDRAULIC BRAKE SYSTEM” on page 3-19.
	Rear wheel		Refer to “REAR WHEEL” on page 4-10.
1	Rear brake hose union bolt	1	
2	Copper washer	2	
3	Rear brake hose	1	
4	Rear brake caliper	1	
			For installation, reverse the removal procedure.

Disassembling the rear brake caliper

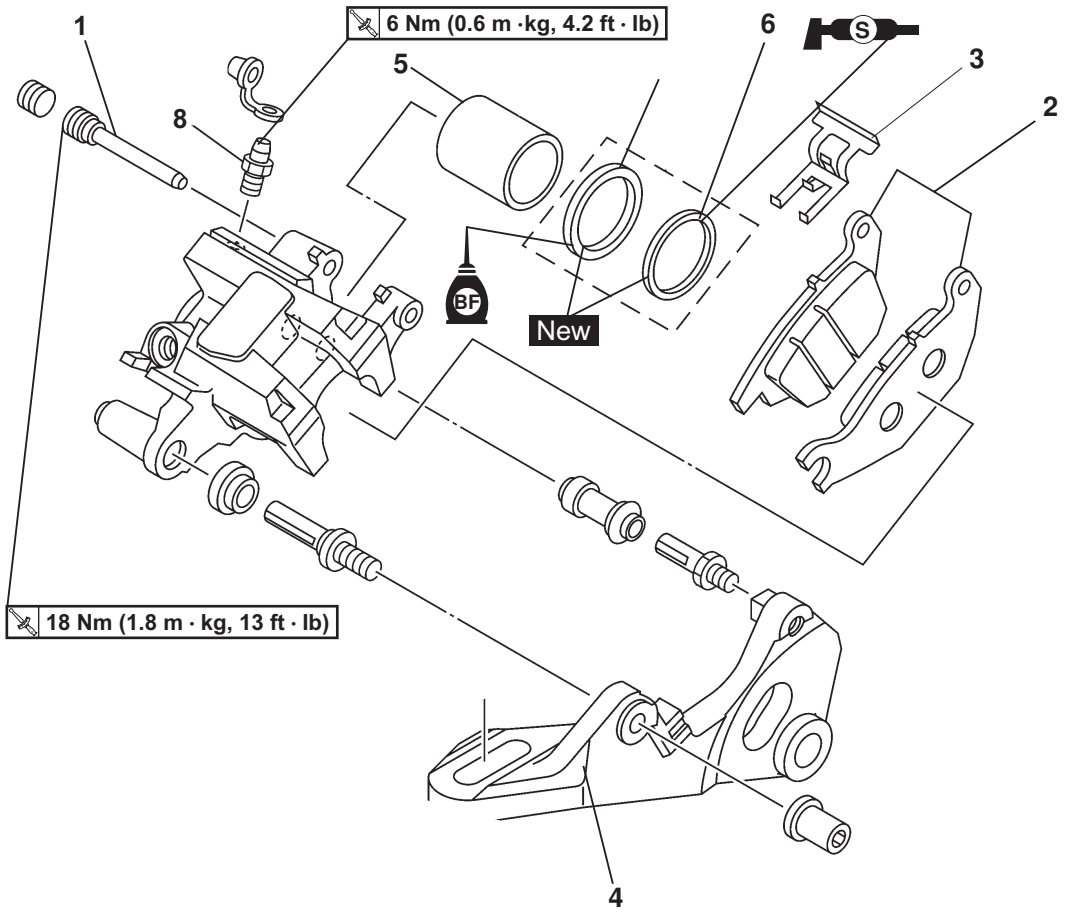

Order	Job/Parts to remove	Qty	Remarks
1	Brake pad retaining bolt	2	
2	Rear brake pad	2	
3	Brake pad spring	1	
4	Brake caliper bracket	1	
5	Brake caliper piston	1	
6	Brake caliper piston dust seal	1	
7	Brake caliper piston seal	1	
8	Bleed screw	1	
			For assembly, reverse the disassembly procedure.

INTRODUCTION

WARNING

Disc brake components rarely require disassembly. Therefore, always follow these preventive measures:

Never disassemble brake components unless absolutely necessary.

If any connection on the hydraulic brake system is disconnected, the entire brake system must be disassembled, drained, cleaned, properly filled, and bled after reassembly.

Never use solvents on internal brake components.

Use only clean or new brake fluid for cleaning brake components.

Brake fluid may damage painted surfaces and plastic parts. Therefore, always clean up any spilt brake fluid immediately.

Avoid brake fluid coming into contact with the eyes as it can cause serious injury.

FIRST AID FOR BRAKE FLUID ENTERING THE EYES:

Flush with water for 15 minutes and get immediate medical attention.

CHECKING THE REAR BRAKE DISC

1. Remove:
   - Rear wheel
     Refer to “REAR WHEEL” on page 4-12.
2. Check:
   - Brake disc
     Damage/galling → Replace.
3. Measure:
   - Brake disc deflection
     Out of specification → Correct the brake disc deflection or replace the brake disc.
     Refer to “CHECKING THE FRONT BRAKE DISC” on page 4-18.

Brake disc deflection limit
0.10 mm

4. Measure:
   - Brake disc thickness
     Measure the brake disc thickness at a few different locations.
     Out of specification → Replace.
     Refer to “CHECKING THE FRONT BRAKE DISC” on page 4-18.

Brake disc thickness limit
4.0 mm

5. Adjust:
   - Brake disc deflection
     Refer to “CHECKING THE FRONT BRAKE DISC” on page 4-18.

Rear brake disc bolt
18 Nm (1.8 m·kg, 13 ft·lb)
LOCTITE®

6. Install:
   - Rear wheel
     Refer to “REAR WHEEL” on page 4-12.

REPLACING THE REAR BRAKE PADS

NOTE:

When replacing the brake pads, it is not necessary to disconnect the brake hose or disassemble the brake caliper.

1. Remove:
   - Brake pads
   - Brake pad spring

NOTE:

To remove the inner brake pad “1”, push down on the brake caliper bracket so that there is space to remove the brake pad.

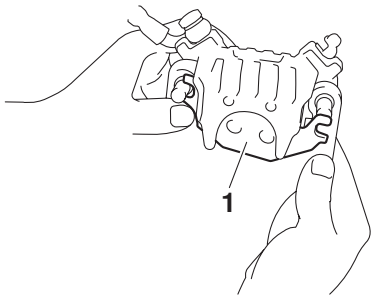

2. Measure:
   - Brake pad wear limit “a”
     Out of specification → Replace the brake pads as a set.

Brake pad lining thickness (inner)
7.0 mm
Limit
1.5 mm
Brake pad lining thickness (outer)
7.0 mm
Limit
1.5 mm

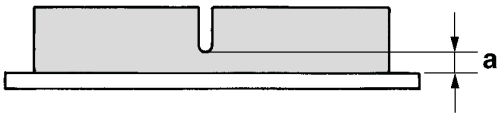

3. Install:
   - Brake pad spring New
   - Brake pads New

NOTE:
Always install new brake pads and a new brake pad spring as a set.

a. Connect a clear plastic hose tightly to the bleed screw. Put the other end of the hose into an open container.

b. Loosen the bleed screw and push the brake caliper piston into the brake caliper with your finger.
c. Tighten the bleed screw.

Rear brake caliper bleed screw
6 Nm (0.6 m·kg, 4.2ft·lb)

d. Install a new brake pad spring "1" and new brake pads.

NOTE:
Install the brake pad spring as shown.

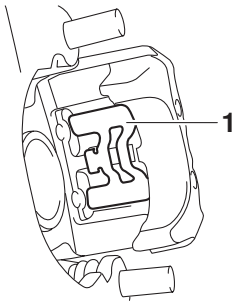

4. Install:
   - Brake pad retaining bolts
   - Brake caliper

Rear brake pad retaining bolt
18 Nm (1.8 m·kg, 13 ft·lb)
LOCTITE®

5. Install:
   - Rear wheel
     Refer to "REAR WHEEL" on page 4-12.
6. Check:
   - Brake fluid level
     Below the minimum level mark "a" → Add the recommended brake fluid to the proper level.
     Refer to "CHECKING THE BRAKE FLUID LEVEL" on page 3-19.

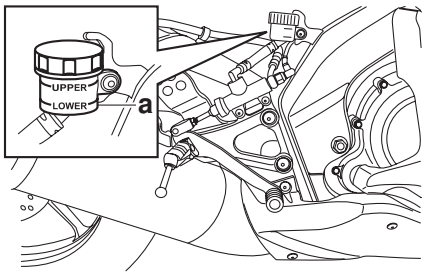

7. Check:
   - Brake pedal operation
     Soft or spongy feeling → Bleed the brake system.
     Refer to "BLEEDING THE HYDRAULIC BRAKE SYSTEM" on page 3-19.

REMOVING THE REAR BRAKE CALIPER

NOTE:
Before disassembling the brake caliper, drain the brake fluid from the entire brake system.

1. Remove:
   - Union bolt “1”
   - Copper washers “2”
   - Brake hose “3”

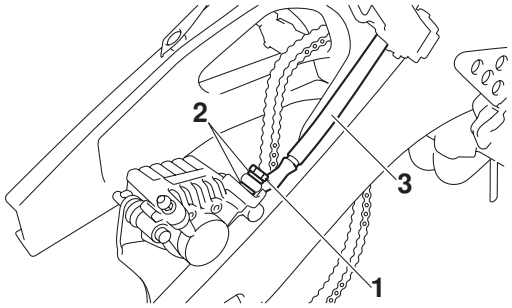

NOTE:

Put the end of the brake hose into a container and pump out the brake fluid carefully.

DISASSEMBLING THE REAR BRAKE CALIPER

1. Remove:
   - Brake caliper piston “1”
   - Brake caliper piston dust seal “2”
   - Brake caliper piston seal “3”

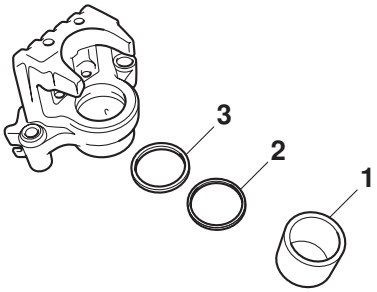

▼▼▼▼▼▼▼▼▼▼▼▼▼▼▼▼▼▼▼▼▼▼▼▼▼▼▼▼▼▼▼▼▼▼▼▼▼▼

a. Blow compressed air into the brake hose joint opening “a” to force out the piston from the brake caliper.

WARNING

Cover the brake caliper piston with a rag. Be careful not to get injured when the piston is expelled from the brake caliper. Never try to pry out the brake caliper piston.

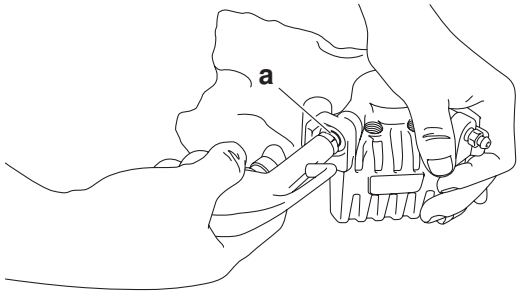

b. Remove the brake caliper piston seal and dust seal.

▲▲▲▲▲▲▲▲▲▲▲▲▲▲▲▲▲▲▲▲▲▲▲▲▲▲▲▲▲▲▲▲▲▲▲▲▲▲

CHECKING THE REAR BRAKE CALIPER

Recommended brake component replacement schedule	
Brake pads	If necessary
Piston seal	Every two years
Piston dust seal	Every two years
Brake hoses	Every four years
Brake fluid	Every two years and whenever the brake is disassembled

1. Check:
   - Brake caliper piston “1”
     Rust/scratches/wear → Replace the brake caliper piston.
   - Brake caliper cylinder “2”
     Scratches/wear → Replace the brake caliper assembly.
   - Brake caliper body “3”
     Cracks/damage → Replace the brake caliper assembly.
   - Brake fluid delivery passages (brake caliper body)
     Obstruction → Blow out with compressed air.

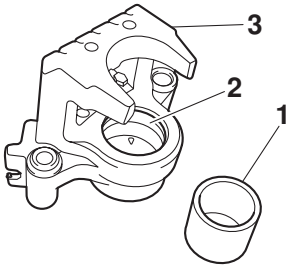

WARNING

Whenever a brake caliper is disassembled, replace the brake caliper piston dust seals and piston seals.

2. Check:
   - Brake caliper bracket
     Cracks/damage → Replace.

ASSEMBLING THE REAR BRAKE CALIPER

WARNING

Before installation, all internal brake components should be cleaned and lubricated with clean or new brake fluid.
Never use solvents on internal brake components as they will cause the brake caliper piston dust seal and piston seal to swell and distort.
Whenever a brake caliper is disassembled, replace the brake caliper piston dust seal and piston seal.

Recommended fluid
DOT 3 or DOT 4

INSTALLING THE REAR BRAKE CALIPER

1. Install:
   - Brake caliper “1”
   - Copper washers New
   - Brake hose “2”
   - Union bolt “3”

Brake hose union bolt
26 Nm (2.6 m·kg, 19 ft·lb)

WARNING

Proper brake hose routing is essential to insure safe vehicle operation. Refer to “CABLE ROUTING” on page 2-33.

CAUTION:

When installing the brake hose onto the brake caliper, be sure to position the brake pipe “a” into the slot “b” in the brake caliper.

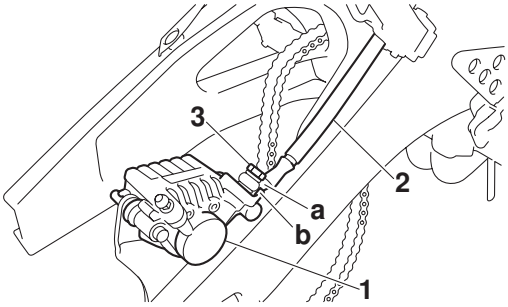

2. Install:
   - Brake pad spring
   - Brake pads
   - Brake pad retaining bolts
   - Rear brake caliper
     Refer to “REPLACING THE REAR BRAKE PADS” on page 4-30.

Rear brake pad retaining bolt
18 Nm (1.8 m·kg, 13 ft·lb)
LOCTITE®

3. Install:
   - Rear wheel
     Refer to “REAR WHEEL” on page 4-10.
4. Fill:
   - Brake fluid reservoir
     (with the specified amount of the recommended brake fluid)

Recommended fluid
DOT 3 or DOT 4

WARNING

Use only the designated brake fluid. Other brake fluids may cause the rubber seals to deteriorate, causing leakage and poor brake performance.
Refill with the same type of brake fluid that is already in the system. Mixing brake fluids may result in a harmful chemical reaction, leading to poor brake performance.
When refilling, be careful that water does not enter the brake fluid reservoir. Water will significantly lower the boiling point of the brake fluid and could cause vapor lock.

CAUTION:

Brake fluid may damage painted surfaces and plastic parts. Therefore, always clean up any spilt brake fluid immediately.

5. Bleed:
   - Brake system
     Refer to “BLEEDING THE HYDRAULIC BRAKE SYSTEM” on page 3-19.
6. Check:
   - Brake fluid level
     Below the minimum level mark “a” → Add the recommended brake fluid to the proper level.
     Refer to “CHECKING THE BRAKE FLUID LEVEL” on page 3-17.

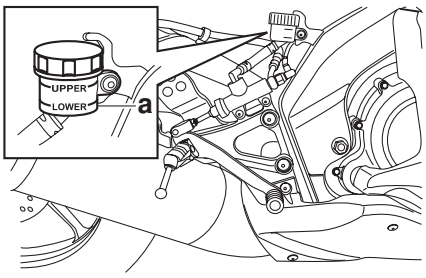

7. Check:
   - Brake pedal operation
     Soft or spongy feeling → Bleed the brake system.
     Refer to “BLEEDING THE HYDRAULIC BRAKE SYSTEM” on page 3-19.

REMOVING THE REAR BRAKE MASTER CYLINDER

NOTE:

Before removing the rear brake master cylinder, drain the brake fluid from the entire brake system.

1. Disconnect:
   - Rear brake light switch coupler
2. Loosen:
   - Rear brake light switch “1”
3. Remove:
   - Rear brake master cylinder bolts
   - Rear brake master cylinder
4. Remove:
   - Rear brake light switch “1”
   - Copper washers “2”
   - Brake hose “3”

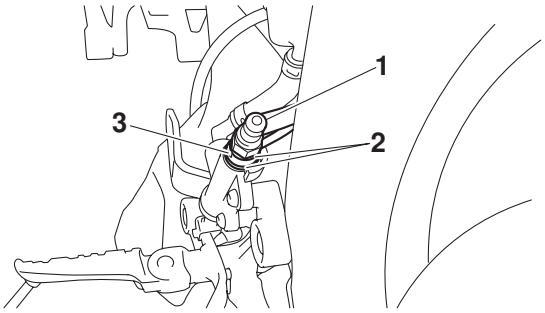

NOTE:

To collect any remaining brake fluid, place a container under the master cylinder and the end of the brake hose.

CHECKING THE REAR BRAKE MASTER CYLINDER

1. Check:
   - Brake master cylinder
     Damage/scratches/wear → Replace.
   - Brake fluid delivery passages (brake master cylinder body)
     Obstruction → Blow out with compressed air.
2. Check:
   - Brake master cylinder kit
     Damage/scratches/wear → Replace.
3. Check:
   - Brake fluid reservoir
     Cracks/damage → Replace.
   - Brake fluid reservoir diaphragm
     Cracks/damage → Replace.
4. Check:
   - Brake hoses
     Cracks/damage/wear → Replace.

ASSEMBLING THE REAR BRAKE MASTER CYLINDER

WARNING

Before installation, all internal brake components should be cleaned and lubricated with clean or new brake fluid.
Never use solvents on internal brake components.

Recommended fluid
DOT 3 or DOT 4

INSTALLING THE REAR BRAKE MASTER CYLINDER

1. Install:
   - Copper washers “1” New
   - Brake hose “2”
   - Rear brake light switch “3”

WARNING

Proper brake hose routing is essential to insure safe vehicle operation. Refer to “CABLE ROUTING” on page 2-33.

CAUTION:

When installing the brake hose onto the brake master cylinder, make sure the brake pipe touches the projection “a”as shown.

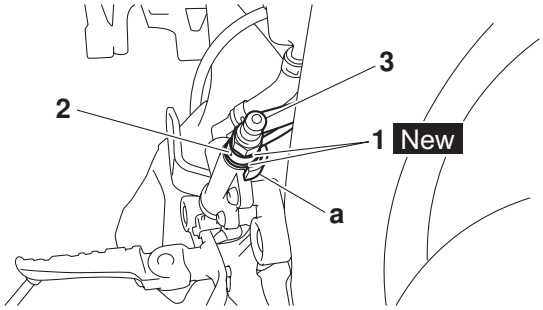

2. Fill:
   - Brake fluid reservoir
     (with the specified amount of the recommended brake fluid)

	Recommended fluid **DOT 3 or DOT 4**

WARNING

Use only the designated brake fluid. Other brake fluids may cause the rubber seals to deteriorate, causing leakage and poor brake performance.
Refill with the same type of brake fluid that is already in the system. Mixing brake fluids may result in a harmful chemical reaction, leading to poor brake performance.
When refilling, be careful that water does not enter the brake fluid reservoir. Water will significantly lower the boiling point of the brake fluid and could cause vapor lock.

CAUTION:

Brake fluid may damage painted surfaces and plastic parts. Therefore, always clean up any spilt brake fluid immediately.

3. Bleed:
   - Brake system
     Refer to “BLEEDING THE HYDRAULIC BRAKE SYSTEM” on page 3-19.
4. Check:
   - Brake fluid level
     Below the minimum level mark “a” → Add the recommended brake fluid to the proper level.
     Refer to “CHECKING THE BRAKE FLUID LEVEL” on page 3-17.

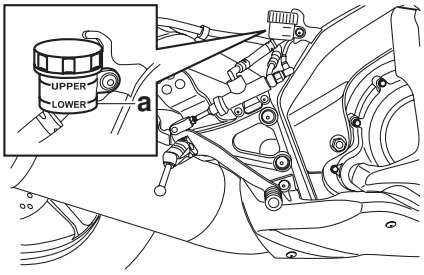

5. Check:
   - Brake pedal operation
     Soft or spongy feeling→ Bleed the brake system.
     Refer to “BLEEDING THE HYDRAULIC BRAKE SYSTEM” on page 3-19.
6. Adjust:
   - Brake pedal position
     Refer to “ADJUSTING THE REAR DISC BRAKE” on page 3-17.

	Brake pedal position **44 mm**

HANDLEBARS

Removing the handlebars

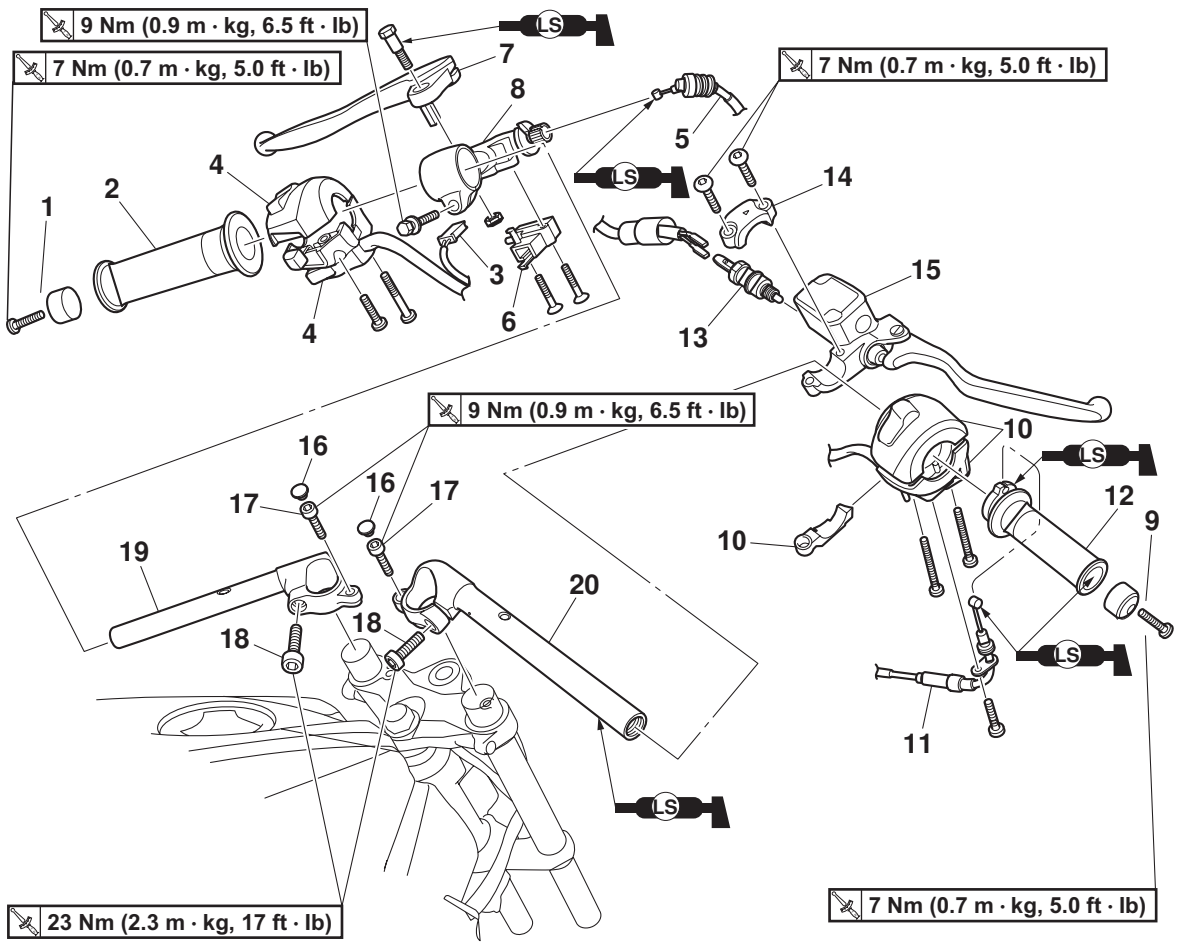

Order	Job/Parts to remove	Qty	Remarks
1	Left grip end	1	
2	Handlebar grip	1	
3	Clutch switch coupler	1	Disconnect.
4	Left handlebar switch	1	
5	Clutch cable	1	Disconnect.
6	Clutch switch	1	
7	Clutch lever	1	
8	Clutch lever holder	1	
9	Right grip end	1	
10	Right handlebar switch	1	
11	Throttle cable	1	Disconnect.
12	Throttle grip	1	
13	Front brake light switch	1	
14	Front brake master cylinder holder	1	
15	Front brake master cylinder	1	
16	Plug	2	

Removing the handlebars

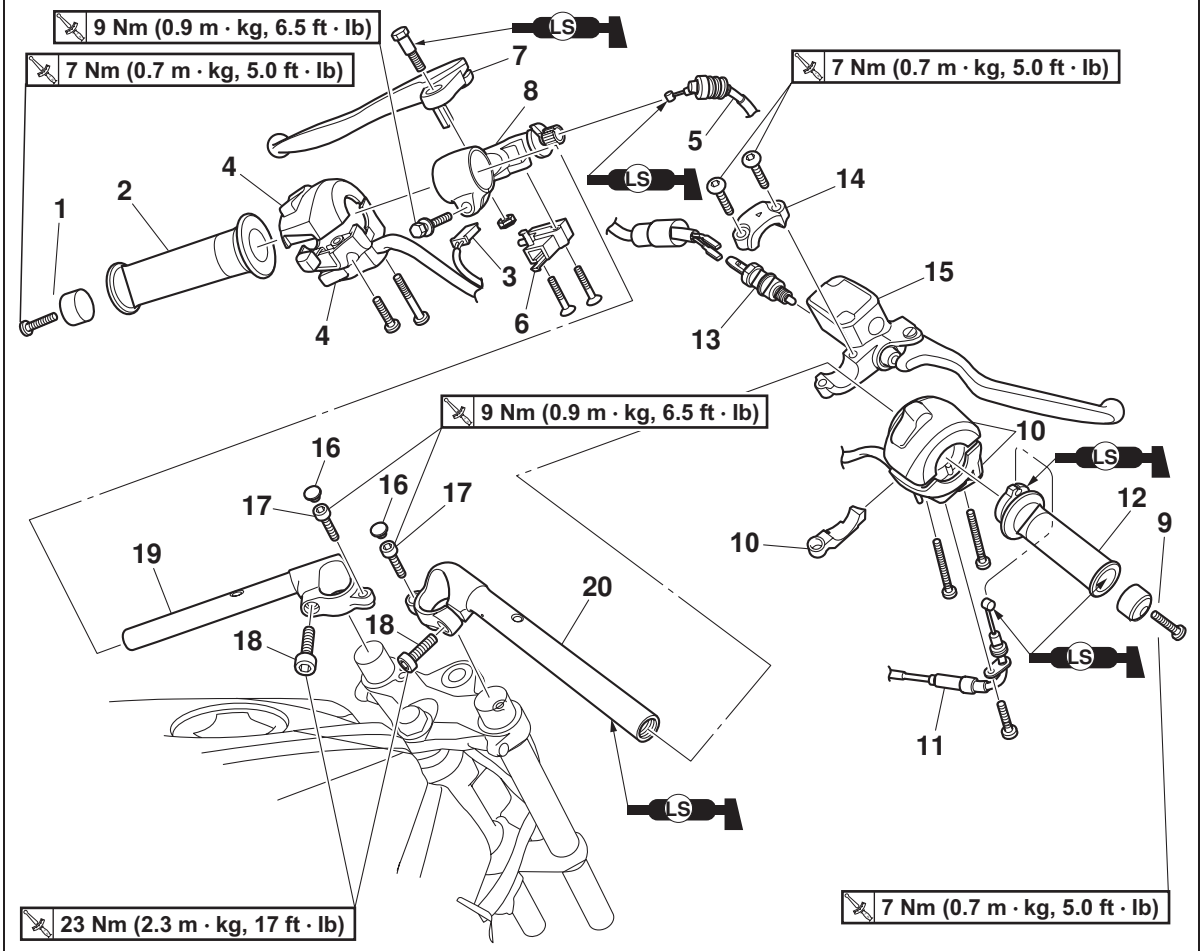

Order	Job/Parts to remove	Qty	Remarks
17	Handlebar bolt	2	
18	Handlebar pinch bolt	2	
19	Left handlebar	1	
20	Right handlebar	1	
			For installation, reverse the removal procedure.

REMOVING THE HANDLEBARS

1. Stand the vehicle on a level surface.

WARNING

Securely support the vehicle so that there is no danger of it falling over.

2. Remove:
   - Handlebar grip “1”

NOTE:

Blow compressed air between the handlebar and the handlebar grip, and gradually push the grip off the handlebar.

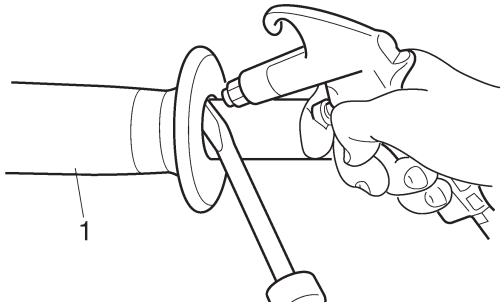

CHECKING THE HANDLEBARS

1. Check:
   - Left handlebar
   - Right handlebar
     Bends/cracks/damage → Replace.

WARNING

Do not attempt to straighten a bent handlebar as this may dangerously weaken it.

INSTALLING THE HANDLEBARS

1. Stand the vehicle on a level surface.

WARNING

Securely support the vehicle so that there is no danger of it falling over.

2. Install:
   - Front brake master cylinder “1”
   - Front brake master cylinder holder “2”
   - Front brake light switch

	**Front brake master cylinder holder bolt** **7 Nm (0.9 m·kg, 6.5 ft·lb)**

NOTE:

- Install the brake master cylinder holder with the arrow mark “a” pointing forward.
- Align the mating surfaces of the brake master cylinder holder with the punch mark “b” on the handlebar.
- First, tighten the front bolt, then the rear bolt.

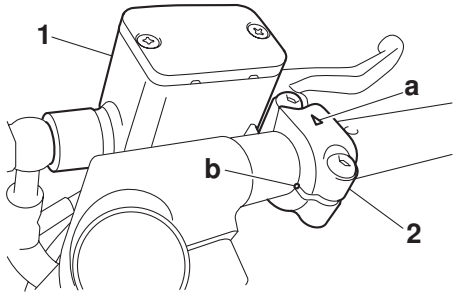

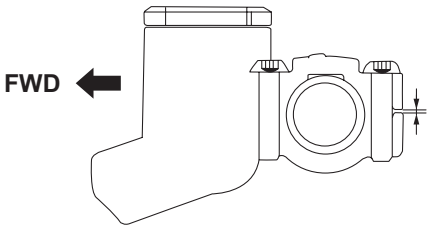

3. Install:
   - Front brake light switch

NOTE:

Before fully installing the front brake light switch, be sure to completely install the rubber cover over the switch. Also, be sure not to twist the front brake light switch lead when screwing in the switch.

4. Install:
   - Throttle grip “1”
   - Throttle cable
   - Right handlebar switch “2”

NOTE:

- Be sure to position the washer between the throttle grip and the right handlebar switch.
- Lubricate the end of the throttle cable and the inside of the throttle grip with a thin coat of the lithium-soap-based grease, and then install the throttle grip onto the right handlebar.
- Route the throttle cable through the slot in the throttle grip, and then install the cable.
- Align the projection “a” on the right handlebar switch with the hole“b” on the right handlebar.

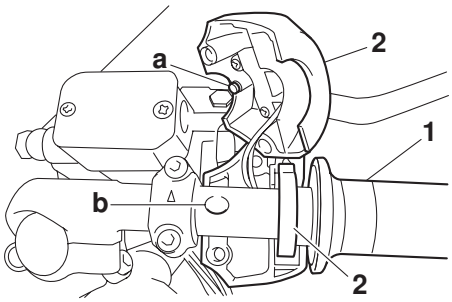

5. Install:
   • Right grip end “1”

NOTE:

There should be 1–3 mm (0.04–0.12 in) of clearance “a” between the throttle grip and the right grip end.

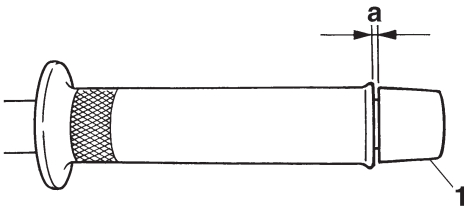

6. Install:
   • Clutch lever holder “1”

	**Clutch lever holder bolt 6 Nm (0.6 m·kg, 4.5 ft·lb)**

NOTE:

Align the mating surfaces of the clutch lever holder with the punch mark “a” on the left handlebar.

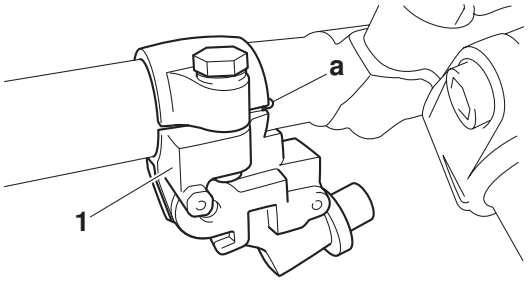

7. Install:
   • Clutch lever
   • Clutch switch “1”

NOTE:

Align the projection “a” on the clutch switch with the slit “b” in the clutch lever holder.

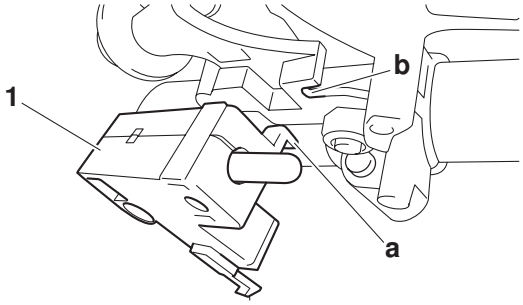

8. Connect:
   • Clutch cable

NOTE:

Lubricate the end of the clutch cable with a thin coat of lithium-soap-based grease.

9. Install:
   • Left handlebar switch “1”

NOTE:

Align the projection “a” on the left handlebar switch with the hole “b” in the left handlebar.

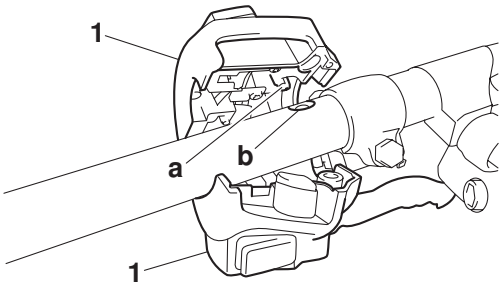

10. Connect:
    • Clutch switch coupler
11. Install:
    • Handlebar grip “1”
    • Left grip end “2”

▼▼

a. Apply a thin coat of rubber adhesive onto the end of the left handlebar.
b. Slide the handlebar grip over the end of the left handlebar.
c. Wipe off any excess rubber adhesive with a clean rag.

WARNING

Do not touch the handlebar grip until the rubber adhesive has fully dried.

NOTE:

There should be 3 mm of clearance“a” between the handlebar grip and the grip end.

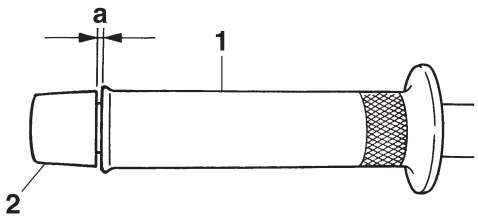

12.Check:
- Cable routing

NOTE:

Make sure the main switch lead, brake hose, throttle cable, clutch cable, and handlebar switch leads are routed properly.

13.Adjust:
- Clutch lever free play
  Refer to “ADJUSTING THE CLUTCH CABLE FREE PLAY” on page 3-11.

	Clutch lever free play **10.0–15.0 mm**

14.Adjust:
- Throttle cable free play
  Refer to “ADJUSTING THE THROTTLE CABLE FREE PLAY” on page 3-6.

	Throttle cable free play **3.0–5.0 mm**

FRONT FORK

Removing the front fork legs

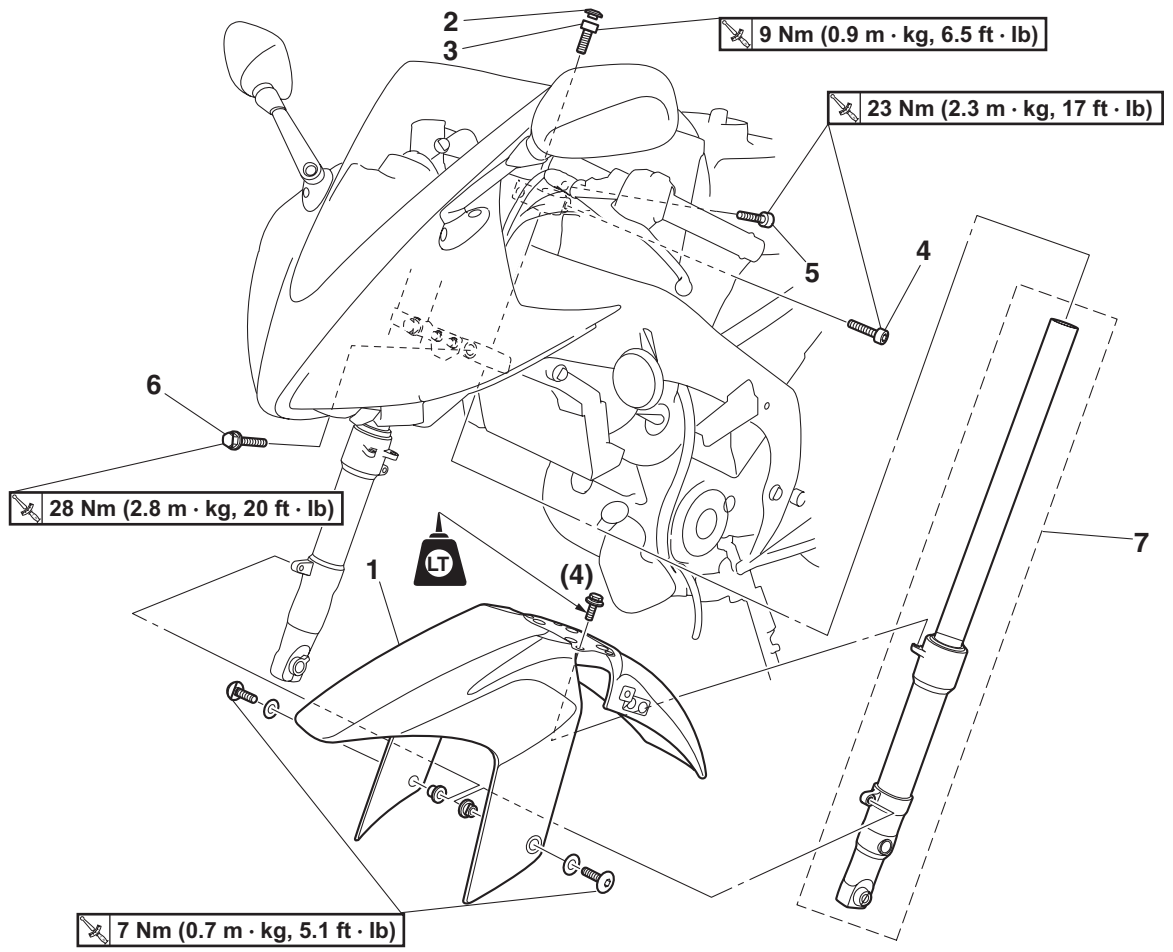

Order	Job/Parts to remove	Qty	Remarks
			The following procedure applies to both of the front fork legs.
	Front wheel		Refer to “FRONT WHEEL” on page 4-6.
1	Front fender	1	
2	Plug	1	
3	Handlebar bolt	1	Loosen.
4	Handlebar pinch bolt	1	Loosen.
5	Upper bracket pinch bolt	1	Loosen.
6	Lower bracket pinch bolt	1	Loosen.
7	Front fork leg	1	
			For installation, reverse the removal procedure.

Disassembling the front fork legs

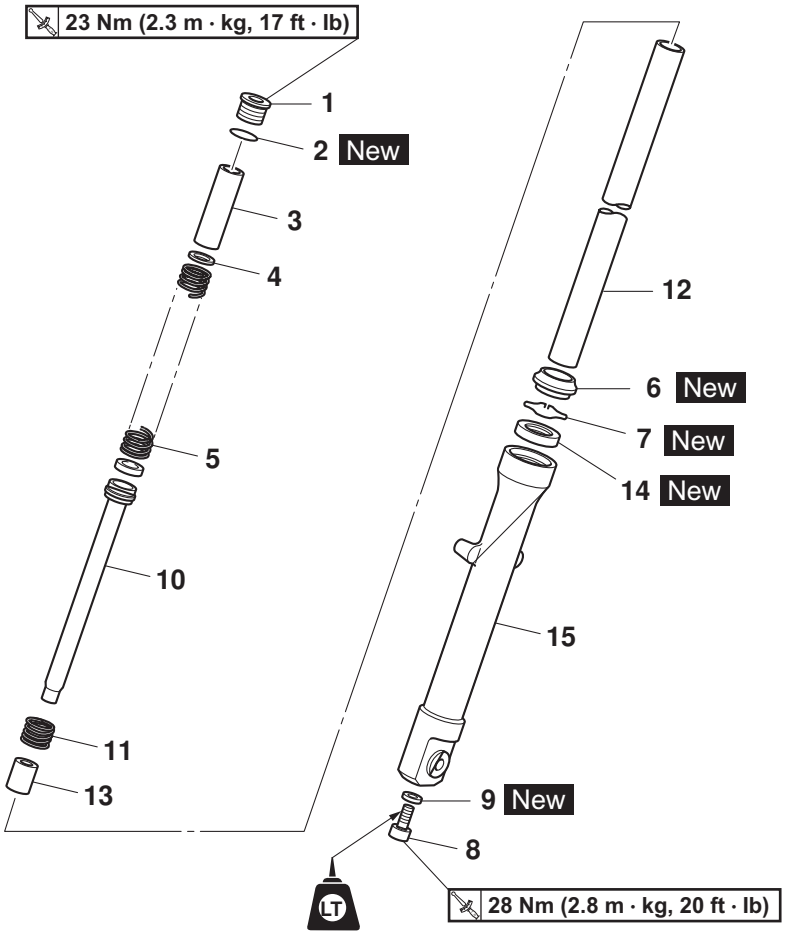

Order	Job/Parts to remove	Qty	Remarks
			The following procedure applies to both of the front fork legs.
1	Cap bolt	1	
2	O-ring	1	
3	Spacer	1	
4	Washer	1	
5	Fork spring	1	
6	Dust seal	1	
7	Oil seal clip	1	
8	Damper rod bolt	1	
9	Copper washer	1	
10	Damper rod	1	
11	Rebound spring	1	
12	Inner tube	1	
13	Oil flow stopper	1	
14	Oil seal	1	

Disassembling the front fork legs

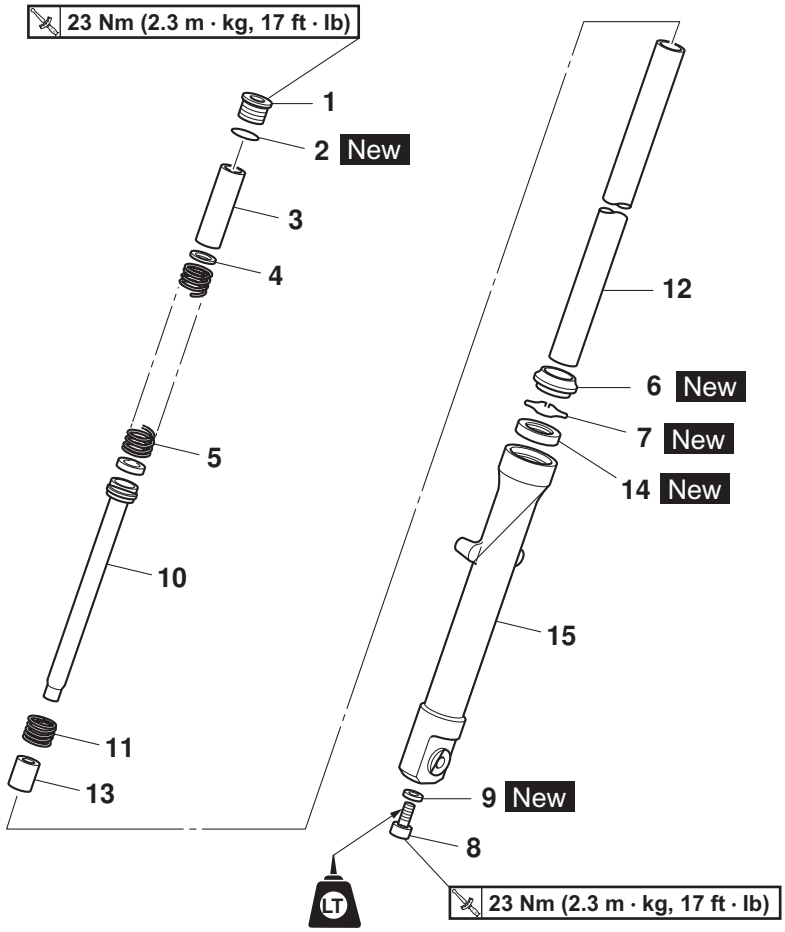

Order	Job/Parts to remove	Qty	Remarks
15	Outer tube	1	
			For assembly, reverse the disassembly procedure.

REMOVING THE FRONT FORK LEGS

The following procedure applies to both of the front fork legs.

1. Stand the vehicle on a level surface.

WARNING

Securely support the vehicle so that there is no danger of it falling over.

2. Loosen:
   - Handlebar pinch bolt “1”
   - Handlebar bolt “2”
   - Upper bracket pinch bolt “3”
   - Lower bracket pinch bolt “4”

WARNING

Before loosening the upper and lower bracket pinch bolts, support the front fork leg.

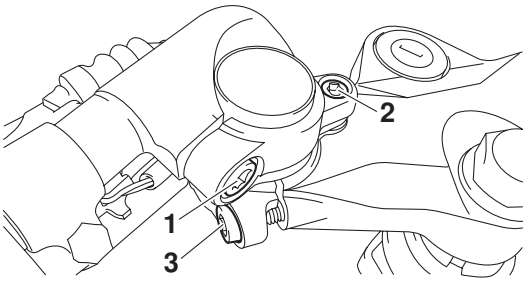

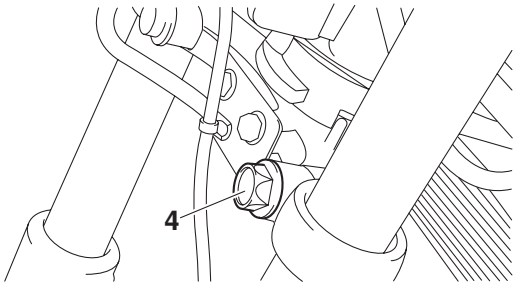

3. Remove:
   - Front fork leg

DISASSEMBLING THE FRONT FORK LEGS

The following procedure applies to both of the front fork legs.

1. Remove:
   - Rubber cap
   - Clip “1”
   - Front fork cap “2”
     (with O-ring)
   - Fork spring

2. Drain:
   - Fork oil

NOTE:

Stroke the inner tube several times while draining the fork oil.

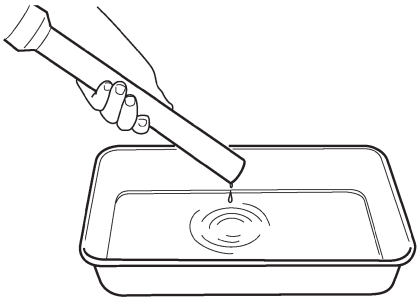

3. Remove:
   - Dust seal “1”
   - Oil seal clip “2”
     (with a flat-head screwdriver)

CAUTION:

Do not scratch the inner tube.

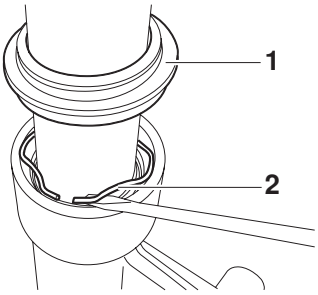

4. Remove:
   - Damper rod bolt “1”
   - Damper rod

NOTE:

While holding the damper rod with the damper rod holder “2” and T-handle “3”, loosen the damper rod bolt.

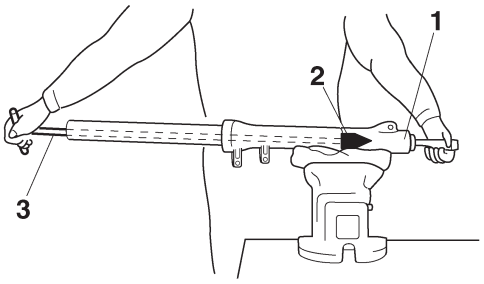

	**T-Handle** **YSST-713**

CHECKING THE FRONT FORK LEGS

The following procedure applies to both of the front fork legs.

1. Check:
   - Inner tube
   - Outer tube
     Bends/damage/scratches → Replace.

WARNING

Do not attempt to straighten a bent inner tube as this may dangerously weaken it.

2. Measure:
   - Spring free length “a”
     Out of specification → Replace.

	**Fork spring free length** **384.8mm**

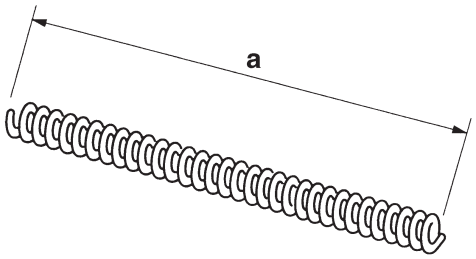

3. Check:
   - Damper rod
     Damage/wear → Replace.
     Obstruction → Blow out all of the oil passages with compressed air.
   - Oil flow stopper
     Damage → Replace.

CAUTION:

When disassembling and assembling the front fork leg, do not allow any foreign material to enter the front fork.

ASSEMBLING THE FRONT FORK LEGS

The following procedure applies to both of the front fork legs.

WARNING

Make sure the oil levels in both front fork legs are equal.
Uneven oil levels can result in poor handling and a loss of stability.

NOTE:

- When assembling the front fork leg, be sure to replace the following parts:
  - Outer tube bushing
  - Oil seal
  - Dust seal
  - Clip
- Before assembling the front fork leg, make sure all of the components are clean.

1. Install:
   - Damper rod

CAUTION:

Allow the damper rod to slide slowly down the inner tube until it protrudes from the bottom of the inner tube. Be careful not to damage the inner tube.

2. Lubricate:
   - Inner tube’s outer surface

	Recommended oil **Fork oil 10W or equivalent**

3. Tighten:
   - Damper rod bolt “1”

	Damper rod bolt **28 Nm (2.8 m·kg, 20 ft·lb)**

NOTE:

While holding the damper rod with the damper rod holder “2” and T-handle “3”, tighten the damper rod bolt.

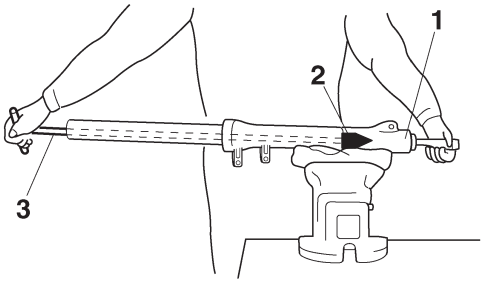

4. Install:
   - Outer tube bushing “1” New
   - Washer “2”
     (with the TFF Oil seal installation Tool)

	TFF Oil Seal InstallationTool **YSST-775**

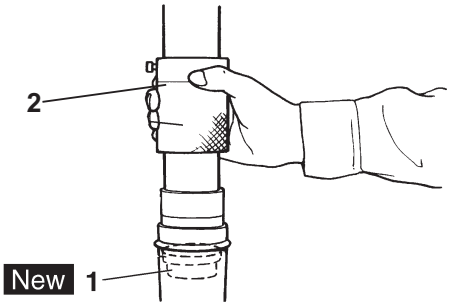

5. Install:
   - Oil seal “1” New
     (TFF Installation Tool “2”)

	TFF Oil Seal Installation Tool **YSST-775**

CAUTION:

Make sure the numbered side of the oil seal faces up.

NOTE:

- Before installing the oil seal, lubricate its lips with lithium-soap-based grease.
- Lubricate the outer surface of the inner tube with fork oil.
- Before installing the oil seal, cover the top of the front fork leg with a plastic bag to protect the oil seal during installation.

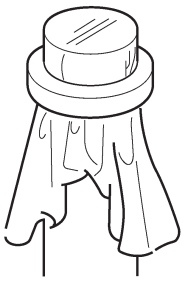

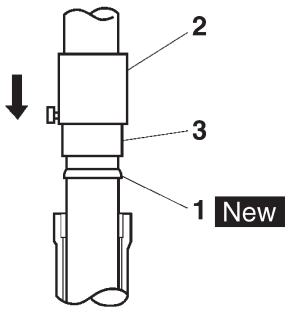

6. Install:
   - Oil seal clip “1” New

NOTE:

Adjust the oil seal clip so that it fits into the outer tube’s groove.

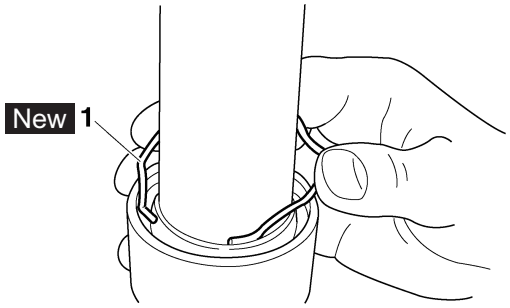

7. Install:
   - Dust seal “1” New
     (with the TFF oil seal installation tool “2”)

	TFF Oil Seal Installation Tool **YSST-775**

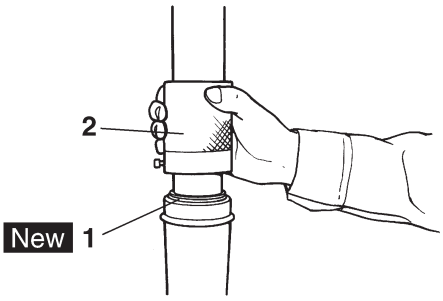

8. Fill:
   - Front fork leg
     (with the specified amount of the recommended fork oil)

	Recommended oil **Fork oil 10W or equivalent** **Quantity** **Total-240± 3cm³**

CAUTION:

- **Be sure to use the recommended fork oil. Other oils may have an adverse effect on front fork performance.**
- **When disassembling and assembling the front fork leg, do not allow any foreign material to enter the front fork.**

9. After filling the front fork leg, slowly stroke the inner tube “1” up and down (at least ten times) to distribute the fork oil.

NOTE:

Be sure to stroke the inner tube slowly because the fork oil may spurt out.

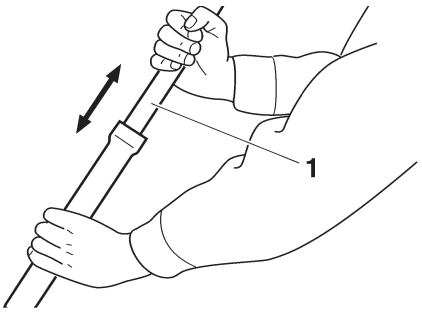

10. Before measuring the fork oil level, wait ten minutes until the oil has settled and the air bubbles have dispersed.

NOTE:

Be sure to bleed the front fork leg of any residual air.

11. Measure:
    - Front fork leg oil level “a”
      (from the top of the inner tube, with the inner tube fully compressed and without the fork spring)
      Out of specification → Correct.

	Level **126.0 mm**

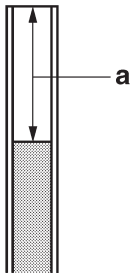

12.Install:
- Fork spring “1”

NOTE:

Install the spring with the smaller pitch “a” facing up.

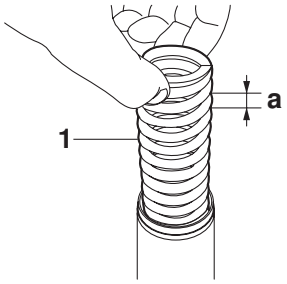

13.Install:
- O-ring New
  (to front fork cap)
- Front fork cap
- Clip New

NOTE:

- Before installing the front fork cap, lubricate its O-ring with grease.
- Insert the front fork cap into the inner tube, and then install the clip, making sure that the cap is securely held in place with the clip.

INSTALLING THE FRONT FORK LEGS

The following procedure applies to both of the front fork legs.

1. Install:
   - Front fork leg
     Temporarily tighten the upper and lower bracket pinch bolts.

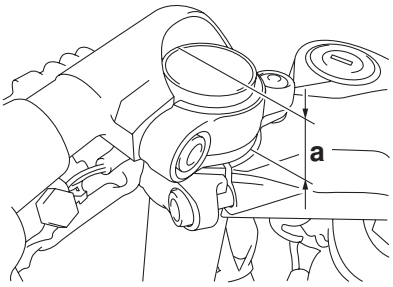

2. Tighten:
   - Lower bracket pinch bolt “1”

	Lower bracket pinch bolt **28 Nm (2.8 m·kg, 20 ft·lb)**

- Upper bracket pinch bolt “2”

	Upper bracket pinch bolt **23 Nm (2.3 m·kg, 17 ft·lb)**

- Handlebar bolt “3”

	Handlebar bolt **9 Nm (0.9 m·kg, 6.5 ft·lb)**

- Handlebar pinch bolt “4”

	Handlebar pinch bolt **23 Nm (2.3 m·kg, 17 ft·lb)**

WARNING

Make sure the brake hose, clutch cable, and leads are routed properly.

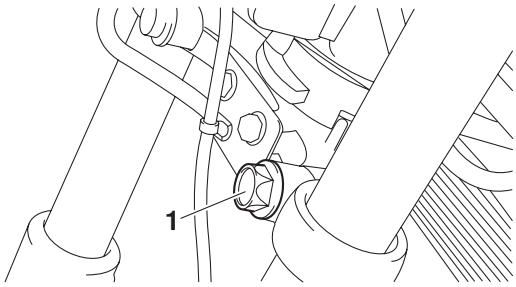

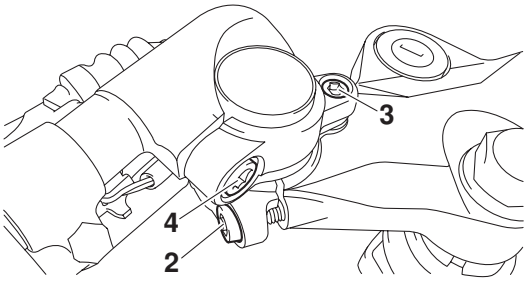

STEERING HEAD

Removing the lower bracket

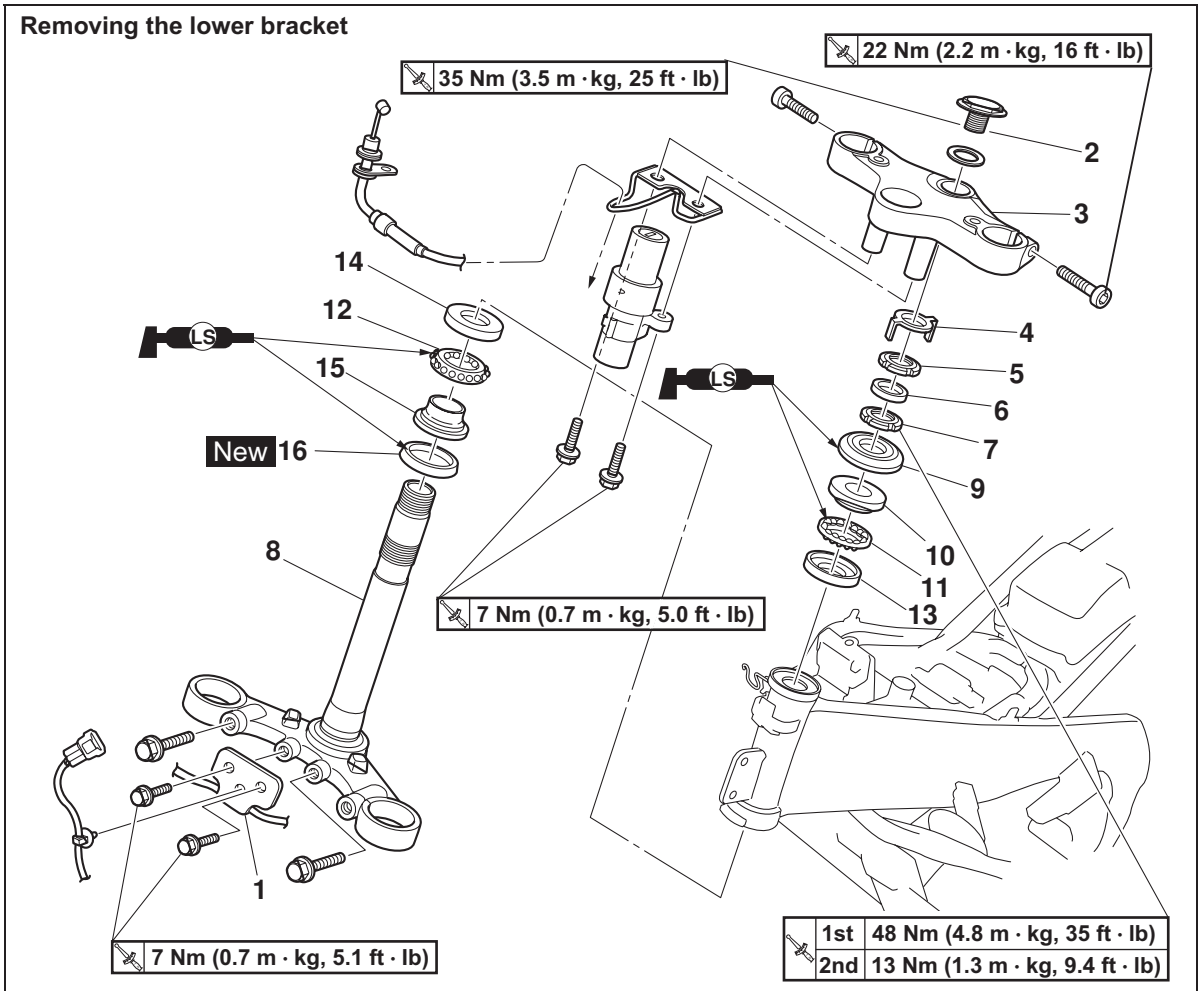

Order	Job/Parts to remove	Qty	Remarks
	Front cowling assembly		Refer to “GENERAL CHASSIS” on page 4-1.
	Front fork legs		Refer to “FRONT FORK” on page 4-40.
	Fuel tank		Refer to “FUEL TANK” on page 7-1.
1	Front brake pipe bracket	1	
2	Steering stem bolt	1	
3	Upper bracket	1	
4	Lock washer	1	
5	Upper ring nut	1	
6	Rubber washer	1	
7	Lower ring nut	1	
8	Lower bracket	1	
9	Bearing cover	1	
10	Upper bearing inner race	1	
11	Upper bearing	1	
12	Lower bearing	1	

Removing the lower bracket

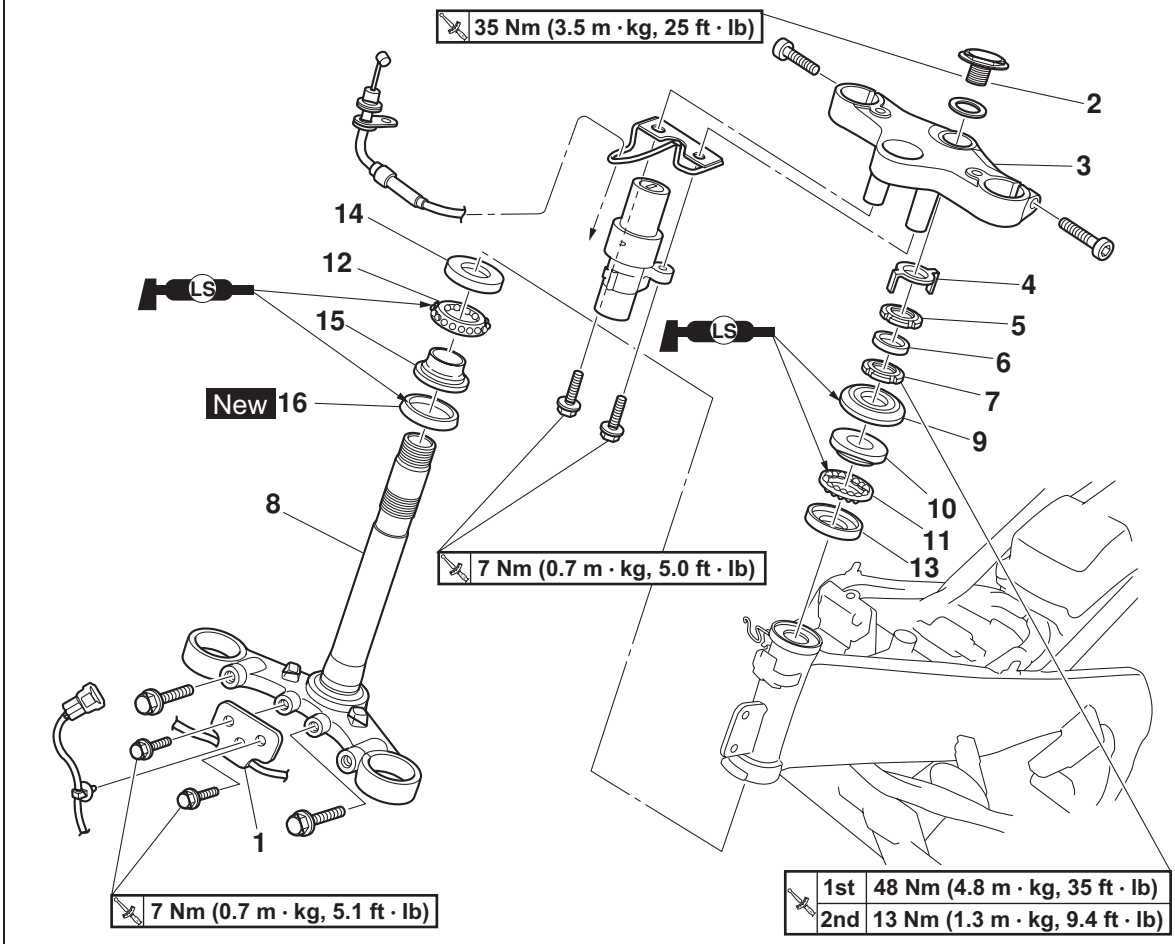

Order	Job/Parts to remove	Qty	Remarks
13	Upper bearing outer race	1	
14	Lower bearing outer race	1	
15	Lower bearing inner race	1	
16	Dust seal	1	
			For installation, reverse the removal procedure.

REMOVING THE LOWER BRACKET

1. Stand the vehicle on a level surface.

WARNING

Securely support the vehicle so that there is no danger of it falling over.

2. Remove:
   - Upper ring nut
   - Rubber washer
   - Lower ring nut “1”
   - Lower bracket

NOTE:

Remove the lower ring nut with the steering nut wrench “2”.

Steering nut socket
YSST-721

WARNING

Securely support the lower bracket so that there is no danger of it falling.

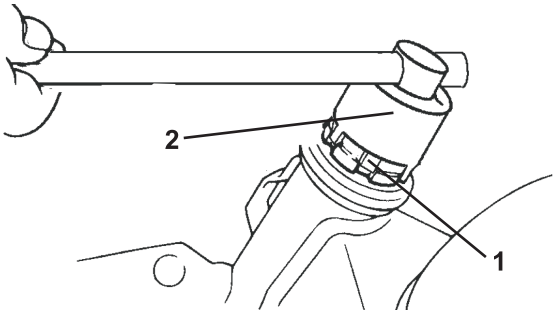

CHECKING THE STEERING HEAD

1. Wash:
   - Bearings
   - Bearing races

Recommended cleaning solvent
Kerosene

2. Check:
   - Bearings
   - Bearing races
   Damage/pitting → Replace.
3. Replace:
   - Bearings
   - Bearing races

▼▼

a. Remove the bearing races from the steering head pipe with a long rod “1” and hammer.
b. Remove the bearing race from the lower bracket with a floor chisel “2” and hammer.
c. Install a new dust seal and new bearing races.

CAUTION:

If the bearing races are not installed properly, the steering head pipe could be damaged.

NOTE:

- Always replace the bearings and bearing races as a set.
- Whenever the steering head is disassembled, replace the dust seal.

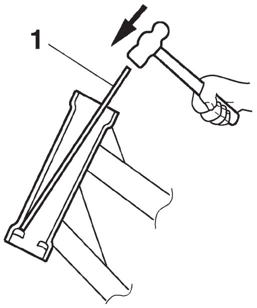

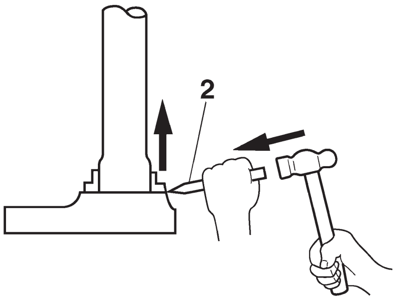

▲▲

4. Check:
   - Upper bracket
   - Lower bracket
   (along with the steering stem)
   Bends/cracks/damage → Replace.

INSTALLING THE STEERING HEAD

1. Lubricate:
   - Upper bearing
   - Lower bearing
   - Bearing races

Recommended lubricant
Lithium-soap-based grease

2. Install:
   - Lower ring nut
   - Rubber washer

- Upper ring nut
- Lock washer
  Refer to “CHECKING AND ADJUSTING THE STEERING HEAD” on page 3-21.

3. Install:
   - Upper bracket
   - Steering stem nut

NOTE:

Temporarily tighten the steering stem nut.

4. Install:
   - Front fork legs
     Refer to “FRONT FORK” on page 4-41.

NOTE:

Temporarily tighten the upper and lower bracket pinch bolts.

5. Tighten:
   - Steering stem nut

	**Steering stem bolt** **35 Nm (3.5 m·kg, 25 ft·lb)**

REAR SHOCK ABSORBER ASSEMBLY

Removing the rear shock absorber assembly

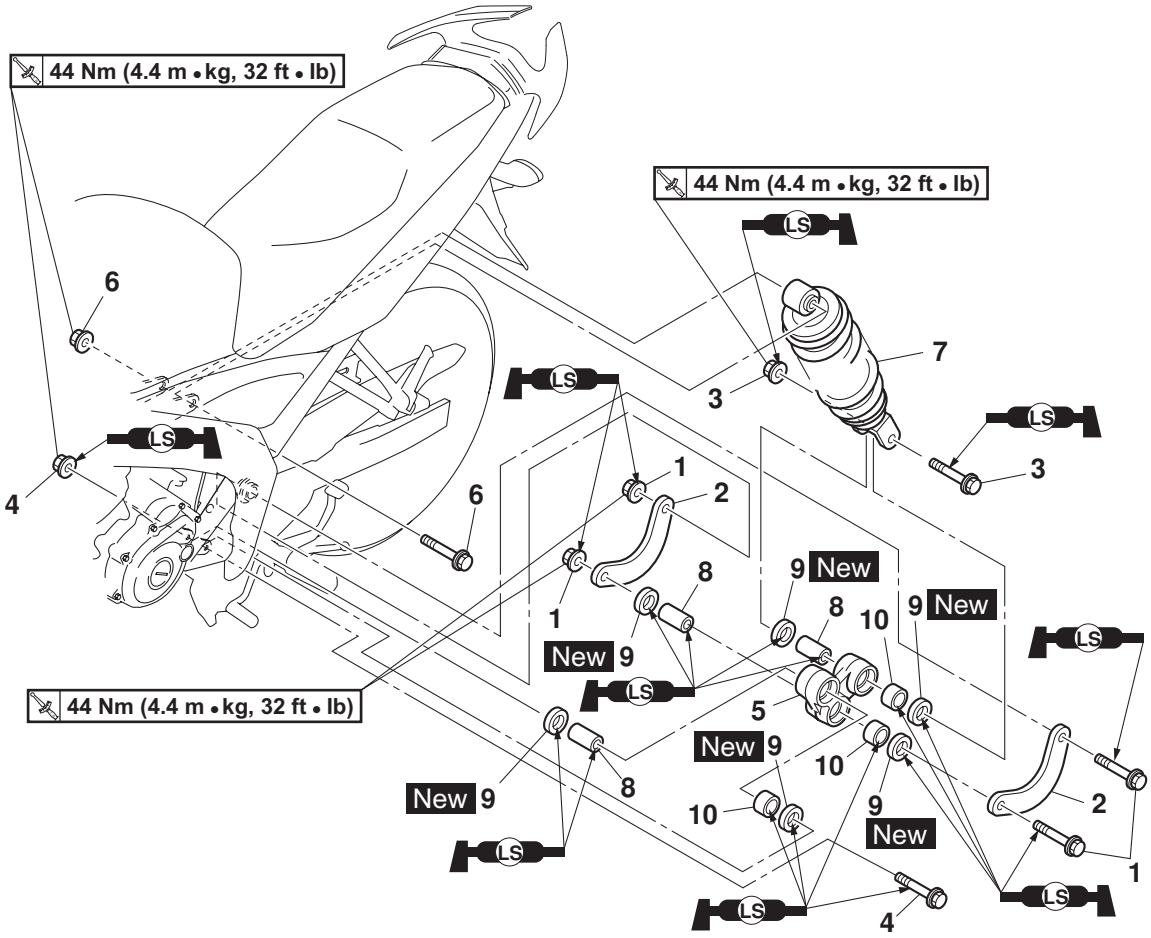

Order	Job/Parts to remove	Qty	Remarks
1	Connecting arm nut/bolt	2/2	
2	Connecting arm	2	
3	Rear shock absorber assembly lower nut/bolt	1/1	
4	Relay arm nut/bolt	1/1	
5	Relay arm	1	
6	Rear shock absorber assembly upper nut/bolt	1/1	
7	Rear shock absorber assembly	1	
8	Spacer	3	
9	Oil seal	6	
10	Bearing	3	
			For installation, reverse the removal procedure.

REMOVING THE REAR SHOCK ABSORBER ASSEMBLY

1. Stand the vehicle on a level surface.

WARNING

Securely support the vehicle so that there is no danger of it falling over.

NOTE:

Place the vehicle on a suitable stand so that the rear wheel is elevated.

CHECKING THE REAR SHOCK ABSORBER ASSEMBLY

1. Check:
   - Rear shock absorber rod
     Bends/damage → Replace the rear shock absorber assembly.
   - Rear shock absorber
     Oil leaks → Replace the rear shock absorber assembly.
   - Spring
     Damage/wear → Replace the rear shock absorber assembly.
   - Bushing
     Damage/wear → Replace the rear shock absorber assembly.
   - Bolts
     Bends/damage/wear → Replace.

CHECKING THE CONNECTING ARM AND RELAY ARM

1. Check:
   - Connecting arms
   - Relay arm
     Damage/wear → Replace.
2. Check:
   - Bearings
   - Oil seals
     Damage/pitting → Replace.
3. Check:
   - Spacers
     Damage/scratches → Replace.

INSTALLING THE RELAY ARM

1. Lubricate:
   - Spacers
   - Bearings

	Recommended lubricant **Lithium-soap-base grease**

2. Install:
   - Bearing “1”
     (to the relay arm)
   - Oil seal “2”
     (to the relay arm)

	Installed depth “a” **0.5 mm**

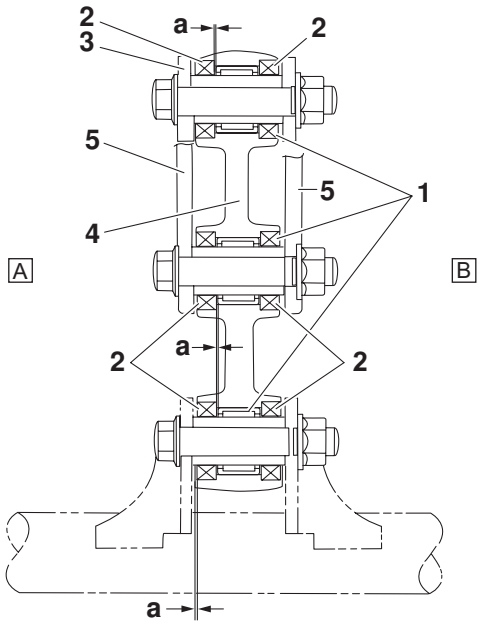

3. Rear shock absorber assembly
4. Relay arm
5. Connecting arm

A. Left side
B. Right side

INSTALLING THE REAR SHOCK ABSORBER ASSEMBLY

1. Install:
   - Rear shock absorber assembly
   - Relay arm “1”

NOTE:

Install the portion of the relay arm with the smaller bolt hole pitch to the frame as shown in the illustration.

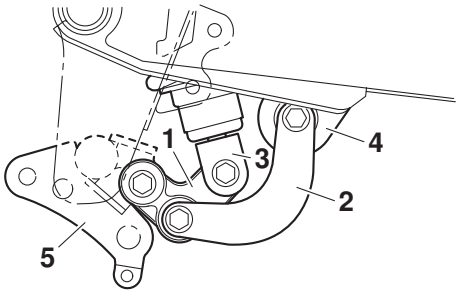

2. Connecting arm
3. Rear shock absorber assembly
4. Swingarm
5. Frame

2. Tighten:
   - Rear shock absorber assembly upper nut

	**Rear shock absorber assembly upper nut** **44 Nm (4.4 m·kg, 32 ft·lb)**

   - Relay arm nut

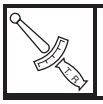	**Relay arm nut** **44 Nm (4.4 m·kg, 32 ft·lb)**

   - Rear shock absorber assembly lower nut

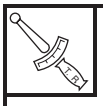	**Rear shock absorber assembly lower nut** **44 Nm (4.4 m·kg, 32 ft·lb)**

3. Install:
   - Connecting arms

NOTE:

Install each connecting arm with its chamfered side facing outward.

4. Tighten:
   - Connecting arm nuts

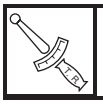	**Connecting arm nut** **44 Nm (4.4 m·kg, 32 ft·lb)**

SWINGARM

Removing the swingarm

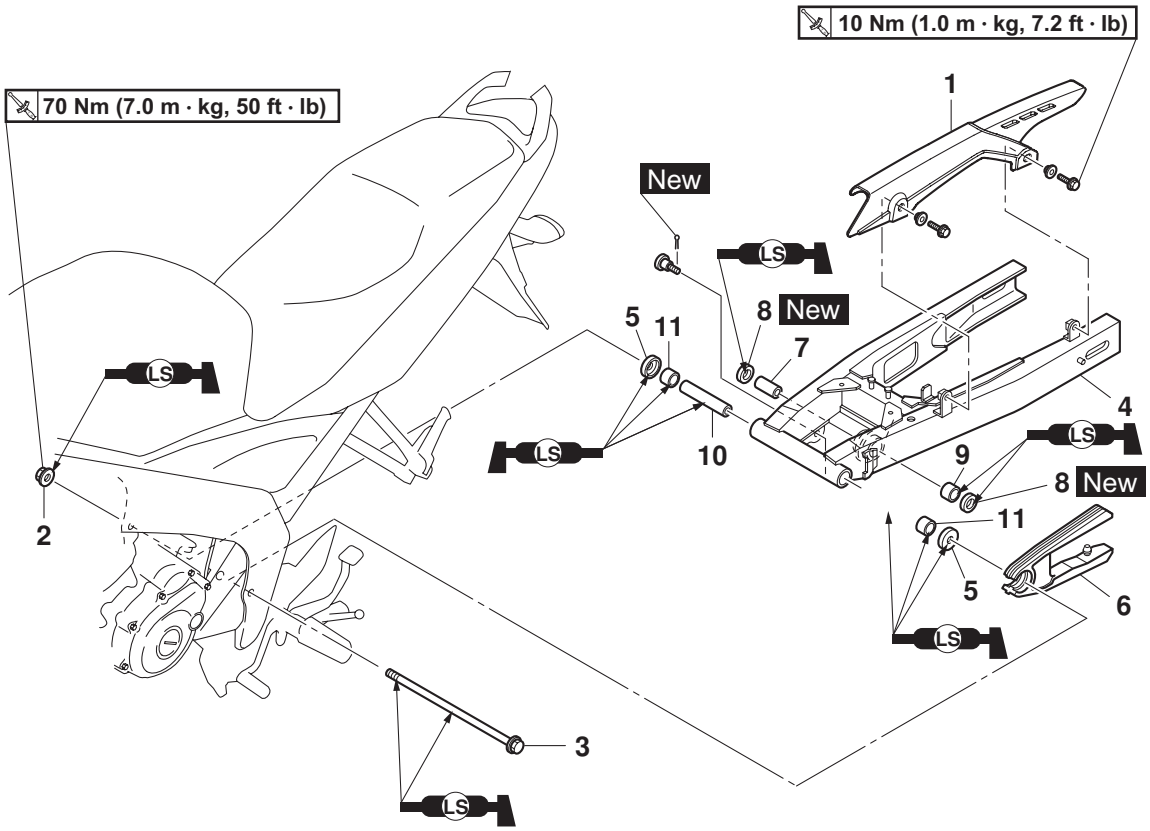

Order	Job/Parts to remove	Qty	Remarks
	Muffler		Refer to “ENGINE REMOVAL” on page 5-1.
	Rear wheel		Refer to “REAR WHEEL” on page 4-10.
	Relay arm/Rear shock absorber assembly		Refer to “REAR SHOCK ABSORBER ASSEMBLY” on page 4-53.
1	Drive chain cover	1	
2	Pivot shaft nut	1	
3	Pivot shaft	1	
4	Swingarm	1	
5	Dust Cover	2	
6	Drive chain guide	1	
7	Spacer	1	
8	Oil seal	2	
9	Bearing	1	
10	Spacer	2	

Removing the swingarm

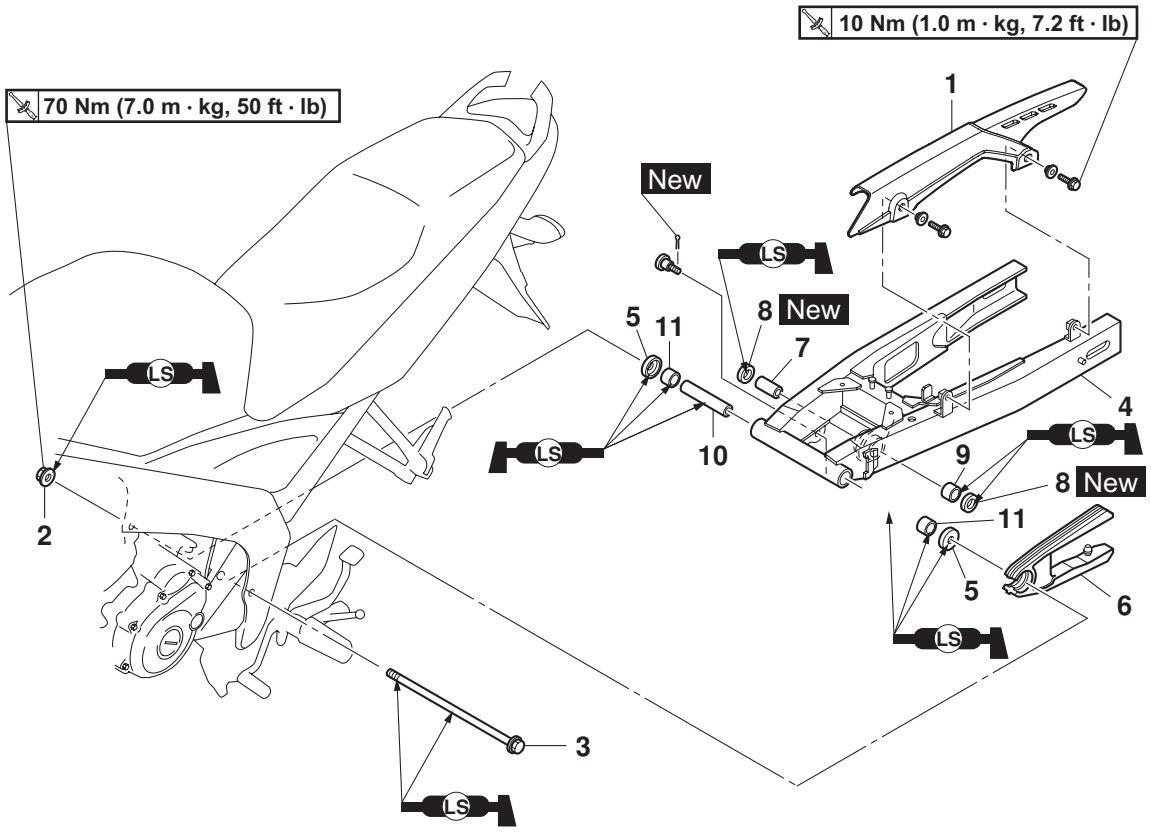

Order	Job/Parts to remove	Qty	Remarks
11	Bearing	2	
			For installation, reverse the removal procedure.

REMOVING THE SWINGARM

1. Stand the vehicle on a level surface.

WARNING

Securely support the vehicle so that there is no danger of it falling over.

NOTE:

Place the vehicle on a suitable stand so that the rear wheel is elevated.

2. Measure:
   - Swingarm side play

▼▼

a. Measure the tightening torque of the pivot shaft nut.

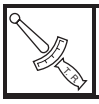	**Pivot shaft nut** **70 Nm (7.0 m·kg, 50 ft·lb)**

b. Measure the swingarm side play “A” by moving the swingarm from side to side.

c. If the swingarm side play is out of specification, check the spacers, bearings, and dust covers.

	**Swingarm side play (at the end of the swingarm)** **0.8–2.4 mm (0.0315–0.0945 in)**

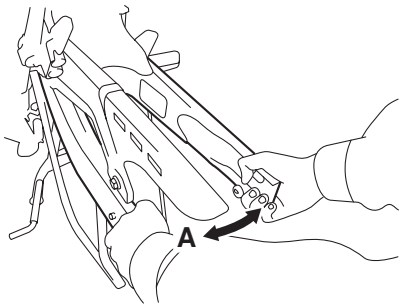

▲▲

CHECKING THE SWINGARM

1. Check:
   - Swingarm
     Bends/cracks/damage → Replace.
2. Check:
   - Pivot shaft
     Roll the pivot shaft on a flat surface.
     Bends → Replace.

WARNING

Do not attempt to straighten a bent pivot shaft.

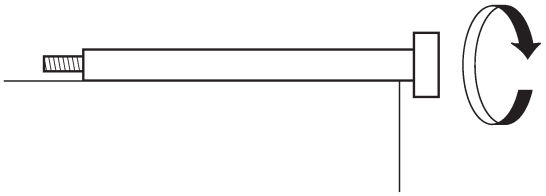

3. Wash:
   - Pivot shaft
   - Dust covers
   - Spacers
   - Bearings

	**Recommended cleaning solvent** **Kerosene**

4. Check:
   - Dust covers
   - Spacers
   - Oil seals
     Damage/wear → Replace.
   - Bearings
     Damage/pitting → Replace.

INSTALLING THE SWINGARM

1. Lubricate:
   - Bearings
   - Spacers
   - Dust covers
   - Pivot shaft

	**Recommended lubricant** **Lithium-soap-based grease**

2. Install:
   - Bearings “1”

	**Installed depth “a”** **0.5–1.5 mm**

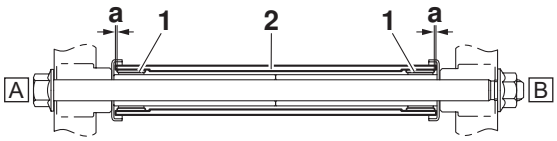

2. Swingarm
A. Left side
B. Right side

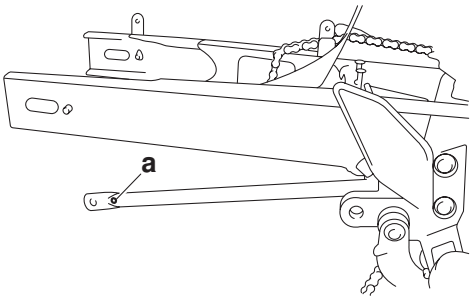

4. Install:
   - Rear shock absorber assembly
   - Relay arm
   - Rear wheel
     Refer to “REAR SHOCK ABSORBER ASSEMBLY” on page 4-48 and “REAR WHEEL” on page 4-10.
5. Adjust:
   - Drive chain slack
     Refer to “ADJUSTING THE DRIVE CHAIN SLACK” on page 3-20.

	Drive chain slack **20–40 mm**

CHAIN DRIVE

Removing the drive chain

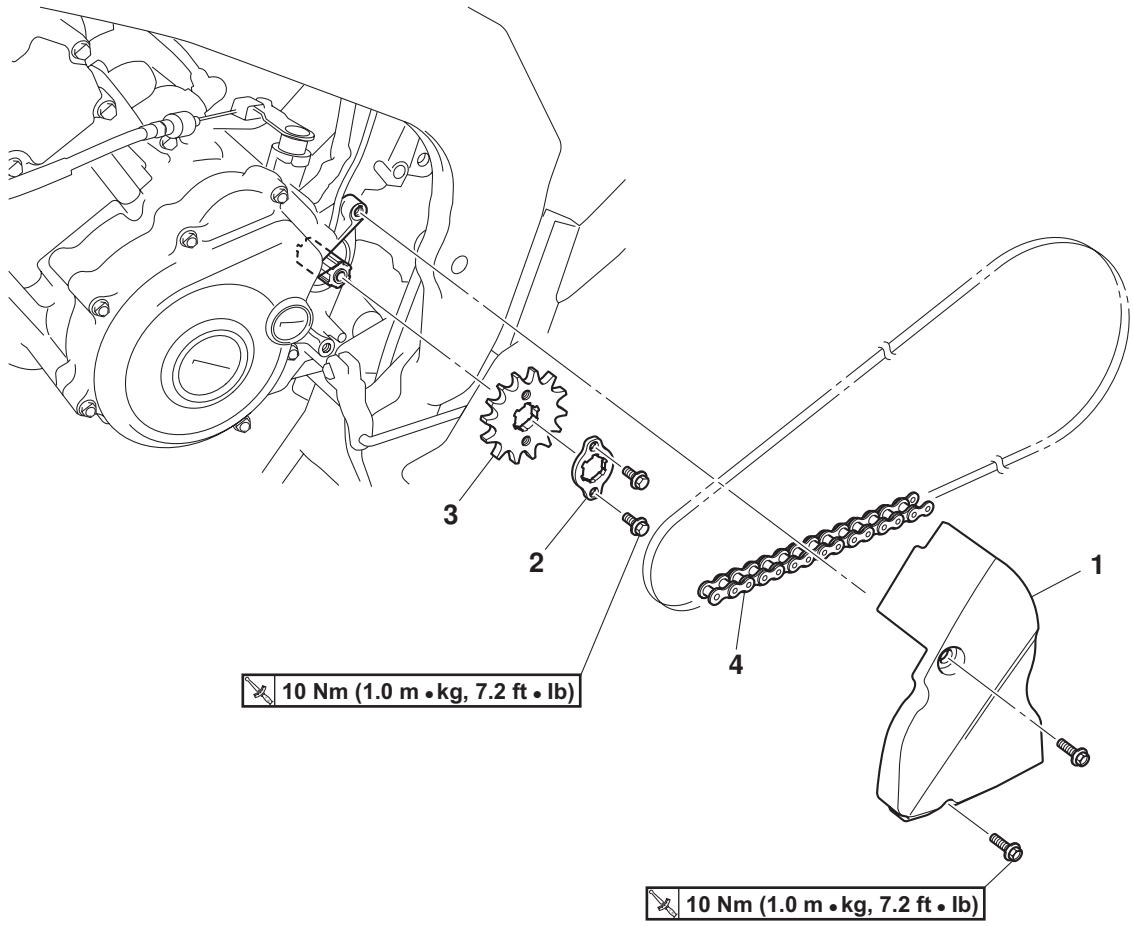

Order	Job/Parts to remove	Qty	Remarks
	Rear wheel		Refer to “REAR WHEEL” on page 4-10.
	Swingarm		Refer to “SWINGARM” on page 4-56.
1	Drive sprocket cover	1	
2	Drive sprocket retainer	1	
3	Drive sprocket	1	
4	Drive chain	1	
			For installation, reverse the removal procedure.

CHECKING THE DRIVE CHAIN

1. Measure:
   - 15-link section “a” of the drive chain
     Out of specification → Replace the drive chain.

15-link length limit
190.5 mm

▼▼▼▼▼▼▼▼▼▼▼▼▼▼▼▼▼▼▼▼▼▼▼▼▼▼▼▼▼▼▼▼▼▼▼▼▼▼▼

a. Measure the length “a” between the inner sides of the pins and the length “b” between the outer sides of the pins on a 15-link section of the drive chain as shown in the illustration.

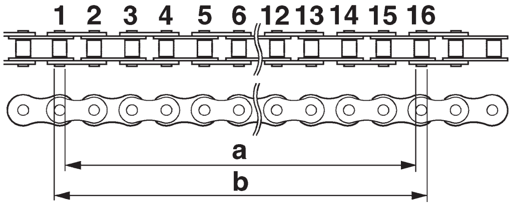

b. Calculate the length “c” of the 15-link section of the drive chain using the following formula.
   Drive chain 15-link section length “c” = (length “a” between pin inner sides + length “b” between pin outer sides)/2

NOTE:

- When measuring a 15-link section of the drive chain, make sure that the drive chain is taut.
- Perform this procedure 2–3 times, at a different location each time.

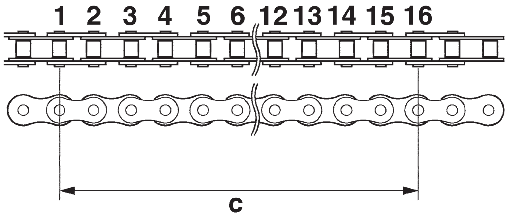

▲▲▲▲▲▲▲▲▲▲▲▲▲▲▲▲▲▲▲▲▲▲▲▲▲▲▲▲▲▲▲▲▲▲▲▲▲▲▲

2. Check:
   - Drive chain
     Stiffness → Clean and lubricate or replace.

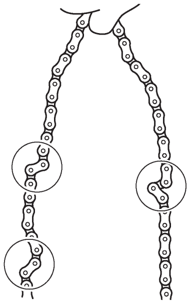

3. Clean:
   - Drive chain

▼▼▼▼▼▼▼▼▼▼▼▼▼▼▼▼▼▼▼▼▼▼▼▼▼▼▼▼▼▼▼▼▼▼▼▼▼▼▼

a. Wipe the drive chain with a clean cloth.
b. Spray the chain cleaning chemical on entire chain and clean it completely.

Recommended chain cleaner
Suitable for O-ring chains

▲▲▲▲▲▲▲▲▲▲▲▲▲▲▲▲▲▲▲▲▲▲▲▲▲▲▲▲▲▲▲▲▲▲▲▲▲▲▲

4. Check:
   - Drive chain rollers “1”
     Damage/wear → Replace the drive chain.
   - Drive chain side plates “2”
     Damage/wear → Replace the drive chain.
     Cracks → Replace the drive chain.

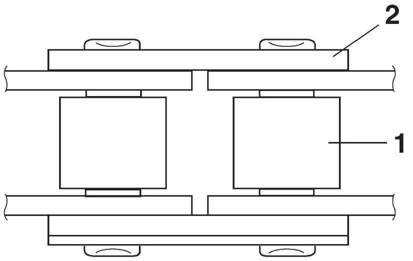

5. Lubricate:
   - Drive chain

Recommended lubricant
Chain lubricant
Suitable for O-ring chains

- Wipe the excess lubricant.

6. Check:
   - Drive sprocket
     Refer to “REAR WHEEL” on page 4-10.

INSTALLING THE DRIVE CHAIN

1. Lubricate:
   - Drive chain

	**Recommended lubricant** **chain lubricant** **suitable for O-ring chains**

2. Install:
   - Drive chain
   - Drive sprocket
   - Drive sprocket retainer

	**Drive sprocket retainer bolt** **10 Nm (1.0 m·kg, 7.2 ft·lb)**

3. Install:
   - Swingarm
     Refer to “SWINGARM” on page 4-56.
   - Rear wheel
     Refer to “REAR WHEEL” on page 4-10.
4. Adjust:
   - Drive chain slack
     Refer to “ADJUSTING THE DRIVE CHAIN SLACK” on page 3-20.

	**Drive chain slack** **20–40 mm**

CAUTION:

A drive chain that is too tight will overload the engine and other vital parts, and one that is too loose can skip and damage the swingarm or cause an accident. Therefore, keep the drive chain slack within the specified limits.

ENGINE

ENGINE REMOVAL

Removing the muffler

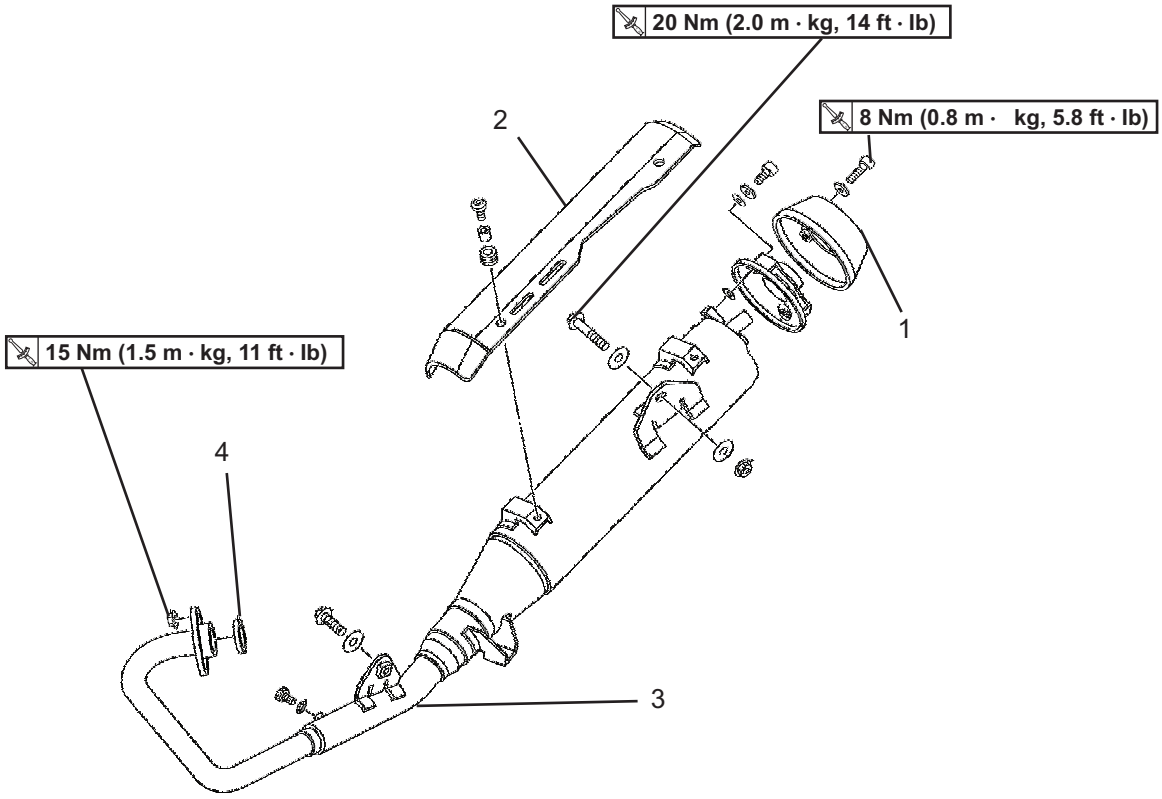

Order	Job/Parts to remove	Qty	Remarks
1	Muffler end cap	1	
2	Muffler protector	1	
3	Muffler	1	
4	Exhaust pipe gasket	1	
			For installation, reverse the removal procedure.

Disconnecting the leads and couplers

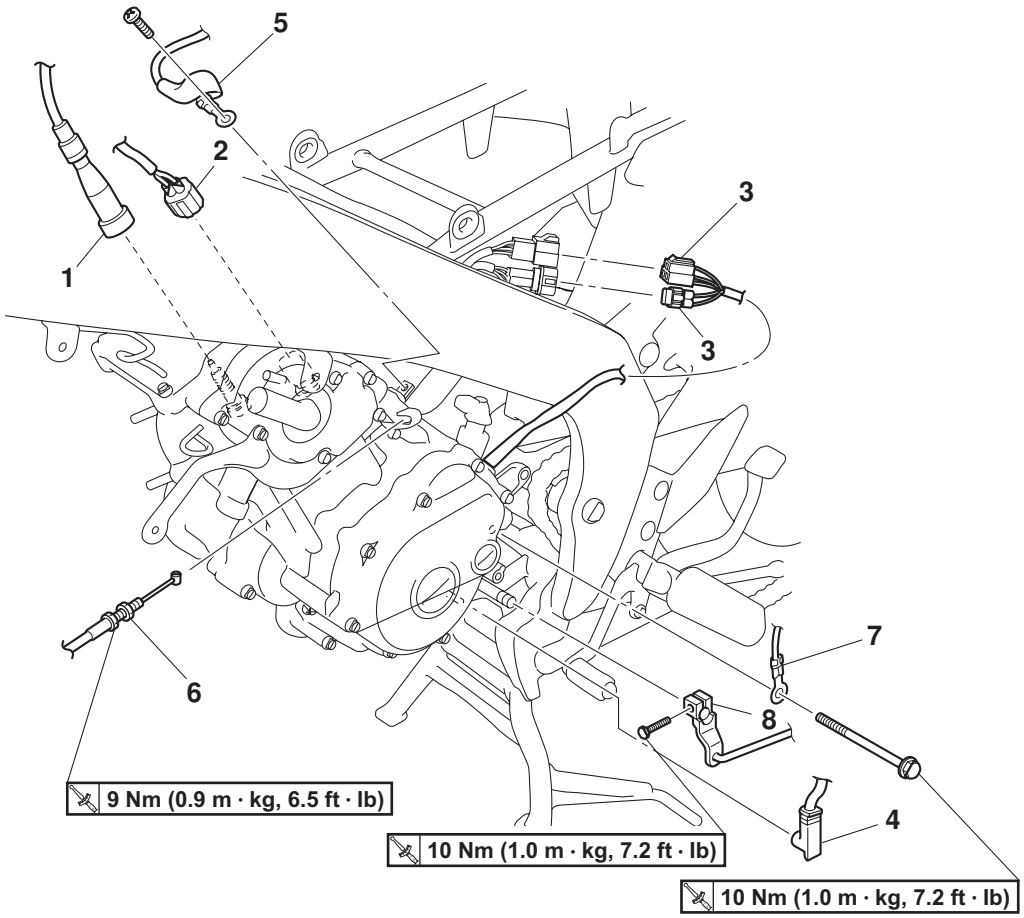

Order	Job/Parts to remove	Qty	Remarks
			CAUTION: **First, disconnect the negative battery lead, and then the positive battery lead.**
	Negative battery lead/Positive battery lead		Refer to “CHECKING AND CHARGING THE BATTERY” on page 3-25.
	Engine oil		Drain. Refer to “CHANGING THE ENGINE OIL” on page 3-10.
	Coolant		Drain. “CHANGING THE COOLANT” on page 3-14
	Seat/Side panel/Front panel/Air filter case		Refer to “GENERAL CHASSIS” on page 4-1.
	Fuel tank		Refer to “FUEL TANK” on page 7-1.
	Throttle body/Intake manifold		Refer to “THROTTLE BODY” on page 7-4.
	Water pump breather hose/Radiator outlet hose/Radiator inlet hose/Radiator		Refer to “RADIATOR” on page 6-1.
	Air cut-off valve/Reed valve/Plate		Refer to “AIR INDUCTION SYSTEM” on page 7-9.
	Drive sprocket cover/Drive sprocket		Refer to “CHAIN DRIVE” on page 4-60.
1	Spark plug cap	1	Disconnect.

Disconnecting the leads and couplers

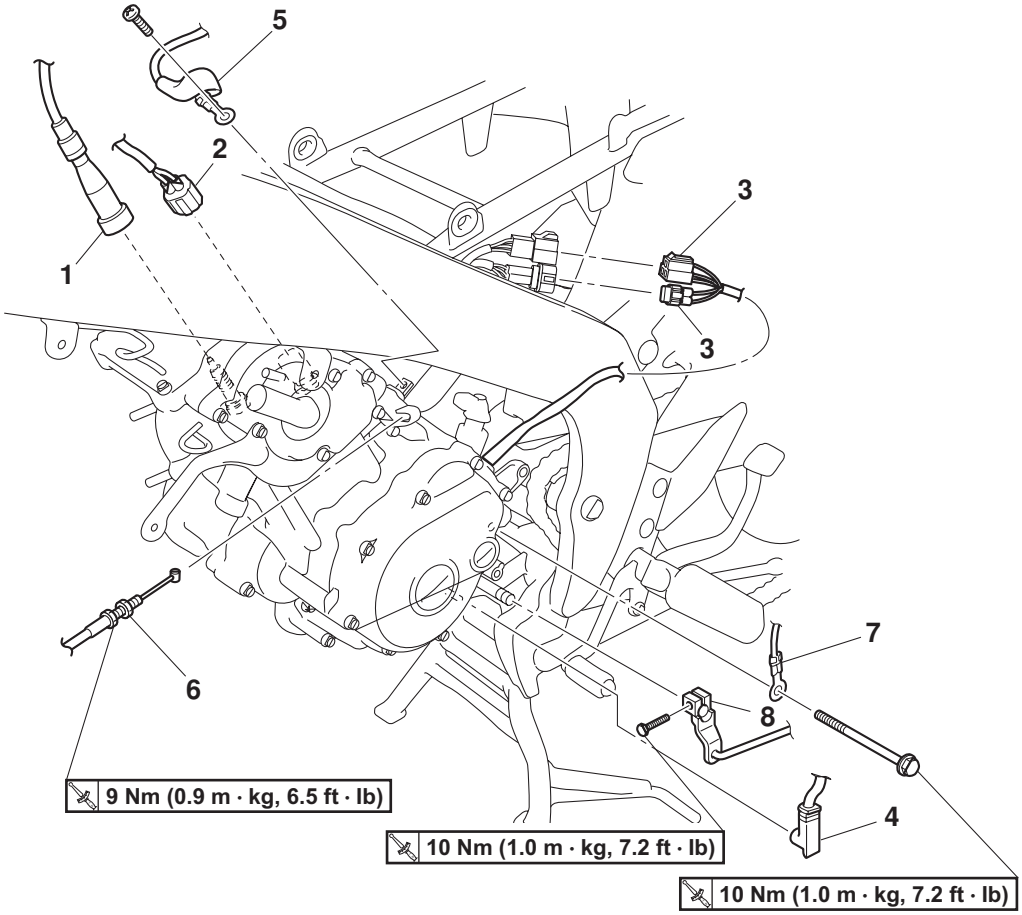

Order	Job/Parts to remove	Qty	Remarks
2	Coolant temperature sensor coupler	1	Disconnect.
3	Stator coil coupler/Crankshaft position sensor coupler	1/1	Disconnect.
4	Neutral switch connector	1	Disconnect.
5	Starter motor lead	1	Disconnect.
6	Clutch cable	1	Disconnect.
7	Negative battery lead	1	Disconnect.
8	Shift arm	1	
			For installation, reverse the removal procedure.

Removing the engine

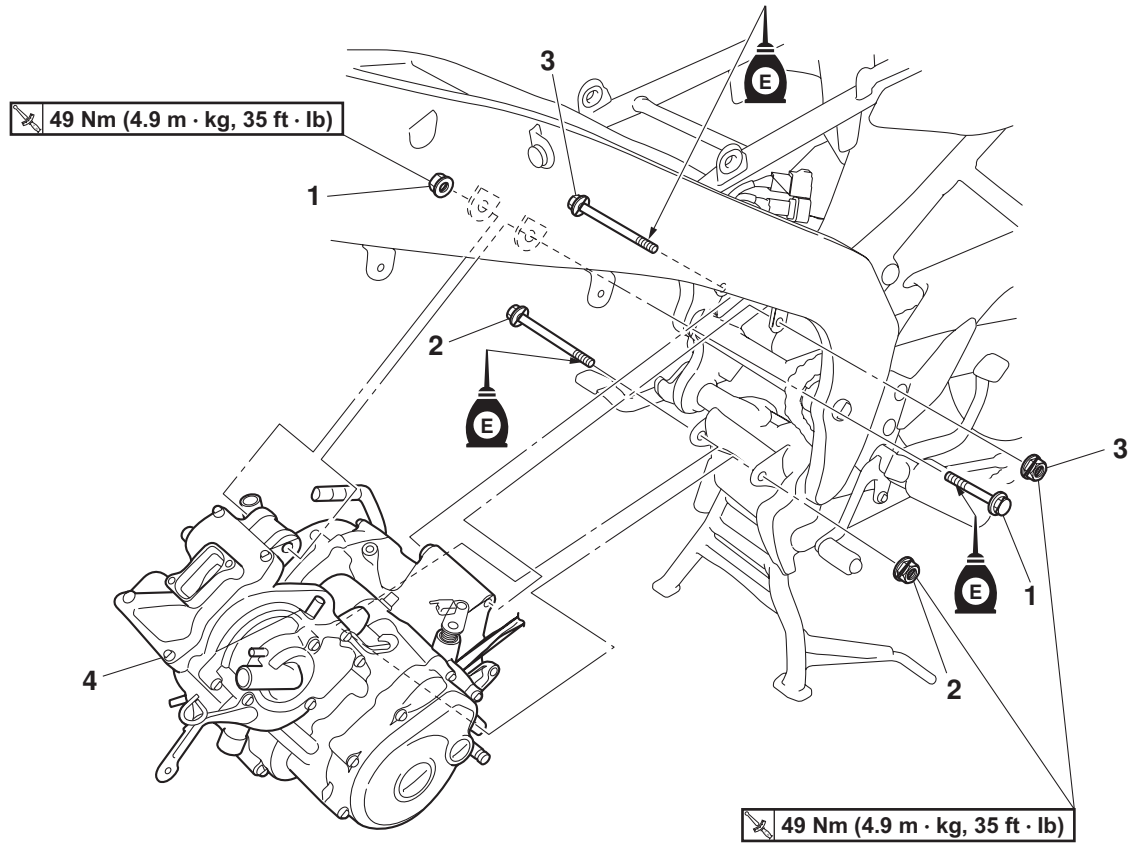

Order	Job/Parts to remove	Qty	Remarks
			NOTE: Place a suitable stand under the engine.
1	Engine mounting bolt/nut (front side)	1/1	
2	Engine mounting bolt/nut (rear lower side)	1/1	
3	Engine mounting bolt/nut (rear upper side)	1/1	
4	Engine	1	
			For installation, reverse the removal procedure.

INSTALLING THE ENGINE

1. Install:
   - Engine “1”
   - Engine mounting bolt (rear upper side) “2”
   - Engine mounting nut (rear upper side) “3”
   - Engine mounting bolt (rear lower side) “4”
   - Engine mounting nut (rear lower side) “5”
   - Engine mounting bolt (front side) “6”
   - Engine mounting nut (front side) “7”

NOTE:

Do not fully tighten the bolts and nuts.

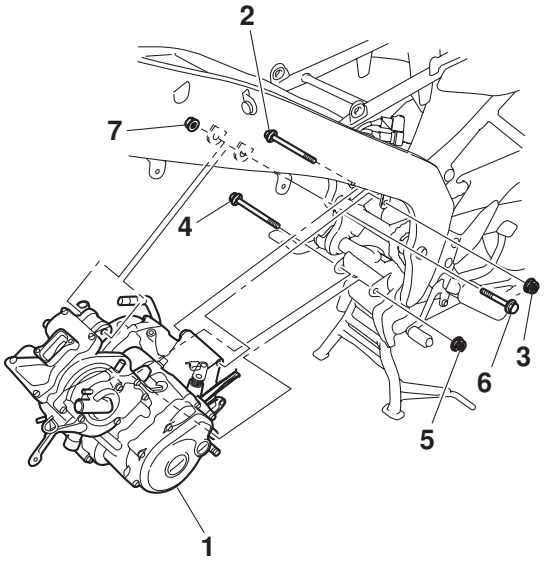

2. Tighten:
   - Engine mounting nut (rear upper side)

	Engine mounting nut (rear upper side) **49 Nm (4.9 m·kg, 35 ft·lb)**

   - Engine mounting nut (rear lower side)

	Engine mounting nut (rear lower side) **49 Nm (4.9 m·kg, 35 ft·lb)**

   - Engine mounting nut (front side)

	Engine mounting nut (front side) **49 Nm (4.9 m·kg, 35 ft·lb)**

INSTALLING THE SHIFT ARM

1. Install:
   - Shift arm “1”

	Shift arm bolt **10 Nm (1.0 m·kg, 7.2 ft·lb)**

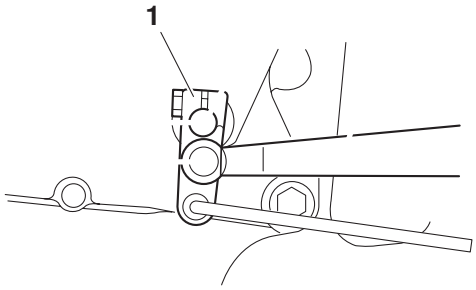

CYLINDER HEAD

Removing the cylinder head

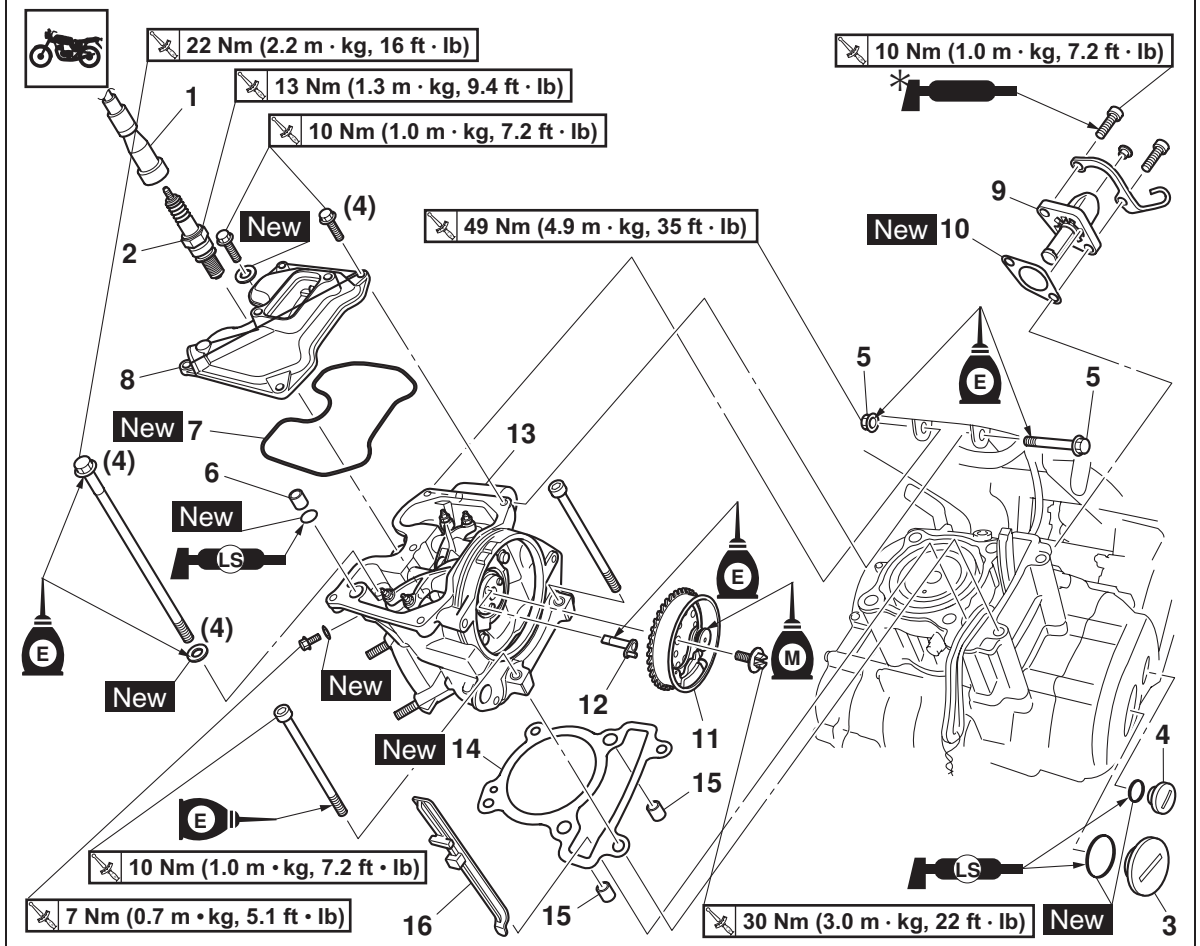

Order	Job/Parts to remove	Qty	Remarks
	Seat/Left and right front panel/Left and right side panel/Air filter case		Refer to “GENERAL CHASSIS” on page 4-1.
	Fuel tank		Refer to “FUEL TANK” on page 7-1.
	Throttle body/Intake manifold		Refer to “THROTTLE BODY” on page 7-4.
	Air cut-off valve/Reed valve/Plate		Refer to “AIR INDUCTION SYSTEM” on page 7-9.
	Thermostat/Coolant temperature sensor		Refer to “THERMOSTAT” on page 6-4.
	Water pump		Refer to “WATER PUMP” on page 6-6.
	Radiator		Refer to “RADIATOR” on page 6-1.
	Muffler		Refer to “ENGINE REMOVAL” on page 5-1.
	Clutch cable		Disconnect. Refer to “CLUTCH” on page 5-36.
1	Spark plug cap	1	Disconnect.
2	Spark plug	1	
3	Crankshaft end accessing screw	1	
4	Timing mark accessing screw	1	
5	Engine mounting bolt/nut (front side)	1/1	

Removing the cylinder head

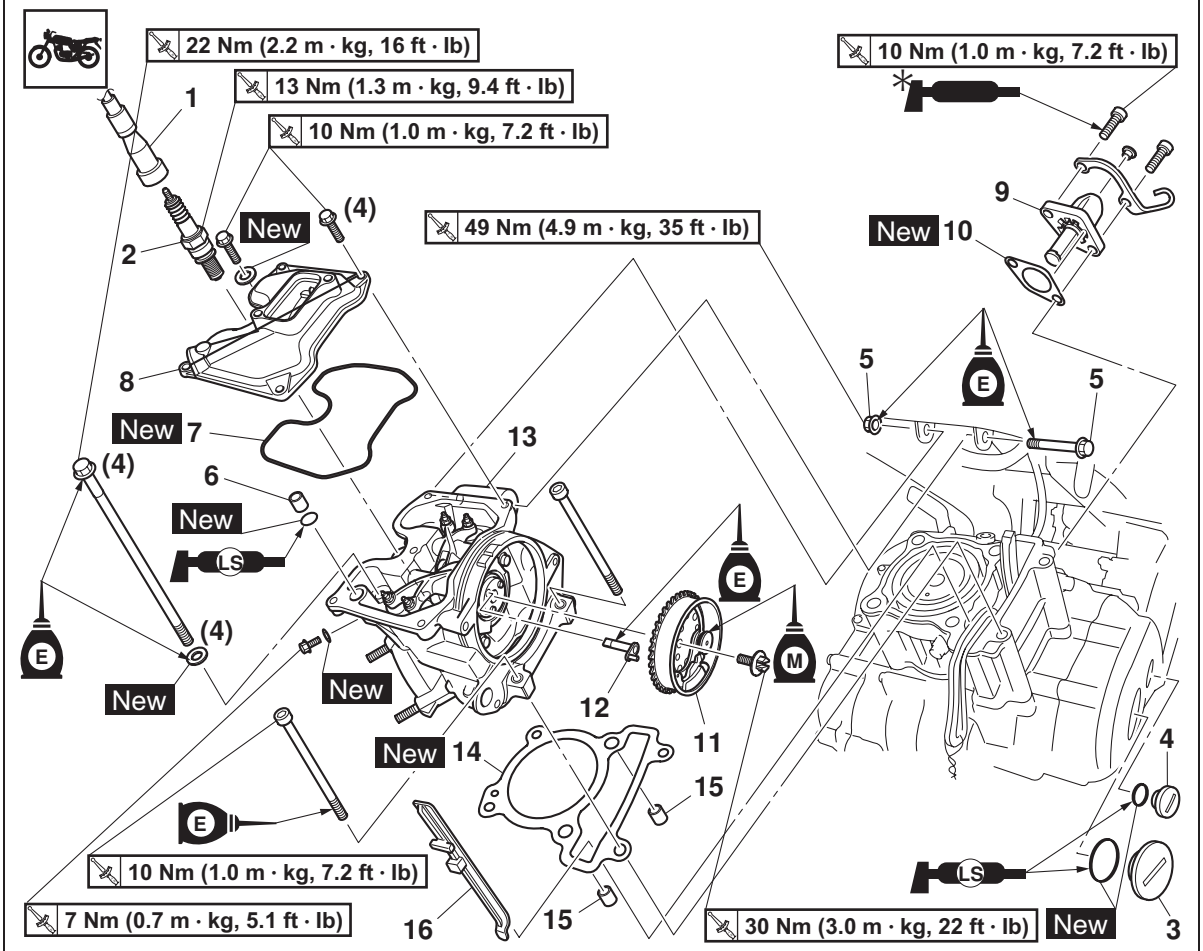

Order	Job/Parts to remove	Qty	Remarks
6	Cylinder head cover	1	
7	Cylinder head cover gasket	1	
8	Dowel pin	1	
9	Timing chain tensioner	1	
10	Timing chain tensioner gasket	1	
11	Camshaft sprocket	1	
12	Decompression cam	1	
13	Cylinder head	1	
14	Cylinder head gasket	1	
15	Dowel pin	2	
16	Timing chain guide (exhaust side)	1	
			For installation, reverse the removal procedure.

* Yamaha bond No. 1215 (Three Bond No. 1215)

REMOVING THE CYLINDER HEAD

1. Align:
   - "I" mark "a" on the magneto rotor (with the stationary pointer "b" on the magneto cover)

▼▼▼▼▼▼▼▼▼▼▼▼▼▼▼▼▼▼▼▼▼▼▼▼▼▼▼▼▼▼▼▼

a. Turn the crankshaft counterclockwise.
b. When the piston is at TDC on the compression stroke, align the "I" mark "c" on the camshaft sprocket with the mark "d" on the cylinder head.

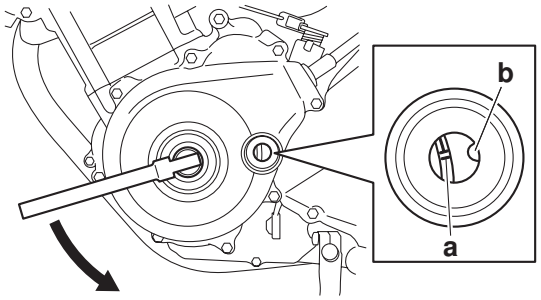

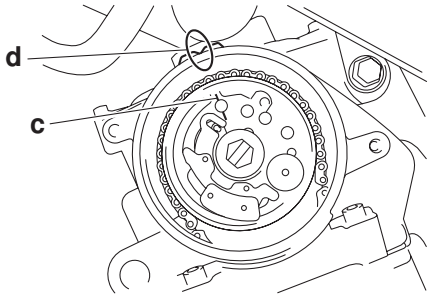

▲▲▲▲▲▲▲▲▲▲▲▲▲▲▲▲▲▲▲▲▲▲▲▲▲▲▲▲▲▲▲▲

2. Loosen:
   - Camshaft sprocket bolt "1"

NOTE:

While holding the magneto rotor nut with a wrench "2", loosen the camshaft sprocket bolt.

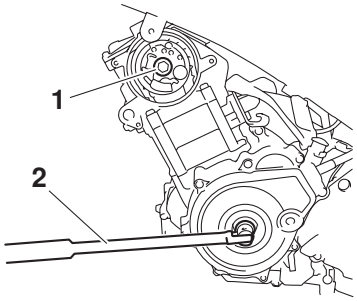

3. Remove:
   - Camshaft sprocket

NOTE:

To prevent the timing chain from falling into the crankcase, fasten it with a wire "1".

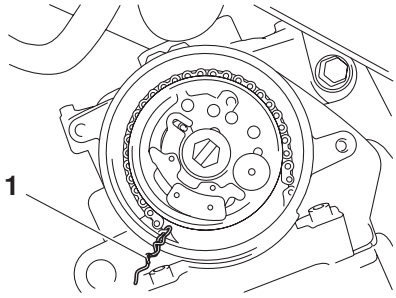

4. Remove:
   - Cylinder head

NOTE:

- Loosen the bolts in the proper sequence as shown.
- Loosen each bolt 1/2 of a turn at a time. After all of the bolts are fully loosened, remove them.

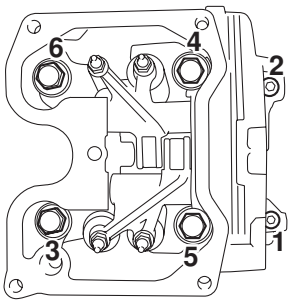

CHECKING THE CYLINDER HEAD

1. Eliminate:
   - Combustion chamber carbon deposits (with a rounded scraper)

NOTE:

Do not use a sharp instrument to avoid damaging or scratching:
- Spark plug bore threads
- Valve seats

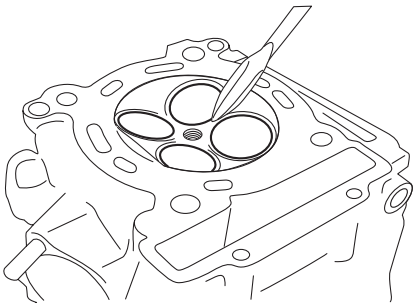

2. Check:
   - Cylinder head
     Damage/scratches → Replace.
   - Cylinder head water jacket
     Mineral deposits/rust → Eliminate.
3. Measure:
   - Cylinder head warpage
     Out of specification → Resurface the cylinder head.

Warpage limit
0.03 mm

▼▼▼▼▼▼▼▼▼▼▼▼▼▼▼▼▼▼▼▼▼▼▼▼▼▼▼▼

a. Place a straightedge “1” and a thickness gauge “2” across the cylinder head.

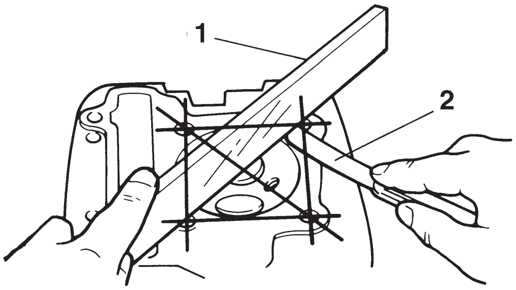

b. Measure the warpage.
c. If the limit is exceeded, resurface the cylinder head as follows.
d. Place a 400–600 grit wet sandpaper on the surface plate and resurface the cylinder head using a figure-eight sanding pattern.

NOTE:

To ensure an even surface, rotate the cylinder head several times.

▲▲▲▲▲▲▲▲▲▲▲▲▲▲▲▲▲▲▲▲▲▲▲▲▲▲▲▲

CHECKING THE CAMSHAFT SPROCKET AND TIMING CHAIN GUIDE

1. Check:
   - Camshaft sprocket
     More than 1/4 tooth wear “a” → Replace the camshaft sprocket, timing chain and crankshaft as a set.

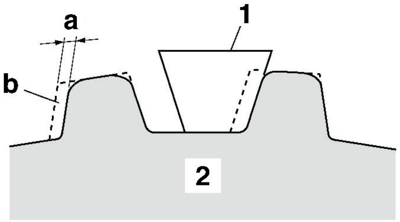

a. 1/4 tooth
b. Correct
1. Timing chain roller
2. Camshaft sprocket

2. Check:
   - Timing chain guide (exhaust side)
     Damage/wear → Replace.

CHECKING THE TIMING CHAIN TENSIONER

1. Check:
   - Timing chain tensioner
     Cracks/damage/rough movement → Replace.

a. Lightly press the timing chain tensioner rod into the timing chain tensioner housing by hand.

NOTE:

While pressing the timing chain tensioner rod, wind it clockwise with a thin screwdriver “1” until it stops.

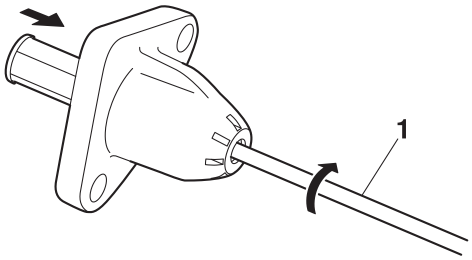

b. Remove the screwdriver and slowly release the timing chain tensioner rod.
c. Make sure that the timing chain tensioner rod comes out of the timing chain tensioner housing smoothly. If there is rough movement, replace the timing chain tensioner.

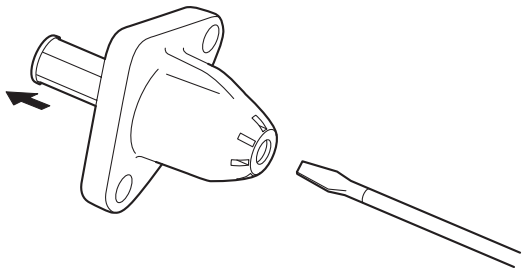

B

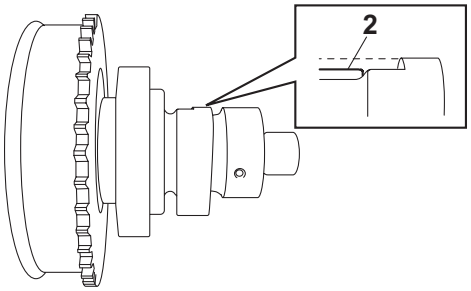

CHECKING THE DECOMPRESSION SYSTEM

1. Check:
   - Decompression system

a. Check the decompression system with the camshaft sprocket and the decompression cam installed to the camshaft.
b. Check that the decompression lever “1” moves smoothly.
c. Without operating the decompression lever, check that the decompression cam “2” projects from the camshaft (exhaust cam) as shown in the illustration “A”.
d. Move the decompression lever “1” in the direction of the arrow shown and check that the decompression cam does not project from the camshaft (exhaust cam) as shown in the illustration “B”.

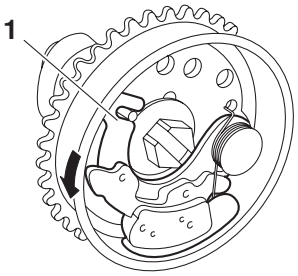

A

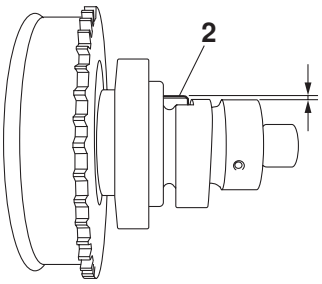

INSTALLING THE CYLINDER HEAD

1. Install:
   - Cylinder head

NOTE:

Pass the timing chain through the timing chain cavity.

2. Tighten:
   - Cylinder head bolts “1”

	**Cylinder head bolt** **22 Nm (2.2 m·kg, 16 ft·lb)**

   - Cylinder head bolts “2”

	**Cylinder head bolt** **10 Nm (1.0 m·kg, 7.2 ft·lb)**

NOTE:

- Lubricate the cylinder head bolts with engine oil.
- Tighten the cylinder head bolts in the proper tightening sequence as shown and torque them in two stages.

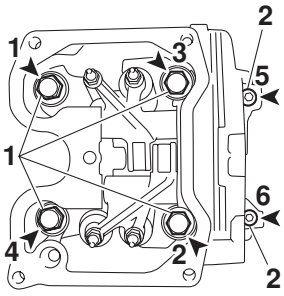

3. Install:
   - Camshaft sprocket

a. Turn the crankshaft counterclockwise.
b. Align the “I” mark “a” on the magneto rotor with the stationary pointer “b” on the magneto cover.

c. Align the “I” mark “c” on the camshaft sprocket with the stationary pointer “d” on the cylinder head.
d. Install the timing chain onto the camshaft sprocket, and then install the camshaft sprocket onto the camshaft.

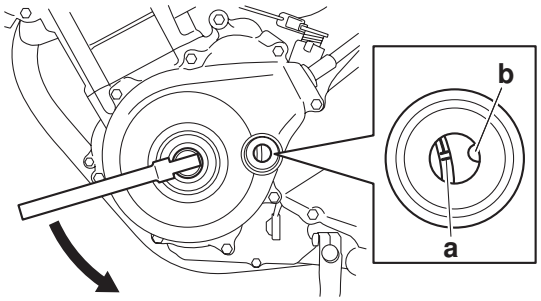

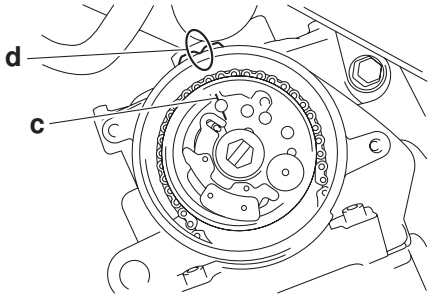

NOTE:

When installing the camshaft sprocket, be sure to keep the timing chain as tight as possible on the exhaust side.

CAUTION:

Do not turn the crankshaft when installing the camshaft(s) to avoid damage or improper valve timing.

e. While holding the camshaft, temporarily tighten the camshaft sprocket bolt.
f. Remove the wire from the timing chain.

▲▲▲▲▲▲▲▲▲▲▲▲▲▲▲▲▲▲▲▲▲▲▲▲▲▲▲

4. Install:
   - Timing chain tensioner gasket New
   - Timing chain tensioner

▼▼▼▼▼▼▼▼▼▼▼▼▼▼▼▼▼▼▼▼▼▼▼▼▼▼▼

a. While lightly pressing the timing chain tensioner rod by hand, turn the tensioner rod fully clockwise with a thin screwdriver “1”.
b. With the timing chain tensioner rod turned all the way into the timing chain tensioner housing (with the thin screwdriver still installed), install the gasket and the timing chain tensioner “2” onto the cylinder block.
c. Tighten the timing chain tensioner bolts “3” to the specified torque.

	**Timing chain tensioner bolt 10 Nm (1.0 m·kg, 7.2 ft·lb)**

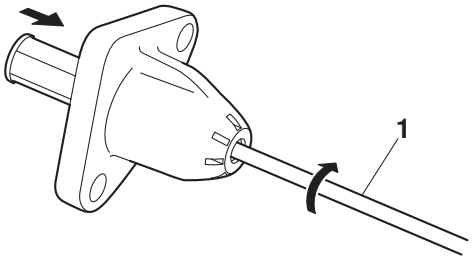

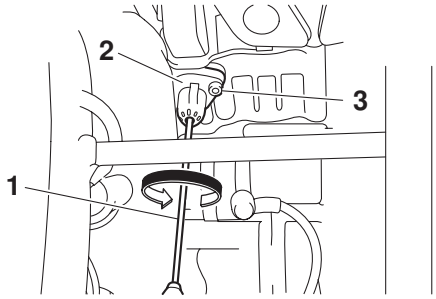

d. Remove the screwdriver, make sure the timing chain tensioner rod releases.

▲▲▲▲▲▲▲▲▲▲▲▲▲▲▲▲▲▲▲▲▲▲▲▲▲▲▲

5. Turn:
   - Crankshaft
     (several turns counterclockwise)
6. Check:
   - “I” mark “a”
     Align the “I” mark on the magneto rotor with the stationary pointer “b” on the magneto cover.
   - “I” mark “c”
     Align the “I” mark on the camshaft sprocket with the stationary pointer “d” on the cylinder head.
     Out of alignment → Correct.
     Refer to the installation steps above.

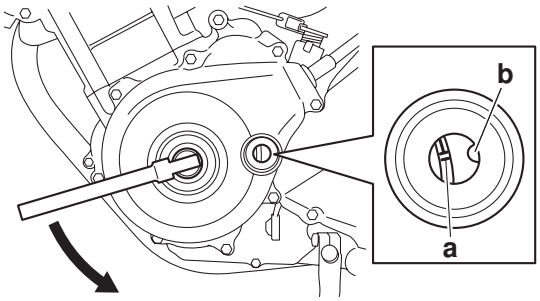

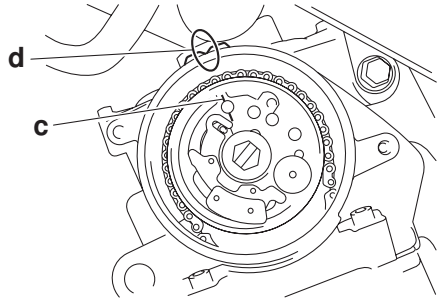

7. Tighten:
   - Camshaft sprocket bolt

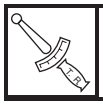	**Camshaft sprocket bolt** **30 Nm (3.0 m·kg, 22 ft·lb)**

CAUTION:

Be sure to tighten the camshaft sprocket bolt to the specified torque to avoid the possibility of the bolt coming loose and damaging the engine.

8. Measure:
   - Valve clearance
     Out of specification → Adjust.
     Refer to “ADJUSTING THE VALVE CLEARANCE” on page 3-3.

CAMSHAFT

Removing the rocker arms and camshaft

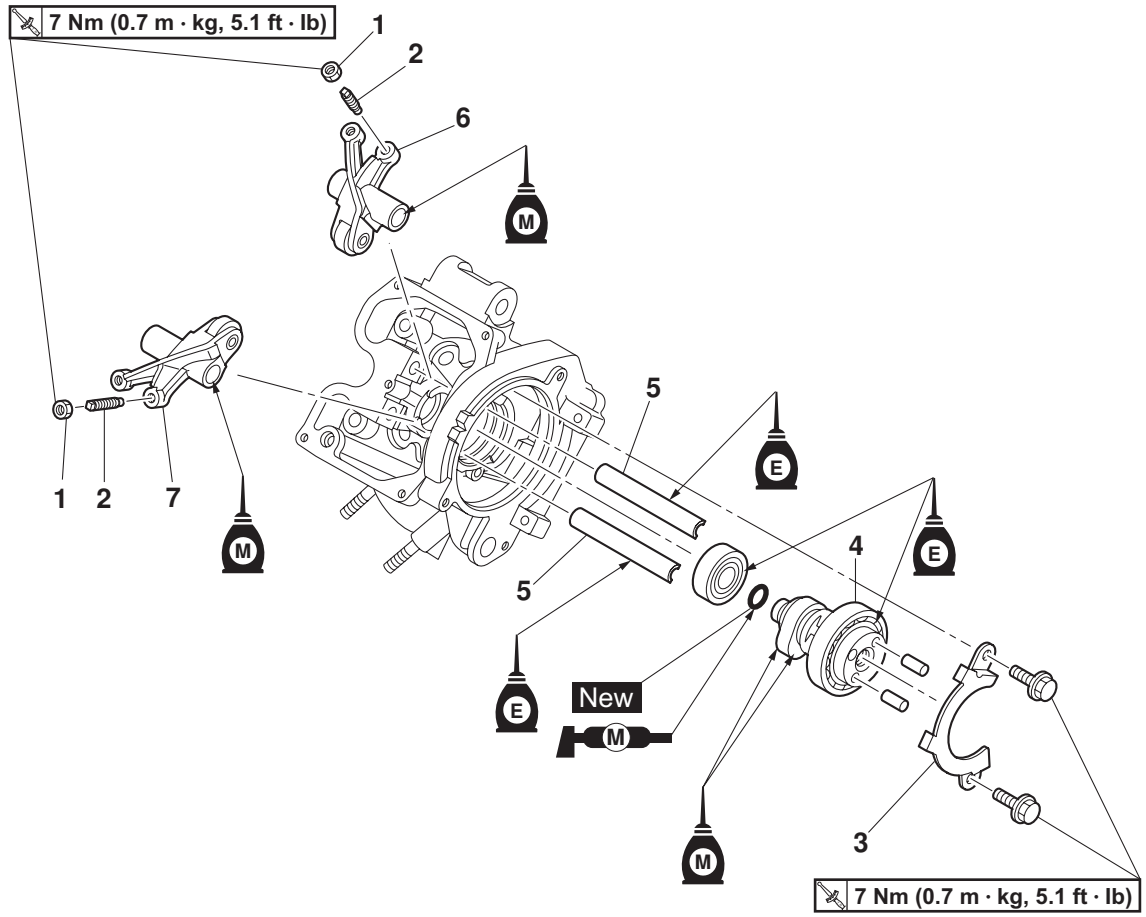

Order	Job/Parts to remove	Qty	Remarks
	Cylinder head		Refer to “CYLINDER HEAD” on page 5-6.
1	Locknut	2	
2	Adjusting screw	2	
3	Camshaft retainer	1	
4	Camshaft	1	
5	Rocker arm shaft	2	
6	Intake rocker arm	1	
7	Exhaust rocker arm	1	
			For installation, reverse the removal procedure.

REMOVING THE ROCKER ARMS AND CAMSHAFT

1. Loosen:
   - Locknut “1”
   - Valve clearance adjusting screw “2”

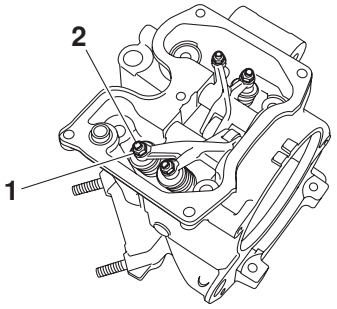

2. Remove:
   - Camshaft “1”

NOTE:

Screw 8-mm (0.31-in) bolt “2” into the threaded end of the camshaft and then pull out the camshaft.

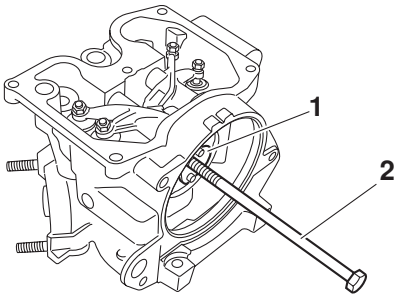

CHECKING THE CAMSHAFT

1. Check:
   - Camshaft lobes
     Blue discoloration/pitting/scratches → Replace the camshaft.
2. Measure:
   - Camshaft lobe dimensions “a” and “b”
     Out of specification → Replace the camshaft.

Camshaft lobe dimensions

Intake a
25.177 ± 0.05 mm
Limit
25.027 mm

Intake b
30.275 ± 0.05 mm
Limit
30.125 mm

Exhaust a
25.115 ± 0.05 mm
Limit
24.965 mm

Exhaust b
30.282 ± 0.05 mm
Limit
30.132 mm

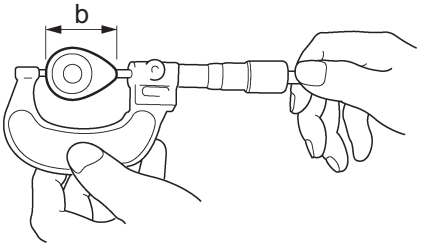

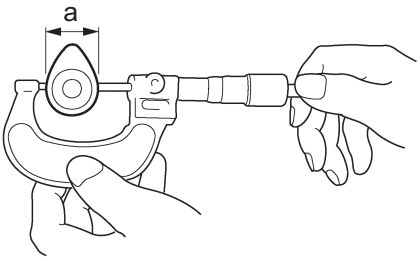

3. Check:
   - Camshaft oil passage
     Obstruction → Blow out with compressed air.

CHECKING THE ROCKER ARMS AND ROCKER ARM SHAFTS

The following procedure applies to all of the rocker arms and rocker arm shafts.

1. Check:
   - Rocker arm
     Damage/wear → Replace.

2. Check:
   - Rocker arm shaft
     Blue discoloration/excessive wear/pitting/scratches → Replace or check the lubrication system.
3. Measure:
   - Rocker arm inside diameter "a"
     Out of specification → Replace.

Rocker arm inside diameter
9.985–10.000 mm

Limit
10.030 mm

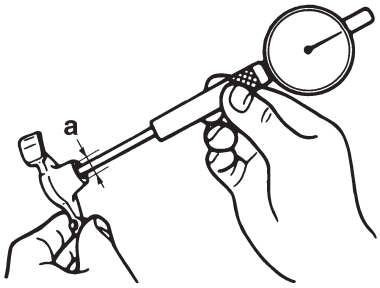

4. Measure:
   - Rocker arm shaft outside diameter "a"
     Out of specification → Replace.

Rocker arm shaft outside diameter
9.966–9.976 mm

Limit
9.950 mm

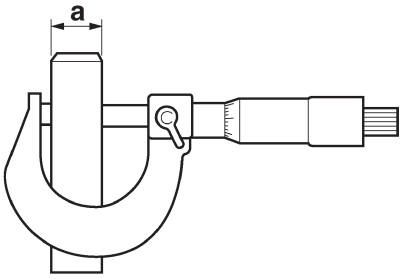

5. Calculate:
   - Rocker-arm-to-rocker-arm-shaft clearance

NOTE:

Calculate the clearance by subtracting the rocker arm shaft outside diameter from the rocker arm inside diameter.

Out of specification → Replace the defective part(s).

Rocker-arm-to-rocker-arm-shaft clearance
0.009–0.034 mm

Limit
0.08 mm

INSTALLING THE CAMSHAFT AND ROCKER ARMS

1. Lubricate:
   - Rocker arms
   - Rocker arm shafts

Recommended lubricant
Rocker arm inner surface
Molybdenum disulfide oil
Rocker arm shaft
Engine oil

2. Lubricate:
   - Camshaft

Recommended lubricant
Camshaft
Molybdenum disulfide oil
Camshaft bearing
Engine oil

3. Install:
   - Intake and exhaust rocker arms
   - Rocker arm shafts "1"

NOTE:

- Make sure that the cutout "a" in each rocker arm shaft is facing downward as shown in the illustration.
- Make sure the rocker arm shafts (intake and exhaust) are completely pushed into the cylinder head.

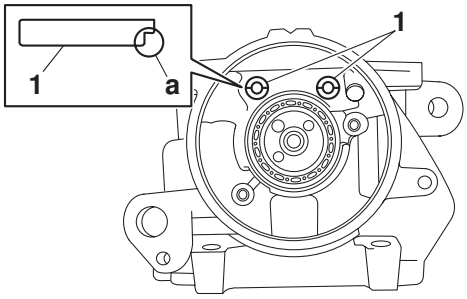

VALVES AND VALVE SPRINGS

Removing the valves and valve springs

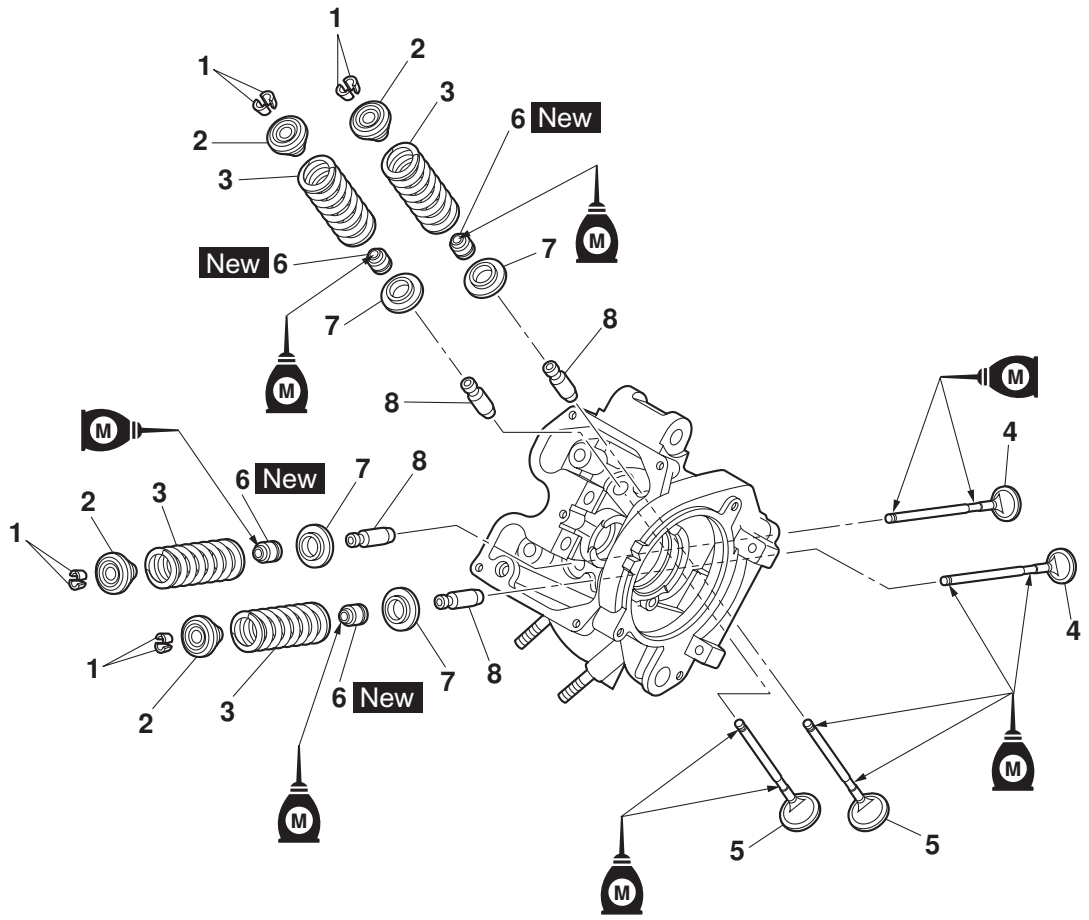

Order	Job/Parts to remove	Qty	Remarks
	Cylinder head		Refer to “CYLINDER HEAD” on page 5-6.
	Rocker arms/Camshaft		Refer to “CAMSHAFT” on page 5-13.
1	Valve cotter	8	
2	Upper spring seat	4	
3	Valve spring	4	
4	Intake valve	2	
5	Exhaust valve	2	
6	Valve stem seal	4	
7	Lower spring seat	4	
8	Valve guide	4	
			For installation, reverse the removal procedure.

REMOVING THE VALVES

The following procedure applies to all of the valves and related components.

NOTE:

Before removing the internal parts of the cylinder head (e.g., valves, valve springs, valve seats), make sure the valves properly seal.

1. Check:
   - Valve sealing
     Leakage at the valve seat → Check the valve face, valve seat, and valve seat width.
     Refer to "CHECKING THE VALVE SEATS" on page 5-19.

▼▼▼▼▼▼▼▼▼▼▼▼▼▼▼▼▼▼▼▼▼▼▼▼▼▼▼▼▼▼▼▼

a. Pour a clean solvent "a" into the intake and exhaust ports.
b. Check that the valves properly seal.

NOTE:

There should be no leakage at the valve seat "1".

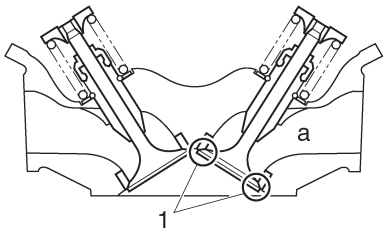

▲▲▲▲▲▲▲▲▲▲▲▲▲▲▲▲▲▲▲▲▲▲▲▲▲▲▲▲▲▲▲▲

- Valve cotters "1"

NOTE:

Remove the valve cotters by compressing the valve spring with the valve spring compressor and the valve spring compressor attachment "2".

Valve spring compressor
YSST-603

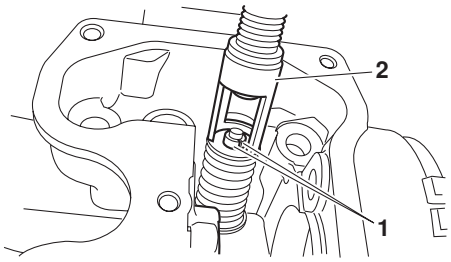

3. Remove:
   - Upper spring seat "1"
   - Valve spring "2"
   - Valve "3"
   - Valve stem seal "4"
   - Lower spring seat "5"

NOTE:

Identify the position of each part very carefully so that it can be reinstalled in its original place.

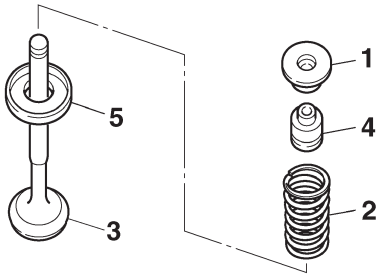

CHECKING THE VALVES AND VALVE GUIDES

The following procedure applies to all of the valves and valve guides.

1. Measure:
   - Valve-stem-to-valve-guide clearance
     Out of specification → Replace the cylinder head

- Valve-stem-to-valve-guide clearance = Valve guide inside diameter "a" - Valve stem diameter "b"

Valve-stem-to-valve-guide clearance (intake)
0.010–0.037 mm
Limit
0.080 mm
Valve-stem-to-valve-guide clearance (exhaust)
0.025–0.052 mm
Limit
0.100 mm

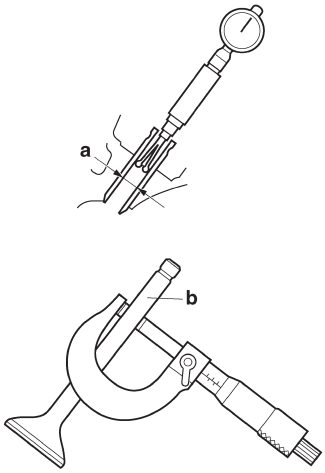

Valve & Valve guide clearance = a–b

2. Eliminate:
   - Carbon deposits
     (from the valve face and valve seat)
3. Check:
   - Valve face
     Pitting/wear → Grind the valve face.
   - Valve stem end
     Mushroom shape or diameter larger than the body of the valve stem → Replace the valve.
4. Measure:
   - Valve margin thickness D "a"
     Out of specification → Replace the valve.

Valve margin thickness D (intake)
0.50–0.90 mm
Valve margin thickness D (exhaust)
0.50–0.90 mm

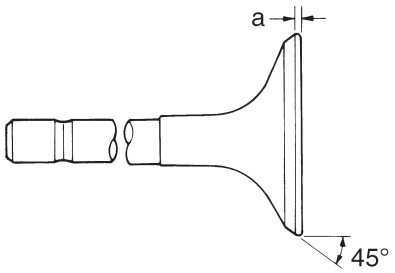

5. Measure:
   - Valve stem runout
     Out of specification → Replace the valve.

NOTE:

- When installing a new valve, always replace the valve guide.
- If the valve is removed or replaced, always replace the valve stem seal.

Valve stem runout
0.010 mm

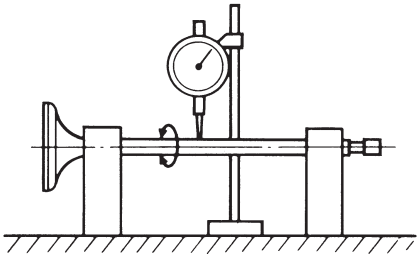

CHECKING THE VALVE SEATS

The following procedure applies to all of the valves and valve seats.

1. Eliminate:
   - Carbon deposits
     (from the valve face and valve seat)
2. Check:
   - Valve seat
     Pitting/wear → Replace the cylinder head.
3. Measure:
   - Valve seat width C "a"
     Out of specification → Replace the cylinder head.

Valve seat width C (intake)
0.90–1.10 mm
Valve seat width C (exhaust)
0.90–1.10 mm

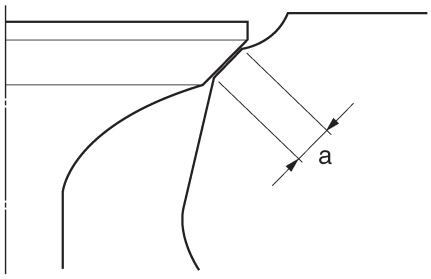

a. Install the valve into the cylinder head.

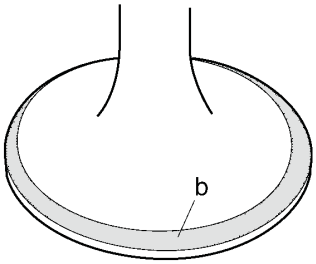

b. Press the valve through the valve guide and onto the valve seat to make a clear impression.
c. Measure the valve seat width.

NOTE:

Where the valve seat and valve face contacted one another, the blueing will have been removed.

4. Lap:
   - Valve face
   - Valve seat

NOTE:

After replacing the cylinder head or replacing the valve and valve guide, the valve seat and valve face should be lapped.

a. Apply a coarse lapping compound "a" to the valve face.

CAUTION:

Do not let the lapping compound enter the gap between the valve stem and the valve guide.

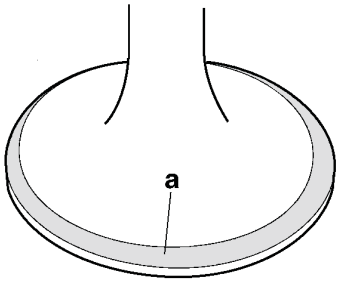

b. Apply molybdenum disulfide oil onto the valve stem.

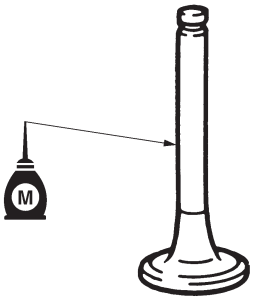

c. Install the valve into the cylinder head.
d. Turn the valve until the valve face and valve seat are evenly polished, then clean off all of the lapping compound.

NOTE:

For the best lapping results, lightly tap the valve seat while rotating the valve back and forth between your hands.

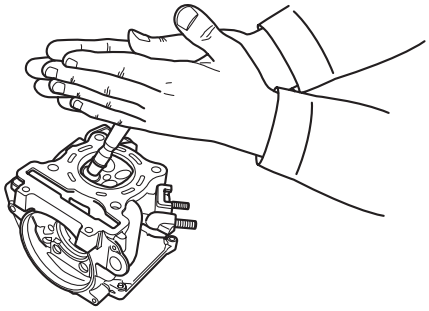

e. Apply a fine lapping compound to the valve face and repeat the above steps.
f. After every lapping procedure, be sure to clean off all of the lapping compound from the valve face and valve seat.

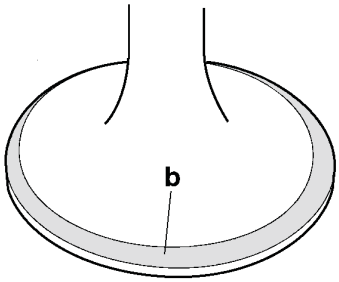

g. Install the valve into the cylinder head.
h. Press the valve through the valve guide and onto the valve seat to make a clear impression.
i. Measure the valve seat width "c" again. If the valve seat width is out of specification, reface and lap the valve seat.

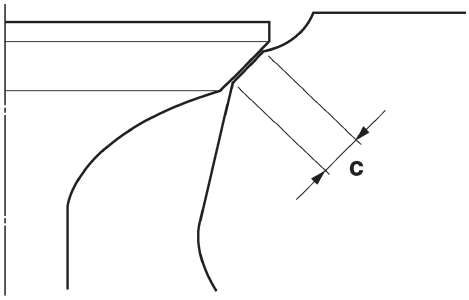

CHECKING THE VALVE SPRINGS

The following procedure applies to all of the valve springs.

1. Measure:
   - Valve spring free length "a"
     Out of specification → Replace the valve spring.

Free length (intake)
41.71 mm
Limit
39.62 mm
Free length (exhaust)
41.71 mm
Limit
39.62 mm

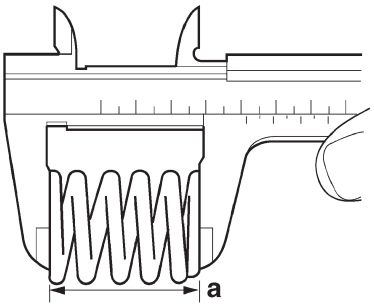

2. Measure:
   - Compressed valve spring force “a”
     Out of specification → Replace the valve spring.

Installed compression spring force (intake)
140–162 N (31.47–36.42 lbf)
(14.28–16.52 kgf)
Installed compression spring force (exhaust)
140–162 N (31.47–36.42 lbf)
(14.28–16.52 kgf)
Installed length (intake)
35.30 mm
Installed length (exhaust)
35.30 mm

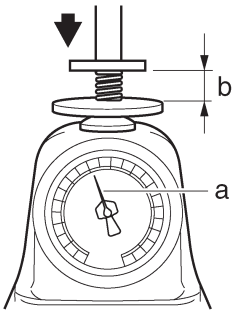

b. Installed length

3. Measure:
   - Valve spring tilt “a”
     Out of specification → Replace the valve spring.

Spring tilt (intake)
2.5°/1.8 mm
Spring tilt (exhaust)
2.5°/1.8 mm

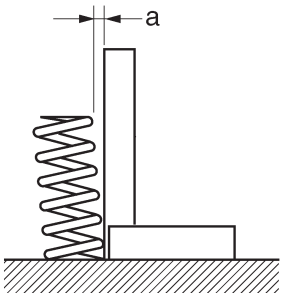

INSTALLING THE VALVES

The following procedure applies to all of the valves and related components.

1. Deburr:
   - Valve stem end
     (with an oil stone)

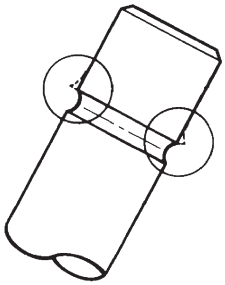

2. Lubricate:
   - Valve stem “1”
   - Valve stem seal “2” New
     (with the recommended lubricant)

Recommended lubricant
Molybdenum disulfide oil

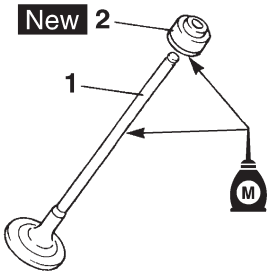

3. Install:
   - Lower spring seat “1”

- Valve stem seal “2” New
- Valve “3”
- Valve spring “4”
- Upper spring seat “5”
  (into the cylinder head)

NOTE:

- Make sure each valve is installed in its original place.
- Install the valve springs with the larger pitch “a” facing up.

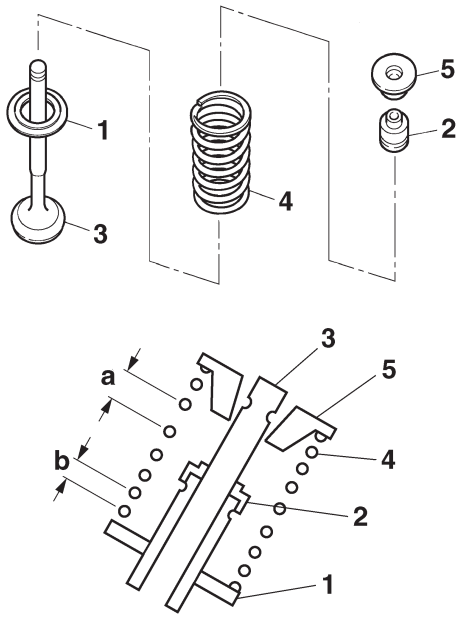

b. Smaller pitch

4. Install:
   - Valve cotters “1”

NOTE:

Install the valve cotters by compressing the valve spring with the valve spring compressor “2”.

	**Valve spring compressor YSST-603**

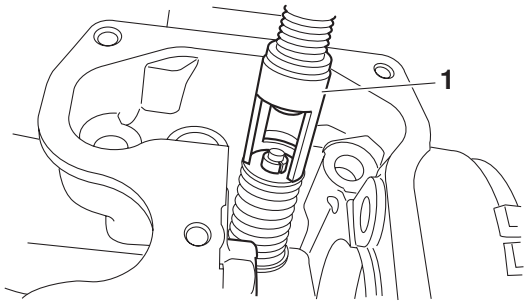

5. To secure the valve cotters onto the valve stem, lightly tap the valve tip with a soft-face hammer.

CAUTION:

Hitting the valve tip with excessive force could damage the valve.

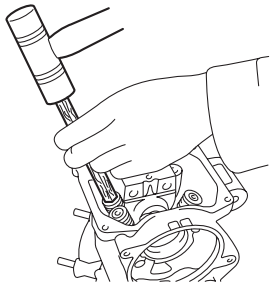

CYLINDER AND PISTON

Removing the cylinder and piston

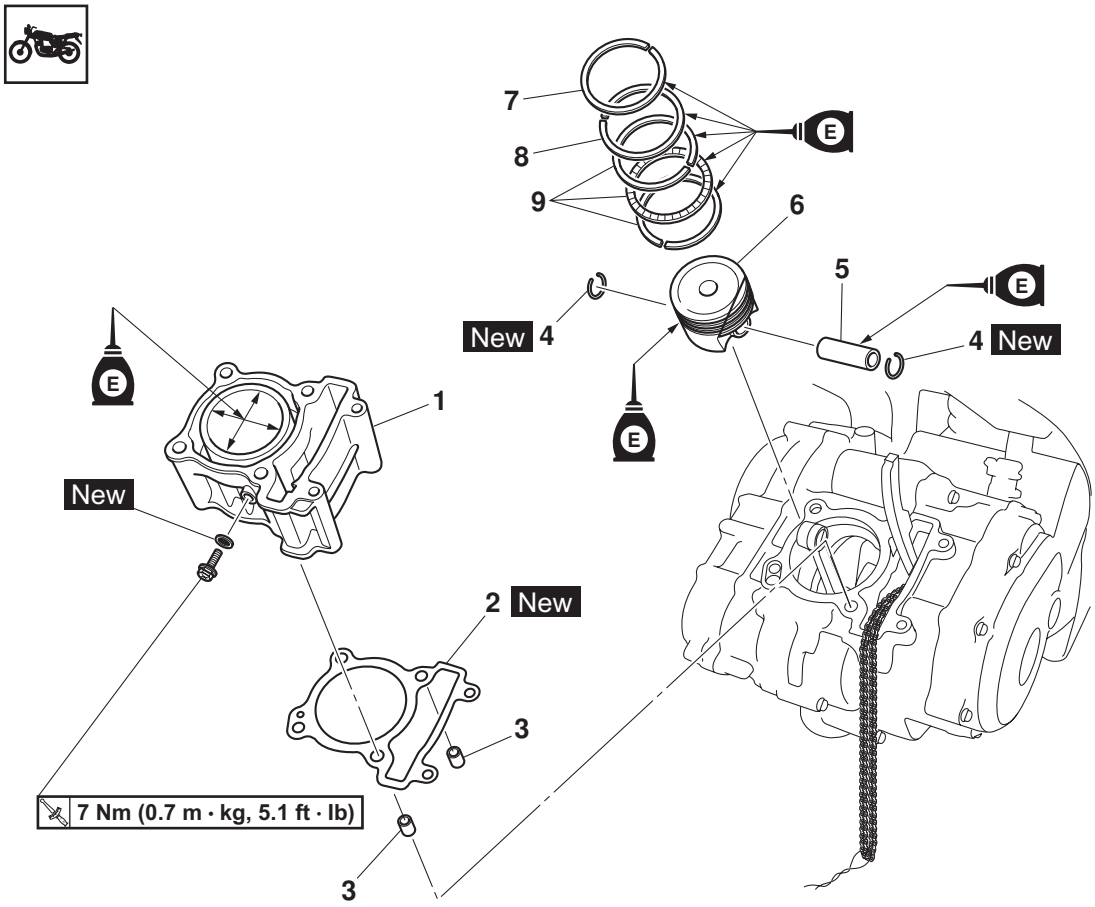

Order	Job/Parts to remove	Qty	Remarks
	Cylinder head		Refer to “CYLINDER HEAD” on page 5-6.
1	Cylinder	1	
2	Cylinder gasket	1	
3	Dowel pin	2	
4	Piston pin circlip	2	
5	Piston pin	1	
6	Piston	1	
7	Top Ring .	1	
8	2nd ring	1	
9	Oil Ring	1	
			For installation, reverse the removal procedure.

REMOVING THE PISTON

1. Remove:
   - Piston pin clips “1”
   - Piston pin “2”
   - Piston “3”

CAUTION:

Do not use a hammer to drive the piston pin out.

NOTE:

- Before removing the piston pin clip, cover the crankcase opening with a clean rag to prevent the piston pin clip from falling into the crankcase.
- Before removing the piston pin, deburr the piston pin clip’s groove and the piston pin bore area.

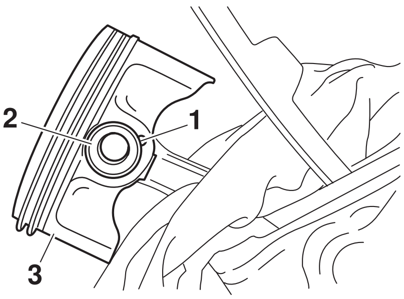

2. Remove:
   - Top ring
   - 2nd ring
   - Oil ring

NOTE:

When removing a piston ring, open the end gap with your fingers and lift the other side of the ring over the piston crown.

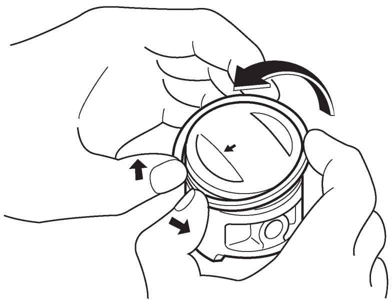

CHECKING THE CYLINDER AND PISTON

1. Check:
   - Piston wall
   - Cylinder wall
     Vertical scratches → Replace the cylinder, and replace the piston and piston rings as a set.
2. Measure:
   - Piston-to-cylinder clearance

▼▼▼▼▼▼▼▼▼▼▼▼▼▼▼▼▼▼▼▼▼▼▼▼▼▼▼▼▼

a. Measure cylinder bore “C” with the cylinder bore gauge.

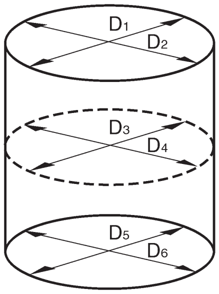

NOTE:

Measure cylinder bore “C” by taking side-to-side and front-to-back measurements of the cylinder. Then, find the average of the measurements.

Bore
56.985–57.010 mm
Taper limit
0.05 mm
Out of round limit
0.05 mm

"C" = maximum of D_1–D_2
"T" = maximum of D_1 or D_2 - maximum of D_5 or D_6
"R" = maximum of D_1, D_3 or D_5 - minimum of D_2, D_4 or D_6

b. If out of specification, replace the cylinder, and replace the piston and piston rings as a set.
c. Measure piston skirt diameter "D" "a" with the micrometer.

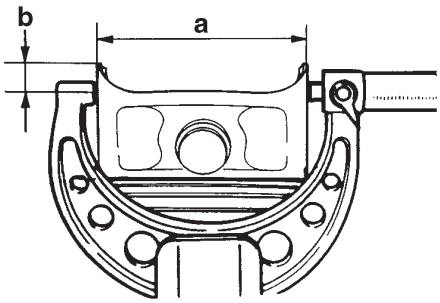

b. 5.0 mm (0.20 in) from the bottom edge of the piston

Piston
Diameter D
56.965–56.990 mm

d. If out of specification, replace the piston and piston rings as a set.
e. Calculate the piston-to-cylinder clearance with the following formula.

• Piston-to-cylinder clearance =
Cylinder bore "C" -
Piston skirt diameter "D"

Piston-to-cylinder clearance
0.020–0.045 mm

Limit
0.15 mm

f. If out of specification, replace the cylinder, and replace the piston and piston rings as a set.

▲▲▲▲▲▲▲▲▲▲▲▲▲▲▲▲▲▲▲▲▲▲▲▲▲▲▲▲▲▲

CHECKING THE PISTON RINGS

1. Measure:
   • Piston ring side clearance
   Out of specification → Replace the piston and piston rings as a set.

NOTE:

Before measuring the piston ring side clearance, eliminate any carbon deposits from the piston ring grooves and piston rings.

Piston ring
Top ring
Ring side clearance
0.030–0.065 mm
Limit
0.100 mm
2nd ring
Ring side clearance
0.020–0.055 mm
Limit
0.100 mm

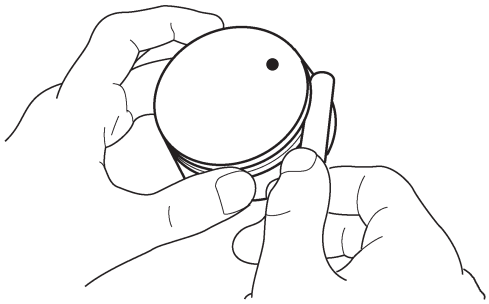

2. Install:
   • Piston ring
   (into the cylinder)

NOTE:

Level the piston ring into the cylinder with the piston crown.

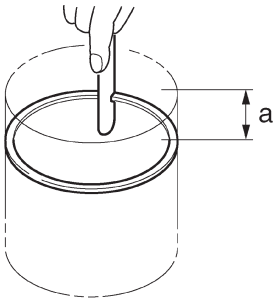

a. 40 mm

3. Measure:
   - Piston ring end gap
     Out of specification → Replace the piston ring.

NOTE:

The oil ring expander spacer end gap cannot be measured. If the oil ring rail gap is excessive, replace all three piston rings.

Piston ring
Top ring
End gap (installed)
0.10–0.25 mm
Limit
0.40 mm
2nd ring
End gap (installed)
0.10–0.25 mm
Limit
0.40 mm
Oil ring
End gap (installed)
0.20–0.70 mm

CHECKING THE PISTON PIN

1. Check:
   - Piston pin
     Blue discoloration/grooves → Replace the piston pin and then check the lubrication system.
2. Measure:
   - Piston pin outside diameter “a”
     Out of specification → Replace the piston pin.

Piston pin outside diameter
13.995–14.000 mm

Limit
13.975 mm

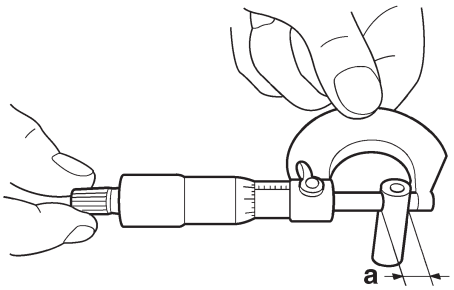

3. Measure:
   - Piston pin bore diameter “b”
     Out of specification → Replace the piston.

Piston pin bore inside diameter
14.002–14.013 mm

Limit
14.043 mm

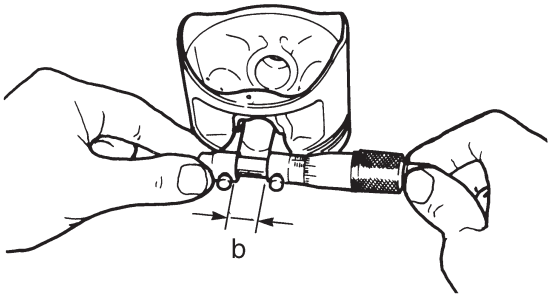

4. Calculate:
   - Piston-pin-to-piston-pin-bore clearance
     Out of specification → Replace the piston pin and piston as a set.

- Piston-pin-to-piston-pin-bore clearance = Piston pin bore diameter “b” - Piston pin outside diameter “a”

Piston-pin-to-piston-pin-bore clearance
0.002–0.018 mm
Limit
0.068 mm

INSTALLING THE PISTON AND CYLINDER

1. Install:
   - Top ring “1”
   - 2nd ring “2”
   - Oil ring expander “3”
   - Lower oil ring rail “4”
   - Upper oil ring rail “5”

NOTE:

Be sure to install the piston rings so that the manufacturer marks or numbers face up.

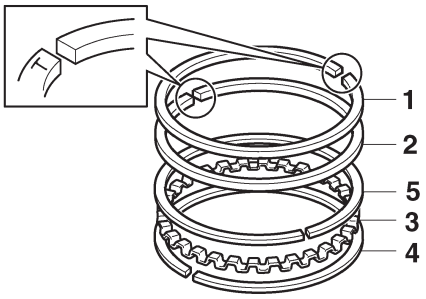

2. Install:
   - Piston “1”
   - Piston pin “2”
   - Piston pin clips “3” New

NOTE:
- Apply engine oil the piston pin.
- Make sure the arrow mark “a” on the piston points towards the exhaust side of the cylinder.
- Before installing the piston pin clip, cover the crankcase opening with a clean rag to prevent the clip from falling into the crankcase.

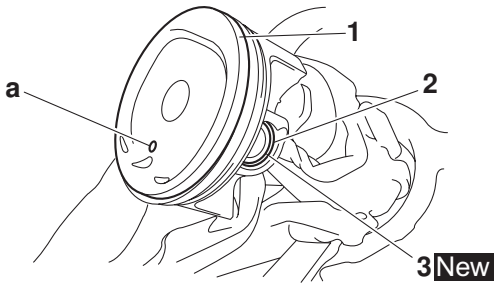

3. Lubricate:
   - Piston
   - Piston rings
   - Cylinder
     (with the recommended lubricant)

	Recommended lubricant **Engine oil**

4. Offset:
   - Piston ring end gaps

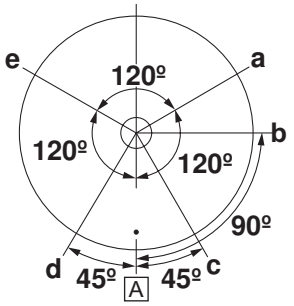

a. Top ring
b. Oil ring expander
c. Upper oil ring rail
d. Lower oil ring rail
e. 2nd ring
A. exhaust side

5. Install:
   - Dowel pins
   - Cylinder head gasket New
   - Cylinder “1”

NOTE:
- While compressing the piston rings with one hand, install the cylinder with the other hand.
- Pass the timing chain and timing chain guide (intake side) through the timing chain cavity.

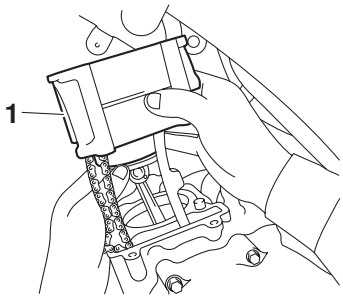

MAGNETO AND STARTER CLUTCH

Removing the magneto and starter clutch

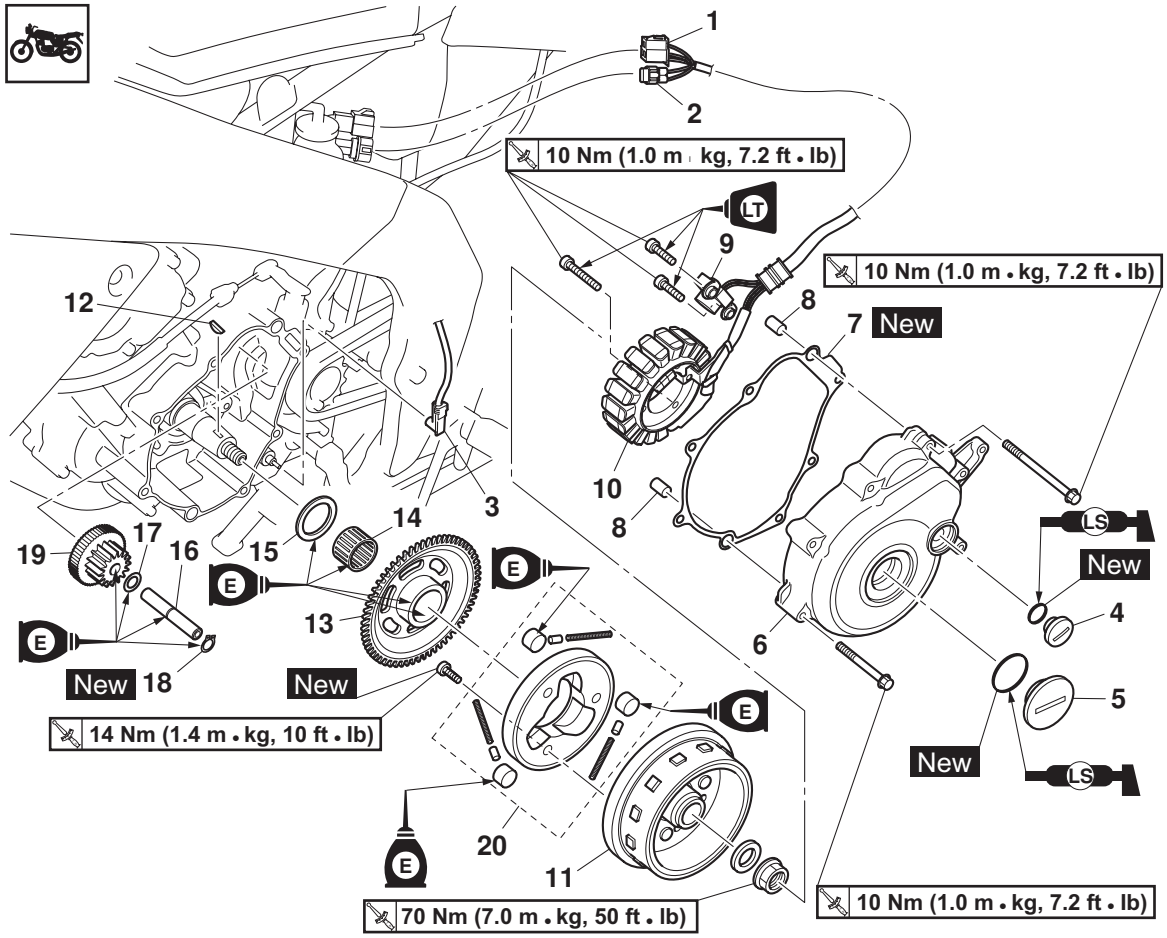

Order	Job/Parts to remove	Qty	Remarks
	Engine oil		Drain. Refer to “CHANGING THE ENGINE OIL” on page 3-10.
	Left side panel		Refer to “GENERAL CHASSIS” on page 4-1.
	Drive sprocket cover		Refer to “CHAIN DRIVE” on page 4-60.
1	Stator coil coupler	1	Disconnect.
2	Crankshaft position sensor coupler	1	Disconnect.
3	Neutral switch lead connector	1	Disconnect.
4	Timing mark accessing screw	1	
5	Crankshaft end accessing screw	1	
6	Magneto cover	1	
7	Magnetor cover gasket	1	
8	Dowel pin	2	
9	Crankshaft position sensor	1	
10	Stator coil	1	
11	Magneto rotor	1	

Removing the magneto and starter clutch

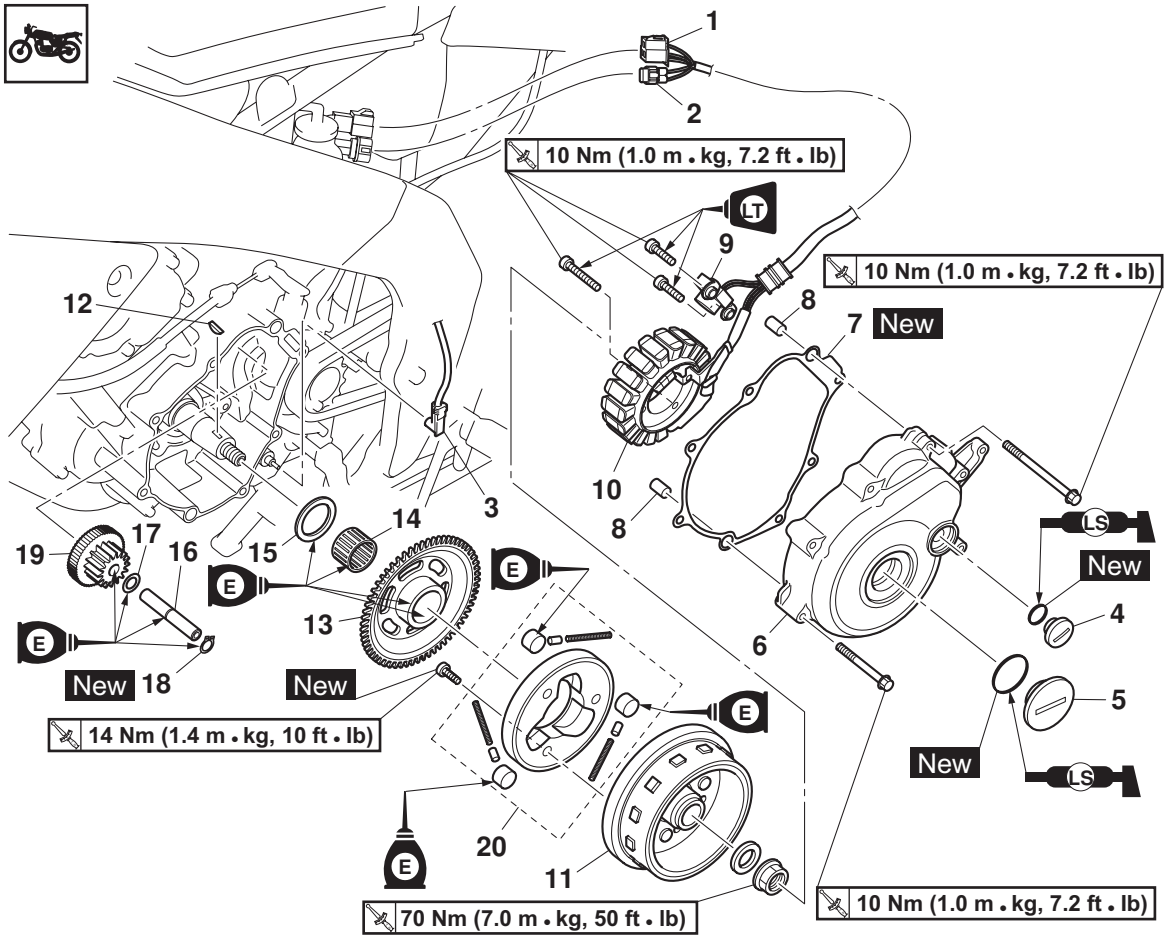

Order	Job/Parts to remove	Qty	Remarks
12	Woodruff key	1	
13	Starter clutch gear	1	
14	Bearing	1	
15	Washer	1	
16	Starter clutch idle gear shaft	1	
17	Washer	1	
18	Circlip	1	
19	Starter clutch idle gear	1	
20	Starter clutch assembly	1	
			For installation, reverse the removal procedure.

REMOVING THE MAGNETO

1. Remove:
   - Magneto rotor nut
   - Washer

NOTE:

- While holding the magneto rotor using magneto holder “1”, loosen the magneto rotor nut.

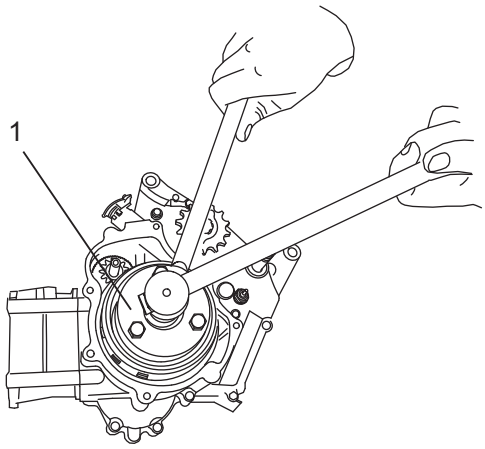

Magneto Holder
YSST-701

2. Remove:
   - Magneto rotor “1”
     (with the flywheel puller “2”)
   - Woodruff key

CAUTION:

To protect the end of the crankshaft, place an appropriate sized socket between the flywheel puller set center bolt and the crankshaft.

NOTE:

Make sure the magneto puller is centered over the magneto rotor.

Magneto puller
YSST-702

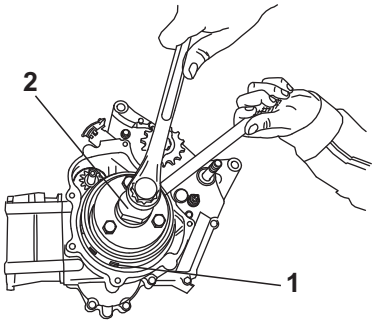

REMOVING THE STARTER CLUTCH

1. Remove:
   - Starter clutch bolts “1”

NOTE:

- While holding the magneto rotor with the magneto holder, remove the Starter clutch bolts “1”

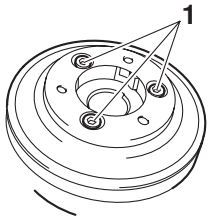

CHECKING THE STARTER CLUTCH

1. Check:
   - Starter clutch rollers “1”
   - Starter clutch spring caps “2”
   - Starter clutch springs “3”
     Damage/wear → Replace the starter clutch assembly.

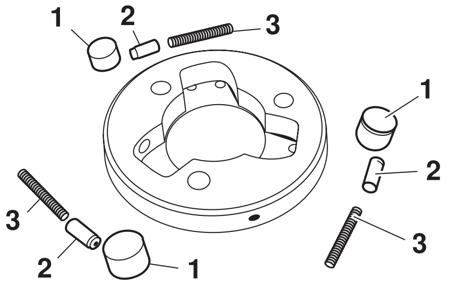

2. Check:
   - Starter clutch idle gear
   - Starter clutch gear
     Burrs/chips/roughness/wear → Replace the defective part(s).
3. Check:
   - Starter clutch gear contacting surfaces
     Damage/pitting/wear → Replace the starter clutch gear.
4. Check:
   - Starter clutch operation

▼▼▼▼▼▼▼▼▼▼▼▼▼▼▼▼▼▼▼▼▼▼▼▼▼▼▼▼▼

a. Install the starter clutch gear “1” onto the starter clutch and hold the magneto rotor.
b. When turning the starter clutch gear clockwise “A”, the starter clutch and the starter clutch gear should engage, otherwise the starter clutch is faulty and must be replaced.
c. When turning the starter clutch gear counterclockwise “B”, it should turn freely, otherwise the starter clutch is faulty and must be replaced.

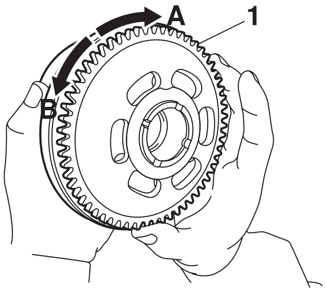

▲▲▲▲▲▲▲▲▲▲▲▲▲▲▲▲▲▲▲▲▲▲▲▲▲▲▲▲▲

INSTALLING THE STARTER CLUTCH

1. Install:
   - Starter clutch assembly
   - Starter clutch bolts “1” New

	Starter clutch bolt **14 Nm (1.4 m·kg, 10 ft·lb)**

NOTE:

- While holding the magneto rotor, tighten the starter clutch bolts “1”.
- Stake the end “a” of each starter clutch bolt.

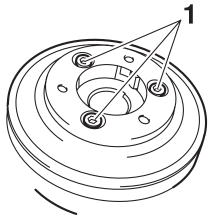

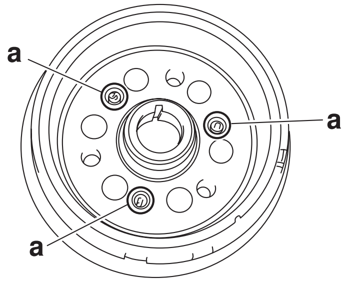

INSTALLING THE MAGNETO

1. Install:
   - Woodruff key
   - Magneto rotor
   - Washer
   - Magneto rotor nut

NOTE:

- Clean the tapered portion of the crankshaft and the magneto rotor hub.
- When installing the magneto rotor, make sure the woodruff key is properly sealed in the keyway of the crankshaft.

2. Tighten:
   - Magneto rotor nut “1”

	Magneto rotor nut **70 Nm (7.0 m·kg, 50 ft·lb)**

NOTE:

- While holding the magneto rotor "2", tighten the magneto rotor nut "1".

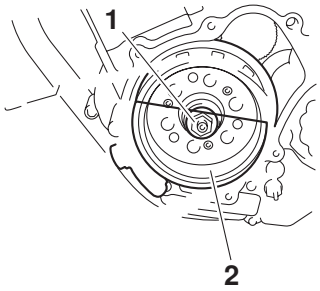

3. Apply:
   - Sealant
     (onto the crankshaft position sensor/stator assembly lead grommet)

	**Yamaha bond No. 1215** **TG-1215**

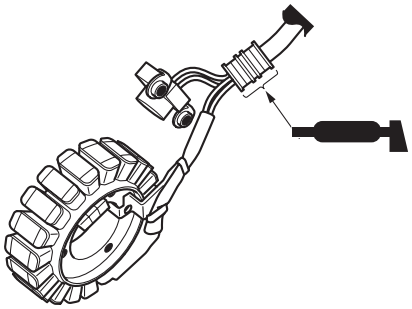

4. Install:
   - Magneto cover

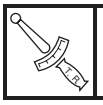	**Magneto cover bolt** **10 Nm (1.0 m·kg, 7.2 ft·lb)**

NOTE:

Tighten the magneto cover bolts in the proper tightening sequence as shown.

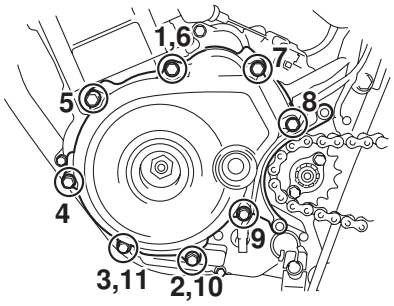

ELECTRIC STARTER

Removing the starter motor

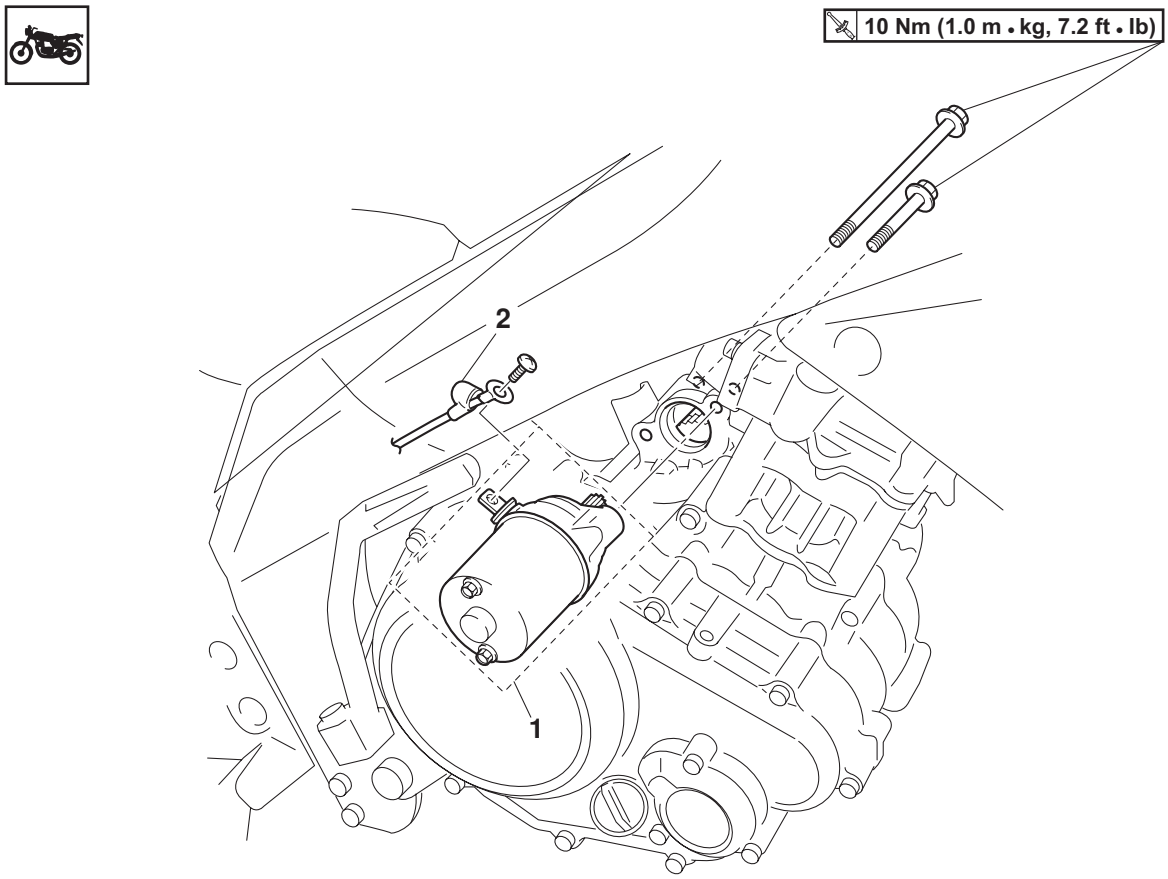

Order	Job/Parts to remove	Qty	Remarks
1	Starter motor	1	
2	Starter motor lead	1	Disconnect.
			For installation, reverse the removal procedure.

Disassembling the starter motor

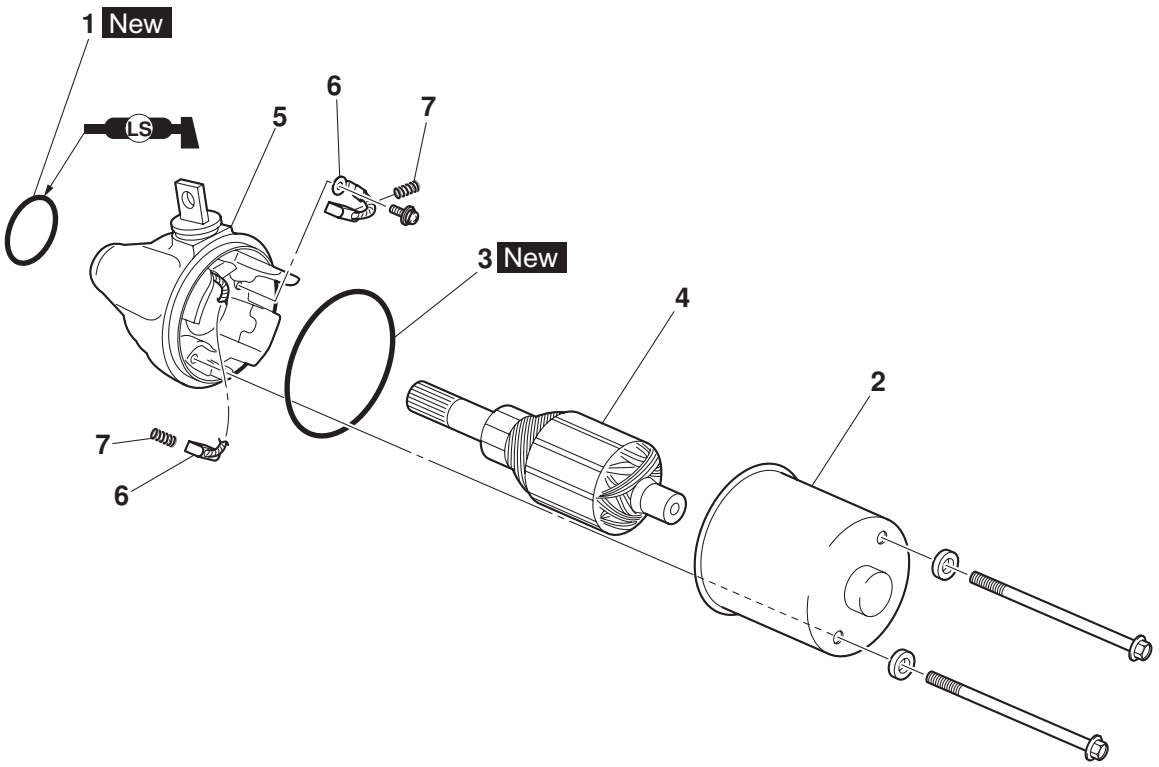

Order	Job/Parts to remove	Qty	Remarks
1	O-ring	1	
2	Starter motor yoke	1	
3	O-ring	1	
4	Commutator	1	
5	Starter motor front cover/brush holder set	1	
6	Brush	2	
7	Brush spring	2	
			For assembly, reverse the disassembly procedure.

DISASSEMBLING THE STARTER MOTOR

1. Remove:
   - Starter motor yoke “1”
   - Starter motor front cover/brush holder set “2”

NOTE:

Before disassembling the starter motor, make alignment marks “a” on the starter motor yoke and starter motor front cover/brush holder set.

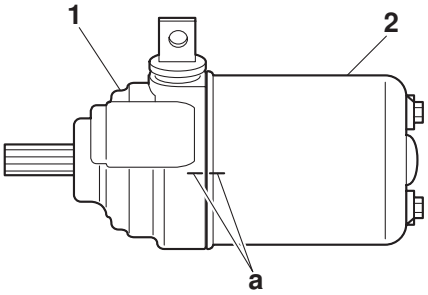

CHECKING THE STARTER MOTOR

1. Check:
   - Commutator
     Dirt → Clean with 600 grit sandpaper.
2. Measure:
   - Commutator diameter “a”
     Out of specification → Replace the starter motor.

	Limit **16.6 mm**

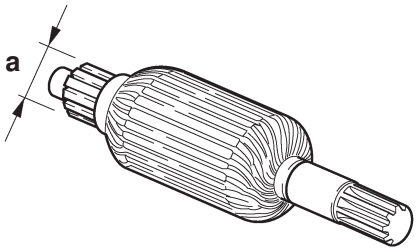

3. Measure:
   - Mica undercut “a”
     Out of specification → Scrape the mica to the proper measurement with a hacksaw blade that has been grounded to fit the commutator.

	Mica undercut (depth) **1.35 mm**

NOTE:

The mica of the commutator must be undercut to ensure proper operation of the commutator.

4. Measure:
   - Armature assembly resistances (commutator and insulation)
     Out of specification → Replace the starter motor.

▼▼▼▼▼▼▼▼▼▼▼▼▼▼▼▼▼▼▼▼▼▼▼▼▼▼▼▼▼▼▼▼

a. Measure the armature assembly resistances with the multimeter.

	Multimeter

	Armature coil **Commutator resistance “1”** **0.0315–0.0385 Ω at 20 °C (68 °F)** **Insulation resistance “2”** **Above 1 MΩ at 20 °C (68 °F)**

b. If any resistance is out of specification, replace the starter motor.

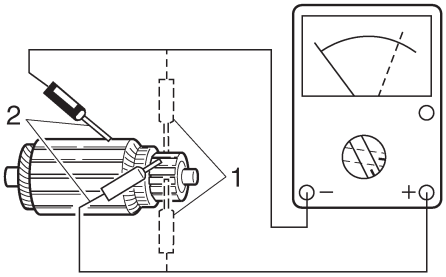

▲▲▲▲▲▲▲▲▲▲▲▲▲▲▲▲▲▲▲▲▲▲▲▲▲▲▲▲▲▲▲▲

5. Measure:
   - Brush length “a”
     Out of specification → Replace the starter motor front cover/brush holder set.

	Limit **3.50 mm**

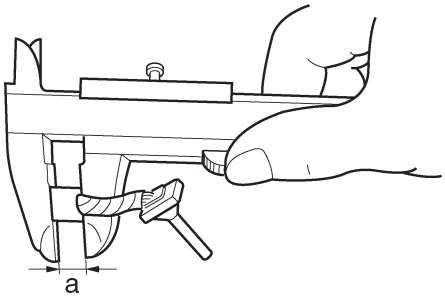

6. Measure:
   - Brush spring force
     Out of specification → Replace the brush spring as a set.

	**Brush spring force** **3.92–5.88 N**

7. Check:
   - Gear teeth
     Damage/wear → Replace the gear.
8. Check:
   - Bearing
   - Oil seal
     Damage/wear → Replace the starter motor front cover/brush holder set.

ASSEMBLING THE STARTER MOTOR

1. Install:
   - Starter motor front cover/brush holder set "1"
   - Starter motor yoke "2"

NOTE:

Align the marks "a" on the starter motor yoke and starter motor front cover/brush holder set made during disassembly.

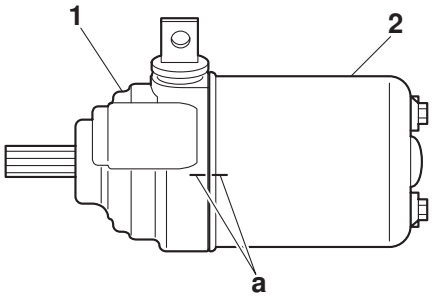

CLUTCH

Removing the clutch cover

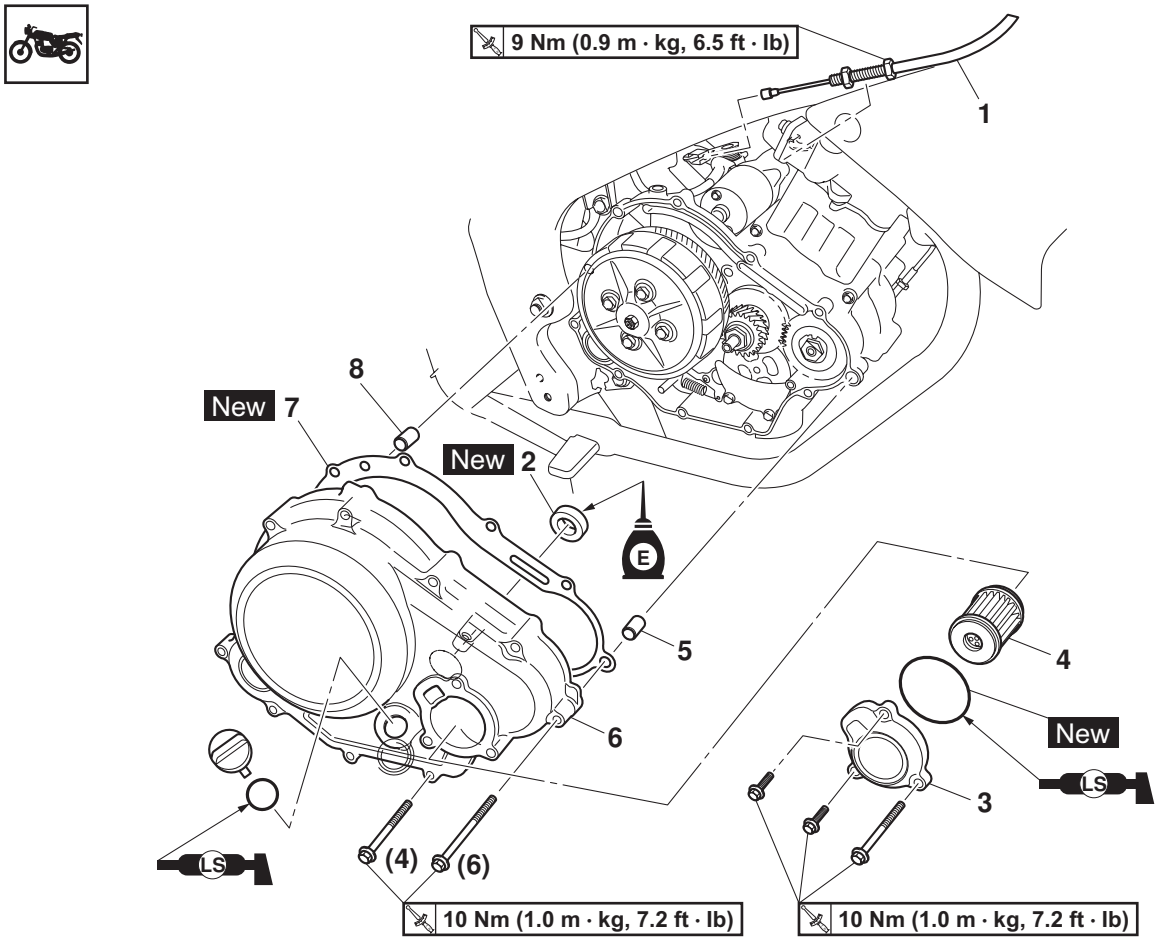

Order	Job/Parts to remove	Qty	Remarks
	Engine oil		Drain. Refer to “CHANGING THE ENGINE OIL” on page 3-10.
1	Clutch cable	1	Disconnect.
2	Oil seal	2	
3	Oil filter cover	1	
4	Oil filter	1	
5	Dowel pin	2	
6	Clutch cover	1	
7	Clutch cover gasket	1	
			For installation, reverse the removal procedure.

Removing the clutch

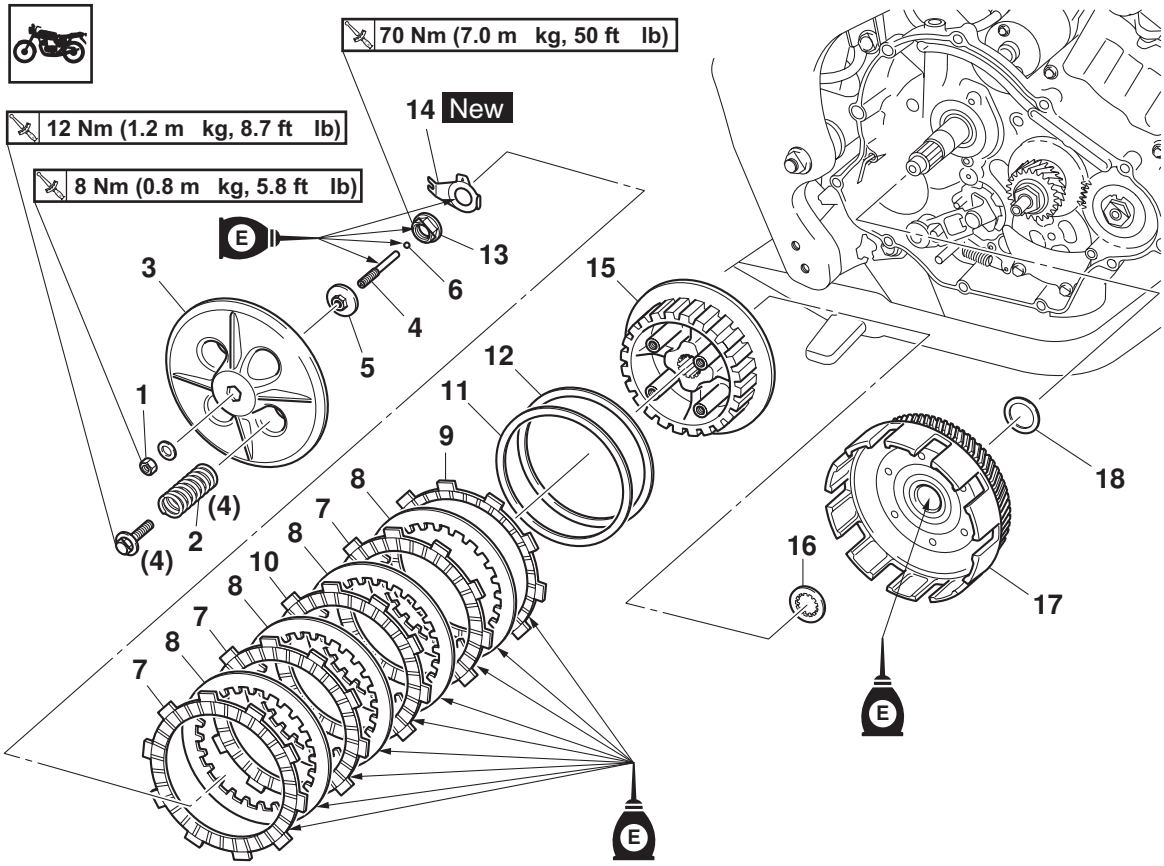

Order	Job/Parts to remove	Qty	Remarks
1	Locknut	1	
2	Clutch spring	4	
3	Pressure plate	1	
4	Short clutch push rod	1	
5	Clutch push rod holder	1	
6	Ball	1	
7	Friction plate 1	3	
8	Clutch plate	4	
9	Friction plate 2	1	
10	Friction plate 3	1	
11	Clutch damper spring	1	
12	Clutch damper spring seat	1	
13	Clutch boss nut	1	
14	Lock washer	1	
15	Clutch boss	1	
16	Thrust washer	1	
17	Clutch housing	1	

Removing the clutch

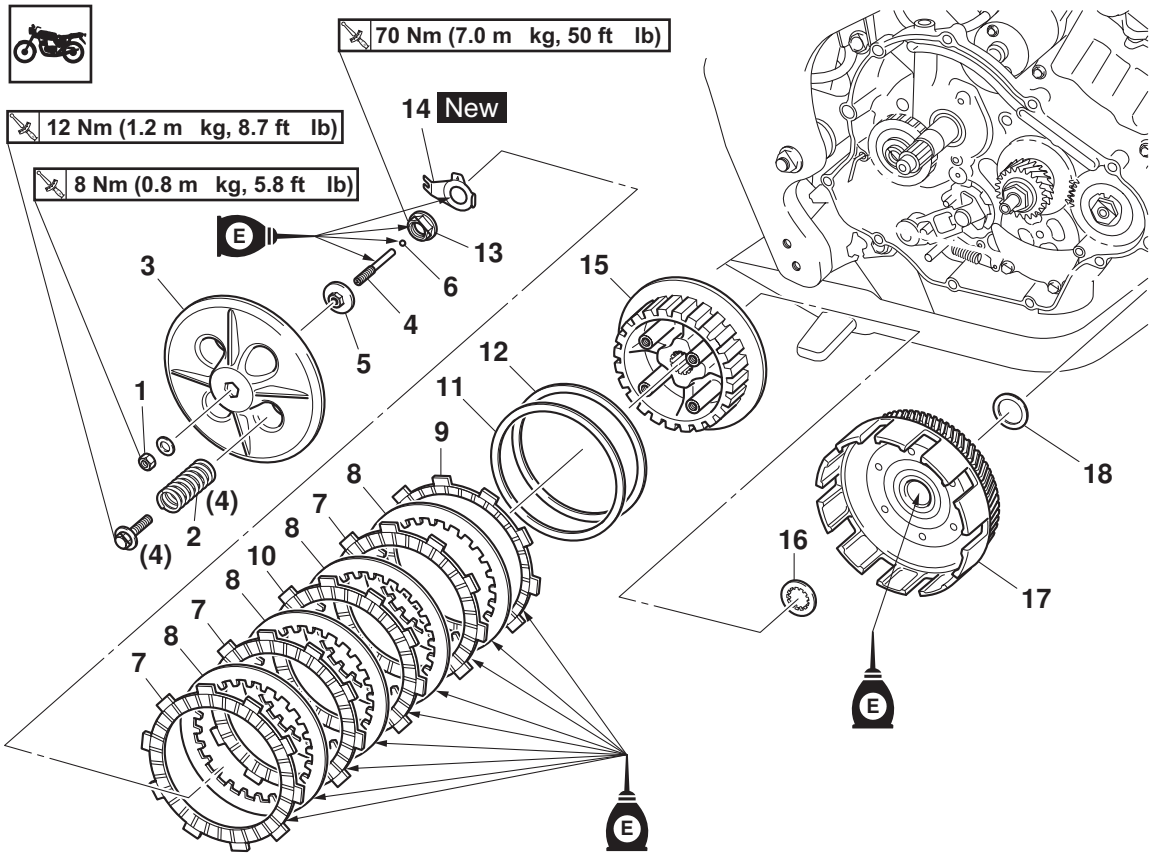

Order	Job/Parts to remove	Qty	Remarks
18	Conical spring washer	1	
			For installation, reverse the removal procedure.

Removing the push lever

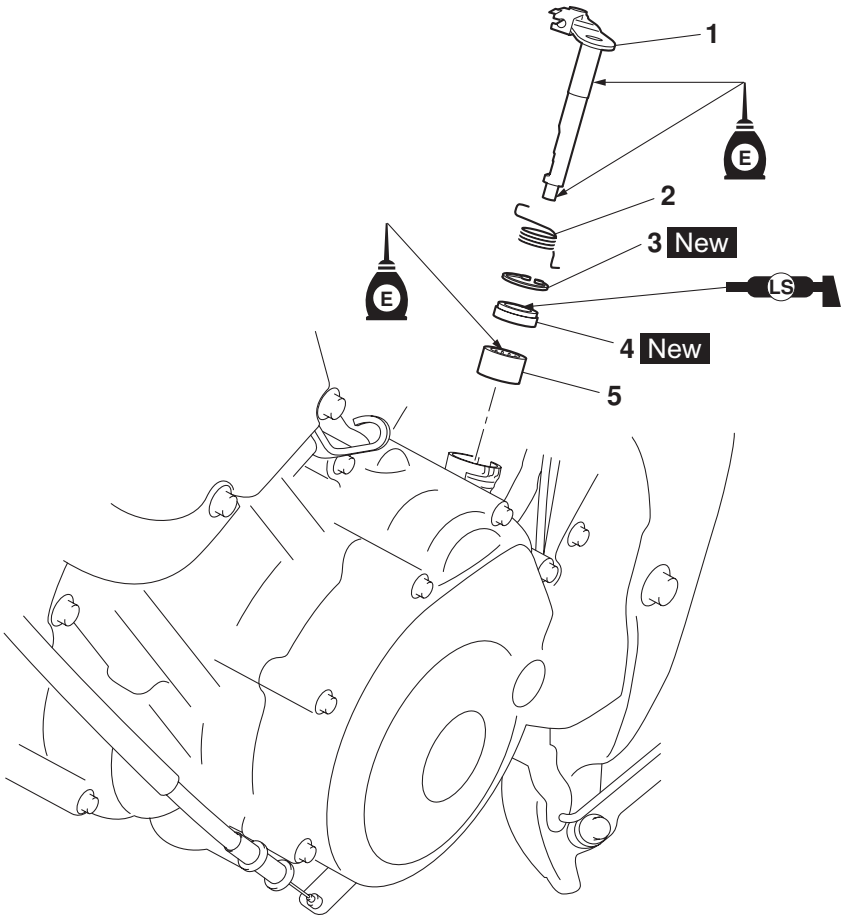

Order	Job/Parts to remove	Qty	Remarks
	Clutch housing		Refer to “CLUTCH” on page 5-36.
1	Clutch push lever	1	
2	Clutch push lever spring	1	
3	Circlip	1	
4	Oil seal	1	
5	Bearing	1	
			For installation, reverse the removal procedure.

REMOVING THE CLUTCH

1. Straighten the lock washer tab.
2. Loosen:
   - Clutch boss nut “1”

NOTE:

While holding the clutch boss “2” with the clutch hub holder “3”, loosen the clutch boss nut.

Clutch hub holder
YSST-733

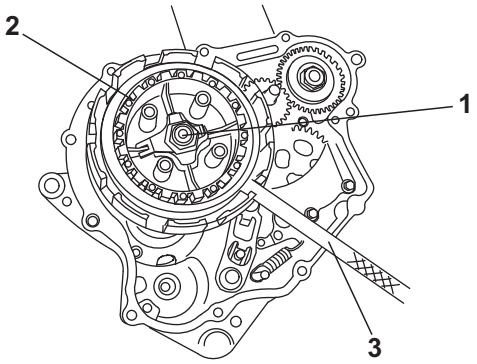

CHECKING THE FRICTION PLATES

The following procedure applies to all of the friction plates.

1. Check:
   - Friction plate
     Damage/wear → Replace the friction plates as a set.
2. Measure:
   - Friction plate thickness
     Out of specification → Replace the friction plates as a set.

NOTE:

Measure the friction plate at four places.

Friction plate 1 thickness
2.90–3.10 mm
Wear limit
2.80 mm
Friction plate 2 thickness
2.90–3.10 mm
Wear limit
2.80 mm

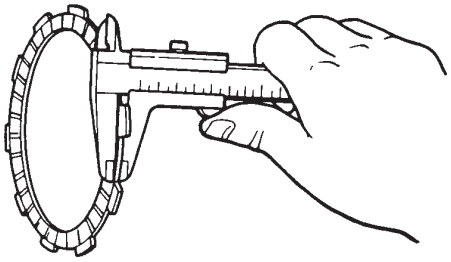

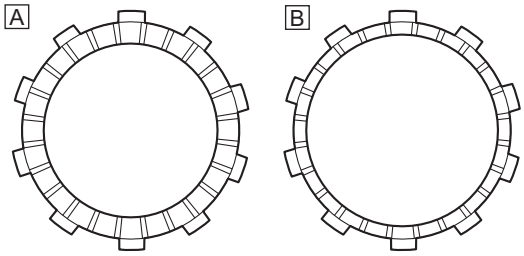

A. Friction plate 1
B. Friction plate 2

CHECKING THE CLUTCH PLATES

The following procedure applies to all of the clutch plates.

1. Check:
   - Clutch plate
     Damage → Replace the clutch plates as a set.
2. Measure:
   - Clutch plate warpage
     (with a surface plate and thickness gauge “1”)
     Out of specification → Replace the clutch plates as a set.

Clutch plate thickness
1.45–1.75 mm
Warpage limit
0.20 mm

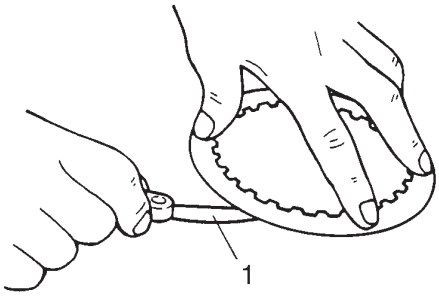

CHECKING THE CLUTCH SPRINGS

The following procedure applies to all of the clutch springs.

1. Check:
   - Clutch spring
     Damage → Replace the clutch springs as a set.
2. Measure:
   - Clutch spring free length “a”
     Out of specification → Replace the clutch springs as a set.

Clutch spring free length
39.00 mm
Minimum length
36.80 mm

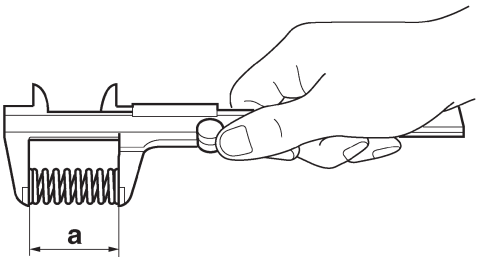

CHECKING THE CLUTCH HOUSING

1. Check:
   - Clutch housing dogs “1”
     Damage/pitting/wear → Deburr the clutch housing dogs or replace the clutch housing.

NOTE:

Pitting on the clutch housing dogs will cause erratic clutch operation.

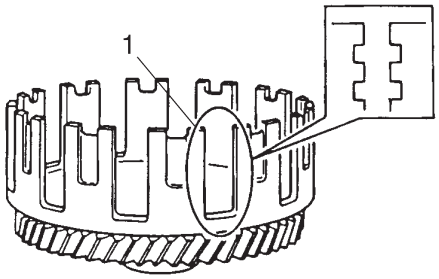

2. Check:
   - Bearing
     Damage/wear → Replace the bearing and clutch housing.

CHECKING THE CLUTCH BOSS

1. Check:
   - Clutch boss splines
     Damage/pitting/wear → Replace the clutch boss.

NOTE:

Pitting on the clutch boss splines will cause erratic clutch operation.

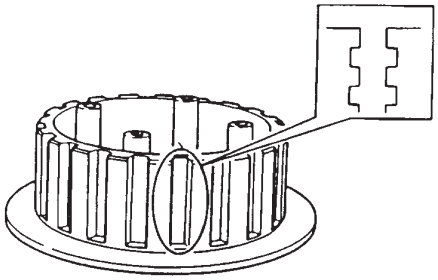

CHECKING THE PRESSURE PLATE

1. Check:
   - Pressure plate
     Cracks/damage → Replace.

CHECKING THE CLUTCH PUSH LEVER AND SHORT CLUTCH PUSH ROD

1. Check:
   - Clutch push lever
   - Short clutch push rod
     Damage/wear → Replace the defective part(s).

CHECKING THE PRIMARY DRIVE GEAR

1. Remove:
   - Primary drive gear
     Refer to “BALANCER GEAR” on page 5-51.

2. Check:
   - Primary drive gear
     Damage/wear → Replace the primary drive gear and clutch housing as a set.
     Excessive noise during operation → Replace the primary drive gear and clutch housing as a set.
3. Install:
   - Primary drive gear
     Refer to “BALANCER GEAR” on page 5-51.

CHECKING THE PRIMARY DRIVEN GEAR

1. Check:
   - Primary driven gear “1”
     Damage/wear → Replace the primary drive gear and clutch housing as a set.
     Excessive noise during operation → Replace the primary drive gear and clutch housing as a set.

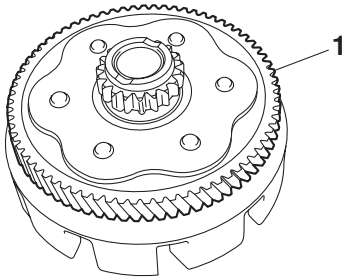

INSTALLING THE CLUTCH

1. Install:
   - Conical spring washer “1”

NOTE:

Install the conical spring washer as shown in the illustration.

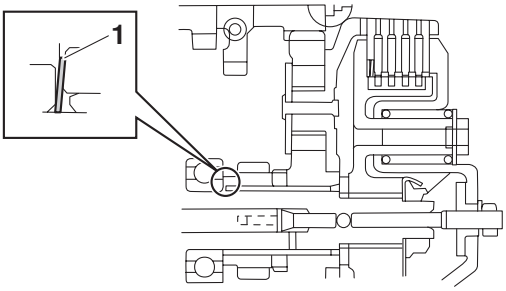

2. Install:
   - Clutch housing
   - Thrust washer “1”

NOTE:

Be sure the thrust washer sharp-edged conner “a” is positioned opposite side to the clutch boss.

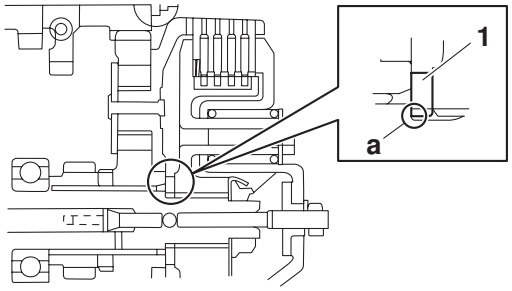

3. Install:
   - Clutch boss “1”
   - Lock washer “2” New
   - Clutch boss nut

NOTE:

- Lubricate the clutch boss nut threads and lock washer mating surfaces with engine oil.
- Align the notch “a” in the lock washer with a low rib “b” on the clutch boss.

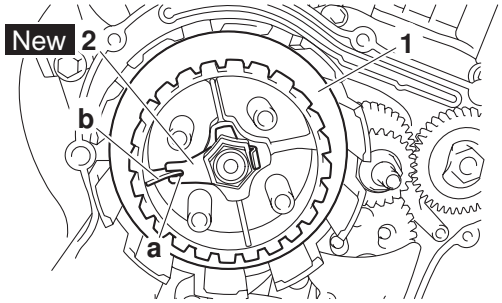

4. Tighten:
   - Clutch boss nut “1”

	**Clutch boss nut** **70 Nm (7.0 m·kg, 50 ft·lb)**

NOTE:

While holding the clutch boss “2” with the clutch hub holder “3”, tighten the clutch boss nut.

	**Clutch hub holder** **YSST-733**

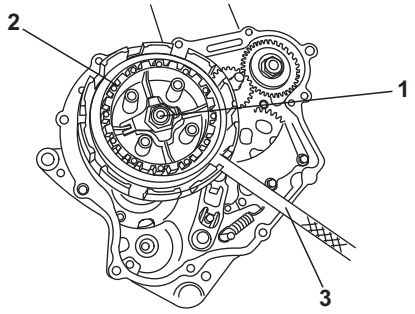

5. Bend the lock washer tab along a flat side of the nut.
6. Lubricate:
   - Friction plates
   - Clutch plates
   (with the recommended lubricant)

	Recommended lubricant **Engine oil**

7. Install:
   - Clutch damper spring seat “1”
   - Clutch damper spring “2”
   - Friction plate 2
   - Clutch plates
   - Friction plates 1

NOTE:

- Install the clutch damper spring seat and clutch damper spring as shown in the illustration.
- First, install a friction plate and then alternate between a clutch plate and a friction plate.

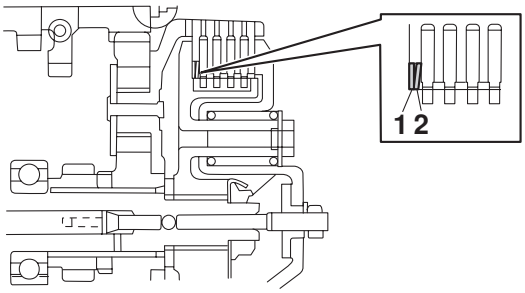

8. Install:
   - Pressure plate
   - Clutch springs “1”
   - Clutch spring bolts “2”

	Clutch spring bolt **12 Nm (1.2 m·kg, 8.7 ft·lb)**

NOTE:

Tighten the clutch spring bolts in stages and in a crisscross pattern.

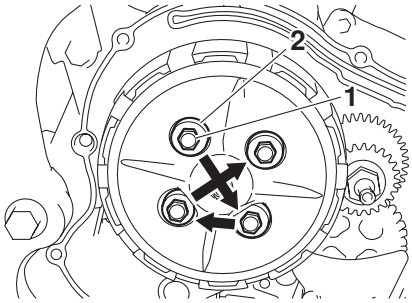

9. Adjust:
   - Clutch mechanism free play

▼▼▼▼▼▼▼▼▼▼▼▼▼▼▼▼▼▼▼▼▼▼▼▼▼▼▼▼▼▼

a. Check that projection “a” on the clutch push lever “1” aligns with mark “b” shown on the crankcase in the illustration by pushing the clutch push lever manually in direction “c” until it stops.

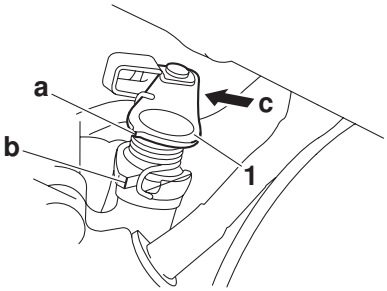

b. If projection “a” is not aligned with mark “b”, align them as follows:
   - Loosen the locknut “2”.
   - With the clutch push lever fully pushed in direction “c”, turn the short clutch push rod “3” in or out until projection “a” aligns with mark “b”.
   - Hold the short clutch push rod to prevent it from moving and then tighten the locknut to specification.

	Locknut (short clutch push rod) **8 Nm (0.8 m·kg, 5.8 ft·lb)**

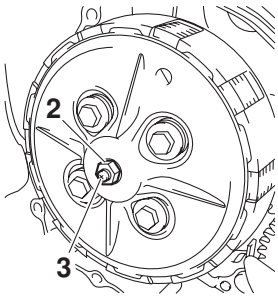

▲▲▲▲▲▲▲▲▲▲▲▲▲▲▲▲▲▲▲▲▲▲▲▲▲▲▲▲▲▲

10.Install:
- Oil seal “1”
- Oil seal “2”

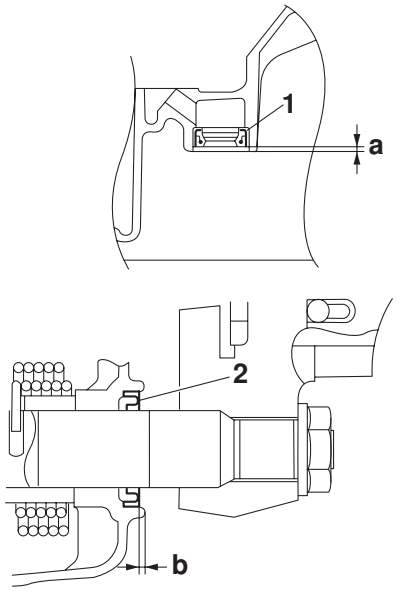

11.Install:
- Clutch cover

	**Clutch cover bolt** **10 Nm (1.0 m·kg, 7.2 ft·lb)**

NOTE:

Tighten the clutch cover bolts in the proper tightening sequence as shown.

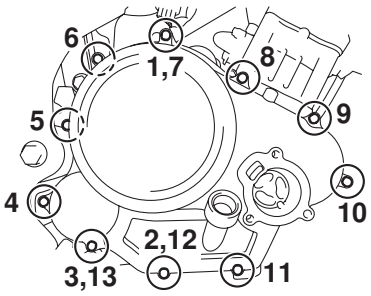

13.Adjust:
- Clutch cable free play
  Refer to “ADJUSTING THE CLUTCH CABLE FREE PLAY” on page 3-11.

OIL PUMP

Removing the oil pump

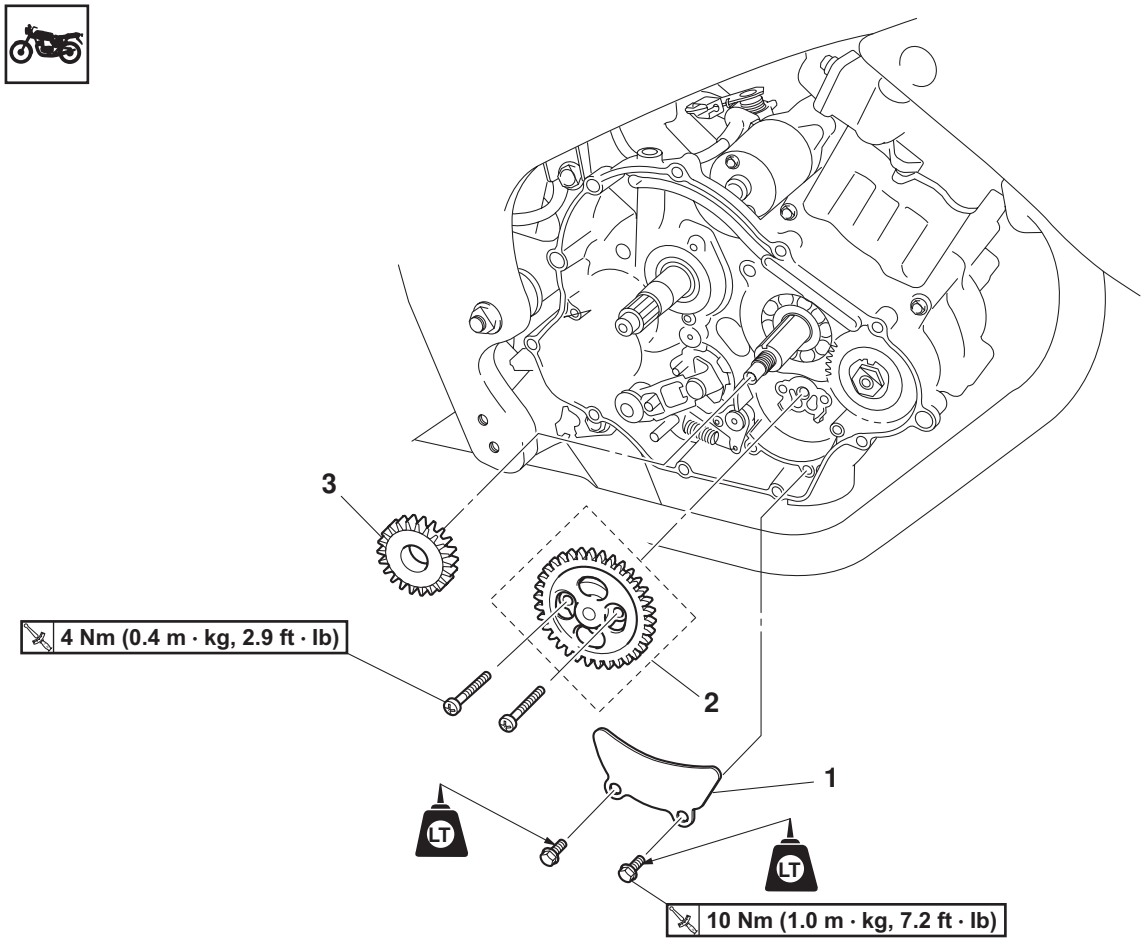

Order	Job/Parts to remove	Qty	Remarks
	Clutch housing		Refer to “CLUTCH” on page 5-36.
	Primary drive gear/Balancer drive gear		Refer to “BALANCER GEAR” on page 5-51.
1	Oil baffle plate	1	
2	Oil pump assembly	1	
3	Oil pump drive gear	1	
			For installation, reverse the removal procedure.

Disassembling the oil pump

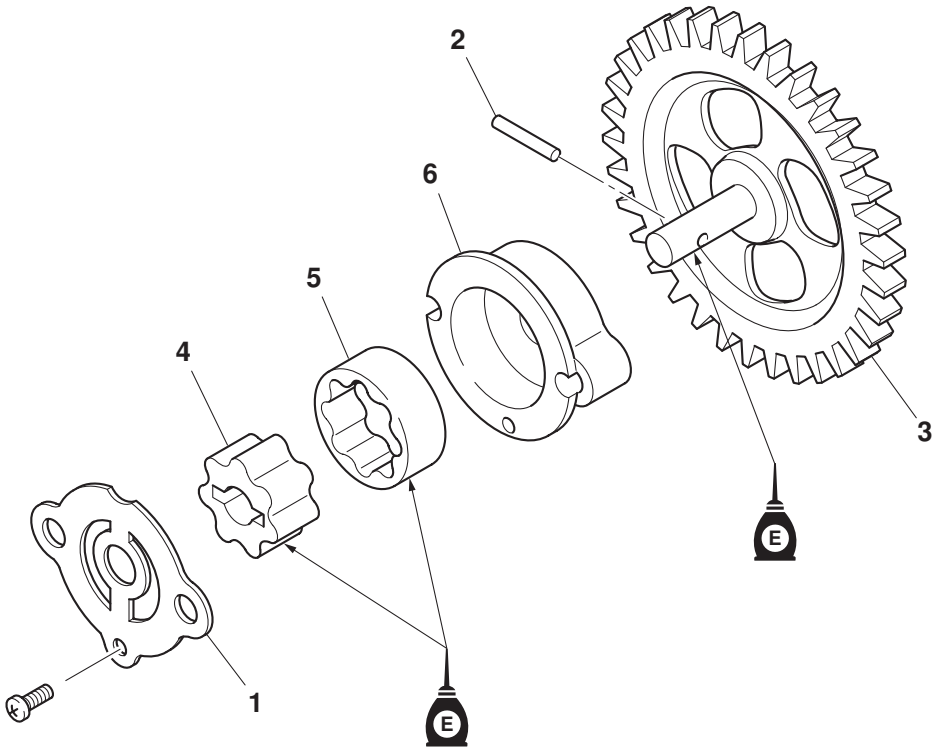

Order	Job/Parts to remove	Qty	Remarks
1	Oil pump housing cover	1	
2	Pin	1	
3	Oil pump driven gear	1	
4	Oil pump inner rotor	1	
5	Oil pump outer rotor	1	
6	Oil pump housing	1	
			For assembly, reverse the disassembly procedure.

CHECKING THE OIL PUMP

1. Check:
   - Oil pump drive gear
   - Oil pump driven gear
   - Oil pump housing
   - Oil pump housing cover
     Cracks/damage/wear → Replace the defective part(s).
2. Measure:
   - Inner-rotor-to-outer-rotor-tip clearance “a”
   - Outer-rotor-to-oil-pump-housing clearance “b”
   - Oil-pump-housing-to-inner-rotor-and-outer-rotor clearance “c”
     Out of specification → Replace the oil pump.

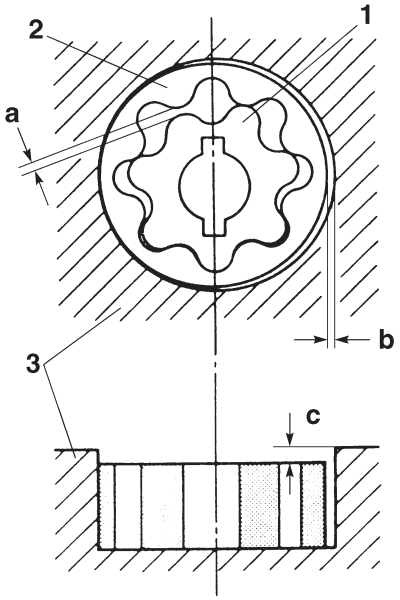

1. Inner rotor
2. Outer rotor
3. Oil pump housing

Inner-rotor-to-outer-rotor-tip clearance
Less than 0.15 mm
Limit
0.23 mm
Outer-rotor-to-oil-pump-housing clearance
0.13–0.18 mm
Limit
0.25 mm
Oil-pump-housing-to-inner-and-outer-rotor clearance
0.06–0.11 mm
Limit
0.18 mm

3. Check:
   - Oil pump operation
     Rough movement → Repeat steps (1) and (2) or replace the defective part(s).

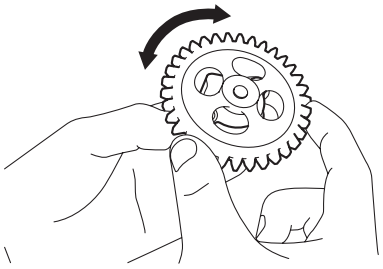

EAS25000
ASSEMBLING THE OIL PUMP

1. Lubricate:
   - Oil pump inner rotor
   - Oil pump outer rotor
   - Oil pump driven gear
     (with the recommended lubricant)

Recommended lubricant
Engine oil

2. Install:
   - Oil pump outer rotor
   - Oil pump inner rotor “1”
   - Oil pump driven gear
   - Pin “2”

NOTE:

When installing the inner rotor, align the pin “2” in the oil pump shaft with the groove “a” in the inner rotor “1”.

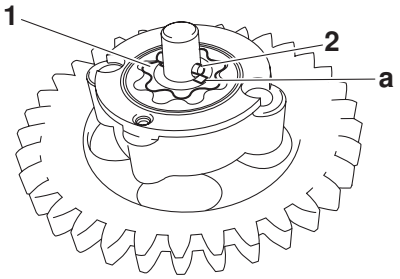

3. Check:
   - Oil pump operation
     Refer to “CHECKING THE OIL PUMP” on page 5-45.

INSTALLING THE OIL PUMP

1. Install:
   - Oil pump assembly

	**Oil pump assembly screw** **4 Nm (0.4 m·kg, 2.4 ft·lb)**

CAUTION:

After tightening the screws, make sure the oil pump turns smoothly.

SHIFT SHAFT

Removing the shift shaft and stopper lever

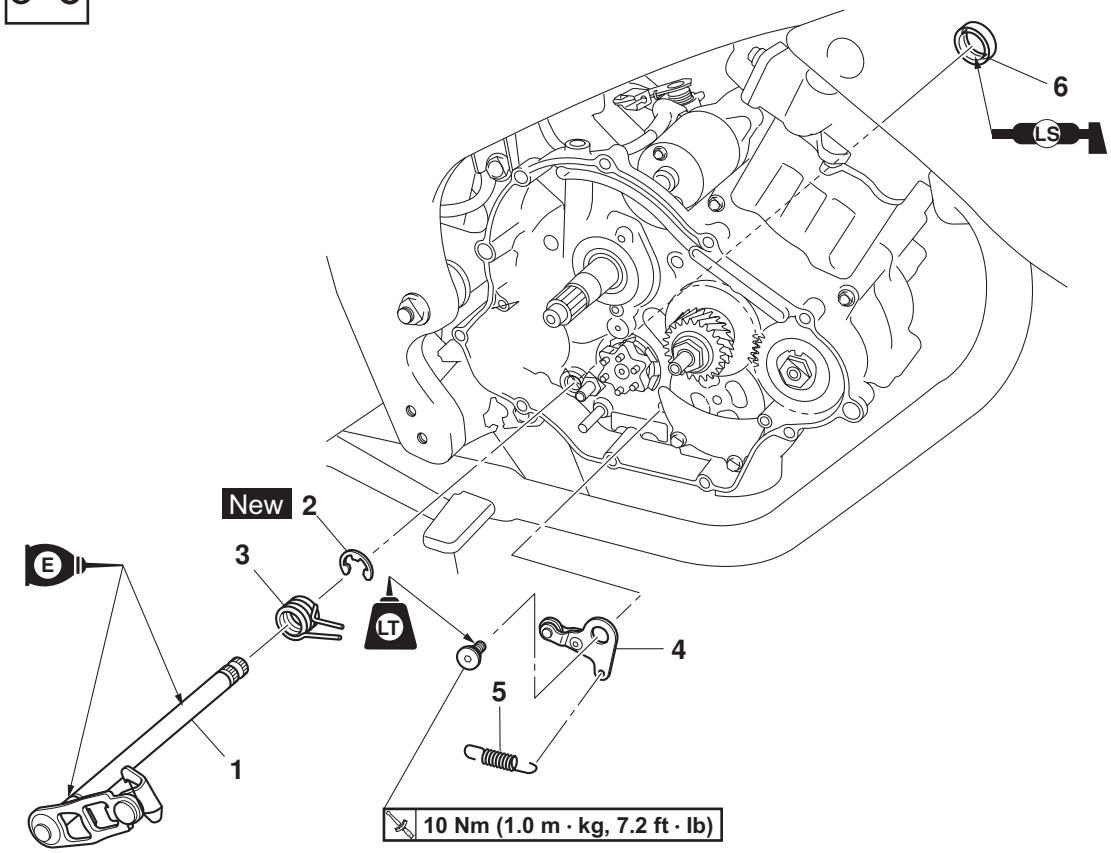

Order	Job/Parts to remove	Qty	Remarks
	Clutch housing		Refer to “CLUTCH” on page 5-36.
	Shift arm		
1	Shift shaft	1	
2	Circlip	1	
3	Shift shaft spring	1	
4	Stopper lever	1	
5	Stopper lever spring	1	
6	Oil seal	1	
			For installation, reverse the removal procedure.

CHECKING THE SHIFT SHAFT

1. Check:
   - Shift shaft
     Bends/damage/wear → Replace.
   - Shift shaft spring
     Damage/wear → Replace.

CHECKING THE STOPPER LEVER

1. Check:
   - Stopper lever
     Bends/damage → Replace.
     Roller turns roughly → Replace the stopper lever.
   - Stopper lever spring
     Damage/wear → Replace.

INSTALLING THE SHIFT SHAFT

1. Install:
   - Stopper lever “1”
   - Stopper lever spring “2”

NOTE:

- Hook the ends of the stopper lever spring onto the stopper lever and the crankcase boss “3”.
- Mesh the stopper lever with the shift drum segment assembly.

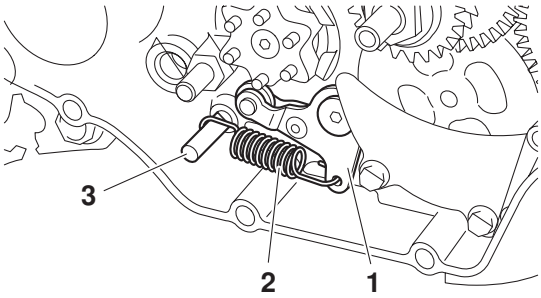

2. Install:
   - Shift shaft “1”

NOTE:

Hook the end of the shift shaft spring onto the shift shaft spring stopper“2”.

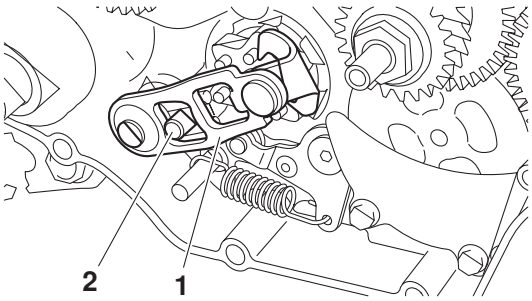

BALANCER GEAR

Removing the primary drive gear and balancer gears

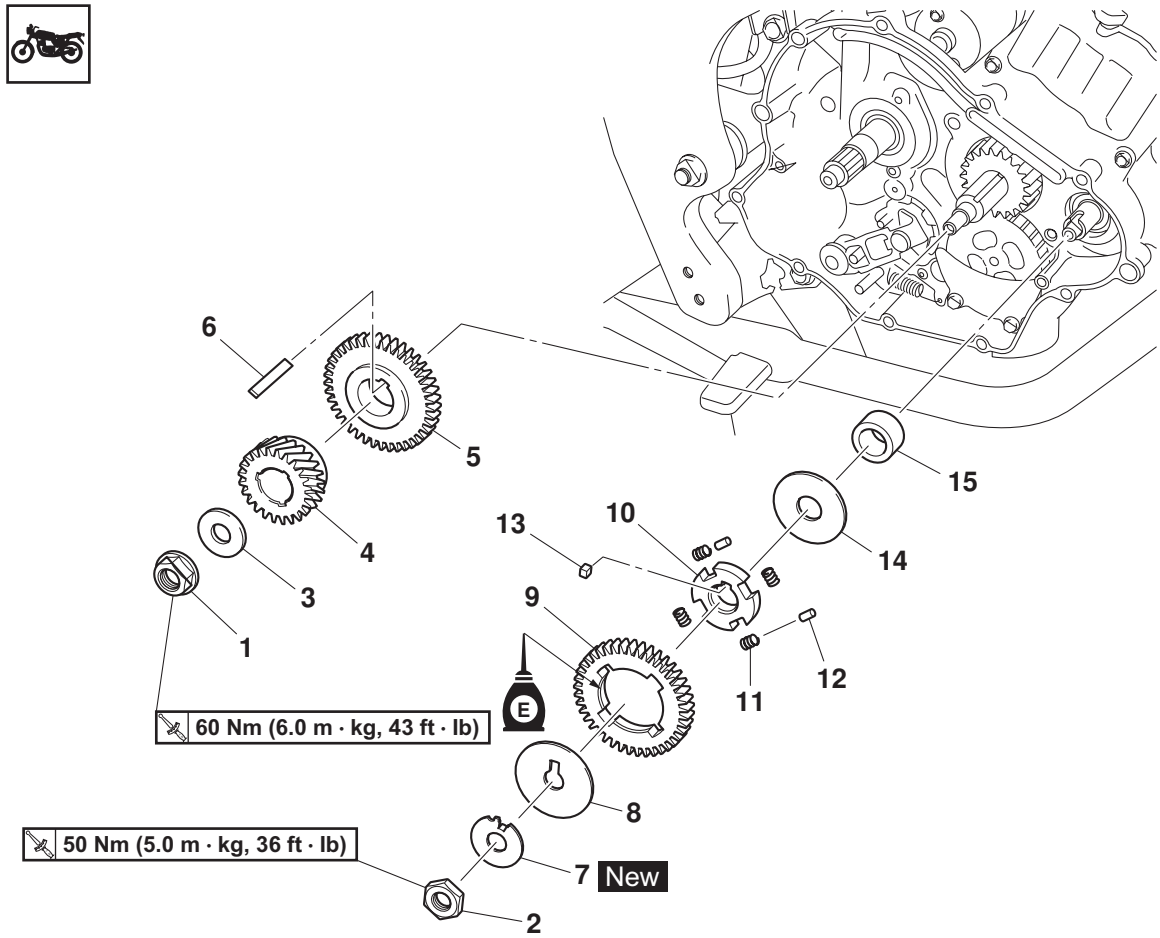

Order	Job/Parts to remove	Qty	Remarks
	Clutch housing		Refer to “CLUTCH” on page 5-36.
1	Primary drive gear nut	1	
2	Balancer driven gear nut	1	
3	Washer	1	
4	Primary drive gear	1	
5	Balancer drive gear	1	
6	Straight key	1	
7	Lock washer	1	
8	Balancer driven gear plate 1	1	
9	Balancer driven gear	1	
10	Buffer boss	1	
11	Spring	4	
12	Dowel pin	2	
13	Straight key	1	
14	Balancer driven gear plate 2	1	

Removing the primary drive gear and balancer gears

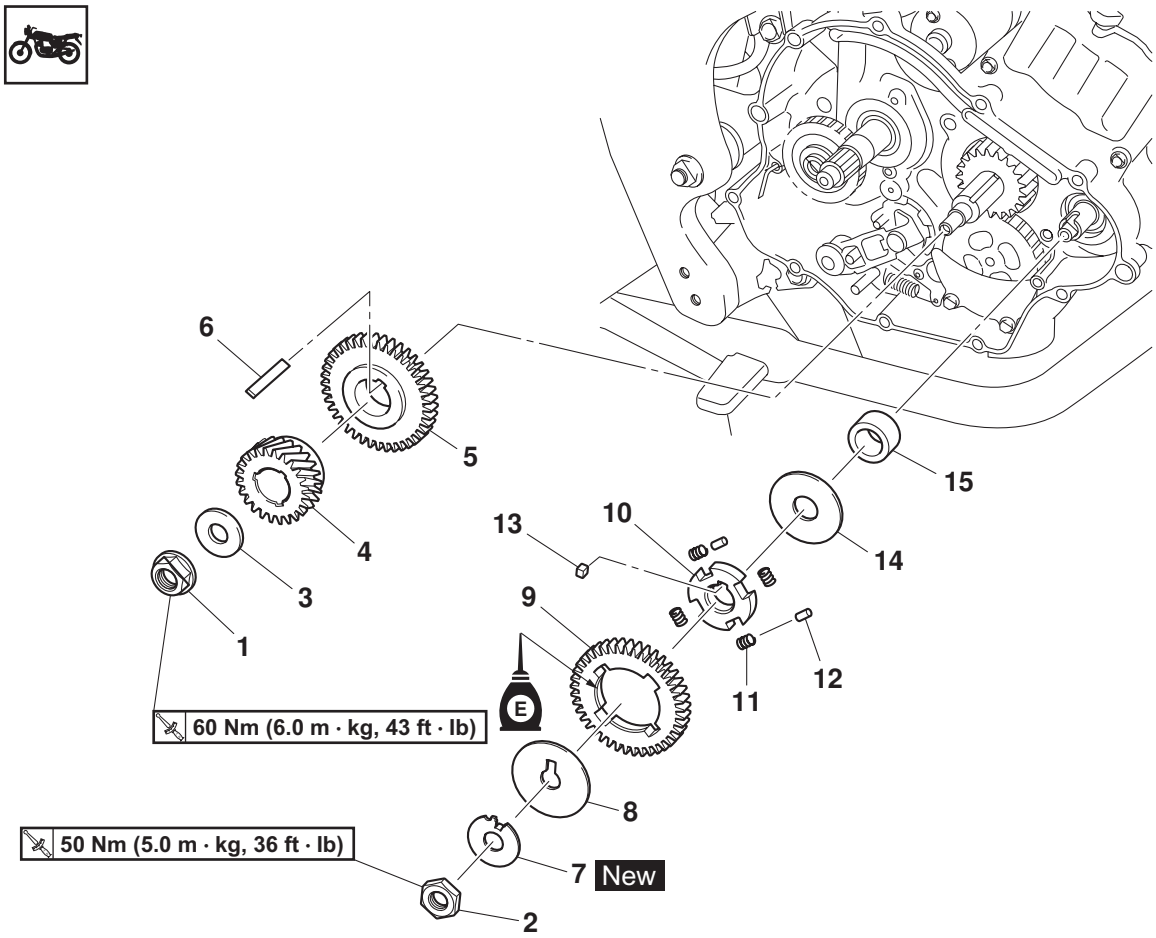

Order	Job/Parts to remove	Qty	Remarks
15	Spacer	1	
			For installation, reverse the removal procedure.

REMOVING THE PRIMARY DRIVE GEAR AND BALANCER GEARS

1. Loosen:
   - Primary drive gear nut “1”

NOTE:

Place the aluminum plate “a” between balancer drive gear “2” and balancer driven gear “3”, and then loosen the primary drive gear nut.

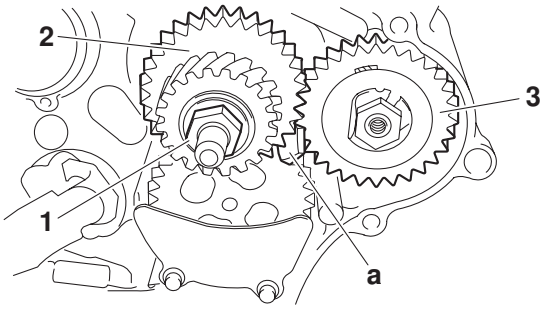

2. Straighten the lock washer tab.
3. Loosen:
   - Balancer driven gear nut “1”

NOTE:

Place the aluminum plate “a” between balancer drive gear “2” and balancer driven gear “3”, and then loosen the balancer driven gear nut.

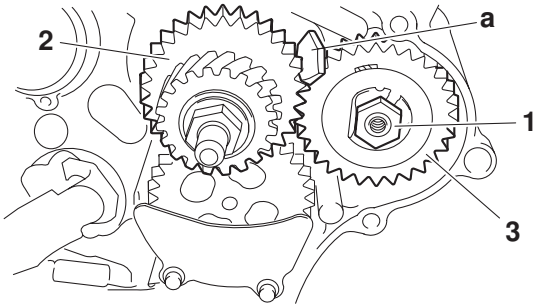

CHECKING THE BALANCER GEARS AND PRIMARY DRIVE GEAR

1. Check:
   - Balancer drive gear
   - Balancer driven gear
   - Buffer boss
   - Spring
   - Dowel pin
     Cracks/damage/wear → Replace.
2. Check:
   - Primary drive gear
     Refer to “CHECKING THE PRIMARY DRIVE GEAR” on page 5-42.

ASSEMBLING THE BALANCER DRIVEN GEAR

1. Assemble:
   - Dowel pins “1”
   - Springs “2”
     (to the buffer boss)

NOTE:

Install the dowel pins and springs alternately as shown as.

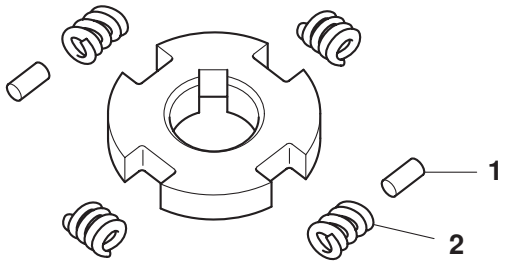

2. Assemble:
   - Buffer boss “1”
   - Balancer driven gear “2”

NOTE:

Align the punch mark “a” in the buffer boss with the punch mark “b” in the balancer driven gear.

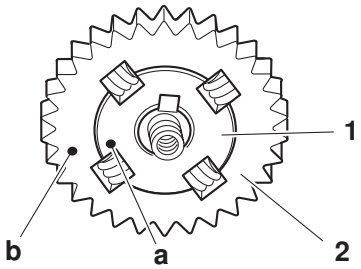

INSTALLING THE PRIMARY DRIVE GEAR AND BALANCER GEARS

1. Install:
   - Balancer driven gear “1”
   - Lock washer New
   - Balancer drive gear “2”
   - Primary drive gear
   - Washer “3”
   - Balancer driven gear nut
   - Primary drive gear nut

NOTE:

- Align the punch mark “a” in the balancer drive gear “2” with the punch mark “b” in the balancer driven gear “1”.

- Be sure the washer sharp-edged conner “c” is positioned opposite side to the primary drive gear.

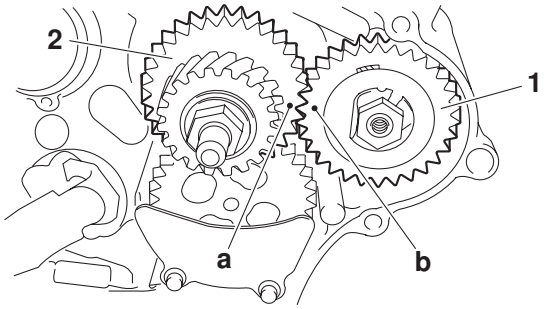

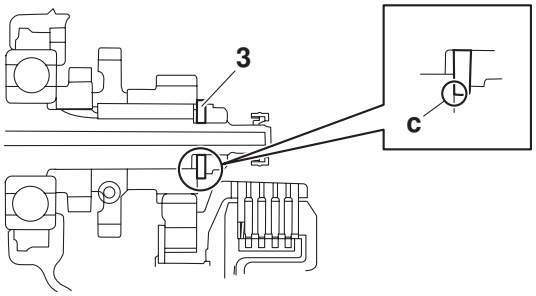

2. Tighten:
   - Balancer driven gear nut “1”
   - Primary drive gear nut “2”

	**Balancer driven gear nut** **50 Nm (5.0 m·kg, 36 ft·lb)** **Primary drive gear nut** **60 Nm (6.0 m·kg, 43 ft·lb)**

NOTE:

- Place the aluminum plate “a” between balancer drive gear “3” and balancer driven gear “4”, and then tighten the balancer driven gear nut.
- Place the aluminum plate “b” between balancer drive gear “3” and balancer driven gear “4”, and then tighten the primary drive gear nut.

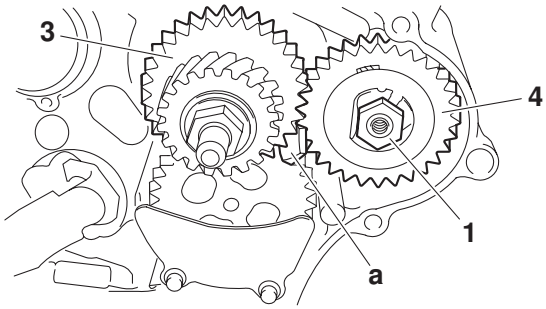

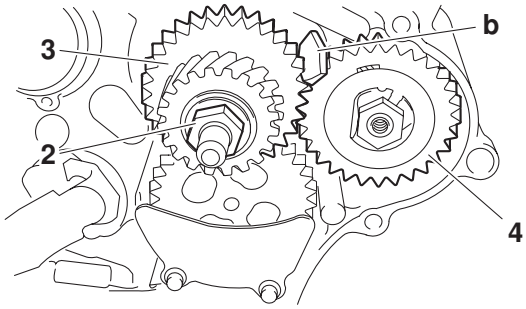

3. Bend the lock washer tab along a flat side of the nut.

CRANKCASE

Separating the crankcase

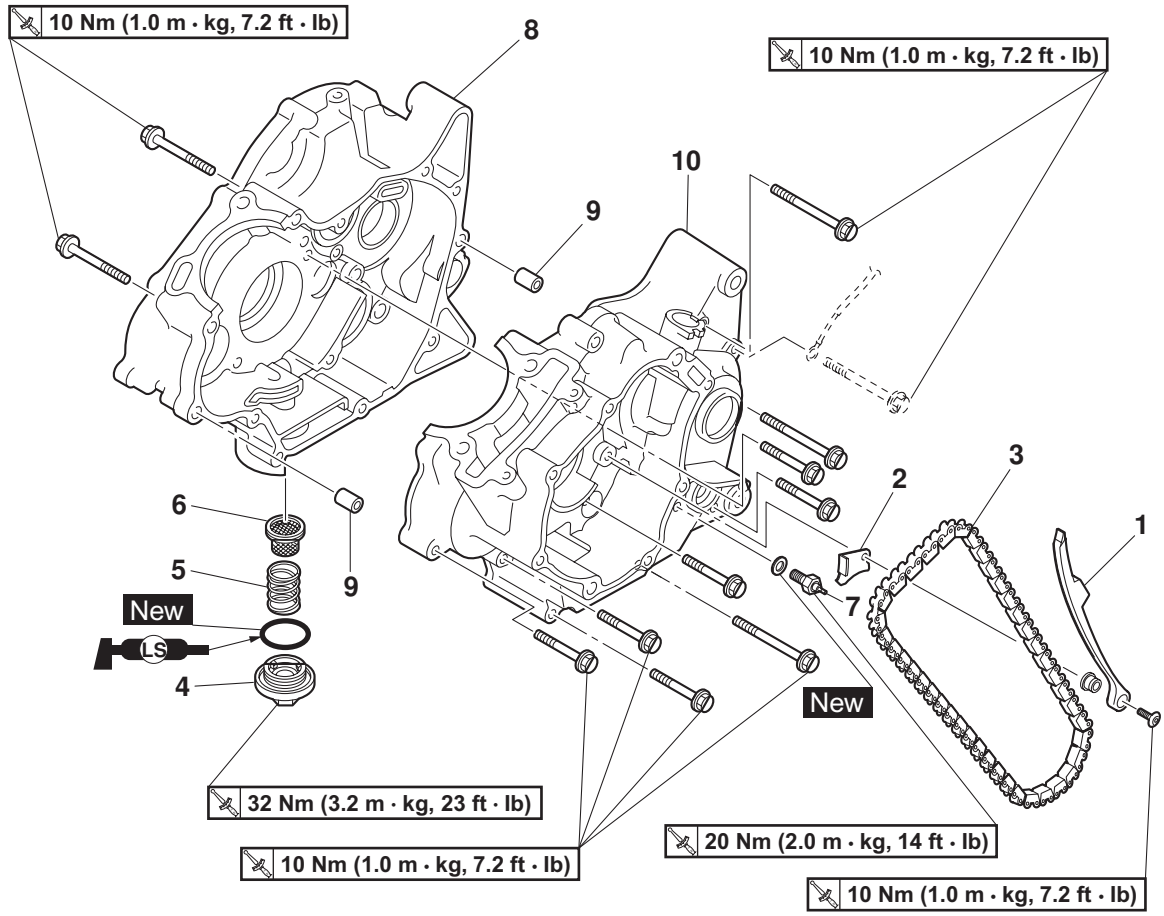

Order	Job/Parts to remove	Qty	Remarks
	Engine		
	Cylinder head		Refer to “CYLINDER HEAD” on page 5-6.
	Cylinder/Piston		Refer to “CYLINDER AND PISTON” on page 5-22.
	Clutch housing		Refer to “CLUTCH” on page 5-36.
	Oil pump assembly		Refer to “OIL PUMP” on page 5-45.
	Shift shaft		Refer to “SHIFT SHAFT” on page 5-53.
	Starter motor		Refer to “ELECTRIC STARTER” on page 5-32.
	Balancer gears		Refer to “BALANCER GEAR” on page 5-51.
	Magneto rotor		Refer to “MAGNETOAND STARTER CLUTCH” on page 5-27.
1	Timing chain guide (intake side)	1	
2	Chain cover	1	
3	Timing chain	1	
4	Engine oil drain plug	1	

Separating the crankcase

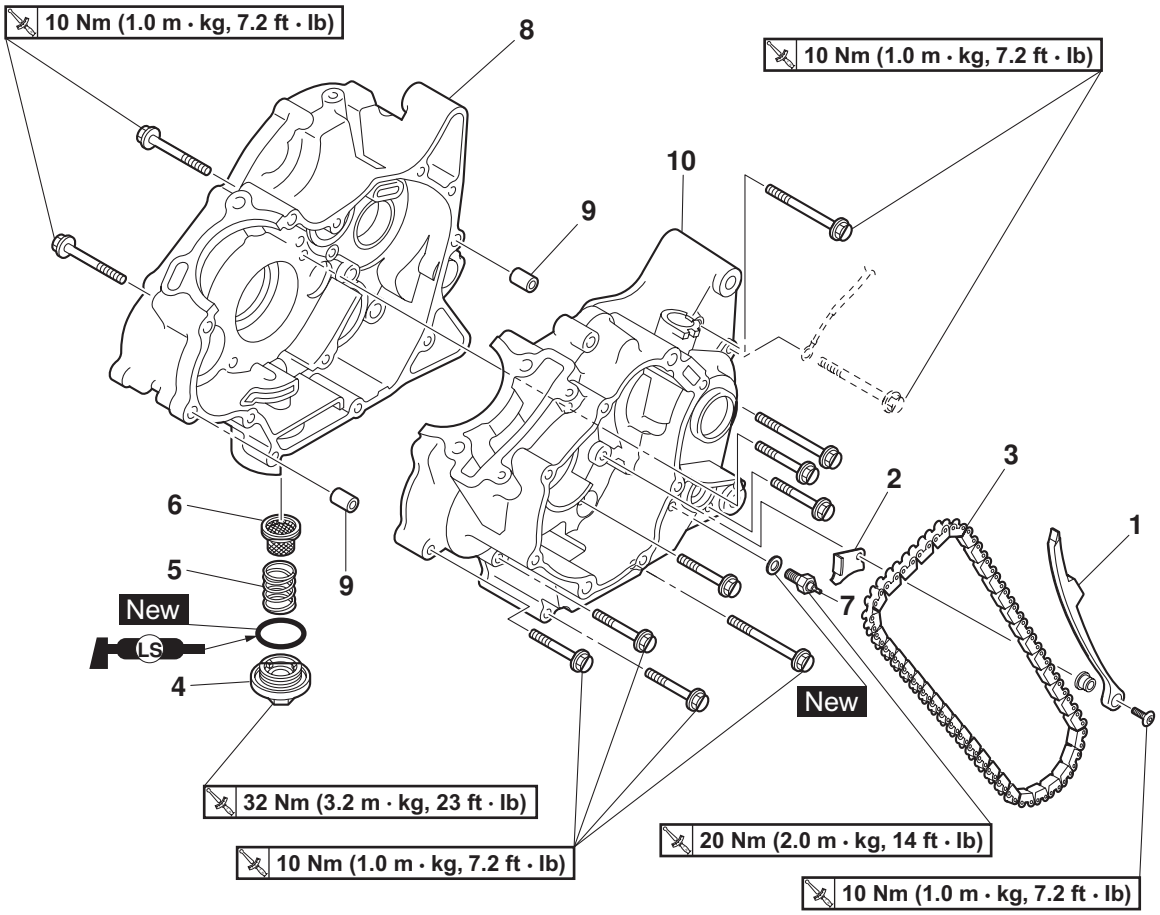

Order	Job/Parts to remove	Qty	Remarks
5	Spring	1	
6	Engine oil strainer	1	
7	Neutral switch	1	
8	Right crankcase	1	
9	Dowel pin	2	
10	Left crankcase	1	
			For installation, reverse the removal procedure.

Removing the oil seal and bearings

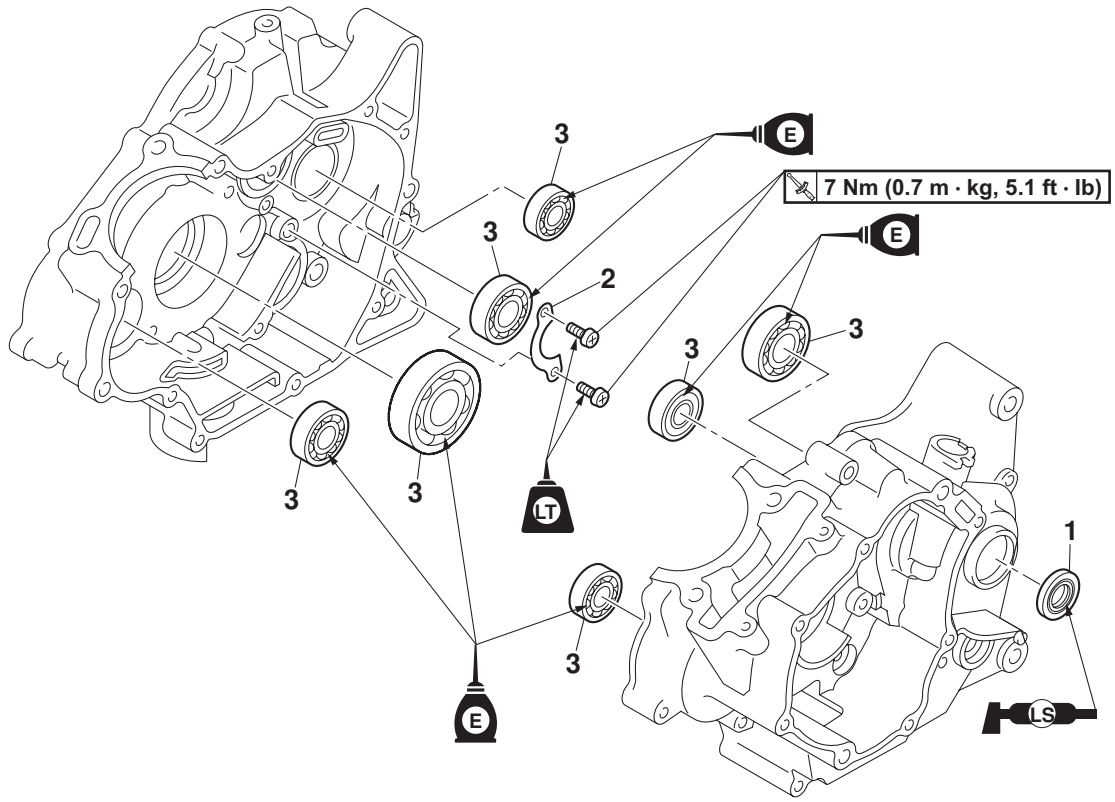

Order	Job/Parts to remove	Qty	Remarks
	Crankshaft/Balancer		Refer to “CRANKSHAFT” on page 5-60.
	Transmission		Refer to “TRANSMISSION” on page 5-64.
1	Oil seal	1	
2	Bearing retainer	1	
3	Bearing	7	
			For installation, reverse the removal procedure.

SEPARATING THE CRANKCASE

1. Remove:
   - Crankcase bolts

NOTE:

Loosen each bolt 1/4 of a turn at a time, in stages and in the proper sequence as shown.

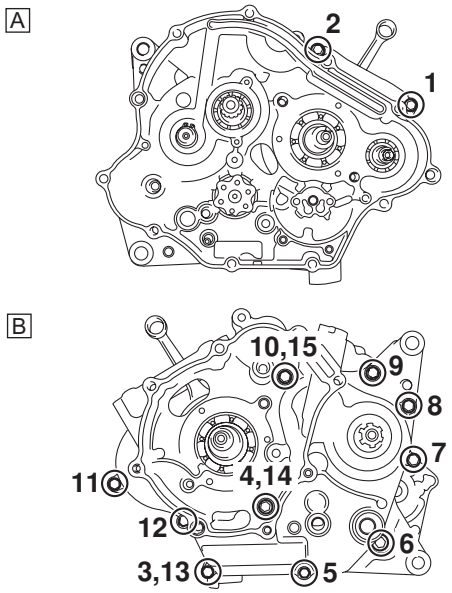

A. Right crankcase
B. Left crankcase

2. Turn:
   - Shift drum segment

NOTE:

Turn the shift drum segment “1” to the position shown in the illustration. In this position, the shift drum segment teeth will not contact the crankcase during crankcase separation.

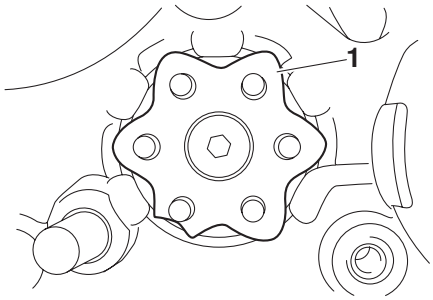

3. Remove:
   - Right crankcase

CAUTION:

Tap on one side of the crankcase with a soft-face hammer. Tap only on reinforced portions of the crankcase, not on the crankcase mating surfaces. Work slowly and carefully and make sure the crankcase halves separate evenly.

CHECKING THE CRANKCASE

1. Thoroughly wash the crankcase halves in a mild solvent.
2. Thoroughly clean all the gasket surfaces and crankcase mating surfaces.
3. Check:
   - Crankcase
     Cracks/damage → Replace.
   - Oil delivery passages
     Obstruction → Blow out with compressed air.

CHECKING THE TIMING CHAIN AND TIMING CHAIN GUIDE

1. Check:
   - Timing chain
     Damage/stiffness → Replace the timing chain and camshaft sprocket as a set.

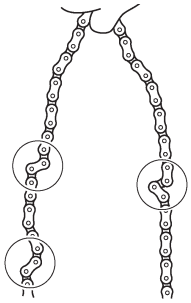

2. Check:
   - Timing chain guide (intake side)
     Damage/wear → Replace.

CHECKING THE OIL STRAINER

1. Check:
   - Oil strainer
     Damage → Replace.
     Contaminants → Clean with solvent.

CHECKING THE BEARINGS AND OIL SEAL

1. Check:
   - Bearings
     Clean and lubricate the bearings, then rotate the inner race with your finger.

Rough movement → Replace.
- Oil seal
  Damage/wear → Replace.

INSTALLING THE BEARING RETAINER

1. Install:
   - Bearing retainer “1”

NOTE:

- Install the bearing retainer “1” with its “OUT” mark “a” facing outward.
- Apply locking agent (LOCTITE®) to the threads of the bearing retainer bolt.

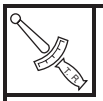	**Bearing retainer bolt** **7 Nm (0.7 m·kg, 5.1 ft·lb)** **LOCTITE**

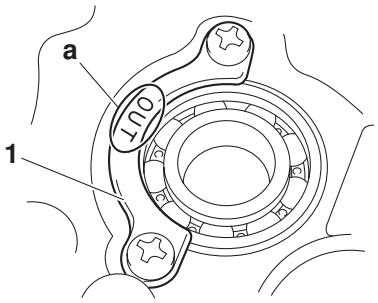

ASSEMBLING THE CRANKCASE

1. Thoroughly clean all the gasket mating surfaces and crankcase mating surfaces.
2. Apply:
   - Sealant
     (onto the crankcase mating surfaces)

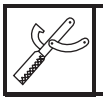	**Yamaha bond No. 1215**

NOTE:

Do not allow any sealant to come into contact with the oil gallery.

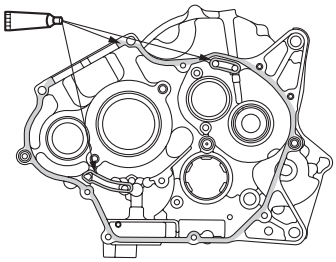

3. Install:
   - Right crankcase

NOTE:

Turn the shift drum segment “1” to the position shown in the illustration. In this position, the shift drum segment teeth will not contact the crankcase during crankcase installation.

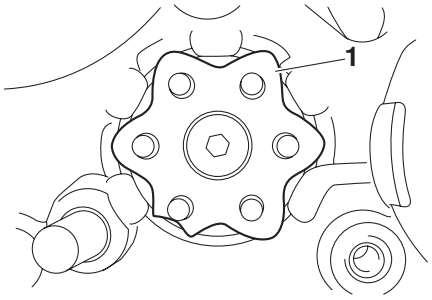

4. Install:
   - Crankcase bolts

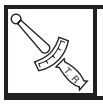	**Crankcase bolt** **10 Nm (1.0 m·kg, 7.2 ft·lb)**

NOTE:

Tighten each bolt 1/4 of a turn at a time, in stages and in the proper sequence as shown.

- M6 × 70 mm : “7–9”, “11”
- M6 × 55 mm : “14”, “15”
- M6 × 45 mm : “1–5”, “10”

A

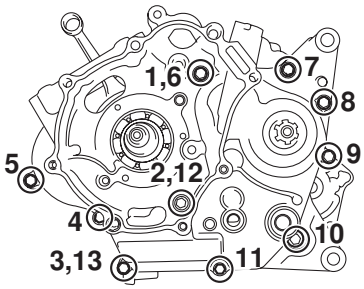

B

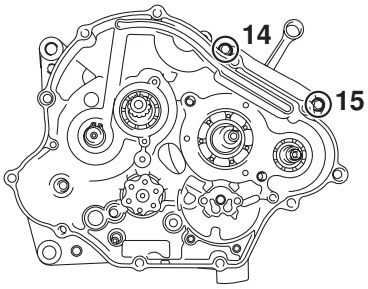

A. Left crankcase
B. Right crankcase

CRANKSHAFT

Removing the crankshaft and balancer

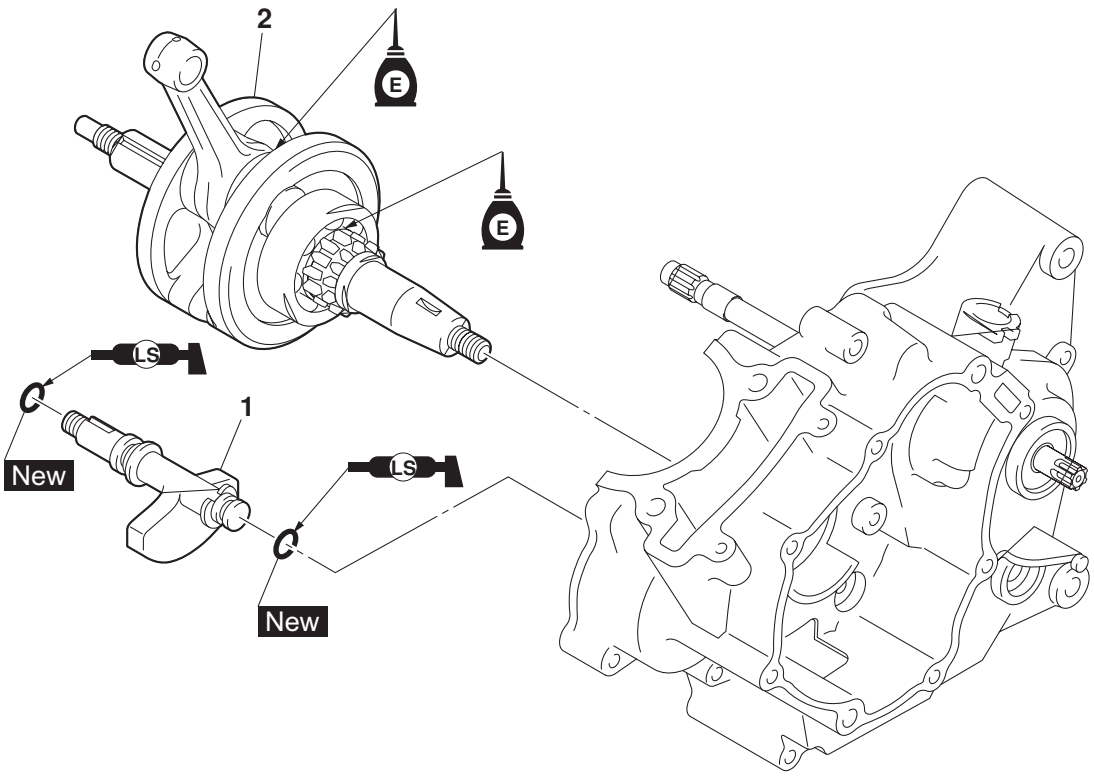

Order	Job/Parts to remove	Qty	Remarks
	Crankcase		Separate. Refer to “CRANKCASE” on page 5-55.
1	Balancer	1	
2	Crankshaft	1	
			For installation, reverse the removal procedure.

REMOVING THE CRANKSHAFT

1. Remove:
   - Crankshaft “1”

NOTE:

- Remove the crankshaft with the crankcase separating tool “2”.
- Make sure the crankcase separating tool is centered over the crankshaft.

CAUTION:

- **To protect the end of the crankshaft, place an appropriate sized socket between the crankcase separating tool bolt and the crankshaft.**
- **Do not tap on the crankshaft.**

Crankcase separating tool
YSST-265

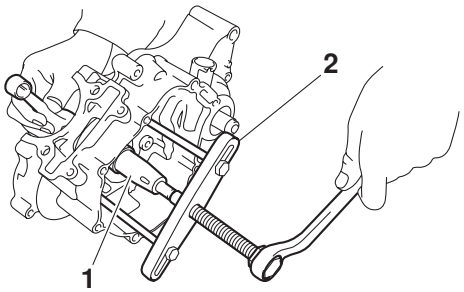

CHECKING THE CRANKSHAFT

1. Measure:
   - Crankshaft runout
     Out of specification → Replace the crankshaft, bearing or both.

NOTE:

Turn the crankshaft slowly.

Runout limit C
0.030 mm

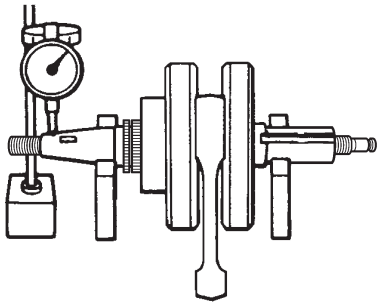

2. Measure:
   - Big end side clearance
     Out of specification → Replace the crankshaft.

Big end side clearance D
0.110–0.410 mm

3. Measure:
   - Crankshaft width
     Out of specification → Replace the crankshaft.

Width A
47.95–48.00 mm

4. Check:
   - Crankshaft sprocket
     Damage/wear → Replace the crankshaft.
   - Bearing
     Cracks/damage/wear → Replace the crankshaft.
5. Check:
   - Crankshaft journal
     Scratches/wear → Replace the crankshaft.
   - Crankshaft journal oil passage
     Obstruction → Blow out with compressed air.

INSTALLING THE CRANKSHAFT

1. Install:
   - Crankshaft “1”

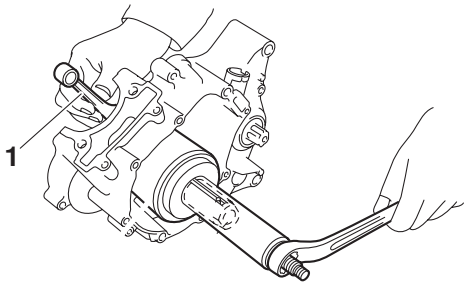

CAUTION:

To avoid scratching the crankshaft and to ease the installation procedure, lubricate the oil seal lips with lithium-soap-based grease and each bearing with engine oil.

NOTE:

Hold the connecting rod at top dead center (TDC) with one hand while turning the nut of the crankshaft installer bolt with the other. Turn the crankshaft installer bolt until the crankshaft bottoms against the bearing.

TRANSMISSION

Removing the transmission, shift drum assembly, and shift forks

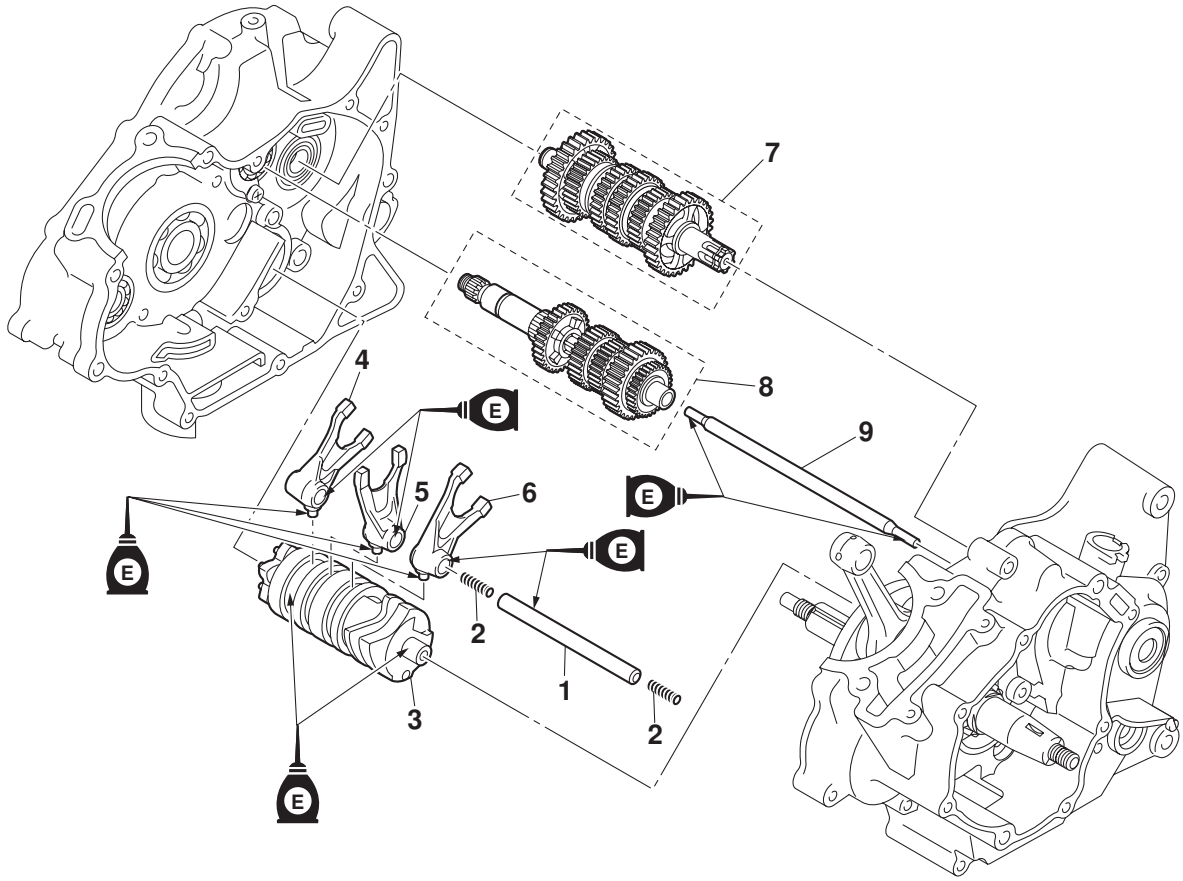

Order	Job/Parts to remove	Qty	Remarks
	Crankcase		Separate. Refer to “CRANKCASE” on page 5-56.
1	Shift fork guide bar	1	
2	Spring	2	
3	Shift drum assembly	1	
4	Shift fork-R	1	
5	Shift fork-C	1	
6	Shift fork-L	1	
7	Drive axle assembly	1	
8	Main axle assembly	1	
9	Long clutch push rod	1	
			For installation, reverse the removal procedure.

Disassembling the main axle

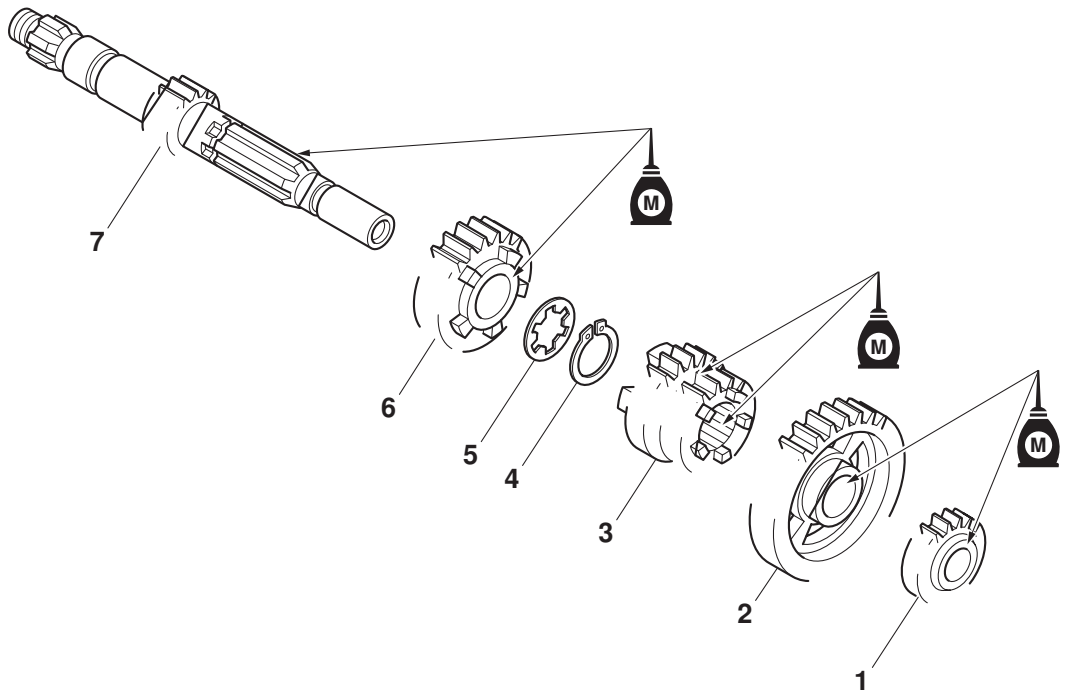

Order	Job/Parts to remove	Qty	Remarks
1	2nd pinion gear	1	
2	6th pinion gear	1	
3	3rd/4th pinion gear	1	
4	Circlip	1	
5	Toothed washer	1	
6	5th pinion gear	1	
7	Main axle/1st pinion gear	1	
			For assembly, reverse the disassembly procedure.

Disassembling the drive axle

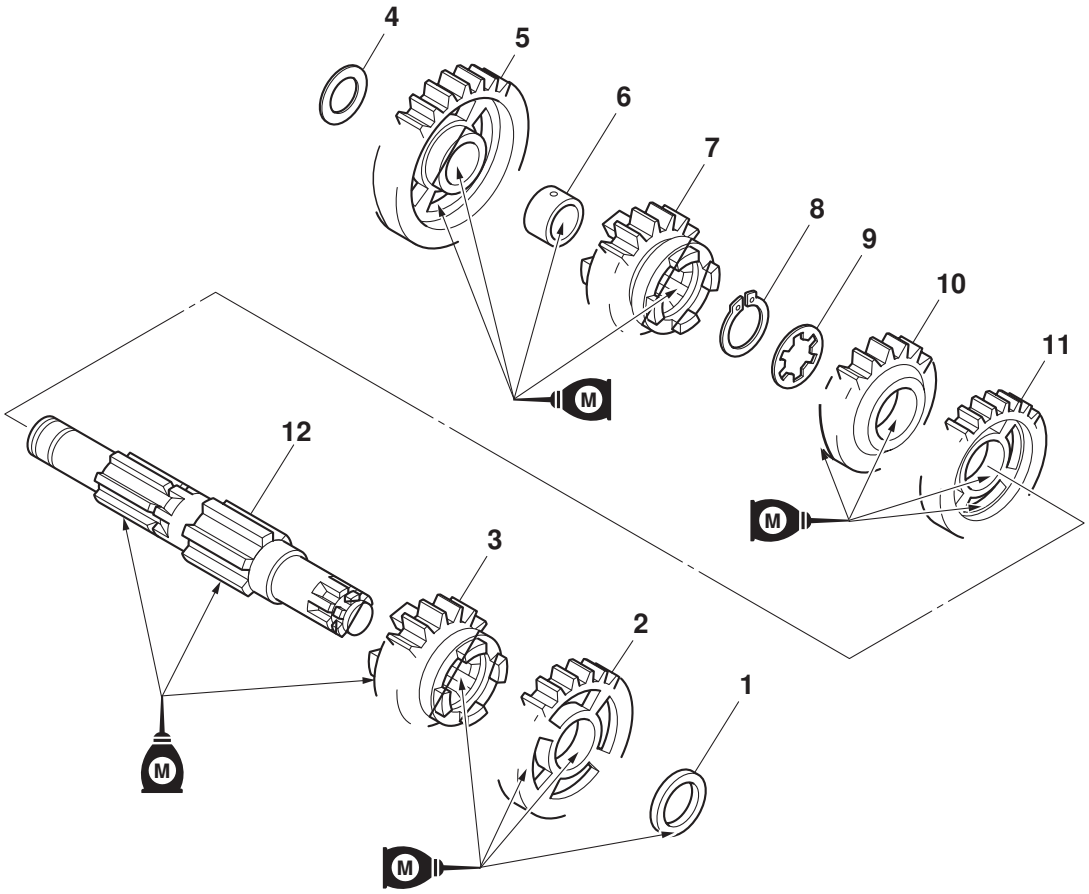

Order	Job/Parts to remove	Qty	Remarks
1	Washer	1	
2	2nd wheel gear	1	
3	6th wheel gear	1	
4	Washer	1	
5	1st wheel gear	1	
6	Spacer	1	
7	5th wheel gear	1	
8	Circlip	1	
9	Toothed washer	1	
10	4th wheel gear	1	
11	3rd wheel gear	1	
12	Drive axle	1	
			For assembly, reverse the disassembly procedure.

CHECKING THE SHIFT FORKS

The following procedure applies to all of the shift forks.

1. Check:
   - Shift fork cam follower “1”
   - Shift fork pawl “2”
     Bends/damage/scoring/wear → Replace the shift fork.

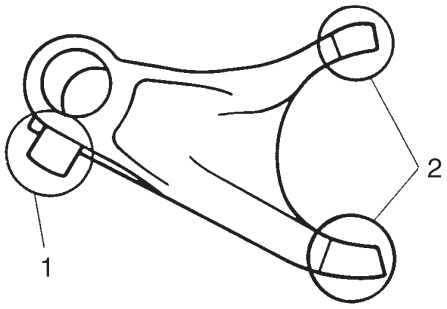

2. Check:
   - Shift fork guide bar
     Roll the shift fork guide bar on a flat surface.
     Bends → Replace.

WARNING

Do not attempt to straighten a bent shift fork guide bar.

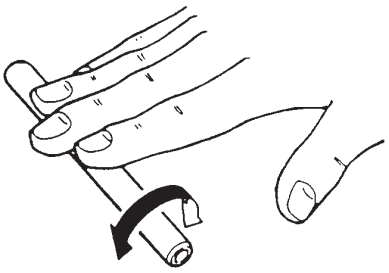

319-010

3. Check:
   - Shift fork movement
     (along the shift fork guide bar)
     Rough movement → Replace the shift forks and shift fork guide bar as a set.

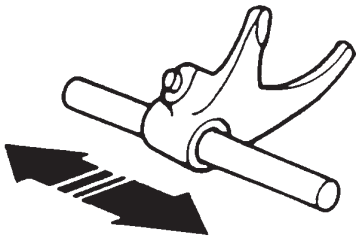

319-011

CHECKING THE SHIFT DRUM ASSEMBLY

1. Check:
   - Shift drum groove
     Damage/scratches/wear → Replace the shift drum assembly.
   - Shift drum segment “1”
     Damage/wear → Replace the shift drum assembly.
   - Shift drum bearing “2”
     Damage/pitting → Replace the shift drum assembly.

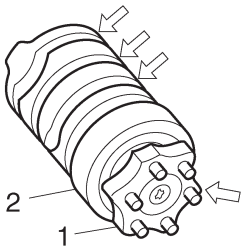

CHECKING THE TRANSMISSION

1. Measure:
   - Main axle runout
     (with a centering device and dial gauge “1”)
     Out of specification → Replace the main axle.

	Main axle runout limit **0.08 mm**

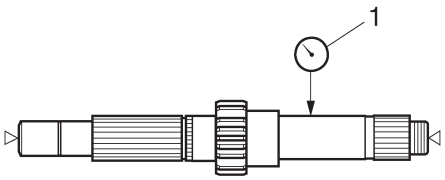

2. Measure:
   - Drive axle runout
     (with a centering device and dial gauge “1”)
     Out of specification → Replace the drive axle.

	Drive axle runout limit **0.08 mm**

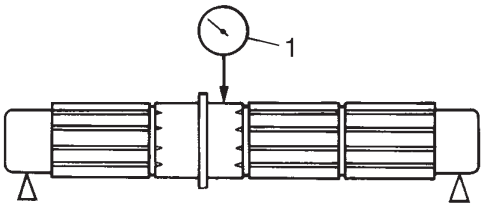

3. Check:
   - Transmission gears
     Blue discoloration/pitting/wear → Replace the defective gear(s).
   - Transmission gear dogs
     Cracks/damage/rounded edges → Replace the defective gear(s).

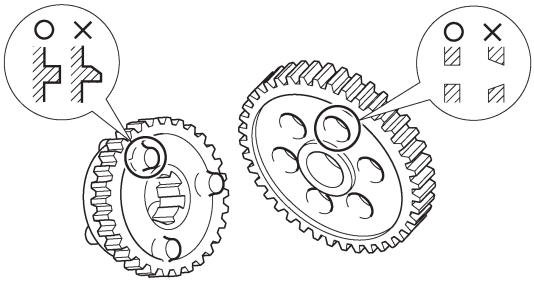

4. Check:
   - Transmission gear engagement
     (each pinion gear to its respective wheel gear)
     Incorrect → Reassemble the transmission axle assemblies.
5. Check:
   - Transmission gear movement
     Rough movement → Replace the defective part(s).

CHECKING THE CLUTCH PUSH RODS

1. Check:
   - Long clutch push rod
     Cracks/damage/wear → Replace the long clutch push rod.
2. Measure:
   - Push rod bending limit
     Out of specification → Replace the long clutch push rod.

	Push rod bending limit **0.500 mm**

ASSEMBLING THE MAIN AXLE AND DRIVE AXLE

1. Install:
   - Toothed washer "1"
   - Circlip "2" New

NOTE:

- Be sure to install the circlip so that its sharp edge "a" is facing away from the toothed washer and gear.
- Be sure the circlip ends "b" are positioned at the axle spline groove"c".

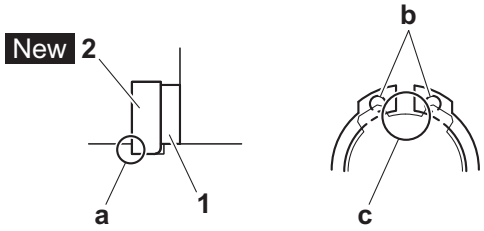

2. Install:
   - 2nd pinion gear "1"

NOTE:

Press the 2nd pinion gear into the main axle "2", as shown in the illustration.

	Installed depth "a" **106.85–107.05 mm**

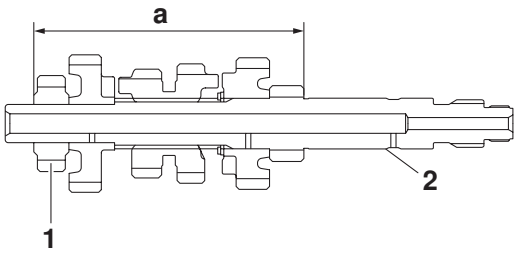

INSTALLING THE SHIFT FORKS AND SHIFT DRUM ASSEMBLY

1. Install:
   - Shift fork-L "1"
   - Shift fork-C "2"
   - Shift fork-R "3"
   - Shift drum assembly "4"
   - Springs
   - Shift fork guide bar "5"

NOTE:

The embossed marks on the shift forks should face towards the right side of the engine and be in the following sequence:“R”, “C”, “L”.

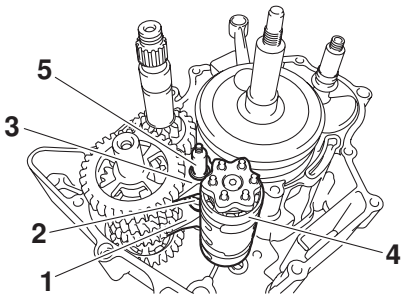

2. Check:
   - Transmission
     Rough movement → Repair.

NOTE:

- Apply engine oil to each gear and bearing thoroughly.
- Before assembling the crankcase, make sure that the transmission is in neutral and that the gears turn freely.

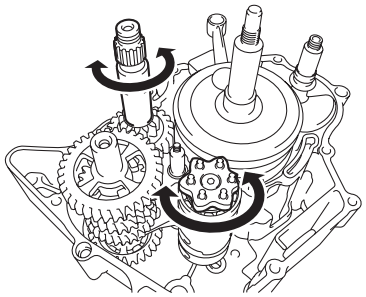

COOLING SYSTEM

RADIATOR

Removing the radiator

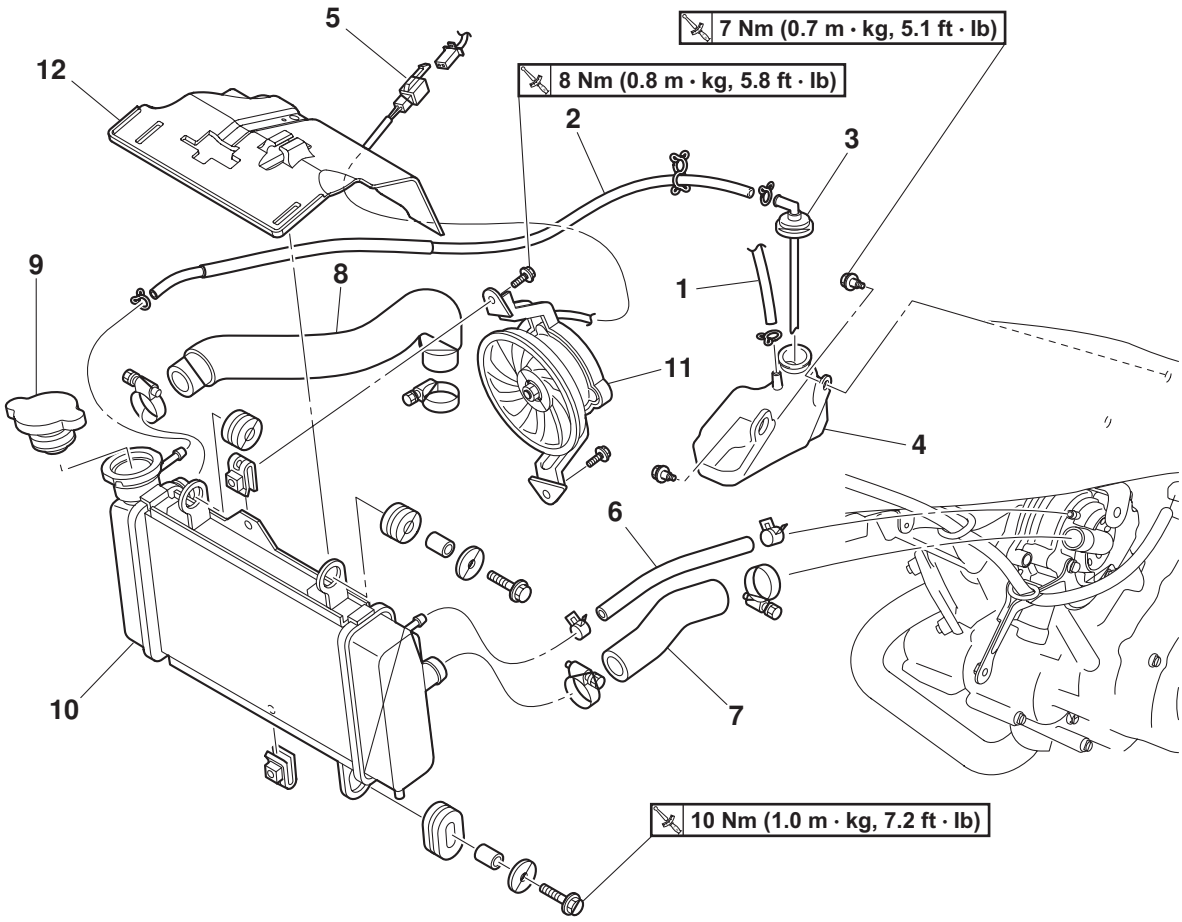

Order	Job/Parts to remove	Qty	Remarks
	Coolant		Drain. Refer to “CHANGING THE COOLANT” on page 3-14.
	Seat/Left and Right front panel/Left and Right side panel		Refer to “GENERAL CHASSIS” on page 4-1.
	Fuel tank		Refer to “FUEL TANK” on page 7-1.
	Air filter case		Refer to “GENERAL CHASSIS” on page 4-1.
1	Coolant reservoir breather hose	1	
2	Coolant reservoir hose	1	
3	Coolant reservoir cap	1	
4	Coolant reservoir	1	
5	Radiator fan coupler	1	Disconnect.
6	Water pump breather hose	1	
7	Radiator outlet hose	1	
8	Radiator inlet hose	1	
9	Radiator cap	1	

Removing the radiator

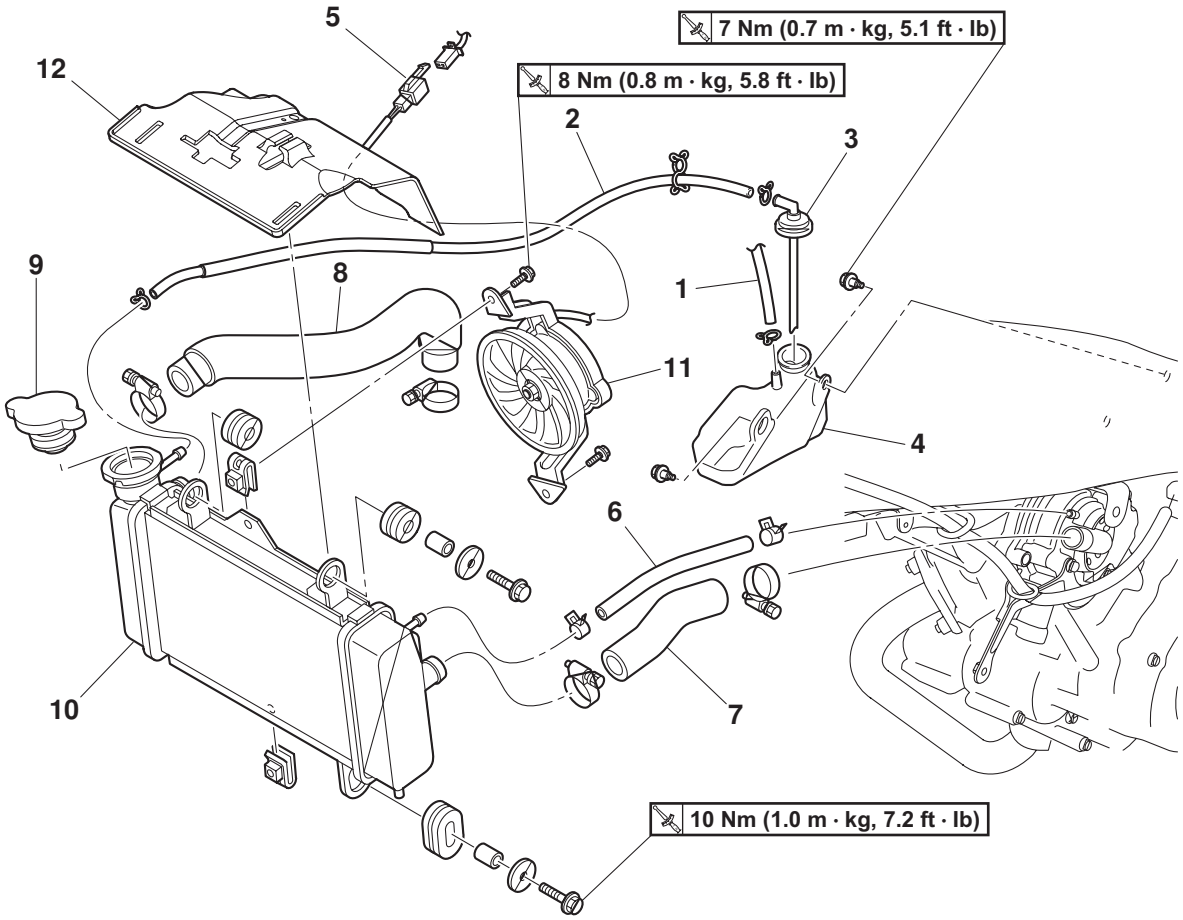

Order	Job/Parts to remove	Qty	Remarks
10	Radiator	1	
11	Radiator fan	1	
12	Radiator cover	1	
			For installation, reverse the removal procedure.

CHECKING THE RADIATOR

1. Check:
   - Radiator fins
     Obstruction → Clean.
     Apply compressed air to the rear of the radiator.
     Damage → Repair or replace.

NOTE:

Straighten any flattened fins with a thin, flat-head screwdriver.

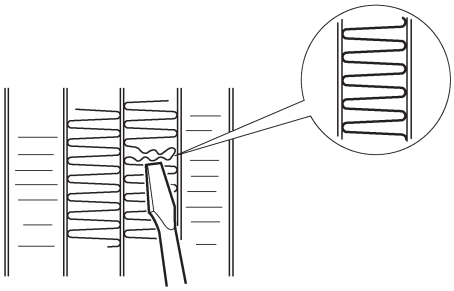

2. Check:
   - Radiator hoses
     Cracks/damage → Replace.
3. Measure:
   - Radiator cap opening pressure
     Below the specified pressure → Replace the radiator cap.

	**Radiator cap opening pressure 107.9-137.3 kPa**

▼▼▼▼▼▼▼▼▼▼▼▼▼▼▼▼▼▼▼▼▼▼▼▼▼▼▼▼▼▼▼▼

a. Install the radiator cap tester "1" and radiator cap tester adapter "2" to the radiator cap "3".

	**Radiator cap tester**

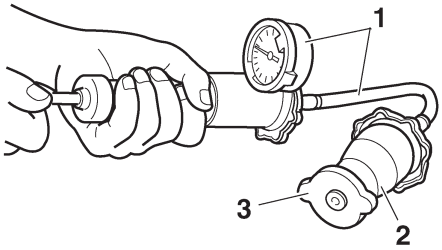

b. Apply the specified pressure for ten seconds and make sure there is no drop in pressure.

▲▲▲▲▲▲▲▲▲▲▲▲▲▲▲▲▲▲▲▲▲▲▲▲▲▲▲▲▲▲▲▲

4. Check:
   - Radiator fan
     Damage → Replace.
     Malfunction → Check and repair.
     Refer to "COOLING SYSTEM" on page 8-25.

INSTALLING THE RADIATOR

1. Fill:
   - Cooling system
     (with the specified amount of the recommended coolant)
     Refer to "CHANGING THE COOLANT" on page 3-14.
2. Check:
   - Cooling system
     Leaks → Repair or replace any faulty part.
3. Measure:
   - Radiator cap opening pressure
     Below the specified pressure → Replace the radiator cap.
     Refer to "CHECKING THE RADIATOR" on page 6-3.

THERMOSTAT

Removing the thermostat

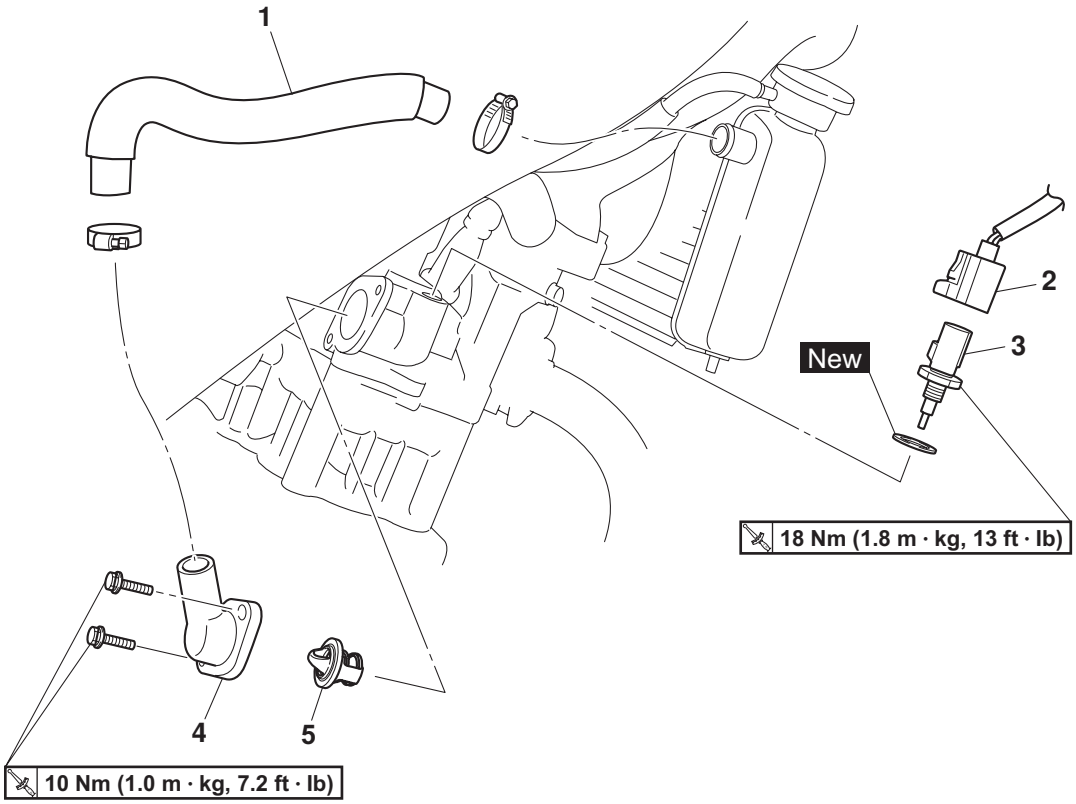

Order	Job/Parts to remove	Qty	Remarks
	Coolant		Drain. Refer to “CHANGING THE COOLANT” on page 3-14.
	Seat/Right front panel		Refer to “GENERAL CHASSIS” on page 4-1.
	Fuel tank		Refer to “FUEL TANK” on page 7-1.
1	Radiator inlet hose	1	
2	Coolant temperature sensor coupler	1	Disconnect.
3	Coolant temperature sensor	1	
4	Thermostat cover	1	
5	Thermostat	1	
			For installation, reverse the removal procedure.

CHECKING THE THERMOSTAT

1. Check:
   - Thermostat
     Does not open at 80.5–83.5 °C (176.9–182.3 °F) → Replace.

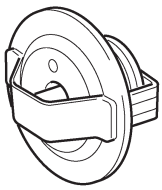

▼▼▼▼▼▼▼▼▼▼▼▼▼▼▼▼▼▼▼▼▼▼▼▼▼▼▼▼▼▼▼▼

a. Suspend the thermostat "1" in a container "2" filled with water.
b. Slowly heat the water "3".
c. Place a thermometer "4" in the water.
d. While stirring the water, observe the thermostat and thermometer's indicated temperature.

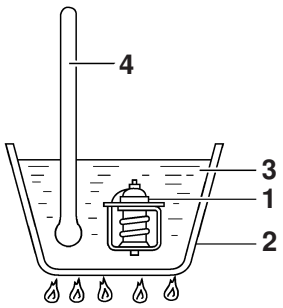

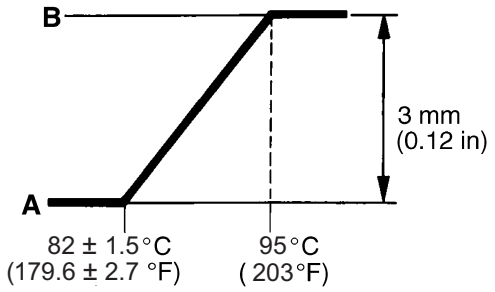

A. Fully closed
B. Fully open

NOTE:

If the accuracy of the thermostat is in doubt, replace it. A faulty thermostat could cause serious overheating or overcooling.

▲▲▲▲▲▲▲▲▲▲▲▲▲▲▲▲▲▲▲▲▲▲▲▲▲▲▲▲▲▲▲▲

2. Check:
   - Thermostat cover
     Cracks/damage → Replace.
3. Check:
   - Radiator inlet hose
     Cracks/damage → Replace.

INSTALLING THE THERMOSTAT

1. Install:
   - Thermostat

NOTE:

Install the thermostat with its breather hole "a" facing up.

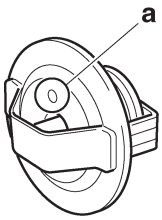

2. Install:
   - Copper washer New
   - Coolant temperature sensor

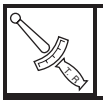	**Coolant temperature sensor 18 Nm (1.8 m·kg, 13 ft·lb)**

CAUTION:

Use extreme care when handling the coolant temperature sensor. Replace any part that was dropped or subjected to a strong impact.

3. Fill:
   - Cooling system
     (with the specified amount of the recommended coolant)
     Refer to "CHANGING THE COOLANT" on page 3-14.
4. Check:
   - Cooling system
     Leaks → Repair or replace any faulty part.
5. Measure:
   - Radiator cap opening pressure
     Below the specified pressure → Replace the radiator cap.
     Refer to "CHECKING THE RADIATOR" on page 6-3.

WATER PUMP

Removing the water pump

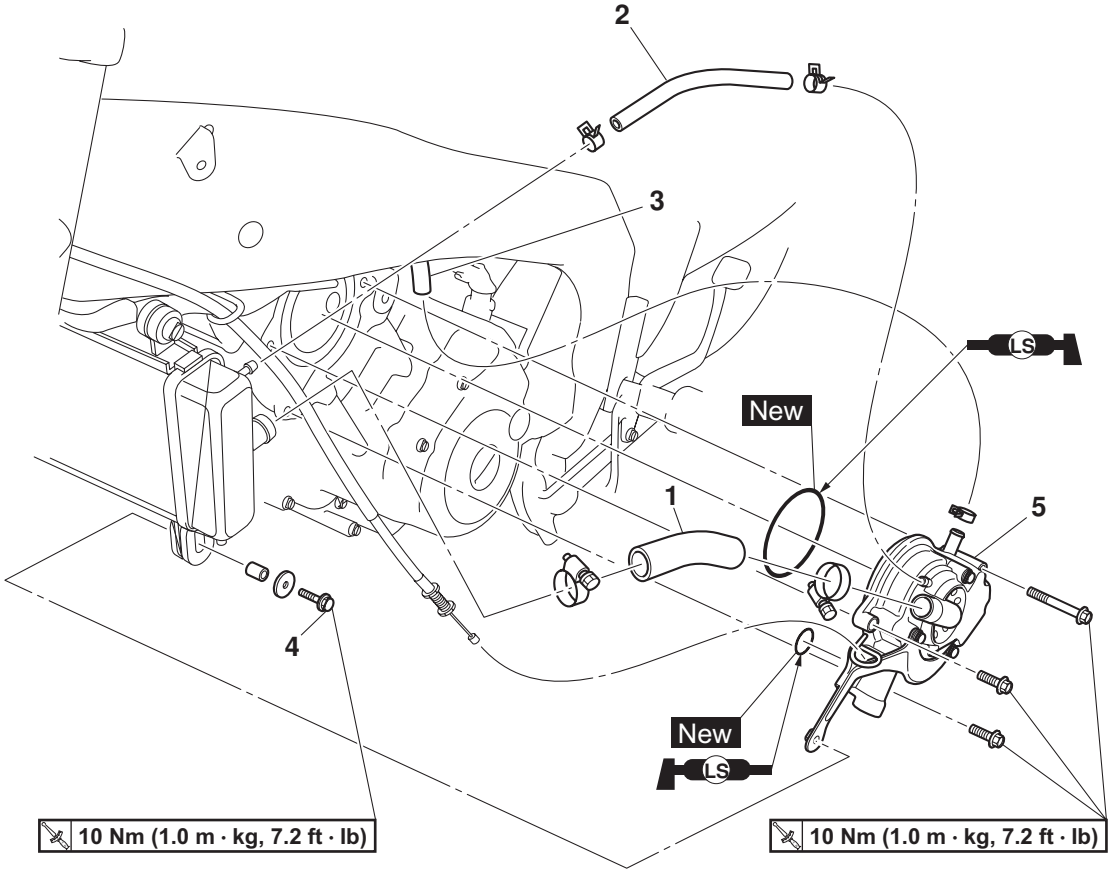

Order	Job/Parts to remove	Qty	Remarks
			It is not necessary to remove the water pump unless the coolant level is extremely low or the coolant contains engine oil.
	Left front panel		Refer to “GENERAL CHASSIS” on page 4-1.
	Clutch cable (engine side)		Disconnect. Refer to “CLUTCH” on page 5-37.
	Coolant		Drain. Refer to “CHANGING THE COOLANT” on page 3-14.
1	Radiator outlet hose	1	
2	Water pump breather hose	1	
3	Cylinder head breather hose	1	Disconnect.
4	Radiator bracket bolt	1	
5	Water pump assembly	1	
			For installation, reverse the removal procedure.

Disassembling the water pump

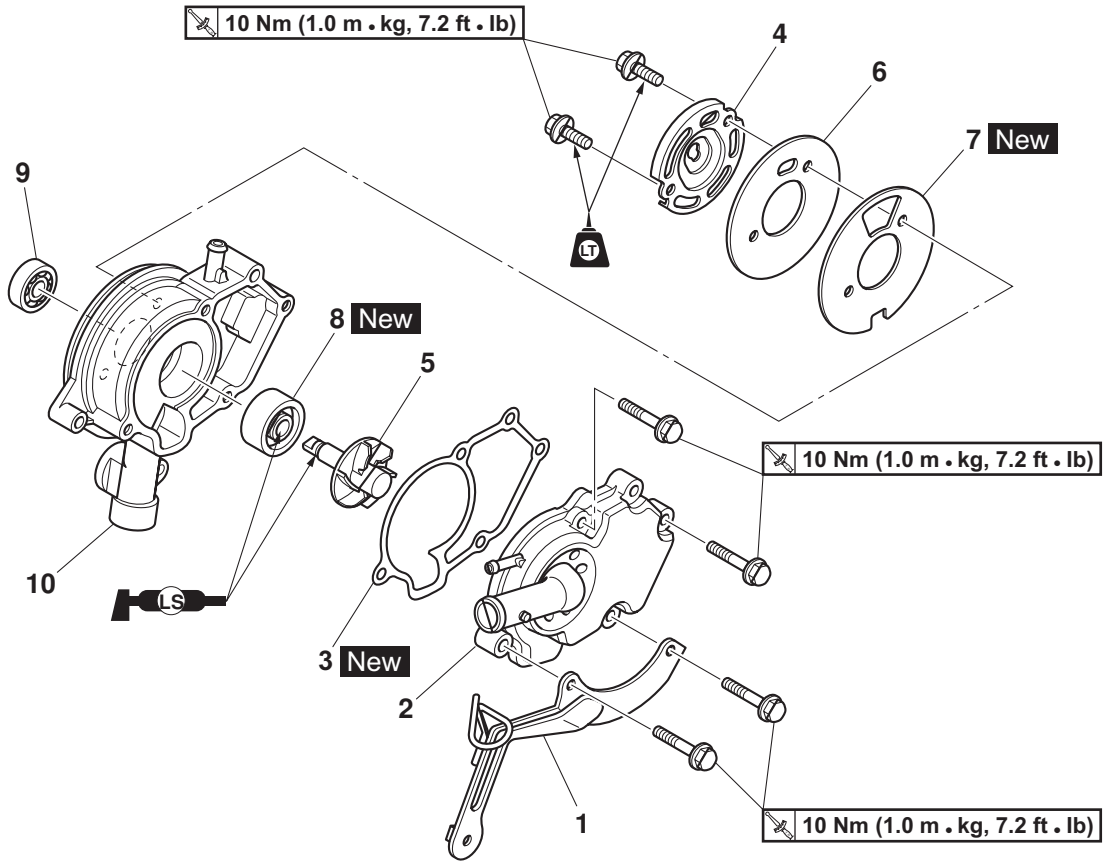

Order	Job/Parts to remove	Q ty	Remarks
1	Radiator bracket	1	
2	Water pump housing cover	1	
3	Water pump housing cover gasket	1	
4	Impeller shaft retainer	1	
5	Impeller shaft	1	
6	Water pump housing plate	1	
7	Water pump housing gasket	1	
8	Water pump seal	1	
9	Bearing	1	
10	Water pump housing	1	
			For assembly, reverse the disassembly procedure.

DISASSEMBLING THE WATER PUMP

1. Remove:
   - Water pump seal “1”

NOTE:

Remove the water pump seal from the inside of the water pump housing.

2. Remove:
   - Bearing “2”

NOTE:

Remove the bearing from the outside of the water pump housing “3”.

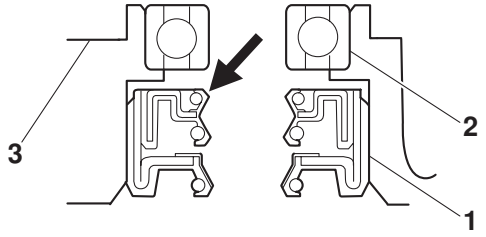

CHECKING THE WATER PUMP

1. Check:
   - Impeller shaft
     Cracks/damage/wear → Replace.
   - Bearing
     Rough movement → Replace.
   - Radiator outlet hose
     Cracks/damage → Replace.

ASSEMBLING THE WATER PUMP

1. Install:
   - Water pump seal “1” New
     (into the water pump housing “2”)

CAUTION:

Never lubricate the water pump seal surface with oil or grease.

NOTE:

- Install the water pump seal with the special tools.
- Install the water pump seal with the special tools to the specified depth as shown in the illustration.

	**Mechanical seal/bearing installer YSST-722**

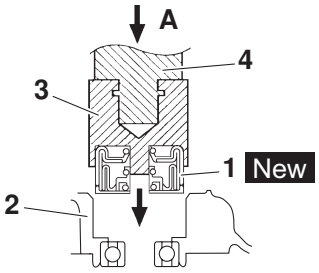

A. Push down
3. Mechanical seal installer
4. Middle driven shaft bearing driver

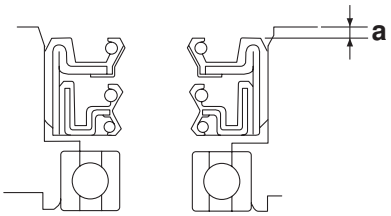

a. 0–0.5 mm

2. Lubricate:
   - Water pump seal lip

	**Recommended lubricant Lithium-soap-based grease**

3. Install:
   - Water pump housing gasket “1” New
   - Water pump housing plate “2”
   - Impeller shaft
   - Impeller shaft retainer “3”

NOTE:

- Before installing the impeller shaft retainer, lubricate the slit on impeller shaft end with a thin coat of lithium-soap-based grease.
- Install the water pump housing gasket “1” as shown in the illustration.
- After installation, check that the impeller shaft rotates smoothly.

- Be sure to align the bolt holes in the water pump housing gasket, water pump housing plate and impeller shaft retainer. Make sure that the water pump housing plate does not block the hole “a” in the gasket.

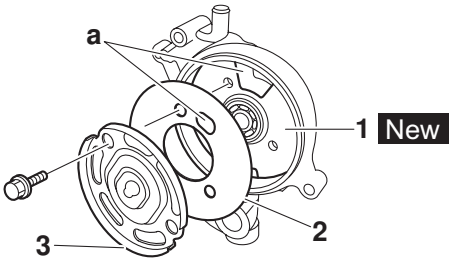

INSTALLING THE WATER PUMP

1. Install:
   - Water pump assembly “1”
   - O-rings “2” New

NOTE:

- Align the projection “a” on the impeller shaft with the slit “b” on the camshaft sprocket bolt.
- Lubricate the O-rings with a thin coat of lithium-soap-based grease.

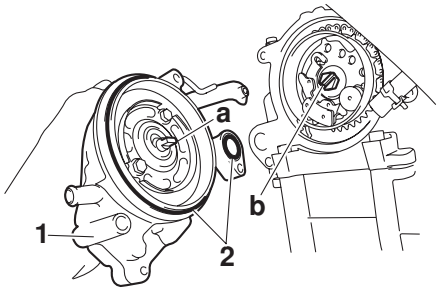

2. Fill:
   - Cooling system
     (with the specified amount of the recommended coolant)
     Refer to “CHANGING THE COOLANT” on page 3-14.
3. Check:
   - Cooling system
     Leaks → Repair or replace the faulty part.
4. Measure:
   - Radiator cap opening pressure
     Below the specified pressure → Replace the radiator cap.
     Refer to “CHECKING THE RADIATOR” on page 6-3.

FUEL SYSTEM

FUEL TANK

Removing the fuel tank

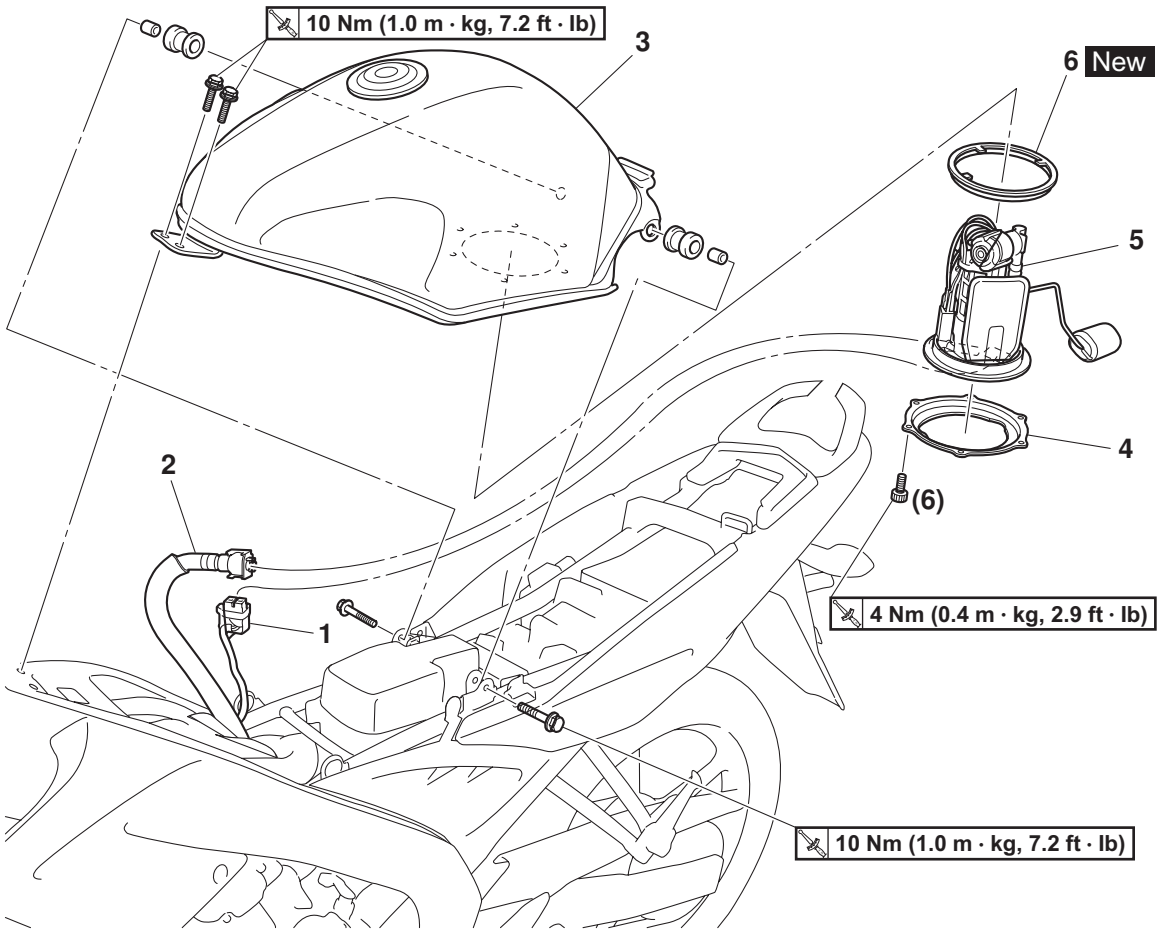

Order	Job/Parts to remove	Qty	Remarks
	Seat		Refer to “GENERAL CHASSIS” on page 4-1.
1	Fuel pump coupler	1	Disconnect.
2	Fuel hose	1	Disconnect.
3	Fuel tank	1	Disconnect.
4	Fuel pump retainer	1	
5	Fuel pump	1	
6	Fuel pump gasket	1	
			For installation, reverse the removal procedure.

REMOVING THE FUEL TANK

1. Extract the fuel in the fuel tank through the fuel tank cap with a pump.
2. Disconnect:
   - Fuel hose

WARNING

Cover fuel hose connections with a cloth when disconnecting them. Residual pressure in the fuel lines could cause fuel to spurt out when removing the hoses.

NOTE:

- To remove the fuel hose from the fuel pump, slide the fuel hose connector cover "1" on the end of the hose in the direction of the arrow shown, press the two buttons "2" on the sides of the connector, and then remove the hose.
- Remove the fuel hose manually without using any tools.
- Before removing the hose, place a few rags in the area under where it will be removed.

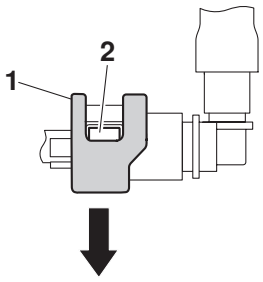

3. Remove:
   - Fuel tank

NOTE:

Do not set the fuel tank down on the installation surface of the fuel pump. Be sure to lean the fuel tank against a wall or the like.

REMOVING THE FUEL PUMP

1. Remove:
   - Fuel pump

CAUTION:

- **Do not drop the fuel pump or give it a strong shock.**
- **Do not touch the base section of the fuel sender.**

CHECKING THE FUEL PUMP BODY

1. Check:
   - Fuel pump body
     Obstruction → Clean.
     Cracks/damage → Replace fuel pump assembly.

INSTALLING THE FUEL PUMP

1. Install:
   - Fuel pump

	**Fuel pump bolt** **4 Nm (0.4 m·kg, 2.9 ft·lb)**

NOTE:

- Do not damage the installation surfaces of the fuel tank when installing the fuel pump.
- Always use a new fuel pump gasket.
- Install the fuel pump as shown in the illustration.
- Align the projection "a" on the fuel pump with the slot in the fuel pump retainer.
- Tighten the fuel pump bolts in stages in a criss-cross pattern.

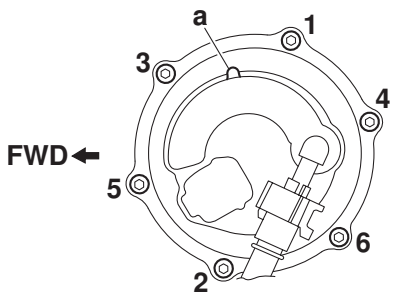

INSTALLING THE FUEL TANK

1. Connect:
   - Fuel hose

CAUTION:

When installing the fuel hose, make sure that it is securely connected, and that the fuel hose connector cover on the fuel hose is in the correct position, otherwise the fuel hose will not be properly installed.

NOTE:

- Install the fuel hose securely onto the fuel pump until a distinct "click" is heard.

- To install the fuel hose onto the fuel pump, slide the fuel hose connector cover “1” on the end of the hose in the direction of the arrow shown.

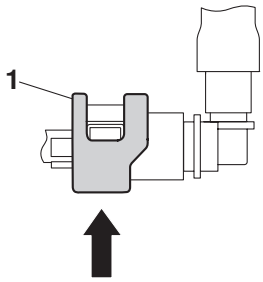

THROTTLE BODY

Removing the throttle body

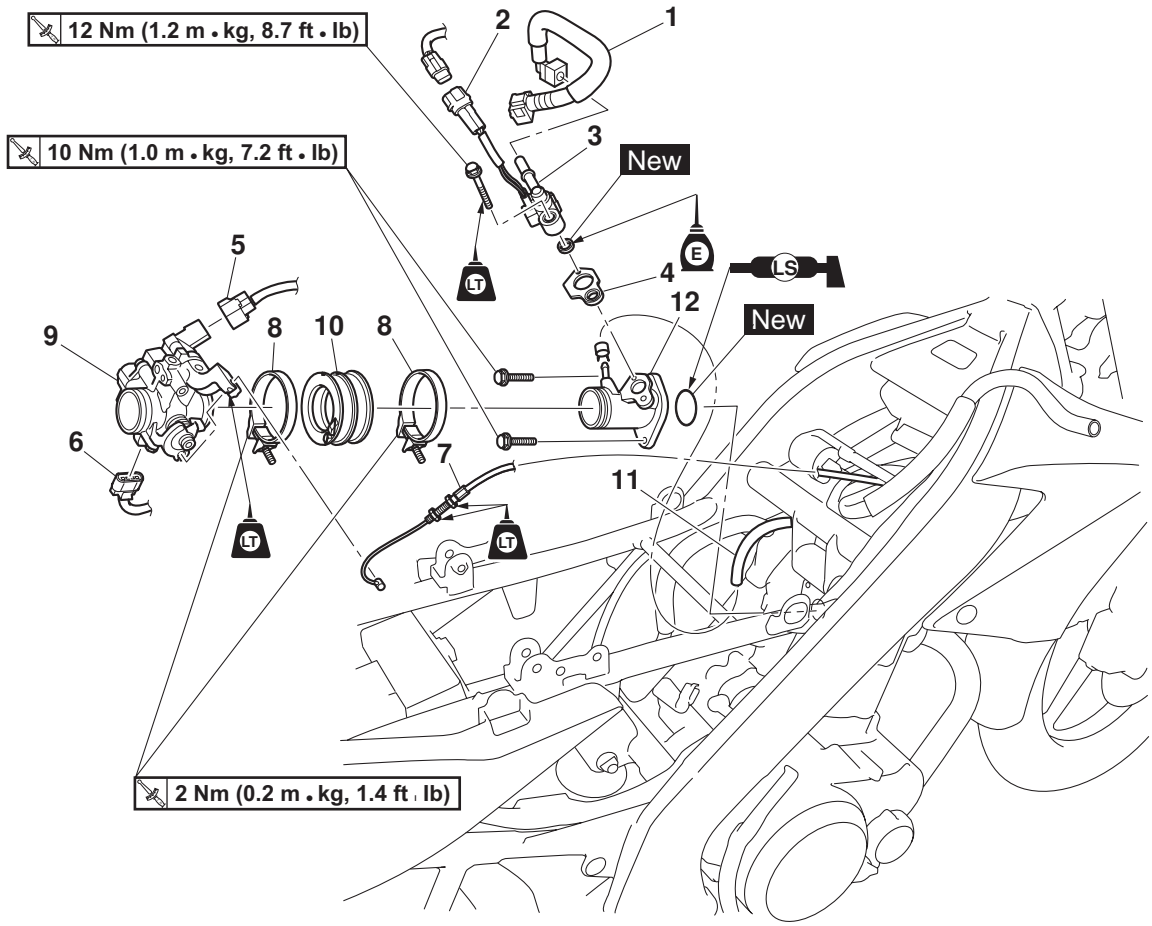

Order	Job/Parts to remove	Qty	Remarks
	Seat/Left and Right side panel		Refer to “GENERAL CHASSIS” on page 4-1.
	Fuel tank		Refer to “FUEL TANK” on page 7-1.
	Air filter case		Refer to “GENERAL CHASSIS” on page 4-1.
1	Fuel hose	1	
2	Fuel injector coupler	1	Disconnect.
3	Fuel injector	1	
4	Fuel injector gasket	1	
5	FID (fast idle solenoid) coupler	1	Disconnect.
6	Throttle body sensor assembly coupler	1	Disconnect.
7	Throttle cable	1	Disconnect.
8	Throttle body joint clamp screw	2	Loosen.
9	Throttle body	1	**CAUTION:** **The throttle body should not be disassembled.**

Removing the throttle body

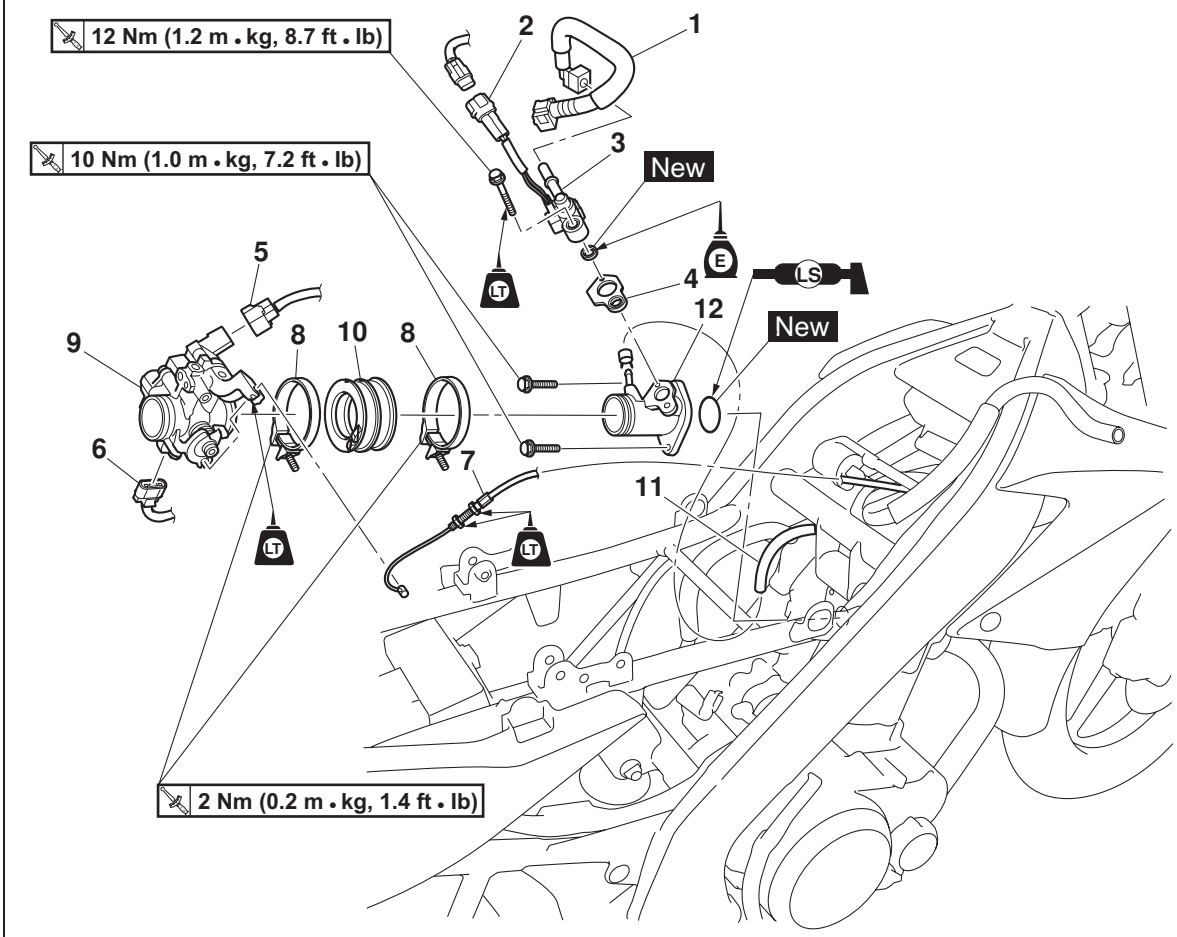

Order	Job/Parts to remove	Qty	Remarks
10	Throttle body joint	1	
11	Air induction system vacuum hose	1	Disconnect.
12	Intake manifold	1	
			For installation, reverse the removal procedure.

THROTTLE BODY

REMOVING THE THROTTLE BODY

1. Remove:
   - Throttle body

CAUTION:

Do not remove the throttle body sensor assembly "1", from the throttle body.

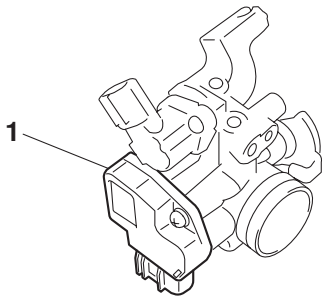

CHECKING THE FUEL INJECTOR

1. Check:
   - Fuel injector
     Damage → Replace.

CHECKING THE THROTTLE BODY

1. Check:
   - Throttle body
     Cracks/damage → Replace the throttle body.
2. Check:
   - Fuel passages
     Obstructions → Clean.

▼▼▼▼▼▼▼▼▼▼▼▼▼▼▼▼▼▼▼▼▼▼▼▼▼▼▼▼▼▼▼▼▼▼

a. Wash the throttle body in a petroleum- based solvent.
   Do not use any caustic carburetor cleaning solution.
b. Blow out all of the passages with compressed air.

▲▲▲▲▲▲▲▲▲▲▲▲▲▲▲▲▲▲▲▲▲▲▲▲▲▲▲▲▲▲▲▲▲▲

CHECKING THE FUEL PRESSURE

1. Check:
   - Fuel pressure

▼▼▼▼▼▼▼▼▼▼▼▼▼▼▼▼▼▼▼▼▼▼▼▼▼▼▼▼▼▼▼▼▼▼

a. Remove the seat.
   Refer to "GENERAL CHASSIS" on page 4-1.
b. Lift the front of the fuel tank.
c. Disconnect the fuel hose "1" from the fuel pump "2".

WARNING

Cover fuel hose connections with a cloth when disconnecting them. Residual pressure in the fuel lines could cause fuel to spurt out when removing the hoses.

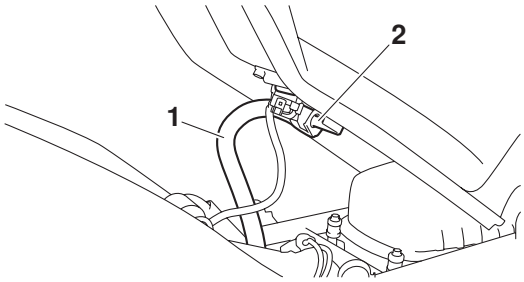

d. Connect the fuel pressure adapter "3" between the fuel hose "1" and fuel pump "2".
e. Connect the pressure gauge "4" to fuel pressure adapter "3".

	**Fuel Pressure gauge**

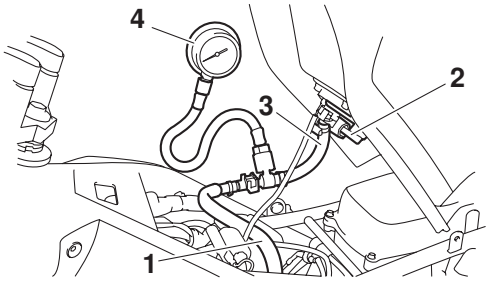

f. Start the engine.
g. Measure the fuel pressure.

	**Fuel pressure** **250.0 kPa**

Faulty → Replace the fuel pump.

▲▲▲▲▲▲▲▲▲▲▲▲▲▲▲▲▲▲▲▲▲▲▲▲▲▲▲▲▲▲▲▲▲▲

INSTALLING THE THROTTLE BODY

1. Install:
   - Throttle body joint clamps

NOTE:

Align the projections "a" on the throttle body joint with the slot "b" in each throttle body joint clamp.

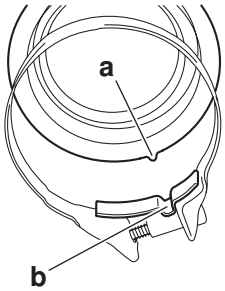

2. Install:
   - Throttle body joint

NOTE:

Align the projection “a” on the throttle body joint with the slot “b” in the intake manifold.

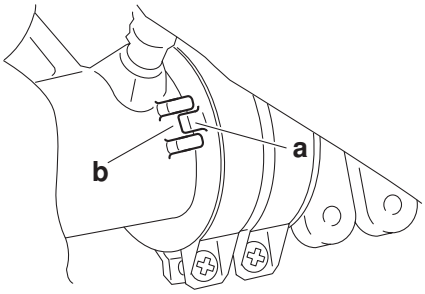

3. Install:
   - Throttle body

NOTE:

Align the projection “a” on the throttle body with the slot “b” throttle body joint.

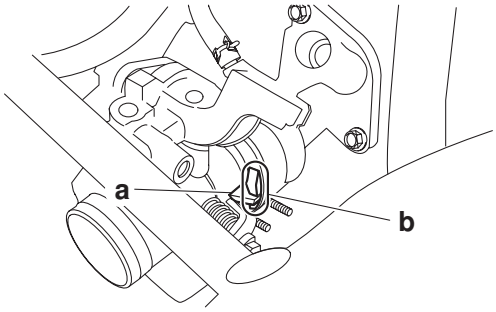

4. Adjust:
   - Throttle cable free play
     Refer to “ADJUSTING THE THROTTLE CABLE FREE PLAY” on page 3-6.

AIR INDUCTION SYSTEM

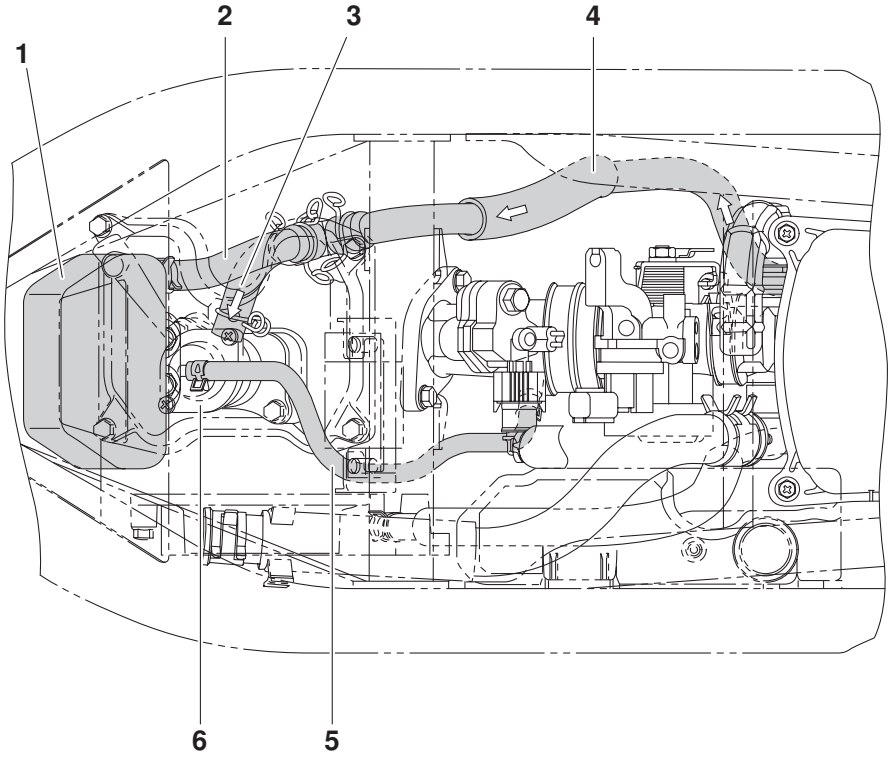

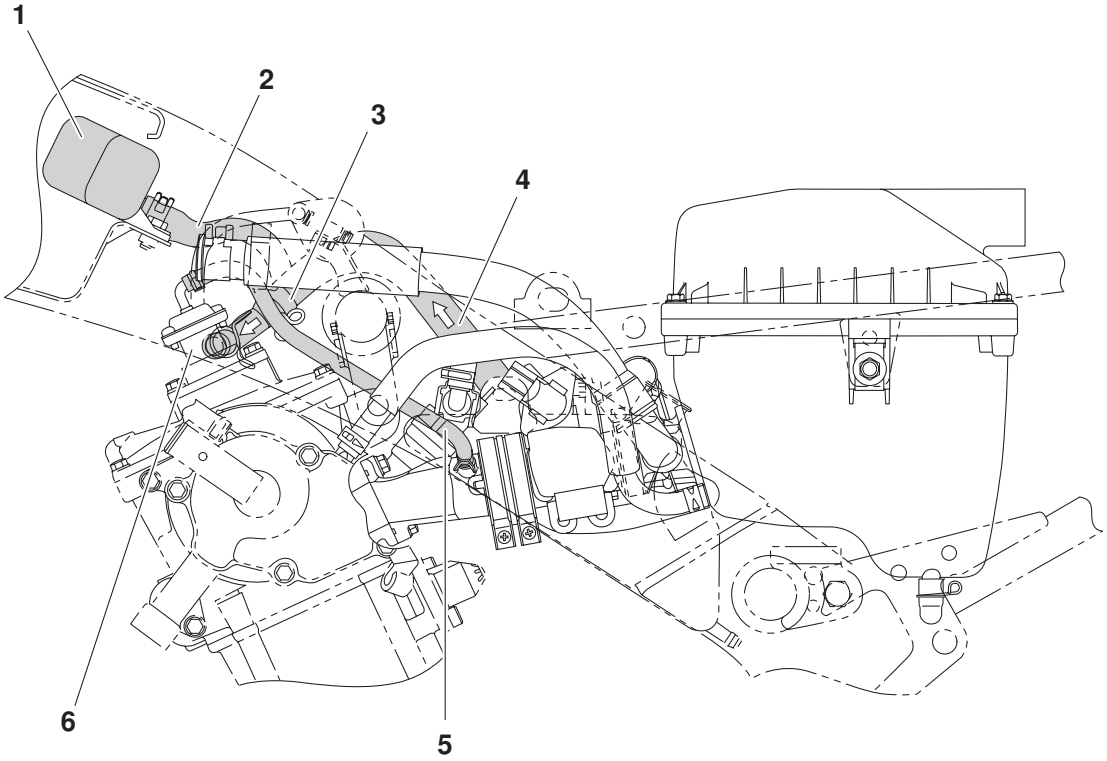

1. Resonator
2. Air induction system hose (3-way joint to resonator)
3. Air induction system hose (3-way joint to air cut-off valve)
4. Air induction system hose (air filter case to 3-way joint)
5. Air induction system vacuum hose
6. Air cut-off valve

Removing the air cut-off valve and reed valve

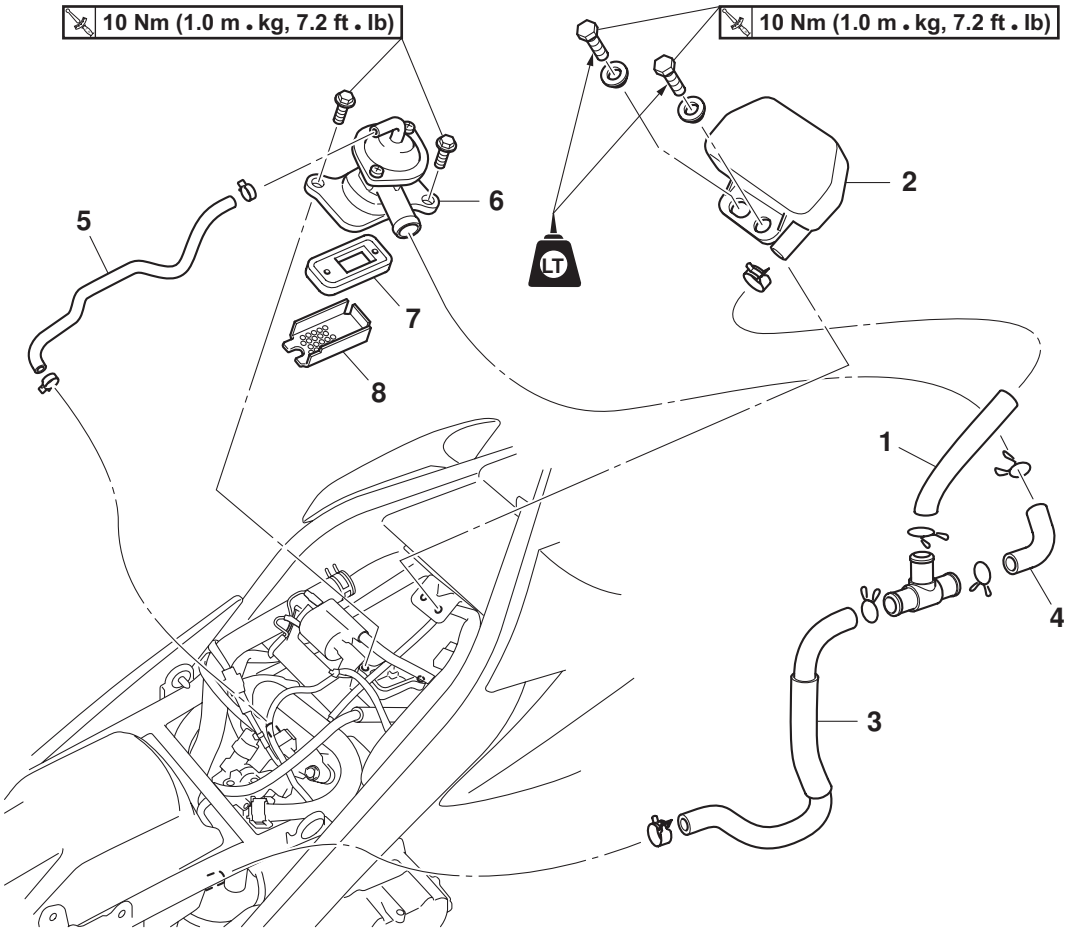

Order	Job/Parts to remove	Qty	Remarks
	Seat/Right side panel		Refer to “GENERAL CHASSIS” on page 4-1.
	Fuel tank		Refer to “FUEL TANK” on page 7-1.
1	Air induction system hose (3-way joint to resonator)	1	
2	Resonator	1	
3	Air induction system hose (air filter case to 3-way joint)	1	
4	Air induction system hose (3-way joint to air cut-off valve)	1	
5	Air induction system vacuum hose	1	
6	Air cut-off valve	1	
7	Reed valve assembly	1	
8	Reed valve plate	1	
			For installation, reverse the removal procedure.

CHECKING THE AIR INDUCTION SYSTEM

Air injection

The air induction system burns unburned exhaust gases by injecting fresh air (secondary air) into the exhaust port, reducing the emission of hydrocarbons. When there is negative pressure at the exhaust port, the reed valve opens, allowing secondary air to flow into the exhaust port. The required temperature for burning the unburned exhaust gases is approximately 600 to 700 °C.

Air cut-off valve

The air cut-off valve is operated by the intake gas pressure through the piston valve diaphragm. Normally, the air cut-off valve is open to allow fresh air to flow into the exhaust port. During sudden deceleration (the throttle valve suddenly closes), negative pressure is generated and the air cut-off valve is closed in order to prevent after-burning.
Additionally, at high engine speeds and when the pressure decreases, the air cut-off valve automatically closes to guard against a loss of performance due to self-EGR.

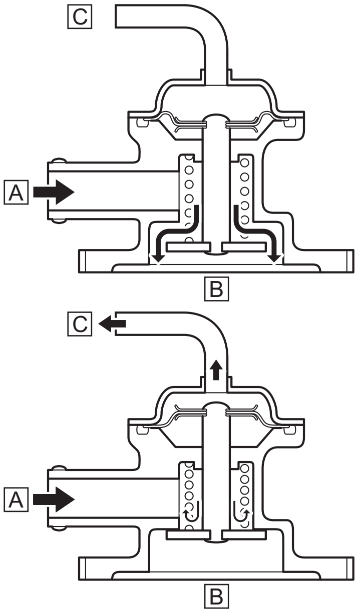

A. From the air filter case
B. To the cylinder head
C. To the intake manifold

1. Check:
   - Hoses
     Loose connections → Connect properly.
     Cracks/damage → Replace.
   - 3-way joint
     Cracks/damage → Replace.
2. Check:
   - Reed valve
   - Reed valve stopper
   - Reed valve seat
     Cracks/damage → Replace the reed valve assembly.
3. Check:
   - Air cut-off valve
     Cracks/damage → Replace.
4. Check:
   - Air cut-off valve operation
     Does not operate → Replace.

▼▼▼▼▼▼▼▼▼▼▼▼▼▼▼▼▼▼▼▼▼▼▼▼▼▼▼▼▼▼▼▼

a. Blow air through the end of the air induction system hose (3-way joint to air cut-off valve) and check that air flows from the air cut-off valve (to cylinder head side).

Air cut-off valve opens
Perform step (b).
Air cut-off valve closes
Replace the air cut-off valve.

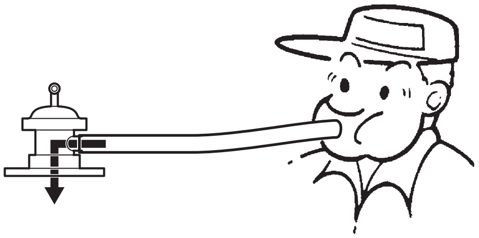

b. Install a vacuum/pressure pump to the air-cut off valve “1” and apply negative pressure to the valve.

Vacuum/pressure pump gauge set

c. Blow air through the end of the air induction system hose (3-way joint to air cut-off valve) and check that air does not flow and out through the air cut-off valve (to cylinder head side).

Air cut-off valve opens
Replace the air cut-off valve.
Air cut-off valve closes
Air cut-off valve is OK.

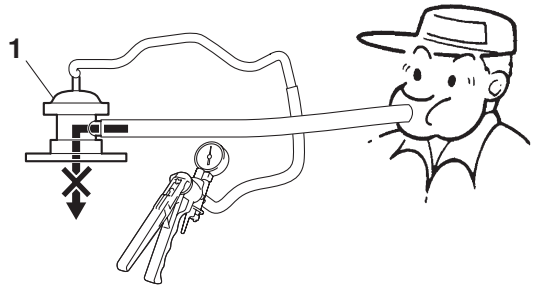

ELECTRICAL SYSTEM

IGNITION SYSTEM

CIRCUIT DIAGRAM

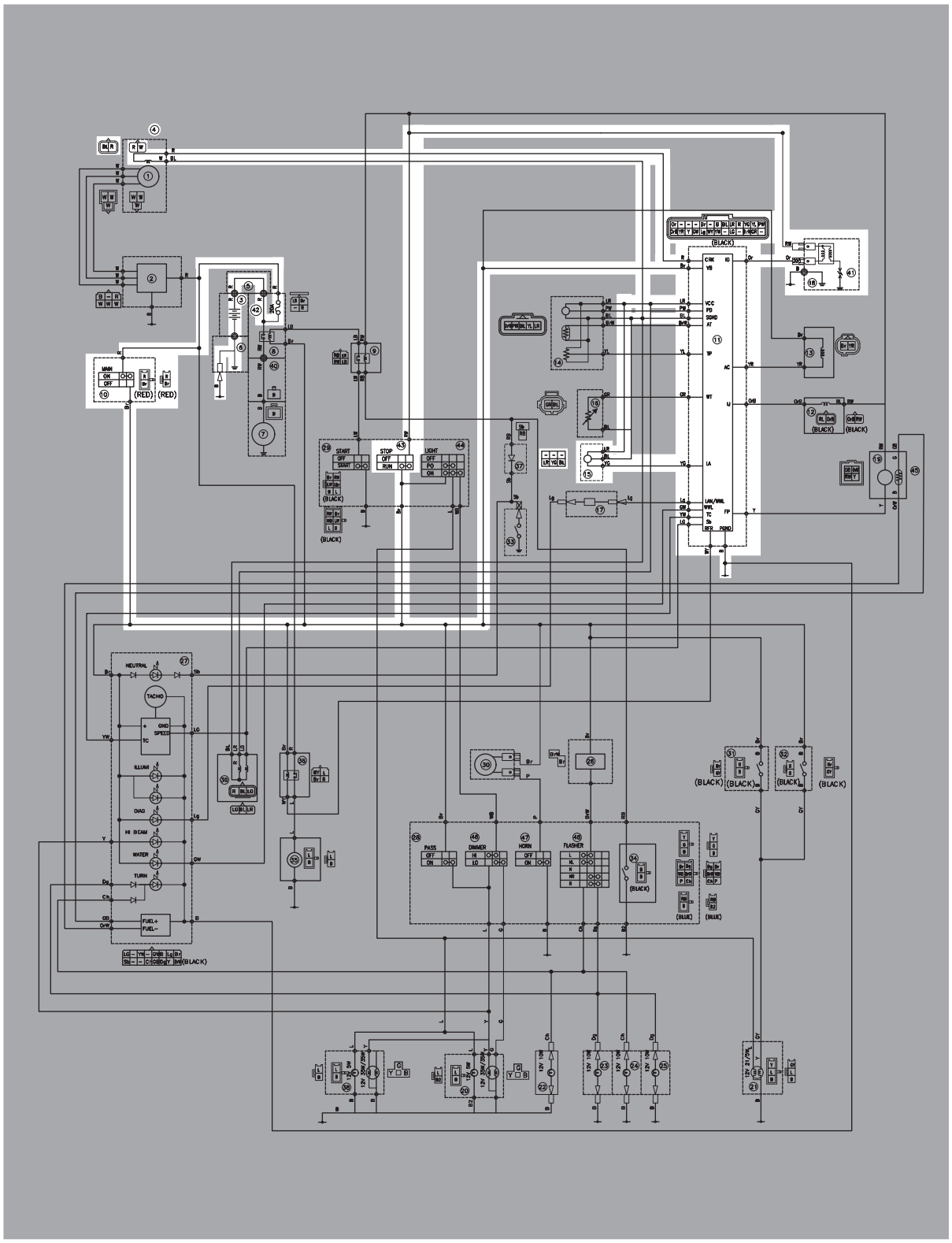

3. Battery
4. Crankshaft position sensor
10. Main switch
11. ECU (engine control unit)
15. Lean angle sensor
18. Ignition coil
41. Spark plug
42. Fuse
43. Engine stop switch

TROUBLESHOOTING

The ignition system fails to operate (no spark or intermittent spark).

NOTE:

• Before troubleshooting, remove the following part(s):

1. Seat
2. Fuel tank
3. Right front panel

1. Check the fuse. Refer to “CHECKING THE FUSE” on page 8-61.	NG →	Replace the fuse.
OK ↓		
2. Check the battery. Refer to “CHECKING AND CHARGING THE BATTERY” on page 8-61.	NG →	• Clean the battery terminals. • Recharge or replace the battery.
OK ↓		
3. Check the spark plug. Refer to “CHECKING THE SPARK PLUG” on page 3-7.	NG →	Re-gap or replace the spark plug.
OK ↓		
4. Check the ignition spark gap. Refer to “CHECKING THE IGNITION SPARK GAP” on page 8-67.	OK →	Ignition system is OK.
NG ↓		
5. Check the spark plug cap. Refer to “CHECKING THE SPARK PLUG CAP” on page 8-66.	NG →	Replace the spark plug cap.
OK ↓		
6. Check the ignition coil. Refer to “CHECKING THE IGNITION COIL” on page 8-67.	NG →	Replace the ignition coil.
OK ↓		
7. Check the crankshaft position sensor. Refer to “CHECKING THE CRANKSHAFT POSITION SENSOR” on page 8-68.	NG →	Replace the crankshaft position sensor/stator assembly.
OK ↓		
8. Check the main switch. Refer to “CHECKING THE SWITCHES” on page 8-57.	NG →	Replace the main switch.
OK ↓		

9. Check the engine stop switch. Refer to “CHECKING THE SWITCHES” on page 8-57.	NG →	The engine stop switch is faulty. Replace the right handlebar switch.
OK ↓		
10. Check the lean angle sensor. Refer to “CHECKING THE LEAN ANGLE SENSOR” on page 8-68.	NG →	Replace the lean angle sensor.
OK ↓		
11. Check the entire ignition system wiring. Refer to “CIRCUIT DIAGRAM” on page 8-1.	NG →	Properly connect or repair the ignition system wiring.
OK ↓		
Replace the ECU.		

ELECTRIC STARTING SYSTEM

CIRCUIT DIAGRAM

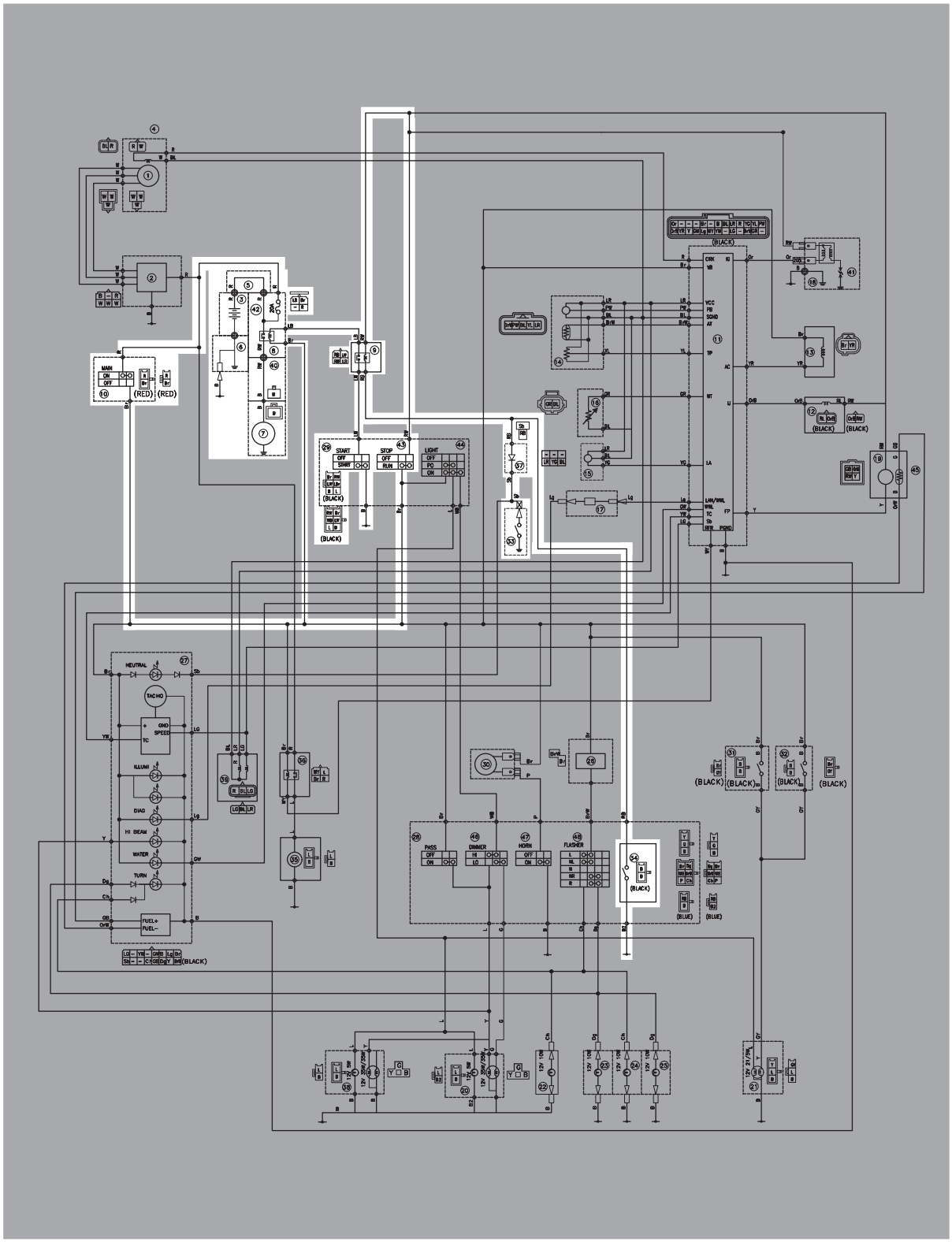

3. Battery
7. Starter motor
8. Starter relay
9. Starting system cut off relay.
10. Main switch
29. Start switch
33. Neutral switch
34. Clutch switch
37. Diode
42. Fuse
43. Engine stop switch

STARTING CIRCUIT CUT-OFF SYSTEM OPERATION

If the engine stop switch is set to "◯" and the main switch is set to "ON" (both switches are closed), the starter motor can only operate if at least one of the following conditions is met:

• The transmission is in neutral (the neutral switch is closed).

• The clutch lever is pulled to the handlebar (the clutch switch is closed).

The starting circuit cut-off relay prevents the starter motor from operating when neither of these conditions has been met. In this instance, the starting circuit cut-off relay is open so current cannot reach the starter motor. When at least one of the above conditions has been met, the starting circuit cut-off relay is closed and the engine can be started by pressing the start switch "⊛".

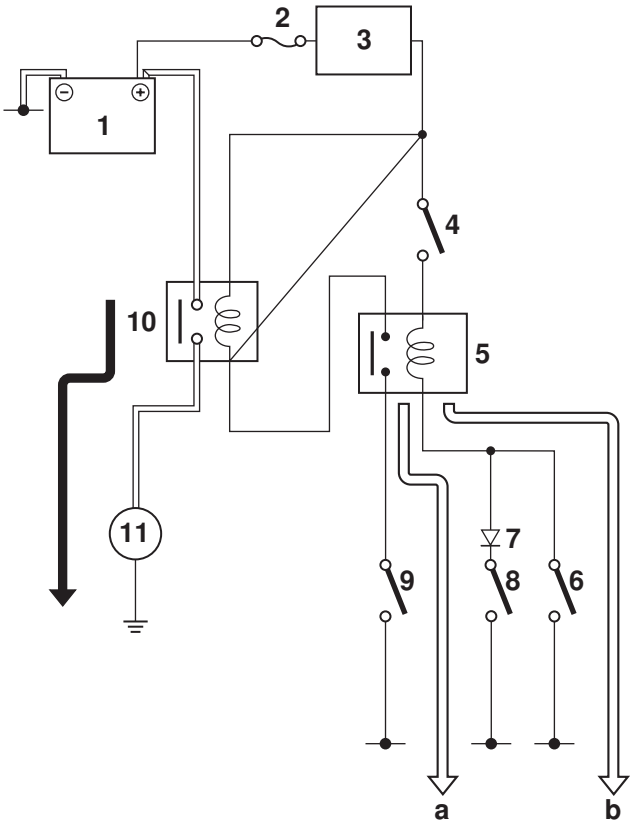

a. WHEN THE TRANSMISSION IS IN NEUTRAL
b. WHEN CLUTCH LEVER IS PULLED TO THE HANDLEBAR

3. Battery
7. Starter motor
8. Starter relay
9. Starting system cut off relay.
10. Main switch
29. Start switch
33. Neutral switch
34. Clutch switch
37. Diode
42. Fuse
43. Engine stop switch

TROUBLESHOOTING

The starter motor fails to turn.

NOTE:

• Before troubleshooting, remove the following part(s):
1. Seat
2. Right side panel

1. Check the fuse. Refer to "CHECKING THE FUSE" on page 8-61.	NG →	Replace the fuse.
OK ↓		
2. Check the battery. Refer to "CHECKING AND CHARGING THE BATTERY" on page 8-61.	NG →	• Clean the battery terminals. • Recharge or replace the battery.
OK ↓		
3. Check the starter motor operation. Refer to "CHECKING THE STARTER MOTOR OPERATION" on page 8-69.	OK →	Starter motor is OK. Perform the electric starting system troubleshooting, starting with step 5.
NG ↓		
4. Check the starter motor. Refer to "CHECKING THE STARTER MOTOR" on page 5-35.	NG →	Repair or replace the starter motor.
OK ↓		
5. Check the starting circuit cut-off relay. Refer to "CHECKING THE RELAYS" on page 8-64.	NG →	Replace the starting circuit cut-off relay.
OK ↓		
6. Check the diode. Refer to "CHECKING THE DIODE" on page 8-66.	NG →	Replace the diode.
OK ↓		
7. Check the starter relay. Refer to "CHECKING THE RELAYS" on page 8-64.	NG →	Replace the starter relay.
OK ↓		
8. Check the main switch. Refer to "CHECKING THE SWITCHES" on page 8-57.	NG →	Replace the main switch.
OK ↓		

9. Check the engine stop switch. Refer to “CHECKING THE SWITCHES” on page 8-57.	NG →	The engine stop switch is faulty. Replace the right handlebar switch.
OK ↓		
10. Check the neutral switch. Refer to “CHECKING THE SWITCHES” on page 8-57.	NG →	Replace the neutral switch.
OK ↓		
11. Check the clutch switch. Refer to “CHECKING THE SWITCHES” on page 8-57.	NG →	Replace the clutch switch.
OK ↓		
12. Check the start switch. Refer to “CHECKING THE SWITCHES” on page 8-57.	NG →	The start switch is faulty. Replace the right handlebar switch.
OK ↓		
13. Check the entire starting system wiring. Refer to “CIRCUIT DIAGRAM” on page 8-5.	NG →	Properly connect or repair the starting system wiring.
OK ↓		
The starting system circuit is OK.		

CHARGING SYSTEM

CIRCUIT DIAGRAM

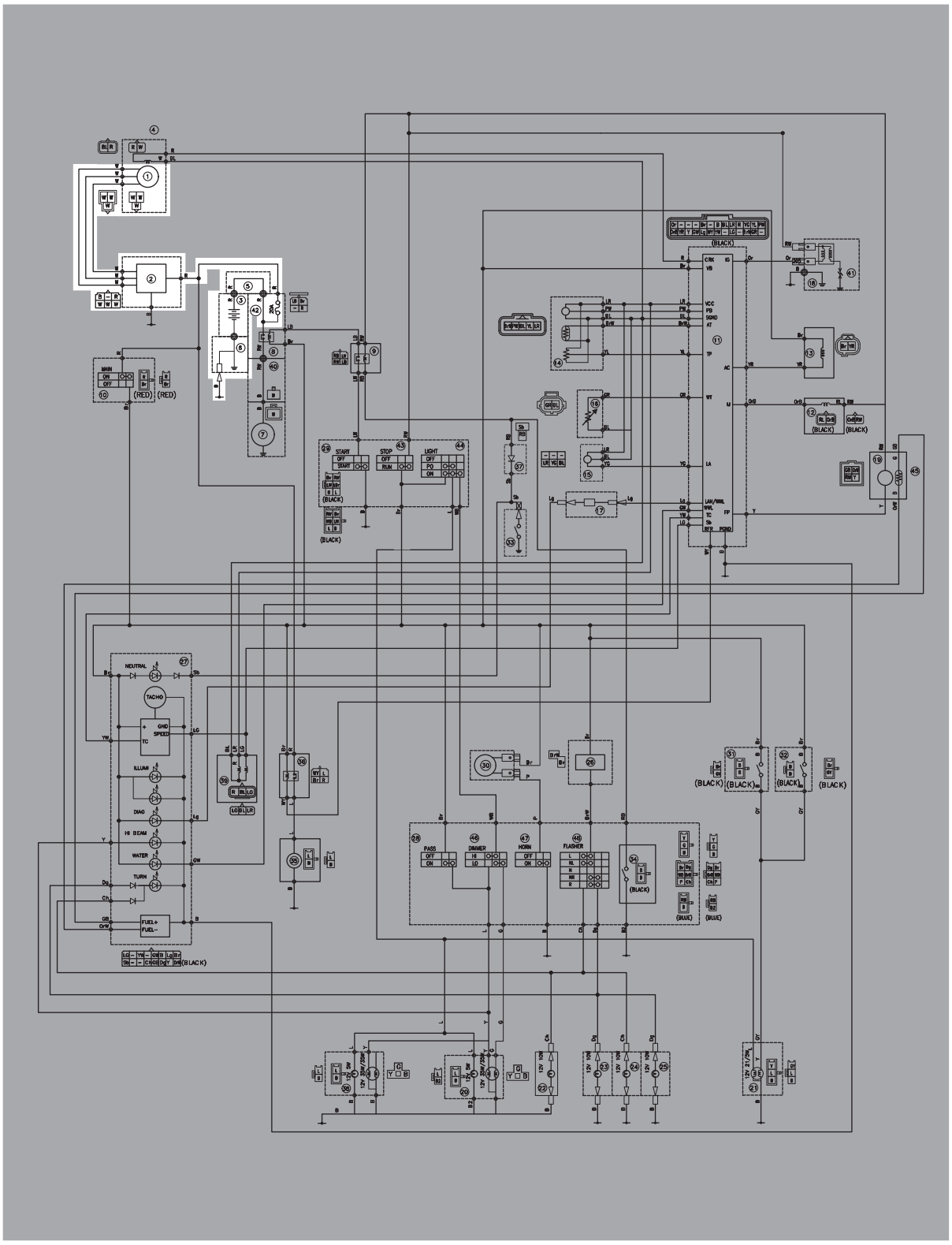

1. AC magneto
2. Rectifier/regulator
3. Battery
42. Fuse

TROUBLESHOOTING

The battery is not being charged.

NOTE:

• Before troubleshooting, remove the following part(s):
1. Seat
2. Left side panel/Side Cover.

1. Check the fuse. Refer to “CHECKING THE FUSE” on page 8-61.	NG →	Replace the fuse.
OK ↓		
2. Check the battery. Refer to “CHECKING AND CHARGING THE BATTERY” on page 8-61.	NG →	• Clean the battery terminals. • Recharge or replace the battery.
OK ↓		
3. Check the stator coil. Refer to “CHECKING THE STATOR COIL” on page 8-69.	NG →	Replace the crankshaft position sensor/stator assembly.
OK ↓		
4. Check the rectifier/regulator. Refer to “CHECKING THE RECTIFIER/REGULATOR” on page 8-69.	NG →	Replace the rectifier/regulator.
OK ↓		
5. Check the entire charging system wiring. Refer to “CIRCUIT DIAGRAM” on page 8-11.	NG →	Properly connect or repair the charging system wiring.
OK ↓		
The charging system circuit is OK.		

LIGHTING SYSTEM

CIRCUIT DIAGRAM

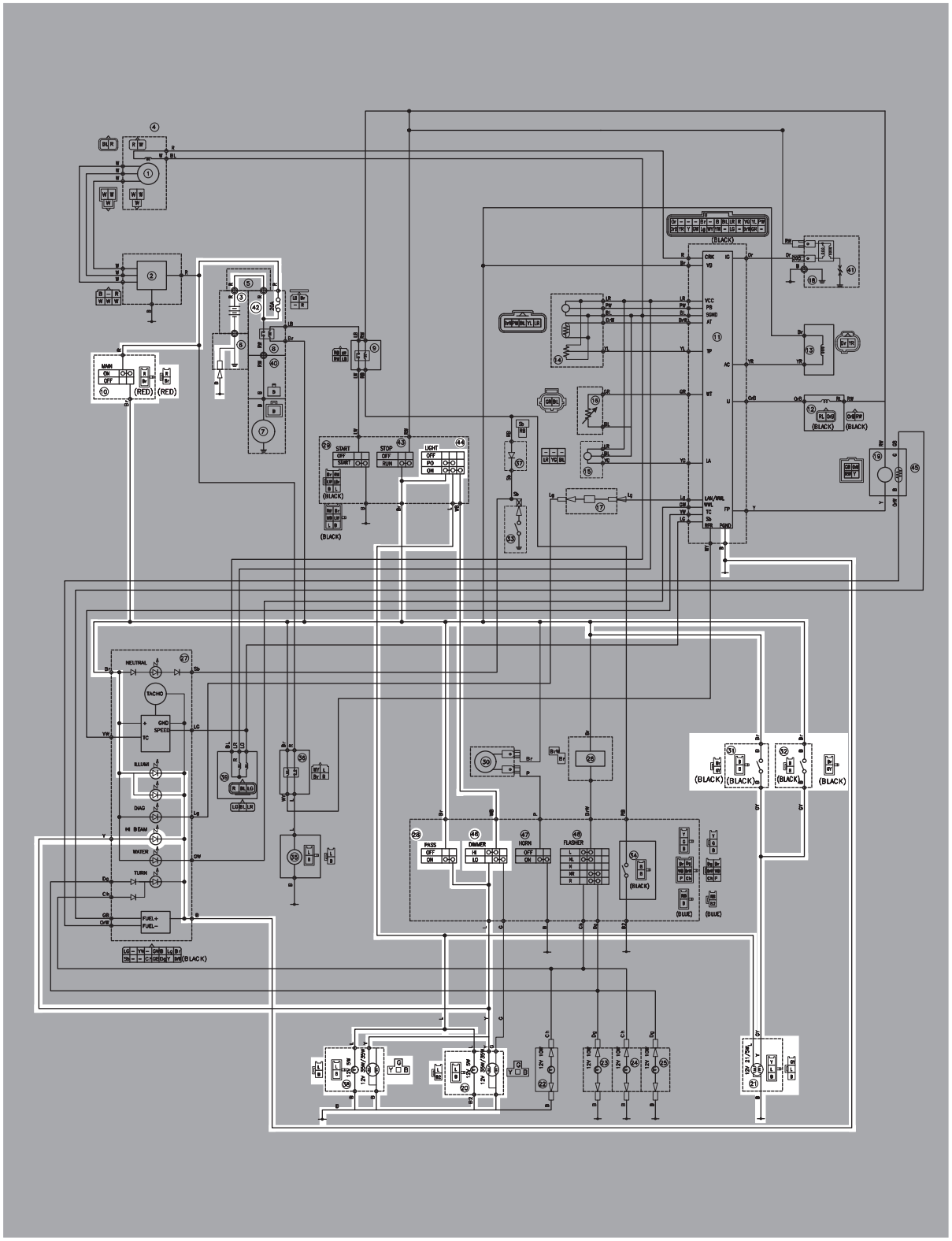

3. Battery
10. Main switch
20. Head light (L)
21. Tail / brake light
28. Pass switch
31. Front brake light switch
32. Rear brake light switch
38. Head light (R)
42. Fuse
44. Light switch
46. Dimmer switch

TROUBLESHOOTING

Any of the following fail to light: headlight, high beam indicator light, taillight, auxiliary light or meter light.

NOTE:

• Before troubleshooting, remove the following part(s):

1. Seat
2. Side Cover & Cowling
3. Headlight

1. Check the each bulbs and bulb sockets condition. Refer to “CHECKING THE BULBS AND BULB SOCKETS” on page 8-60.	NG →	Replace the bulb(s) and bulb socket(s).
OK ↓		
2. Check the fuse. Refer to “CHECKING THE FUSE” on page 8-61.	NG →	Replace the fuse.
OK ↓		
3. Check the battery. Refer to “CHECKING AND CHARGING THE BATTERY” on page 8-61.	NG →	• Clean the battery terminals. • Recharge or replace the battery.
OK ↓		
4. Check the main switch. Refer to “CHECKING THE SWITCHES” on page 8-57.	NG →	Replace the main switch.
OK ↓		
5. Check the dimmer switch. Refer to “CHECKING THE SWITCHES” on page 8-57.	NG →	The dimmer switch is faulty. Replace the left handlebar switch.
OK ↓		
6. Check the pass switch. Refer to “CHECKING THE SWITCHES” on page 8-57.	NG →	The pass switch is faulty. Replace the left handlebar switch.
OK ↓		
7. Check the entire lighting system wiring. Refer to “CIRCUIT DIAGRAM” on page 8-15.	NG →	Properly connect or repair the lighting system wiring.
OK ↓		
This circuit is OK.		

SIGNALING SYSTEM

CIRCUIT DIAGRAM

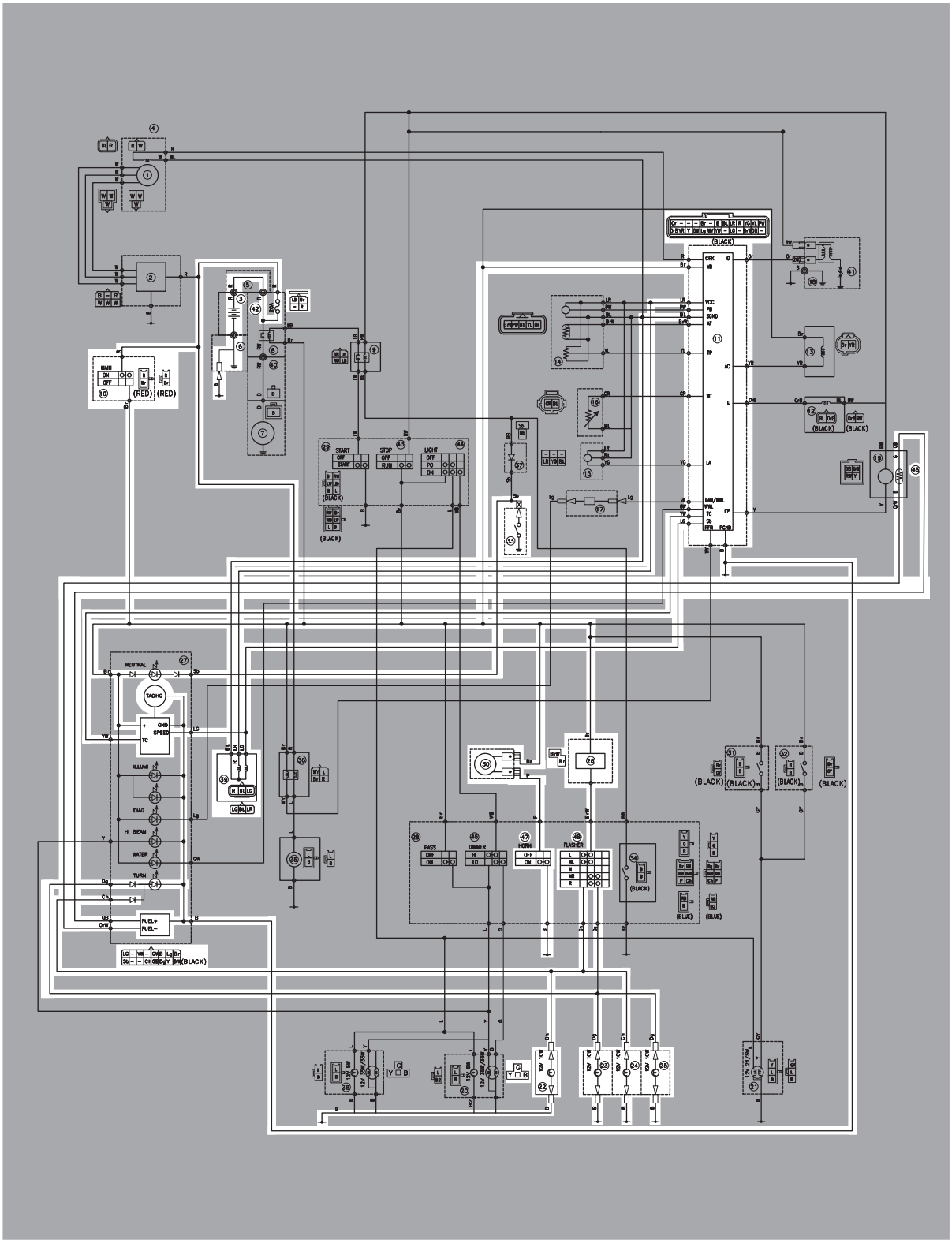

3. Battery
10. Main switch
11. ECU (engine control unit)
21. Tail light
22. Front Flasher light (L)
23. Front Flasher light (R)
24. Rear Flasher light (L)
25. Rear Flasher light ®
30. Horn
33. Neutral switch
39. Speed sensor
42. Fuse
45. Fuel sender
48. Turn signal switch

TROUBLESHOOTING

- Any of the following fail to light: turn signal lights, brake light or indicator lights.
- The horn fails to sound.
- The fuel gauge fails to operate.

NOTE:

- Before troubleshooting, remove the following part(s):

1. Seat
2. Fuel tank
3. Headlight

1. Check the fuse. Refer to “CHECKING THE FUSE” on page 8-61.	NG →	Replace the fuse.
OK ↓		
2. Check the battery. Refer to “CHECKING AND CHARGING THE BATTERY” on page 8-61.	NG →	• Clean the battery terminals. • Recharge or replace the battery.
OK ↓		
3. Check the main switch. Refer to “CHECKING THE SWITCHES” on page 8-57.	NG →	Replace the main switch.
OK ↓		
4. Check the entire signaling system wiring. Refer to “CIRCUIT DIAGRAM” on page 8-19.	NG →	Properly connect or repair the signaling system wiring.
OK ↓		
Check the condition of each of the signaling system circuits. Refer to “Checking the signaling system”.		

Check the signaling system

The horn fails to sound.

1. Check the horn switch. Refer to “CHECKING THE SWITCHES” on page 8-57.	NG →	The horn switch is faulty. Replace the left handlebar switch.
OK ↓		
2. Check the horn. Refer to “CHECKING THE HORN” on page 8-70.	NG →	Replace the horn.
OK ↓		

3. Check the entire signaling system wiring. Refer to “CIRCUIT DIAGRAM” on page 8-19.	NG →	Properly connect or repair the signaling system wiring.
OK ↓		
This circuit is OK.		

The tail/brake light fails to come on.

1. Check the tail/brake light bulb and socket. Refer to “CHECKING THE BULBS AND BULB SOCKETS” on page 8-60.	NG →	Replace the tail/brake light bulb, socket or both.
OK ↓		
2. Check the front brake light switch. Refer to “CHECKING THE SWITCHES” on page 8-57.	NG →	Replace the front brake light switch.
OK ↓		
3. Check the rear brake light switch. Refer to “CHECKING THE SWITCHES” on page 8-57.	NG →	Replace the rear brake light switch.
OK ↓		
4. Check the entire signaling system wiring. Refer to “CIRCUIT DIAGRAM” on page 8-19.	NG →	Properly connect or repair the signaling system wiring.
OK ↓		
This circuit is OK.		

The turn signal light, turn signal indicator light or both fail to blink.

1. Check the turn signal light bulb and socket. Refer to “CHECKING THE BULBS AND BULB SOCKETS” on page 8-60.	NG →	Replace the turn signal light bulb, socket or both.
OK ↓		
2. Check the turn signal indicator light bulb and socket. Refer to “CHECKING THE BULBS AND BULB SOCKETS” on page 8-60.	NG →	Replace the turn signal indicator light bulb, socket or both.
OK ↓		

3. Check the turn signal switch. Refer to “CHECKING THE SWITCHES” on page 8-57.	NG →	The turn signal switch is faulty. Replace the left handlebar switch.
OK ↓		
4. Check the turn signal relay. Refer to “CHECKING THE TURN SIGNAL RELAY” on page 8-65.	NG →	Replace the turn signal relay.
OK ↓		
5. Check the entire signaling system wiring. Refer to “CIRCUIT DIAGRAM” on page 8-19.	NG →	Properly connect or repair the signaling system wiring.
OK ↓		
Replace the meter assembly.		

The neutral indicator light fails to come on.

1. Check the neutral indicator light bulb and socket. Refer to “CHECKING THE BULBS AND BULB SOCKETS” on page 8-60.	NG →	Replace the neutral indicator light bulb, socket or both.
OK ↓		
2. Check the neutral switch. Refer to “CHECKING THE SWITCHES” on page 8-57.	NG →	Replace the neutral switch.
OK ↓		
3. Check the entire signaling system wiring. Refer to “CIRCUIT DIAGRAM” on page 8-19.	NG →	Properly connect or repair the signaling system wiring.
OK ↓		
Replace the meter assembly.		

The fuel gauge fails to operate.

1. Check the fuel sender. Refer to “CHECKING THE FUEL SENDER” on page 8-70.	NG →	Replace the fuel pump assembly.
OK ↓		

2. Check the entire signaling system wiring.
   Refer to “CIRCUIT DIAGRAM” on page 8-19.

NG → Properly connect or repair the signaling system wiring.

OK ↓

Replace the meter assembly.

COOLING SYSTEM

CIRCUIT DIAGRAM

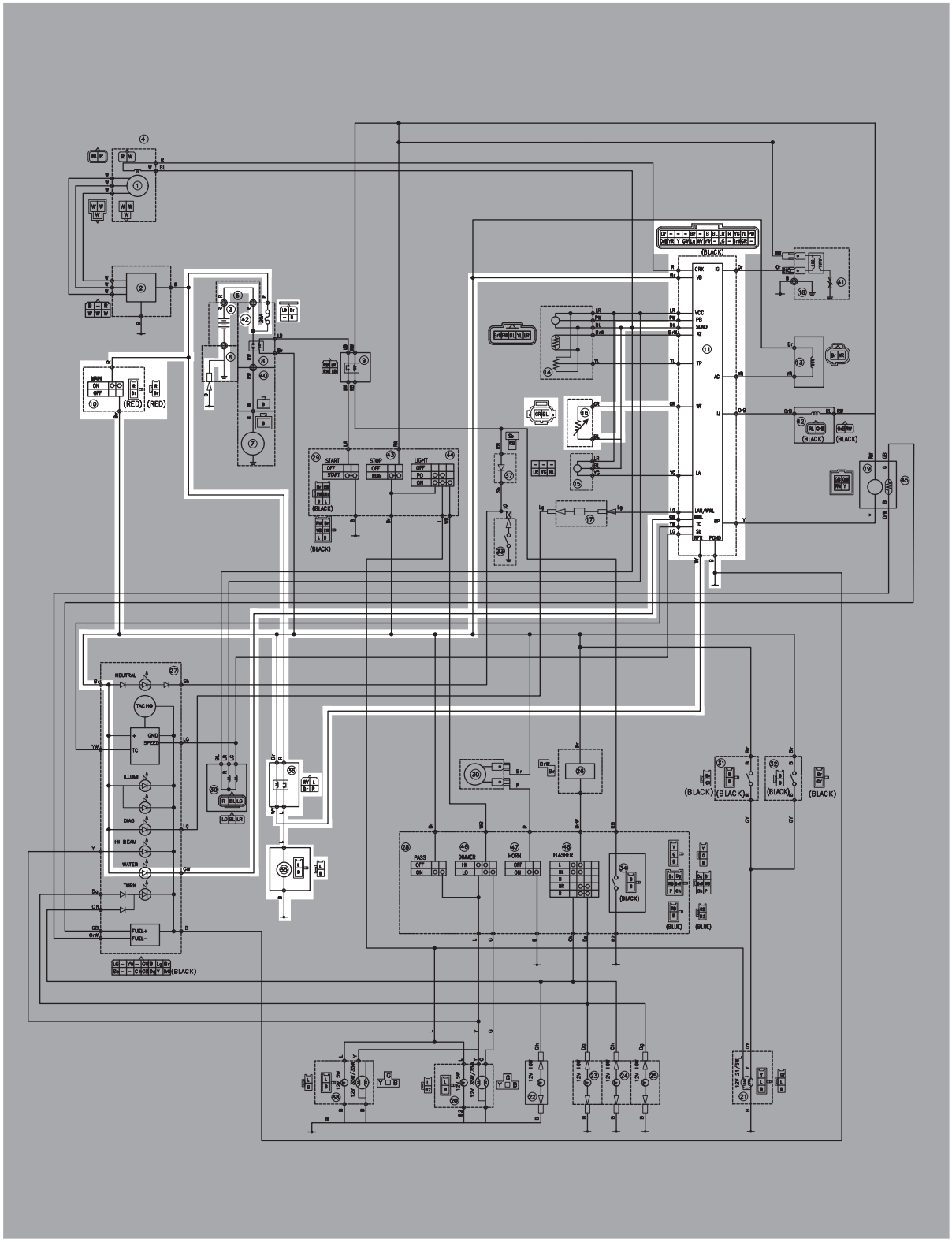

3. Battery
10. Main switch
11. ECU (engine control unit)
16. Coolant temperature sensor
35. Radiator fan motor
36. Radiator fan motor relay
42. Fuse

TROUBLESHOOTING

NOTE:

• Before troubleshooting, remove the following part(s):
1. Seat
2. Left and right front panel
3. Headlight lens unit

1. Check the fuse. Refer to “CHECKING THE FUSE” on page 8-61.	NG →	Replace the fuse.
OK ↓		
2. Check the battery. Refer to “CHECKING AND CHARGING THE BATTERY” on page 8-61.	NG →	• Clean the battery terminals. • Recharge or replace the battery.
OK ↓		
3. Check the main switch. Refer to “CHECKING THE SWITCHES” on page 8-57.	NG →	Replace the main switch.
OK ↓		
4. Check the radiator fan motor. Refer to “CHECKING THE RADIATOR FAN MOTOR” on page 8-71.	NG →	Replace the radiator fan motor.
OK ↓		
5. Check the radiator fan motor relay. Refer to “CHECKING THE RELAYS” on page 8-64.	NG →	Replace the radiator fan motor relay.
OK ↓		
6. Check the coolant temperature sensor. Refer to “CHECKING THE COOLANT TEMPERATURE SENSOR” on page 8-71.	NG →	Replace the coolant temperature sensor.
OK ↓		
7. Check the entire cooling system wiring. Refer to “CIRCUIT DIAGRAM” on page 8-25.	NG →	Properly connect or repair the cooling system wiring.
OK ↓		
Replace the ECU.		

FUEL INJECTION SYSTEM

CIRCUIT DIAGRAM

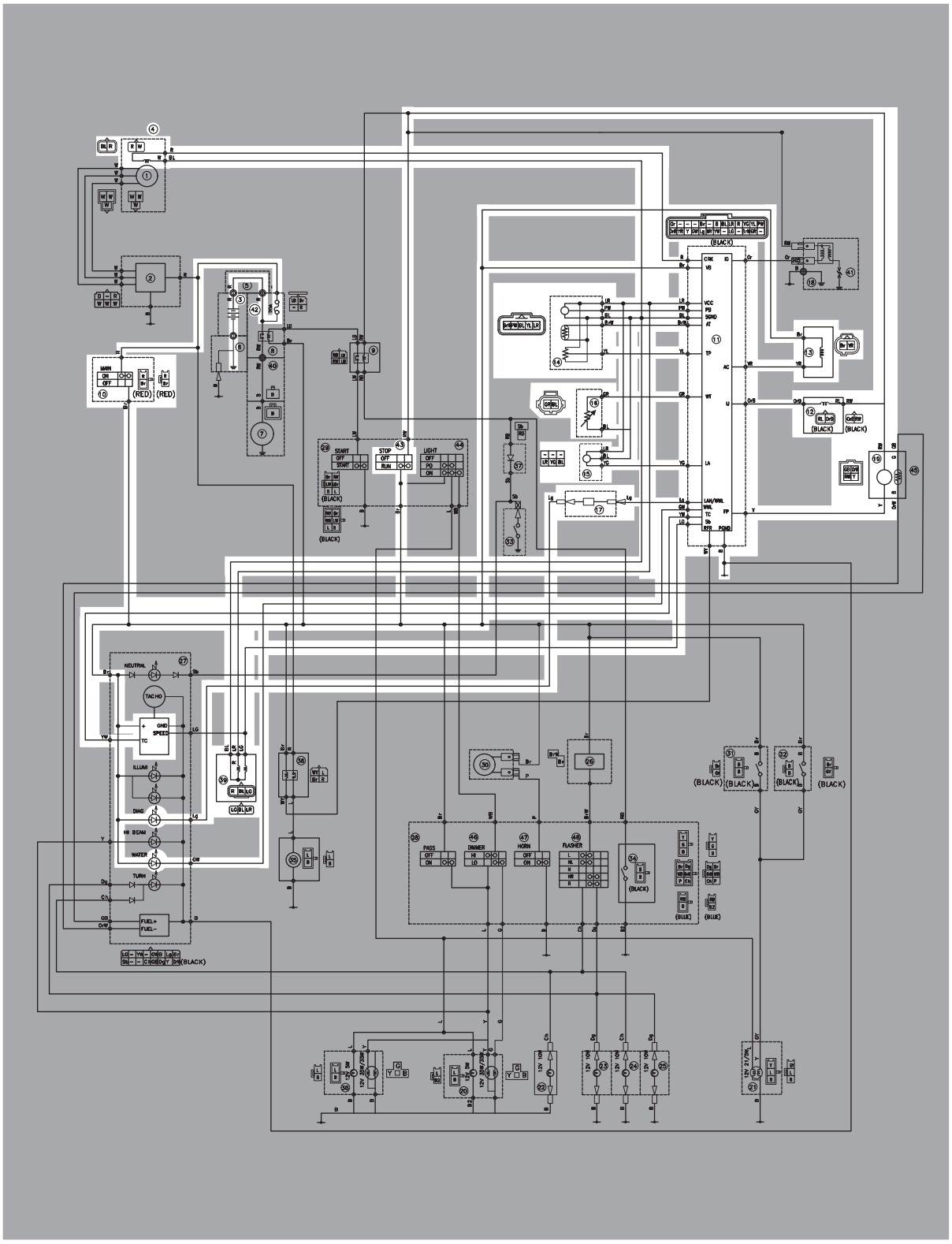

3. Battery
4. Crankshaft position sensor
10. Main switch
11. ECU (engine control unit)
12. Fuel injector
13. FID (fast idle solenoid) device
14. Sensor Module
15. Lean Angle Sensor
16. Coolant temperature sensor
17. Self-diagnosis signal connector
18. Ignition coil
19. Fuel pump
29. Engine stop switch
35. Radiator fan motor
36. Radiator fan motor relay
39. Vehicle speed sensor
41. Spark plug
42. Fuse
43. Stop Switch

ECU SELF-DIAGNOSTIC FUNCTION

The ECU is equipped with a self-diagnostic function in order to ensure that the fuel injection system is operating normally. If this function detects a malfunction in the system, it immediately operates the engine under substitute characteristics and illuminates the engine trouble warning light to alert the rider that a malfunction has occurred in the system. Once a malfunction has been detected, a fault code is stored in the memory of the ECU.

- To inform the rider that the fuel injection system is not functioning, the engine trouble warning light flashes when the start switch is being pushed to start the engine.
- If a malfunction is detected in the system by the self-diagnostic function, the ECU provides an appropriate substitute characteristic operation, and alerts the rider of the detected malfunction by illuminating the engine trouble warning light.
- After the engine has been stopped, the fault code number appears on the engine trouble warning light (or displayed on the FI diagnostic tool). It remains stored in the memory of the ECU until it is deleted.

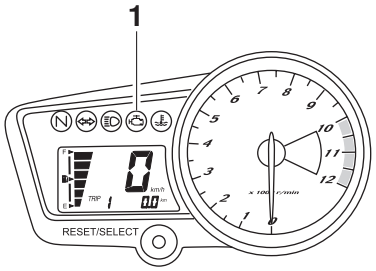

1. Engine trouble warning light

Engine trouble warning light fault code indication

Digit of 10: Cycles of 1 sec. ON and 1.5 sec. OFF.
Digit of 1: Cycles of 0.5 sec. ON and 0.5 sec. OFF.

Example: 42

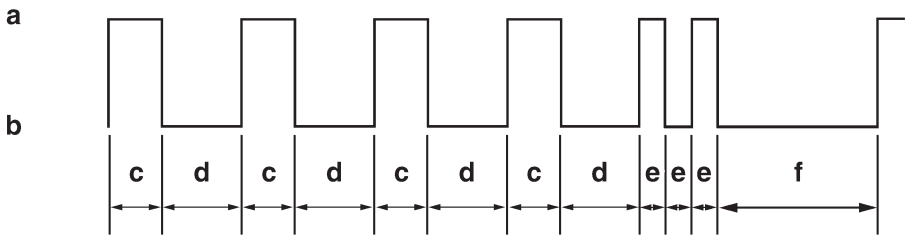

a. Light ON
b. Light OFF
c. 1 sec.
d. 1.5 sec.
e. 0.5 sec.
f. 3 sec.

Engine trouble warning light indication and fuel injection system operation

Warning light indication	ECU operation	Fuel injection operation	Vehicle operation
Flashing* (when starter switch is pushed)	Warning provided when unable to start engine	Operation stopped	Cannot be operated
Remains on	Malfunction detected	Operated with substitute characteristics in accordance with the description of the malfunction	Can or cannot be operated depending on the fault code

* The warning light flashes when any one of the conditions listed below is present and the start switch is pushed:

30: Lean angle sensor (rollover detected)

33: Faulty ignition

39: Fuel injector (open or short circuit)

41: Lean angle sensor (open or short circuit)

50: ECU internal malfunction (memory check error)

Checking the engine trouble warning light bulb

The engine trouble warning light comes on for 3 seconds after the main switch has been turned to“ON”. If the warning light does not come on under these conditions, the communication wire disconnection or the warning light LEDs may be defective.

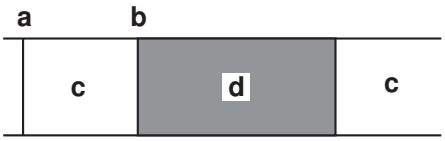

a. Main switch “OFF”
b. Main switch “ON”
c. Engine trouble warning light off
d. Engine trouble warning light on for 3 seconds

NOTE :

Engine unable to start under following conditions.
Engine trouble warning light flashes when the start switch is pushed.

SELF-DIAGNOSTIC FUNCTION TABLE

If the ECU detects an abnormal signal from a sensor while the vehicle is being driven, the ECU illuminates the engine trouble warning light and provides the engine with alternate operating instructions that are appropriate for the type of malfunction.
When an abnormal signal is received from a sensor, the ECU processes the specified values that are programmed for each sensor in order to provide the engine with alternate operating instructions that enable the engine to continue to operate or stop operating, depending on the conditions.

Self-Diagnostic Function table

Fault code No.	Item	Symptom	Able / unable to start	Able / unable to drive
12	Crankshaft position sensor	No normal signals are received from the crankshaft position sensor.	Unable	Unable
13	Intake air pressure sensor (open or short circuit)	Intake air pressure sensor: open or short circuit detected.	Able	Able
14	Intake air pressure sensor (clogged pressure detect hole)	Intake air pressure sensor: clogged pressure detect hole.	Able	Able
15	Throttle position sensor (open or short circuit)	Throttle position sensor: open or short circuit detected.	Able	Able
16	Throttle position sensor (stuck)	Throttle position sensor is stuck	Able	Able
21	Coolant temperature sensor	Coolant temperature sensor: open or short circuit detected.	Able	Able
22	Intake air temperature sensor (open or short circuit)	Intake air temperature sensor: open or short circuit detected.	Able	Able
30	Lean angle sensor (latch up detected)	No normal signal is received from the lean angle sensor.	Unable	Unable
33	Ignition coil (open circuit)	Primary lead of the ignition coil: open circuit detected.	Unable	Unable
39	Fuel injector	Fuel injector: open or short circuit detected.	Unable	Unable
41	Lean angle sensor (open or short circuit)	Lean angle sensor: open or short circuit detected.	Unable	Unable
42	Speed Sensor (open or short circuit)	No Normal Signals are received from the speed sensor	Able	Able
44	Error in reading from or writing on EEPROM	Error is detected while reading from or writing on EEPROM (CO adjustment value, code re-registering key code, and throttle valve fully closed notification value).	Able	Able
46	Vehicle system power supply (Monitoring voltage)	Power supply to the fuel injection system is not normal.	Able	Able
50	ECU internal malfunction (memory check error)	Faulty ECU memory. (When this malfunction is detected in the ECU, the fault code number might not appear on the meter.)	Unable	Unable
—	Start unable warning	Engine trouble warning light flashes when the start switch is turned ON.	Unable	Unable

TROUBLESHOOTING METHOD

The engine operation is not normal and the engine trouble warning light comes on.

1. Check:
   - Fault code number

▼▼▼▼▼▼▼▼▼▼▼▼▼▼▼▼▼▼▼▼▼▼▼▼▼▼▼▼▼▼

a. Check the fault code number displayed on the FI diagnostic tool or Meter.
b. Identify the faulty system with the fault code. Refer to “Self-Diagnostic Function table”.
c. Identify the probable cause of the malfunction. Refer to “Diagnostic code table”.

▲▲▲▲▲▲▲▲▲▲▲▲▲▲▲▲▲▲▲▲▲▲▲▲▲▲▲▲▲▲

2. Check and repair the probable cause of malfunction.

Fault code No.	No fault code No.
Check and repair. Refer to “TROUBLESHOOTING DETAILS” on page 8-40. Monitor the operation of the sensors and actuators in the diagnostic mode. Refer to “Sensor operation table” and “Actuator operation table”.	Check and repair. Refer to “Self-Diagnostic Function table”.

3. Perform Fuel Injection System reinstatement action.
   Refer to “Reinstatement method” of table in “TROUBLESHOOTING DETAILS” on page 8-40.
4. Turn the main switch to “OFF” and back to “ON”, then check that no fault code number is displayed.

NOTE:

If fault codes are displayed, repeat steps (1) to (4) until no fault code number is displayed.

5. Erase the malfunction history in the diagnostic mode. Refer to“Sensor operation table (Diagnostic code No. 62)”.

NOTE:

Turning the main switch to “OFF” will not erase the malfunction history.

The engine operation is not normal but the engine trouble warning light does not come on.

1. Check the operation of following sensors and actuators in the Diagnostic mode. Refer to “Sensor operation table” and “Actuator operation table”.

30: Ignition coil
36: Fuel injector

If a malfunction is detected in the sensors or actuators, repair or replace all faulty parts.
If no malfunction is detected in the sensors and actuators, check and repair inner parts of the engine.

DIAGNOSTIC MODE

It is possible to monitor the sensor output data or check the activation of actuators with the FI diagnostic tool connected to the vehicle and set to the normal mode or the diagnostic monitoring mode.

	**FI diagnostic tool**

Setting the normal mode

NOTE:

The engine speed, coolant temperature, and fault code, if detected, can be displayed on the LCD of the FI diagnostic tool when the tool is connected to the vehicle and is set to the normal mode.

1. Turn the main switch to “OFF”.
2. Disconnect the self-diagnosis signal connector “1”, and then connect the FI diagnostic tool “2” as shown.
3. Turn the main switch to “ON” and start the engine.

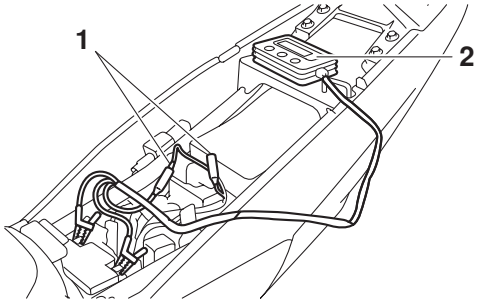

NOTE:

- Coolant temperature and engine revolution appear on the LCD of the FI diagnostic tool.
- “POWER” LED (green) comes on.
- If a malfunction is detected in the system, “WARNING” LED (orange) comes on.

4. Stop the engine.

NOTE:

If a malfunction is detected in the system, the fault code appears on the LCD of the FI diagnostic tool. And also, “WARNING” LED (orange) comes on.

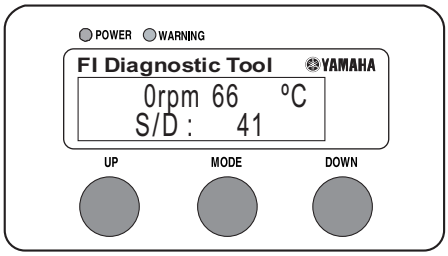

Communication error with the FI diagnostic tool

LCD Display	Symptom	Probable cause of malfunction
Waiting for connection....	No signals are received from the ECU.	• Improper connection in connecting lead. • The main switch is “OFF” position. • Malfunction in FI diagnostic tool. • Malfunction in ECU.
ERROR 4	Commands from the FI diagnostic tool are not accepted by the ECU.	• Turn the main switch to “OFF” once, and then set the FI diagnostic tool to CO adjustment mode or diagnostic mode. • Vehicle battery is insufficiently charged. • Malfunction in FI diagnostic tool. • Malfunction in ECU.

5. Turn the main switch to “OFF” to cancel the normal mode.
6. Disconnect the FI diagnostic tool and connect the self-diagnosis signal connector.

Setting the diagnostic mode

1. Turn the main switch to “OFF”.
2. Disconnect the self-diagnosis signal connector “1”, and then connect the FI diagnostic tool “2” as shown.
3. While press the “MODE” button, turn the main switch to “ON”.

NOTE:

- “DIAG” appears on the LCD of the FI diagnostic tool.
- “POWER” LED (Green) comes on.

4. Press the “UP” button to select the CO adjustment mode “CO” or the diagnostic mode “DIAG”.
5. After selecting “DIAG”, press the “MODE” button.
6. Select the diagnostic code number corresponding to the fault code number by pressing the “UP” and “DOWN” buttons.

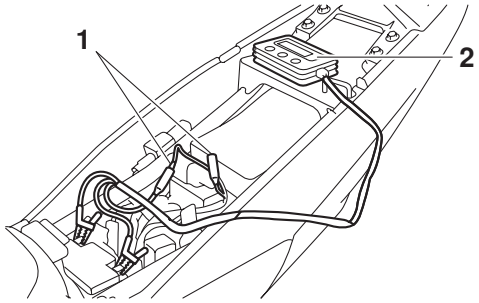

NOTE:

- The diagnostic code number appears on the LCD (01-70).
- To decrease the selected diagnostic code number, press the “DOWN” button. Press the “DOWN” button for 1 second or longer to automatically decrease the diagnostic code numbers.
- To increase the selected diagnostic code number, press the “UP” button. Press the “UP” button for 1 second or longer to automatically increase the diagnostic code numbers.

7. Verify the operation of the sensor or actuator.
   - Sensor operation
     The data representing the operating conditions of the sensor appear on the LCD.
   - Actuator operation
     Press the “MODE” button.

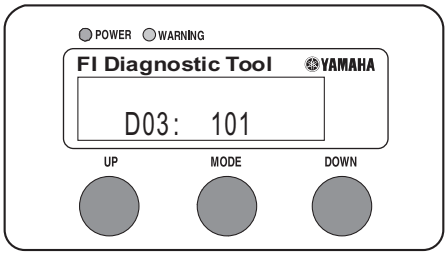

8. Turn the main switch to “OFF” to cancel the diagnostic mode.
9. Disconnect the FI diagnostic tool and connect the self-diagnosis signal connector.

Fault code table

Fault code No.	Symptom	Probable cause of malfunction	Diagnostic code No.
12	No normal signals are received from the crankshaft position sensor.	• Open or short circuit in wire harness. • Defective crankshaft position sensor. • Malfunction in AC magneto rotor. • Improperly installed sensor. • Malfunction in ECU.	—
13	Intake air pressure sensor: open or short circuit detected.	• Open or short circuit in wire harness. • Defective intake air pressure sensor. • Malfunction in ECU.	03
14	Intake air pressure sensor (clogged pressure detect hole).	• Intake air pressure sensor detect hole is clogged. • Malfunction in ECU.	03
15	Throttle position sensor: open or short circuit detected.	• Open or short circuit in wire harness. • Defective throttle position sensor. • Improperly installed throttle position sensor. • Malfunction in ECU	01
16	Stuck throttle position sensor is detected.	• Stuck throttle position sensor. • Malfunction in ECU.	01
21	Coolant temperature sensor: open or short circuit detected.	• Open or short circuit in wire harness. • Defective coolant temperature sensor. • Malfunction in ECU. • Improperly installed coolant temperature sensor.	06
22	Intake air temperature sensor: open or short circuit detected.	• Open or short circuit in wire harness. • Defective air temperature sensor. • Improperly installed intake air temperature sensor. • Malfunction in ECU.	05
30	Rollover signal is received from the lean angle sensor.	• Overturned. • Malfunction in ECU.	08
33	Primary lead of the ignition coil: open circuit detected.	• Open circuit in wire harness. • Malfunction in ignition coil. • Malfunction in a component of ignition cut-off circuit system. • Malfunction in ECU.	30
39	Fuel injector: open or short circuit detected.	• Open or short circuit in wire harness. • Defective fuel injector. • Improperly installed fuel injector. • Malfunction in ECU.	36
41	Lean angle sensor: open or short circuit detected.	• Open or short circuit in wire harness. • Defective lean angle sensor. • Malfunction in ECU.	08
42	No normal signals received from the speed sensor	• Open or short circuit in wire harness. • Defective lean angle sensor. • Malfunction in ECU.	07

Fault code No.	Symptom	Probable cause of malfunction	Diagnostic code No.
44	Error is detected while reading or writing on EEPROM.	• Malfunction in ECU. (The CO adjustment value and throttle valve fully closed notification valve are not properly written on or read from the internal memory.)	60
46	Power supply to the fuel injection system is not normal. (over charge or over discharge)	• Malfunction in the charging system. Refer to “CHARGING SYSTEM” & check rectifier & regulator on page 8-11.	—
50	Faulty ECU memory. (When this malfunction is detected in the ECU, the fault code number might not appear on the LCD of the FI diagnostic tool.)	• Malfunction in ECU. (The program and data are not properly written on or read from the internal memory.)	—

Diagnostic Code Table

Diagnostic code No.	Item	FI diagnostic tool display	Checking method
01	Throttle angle • Fully closed position • Fully opened position	 14–20 97–107	Check for changes in displayed values while opening and closing the throttle.
03	Intake air pressure	Displays the intake air pressure.	Operate the throttle while pushing the start switch “⊛”. (If the display value changes, the performance is OK.)
05	Intake air temperature	Displays the intake air temperature.	Compare the actually measured air temperature with the display value.
06	Coolant temperature	Displays the coolant temperature.	Compare the actually measured coolant temperature with the meter display value.
07	Vehicle speed pulse	0-999	Check that the number increase when the front wheel is rotated. The number is cumulative and does not reset each. time the wheel is stopped.
08	Lean angle sensor • Upright • Overturned	 0.4–1.4 3.8–4.2	Remove the lean angle sensor and incline it more than 65 degrees.
09	Fuel system voltage (battery voltage)	Approximately 12.0	Compare with the actually measured battery voltage. (If the battery voltage is lower, perform recharging.)

Diagnostic code No.	Item	Actuation	Checking method
30	Ignition coil	When the “MODE” button is pressed, the ignition coil is actuated five times at one-second intervals. Illuminates the “WARNING” on the FI diagnostic tool.	Check the spark five times. • Connect an ignition checker.
36	Fuel injector	When the “MODE” button is pressed, the fuel injector is actuated five times at one-second intervals. Illuminates the “WARNING” on the FI diagnostic tool.	Check the operating sound of the injector five times.
51	Radiator fan motor relay	Actuates the radiator fan motor relay for five cycles every five-second. (ON 2 seconds, OFF 3 seconds) Illuminates the engine trouble warning light.	Check the operating sound of the Radiator fan motor relay five times.
54	FID (fast idle solenoid) device	When the “MODE” button is pressed, the FID (fast idle solenoid) device is actuated five times at one second intervals. Illuminates the “WARNING” on the FI diagnostic tool.	Check the operating sound of the FID five times.
60	EEPROM fault code display • No history • History exists	00 01: CO adjustment value is detected.	—
61	Malfunction history code display • No history • History exists	00 Fault codes 12–50 • (If more than one code number is detected, the display alternates every two seconds to show all the detected code numbers. When all code numbers are shown, the display repeats the same process.)	—

Diag-nostic code No.	Item	Actuation	Checking method
62	Malfunction history code erasure • No history • History exists	 00 Up to 14 fault codes	 — To erase the history, press the “MODE” button of the FI diagnostic tool.
70	Control number	0–254	—

TROUBLESHOOTING DETAILS

This section describes the measures per fault code number displayed on the FI diagnostic tool. Check and service the items or components that are the probable cause of the malfunction following the order given.

After the check and service of the malfunctioning part has been completed, reset the FI diagnostic tool display according to the reinstatement method.

Fault code No.:

Fault code number displayed on the FI diagnostic tool when the engine failed to work normally. Refer to “Diagnostic code table”.

Diagnostic code No.:

Diagnostic code number to be used when the diagnostic mode is operated. Refer to“Sensor operation table” and “Actuator operation table”.

Fault code No.	**12**	**Symptom**	**No normal signals are received from the crankshaft position sensor.**
Diagnostic code No.		**—**	**—**

Order	**Item/components and probable cause**	**Check or maintenance job**	**Reinstatement method**
1	Installed condition of crankshaft position sensor.	Check for looseness or pinching.	Cranking the engine.
2	Connections • Crankshaft position sensor coupler • Main wire harness ECU coupler	• Check the coupler for any pins that may be pulled out. • Check the locking condition of the coupler. • If there is a malfunction, repair it and connect the coupler securely.	
3	Open or short circuit in wire harness.	• Repair or replace if there is an open or short circuit. • Between the crankshaft position sensor coupler and ECU coupler. (red–red) (black/blue–black/blue)	
4	Defective crankshaft position sensor.	• Replace if defective. Refer to “CHECKING THE CRANKSHAFT POSITION SENSOR” on page 8-68.	

CAUTION:

Do not remove the sensor module (throttle body sensor assembly) from the throttle body.

Fault code No.	**13**	**Symptom**	**Intake air pressure sensor: open or short circuit detected.**
Diagnostic code No.		**03**	**Intake air pressure sensor**

Order	**Item/components and probable cause**	**Check or maintenance job**	**Reinstatement method**
1	Connections • Intake air pressure sensor coupler • Main wire harness ECU coupler	• Check the coupler for any pins that may be pulled out. • Check the locking condition of the coupler. • If there is a malfunction, repair it and connect the coupler securely.	Turning the main switch to “ON”.
2	Open or short circuit in wire harness.	• Repair or replace if there is an open or short circuit. • Between intake air pressure sensor coupler and ECU coupler (blue/red–blue/red) (pink/white–pink/white) (black/blue–black/blue)	
3	Defective intake air pressure sensor.	• Execute the diagnostic mode. (Code No.03) • Replace the throttle body if defective. Refer to “CHECKING THE THROTTLE BODY SENSOR ASSEMBLY” on page 8-72. **CAUTION:** **Do not remove the throttle body sensor assembly from the throttle body.**	

CAUTION:

Do not remove the sensor module (throttle body sensor assembly) from the throttle body.

Fault code No.	**14**	**Symptom**	**Intake air pressure sensor: malfunction clogged pressure detect hole**
Diagnostic code No.		**03**	**Intake air pressure sensor**

Order	**Item/components and probable cause**	**Check or maintenance job**	**Reinstatement method**
1	Installed condition of sensor module.	• Check and repair the connection. • Replace throttle body if there is a malfunction.	Starting the engine and operating it at 1000 rpm and above.
2.	Defective intake air pressure sensor.	• Execute the diagnostic mode. (Code No.03) • Replace the throttle body if defective. Refer to “CHECKING THE THROTTLE BODY SENSOR ASSEMBLY” on page 8-72. **CAUTION:** **Do not remove the throttle body sensor assembly from the throttle body.**	

CAUTION:

Do not remove the sensor module (throttle body sensor assembly) from the throttle body.

Fault code No.	**15**	**Symptom**	**Throttle position sensor: open or short circuit detected.**
Diagnostic code No.		**01**	**Throttle position sensor**

Order	**Item/components and probable cause**	**Check or maintenance job**	**Reinstatement method**
1	Installed condition of throttle position sensor.	• Check for looseness or pinching. • Check that the sensor is installed in the specified position.	Turning the main switch to “ON”.
2	Connections • Throttle position sensor coupler • Main wire harness ECU coupler	• Check the coupler for any pins that may be pulled out. • Check the locking condition of the coupler. • If there is a malfunction, repair it and connect the coupler securely.	
3	Open or short circuit in wire harness.	• Repair or replace if there is an open or short circuit. • Between throttle position sensor coupler and ECU coupler (blue/red–blue/red) (yellow/blue–yellow/blue) (black/blue–black/blue)	
4	Defective throttle position sensor.	• Execute the diagnostic mode. (Code No.01) • Replace the throttle body if defective. Refer to “CHECKING THE THROTTLE BODY SENSOR ASSEMBLY” on page 8-72. **CAUTION:** **Do not remove the throttle body sensor assembly from the throttle body.**	

Fault code No.	16	Symptom	Throttle position sensor is stuck.	
Diagnostic code No.		01	Throttle position sensor	
Order	**Item/components and probable cause**		**Check or maintenance job**	**Reinstatement method**
1	Installed condition of throttle position sensor.		• Check for looseness or pinching. • Check that the sensor is installed in the specified position.	Turning the main switch on then open & close the throttle valve.
2	Defective throttle position sensor.		• Execute the diagnostic mode. (Code No.01) • Replace the throttle body if defective. Refer to “CHECKING THE THROTTLE BODY SENSOR ASSEMBLY” on page 8-72. **CAUTION:** **Do not remove the throttle body sensor assembly from the throttle body.**	

Fault code No.	21	Symptom	Coolant temperature sensor-open or short circuit detected.	
Diagnostic code No.		06	Coolant temperature sensor	
Order	**Item/components and probable cause**		**Check or maintenance job**	**Reinstatement method**
1	Installed condition of coolant temperature sensor		Check the installed area for looseness or pinching.	Turning the main switch ON.
2	Connected state of connector • Coolant temperature sensor coupler • Main wire harness ECU coupler		• Check the coupler for any pins that may have pulled out. • Check the locking condition of the coupler. • If there is a malfunction, repair it and connect it securely.	
3	Open or short circuit in wire harness and/or sub lead.		• Repair or replace if there is an open or short circuit. • Main wire harness (black/blue–black/blue) (green/red–green/red)	
4	Defective coolant temperature sensor.		• Execute the diagnostic monitoring mode. (Code No.06) • Replace if defective. Refer to “CHECKING THE COOLANT TEMPERATURE SENSOR” on page 8-71.	

Fault code No.	22	Symptom	Intake air temperature sensor: open or short circuit detected.
Diagnostic code No.		05	Intake air temperature sensor

Order	Item/components and probable cause	Check or maintenance job	Reinstatement method
1	Connections • Sensor module coupler. • Main wire harness ECU coupler	• Check the couplers for any pins that may be pulled out. • Check the locking condition of the couplers. • If there is a malfunction, repair it and connect the coupler securely.	Turning the main switch ON.
2	Open or short circuit in wire harness.	• Repair or replace if there is an open or short circuit. • Between throttle body sensor assembly coupler and ECU coupler. (brown/white–brown/white) (black/blue–black/blue)	
3	Defective intake air temperature sensor.	• Execute the diagnostic mode. (Code No.05) • Replace the throttle body if defective. Refer to “CHECKING THE THROTTLE BODY SENSOR ASSEMBLY” on page 8-72. **CAUTION:** **Do not remove the throttle body sensor assembly from the throttle body.**	

Fault code No.	30	Symptom	Rollover signal is received from the lean angle sensor.
Diagnostic code No.		08	Lean angle sensor

Order	Item/components and probable cause	Check or maintenance job	Reinstatement method
1	The vehicle has overturned.	Raise the vehicle upright.	Turning the main switch to "ON" (however, the engine cannot be restarted unless the main switch is first turned "OFF").
2	Installed condition of the lean angle sensor.	Check for looseness or pinching.	
3	Connections • Lean angle sensor coupler • Main wire harness ECU coupler	• Check the coupler for any pins that may be pulled out. • Check the locking condition of the coupler. • If there is a malfunction, repair it and connect the coupler securely.	
4	Defective lean angle sensor.	• Execute the diagnostic mode. (Code No.08) • Replace if defective. Refer to "CHECKING THE LEAN ANGLE SENSOR" on page 8-68.	

Fault code No.	33	Symptom	Primary lead of the ignition coil: open circuit detected.
Diagnostic code No.		30	Ignition coil

Order	Item/components and probable cause	Check or maintenance job	Reinstatement method
1	Connections • Ignition coil connector (primary coil side) • Main wire harness ECU coupler	• Check the connector and coupler for any pins that may be pulled out. • Check the locking condition of the connector and coupler. • If there is a malfunction, repair it and connect the coupler securely.	Starting the engine.
2	Open or short circuit in wire harness.	• Repair or replace if there is an open or short circuit. • Between ignition coil connector and ECU coupler/main wire harness. (red/white–red/white) (orange–orange)	
3	Defective ignition coil.	• Execute the diagnostic mode. (Code No.30) • Test the primary and secondary coils for continuity. • Replace if defective. Refer to "IGNITION SYSTEM" on page 8-1.	

Fault code No.	39	Symptom	Open or short circuit detected in injector.
Diagnostic code No.		36	Fuel injector

Order	Item/components and probable cause	Check or maintenance job	Reinstatement method
1	Connections • Injector coupler • Main wire harness ECU coupler	• Check the couplers for any pins that may be pulled out. • Check the locking condition of the couplers. • If there is a malfunction, repair it and connect the coupler securely.	Starting the engine.
2	Open or short circuit in wire harness.	• Repair or replace if there is an open or short circuit. • Between fuel injector coupler and ECU coupler. (red/white–red/white) (orange/black–orange/black)	
3	Defective primary injector.	• Execute the diagnostic mode. (Code No.36) • Replace if defective. Refer to “CHECKING THE FUEL INJECTOR” on page 7-6.	

Fault code No.	41	Symptom	Lean angle sensor: open or short circuit detected.
Diagnostic code No.		08	Lean angle sensor

Order	Item/components and probable cause	Check or maintenance job	Reinstatement method
1	Connections • Lean angle sensor coupler • Main wire harness ECU coupler	• Check the coupler for any pins that may be pulled out. • Check the locking condition of the coupler. • If there is a malfunction, repair it and connect the coupler securely.	Turning the main switch to “ON”.
2	Open or short circuit in lead wire.	• Repair or replace if there is an open or short circuit. • Between lean angle sensor coupler and ECU coupler. (blue/red–blue/red) (yellow/green–yellow/green) (black/blue–black/blue)	
3	Defective lean angle sensor.	• Execute the diagnostic mode. (Code No.08) • Replace if defective. Refer to “CHECKING THE LEAN ANGLE SENSOR” on page 8-68.	

Fault code No.	44	Symptom	Error is detected while reading from or writing on EEPROM (CO adjustment value, code re-registering key code, and throttle valve fully closed notification value).
Diagnostic code No.		60	EEPROM fault code display

Order	Item/components and probable cause	Check or maintenance job	Reinstatement method
1	Malfunction in ECU.	• Execute the diagnostic mode. (Code No.60). • 01 is displayed. Adjust the exhaust gas volume (refer to page no. 3-5) Replace ECU if defective.	Turning the main switch to "ON".

Fault code No.	46	Symptom	Power supply to the fuel injection system is not normal.
Diagnostic code No.		—	—

Order	Item/components and probable cause	Check or maintenance job	Reinstatement method
1	Connections • Main wire harness ECU coupler	• Check the coupler for any pins that may be pulled out. • Check the locking condition of the coupler. • If there is a malfunction, repair it and connect the coupler securely.	Starting the engine and operating it at idle.
2	Faulty battery.	• Replace or change the battery Refer to "CHECKING AND CHARGING THE BATTERY" on page 8-61.	
3	Malfunction in rectifier/regulator	• Replace if defective. Refer to "CHARGING SYSTEM" on page 8-11.	
4	Open or short circuit in wire harness.	Repair or replace if there is an open or short circuit. • Between battery and main switch (red–red) • Between main switch and ECU (brown–brown)	

Fault code No.	50	Symptom	Faulty ECU memory. (When this malfunction is detected in the ECU, the fault code number might not appear on the meter.)
Diagnostic code No.		—	—

Order	Item/components and probable cause	Check or maintenance job	Reinstatement method
1	Malfunction in ECU.	Replace the ECU. **NOTE:** Do not perform this procedure with the main switch turned to "ON".	Turning the main switch to "ON".

Fault code No.	42	Symptom	No normal signals are received from the speed sensor.
Diagnostic code No.		07	Speed sensor

Order	Item/components and probable cause	Check or maintenance job	Reinstatement method
1	Installed state of speed sensor.	Check for looseness or pinching.	Starting the engine, and activating the speed sensor by operating the vehicle.
2	Connections • Speed sensor coupler • Main wire harness ECU coupler	• Check the couplers for any pins that may be pulled out. • Check the locking condition of the couplers. • If there is a malfunction, repair it and connect the coupler securely.	
3	Open or short circuit in lead.	• Repair or replace if there is an open or short circuit. • Between speed sensor coupler and ECU coupler.	
4	Defective speed sensor.	• Execute the diagnostic mode. (Code No. 07) • Replace if defective. Refer to “CHECKING THE SPEED SENSOR” on page 8-74	

FUEL PUMP SYSTEM

CIRCUIT DIAGRAM

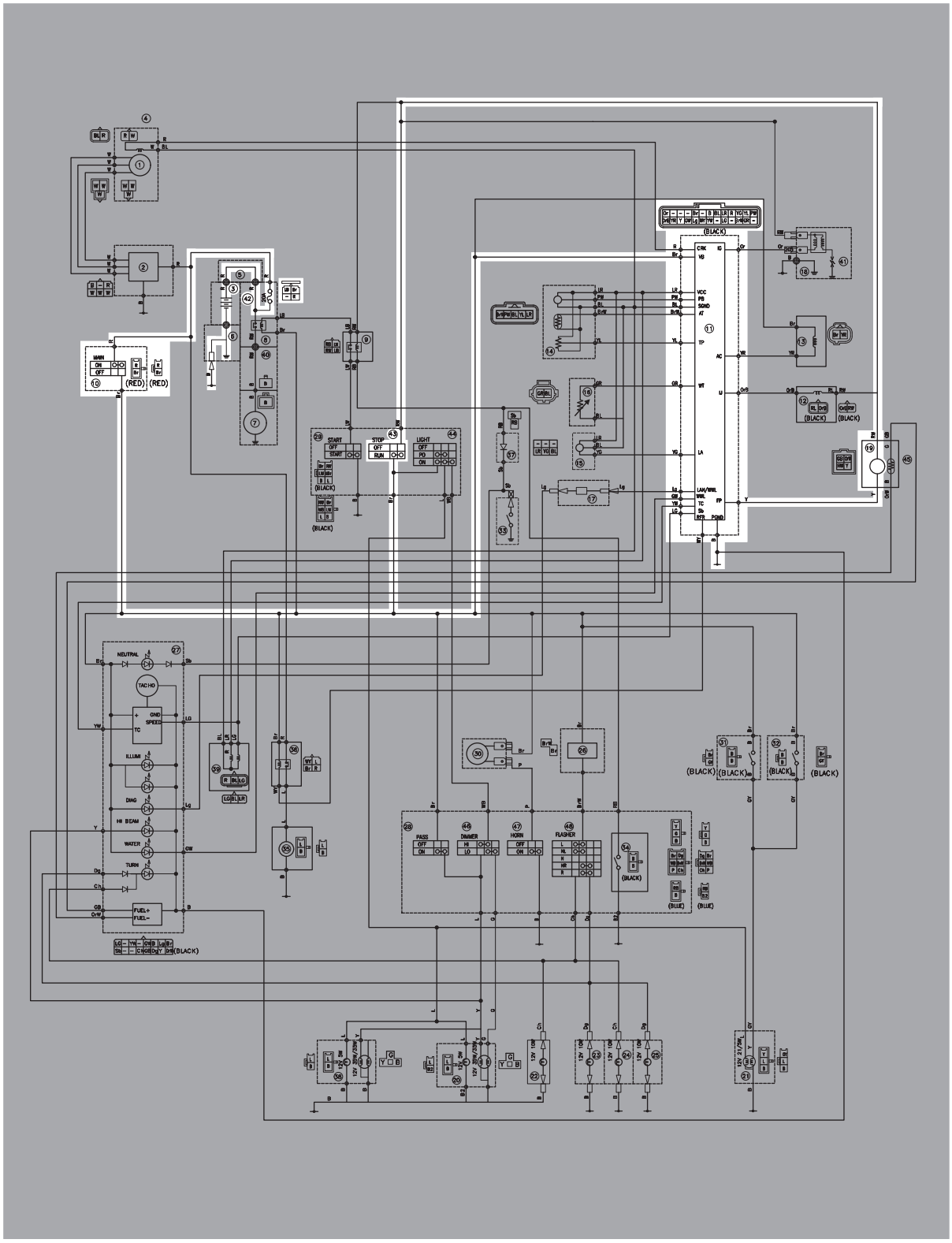

3. Battery
10. Main switch
11. ECU (engine control unit)
19. Fuel pump
42. Fuse
43. Stop switch

TROUBLESHOOTING

If the fuel pump fails to operate.

NOTE:

• Before troubleshooting, remove the following part(s):
1. Seat
2. Fuel tank

1. Check the fuse. Refer to “CHECKING THE FUSE” on page 8-61.	NG →	Replace the fuse.
OK ↓		
2. Check the battery. Refer to “CHECKING AND CHARGING THE BATTERY” on page 8-61.	NG →	• Clean the battery terminals. • Recharge or replace the battery.
OK ↓		
3. Check the main switch. Refer to “CHECKING THE SWITCHES” on page 8-57.	NG →	Replace the main switch.
OK ↓		
4. Check the engine stop switch. Refer to “CHECKING THE SWITCHES” on page 8-57.	NG →	The engine stop switch is faulty. Replace the right handlebar switch.
OK ↓		
5. Check the fuel pump. Refer to “CHECKING THE FUEL PUMP BODY” on page 7-2.	NG →	Replace the fuel pump assembly.
OK ↓		
6. Check the entire fuel pump system wiring. Refer to “CIRCUIT DIAGRAM” on page 8-51.	NG →	Properly connect or repair the fuel pump system wiring.
OK ↓		
Replace the ECU.		

ELECTRICAL COMPONENTS

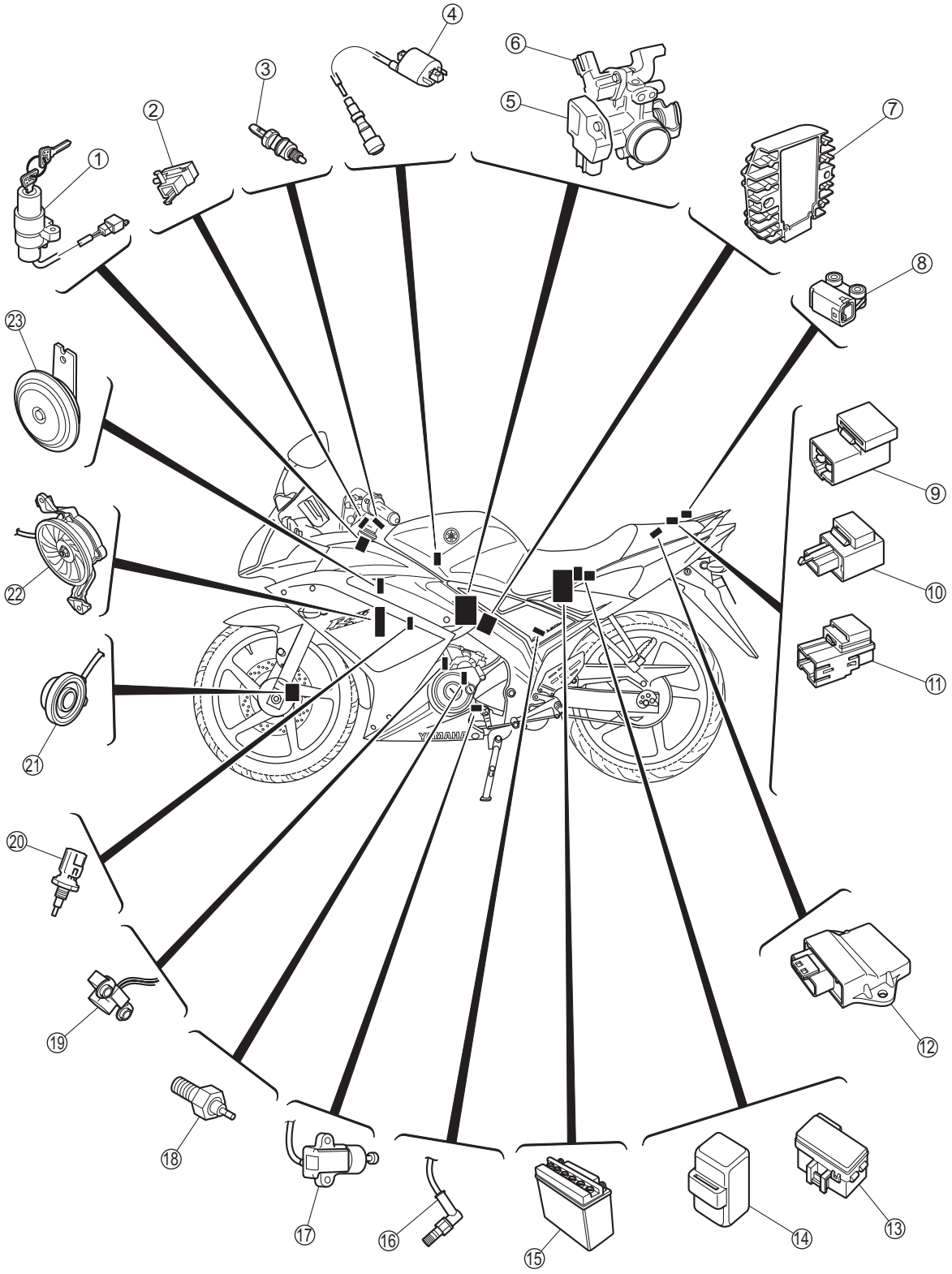

1. Main switch
2. Clutch switch
3. Front brake light switch
4. Ignition coil
5. Throttle body sensor assembly (intake air pressure sensor, intake air temperature sensor, throttle position sensor)
6. FID (fast idle solenoid) device
7. Rectifier/regulator
8. Lean angle sensor
9. Starting circuit cut-off relay
10. Turn signal relay
11. Radiator fan motor relay
12. ECU (engine control unit)
13. Fuse box
14. Starter relay
15. Battery
16. Rear brake light switch
17. Sidestand switch
18. Neutral switch
19. Crankshaft position sensor
20. Coolant temperature sensor
21. Speed sensor
22. Radiator fan
23. Horn

CHECKING THE SWITCHES

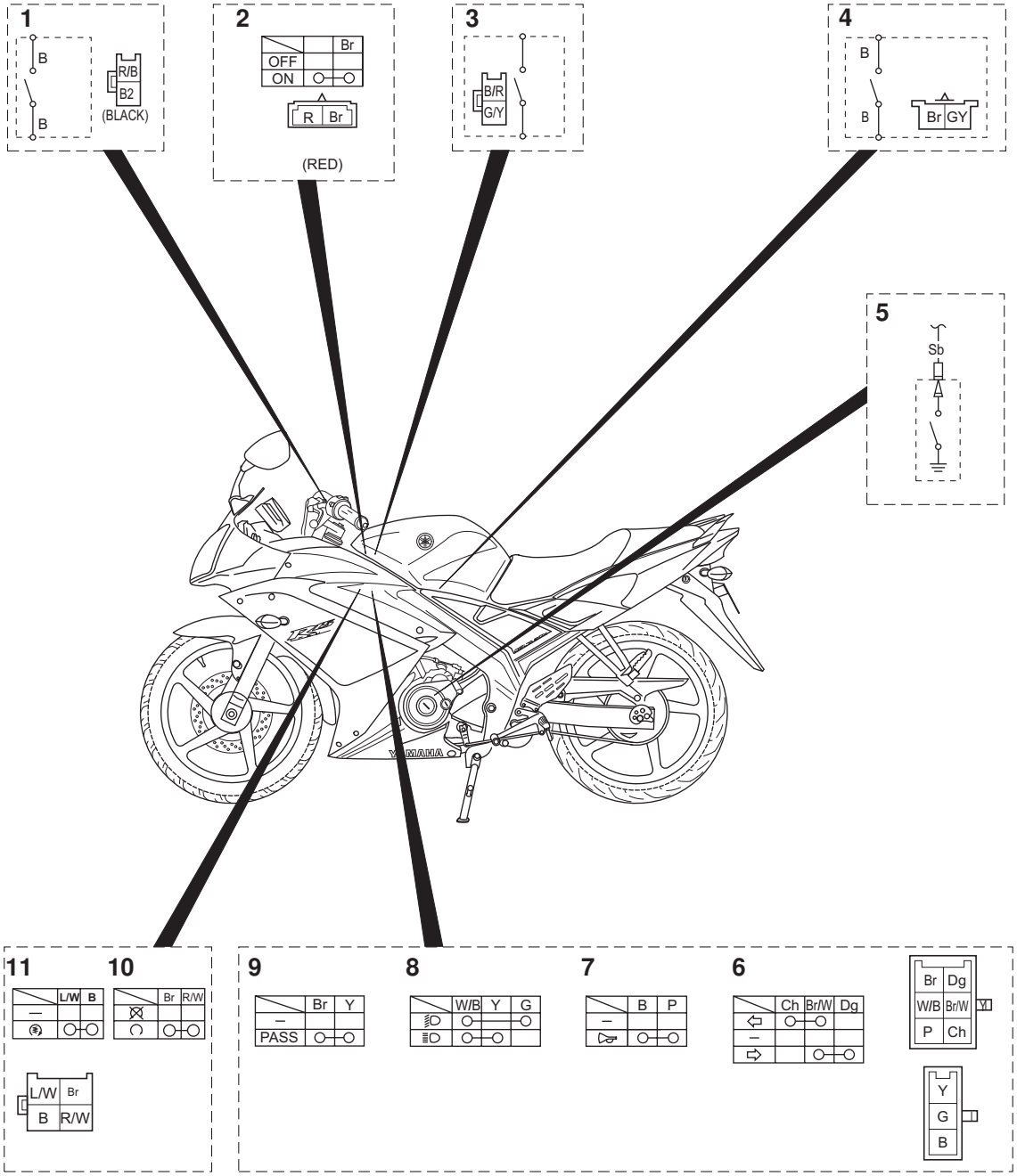

1. Clutch switch
2. Main switch
3. Front brake light switch
4. Rear brake light switch
5. Neutral switch
6. Turn signal switch
7. Horn switch
8. Dimmer switch
9. Pass switch
10. Engine stop switch
11. Start switch

Check each switch for continuity with the multimeter. If the continuity reading is incorrect, check the wiring connections and if necessary, replace the switch.

CAUTION:

Never insert the tester probes into the coupler terminal slots "a". Always insert the probes from the opposite end of the coupler, taking care not to loosen or damage the leads.

	**Multimeter**

NOTE:

- Before checking for continuity, set the multimeter to continuity mode.
- When checking for continuity, switch back and forth between the switch positions a few times.

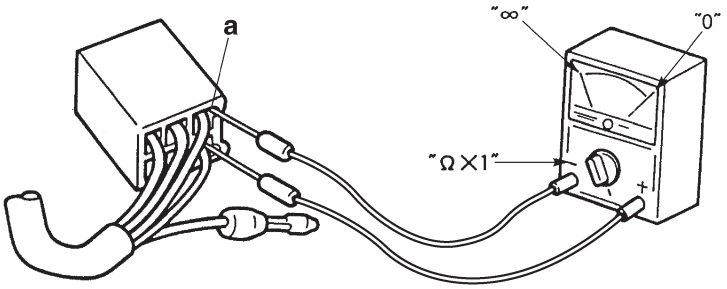

The switches and their terminal connections are illustrated as in the following example of the main switch.
The switch positions "a" are shown in the far left column and the switch lead colors "b" are shown in the top row.
The continuity (i. e., a closed circuit) between switch terminals at a given switch position is indicated by " ○——○ ". There is continuity between red, and brown/blue when the switch is set to "ON".

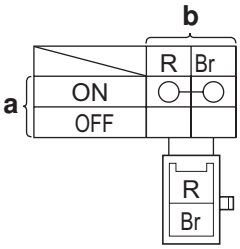

CHECKING THE BULBS AND BULB SOCKETS

Check each bulb and bulb socket for damage or wear, proper connections, and also for continuity between the terminals.
Damage/wear → Repair or replace the bulb, bulb socket or both.
Improperly connected → Properly connect.
No continuity → Repair or replace the bulb, bulb socket or both.

Types of bulbs

The bulbs used on this vehicle are shown in the illustration on the left.

- Bulbs “a” and “b” are used for the headlights and usually use a bulb holder that must be detached before removing the bulb. The majority of these types of bulbs can be removed from their respective socket by turning them counterclockwise.
- Bulbs “c” is used for turn signal and tail/brake lights and can be removed from the socket by pushing and turning the bulb counterclockwise.

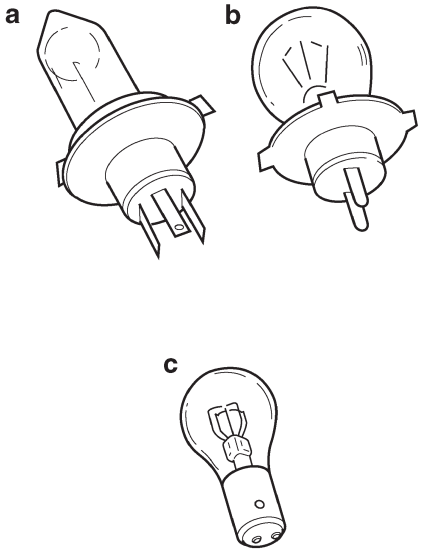

Checking the condition of the bulbs

The following procedure applies to all of the bulbs.

1. Remove:
   - Bulb

WARNING

Since headlight bulb get extremely hot, keep flammable products and your hands away from them until they have cooled down.

CAUTION:

- **Be sure to hold the socket firmly when removing the bulb. Never pull the lead, otherwise it may be pulled out of the terminal in the coupler.**
- **Avoid touching the glass part of a headlight bulb to keep it free from oil, otherwise the transparency of the glass, the life of the bulb, and the luminous flux will be adversely affected. If the headlight bulb gets soiled, thoroughly clean it with a cloth moistened with alcohol or lacquer thinner.**

2. Check:
   - Bulb (for continuity)
     (with the multimeter)
     No continuity → Replace.

	**Multimeter**

NOTE:

Before checking for continuity, set the multi meter to continuity mode.

a. Connect the positive tester probe to terminal “1” and the negative tester probe to terminal “2”, and check the continuity.
b. Connect the positive tester probe to terminal “1” and the negative tester probe to terminal “3”, and check the continuity.
c. If either of the readings indicate no continuity, replace the bulb.

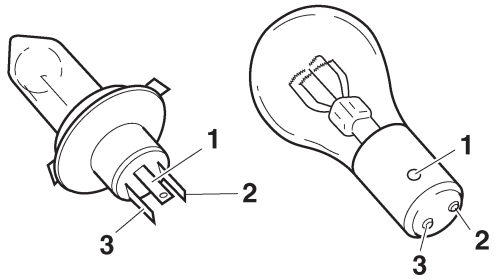

Checking the condition of the bulb sockets
The following procedure applies to all of the bulb sockets.
1. Check:
   - Bulb socket (for continuity)
     (with the multimeter)
     No continuity → Replace.

	**Multimeter**

NOTE:
Check each bulb socket for continuity in the same manner as described in the bulb section; however, note the following.

a. Install a good bulb into the bulb socket.
b. Connect the multimeter probes to the respective leads of the bulb socket.
c. Check the bulb socket for continuity. If any of the readings indicate no continuity, replace the bulb socket.

▲▲▲▲▲▲▲▲▲▲▲▲▲▲▲▲▲▲▲▲▲▲▲▲▲▲▲▲

CHECKING THE FUSE

CAUTION:
To avoid a short circuit, always turn the main switch to "OFF" when checking or replacing a fuse.

1. Remove:
   - Seat
     Refer to "GENERAL CHASSIS" on page 4-1.
2. Check:
   - Fuse

▼▼▼▼▼▼▼▼▼▼▼▼▼▼▼▼▼▼▼▼▼▼▼▼▼▼▼▼

a. Connect the multimeter to the fuse and check the continuity.

NOTE:
Set the multimeter selector to "Ω × 1".

	**Multimeter**

b. If the multimeter indicates "∞", replace the fuse.

▲▲▲▲▲▲▲▲▲▲▲▲▲▲▲▲▲▲▲▲▲▲▲▲▲▲▲▲

3. Replace:
   - Blown fuse

▼▼▼▼▼▼▼▼▼▼▼▼▼▼▼▼▼▼▼▼▼▼▼▼▼▼▼▼

a. Set the main switch to "OFF".
b. Install a new fuse of the correct amperage rating.
c. Set on the switches to verify if the electrical circuit is operational.
d. If the fuse immediately blows again, check the electrical circuit.

Item	Amperage rating	Q'ty
Fuse	20 A	1

WARNING
Never use a fuse with an amperage rating other than that specified. Improvising or using a fuse with the wrong amperage rating may cause extensive damage to the electrical system, cause the lighting and ignition systems to malfunction and could possibly cause a fire.

▲▲▲▲▲▲▲▲▲▲▲▲▲▲▲▲▲▲▲▲▲▲▲▲▲▲▲▲

4. Install:
   - Seat
     Refer to "GENERAL CHASSIS" on page 4-1

CHECKING AND CHARGING THE BATTERY

WARNING
Batteries generate explosive hydrogen gas and contain electrolyte which is made of poisonous and highly caustic sulfuric acid. Therefore, always follow these preventive measures:
- **Wear protective eye gear when handling or working near batteries.**
- **Charge batteries in a well-ventilated area.**
- **Keep batteries away from fire, sparks or open flames (e.g., welding equipment, lighted cigarettes).**
- **DO NOT SMOKE when charging or handling batteries.**
- **KEEP BATTERIES AND ELECTROLYTE OUT OF REACH OF CHILDREN.**
- **Avoid bodily contact with electrolyte as it can cause severe burns or permanent eye injury.**

FIRST AID IN CASE OF BODILY CONTACT: EXTERNAL
- **Skin — Wash with water.**
- **Eyes — Flush with water for 15 minutes and get immediate medical attention.**

INTERNAL

- **Drink large quantities of water or milk followed with milk of magnesia, beaten egg or vegetable oil. Get immediate medical attention.**

CAUTION:

- **This is a sealed battery. Never remove the sealing caps because the balance between cells will not be maintained and battery performance will deteriorate.**
- **Charging time, charging amperage and charging voltage for an MF battery are different from those of conventional batteries. The MF battery should be charged according to the appropriate charging method. If the battery is overcharged, the electrolyte level will drop considerably. Therefore, take special care when charging the battery.**

NOTE:

Since MF batteries are sealed, it is not possible to check the charge state of the battery by measuring the specific gravity of the electrolyte. Therefore, the charge of the battery has to be checked by measuring the voltage at the battery terminals.

1. Remove:
   - Seat
     Refer to “GENERAL CHASSIS” on page 4-1.
2. Disconnect:
   - Battery leads
     (from the battery terminals)

CAUTION:

First, disconnect the negative battery lead “1”, and then positive battery lead “2”.

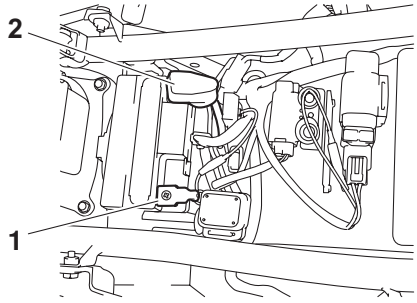

3. Remove:
   - Battery
4. Check:
   - Battery charge

▼▼▼▼▼▼▼▼▼▼▼▼▼▼▼▼▼▼▼▼▼▼▼▼▼▼▼▼▼▼▼▼

a. Connect a multimeter to the battery terminals.

- Positive tester probe → positive battery terminal
- Negative tester probe → negative battery terminal

NOTE:

- The charge state of an MF battery can be checked by measuring its open-circuit voltage (i.e., the voltage when the positive battery terminal is disconnected).
- No charging is necessary when the open-circuit voltage equals or exceeds 12.8 V.

b. Check the charge of the battery, as shown in the charts and the following example.

Example
Open-circuit voltage = 12.0 V
Charging time = 6.5 hours
Charge of the battery = 20–30%

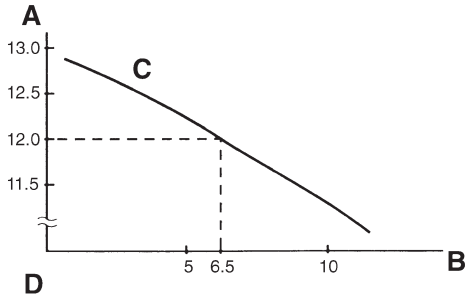

A. Open-circuit voltage (V)
B. Charging time (hours)
C. Relationship between the open-circuit voltage and the charging time at 20 °C (68 °F)
D. These values vary with the temperature, the condition of the battery plates, and the electrolyte level.

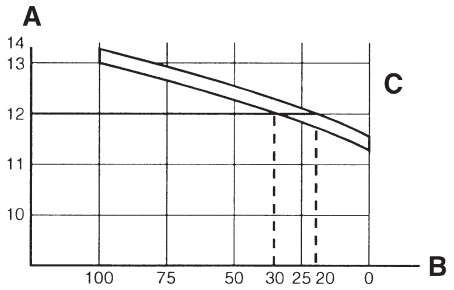

A. Open-circuit voltage (V)
B. Charging condition of the battery (%)
C. Ambient temperature 20 °C (68 °F)

▲▲▲▲▲▲▲▲▲▲▲▲▲▲▲▲▲▲▲▲▲▲▲▲▲▲▲▲

5. Charge:
   - Battery
     (refer to the appropriate charging method illustration)

WARNING

Do not quick charge a battery.

CAUTION:

- **Never remove the MF battery sealing caps.**
- **Do not use a high-rate battery charger since it forces a high-amperage current into the battery quickly and can cause battery overheating and battery plate damage.**
- **If it is impossible to regulate the charging current on the battery charger, be careful not to overcharge the battery.**
- **When charging a battery, be sure to remove it from the vehicle. (If charging has to be done with the battery mounted on the vehicle, disconnect the negative battery lead from the battery terminal.)**
- **To reduce the chance of sparks, do not plug in the battery charger until the battery charger leads are connected to the battery.**
- **Before removing the battery charger lead clips from the battery terminals, be sure to turn off the battery charger.**
- **Make sure the battery charger lead clips are in full contact with the battery terminal and that they are not shorted. A corroded battery charger lead clip may generate heat in the contact area and a weak clip spring may cause sparks.**
- **If the battery becomes hot to the touch at any time during the charging process, disconnect the battery charger and let the battery cool before reconnecting it. Hot batteries can explode!**
- **As shown in the following illustration, the open-circuit voltage of an MF battery stabilizes about 30 minutes after charging has been completed. Therefore, wait 30 minutes after charging is completed before measuring the open-circuit voltage.**

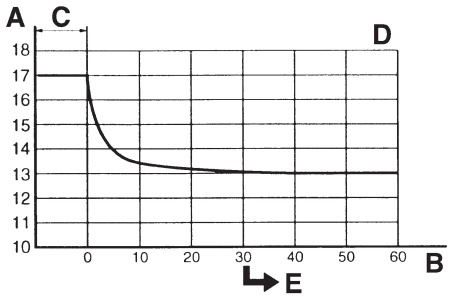

A. Open-circuit voltage (V)
B. Time (minutes)
C. Charging
D. Ambient temperature 20 °C (68 °F)
E. Check the open-circuit voltage.

▼▼▼▼▼▼▼▼▼▼▼▼▼▼▼▼▼▼▼▼▼▼▼▼▼▼▼▼

Charging method using a variable-current (voltage) charger

a. Measure the open-circuit voltage prior to charging.

NOTE:

Voltage should be measured 30 minutes after the machine is stopped.

b. Connect a charger and ammeter to the battery and start charging.

NOTE:

Set the charging voltage at 16–17 V. If the setting is lower, charging will be insufficient. If too high, the battery will be over-charged.

c. Make sure that the current is higher than the standard charging current written on the battery.

NOTE:

If the current is lower than the standard charging current written on the battery, set the charging voltage adjust dial at 20–24 V and monitor the amperage for 3–5 minutes to check the battery.

• Standard charging current is reached Battery is good. • Standard charging current is not reached Replace the battery.

d. Adjust the voltage so that the current is at the standard charging level.
e. Set the time according to the charging time suitable for the open-circuit voltage.
f. If charging requires more than 5 hours, it is advisable to check the charging current after a lapse of 5 hours. If there is any change in the amperage, readjust the voltage to obtain the standard charging current.
g. Measure the battery open-circuit voltage after leaving the battery unused for more than 30 minutes.

12.8 V or more --- Charging is complete. 12.7 V or less --- Recharging is required. Under 12.0 V --- Replace the battery.

▲▲▲▲▲▲▲▲▲▲▲▲▲▲▲▲▲▲▲▲▲▲▲▲▲▲▲▲▲▲

▼▼▼▼▼▼▼▼▼▼▼▼▼▼▼▼▼▼▼▼▼▼▼▼▼▼▼▼▼▼

Charging method using a constant voltage charger

a. Measure the open-circuit voltage prior to charging.

NOTE:

Voltage should be measured 30 minutes after the engine is stopped.

b. Connect a charger and ammeter to the battery and start charging.
c. Make sure that the current is higher than the standard charging current written on the battery.

NOTE:

If the current is lower than the standard charging current written on the battery, this type of battery charger cannot charge the MF battery. A variable voltage charger is recommended.

d. Charge the battery until the battery's charging voltage is 15 V.

NOTE:

Set the charging time at 20 hours (maximum).

e. Measure the battery open-circuit voltage after leaving the battery unused for more than 30 minutes.

12.8 V or more --- Charging is complete. 12.7 V or less --- Recharging is required. Under 12.0 V --- Replace the battery.

▲▲▲▲▲▲▲▲▲▲▲▲▲▲▲▲▲▲▲▲▲▲▲▲▲▲▲▲▲▲

6. Install:
   • Battery
7. Connect:
   • Battery leads
   (to the battery terminals)

CAUTION:

First, connect the positive battery lead "1", and then the negative battery lead "2".

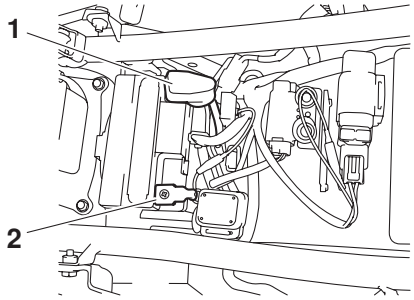

8. Check:
   • Battery terminals
   Dirt → Clean with a wire brush.
   Loose connection → Connect properly.
9. Lubricate:
   • Battery terminals

	Recommended lubricant **Dielectric grease**

10. Install:
   • Seat
   Refer to "GENERAL CHASSIS" on page 4-1.

CHECKING THE RELAYS

Check each switch for continuity with the pocket tester. If the continuity reading is incorrect, replace the relay.

	Multimeter

1. Disconnect the relay from the wire harness.
2. Connect the multimeter (Ω × 1) and battery (12 V) to the relay terminal as shown.
   Check the relay operation.
   Out of specification → Replace.

Starter relay

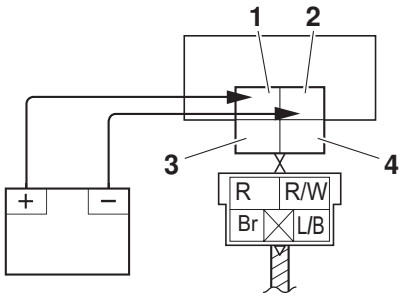

1. Positive battery terminal
2. Negative battery terminal
3. Positive tester probe
4. Negative tester probe

Result
Continuity
(between “3” to “4”)

Starting circuit cut-off relay

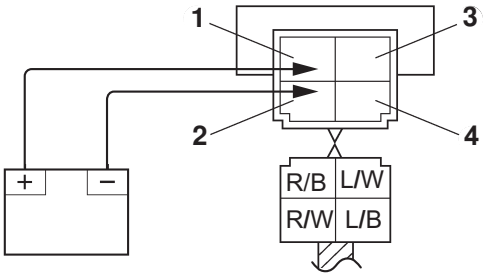

1. Positive battery terminal
2. Negative battery terminal
3. Positive tester probe
4. Negative tester probe

Result
Continuity
(between “3” to “4”)

Radiator fan motor relay

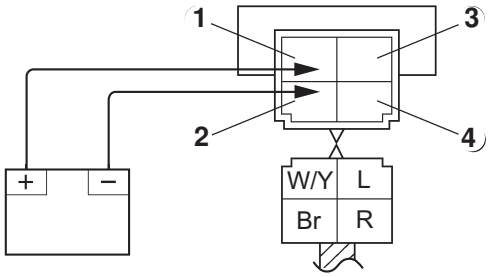

1. Positive battery terminal
2. Negative battery terminal
3. Positive tester probe
4. Negative tester probe

Result
Continuity
(between “3” to “4”)

CHECKING THE TURN SIGNAL RELAY

1. Check:
   - Turn signal relay input voltage
     Out of specification → The wiring circuit from the main switch to the turn signal relay coupler is faulty and must be repaired.

Turn signal relay input voltage
DC 12 V

▼▼▼▼▼▼▼▼▼▼▼▼▼▼▼▼▼▼▼▼▼▼▼▼▼▼▼▼▼▼▼▼▼▼

a. Connect the multimeter to the turn signal relay terminal as shown.

Multimeter

- Positive tester probe →
  brown “1”
- Negative tester probe →
  ground

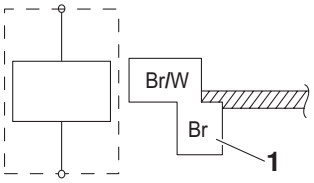

b. Turn the main switch to “ON”.
c. Measure the turn signal relay input voltage.

2. Check:
   • Turn signal relay output voltage
     Out of specification → Replace.

Turn signal relay output voltage
DC 12 V

▼▼▼▼▼▼▼▼▼▼▼▼▼▼▼▼▼▼▼▼▼▼▼▼▼▼▼▼▼▼▼▼

a. Connect the multimeter to the turn signal relay terminal as shown.

Multimeter

• Positive tester probe → brown/white “1”
• Negative tester probe → ground

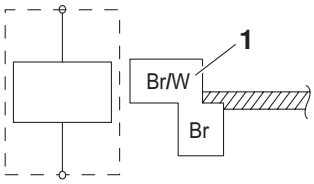

b. Turn the main switch to “ON”.
c. Measure the turn signal relay output voltage.

▲▲▲▲▲▲▲▲▲▲▲▲▲▲▲▲▲▲▲▲▲▲▲▲▲▲▲▲▲▲▲▲

CHECKING THE DIODE

1. Check:
   • Diode
     Out of specification → Replace.

Multimeter

NOTE:
The multimeter or the analog multimeter readings are shown in the following table.

Continuity
Positive tester probe → sky blue “1”
Negative tester probe → red/black “2”
No continuity
Positive tester probe → red/black “2”
Negative tester probe → sky blue “1”

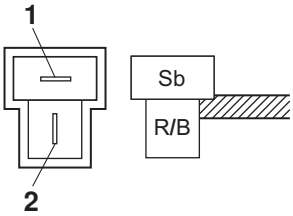

▼▼▼▼▼▼▼▼▼▼▼▼▼▼▼▼▼▼▼▼▼▼▼▼▼▼▼▼▼▼▼▼

a. Disconnect the diode from the wire harness.
b. Connect the pocket tester (Ω × 1) to the diode terminals as shown.
c. Check the diode for continuity.
d. Check the diode for no continuity.

▲▲▲▲▲▲▲▲▲▲▲▲▲▲▲▲▲▲▲▲▲▲▲▲▲▲▲▲▲▲▲▲

CHECKING THE SPARK PLUG CAP

1. Check:
   • Spark plug cap resistance
     Out of specification → Replace.

Resistance
3.75–6.25 kΩ

▼▼▼▼▼▼▼▼▼▼▼▼▼▼▼▼▼▼▼▼▼▼▼▼▼▼▼▼▼▼▼▼

a. Remove the spark plug cap from the spark plug lead.
b. Connect the multimeter (Ω × 1k) to the spark plug cap as shown.

Multimeter

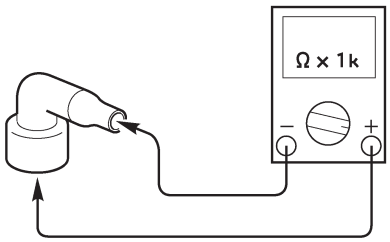

c. Measure the spark plug cap resistance.

▲▲▲▲▲▲▲▲▲▲▲▲▲▲▲▲▲▲▲▲▲▲▲▲▲▲▲▲

CHECKING THE IGNITION COIL

1. Check:
   - Primary coil resistance
     Out of specification → Replace.

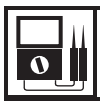	**Primary coil resistance** **2.16–2.64 Ω at 20 °C (68 °F)**

▼▼▼▼▼▼▼▼▼▼▼▼▼▼▼▼▼▼▼▼▼▼▼▼▼▼▼▼

a. Disconnect the ignition coil connectors from the ignition coil terminals.
b. Connect the multimeter (Ω × 1) to the ignition coil as shown.

	**Multimeter**

- Positive tester probe →
  orange “1”
- Negative tester probe →
  red/white “2”

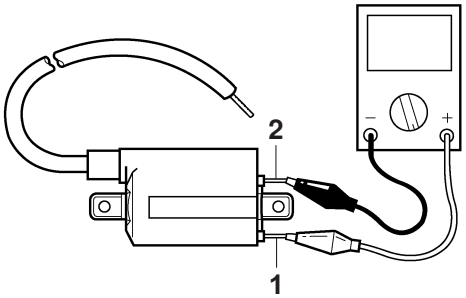

c. Measure the primary coil resistance.

▲▲▲▲▲▲▲▲▲▲▲▲▲▲▲▲▲▲▲▲▲▲▲▲▲▲▲▲

2. Check:
   - Secondary coil resistance
     Out of specification → Replace.

	**Secondary coil resistance** **8.64–12.96 kΩ at 20 °C (68 °F)**

▼▼▼▼▼▼▼▼▼▼▼▼▼▼▼▼▼▼▼▼▼▼▼▼▼▼▼▼

a. Disconnect the spark plug cap from the ignition coil.
b. Connect the multimeter (Ω × 1k) to the ignition coil as shown.

	**Multimeter**

- Positive tester probe →
  orange “1”
- Negative tester probe →
  spark plug lead “2”

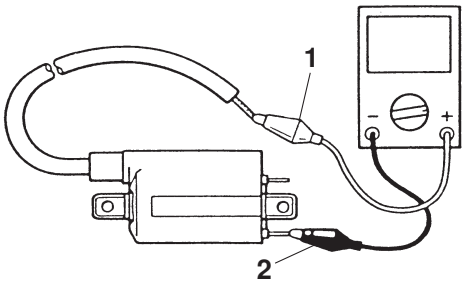

c. Measure the secondary coil resistance.

▲▲▲▲▲▲▲▲▲▲▲▲▲▲▲▲▲▲▲▲▲▲▲▲▲▲▲▲

CHECKING THE IGNITION SPARK GAP

1. Check:
   - Ignition spark gap
     Out of specification → Perform the ignition system troubleshooting, starting with step 5. Refer to “TROUBLESHOOTING” on page 8-3.

	**Minimum ignition spark gap** **6.0 mm**

NOTE:

If the ignition spark gap is within specification, the ignition system circuit is operating normally.

▼▼▼▼▼▼▼▼▼▼▼▼▼▼▼▼▼▼▼▼▼▼▼▼▼▼▼▼

a. Disconnect the spark plug cap from the spark plug.
b. Connect the ignition checker “1” as shown.

Ignition checker

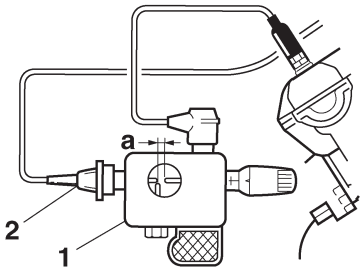

2. Spark plug cap

c. Turn the main switch to “ON” and engine stop switch to “◯”.
d. Measure the ignition spark gap “a”.
e. Crank the engine by pushing the start switch “⊛”

▲▲▲▲▲▲▲▲▲▲▲▲▲▲▲▲▲▲▲▲▲▲▲▲▲▲▲▲▲▲

CHECKING THE CRANKSHAFT POSITION SENSOR

1. Disconnect:
   - Crankshaft position sensor coupler (from the wire harness)
2. Check:
   - Crankshaft position sensor resistance
     Out of specification → Replace the crankshaft position sensor/stator assembly.

Crankshaft position sensor resistance
248–372 Ω at 20 °C (68 °F)

▼▼▼▼▼▼▼▼▼▼▼▼▼▼▼▼▼▼▼▼▼▼▼▼▼▼▼▼▼▼

a. Connect the multimeter to the crankshaft position sensor coupler as shown.

Multimeter

- Positive tester probe → red “1”
- Negative tester probe → white “2”

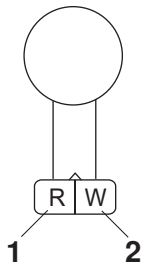

b. Measure the crankshaft position sensor resistance.

▲▲▲▲▲▲▲▲▲▲▲▲▲▲▲▲▲▲▲▲▲▲▲▲▲▲▲▲▲▲

CHECKING THE LEAN ANGLE SENSOR

1. Remove:
   - Lean angle sensor
2. Check:
   - Lean angle sensor output voltage
     Out of specification → Replace.

Lean angle sensor output voltage
Less than 65°: 0.4–1.4 V
More than 65°: 3.7–4.4 V

▼▼▼▼▼▼▼▼▼▼▼▼▼▼▼▼▼▼▼▼▼▼▼▼▼▼▼▼▼▼

a. Connect the lean angle sensor coupler to the wire harness.
b. Connect the multimeter to the lean angle sensor coupler as shown.

Multimeter

- Positive tester probe → yellow/green “1”
- Negative tester probe → black/blue “2”

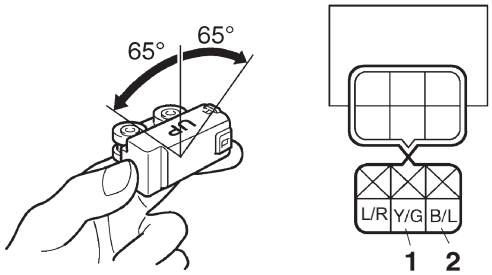

c. Turn the main switch to “ON”.
d. Tilt the lean angle sensor to 65°.

e. Measure the lean angle sensor output voltage.

▲▲▲▲▲▲▲▲▲▲▲▲▲▲▲▲▲▲▲▲▲▲▲▲▲▲▲

CHECKING THE STARTER MOTOR OPERATION

1. Check:
   - Starter motor operation
     Does not operate → Perform the electric starting system troubleshooting, starting with step 4.
     Refer to “TROUBLESHOOTING” on page 8-9.

▼▼▼▼▼▼▼▼▼▼▼▼▼▼▼▼▼▼▼▼▼▼▼▼▼▼▼

a. Connect the positive battery terminal “1” and starter motor lead “2” with a jumper lead “3”.

WARNING

- **A wire that is used as a jumper lead must have at least the same capacity of the battery lead, otherwise the jumper lead may burn.**
- **This check is likely to produce sparks, therefore, make sure no flammable gas or fluid is in the vicinity.**

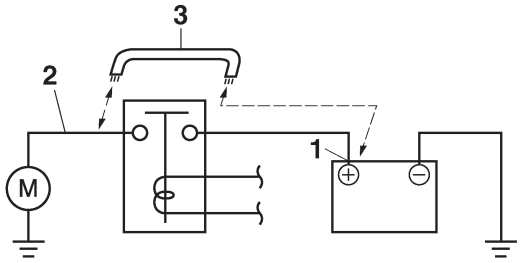

b. Check the starter motor operation.

▲▲▲▲▲▲▲▲▲▲▲▲▲▲▲▲▲▲▲▲▲▲▲▲▲▲▲

CHECKING THE STATOR COIL

1. Disconnect:
   - Stator coil coupler
     (from the wire harness)
2. Check:
   - Stator coil resistance
     Out of specification → Replace the crankshaft position sensor/stator assembly.

	Stator coil resistance **0.448–0.672 Ω at 20 °C (68 °F)**

▼▼▼▼▼▼▼▼▼▼▼▼▼▼▼▼▼▼▼▼▼▼▼▼▼▼▼

a. Connect the multimeter Ω ×1) to the stator coil coupler as shown.

	Multimeter

• Positive tester probe → white “1” • Negative tester probe → white “2”

• Positive tester probe → white “1” • Negative tester probe → white “3”

• Positive tester probe → white “2” • Negative tester probe → white “3”

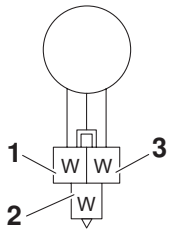

b. Measure the stator coil resistance.

▲▲▲▲▲▲▲▲▲▲▲▲▲▲▲▲▲▲▲▲▲▲▲▲▲▲▲

CHECKING THE RECTIFIER/REGULATOR

1. Check:
   - Charging voltage
     Out of specification → Replace the rectifier/regulator.

	Charging voltage **14 V at 5000 r/min**

▼▼▼▼▼▼▼▼▼▼▼▼▼▼▼▼▼▼▼▼▼▼▼▼▼▼▼

a. Set the engine tachometer to the spark plug lead.
b. Connect the multimeter to the rectifier/regulator coupler as shown.

	Multimeter

- Positive tester probe → red “1”
- Negative tester probe → black “2”

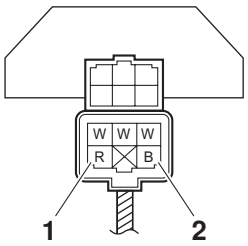

c. Start the engine and let it run at approximately 5000 r/min.
d. Measure the charging voltage.

▲▲▲▲▲▲▲▲▲▲▲▲▲▲▲▲▲▲▲▲▲▲▲▲▲▲▲▲

CHECKING THE HORN

1. Check:
   - Horn resistance
     Out of specification → Replace.

	Coil resistance **4.30–4.80 Ω at 20 °C**

▼▼▼▼▼▼▼▼▼▼▼▼▼▼▼▼▼▼▼▼▼▼▼▼▼▼▼▼

a. Disconnect the horn connectors from the horn terminals.
b. Connect the multimeter (Ω × 1) to the horn terminals.

	Multimeter

- Positive tester probe → horn terminal “1”
- Negative tester probe → horn terminal “2”

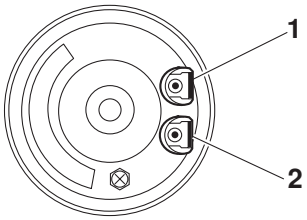

c. Measure the horn resistance.

2. Check:
   - Horn sound
     Faulty sound → Adjust or replace.

▼▼▼▼▼▼▼▼▼▼▼▼▼▼▼▼▼▼▼▼▼▼▼▼▼▼▼▼

a. Connect a battery (12 V) to the horn.
b. Turn the adjusting screw in direction “a” or “b” until the specified horn sound is obtained.

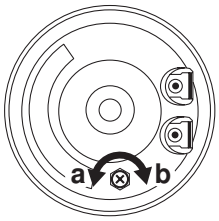

▲▲▲▲▲▲▲▲▲▲▲▲▲▲▲▲▲▲▲▲▲▲▲▲▲▲▲▲

CHECKING THE FUEL SENDER

1. Disconnect:
   - Fuel pump assembly coupler (from the wire harness)
2. Remove:
   - Fuel tank
3. Remove:
   - Fuel pump assembly (from the fuel tank)
4. Check:
   - Fuel sender resistance
     Out of specification → Replace the fuel pump assembly.

	Fuel sender **Sender unit resistance (full)** **4.0–10.0 Ω at 20 °C (68 °F)** **Sender unit resistance (empty)** **90.0–100.0 Ω at 20 °C (68 °F)**

a. Connect the multimeter (Ω × 100) to the fuel sender coupler as shown.

	Multimeter

- Positive tester probe → green “1”
- Negative tester probe → black “2”

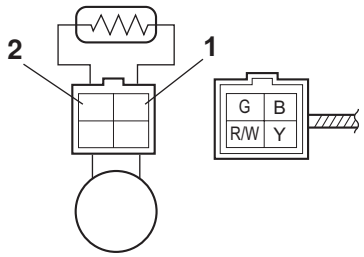

b. Move the fuel sender float to minimum "3"/and maximum "4" level position.

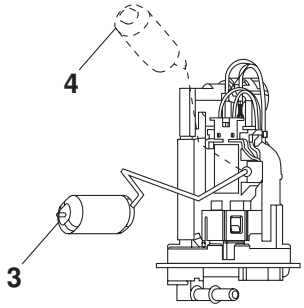

c. Measure the fuel sender resistance.

▲▲▲▲▲▲▲▲▲▲▲▲▲▲▲▲▲▲▲▲▲▲▲▲▲▲▲▲▲▲

CHECKING THE RADIATOR FAN MOTOR

1. Check:
   - Radiator fan motor
     Faulty/rough movement → Replace.

▼▼▼▼▼▼▼▼▼▼▼▼▼▼▼▼▼▼▼▼▼▼▼▼▼▼▼▼▼▼

a. Disconnect the radiator fan motor coupler from the wire harness.
b. Connect the battery (DC 12 V) as shown.

• Positive tester probe → blue "1" • Negative tester probe → black "2"

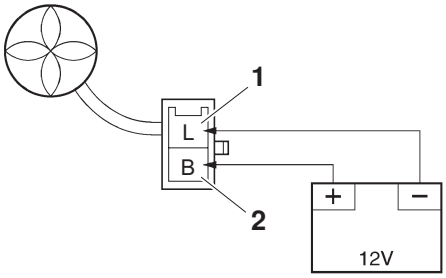

c. Measure the radiator fan motor movement.

▲▲▲▲▲▲▲▲▲▲▲▲▲▲▲▲▲▲▲▲▲▲▲▲▲▲▲▲▲▲

CHECKING THE COOLANT TEMPERATURE SENSOR

1. Remove:
   - Coolant temperature sensor

⚠ WARNING

- **Handle the coolant temperature sensor with special care.**
- **Never subject the coolant temperature sensor to strong shocks. If the coolant temperature sensor is dropped, replace it.**

2. Check:
   - Coolant temperature sensor resistance
     Out of specification → Replace.

	**Coolant temperature sensor resistance** **310–326 Ω at 80 °C (176 °F)**

▼▼▼▼▼▼▼▼▼▼▼▼▼▼▼▼▼▼▼▼▼▼▼▼▼▼▼▼▼▼

a. Connect the multimeter (Ω × 100) to the coolant temperature sensor terminals as shown.

	**Multimeter**

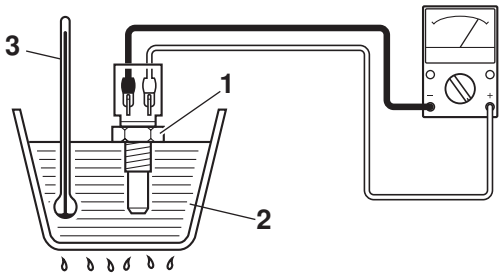

b. Immerse the coolant temperature sensor "1" in a container filled with coolant "2".

NOTE:

Make sure the coolant temperature sensor terminals do not get wet.

c. Place a thermometer "3" in the coolant.
d. Slowly heat the coolant, and then let it cool down to the specified temperature.
e. Check the coolant temperature sensor resistance.

▲▲▲▲▲▲▲▲▲▲▲▲▲▲▲▲▲▲▲▲▲▲▲▲▲▲▲▲▲▲

3. Install:
   - Coolant temperature sensor

	Coolant temperature sensor **18 Nm (1.8 m·kg, 13 ft·lb)**

CHECKING THE THROTTLE BODY SENSOR ASSEMBLY

WARNING

- **Do not remove the throttle body sensor assembly.**
- **Handle the throttle body sensor assembly with special care.**
- **Never subject the throttle body sensor assembly to strong shocks. If the throttle body sensor assembly is dropped, replace it.**

Throttle position sensor

1. Check:
   - Throttle position sensor

▼▼▼▼▼▼▼▼▼▼▼▼▼▼▼▼▼▼▼▼▼▼▼▼▼▼▼▼▼▼▼▼▼▼

a. Connect the digital circuit tester to the terminals of the throttle body sensor assembly coupler as shown.

- Positive tester probe → blue terminal “1”
- Negative tester probe → black/blue terminal “2”

b. Measure the throttle position sensor input voltage.
Out of specification → Replace or repair the wire harness.

	Throttle position sensor input voltage **5 V** **(blue–black/blue)**

c. Connect the pocket tester (DC 20 V) to the terminals of the throttle body sensor assembly coupler as shown.

- Positive tester probe → yellow/blue terminal “3”
- Negative tester probe → black/blue terminal “2”

d. While slowly opening the throttle, check that the throttle position sensor output voltage is increased.
Voltage does not change or it changes abruptly → Replace the throttle body.
Out of specification (closed position) → Replace the throttle body.

	Throttle position sensor output voltage (closed position) **0.63–0.73 V** **(yellow/blue–black/blue)**

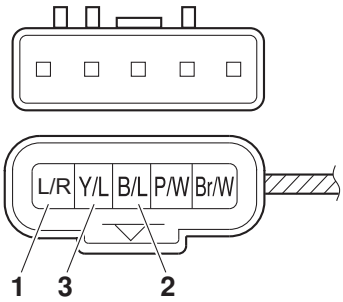

▲▲▲▲▲▲▲▲▲▲▲▲▲▲▲▲▲▲▲▲▲▲▲▲▲▲▲▲▲▲▲▲▲▲

Intake air pressure sensor

1. Check:
   - Intake air pressure sensor output voltage
     Out of specification → Replace the throttle body.

	Intake air pressure sensor output voltage **0.789–4.000 V at 20.00–101.32 kPa**

▼▼▼▼▼▼▼▼▼▼▼▼▼▼▼▼▼▼▼▼▼▼▼▼▼▼▼▼▼▼▼▼▼▼

a. Connect the multimeter to the throttle body sensor assembly coupler as shown.

	Multimeter

- Positive tester probe → pink/white “1”
- Negative tester probe → black/blue “2”

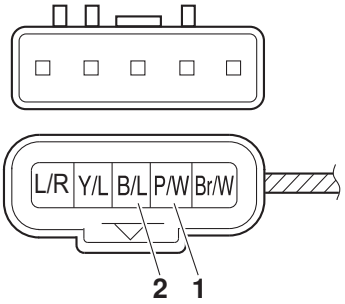

b. Turn the main switch to “ON”.
c. Measure the intake air pressure sensor output voltage.

▲▲▲▲▲▲▲▲▲▲▲▲▲▲▲▲▲▲▲▲▲▲▲▲▲▲▲▲

Intake air temperature sensor

1. Check:
   - Intake air temperature sensor resistance
     Out of specification → Replace the throttle body.

	Intake air temperature sensor resistance 5.7–6.3 kΩ

▼▼▼▼▼▼▼▼▼▼▼▼▼▼▼▼▼▼▼▼▼▼▼▼▼▼▼▼

a. Connect the multimeter (Ω × 1k) to the throttle body sensor assembly coupler as shown.

	Multimeter

- Positive tester probe → brown/white “1”
- Negative tester probe → black/blue “2”

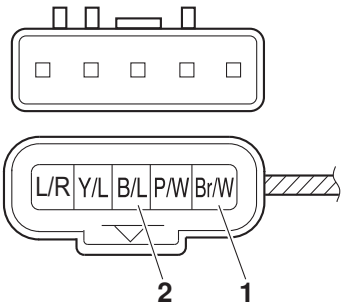

b. Measure the intake air temperature sensor resistance.

▲▲▲▲▲▲▲▲▲▲▲▲▲▲▲▲▲▲▲▲▲▲▲▲▲▲▲▲

CHECKING THE FID (FAST IDLE SOLENOID)

1. Disconnect:
   - FID (fast idle solenoid) device coupler
2. Check:
   - FID (fast idle solenoid) device resistance

▼▼▼▼▼▼▼▼▼▼▼▼▼▼▼▼▼▼▼▼▼▼▼▼▼▼▼▼

a. Disconnect the FID (fast idle solenoid)device couplerfrom the wire harness.
b. Connect the multimeter (Ω) to the terminals of the FID (fast idle solenoid) device.

- Positive tester probe → brown terminal “1”
- Negative tester probe → yellow/red terminal “2”

	Multimeter

c. Measure the FID (fast idle solenoid) device resistance.
   Out of specification → Replace the throttle body assembly.

	FID (fast idle solenoid) device resistance 31.5–38.5 Ω

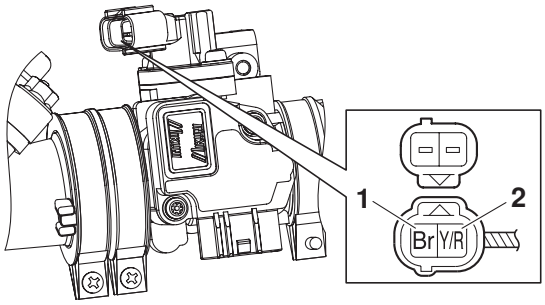

▲▲▲▲▲▲▲▲▲▲▲▲▲▲▲▲▲▲▲▲▲▲▲▲▲▲▲▲

CHECKING THE SPEED SENSOR

1. Check:
   - Speed sensor output voltage
     Out of specification → Replace.

	**Output voltage reading cycle** **0 V to 5.0 V to 0 V to 5.0 V**

a. Connect the multimeter to the speed sensor coupler (wire harness end) as shown.

	**Multimeter**

- Positive tester probe
  gray “1”
- Negative tester probe
  gray/black “2”

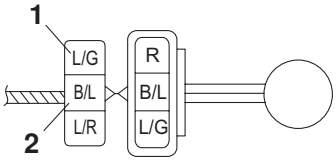

b. Set the main switch to “ON”.
c. Elevate the front wheel and slowly rotate it.
d. Measure the voltage of gray and gray/black. With each full rotation of the front wheel, the voltage reading should cycle from 0 V to 5.0 V to 0 V to 5.0 V.

TROUBLESHOOTING

TROUBLESHOOTING

GENERAL INFORMATION

NOTE:

The following guide for troubleshooting does not cover all the possible causes of trouble. It should be helpful, however, as a guide to basic troubleshooting. Refer to the relative procedure in this manual for checks, adjustments, and replacement of parts.

STARTING FAILURES

Engine

1. Cylinder and cylinder head
   - Loose spark plug
   - Loose cylinder head or cylinder
   - Damaged cylinder head gasket
   - Damaged cylinder gasket
   - Worn or damaged cylinder
   - Incorrect valve clearance
   - Improperly sealed valve
   - Incorrect valve-to-valve-seat contact
   - Incorrect valve timing
   - Faulty valve spring
   - Seized valve
2. Piston and piston ring(s)
   - Improperly installed piston ring
   - Damaged, worn or fatigued piston ring
   - Seized piston ring
   - Seized or damaged piston
3. Air filter
   - Improperly installed air filter
   - Clogged air filter element
4. Crankcase and crankshaft
   - Improperly assembled crankcase
   - Seized crankshaft

Fuel system

1. Fuel tank
   - Empty fuel tank
   - Clogged fuel filter
   - Deteriorated or contaminated fuel
2. Fuel pump
   - Faulty fuel pump
   - Faulty fuel pump relay
3. Throttle body
   - Deteriorated or contaminated fuel
   - Sucked-in air

Electrical system

1. Battery
   - Discharged battery
   - Faulty battery
2. Fuse
   - Blown, damaged or incorrect fuse
   - Improperly installed fuse
3. Spark plug
   - Incorrect spark plug gap
   - Incorrect spark plug heat range
   - Fouled spark plug
   - Worn or damaged electrode
   - Worn or damaged insulator
   - Faulty spark plug cap
4. Ignition coil
   - Cracked or broken ignition coil body
   - Broken or shorted primary or secondary coils
   - Faulty spark plug lead
5. Ignition system
   - Faulty ECU
   - Faulty crankshaft position sensor
   - Broken magneto rotor woodruff key
6. Switches and wiring
   - Faulty main switch
   - Faulty engine stop switch
   - Broken or shorted wiring
   - Faulty neutral switch
   - Faulty start switch
   - Faulty clutch switch
   - Improperly grounded circuit
   - Loose connections
7. Starting system
   - Faulty starter motor
   - Faulty starter relay
   - Faulty starting circuit cut-off relay
   - Faulty starter clutch

INCORRECT ENGINE IDLING SPEED

Engine

1. Cylinder and cylinder head
   - Incorrect valve clearance
   - Damaged valve train components
2. Air filter
   - Clogged air filter element

Fuel system

1. Throttle body
   - Damage or loose throttle body joint
   - Improper throttle cable free play
   - Flooded throttle body
   - Faulty air induction system

Electrical system
1. Battery
   - Discharged battery
   - Faulty battery
2. Spark plug
   - Incorrect spark plug gap
   - Incorrect spark plug heat range
   - Fouled spark plug
   - Worn or damaged electrode
   - Worn or damaged insulator
   - Faulty spark plug cap
3. Ignition coil
   - Broken or shorted primary or secondary coils
   - Faulty spark plug lead
   - Cracked or broken ignition coil
4. Ignition system
   - Faulty ECU
   - Faulty crankshaft position sensor
   - Broken magneto rotor woodruff key

POOR MEDIUM-AND-HIGH-SPEED PERFORMANCE

Refer to “STARTING FAILURES” on page 9-1.

Engine
1. Air filter
   - Clogged air filter element

Fuel system
1. Fuel pump
   - Faulty fuel pump

FAULTY GEAR SHIFTING

Shifting is difficult

Refer to “Clutch drags”.

SHIFT PEDAL DOES NOT MOVE

Shift shaft
- Bent shift shaft

Shift drum and shift forks
- Foreign object in a shift drum groove
- Seized shift fork
- Bent shift fork guide bar

Transmission
- Seized transmission gear
- Foreign object between transmission gears
- Improperly assembled transmission

JUMPS OUT OF GEAR

Shift shaft
- Incorrect shift pedal position
- Improperly returned stopper lever

Shift forks
- Worn shift fork

Shift drum
- Incorrect axial play
- Worn shift drum groove

Transmission
- Worn gear dog

FAULTY CLUTCH

Clutch slips
1. Clutch
   - Improperly assembled clutch
   - Improperly adjusted clutch cable
   - Loose or fatigued clutch spring
   - Worn friction plate
   - Worn clutch plate
2. Engine oil
   - Incorrect oil level
   - Incorrect oil viscosity (low)
   - Deteriorated oil

Clutch drags
1. Clutch
   - Unevenly tensioned clutch springs
   - Warped pressure plate
   - Bent clutch plate
   - Swollen friction plate
   - Bent clutch push rod
   - Broken clutch boss
   - Burnt primary driven gear bushing
2. Engine oil
   - Incorrect oil level
   - Incorrect oil viscosity (high)
   - Deteriorated oil

OVERHEATING

Engine
1. Clogged coolant passages
   - Cylinder head and piston
   - Heavy carbon buildup
2. Engine oil
   - Incorrect oil level

- Incorrect oil viscosity
- Inferior oil quality

Cooling system

1. Coolant
   - Low coolant level
2. Radiator
   - Damaged or leaking radiator
   - Faulty radiator cap
   - Bent or damaged radiator fin
3. Water pump
   - Damaged or faulty water pump
4. Thermostat
   - Thermostat stays closed
5. Hose(s) and pipe(s)
   - Damaged hose
   - Improperly connected hose
   - Damaged pipe
   - Improperly connected pipe

Fuel system

1. Throttle body
   - Damaged or loose throttle body joint
2. Air filter
   - Clogged air filter element

Chassis

1. Brake(s)
   - Dragging brake

Electrical system

1. Spark plug
   - Incorrect spark plug gap
   - Incorrect spark plug heat range
2. Ignition system
   - Faulty ECU

OVERCOOLING

Cooling system

1. Thermostat
   - Thermostat stays open

POOR BRAKING PERFORMANCE

1. Disc brake
   - Worn brake pad
   - Worn brake disc
   - Air in hydraulic brake system
   - Leaking brake fluid
   - Faulty brake caliper kit
   - Faulty brake caliper seal
   - Loose union bolt
   - Damaged brake hose
   - Oil or grease on the brake disc
   - Oil or grease on the brake pad
   - Incorrect brake fluid level

FAULTY FRONT FORK LEGS

Leaking oil

- Bent, damaged or rusty inner tube
- Cracked or damaged outer tube
- Improperly installed oil seal
- Damaged oil seal lip
- Incorrect oil level (high)
- Loose damper rod bolt
- Damaged damper rod bolt copper washer
- Cracked or damaged cap bolt O-ring

Malfunction

- Bent or damaged inner tube
- Bent or damaged outer tube
- Damaged fork spring
- Bent or damaged damper rod
- Incorrect oil viscosity
- Incorrect oil level

UNSTABLE HANDLING

1. Handlebar
   - Bent or improperly installed handlebar
2. Steering head components
   - Improperly installed upper bracket
   - Improperly installed lower bracket (improperly tightened ring nut)
   - Bent steering stem
   - Damaged ball bearing or bearing race
3. Front fork leg(s)
   - Uneven oil levels (both front fork legs)
   - Unevenly tensioned fork spring (both front fork legs)
   - Broken fork spring
   - Bent or damaged inner tube
   - Bent or damaged outer tube
4. Swingarm
   - Worn bearing
   - Bent or damaged swingarm

5. Rear shock absorber assembly
   - Faulty rear shock absorber spring
   - Leaking oil
6. Tyre(s)
   - Uneven tyre pressures (front and rear)
   - Incorrect tyre pressure
   - Uneven tyre wear
7. Wheel(s)
   - Incorrect wheel balance
   - Deformed cast wheel
   - Damaged wheel bearing
   - Bent or loose wheel axle
   - Excessive wheel runout
8. Frame
   - Bent frame
   - Damaged steering head pipe
   - Improperly installed bearing race

FAULTY LIGHTING OR SIGNALING SYSTEM

Headlight does not come on
- Wrong headlight bulb
- Too many electrical accessories
- Hard charging
- Incorrect connection
- Improperly grounded circuit
- Poor contacts (main or light switch)
- Burnt-out headlight bulb

Headlight bulb burnt out
- Wrong headlight bulb
- Faulty battery
- Faulty rectifier/regulator
- Improperly grounded circuit
- Faulty main switch
- Faulty light switch
- Headlight bulb life expired

Tail/brake light does not come on
- Wrong tail/brake light bulb
- Too many electrical accessories
- Incorrect connection
- Burnt-out tail/brake light bulb

Tail/brake light bulb burnt out
- Wrong tail/brake light bulb
- Faulty battery
- Incorrectly adjusted rear brake light switch
- Tail/brake light bulb life expired

Turn signal does not come on
- Faulty turn signal switch
- Faulty turn signal relay
- Burnt-out turn signal bulb
- Incorrect connection
- Damaged or faulty wire harness
- Improperly grounded circuit
- Faulty battery
- Blown, damaged or incorrect fuse

Turn signal blinks slowly
- Faulty turn signal relay
- Faulty main switch
- Faulty turn signal switch
- Incorrect turn signal bulb

Turn signal remains lit
- Faulty turn signal relay
- Burnt-out turn signal bulb

Turn signal blinks quickly
- Incorrect turn signal bulb
- Faulty turn signal relay
- Burnt-out turn signal bulb

Horn does not sound
- Improperly adjusted horn
- Damaged or faulty horn
- Faulty main switch
- Faulty horn switch
- Faulty battery
- Blown, damaged or incorrect fuse
- Faulty wire harness

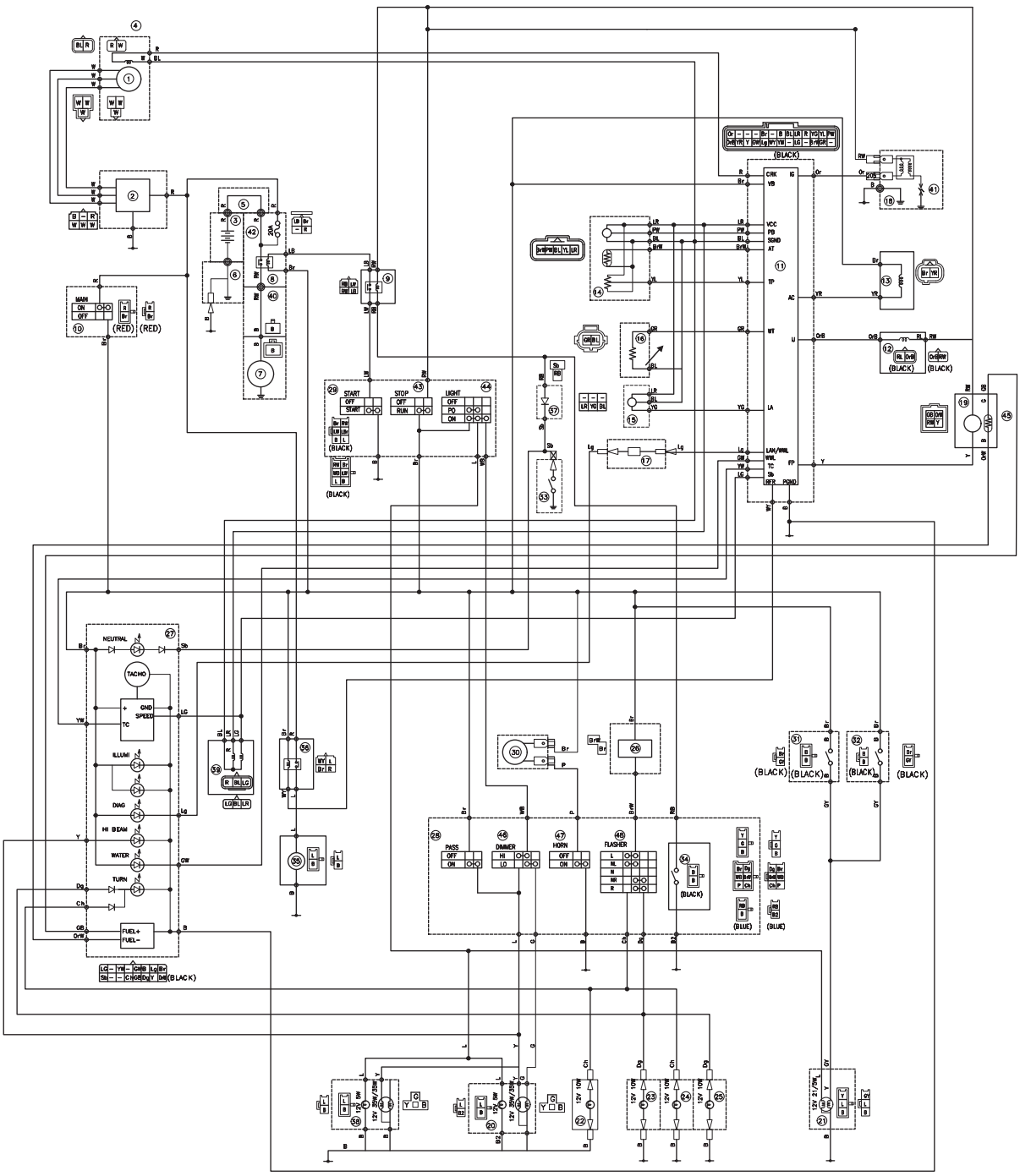
MAIN
ON
OFF
(RED)
(RED)
START
OFF
START
STOP
OFF
RUN
LIGHT
OFF
PO
ON
(BLACK)
(BLACK)
(BLACK)
(BLACK)
(BLACK)
(BLACK)
(BLACK)
(BLACK)
(BLACK)
(BLUE)
(BLUE)
NEUTRAL
TACHO
GND
SPEED
TC
ILLUMI
DIAG
HI BEAM
WATER
TURN
FUEL+
FUEL−
PASS
OFF
ON
DIMMER
HI
LO
HORN
OFF
ON
FLASHER
CRK
VB
VCC
PB
SGND
AT
TP
WT
LA
LAN/WWL
WWL
TC
Sb
BKR
PGND
IG
FP
20A
12V 20W/25W
12V 10W
12V 21/2W

WIRING DIAGRAM

YZF-R15

1. AC magneto
2. Rectifier / Regulator
3. Battery
4. Crank shaft position sensor
5. Wire plus lead
6. Wire minus lead
7. Starter motor
8. Starter relay
9. Ignition cut off relay
10 Main switch
11 ECU
12 Injector
13 FID (Fast Idle Solenoid) device
14 Sensor module.
15 Lean sensor angle
16 Coolant temperature sensor
17 Service tool
18 Ignition. coil
19 Fuel Pump
20 Head Light L
21 Tail / brake Light
22 FR. Flasher Light L
23 FR. Flasher Light R
24 RR. Flasher Light L
25 RR. Flasher Light R
26 Flasher Relay
27 Meter
28 Handle switch L
29 Start switch
30 Horn
31 Front brake light switch
32 Rear brake light switch
33 Neutral switch
34 Clutch switch
35 Fan Motor
36 Radiator fan relay
37 Diode
38 Head Light R
39 Speed Sensor
40 Wire Sub Head
41 Spark plug
42 Main. Fuse
43 Stop switch
44. Light switch
45. Fuel sender
46. Dimmer switch
47. Horn switch
48. Turn signal switch

COLOR CODE

B	Black
Br	Brown
Ch	Chocolate
Dg	Dark green
G	Green
Gy	Gray
L	Blue
Lg	Light green
O	Orange
P	Pink
R	Red
Sb	Sky blue
W	White
Y	Yellow
B/L	Black/Blue
Br/L	Brown/Blue
Br/W	Brown/White
G/R	Green/Red
G/W	Green/White
G/Y	Green/Yellow
L/B	Blue/Black
L/W	Blue/White
O/B	Orange/Black
P/W	Pink/White
R/B	Red/Black
R/L	Red/Blue
R/W	Red/White
W/Y	White/Yellow
Y/G	Yellow/Green
Y/L	Yellow/Blue
Y/R	Yellow/Red