Engine (G4ED – GSL 1.6)

GENERAL
SPECIFICATIONS EM-2
TIGHTENING TORQUE EM-6
COMPRESSION PRESSURE INSPECTION EM-9
TIMING BELT TENSION ADJUSTMENT EM-10
TROUBLESHOOTING EM-15
SPECIAL SERVICE TOOLS EM-18

TIMING SYSTEM
TIMING BELT
COMPONENTS EM-20
REMOVAL EM-21
INSPECTION EM-25
INSTALLATION EM-27

CYLINDER HEAD ASSEMBLY
COMPONENTS EM-33
REMOVAL EM-35
DISASSEMBLY EM-40
INSPECTION EM-40
REPLACEMENT EM-47
REASSEMBLY EM-49
INSTALLATION EM-50

ENGINE AND TRANSAXLE ASSEMBLY
COMPONENTS EM-57
REMOVAL EM-58
INSTALLATION EM-66

ENGINE BLOCK
COMPONENTS EM-67
DISASSEMBLY EM-69
INSPECTION EM-71
REASSEMBLY EM-80

COOLING SYSTEM
COMPONENTS EM-86
ENGINE COOLANT REFILLING AND BLEEDING EM-88
RADIATOR CAP TESTING EM-89
RADIATOR LEAKAGE TEST EM-89
REMOVAL EM-90
INSPECTION EM-93
INSTALLATION EM-94

LUBRICATION SYSTEM
COMPONENTS EM-97
OIL AND FILTER REPLACEMENT EM-99
SELECTION OF ENGINE OIL EM-100
REMOVAL EM-101
DISASSEMBLY EM-103
INSPECTION EM-103
REASSEMBLY EM-104
INSTALLATION EM-105

INTAKE AND EXHAUST SYSTEM
INTAKE MANIFOLD
COMPONENTS EM-108
REMOVAL EM-109
EXHAUST MANIFOLD
COMPONENTS EM-111
REMOVAL EM-112
EXHAUST PIPE
COMPONENTS EM-114
REMOVAL EM-115

Hyundai Accent 1.6L G4ED cvvt EM

GENERAL

SPECIFICATIONS E13EACCE

Description		Specifications	Limit
		1.6 CVVT	
General			
Type		In-line, DOHC	
Number of cylinders		4	
Bore		76.5mm (3.0118in)	
Stroke		87mm (3.4252in)	
Total displacement		1,599 cc (97.57 cu.in)	
Compression ratio		10.0 : 1	
Firing order		1-3-4-2	
Valve timing			
Intake valve	Opens (BTDC)	-8°	
	Closes (ABDC)	60°	
Exhaust valve	Opens (BBDC)	46°	
	Closes (ATDC)	10°	
Cylinder head			
Flatness of gasket surface		Less than 0.03mm (0.0012in)	
Flatness of manifold mounting surface	Intake	Less than 0.15mm (0.0059in)	
	Exhaust	Less than 0.15mm (0.0059in)	
Valve guide hole diameter (Intake, Exhaust)	STD	11.000 ~ 11.018mm (0.4331 ~ 0.4338in)	
	0.05 OS	11.050 ~ 11.068mm (0.4350 ~ 0.4357in)	
	0.25 OS	11.250 ~ 11.268mm (0.4429 ~ 0.4436in)	
	0.50 OS	11.500 ~ 11.518mm (0.4528 ~ 0.4535in)	
Intake valve seat ring hole diameter	STD	30.400 ~ 30.421mm (1.1968 ~ 1.1977in)	
	0.3 OS	30.700 ~ 30.721mm (1.2087 ~ 1.2095in)	
	0.6 OS	31.000 ~ 31.021mm (1.2205 ~ 1.2213in)	
Exhaust valve seat ring hole diameter	STD	27.000 ~ 27.021mm (1.0630 ~ 1.0638in)	
	0.3 OS	27.300 ~ 27.321mm (1.0748 ~ 1.0756in)	
	0.6 OS	27.600 ~ 27.621mm (1.0866 ~ 1.0874in)	
Camshaft			
Cam height	Intake	43.7492 ~ 43.9492mm (1.72241 ~ 1.73028in)	
	Exhaust	44.1494 ~ 44.3494mm (1.73816 ~ 1.74604in)	
Journal outer diameter (Intake, Exhaust)		26.964 ~ 26.980mm (1.0616 ~ 1.0622in)	
Camshaft cap oil clearance		0.02 ~ 0.061mm (0.0008 ~ 0.0024in)	

Description		Specifications	Limit
		1.6 CVVT	
End play		0.10 ~ 0.20mm (0.0039 ~ 0.0079in)	
Valve			
Valve length	Intake	91.8mm (3.6142in)	
	Exhaust	92.4mm (3.6378in)	
Stem outer diameter	Intake	5.965 ~ 5.980mm (0.2348 ~ 0.2354in)	
	Exhaust	5.950 ~ 5.965mm (0.2343 ~ 0.2348in)	
Face angle		45°~ 45°30'	
Thickness of valve head (margin)	Intake	1.1mm (0.0433in)	0.8mm (0.0315in)
	Exhaust	1.3mm (0.0512in)	1.0mm (0.0394in)
Valve stem to valve guide clearance	Intake	0.02 ~ 0.05mm (0.0008 ~ 0.0020in)	0.10mm (0.0039in)
	Exhaust	0.035 ~ 0.065mm (0.0014 ~ 0.0026in)	0.15mm (0.0059in)
Valve guide			
Length	Intake	36.3 ~ 36.7mm (1.4291 ~ 1.4449in)	
	Exhaust	39.3 ~ 39.7mm (1.5472 ~ 1.5630in)	
Valve seat			
Width of seat contact	Intake	0.8 ~ 1.2mm (0.0315 ~ 0.0472in)	
	Exhaust	1.3 ~ 1.7mm (0.0512 ~ 0.0669in)	
Seat angle	Intake	45°~ 45°30'	
	Exhaust	45°~ 45°30'	
Valve spring			
Free length		44.0mm (1.7323in)	
Load		21.6±1.1kg/35mm(47.6±2.4 lb/1.3780in)	
		45.1±2.2kg/27.2mm(99.4±4.9 lb/1.0709in)	
Out of squareness		Less than 1.5°	3°
Cylinder block			
Cylinder bore		76.50 ~ 76.53mm (3.0118 ~ 3.0130in)	
Flatness of gasket surface		Less than 0.05mm (0.0020in)	
Piston			
Piston outer diameter		76.47 ~ 76.50mm (3.0106 ~ 3.0118in)	
Piston to cylinder clearance		0.020 ~ 0.040mm (0.0008 ~ 0.0016in)	
Ring groove width	No. 1 ring groove	1.230 ~ 1.255mm (0.0484 ~ 0.0494in)	
	No. 2 ring groove	1.230 ~ 1.255mm (0.0484 ~ 0.0494in)	
	Oil ring groove	2.030 ~ 2.055mm (0.0799 ~ 0.0809in)	
Piston ring			

Description		Specifications	Limit
		1.6 CVVT	
Side clearance	No.1 ring	0.04 ~ 0.085mm (0.0016 ~ 0.0033in)	0.1 mm (0.0039in)
	No.2 ring	0.04 ~ 0.085mm (0.0016 ~ 0.0033in)	0.1 mm (0.0039in)
	Oil ring	0.08 ~ 0.175mm (0.0031 ~ 0.0069in)	
End gap	No. 1 ring	0.15 ~ 0.30mm (0.0059 ~ 0.0118in)	1.0mm (0.0394in)
	No. 2 ring	0.35 ~ 0.50mm (0.0138 ~ 0.0197in)	1.0mm (0.0394in)
	Oil ring	0.20 ~ 0.70mm (0.0079 ~ 0.0276in)	1.0mm (0.0394in)
Piston pin			
Piston pin outer diameter		18.001 ~ 18.007mm (0.7087 ~ 0.7089in)	
Piston pin hole inner diameter		18.016 ~ 18.021mm (0.7093 ~ 0.7095in)	
Piston pin hole clearance		0.011 ~ 0.018mm (0.0004 ~ 0.0007in)	
Connecting rod small end hole inner diameter		17.974 ~ 17.985mm (0.7076 ~ 0.7081in)	
Connecting rod small end hole clearance		-0.032 ~ -0.016mm (-0.0013 ~ -0.0006in)	
Piston pin press-in load		500~1,500 kg (1,102 ~ 3,306 lb)	
Connecting rod			
Connecting rod big end inner diameter		48.000 ~ 48.018mm (1.8898 ~ 1.8905in)	
Connecting rod bearing oil clearance		0.018 ~ 0.036mm (0.0007 ~ 0.0014in)	
Side clearance		0.10 ~ 0.25mm (0.0039 ~ 0.0098in)	0.4mm (0.0157in)
Crankshaft			
Main journal outer diameter		49.950 ~ 49.968mm (1.9665 ~ 1.9672in)	
Pin journal outer diameter		44.954 ~ 44.972mm (1.7698 ~ 1.7705in)	
Main bearing oil clearance	No. 1, 2, 4, 5	0.022 ~ 0.040mm (0.0009 ~ 0.0016in)	0.1mm (0.0039in)
	No. 3	0.028 ~ 0.046mm (0.0011 ~ 0.0018in)	0.1mm (0.0039in)
End play		0.05 ~ 0.175mm (0.0020 ~ 0.0069in)	0.2mm (0.0079in)
Flywheel			
Runout		0.1mm (0.0039in)	0.13mm (0.0051in)
Oil pump			
Side clearance	Inner rotor	0.040 ~ 0.085mm (0.0016 ~ 0.0033in)	
	Outer rotor	0.040 ~ 0.090mm (0.0016 ~ 0.0035in)	
Body clearance		0.060 ~ 0.090mm (0.0024 ~ 0.0035in)	
Relief valve opening pressure		500±49.0kpa (5.1±0.5kg/cm², 72.5±7.1psi)	
Relief spring	Free length	46.6mm (1.8346in)	
	Load	6.1±0.4kg/40.1mm (13.4±0.9 lb/1.5787in)	
Engine oil			
Oil quantity (Total)		3.3 L (3.49 US qt, 2.90 Imp qt)	

Description		Specifications	Limit
		1.6 CVVT	
Oil quantity (Oil pan)		3.0 L (3.17 US qt, 2.64 Imp qt)	
Oil quantity (Oil filter)		0.3 L (0.32 US qt, 0.26 Imp qt)	
Oil quality		Above SJ / SL	
Oil pressure (Idle)		107.8kpa (1.1kg/cm², 15.6psi)	
Cooling system			
Cooling method		Forced circulation with cooling fan	
Coolant quantity		5.5 ~ 5.8 L (5.81 ~6.13 US qt, 4.84 ~5.10 Imp qt)	
Thermostat	Type	Wax pellet type	
	Opening temperature	82±1.5°C (179.6±2.7°F)	
	Pull opening temperature	95°C (203°F)	
Radiator cap	Main valve opening pressure	93.16 ~ 122.58kpa (0.95 ~ 1.25kg/cm², 13.51 ~ 17.78psi)	
	Vacuum valve opening pressure	0.98 ~ 4.90 kpa (0.01 ~ 0.05kg/cm², 0.14 ~ 0.71 psi)	
Water temperature sensor			
Type		Thermister type	
Resistance	20°C (68°F)	2.45±0.14 kΩ	
	80°C (176°F)	0.3222 kΩ	

TIGHTENING TORQUE

Item	Quan-tity	Tightening torque		
		N.m	kgf.m	lb-ft
Cylinder block				
Engine support bracket bolt	2	44.1 ~ 53.9	4.5 ~ 5.5	32.5 ~ 39.8
Engine support bracket nut	1	44.1 ~ 53.9	4.5 ~ 5.5	32.5 ~ 39.8
Engine support bracket stay bolt	2	44.1 ~ 53.9	4.5 ~ 5.5	32.5 ~ 39.8
Rear plate bolt	1	9.8 ~ 11.8	1.0 ~ 1.2	7.2 ~ 8.7
Engine mounting				
Engine mounting bracket and body fixing bolt	3	49.0 ~ 63.7	5.0 ~ 6.5	36.2 ~ 47.0
Engine mounting insulator and engine mounting support bracket fixing nut	1	68.6 ~ 93.2	7.0 ~ 9.5	50.6 ~ 68.7
Engine mounting support bracket and engine support bracket fixing bolt	2	49.0 ~ 63.7	5.0 ~ 6.5	36.2 ~ 47.0
Engine mounting support bracket and engine support bracket fixing nut	1	49.0 ~ 63.7	5.0 ~ 6.5	36.2 ~ 47.0
Transaxle mounting bracket and body fixing bolt	3	49.0 ~ 63.7	5.0 ~ 6.5	36.2 ~ 47.0
Transaxle mounting insulator and transaxle support bracket fixing bolt	2	68.6 ~ 93.2	7.0 ~ 9.5	50.6 ~ 68.7
Front roll stopper bracket and sub frame fixing bolt	3	49.0 ~ 63.7	5.0 ~ 6.5	36.2 ~ 47.0
Front roll stopper insulator and front roll stopper support bracket fixing bolt,nut	1	49.0 ~ 63.7	5.0 ~ 6.5	36.2 ~ 47.0
Rear roll stopper bracket and sub frame fixing bolt	3	49.0 ~ 63.7	5.0 ~ 6.5	36.2 ~ 47.0
Rear roll stopper insulator and rear roll stopper support bracket fixing bolt,nut	1	49.0 ~ 63.7	5.0 ~ 6.5	36.2 ~ 47.0
Main moving system				
Connecting rod cap nut	8	31.4 ~ 34.3	3.2 ~ 3.5	23.1 ~ 25.3
Crankshaft main bearing cap bolt	10	53.9 ~ 58.8	5.5 ~ 6.0	39.8 ~ 43.4
Flywheel bolt (M/T)	5	117.7 ~ 127.5	12.0 ~ 13.0	86.8 ~ 94.0
Drive plate bolt (A/T)	5	117.7 ~ 127.5	12.0 ~ 13.0	86.8 ~ 94.0
Timing belt				
Timing belt front upper cover bolt	4	7.8 ~ 9.8	0.8 ~ 1.0	5.8 ~ 7.2
Timing belt front lower cover bolt	5	7.8 ~ 9.8	0.8 ~ 1.0	5.8 ~ 7.2
Timing belt rear lower LH cover bolt	3	9.8 ~ 11.8	1.0 ~ 1.2	7.2 ~ 8.7
Timing belt rear upper LH cover bolt	1	9.8 ~ 11.8	1.0 ~ 1.2	7.2 ~ 8.7
Timing belt rear upper RH cover bolt	2	9.8 ~ 11.8	1.0 ~ 1.2	7.2 ~ 8.7
Crankshaft pulley bolt	1	137.3 ~ 147.1	14.0 ~ 15.0	101.3 ~ 108.5
Camshaft sprocket bolt	1	78.5 ~ 98.1	8.0 ~ 10.0	57.9 ~ 72.3
Timing belt tensioner bolt	1	19.6 ~ 26.5	2.0 ~ 2.7	14.5 ~ 19.5
Timing belt idler bolt	1	42.2 ~ 53.9	4.3 ~ 5.5	31.1 ~ 39.8

Item	Quan-tity	Tightening torque		
		N.m	kgf.m	lb-ft
Cylinder head				
Engine cover bolt	4	3.9 ~ 5.9	0.4 ~ 0.6	2.9 ~ 4.3
Cylinder head cover bolt	12	7.8 ~ 9.8	0.8 ~ 1.0	5.8 ~ 7.2
Camshaft bearing cap bolt	24	11.8 ~ 13.7	1.2 ~ 1.4	8.7 ~ 10.1
Intake camshaft and CMP sensor target wheel fixing bolt	1	14.7 ~ 19.6	1.5 ~ 2.0	10.8 ~ 14.5
Exhaust camshaft and CVVT assembly fixing bolt	1	64.7 ~ 76.5	6.6 ~ 7.8	47.7 ~ 56.4
Timing chain auto tensioner bolt	2	7.8 ~ 9.8	0.8 ~ 1.0	5.8 ~ 7.2
OCV(oil control valve) bolt	1	9.8 ~ 11.8	1.0 ~ 1.2	7.2 ~ 8.7
OCV(oil control valve) filter	1	40.2 ~ 50.0	4.1 ~ 5.1	29.7 ~ 36.9
Cylinder head bolt	10	29.4+90° → Release all bolts → 29.4+90°	3.0+90° → Release all bolts → 3.0+90°	21.7+90° → Release all bolts → 21.7+90°
Cooling system				
Water pump pulley bolt	4	7.8 ~ 9.8	0.8 ~ 1.0	5.8 ~ 7.2
Water pump bolt (8 X 28)	3	11.8 ~ 14.7	1.2 ~ 1.5	8.7 ~ 10.8
Water pump and alternator brace fixing bolt (8 X 45)	1	19.6 ~ 23.5	2.0 ~ 2.4	14.5 ~ 17.4
Water pump and alternator brace fixing bolt (8 X 65)	1	19.6 ~ 23.5	2.0 ~ 2.4	14.5 ~ 17.4
Thermostat housing nut	2	14.7 ~ 19.6	1.5 ~ 2.0	10.8 ~ 14.5
Water outlet fitting nut	2	14.7 ~ 19.6	1.5 ~ 2.0	10.8 ~ 14.5
Water inlet fitting bolt	3	16.7 ~ 19.6	1.7 ~ 2.0	12.3 ~ 14.5
Water temperature sensor	1	19.6 ~ 39.2	2.0 ~ 4.0	14.5 ~ 28.9
Water pipe fixing bolt	1	9.8 ~ 14.7	1.0 ~ 1.5	7.2 ~ 10.8
Lubrication system				
Oil filter	1	11.8 ~ 15.7	1.2 ~ 1.6	8.7 ~ 11.6
Front case bolt (8 X 22)	1	18.6 ~ 23.5	1.9 ~ 2.4	13.7 ~ 17.4
Front case bolt (8 X 30)	3	18.6 ~ 23.5	1.9 ~ 2.4	13.7 ~ 17.4
Front case bolt (8 X 45)	1	18.6 ~ 23.5	1.9 ~ 2.4	13.7 ~ 17.4
Front case bolt (8 X 60)	1	18.6 ~ 23.5	1.9 ~ 2.4	13.7 ~ 17.4
Oil pan bolt	18	9.8 ~ 11.8	1.0 ~ 1.2	7.2 ~ 8.7
Oil pan drain plug	1	39.2 ~ 44.1	4.0 ~ 4.5	28.9 ~ 32.5
Oil screen bolt	2	14.7 ~ 21.6	1.5 ~ 2.2	10.8 ~ 15.9
Oil pressure switch	1	14.7 ~ 21.6	1.5 ~ 2.2	10.8 ~ 15.9
Rear oil seal case	5	9.8 ~ 11.8	1.0 ~ 1.2	7.2 ~ 8.7
Intake and exhaust system				
Intake manifold and cylinder head fixing nut	6	14.7 ~ 19.6	1.5 ~ 2.0	10.8 ~ 14.5
Intake manifold and cylinder head fixing bolt(8X45)	2	14.7 ~ 19.6	1.5 ~ 2.0	10.8 ~ 14.5

Item	Quan-tity	Tightening torque		
		N.m	kgf.m	lb-ft
Intake manifold and cylinder head fixing bolt(8X22)	1	14.7 ~ 19.6	1.5 ~ 2.0	10.8 ~ 14.5
Intake manifold stay bolt	4	17.7 ~ 24.5	1.8 ~ 2.5	13.0 ~ 18.1
Exhaust manifold and cylinder head fixing nut	9	29.4 ~ 34.3	3.0 ~ 3.5	21.7 ~ 25.3
O2 sensor to exhaust manifold	1	49.0 ~ 58.8	5.0 ~ 6.0	36.2 ~ 43.4
Exhaust manifold heat cover and exhaust manifold fixing bolt	3	16.7 ~ 21.6	1.7 ~ 2.2	12.3 ~ 15.9
Air cleaner lower cover fixing bolt	3	7.8 ~ 9.8	0.8 ~ 1.0	5.8 ~ 7.2
Throttle body and surge tank fixing bolt and nut	4	14.7 ~ 19.6	1.5 ~ 2.0	10.8 ~ 14.5
Exhaust manifold and front muffler fixing nut	2	29.4 ~ 39.2	3.0 ~ 4.0	21.7 ~ 28.9
Front muffler and center muffler fixing nut	2	29.4 ~ 39.2	3.0 ~ 4.0	21.7 ~ 28.9
Center muffler and main muffler fixing nut	2	29.4 ~ 39.2	3.0 ~ 4.0	21.7 ~ 28.9

COMPESSION PRESSURE INSPECTION EEF8AA76

NOTE

If the there is lack of power, excessive oil consumption or poor fuel economy, measure the compression pressure.

1. Warm up and stop engine.
   Allow the engine to warm up to normal operating temperature.

2. Disconnect the ignition coil connectors and the spark plug cables. (Refer to EE group - ignition system)

■ **1.6 CVVT**

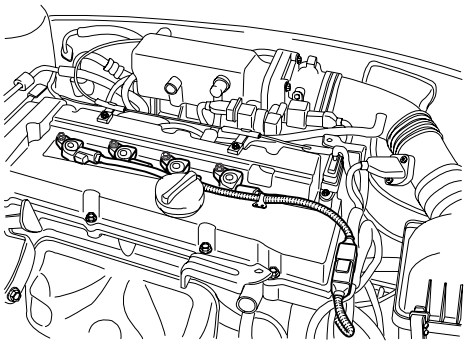

ACJF061A

3. Remove the spark plugs.
   Using a 16mm plug wrench, remove the 4 spark plugs.

4. Check the cylinder compression pressure.

   1) Insert a compression gauge into the spark plug hole.

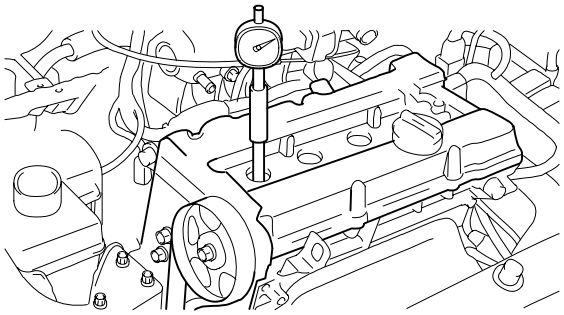

KDPC001B

   2) Fully open the throttle.

   3) While cranking the engine, measure the compression pressure.

NOTE

Always use a fully charged battery to obtain engine speed of 250rpm or more.

   4) Repeat step 1) through 3) for each cylinder.

NOTE

This measurement must be done in as short a time as possible.

Compression pressure (1.6 CVVT) Standard : 1,422kPa (14.5kg/cm², 206psi) (250~400 rpm) Minimum : 1,275kPa (13.0kg/cm², 185psi) Difference between each cylinder : 98kPa (1.0kg/cm², 14psi) or less

   5) If the cylinder compression in 1 or more cylinders is low, pour a small amount of engine oil into the cylinder through the spark plug hole and repeat step 1) through 3) for cylinders with low compression.
      - If adding oil helps the compression, it is likely that the piston rings and/or cylinder bore are worn or damaged.
      - If pressure stays low, a valve may be sticking or seating is improper, or there may be leakage past the gasket.

5. Reinstall the spark plugs.

6. Connect the ignition coil connectors and the spark plug cables. (Refer to EE group - ignition system)

TIMING BELT TENSION ADJUSTMENT

1. Remove the engine cover.
2. Remove the RH front wheel.
3. Remove the bolts(B) and RH side cover(A).

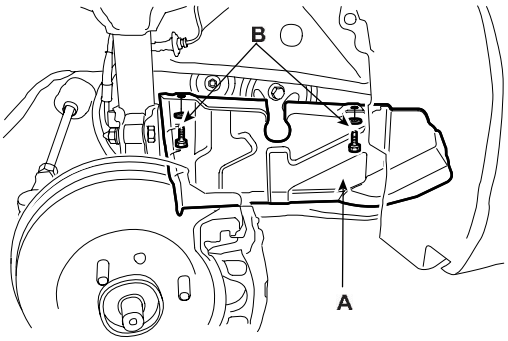

KXDSE16A

4. Loosen the water pump pulley bolts.

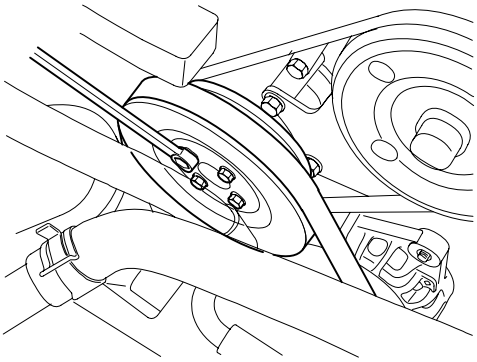

ECKD104B

5. Remove the alternator drive belt(A). (Refer to EE group - alternator)

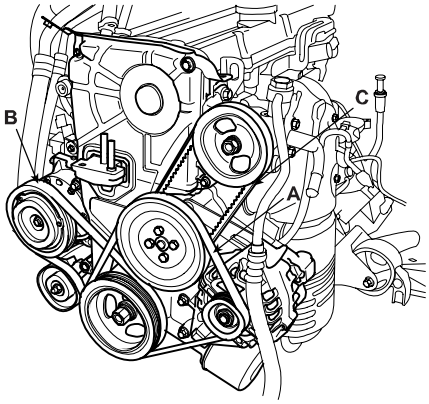

ACJF002A

6. Remove the air conditioner compressor drive belt(B). (Refer to HA group - air conditioner compressor)
7. Remove the power steering pump drive belt(C). (Refer to ST group - power steering pump)
8. Remove the water pump pulley.
9. Remove the 4 bolts(B) and timing belt upper cover (A).

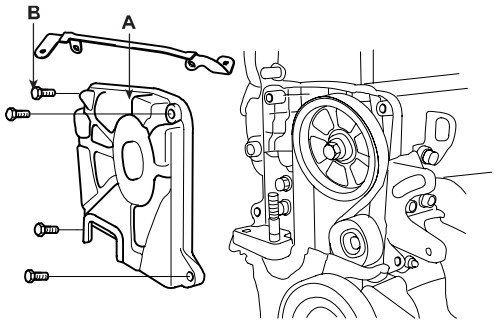

ADGE023A

10. Turn the crankshaft pulley, and align its groove with timing mark "T" of the timing belt cover. Check that the timing mark of camshaft sprocket(A) is aligned with the timing mark of cylinder head cover. (No.1 cylinder compression TDC position)

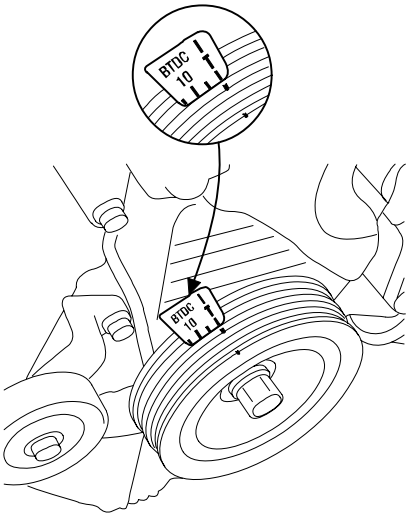

ECKD106A

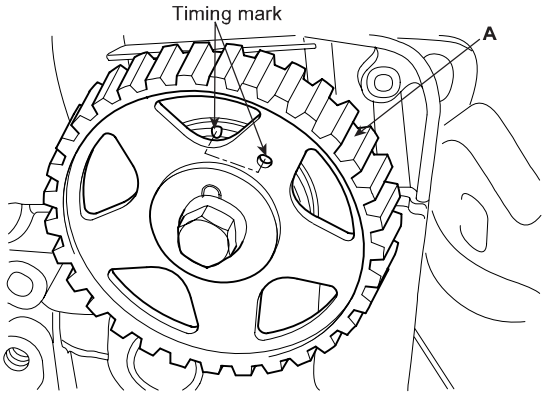

ECDD008F

11. Remove the crankshaft pulley(A).

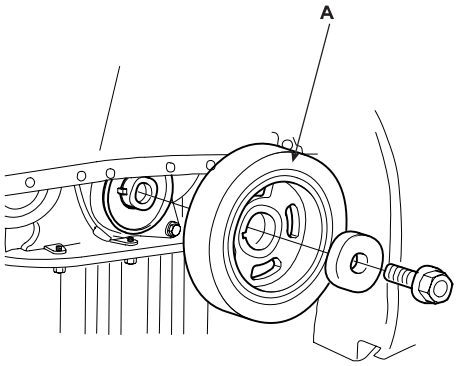

ADGE074A

12. Remove the 4 bolts(B) and timing belt lower cover(A).

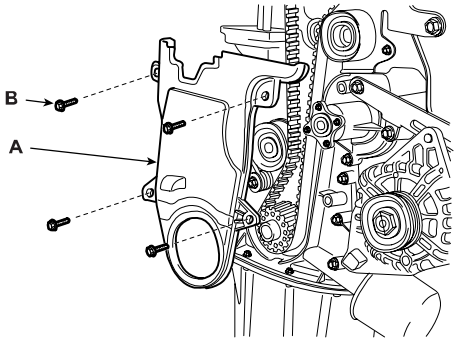

ADGE024A

13. Move the tensioner pulley(C) in the direction of the arrow shown after loosen the mounting bolt (A, B). And temporarily tighten mouting bolt (A, B).

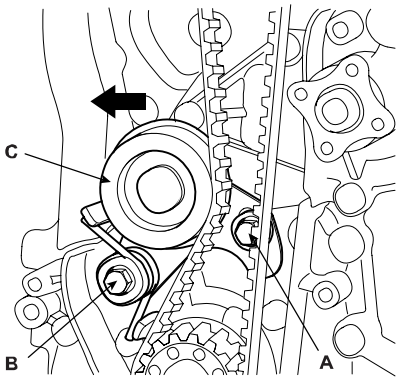

ADGE025A

14. Adjust the timing belt tension.

    1) After inspecting the timing belt, replace it if necessary.

    2) Loosen the tensioner pulley mounting bolt and apply tension to the timing belt.

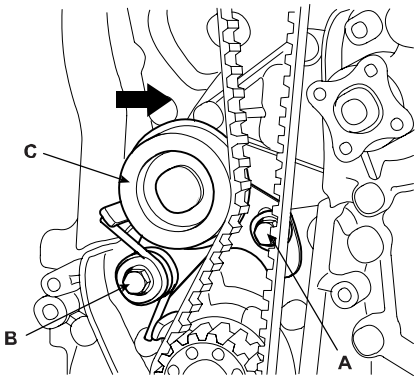

ADGE026A

    3) After checking the alignment between each sprocket and each timing belt tooth, tighten the mounting bolt (A) and (B) one by one.

Tightening torque :
19.6 ~ 26.5N.m (2.0 ~ 2.7kgf.m, 14.5 ~ 19.5lb-ft)

    4) Then recheck the belt tension.
    Verify that when the tensioner and the tension side of the timing belt are pushed in horizontally with a moderate force [approx. 49N (11lb)], the timing belt cog end is aprox. 1/2 of the tensioner mounting bolt head radius (across flats) away from the bolt head center.

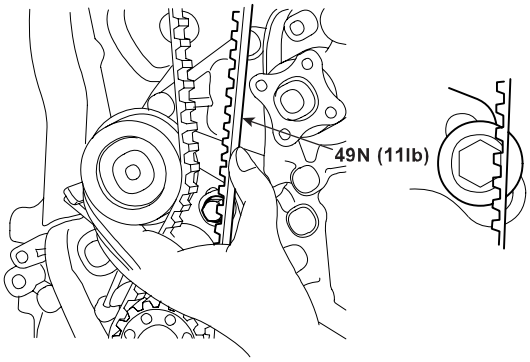

EDKD108A

    5) Timing belt tension measuring procedure (by a sonic tension guage)
    Rotate crankshaft in clockwise direction to set 1st piston on top dead center (TDC) and rotate crankshaft in counterclockwise to 90 ° then measure the belt tension in the middle of tension side span (in arrow direction of above illustration) by free vibration method.

CAUTION

Avoid rotating the crankshaft in a counter clock wise direction.
Engine damage could occur.

Conversion equation of frequency into tension :
$T = (4 / 9.8) \times S^2 \times M \times W \times f^2 / 100000000$

S: Measured belt span (mm)
M: Unit weight of belt (gf/cm²)
W: Belt width (mm)
f: Transverse natural frequency of belt (Hz)

TIMING BELT SPECIFICATIONS

Item	Specifications
S (mm)	249.6
M (gf/cm²)	0.4543
W (mm)	22
f (Hz)	70.4 ~ 87.9
T (kgf)	16 ± 3.5

15. Turn the crankshaft two turns in the operating direction (clockwise) and realign the crankshaft sprocket and camshaft sprocket timing mark.

16. Install the timing belt lower cover(A) with bolts(B).

Tightening torque :
7.8 ~ 9.8N.m (0.8 ~ 1.0kgf.m, 5.8 ~ 7.2lb-ft)

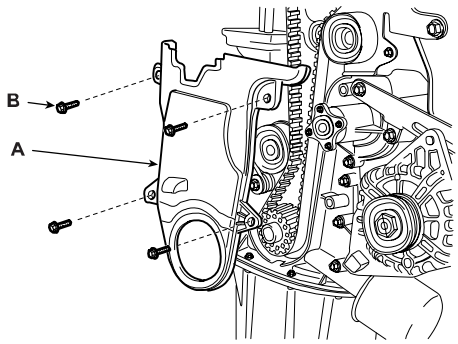

ADGE024A

17. Install the crankshaft pulley(A).

Tightening torque :
137.3 ~ 147.1N.m (14.0 ~ 15.0kgf.m, 101.3 ~ 108.5lb-ft)

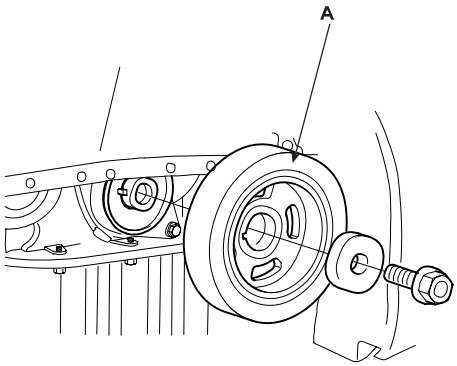

ADGE074A

18. Install the timing belt upper cover(A) with bolts(B).

Tightening torque :
7.8 ~ 9.8N.m (0.8 ~ 1.0kgf.m, 5.8 ~ 7.2lb-ft)

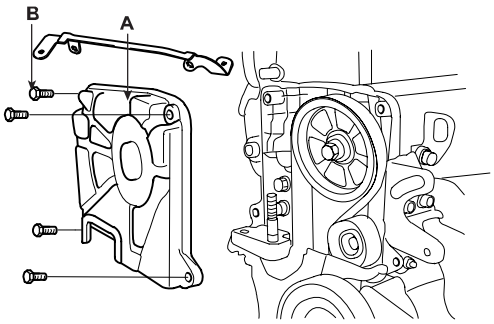

ADGE023A

19. Install the water pump pulley.

20. Install the power steering pump drive belt(C). (Refer to ST group - power steering pump)

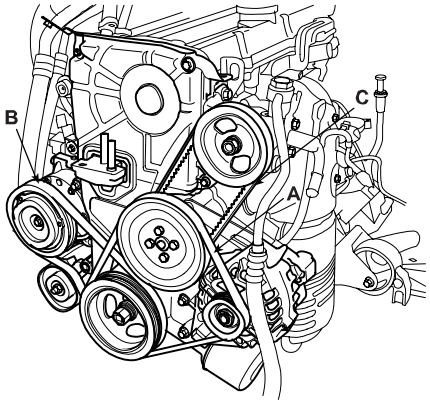

ACJF002A

21. Install the air conditioner compressor drive belt(B). (Refer to HA group - air conditioner compressor)

22. Install the alternator drive belt(A). (Refer to EE group - alternator)

23. Install the RH side cover(A) with bolts(B)

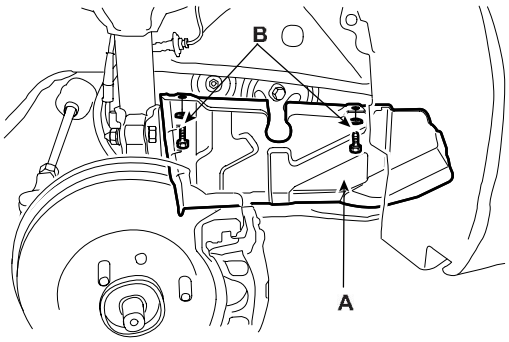

KXDSE16A

24. Install the RH front wheel.

Tightening torque :
88.3 ~ 107.9N.m (9 ~ 11kgf.m, 65.1 ~ 79.6lb-ft)

25. Install the engine cover with bolts.

Tightening torque :
7.8 ~ 11.8N.m (0.8 ~ 1.2kgf.m, 5.8 ~ 8.7lb-ft)

TROUBLESHOOTING ED5EEFF4

Symptom	Suspect area	Remedy
Engine misfire with abnormal internal lower engine noises.	Loose or improperly installed engine flywheel.	Repair or replace the flywheel as required.
	Worn piston rings. (Oil consumption may or may not cause the engine to misfire.)	Inspect the cylinder for a loss of compression . Repair or replace as required.
	Worn crankshaft thrust bearings.	Replace the crankshaft and bearings as required.
Engine misfire with abnormal valve train noise.	Stuck valves. (Carbon buildup on the valve stem can cause the valve not to close properly.)	Repair or replace as required.
	Excessive worn or mis-aligned timing chain.	Replace the timing chain and sprocket as required.
	Worn camshaft lobes.	Replace the camshaft and valve lifers.
Engine misfire with coolant consumption.	• Faulty cylinder head gasket and/or cracking or other damage to the cylinder head and engine block cooling system. • Coolant consumption may or may not cause the engine to overheat.	• Inspect the cylinder head and engine block for damage to the coolant passages and/or a faulty head gasket. • Repair or replace as required.
Engine misfire with excessive oil consumption.	Worn valves, valve guides and/or valve stem oil seals.	Repair or replace as required.
	Worn piston rings. (Oil consumption may or may not cause the engine to misfire)	Inspection the cylinder for a loss of compression. Repair or replace as required.
Engine noise on start-up, but only lasting a few seconds.	Incorrect oil viscosity.	Drain the oil. Install the correct viscosity oil.
	Worn crankshaft thrust bearing.	Inspect the thrust bearing and crankshaft. Repair or replace as required.
Upper engine noise, regardless of engine speed.	Low oil pressure.	Repair or replace as required.
	Broken valve spring.	Replace the valve spring.
	Worn or dirty valve lifters.	Replace the valve lifters.
	Stretched or broken timing chain and/or damaged sprocket teeth.	Replace the timing chain and sprockets.
	Worn timing chain tensioner, if applicable.	Replace the timing chain tensioner as required.
	Worn camshaft lobes.	Inspect the camshaft lobes. Replace the camshaft and valve lifters as required.
	Worn valve guides or valve stems.	Inspect the valves and valve guides, then repair as required.
	Stuck valves. (Carbon on the valve stem or valve seat may cause the valve to stay open.)	Inspect the valves and valve guides, then repair as required.

Symptom	Suspect area	Remedy
Lower engine noise, regardless of engine speed.	Low oil pressure.	Repair or replace damaged components as required.
	Loose or damaged flywheel.	Repair or replace the flywheel.
	Damaged oil pan, contacting the oil pump screen.	Inspect the oil pan. Inspect the oil pump screen. Repair or replace as required.
	Oil pump screen loose, damaged or restricted.	Inspect the oil pump screen. Repair or replace as required.
	Excessive piston-to-cylinder bore clearance.	Inspect the piston and cylinder bore. Repair as required.
	Excessive piston pin-to-bore clearance.	Inspect the piston, piston pin and the connecting rod. Repair or replace as required.
	Excessive connecting rod bearing clearance.	Inspect the following components and repair as required. • The connecting rod bearings. • The connecting rods. • The crankshaft. • The crankshaft journal.
	Excessive crankshaft bearing clearance.	Inspect the following components and repair as required. • The crankshaft bearings. • The crankshaft journals.
	Incorrect piston, piston pin and connecting rod installation.	Verify the piston pins and connecting rods are installed correctly. Repair as required.
Engine noise under load.	Low oil pressure.	Repair or replace as required.
	Excessive connecting rod bearing clearance.	Inspect the following components and repair as required. • The connecting rod bearings. • The connecting rods. • The crankshaft.
	Excessive crankshaft bearing clearance.	Inspect the following components and repair as required. • The crankshaft bearings. • The crankshaft journals. • The cylinder block crankshaft bearing bore.

Symptom	Suspect area	Remedy
Engine will not crank. (crankshaft will not rotate)	Hydraulically locked cylinder. • Coolant/antifreeze in cylinder. • Oil in cylinder. • Fuel in cylinder.	Remove spark plugs and check for fluid. Inspect for broken head gasket. Inspect for cracked engine block or cylinder head. Inspect for a sticking fuel injector and/or leaking fuel regulator.
	Broken timing chain and/or timing chain gears.	Inspect timing chain and gears. Repair as required.
	Foreign material in cylinder. • Broken valve. • Piston material. • Foreign material.	Inspect cylinder for damaged components and/or foreign materials. Repair or replace as required.
	Seized crankshaft or connecting rod bearings.	Inspect crankshaft and connecting rod bearing. Repair or replace as required.
	Bent or broken connecting rod.	Inspect connecting rods. Repair or replace as required.
	Broken crankshaft.	Inspect crankshaft. Repair or replace as required.

SPECIAL SERVICE TOOLS EDFD1F4A

Tool (Number and name)	Illustration	Use
Crankshaft front oil seal installer (09214-32000)	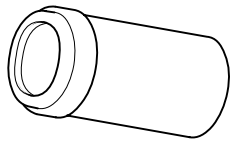 EDKA010A	Installation of the front oil seal
Crankshaft front oil seal guide (09214-32100)	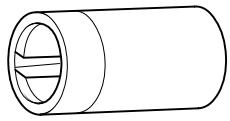 EDKA010B	Installation of the front oil seal
Camshaft oil seal installer (09221-21000)	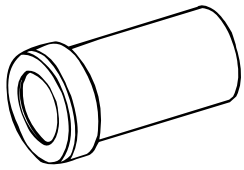 EDDA005B	Installation of the camshaft oil seal
Valve guide remover (09209221-3F100 (A)) Valve guide installer (09221-26000)	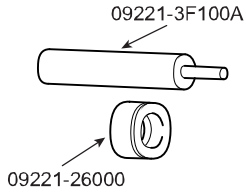 ADGE020B	Removal and installation of the valve guide
Valve stem oil seal installer (09222-22001)	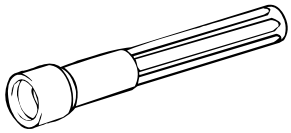 ECKA010A	Installation of the valve stem oil seal

Tool (Number and name)	Illustration	Use
Valve spring compressor (09222-28000) Valve spring compressor adaptor (09222-28100)	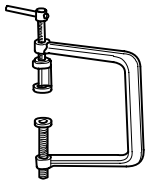 EDDA005C	Removal and installation of the intake or exhaust valve
Crankshaft rear oil seal installer (09231-21000)	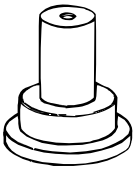 EDDA005F	Installation of the crankshaft rear oil seal
Water temperature sensor socket wrench (09221-25100)	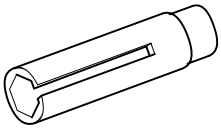 EDKD101B	Removal and installation of water temperature sensor
Oil pan remover (09215-3C000)	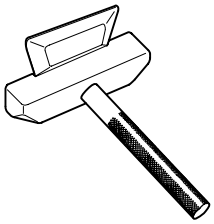 ACJF125A	Removal of oil pan
Torque angle adapter (09221-4A000)	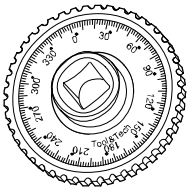 LCAC030A	Installation of bolts & nuts needing an angular method

TIMING SYSTEM

TIMMING BELT

COMPONENT EFD40A4D

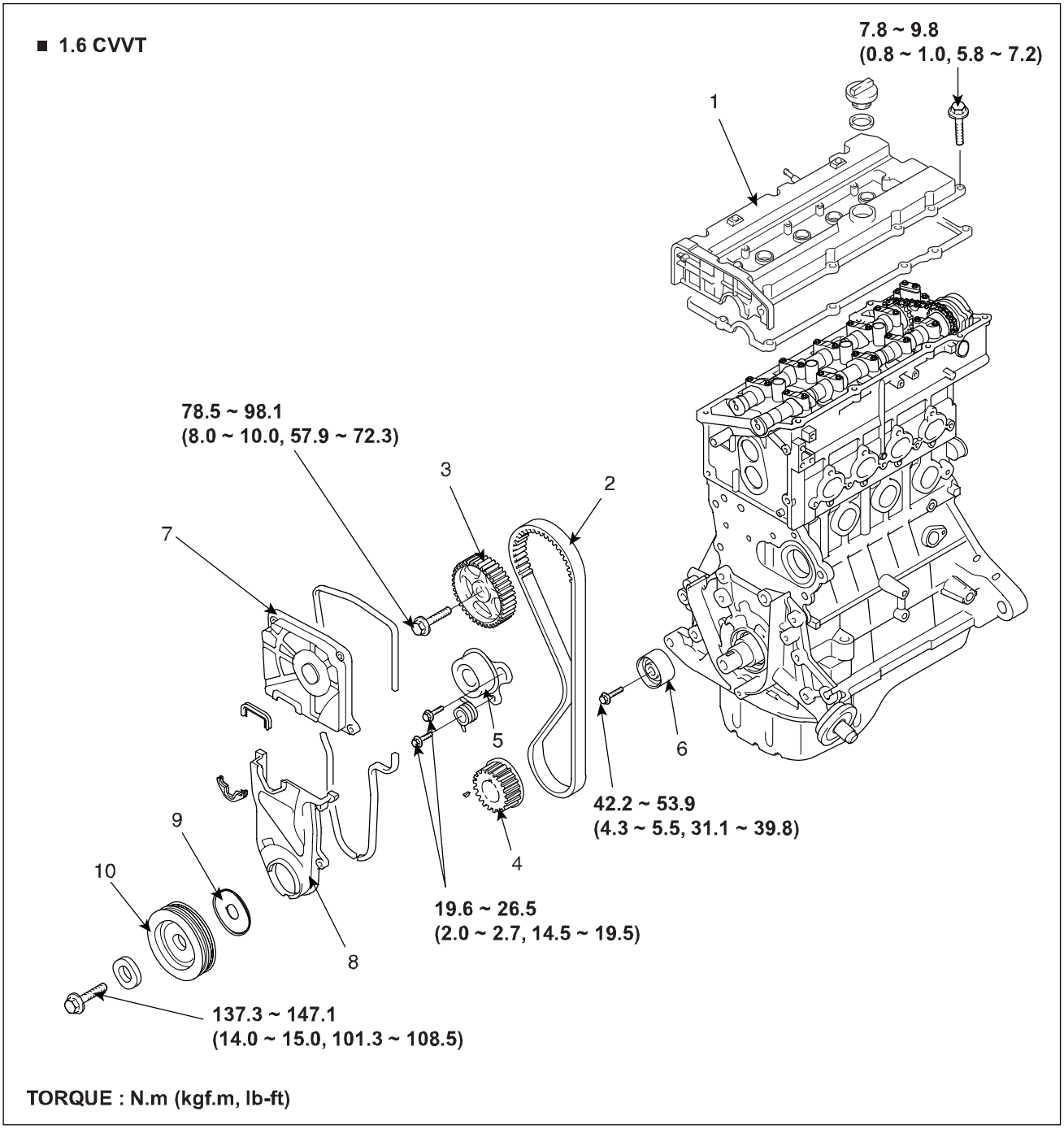

1. Cylinder head cover
2. Timing belt
3. Camshaft sprocket
4. Crankshaft sprocket
5. Tensioner
6. Idler
7. Timing belt upper cover
8. Timing belt lower cover
9. Flange
10. Crankshaft pulley

LCJF001A

REMOVAL EFB8E0EB

Engine removal is not required for this procedure.

1. Remove the engine cover.
2. Remove the RH front wheel.
3. Remove the 2 bolts(B) and RH side cover(A).

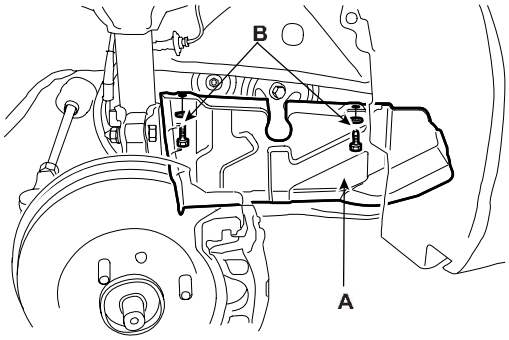

KXDSE16A

4. Temporarily loosen the water pump pulley bolts.

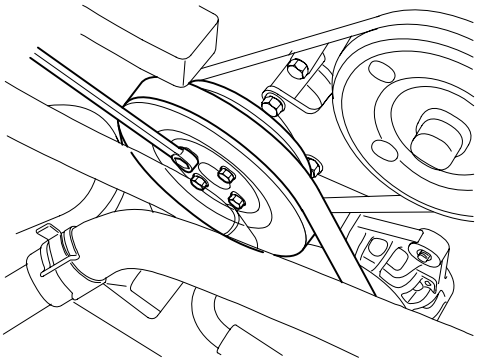

ECKD104B

5. Remove the alternator drive belt(A). (Refer to EE group - alternator)

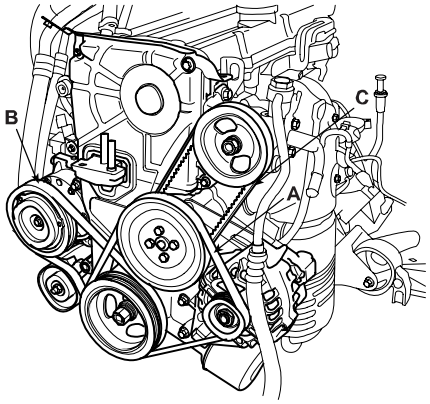

ACJF002A

6. Remove the air conditioner compressor drive belt(B). (Refer to HA group - air conditioner compressor)
7. Remove the power steering pump drive belt(C). (Refer to ST group - power steering pump)
8. Remove the 4 bolts and water pump pulley.
9. Remove the 4 bolts(B) and timing belt upper cover(A).

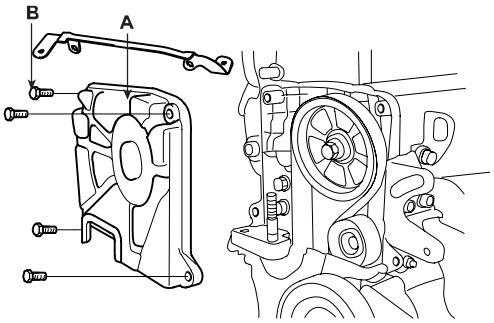

ADGE023A

10. Turn the crankshaft pulley, and align its groove with timing mark "T" of the timing belt cover. Check that the timing mark of camshaft sprocket is aligned with the timing mark of cylinder head cover. (No.1 cylinder compression TDC position)

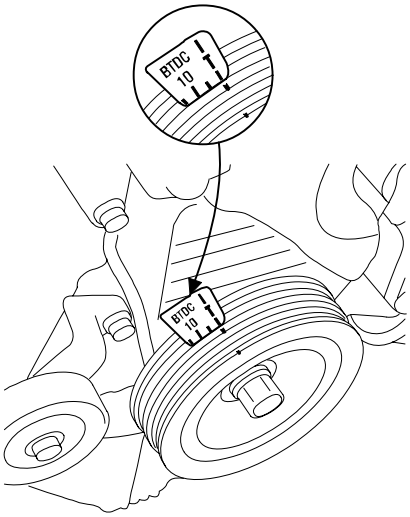

ECKD106A

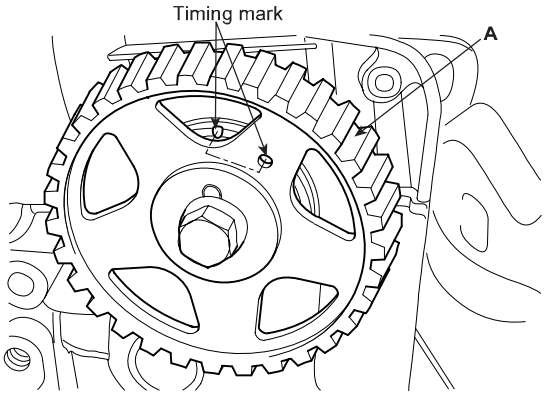

ECDD008F

11. Remove the crankshaft pulley bolt and crankshaft pulley(A).

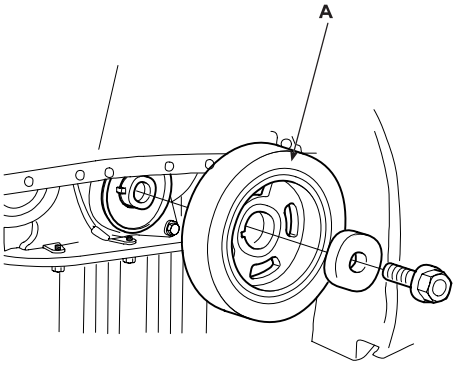

ADGE074A

12. Remove the crankshaft flange(A).

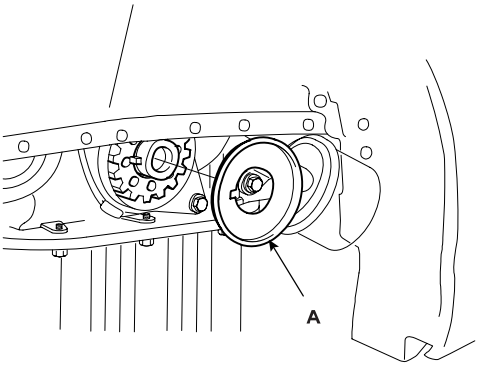

ECKD108A

13. Remove the 4 bolts(B) and timing belt lower cover(A).

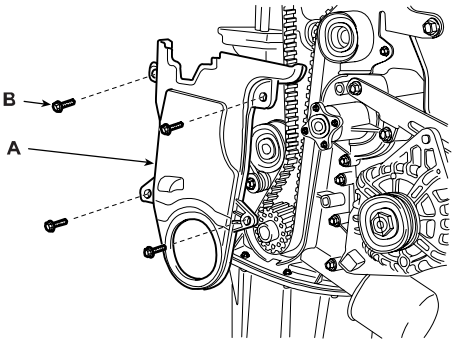

ADGE024A

14. Remove the timing belt tensioner(A) and timing belt.

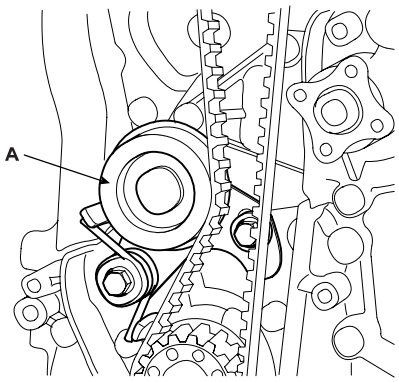

EDKD102B

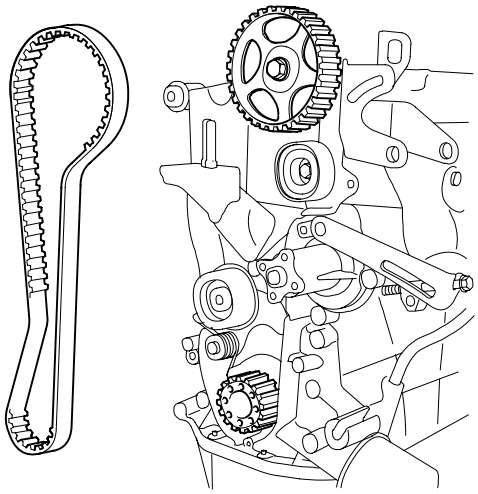

EDKD102A

NOTE

If the timing belt reused, make an arrow indicating the turning direction to make sure that the belt is reinstalled in the same direction as before.

15. Remove the bolt(B) and timing belt idler(A).

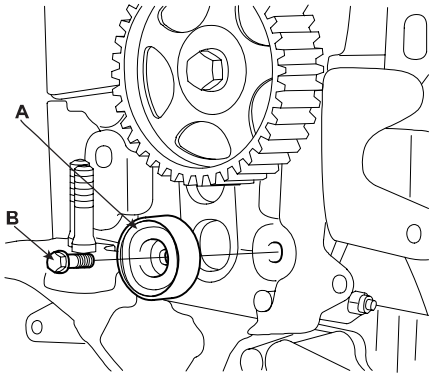

EDKD103A

16. Remove the crankshaft sprocket(A).

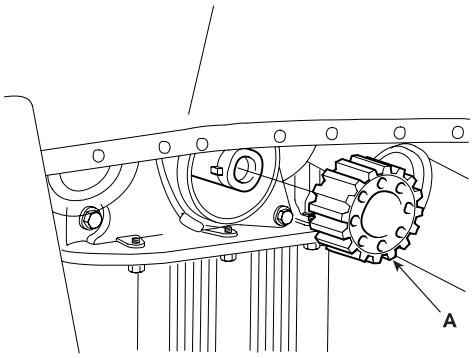

ECKD110A

17. Remove the cylinder head cover.

1) Remove the wire harness bracket(A).

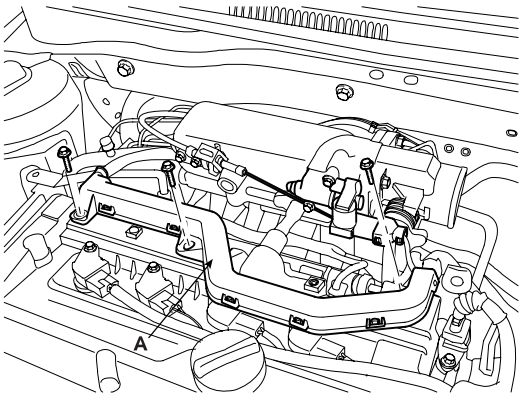

ACJF120A

2) Remove the ignition coil.

■ 1.6 CVVT

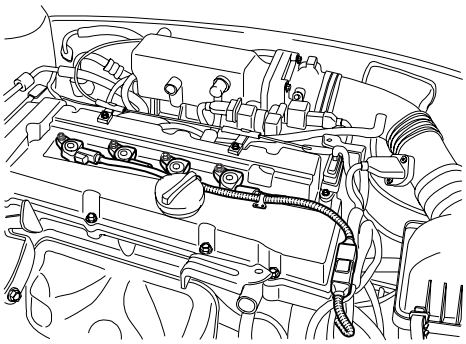

ACJF066A

3) Remove the PCV (Positive Crankcase Ventilation) hose(A) and the breather hose(B) from the cylinder head cover.

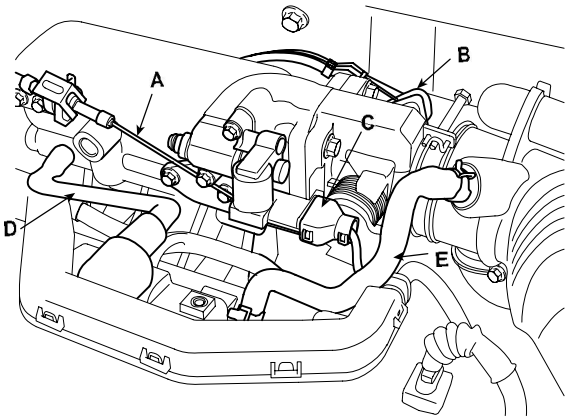

BCJF009A

4) Remove the engine cover bracket(A).

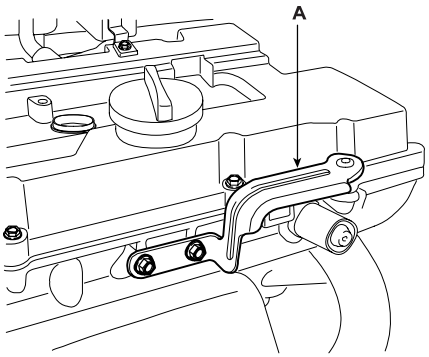

ADGE031A

5) Loosen the cylinder head cover bolts(B) and then remove the cover(A) and gasket.

■ 1.6 CVVT

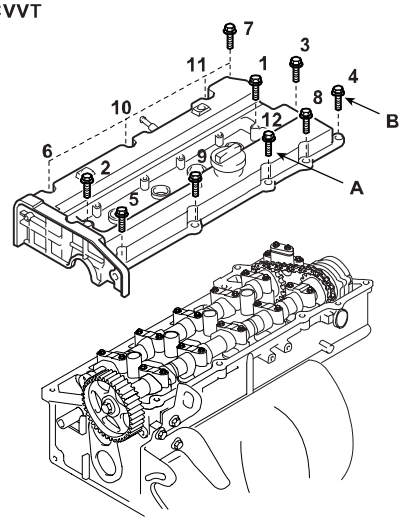

ACJF068A

18. Remove the camshaft sprocket.

1) Hold the portion(A) of the camshaft with a hexagonal wrench, and remove the bolt(C) with a wrench(B) and remove the camshaft sprocket.

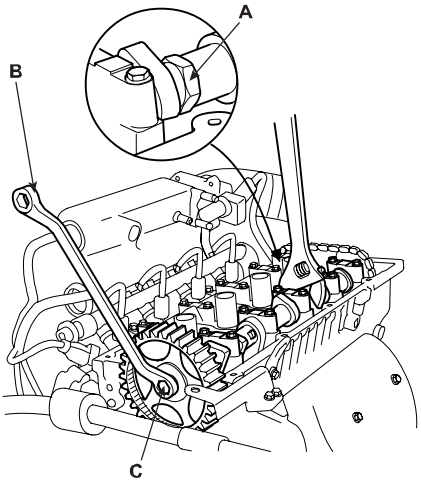

ADGE002A

⚠ ***CAUTION***

Be careful not to damage the cylinder head and valve lifter with the wrench.

INSPECTION EACEBBE7

TIMING BELT

1. Check the belt for oil or dust deposits.
   Replace, if necessary.
   Small deposits should be wiped away with a dry cloth or paper. Do not clean with solvent.

2. When the engine is overhauled or belt tension adjusted, check the belt carefully. If any of the following flaws are evident, replace the belt.

   NOTE

   - *Do not bend, twist or turn the timing belt inside out.*
   - *Do not allow timing belt to come into contact with oil, water and steam.*

3. Inspect the belt closely. If the following problems are evident, replace the belt with a new one.

1) Hardened back surface of rubber.
   Back surface is glossn, non-elastic and so hard that when the nail of your finger is pressed into it, no mark is produced.

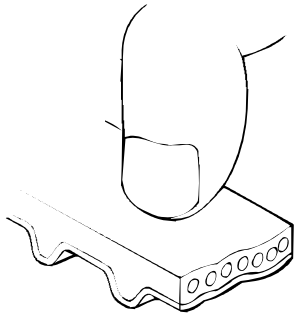

BCJF011A

2) Cracked back surface of rubber.

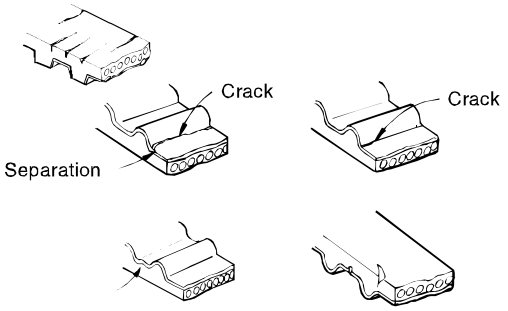

BCJF012A

3) Side of belt is badly worn.

   NOTE

   A belt in good condition should have clear-cut sides as if it were cut with a sharp knife.

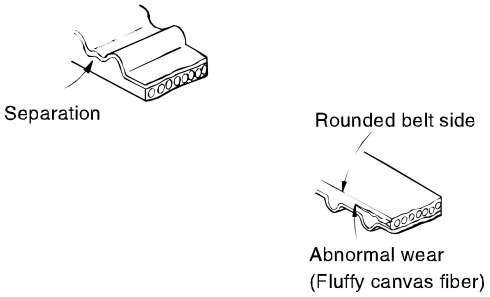

BCJF013A

4) Teeth are badly worn out.
   Initial stage : Canvas on load side of the tooth flank worn (fluffy canvas fibers, rubber gone, color changed to white, and unclear canvas texture)

   Last stage : Canvas on the load side of the tooth flank worn down and rubber exposed (tooth width reduced).

5) Missing tooth.

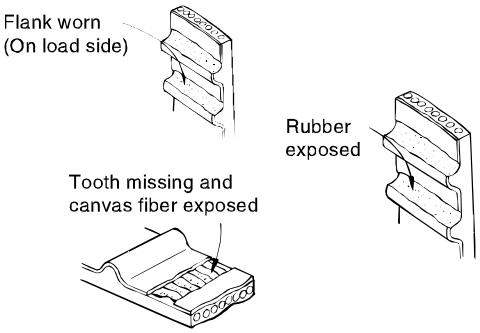

BCJF014A

SPROCKETS, TENSIONER, IDLER

1. Check the camshaft sprocket, crankshaft sprocket, tensioner pulley and idler pulley for abnormal wear, cracks, or damage. Replace as necessary.

2. Inspect the tensioner pulley and the idler pulley for easy and smooth rotation and check for play or noise. Replace as necessary.

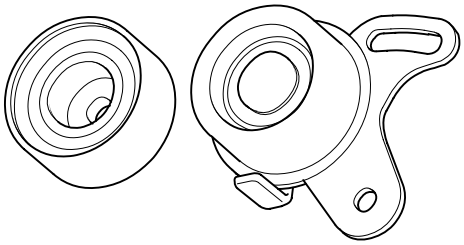

EDKD106A

3. Replace the pulley if there is a grease leak from its bearing.

INSTALLATION E4BD34A8

1. Install the camshaft sprocket and tighten the bolt to the specified torque.

   1) Temporarily install the camshaft sprocket bolt(C).

   2) Hold the portion(A) of the camshaft with a hexagonal wrench, and tighten the bolt(C) with a wrench(B) .

Tightening torque :
78.5 ~ 98.1N.m (8.0 ~ 10.0kgf.m, 57.9 ~ 72.3lb-ft)

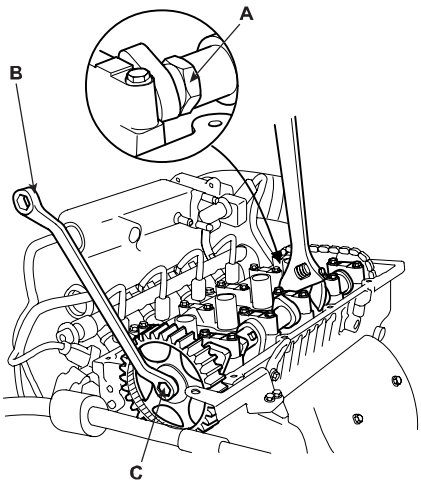

ADGE002A

2. Install the cylinder head cover.

   1) Install the cylinder head cover(A) and bolts(B).

Tightening torque :
7.8 ~ 9.8N.m (0.8 ~ 1.0kgf.m, 5.8 ~ 7.2lb-ft)

■ 1.6 CVVT

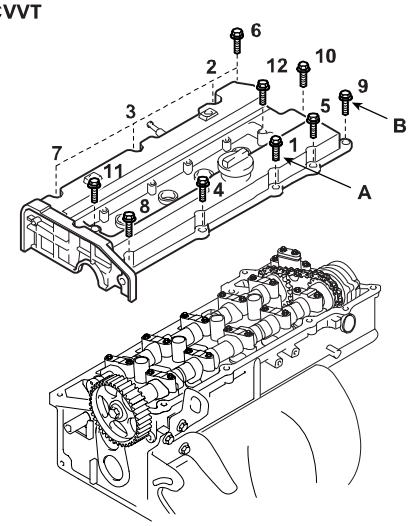

ACJF070A

   2) Install the engine cover bracket(A).

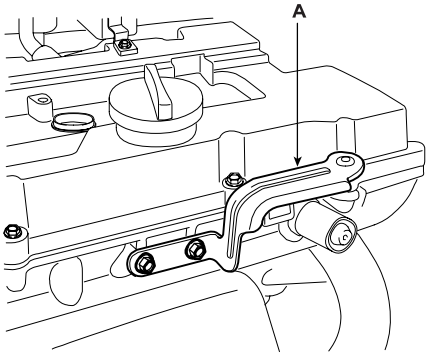

ADGE031A

3) Install the PCV(Positive Crankcase Ventilation) hose(A) and breather hose(B) to the cylinder head cover.

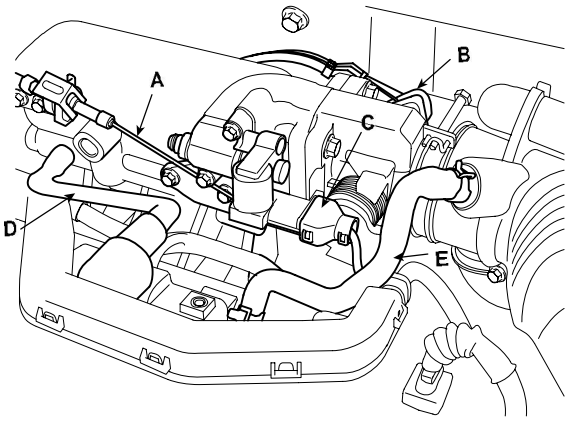

BCJF009A

4) Install the ignition coil.

■ **1.6 CVVT**

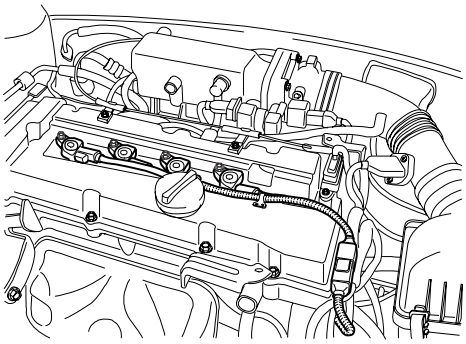

ACJF072A

3. Install the crankshaft sprocket(A).

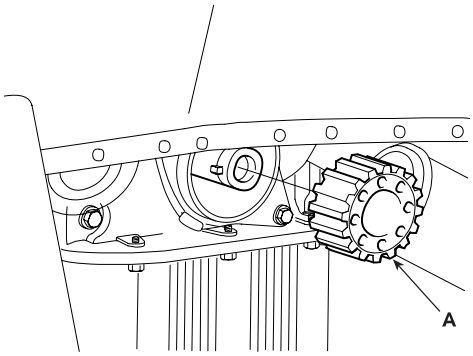

ECKD110A

4. Align the timing marks of the camshaft sprocket(A) and crankshaft sprocket(B) with the No.1 piston placed at top dead center and its compression stroke.

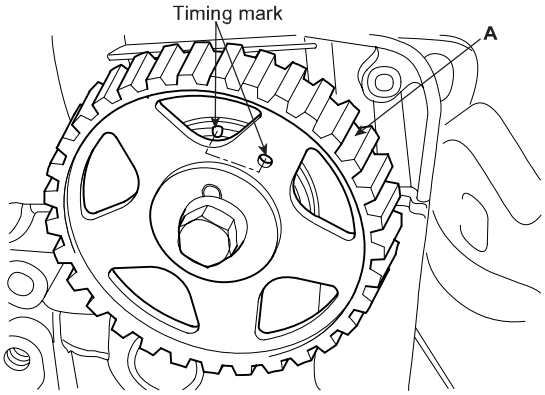

ECDD008F

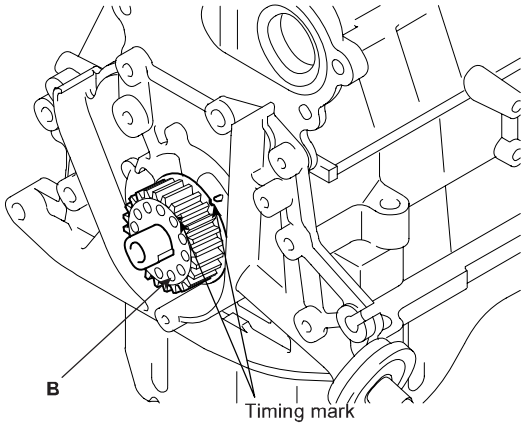

EDKD107A

5. Install the idler pulley(A) and tighten the bolt(B) to the specified torque.

Tightening torque :
42.2 ~ 53.9N.m (4.3 ~ 5.5kgf.m, 31.1 ~ 39.8lb-ft)

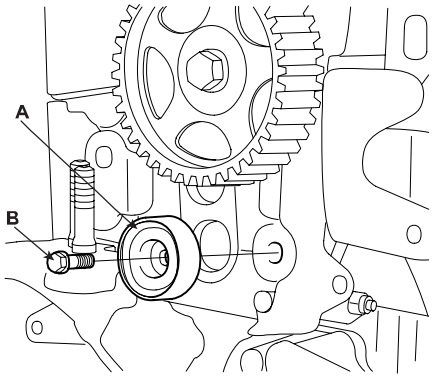

EDKD103A

6. Temporarily install the timing belt tensioner(A).

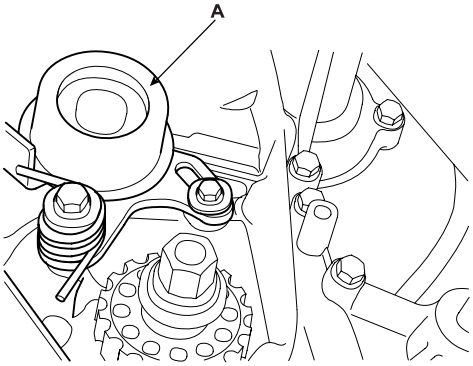

KDPC008E

7. Install the belt so as not give slack at each center of shaft. Use the following order when installing timing belt.
Crankshaft sprocket(A) →idler pulley(B) →camshaft sprocket(C) →timing belt tensioner(D).

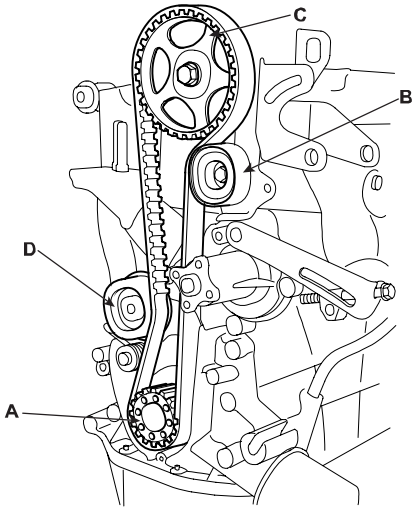

EDKD109A

8. Adjust the timing belt tension.

   1) Loosen the tensioner pulley mounting bolt and apply tension to the timing belt.

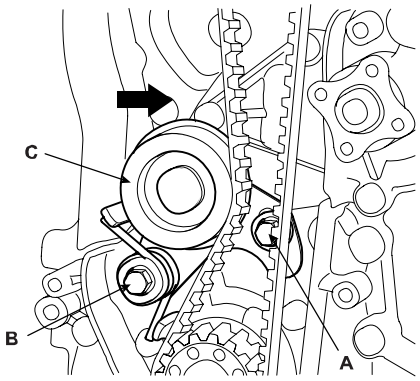

ADGE026A

2) After checking the alignment between each sprocket and each timing belt tooth, tighten the mounting bolt (A) and (B) one by one.

Tightening torque :
19.6 ~ 26.5N.m (2.0 ~ 2.7kgf.m, 14.5 ~ 19.5lb-ft)

3) Then recheck the belt tension.
Verify that when the tensioner and the tension side of the timing belt are pushed in horizontally with a moderate force [approx. 49N (11lb)], the timing belt cog end is aprox. 1/2 of the tensioner mounting bolt head radius (across flats) away from the bolt head center.

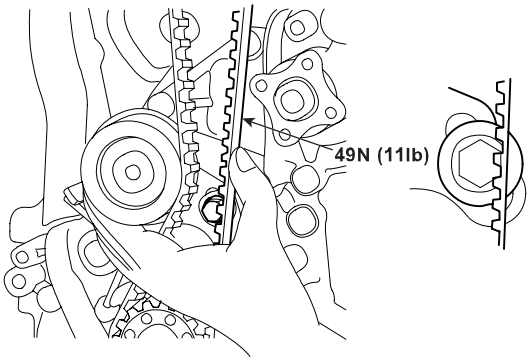

EDKD108A

4) Timing belt tension measuring procedure
(by a sonic tension guage)
Rotate crankshaft in clockwise direction to set 1st piston on top dead center (TDC) and rotate crankshaft in counterclockwise to 90° then measure the belt tension in the middle of tension side span (in arrow direction of above illustration) by free vibration method.

CAUTION

Avoid rotating the crankshaft in a counter clockwise direction.
Engine damage could occur.

Conversion equation of frequency into tension :
$T = (4 / 9.8) \times S^2 \times M \times W \times f^2 / 100000000$

S : Measured belt span (mm)
M : Unit weight of belt (gf/cm²)
W : Belt width (mm)
f : Transverse natural frequency of belt (Hz)

TIMING BELT SPECIFICATIONS

Item	Specifications
S (mm)	249.6
M (gf/cm²)	0.4543
W (mm)	22
f (Hz)	70.4 ~ 87.9
T (kgf)	16 ± 3.5

9. Turn the crankshaft two turns in the operating direction (clockwise) and realign crankshaft sprocket and camshaft sprocket timing mark.

10. Install the timing belt lower cover(A) with 5bolts(B).

Tightening torque :
7.8 ~ 9.8N.m (0.8 ~ 1.0kgf.m, 5.8 ~ 7.2lb-ft)

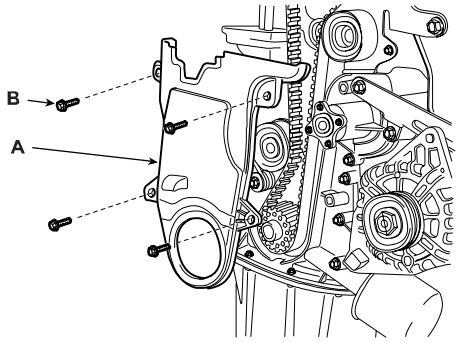

ADGE024A

11. Install the flange and crankshaft pulley(A), and then tighten crankshaft pulley bolt.
    Make sure that crankshaft sprocket pin fits the small hole in the pulley.

Tightening torque :
137.3 ~ 147.1N.m (14.0 ~ 15.0kgf.m, 101.3 ~ 108.5lb-ft)

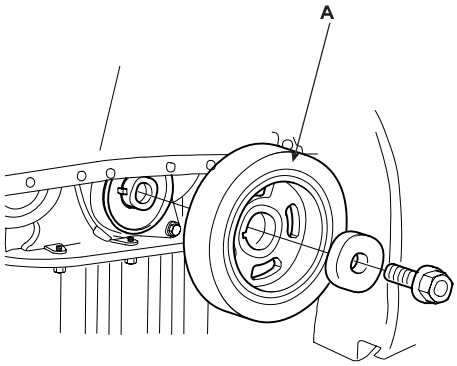

ADGE074A

12. Install the timing belt upper cover(A) with 4 bolts(B).

Tightening torque :
7.8 ~ 9.8N.m (0.8 ~ 1.0kgf.m, 5.8 ~ 7.2lb-ft)

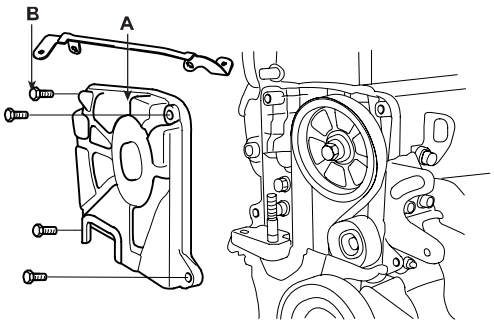

ADGE023A

13. Install the water pump pulley and 4 bolts.

14. Install the power steering pump drive belt(C). (Refer to ST group - power steering pump)

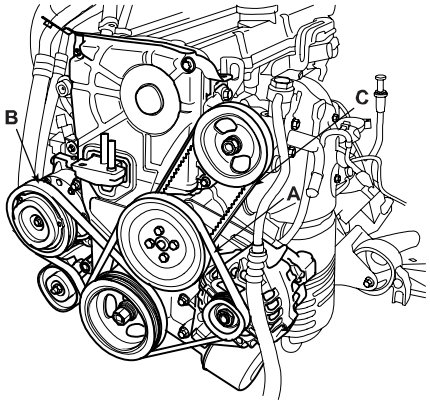

ACJF002A

15. Install the air conditioner compressor drive belt(B). (Refer to HA group - air conditioner compressor)

16. Install the alternator drive belt(A). (Refer to EE group - alternator)

17. Install the RH side cover(A) with 2 bolts(B).

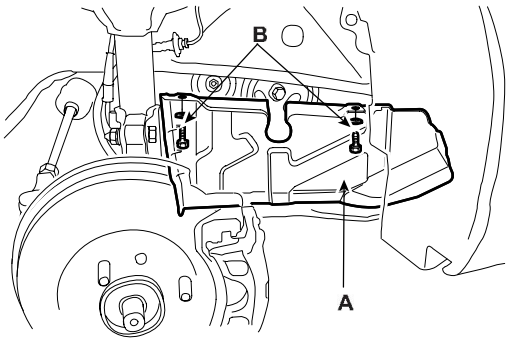

KXDSE16A

18. Install the RH front wheel.

Tightening torque :
88.3 ~ 98.1N.m (9.0 ~ 10.0kgf.m, 65.1 ~ 72.3lb-ft)

19. Install the engine cover with bolts.

Tightening torque :
7.8 ~ 11.8N.m (0.8 ~ 1.2kgf.m, 5.8 ~ 8.7lb-ft)

CYLINDER HEAD ASSEMBLY

COMPONENT EDCA8C53

■ 1.6 CVVT

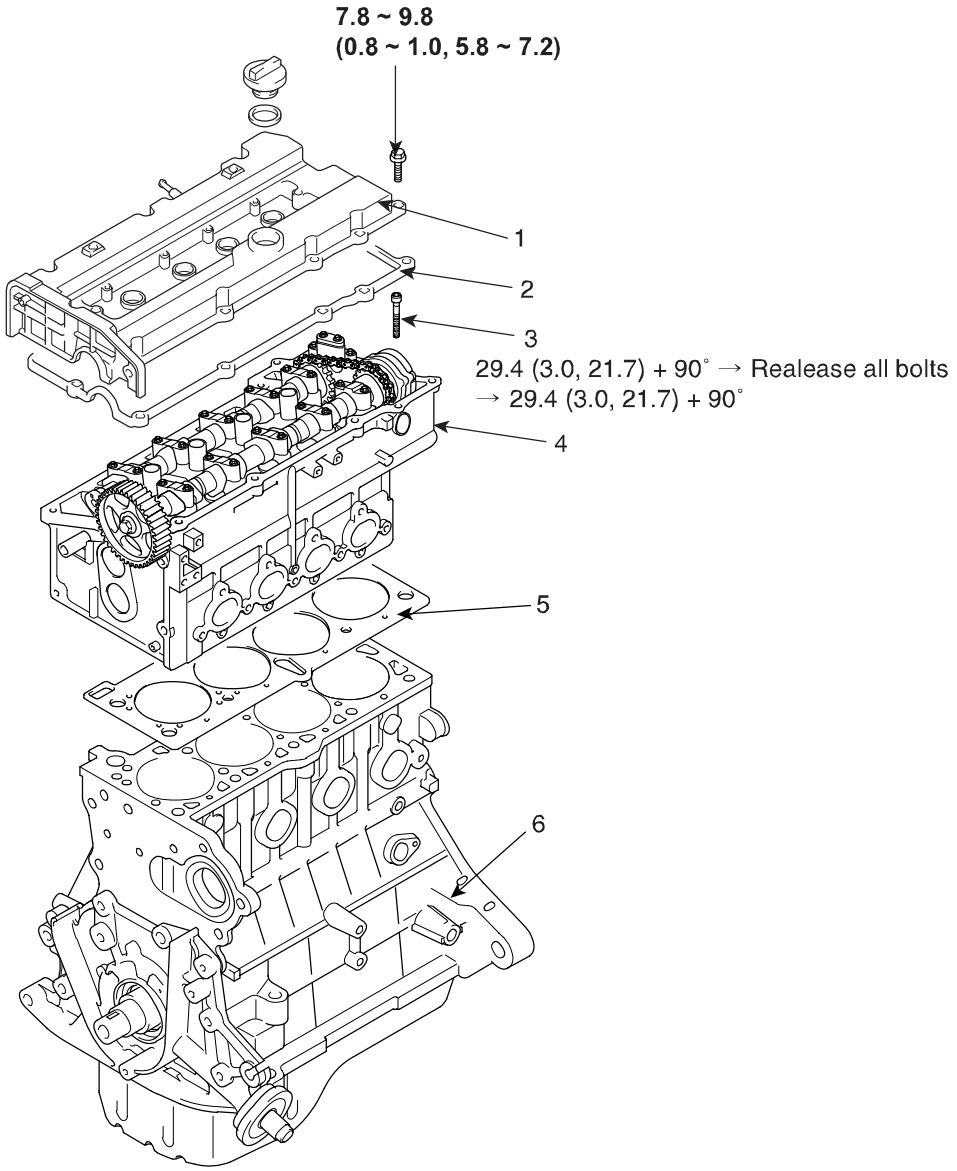

TORQUE : N.m (kgf.m, lb-ft)

1. Cylinder head cover
2. Gasket
3. Cylinder head bolt
4. Cylinder head
5. Cylinder head gasket
6. Cylinder block

LCJF003A

■ 1.6 CVVT

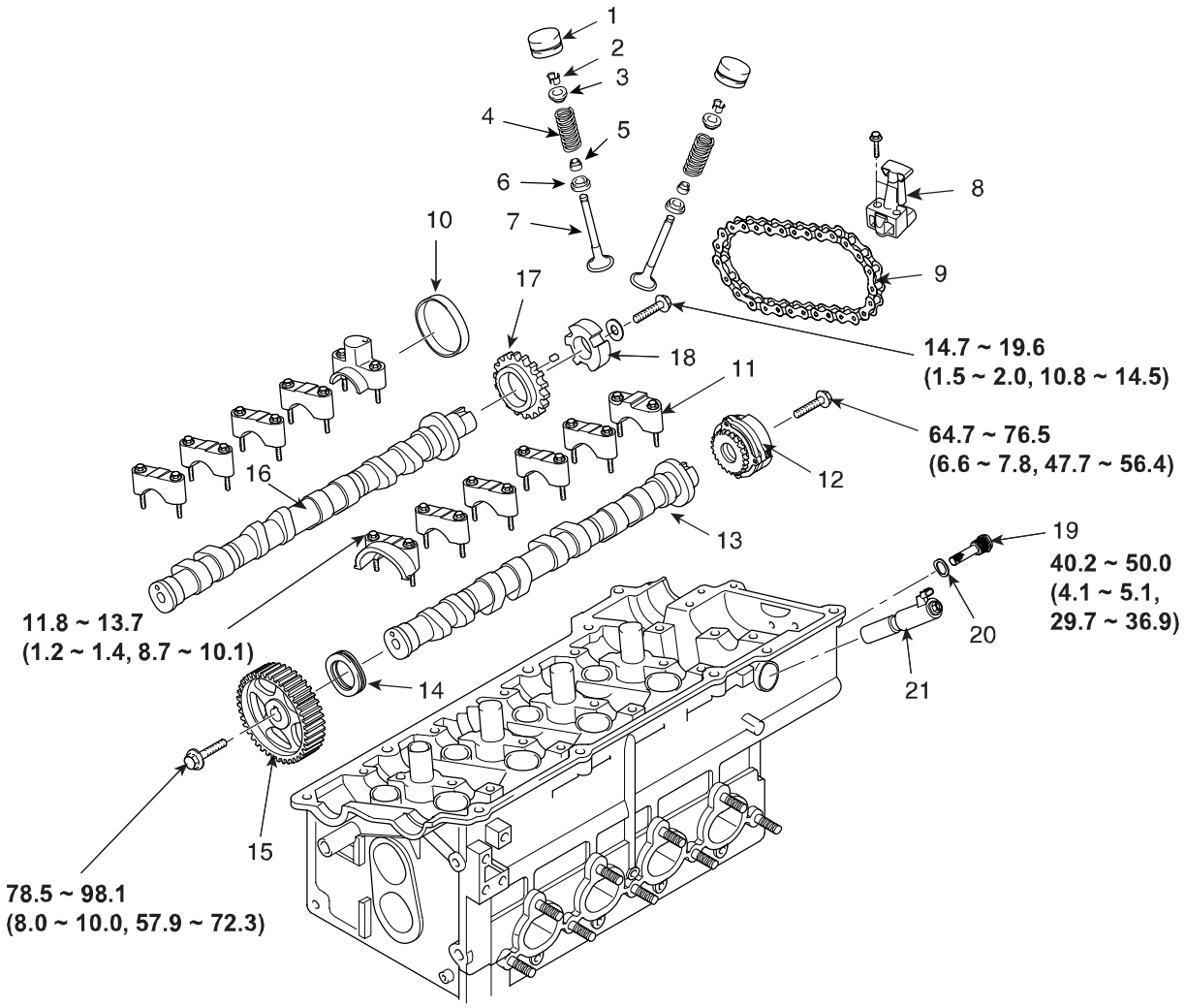

TORQUE : N.m (kgf.m, lb-ft)

1. HLA
   (Hydraulic Lash Adjuster)
2. Retainer lock
3. Retainer
4. Valve spring
5. Stem seal
6. Spring seat
7. Valve
8. Auto tensioner
9. Timing chain
10. Oil seal cap
11. Camshaft bearing cap
12. CVVT (Continuously Variable Valve Timing) assembly
13. Exhaust camshaft
14. Oil seal
15. Camshaft sprocket
16. Intake camshaft
17. Chain sprocket
18. Camshaft position sensor target wheel
19. OCV (Oil Control Valve) Filter
20. Washer
21. OCV (Oil Control Valve)

LCJF004A

REMOVAL ECC10CE5

Engine removal is not required for this procedure.

CAUTION

- ***Use Fender cover to avoid damaging painted surfaces.***
- ***To avoid damaging the cylinder head, wait until the engine coolant temperature drops below normal temperature before removing it.***
- ***When handling a metal gasket, take care not to fold the gasket or damage the contact surface of the gasket.***
- ***To avoid damage, unplug the wiring connectors carefully while holding the connector portion.***

NOTE

- *Mark all wiring and hoses to avoid misconnection.*
- *Inspect the timing belt before removing the cylinder head.*
- *Turn the crankshaft pulley so that the No. 1 piston is at top dead center. (Refer to EM - 22)*

1. Disconnect the terminals(A) from battery and remove the battery.

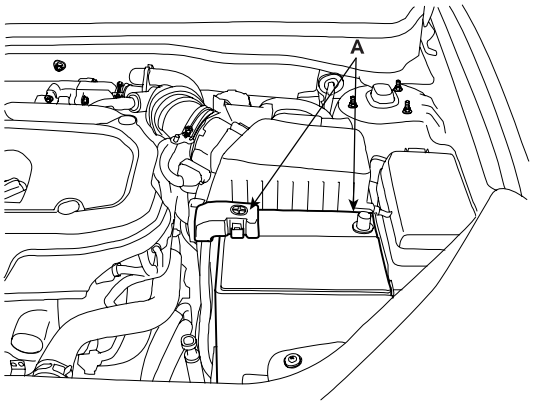

UCNG003A

2. Remove the engine cover.
3. Remove the under cover(A).

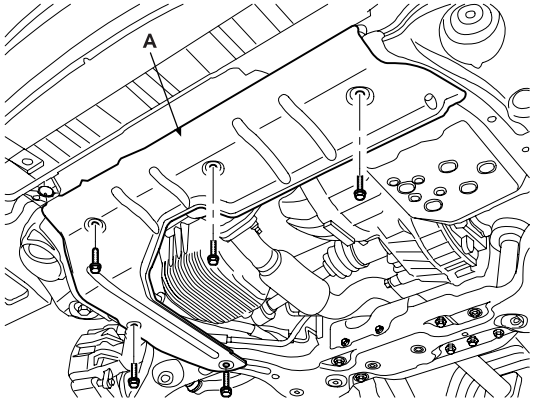

ACJF006A

4. Drain the engine coolant. (Refer to EM - 88)
   Remove the radiator cap to speed draining.

5. Remove the intake air hose and air cleaner assembly.

   1) Disconnect the AFS(Air Flow Sensor) connector(A).

   2) Disconnect the breather hose(B) from intake air hose(D).

   3) Remove the intake air hose(D) and air cleaner upper cover(C).

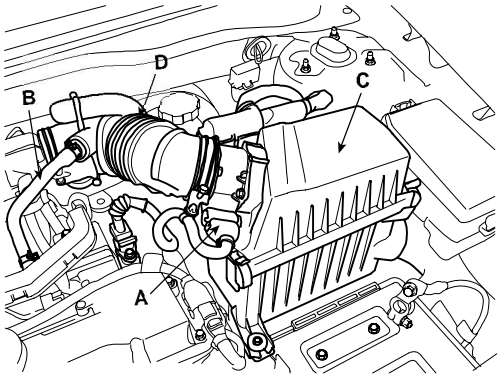

ACJF007A

   4) Disconnect the ECM connector(A) and ECM connector(B) (A/T only).

   5) Remove the air cleaner element and air cleaner lower cover(C).

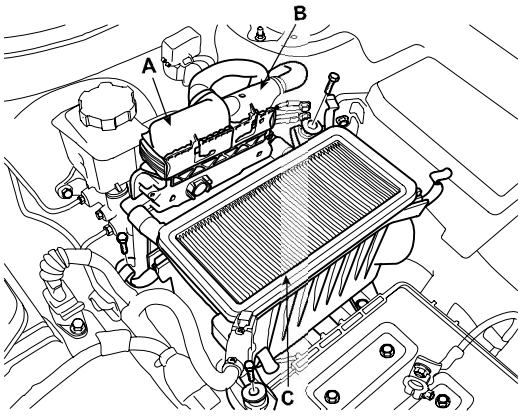

ACJF008A

6. Remove the battery tray(A).

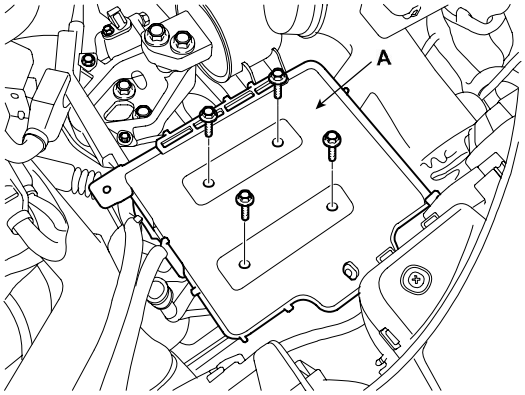

ACJF009A

7. Remove the upper radiator hose(A) and lower radiator hose(B).

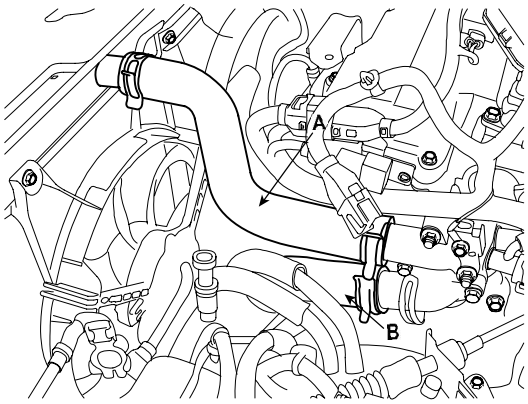

ACJF126A

8. Remove the heater hoses(A).

9. Remove the fuel hose(B).

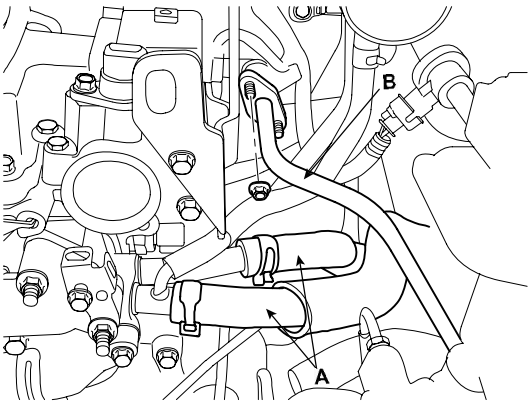

ACJF011A

10. Remove the accelerator cable(A) by loosening the lock-nut, then slip the cable end out of the throttle linkage.

11. Disconnect the TPS (Throttle Position Sensor) connector(B).

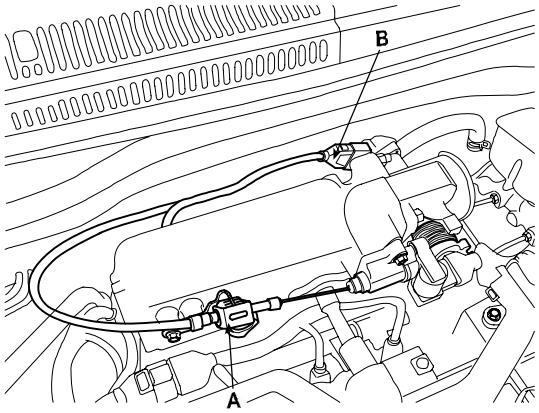

BCJF001A

12. Remove the engine wire harness connectors and wire harness clamps from cylinder head and the intake manifold.

    1) Disconnect the rear oxygen sensor connector (A).

    2) Disconnect the air conditioner compressor switch connector (B).

    3) Disconnect the knock sensor connector (C).

    4) Disconnect the injector connectors(No.3,4) (D).

    5) Disconnect the injector connectors(No.1,2) (E)

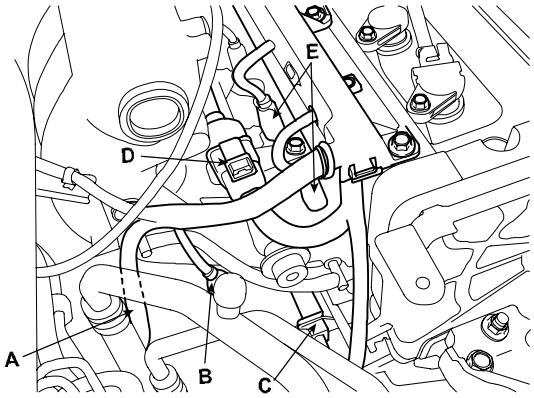

ACJF013A

    6) Remove the wire harness bracket(A).

    7) Disconnect the ISA (Idle Speed Actuator) connector (B).

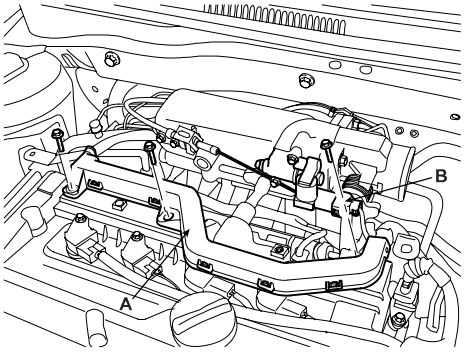

ACJF003A

    8) Disconnect the front oxygen sensor connector(A).

    9) Disconnect the CKP(Crankshaft Position Sensor) connector (B).

    10) Disconnect the OCV(Oil Control Valve) connector (C).

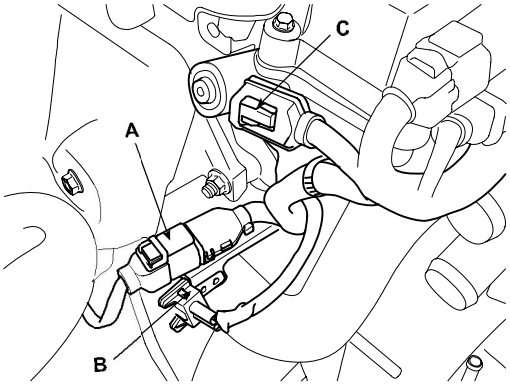

ACJF014A

11) Disconnect the ignition coil connector(A).

12) Disconnect the ignition coil condenser connector(B).

13) Disconnect the CMP(Camshaft Position Sensor) connector(C).

14) Disconnect the ground cable(D).

15) Remove the wire harness bracket(E).

■ 1.6 CVVT

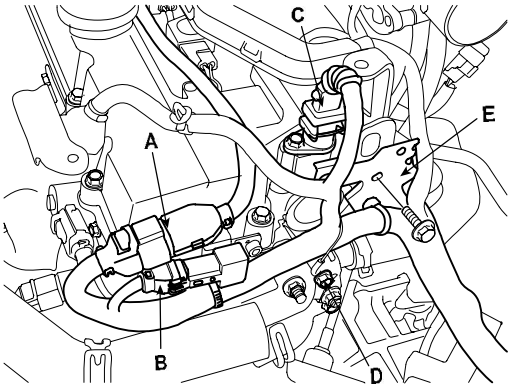

ACJF015A

13. Disconnect the hose(A) of the PCSV (Purge Control Solenoid Valve) side.

14. Remove the brake booster vacuum hose(B).

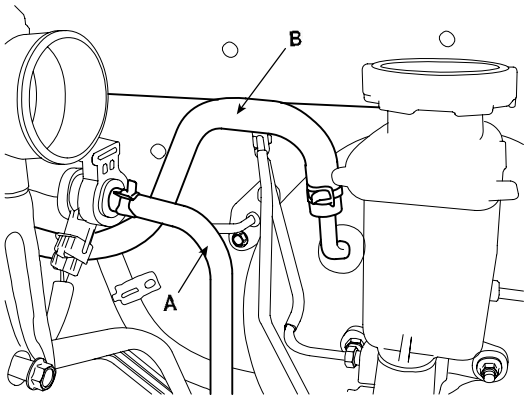

ACJF018A

15. Remove the power steering pump and fix the pump to vehicle with a wire. (Refer to ST group - power steering pump)

16. Remove the ignition coil. (Refer to EE group - ignition system)

17. Remove the exhaust manifold. (Refer to EM - 112)

18. Remove the intake manifold. (Refer to EM - 109)

19. Remove the timing belt. (Refer to EM - 21)

20. Remove the cylinder head cover. (Refer to EM - 24)

21. Remove the camshaft sprocket. (Refer to EM - 24)

22. Remove the timing chain auto tensioner(A).

■ 1.6 CVVT

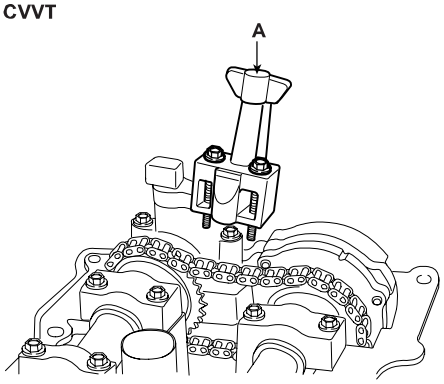

ACJF102A

23. Remove the camshaft bearing caps(A) and camshafts (B).

■ 1.6 CVVT

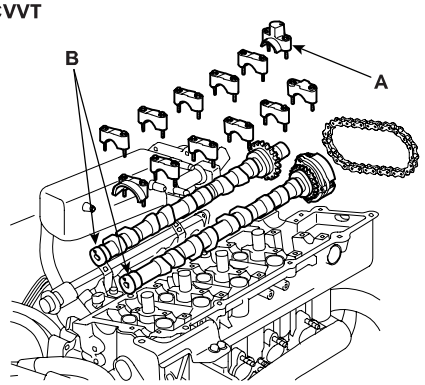

ACJF103A

24. Remove the OCV(Oil Control Valve)(A).

■ 1.6 CVVT

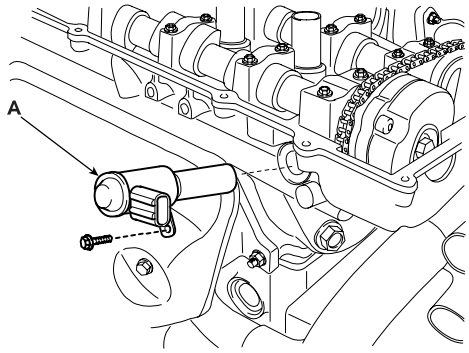

ACJF105A

25. Remove the OCV(Oil Control Valve) filter(A).

■ 1.6 CVVT

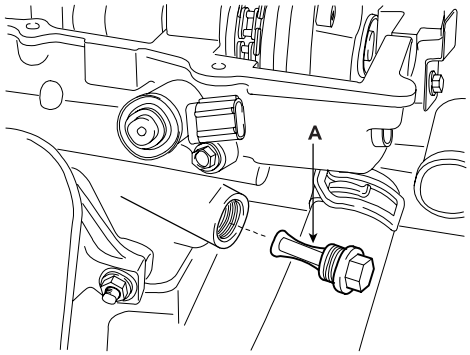

ACJF106A

26. Remove the engine mounting support bracket fixing bolts(A).

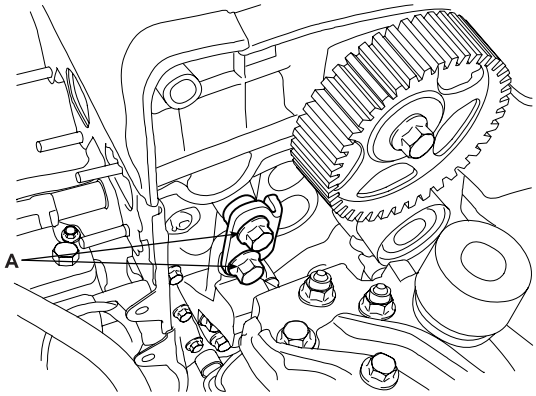

ACJF019A

27. Remove the cylinder head bolts, then remove the cylinder head.

1) Using 8mm hexagon wrench, uniformly loosen and remove the 10 cylinder head bolts, in several passes, in the sequence shown.

■ 1.6 CVVT

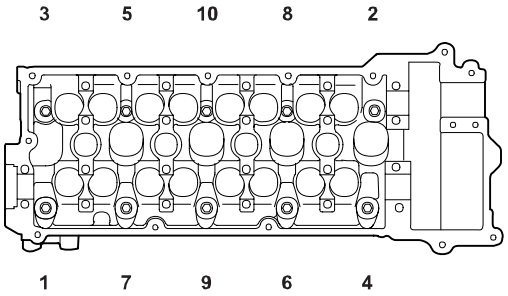

ACJF107A

CAUTION

Head warpage or cracking could result from removing bolts in an incorrect order.

2) Lift the cylinder head from the dowels on the cylinder block and replace the cylinder head on wooden blocks on a bench.

CAUTION

Be careful not to damage the contact surfaces of the cylinder head and cylinder block.

DISASSEMBLY E6B1CB34

NOTE

Identify HLA(Hydraulic Lash Adjuster), valves, valve springs as they are removed so that each item can be reinstalled in its original position.

1. Remove the HLAs(A).

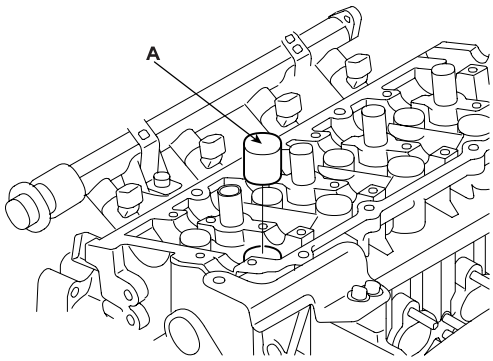

ECKD217A

2. Remove the valves.

   1) Using the SST (09222 - 28000, 09222 - 28100), compress the valve spring and remove the retainer lock.

■ **1.6 CVVT**

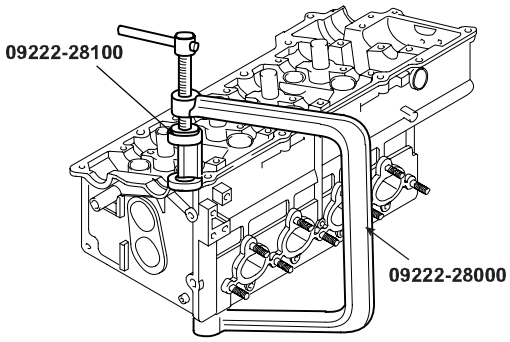

ACJF078A

   2) Remove the spring retainer.

   3) Remove the valve spring.

   4) Remove the valve.

   5) Using a needle-nose pliers, remove the oil seal.

   6) Using a magnetic finger, remove the spring seat.

INSPECTION E344D99E

CYLINDER HEAD

1. Inspect for flatness.
   Using a precision straight edge and feeler gauge, measure the surface the contacting the cylinder block and the manifolds for warpage.

Flatness of cylinder head gasket surface
Standard : Less than 0.03mm (0.0012in)
Limit : 0.05mm (0.0020in)
Flatness of manifold mating surface
Standard : Less than 0.15mm (0.0059in)
Limit : 0.20mm (0.0079in)

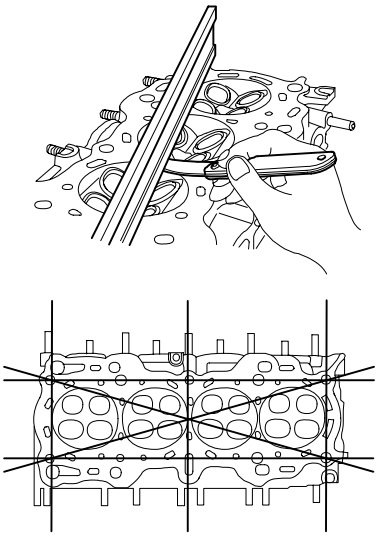

ECKD001H

2. Inspect for cracks.
   Check the combustion chamber, intake ports, exhaust ports and cylinder block surface for cracks. If cracked, replace the cylinder head.

VALVE AND VALVE SPRING

1. Inspect the valve stems and valve guides.

   1) Using a caliper gauge, measure the inner diameter of valve guide.

Valve guide inner diameter :
6.000 ~ 6.015mm (0.2362 ~ 0.2368in)

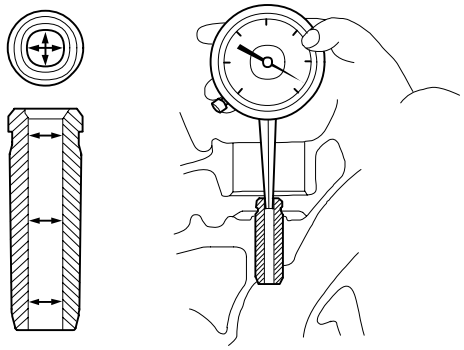

ECKD219A

   2) Using a micrometer, measure the outer diameter of valve stem.

Valve stem outer diameter
Intake : 5.965 ~ 5.980mm (0.2348 ~ 0.2354in)
Exhaust : 5.950 ~ 5.965mm (0.2343 ~ 0.2348in)

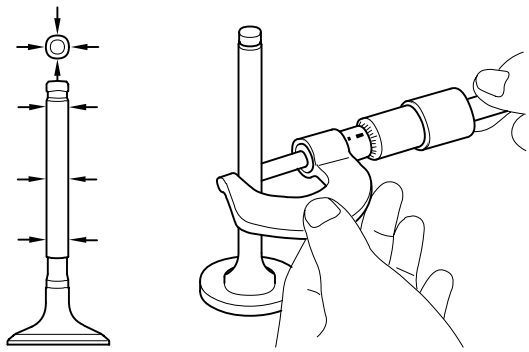

ECKD220A

   3) Subtract the valve stem outer diameter measurement from the valve guide inner diameter measurement.

Valve stem- to-guide clearance
Standard
Intake : 0.02 ~ 0.05mm (0.0008 ~ 0.0020in)
Exhaust : 0.035 ~ 0.065mm (0.0014 ~ 0.0026in)
Limit
Intake : 0.10mm (0.0039in)
Exhaust : 0.15mm (0.0059in)

If the clearance is greater than maximum, replace the valve and valve guide.

2. Inspect the valves.

   1) Check the valve is ground to the correct valve face angle.

   2) Check the surface of valve for wear.
   If the valve face is worn, replace the valve.

   3) Check the valve head margin thickness.
   If the margin thickness is less than minimum, replace the valve.

Margin
Standard
Intake : 1.1mm (0.0433in)
Exhaust : 1.3mm (0.0512in)
Limit
Intake : 0.8mm (0.0315in)
Exhaust : 1.0mm (0.0394in)

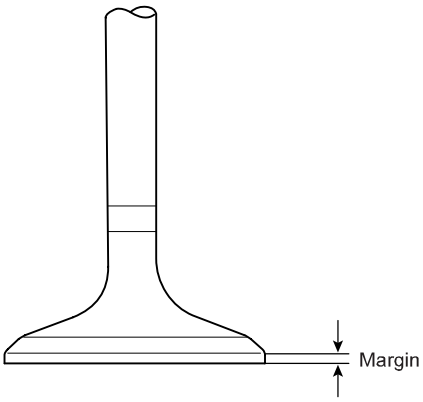

ECKD221A

4) Check the surface of valve stem tip for wear. If the valve stem tip is worn, replace the valve.

3. Inspect the valve seats.

1) Check the valve seat for evidence of overheating and improper contact with the valve face. Replace the seat if necessary.

2) Before reconditioning the seat, check the valve guide for wear. If the valve guide is worn, replace it, then recondition the seat.

3) Recondition the valve seat with a valve seat grinder or cutter. The valve seat contact width should be within specifications and centered on the valve face.

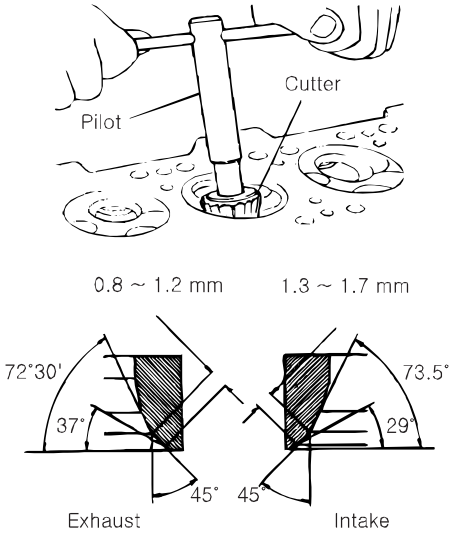

LCGE005A

4. Inspect the valve springs.

1) Using a steel square, measure the out-of-square of valve spring.

2) Using a vernier calipers, measure the free length of valve spring.

Valve spring
Standard
Free height : 44mm (1.7323in)
Load : 21.6±1.1kg/35.0mm (47.6±2.4lb/1.3780in)
45.1±2.2kg/27.2mm (99.4±4.9lb/1.0709in)
Out of square : Less than 1.5 °
Limit
Out of square : 3 °

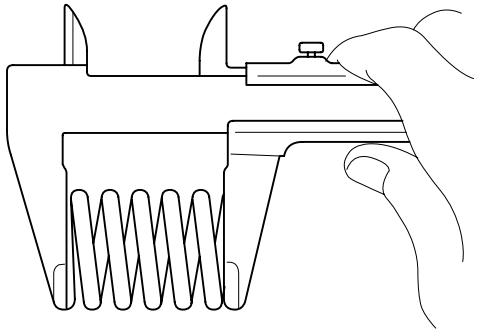

ECKD222A

If the loads is not as specified, replace the valve spring.

CAMSHAFT

1. Inspect the cam lobes.
   Using a micrometer, measure the cam lobe height.

Cam height
Intake : 43.7492 ~ 43.9492mm (1.72241 ~ 1.73028in)
Exhaust : 44.1494 ~ 44.3494mm (1.73816 ~ 1.74604in)

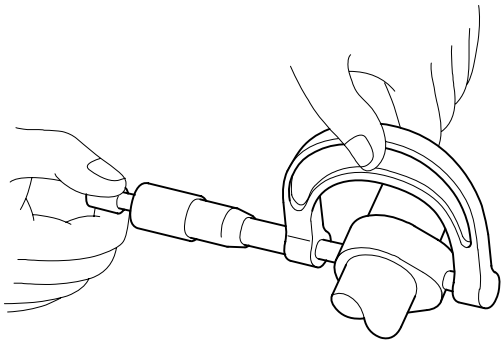

ECKD223A

If the cam lobe height is less than specified, replace the camshaft.

2. Inspect the camshaft journal clearance.
   1) Clean the bearing caps and camshaft journals.
   2) Place the camshafts on the cylinder head.
   3) Lay a strip of plastigage across each of the camshaft journal.

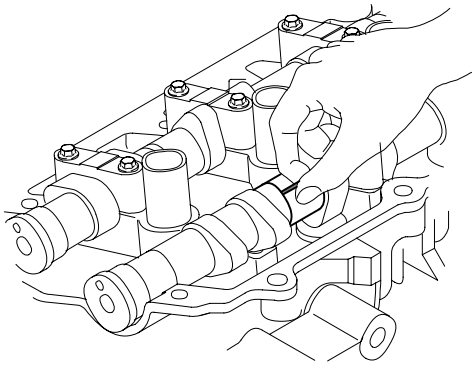

ECKD224A

   4) Install the bearing caps and tighten the bolts with specified torque. (Refer to EM - 51)

CAUTION

Do not turn the camshaft.

   5) Remove the bearing caps.
   6) Measure the plastigage at its widest point.

Bearing oil clearance
Standard : 0.020 ~ 0.061mm (0.0008 ~ 0.0024in)
Limit : 0.1mm (0.0039in)

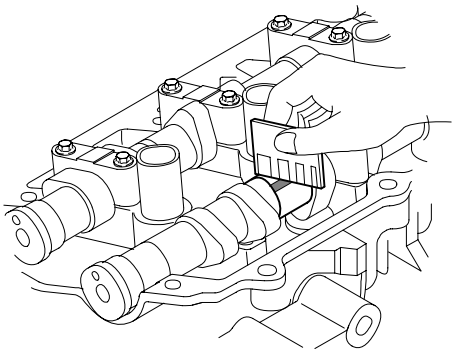

ECKD225A

If the oil clearance is greater than specified, replace the camshaft. If necessary, replace the bearing caps and cylinder head as a set.

   7) Completely remove the plastigage.
   8) Remove the camshafts.

3. Inspect the camshaft end play.

   1) Install the camshafts. (Refer to EM - 51)

   2) Using a dial indicator, measure the end play while moving the camshaft back and forth.

Camshaft end play
Standard : 0.1 ~ 0.2mm (0.0039 ~ 0.0079in)

■ **1.6 CVVT**

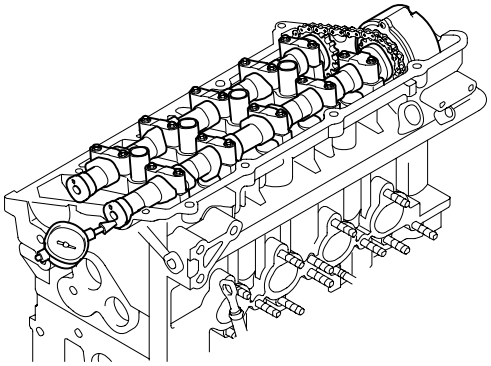

ACJF079A

If the end play is greater than specified, replace the camshaft. If necessary, replace the bearing caps and cylinder head as a set.

   3) Remove the camshafts.

CVVT(CONTINUOUS VARIABLE VALVE TIMING) ASSEMBLY

1. Inspect the CVVT (Continuous Variable Valve Timing) assembly.

   1) Check that the CVVT (Continuous Variable Valve Timing) assembly will not turn.

   2) Apply vinyl tape to all the parts except the one indicated by the arrow in the illustration.

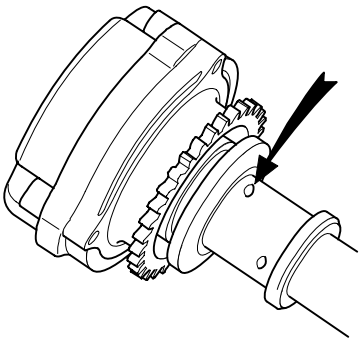

EDKD270B

   3) Wrap tape around the tip of the air gun and apply air of approx. 98kpa (1kg/cm², 14psi) to the port of the camshaft.
   Perform this order to release the lock pin for the maximum delay angle locking.)

NOTE

Wrap around it with a shop rag and the likes, because the oil splashes.

4) Under the condition of 3), turn the CVVT assembly to the advance angle side with your hand.
   - Depending on the air pressure, the CVVT assembly will turn to the advance side.
   - If air is leaking from the port and air pressure cannot be maintained, the locking pin will not release.

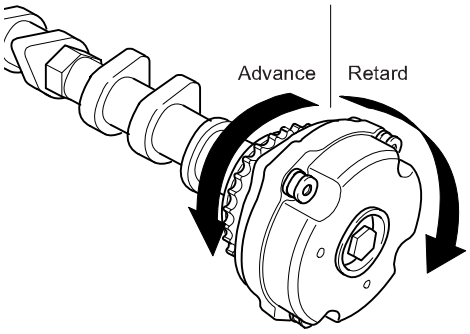

BCGE010A

5) Except the position where the lock pin meets at the maximum delay angle, let the CVVT assembly turn back and forth and check the movable range and that there is no disturbance.

Standard: Movable smoothly in the range about 20 °

6) Turn the CVVT assembly with your hand and lock it at the maximum delay angle position.

HLA (HYDRAULIC LASH ADJUSTER)

With the HLA filled with engine oil, hold A and press B by hand. If B moves, replace the HLA.

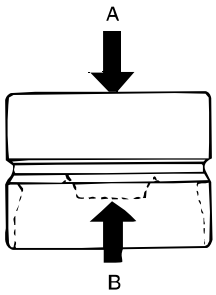

EDA9260B

No.	Problem	Possible cause	Action
1	Temporary noise when starting a cold engine	Normal	This noise will disappear after the oil in the engine reaches the normal pressure.
2	Continuous noise when the engine is started after parking more than 48 hours.	Oil leakage of the high pressure chamber on the HLA, allowing air to get in.	Noise will disappear within 15 minutes when engine runs at 2,000~3,000 rpm.If it doesn't disappear, refer to step 7 below. ***CAUTION*** ***Do not run engine at a speed higher than 3,000 rpm, as this may damage the HLA.***
3	Continuous noise when the engine is first started after rebuilding cylinder head.	Insufficient oil in cylinder head oil gallery.	
4	Continuous noise when the engine is started after excessively cranking the engine by the starter motor.	Oil leakage of the high-pressure chamber in the HLA, allowing air to get in. Insufficient oil in the HLA.	
5	Continuous noise when the engine is running after changing the HLA.		
6	Continuous noise during idle after high engine speed.	Engine oil level too high or too low.	Check oil level. Drain or add oil as necessary.
		Excessive amount of air in the oil at high engine speed.	Check oil supply system
		Deteriorated oil.	Check oil quality. If deteriorated, replace with specified type.
7	Noise continues for more than 15 minutes.	Low oil pressure	Check oil pressure and oil supply system of each part of engine.
		Faulty HLA.	Remove the cylinder head cover and press HLA down by hand. If it moves, replace the HLA. **WARNING** **Be careful with the hot HLAs.**

REPLACEMENT E3058D88

VALVE GUIDE

1. Using the SST(09221 - 3F100A), withdraw the old valve guide toward the bottom of cylinder head.

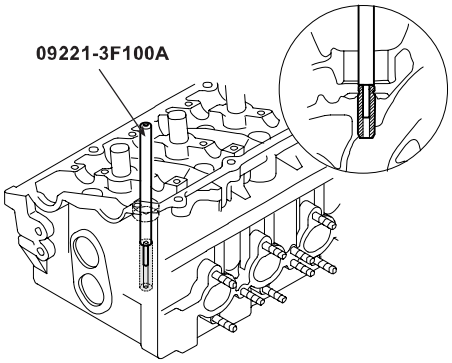

EDKD900A

2. Recondition the valve guide hole of cylinder head so that it can match the newly press-fitted oversize valve guide.

3. Using the SST (09221-3F100A, 09221-26000), press-fit the valve guide. The valve guide must be press-fitted from the upper side of the cylinder head. Keep in mind that the intake and exhaust valve guides are different in length.

Valve guide length
Intake : 36.3 ~ 36.7mm (1.4291 ~ 1.4449in)
Exhaust : 40.8 ~ 41.2mm (1.6063 ~ 1.6220in)

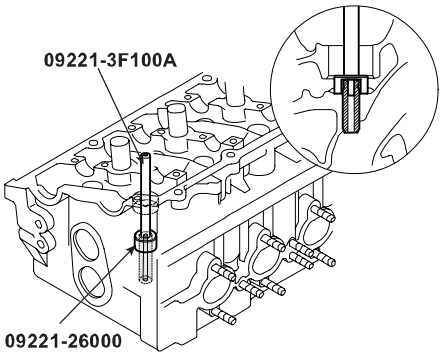

ADGE006A

4. After the valve guide is press-fitted, insert a new valve and check for proper stem-to-guide clearance.

5. After the valve guide is replaced, check that the valve is seated properly. Recondition the valve seats as necessary.

VALVE GUIDE OVERSIZE

Item	Oversize [mm (in)]	Size mark	Valve guide hole inner diameter [mm (in)]	Valve guide outer diameter [mm (in)]	Valve guide protrusion height [mm (in)]
Valve guide	STD	-	11.000 ~ 11.018 (0.4331 ~ 0.4338)	11.050 ~ 11.060 (0.4350 ~ 0.4354)	12.8 (0.5039)
	0.05 (0.002) OS	5	11.050 ~ 11.068 (0.4350 ~ 0.4357)	11.100 ~ 11.110 (0.4370 ~ 0.4374)	
	0.25 (0.010) OS	25	11.250 ~ 11.268 (0.4429 ~ 0.4436)	11.300 ~ 11.310 (0.4449 ~ 0.4453)	
	0.50 (0.020) OS	50	11.500 ~ 11.518 (0.4528 ~ 0.4535)	11.550 ~ 11.560 (0.4547 ~ 0.4551)	

VALVE SEAT RING

1. Cut away the inner face of the valve seat to reduce the wall thickness.

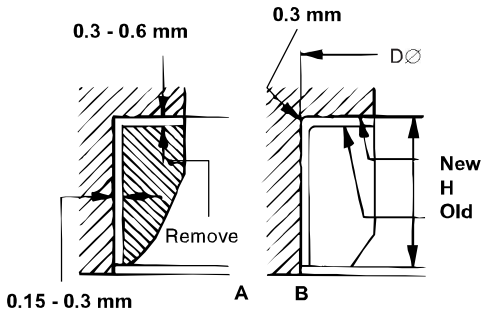

LCJF075A

2. Enlarge the seat ring hole of cylinder head so that matches the specified cylinder head hole inner diameter of new valve seat ring.

3. Heat the cylinder head to about 250℃(480℉) and press-fit an oversize seat ring for the cylinder head hole size.

4. Using lapping compound, lap the valve to the new seat.

VALVE SEAT RING OVERSIZE

Item	Over size mm(in.)	Size mark	Seat ring hole inner diameter [mm(in)]	Seat ring outer diameter [mm(in)]	Seat ring height[mm(in)]
Intake valve seat ring	STD	-	30.400 ~30.421 (1.1968 ~ 1.1977)	30.490 ~30.505 (1.2004 ~ 1.2010)	4.800 ~5.000 (0.1890 ~ 0.1969)
	0.3(0.012)OS	30	30.700 ~ 30.721 (1.2087 ~ 1.2095)	30.790 ~ 30.805 (1.2122 ~ 1.2128)	5.100 ~ 5.300 (0.2008 ~ 0.2087)
	0.6(0.024)OS	60	31.000 ~ 31.021 (1.2205 ~ 1.2213)	31.090 ~ 31.105 (1.2240 ~ 1.2246)	5.400 ~ 5.600 (0.2126 ~ 0.2205)
Exhaust valve seat ring	STD	-	27.000 ~ 27.021 (1.0630 ~ 1.0638)	27.095 ~ 27.115 (1.0667 ~ 1.0675)	5.900 ~ 6.100 (0.2323 ~ 0.2402)
	0.3(0.012)	30	27.300 ~ 27.321 (1.0748 ~ 1.0756)	27.395 ~ 27.415 (1.0785 ~ 1.0793)	6.200 ~ 6.400 (0.2441 ~ 0.2520)
	0.6(0.024)	60	27.600 ~ 27.621 (1.0866 ~ 1.0874)	27.695 ~ 27.715 (1.0904 ~ 1.0911)	6.500 ~ 6.700 (0.2559 ~ 0.2638)

REASSEMBLY E62FA121

NOTE

- *Thoroughly clean all parts to be assembled.*
- *Before installing the parts, apply fresh engine oil to all sliding and rotating surface.*
- *Replace oil seals with new ones.*

1. Install the valves.

   1) Install the spring seats.

   2) Using the SST (09222 - 22001), push in a new oil seal.

NOTE

Do not reuse old valve stem oil seals.
Incorrect installation of the seal could result in oil leakage past the valve guides.

■ 1.6 CVVT

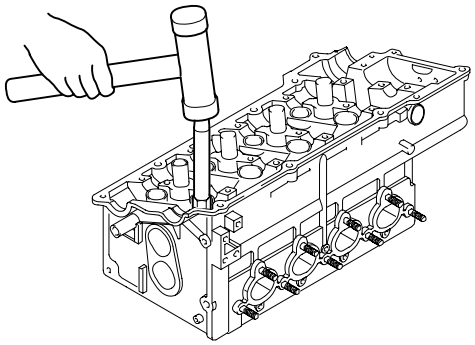

ACJF081A

   3) Install the valve, valve spring and spring retainer.

NOTE

Place the valve springs so that the side coated with enamel faces toward the valve spring retainer and then installs the retainer.

   4) Using the SST(09222 - 28000, 09222 - 28100), compress the spring and install the retainer locks. After installing the valves, ensure that the retainer locks are correctly in place before releasing the valve spring compressor.

■ 1.6 CVVT

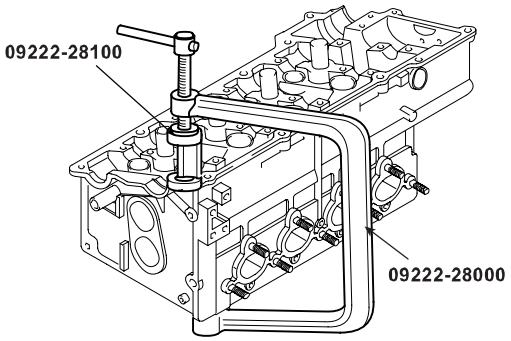

ACJF083A

   5) Lightly tap the end of each valve stem two or three times with the wooden handle of a hammer to ensure proper seating of the valve and retainer lock.

■ 1.6 CVVT

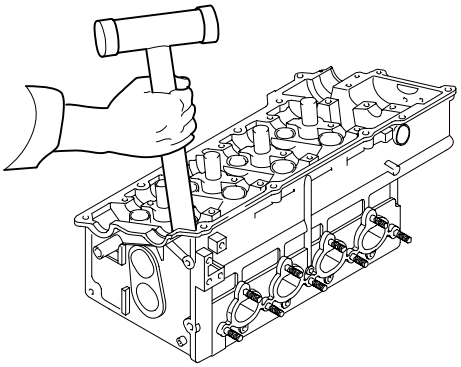

ACJF085A

2. Install the HLA(Hydraulic Lash Adjuster)s.
   Check that the HLA rotates smoothly by hand.

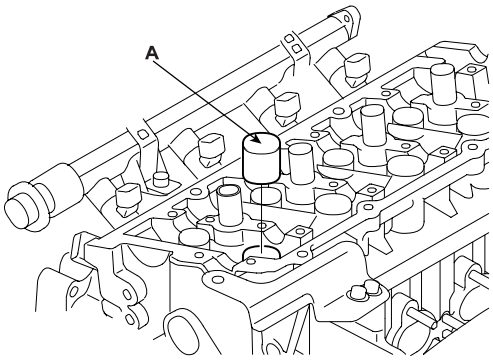

ECKD217A

INSTALLATION E2FFDB0B

NOTE

- *Thoroughly clean all parts to be assembled.*
- *Always use a new cylinder head and manifold gasket.*
- *Always use a new cylinder head bolt.*
- *The cylinder head gasket is a metal gasket. Take care not to bend it.*
- *Rotate the crankshaft, set the No.1 piston at TDC.*

1. Install the cylinder head gasket(A) on the cylinder block.

NOTE

Be careful of the installation direction.

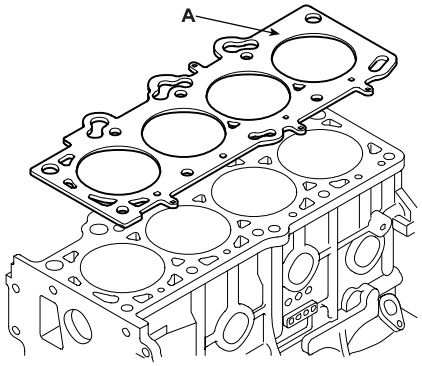

ECKD231A

2. Place the cylinder head quietly in order not to damage the gasket with the bottom part of the end.

3. Install the cylinder head bolts.

   1) Apply a light coat if engine oil on the threads and under the heads of the cylinder head bolts.

   2) Using 8mm and 10mm hexagon wrench, install and tighten the 10 cylinder head bolts and plate washers, in several passes, in the sequence shown.

Tightening torque :
29.4N.m (3.0kgf.m, 21.7lb-ft) + 90° → Release all bolts → 29.4N.m (3.0kgf.m, 21.7lb-ft) + 90°

■ **1.6 CVVT**

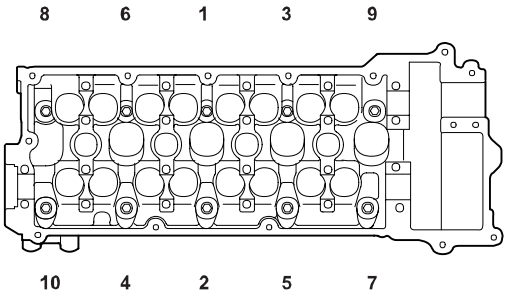

ACJF092A

4. Install the engine mounting support bracket fixing bolts(A).

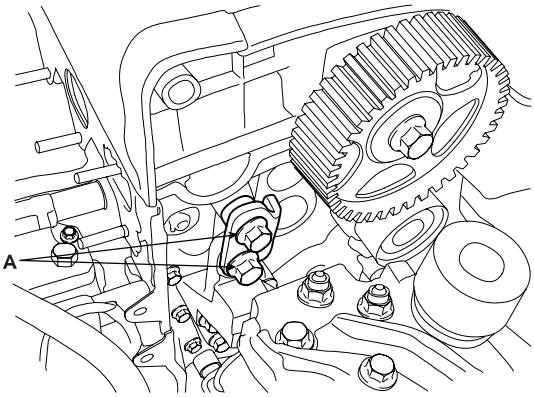

ACJF019A

5. Install the OCV(Oil Control Valve) filter(A).

Tightening torque :
40.2 ~ 50.0N.m (4.1 ~ 5.1kgf.m, 29.7 ~ 36.9lb-ft)

■ 1.6 CVVT

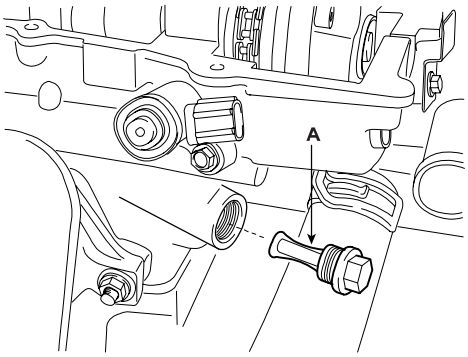

ACJF117A

NOTE

- *Always use a new OCV(Oil Control Valve) filter gasket.*
- *Keep clean the OCV(Oil Control Valve) filter.*

6. Install the OCV(Oil Control Valve)(A).

Tightening torque :
9.8 ~ 11.8N.m (1.0 ~ 1.2kgf.m, 7.2 ~ 8.7lb-ft)

■ 1.6 CVVT

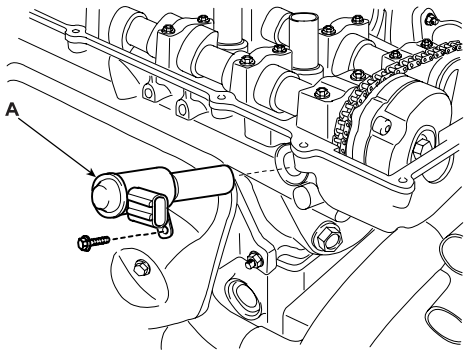

ACJF118A

CAUTION

- ***Do not reuse the OCV(Oil Control Valve) when dropped.***
- ***Keep clean the OCV(Oil Control Valve).***
- ***Do not hold the OCV(Oil Control Valve) sleeve during servicing.***
- ***When the OCV(Oil Control Valve) is installed on the engine, do not move the engine with holding the OCV(Oil Control Valve) yoke.***

7. Install the camshafts.

1) Align the camshaft timing chain with the intake timing chain sprocket and exhaust timing chain sprocket as shown.

■ 1.6 CVVT

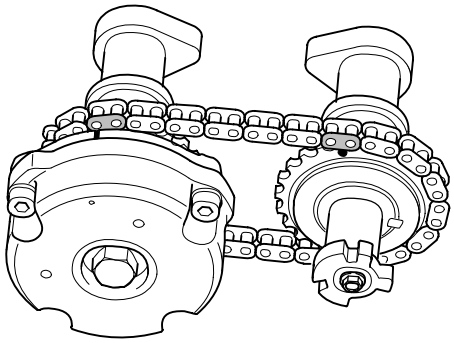

ACJF094A

2) Install the camshaft(A) and bearing caps(B).

Tightening torque :
11.8 ~ 13.7N.m (1.2 ~ 1.4kgf.m, 8.7 ~ 10.1lb-ft)

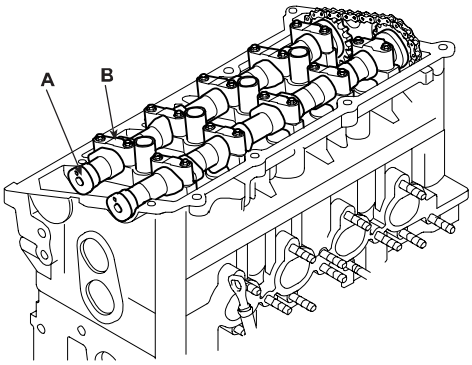

EDKD124A

3) Install the timing chain auto tensioner(A).

Tightening torque :
7.8 ~ 9.8N.m (0.8 ~ 1.0kgf.m, 5.8 ~ 7.2lb-ft)

■ 1.6 CVVT

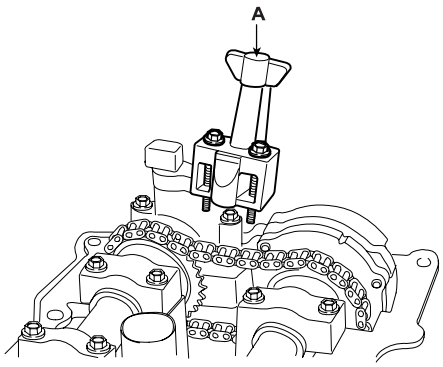

ACJF119A

8. Using the SST (09221 - 21000), install the camshaft bearing oil seal.

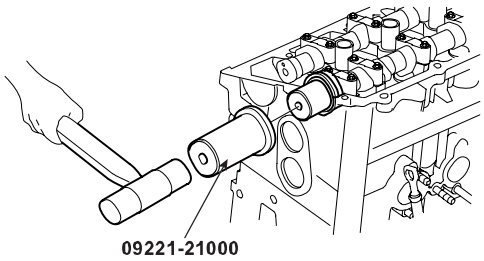

EDKD125A

9. Install the camshaft sprocket. (Refer to EM - 24)

10. Install the cylinder head cover.

1) Install the cylinder head cover gasket(A) in the groove of the cylinder head cover(B).

■ 1.6 CVVT

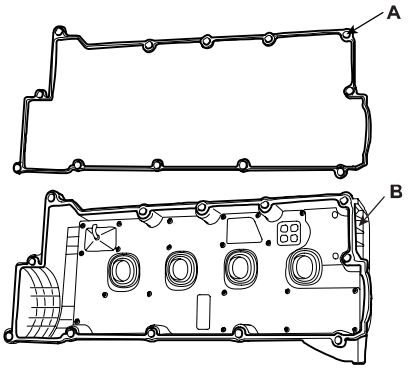

ACJF096A

NOTE

- *Before installing the cylinder head cover gasket, thoroughly clean the cylinder head cover and the groove.*
- *When installing, make sure the cylinder head cover gasket is seated securely in the corners of the recesses with no gap.*

2) Apply liquid gasket to the head cover gasket at the corners of the recess.

■ 1.6 CVVT

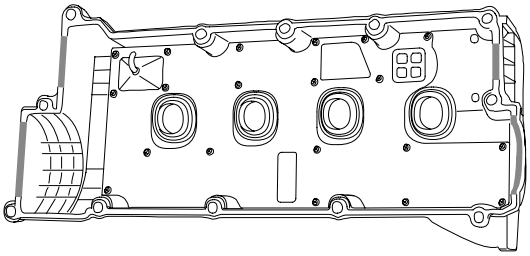

ACJF098A

NOTE

- *Use liquid gasket, loctite No. 5999.*
- *Check that the mating surfaces are clean and dry before applying liquid gasket.*
- *After assembly, wait at least 30 minutes before filling the engine with oil.*

3) Install the cylinder head cover(A) with bolts(B). Uniformly tighten the bolts in several passes. Pre-tighten all bolts by 3.9~4.9N.m (0.4~0.5kgf.m, 2.9~3.6lb-ft) and then tighten by the specified torque.

Tightening torque :
7.8 ~ 9.8N.m (0.8 ~ 1.0kgf.m, 5.8 ~ 7.2lb-ft)

■ 1.6 CVVT

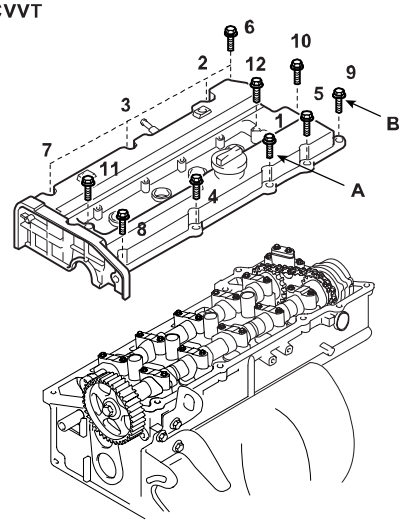

ACJF087A

11. Install the timing belt. (Refer to EM - 27)
12. Install the intake manifold. (Refer to EM - 109)
13. Install the exhaust manifold. (Refer to EM - 112)
14. Install the ignition coil. (Refer to EE group - ignition system).
15. Install the power steering pump. (Refer to ST group - power steering pump)
16. Install the brake booster hose(B).
17. Connect the hose(A) of the PCSV (Purge Control Solenoid Valve) side.

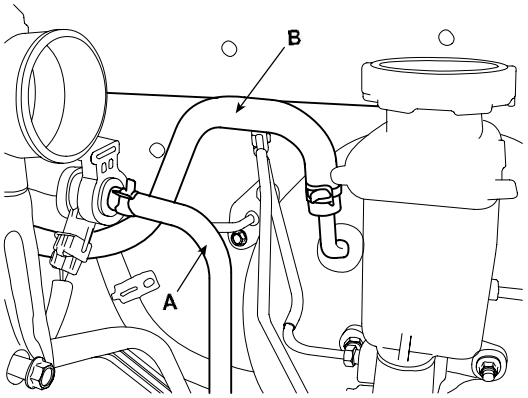

ACJF018A

18. Install the engine wire harness connectors and wire harness clamps to the cylinder head and the intake manifold.
    1) Install the wire harness bracket(E).
    2) Connect the ground cable(D).
    3) Connect the CMP(Camshaft position sensor) connector(C).
    4) Connect the ignition coil condenser connector(B).
    5) Connect the ignition coil connector(A).

■ 1.6 CVVT

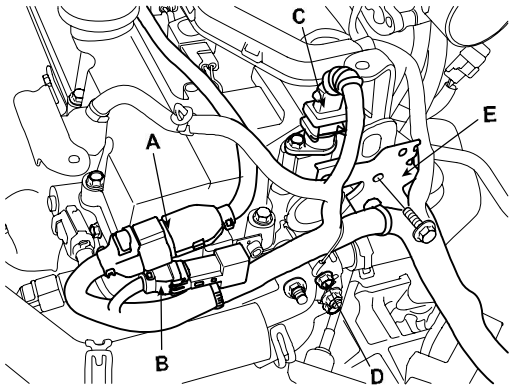

ACJF015A

6) Connect the OCV(Oil Control Valve) connector(C).

7) Connect the CKP(Crankshaft Position Sensor) connector(B).

8) Connect the front oxygen sensor connector(A).

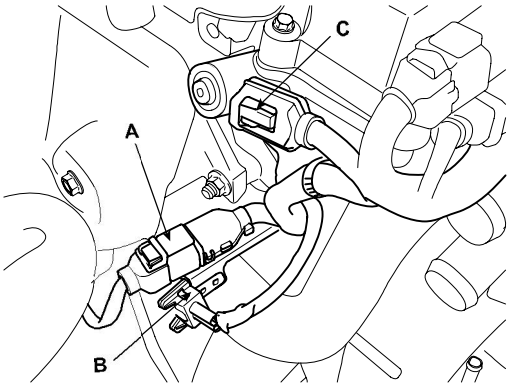

ACJF014A

9) Connect the ISA(Idle Speed Actuator) connector(B).

10) Install the wire harness bracket(A).

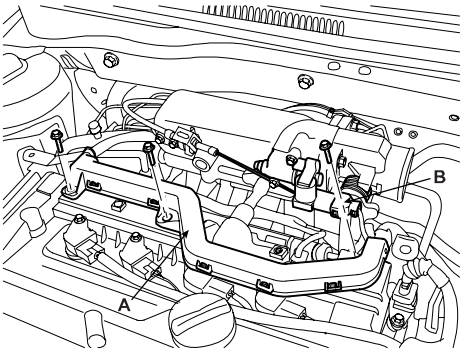

ACJF003A

11) Connect the injector connectors (No.1,2) (E).

12) Connect the injector connectors (No.3,4) (D).

13) Connect the knock sensor connector(C).

14) Connect the air conditioner compressor switch connector(B).

15) Connect the rear oxygen sensor connector(A).

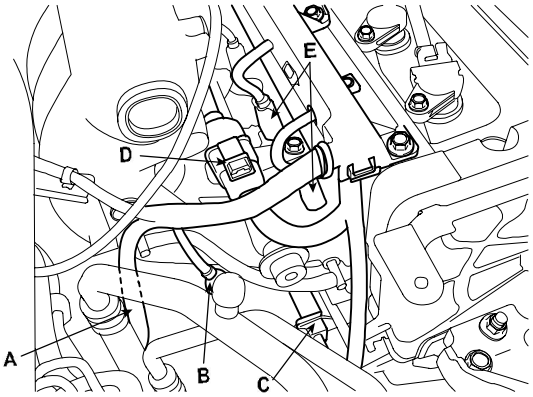

ACJF013A

19. Connect the TPS (Throttle Position Sensor) connector (B).

20. Install the accelerator cable(A).

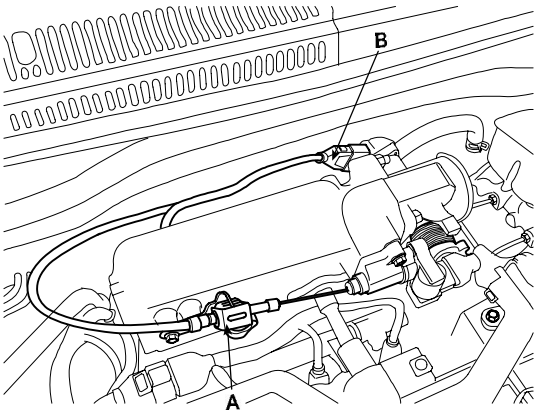

BCJF001A

21. Install the fuel hose(B).

22. Install the heater hoses(A).

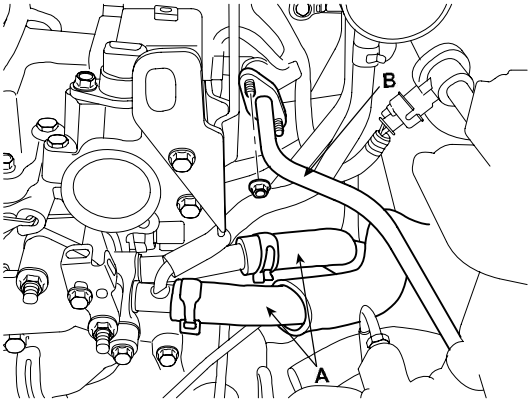

ACJF011A

23. Install the upper radiator hose(A) and lower radiator hose(B).

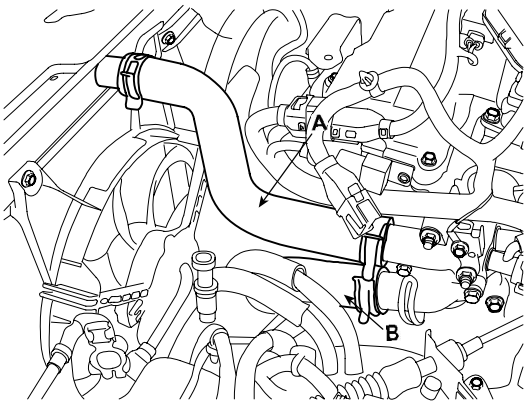

ACJF126A

24. Install the battery tray(A).

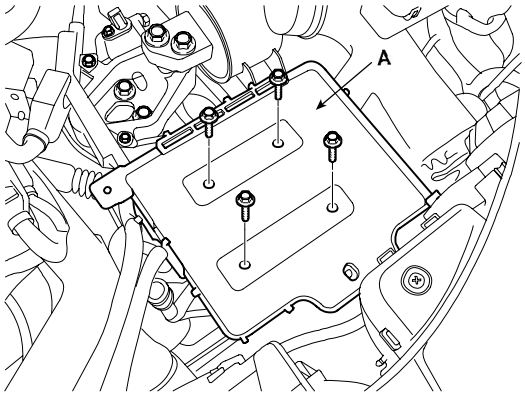

ACJF009A

25. Install the intake air hose and air cleaner assembly.

1) Install the air cleaner element and air cleaner lower cover(C).

Tightening torque :
7.8 ~ 9.8N.m (0.8 ~ 1.0kgf.m, 5.8 ~ 7.2lb-ft)

2) Connect the ECM connector(A) and ECM connector(B) (A/T only).

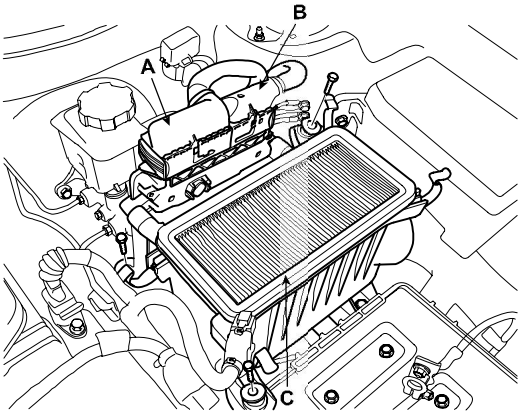

ACJF008A

3) Install the intake air hose(D) and air cleaner upper cover(C).

4) Connect the breather hose(B) to intake air hose(D).

5) Connect the AFS(Air Flow Sensor) connector(A).

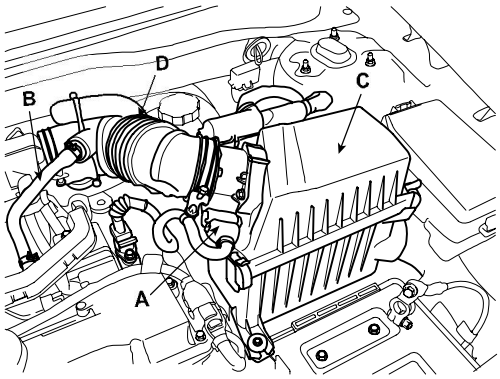

ACJF007A

26. Install the under cover(A).

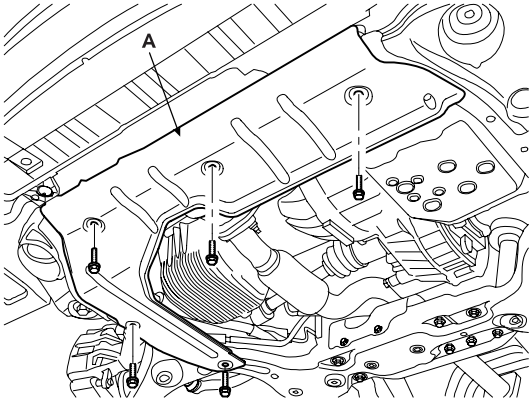

ACJF006A

27. Install the engine cover.

Tightening torque :
3.9 ~ 5.9N.m (0.4 ~ 0.6kgf.m, 2.9 ~ 4.3lb-ft)

28. Install the battery and connect the battery terminals(A).

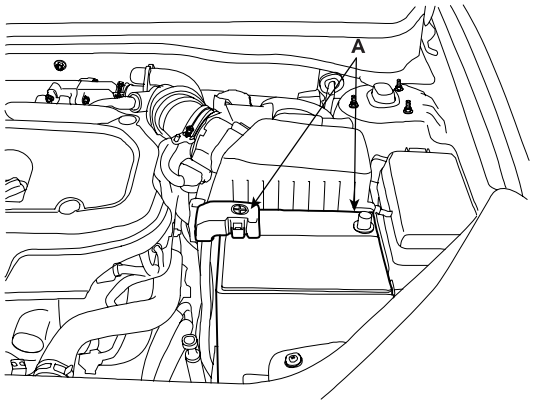

UCNG003A

29. Fill with engine coolant. (Refer to EM - 88)

30. Start the engine and check for leaks.

31. Recheck engine coolant level and oil level.

ENGINE AND TRANSAXLE ASSEMBLY

COMPONENT EB5DB67E

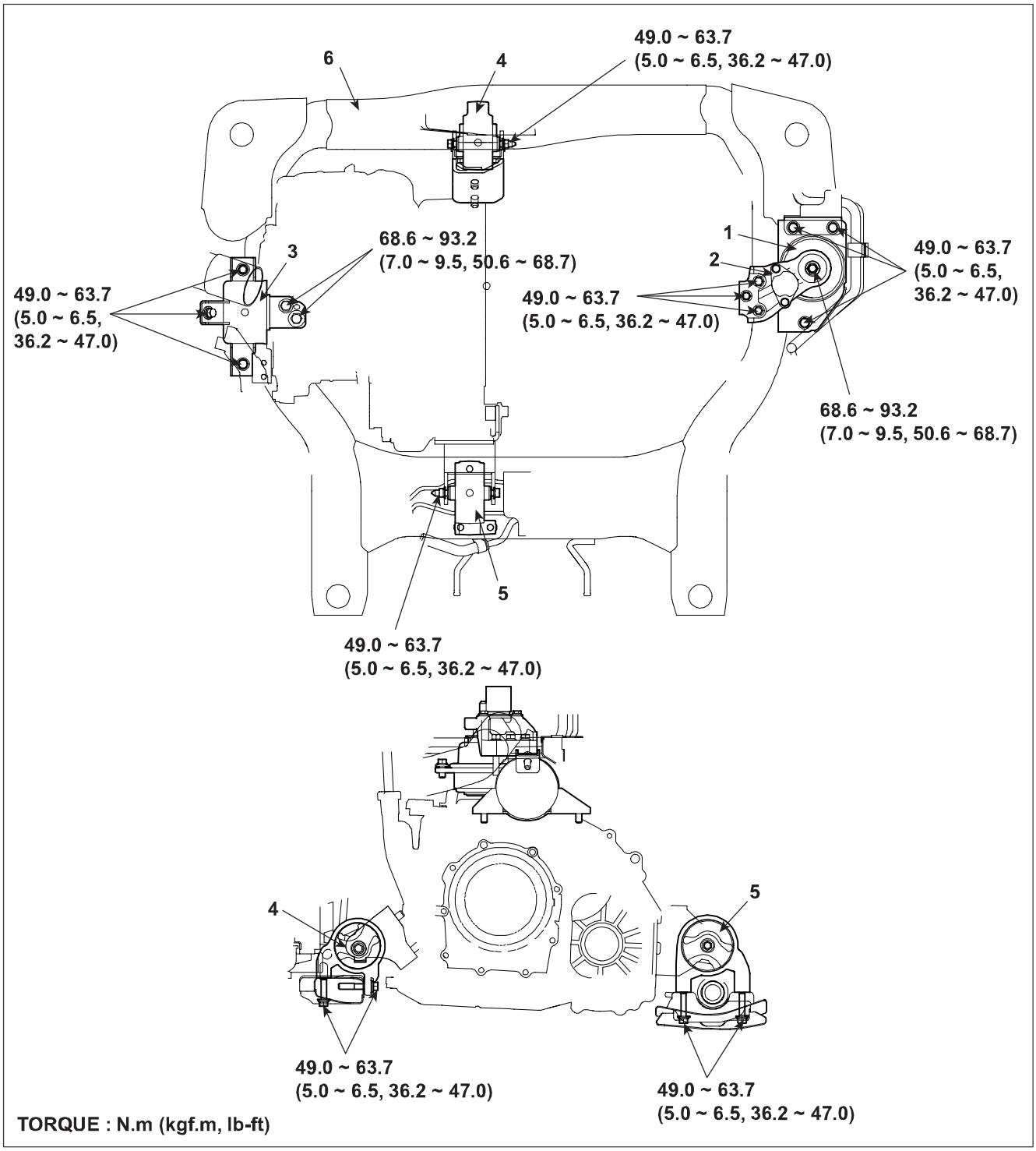

1. Engine mounting bracket
2. Engine mounting support bracket
3. Transaxle mounting bracket
4. Front roll stopper
5. Rear roll stopper
6. Sub-frame

LCJF007A

REMOVAL ECDEEDA2

CAUTION

- ***Use fender covers to avoid damaging painted surfaces.***
- ***To avoid damage, unplug the wiring connectors carefully while holding the connector portion.***

NOTE

- *Mark all wiring and hoses to avoid misconnection.*

1. Disconnect the terminals(A) from battery and remove the battery.

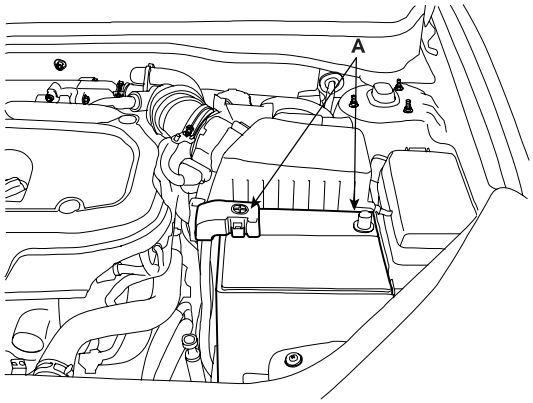

UCNG003A

2. Remove the engine cover.

3. Remove the under cover(A).

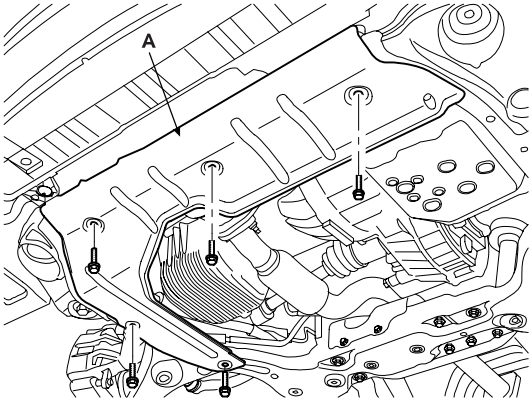

ACJF006A

4. Drain the engine coolant. (Refer to EM - 88) Remove the radiator cap to speed draining.

5. Remove the intake air hose and air cleaner assembly.

   1) Disconnect the AFS(Air Flow Sensor) connector(A).

   2) Disconnect the breather hose(B) from intake air hose(D).

   3) Remove the intake air hose(D) and air cleaner upper cover(C).

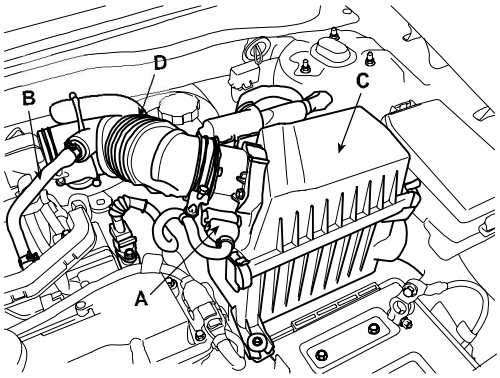

ACJF007A

4) Disconnect the ECM connector(A) and ECM connector(B) (A/T only).

5) Remove the air cleaner element and air cleaner lower cover(C).

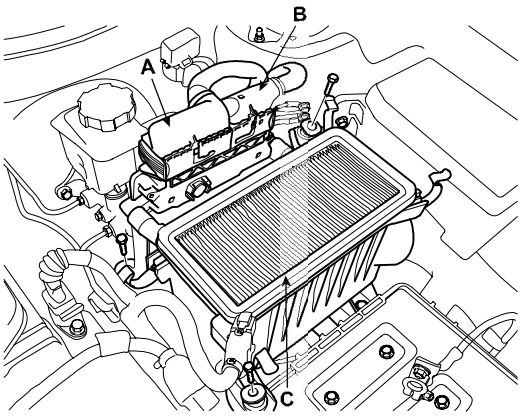

ACJF008A

6. Remove the battery tray(A).

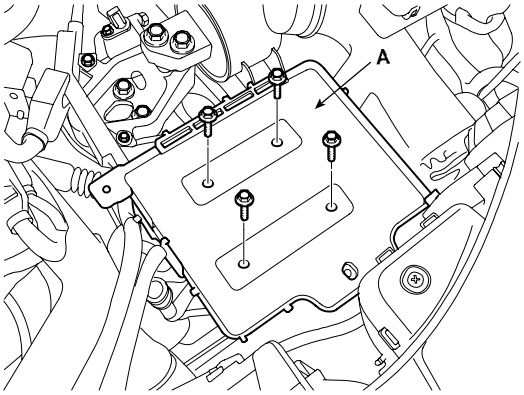

ACJF009A

7. Disconnect the upper radiator hose(A) and lower radiator hose(B).

8. Disconnect the ATF oil cooler hoses(C).

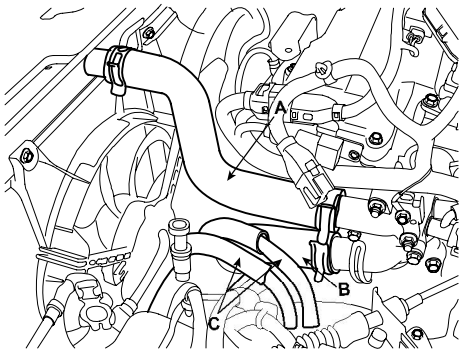

ACJF010A

9. Disconnect the heater hoses(A).

10. Disconnect the fuel hose(B).

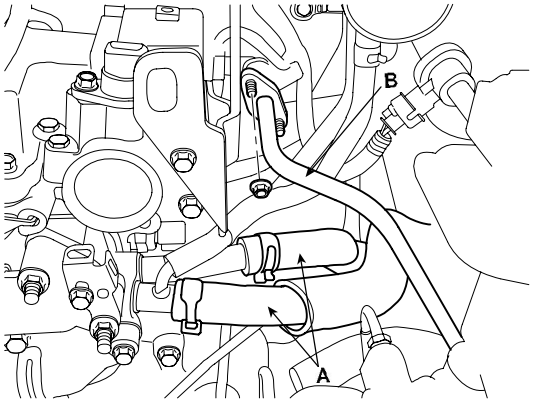

ACJF011A

11. Remove the accelerator cable(A) by loosening the lock-nut, then slip the cable end out of the throttle linkage.

12. Disconnect the TPS (Throttle Position Sensor) connector(B).

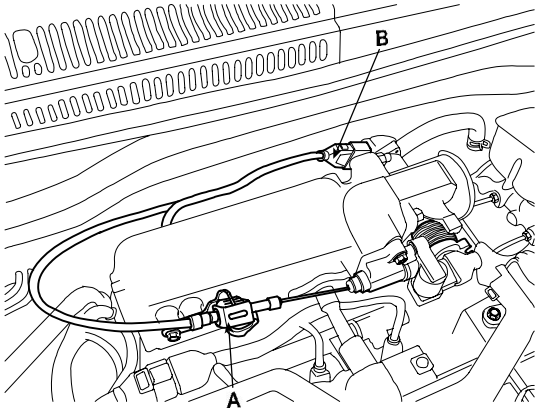

BCJF001A

13. Remove the engine wire harness connectors and wire harness clamps from cylinder head and the intake manifold.

    1) Disconnect the rear oxygen sensor connector (A).

    2) Disconnect the air conditioner compressor switch connector (B).

    3) Disconnect the knock sensor connector (C).

    4) Disconnect the injector connectors(No.3,4) (D).

    5) Disconnect the injector connectors(No.1,2) (E)

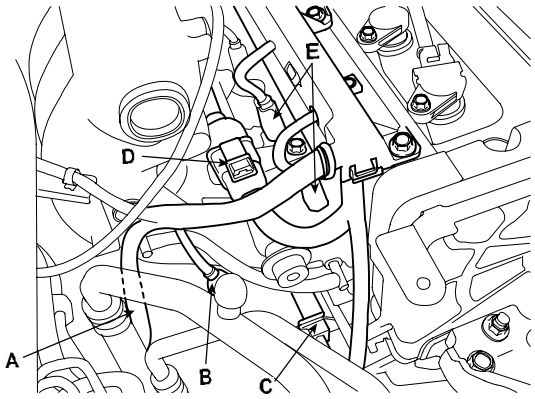

ACJF013A

    6) Remove the wire harness bracket(A).

    7) Disconnect the ISA (Idle Speed Actuator) connector (B).

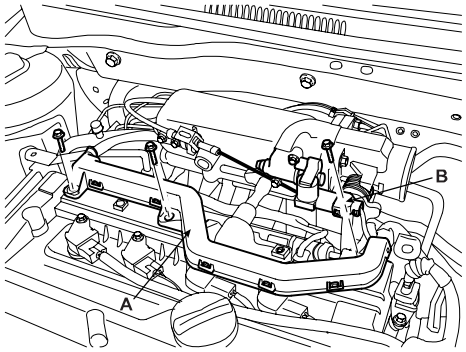

ACJF003A

    8) Disconnect the front oxygen sensor connector(A).

    9) Disconnect the CKP(Crankshaft Position Sensor) connector (B).

    10) Disconnect the OCV(Oil Control Valve) connector (C).

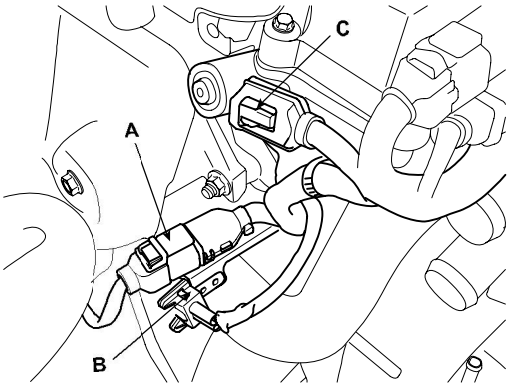

ACJF014A

    11) Disconnect the ignition coil connector(A).

    12) Disconnect the ignition coil condenser connector(B).

    13) Disconnect the CMP(Camshaft Position Sensor) connector(C).

    14) Disconnect the ground cable(D).

    15) Remove the wire harness bracket(E).

■ 1.6 CVVT

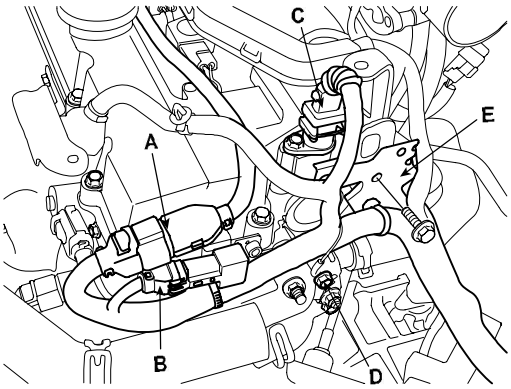

ACJF015A

16) Remove the ground cable(A) between engine mounting and vehicle body.

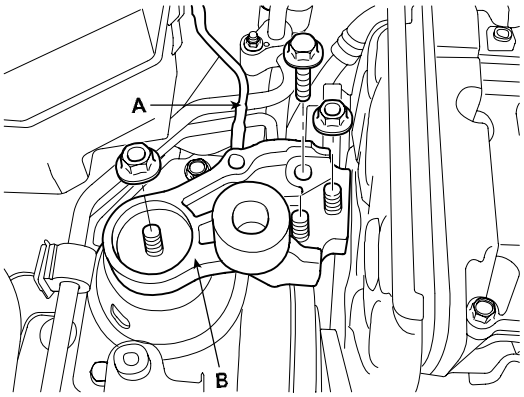

ACJF017A

17) Remove the ground cable(A) between transaxle housing and vehicle body.

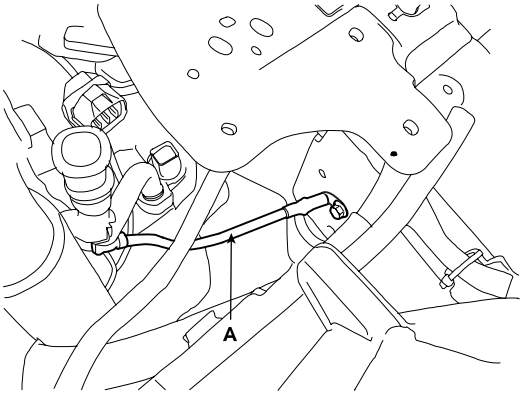

ACJF020A

14. Remove the transaxle wire harness connectors and control cable from transaxle (A/T).

1) Disconnect the transaxle range switch connector (A).

2) Disconnect the solenoid valve connector(B).

3) Disconnect the ATF oil temperature sensor connector (C).

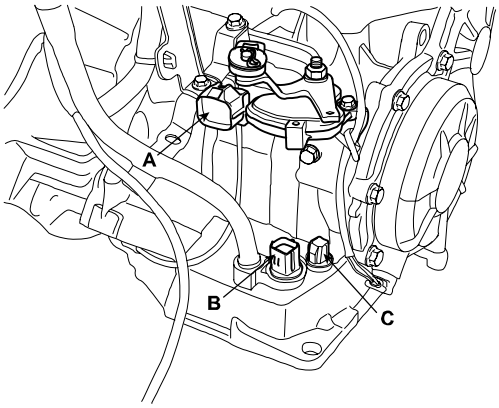

ACJF021A

4) Disconnect the vehicle speed sensor connector(A).

5) Disconnect the band server switch connector(B).

6) Disconnect the pulse generator(A) connector(C).

7) Disconnect the pulse generator(B) connector(D).

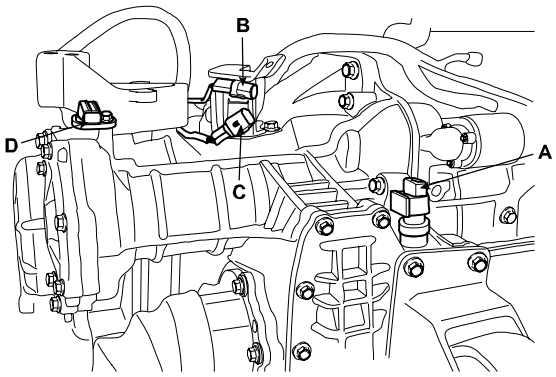

ACJF022A

8) Remove the control cable nut(A) from transaxle range switch.

9) Remove the control cable(B).

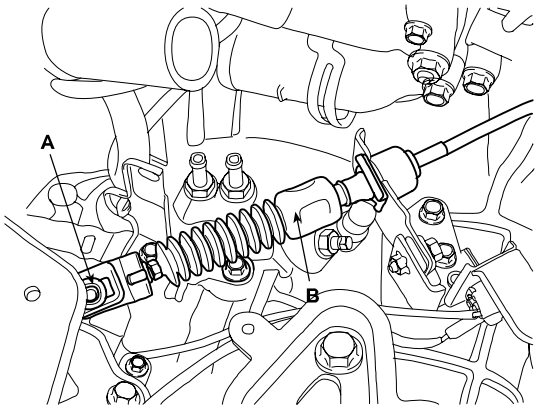

ACJF023A

15. Remove the transaxle wire harness connectors and control cable from transaxle (M/T).

1) Disconnect the vehicle speed sensor connector(A).

2) Disconnect the neutral switch connector(B).

3) Disconnect the back-up lamp switch connector(C).

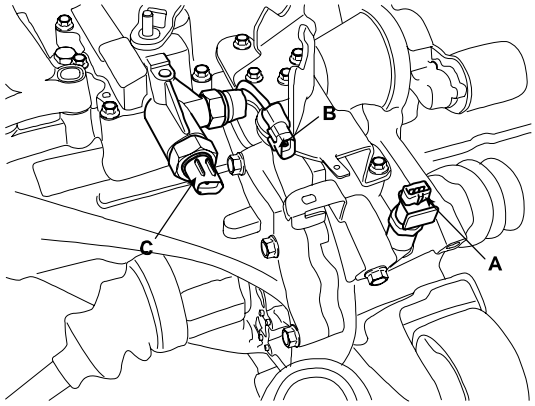

ACJF024A

4) Remove the control cable(A).

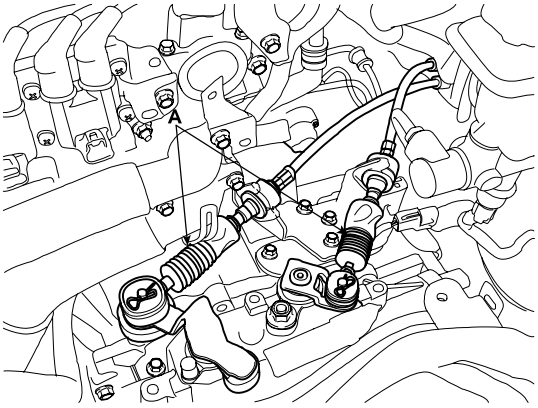

ACJF025A

16. Move the disconnected wire harnesses to the fuse box side so as to prevent interfering with other parts.

17. Disconnect the hose(A) of the PCSV (Purge Control Solenoid Valve) side.

18. Remove the brake booster vacuum hose(B).

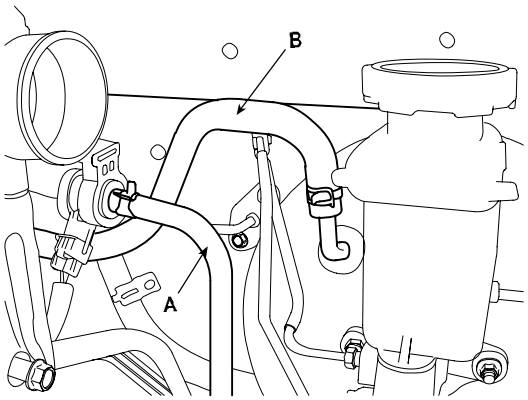

ACJF018A

19. Remove the power steering oil hose(A) and drain the power steering oil.

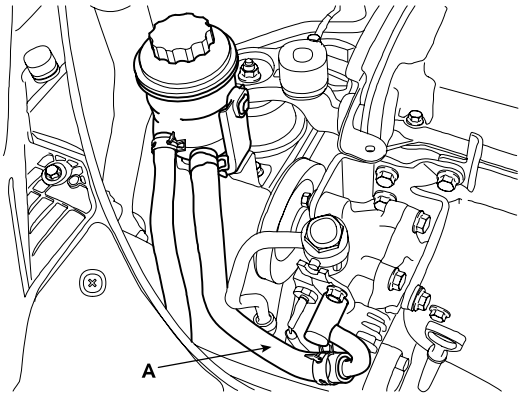

ACJF026A

20. Remove the power steering return hose(A).

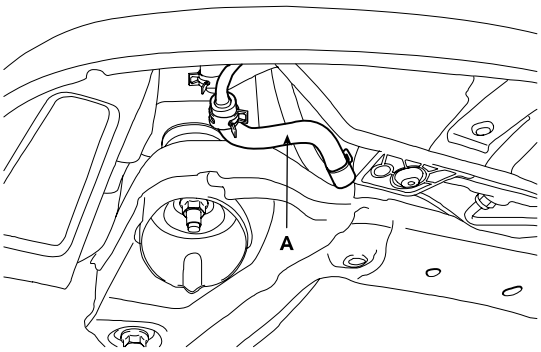

ACJF027A

21. Recovering refrigerant and remove the high & low pressure pipe. (Refer to HA group - air conditioner compressor)

22. Remove the nuts(B,D), bolt(C) and engine mounting support bracket(A).

Tightening torque :
Nut (B) : 68.6 ~ 93.2N.m (7.0~ 9.5kgf.m, 50.6 ~ 68.7lb-ft)
Bolt(C),Nut(D):49.0~63.7N.m(5.0~6.5kgf.m,36.2~47.0lb-ft)

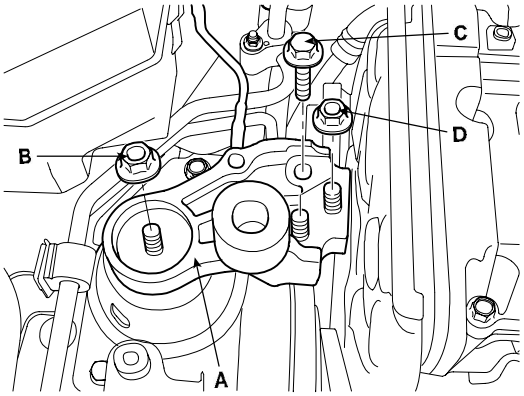

ACJF130A

23. Remove the transaxle mounting bracket(A).

Tightening torque :
Bolt, Nut (B) :
68.6 ~ 93.2N.m (7.0~ 9.5kgf.m, 50.6 ~ 68.7lb-ft)

■ A/T

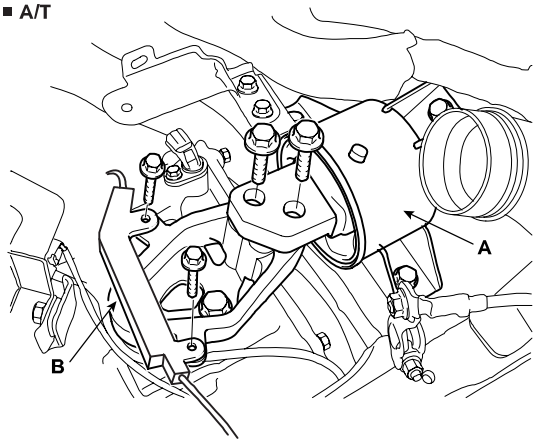

BCJF002A

* A/T : Remove the wire harness protector(B) on the transaxle mounting support braket.

■ M/T

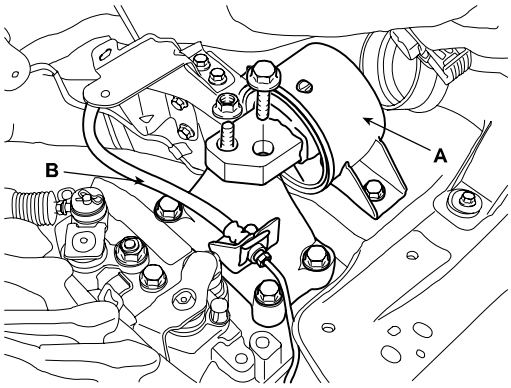

BCJF003A

* M/T : Remove the clutch realese cylinder oil hose(B) on the transaxle mouting support bracket.

24. Disconnect the alternator connector(A) and "B" terminal (B).

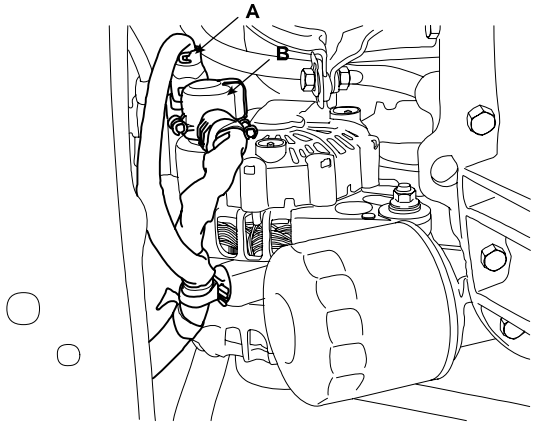

ACJF030A

25. Remove the front tires.

26. Remove the ABS wheel speed sensor(A).

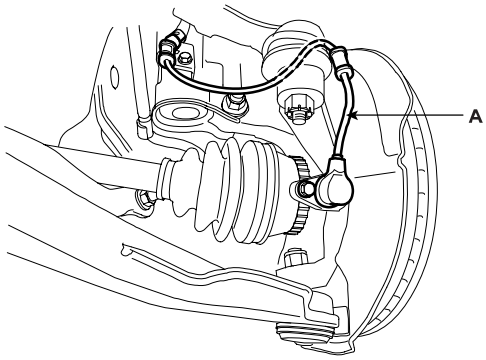

LCGF138A

27. Remove the caliper and hang assembly(A).

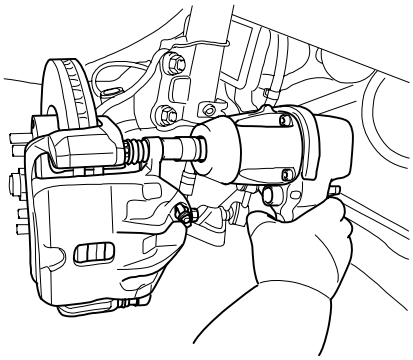

LCGF139A

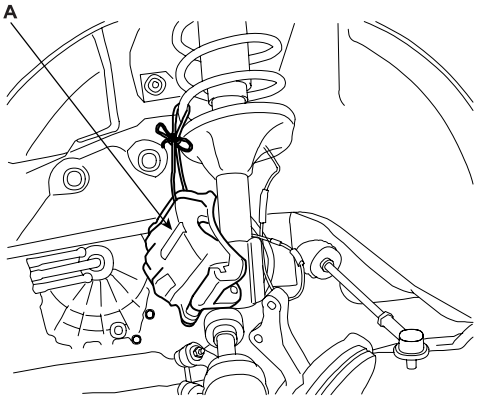

LCGF140A

28. Remove the knuckle mounting bolts(A).

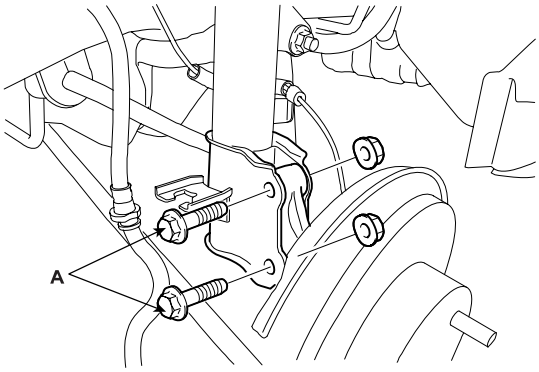

LCGF141A

29. Remove the steering u-joint mounting bolt(A).

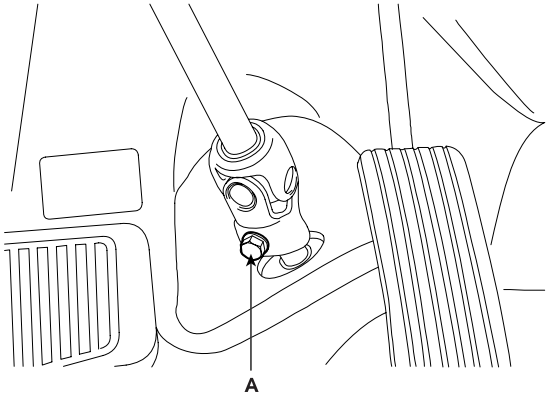

LCGF142A

30. Remove the front muffler heat protector(A).

31. Remove the front muffler(B).

Tightening torque :
29.4 ~ 39.2N.m(3.0 ~ 4.0kgf.m,21.7 ~ 28.9lb-ft)

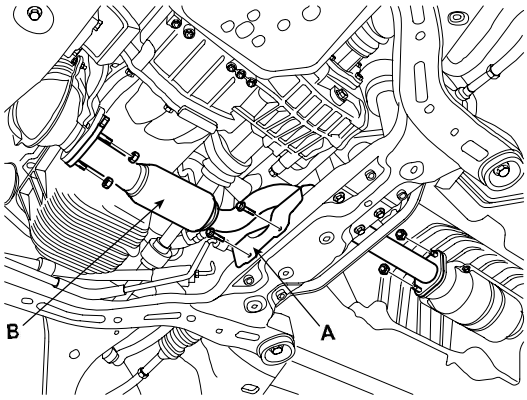

ACJF031A

32. Using a floor jack, support the engine and transaxle assembly.

NOTE

After removing the sub frame mounting bolt , the engine and transaxle assembly may fall downward, and so support them securely with floor jack.
Verify that the hoses and connectors are disconnected before removing the engine and transaxle assembly.

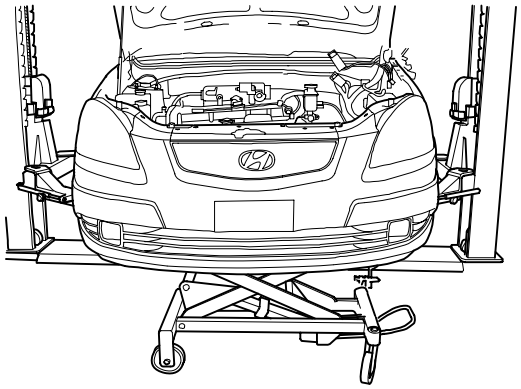

KDNF001A

33. Remove the sub frame bolts and nuts.

Tightening torque :
Bolt(A), Nut(B):
93.2 ~ 117.7N.m (9.5 ~ 12.0kgf.m, 68.7 ~ 86.8lbf.ft)

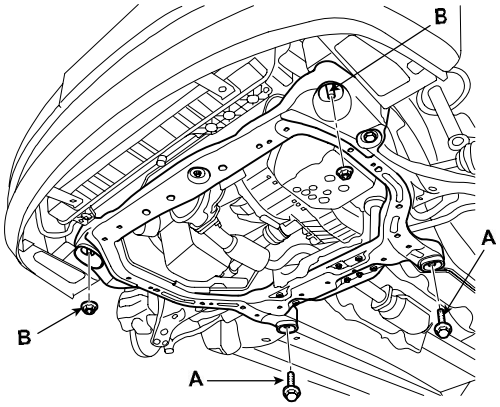

ACJF033A

34. Remove the engine and transaxle assembly by lifting vehicle.

NOTE

When remove the engine and transaxle assembly, be careful not to damage any surrounding parts or body components.

INSTALLATION EADDB127

Installation is in the reverse order of removal.
Perform the following :

- Adjust the shift cable.
- Adjust the throttle cable.
- Refill the engine with engine oil.
- Refill the transaxle with fluid.
- Refill the radiator and reservoir tank with engine coolant.
- Place the heater control knob on "HOT" position.
- Bleed air from the cooling system
  - Start engine and let it run until it warms up. (until the radiator fan operates 3 or 4 times.)
  - Turn Off the engine. Check the level in the radiator, add coolant if needed. This will allow trapped air to be removed from the cooling system.
  - Put the radiator cap on tightly, then run the engine again and check for leaks.

- Clean the battery posts and cable terminals with sandpaper assemble them, then apply grease to prevent corrosion.
- Inspect for fuel leakage.
  - After assemble the fuel line, turn on the ignition switch (do not operate the starter) so that the fuel pump runs for approximately two seconds and fuel line pressurizes.
  - Repeat this operation two or three times, then check for fuel leakage at any point in the fuel line.

ENGINE BLOCK

COMPONENT ECFECE33

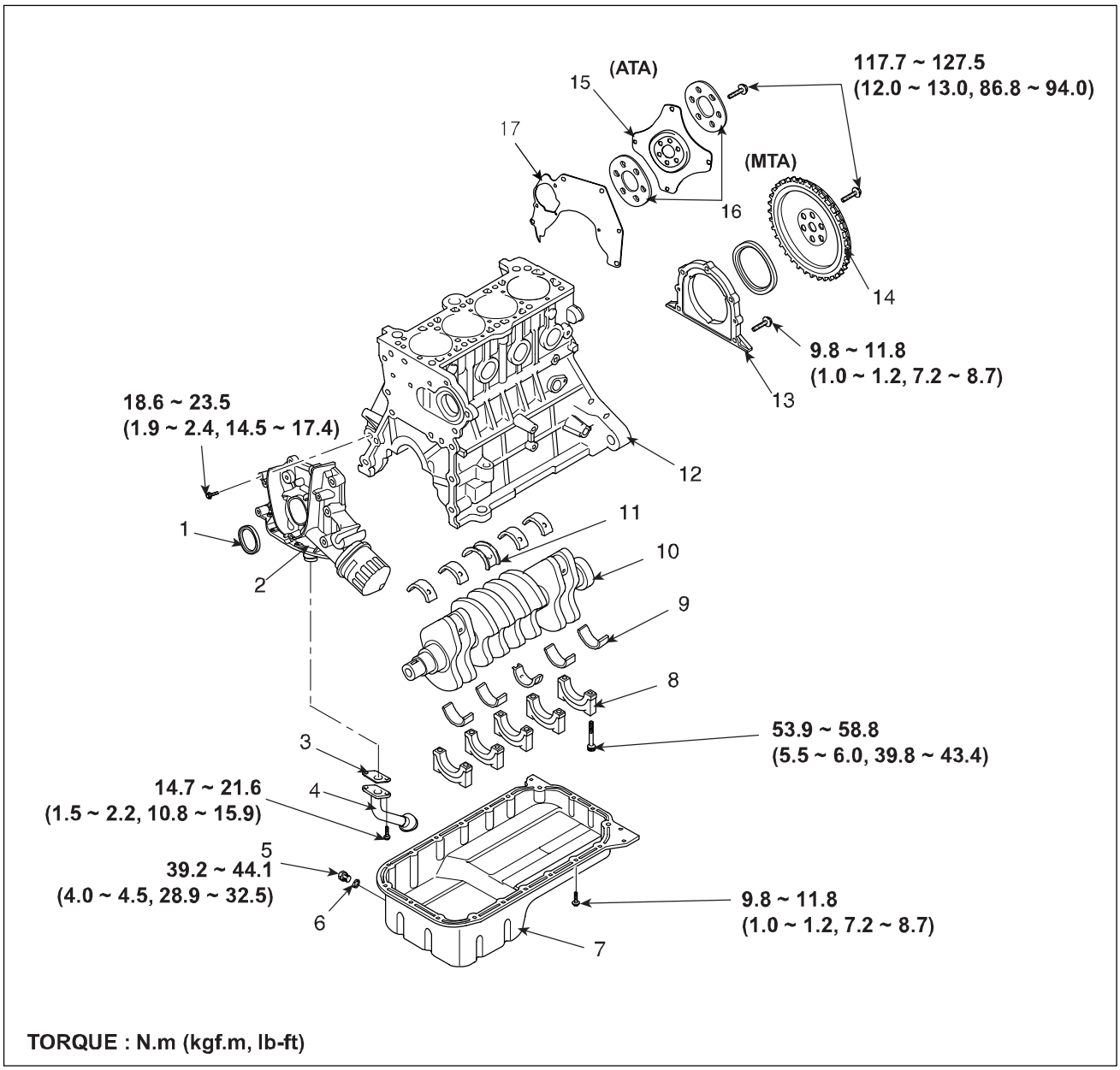

1. Oil seal
2. Front case
3. Gasket
4. Oil screen
5. Drain plug
6. Gasket
7. Oil pan
8. Main bearing cap
9. Main bearing
10. Crankshaft
11. Center bearing
12. Cylinder block
13. Rear oil seal case
14. Flywheel
15. Drive plate
16. Washer
17. Rear plate

UCNG001A

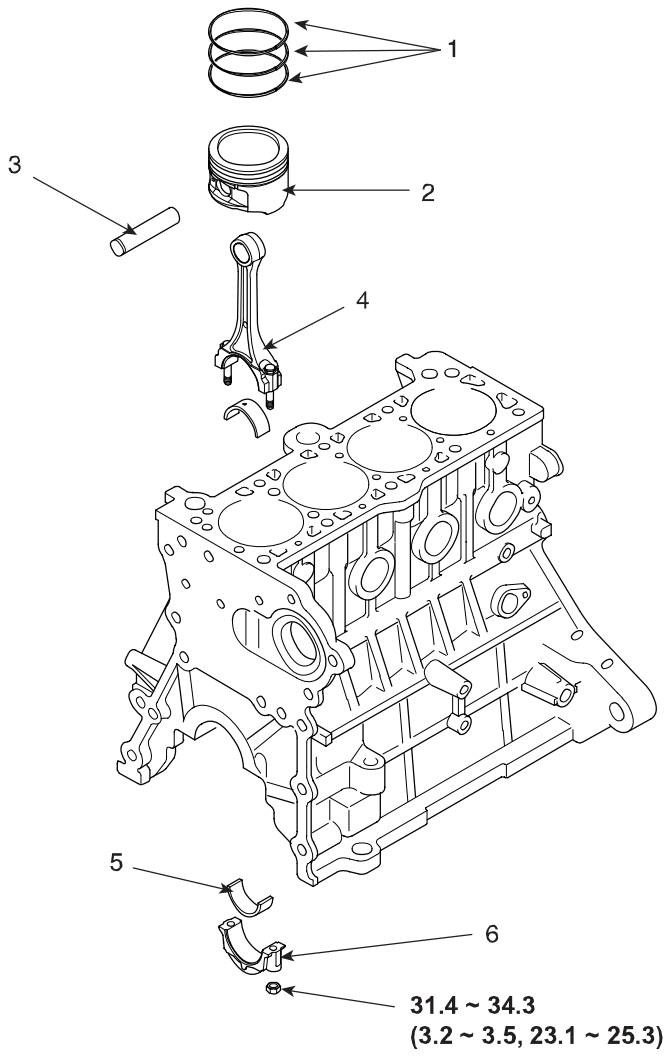

TORQUE : N.m (kgf.m, lb-ft)

1. Piston ring
2. Piston
3. Piston pin
4. Connecting rod
5. Connecting rod bearing
6. Connecting rod bearing cap

LCJF009A

DISASSEMBLY EFDA87C3

1. M/T : Remove the fly wheel.
2. A/T : Remove the drive plate.
3. Install the engine to engine stand for disassembly.
4. Remove the timing belt. (Refer to EM - 21)
5. Remove the cylinder head. (Refer to EM - 35)
6. Remove the oil level gauge tube(A).

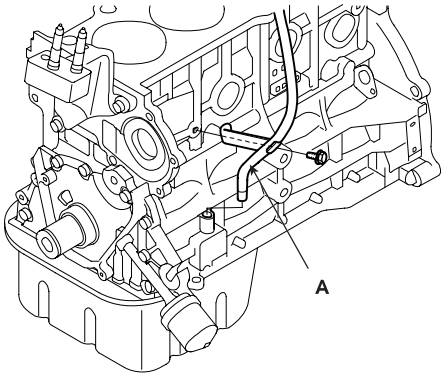

ECKD301A

7. Remove the knock sensor(A).

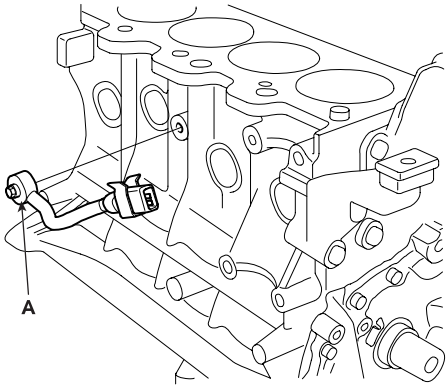

ECKD302A

8. Remove the oil pressure switch(A).

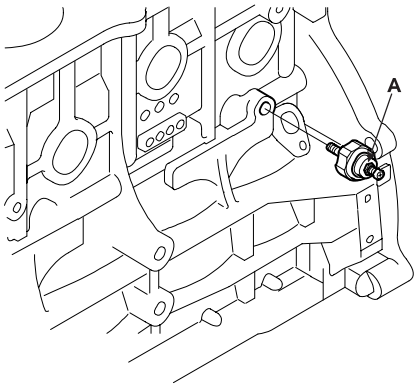

ECKD303A

9. Remove the water pump. (Refer to EM - 90)
10. Remove the oil pan(A).

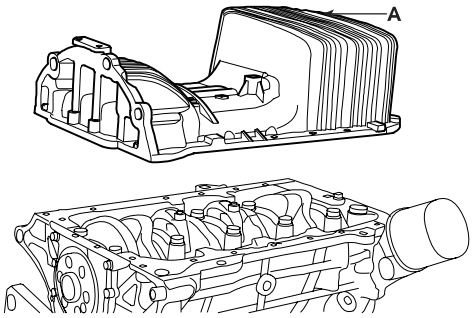

EDKD142A

11. Remove the oil screen.
    Remove the 2bolts(C), oil screen(A) and gasket(B).

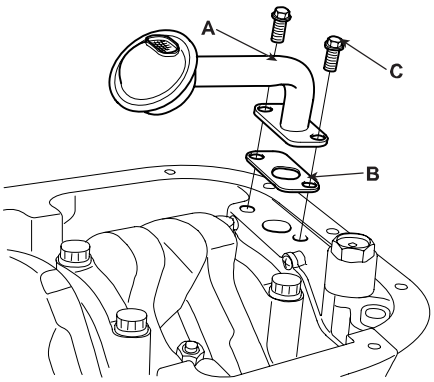

EDKD143A

12. Check the connecting rod end play. (Refer to EM - 71)

13. Remove the connecting rod caps and check oil clearance. (Refer to EM - 71)

14. Remove the piston and connecting rod assemblies.

    1) Using a ridge reamer, remove all the carbon from the top of the cylinder.

    2) Push the piston, connecting rod assembly and upper bearing through the top of the cylinder block.

NOTE

- *Keep the bearings, connecting rod and cap together.*
- *Arrange the piston and connecting rod assemblies in the correct order.*

15. Remove the front case. (Refer to EM - 102)

16. Remove the rear oil seal case.
    Remove the 5bolts(B) and rear oil seal case(A).

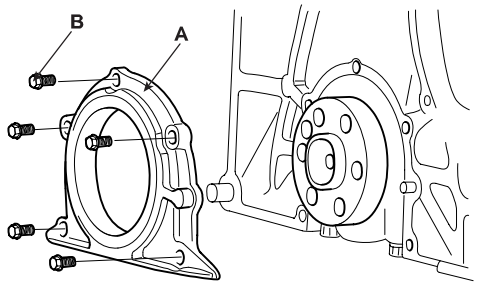

EDKD144A

17. Remove the crankshaft bearing cap and check oil clearance. (Refer to EM - 73)

18. Check the crankshaft end play. (Refer to EM - 75)

19. Lift the crankshaft(A) out of the engine, being careful not to damage journals.

NOTE

Arrange the main bearings and thrust bearings in the correct order.

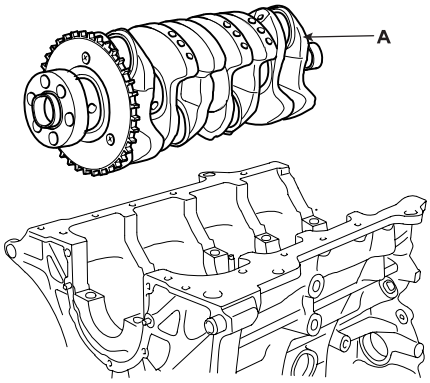

ECKD307A

20. Check fit between piston and piston pin.
    Try to move the piston back and forth on the piston pin.
    If any movement is felt, replace the piston and pin as a set.

21. Remove the piston rings.

    1) Using a piston ring expender, remove the 2 compression rings.

    2) Remove the 2 side rails and oil ring by hand.

NOTE

Arrange the piston rings in the correct order only.

22. Remove the connecting rod from the piston.
    Using a press, remove the piston pin from piston.
    (Press-in load : 500 ~ 1,500kg(1,102 ~ 3,306lb))

INSPECTION E762AAE1

CONNECTING ROD AND CRANKSHAFT

1. Check the connecting rod end play.
   Using feeler gauge, measure the end play while moving the connecting rod back and forth.

End play Standard : 0.1 ~ 0.25mm (0.0039 ~ 0.0098in) Maximum : 0.4mm (0.0157in)

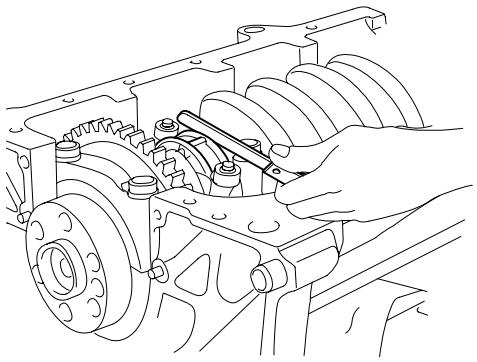

EDKD145A

- If out-of-tolerance, install a new connecting rod.
- If still out-of-tolerance, replace the crankshaft.

2. Check the connecting rod bearing oil clearance.

   1) Check the match marks on the connecting rod and cap are aligned to ensure correct reassembly.

   2) Remove the 2 connecting rod cap nuts.

   3) Remove the connecting rod cap and lower bearing.

   4) Clean the crankshaft pin journal and bearing.

   5) Place a plastigage across the crankshaft pin journal.

   6) Reinstall the lower bearing and cap, and tighten the nuts.

Tightening torque : 31.4 ~ 34.3N.m (3.2 ~ 3.5kgf.m, 23.1 ~ 25.3lb-ft)

NOTE

Do not turn the crankshaft.

   7) Remove the 2nuts, connecting rod cap and lower bearing .

   8) Measure the plastigage at its widest point.

Standard oil clearance 0.018 ~ 0.036mm (0.0007 ~ 0.0014in)

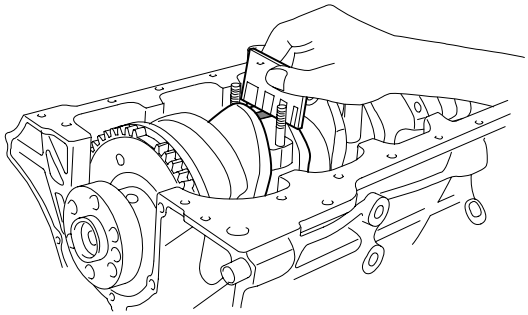

ECKD309A

   9) If the plastigage measures too wide or too narrow, remove the upper and lower bearing and then install a new bearings with the same color mark. (Refer to EM - 73, connecting rod bearing selection table)
   Recheck the oil clearance.

CAUTION

Do not file, shim, of scrape the bearings or the caps to adjust clearance.

   10) If the plastigage shows the clearance is still incorrect, try the next larger or smaller bearing. (Refer to EM - 73, connecting rod bearing selection table)
   Recheck the oil clearance.

NOTE

If the proper clearance cannot be obtained by using the appropriate larger or smaller bearings, replace the crankshaft and start over.

CAUTION

If the marks are indecipherable because of an accumulation of dirt and dust, do not scrub them with a wire brush or scraper. Clean them only with solvent or detergent.

CONNECTING ROD MARK LOCATION

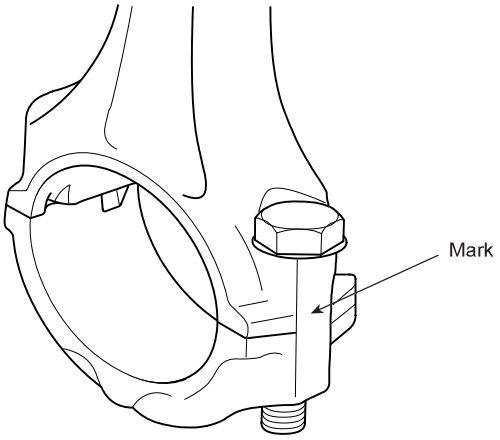

EDKD146A

IDENTIFICATION OF CONNECTING ROD

Mark	Connecting rod big-end inner diameter
^	48.000 ~ 48.006mm (1.8898 ~ 1.8900in)
b	48.006 ~ 48.012mm (1.8900 ~ 1.8902in)
c	48.012 ~ 48.018mm (1.8902 ~ 1.8905in)

CRANKSHAFT PIN JOURNAL MARK LOCATION

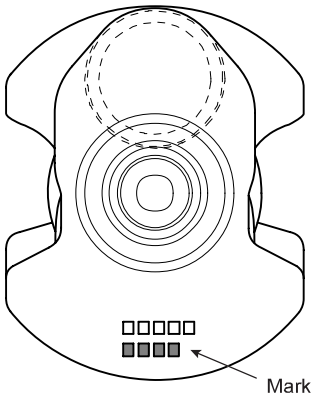

LCGE007A

IDENTIFICATION OF CRANKSHAFT PIN JOURNAL

Mark	Crankshaft pin journal outer diameter
^	44.966 ~ 44.972mm (1.7703 ~ 1.7705in)
b	44.960 ~ 44.966mm (1.7701 ~ 1.7703in)
c	44.954 ~ 44.960mm (1.7698 ~ 1.7701in)

CONNECTING ROD BEARING MARK LOCATION

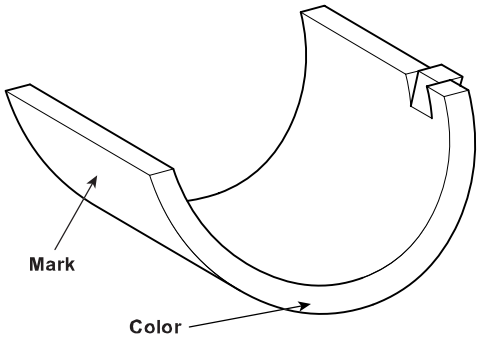

ECKD313A

IDENTIFICATION OF CONNECTING ROD BEARING

Mark	Color	Connecting rod bearing thickness
AA	Blue	1.514 ~ 1.517mm (0.0596 ~ 0.0597in)
A	Black	1.511 ~ 1.514mm (0.0595 ~ 0.0596in)
B	None	1.508 ~ 1.511mm (0.0594 ~ 0.0595in)
C	Green	1.505 ~ 1.508mm (0.0593 ~ 0.0594in)
D	Yellow	1.502 ~ 1.505mm (0.0591 ~ 0.0593in)

11) Select the bearing by using selection table.

CONNECTING ROD BEARING SELECTION TABLE

		Connecting rod mark		
		^	b	c
Crank shaft pin journal mark	^	D (Yellow)	C (Green)	B (None)
	b	C (Green)	B (None)	A (Black)
	c	B (None)	A (Black)	AA (Blue)

3. Check the connecting rods.

1) When reinstalling, make sure that cylinder numbers put on the connecting rod and cap at disassembly match. When a new connecting rod is installed, make sure that the notches for holding the bearing in place are on the same side.

2) Replace the connecting rod if it is damaged on the thrust faces at either end. Also if step wear or a severely rough surface of the inside diameter of the small end is apparent, the rod must be replaced as well.

3) Using a connecting rod aligning tool, check the rod for bend and twist. If the measured value is close to the repair limit, correct the rod by a press. Any connecting rod that has been severely bent or distorted should be replaced.

Allowable bend of connecting rod :
0.05mm / 100mm (0.0020in / 3.94in) or less
Allowable twist of connecting rod :
0.1mm / 100mm (0.0039in / 3.94in) or less

4. Check the crankshaft bearing oil clearance.

1) To check main bearing-to-journal oil clearance, remove the main bearing caps and lower bearings.

2) Clean each main journal and lower bearing with a clean shop towel.

3) Place one strip of plastigage across each main journal.

4) Reinstall the lower bearings and caps, then tighten the bolts.

Tightening torque :
53.9 ~ 58.8N.m(5.5 ~ 6.0kgf.m, 39.8 ~ 43.4lb-ft)

NOTE

Do not turn the crankshaft.

5) Remove the cap and lower bearing again, and measure the widest part of the plastigage.

Standard oil clearance :
No.1, 2, 4, 5 : 0.022 ~ 0.040mm (0.0009 ~ 0.0016in)

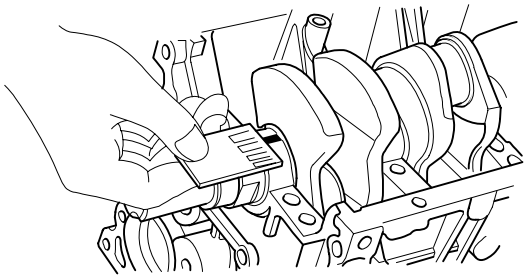

ECKD001I

6) If the plastigage measures too wide or too narrow, remove the upper and lower bearing and then install a new bearings with the same color mark. (Refer to EM - 75, crankshaft main bearing selection table)
Recheck the oil clearance.

CAUTION

Do not file, shim, or scrape the bearings or the cap to adjust clearance.

7) If the plastigage shows the clearance is still incorrect, try the next larger or smaller bearing. (Refer to EM - 75, crankshaft main bearing selection table)
Recheck the oil clearance.

NOTE

If the proper clearance cannot be obtained by using the appropriate larger or smaller bearings, replace the crankshaft and start over.

CAUTION

If the marks are indecipherable because of an accumulation of dirt and dust, do not scrub them with a wire brush or scraper. Clean them only with solvent or detergent.

Cylinder block crankshaft journal bore mark location

Letters have been stamped on the end of the block as a mark for the size of each of the 5 main journal bores.

Use them, and the numbers or letters stamped on the crank (marks for main journal size), to choose the correct bearings.

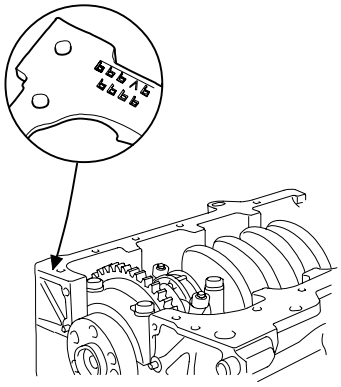

EDKD147A

IDENTIFICATION OF CYLINDER BLOCK CRANKSHAFT JOURNAL BORE

Mark	Cylinder block crankshaft journal bore inner diameter
^	54.000 ~ 54.006mm (2.1260 ~ 2.1262in)
b	54.006 ~ 54.012mm (2.1262 ~ 2.1265in)
c	54.012 ~ 54.018mm (2.1265 ~ 2.1267in)

CRANKSHAFT MAIN JOURNAL MARK LOCATION

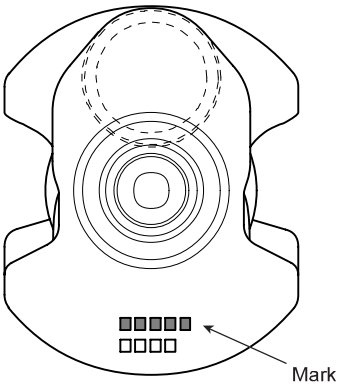

LCGE009A

IDENTIFICATION OF CRANKSHAFT MAIN JOURNAL

Mark	Crankshaft main journal outer diameter
^	49.962 ~ 49.968mm (1.9670 ~ 1.9672in)
b	49.956 ~ 49.962mm (1.9668 ~ 1.9670in)
c	49.950 ~ 49.956mm (1.9665 ~ 1.9668in)

CRANKSHAFT MAIN BEARING MARK LOCATION

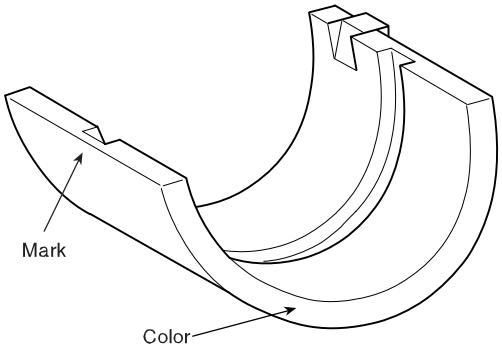

ECKD316A

IDENTIFICATION OF CRANKSHAFT MAIN BEARING

Mark	Color	Crankshaft main bearing thickness	
		No.1, 2, 4, 5	No. 3
AA	Blue	2.014 ~ 2.017 (0.0793 ~ 0.0794)	2.011 ~ 2.014 (0.0792 ~ 0.0793)
A	Black	2.011 ~ 2.014 (0.0792 ~ 0.0793)	2.008 ~ 2.011 (0.0791 ~ 0.0792)
B	None	2.008 ~ 2.011 (0.0791 ~ 0.0792)	2.005 ~ 2.008 (0.0789 ~ 0.0791)
C	Green	2.005 ~ 2.008 (0.0789 ~ 0.0791)	2.002 ~ 2.005 (0.0788 ~ 0.0789)
D	Yel-low	2.002 ~ 2.005 (0.0788 ~ 0.0789)	1.999 ~ 2.002 (0.0787 ~ 0.0788)

8) Select the bearing by using selection table.

CRANKSHAFT MAIN BEARING SELECTION TABLE

		Cylinder block crankshaft journal bore mark		
		^	b	c
Crank shaft main journal mark	^	D (Yellow)	C (Green)	B (None)
	b	C (Green)	B (None)	A (Black)
	c	B (None)	A (Black)	AA (Blue)

5. Check the crankshaft end play.
   Using a dial indicator, measure the thrust clearance while prying the crankshaft back and forth with a screwdriver.

End play
Standard: 0.05 ~ 0.175mm (0.0020 ~ 0.0069in)
Limit : 0.20mm (0.0079in)

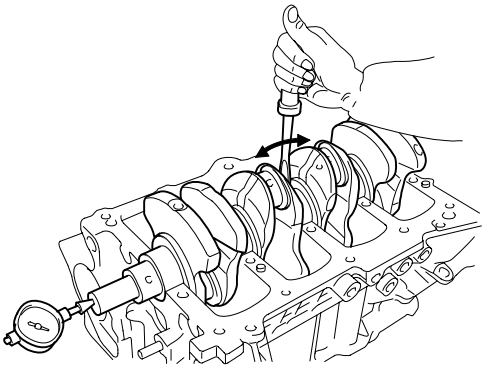

ECKD001B

If the end play is greater than maximum, replace the center bearing.

6. Inspect the crankshaft main journals and pin journals. Using a micrometer, measure the diameter of each main journal and pin journal.

Main journal diameter :
49.950 ~ 49.968mm (1.9665 ~ 1.9672in)
Pin journal diameter :
44.954 ~ 44.972mm (1.7698 ~ 1.7705in)

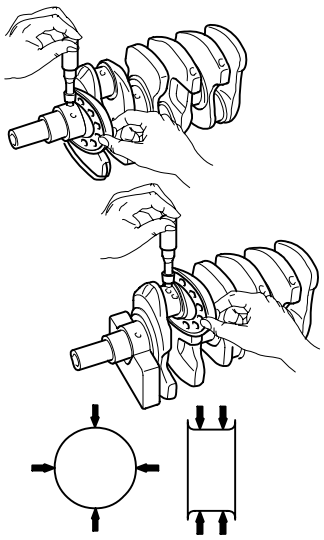

ECKD001E

CYLINDER BLOCK

1. Remove the gasket material.
   Using a gasket scraper, remove all the gasket material from the top surface of the cylinder block.

2. Clean the cylinder block
   Using a soft brush and solvent, thoroughly clean the cylinder block.

3. Inspect the top surface of cylinder block for flatness.
   Using a precision straight edge and feeler gauge, measure the surface contacting the cylinder head gasket for warpage.

Flatness of cylinder block gasket surface Standard : Less than 0.05mm (0.0020in)

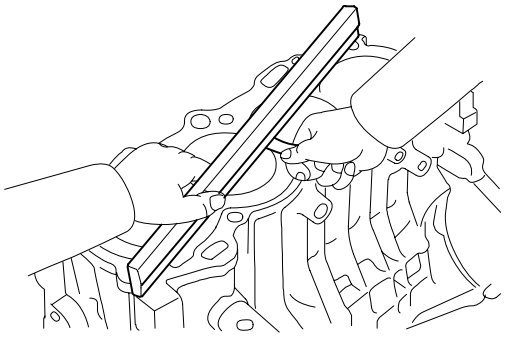

ECKD001L

4. Inspect the cylinder bore.
   Visually check the cylinder for vertical scratchs.
   If deep scratchs are present, replace the cylinder block.

5. Inspect the cylinder bore diameter.
   Using a cylinder bore gauge, measure the cylinder bore diameter at position in the thrust and axial direction.

Standard diameter : 1.6 CVVT : 76.50 ~ 76.53mm (3.0118 ~ 3.0130in)

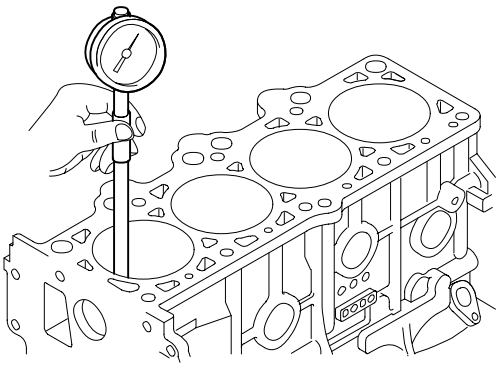

ECKD318A

6. Check the cylinder bore size code on the cylinder block bottom face.

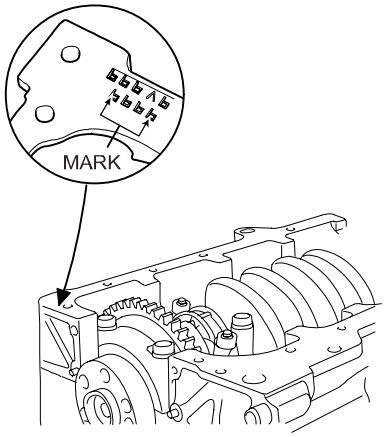

LCGE010A

IDENTIFICATION OF CYLINDER BORE SIZE

Mark	Cylinder bore inner diameter
A	76.50 ~ 76.51mm (3.0118 ~ 3.0122in)
B	76.51 ~ 76.52mm (3.0122 ~ 3.0126in)
C	76.52 ~ 76.53mm (3.0126 ~ 3.0130in)

7. Check the piston size mark(A) on the piston top face.

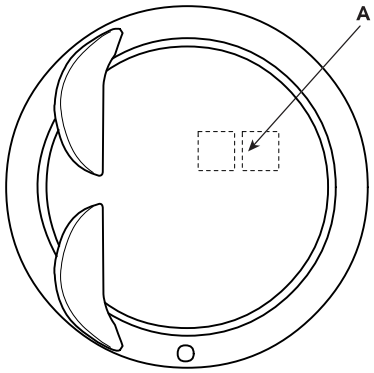

BCJF004A

DISCRIMINATION OF PISTON OUTER DIAMETER

Mark	Piston outer diameter
A	76.47 ~ 76.48mm (3.0106 ~ 3.0110in)
B	76.48 ~ 76.49mm (3.0110 ~ 3.0114in)
C	76.49 ~ 76.50mm (3.0114 ~ 3.0118in)

8. Select the piston related to cylinder bore class.

Piston -to-cylinder clearance :
0.02 ~ 0.04mm (0.0008 ~ 0.0016in)

BORING CYLINDER

1. Oversize pistons should be selected according to the largest bore cylinder.

NOTE

The size of piston is stamped on top of the piston.

2. Measure the outside diameter of the piston to be used.
3. According to the measured O.D(Outer Diameter), calculate the new bore size.

New bore size = piston O.D + 0.02 to 0.04mm (0.0008 to 0.0016in) (clearance between piston and cylinder) - 0.01mm (0.0004in) (honing margin.)

4. Bore each of the cylinders to the calculated size.

CAUTION

To prevent distortion that may result from temperature rise during honing, bore the cylinder holes in the firing order.

5. Hone the cylinders, finishing them to the proper dimension (piston outside diameter + gap with cylinder).
6. Check the clearance between the piston and cylinder.

Standard : 0.02 ~ 0.04mm (0.0008 ~ 0.0016in)

NOTE

When boring the cylinders, finish all of the cylinders to the same oversize. Do not bore only one cylinder to the oversize.
(1.6 CVVT : Don't use over size)

PISTON AND PISTON RINGS

1. Clean the piston.

   1) Using a gasket scraper, remove the carbon from the piston top.

   2) Using a groove cleaning tool or broken ring, clean the piston ring grooves.

   3) Using solvent and a brush, thoroughly clean the piston.

   NOTE

   Do not use a wire brush.

2. The standard measurement of the piston outside diameter is taken 39.15mm(1.5413in) from top land of the piston.

Standard diameter : 76.47 ~ 76.50mm (3.0106 ~ 3.0118in)

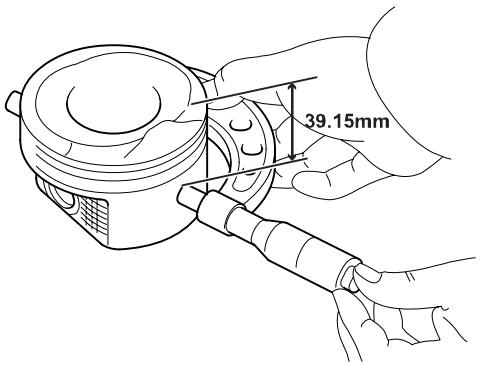

BCJF005A

3. Calculate the difference between the cylinder bore inner diameter and the piston outer diameter.

Piston-to-cylinder clearance : 0.02 ~ 0.04mm (0.0008 ~ 0.0016in)

4. Inspect the piston ring side clearance.
   Using a feeler gauge, measure the clearance between new piston ring and the wall of ring groove.

Piston ring side clearance No.1 ring : 0.04 ~ 0.085mm (0.0016 ~ 0.0033in) No.2 ring : 0.04 ~ 0.085mm (0.0016 ~ 0.0033in) Oil ring : 0.08 ~ 0.175mm (0.0031 ~ 0.0069in) Limit No.1 ring : 0.1mm (0.0039in) No.2 ring : 0.1mm (0.0039in)

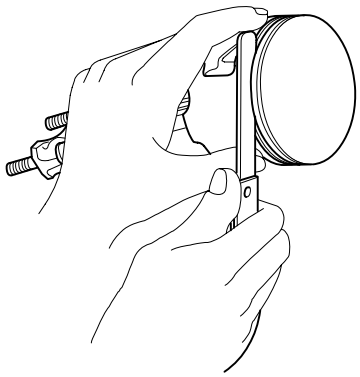

ECKD001G

If the clearance is greater than maximum, replace the piston.

5. Inspect the piston ring end gap.
   To measure the piston ring end gap, insert a piston ring into the cylinder bore. Position the ring at right angles to the cylinder wall by gently pressing it down with a piston. Measure the gap with a feeler gauge. If the gap exceeds the service limit, replace the piston rings. If the gap is too large, recheck the cylinder bore inner diameter. If the bore is over the service limit, the cylinder block must be rebored. (Refer to EM - 77)

Piston ring end gap
Standard
No.1 ring : 0.15 ~ 0.30mm (0.0059 ~ 0.0118in)
No.2 ring : 0.35 ~ 0.50mm (0.0138 ~ 0.0197in)
Oil ring : 0.20 ~ 0.70mm(0.0079 ~ 0.0276in)
Limit
No.1, 2, oil ring : 1.0mm(0.0394in)

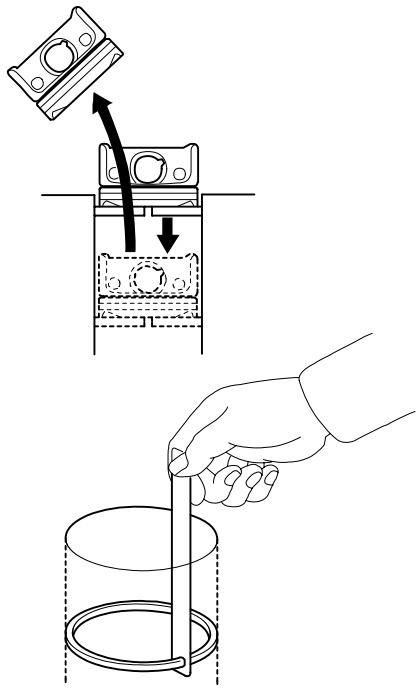

ACJF112A

PISTON PINS

1. Measure the outer diameter of piston pin

Piston pin diameter :
18.001 ~ 18.007mm (0.7087 ~ 0.7089in)

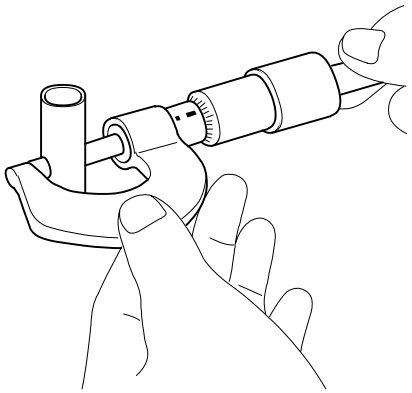

ECKD001Z

2. Measure the piston pin-to-piston clearance.

Piston pin-to-piston clearance :
0.011 ~ 0.018mm (0.0004 ~ 0.0007in)

3. Check the difference between the piston pin outer diameter and the connecting rod small end inner diameter.

Piston pin-to-connecting rod interference :
-0.033 ~ -0.016mm (-0.0013 ~ -0.0006in)

OIL PRESSURE SWITCH

1. Check the continuity between the terminal and the body with an ohmmeter. If there is no continuity, replace the oil pressure switch.

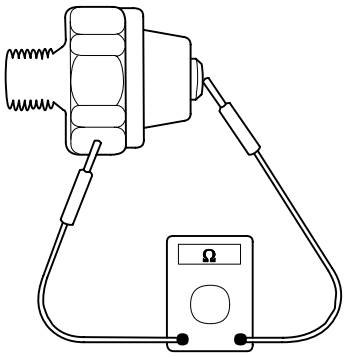

ECKD001W

2. Check the continuity between the terminal and the body when the fine wire is pushed. If there is continuity even when the fine wire is pushed, replace the switch.

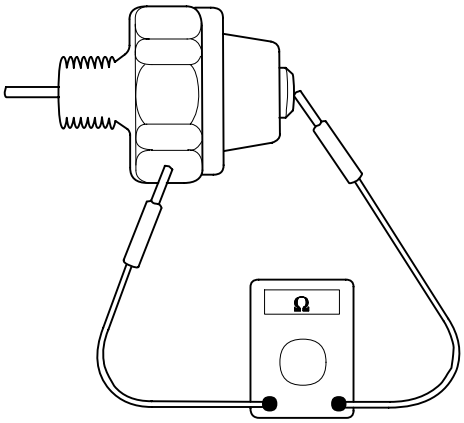

ECKD001Y

3. If there is no continuity when a 49.0kpa (0.5kg/cm², 7.1psi) vacuum is applied through the oil hole, the switch is operating properly.
   Check for air leakage. If air leaks, the diaphragm is broken. Replace it.

REASSEMBLY EB510CA0

NOTE

- *Thoroughly clean all parts to assembled.*
- *Before installing the parts, apply fresh engine oil to all sliding and rotating surfaces.*
- *Replace all gaskets, O-rings and oil seals with new parts.*

1. Assemble the piston and connecting rod.
   1) Use a hydraulic press for installation
   2) The piston front mark and the connecting rod front mark must face the timing belt side of the engine.

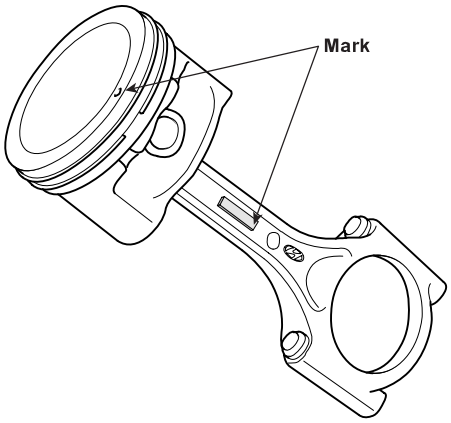

ECKD320A

2. Install the piston rings.
   1) Install the oil ring expander and 2 side rails by hand.
   2) Using a piston ring expander, install the 2 compression rings with the code mark facing upward.

3) Position the piston rings so that the ring ends are as shown.

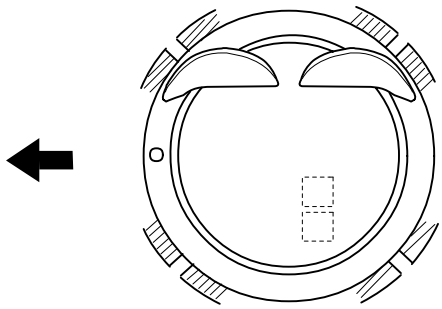

BCJF006A

3. Install the connecting rod bearings.

1) Align the bearing(A) claw with the groove of the connecting rod or connecting rod cap(B).

2) Install the bearings(A) in the connecting rod and connecting rod cap(B).

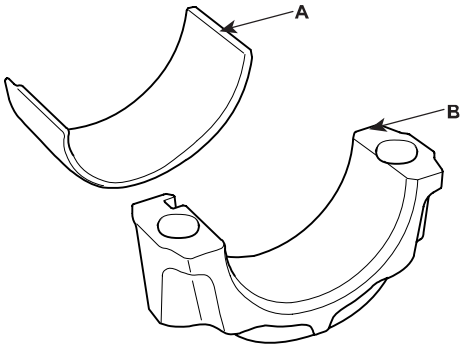

ECKD322A

4. Install the crankshaft main bearings.

NOTE

Upper bearings have an oil groove of oil holes ; Lower bearings do not.

1) Align the bearing claw with the claw groove of the cylinder block, push in the 4 upper bearings(A).

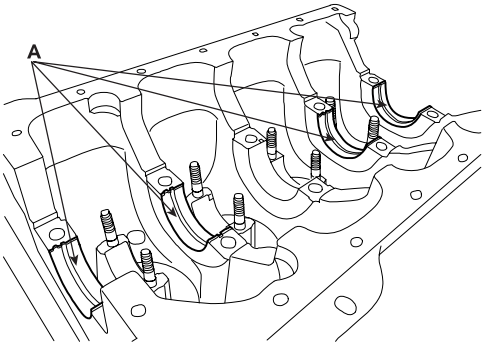

EDKD149A

2) Align the bearing claw with the claw groove of the main bearing cap, and push in the 5 lower bearings.

5. Install the center bearing.
Install the center bearing(A) under the No.3 journal position of the cylinder block with the oil grooves facing outward.

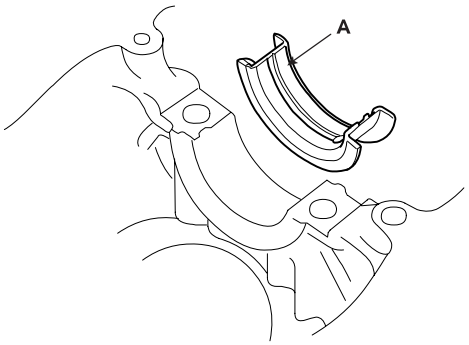

EDKD150A

6. Place the crankshaft on the cylinder block.

7. Place the main bearing caps on the cylinder block.

8. Install the main bearing cap bolts.

NOTE

The main bearing cap bolts are tightened in 2 progressive steps.
If any of the bearing cap bolts in broken or deformed, replace it.

1) Apply a light coat of engine oil on the threads and under the bearing cap bolts.

2) Install and uniformly tighten the 10 bearing cap bolts(A),in several passes, in the sequence shown.

Tightening torque :
53.9 ~ 58.8N.m (5.5 ~ 6.0kgf.m, 39.8 ~ 43.4lb-ft)

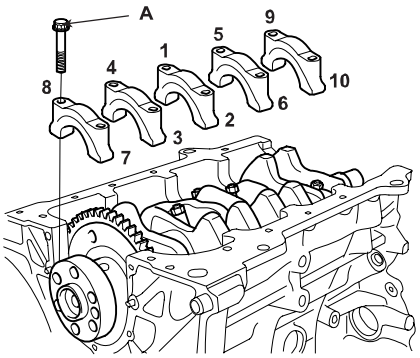

ADGE063A

3) Check that the crankshaft turns smoothly.

9. Check the crankshaft end play. (Refer to EM - 75)

10. Install the piston and connecting rod assemblies.

NOTE

Before installing the piston, apply a coat of engine oil to the ring grooves and cylinder bores.

1) Remove the connecting rod caps, and slip short sections of rubber hose over the threaded ends of the connecting rod bolts

2) Install the ring compressor, check that the rings are securely in place, then position the piston in the cylinder, and tap it in using the wooden handle of a hammer.

3) Stop after the ring compressor pops free, and check the connecting rod-to-crank journal alignment before pushing the piston into place.

4) Apply engine oil to the bolt threads. install the rod caps with bearings, and tighten the nuts.

Tightening torque :
31.4 ~ 34.3N.m (3.2 ~ 3.5kgf.m, 23.1 ~ 25.3lb-ft)

NOTE

Maintain downward force on the ring compressor to prevent the rings from expending before entering the cylinder bore.

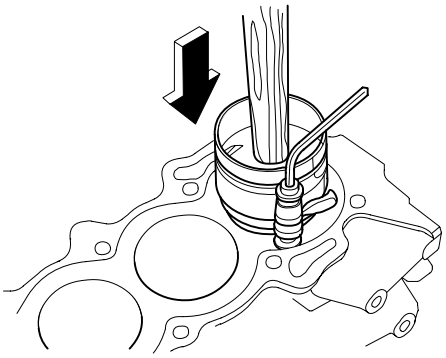

ECKD001F

11. Install the rear oil seal case.

1) Using a razor blade and gasket scraper, remove all the old packing material from the gasket surfaces.

NOTE

Check that the mating surfaces are clean and dry before applying liquid gasket.

2) Apply liquid gasket as an even bead, centered between the edges of the mating surface.

Liquid gasket : LOCTITE 5900 or equivalent

3) Install the rear oil seal case(A) with 5 bolts(B).

Tightening torque :
9.8 ~ 11.8N.m (1.0 ~ 1.2kgf.m, 7.2 ~ 8.7lb-ft)

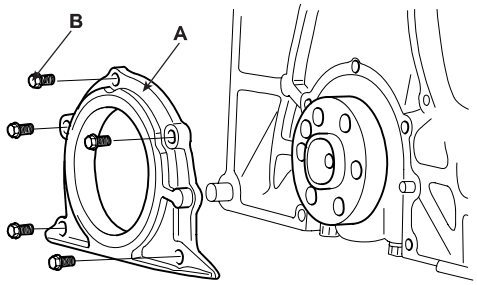

EDKD144A

12. Install the rear oil seal.

1) Apply engine oil to a new oil seal lip.

2) Using the SST(09231-21000) and a hammer, tap in the oil seal until its surface is flush with the rear oil seal retainer edge.

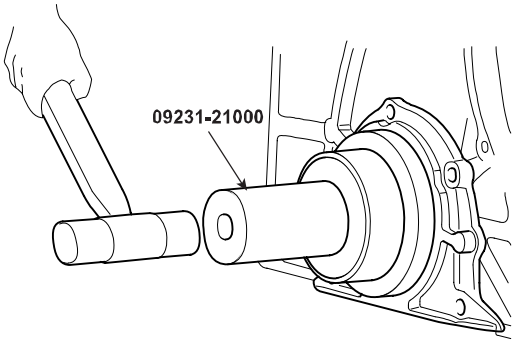

ACJF113A

13. Install the front case. (Refer to EM - 105)

14. Install the oil screen.
Install a new gasket(B) and oil screen(A) with 2 bolts(C).

Tightening torque :
14.7 ~ 21.6N.m (1.5 ~ 2.2kgf.m, 10.8 ~ 15.9lb-ft)

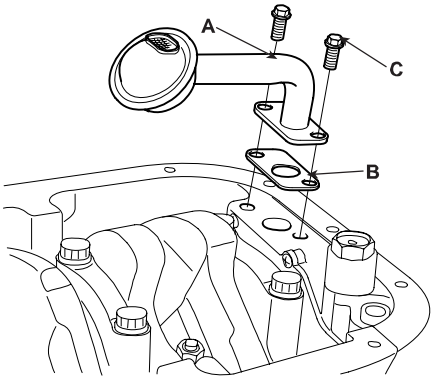

EDKD143A

15. Install the oil pan.

1) Using a razor blade and gasket scraper, remove all the old packing material from the gasket surfaces.

NOTE

Check that the mating surfaces are clean and dry before applying liquid gasket.

2) Apply liquid gasket as an even bead, centered between the edges of the mating surface.

Liquid gasket : TB1217H or equivalent

NOTE

- *To prevent leakage of oil, apply liquid gasket to the inner threads of the bolt holes.*
- *D not install the parts if five minutes or more have elapsed since applying the liquid gasket. Instead, reapply liquid gasket after removing the residue.*
- *After assembly, wait at least 30 minutes before filling the engine with oil.*

3) Install the oil pan(A) with the bolts.
Uniformly tighten the bolts in several passes.

Tightening torque :
9.8 ~ 11.8N.m (1.0 ~ 1.2kgf.m, 7.2 ~ 8.7lb-ft)

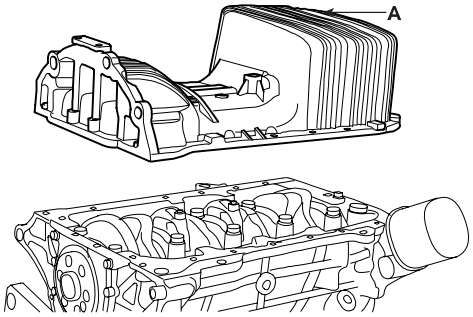

EDKD142A

16. Install the water pump. (Refer to EM - 94)

17. Install the oil pressure switch.

1) Apply adhesive to 2 or 3 threads.

Adhesive : TB 2310/2350 or equivalent.

2) Install the oil pressure switch(A).

Tightening torque :
14.7 ~ 21.6N.m (1.5 ~ 2.2kgf.m, 10.8 ~ 15.9lb-ft)

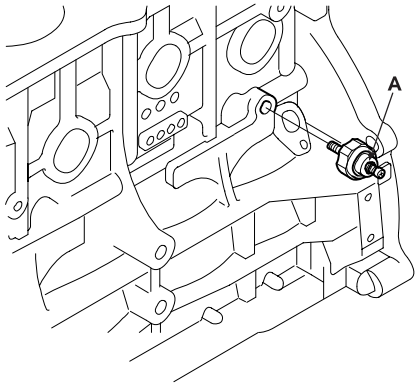

ECKD303A

18. Install the knock sensor(A).

Tightening torque :
16.7 ~ 26.5N.m (1.7 ~ 2.7kgf.m, 12.3 ~ 19.5lb-ft)

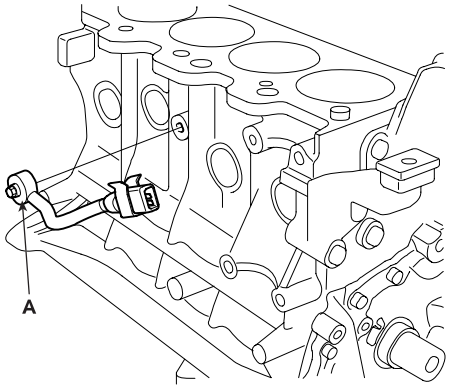

ECKD302A

19. Install the oil level gauge tube(A).

1) Install a new O-ring on the oil level gauge tube.

2) Apply engine oil on the O-ring.

3) Install the oil level gauge tube(A) with the bolt.

Tightening torque :
11.8 ~ 14.7N.m (1.2 ~ 1.5kgf.m, 8.7 ~ 10.8lb-ft)

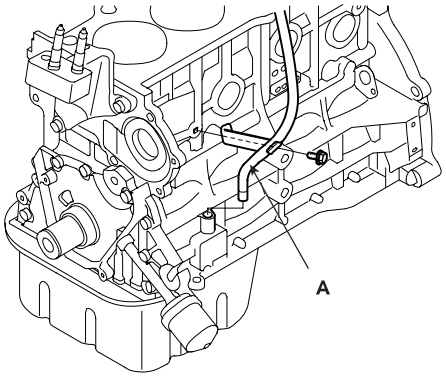

ECKD301A

20. Install the cylinder head. (Refer to EM - 50)

21. Install the timing belt. (Refer to EM - 27)

22. Remove the engine stand.

23. A/T :install the drive plate.

Tightening torque :
117.7 ~ 127.5N.m (12.0 ~ 13.0kgf.m, 86.8 ~ 94.0lb-ft)

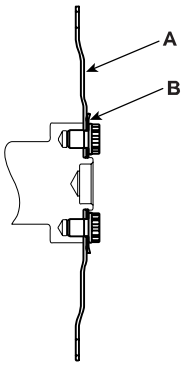

ACGE018A

24. M/T :install the fly wheel.

Tightening torque :
117.7 ~ 127.5N.m (12.0 ~ 13.0kgf.m, 86.8 ~ 94.0lb-ft)

COOLING SYSTEM

COMPONENT EEB42400

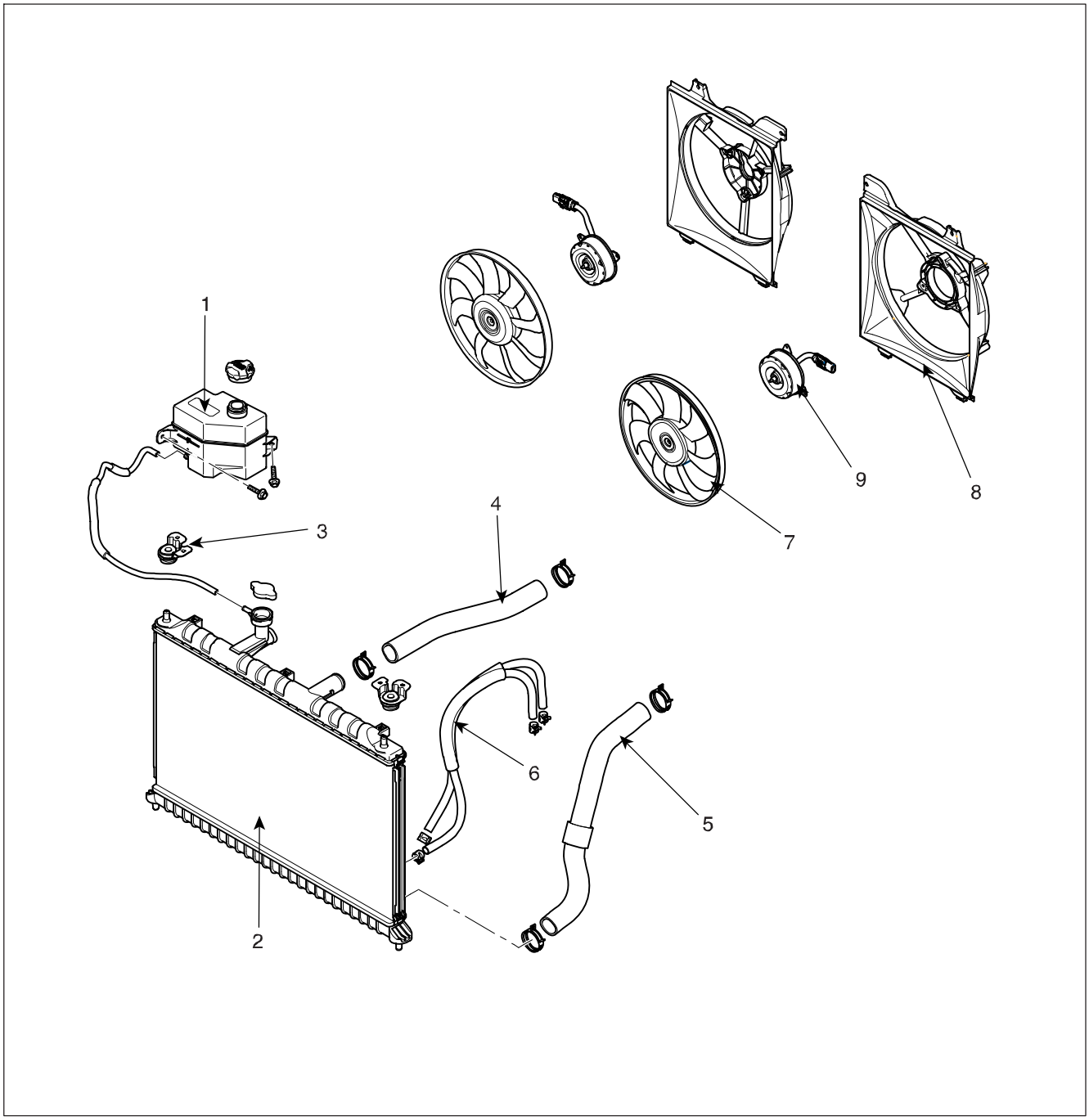

1. Coolant reservoir tank
2. Radiator
3. Radiator mounting bracket
4. Radiator upper hose
5. Radiator lower hose
6. ATF oil cooler hose
7. Cooling fan
8. Cooling fan shroud
9. Cooling fan motor

LCJF076A

■ 1.6 CVVT

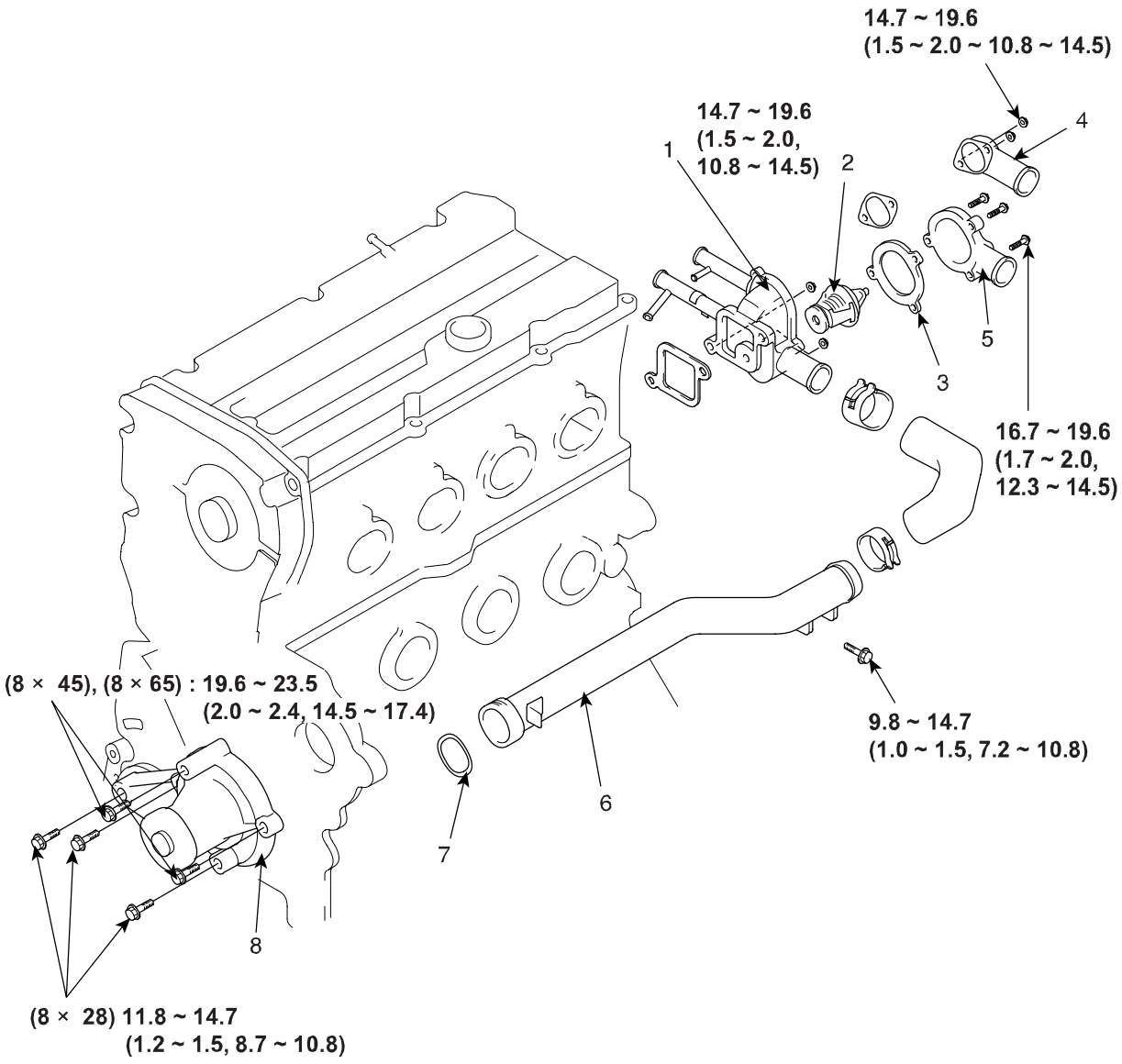

TORQUE : N.m (kgf.m, lb-ft)

1. Thermostat housing
2. Thermostat
3. Gasket
4. Water inlet fitting
5. Water outlet fitting
6. Water inlet pipe
7. O-ring
8. Water pump

UCNG002A

ENGINE COOLANT REFILLING AND BLEEDING E8D464DF

WARNING

Never remove the radiator cap when the engine is hot.
Serious scalding could be caused by hot fluid under high pressure escaping from the radiator.

CAUTION

When pouring engine coolant, be sure to shut the relay box lid and not to let coolant spill on the electrical parts of the paint. If any coolant spills, rinse it off immediately.

1. Slide the heater temperature control lever to maximum heat. Make sure the engine and radiator are cool to the touch.

2. Remove the radiator cap(A).

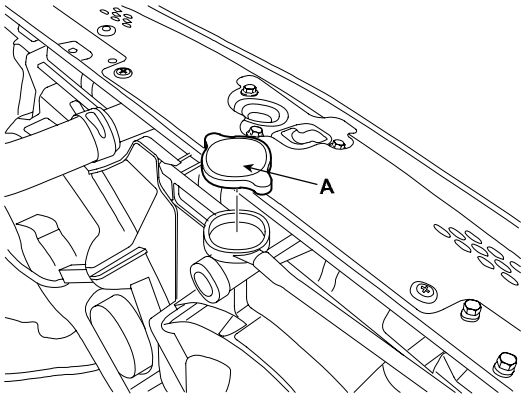

ACJF034A

3. Loosen the drain plug(A), and drain the coolant.

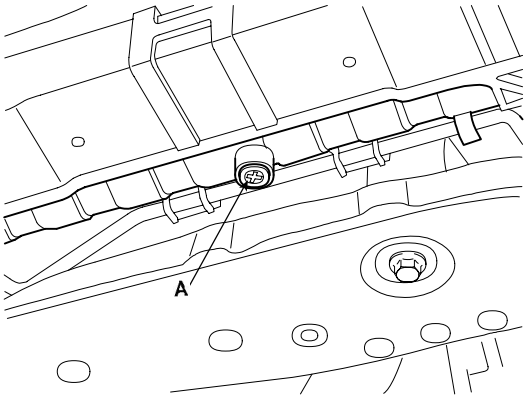

ACJF036A

4. Tighten the radiator drain plug(A) securely.

5. Remove the coolant reservoir tank. Drain the coolant and reinstall the coolant reservoir tank. Fill the coolant reservoir tank to the MAX mark with the coolant.

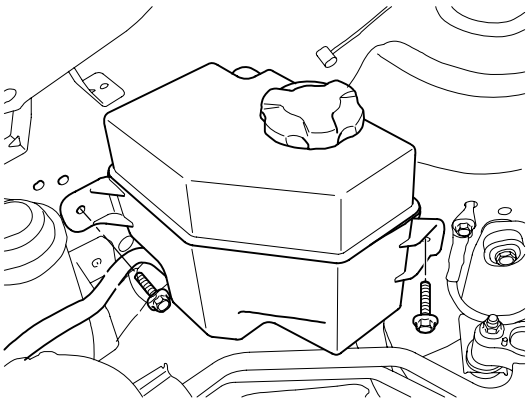

ACJF037A

6. Fill the coolant into the radiator to the base of filler neck. Gently squeeze the upper/lower hoses of radiator so as to bleed air easily.

NOTE

- *Mix the recommended antifreeze with an equal amount of water in a clean container.*
- *Use only genuine antifreeze/coolant.*
- *For best corrosion protection, the coolant concentration must be maintained year-round at 50% minimum. Coolant concentrations less than 50% may not provide sufficient protection against corrosion of freezing.*
- *Coolant concentrations greater then 60% will impair cooling efficiency and are not recommended.*

CAUTION

- ***Do not mix different brands of antifreeze/coolants.***
- ***Do not use additional rust inhibitors or antirust products; they may not be compatible with the coolant.***

7. Start the engine and allow coolant to circulates. When the cooling fan operates and coolant circulates, refill coolant through the radiator filler neck.

8. Repeat step 7 until the cooling fan cycles on and off three to five times to sufficiently bleed air out of the cooling system.

9. Install the radiator cap and fill the reservoir tank to the "MAX" line with coolant.

10. Run the vehicle under idle until the cooling fan operates 2~3 times.

11. Stop the engine and allow coolant to cool.

12. Repeat steps 6 to 11 until the coolant level stays constant and all air is bleed out of the cooling system.

NOTE

Recheck the coolant level in the reservoir tank for 2~3 days after replacing coolant.

Coolant capacity :
5.5~5.8 liters(5.8~6.1 US qt, 4.8~5.1 Imp qt)

RADIATOR CAP TESTING

1. Remove the radiator cap, wet the seal with coolant, then install it onto pressure tester.

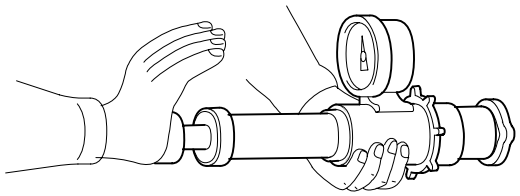

ECKD501X

2. Apply a pressure of 93.16 ~ 122.58kpa (0.95 ~ 1.25kg/cm², 13.51 ~ 17.78psi)

3. Check for a drop in pressure.

4. If the pressure drops, replace the cap.

RADIATOR LEAKGE TEST

1. Wait until engine is cool, then carefully remove the radiator cap and fill the radiator with engine coolant, then install it on the pressure tester.

2. Apply a pressure tester to the radiator and apply a pressure of 93.16 ~ 122.58kpa (0.95 ~ 1.25kg/cm², 13.51 ~ 17.78psi).

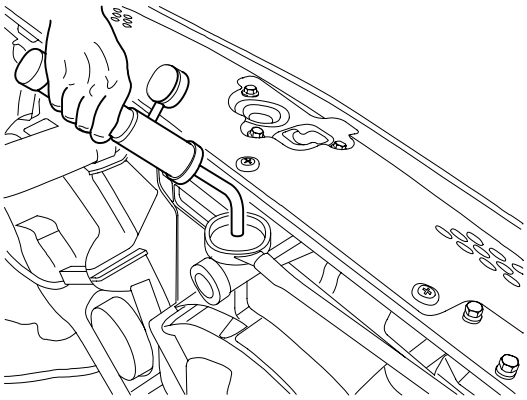

ACJF035A

3. Inspect for engine coolant leaks and a drop in pressure.

4. Remove the tester and reinstall the radiator cap.

NOTE

Check for engine oil in the coolant and/or coolant in the engine oil.

REMOVAL E144A6FF

WATER PUMP

1. Drain the engine coolant.

   WARNING

   System is under high pressure when the engine is hot.
   To avoid danger of releasing scalding engine coolant, remove the cap only when the engine is cool.

2. Loosen the water pump pulley bolts.

3. Remove the drive belts.

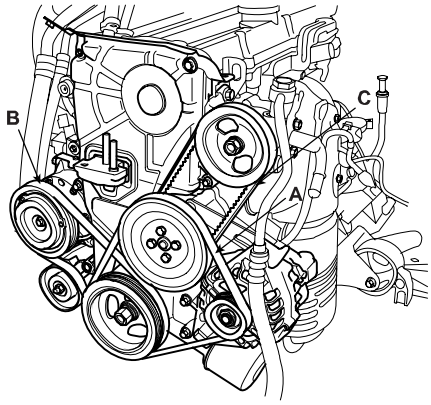

ACJF002A

4. Remove the water pump pulley.

5. Remove the timing belt. (Refer to EM - 21)

6. Remove the timing belt idler.

7. Remove the water pump.

   1) Remove the 2 bolts and alternator brace(A).

   2) Remove the 3 bolts and remove the water pump(B) and gasket.

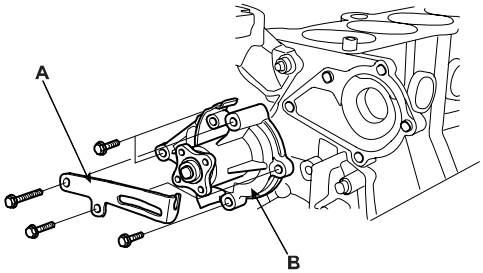

EDKD181A

THRMOSTAT

NOTE

Disassembly of the thermostat would have an adverse effect, causing a lowering of cooling efficiency.

1. Drain the engine coolant so its level is below thermostat.
2. Remove the water inlet fitting(A), gasket(B) and thermostat(C).

■ 1.6 CVVT

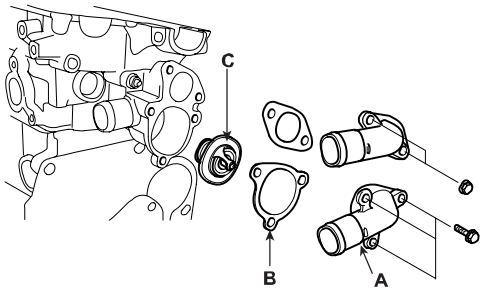

ACJF110A

RADIATOR

1. Drain the engine coolant.
   Remove the radiator cap to speed draining.
2. Remove the upper radiator hose(A) and lower radiator hose(B).
3. Remove the ATF(Automatic Transaxle Fluid) oil cooler hoses(C). (A/T)

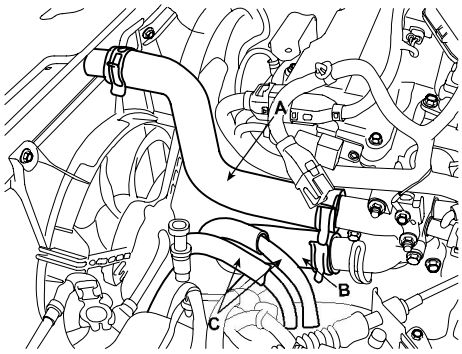

ACJF010A

4. Disconnect the fan motor connector(A,B).

■ 2 Fan type

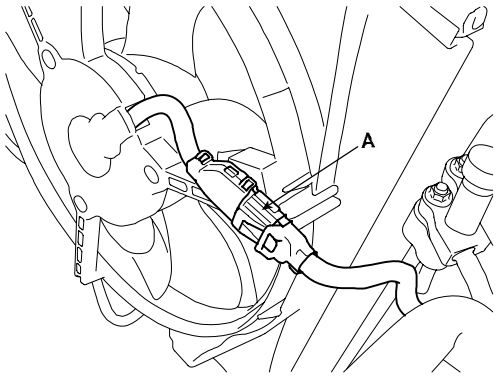

LCJF078A

■ 2 Fan type

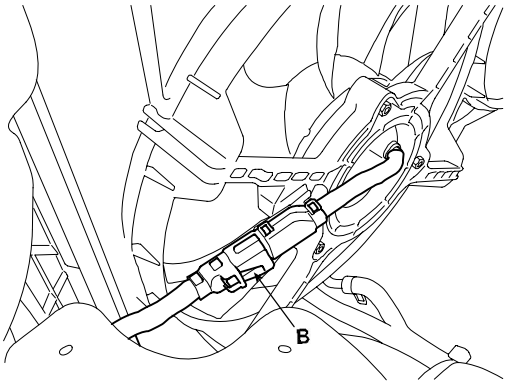

LCJF079A

5. Remove the cooling fan mounting bolt(A,B) and remove cooling fan.

■ 2 Fan type

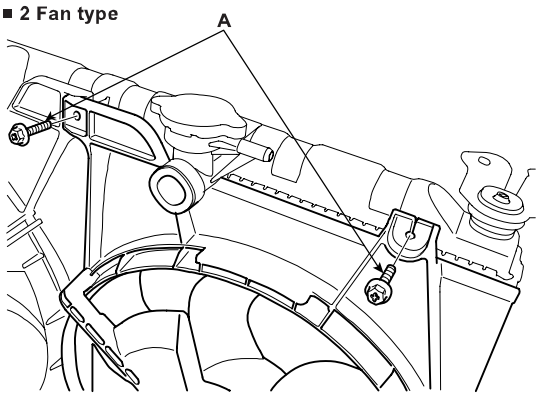

LCJF082A

■ 2 Fan type

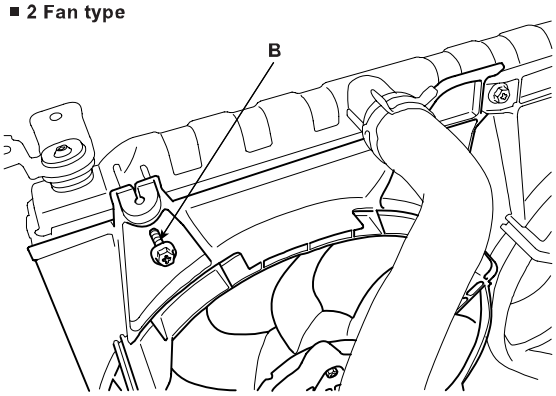

LCJF083A

6. Remove the radiator upper bracket(A,B), then pull up the radiator.

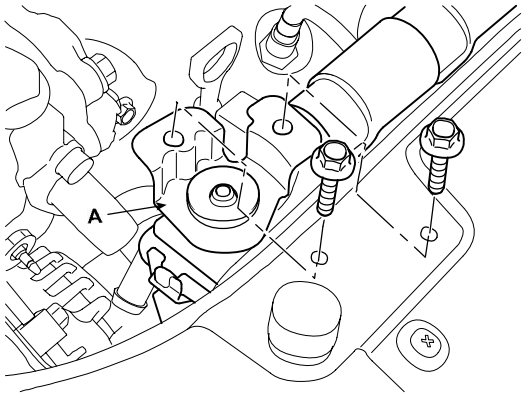

ACJF045A

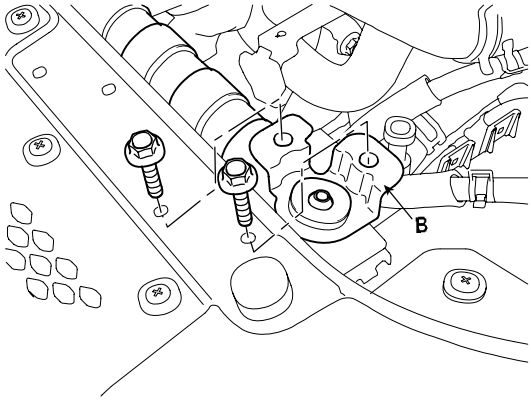

ACJF046A

INSPECTION EC8A266B

WATER PUMP

1. Check each part for cracks, damage or wear, and replace the coolant pump assembly if necessary.

2. Check the bearing for damage, abnormal noise and sluggish rotation, and replace the coolant pump assembly if necessary.

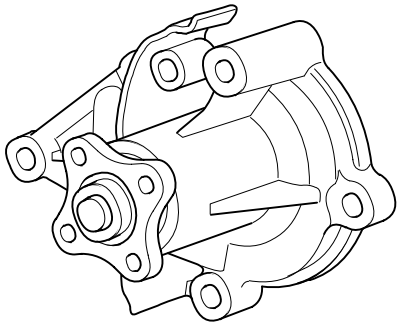

EDKD183A

3. Check for coolant leakage. If coolant leaks from hole, the seal is defective. Replace the coolant pump assembly.

NOTE

A small amount of "weeping" from the bleed hole is normal.

THERMOSTAT

1. Immerse the thermostat in water and gradually heat the water.

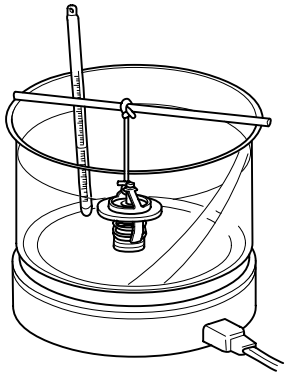

ECKD503B

2. Check the valve opening temperature.

Valve opening temperature : 82±1.5°C (179.6±2.7°F) Full opening temperature : 95°C (203°F)

If the valve opening temperature is not as specified, replace the thermostat.

3. Check the valve lift.

Valve lift : 8mm(0.3in) or more at 95°C (203°F)

If the valve lift is not as specified, replace the thermostat.

COOLING FAN

1. Disconnect the cooling fan motor connector.

■ 2 Fan type

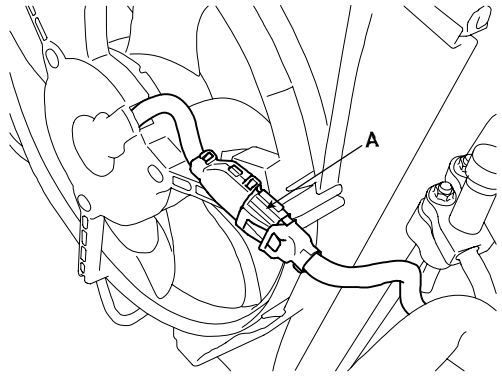

LCJF078A

■ 2 Fan type

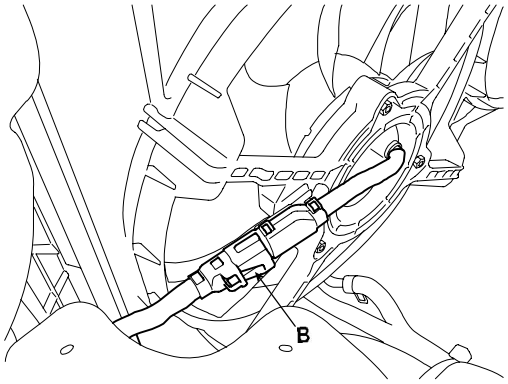

LCJF079A

2. Check that the radiator fan rotates when battery voltage is applied between (+) and (-) terminals.

INSTALLATION EBC8DDC4

WATER PUMP

1. Install the water pump.
   1) Install the water pump(C) and a new gasket with the 3 bolts(B).

Tightening torque :
11.8 ~ 14.7N.m (1.2 ~ 1.5kgf.m, 8.7 ~ 10.8lb-ft)

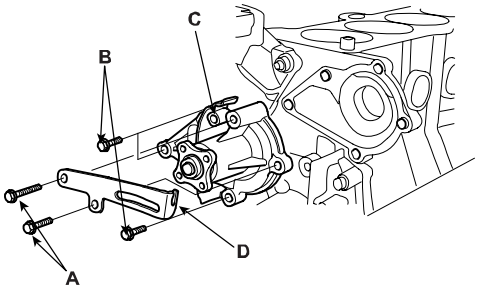

EDKD181B

   2) Install the alternator brace(D) with the 2 bolts(A).

Tightening torque :
19.6 ~ 23.5N.m (2.0 ~ 2.4kgf.m, 14.5 ~ 17.4lb-ft)

2. Install the timing belt idler.
3. Install the timing belt. (Refer to EM - 27)
4. Install the water pump pulley.
5. Install the drive belts.
6. Tighten the water pump pulley bolts.

Tightening torque :
7.8 ~ 9.8N.m (0.8 ~ 1.0kgf.m, 5.8 ~ 7.2lb-ft)

7. Fill with engine coolant.
8. Start engine and check for leaks.
9. Recheck engine coolant level.

THERMOSTAT

1. Place the thermostat in thermostat housing.
   1) Install the thermostat(B) with the jiggle valve upward.
   2) Install a new gasket(A) to the thermostat(B).
2. Install the water inlet fitting(A).

Tightening torque :
14.7 ~ 19.6N.m (1.5 ~ 2.0kgf.m, 10.8 ~ 14.5lb-ft)

■ **1.6 CVVT**

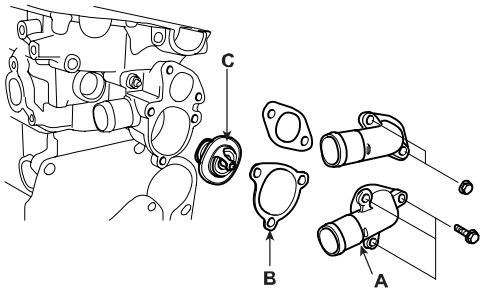

ACJF110A

3. Fill with engine coolant.
4. Start engine and check for leaks.

RADIATOR

1. Install the radiator.
2. Install the radiator upper bracket(A,B).

Tightening torque :
6.9 ~ 10.8N.m (0.7 ~ 1.1kgf.m, 5.1 ~ 8.0lb-ft)

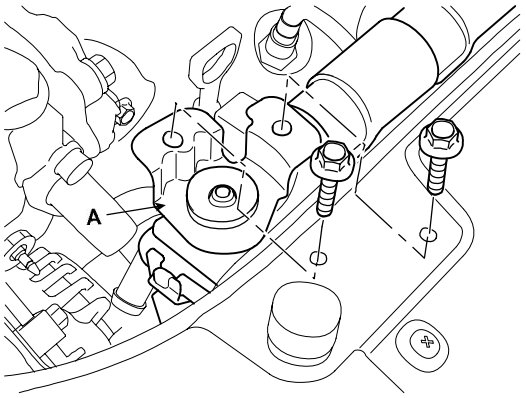

ACJF045A

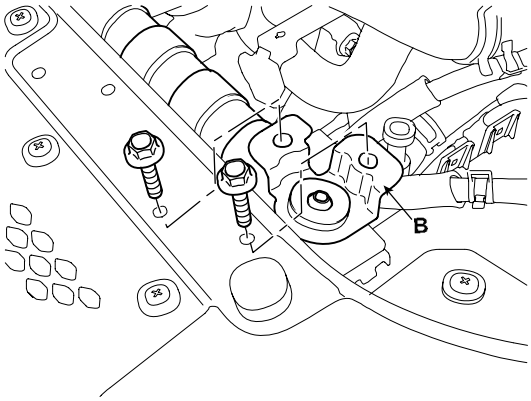

ACJF046A

3. Install the cooling fan mounting bolts(A,B).

Tightening torque :
6.9 ~ 10.8N.m (0.7 ~ 1.1kgf.m, 5.1 ~ 8.0lb-ft)

■ 2 Fan type

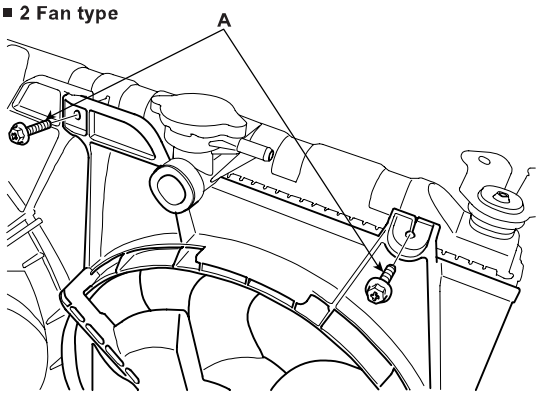

LCJF082A

■ 2 Fan type

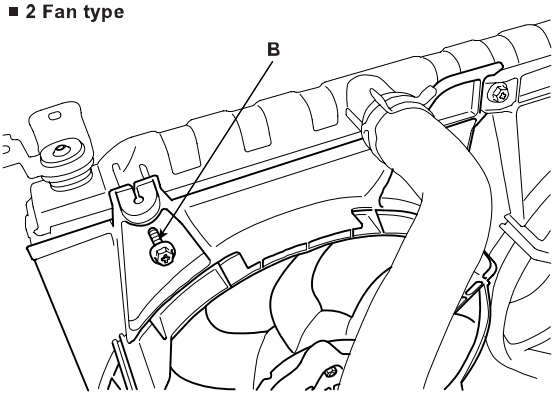

LCJF083A

4. Connect the fan motor connector(A,B).

■ 2 Fan type

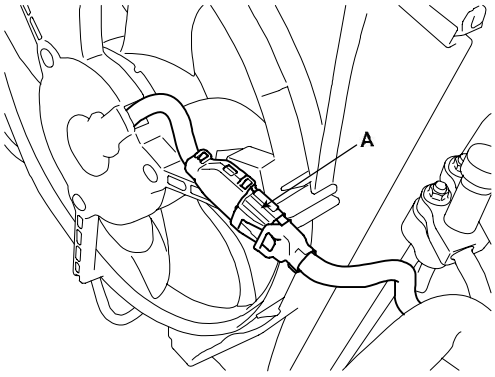

LCJF078A

■ 2 Fan type

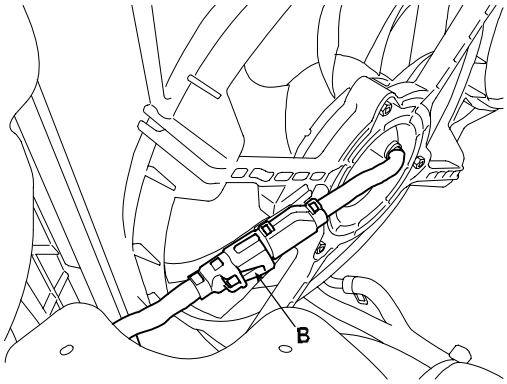

LCJF079A

5. Install the upper radiator hose(A) and lower radiator hose(B).

6. Install the ATF(Automatic Transaxle Fluid) oil cooler hoses(C).

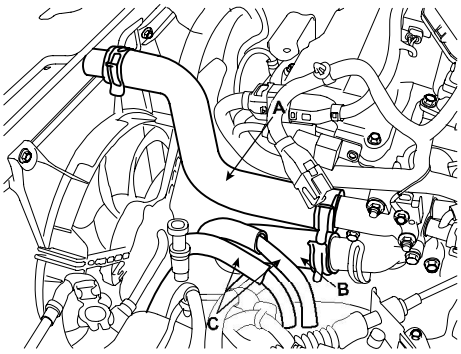

ACJF010A

7. Fill with engine coolant.

8. Start engine and check for leaks.

LUBRICATION SYSTEM

COMPONENT E41742E9

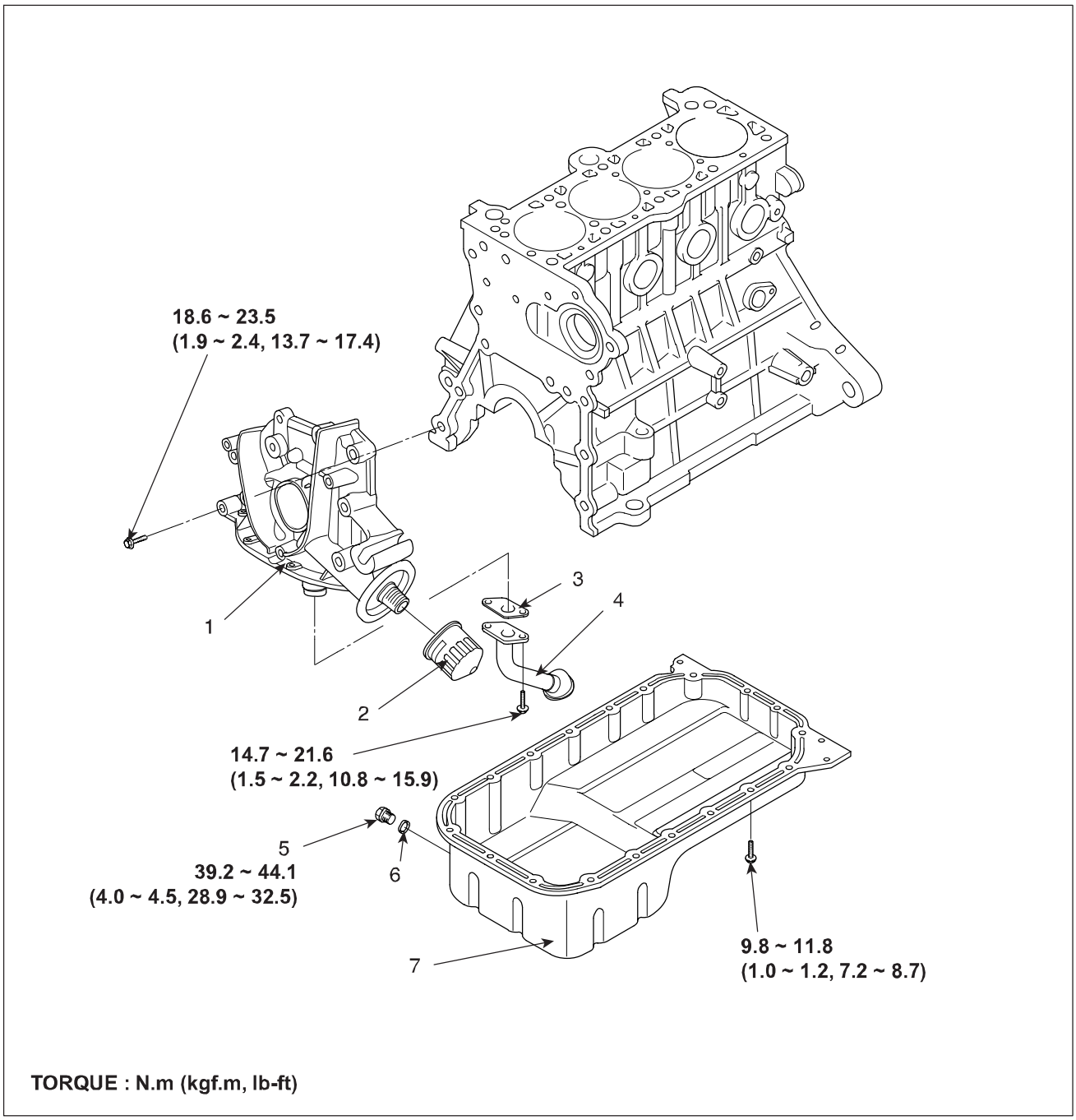

1. Front case
2. Filter
3. Gasket
4. Oil screen
5. Drain plug
6. Gasket
7. Oil pan

BCJF007A

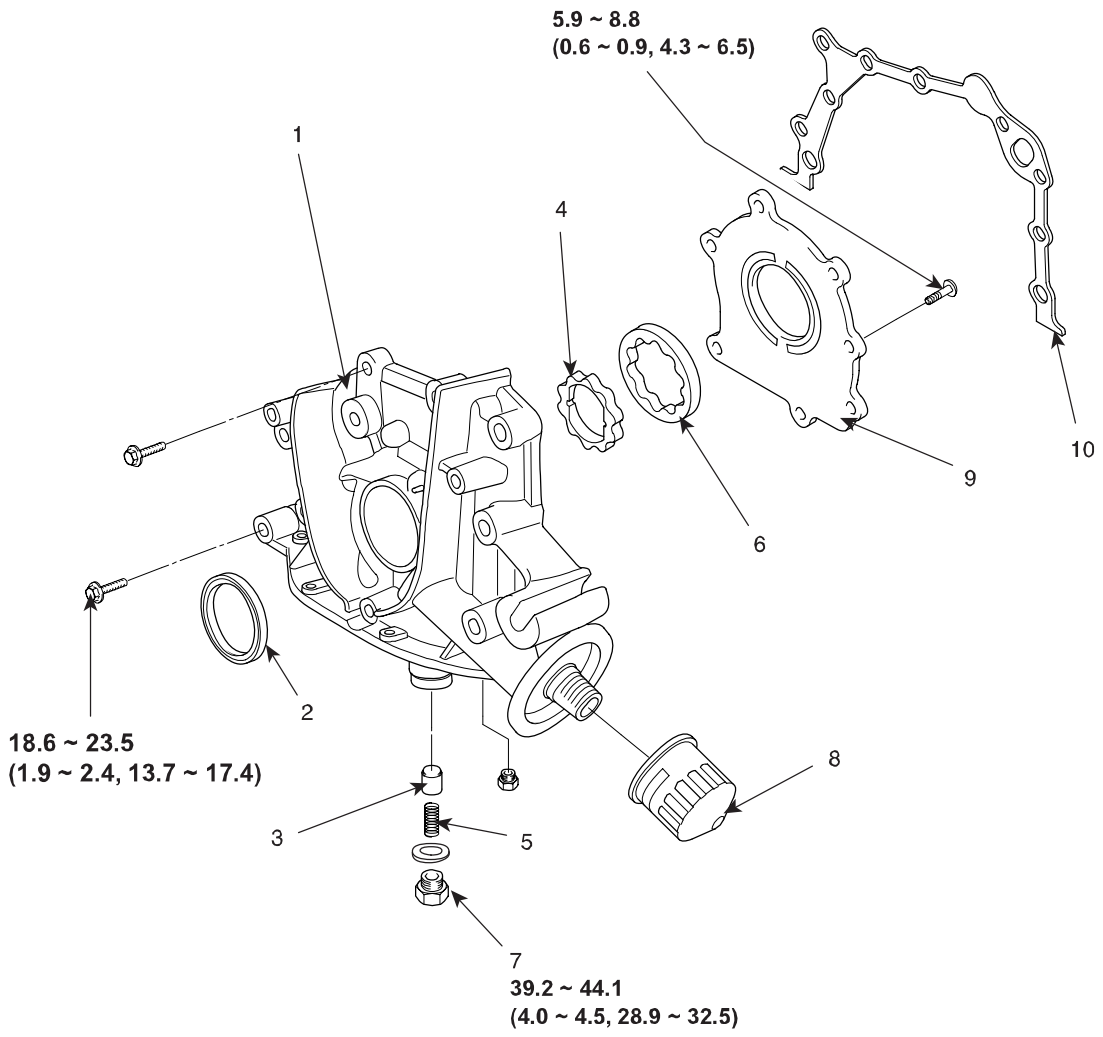

TORQUE : N.m (kgf.m, lb-ft)

1. Front case
2. Oil seal
3. Relief plunger
4. Inner rotor
5. Relief spring
6. Outer rotor
7. Plug
8. Oil filter
9. Pump cover
10. Gasket

BCJF008A

OIL AND FILTER REPLACEMENT EF6282B6

CAUTION

- ***Prolonged and repeated contact with mineral oil will result in the removal of natural fats from the skin, leading to dryness, irritation and dermatitis. In addition, used engine oil contains potentially harmful contaminants which may cause skin cancer.***
- ***Exercise caution in order to minimize the length and frequency of contact of your skin to used oil. Wear protective clothing and gloves. Wash your skin thoroughly with soap and water, or use water-less hand cleaner, to remove any used engine oil. Do not use gasoline, thinners, or solvents.***
- ***In order to preserve the environment, used oil and used oil filter must be disposed of only at designated disposal sites.***

1. Drain the engine oil.
   1) Remove the oil filler cap.
   2) Remove the oil drain plug, and drain the oil into a container.
2. Replace the oil filter.
   1) Remove the oil filter.
   2) Check and clean the oil filter installation surface.
   3) Check the part number of the new oil filter is as same as old one.
   4) Apply clean engine oil to the gasket of a new oil filter.
   5) Lightly screw the oil filter into place, and tighten it until the gasket contacts the seat.
   6) Tighten it an additional 3/4 turn.
3. Refill with engine oil.
   1) Clean and install the oil drain plug with a new gasket.

Tightening torque : 39.2 ~ 44.1N.m (4.0 ~ 4.5kgf.m, 28.9 ~ 32.5lb-ft)

   2) Fill with fresh engine oil.

Oil Capacity Total : 3.3 L (3.49 US qt, 2.90 Imp qt) Oil pan : 3.0 L (3.17 US qt, 2.64 Imp qt) Oil filter : 0.3 L (0.32 US qt, 0.26 Imp qt)

   3) Install the oil filler cap.
4. Start engine and check for oil leaks.
5. Recheck the engine oil level.

INSPECTION

1. Check the engine oil quality.
   Check the oil deterioration, entry of water, discoloring of thinning.
   If the quality is visibly poor, replace the oil.
2. Check the engine oil level.
   After warning up the engine and then 5 minutes after the engine stop, oil level should be between the "L" and "F" marks in the dipstick.
   If low, check for leakage and add oil up to the "F" mark.

NOTE

Do not fill with engine oil above the "F" mark.

SELECTION OF ENGINE OIL

Recommended ILSAC classification : GF3 OR ABOVE
Recommended API classification : SJ / SL OR ABOVE
Recommended SAE viscosity grades :

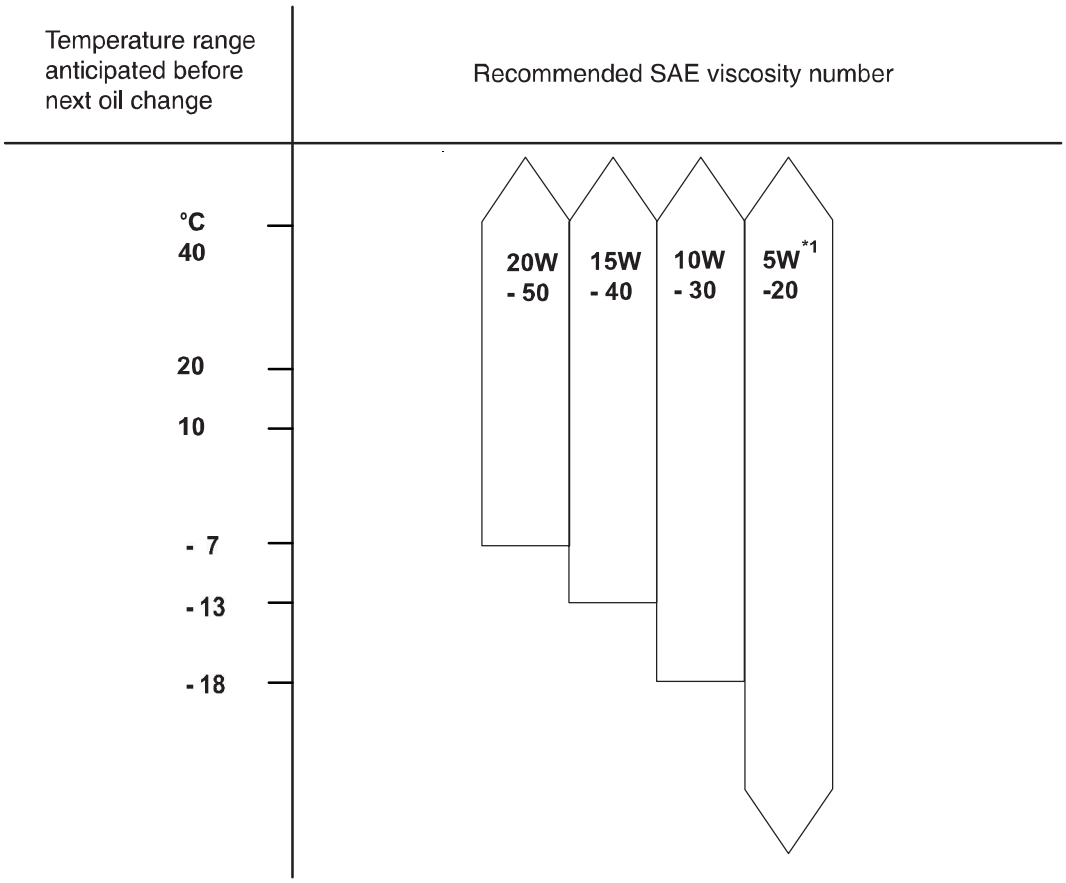

*1 : Recommended regardless of environment.
If not available, refer to the recommended SAE viscosity numbers.

LC8F002A

NOTE

For best performance and maximum protection of all types of operation, select only those lubricants which :

1. *Satisfy the requirement of the API classification.*
2. *Have proper SAE grade number for expected ambient temperature range.*
3. *Lubricants that do not have both an SAE grade number and API service classification on the container should not be used.*

REMOVAL EB7E0652

OIL PAN

1. Drain the engine oil.
2. Disconnect the rear oxygen sensor connector(A).

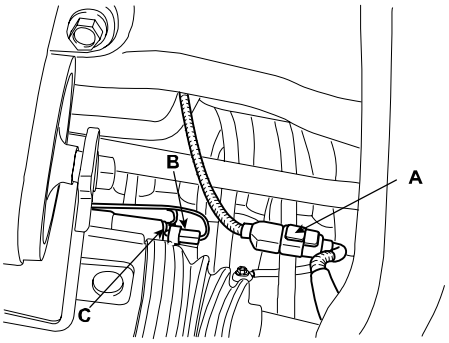

ACGE013A

3. Remove the front muffler heat protector(A)
4. Remove the front muffler(B).

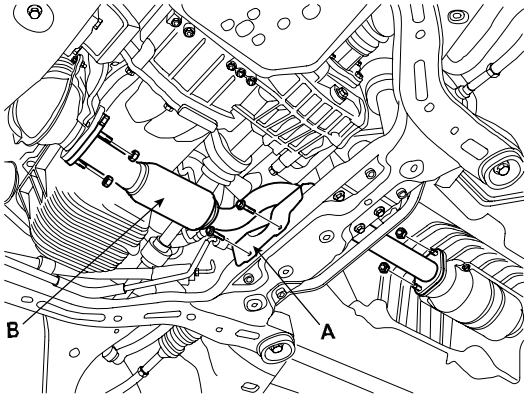

ACJF031A

5. Remove the exhaust manifold and catalytic converter assembly(A). (Refer to EM - 112)

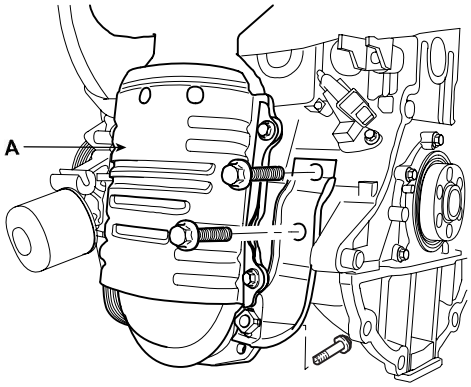

ACJF005A

6. Using the SST(09215-3C000) and remove the oil pan.

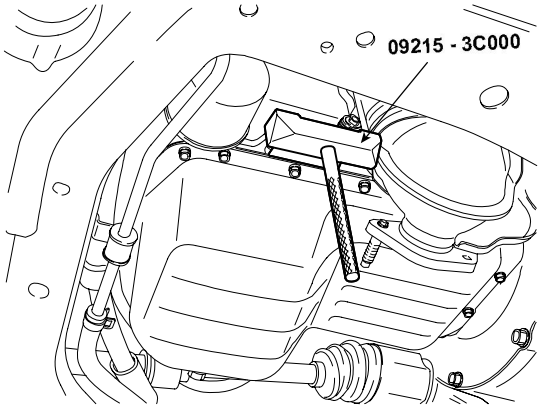

BCJF015A

OIL PUMP

1. Drain the engine oil.
2. Remove the drive belts.
3. Turn the crankshaft pulley, and align its groove with timing mark "T" of the timing belt cover.
4. Remove the timing belt. (Refer to EM - 21)
5. Remove the timing belt tensioner(A).

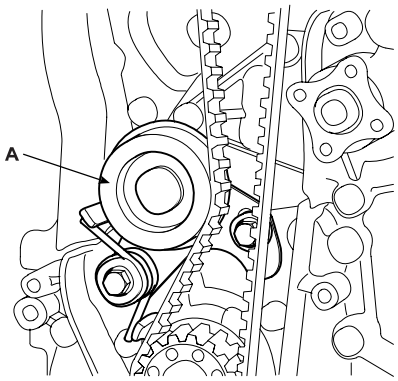

EDKD102B

6. Remove the oil pan and oil screen.
7. Remove the alternator. (Refer to EE group - alternator)
8. Remove the air conditioner compressor tensioner bracket(A).

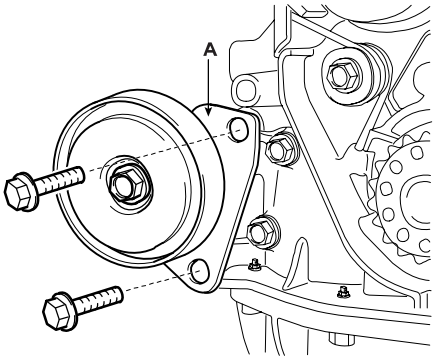

ADGE066A

9. Remove the front case.
   1) Remove the screw from the pump housing, then separate the housing and cover(A).

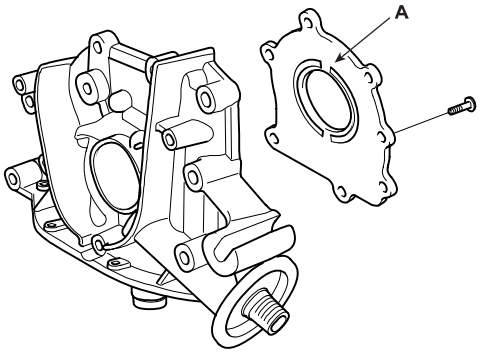

EDKD202A

   2) Remove the inner rotor(A) and outer rotor(B).

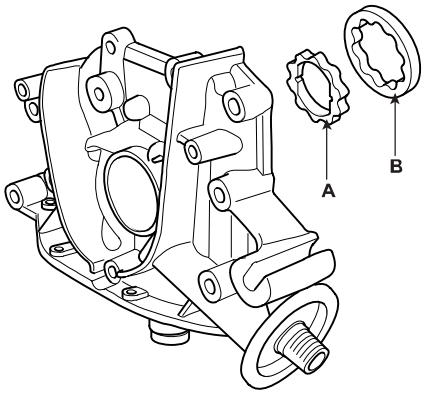

EDKD203A

DISASSEMBLY E5EBBBA4

RELIEF PLUNGER

1. Remove the relief plunger.
   Remove the plug(A), spring(B) and relief plunger(C).

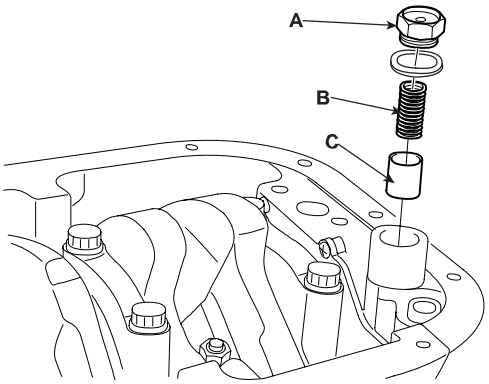

ACJF128A

INSPECTION EC7F2A68

1. Inspect the relief plunger.
   Coat the plunger with engine oil and check that it falls smoothly into the plunger hole by its own weight.
   If it does not, replace the relief plunger. If necessary, replace the front case.

2. Inspect the relief valve spring.
   Inspect for distorted or broken relief valve spring.

Standard value
Free height : 46.6mm (1.8346in)
Load : 6.1±0.4kg/40.1mm (13.4±0.9 lb/1.5787in)

3. Inspect the rotor side clearance.
   Using a feeler gauge and precision straight edge, measure the clearance between the rotors and precision straight edge.

Side clearance	Inner rotor	0.04 ~ 0.085mm (0.0016 ~ 0.0033in)
	Outer rotor	0.04 ~ 0.09mm (0.0016 ~ 0.0035in)

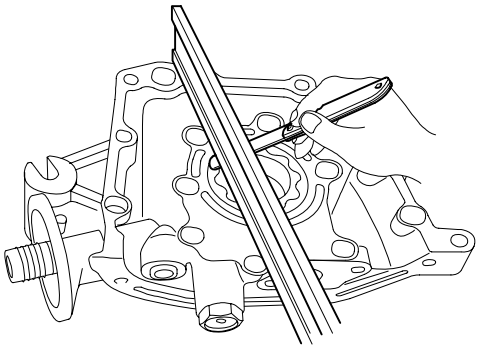

EDKD205A

If the side clearance is greater than maximum, replace the rotors as a set. If necessary, replace the front case.

4. Inspect the rotor tip clearance.
   Using a feeler gauge, measure the tip clearance between the inner and outer rotor tips.

Tip clearance 0.025 ~ 0.069mm (0.0010 ~ 0.0027in)

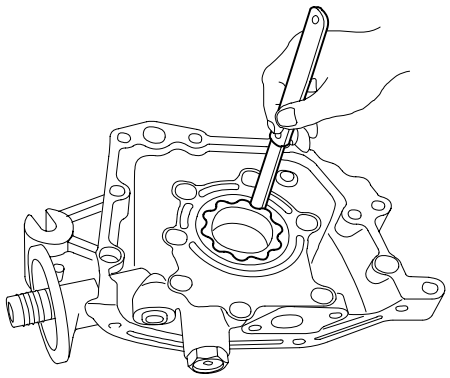

EDKD206A

If the tip clearance is greater than specified, replace the rotors as a set.

5. Inspect the rotor body clearance.
   Using a feeler gauge, measure the clearance between the outer rotor and body.

Body clearance 0.060 ~ 0.090mm (0.0024 ~ 0.0035in)

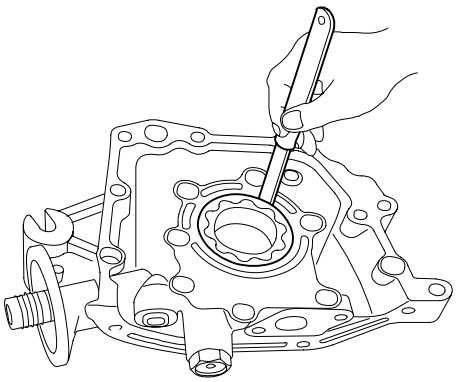

EDKD207A

If the body clearance is greater than specified, replace the rotors as a set. If necessary, replace the front case.

REASSEMBLY ECBB88E3

RELIEF PLUNGER

1. Install the relief plunger.
   Install relief plunger(C) and spring(B) into the front case hole, and install the plug(A).

Tightening torque : 39.2 ~ 49.0N.m (4.0 ~ 5.0kgf.m, 28.9 ~ 36.2lb-ft)

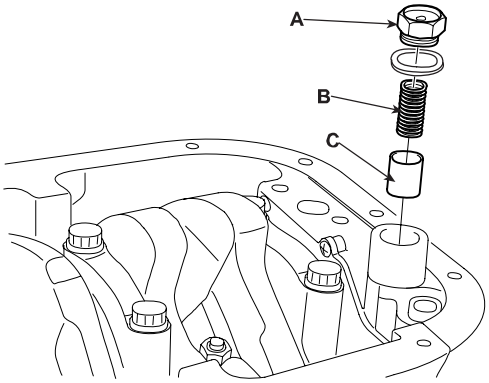

ACJF128A

INSTALLATION E2EFCA2F

OIL PUMP

1. Install the oil pump.

   1) Place the inner and outer rotors into front case with the marks facing the oil pump cover side.

   2) Install the oil pump cover(A) to front case with the 7 screws.

Tightening torque :
5.9 ~ 6.9N.m (0.6 ~ 0.7kgf.m, 4.3 ~ 5.1lb-ft)

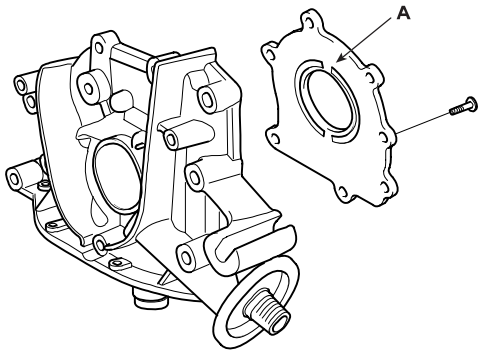

EDKD202A

2. Check that the oil pump turns freely.

3. Install the oil pump on the cylinder block.

   1) Place a new front case gasket on the cylinder block.

   2) Apply engine oil to the lip of the oil pump seal. Then, install the oil pump onto the crankshaft.

   3) When the pump is in place, clean any excess grease off the crankshaft and check that the oil seal lip is not distorted.

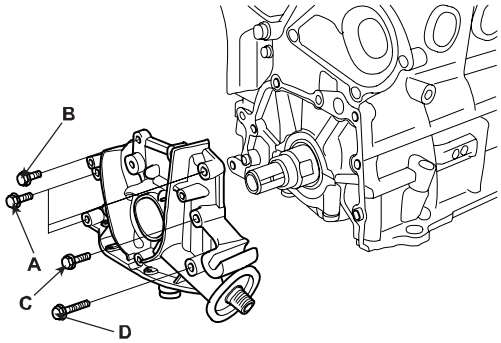

EDKD208A

Bolt length
(A) : 30mm (1.181in), (B) : 22mm (0.866in),
(C) : 45mm (1.772in), (D) : 60mm (2.362in)
Tightening torque :
18.6 ~ 23.5N.m (1.9 ~ 2.4kgf.m, 13.7 ~ 17.4lb-ft)

4. Apply a light coat of oil to the front case oil seal lip.

5. Using the SST(09214-32000),install the front case oil seal.

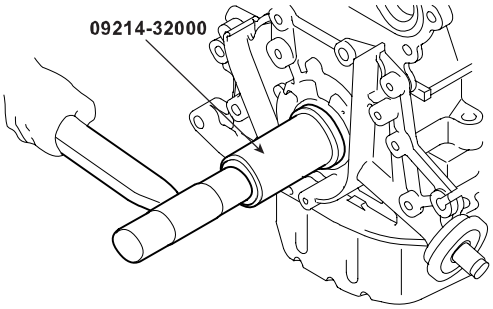

EDKD209A

6. Install the air conditioner compressor tensioner bracket (A).

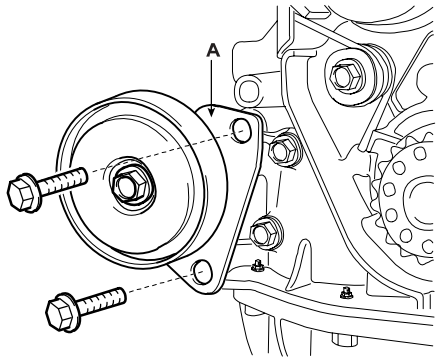

ADGE066A

7. Install the alternator. (Refer to EE group - alternator)

8. Install the oil screen.

Tightening torque : 14.7 ~ 21.6N.m (1.5 ~ 2.2kgf.m, 10.8 ~ 15.9lb-ft)

9. Install the oil pan.

Tightening torque : 9.8 ~ 11.8N.m (1.0 ~ 1.2kgf.m, 7.2 ~ 8.7lb-ft)

NOTE

Clean the oil pan gasket mating surfaces.

10. Install the timing belt tensioner.

11. Install the timing belt (Refer to EM - 27)

12. Install the drive belts.

13. Fill with engine oil.

OIL PAN

1. Install the oil pan.

   1) Using a razor blade and gasket scraper, remove all the old packing material from the gasket surfaces.

NOTE

Check that the mating surfaces are clean and dry before applying liquid gasket.

   2) Apply liquid gasket as an even bead, centered between the edges of the mating surface.

Liquid gasket : TB1217H or equivalent

NOTE

- *To prevent leakage of oil, apply liquid gasket to the inner threads of the bolt holes.*
- *Do not install the parts if five minutes or more have elapsed since applying the liquid gasket. Instead, reapply liquid gasket after removing the residue.*
- *After assembly, wait at least 30 minutes before filling the engine with oil.*

   3) Install the oil pan(A) with the bolts.
   Uniformly tighten the bolts in several passes.

Tightening torque : 9.8 ~ 11.8N.m (1.0 ~ 1.2kgf.m, 7.2 ~ 8.7lb-ft)

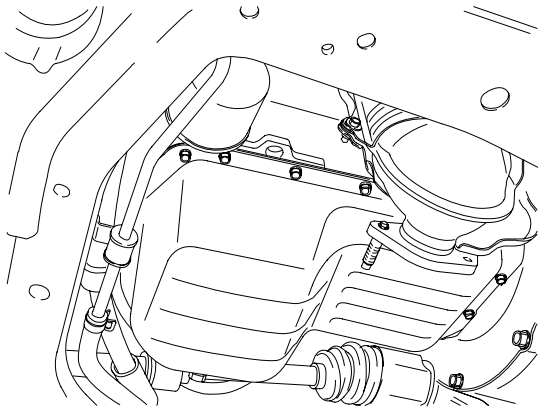

BCJF016A

2. Install the exhaust manifold and catalytic converter assembly(A). (Refer to EM - 112).

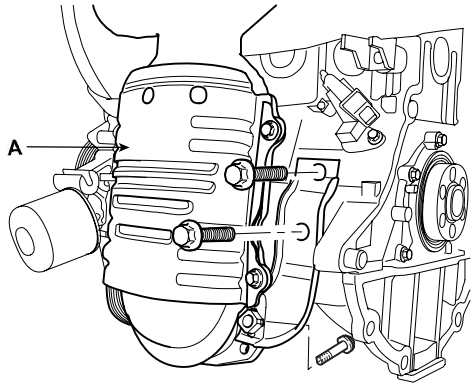

ACJF005A

3. Install the front muffler(B).

Tightening torque : 29.4 ~ 39.2N.m (3.0 ~ 4.0kgf.m, 21.7 ~ 28.9lb-ft)

4. Install the front muffler heat protector(A).

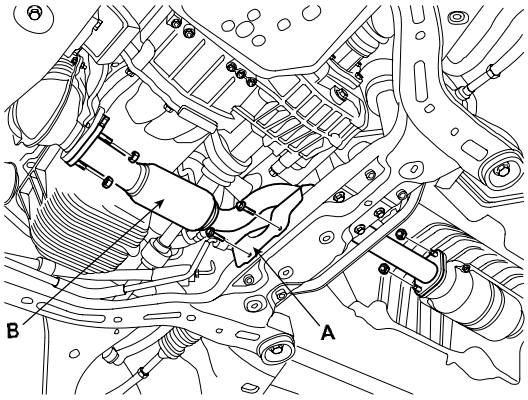

ACJF031A

5. Connect the rear oxygen sensor connector(A).

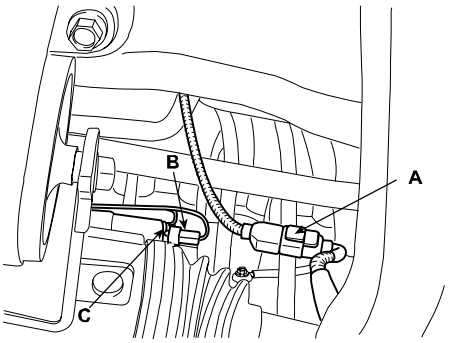

ACGE013A

6. Fill with engine oil

INTAKE AND EXHAUST SYSTEM

INTAKE MANIFOLD

COMPONENT EDDF9D5A

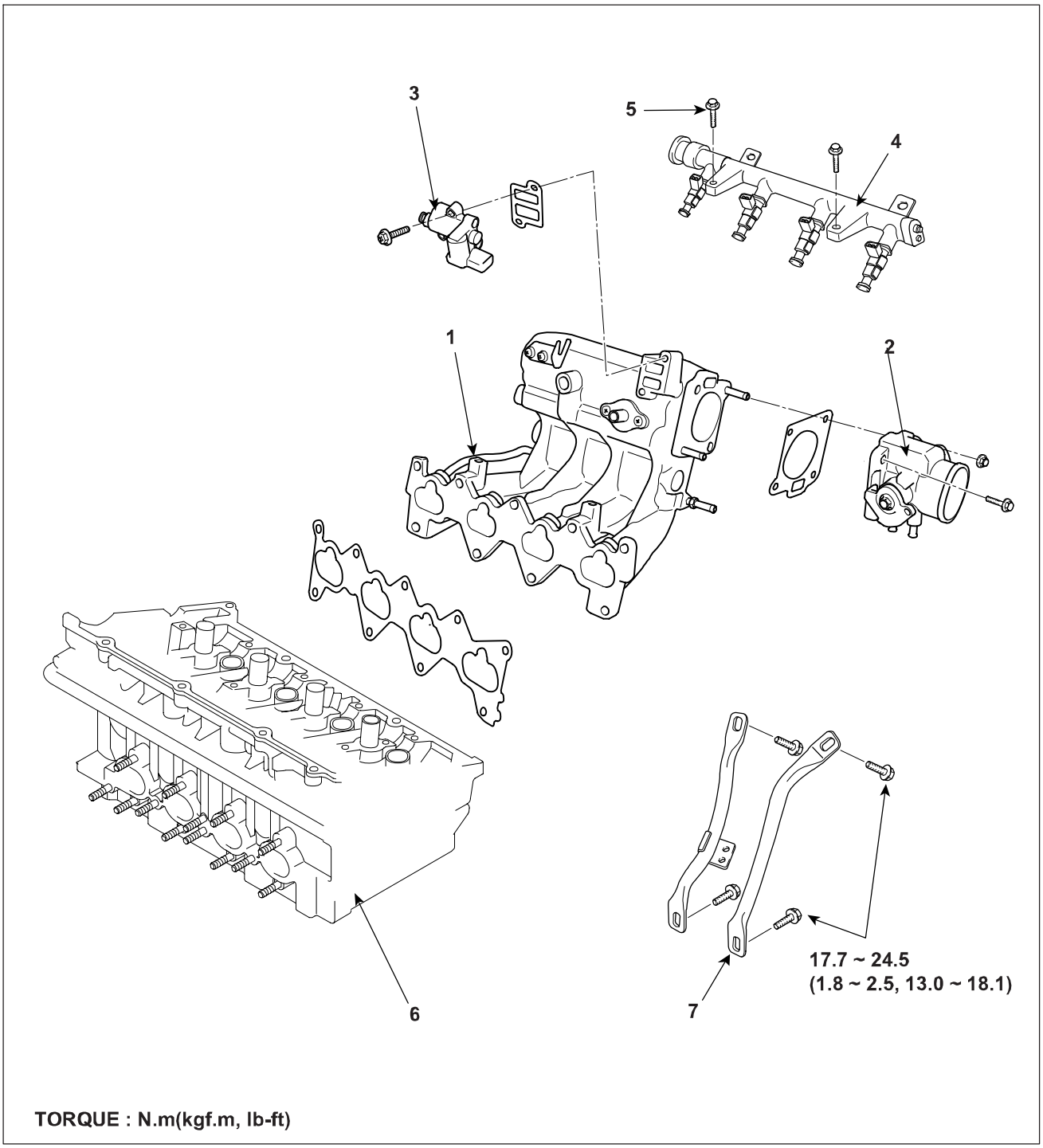

1. Intake manifold
2. Throttle body
3. ISA(Idle Speed Actuator)
4. Delivery pipe
5. Gasket
6. Cylinder head
7. Intake manifold stay

LCJF015A

REMOVAL EAC85CFA

1. Remove the engine cover.
2. Remove the accelerator cable(A).
3. Disconnect the TPS (Throttle Position Sensor) connector (B).
4. Disconnect the ISA(Idle Speed Actuator) connector(B).
5. Disconnect the PCV(Positive Crankcase Ventilation) hose(D) and breather hose(E).

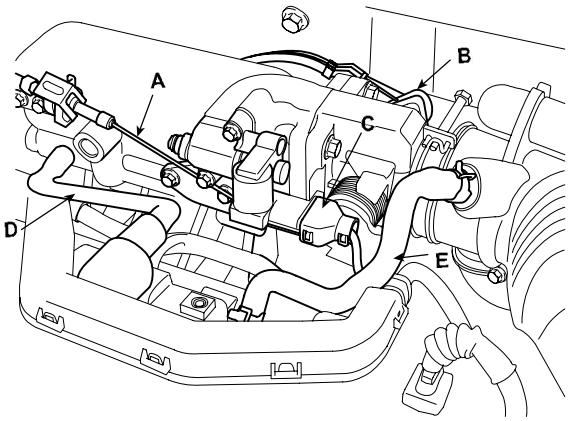

BCJF009A

6. Disconnect the injector connector (No. 3, 4) (A).
7. Disconnect the injector connector (No. 1, 2) (B).

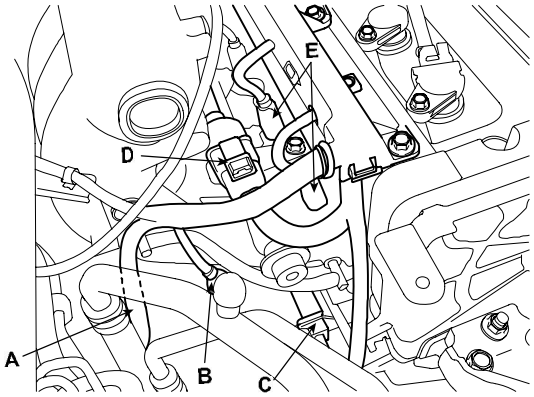

ACJF013A

8. Remove the heater hose(A), PCSV(Purge Control Solenoid Valve)(B) and the brake vacuum hose(C) from throttle body and intake manifold.
9. Disconnect the PCSV(Purge Control Solenoid Valve) (D) and water temperature sensor connector(E).

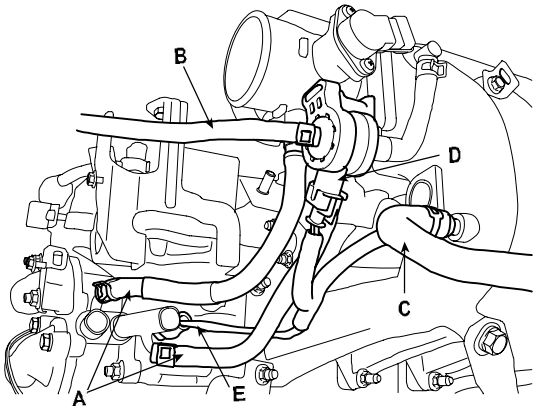

ACJF047A

10. Remove the delivery pipe(A).

Tightening torque :
18.6 ~ 27.5N.m (1.9 ~ 2.8kgf.m, 13.7 ~ 20.3lb-ft)

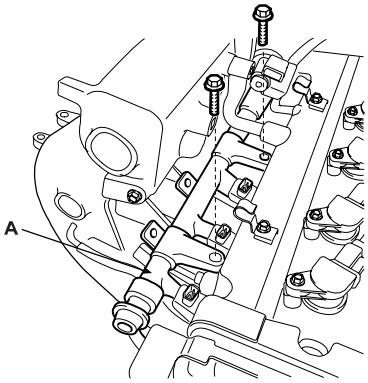

ADGE067A

11. Remove the intake manifold stay(A).

Tightening torque :
17.7 ~ 24.5N.m (1.8 ~ 2.5kgf.m, 13.0 ~ 18.1lb-ft)

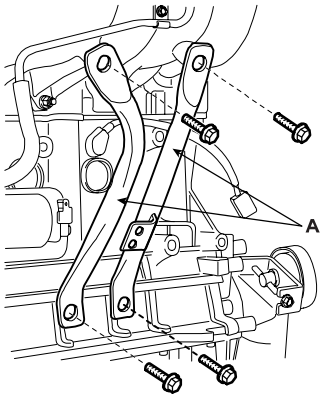

ADGE070A

12. Remove the intake manifold.

Tightening torque :
14.7 ~ 19.6N.m (1.5 ~ 2.0kgf.m, 10.8 ~ 14.5lb-ft)

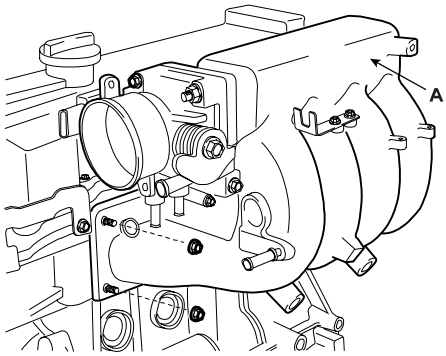

ADGE071A

13. Installation is in the reverse order of removal with new gasket.

EXHAUST MANIFOLD

COMPONENT E253A8D3

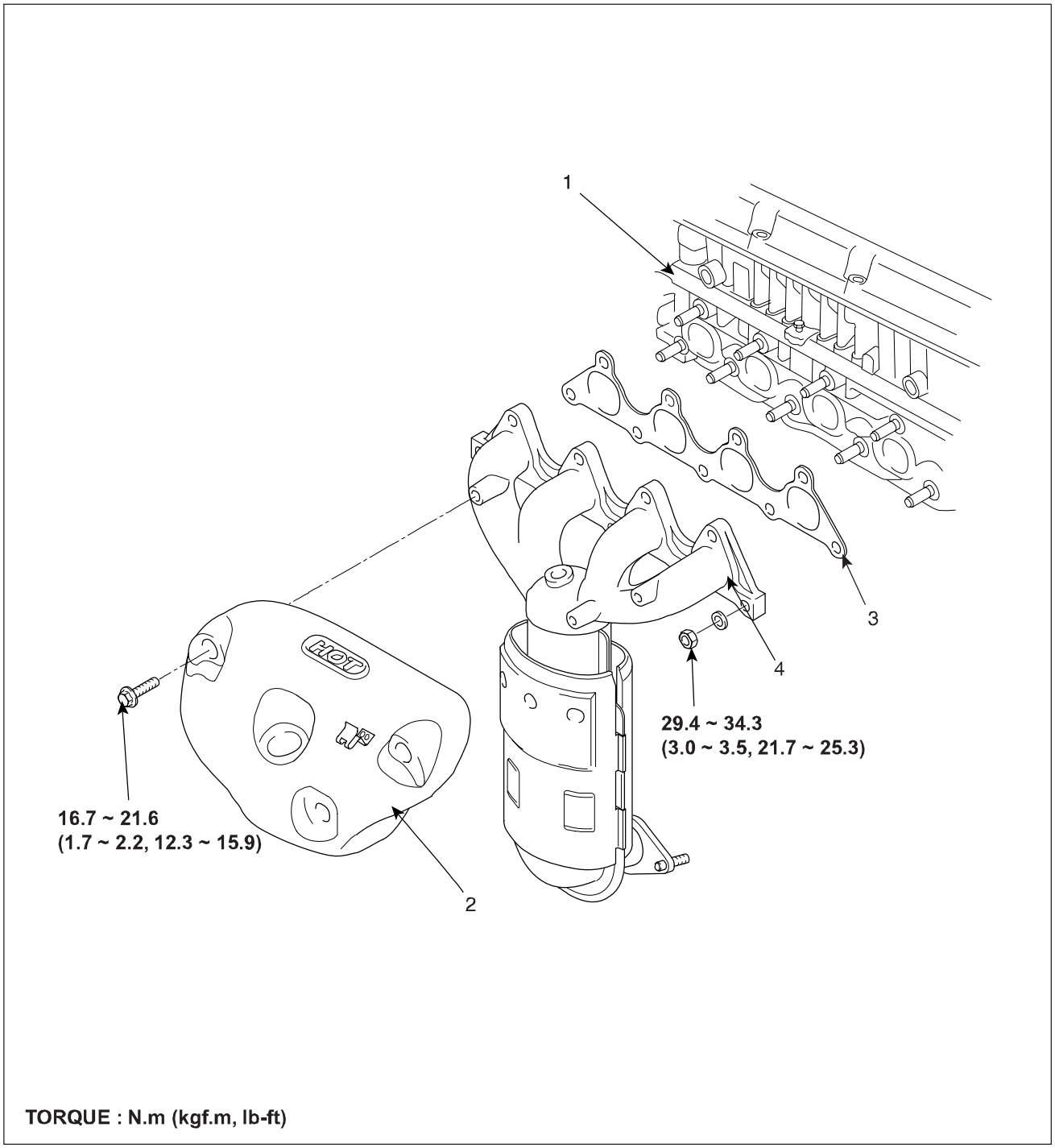

1. Cylinder head
2. Heat protector
3. Gasket
4. Exhaust manifold

BCJF010A

REMOVAL ECFE4BC1

1. Remove the engine cover.
2. Disconnect the front oxygen sensor connector.
3. Remove the front muffler heat protector(A).

Tightening torque :
7.8 ~ 11.8N.m (0.8 ~ 1.2kgf.m, 5.8 ~ 8.7lb-ft)

4. Remove the front muffler(B).

Tightening torque :
29.4 ~ 39.2N.m (3.0 ~ 4.0kgf.m, 21.7 ~ 28.9lb-ft)

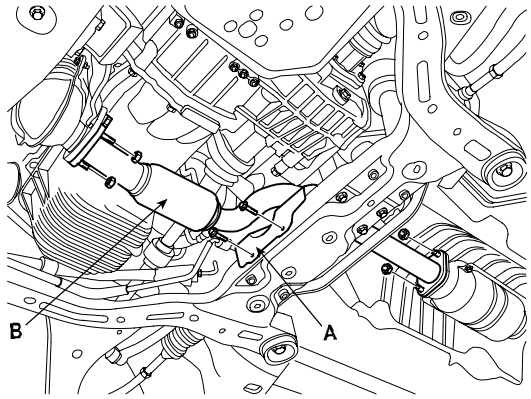

ACJF031A

5. Remove the stay(A) of the exhaust manifold and catalytic converter assembly .

Tightening torque :
Bolts(B) : 34.3 ~ 39.2N.m (3.5 ~ 5.5kgf.m, 25.3 ~ 28.9lb-ft)
Bolts(C) : 29.4 ~ 39.2N.m (3.0 ~ 5.5kgf.m, 21.7 ~ 28.9lb-ft)

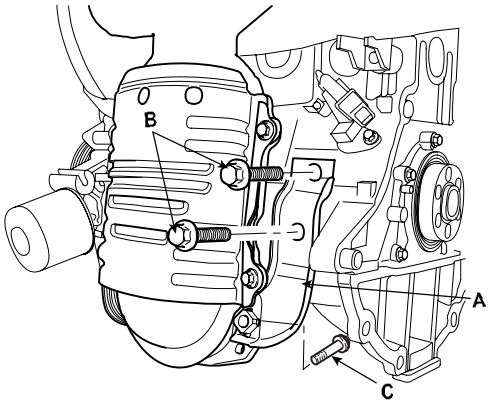

ACJF123A

6. Remove the heat protector(A).

Tightening torque :
16.7 ~ 21.6N.m (1.7 ~ 2.2kgf.m, 12.3 ~ 15.9lb-ft)

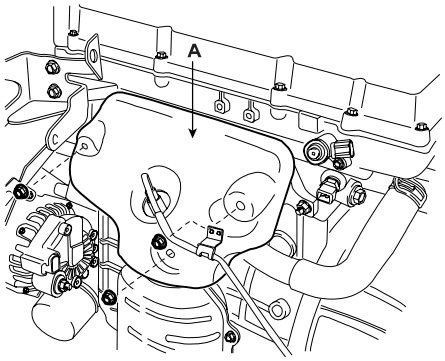

ADGE072A

7. Remove the exhaust manifold and catalytic converter assembly(A).

Tightening torque : 29.4 ~ 34.3N.m (3.0 ~ 3.5kgf.m, 21.7 ~ 25.3lb-ft)

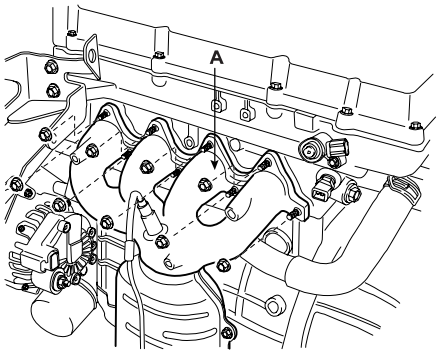

ADGE073A

8. Installation is in the reverse order of removal

EXHAUST PIPE

COMPONENT EA2DEA9D

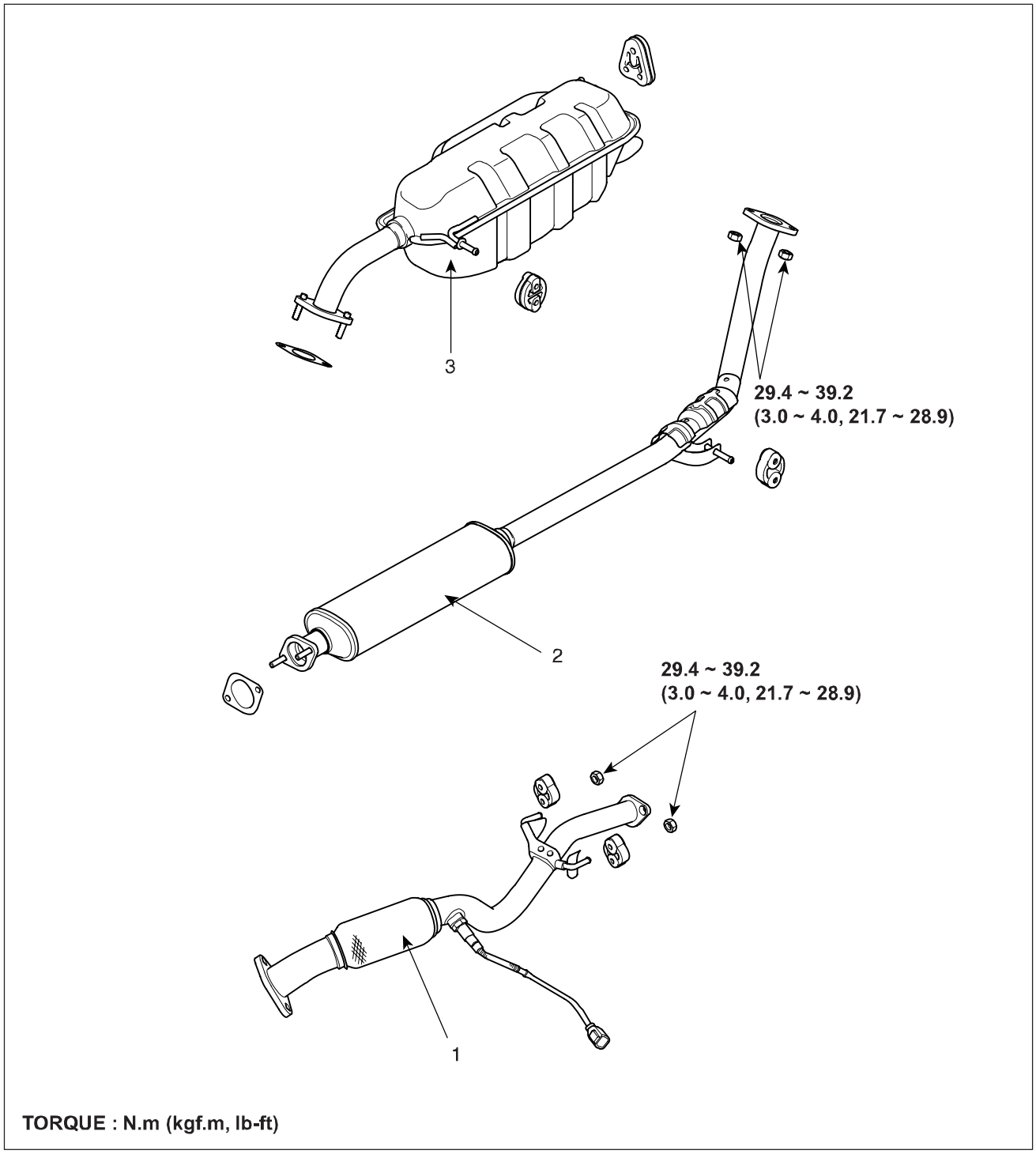

1. Front muffler
2. Center muffler
3. Main muffler

LCJF017A

REMOVAL E2B40A80

1. Remove the front muffler heat protector(A).

Tightening torque :
7.8 ~ 11.8N.m (0.8 ~ 1.2kgf.m, 5.8 ~ 8.7lb-ft)

2. Remove the front muffler(B).

Tightening torque :
29.4 ~ 39.2N.m (3.0 ~ 4.0kgf.m, 21.7 ~ 28.9lb-ft)

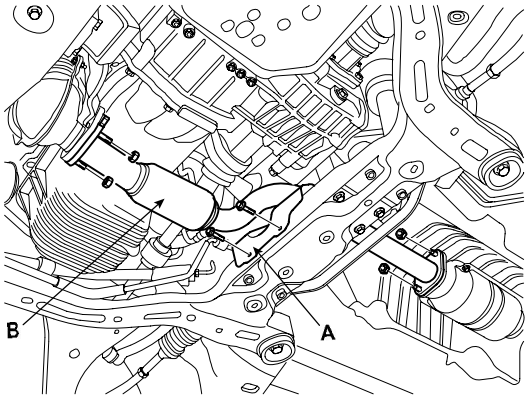

ACJF031A

3. Remove the center muffler(A).

Tightening torque :
29.4 ~ 39.2N.m (3.0 ~ 4.0kgf.m, 21.7 ~ 28.9lb-ft)

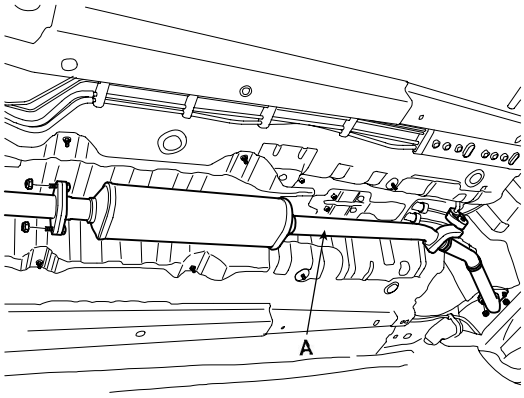

ACJF050A

4. Remove the main muffler(A).

Tightening torque :
29.4 ~ 39.2N.m (3.0 ~ 4.0kgf.m, 21.7 ~ 28.9lb-ft)

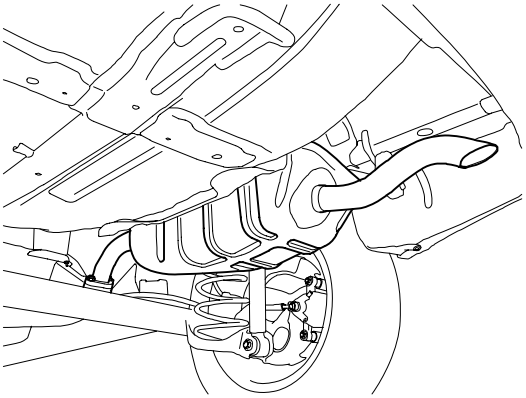

ACJF054A