SECTION : 9T

IMMOBILIZER ANTI–THEFT SYSTEM

CAUTION : Disconnect the negative battery cable before removing or installing any electrical unit or when a tool or equipment could easily come in contact with exposed electrical terminals. Disconnecting this cable will help prevent personal injury and damage to the vehicle. The ignition must also be in LOCK unless otherwise noted.

TABLE OF CONTENTS

SPECIFICATIONS 9T–1
FASTENER TIGHTENING SPECIFICATIONS 9T–1
SPECIAL TOOLS 9T–1
SPECIAL TOOLS TABLE 9T–1
DIAGNOSIS 9T–2
IMMOBILIZERANTI–THEFT SYSTEM 9T–2
DTC 53 – PCM/ECM Immobilized Error 9T–2
KEY STATUS ERRORS 9T–2
COMMUNICATION BETWEEN IMMOBILIZER AND TEST EQUIPMENT 9T–3
MAINTENANCE AND REPAIR 9T–4
ON–VEHICLE SERVICE 9T–4
KEY CODING PROCEDURE 9T–4
ID CODE REPROGRAMMING 9T–4
TRANSPONDER 9T–5
DETECTION COIL 9T–5
IMMOBILIZER CONTROL UNIT 9T–8
GENERAL DESCRIPTION AND SYSTEM OPERATION 9T–10
IMMOBILIZER SYSTEM 9T–10
ELECTRONICALLY CODED KEYS 9T–10
DETECTION COIL 9T–10
IMMOBILIZER CONTROL UNIT 9T–10
SERIAL DATA LINK 9T–11
POWERTRAIN CONTROL MODULE (PCM)/ENGINE CONTROL MODULE (ECM) 9T–11

SPECIFICATIONS

FASTENER TIGHTENING SPECIFICATIONS

Application	N•m	Lb–Ft	Lb–In
Immobilizer Control Unit Mounting Bolts	4	–	35
Knee Bolster Mounting Bolts	22	16	–

SPECIAL TOOLS

SPECIAL TOOLS TABLE

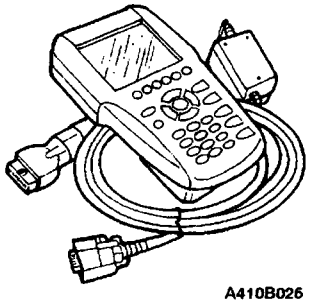 A410B026	Scan Tool

DIAGNOSIS

IMMOBILIZERANTI–THEFT SYSTEM

The immobilizer anti–theft system requires diagnosis when it is not possible to start the engine. If the no–start condition occurs because of the immobilizer system, a diagnostic trouble code (DTC) 53 should be set.

The immobilizer anti–theft system requires diagnosis when it is not possible to start the engine. If the no–start condition occurs because of the immobilizer system, a diagnostic trouble code (DTC) 53 should be set.

Unauthorized use of a scan tool could be a method of defeating the immobilizer anti–theft system. Therefore, certain scan tool procedures require the use of a password. The following functions are password protected:

- Coding of an additional key.
- Deleting all key codes.
- Deletion of the immobilizer identification (ID) code.
- Deletion of the powertrain control module (PCM)/engine control module (ECM) ID code.

The following functions do not require a password:

- Reading an ignition key to determine if the transponder is working or if a key is authorized.
- Reading the immobilizer ID code to verify that it matches the PCM/ECM ID code.

DTC 53 – PCM/ECM Immobilized Error

Step	Action	Value(s)	Yes	No
1	Connect the scan tool using the following procedure: 1. Insert the immobilizer data cartridge into the scan tool. 2. Turn the ignition OFF. 3. Connect the scan tool to the data link connector DLC). 4. Turn the ignition ON, but do not start the engine. Is communication established between the scan tool and the immobilizer control unit?		Go to *Step 2*	Go to ”Communication Between Immobilizer and Test Equipment”
2	Select SYSTEM DIAGNOSIS from the scan tool menu. Does the KEY STATUS message indicate POS NR (position number) 00?		Go to ’Key Status Errors”	Go to *Step 3*
3	Read the IMMO & PCM/ECM ID–CODE message that is displayed after requesting SYSTEM DIAGNOSIS. Does the message ID–CODE DIFFERENT appear?		Go to ”ID Code Reprogramming”	Go to *Step 4*
4	Check for an open serial data wire between the immobilizer control unit and the powertrain control module (PCM)/engine control module (ECM). Is the circuit open?		Go to *Step 5*	Go to *Step 6*
5	Repair the open serial data wire between the PCM/ECM and the immobilizer control unit. Is the repair complete?		System OK	
6	1. Replace the ECM. 2. Reprogram the identification (ID) code. Refer to”ID Code Reprogramming” in this section. Is the repair complete?		System OK	

KEY STATUS ERRORS

The following KEY STATUS messages may be shown on the scan tool after commanding SYSTEM DIAGNOSIS:

- IGNITION OFF STATUS. This message informs the technician that the ignition is OFF during the key coding process. Turn the ignition ON during key coding, but do not start the engine.

- KEY IS OCCUPIED. Only five keys may be coded. If a new key is desired, the previous key codes must be deleted. Up to five keys may then be authorized.
- ALREADY AUTHORIZED. Key coding is being attempted with a key that is already authorized.
- ERROR NO. 001, 002, 003. There is no communication between the transponder in the ignition key and the detection coil. Follow the steps below to diagnose the problem:

1. Try a different key. If a different key works, the problem is in the original key.
2. If trying a different key results in the same error message, replace the detection coil.

- INVALID KEY. The communication between the immobilizer control unit and the key transponder has not validated the key. Follow the steps below to diagnose the problem:

1. Code the key. Refer to”Key Coding Procedure”in this section.
2. If the same message is received after key coding, check the connection of the detection coil.
3. If the detection coil is okay, replace the immobilizer. Refer to”Immobilizer Control Unit” in this section.

- NO TRANSPONDER DETECTED. The fault may be in ignition key transponder, the detection coil, or the immobilizer. Follow the steps below to diagnose the problem:

1. Try a different key. If a different key works, the problem is in the original key.
2. If trying a different key results in the same error message, check the connection of the detection coil.
3. If the connection of the detection coil is okay, disconnect the detection coil and use an ohmmeter to check for an open detection coil.
4. If the detection coil is not open, replace the immobilizer control unit. Refer to”Immobilizer Control Unit” in this section.

COMMUNICATION BETWEEN IMMOBILIZER AND TEST EQUIPMENT

1. Connect the test equipment as described in the*Scan Tool Equipment Manual.*
2. If communication between the scan tool and the test equipment is unsuccessful, wait 30 seconds and try again.
3. If communication is not successful on the second try, turn the ignition OFF, and check the wire and the connectors between the immobilizer control unit terminal 3 and the data link connector (DLC).
4. If the wire and the connectors between the DLC and the immobilizer control unit are OK, replace the immobilizer control unit. Refer to ”Immobilizer Control Unit”in this section.

MAINTENANCE AND REPAIR

ON–VEHICLE SERVICE

KEY CODING PROCEDURE

1. Install the immobilizer control unit cartridge in the scan tool.
2. Turn the ignition OFF
3. Connect the scan tool.
4. Turn the ignition ON with the key to be coded.
5. Enter the four–digit password that enables service personnel to use the scan tool for coding keys.
6. A lost key can be deleted only by deleting all keys and reauthorizing the remaining keys as new keys. If a key is lost, go to the next step. If no keys have been lost but an additional key is desired, go to Step 8.
7. Use the scan tool command DELETE ALL KEY CODES.
8. Use the scan tool command AUTHORIZE ONE ADDITIONAL KEY.
9. Repeat Steps 4, 5, and 6 until the immobilizer control unit has recorded all of the new keys or, after a deletion, has reauthorized all of the remaining keys. The immobilizer control unit can record a maximum of five keys.
10. Return the system to the normal mode.
11. Turn the ignition OFF.
12. Turn the ignition ON.
13. Start the engine.

ID CODE REPROGRAMMING

Reprogram the identification (ID) code in the following situations:

1. An immobilizer control unit has been replaced.
2. An electronic control module (ECM) has been replaced.

If a valid key has been lost, refer to”Key Coding Procedure” in this section.

Reprogramming Procedure

1. Turn the ignition OFF. Reprogramming is not allowed while the engine is running.
2. Insert the immobilizer control unit cartridge into the scan tool.
3. Turn the ignition ON, but do not start the vehicle.
4. Enter the four–digit password that enables service personnel to use the scan tool for ID code reprogramming.
5. Use the scan tool to command RESET ID CODE.

6. Turn the ignition OFF and ON again, but do not crank or start the engine. The powertrain control module (PCM)/engine control module (ECM) will reset the ECM ID code to match the new ID code that was calculated and sent by the immobilizer control unit when the ignition was first turned ON after the reset command.
7. Return the system to the normal mode.
8. Turn the ignition OFF.
9. Turn the ignition ON.
10. Start the engine.

After reprogramming the ID code, the scan tool SYSTEM DIAGNOSIS command can verify that the PCM/ ECM ID code matches the immobilizer control unit ID code.

If the reprogramming procedure does not result in matching ID codes, check the electrical connectors for the serial data wire between the immobilizer control unit and the PCM/ECM.

TRANSPONDER

If a transponder is faulty, the ignition key must be replaced. It is not possible to install a new transponder into a key.

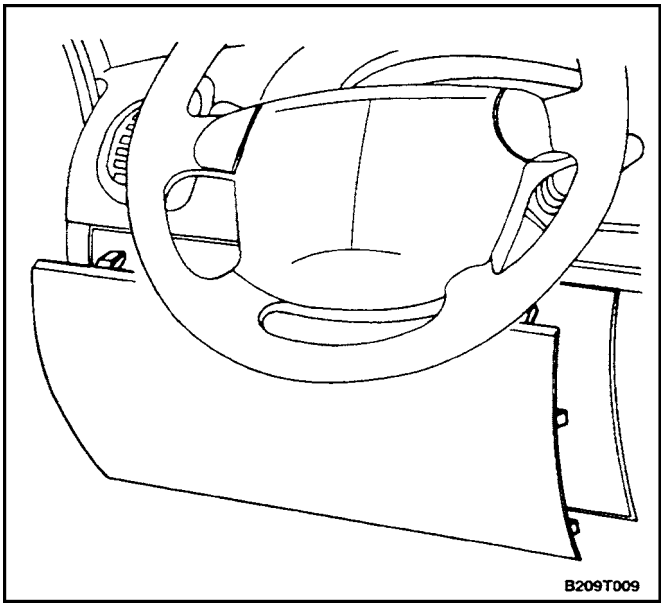

DETECTION COIL

Removal Procedure

1. Carefully pull the knee bolster trim panel until it is loose from its retaining clips.

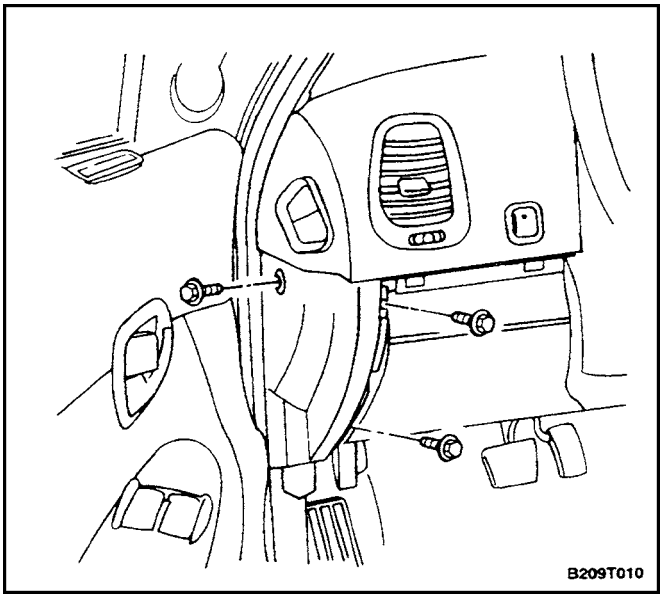

2. Slide the knee bolster trim panel upward and pull it outward to remove it.
3. Remove the instrument panel side cover.

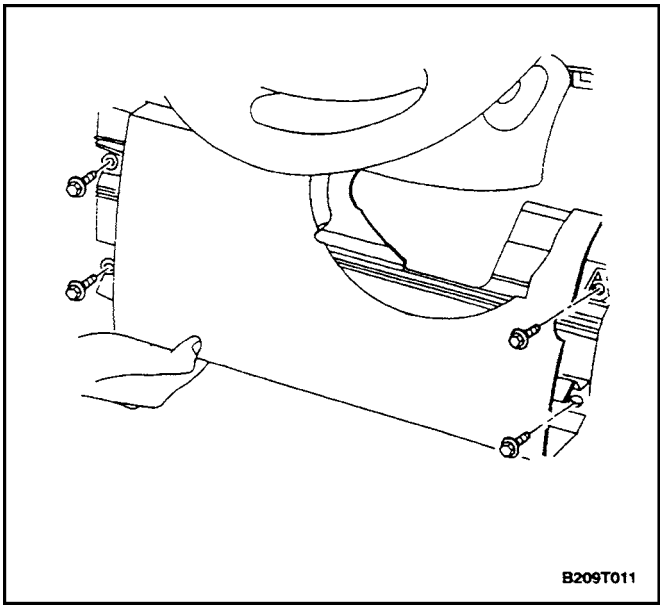

4. Remove the bolts and the knee bolster.

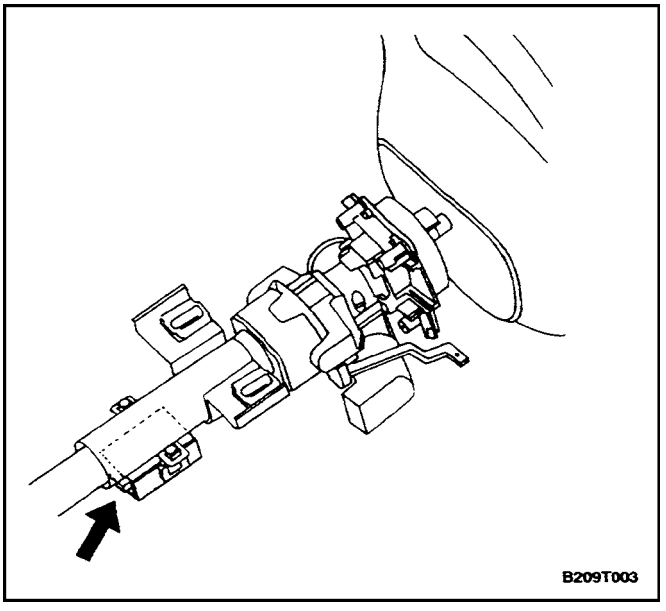

5. Remove the steering column lower cover. Refer to*Section 6E, Steering Wheel and Column.*
6. Disconnect the two–pin connector from the immobilizer.

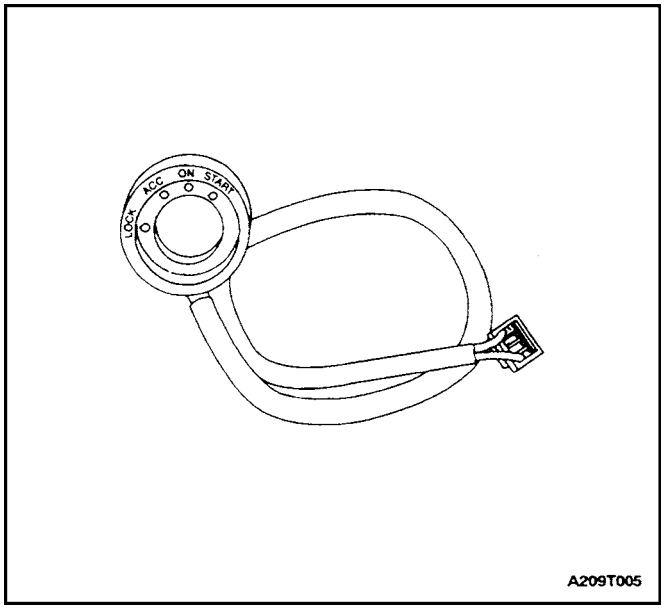

7. Pry the detection coil away from the lock cylinder. If the detection coil will be replaced with a new one, it does not matter if the key position trim ring is damaged during removal. A new trim ring is part of the new detection coil.

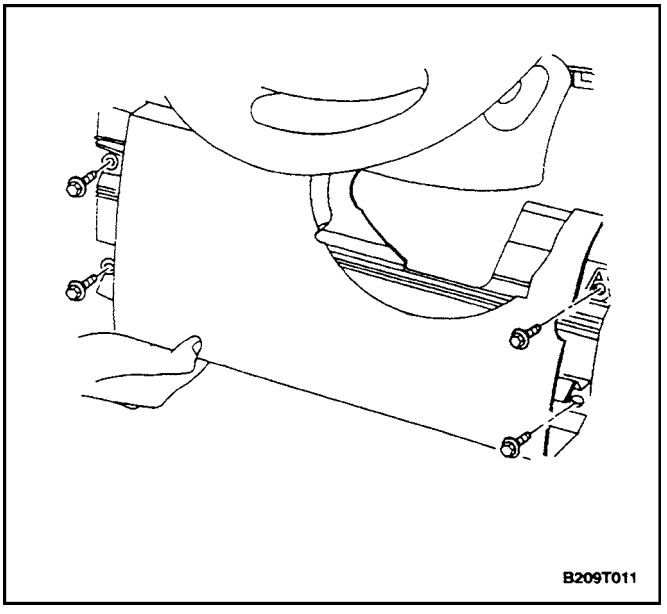

Installation Procedure

1. Install the detection coil by pressing it onto the lock cylinder until it snaps in place.
2. Connect the two–pin connector to the immobilizer.
3. Install the steering column lower cover. Refer to *Section 6E, Steering Wheel and Column.*
4. Install the knee bolster with the bolts.

Tighten

Tighten the knee bolster mounting bolts to 22 N•m (16 lb–ft)

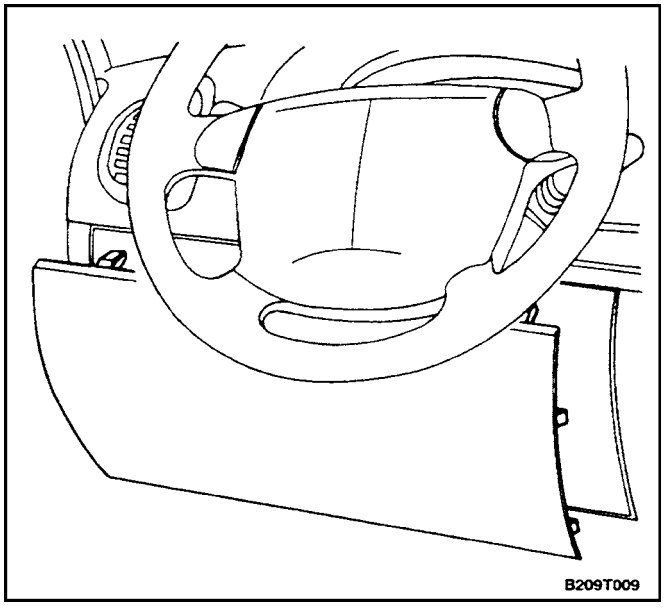

5. Install the instrument panel side cover.
6. Install the knee bolster trim panel.

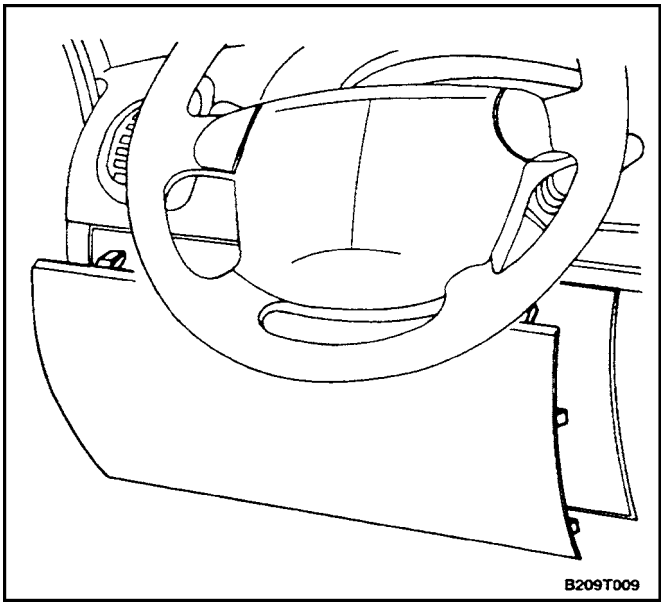

IMMOBILIZER CONTROL UNIT

Removal Procedure

1. Disconnect the negative battery cable.
2. Carefully pull the knee bolster trim panel loose from its retaining clips.

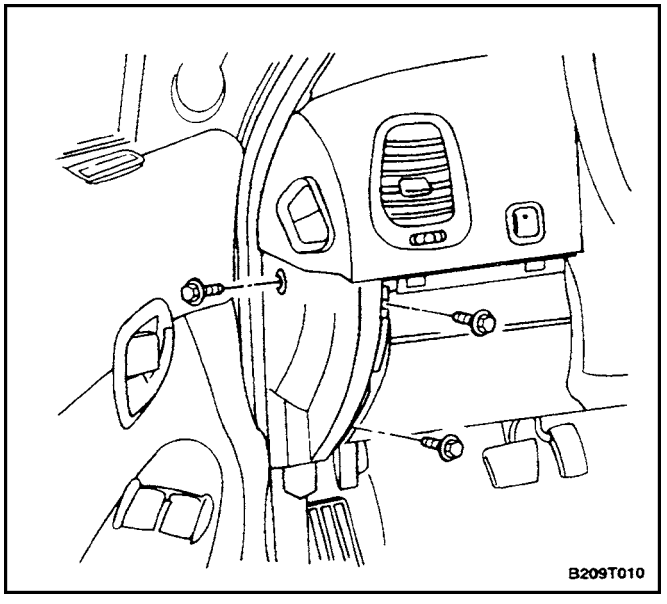

3. Slide the knee bolster trim panel upward and pull it outward to remove it.
4. Remove the instrument panel side cover.

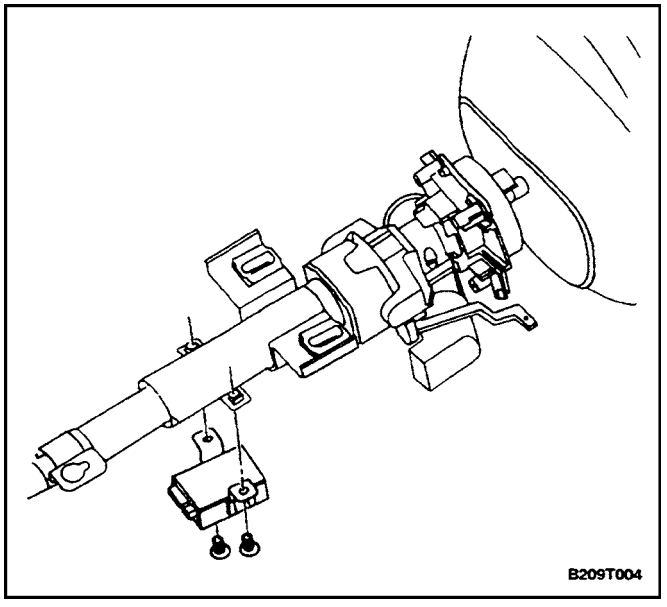

5. Remove the bolts and the knee bolster.
6. Remove the bolts and the immobilizer control unit.
7. Disconnect the electrical connectors from the immobilizer control unit.

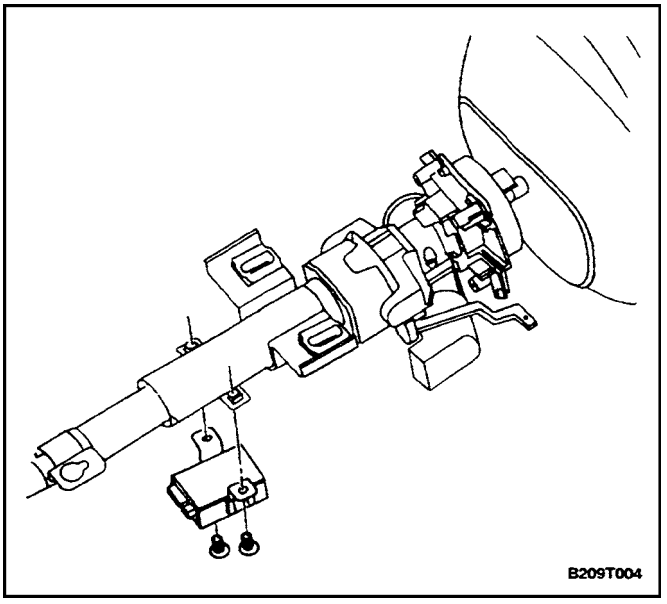

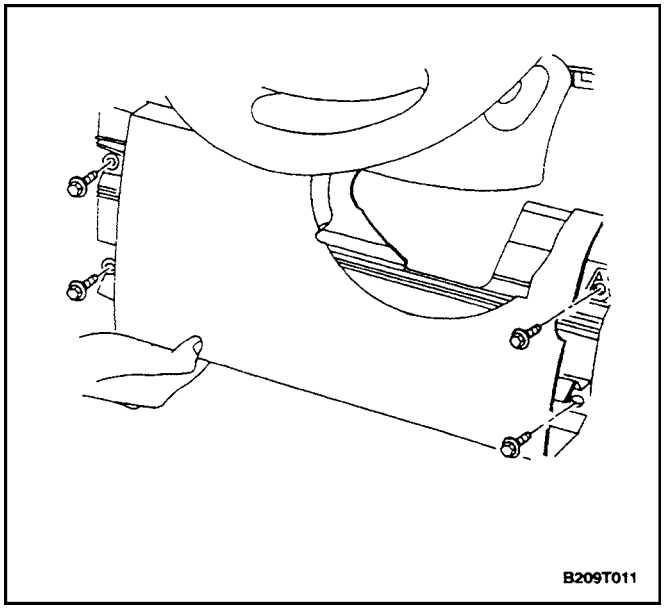

Installation Procedure

1. Connect the electrical connectors to the immobilizer control unit.
2. Install the immobilizer control unit with the bolts.

   Tighten

   Tighten the immobilizer control unit mounting bolts to 4 N•m (35 lb–in).

3. Install the knee bolster with the bolts.

   Tighten

   Tighten the knee bolster mounting bolts to 22 N•m (16 lb–in).
4. Install the instrument panel side cover.
5. Install the knee bolster trim panel.
6. Connect the negative battery cable.

Important : After replacing the immobilizer, the keys must be re–authorized using the key coding procedure. Refer to”Key Coding Procedure” in this section. Also, the electronic control module (ECM) identification (ID) code must be reset. Refer to”ID Code Reprogramming” in this section.

GENERAL DESCRIPTION AND SYSTEM OPERATION

IMMOBILIZER SYSTEM

The purpose of the immobilizer system is to prevent the vehicle from being stolen or driven by unauthorized users. Users are authorized by an electronically coded key.

When the ignition is turned ON, the key is tested by the immobilizer system. While the key code is being read by the immobilizer control unit, the engine can start and run with any key that will turn the lock cylinder. The key code is read and compared with key codes that have been stored in the immobilizer control unit's memory.

If a valid key is detected, the immobilizer control unit sends a serial data release message to the powertrain control module (PCM)/engine control module (ECM). Included in the release message is an identification (ID) code which assures that neither the immobilizer control unit nor the PCM/ECM has been substituted to defeat the system.

If the PCM/ECM does not receive a release message within a specified time, or if the ID codes do not match, the PCM/ECM performs the following actions:

- Disables the fuel injector circuit.
- Disables the fuel pump circuit.
- Disables the ignition coil.
- Sets diagnostic trouble code (DTC) 53.

The above conditions are maintained until the ignition is turned OFF.

The immobilizer control unit system consists of the following components:

- Electronically coded keys.
- Detection coil.
- Immobilizer control unit.
- PCM/ECM.
- Instrument cluster indicator.
- A data link connector (DLC) to provide serial data access for a scan tool.

A PCM/ECM for a vehicle without an immobilizer control unit cannot be interchanged with a PCM/ECM that is used with an immobilizer control unit system. The immobilizer control unit and the PCM/ECM must have a matching ID code. ID coding and key coding are accomplished by using a scan tool.

ELECTRONICALLY CODED KEYS

Each valid ignition key has an internal transponder which transmits a unique code. When a key is inserted into the ignition lock, the transponder is inductively coupled to the detection coil. The transponder interacts with the detection coil to generate an amplitude modulated modulated signal which is conducted from the detection coil to the immobilizer control unit. The immobilizer control unit reads the radio–frequency signal. A release message is sent to the powertrain control module (PCM)/engine control module (ECM) if the key is authorized.

New keys are coded by using a scan tool. Refer to in this section."Key Coding Procedure"

DETECTION COIL

A detection coil is mounted at the ignition lock as an integral part of the key position trim ring. The wires to and from the detection coil are connected to the immobilizer. When the ignition is turned ON, the immobilizer energizes the detection coil and the coil is coupled inductively to the transponder in the ignition key. The immobilizer sends a modulated signal to the detection coil. The signal is changed by interaction with the internal transponder in the ignition key. The immobilizer reads the signal from the detection coil and determines whether the key is authorized.

IMMOBILIZER CONTROL UNIT

The immobilizer control unit is an electronic module in the instrument panel which verifies the validity of an ignition key when the ignition is turned ON.

To accomplish its purpose, the immobilizer control unit performs the following actions:

- Learns and stores the codes of valid keys.
- Reads the radio frequency input from the ignition key.
- Compares the received code with the codes of the valid keys.
- Sends a release message to the powertrain control module (PCM)/engine control module (ECM) if a valid key has been presented.
- Calculates and transmits identification (ID) codes within each release message.
- Controls the external relay which interrupts the starter relay circuit.
- Controls the status indicator in the instrument cluster.
- Monitors system faults.
- Supports system test functions.

Normal Operation

When the ignition is turned ON, the immobilizer control unit tries to read the key code transmitted by the transponder in the ignition key.

If a valid key is detected, the immobilizer control unit sends a release message to the PCM/ECM. The release message contains an ID code. Immobilization will be performed by the PCM/ECM if no release message is received, or if the ID code in the PCM/ECM does not match the immobilizer control unit ID code.

If a non–valid key is detected, the release message is not sent to the PCM/ECM.

When the driver turns the ignition OFF, the immobilizer control unit switches to the active mode.

Data Link Connector (DLC)

When the ignition is ON, a scan tool can switch the immobilizer control unit to the data link connector (DLC) mode for the purpose of diagnostics, key coding, or ID coding.

ID Code Handling

One of 65,535 possible ID codes is stored in the immobilizer control unit's memory.

The ID code can be erased by using the scan tools'RESET ID CODE command. When the immobilizer control unit calculates a new ID code, the PCM/ECM ID code must be reset to match the immobilizer control unit ID code. To reset the ID code, refer to "ID Code Reprogramming."

During diagnostic procedures, the ID code can be read for comparison with the PCM/ECM ID code by using the scan tool's READ IMMOBILIZER CONTROL UNIT IDCODE command.

SERIAL DATA LINK

Serial data can be exchanged between a scan tool, the powertrain control module (PCM)/engine control module ECM), and the immobilizer control unit.

The scan tool connection is the data link connector (DLC).

POWERTRAIN CONTROL MODULE (PCM)/ENGINE CONTROL MODULE (ECM)

When the powertrain control module (PCM)/engine control module (ECM) detects that the ignition is being turned ON, the PCM/ECM waits for a release message from the immobilizer control unit. If a release message is not received within a specified time, the PCM/ECM disables the engine. The engine is also disabled if the identification (ID) code transmitted by the immobilizer control unit does not match the code stored in the PCM/ECM's memory. Immobilization remains in effect until the ignition is turned OFF, or until battery power is removed.

To prevent the vehicle from being driven, the PCM/ECM applies the following strategy:

- The ignition module is put in a bypass mode.
- The PCM/ECM will not create an electronic spark timing (EST) output. Therefore, no spark will be generated by the ignition coil.
- The PCM/ECM will not enable the fuel pump.
- The PCM/ECM will not enable the fuel injectors.
- The PCM/ECM sets diagnostic trouble code (DTC) 53.

Serial data communication is transmitted on a single wire between the immobilizer control unit and the PCM/ ECM.

During diagnostic procedures or ID code changing, a scan tool is added to the communication system.

A PCM/ECM with an immobilizer control unit is not exchangeable with a PCM/ECM that does not have an immobilizer control unit.

SECTION : 9T

REMOTE KEYLESS ENTRY AND PERIMETER/ULTRASONIC ANTI–THEFT SYSTEM

CAUTION : Disconnect the negative battery cable before removing or installing any electrical unit or when a tool or equipment could easily come in contact with exposed electrical terminals. Disconnecting this cable will help prevent personal injury and damage to the vehicle. The ignition must also be in LOCK unless otherwise noted.

TABLE OF CONTENTS

SPECIFICATIONS 9T–1
FASTENER TIGHTENING SPECIFICATIONS . 9T–1
SCHEMATIC AND ROUTING DIAGRAMS 9T–2
REMOTE KEYLESS ENTRY AND ANTI–THEFT SYSTEM (1 OF 2) 9T–2
REMOTE KEYLESS ENTRY AND ANTI–THEFT SYSTEM (2 OF 2) 9T–3
CONTROL MODULE/RECEIVER CONNECTOR 9T–4
WIRING HARNESS CONNECTORS 9T–4
MAINTENANCE AND REPAIR 9T–5
ON–VEHICLE SERVICE 9T–5
CONTROL MODULE/RECEIVER 9T–5
SIREN 9T–5
FRONT DOOR TAMPER SWITCH 9T–7
REAR DECK LID TAMPER SWITCH 9T–7
HOOD OPEN SWITCH 9T–8
PASSWORD PROGRAMMING 9T–10
GENERAL DESCRIPTION AND SYSTEM OPERATION 9T–11
REMOTE KEYLESS ENTRY AND ANTI–THEFT SYSTEM 9T–11
REMOTE LOCKING AND UNLOCKING 9T–11
SECURITY INDICATOR 9T–11
INTRUSION SENSING 9T–11
SIREN 9T–11
VEHICLE LOCATOR 9T–12
AUTOLOCKING (SAFETY LOCK) 9T–12
CONTROL MODULE/RECEIVER 9T–12
FAULT OR ALARM INDICATION 9T–12
PANIC BUTTON 9T–12

SPECIFICATIONS

FASTENER TIGHTENING SPECIFICATIONS

Application	N•m	Lb–Ft	Lb–In
Hood Open Switch Mounting Screw	8	–	71
Siren Bracket Mounting Bolt	22	16	–

SCHEMATIC AND ROUTING DIAGRAMS

REMOTE KEYLESS ENTRY AND ANTI–THEFT SYSTEM (1 OF 2)

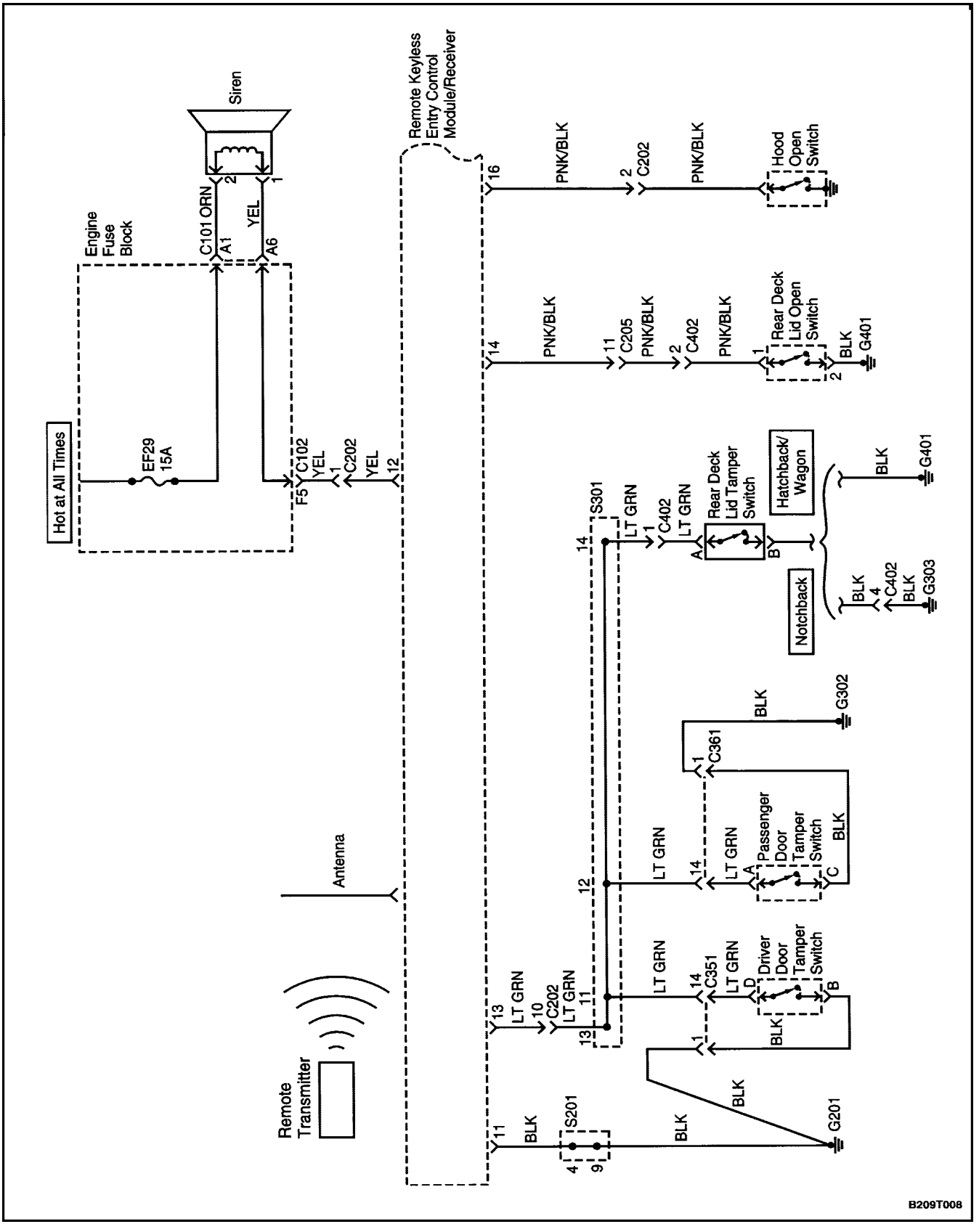

REMOTE KEYLESS ENTRY AND ANTI–THEFT SYSTEM (2 OF 2)

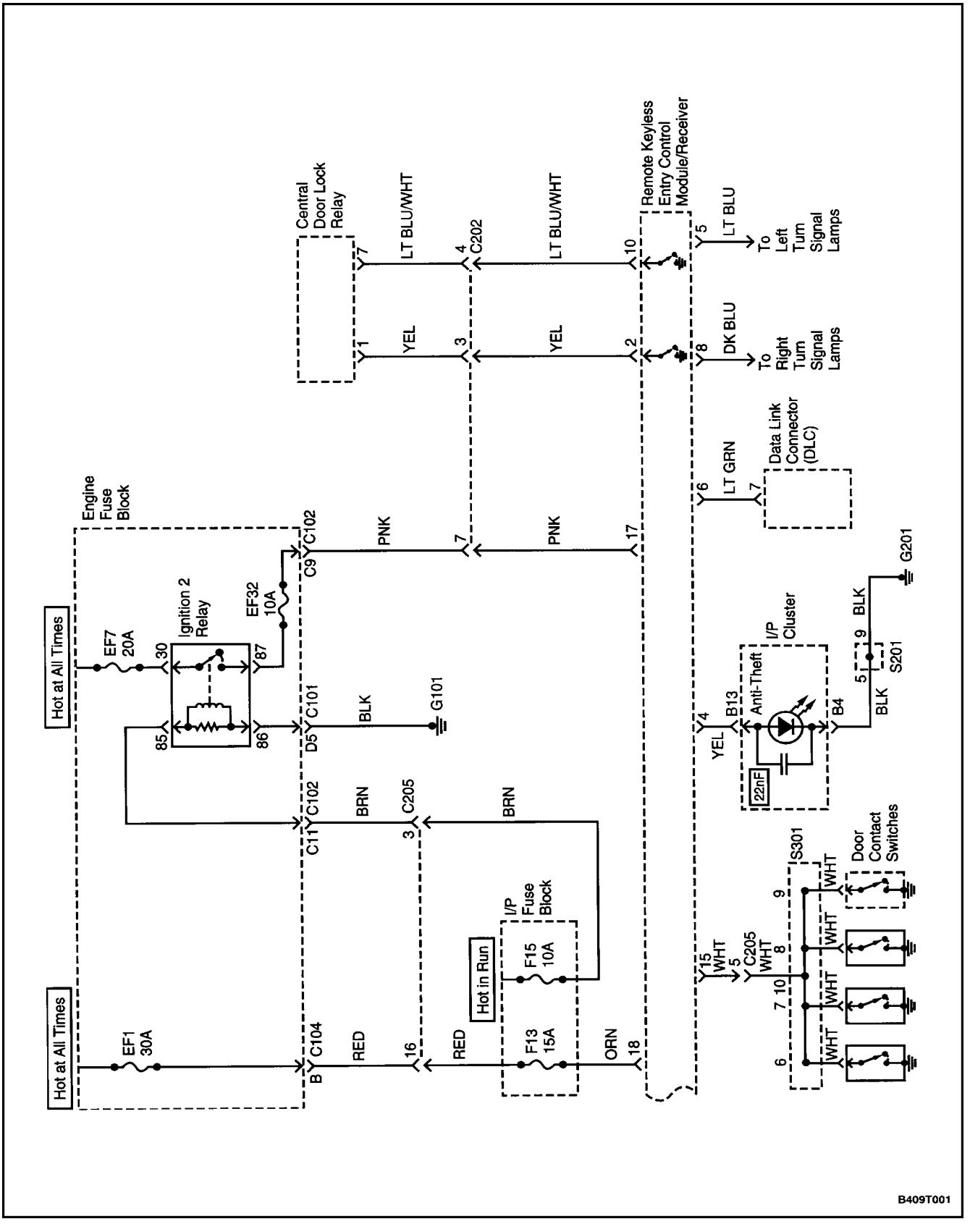

CONTROL MODULE/RECEIVER CONNECTOR

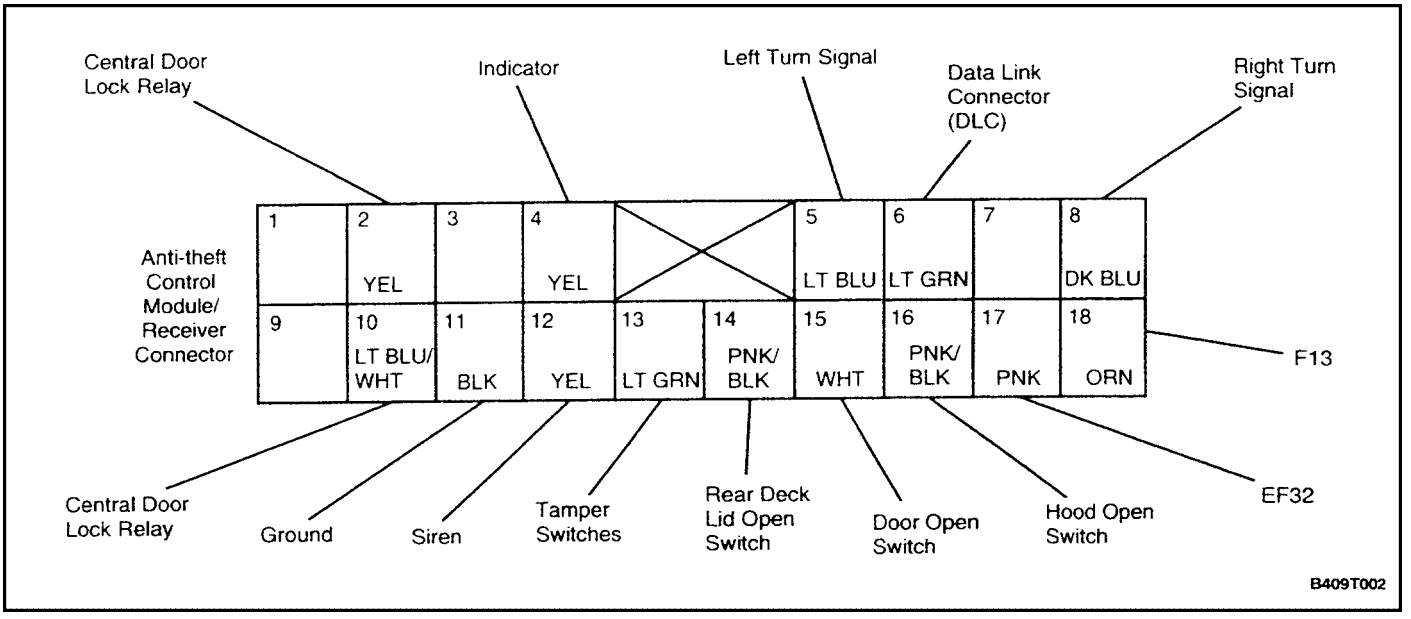

WIRING HARNESS CONNECTORS

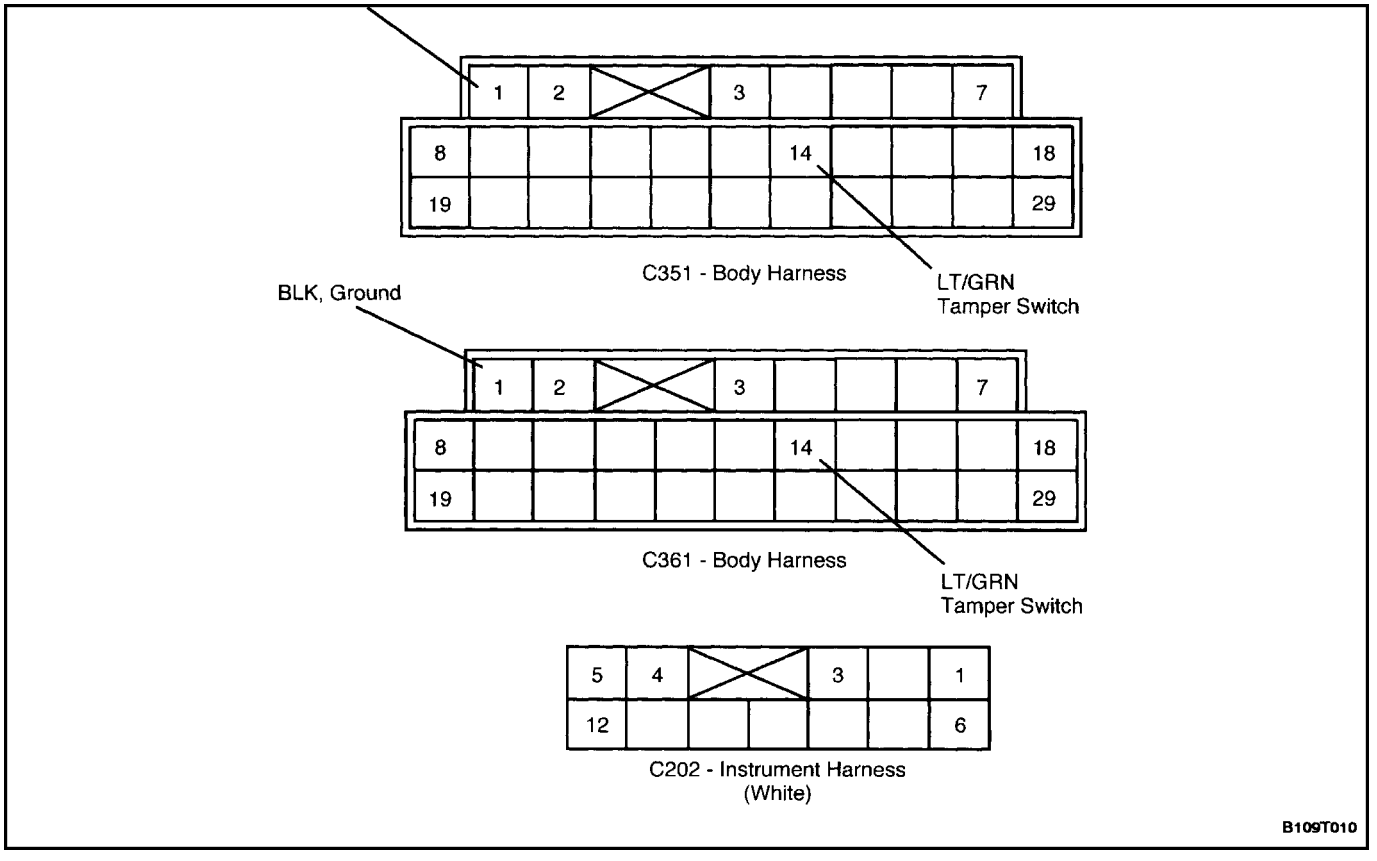

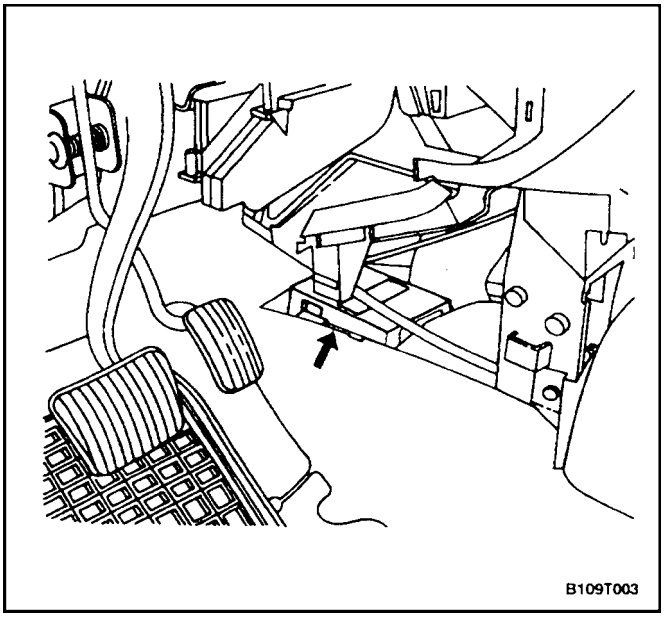

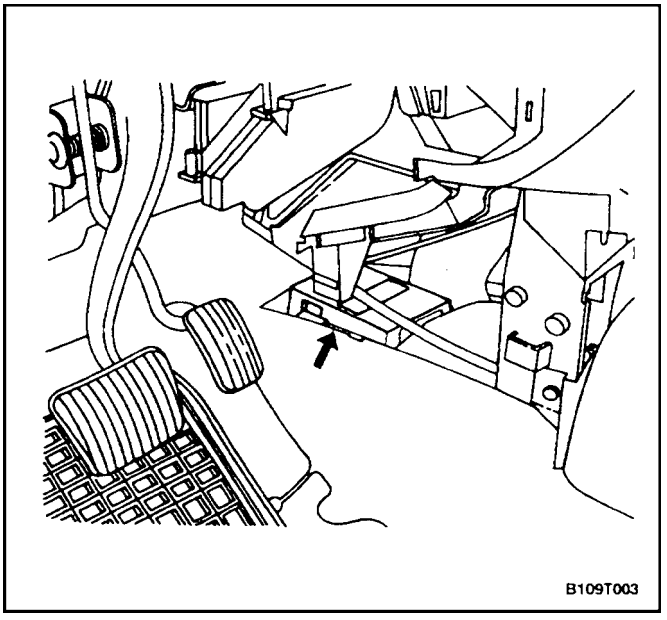

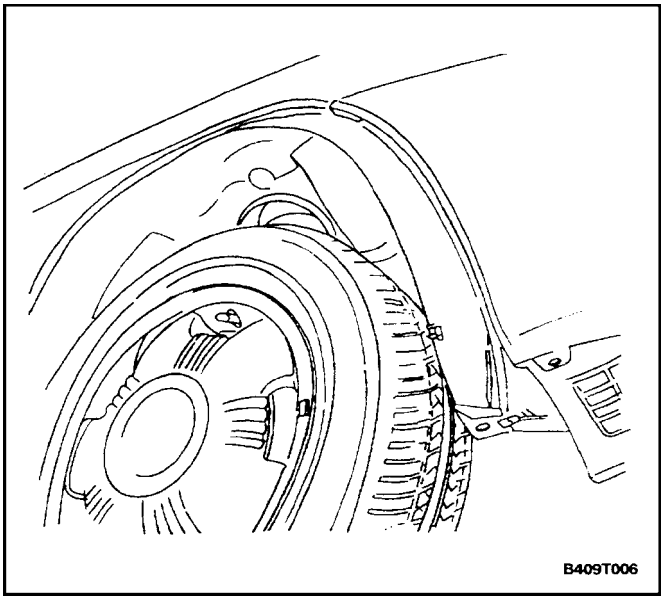

MAINTENANCE AND REPAIR

ON–VEHICLE SERVICE

CONTROL MODULE/RECEIVER

Removal Procedure

1. Disconnect the negative battery cable.
2. Remove floor console left side forward trim panel. Refer to *Section 9G, Interior Trim.*
3. Disconnect the control module/receiver electrical connector.
4. Slide the control module/receiver toward the rear of the vehicle and remove it.

Installation Procedure

1. Install the control module/receiver by sliding it onto its bracket.
2. Connect the control module/receiver electrical connector.
3. Install the floor console left side forward trim panel. Refer to *Section 9G, Interior Trim.*
4. Connect the negative battery cable.

SIREN

Removal Procedure

1. Remove several screws to boosen the forward half of the right front wheel well splash shield.

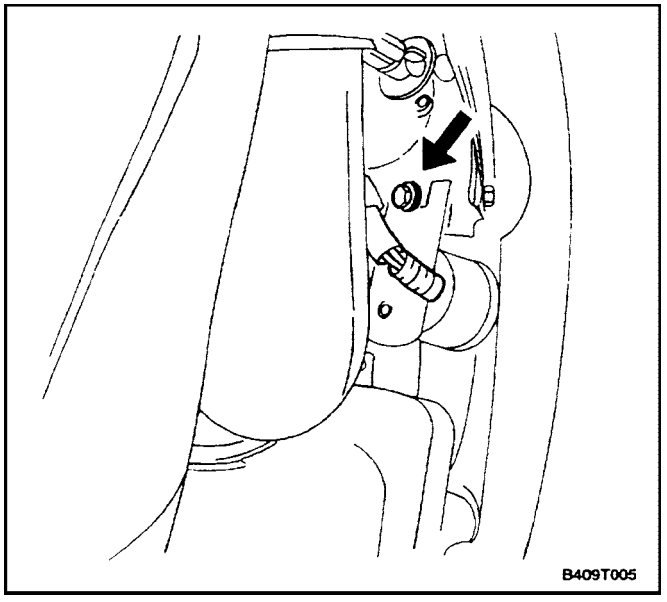

2. Remove the siren electrical connector.
3. Remove the siren bracket mounting bolt.
4. Remove the siren.

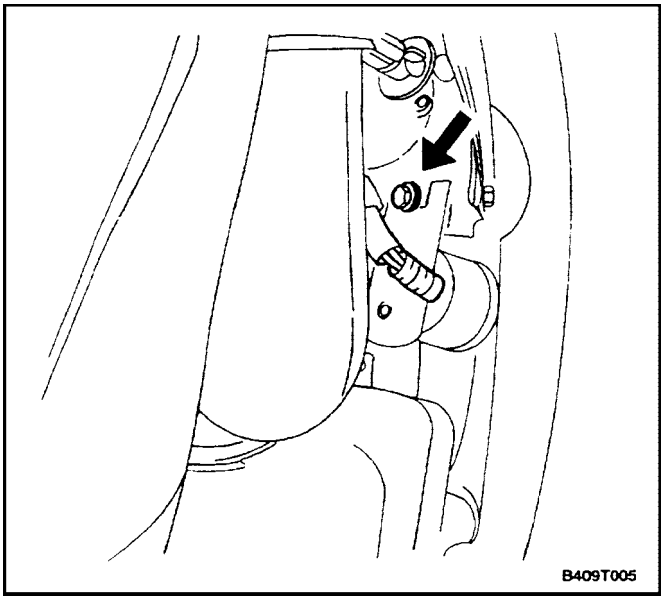

Installation Procedure

1. Install the siren on the siren bracket with the mounting screws.

   Tighten

   Tighten the siren bracket mounting bolts to 22 N•m (16 lb–in).

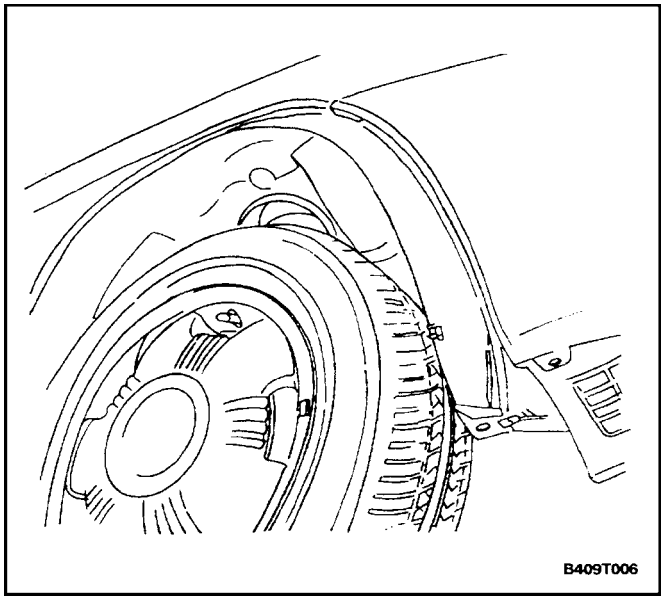

2. Connect the siren electrical connector.

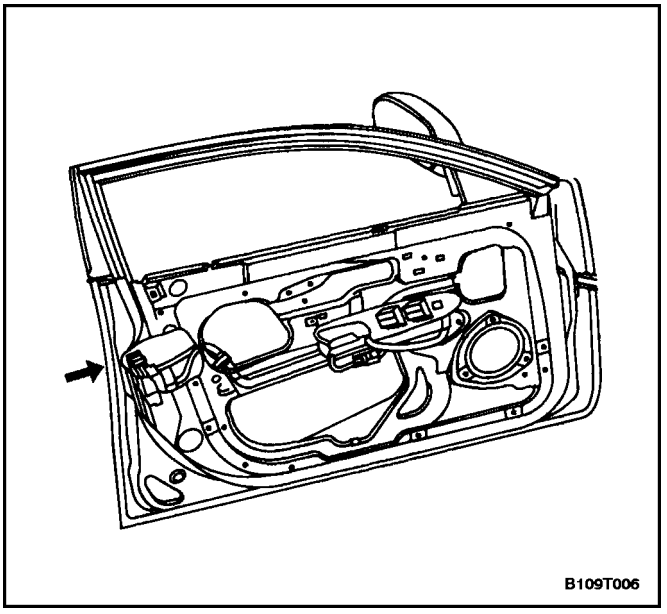

FRONT DOOR TAMPER SWITCH

Removal Procedure

1. Disconnect the negative battery cable.
2. Remove the front door trim panel. Refer to *Section 9G, Interior Trim.*
3. Disconnect the door tamper switch electrical connector.
4. Remove the front door lock and the integral door tamper switch. Refer to*Section 9P, Doors.*

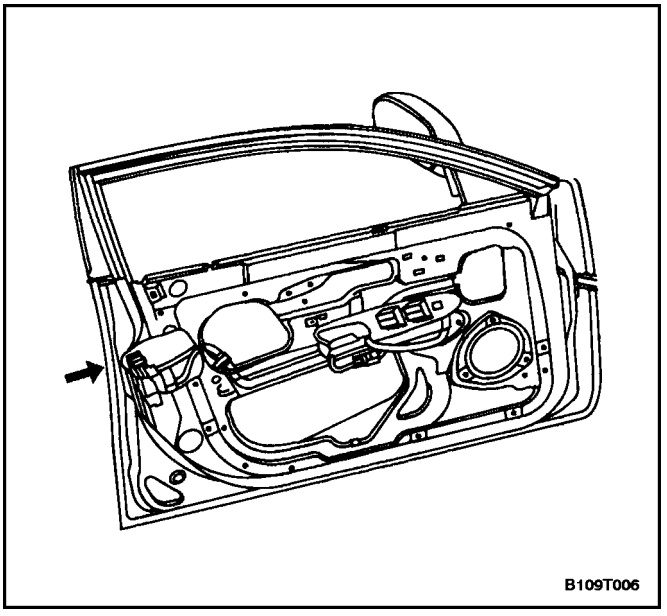

Installation Procedure

1. Install the front door lock and the integral door tamper switch. Refer to*Section 9P, Doors.*
2. Install the door tamper switch electrical connector.
3. Install the front door trim panel. Refer to *Section 9G, Interior Trim.*
4. Connect the negative battery cable.

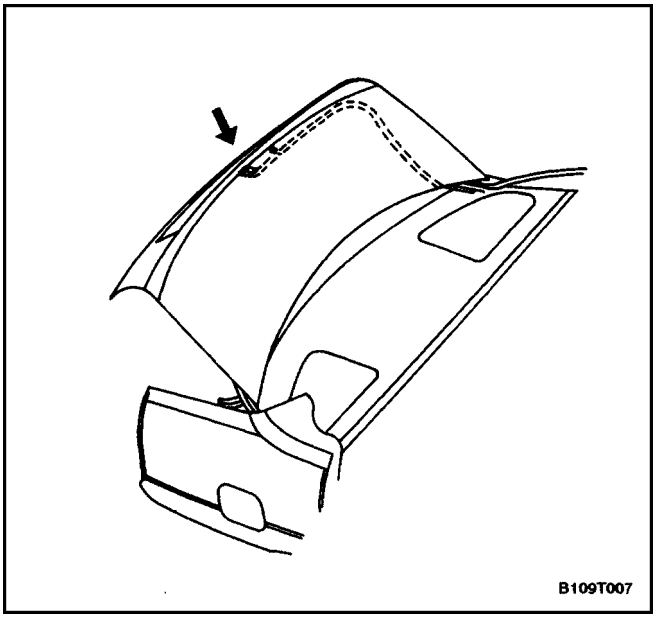

REAR DECK LID TAMPER SWITCH

Removal Procedure

1. Disconnect the negative battery cable.
2. Disconnect the rear deck lid tamper switch electrical connector from the tamper switch.
3. Remove the rear deck lid tamper switch.

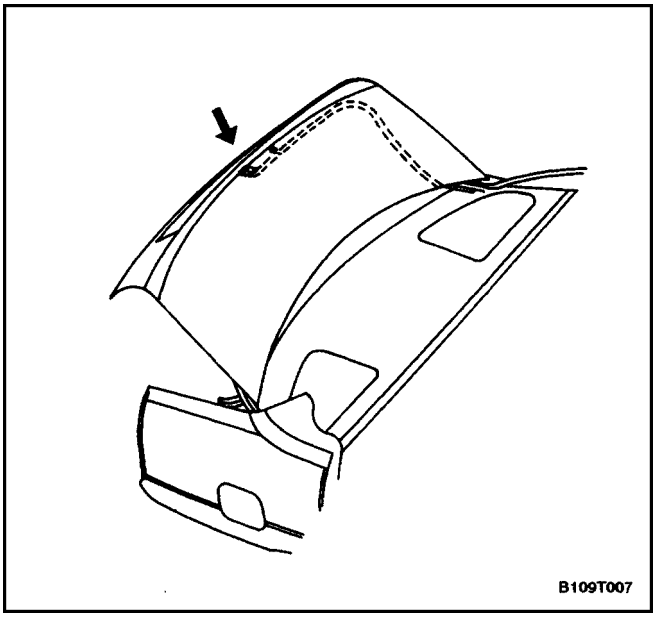

Installation Procedure

1. Install the rear deck lid tamper switch.
2. Connect the rear deck lid tamper switch electrical connector to the tamper switch.
3. Connect the negative battery cable.

HOOD OPEN SWITCH

Removal Procedure

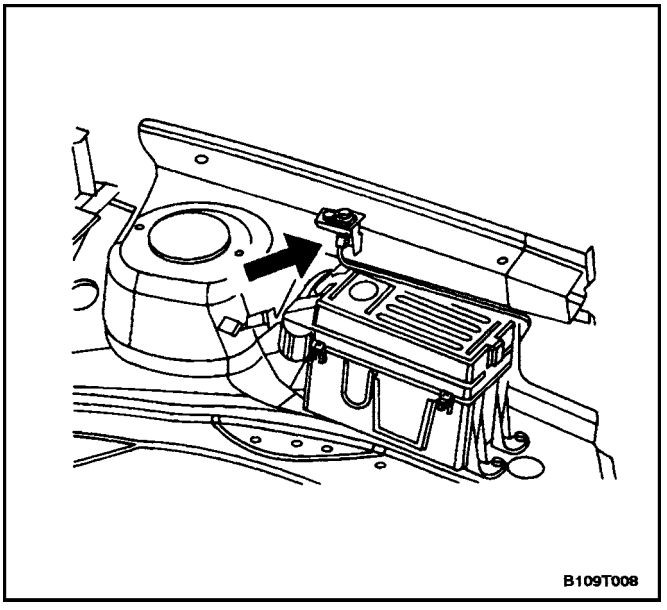

1. Disconnect the negative battery cable.
2. Disconnect the electrical connector from the hood open switch.

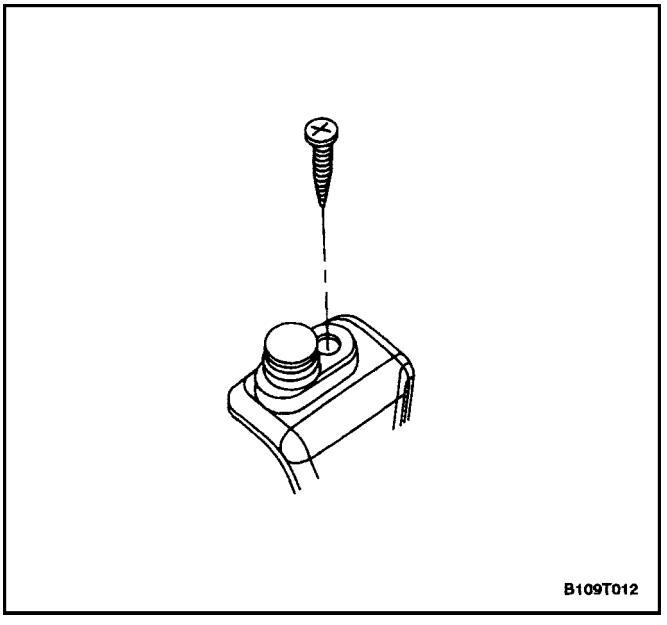

3. Remove the mounting screw from the hood open switch.
4. Remove the hood open switch.

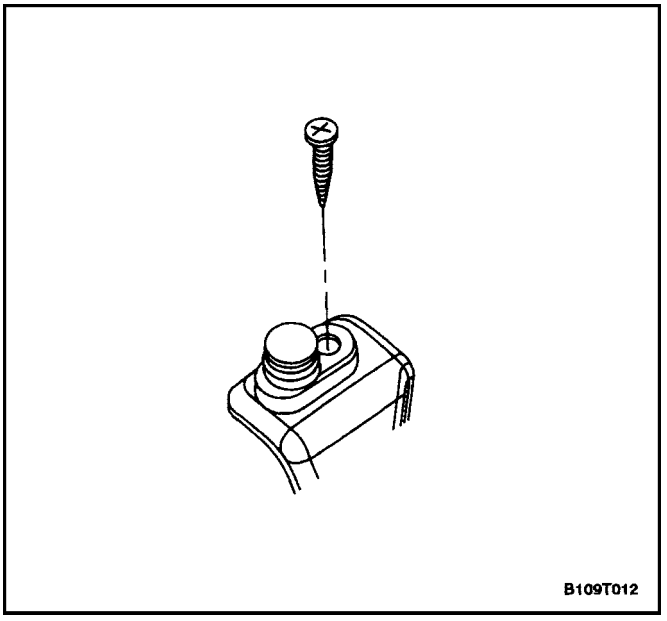

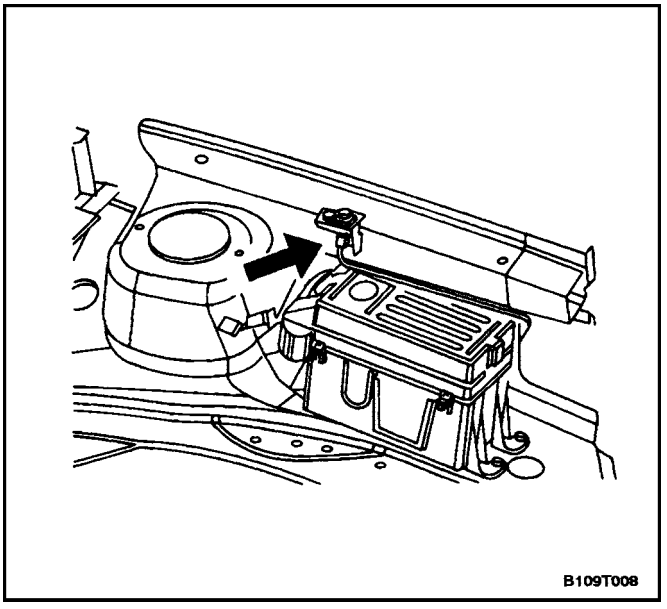

Installation Procedure

1. Install the hood open switch with the mounting screw.

   Tighten

   Tighten the hood open switch mounting screw to 8 N•m (71 lb–in).

2. Connect the electrical connector to the hood open switch.
3. Connect the negative battery cable.

PASSWORD PROGRAMMING

If a transmitter is lost or damaged, the control module/receiver must be re–programmed to communicate with a new transmitter. The passwords recorded in the control module/receiver should not be deleted when power is off in the control module/receiver.

Each control module/receiver should be able to record five passwords. The following method is used to record new passwords in the control module/receiver:

1. Connect the scan tool to the assembly line diagnostic link (ALDL) connector.
2. Turn the ignition ON.
3. Delete the current passwords.
4. Send the programming mode message to the control module/receiver.
5. Press any button of the transmitter to generate a data code including a password which will be recorded by the control module/receiver. The control module/receiver sends a response message to the scan tool to indicate that the first password has been recorded.
6. Press any button of the transmitter to generate a data code including a password which will be recorded by the control module/receiver. The control module/receiver sends a response message to the scan tool to indicate that the second password has been recorded.
7. Press any button of the transmitter three more times until the control module/receiver has responded that the third, fourth, and fifth passwords have been recorded.
8. Turn the ignition OFF.
9. Disconnect the scan tool.

The control module/receiver automatically leaves the programming mode and switches to the normal operating mode when either of the following conditions occurs:

- The scan tool is disconnected from the ALDL.
- Five passwords are recorded in the control module/receiver.

GENERAL DESCRIPTION AND SYSTEM OPERATION

REMOTE KEYLESS ENTRY AND ANTI–THEFT SYSTEM

The remote keyless entry and anti–theft system can perform the following functions:

- Remotely lock and unlock the vehicle doors with a hand–held high–frequency transmitter.
- Sense intrusion into the vehicle through the doors, the trunk, or the hood.
- Activate a warning to signal an intrusion.
- Help the driver find the vehicle in a parking area.
- Automatically re–lock the doors if a door or the trunk is not opened within 30 seconds after the vehicle has been unlocked by the remote keyless entry.
- Communicate serial data to a scan tool to help diagnose system faults.

The remote keyless entry and anti–theft system consists of the following components:

- Keyless entry and anti–theft control module/receiver.
- Security indicator.
- Rear deck lid open switch.
- Rear deck lid tamper switch.
- Front door tamper switches.
- Door open switches.
- Central locking unit.
- Flashing turn signal lamps.
- Siren.
- Hood open switch.

REMOTE LOCKING AND UNLOCKING

The hand–held transmitter locks and unlocks the vehicle doors by sending radio waves to the control module/receiver in the vehicle. The effective range of the transmitter varies between 5 and 10 meters (approximately 16 to 32 feet), depending on whether or not objects such as other vehicles are blocking the path of the radio waves.

The transmitter has a LOCK button and an UNLOCK button which only function when the ignition is OFF. Pressing the UNLOCK button has the following effects:

- The doors are unlocked.
- The turn signal lamps flash twice.
- The control module is disarmed.

Pressing the LOCK button has the following effects:

- The doors are locked.
- The turn signal lamps flash once.
- The control module is armed.

The transmitter has a replaceable battery. The battery is designed to last at least three years before replacement is necessary.

SECURITY INDICATOR

There is a security indicator on the instrument panel. After the LOCK button of the transmitter is pressed, the module is placed in the armed mode, and the security indicator flashes. The security indicator turns ON for 0.1 second and OFF for 0.7 second. It then flashes at that frequency until the control module/receiver is disarmed. If the vehicle is equipped with an immobilizer, the security indicator is connected to the immobilizer system instead of the keyless entry/anti— theft system.

INTRUSION SENSING

The anti–theft function is armed if the transmitter sends the LOCK message to the control module/receiver when the ignition is OFF.

When the hood, the door, or the rear deck lid is opened, the hood open switch, the door open switch, or the trunk open switch will change its input to ground. The alarm will be activated if the hood open sensor, the door open sensor, or the trunk open sensor changes its input to ground before either of the following conditions occurs:

- An UNLOCK message is received from the transmitter.
- The front door tamper switch or the rear deck lid tamper switch indicates key operation by changing its input to ground.

The alarm also will be activated if the ignition input is changed to battery voltage before either of the following conditions occurs:

- An UNLOCK message is received from the transmitter.
- The front door tamper switch or the rear deck lid tamper switch indicates key operation by changing its input to ground.

SIREN

The remote keyless entry system is armed when the LOCK message is received from the transmitter when the ignition is OFF. When the system is armed, it will activate the siren and flash the turn signals for 28 seconds if any of the following conditions occurs:

- A door is opened without using the key (front door open switch input is changed to ground).
- The rear deck lid is opened without using the key trunk open switch input is changed to ground).
- The hood is opened while the anti–theft system is armed (hood open switch input is changed to ground).
- The ignition switch input is changed to battery voltage.

The siren is disarmed when any of the following conditions occurs:

- The door is opened with the key.
- The rear deck lid is opened with the key.
- The UNLOCK button or the LOCK button on the remote transmitter is pressed within 2 seconds of the beginning of the alarm. If the UNLOCK button or the LOCK button is not pressed within 2 seconds of the beginning of the alarm, the transmitter will not stop the alarm.

VEHICLE LOCATOR

The remote keyless entry system assists the driver in locating the vehicle. When the vehicle is unlocked with the remote control, the turn signals flash twice to indicate the location of the vehicle. The duration of the flashes and the length of time between flashes is used to indicate certain vehicle conditions. Refer to ”Fault or Alarm Indication” in this section.

AUTOLOCKING (SAFETY LOCK)

The remote keyless entry system features an autolocking control. If the doors are unlocked with the remote transmitter when the control module/receiver is in the armed mode, the doors are automatically re–locked after 30 seconds unless any of the following events occur:

- The door is opened.
- The ignition switch is turned ON.
- The rear deck lid is opened.
- The hood is opened.

CONTROL MODULE/RECEIVER

The remote keyless entry control module/receiver is contained in the floor console. The module/receiver processes signals from the remote transmitter and the intrusion sensors, and it activates the alarm if an intrusion is detected. The control module/receiver also has a selfdiagnostic function which will display trouble codes. In order to display trouble codes, a scan tool must be connected to the assembly line diagnostic link (ALDL) connector.

The control module/receiver will not communicate with transmitters from other vehicles because there are over four billion possible electronic password combinations, and passwords are not duplicated. The control module/ receiver has an attached antenna to detect signals from the transmitter.

FAULT OR ALARM INDICATION

When the UNLOCK button on the remote transmitter is pressed, the control module/receiver will flash the parking lamps to indicate information about the remote keyless entry and anti–theft system.

Normal Condition: If there has not been an intrusion, and no fault has been detected, the control module/receiver will signal a normal condition when the UNLOCK button is pressed. The parking lamps will flash twice for 0.5 second, with a 0.5 second pause between flashes.

Fault Indication: If there is a fault in the remote keyless entry and anti–theft system, the control module/receiver will signal the fault when the UNLOCK button is pressed. The parking lamps will flash twice for 1 second, with a 0.5 second pause between flashes.

Alarm Indication: If there has been an intrusion since the last time the LOCK button was pressed, the control module/receiver will signal that there has been an intrusion when the UNLOCK button is pressed. The parking lamps will flash twice for 0.5 second, with a 1.5 second pause between flashes.

Alarm and fault information in the control module/receiver will be erased the next time the controlmodule/receiver enters the armed condition after receiving a LOCK message from the transmitter.

PANIC BUTTON

In addition to the LOCK and UNLOCK buttons on the transmitter, there is the panic button. This button is used to activate the siren if a threatening situation occurs while the driver is approaching the vehicle. If the panic button is held down for 2 seconds, the siren will be activated for 30 seconds, and the parking lights will flash during that time.

TECHNICAL SERVICE BULLETIN

Bulletin No.:	TSB-003-01	Description:	Remote Keyless Entry Transmitter Programming
Model(s):	All	Group:	Body
Date:	May 18, 2001	Reference:	N/A
VIN Range:	All	Prod. Dates:	All

Remote Keyless Entry Transmitter Programming Information

The Daewoo Remote Keyless Entry System allows for the use of as many as five (5) transmitters for each vehicle. Replacement Remote Keyless Entry System Transmitters must first be programmed to a specific vehicle using the Scan 100 Scan Tool. This process is completed using serial data communication between the Scan 100 Scan Tool and the Remote Keyless Entry Control Unit and is the only method available for programming Transmitters.

Note: ***All Transmitters for a specific vehicle must be programmed at the same time. Once the programming function of the Remote Keyless Entry System is activated, any Transmitter (existing or new) that is not programmed (or reprogrammed) during the programming procedure will no longer operate the Remote Keyless Entry System of that vehicle.***

This Technical Service Bulletin provides information concerning the programming procedure for the Remote Keyless Entry Transmitter(s).

REMOTE KEYLESS ENTRY TRANSMITTER PROGRAMMING PROCEDURE:

Note: ***Ensure that the doors, hood and trunk / rear hatch are closed prior to starting the programming procedure.***

1. Connect the Scan 100 Scan Tool to the Data Link Connector (DLC).
2. Turn the Scan 100 Scan Tool “ON” by pressing the “POWER” Button, then wait for the MAIN MENU screen to be displayed.
3. From the MAIN MENU screen, select “Diagnostics” by pressing #1 on the Key Pad.
4. From the MODEL YEAR screen, select the appropriate model year of the specific vehicle by either scrolling down to the year and pressing “ENTER”, or by pressing the respective item number on the Key Pad.
5. From the VEHICLE TYPE screen, select the specific vehicle model by either scrolling down to the model name and pressing “ENTER”, or by pressing the respective item number on the Key Pad.
6. From the SYSTEM SELECTION MENU screen, select “Body” by pressing #2 on the Key Pad.
7. From the BODY SELECTION MENU screen, select “Coding” by pressing #2 on the Key Pad.

Circulate To:				
	☑ General Manager	☑ Technician(s)	☑ Body Shop Manager	☐
	☑ Service Manager	☑ Service Advisor	☑ Parts Manager	☐

8. From the CODING SYSTEM screen, select “Coding Only” by pressing #1 on the Key Pad.
9. From the SECRET NUMBER OF CODINGS screen, enter four (4) zero's (0-0-0-0) in the four (4) boxes labeled “1-2-3-4”.
10. From the CODING SYSTEM SELECT screen, select “Keyless Entry” by pressing #2 on the Key Pad.

Note: ***A slight delay may occur and “PLEASE WAIT” may be displayed before the next screen appears.***

11. From the KEYLESS ENTRY CODING SYSTEM screen, select “Coding Transmitter” by pressing #1 on the Key Pad.
12. When directed by the Scan 100 Scan Tool, press **any** Button on the first Transmitter to be programmed.

CAUTION: ***Ensure that Transmitters from other vehicles in the immediate area are not activated during this procedure.***

13. Continue programming Transmitters when directed by the Scan 100 Scan Tool until all Transmitters have been programmed.

Note: ***A maximum of five (5) Transmitters may be programmed to a vehicle.***

14. Once all Transmitters have been programmed, press the “ESC” Button on the Key Pad. The display will confirm the number of Transmitters programmed. If the number displayed does not match the number of Transmitters programmed, repeat the procedure.
15. Turn the Scan 100 Scan Tool “OFF” by pressing the “POWER” Button, then disconnect it from the Data Link Connector.
16. Wait approximately 10 seconds, then test the operation of each programmed Transmitter to ensure it operates properly.

If additional information is needed regarding this procedure, please contact your District Parts & Service Manager or the Daewoo Technical Assistance Center toll free at (877) 362-1234, selection 1.

SECTION : 9R

BODY FRONT END

TABLE OF CONTENTS

SPECIFICATIONS 9R–1
FASTENER TIGHTENING SPECIFICATIONS . 9R–1
MAINTENANCE AND REPAIR 9R–2
ON–VEHICLE SERVICE 9R–2
LUBRICATION 9R–2
FASTENERS 9R–2
ANTICORROSION MATERIALS 9R–2
FRONT END SEALING 9R–2
COWL VENT GRILLE 9R–2
HOOD 9R–4
HOOD HINGES 9R–4
HOOD PROP ROD 9R–5
HOOD SECONDARY LATCH 9R–6
HOOD LATCH RELEASE CABLE 9R–6
RADIATOR GRILLE 9R–8
FENDER 9R–9
GENERAL DESCRIPTION AND SYSTEM OPERATION 9R–14
BODY FRONT END 9R–14

SPECIFICATIONS

FASTENER TIGHTENING SPECIFICATIONS

Application	N•m	Lb–Ft	Lb–In
A–Pillar Fender Bolt	8	–	71
Cowl Vent Grille Screws	4	–	35
Fender Bolt (Front of Fascia)	4	–	35
Front Bumper Fascia–to–Fender Bolt	1.5	–	13
Hinge Bolts	27	20	–
Hood–to–Hinge Bolts	27	20	–
Hood Latch Bolts	8	–	71
Hood Release Handle Nuts	4	–	35
Lower Fender Bolt	8	–	71
Radiator Grille Nuts	4	–	35
Splash Shield Bolts	1.5	–	13
Upper Fender Bolts	8	–	71

MAINTENANCE AND REPAIR

ON–VEHICLE SERVICE

LUBRICATION

The hood hinges and the locking mechanisms require periodic lubrication for proper operation. Refer to *Section 0B, General Information* for the specific types and intervals of lubrication.

FASTENERS

Notice : Dissimilar metals in direct contact with each other may corrode rapidly. Make sure to use the correct fasteners to prevent premature corrosion.

Many aluminum components are used on current models. Aluminum in contact with steel may corrode rapidly if it is not protected by special finishes or isolators.

The fasteners used have a special finish which provides adequate protection from corrosion. These special fasteners differ in color in order to easily identify them from the standard metric fasteners, which are medium blue.

When replacing fasteners, avoid substituting otherwise similar fasteners in the same location.

ANTICORROSION MATERIALS

In order to provide rust resistance, anticorrosion materials have been applied to the interior surfaces of most of the metal panels. When you service these panels, properly recoat them with a service–type anticorrosion material if any of the original material has been disturbed.

FRONT END SEALING

All locations where waterleaks may occur are sealed during production with high quality, durable sealers. If it becomes necessary to reseal specific areas, use a highquality sealer of medium–bodied consistency which will retain its flexible characteristics after curing and can be painted, if necessary.

COWL VENT GRILLE

(Left–Hand Drive Shown, Right–Hand Drive Similar)

Removal Procedure

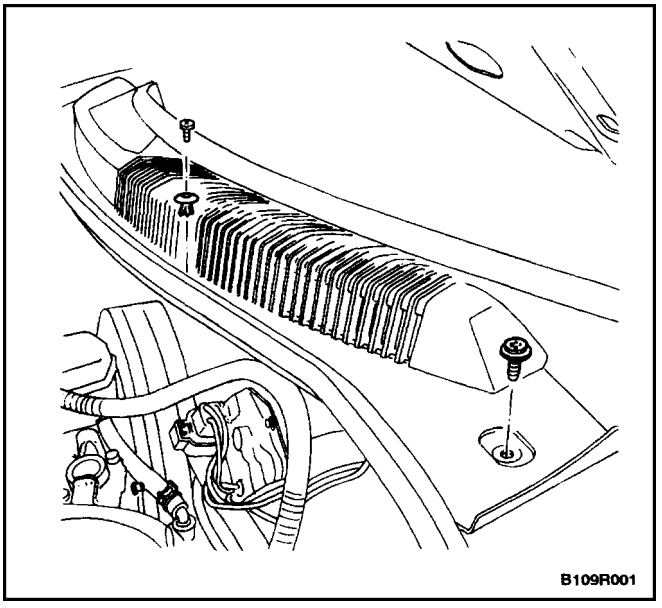

1. Raise the hood and support it with the hood prop.
2. Remove the wiper arms. Refer to*Section 9D, Wipers/ Washer Systems.*
3. Remove the cowl vent grille screws and the two–piece grille.

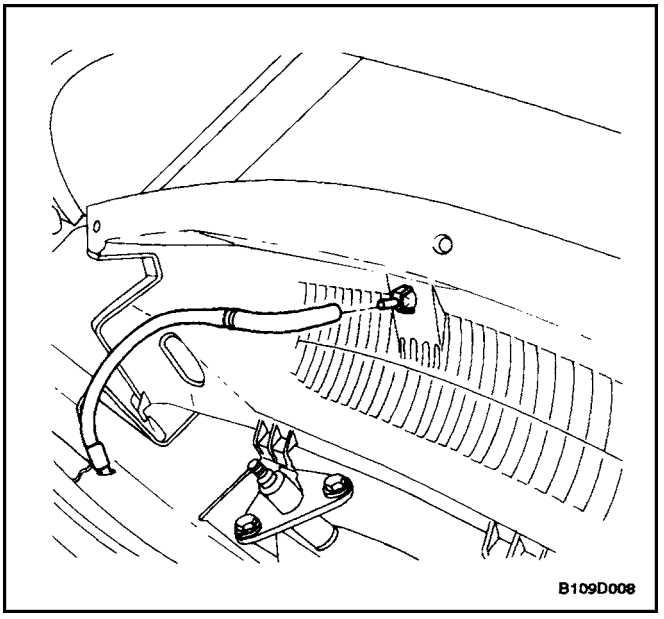

4. Disconnect the washer hoses.

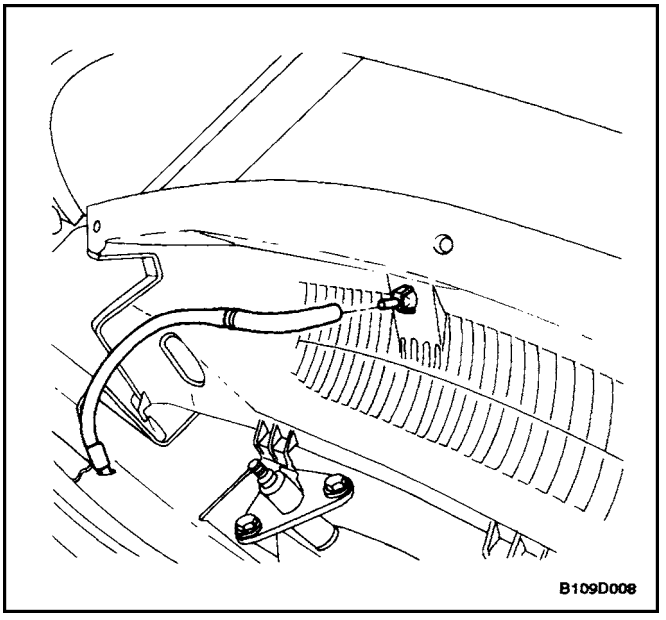

Installation Procedure

1. Connect the washer hoses.

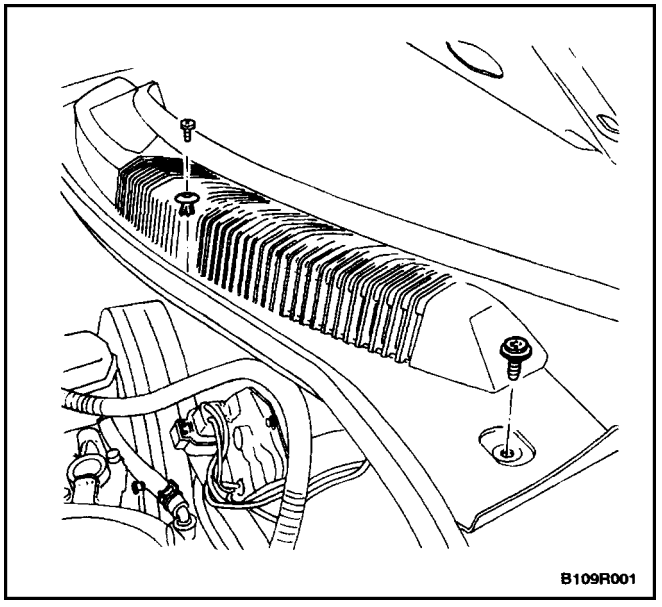

Notice : Dissimilar metals in direct contact with each other may corrode rapidly. Make sure to use the correct fasteners to prevent premature corrosion.

2. Install the two–piece grille and the cowl vent grille screws.

   Tighten

   Tighten the cowl vent grille screws to 4 N•m (35 lbin).

3. Install the wiper arms. Refer to *Section 9D, Wipers/ Washer Systems.*

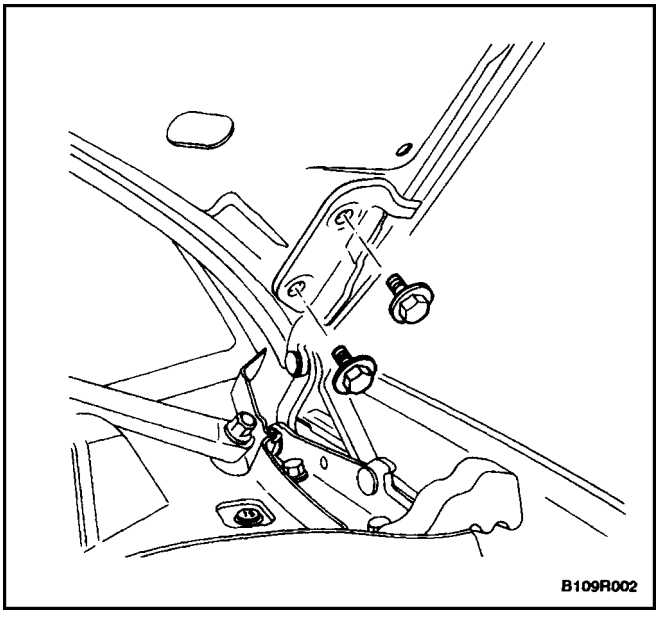

HOOD

Removal Procedure

Notice : Install protective coverings over the fenders and the windshield in order to prevent damage to the paint, the glass and the moldings when you are removing and installing the hood.

1. Raise and support the hood.
2. Mark the position of the hinge to the hood to facilitate alignment during installation.
3. Remove the bolts that retain the hood to both hinges.
4. With the aid of another technician, remove the hood from the hinges.

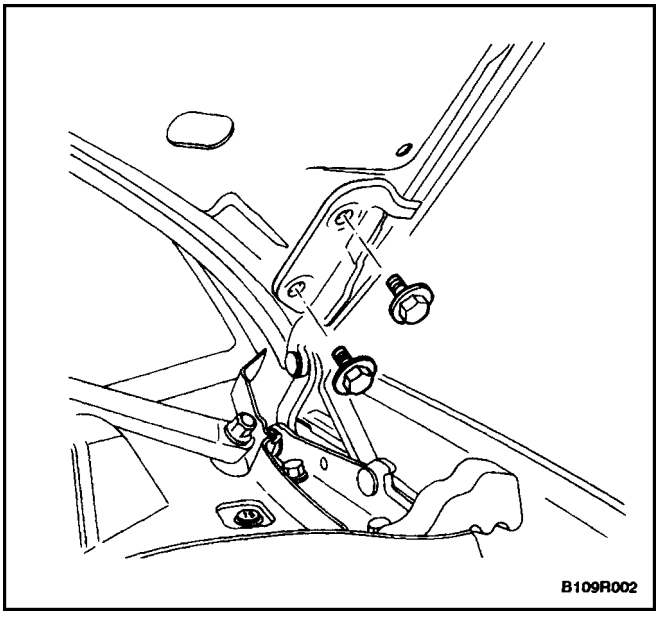

Installation Procedure

1. With the aid of another technician, position the hood in the location marked during removal.

Notice : Dissimilar metals in direct contact with each other may corrode rapidly. Make sure to use the correct fasteners to prevent premature corrosion.

2. Install the two bolts securing the hood to each hinge.

Tighten

Tighten the hood–to–hinge bolts to 27 N•m (20 lb–ft).

3. Inspect the hood for proper alignment.

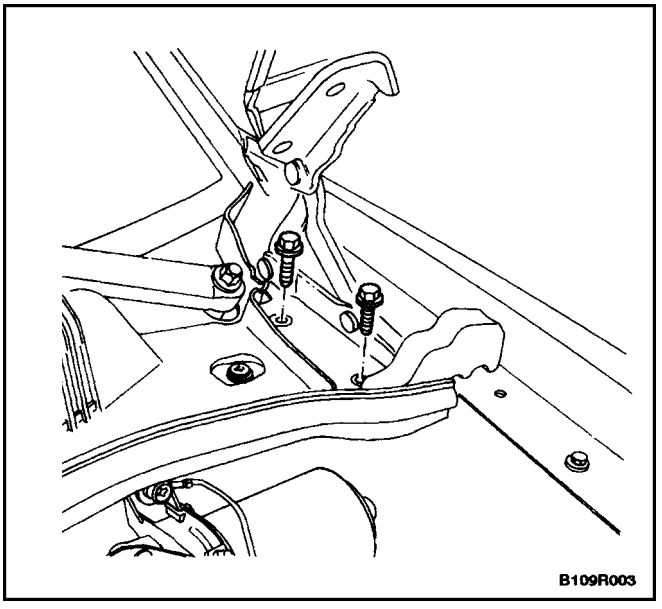

HOOD HINGES

Removal Procedure

1. Remove the hood. Refer to"Hood" in this section.
2. Remove the bolts and the hinge.

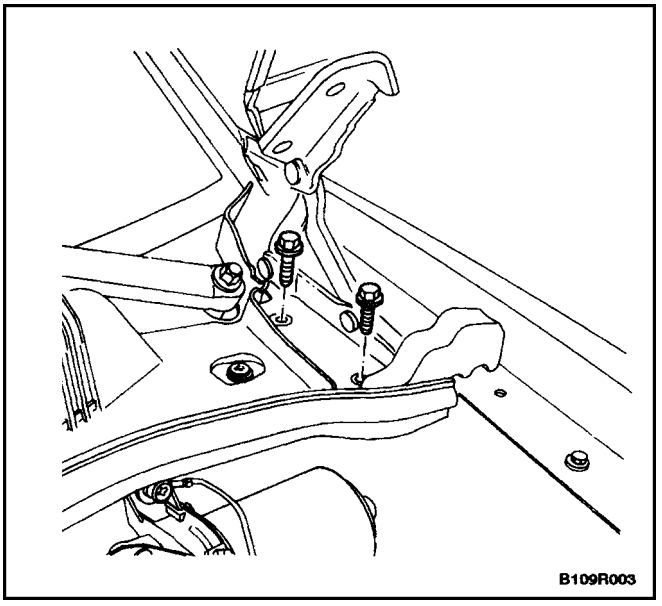

Installation Procedure

Notice : Dissimilar metals in direct contact with each other may corrode rapidly. Make sure to use the correct fasteners to prevent premature corrosion.

1. Install the hinge with the bolts.

   Tighten

   Tighten the hinge bolts to 27 N•m (20 lb–ft).
2. Install the hood. Refer to"Hood" in this section.

HOOD PROP ROD

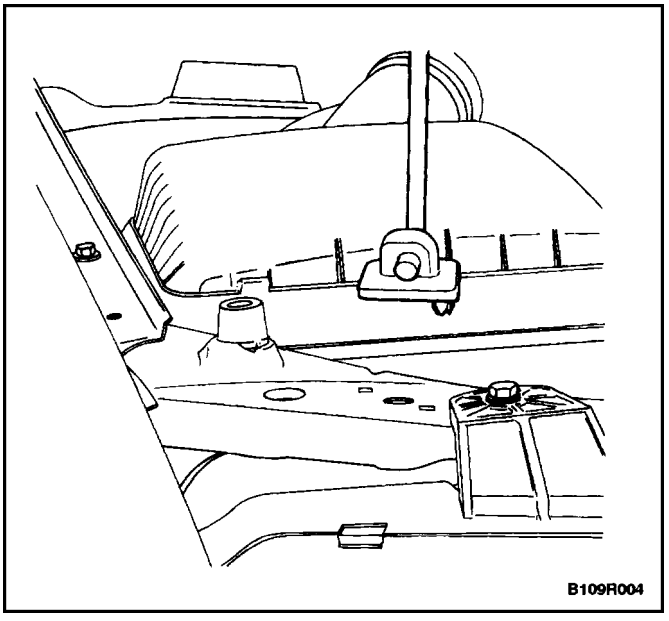

Removal Procedure

1. Support the hood in the open position.
2. Remove the hood prop rod by gently prying the base from the radiator support.

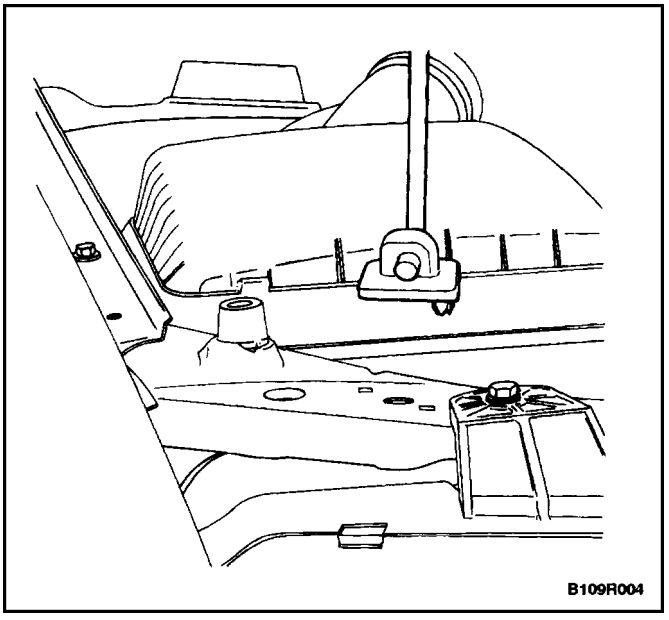

Installation Procedure

1. Install the hood prop rod by snapping the base back into the radiator support.

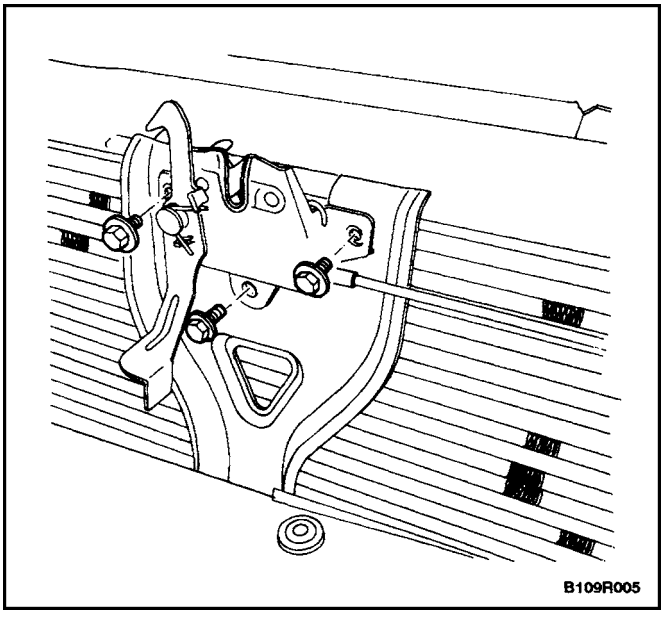

HOOD SECONDARY LATCH

(Left–Hand Drive Shown, Right–Hand Drive Similar)

Removal Procedure

1. Open the hood.
2. Mark the position of the hood latch on the radiator support to facilitate alignment during installation.
3. Remove the bolts and the hood latch.
4. Disconnect the hood release cable.

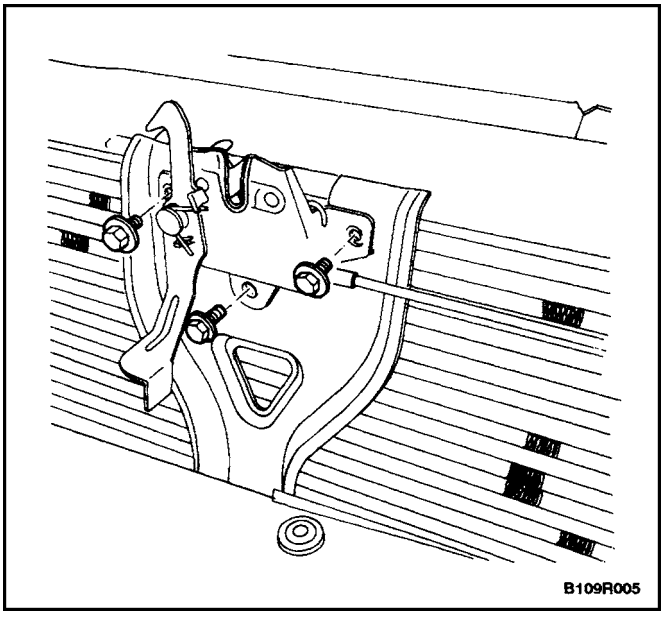

Installation Procedure

Notice : Dissimilar metals in direct contact with each other may corrode rapidly. Make sure to use the correct fasteners to prevent premature corrosion.

1. Connect the hood release cable to the latch.
2. Position the hood latch in the location marked during removal.
3. Install the hood latch with the bolts.

   Tighten

   Tighten the hood latch bolts to 8 N•m (71 lb–in).

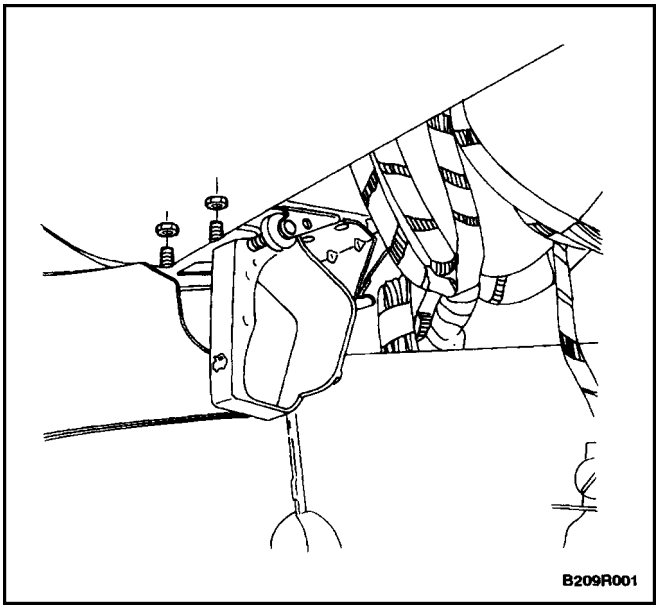

HOOD LATCH RELEASE CABLE

(Left–Hand Drive Shown, Right–Hand Drive Similar)

Removal Procedure

1. Remove the nuts and the hood release handle from the instrument panel.

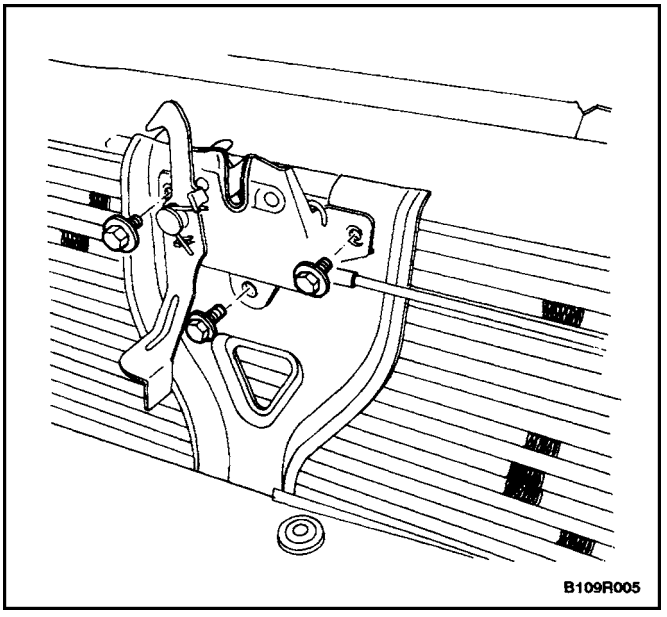

2. Open the hood.
3. Remove the bolts and the hood latch release.
4. Remove the cable from the hood latch release assembly.

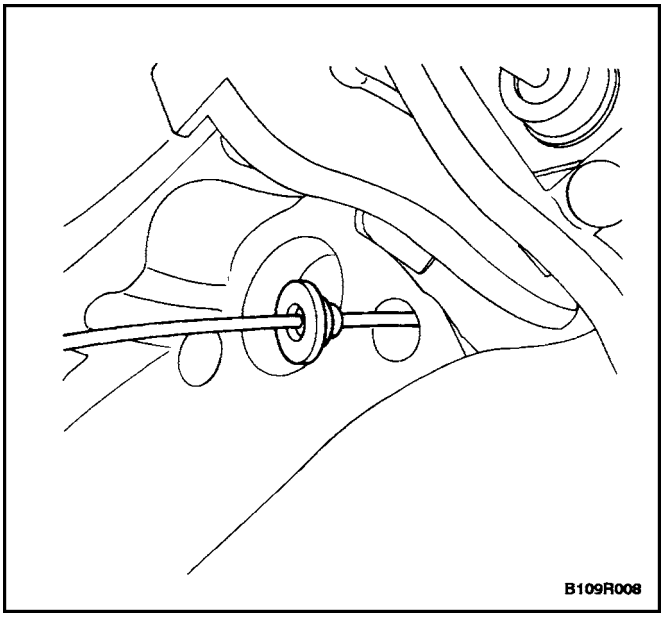

5. Remove the cable and the grommet from inside the vehicle.

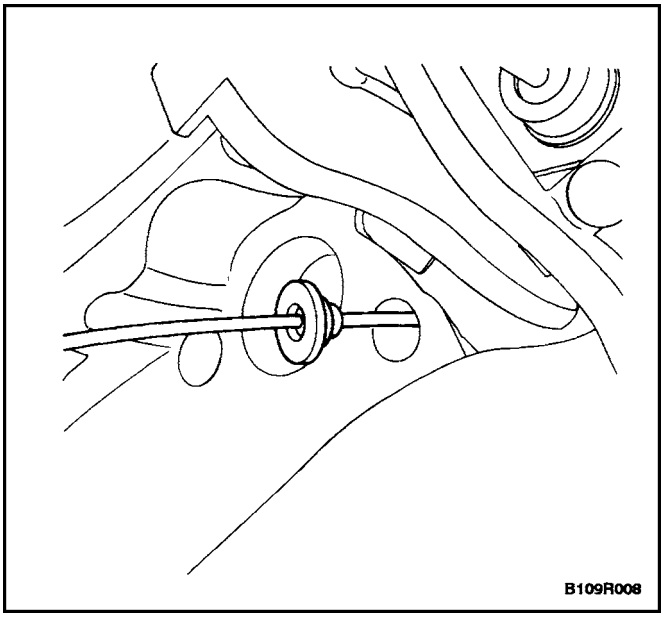

Installation Procedure

Notice : Dissimilar metals in direct contact with each other may corrode rapidly. Make sure to use the correct fasteners to prevent premature corrosion.

1. Install the cable through the engine compartment.
2. Install the cable into the hood latch release handle.
3. Install the grommet in the fire wall.

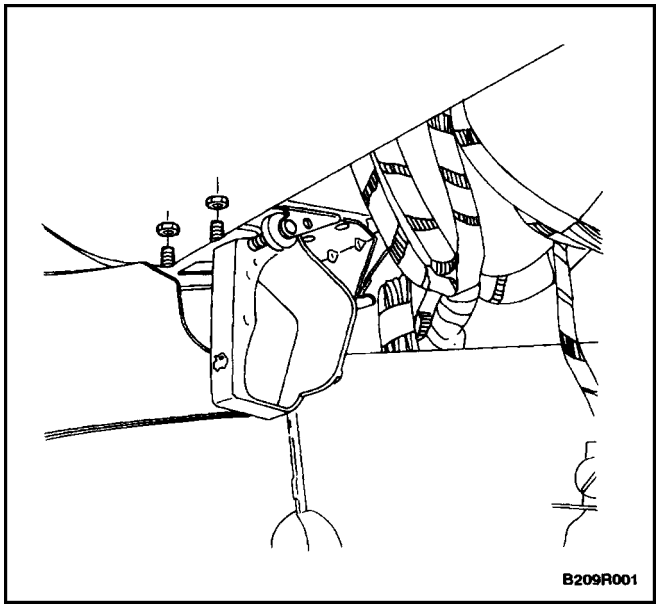

4. Install the hood release handle on the instrument panel with the nuts.

Tighten

Tighten the hood latch bolts to 8 N•m (71 lb–in).

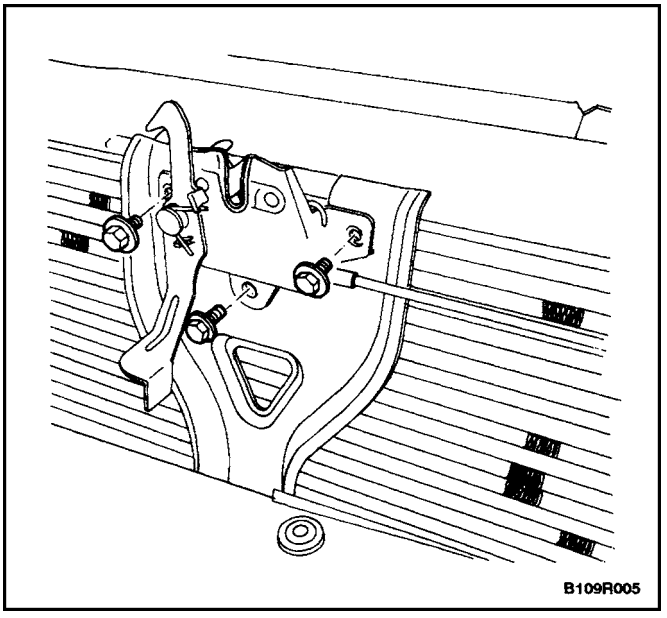

5. Install the cable to the hood latch release assembly.
6. Install the hood latch release assembly with the bolts.

Tighten

Tighten the hood latch bolts to 8 N•m (71 lb–in).

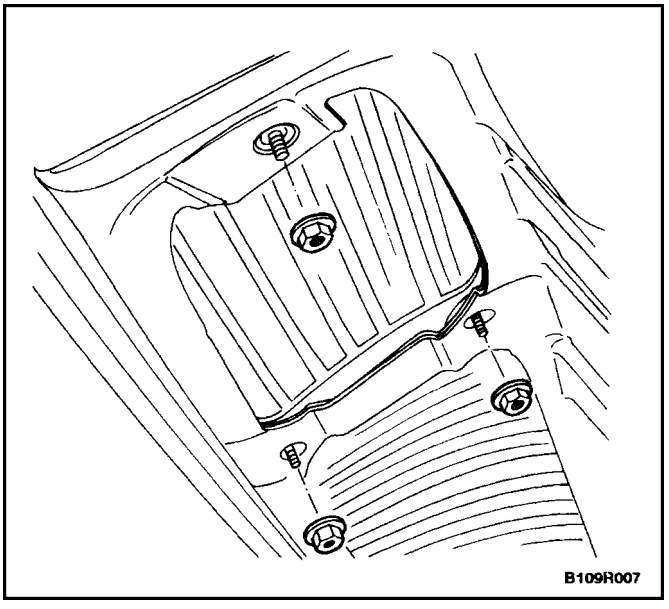

RADIATOR GRILLE

Removal Procedure

1. Open the hood.
2. Remove the nuts and the radiator grille.

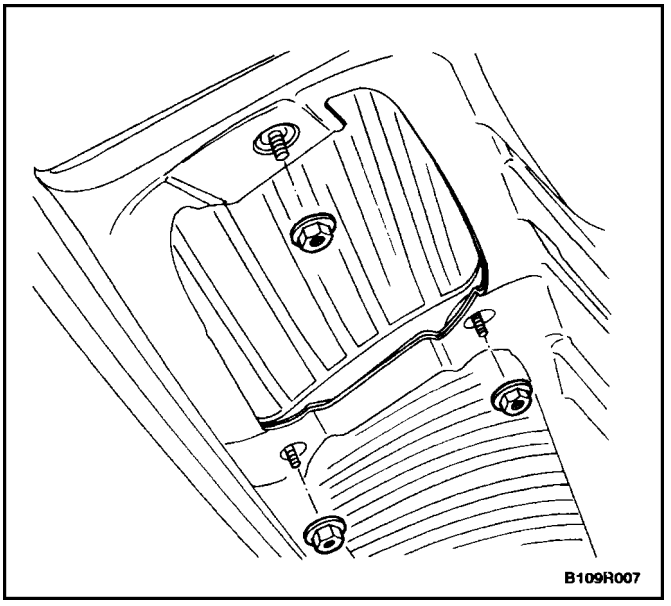

Installation Procedure

Notice : Dissimilar metals in direct contact with each other may corrode rapidly. Make sure to use the correct fasteners to prevent premature corrosion.

1. Install the radiator grille with the nuts.

   Tighten

   Tighten the radiator grille nuts to 4 N•m (35 lb–in).

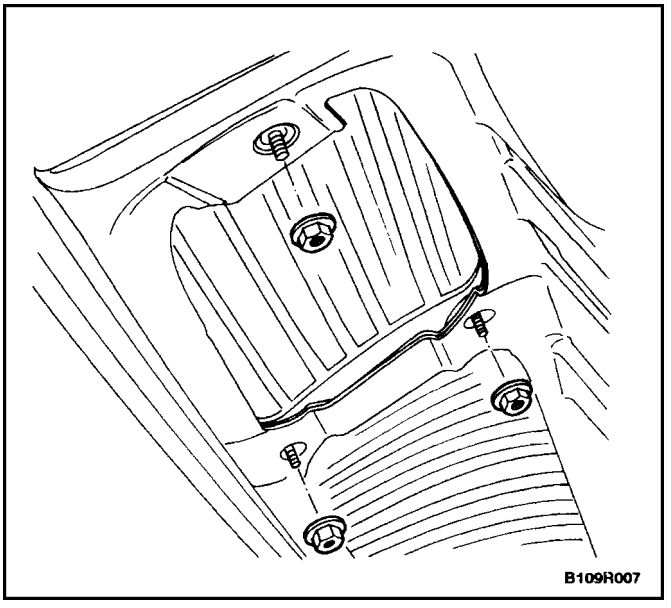

FENDER

Removal Procedure

1. Raise and suitably support the vehicle.
2. Remove the front wheel. Refer to*Section 2E, Tires and Wheels.*
3. Remove the screws, the bolts, and the front wheel well splash shield.

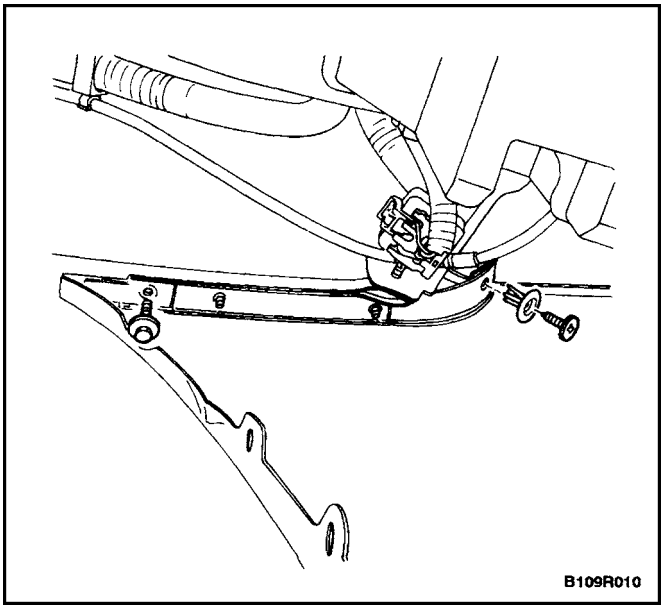

4. Remove the side turn signal lamp. Refer to *Section 9B, Lighting Systems.*
5. Remove the screw and the bolt that secure the front bumper fascia to the fender.

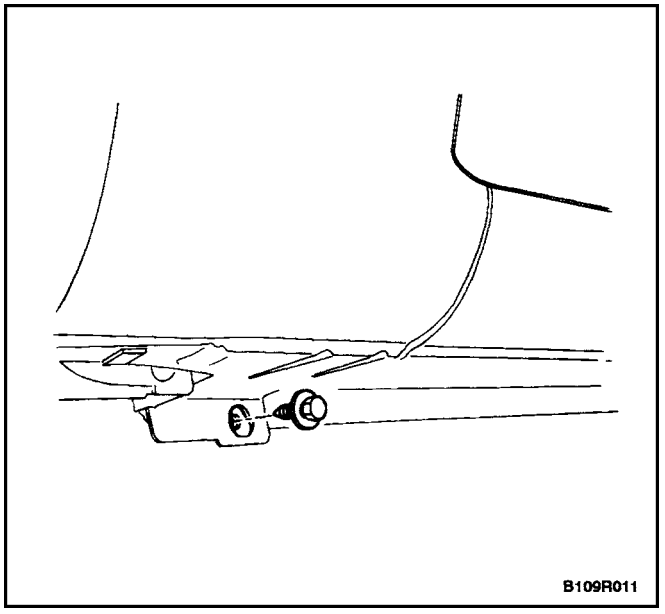

6. Remove the bolt at the base of the fender.

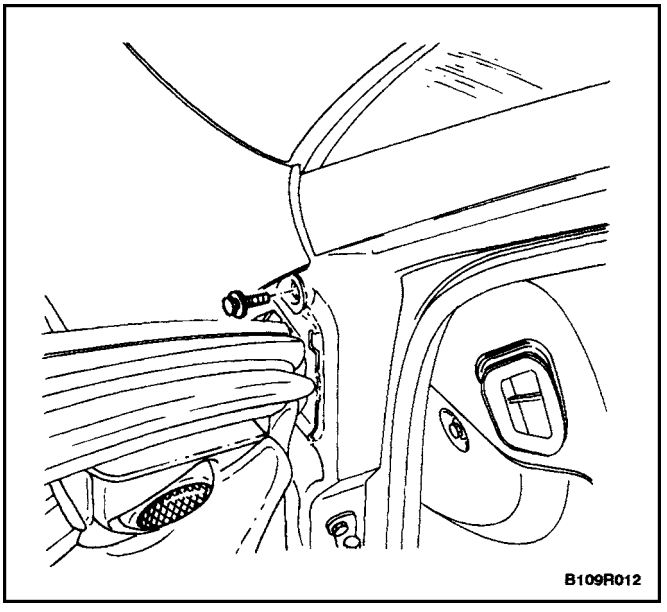

7. Open the front door.
8. Remove the bolt at the base of the A–pillar.

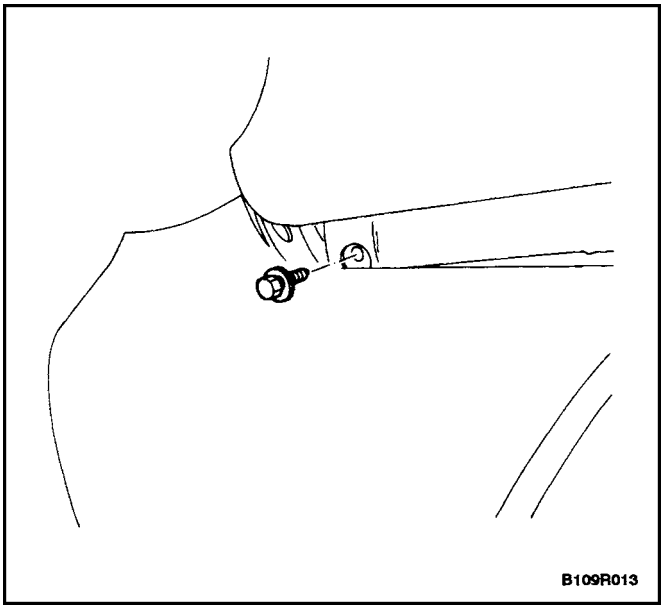

9. Open the hood.
10. Remove the headlamp. Refer to *Section 9B, Lighting Systems.*
11. Remove the bolt between the bumper fascia and the fender.

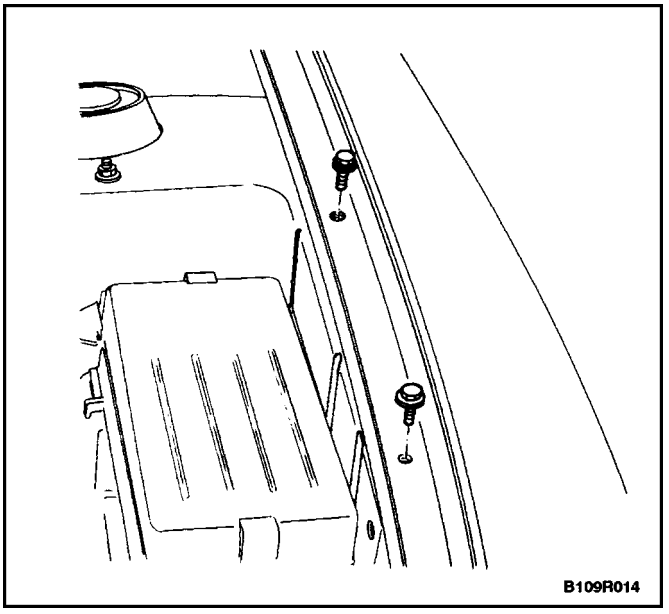

12. Remove the bolts along the top of the fender.
13. Remove the fender.

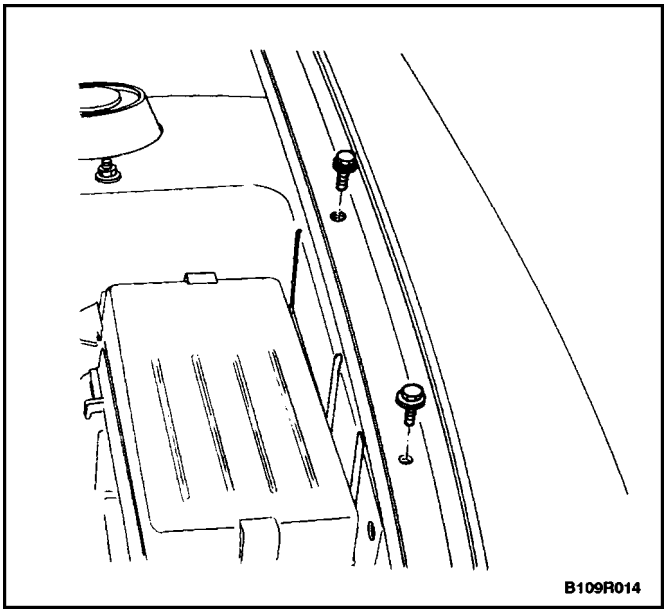

Installation Procedure

1. Install the headlamp. Refer to *Section 9B, Lighting Systems.*
2. Install the fender.

Notice : Dissimilar metals in direct contact with each other may corrode rapidly. Make sure to use the correct fasteners to prevent premature corrosion.

3. Install the bolts along the top of the fender.

Tighten

Tighten the upper fender bolts to 8 N•m (71 lb–in).

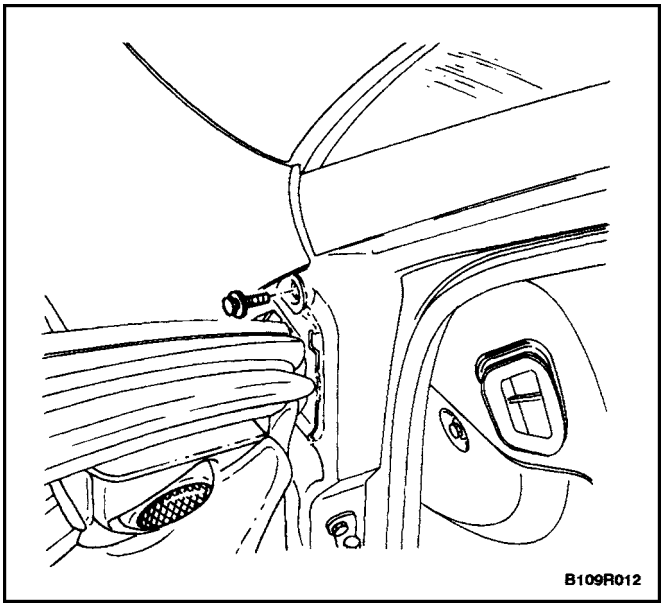

4. Install the bolt at the base of the A–pillar.

Tighten

Tighten the A–pillar fender bolt to 8 N•m (71 lb–in).

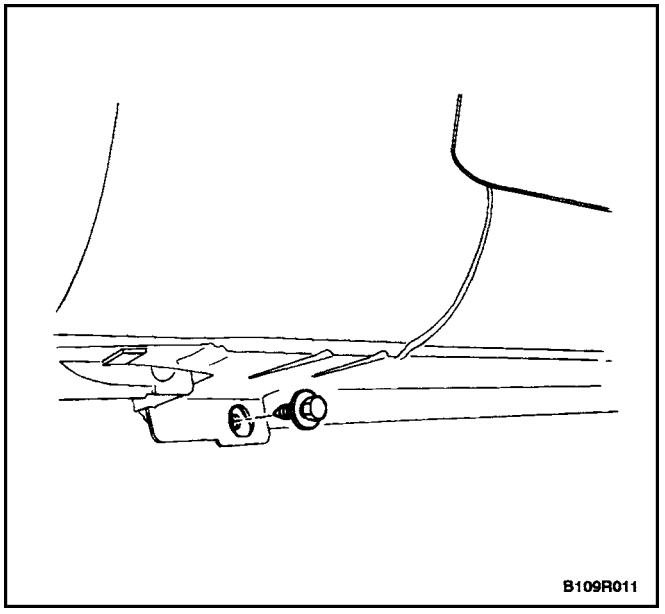

5. Install the bolt at the base of the fender.

Tighten

Tighten the lower fender bolt to 8 N•m (71 lb–in).

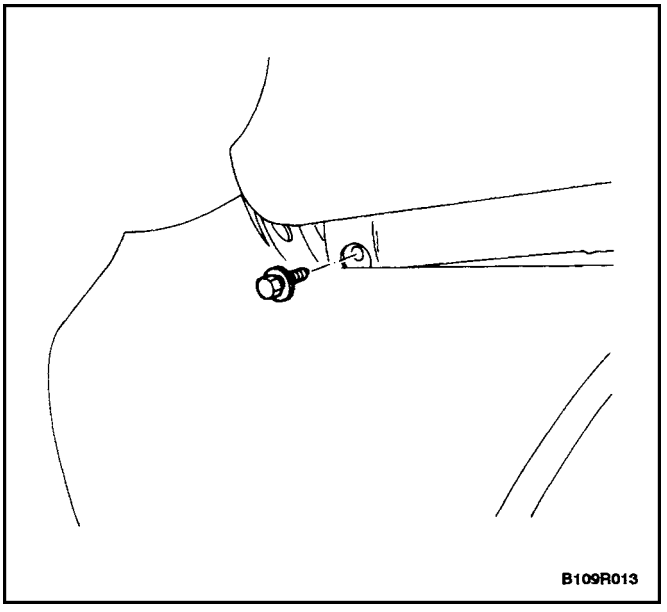

6. Install the bolt between the bumper fascia and the fender.

Tighten

Tighten the fender bolt on the front of the fascia to 4 N•m (35 lb–in).

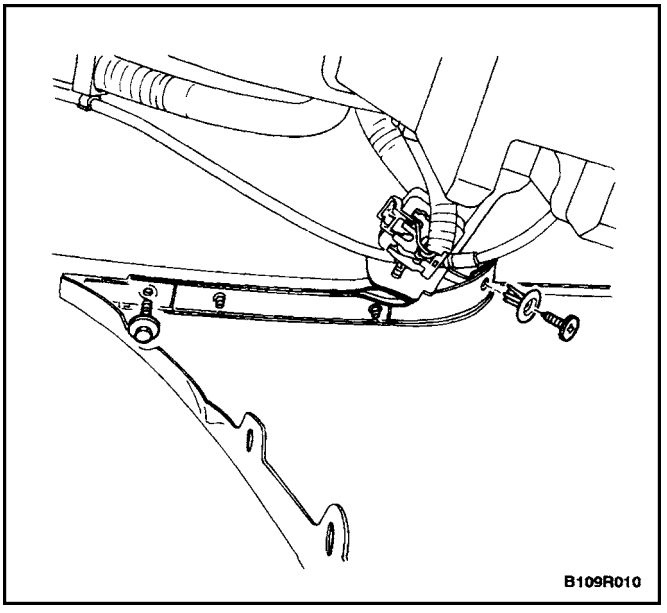

7. Install the fender to the front bumper fascia with the screw and the bolt.

Tighten

Tighten the front bumper fascia–to–fender bolt to 1.5 N•m (13 lb–in).

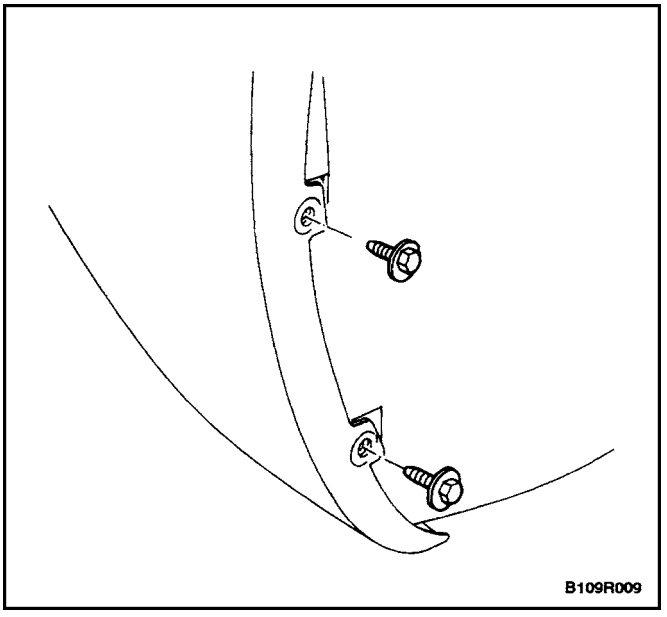

8. Install the side turn signal lamp. Refer to *Section 9B, Lighting Systems.*
9. Install the front wheel well splash shield with the screws and the bolts.

   Tighten

   Tighten the splash shield bolts to 1.5 N•m (13 lb–in).
10. Install the front wheel. Refer to *Section 2E, Tires and Wheels.*
11. Lower the vehicle.

GENERAL DESCRIPTION AND SYSTEM OPERATION

BODY FRONT END

This vehicle has a unitized body with a frame assembly supporting the engine and the transaxle. The fender panels and the radiator support are also integral parts of the body.

SECTION : 9S

BODY REAR END

CAUTION : Disconnect the negative battery cable before removing or installing any electrical unit or when a tool or equipment could easily come in contact with exposed electrical terminals. Disconnecting this cable will help prevent personal injury and damage to the vehicle. The ignition must also be in LOCK unless otherwise noted.

TABLE OF CONTENTS

SPECIFICATIONS 9S–1
FASTENER TIGHTENING SPECIFICATIONS . 9S–1
MAINTENANCE AND REPAIR 9S–3
ON–VEHICLE SERVICE 9S–3
FUEL FILLER DOOR 9S–3
REAR DECK LID (NOTCHBACK) 9S–3
REAR DECK LID SPRINGS (NOTCHBACK) .. 9S–5
LUGGAGE COMPARTMENT LOCK CYLINDER 9S–6
LUGGAGE COMPARTMENT LOCK STRIKER (NOTCHBACK) 9S–7
LUGGAGE COMPARTMENT LOCK (NOTCHBACK AND HATCHBACK) 9S–7
WEATHERSTRIP 9S–9
HATCHBACK DOOR 9S–9
GAS SUPPORT ASSEMBLIES (HATCHBACK) 9S–10
LUGGAGE COMPARTMENT LOCK STRIKER (HATCHBACK) 9S–11
REAR SPOILER (HATCHBACK) 9S–11
TAILGATE (WAGON) 9S–12
GAS SUPPORT ASSEMBLIES (WAGON) ... 9S–13
LUGGAGE COMPARTMENT LOCK STRIKER (WAGON) 9S–14
REAR DECK LID/HATCHBACK DOOR REMOTE CABLE AND HANDLE (NOTCHBACK) 9S–15
FUEL FILLER DOOR REMOTE CABLE AND HANDLE 9S–16
GENERAL DESCRIPTION AND SYSTEM OPERATION 9S–19
FUEL FILLER DOOR 9S–19
REAR DECK LID (NOTCHBACK) 9S–19
HATCHBACK DOOR 9S–19
TAILGATE (WAGON) 9S–19

SPECIFICATIONS

FASTENER TIGHTENING SPECIFICATIONS

Application	N•m	Lb–Ft	Lb–In
Fuel Filler Door Screws	4	–	35
Fuel Filler Door/Remote Cable Handle Screws	8	–	71
Gas Support Assembly Bolts	8	–	71
Gas Support Assembly Studs	20	15	–
Hatchback Door Lock Striker Screws	8	–	71
Hatchback Hinge Bolts	20	15	–
Lower B–Pillar Seat Belt Anchor Bolt	35	26	–
Luggage Compartment Lock Cylinder Nuts	4	–	35

Application	N•m	Lb–Ft	Lb–In
Luggage Compartment Lock Screws	6	–	53
Luggage Compartment Lock Striker Bolts	8	–	71
Rear Deck Lid Bolts	10	–	89
Rear Spoiler Nuts	4	–	35
Remote Cable Handle Screws	8	–	71
Tailgate Hinge Bolts	20	15	–
Tailgate Lock Striker Bolts	10	–	89

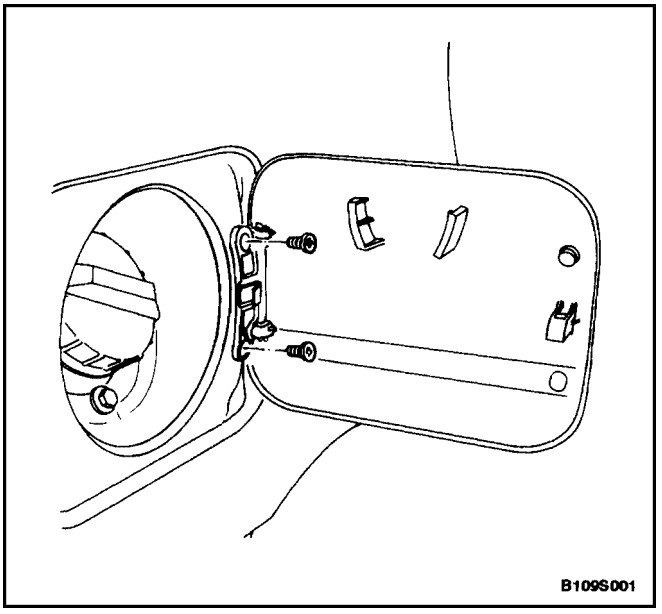

MAINTENANCE AND REPAIR

ON–VEHICLE SERVICE

FUEL FILLER DOOR

Removal Procedure

1. Remove the screws and the fuel filler door.

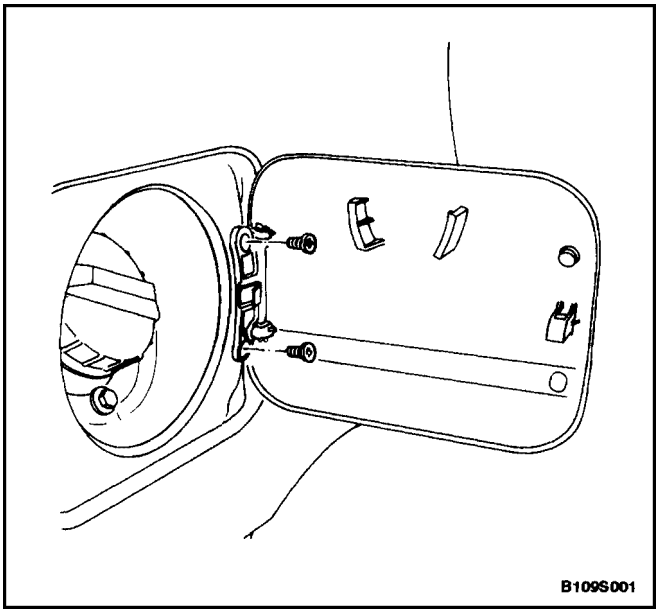

Installation Procedure

Notice : Dissimilar metals in direct contact with each other may corrode rapidly. Make sure to use the correct fasteners to prevent premature corrosion.

1. Install the fuel filler door with the screws.

   Tighten

   Tighten the fuel filler door screws to 4 N•m (35 lb–in).

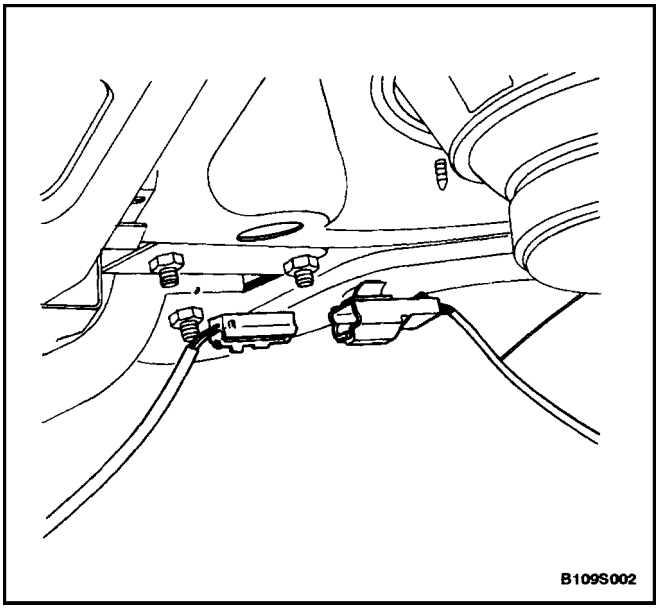

REAR DECK LID (NOTCHBACK)

Removal Procedure

1. Disconnect the negative battery cable.
2. Disconnect the electrical connector.

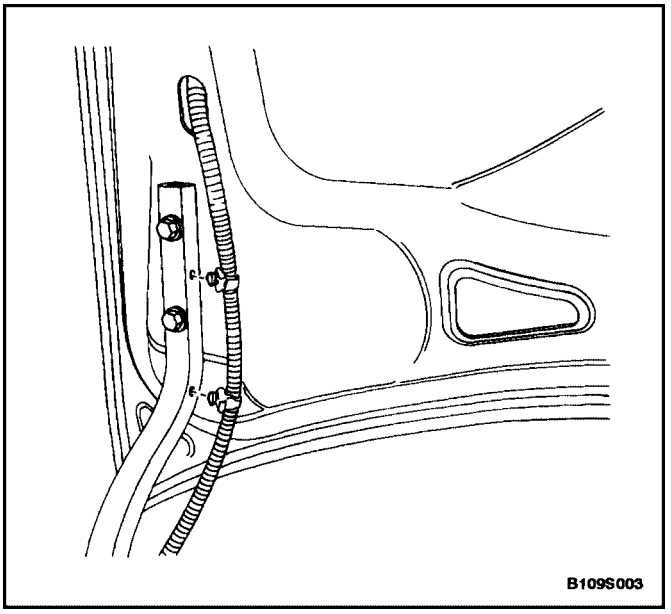

3. Remove the electrical harness from the rear deck lid hinge arm.

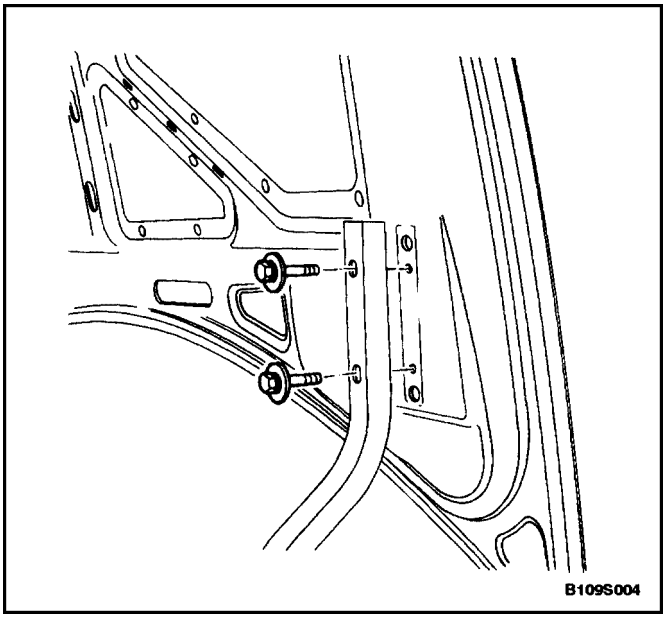

4. Remove the bolts and the rear deck lid.

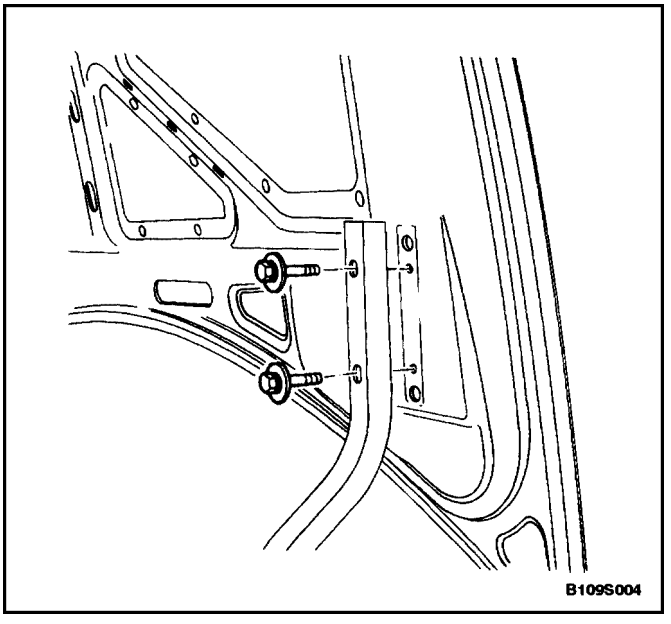

Installation Procedure

Notice : Dissimilar metals in direct contact with each other may corrode rapidly. Make sure to use the correct fasteners to prevent premature corrosion.

1. Install the rear deck lid with the bolts.

   ### Tighten

   Tighten the rear deck lid bolts to 10 N•m (89 lb–in).

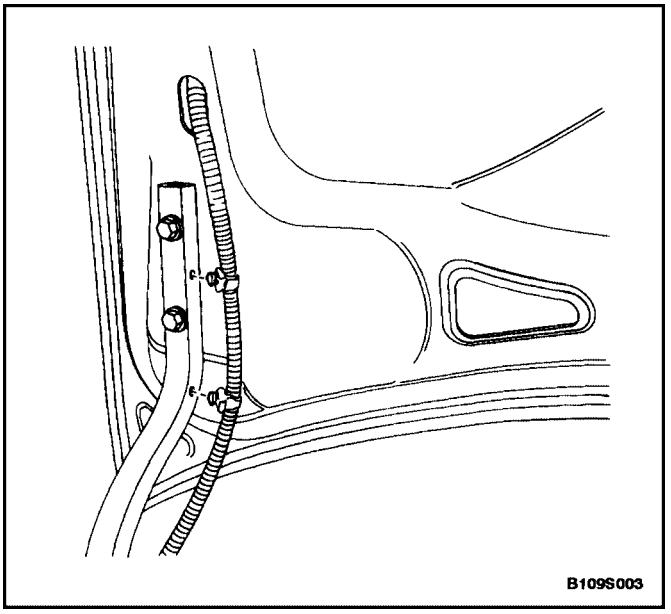

2. Install the electrical harness to the rear deck lid hinge arm.

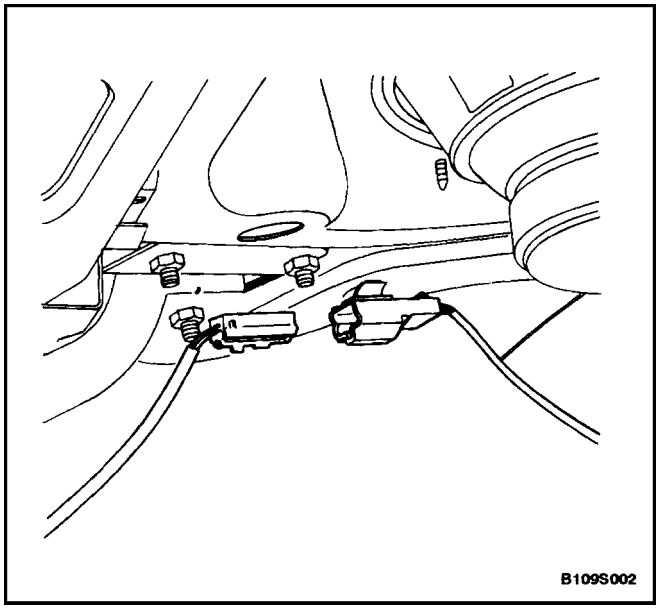

3. Connect the electrical connector.
4. Connect the negative battery cable.

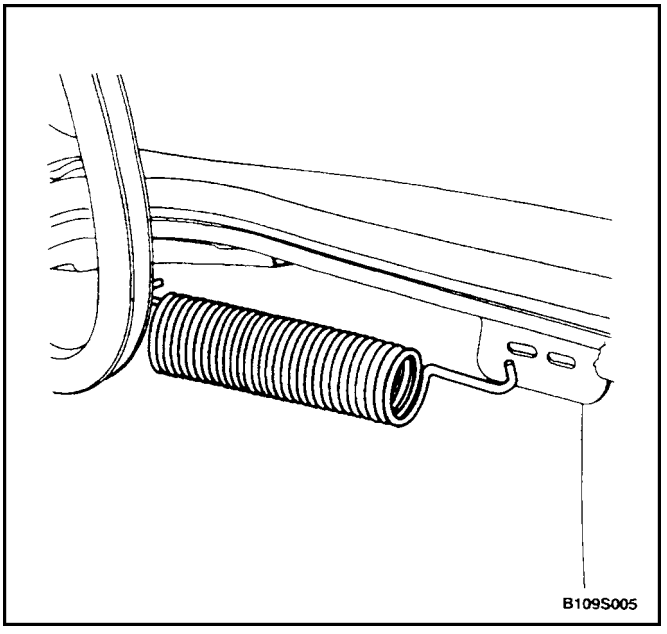

REAR DECK LID SPRINGS (NOTCHBACK)

Removal Procedure

1. Raise and support the deck lid in the open position.
2. Pull the spring out of the rear mount.
3. Remove the spring from the hinge.

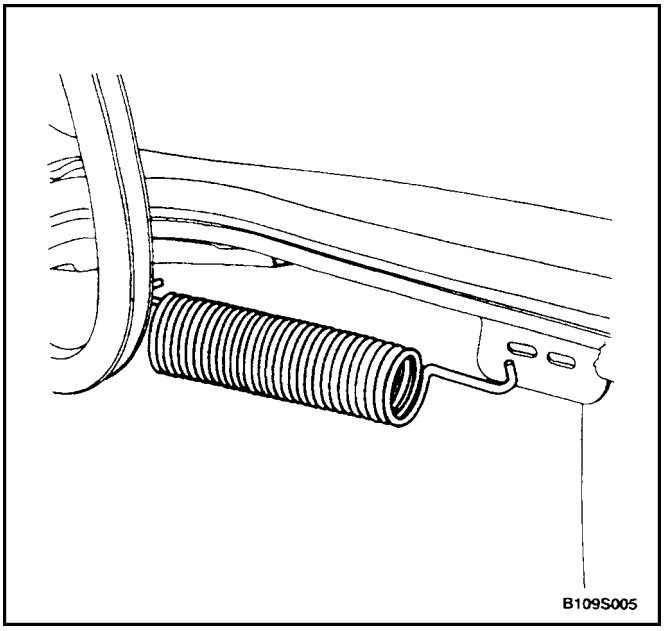

Installation Procedure

1. Install the spring into the hinge mount.
2. Extend the spring to mount it in the rear mounting hole.

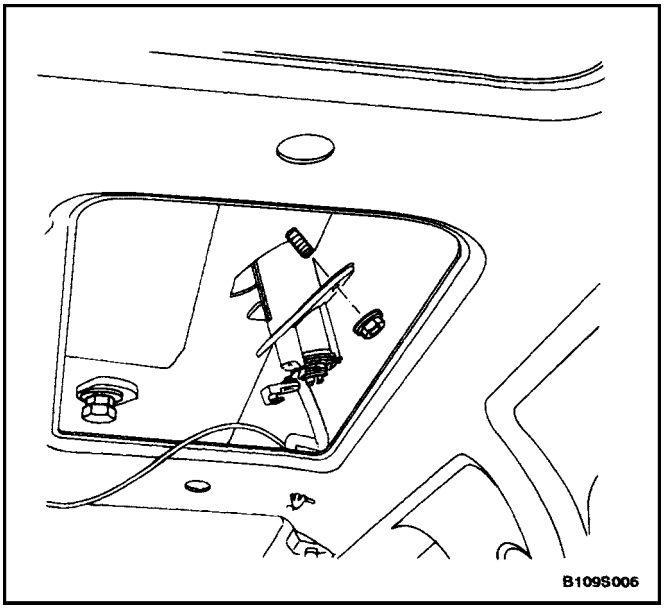

LUGGAGE COMPARTMENT LOCK CYLINDER

(Notchback Shown, Hatchback and Wagon Similar)

Removal Procedure

1. Remove the lower garnish molding (hatchback and wagon only).
2. Remove the nuts that secure the lock cylinder.
3. Disconnect the lock rod.
4. Remove the luggage compartment lock cylinder.

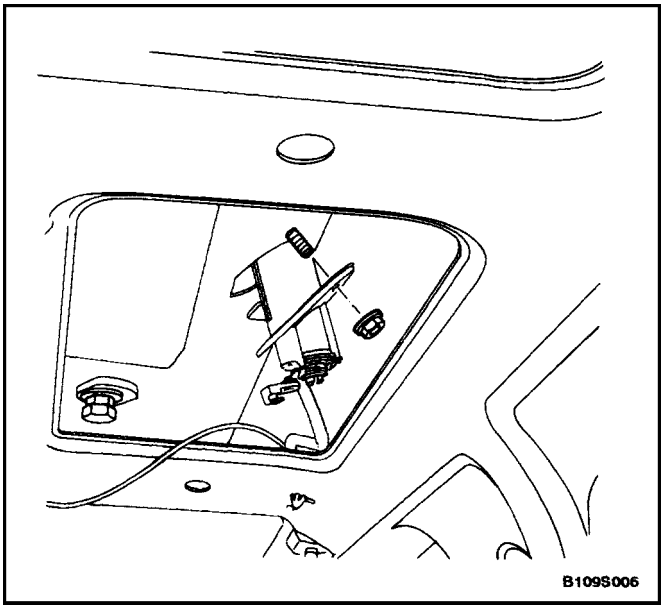

Installation Procedure

1. Install the luggage compartment lock cylinder.
2. Connect the lock rod.

Notice : Dissimilar metals in direct contact with each other may corrode rapidly. Make sure to use the correct fasteners to prevent premature corrosion.

3. Secure the luggage compartment lock cylinder with the nuts.

   Tighten

   Tighten the luggage compartment lock cylinder nuts to 4 N•m (35 lb–in).
4. Install the lower garnish molding (hatchback and wagon only).

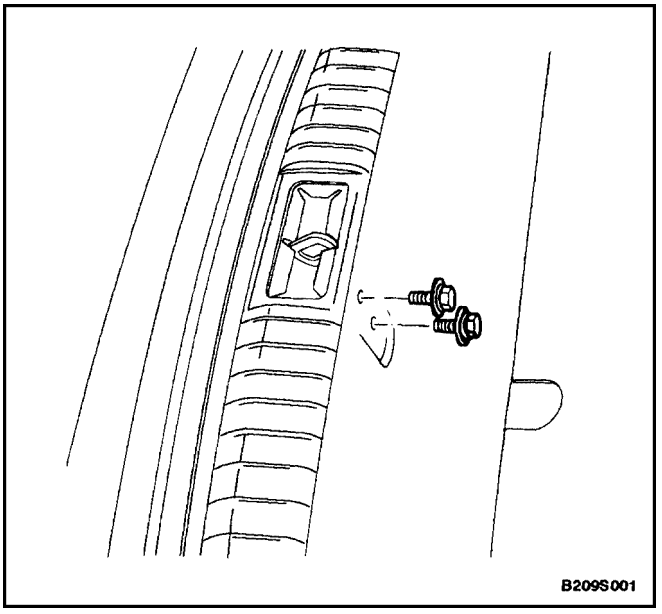

LUGGAGE COMPARTMENT LOCK STRIKER (NOTCHBACK)

Removal Procedure

1. Open the luggage compartment.
2. Remove the bolts securing the lock striker.
3. Pull the lock striker out.
4. Disconnect the lock release cable from the lock striker.

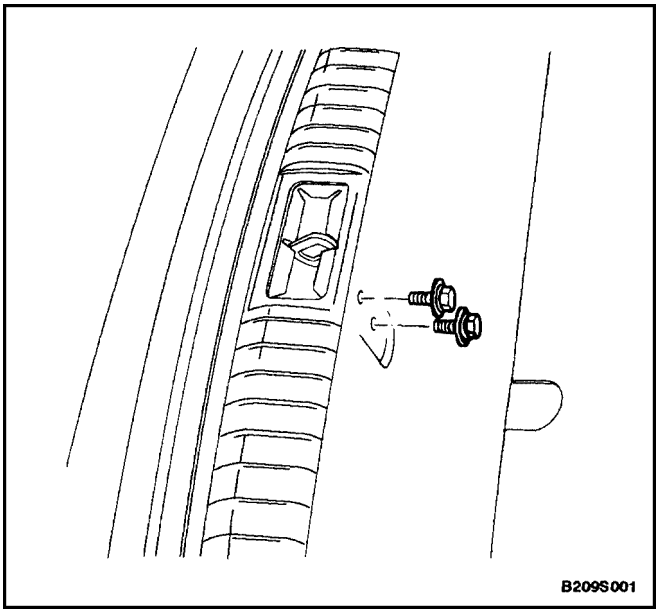

Installation Procedure

1. Connect the lock release cable.

Notice : Dissimilar metals in direct contact with each other may corrode rapidly. Make sure to use the correct fasteners to prevent premature corrosion.

2. Install the lock striker with the bolts.

Tighten

Tighten the luggage compartment lock striker bolts to 8 N•m (71 lb–in).

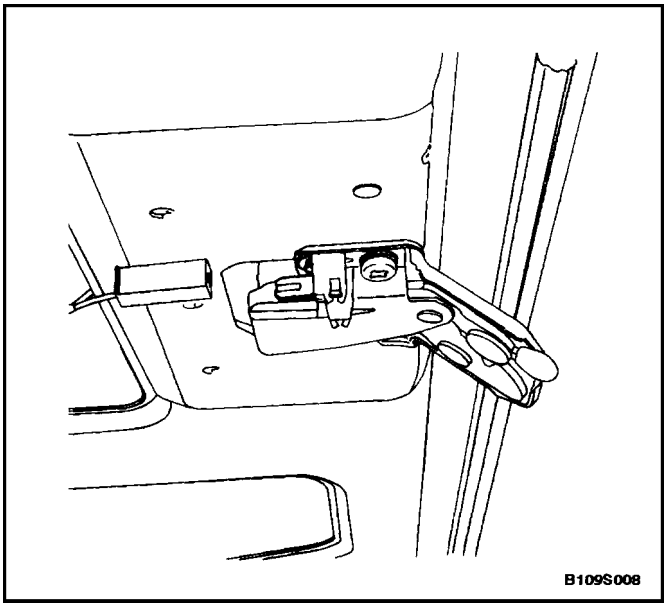

LUGGAGE COMPARTMENT LOCK (NOTCHBACK AND HATCHBACK)

(Notchback Shown, Hatchback Similar)

Removal Procedure

1. Disconnect the negative battery cable.
2. Remove the lock trim cover (hatchback only).
3. Disconnect the electrical connector.

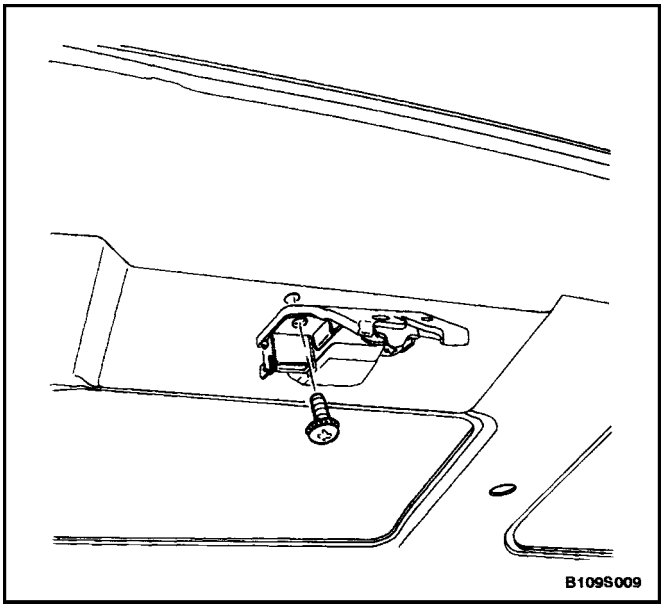

4. Remove the screws and the luggage compartment lock.
5. Disconnect the lock rod.

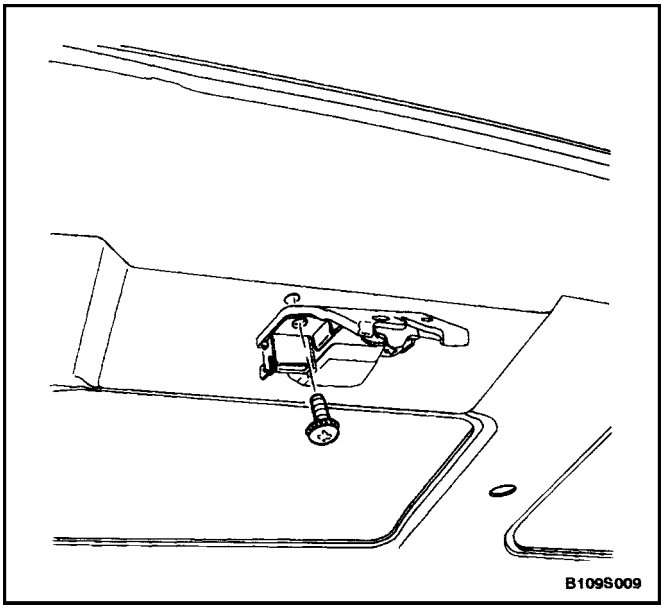

Installation Procedure

1. Connect the lock rod.

Notice : Dissimilar metals in direct contact with each other may corrode rapidly. Make sure to use the correct fasteners to prevent premature corrosion.

2. Install the luggage compartment lock with the screws.

Tighten

Tighten the luggage compartment lock screws to 6 N•m (53 lb–in).

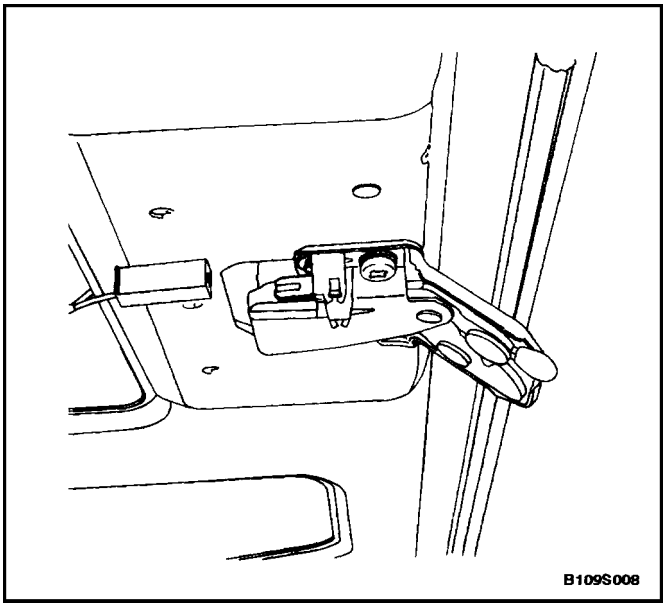

3. Connect the electrical connector.
4. Install the lock trim cover (hatchback only).
5. Connect the negative battery cable.

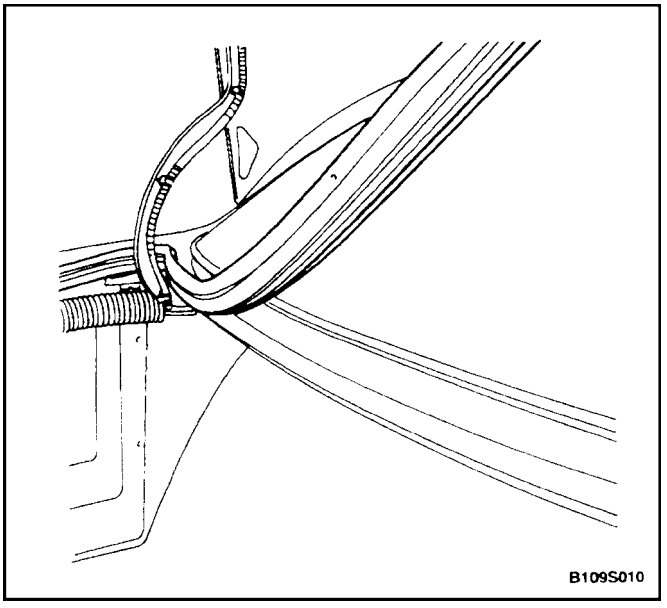

WEATHERSTRIP

(Notchback Shown, Hatchback Similar)

Removal Procedure

1. Open the luggage compartment lid.
2. Remove the weatherstrip from around the gutter.

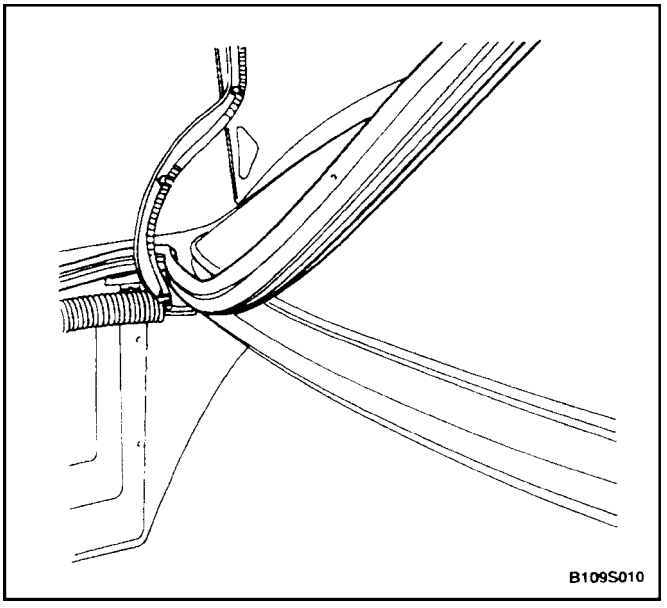

Installation Procedure

1. Install the weatherstrip onto the gutter flange.
2. Inspect the weatherstrip. Make sure that the clinch is completely seated onto the flange.
3. Using a water hose without a nozzle, test the rear deck lid to make sure that no leaks are present.
   - If there are no leaks present, the weatherstrip does not need to be held in place. No further repair is required.
   - If leaks are present, continue with the remainder of the installation procedure.
4. Remove the weatherstrip.
5. Install the new weatherstrip onto the gutter flange.

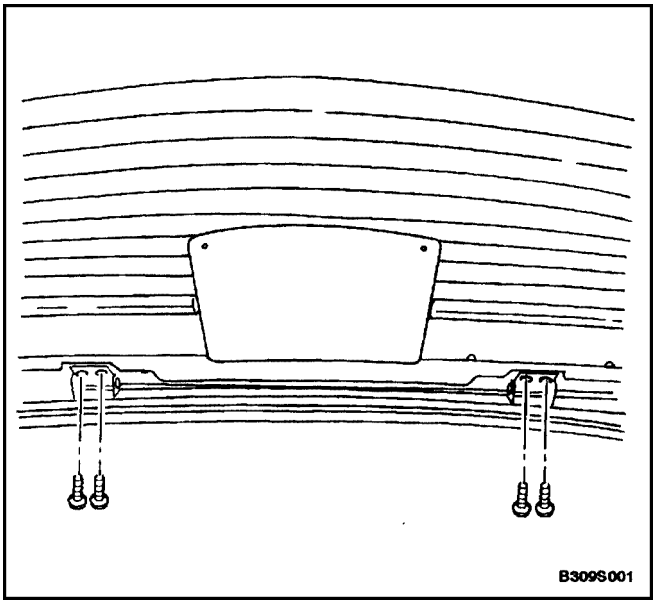

HATCHBACK DOOR

Removal Procedure

1. Open and suitably support the hatchback door.
2. Disconnect the hatchback door grommets, electrical connectors, and washer hose.
3. Remove the gas support assemblies from the hatchback door. Refer to"Gas Support Assemblies (Hatchback)" in this section.
4. With the aid of another technician, remove the bolts and the hatchback door from the hinges.

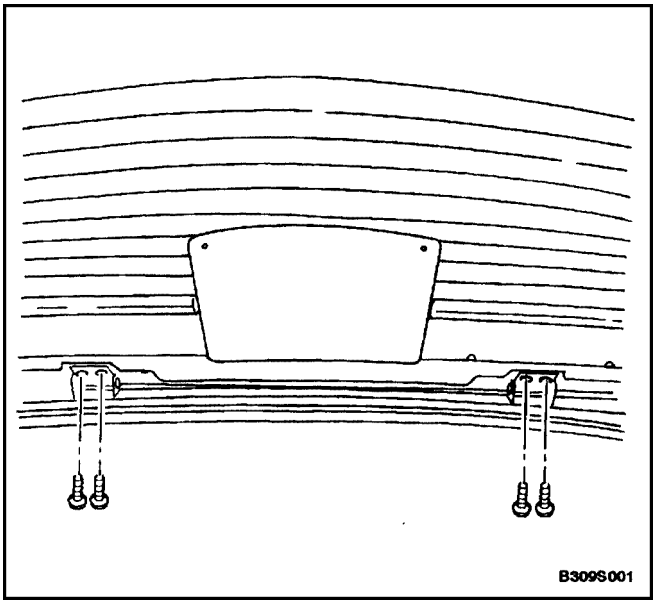

Installation Procedure

1. With the aid of another technician, install the hatchback door to the hinges with the bolts.

   Tighten

   Tighten the hatchback hinge bolts to 20 N•m (15 lbft).
2. Install the gas support assemblies to the hatchback door. Refer to"Gas Support Assemblies (Hatchback)" in this section.
3. Connect the hatchback door electrical connectors, washer hose, and grommets.
4. Close the hatchback door.

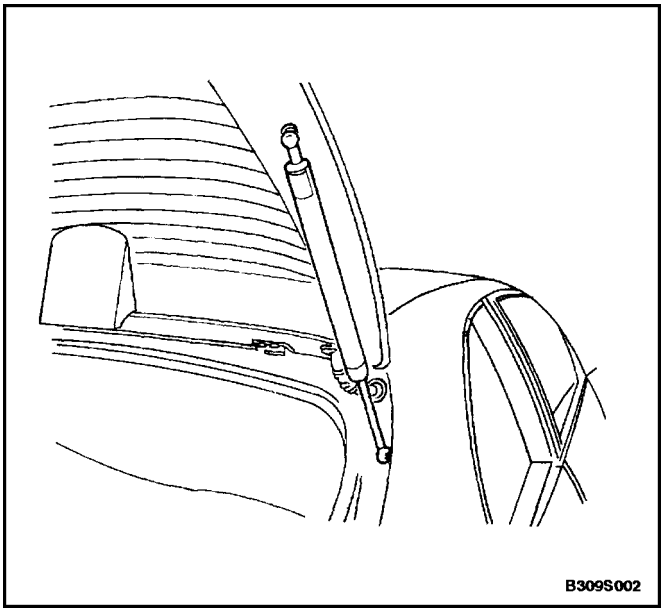

GAS SUPPORT ASSEMBLIES (HATCHBACK)

Removal Procedure

1. Open and suitably support the hatchback door.
2. Unscrew and remove the gas support assembly from the hatchback door and the body.

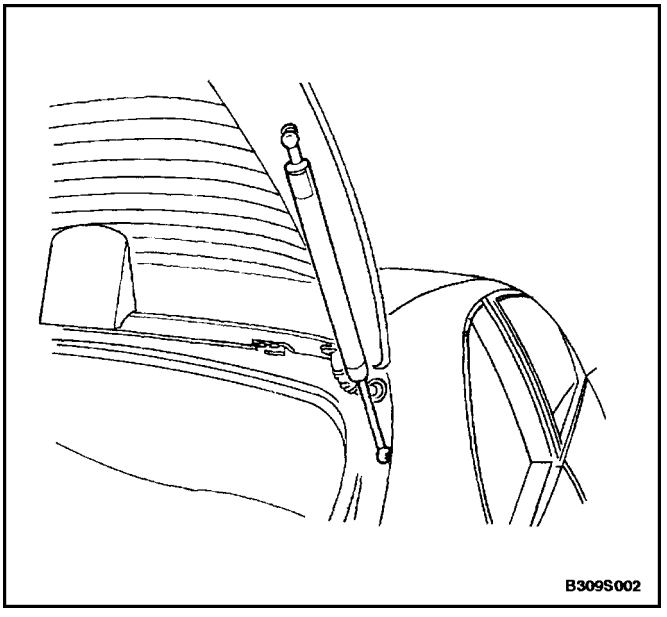

Installation Procedure

1. Install the gas support assembly onto the hatchback door and the body.

   Tighten

   Tighten the gas support assembly studs to 20 N•m (15 lb–ft).
2. Close the hatchback door.

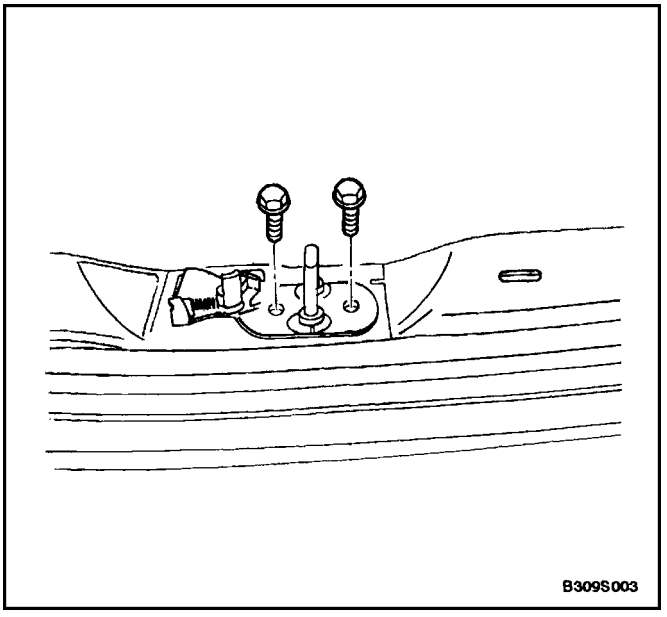

LUGGAGE COMPARTMENT LOCK STRIKER (HATCHBACK)

Removal Procedure

1. Open the hatchback door.
2. Remove the luggage compartment rear trim panel. Refer to *Section 9G, Interior Trim.*
3. Remove the screws that secure the lock striker.

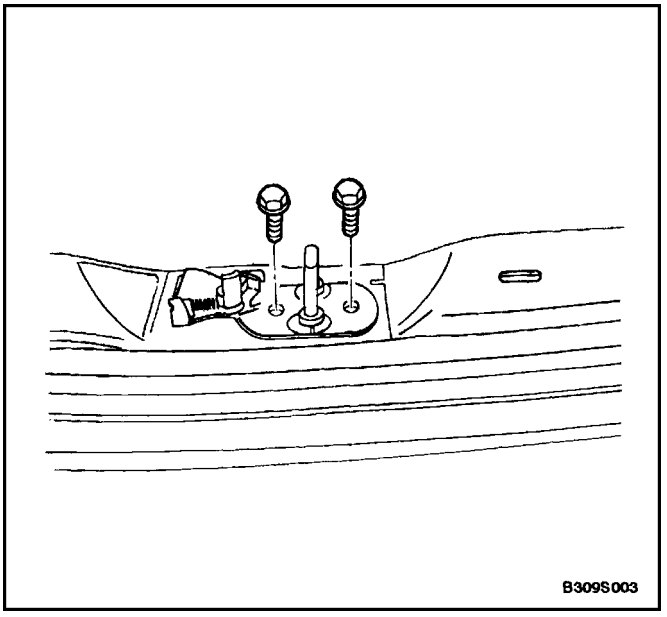

Installation Procedure

1. Install the lock striker with the screws.

   Tighten

   Tighten the hatchback door lock striker screws to 8 N•m (71 lb–in).
2. Install the luggage compartment rear trim panel. Refer to *Section 9G, Interior Trim.*
3. Close the hatchback door.

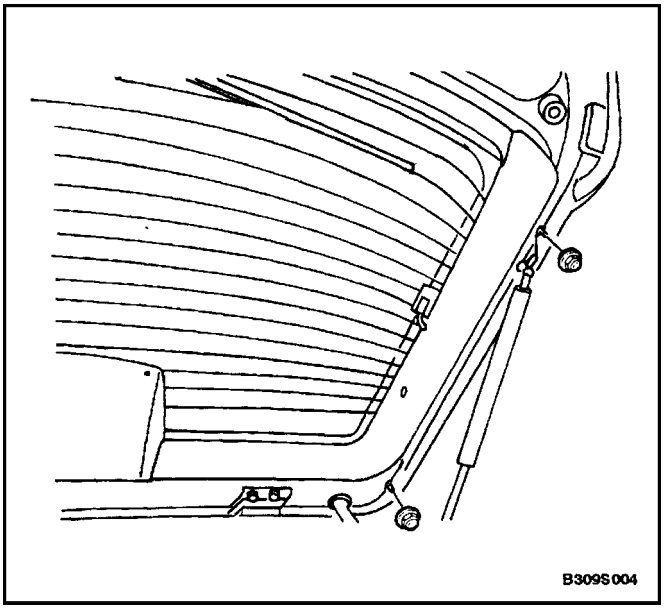

REAR SPOILER (HATCHBACK)

Removal Procedure

1. Open the hatchback door.
2. Remove the nuts and the rear spoiler.

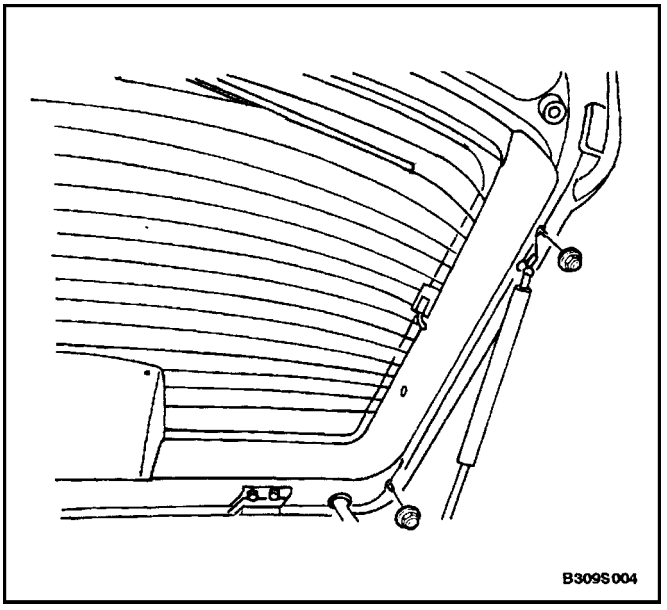

Installation Procedure

1. Install the rear spoiler with the nuts.

   Tighten

   Tighten the rear spoiler nuts to 4 N•m (35 lb–in).
2. Close the hatchback door.

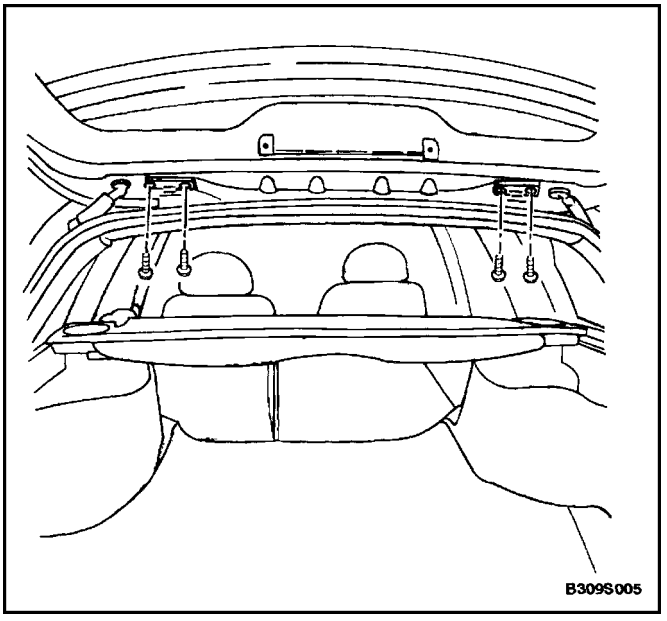

TAILGATE (WAGON)

Removal Procedure

1. Open and suitably support the tailgate.
2. Disconnect the tailgate grommets, electrical connectors, and washer hose.
3. Remove the gas support assemblies from the tailgate. Refer to”Gas Support Assemblies (Hatchback)” in this section
4. With the aid of another technician, remove the bolts and the tailgate from the hinges.

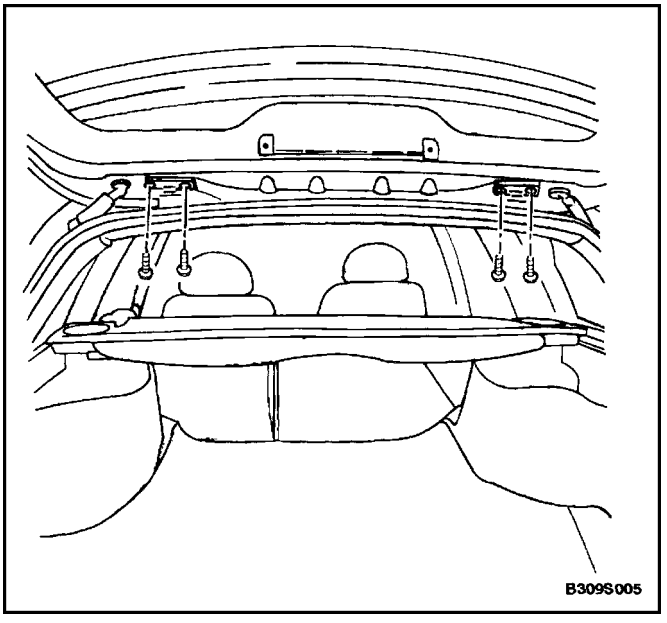

Installation Procedure

1. With the aid of another technician, install the tailgate to the hinges with the bolts.

   Tighten

   Tighten the tailgate hinge bolts to 20 N•m (15 lb–ft).
2. Install the gas support assemblies to the tailgate. Refer to”Gas Support Assemblies (Hatchback)” in this section.
3. Connect the tailgate electrical connectors, washer hose, and grommets..
4. Close the tailgate.

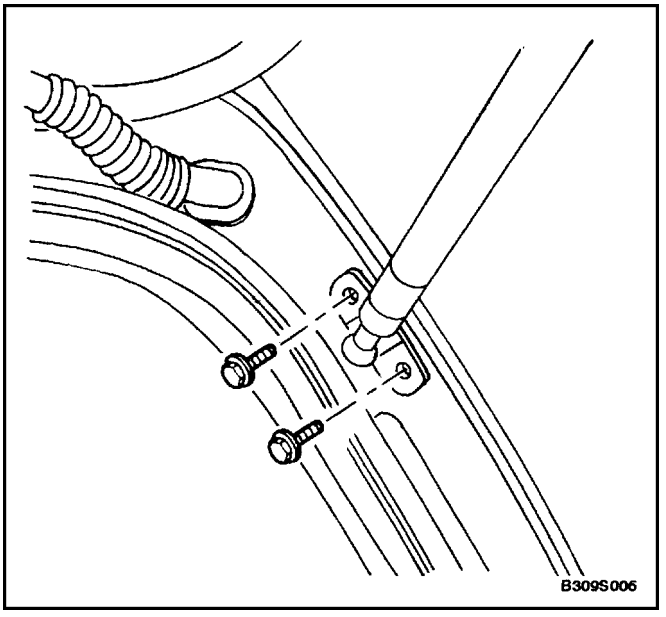

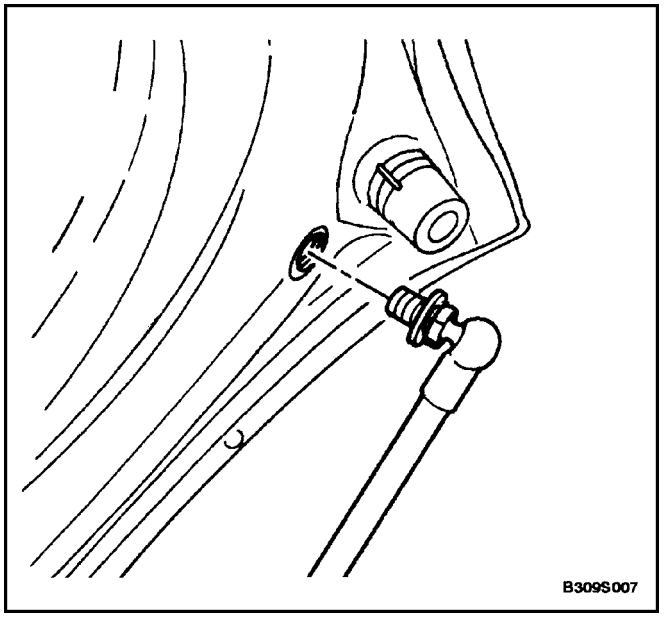

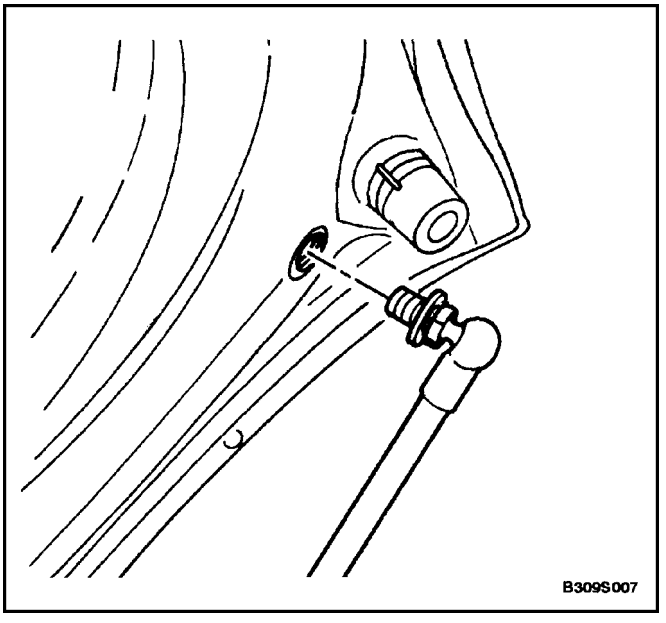

GAS SUPPORT ASSEMBLIES (WAGON)

Removal Procedure

1. Open and suitably support the tailgate.
2. Remove the bolts and the gas support assembly from the body.
3. Unscrew and remove the gas support assembly from the tailgate.

Installation Procedure

1. Install the gas support assembly onto the tailgate.

   Tighten

   Tighten the gas support assembly studs to 20 N•m (15 lb–ft).

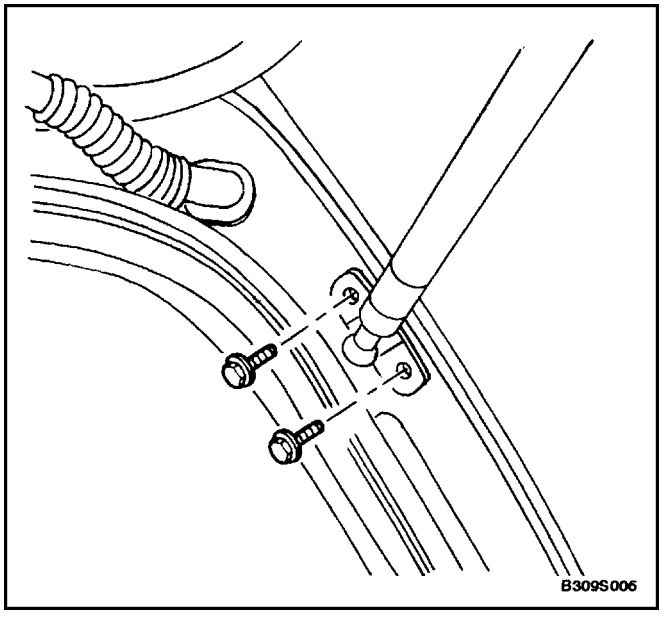

2. Install the gas support assembly onto the body with the bolts.

Tighten

Tighten the gas support assembly bolts to 8 N•m (71 lb–in).

3. Close the tailgate.

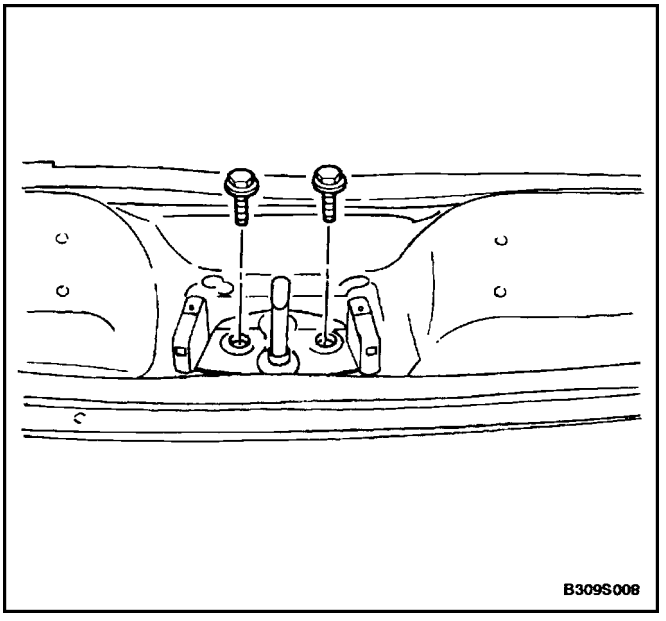

LUGGAGE COMPARTMENT LOCK STRIKER (WAGON)

Removal Procedure

1. Open the tailgate.
2. Remove the luggage compartment rear trim panel. Refer to *Section 9G, Interior Trim.*
3. Remove the bolts that secure the lock striker.

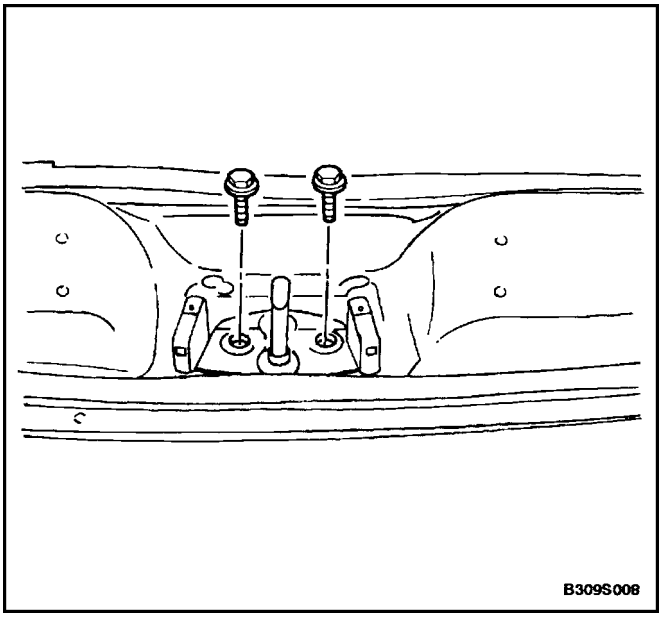

Installation Procedure

1. Install the lock striker with the screws.

Tighten

Tighten the tailgate lock striker bolts to 10 N•m (89 lbin).

2. Install the luggage compartment rear trim panel. Refer to *Section 9G, Interior Trim.*
3. Close the tailgate.

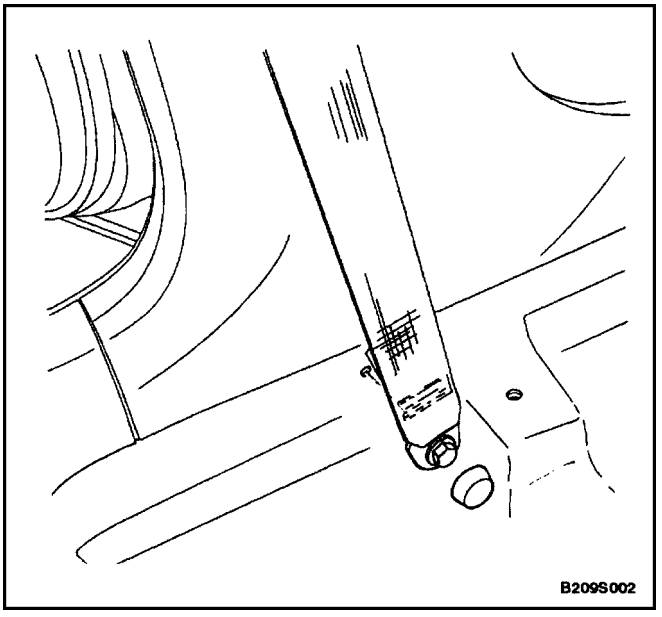

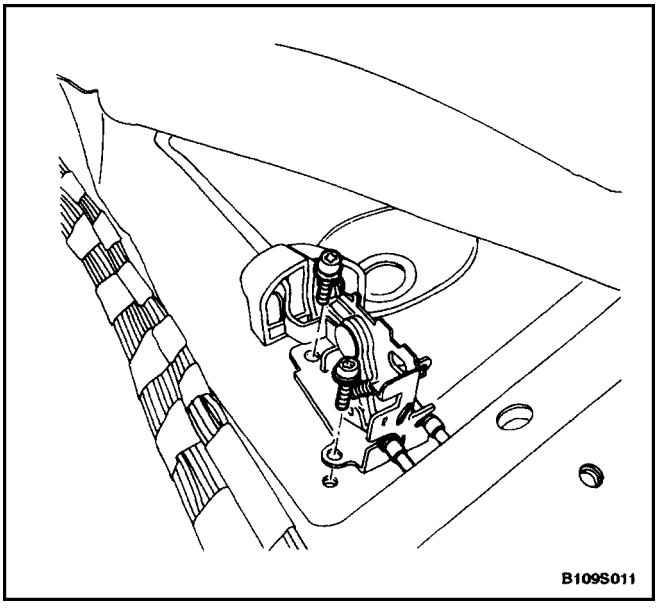

REAR DECK LID/HATCHBACK DOOR REMOTE CABLE AND HANDLE (NOTCHBACK)

(Notchback Shown, Hatchback Similar)

(Left–Hand Drive Shown, Right–Hand Drive Similar)

Removal Procedure

1. Open the luggage compartment.
2. Remove the luggage compartment left side wheelhouse trim panel. Refer to *Section 9G, Interior Trim.*
3. Remove the lock striker. Refer to ”Luggage Compartment Lock Striker (Notchback)” or”Luggage Compartment Lock Striker (Hatchback)” in this section.
4. Remove the driver’s seat and the rear seat. Refer to *Section 9H, Seats.*
5. Remove the lower B–pillar seat belt bolt and the anchor.
6. Remove the rear deck lid remote handle cover.
7. Reposition the floor carpet on the left side of the vehicle.
8. Remove the screws and the rear deck lid remote handle.
9. Disconnect the cable from the handle.
10. Remove the cable.

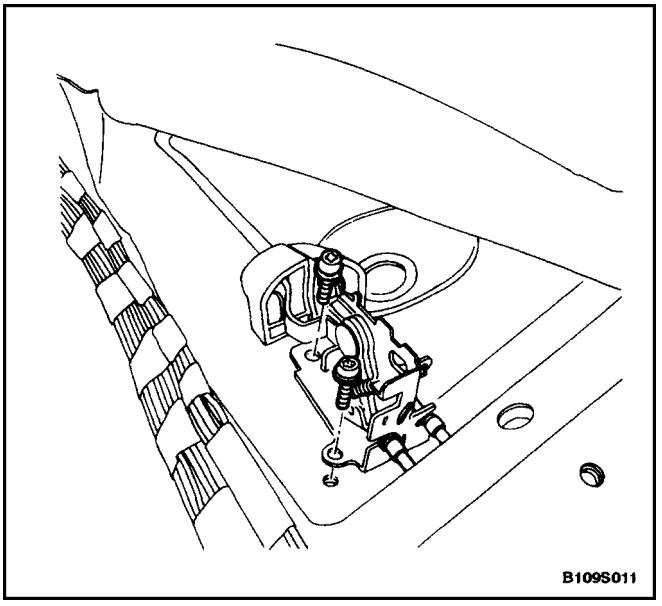

Installation Procedure

1. Feed the cable from the luggage compartment to the passenger compartment.
2. Connect the cable to the handle.

Notice : Dissimilar metals in direct contact with each other may corrode rapidly. Make sure to use the correct fasteners to prevent premature corrosion.

3. Install the handle with the screws.

   Tighten

   Tighten the rear deck lid remote cable handle screws to 8 N•m (71 lb–in).
4. Install the rear deck lid remote handle cover.

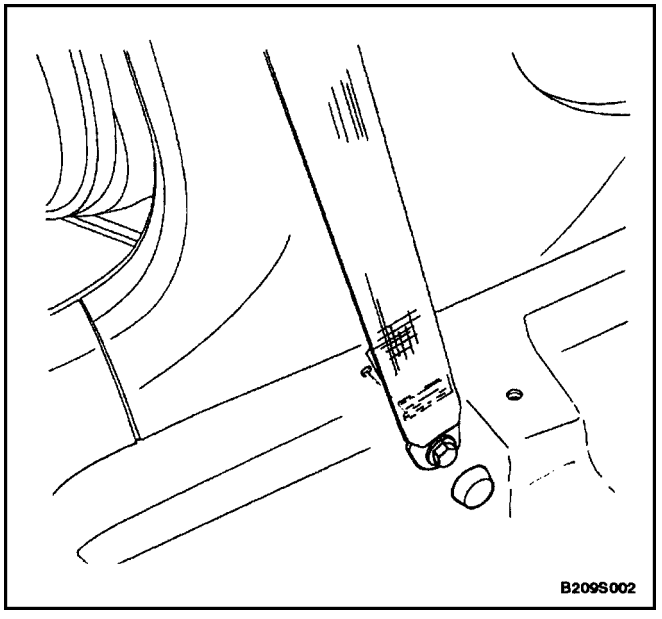

5. Install the floor carpet to its original position.
6. Install the lower B–pillar seat belt anchor with the bolt.

   Tighten

   Tighten the lower B–pillar seat belt bolt to 35 N•m (26 lb–ft).
7. Install the driver's seat and the rear seat. Refer to *Section 9H, Seats.*
8. Install the lock striker. Refer to "Luggage Compartment Lock Striker (Notchback)" or"Luggage Compartment Lock Striker (Hatchback)" in this section.
9. Install the luggage compartment left side wheelhouse trim panel. Refer to *Section 9G, Interior Trim.*

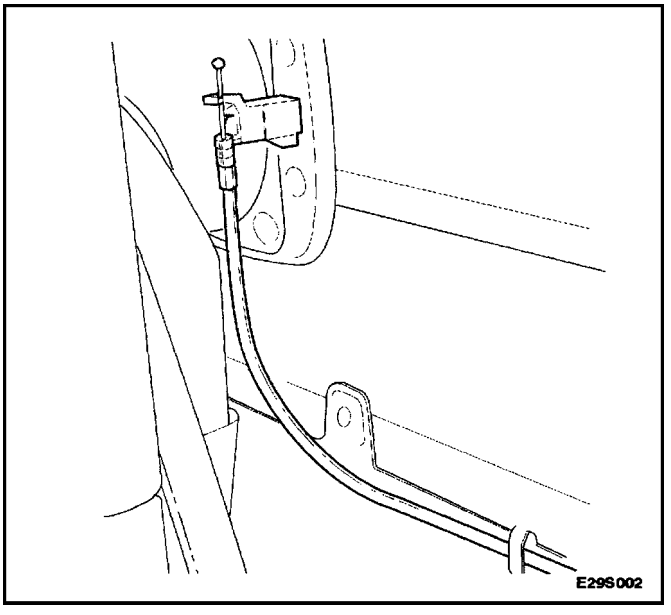

FUEL FILLER DOOR REMOTE CABLE AND HANDLE

(Notchback Shown, Hatchback and Wagon Similar)

(Left–Hand Drive Shown, Right–Hand Drive Similar)

Removal Procedure

1. Open the luggage compartment.
2. Remove the luggage compartment wheelhouse trim panels. Refer to *Section 9G, Interior Trim.*
3. Disconnect the cable from the fuel filler door.

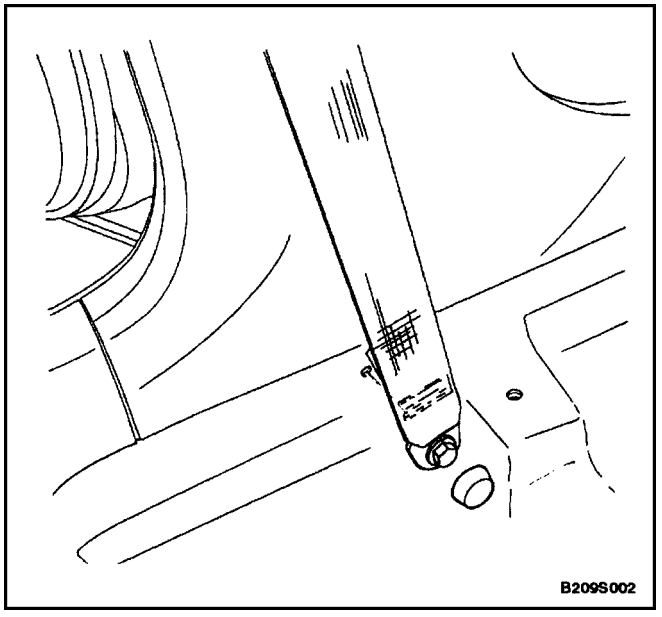

4. Remove the front seat and the rear seats. Refer to *Section 9H, Seats.*
5. Remove the lower B–pillar seat belt bolt and the anchor.

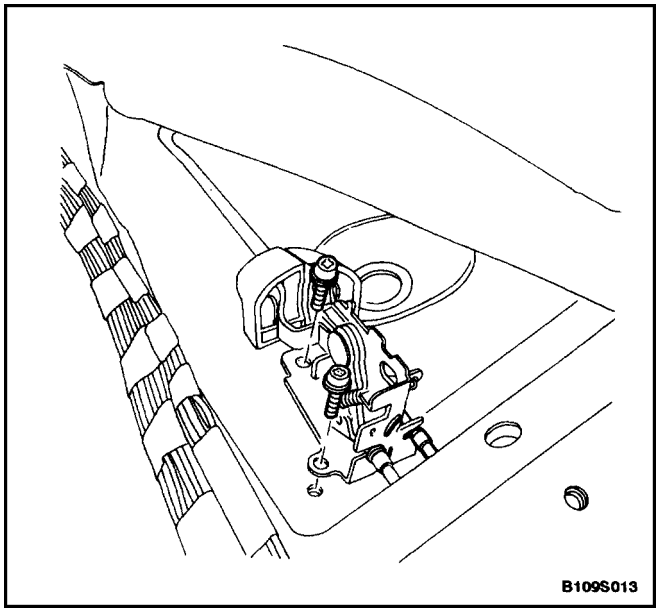

6. Remove the rear deck lid remote handle cover.
7. Reposition the floor carpet on the left side of the vehicle.
8. Remove the screws and the fuel filler door remote handle.
9. Disconnect the cable from the handle.
10. Remove the cable.

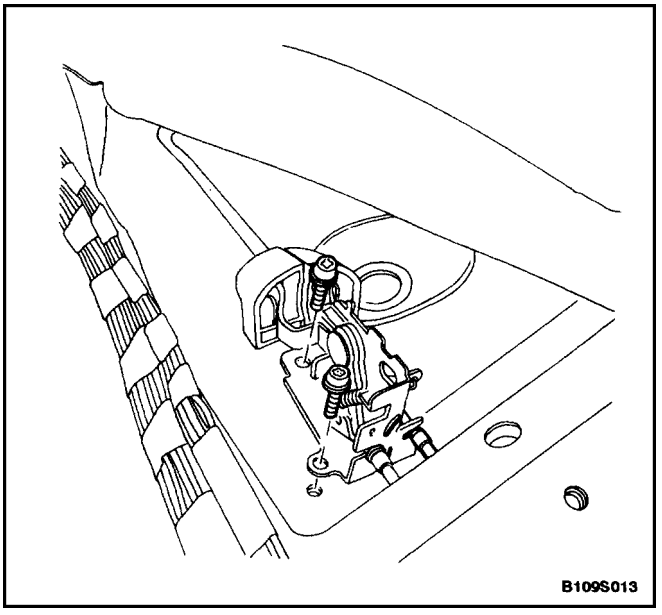

Installation Procedure

1. Feed the cable from the luggage compartment to the passenger compartment.
2. Connect the cable to the handle.
3. Install the handle with the screws.

Tighten

Tighten the fuel filler door remote cable handle screws to 8 N•m (71 lb–in).

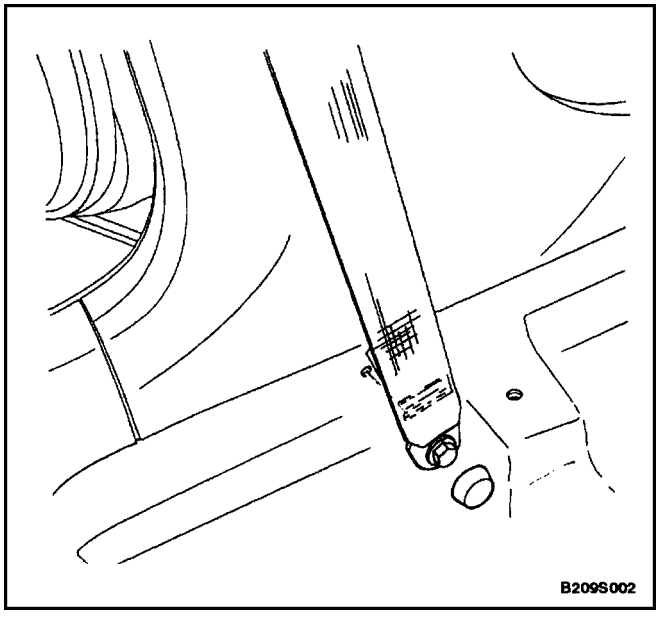

4. Install the floor carpet to its original position.
5. Install the lower B–pillar seat belt anchor with the bolt.

Tighten

Tighten the lower B–pillar seat belt anchor bolt to 35 N•m (26 lb–ft).

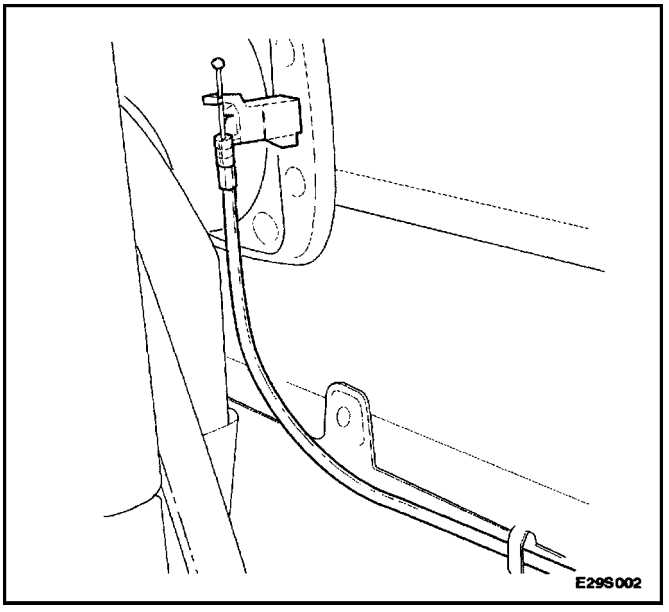

6. Install the front seat and the rear seat. Refer to *Section 9H, Seats.*
7. Connect the cable to the fuel filler door.
8. Install the luggage compartment wheelhouse trim panels. Refer to *Section 9G, Interior Trim.*

GENERAL DESCRIPTION AND SYSTEM OPERATION

FUEL FILLER DOOR

The fuel filler door attaches to the fuel tank pocket on the right side of the vehicle. The door is opened by pulling on the fuel filler door remote handle located on the floor in front of the driver's seat.

REAR DECK LID (NOTCHBACK)

The rear deck lid consists of an inner and outer panel that is hemmed around the perimeter and bonded together with structural adhesive. The deck lid springs assist in the opening of the rear deck lid and hold it in the open position.

HATCHBACK DOOR

The hatchback door consists of the rear hatch glass within a steel frame. The steel frame is made of an inner and outer panel hemmed around the perimeter and bonded together with structural adhesive. The gas support assemblies assist in the opening of the hatchback door and can hold it in the open position.

TAILGATE (WAGON)

The tailgate is made of a steel frame which contains the rear glass. The steel frame is made of an inner and outer panel hemmed around the perimeter and bonded together with structural adhesive. The gas support assemblies assist in the opening of the tailgate and can hold it in the open position.

TECHNICAL SERVICE BULLETIN

Bulletin No.:	TSB-001-98	Description:	Paint Codes
Model(s):	All 1998 & 1999 Models	Group:	Paint
Date:	November 18, 1998	Reference:	
VIN Range:	ALL	Prod. Dates:	ALL

To ensure correct paint color matching and the ability to acquire 1998-1999 Daewoo paint from your local supplier, we have compiled a list of paint codes for Daewoo paint colors from a number of the most predominant U.S. paint suppliers.

When ordering paint from your local supplier, please use the corresponding paint code for the Daewoo paint color and paint brand you are purchasing.

You may forward questions to the Daewoo Technical Assistance Center at **(877) DMA-1234** or to your paint manufacturer's representative. A list of paint manufacturer contacts is provided on page 3 of this bulletin.

1999 Paint Codes

Daewoo Color Code	Color Name	Model Application			Paint Manufacturer Codes			
		Lanos	Nubira	Leganza	Akzo	Dupont	PPG	Sherwin Williams/ Martin Senour
11U	Galaxy White	●	●	●	DAE11U	F3540	91694	56925
21U	Azurite Blue	●			DAE21U	F3133	190456	56926
24U	Regatta Blue Pearl		●		DAE24U	F3132	190079	56928
42U	Deep Bluish Green	●	●	●	DAE42U	F3017	48187	56930
62U	Khaki Beige		●	●	DAE62U	F3186	28495	56933
74U	Spinel Red Pearl	●	●	●	DAE74U	F3185	74842	56937
83L	Granada Black			●	DAE83L	F1648	95089	53380
92U	Poly Silver	●	●		DAE92U	F3130	36652	56939
93U	Olive Sllver			●	DAE93U	F7117	37211	56940

Circulate To:

☑ General Manager ☑ Technician(s) ☑ Body Shop Manager ☐
☑ Service Manager ☑ Service Advisor ☑ Parts Manager ☐

1998 Paint Codes

Daewoo Color Code	Color Name	Model Application			Paint Manufacturer Codes			
		Lanos	Nubira	Leganza	Akzo	Dupont	PPG	Sherwin Williams/ Martin Senour
11U	Galaxy White	●	●	●	DAE11U	F3540	91694	56925
21U	Azurite Blue	●			DAE21U	F3133	190456	56926
23U	Caribbean Blue			●	DAE23U	F3538	190458	56927
24U	Regatta Blue Pearl		●		DAE24U	F3132	190079	56928
28U	Royal Blue		●		DAE28U	F3188	190461	56929
42U	Deep Bluish Green	●	●	●	DAE42U	F3017	48187	56930
43U	Light Evergreen	●			DAE43U	F3135	48188	56931
62U	Khaki Beige		●	●	DAE62U	F3186	28495	56933
73L	Super Red	●	●		DAE73L	F1608	74482	55994
74U	Spinel Red Pearl	●	●	●	DAE74U	F3185	74842	56937
83L	Granada Black			●	DAE83L	F1648	95089	53380
92U	Poly Silver	●	●		DAE92U	F3130	36652	56939
93U	Olive Sllver			●	DAE93U	F7117	37211	56940

Paint Manufacturer Telephone Numbers:

Akzo

Customer Assistance . . . . . .(800) 618-1010

Dupont

Customer Assistance . . . . . .(800) 338-7668

PPG

Color Library/Codes/Formulas . . . . . .(440) 572-6100
Technical Assistance . . . . . .(440) 572-6111

Sherwin Williams

Customer Assistance . . . . . .(800) 798-5872

Martin Senour

Customer Assistance . . . . . .(800) 526-6704

TECHNICAL SERVICE BULLETIN

Bulletin No.:	TSB-002-98	Description:	Rear Hatch Lock Rod
Model(s):	1998-99 Nubira 5-Door	Group:	Body
Date:	November 25, 1998	Reference:	N/A
VIN Range:	See Attached	Prod. Dates:	N/A

For some Nubira 5-Door models, it is possible that the alarm may be triggered when opening the rear hatch with the key. If the key is rotated slowly, it is possible that the rear latch could be released before the lock switch disables the alarm system. To correct this condition, Daewoo has developed an updated rear hatch lock rod which is 5 mm shorter than the original rod.

A supply of updated lock rods has been shipped to your location and are available for customer complaints/concerns.

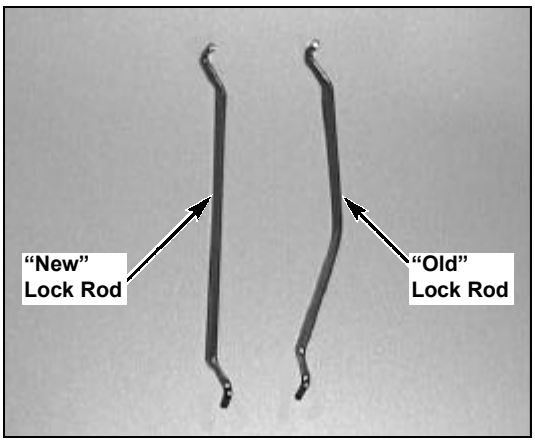

All applicable Store stock units should be immediately updated with the new lock rod. Affected customer vehicles, demonstrators, DCA vehicles, etc. should be updated as they come in for periodic service and/or repairs regardless if a complaint has been made.

A list of applicable Nubira 5-Door Vehicle Identification Numbers (VIN's) has been attached for your reference.

REAR HATCH LOCK ROD REMOVAL / INSTALLATION INSTRUCTIONS

Lock Rod Removal:

1. Raise the rear hatch to its fully opened position.
2. Remove the rear hatch inner trim panel by removing and retaining the four (4) screws and three (3) trim panel clips.

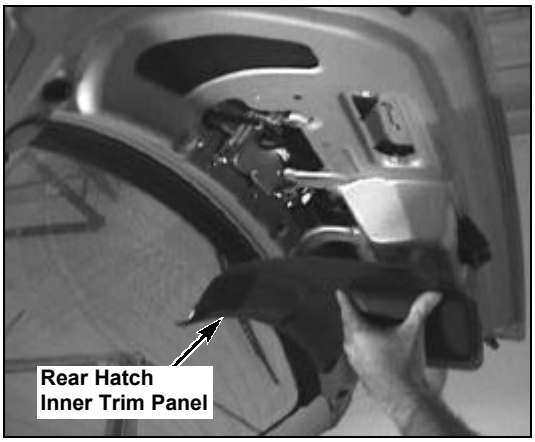

Circulate To:				
	√ General Manager	√ Technician(s)	√ Body Shop Manager	☐
	√ Service Manager	√ Service Advisor	√ Parts Manager	☐

3. Release the two (2) lock rod plastic lock tabs and remove the lock rod.

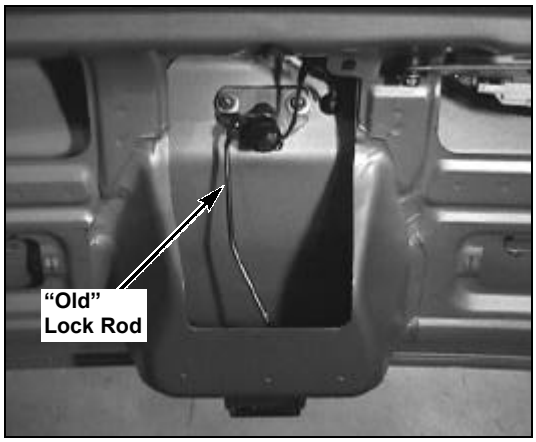

Lock Rod Installation:

1. Install the new lock rod and reattach the two (2) plastic lock tabs.
2. Reinstall the rear hatch inner trim panel, the four (4) retaining screws and the three (3) trim panel clips.
3. Verify the operation of the latch rod by first setting the alarm system, then opening the rear hatch by slowly rotating the key in the cylinder.

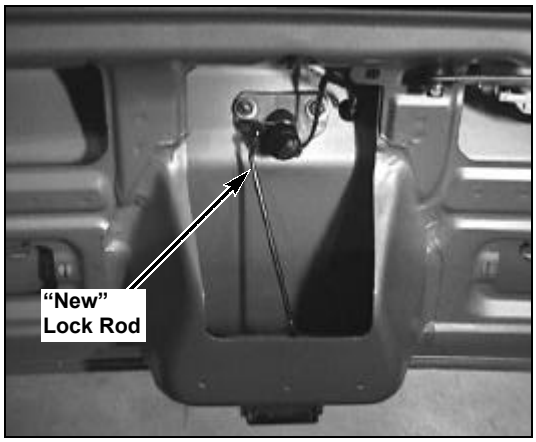

Parts Information:

Part Name	Part Number	Qty. Req'd
Rod-Key Cyl, T/Gate	96237711	1

Warranty Information:

Operation Code	Operation Description	Labor Time
F896112	Rod, T/Gate Lock, Replace	0.2 hr

Causal Part Number: 96301830
Nature Code: N65
Cause Code: R31

SECTION : 9O

BUMPERS AND FASCIAS

CAUTION : Disconnect the negative battery cable before removing or installing any electrical unit or when a tool or equipment could easily come in contact with exposed electrical terminals. Disconnecting this cable will help prevent personal injury and damage to the vehicle. The ignition must also be in LOCK unless otherwise noted.

TABLE OF CONTENTS

SPECIFICATIONS 9O–1
FASTENER TIGHTENING SPECIFICATIONS . 9O–1
MAINTENANCE AND REPAIR 9O–2
ON–VEHICLE SERVICE 9O–2
FRONT BUMPER FASCIA 9O–2
FRONT BUMPER ENERGY ABSORBER 9O–6
FRONT BUMPER IMPACT BAR 9O–6
REAR BUMPER FASCIA 9O–8
REAR BUMPER ENERGY ABSORBER 9O–11
REAR BUMPER IMPACT BAR 9O–12
GENERAL DESCRIPTION AND SYSTEM OPERATION 9O–14
BUMPERS 9O–14

SPECIFICATIONS

FASTENER TIGHTENING SPECIFICATIONS

Application	N•m	Lb–Ft	Lb–In
Fender–to–Fascia Bolts	1.5	–	13
Front Impact Bar Bolts	35	26	–
Front Impact Bar Nuts	22	16	–
Front Wheel Well Fascia Bolts	1.5	–	13
Front Wheel Well Splash Shield Bolts	1.5	–	13
Luggage Compartment Fascia Bolts	8	–	71
Rear Impact Bar Bolts	35	26	–
Rear Impact Bar Bracket Nuts	30	22	–
Rear Wheel Mud Guard Bolts	1.5	–	13
Rear Wheel Well Fascia Bolts	1.5	–	13
Rear Wheel Well Splash Shield Bolts	1.5	–	13

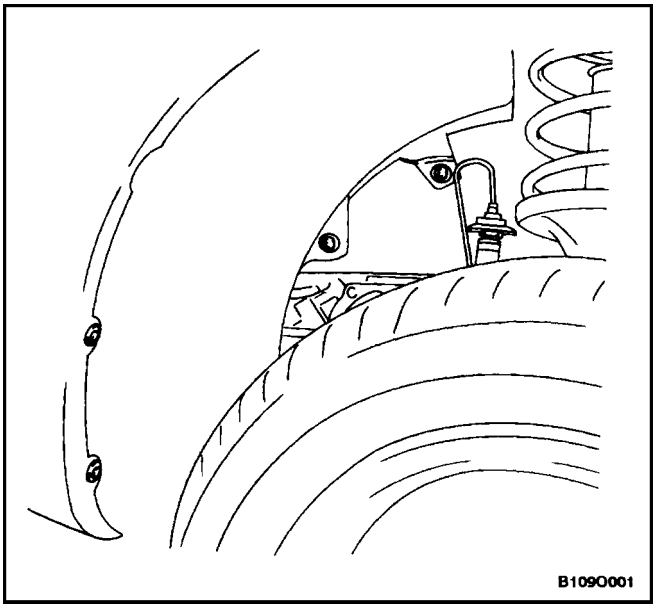

MAINTENANCE AND REPAIR

ON–VEHICLE SERVICE

FRONT BUMPER FASCIA

Removal Procedure

1. Disconnect the negative battery cable.
2. Remove the front wheels. Refer to *Section 2E, Tires and Wheels.*
3. Remove the bolts and the screws and reposition the front portion of the splash shields.

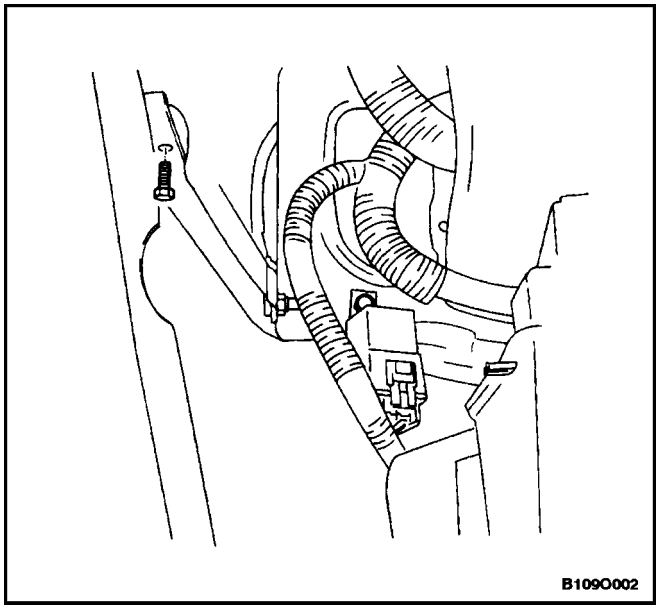

4. Remove the fog lamps (if equipped). Refer to *Section 9B, Lighting Systems.*
5. Remove the headlamps. Refer to *Section 9B, Lighting Systems.*
6. Remove the front wheel well fascia bolts.

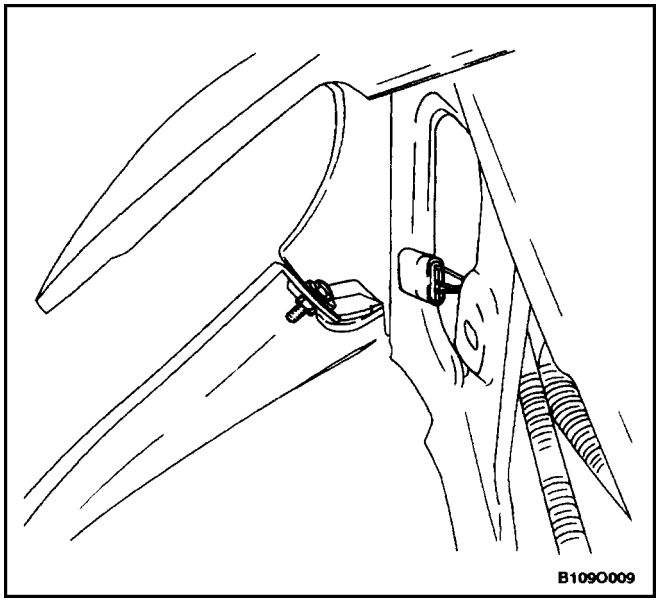

7. Remove the fender–to–fascia bolts.n.

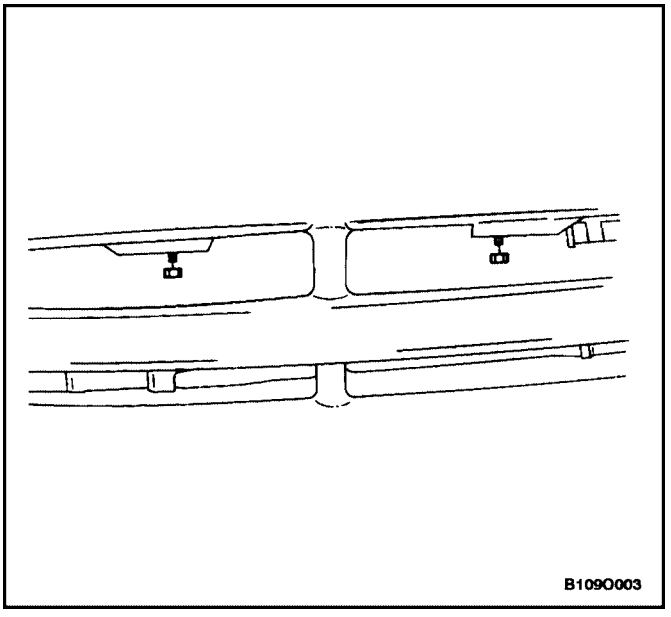

8. Remove the front fascia screws behind the fascia.

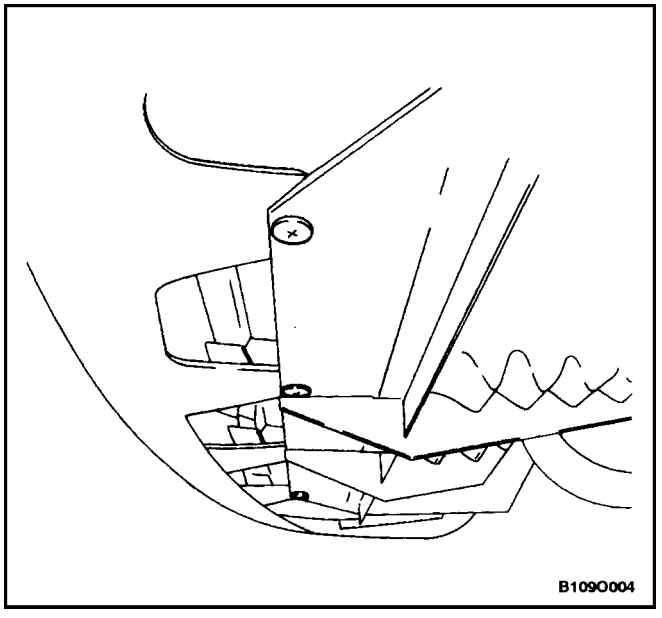

9. Remove lower fascia screws.

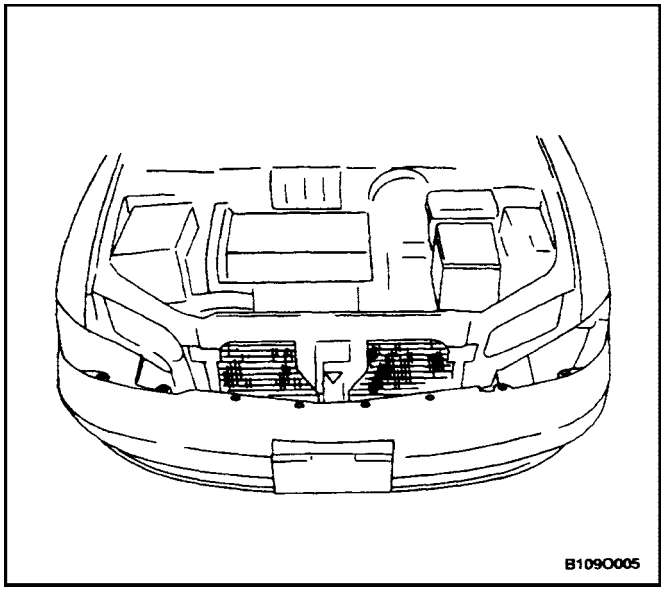

10. Remove the upper fascia screws.
11. Remove the front bumper fascia.

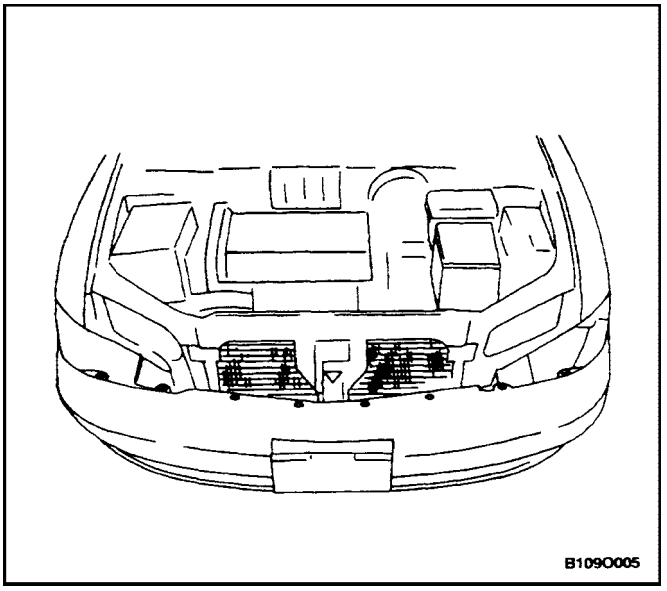

Installation Procedure

1. Install the front bumper fascia.

Notice : Dissimilar metals in direct contact with each other may corrode rapidly. Make sure to use the correct fasteners to prevent premature corrosion.

2. Install the upper fascia screws.

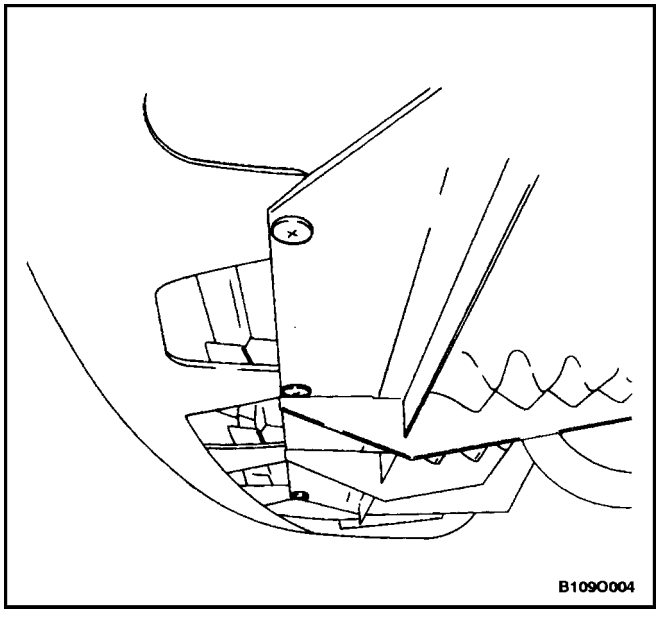

3. Install the lower fascia screws.

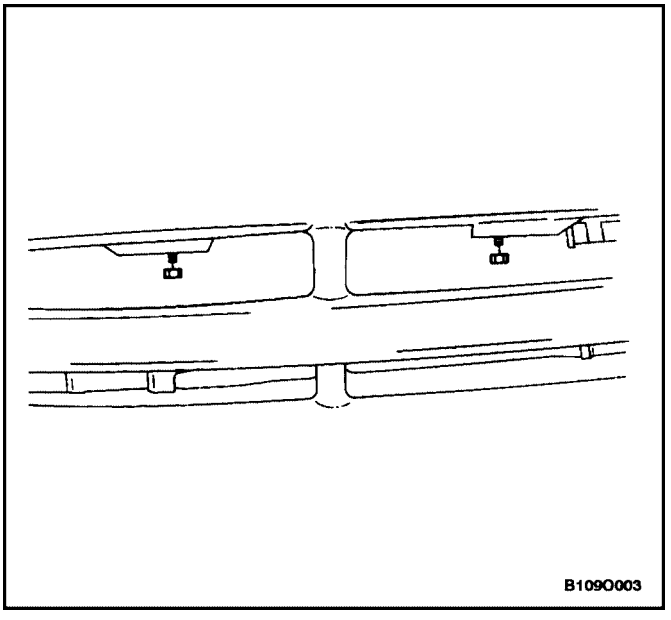

4. Install the front fascia nuts.

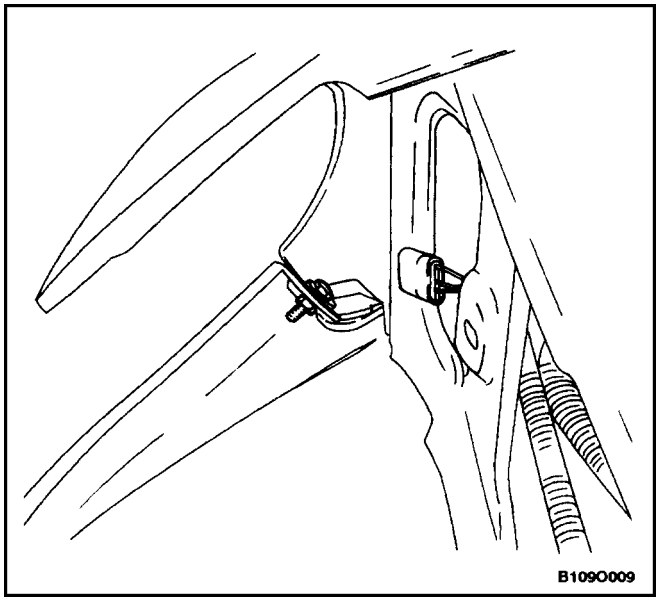

5. Install the fender–to–fascia bolts.

Tighten

Tighten the fender–to–fascia bolts to 1.5 N•m (13 lbin).

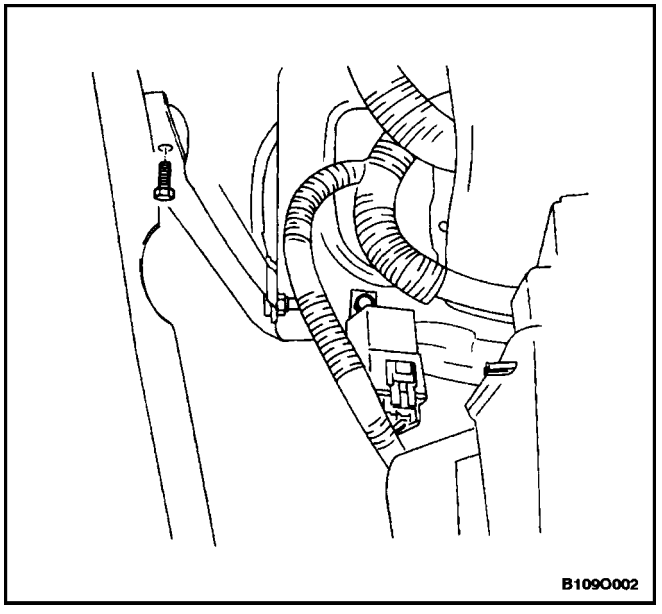

6. Install the front wheel well fascia bolts.

Tighten

Tighten the front wheel well fascia bolts to 1.5 N•m (13 lb–in).

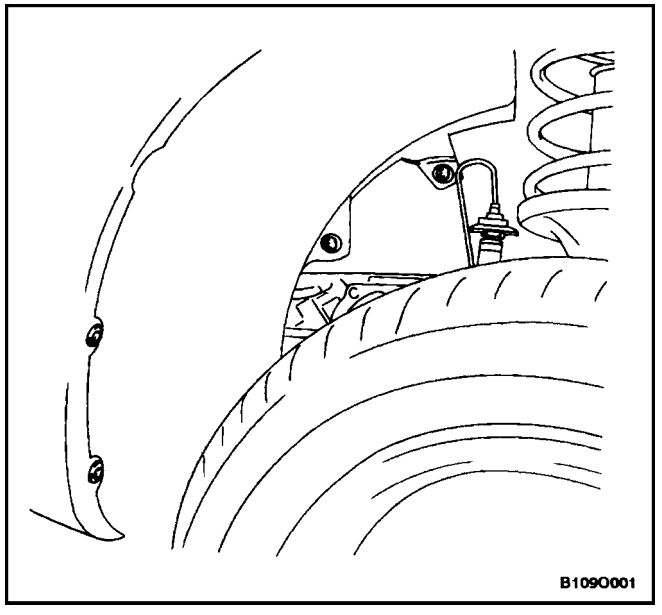

7. Install the headlamps. Refer to *Section 9B, Lighting Systems.*
8. Remove the fog lamps (if equipped). Refer to *Section 9B, Lighting Systems.*
9. Reposition the front portion of the splash shields and install the bolts and the screws.

Tighten

Tighten the front wheel well splash shield bolts to 1.5 N•m (13 lb–in).

10. Connect the negative battery cable.

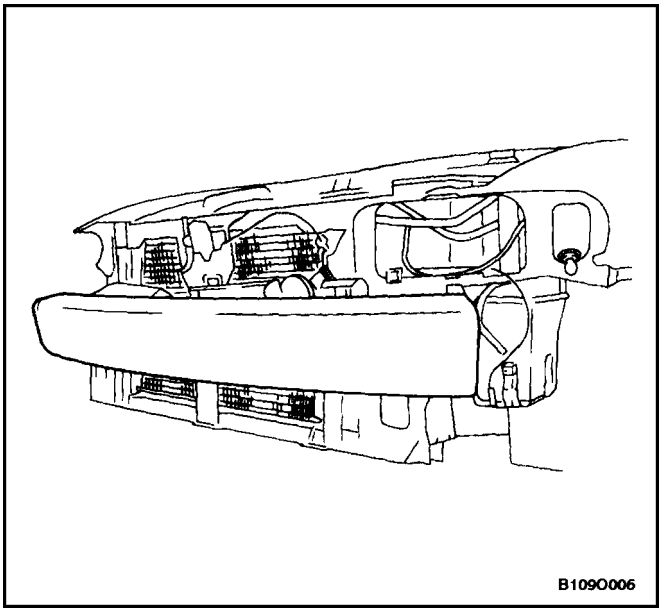

FRONT BUMPER ENERGY ABSORBER

Removal Procedure

1. Remove the front bumper fascia. Refer to"Front Bumper Fascia" in this section.
2. Remove the energy absorber.

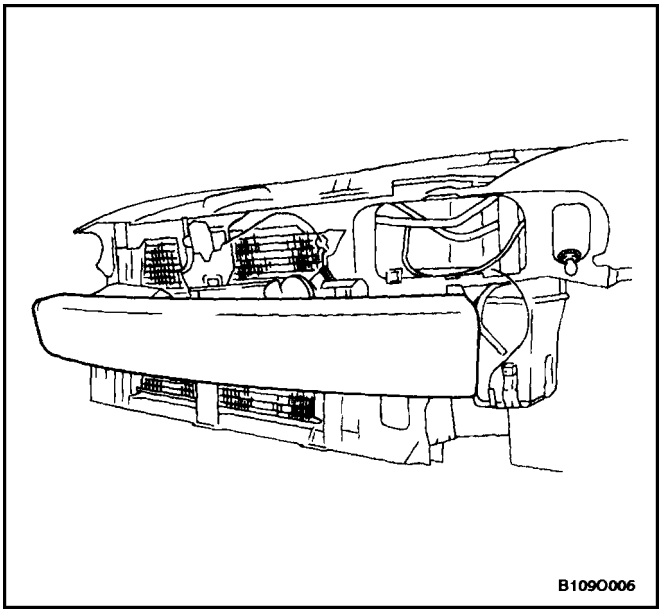

Installation Procedure

1. Install the energy absorber.
2. Install the front bumper fascia. Refer to"Front Bumper Fascia" in this section.

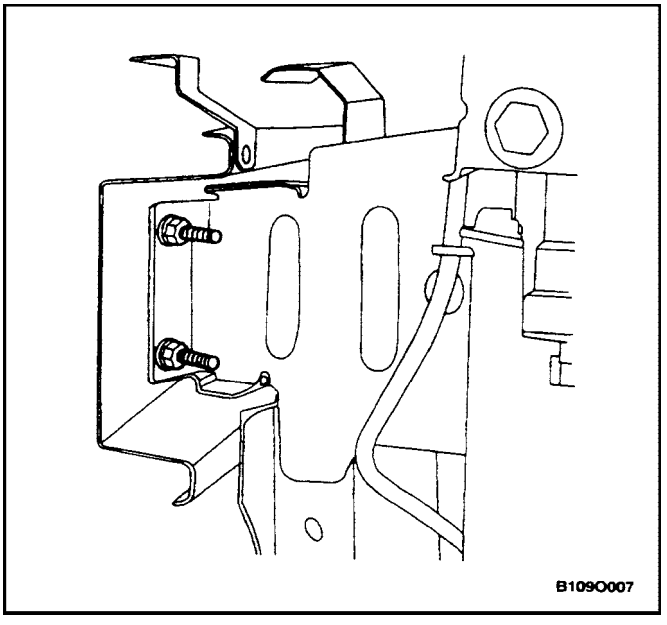

FRONT BUMPER IMPACT BAR

Removal Procedure

1. Remove the front bumper fascia. Refer to"Front Bumper Fascia" in this section.
2. Remove the front bumper energy absorber. Refer to"Front Bumper Energy Absorber" in this section.
3. Remove the front bumper impact bar nuts.

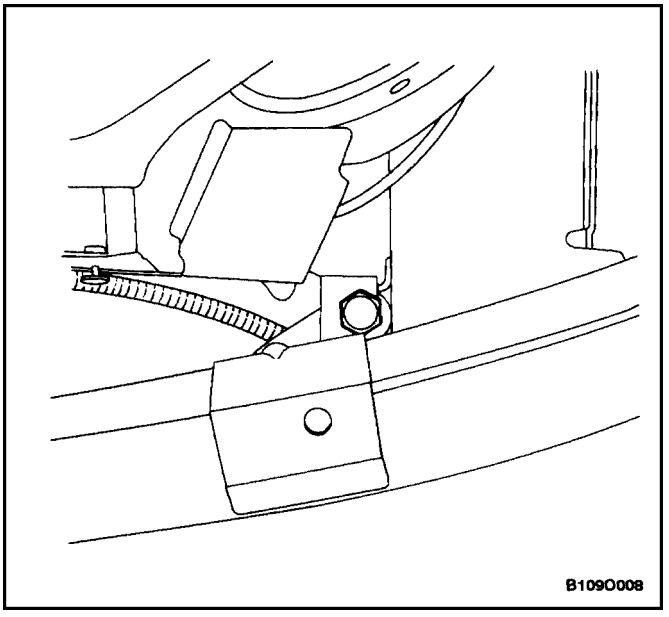

4. Remove the front impact bar bolts.
5. Remove the impact bar.

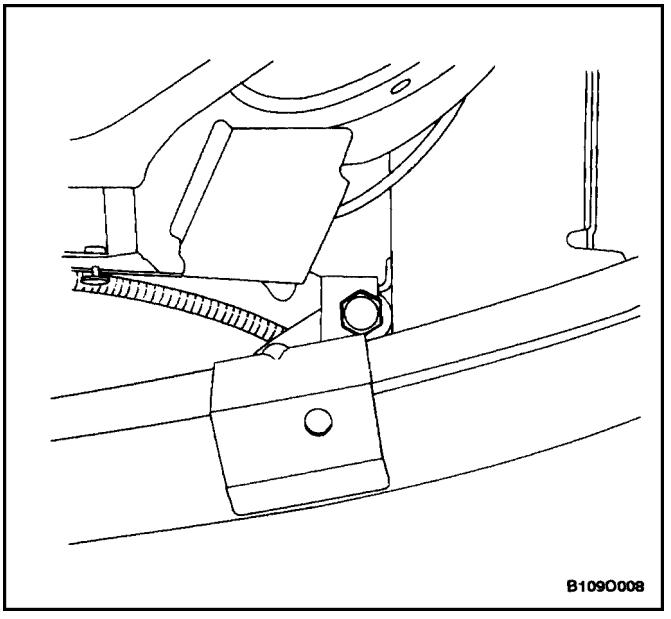

Installation Procedure

1. Install the impact bar.

Notice : Dissimilar metals in direct contact with each other may corrode rapidly. Make sure to use the correct fasteners to prevent premature corrosion.

2. Install the front impact bar bolts.

Tighten

Tighten the front impact bar bolts to 22 N•m (16 lb–ft).

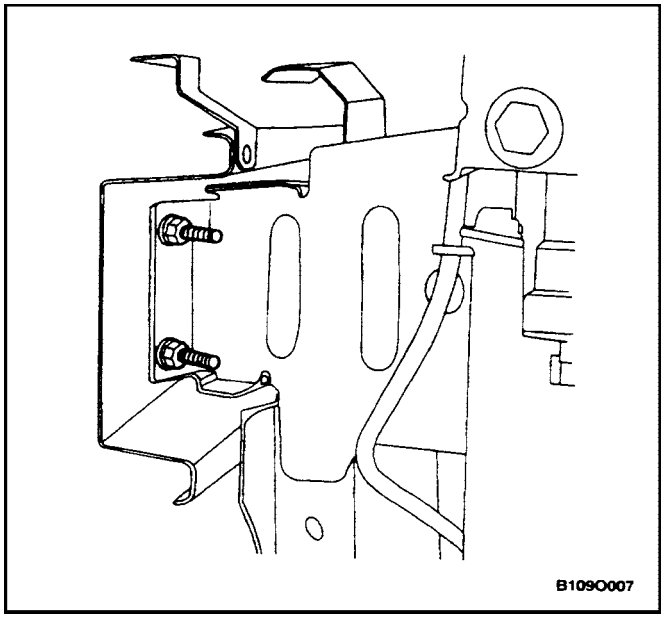

3. Install the front bumper impact bar nuts.

Tighten

Tighten the front impact bar nuts to 30 N•m (22 lb–ft).

4. Install the front bumper energy absorber. Refer to”Front Bumper Energy Absorber” in this section.
5. Install the front bumper fascia. Refer to”Front Bumper Fascia” in this section.

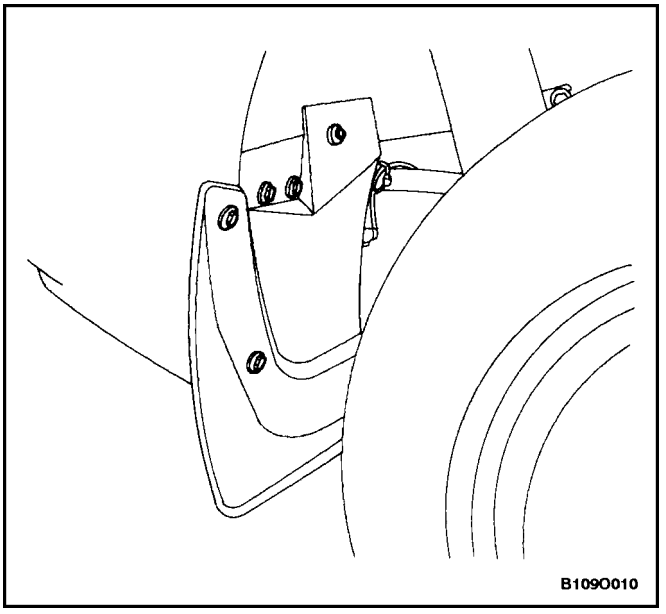

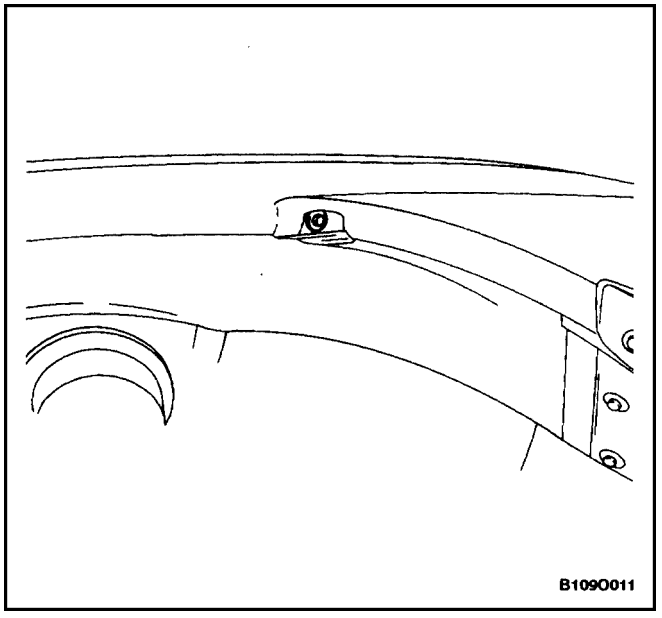

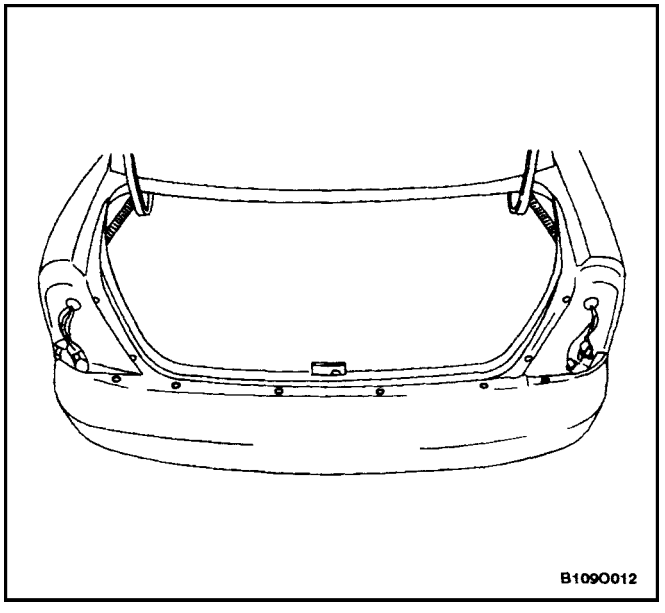

REAR BUMPER FASCIA

(Notchback Shown, Hatchback and Wagon Similar)

Removal Procedure

1. Remove the bolts and the rear wheel mud guards.
2. Remove the bolts and the screws and the rear wheel well splash shields.
3. Remove the fascia bolts at the top of the rear wheel wells.
4. Remove the taillamps. Refer to *Section 9B, Lighting Systems.*
5. Remove the upper fascia screws.

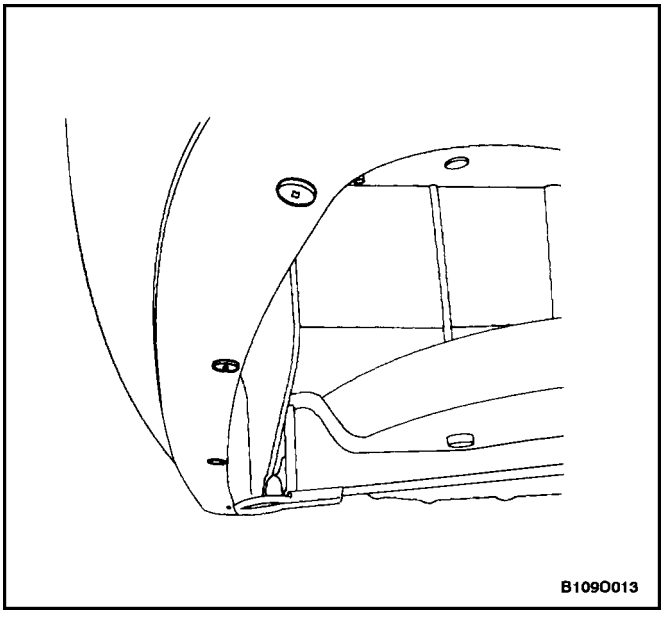

6. Remove the lower fascia screws.

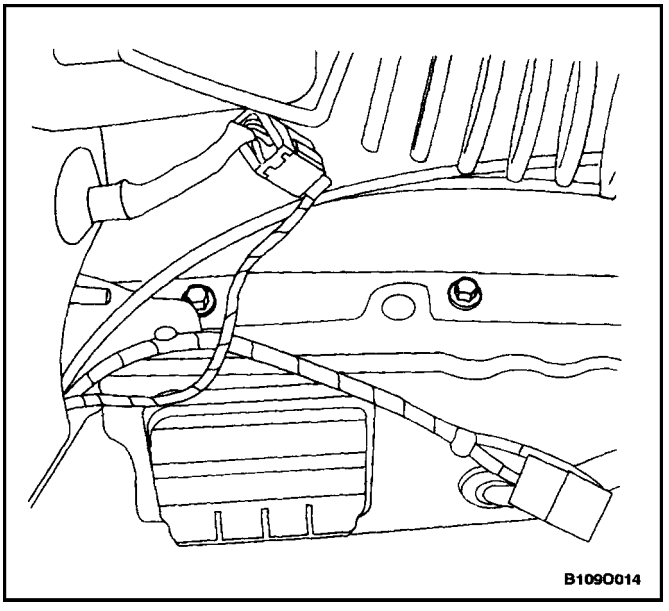

7. Remove the luggage compartment rear quarter trim panel.
8. Remove the fascia bolts in the luggage compartment.
9. Remove the fascia.

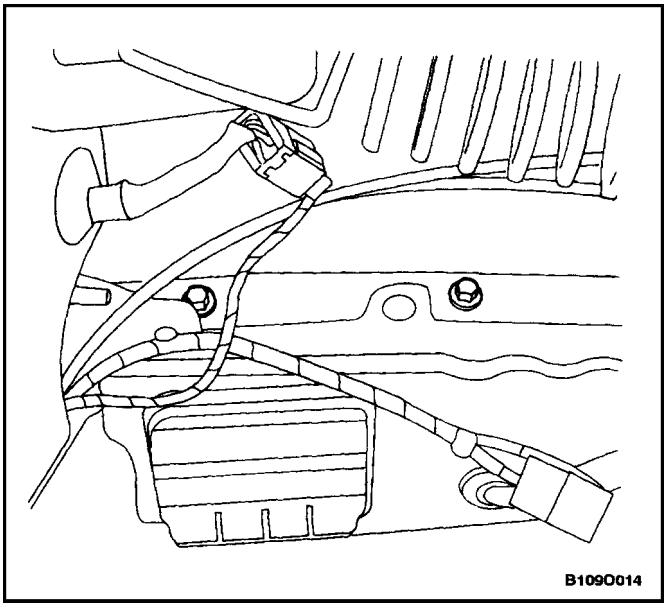

Installation Procedure

1. Install the fascia.

Notice : Dissimilar metals in direct contact with each other may corrode rapidly. Make sure to use the correct fasteners to prevent premature corrosion.

2. Install the luggage compartment fascia bolts.

Tighten

Tighten the luggage compartment fascia bolts to 8 N•m (71 lb–in).

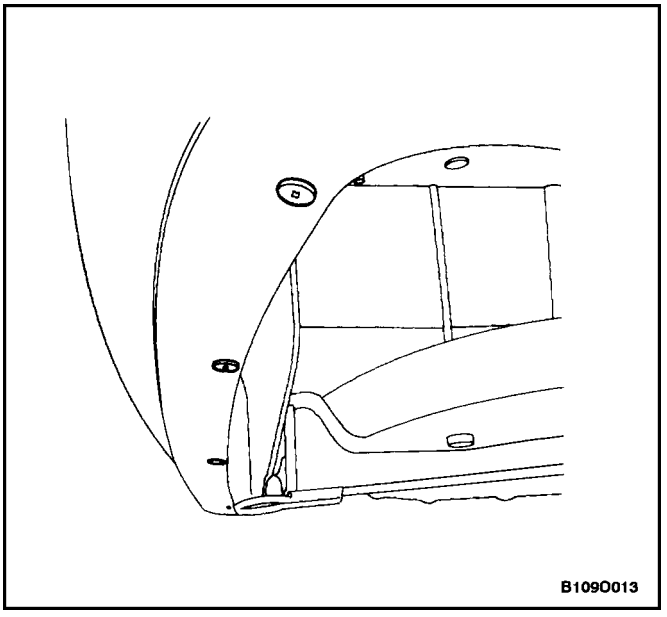

3. Install the luggage compartment rear quarter trim panel.
4. Install the lower fascia screws.

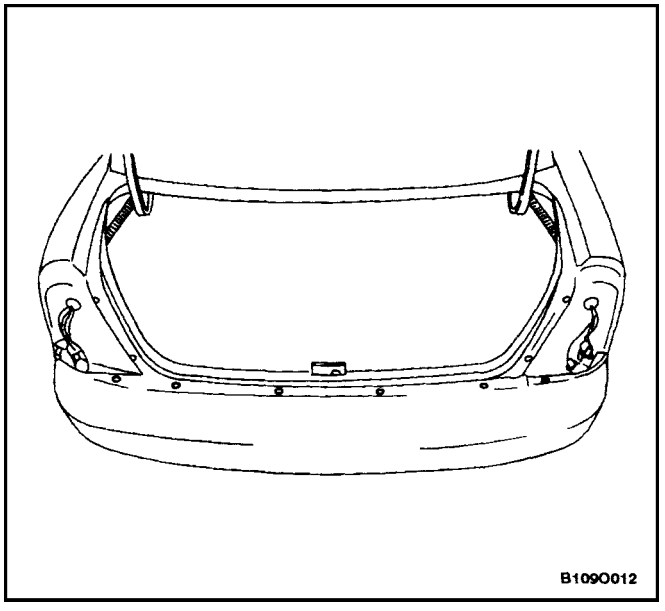

5. Install the upper fascia screws.

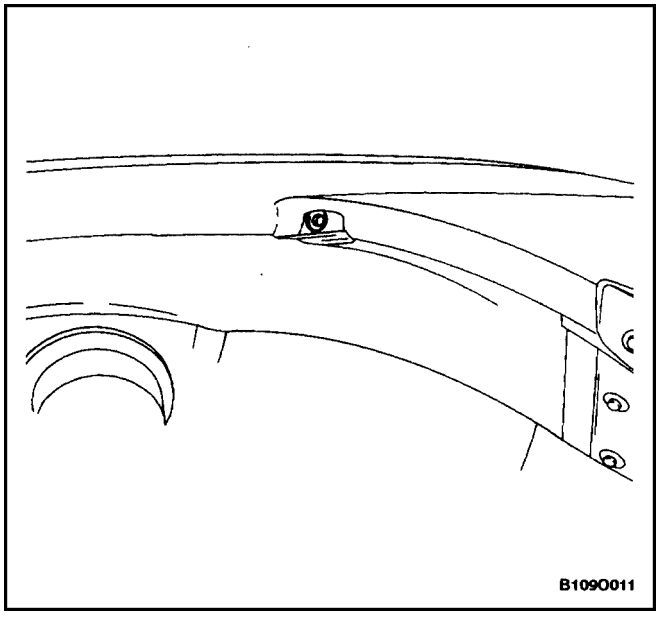

6. Install the taillamps. Refer to *Section 9B, Lighting Systems.*
7. Install the rear wheel well fascia bolts.

Tighten

Tighten the rear wheel well fascia bolts to 1.5 N•m (13 lb–in).

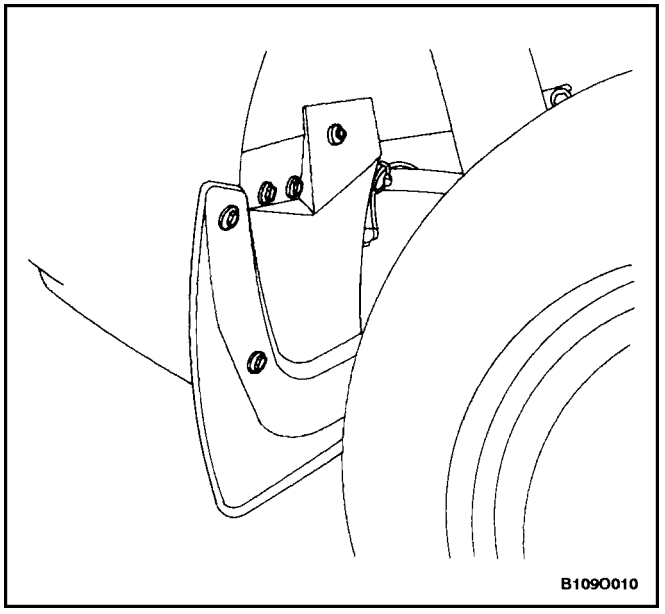

8. Install the rear wheel well splash shields with the bolts and the screws.

   Tighten

   Tighten the rear wheel well splash shield bolts to 1.5 N•m (13 lb–in).
9. Install the rear wheel mud guards with the bolts.

   Tighten

   Tighten the rear wheel mud guard bolts to 1.5 N•m (13 lb–in).

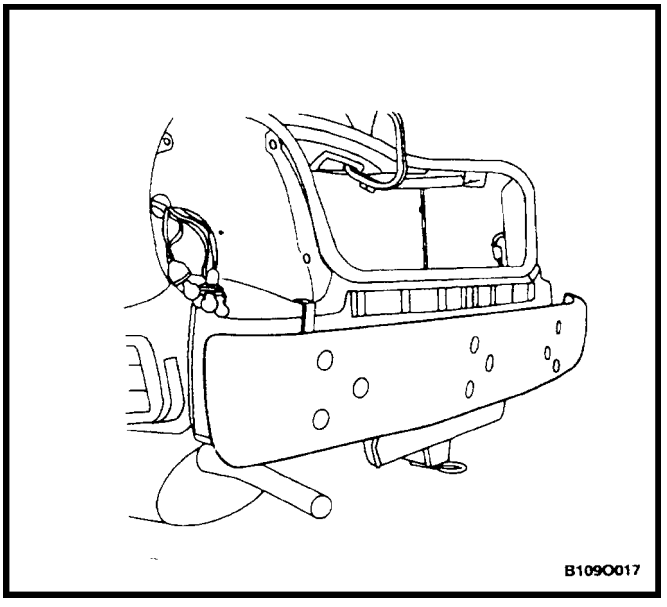

REAR BUMPER ENERGY ABSORBER

(Notchback Shown, Hatchback and Wagon Similar)

Removal Procedure

1. Remove the rear bumper fascia. Refer to"Rear Bumper Fascia" in this section.
2. Remove the energy absorber.

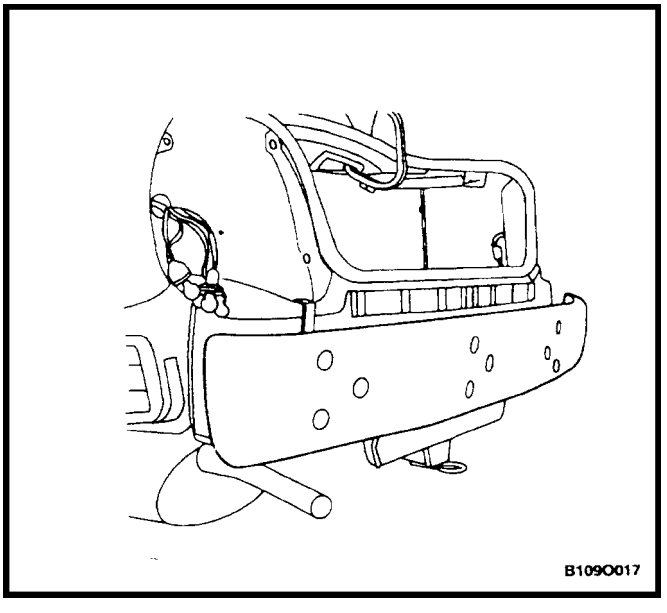

Installation Procedure

1. Install the energy absorber.
2. Install the rear bumper fascia. Refer to"Rear Bumper Fascia" in this section.

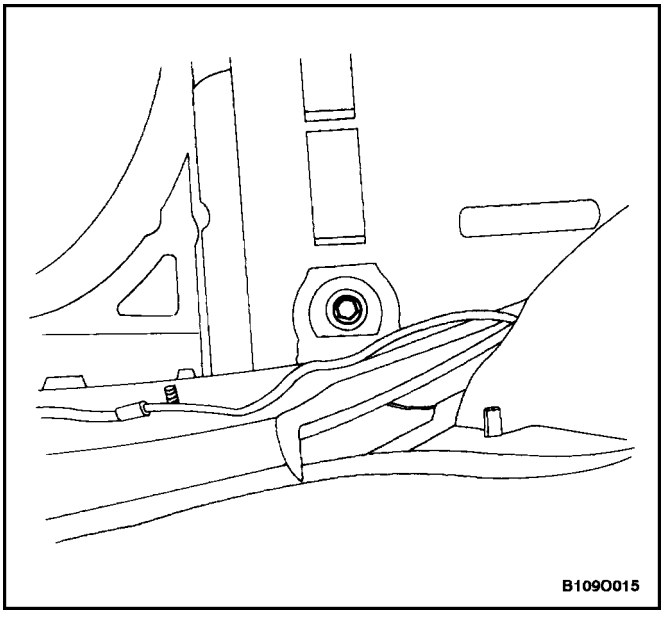

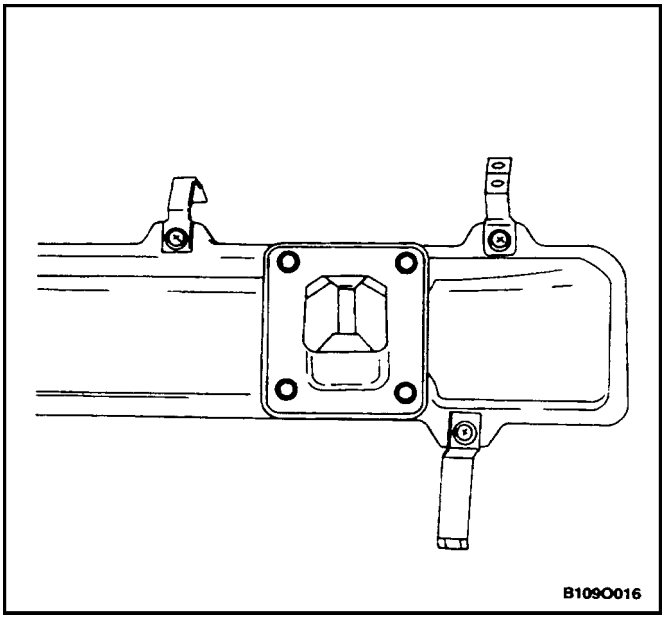

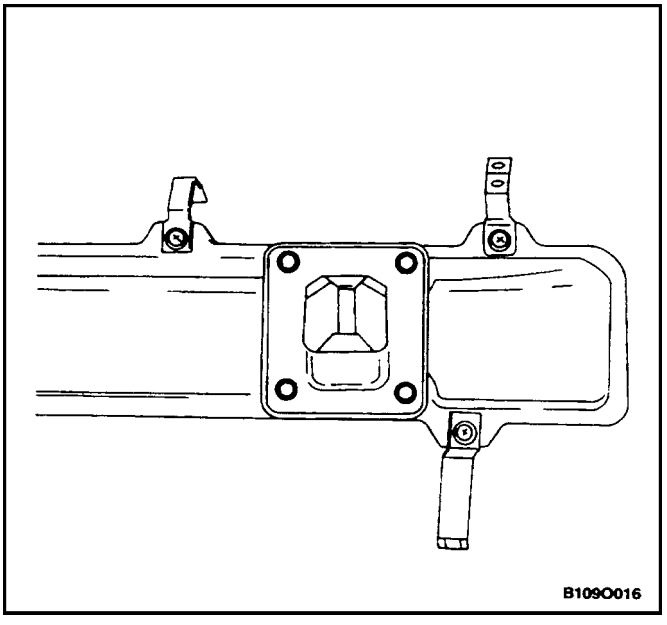

REAR BUMPER IMPACT BAR

(Notchback Shown, Hatchback and Wagon Similar)

Removal Procedure

1. Remove the rear bumper fascia. Refer to"Rear Bumper Fascia" in this section.
2. Remove the rear bumper energy absorber. Refer to"Rear Bumper Energy Absorber" in this section.
3. Reposition the luggage compartment floor carpet.
4. Remove the plastic caps to reveal the impact bar bolts.
5. Remove the bolts securing the impact bar.
6. Remove the impact bar from the vehicle.
7. Remove the nuts and the impact bar brackets from the impact bar.
8. Remove the screws and the rear fascia brackets from the impact bar.

Installation Procedure

Notice : Dissimilar metals in direct contact with each other may corrode rapidly. Make sure to use the correct fasteners to prevent premature corrosion.

1. Install the rear fascia brackets to the impact bar with the screws.
2. Install the impact bar brackets to the impact bar with the nuts.

   Tighten

   Tighten the rear impact bar bracket nuts to 30 N•m (22 lb–ft).

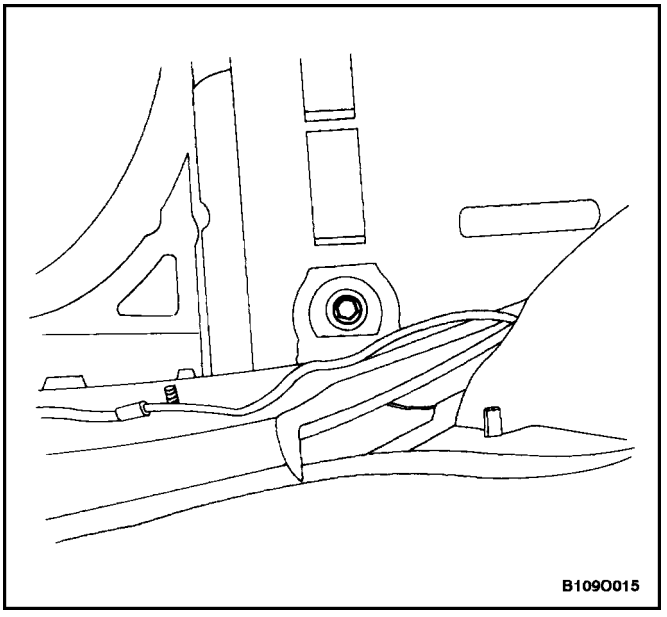

3. Install the impact bar.
4. Install the rear impact bar to the vehicle with the bolts.

   Tighten

   Tighten the rear impact bar bolts to 35 N•m (26 lb–ft).
5. Install the luggage compartment floor carpet to its original position.
6. Install the rear impact bar to the vehicle with the bolts.
7. Install the rear bumper energy absorber. Refer to”Rear Bumper Energy Absorber” in this section.
8. Install the rear bumper fascia. Refer to”Rear Bumper Fascia” in this section.

GENERAL DESCRIPTION AND SYSTEM OPERATION

BUMPERS

The bumper systems are designed to sustain a collision into a fixed barrier at either 8 km/h (5 mph) or 4 km/h (2.5 mph) without damage. After absorbing the energy of a collision, these bumper systems restore themselves to their original position. Both the front and the rear bumpers feature an internal foam energy absorber and a polymer fascia cover. The rear bumper fascia must be removed before access can be gained to the energy absorber and the bumper impact bar. The front bumper assembly can be removed as a whole unit or the fascia cover can be removed separately.

SECTION : 9N

FRAME AND UNDERBODY

TABLE OF CONTENTS

SPECIFICATIONS 9N–1
FASTENER TIGHTENING SPECIFICATIONS . 9N–1
MAINTENANCE AND REPAIR 9N–2
ON–VEHICLE SERVICE 9N–2
ALIGNMENT CHECKING 9N–2
FLOOR PAN INSULATORS 9N–2
ENGINE UNDER COVER 9N–3
GENERAL DESCRIPTION AND SYSTEM OPERATION 9N–5
GENERAL BODY CONSTRUCTION 9N–5
ENGINE UNDER COVERS 9N–5

SPECIFICATIONS

FASTENER TIGHTENING SPECIFICATIONS

Application	N•m	Lb–Ft	Lb–In
Engine Under Cover Screw	2	–	18
Front Fascia Splash Shield Screw	1.5	–	13

MAINTENANCE AND REPAIR

ON–VEHICLE SERVICE

ALIGNMENT CHECKING

An accurate method of determining the alignment of the underbody uses a measuring tram gauge. The tram gauge set used to perform the recommended measuring checks must include a vertical pointer.

Two types of measurements can be made with a tram gauge: direct point–to–point measurements and measurements calculated on a horizontal plane (datum line) parallel to the underbody. Point–to–point measurements are generally taken on steering and suspension engine compartment parts and simply require the vertical pointers to be set equally.

For horizontal plane measurements, the vertical pointers must be set as specified for each point to bemeasured.

Dimensions–to–gauge holes are measured to the center of the holes and flush to the adjacent surface metal unless otherwise specified. It is recommended that the diagonal dimensions to the cross–body be checked on both sides in order to verify the dimensional accuracy of the vehicle underbody.

FLOOR PAN INSULATORS

The floor pan insulators have been designed for the higher floor pan temperatures that result from the use of the catalytic converter in the exhaust system. Therefore, when servicing a vehicle, it is essential that any insulators that may have been disturbed or removed be reinstalled in the original sequence and location. Also, if an insulator needs to be replaced, use only the insulation specified for that location on the floor pan.

When servicing or replacing interior insulators, observe the following instructions.

- Install the insulators in the original position and sequence. Butt the pieces together in order to avoid gapping or overlapping.
- If it is necessary to replace an insulator, use only the specified insulation.
- Use the original part to determine the amount of replacement material required and as a template for cutting and fitting the new piece to the floor pan.
- When installing the insulator, do not enlarge any cutouts or holes that are used for the attachment of interior parts such as the instrument panel or the floor console.
- Route the cross–body harness for interior parts over the floor pan insulators. Clip it in the original location.
- Do not apply spray–on deadeners or trim adhesives to the top of the floor pan at the area directly over the catalytic converter or the muffler.

Any insulator service repair or replacement should be the same thickness, size, and location as the original installation in the vehicle.

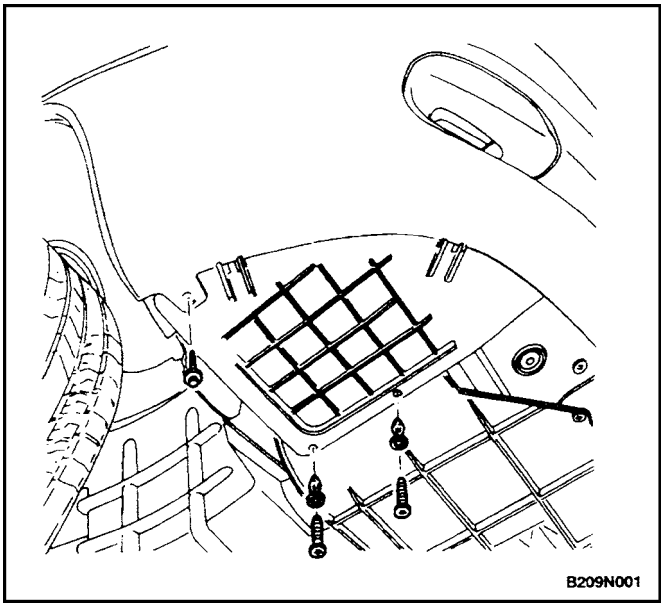

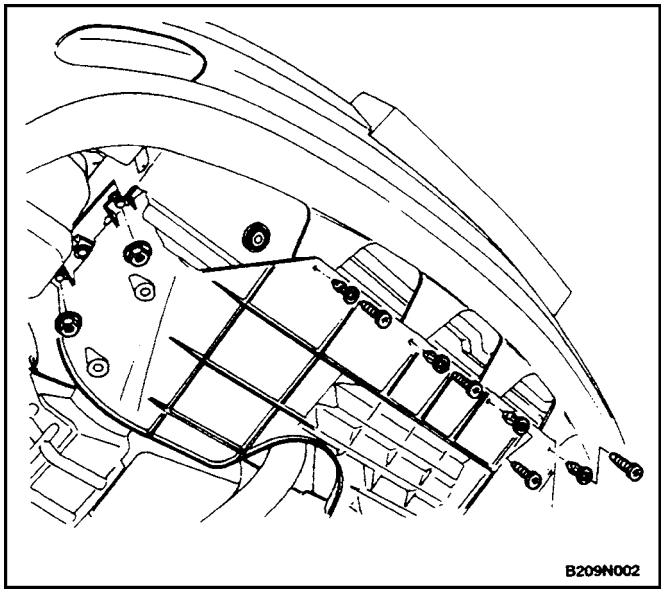

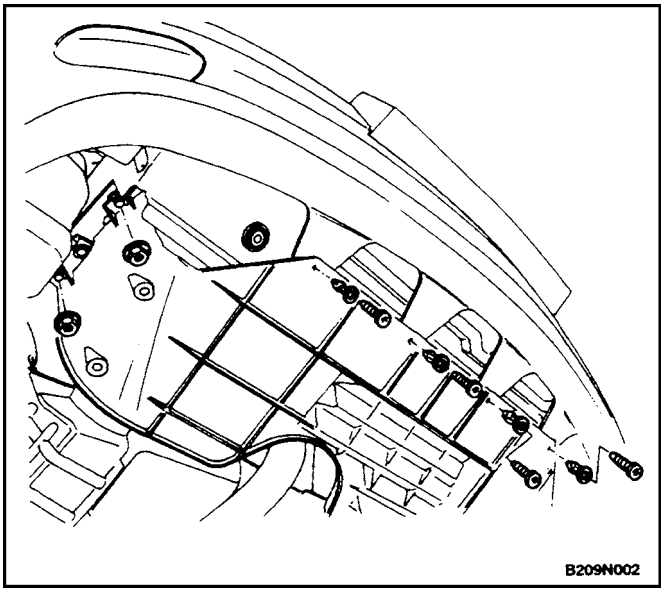

ENGINE UNDER COVER

Removal Procedure

1. Raise and suitably support the vehicle.
2. Remove the screws and the front fascia splash shield.
3. Remove the screws, the nuts, and the engine under cover.

Installation Procedure

1. Install the engine under cover with the screws and the nuts.

   Tighten

   Tighten the engine under cover nuts to 2 N•m (18 lbin).
2. Install the front fascia splash shield with the screws.

   Tighten

   Tighten the front fascia splash shield screw to 1.5 N•m (13 lb–in).
3. Lower the vehicle.

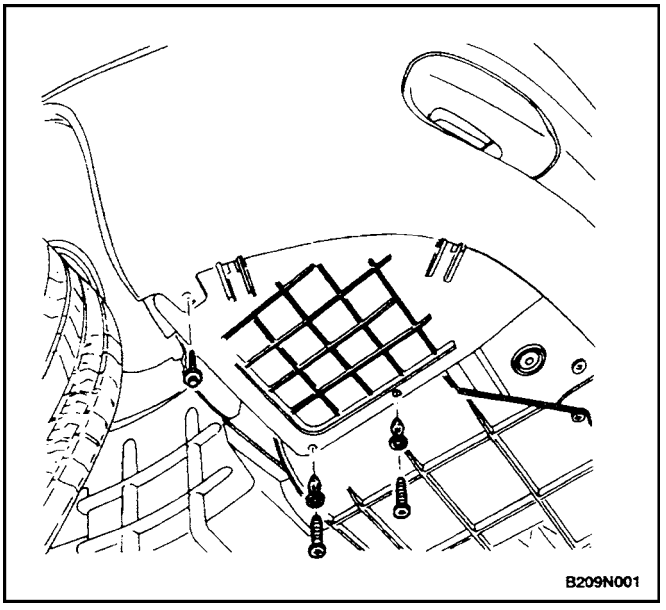

4. Install the front fascia splash shield with the screws.
   Tighten
   Tighten the front fascia splash shield screw to 1.5 N•m (13 lb–in).
5. Lower the vehicle.

GENERAL DESCRIPTION AND SYSTEM OPERATION

GENERAL BODY CONSTRUCTION

This vehicle is constructed with a unitized body which incorporates integral front and rear frame side rails.

The front suspension lower control arms are bolted to and retained by supports, one each on the right and left sides. The front suspension lower control arm supports are attached to the underbody with three bolts at two locations. The engine is bolted to the integral front side rails. The suspension strut towers must be dimensionally correct in relation to the remainder of the underbody in order to maintain specified suspension strut and caster/camber angles.

Since the individual underbody parts contribute directly to the overall strength of the body, it is essential to observe proper welding techniques during service repair operations. The underbody parts should be properly sealed and rustproofed whenever body repair operations destroy or damage the original sealing and rustproofing. When rustproofing critical underbody parts, use a good–quality type of air–dry primer, such as a corrosionresistant chromate or an equivalent material. Combination–type primer/surfacers are not recommended.

ENGINE UNDER COVERS

The engine under covers are molded pieces of plastic that serve as shields for the underside of the engine. The covers help protect the engine from small rocks, gravel and other objects that would otherwise come into contact with the engine during normal driving conditions.

SECTION : 9P

DOORS

CAUTION : Disconnect the negative battery cable before removing or installing any electrical unit or when a tool or equipment could easily come in contact with exposed electrical terminals. Disconnecting this cable will help prevent personal injury and damage to the vehicle. The ignition must also be in LOCK unless otherwise noted.

TABLE OF CONTENTS

SPECIFICATIONS 9P–1
FASTENER TIGHTENING SPECIFICATIONS . 9P–1
SCHEMATIC AND ROUTING DIAGRAMS 9P–3
POWER DOOR LOCKS 9P–3
POWER WINDOWS ((FRONT AND REAR)) .. 9P–4
DIAGNOSIS 9P–5
POWER DOOR LOCKS 9P–5
POWER WINDOWS (FRONT AND REAR) ... 9P–7
MAINTENANCE AND REPAIR 9P–9
ON–VEHICLE SERVICE 9P–9
FRONT DOOR GLASS RUN 9P–9
REAR DOOR GLASS RUN 9P–9
FRONT DOOR SECONDARY WEATHERSTRIP 9P–11
REAR DOOR SECONDARY WEATHERSTRIP 9P–11
DOOR LOCK STRIKER 9P–12
DOOR LOCK STRIKER ADJUSTMENT 9P–13
FRONT DOOR LOCK 9P–14
CHILDPROOF REAR DOOR LOCK 9P–17
INSIDE DOOR HANDLE 9P–19
INSIDE LOCK ROD 9P–19
OUTSIDE DOOR HANDLE 9P–20
DOOR LOCK CYLINDER 9P–21
POWER FRONT WINDOW REGULATOR ... 9P–21
POWER REAR WINDOW REGULATOR 9P–23
MANUAL REAR WINDOW REGULATOR 9P–24
MANUAL REAR WINDOW REGULATOR HANDLE 9P–25
FRONT DOOR ASSEMBLY 9P–25
REAR DOOR ASSEMBLY 9P–27
DOOR HINGE 9P–29
DOOR HOLD OPEN LINK 9P–29
INSIDE CHANNEL MOLDING 9P–30
OUTSIDE CHANNEL MOLDING 9P–31
DOOR WEATHERSTRIP 9P–31
DOOR SEAL TRIM 9P–32
FRONT DOOR OPENING WEATHERSTRIP . 9P–33
REAR DOOR OPENING WEATHERSTRIP .. 9P–34
GENERAL DESCRIPTION AND SYSTEM OPERATION 9P–35
DOOR LOCK STRIKER 9P–35
CHILDPROOF REAR DOOR LOCK 9P–35
POWER DOOR LOCKS 9P–35
POWER WINDOWS 9P–35

SPECIFICATIONS

FASTENER TIGHTENING SPECIFICATIONS

Application	N•m	Lb–Ft	Lb–In
Door Hinge Bolts	25	18	–
Door Hold Open Link–to–Body Bolt	27	20	–
Door Hold Open Link–to–Door Bolts	6	–	53
Door Lock Striker Screws	10	–	89
Door Pull Bracket Screws	3.5	–	31

Application	N•m	Lb–Ft	Lb–In
Front and Rear Door Lock Screws	10	–	89
Inside Door Handle Screw	1.5	–	13
Outside Door Handle Bolts	4	–	35
Rear Door Exterior Garnish Molding Screws	1.5	–	13
Window Regulator Nuts	8	–	71

SCHEMATIC AND ROUTING DIAGRAMS

POWER DOOR LOCKS

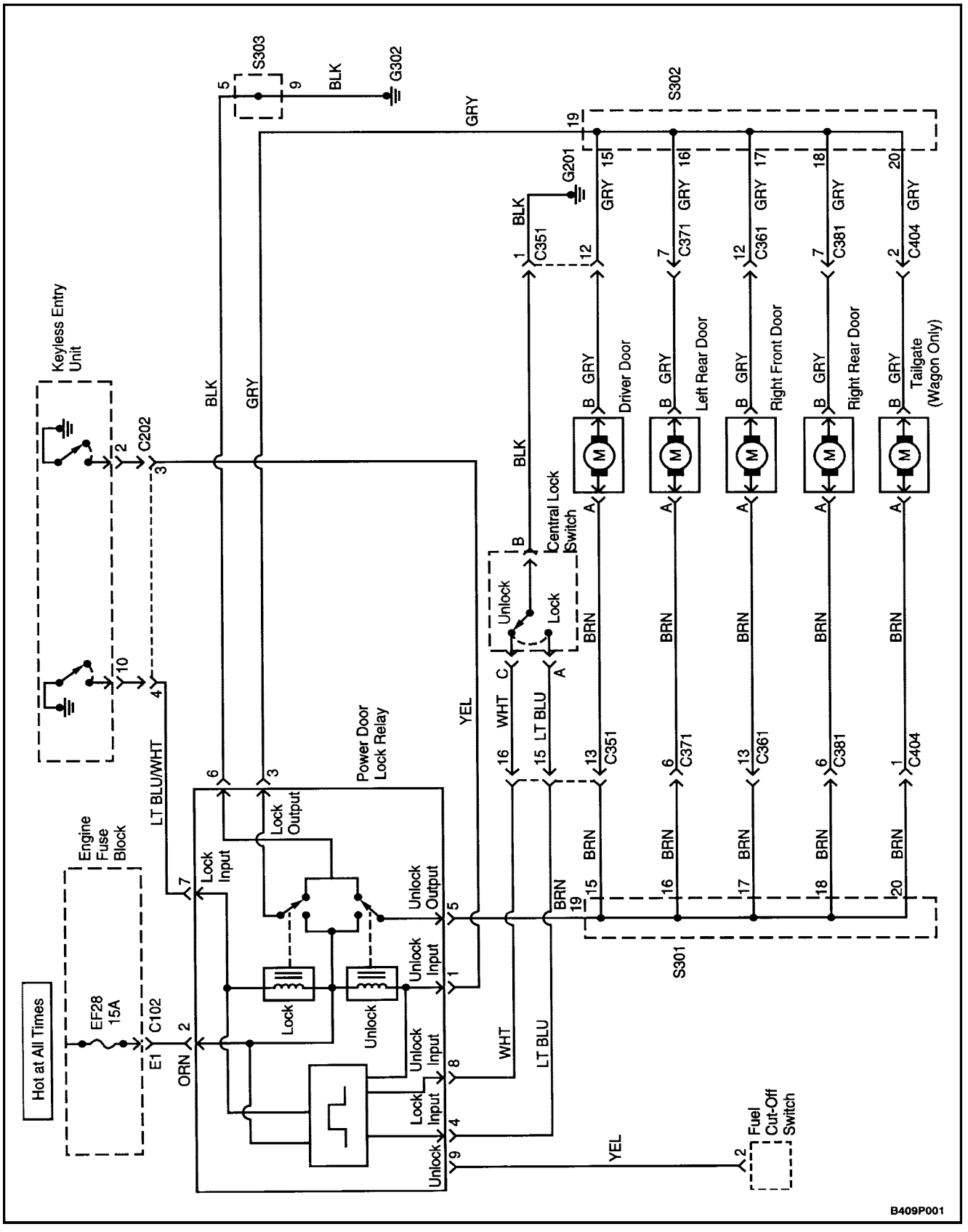

POWER WINDOWS ((FRONT AND REAR))

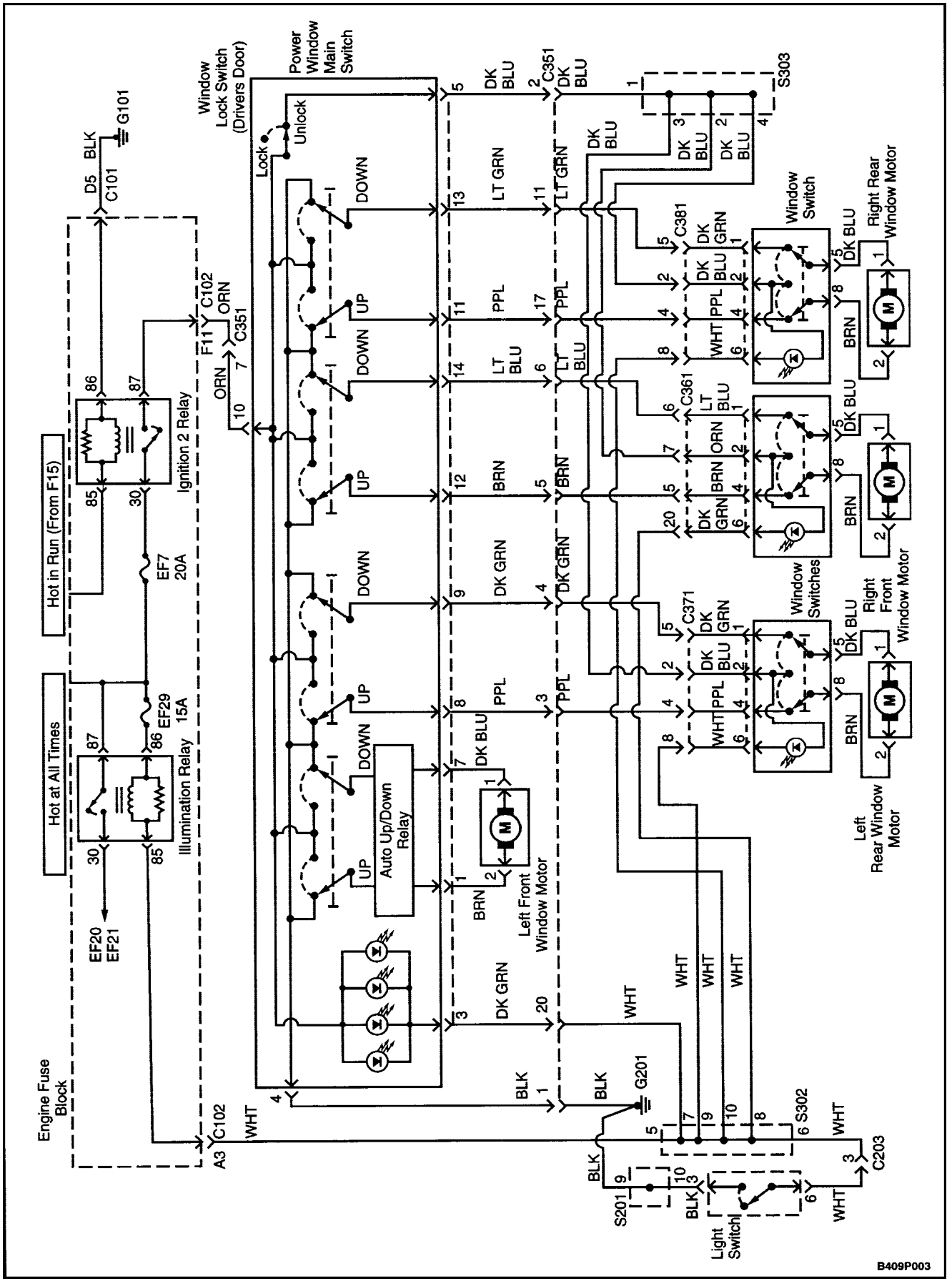

DIAGNOSIS

POWER DOOR LOCKS

Power Door Locks Do Not Operate At Any Door

Step	Action	Value(s)	Yes	No
1	Check fuse EF28. Is fuse Ef28 blown ?		Go to*Step 2*	Go to*Step 3*
2	1. Check for a short circuit and repair it, if necessary. 2. Replace fuse EF13. Is the repair complete ?		System OK	
3	Check the voltage at fuse EF28. Is the voltage equal to the specified valus ?	11—14 v	Go to*Step 5*	Go to*Step 4*
4	Repair the power supply circuit for fuse EF28. Is the repair complete ?		System OK	
5	Check the voltage at the YEL wire of the power door lock relay connector. Is the voltage equal to the specified value ?		Go to*Step 7*	Go to*Step 6*
6	Repair the short to voltage between the power door lock relay connector and the fuel cutoff switch. Is the repair complete ?		System OK	
7	Check the voltage at terminal 2 (ORN) of the power door lock relay connector. Is the voltage equal to the specified value ?	11—14 v	Go to*Step 9*	Go to*Step 8*
8	Repair the open circuit between fuse EF28 and terminal 2 (ORN) of the door lock relay connecotor. Is the repair complete ?		System OK	
9	Use an ohmmeter to check the continuity between terminal 6 (BLK) of the power door lock relay connector and ground. Is the continuity equal to the specified value ?	$\approx$ 0 Ω	Go to*Step 11*	Go to*Step 10*
10	Repair the open circuit between terminal 6 (BLK) of the power door lock relay connector and ground. Is the repair complete ?		System OK	
11	1. Disconnect the power door lock relay connector. 2. Connect a fused jumper wire to the positive battery terminal. 3. Connect another jumper wire to ground. 4. Apply the positive jumper wire to terminal 3 (GRY) of the power door lock relay connector. 5. Apply the grounded jumper wire to terminal. 6. Switch the jumper wires so that the positive jumper is connected to terminal 5 (BRN) and the grounded jumper is connected to terminal 3 (GRY). Do the doors lock and unlock when power and ground are applied to terminals 3 and 5 of the door lock relay connector ?		Go to*Step 15*	Go to*Step 12*

Step	Action	Value(s)	Yes	No
12	Repair the open circuit between terminal 3 of the power door lock relay and splice pack S302, or between terminal 5 of the door lock relay and splice pack S301. Is the repair complete ?		System OK	
13	1. Raise the power window in the driver's side door. 2. Disconnect the central lock switch connector at the top of the door lock. (There are three connectors on the door lock. Use the schematic to verify the correct connector.) 3. Use an ohmmeter to check the continuity between terminal B (BLK) of the central lock switch connector and ground. Is the continuity equal to the specified value ?	≈ 0 Ω	Go to*Step 15*	Go to*Step 14*
14	Repair the open circuit between the central lock switch connector terminal B (BLK) and ground. Is the repair complete ?		System OK	
15	1. Make sure the lock relay connector is connected. 2. Touch a grounded jumper wire to terminal A (LT BLU) of the disconnected central lock switch connector. 3. Remove the grounded jumper wire and touch it to terminal C (WHT) of the disconnected central lock switch connector. Do the doors lock and unlock when terminals C and A are alternately grounded ?		Go to*Step 16*	Go to*Step 17*
16	1. Make sure all the lock rods are connected to the driver's side door lock. 2. If no disconnected lock rods are found, replace the driver's side door lock with the integral door lock switch. (Do not confuse the door lock with the lock cylinder. The door lock has three connectors:the lock switch, the lock solenoid, and the door contact switch. Use the schematic to verify the correct connector.) Is the repair complete ?		System OK	
17	Use an ohmmeter to check the continuity between terminal A (LT BLU) of the disconnected central lock switch connector and terminal 4 (LT BLU) of the power door lock relay connector. Is the continuity equal to the specified value ?	≈ 0 Ω	Go to*Step 19*	Go to*Step 18*
18	Repair the open LT BLU wire. Is the repair complete ?		System OK	
19	Use an ohmmeter to check the continuity between terminal C (WHT) of the disconnected central lock switch connector and terminal 8 (WHT) of the door lock relay connector. Is the continuity equal to the specified value ?	≈ 0 Ω	Go to*Step 21*	Go to*Step 20*

Step	Action	Value(s)	Yes	No
20	Repair the open WHT wire. Is the repair complete ?		System OK	
21	Repair the open lock relay. Is the repair complete ?		System OK	

POWER WINDOWS (FRONT AND REAR)

Power Windows Do Not Operate

Step	Action	Value(s)	Yes	No
1	1. Make sure the window lock switch on the driver's side door is not engaged. necessary. 2. Test each of the power windows. Does any power window operate ?		Go to*Step 7*	Go to*Step 2*
2	1. At the driver's side door, remove the power window switch retaining screw. 2. Lift up the power window switch to expose the connector. 3. Turn the ignition ON. 4. Check the voltage at terminal 10 (ORN) of the power window switch. Is the voltage equal to the specified value ?	11—14 v	Go to*Step 4*	Go to*Step 3*
3	Repair the open power supply circuit to the driver's side door power window switch. Is the repair complete		System OK	
4	Use an ohmmeter to check the continuity between ground and terminal 4 (BLK) of the driver's side door power window switch connector. Is the continuity equal to the specified value ?	≈ 0 Ω	Go to*Step 6*	Go to*Step 5*
5	Repair the open circuit between ground and terminal 4 (BLK) of the driver's side door power window switch. Is the repair complete		System OK	
6	Replace the driver's side power window switch. Is the repair complete		System OK	
7	1. At the door with the inoperative power window, remove the door trim panel. 2. connect a fused jumper wire to the positive battery terminal. 3. Connect another jumper wire to the negative battery teminal. 4. Disconnect the two—wire connector between the window motor and the door harness. 5. Connect the negative jumper wire to one of the terminals of the two—wire connector. 6. Touch the positive jumper wire to the other terminal of the two—wire connector. Does the window move up when the motor is powered directly by the battery, and down when the jumper connections are reversed ?		Go to*Step 9*	Go to*Step 8*
8	Replace the window motor. Is the repair complete		System OK	

Step	Action	Value(s)	Yes	No
9	Check the operation of the windows. Is the driver's side window the one that is inoperative ?		Go to*Step 10*	Go to*Step 11*
10	Replace the driver's side door power window switch. Is the repair complete		System OK	
11	1. Make sure the window lock switch on the driver's side door is not engaged. 2. Turn the ignition ON. 3. Backprobe to check the voltage at terminal 5 (DK BLU) of the driver's side door power window switch. Is the voltage equal to the specified value ?	11—14 v	Go to*Step 12*	Go to*Step 10*
12	1. Make sure the window lock switch on the driver's side door is not engaged. 2. Turn the ignition ON. 3. Check the voltage at terminal 2 (PNK) of the window switch connector for the inoperative window. Is the voltage equal to the specified value ?	11—14 v	Go to*Step 14*	Go to*Step 13*
13	Repair the open wire between the terminal 2 of the window switch and the driver's side door power window switch. Is the repair complete		System OK	
14	1. At the inoperative window switch, use an ohmmeter to check the continuity between ground and terminal 4. 2. At the inoperative window switch, use an ohmmeter to check the continuity between ground and terminal 1. Are the continuities equal to the specified value ?	11—14 v	Go to*Step 15*	Go to*Step 16*
15	Replace the power window switch. Is the repair complete		System OK	
16	If one of the window switch wires tested in Step 14 does not show continuity with ground, use an ohmmeter to test the continuity of that wire between the window switch and the driver's side door power window switch. Is the continuity equal to the specified value ?	≈ 0 Ω	Go to*Step 17*	Go to*Step 18*
17	Replace the window switch for the inoperative window. Is the repair complete ?		System OK	
18	Repair the open circuit between the window switch and the driver's side power window switch. Is the continuity equal to the specified value ?	≈ 0 Ω	Go to*Step 21*	Go to*Step 20*

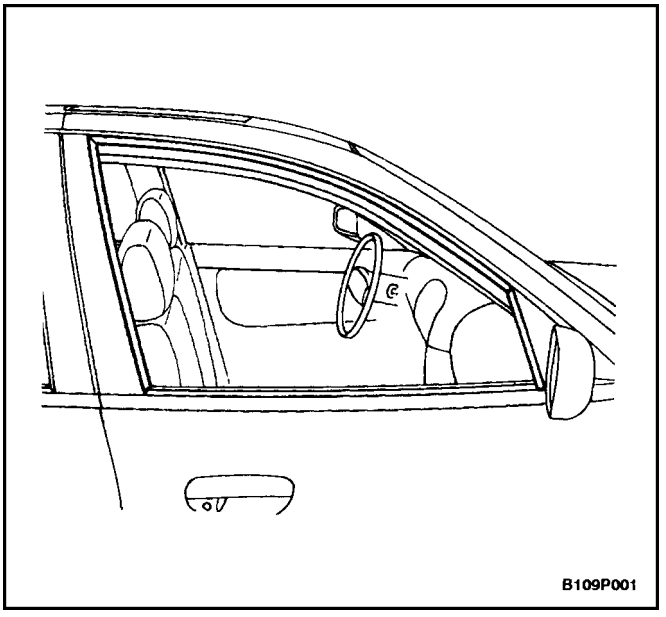

MAINTENANCE AND REPAIR

ON–VEHICLE SERVICE

FRONT DOOR GLASS RUN

Removal Procedure

1. Remove the outside rearview mirror. Refer to *Section 9L, Glass and Mirrors.*
2. Remove the front door glass. Refer to *Section 9L, Glass and Mirrors.*
3. Remove the glass run.

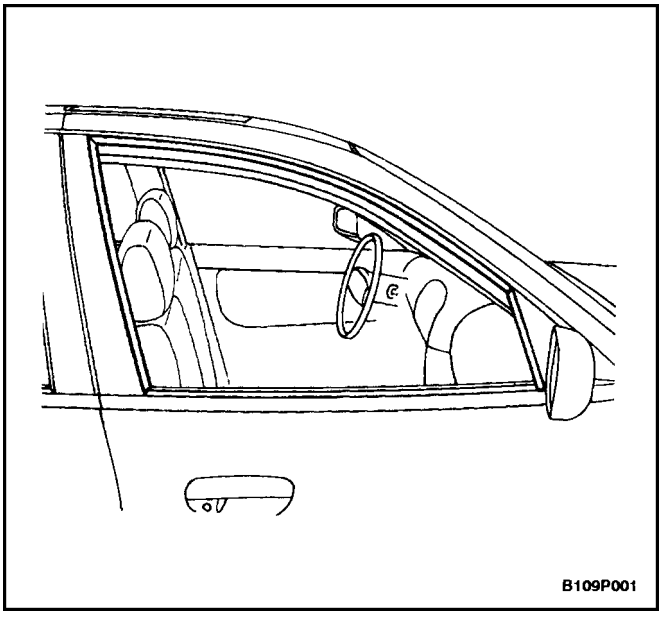

Installation Procedure

1. Install the glass run.
2. Install the front door glass. Refer to *Section 9L, Glass and Mirrors.*
3. Install the outside rearview mirror. Refer to *Section 9L, Glass and Mirrors.*

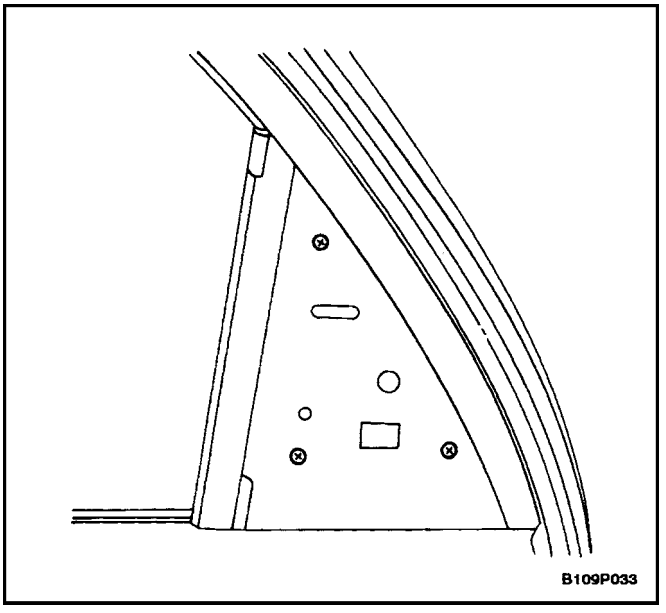

REAR DOOR GLASS RUN

Removal Procedure

1. Remove the rear door glass. Refer to *Section 9L, Glass and Mirrors.*
2. Remove the interior garnish molding.
3. Remove the screws and the exterior garnish molding.

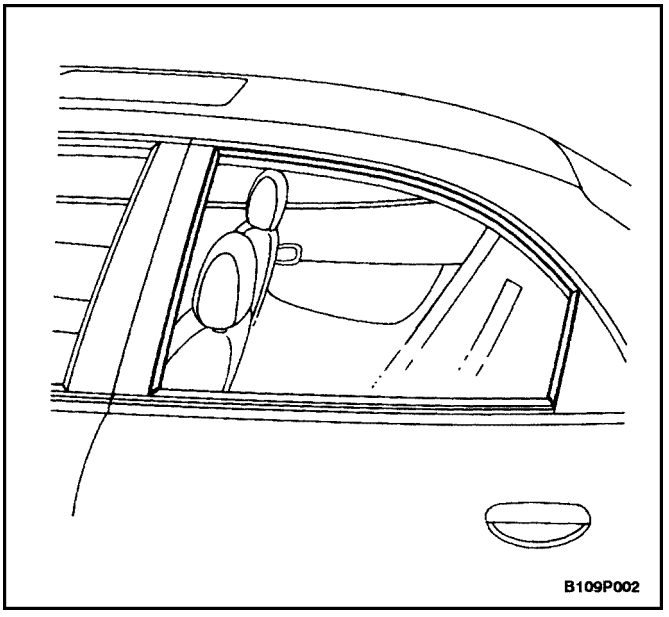

4. Remove the glass run.

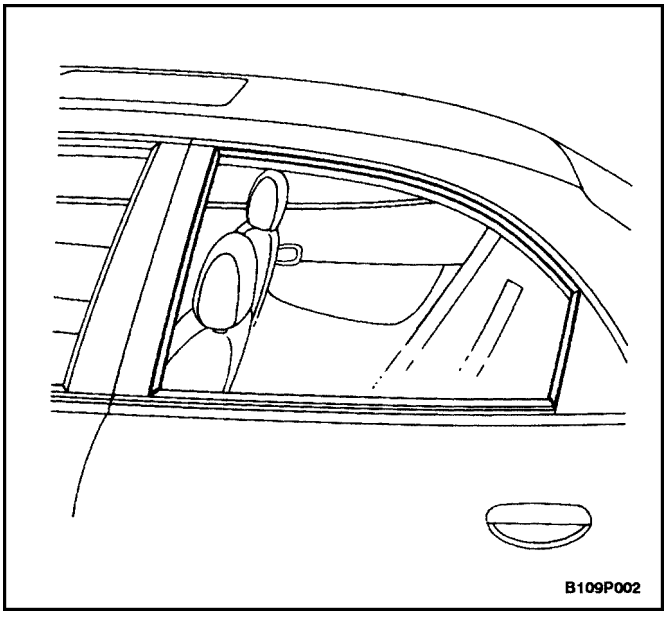

Installation Procedure

1. Install the glass run.

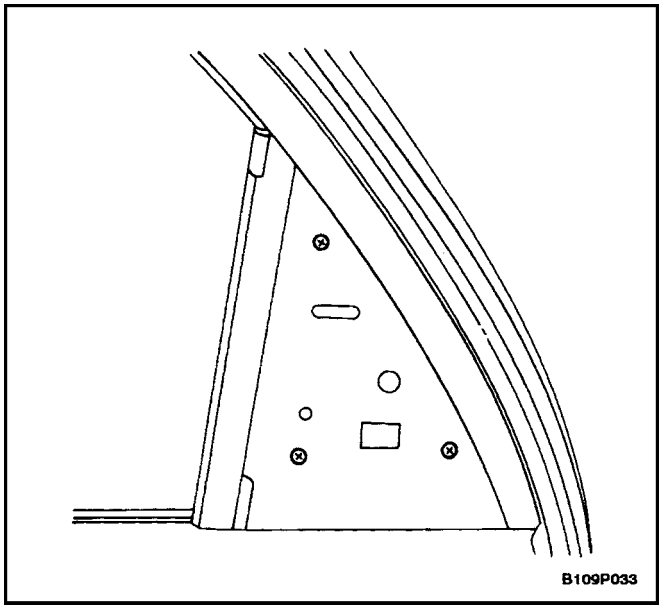

Notice : Dissimilar metals in direct contact with each other may corrode rapidly. Make sure to use the correct fasteners to prevent premature corrosion.

2. Install the exterior garnish molding with the screws.

   Tighten

   Tighten the rear door exterior garnish molding screws to 1.5 N•m (13 lb–in).
3. Install the interior garnish molding.
4. Install the rear door glass. Refer to *Section 9L, Glass and Mirrors.*

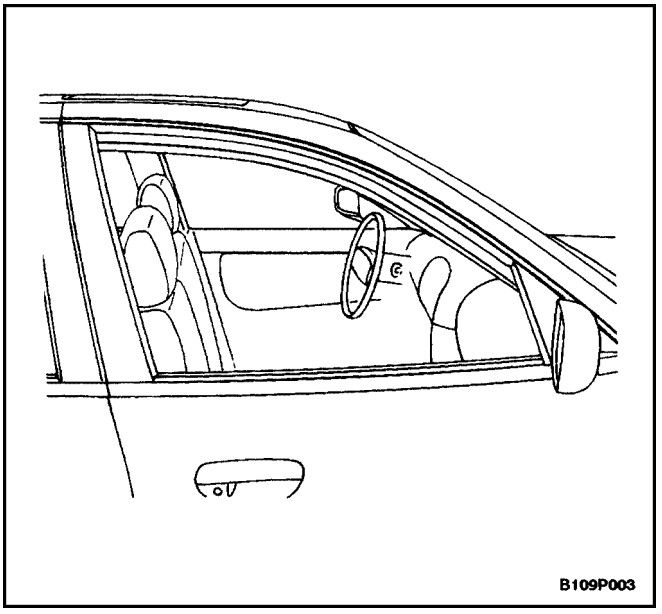

FRONT DOOR SECONDARY WEATHERSTRIP

Removal Procedure

1. Remove the outside rearview mirror. Refer to *Section 9L, Glass and Mirrors.*
2. Remove the front door secondary weatherstrip.

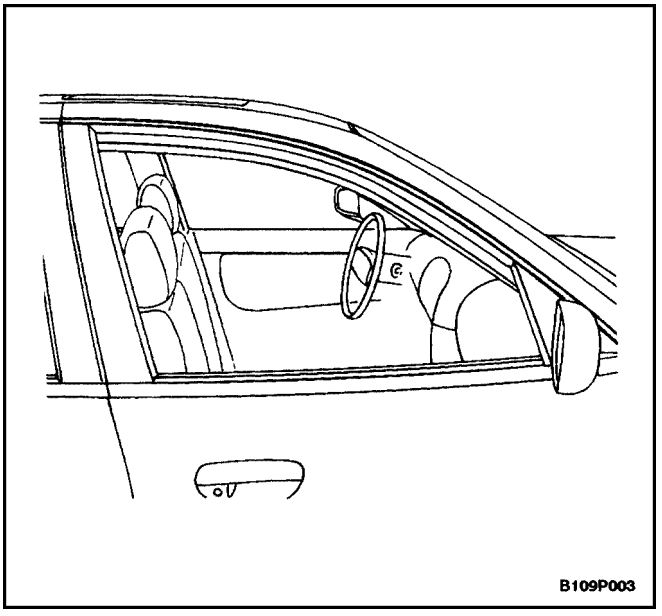

Installation Procedure

1. Install the front door secondary weatherstrip.
2. Install the outside rearview mirror. Refer to *Section 9L, Glass and Mirrors.*

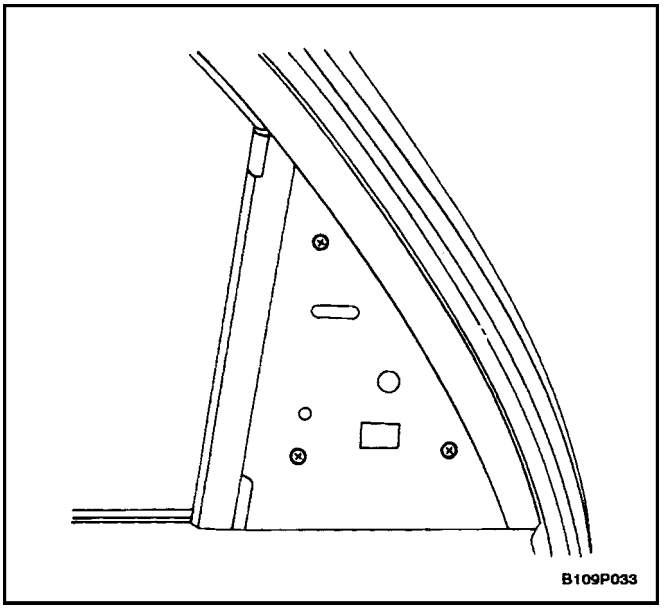

REAR DOOR SECONDARY WEATHERSTRIP

Removal Procedure

1. Remove the interior garnish molding.
2. Remove the screws and the exterior garnish molding.

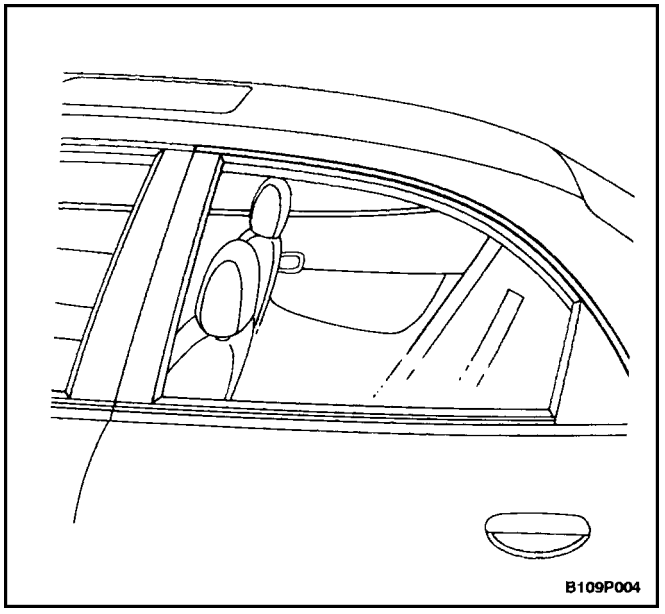

3. Remove the rear door secondary weatherstrip.

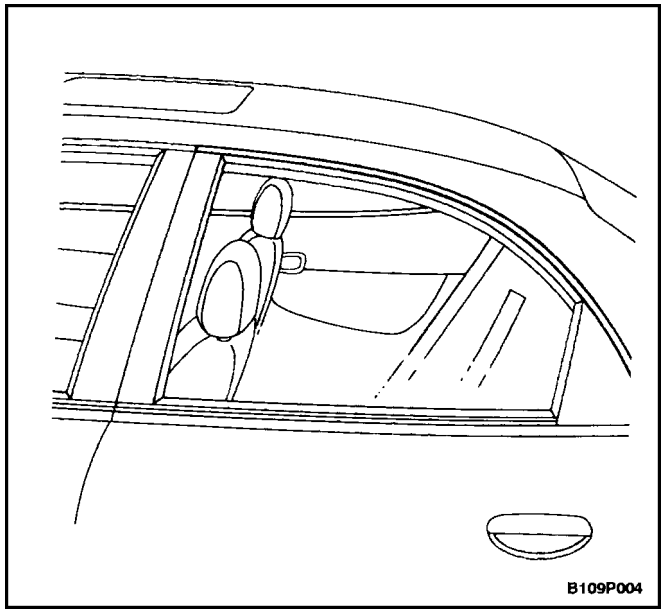

Installation Procedure

1. Install the rear door secondary weatherstrip.

Notice : Dissimilar metals in direct contact with each other may corrode rapidly. Make sure to use the correct fasteners to prevent premature corrosion.

2. Install the exterior garnish molding with the screws.

   Tighten

   Tighten the rear door exterior garnish molding screws to 1.5 N•m (13 lb–in).

3. Install the interior garnish molding.

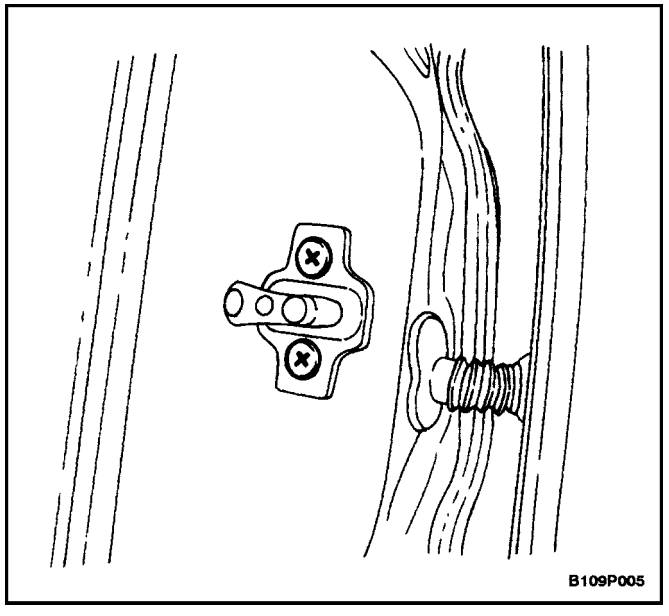

DOOR LOCK STRIKER

Removal Procedure

1. Remove the screws and the door lock striker.

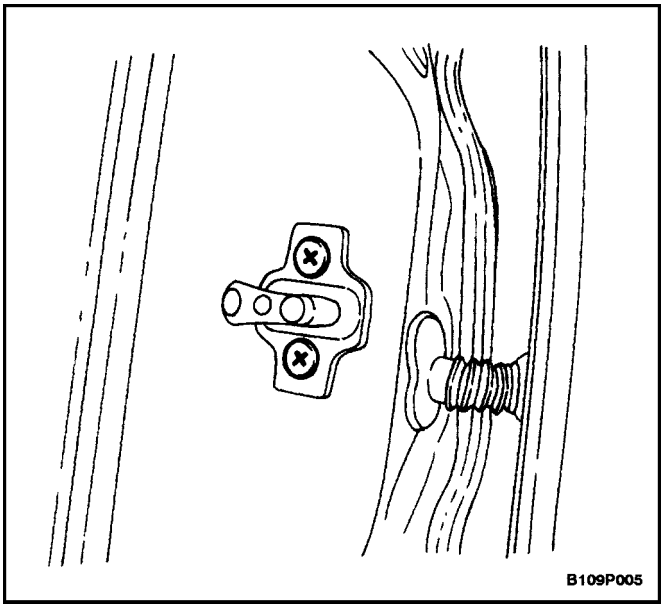

Installation Procedure

Notice : Dissimilar metals in direct contact with each other may corrode rapidly. Make sure to use the correct fasteners to prevent premature corrosion.

1. Install the screws and the door lock striker.

   Tighten

   Tighten the door lock striker screws to 10 N•m (89 lb–in).

DOOR LOCK STRIKER ADJUSTMENT

The door lock striker consists of a striker with two screws that are threaded into a tapped, floating cage plate located in the appropriate body pillar. This floating cage plate allows the striker to be easily adjusted in or out and up or down. The door is secured in the closed position when the door lock fork snaps over and engages the striker.

Notice : The door lock striker is an important attaching part that can affect the performance of vital components and systems and can cause major repair expenses. If replacement becomes necessary, the door lock striker must be replaced by one with the same part number or with an equivalent. Do not use a replacement part of lesser quality or of a substitute design. The specified torque values must be used during reassembly in order to ensure the proper retention of the part.

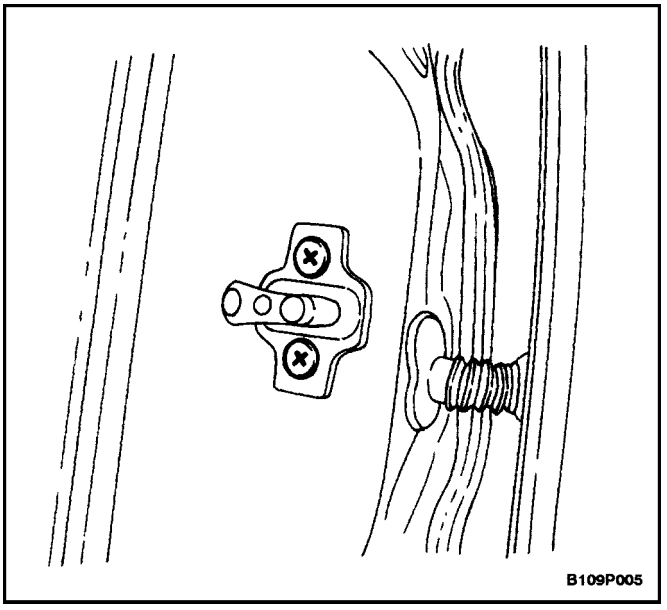

Up/Down or In/Out Adjustment

An adjustment of the striker in the up and down or in and out directions may be necessary for a number of reasons: vehicle frame damage as the result of a collision, installation of new door weatherstripping, customer complaints of excessive windnoise, or difficulty in opening or closing the door. In order to adjust the door striker in an up and down or in and out direction, performthe following procedure:

1. The door must be properly aligned.
2. Loosen the striker screws.
3. The floating cage plate can be moved slightly using the ends of the striker screws. Move the floating cage plate to the desired position.

Notice : It is important to use a flat–end rotary file in order not to damage the tapped floating cage plate. The striker screws and the tapped floating cage plate are important attaching parts that could affect the performance of vital components and systems.

4. If proper adjustment requires that the floating cage plate be moved more than is possible, use an electric hand drill and a 3/8–inch rotary file with a flat head in order to enlarge the body opening in the direction required.
5. Tighten the striker screws to the correct position.

Tighten

Tighten the door lock striker screws to 10 N•m (89 lb–in).

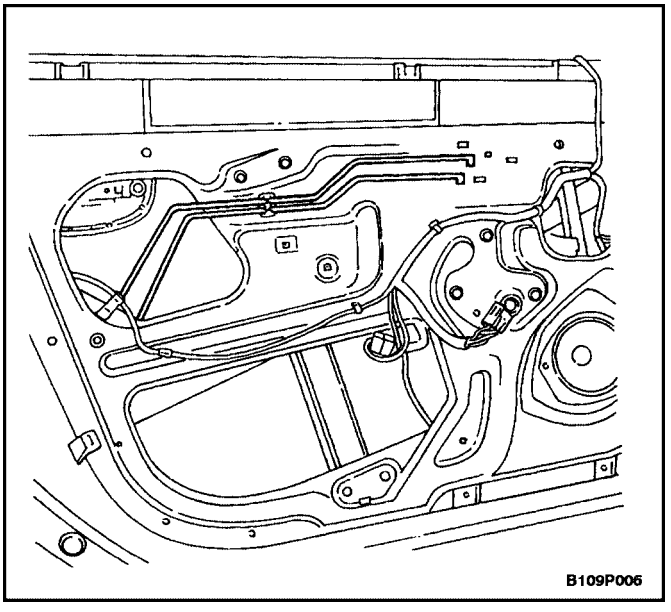

FRONT DOOR LOCK

Removal Procedure

1. Disconnect the negative battery cable.
2. Remove the seal trim. Refer to”Door Seal Trim” in this section.
3. Disconnect the inside door handle and the lock rods.

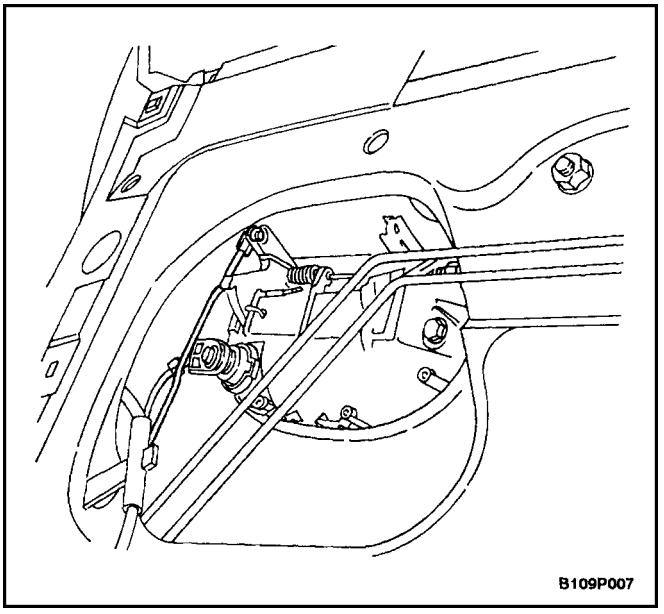

4. Disconnect the outside door handle and the lock rods.

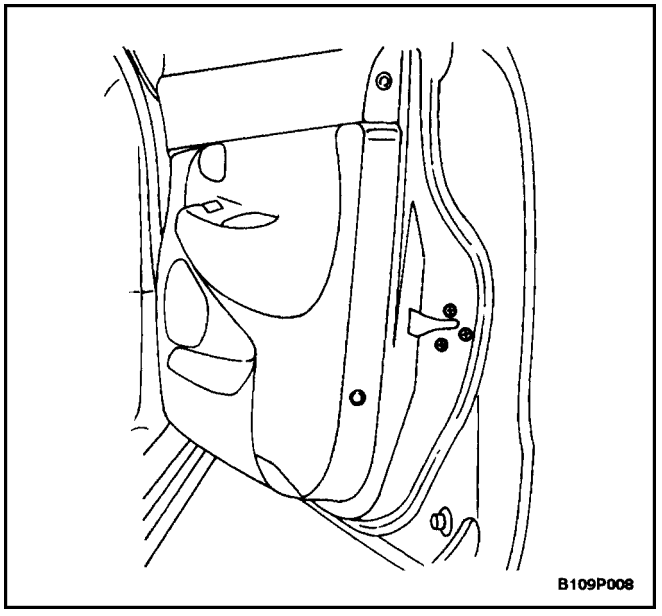

5. Remove the screws and the front door lock.

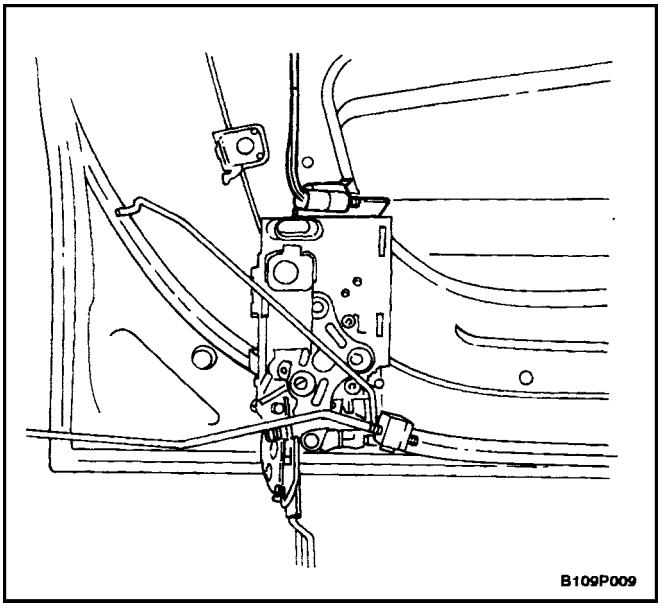

6. Disconnect the electrical connector.

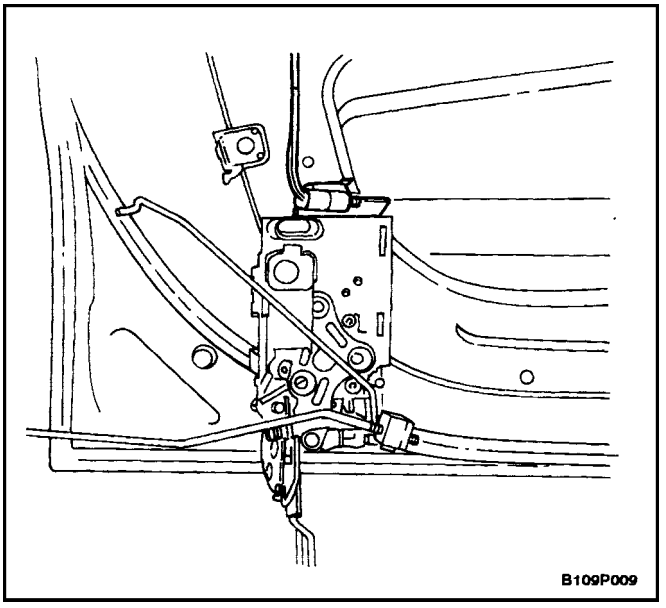

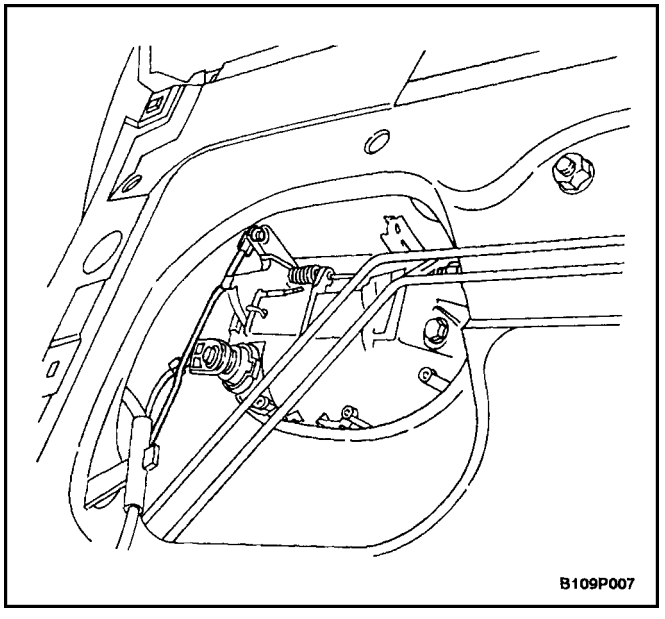

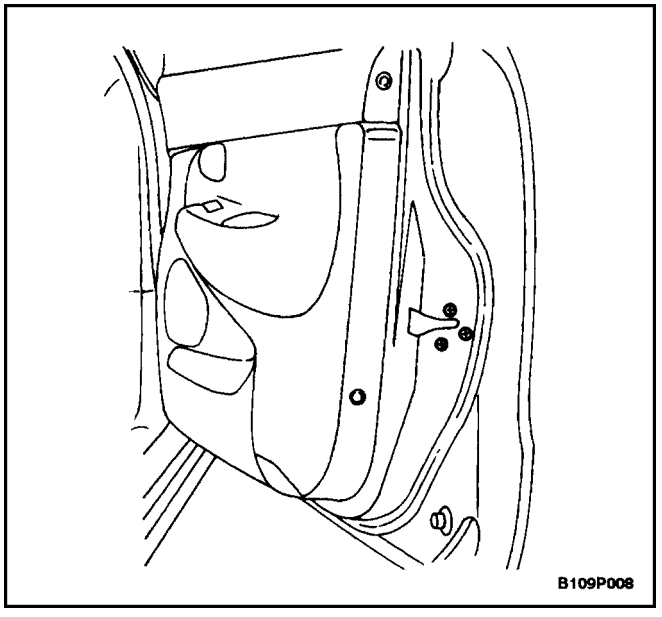

Installation Procedure

1. Connect the electrical connector.
2. Connect the inside door handle and the lock rods.
3. Connect the outside door handle and the lock rods.

Notice : It is important to use a flat–end rotary file in order not to damage the tapped floating cage plate. The striker screws and the tapped floating cage plate are important attaching parts that could affect the performance of vital components and systems.

4. Install the front door lock with the screws.

   Tighten

   Tighten the front door lock screws to 10 N•m (89 lbin).
5. Install the seal trim. Refer to”Door Seal Trim” in this section.
6. Connect the negative battery cable.

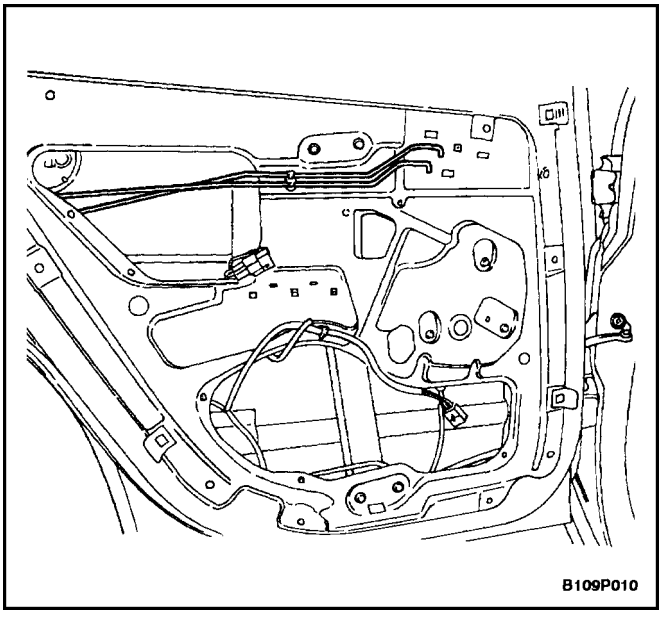

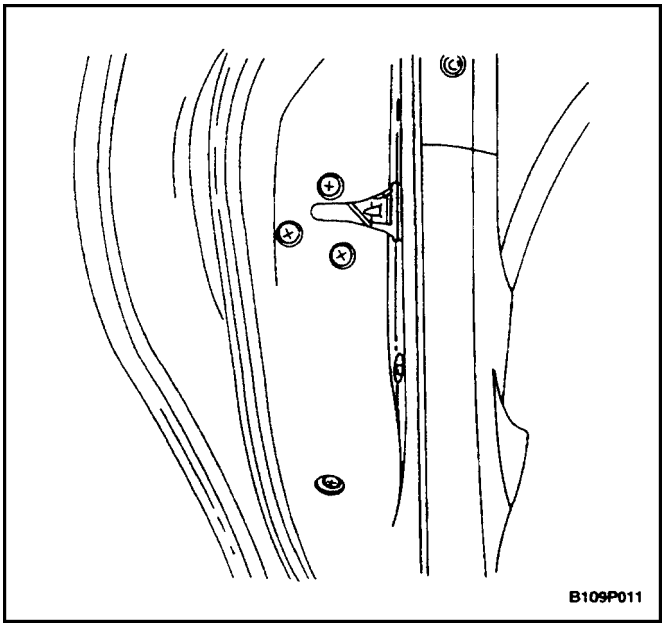

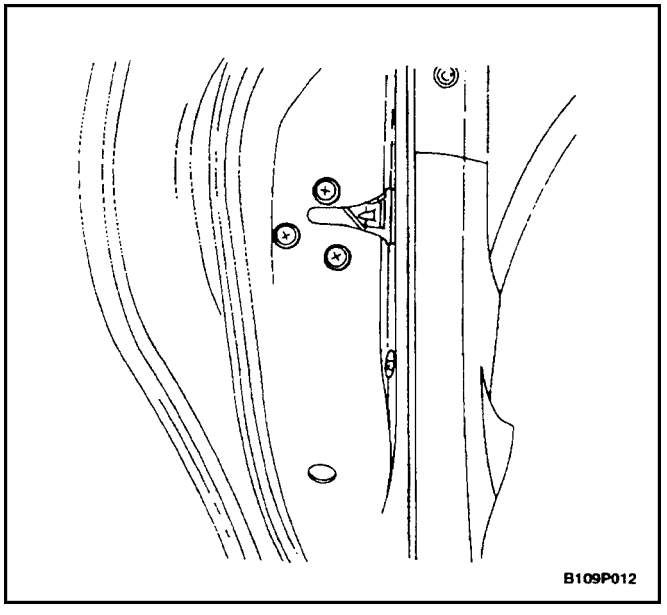

CHILDPROOF REAR DOOR LOCK

Removal Procedure

1. Disconnect the negative battery cable.
2. Remove the door seal trim. Refer to"Door Seal Trim" in this section.
3. Disconnect the inside door handle and the lock rods.
4. Disconnect the outside door handle and the lock rods.
5. Remove the screw and the guide rail.
6. Disconnect the electrical connector.
7. Disconnect the electrical connector.
8. Disconnect the lock rods at the lock.

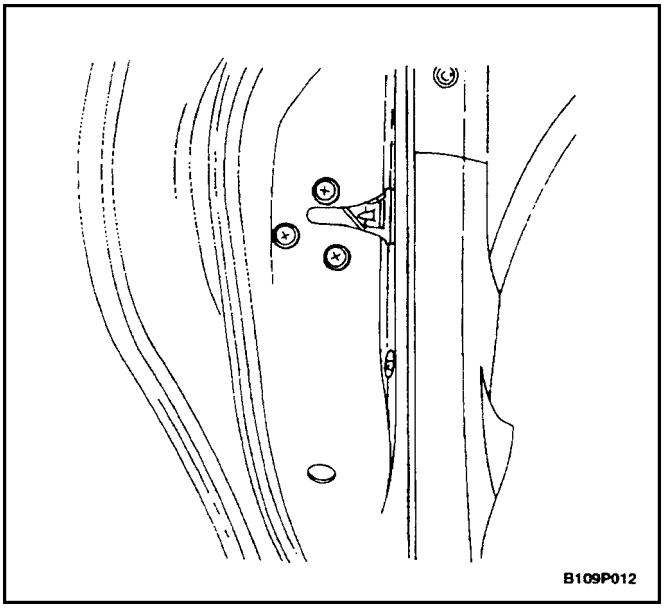

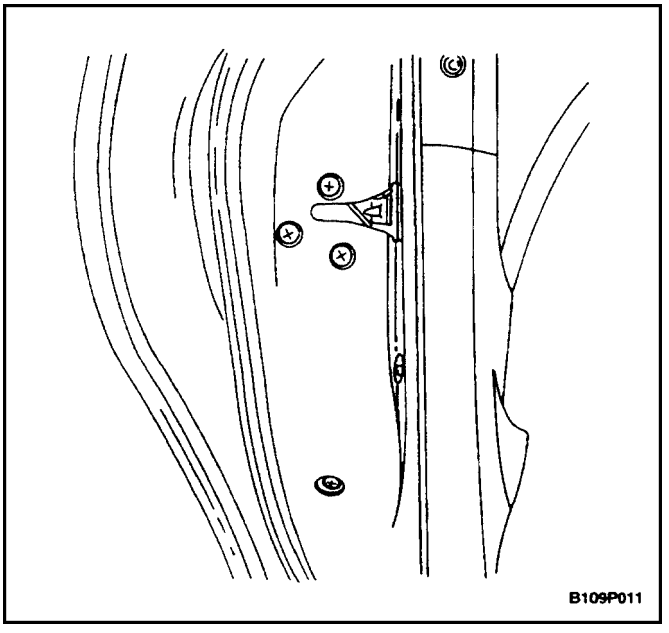

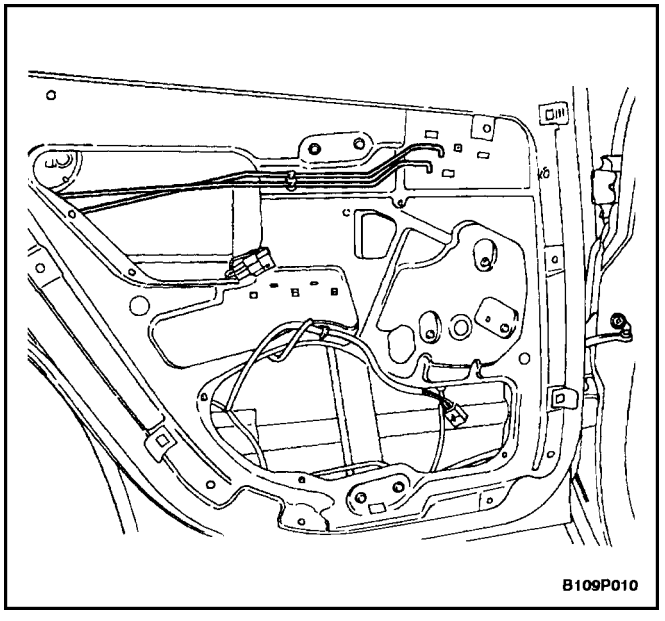

Installation Procedure

Notice : Dissimilar metals in direct contact with each other may corrode rapidly. Make sure to use the correct fasteners to prevent premature corrosion.

1. Install the rear door lock with the screws.

   Tighten

   Tighten the rear door lock screws to 10 N•m (89 lbin).

2. Connect the electrical connector.
3. Install the guide rail with the screw.
4. Connect the outside door handle and the lock rods.
5. Connect the inside door handle and the lock rods.
6. Install the door seal trim. Refer to”Door Seal Trim” in this section.
7. Connect the negative battery cable.

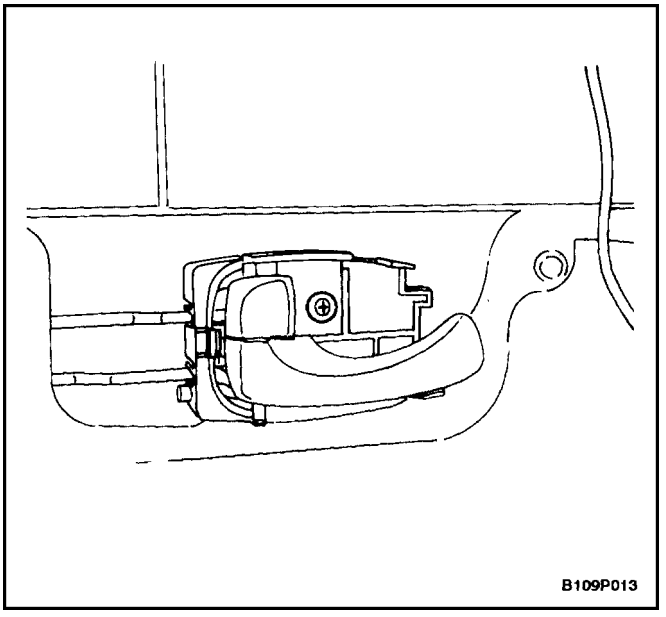

INSIDE DOOR HANDLE

Removal Procedure

1. Remove the door seal trim. Refer to"Door Seal Trim" in this section.
2. Remove the screw securing the door handle to the door.
3. Slide the door handle forward and remove it from the door.
4. Disconnect the inside door handle and the lock rods.

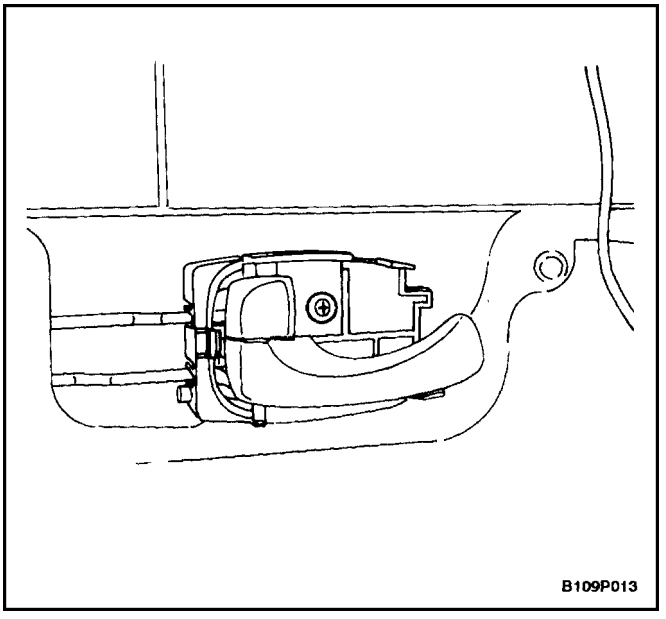

Installation Procedure

1. Connect the inside door handle and the lock rods.
2. Insert the inside door handle into the slots in the door.
3. Slide the door handle rearward.

Notice : Dissimilar metals in direct contact with each other may corrode rapidly. Make sure to use the correct fasteners to prevent premature corrosion.

4. Install the inside door handle screw.

   ### Tighten

   Tighten the inside door handle screw to 1.5 N•m (13 lb–in).

5. Install the door seal trim. Refer to"Door Seal Trim" in this section.

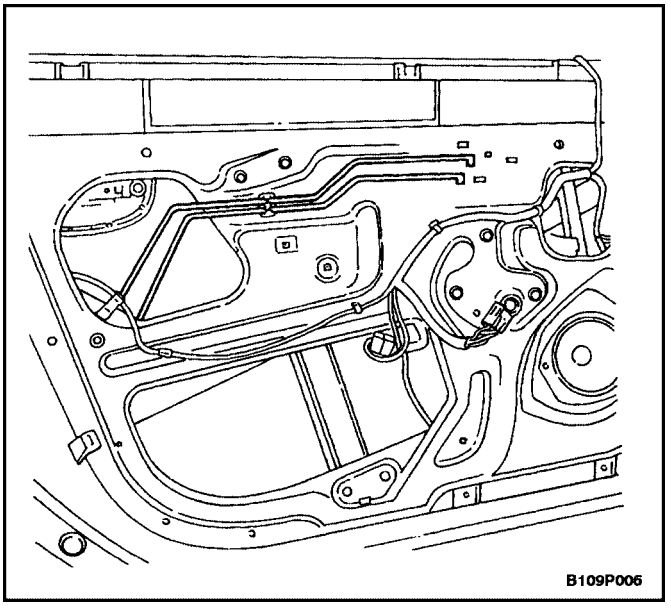

INSIDE LOCK ROD

Removal Procedure

1. Remove the door seal trim. Refer to"Door Seal Trim" in this section.
2. Disconnect the inside lock rods from the door handle and the lock.

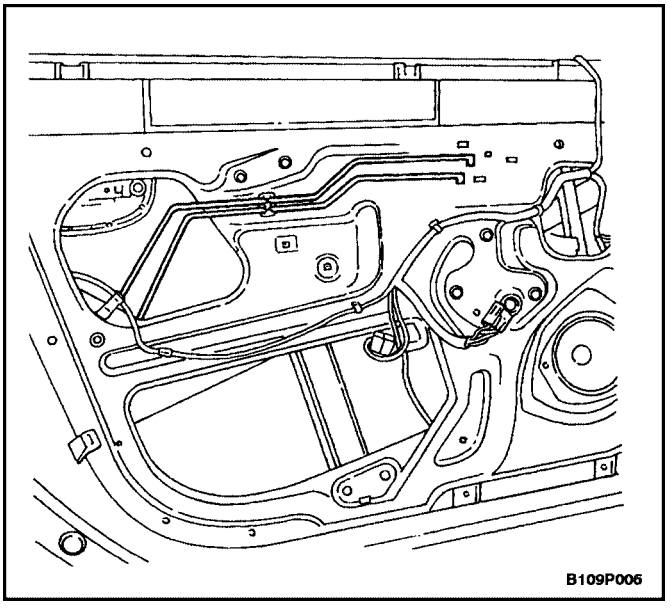

Installation Procedure

1. Connect the inside lock rods to the door handle and the lock.
2. Install the door seal trim. Refer to"Door Seal Trim" in this section.

OUTSIDE DOOR HANDLE

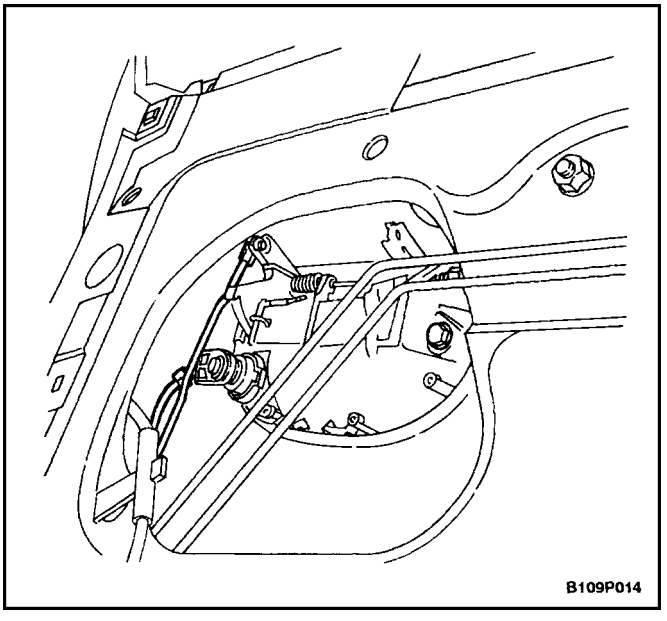

Removal Procedure

1. Remove the door seal trim. Refer to"Door Seal Trim" in this section.
2. Disconnect the outside door handle and the lock rods.
3. Remove the bolts and the door handle.

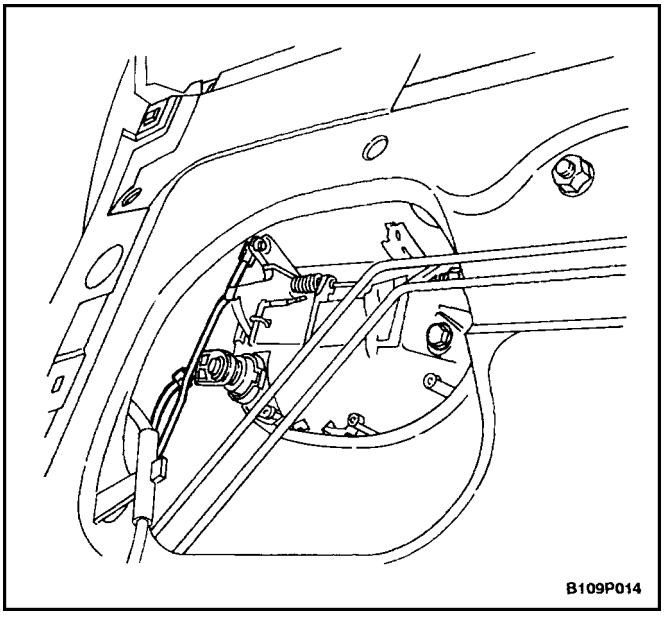

Installation Procedure

1. Connect the outside door handle and the lock rods.

Notice : Dissimilar metals in direct contact with each other may corrode rapidly. Make sure to use the correct fasteners to prevent premature corrosion.

2. Install the door handle with the bolts.

   #### Tighten

   Tighten the outside door handle bolts to 4 N•m (35 lbin).

3. Install the door seal trim. Refer to"Door Seal Trim" in this section.

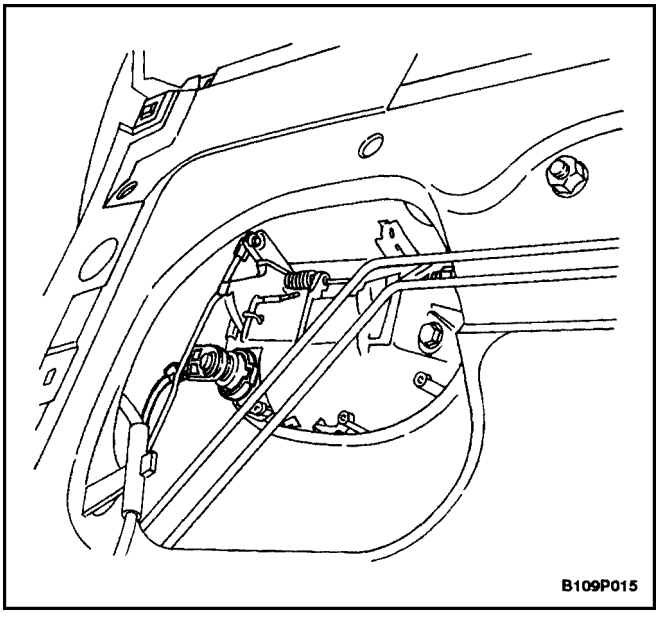

DOOR LOCK CYLINDER

Removal Procedure

1. Remove the door seal trim. Refer to"Door Seal Trim" in this section.
2. Disconnect the outside door handle lock rod.
3. Remove the retaining clip and the lock cylinder.

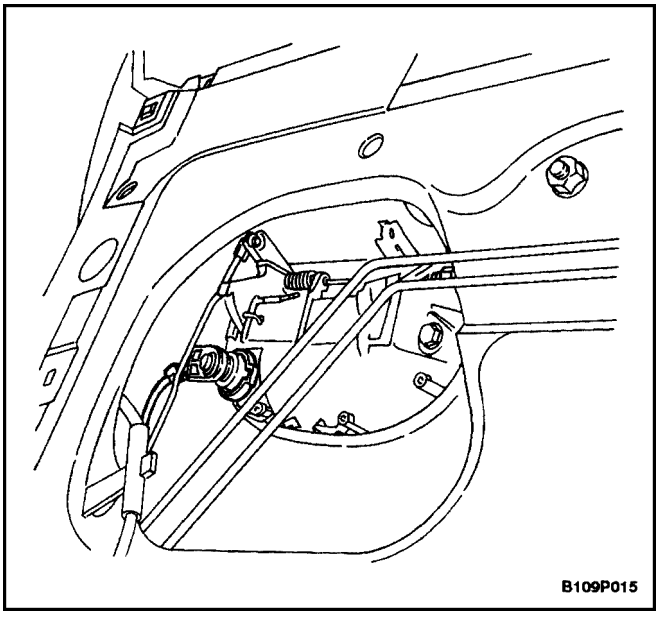

Installation Procedure

1. Install the lock cylinder with the retaining clip.
2. Connect the outside door handle lock rod.
3. Install the door seal trim. Refer to"Door Seal Trim" in this section.

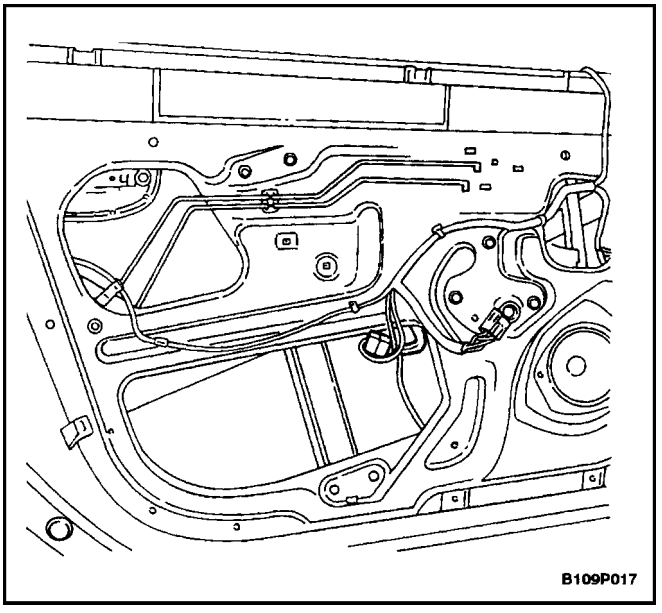

POWER FRONT WINDOW REGULATOR

Removal Procedure

1. Disconnect the negative battery cable.
2. Remove the front door glass. Refer to *Section 9L, Glass and Mirrors.*
3. Disconnect the electrical connector.

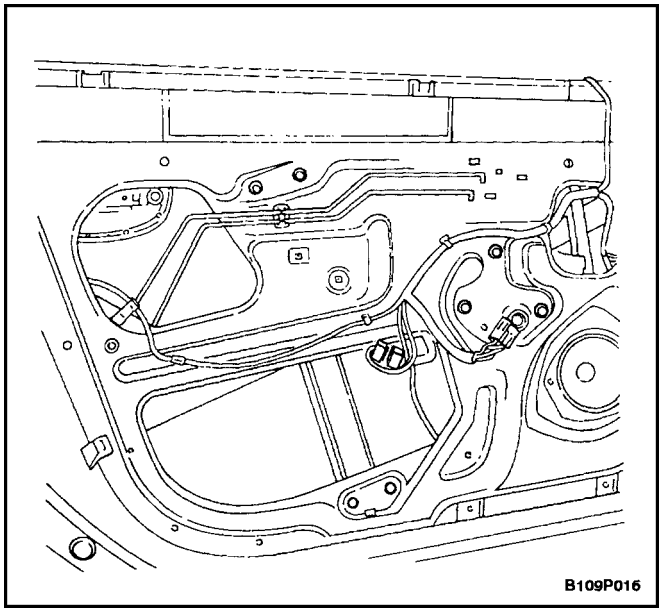

4. Remove the nuts and the regulator.

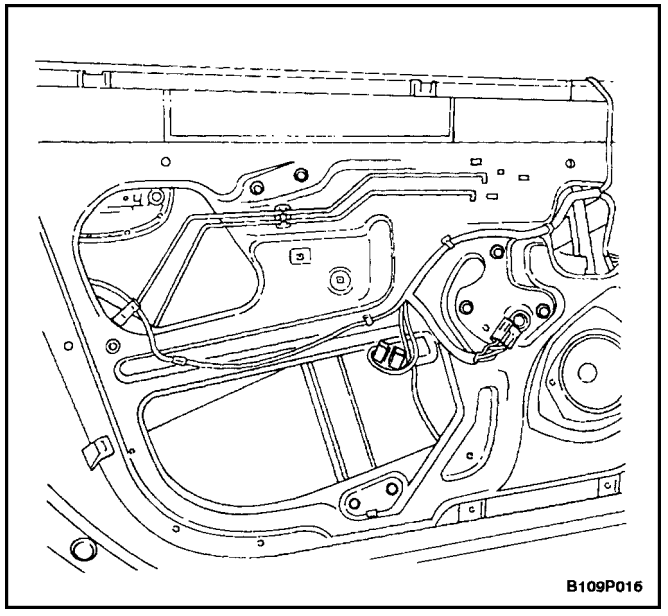

Installation Procedure

Notice : Dissimilar metals in direct contact with each other may corrode rapidly. Make sure to use the correct fasteners to prevent premature corrosion.

1. Install the window regulator with the nuts.

   Tighten

   Tighten the window regulator nuts to 8 N•m (71 lb–in).

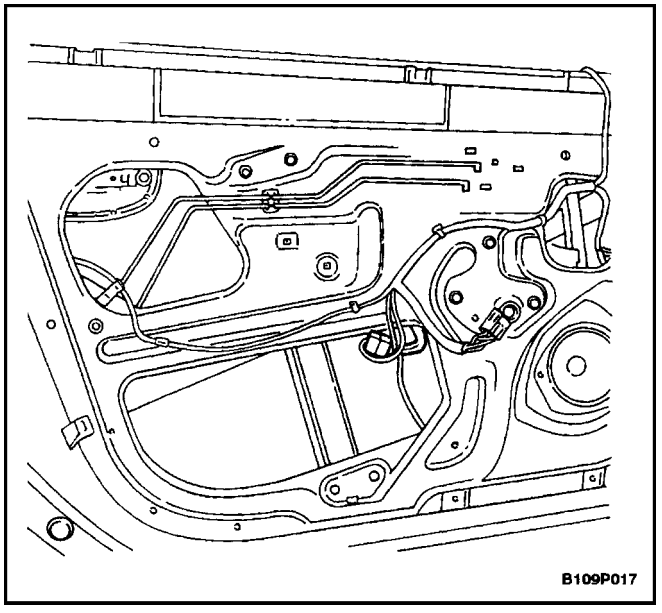

2. Connect the electrical connector.
3. Install the front door glass. Refer to *Section 9L, Glass and Mirrors.*
4. Connect the negative battery cable.

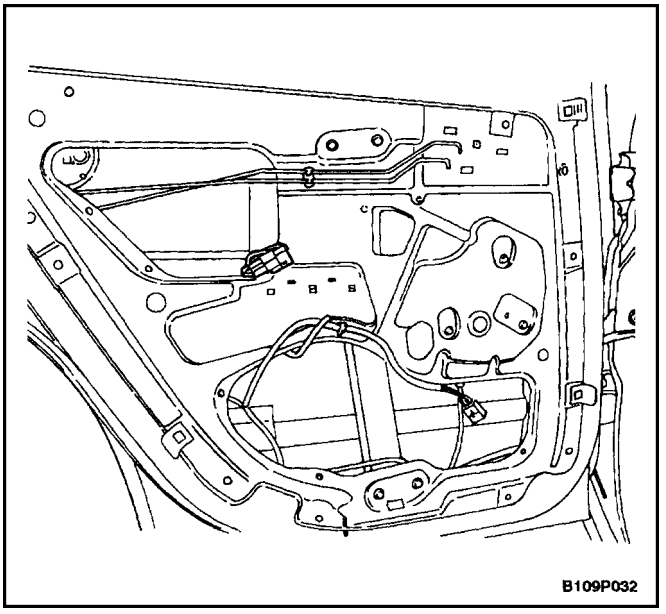

POWER REAR WINDOW REGULATOR

Removal Procedure

1. Disconnect the negative battery cable.
2. Remove the rear door glass. Refer to *Section 9L, Glass and Mirrors.*
3. Disconnect the electrical connector.

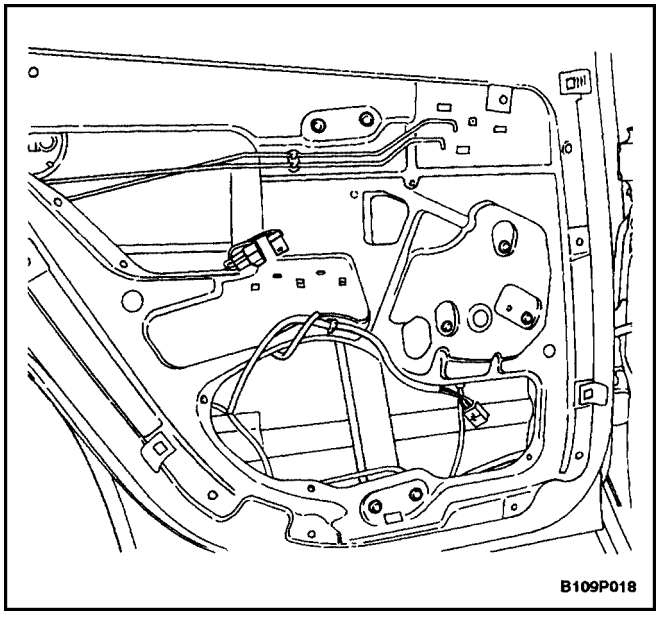

4. Remove the nuts and the window regulator.

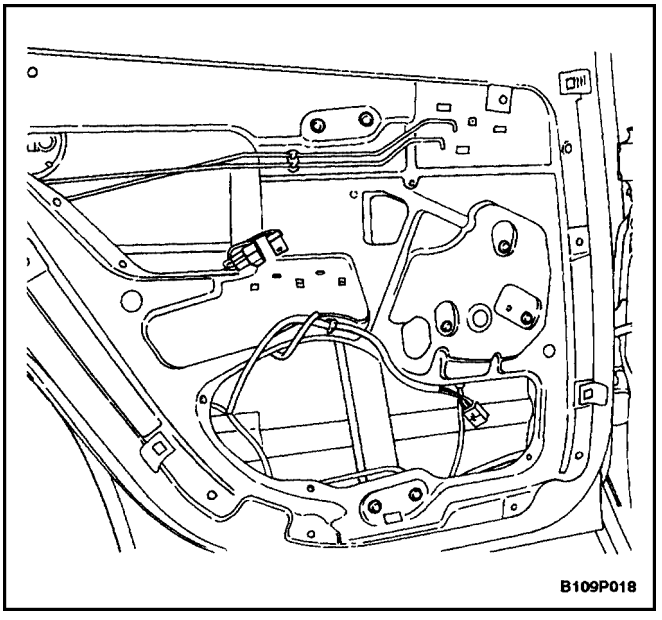

Installation Procedure

Notice : Dissimilar metals in direct contact with each other may corrode rapidly. Make sure to use the correct fasteners to prevent premature corrosion.

1. Install the window regulator with the nuts.

   ### Tighten

   Tighten the window regulator nuts to 8 N•m (71 lb–in).

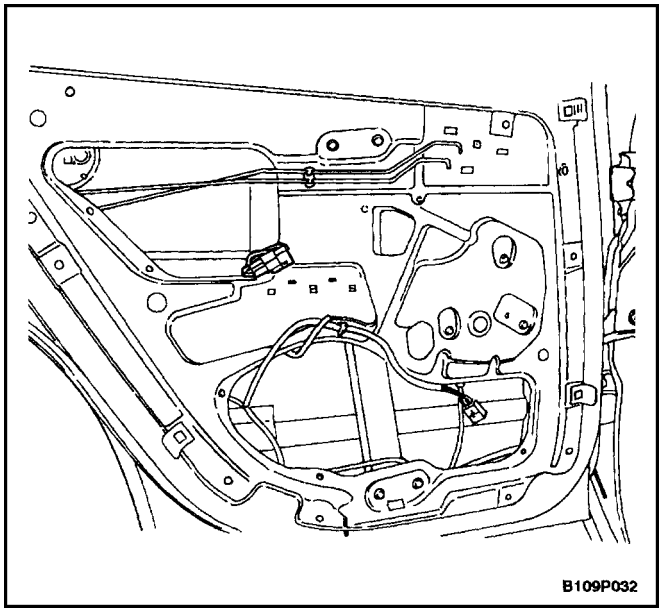

2. Connect the electrical connector.
3. Install the rear door glass. Refer to *Section 9L, Glass and Mirrors.*
4. Connect the negative battery cable.

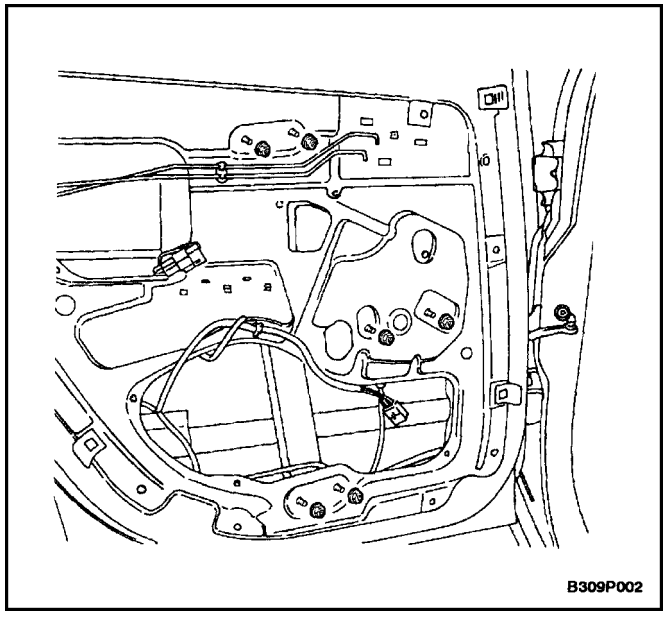

MANUAL REAR WINDOW REGULATOR

Removal Procedure

1. Remove the regulator handle. Refer to"Manual Rear Window Regulator Handle" in this section.
2. Remove the rear door glass. Refer to *Section 9L, Glass and Mirrors.*
3. Remove the nuts and the window regulator.

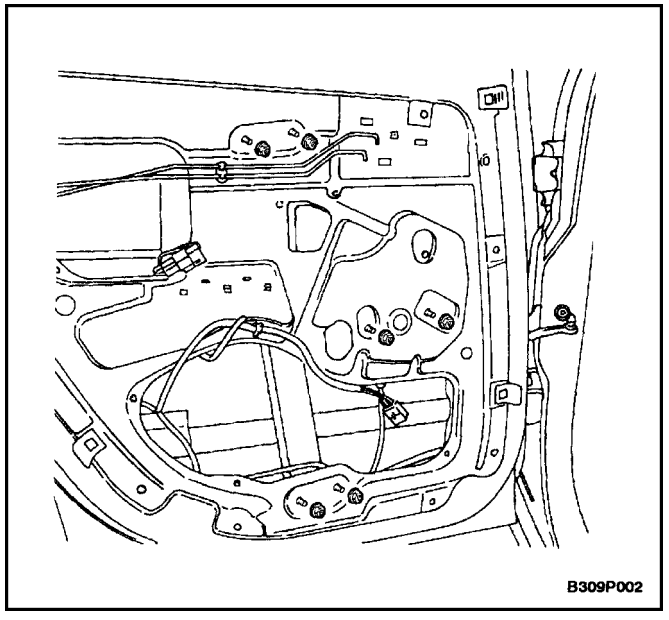

Installation Procedure

Notice : Dissimilar metals in direct contact with each other may corrode rapidly. Make sure to use the correct fasteners to prevent premature corrosion.

1. Install the window regulator with the nuts.

   Tighten

   Tighten the window regulator nuts to 8 N•m (71 lb–in).
2. Install the rear door glass. Refer to *Section 9L, Glass and Mirrors.*
3. Install the regulator handle. Refer to"Manual Rear Window Regulator Handle" in this section.

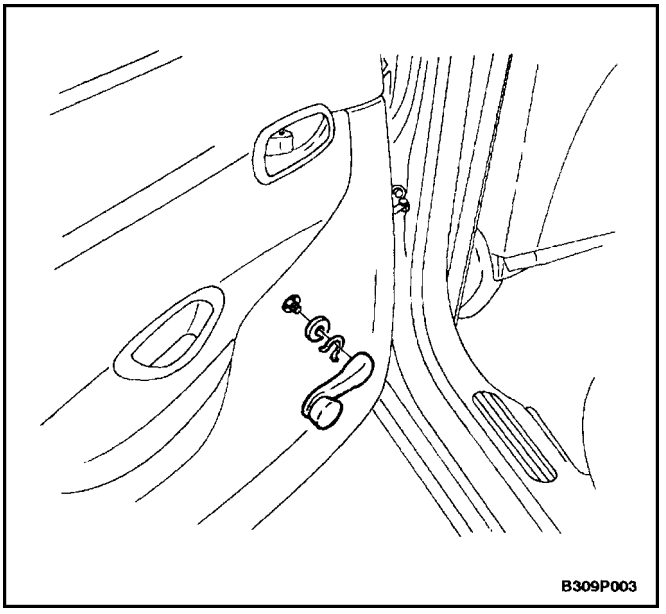

MANUAL REAR WINDOW REGULATOR HANDLE

Removal Procedure

1. Reposition the plastic ring behind the window regulator handle to reveal the ”C” clip.
2. Remove the ”C” clip.
3. Remove the window regulator handle and the plastic ring.

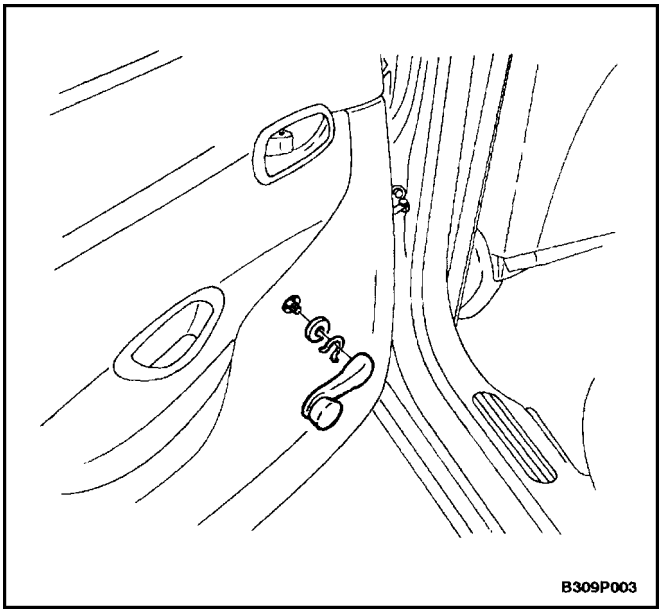

Installation Procedure

1. Install the plastic ring.
2. Install the ”C” clip onto the window regulator handle.
3. Install the window regulator handle.

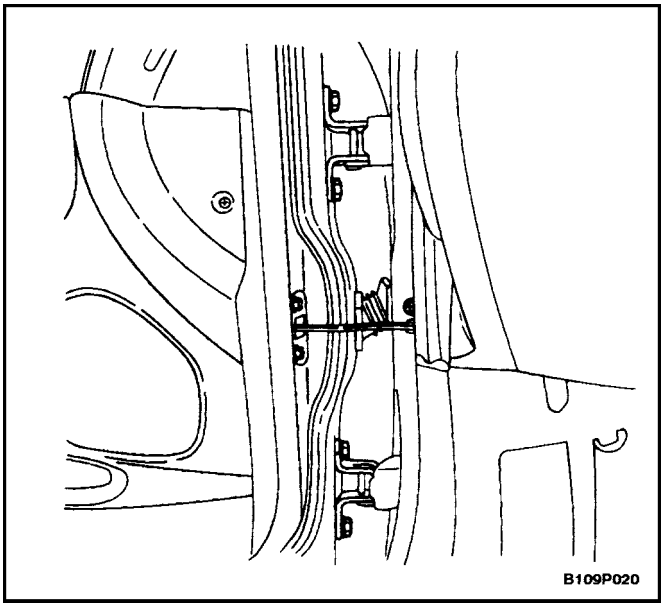

FRONT DOOR ASSEMBLY

Removal Procedure

1. Disconnect the negative battery cable.
2. Remove the bolt and the door hold open link from the body.
3. With the aid of another technician, remove the door hinge bolts and the front door.

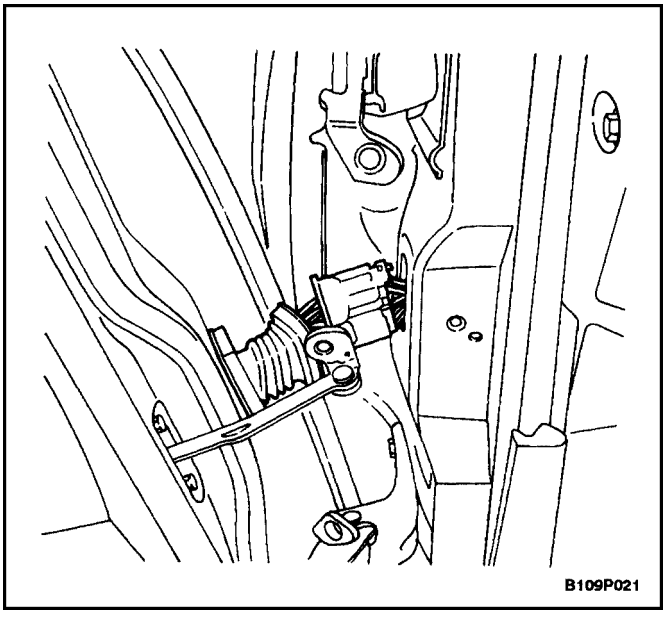

4. Disconnect the body–to–door rubber grommet and the electrical connector.

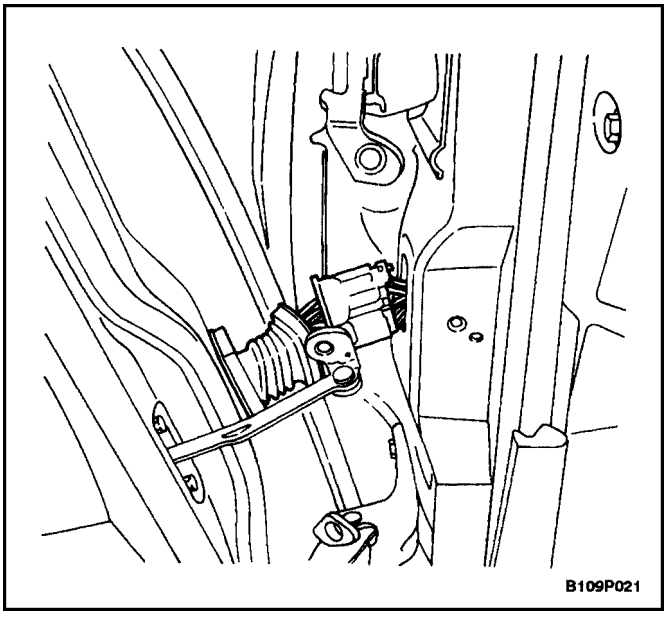

Installation Procedure

1. Connect the electrical connector and the body–to–door rubber grommet.

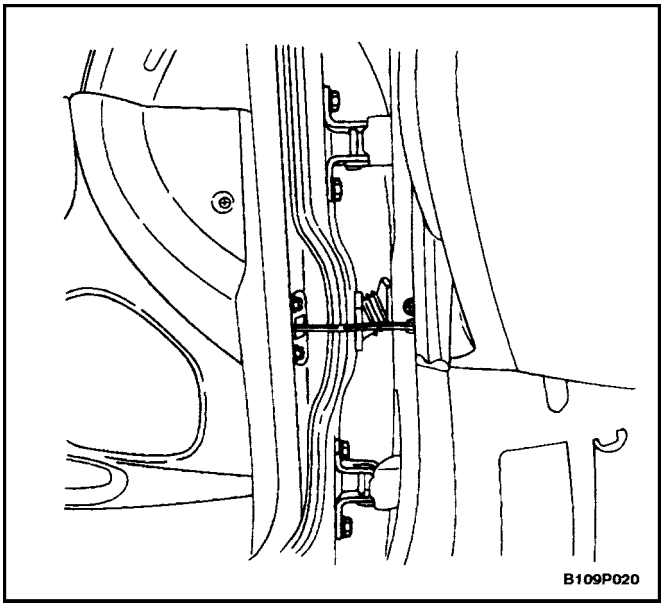

Notice : Dissimilar metals in direct contact with each other may corrode rapidly. Make sure to use the correct fasteners to prevent premature corrosion.

2. With the aid of another technician, lightly secure the front door with the door hinge bolts.
3. Adjust the door for proper fit.

Tighten

Tighten the door hinge bolts to 25 N•m(18 lb–ft).

4. Install the door hold open link to the body with the bolt.

Tighten

Tighten the door hold open link–to–body bolt to 27 N•m (20 lb–ft).

5. Connect the negative battery cable.
6. Perform the waterleak test. Refer to*Section 9I, Waterleaks.*
7. Check for windnoise. Refer to*Section 9J, Windnoise.*

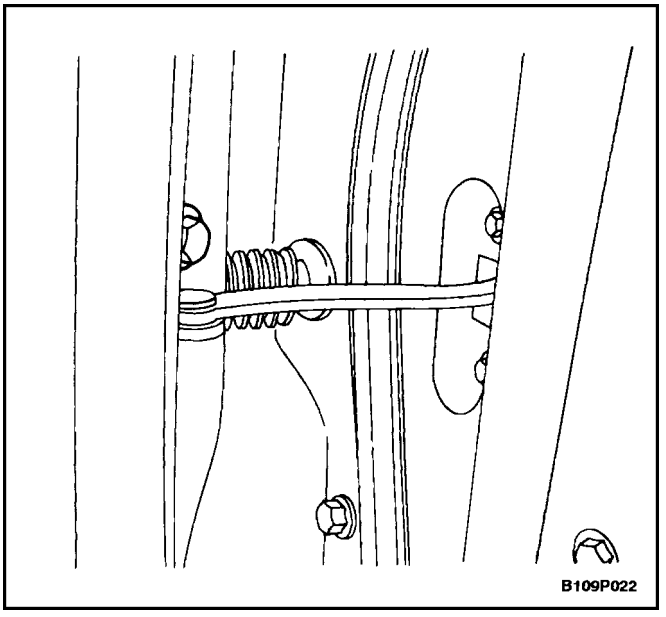

REAR DOOR ASSEMBLY

Removal Procedure

1. Disconnect the negative battery cable.
2. Remove the bolt and the door hold open link from the body.

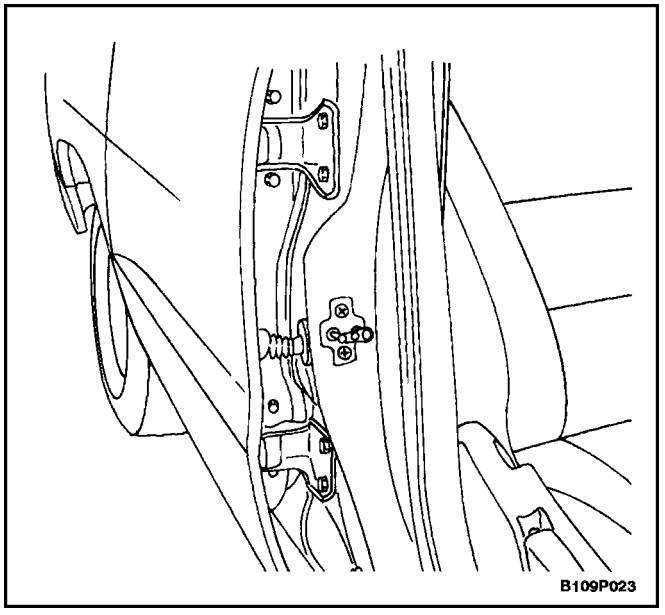

3. With the aid of another technician, remove the door hinge bolts and the rear door.

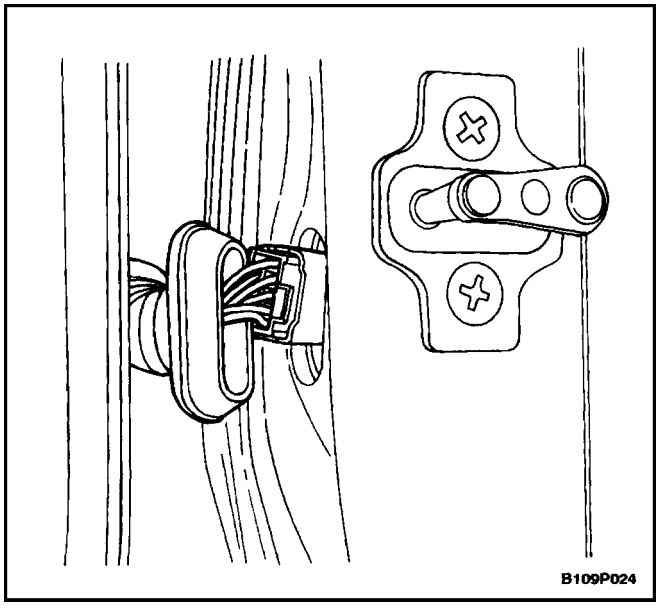

4. Disconnect the body–to–door rubber grommet and the electrical connector.

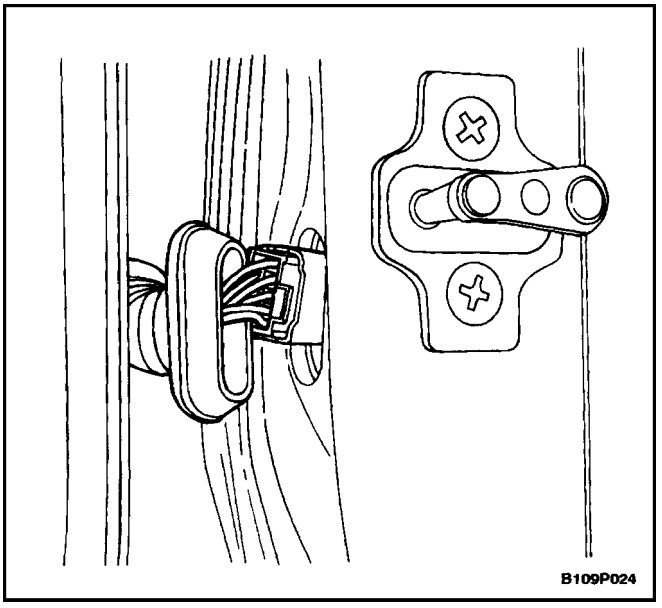

Installation Procedure

1. Connect the body–to–door rubber grommet and the electrical connector.

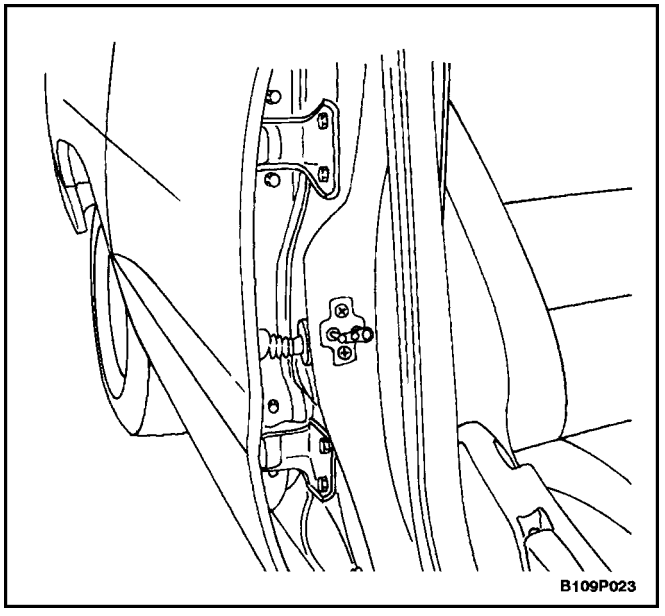

Notice : Dissimilar metals in direct contact with each other may corrode rapidly. Make sure to use the correct fasteners to prevent premature corrosion.

2. With the aid of another technician, lightly secure the rear door with the door hinge bolts.
3. Adjust the door for proper fit.

Tighten

Tighten the door hinge bolts to 25 N•m (18 lb–ft).

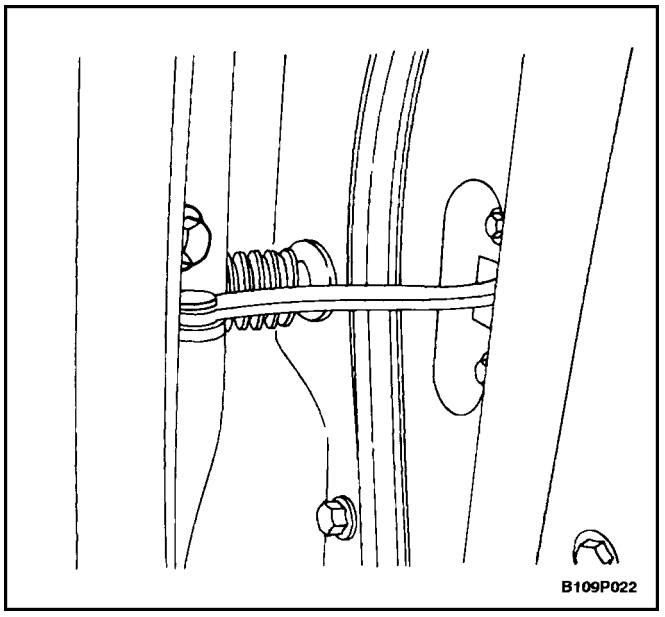

4. Install the rear door hold open link to the body with the bolt.

Tighten

Tighten the door hold open link–to–body bolt to 27 N•m (20 lb–ft).

5. Connect the negative battery cable.
6. Perform the waterleak test. Refer to *Section 9I, Waterleaks.*
7. Check for windnoise. Refer to *Section 9J, Windnoise.*

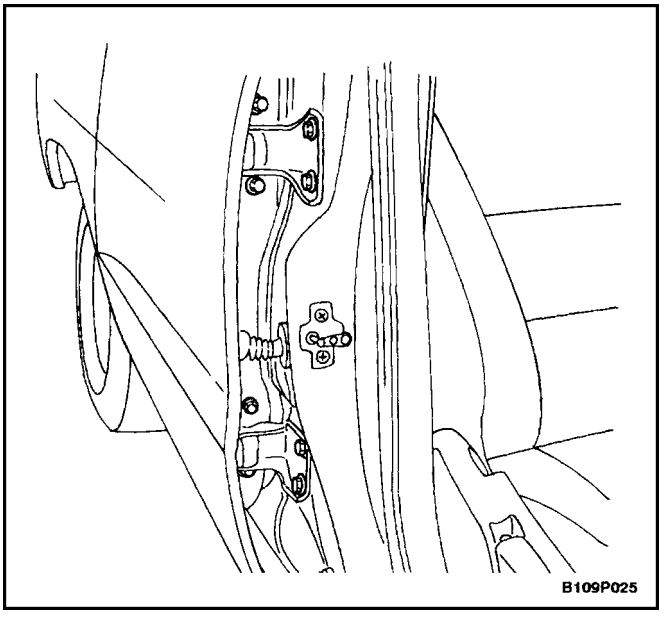

DOOR HINGE

Removal Procedure

1. With the aid of another technician, remove the bolts and the hinge from the door and the body.

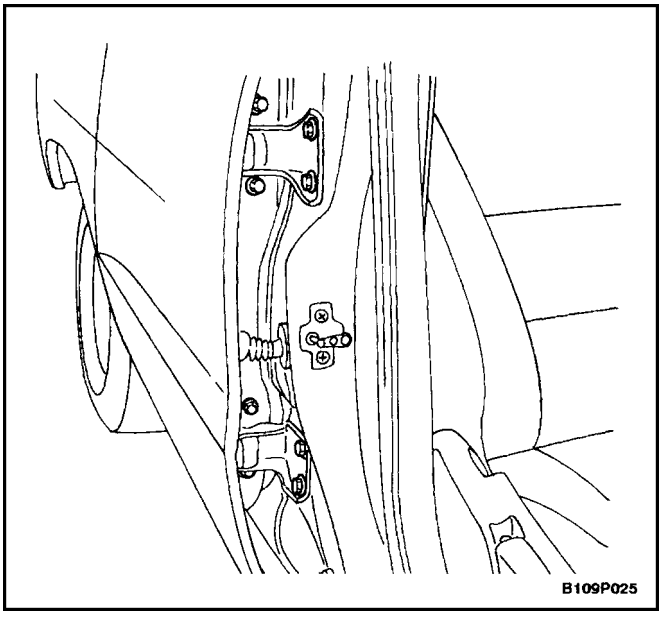

Installation Procedure

Notice : Dissimilar metals in direct contact with each other may corrode rapidly. Make sure to use the correct fasteners to prevent premature corrosion.

1. With the aid of another technician, install the hinge to the door and the body with the bolts.

   Tighten

   Tighten the door hinge bolts to 25 N•m (18 lb–ft).

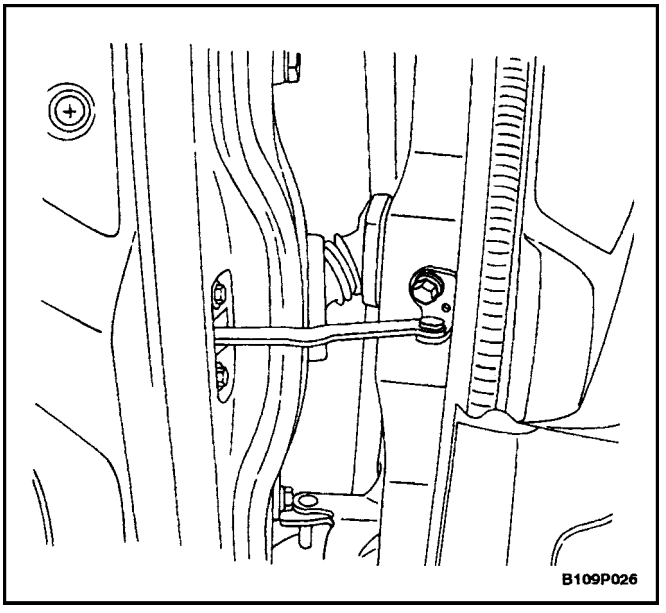

DOOR HOLD OPEN LINK

Removal Procedure

1. Remove the door trim panel. Refer to*Section 9G, Interior Trim.*
2. Reposition the door seal trim.
3. Remove the bolts on the door and on the body.
4. Remove the door hold open link.

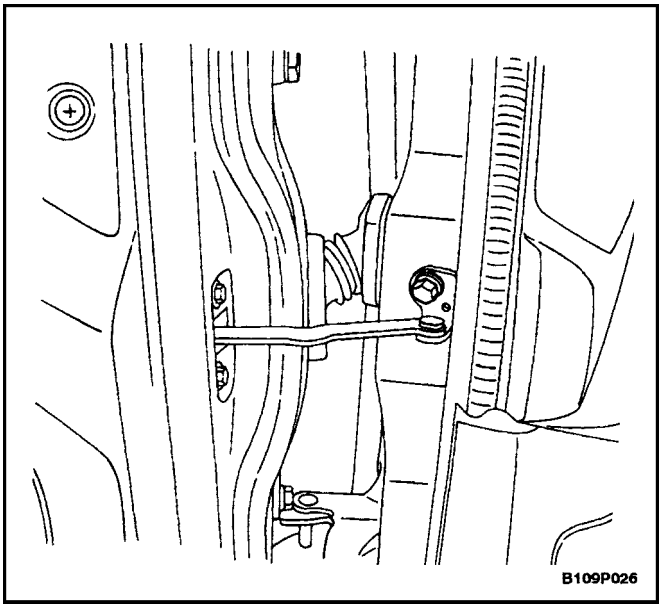

Installation Procedure

Notice : Dissimilar metals in direct contact with each other may corrode rapidly. Make sure to use the correct fasteners to prevent premature corrosion.

1. Install the door hold open link to the door and the body with the bolts.

   Tighten

   Tighten the door hold open link–to–body bolt to 27 N•m (20 lb–ft).

   Tighten the door hold open link–to–door bolts to 6 N•m (53 lb–in).
2. Reposition the door seal trim.
3. Install the door trim panel. Refer to*Section 9G, Interior Trim.*

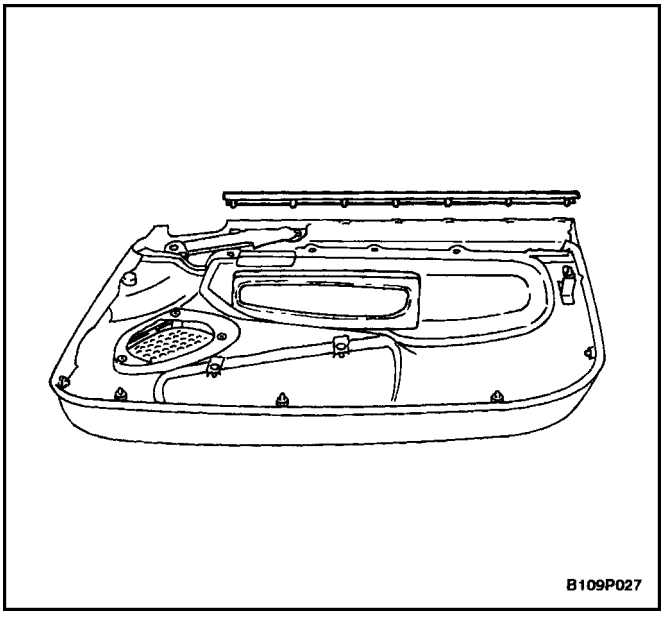

INSIDE CHANNEL MOLDING

Removal Procedure

1. Remove the door trim panel. Refer to *Section 9G, Interior Trim.*
2. Straighten the retaining tabs in order to release the channel molding from the door trim panel.
3. Remove the channel molding.

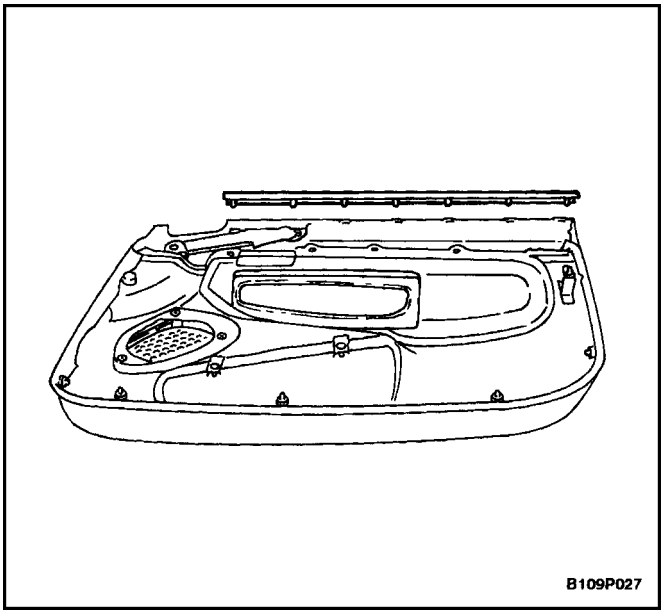

Installation Procedure

1. Install the channel molding onto the door trim panel.
2. Bend the retaining tabs to secure the channel molding to the door trim panel.
3. Install the door trim panel. Refer to *Section 9G, Interior Trim.*

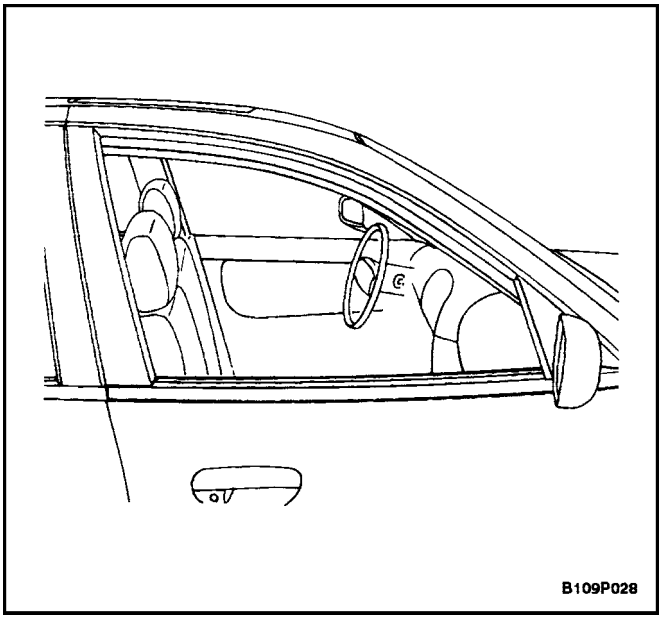

OUTSIDE CHANNEL MOLDING

Removal Procedure

1. Lower the window completely.
2. Lift the outside channel molding off the door.

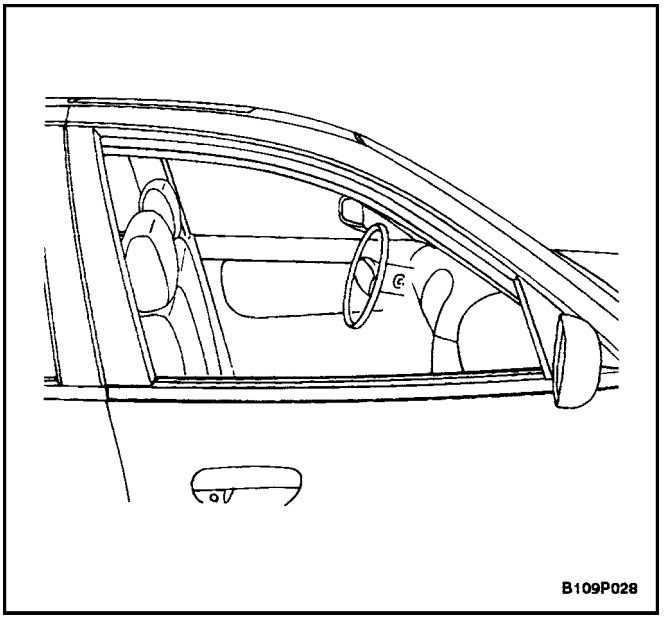

Installation Procedure

1. Press the outside channel molding onto the door.
2. Raise the window.

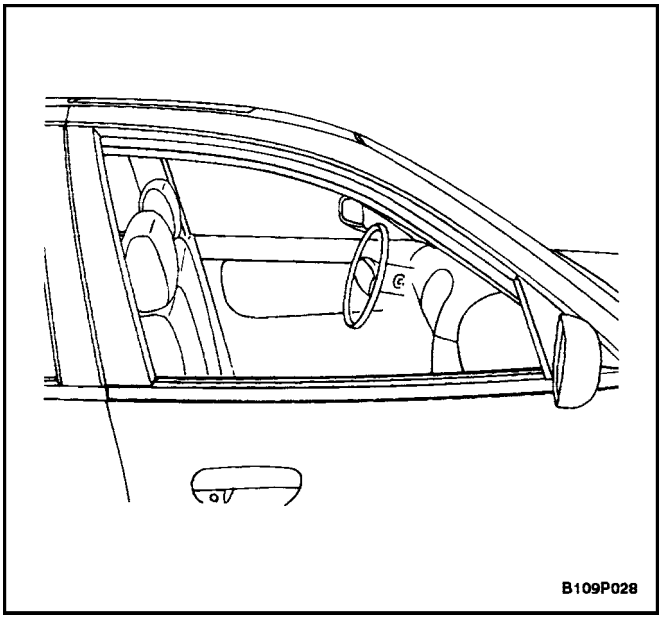

DOOR WEATHERSTRIP

Removal Procedure

1. Lower the window completely.
2. Remove the door weatherstrip.

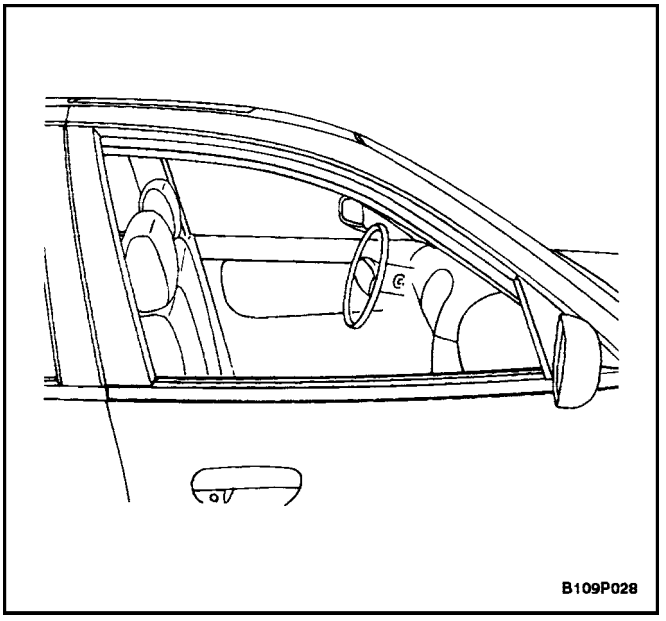
B109P028

Installation Procedure

1. Install the door weatherstrip.

Notice : Dissimilar metals in direct contact with each other may corrode rapidly. Make sure to use the correct fasteners to prevent premature corrosion.

2. Install the door hold open link to the body with the bolt.

Tighten

Tighten the door hold open link–to–body bolt to 27 N•m (20 lb–ft).

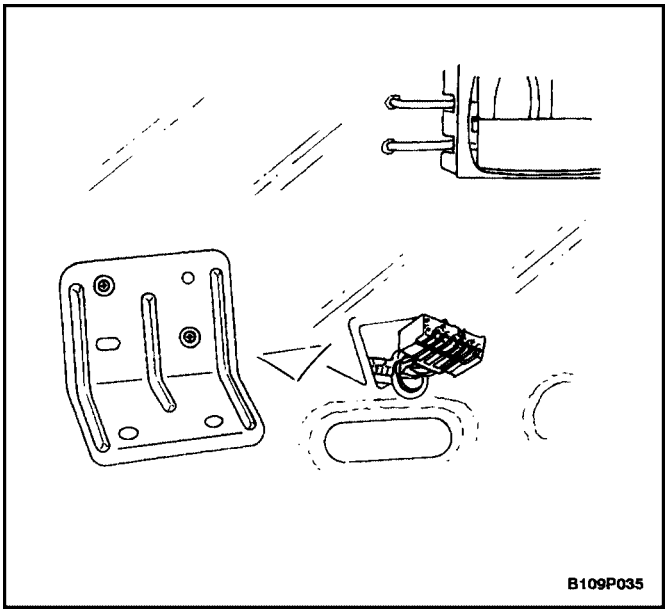
B109P035

DOOR SEAL TRIM

Removal Procedure

1. Remove the door trim panel. Refer to *Section 9G, Interior Trim.*
2. Remove the screws and the door pull bracket.

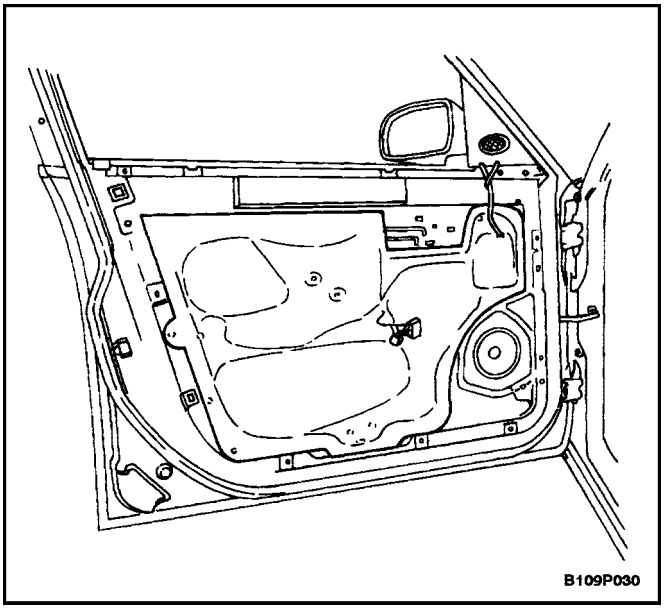
B109P030

3. Remove the inside door handle. Refer to”Inside Door Handle” in this section.
4. Remove the door seal trim.

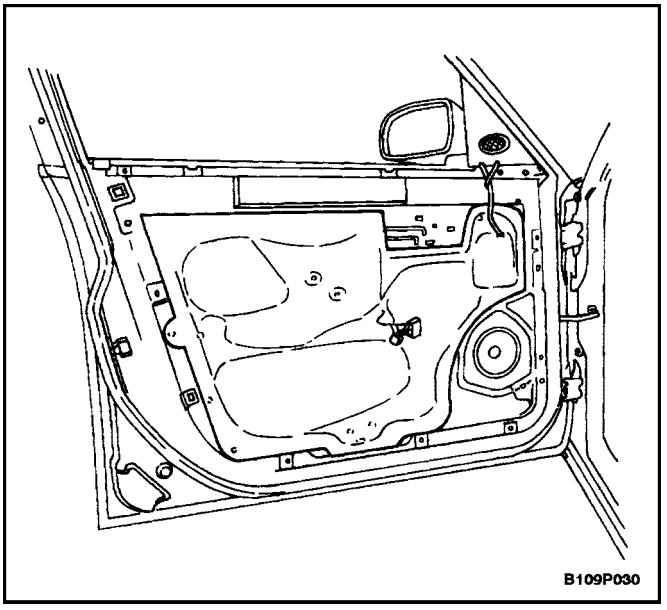

Installation Procedure

1. Install the door seal trim.

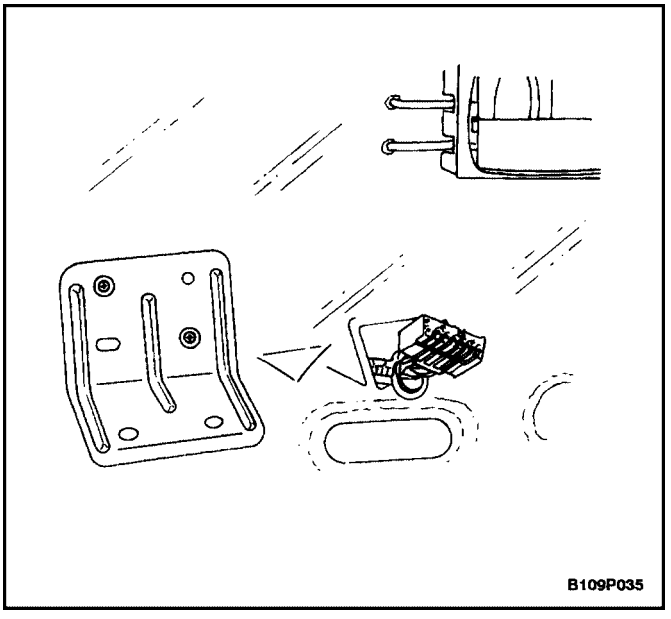

2. Install the inside door handle. Refer to"Inside Door Handle" in this section.

Notice : Dissimilar metals in direct contact with each other may corrode rapidly. Make sure to use the correct fasteners to prevent premature corrosion.

3. Install the door pull bracket with the screws.

   Tighten

   Tighten the door pull bracket screws to 3.5 N•m (31 lb–in).

4. Install the door trim panel. Refer to *Section 9G, Interior Trim.*

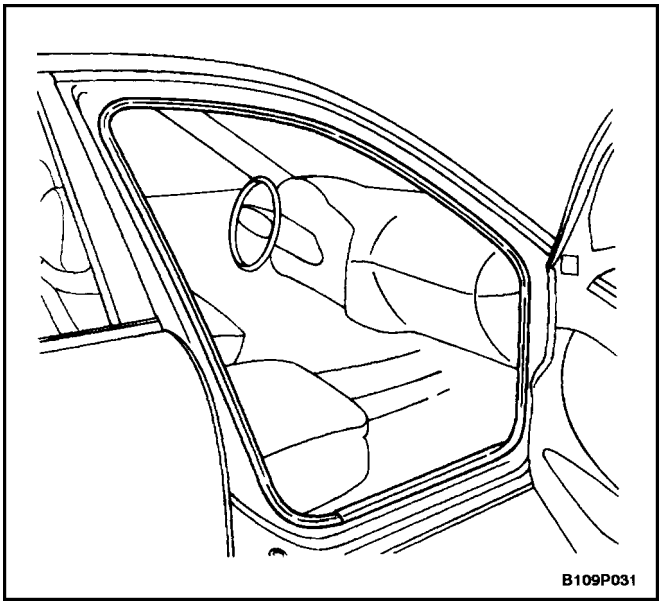

FRONT DOOR OPENING WEATHERSTRIP

Removal Procedure

1. Remove the kick panel, the front rocker panel, and the lower B–pillar trim panel. Refer to *Section 9G, Interior Trim.*
2. Remove the door opening weatherstrip.

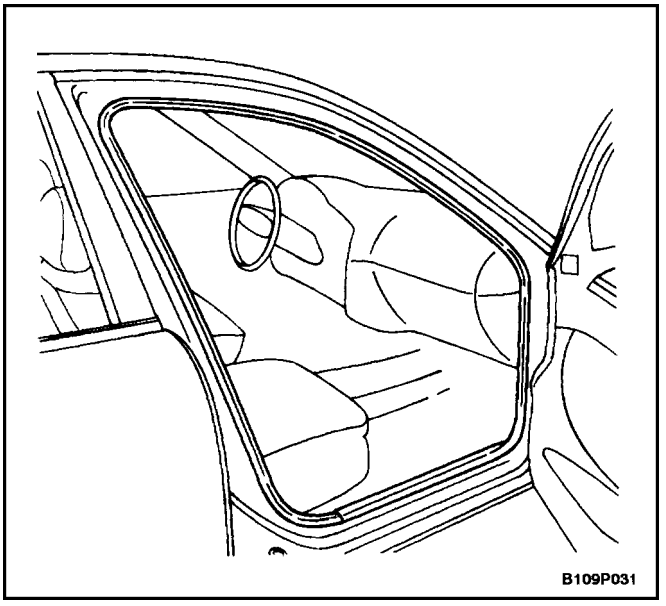

Installation Procedure

1. Install the door opening weatherstrip.
2. Install the kick panel, the front rocker panel, and the lower B–pillar trim panel. Refer to *Section 9G, Interior Trim.*

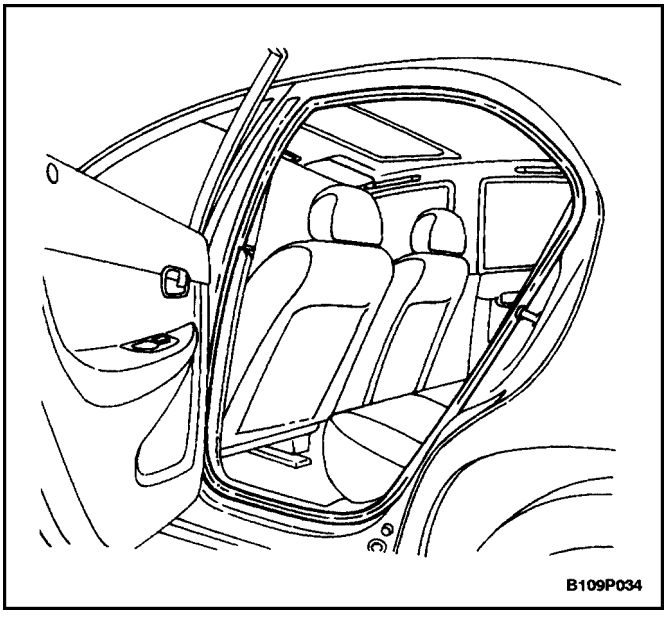

REAR DOOR OPENING WEATHERSTRIP

Removal Procedure

1. Remove the rear rocker panel and the lower B–pillar trim panel. Refer to *Section 9G, Interior Trim.*
2. Remove the door opening weatherstrip.

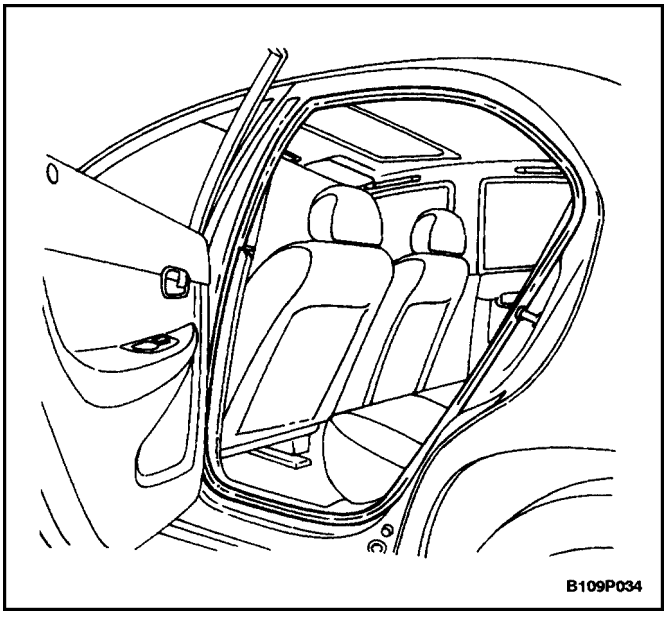

Installation Procedure

1. Install the door opening weatherstrip.
2. Instal the rear rocker panel and the lower B–pillar trim panel. Refer to *Section 9G, Interior Trim.*

GENERAL DESCRIPTION AND SYSTEM OPERATION

DOOR LOCK STRIKER

The front and the rear door lock strikers each consist of a striker with two screws threaded into a floating cage plate in the B–pillars and the C–pillars. The door is secured in the closed position when the door lock fork snaps over and engages the striker.

CHILDPROOF REAR DOOR LOCK

The childproof rear door locks help prevent passengers, especially children, from opening the rear doors of the vehicle from the inside.

To activate the locks, move the levers of both rear doors to the lock position. Then, close both doors. Rear passengers will be unable to open the doors from inside of the vehicle.

To deactivate the childproof rear door lock, unlock the door from the inside of the vehicle and open the door from the outside. Move the lever to the unlock position. The rear door will now work normally.

POWER DOOR LOCKS

The power door locks use a solenoid that is contained in each door lock assembly. The door locks are activated by the actuator on the inside door handle or by the lock cylinder on the driver's side door only. When the driver's side door is locked or unlocked by the actuator or the lock cylinder, all the doors are locked or unlocked accordingly.

POWER WINDOWS

The power windows are controlled by electrical switches on the door panels and are operated by a motor at each window regulator. Each door has a switch to control its window, and the driver's side door has four switches to control all door windows on the vehicle. The windows are lowered by pressing down on the switch and are raised by pulling up on the switch. The window will stop movement when the switch is released or when the window is completely open or closed.

The driver's side window operates automatically. By pressing and releasing the switch, the driver's side window will lower. It will stop only when the switch is activated again or when the window is completely open.

The driver's side door control also contains a button that, when pressed, will prevent the operation of the windows in the front passenger door or the rear door.

SECTION : 9Q

ROOF

CAUTION : Disconnect the negative battery cable before removing or installing any electrical unit or when a tool or equipment could easily come in contact with exposed electrical terminals. Disconnecting this cable will help prevent personal injury and damage to the vehicle. The ignition must also be in LOCK unless otherwise noted.

TABLE OF CONTENTS

SPECIFICATIONS 9Q–1
FASTENER TIGHTENING SPECIFICATIONS . 9Q–1
SCHEMATIC AND ROUTING DIAGRAMS 9Q–2
POWER SUNROOF SYSTEM 9Q–2
DIAGNOSIS 9Q–3
POWER SUNROOF 9Q–3
MAINTENANCE AND REPAIR 9Q–5
ON–VEHICLE SERVICE 9Q–5
POWER SUNROOF 9Q–5
ROOF RACK (WAGON) 9Q–8
FORMED HEADLINER 9Q–9
SUN VISORS 9Q–12
PASSENGER ASSIST HANDLES 9Q–13
INTERIOR COURTESY LAMP/POWER SUNROOF CONTROL SWITCH 9Q–14
GENERAL DESCRIPTION AND SYSTEM OPERATION 9Q–16
ROOF 9Q–16
POWER SUNROOF 9Q–16
ROOF RACK (WAGON) 9Q–16
SUN VISORS 9Q–16
PASSENGER ASSIST HANDLES 9Q–16
INTERIOR COURTESY LAMP/POWER SUNROOF CONTROL SWITCH 9Q–16
COAT HOOK 9Q–16

SPECIFICATIONS

FASTENER TIGHTENING SPECIFICATIONS

Application	N•m	Lb–Ft	Lb–In
Lamp/Power Sunroof Control Switch Screws	4	–	35
Passenger Assist Handle Screws	3.5	–	31
Rear Seat Belt Anchor Bolts	35	26	–
Roof Rack Nuts	27	20	–
Seat Belt Anchor Bolts	35	26	–
Sun Visor Screw	2	–	18
Sun Visor Support Screw	2	–	18
Sunroof Glass Screws	7	–	62
Sunroof Housing Bolts	7	–	62
Sunroof Motor Screws	5	–	44

SCHEMATIC AND ROUTING DIAGRAMS

POWER SUNROOF SYSTEM

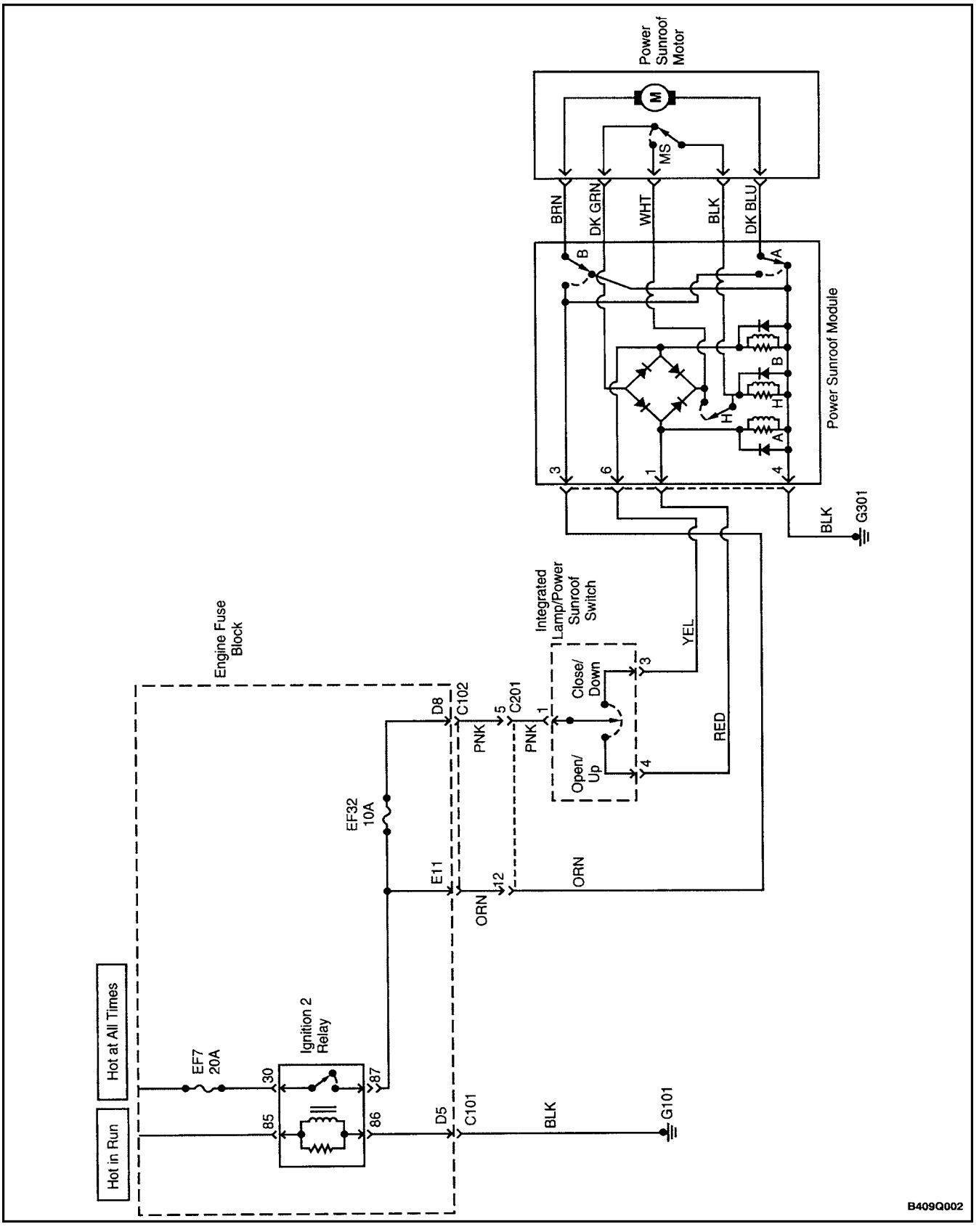

DIAGNOSIS

POWER SUNROOF

Power Sunroof Does Not Work

Step	Action	Value(s)	Yes	No
1	1. Turn the ignition ON. 2. Does the power mirror work? Is fuse F4 blown?		Go to *Step 8*	Go to *Step 2*
2	Check the fuse EF7 and the fuse EF32. Are the fuses blown?		Go to *Step 3*	Go to *Step 4*
3	1. Check for a short circuit. 2. Repair the short circuit, if necessary. 3. Replace the fuse. Is the repair complete?		System OK	
4	1. Remove the Ignition 2 relay. 2. Turn the ignition ON. 3. Check the voltage at the Ignition 2 relay socket, terminal 30 and terminal 85. The terminals are not marked on the relay socket, but are marked on the bottom of the relay. Does the voltmeter indicate the specified value at both locations?	11 – 14 v	Go to *Step 6*	Go to *Step 5*
5	Repair the power supply to the Ignition 2 relay. Is the repair complete?		System OK	
6	1. Temporarily substitute a known good relay for the Ignition 2 relay. 2. Turn the ignition ON. 3. Attempt to operate the sunroof. Does the sunroof operate?		Go to *Step 7*	Go to *Step 8*
7	1. Return the substituted relay to its original position. 2. Replace the Ignition 2 relay. Is the repair complete?		System OK	
8	1. Disconnect the lamp/sunroof switch. 2. Turn the ignition ON. 3. At the lamp/sunroof switch, on the fuse–side of the connector, check the voltage at terminal 1. Does the voltmeter indicate the specified value?	11 – 14 v	Go to *Step 10*	Go to *Step 9*
9	Repair the open circuit between the fuse EF32 and the sunroof switch. Is the repair complete?		System OK	
10	1. Reconnect the sunroof switch. 2. Disconnect the sunroof module six–pin electrical connector. 3. Use an ohmmeter to measure the resistance between the terminal 4 and ground. Is the resistance within the specified value?	$\approx$ 0 Ω	Go to *Step 10*	Go to *Step 9*
11	Repair the ground circuit. Is the repair complete?		System OK	

Step	Action	Value(s)	Yes	No
12	1. Leave the sunroof module disconnected. 2. Turn the ignition ON. 3. Check the voltage at terminal 3 of the connector for the sunroof module. Does the ohmmeter indicate the specified value?	11–14 v	Go to *Step 14*	Go to *Step 13*
13	Repair the open power supply to terminal 3 of the sunroof module connector. Is the repair complete?		System OK	
14	1. Reconnect the sunroof module. 2. Remove the sunroof motor, but leave the connectors attached. 3. Use the sunroof switch to attempt to operate the motor in both directions. Does the motor operate?		Go to *Step 15*	Go to *Step 16*
15	Repair the jammed sunroof mechanism. Is the repair complete?		System OK	
16	1. Disconnect both of the one–wire connectors at the sunroof motor. 2. Connect a voltmeter between the one–wire connectors. 3. Turn the ignition ON. 4. Turn the sunroof switch to the CLOSE position and observe the voltmeter reading. 5. Turn the sunroof switch to the OPEN position and observe the voltmeter reading. 6. The meter will show the same voltage at both switch positions, but one of the switch positions will show a reverse polarity. Does the voltmeter indicate the specified value when the switch is in either the OPEN or the CLOSE position?	11–14 v	Go to *Step 18*	Go to *Step 17*
17	Replace the sunroof module. Is the repair complete?		System OK	
18	Replace the sunroof motor. Is the repair complete?		System OK	Go to *Step 17*

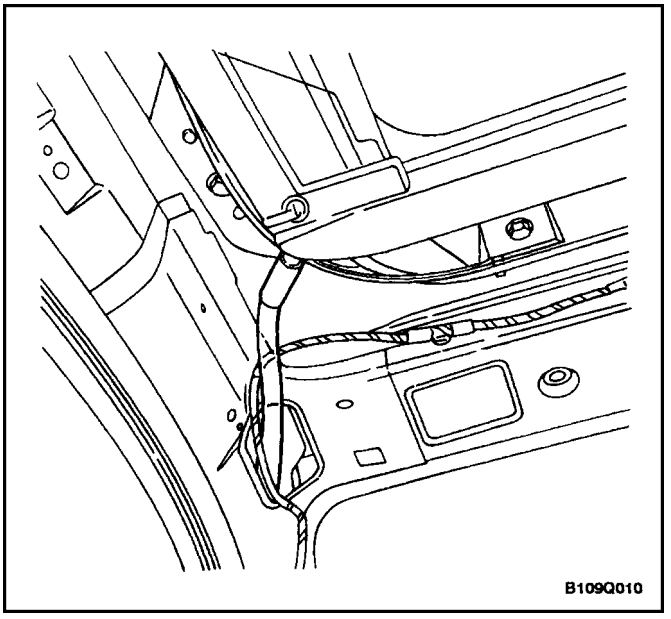

MAINTENANCE AND REPAIR

ON–VEHICLE SERVICE

POWER SUNROOF

Removal Procedure

1. Disconnect the negative battery cable.
2. Remove the headliner. Refer to”Formed Headliner” in this section.
3. Remove the drain hoses.

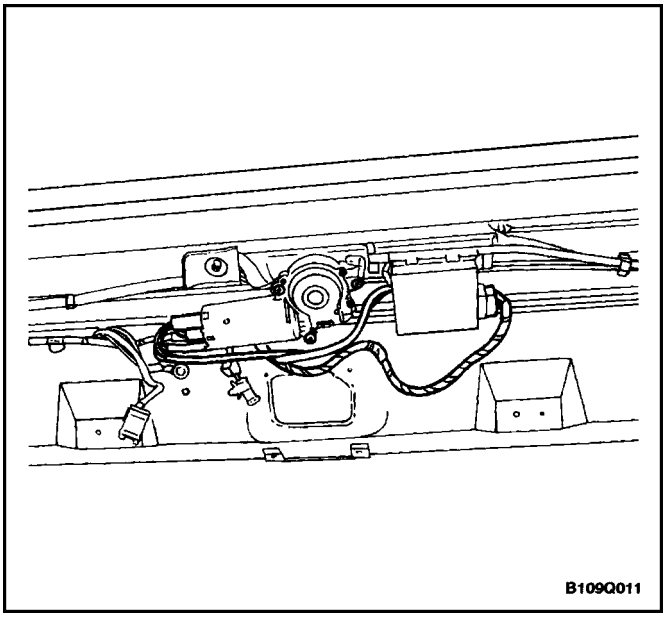

4. Disconnect the electrical connectors.
5. Remove the screws and the motor.

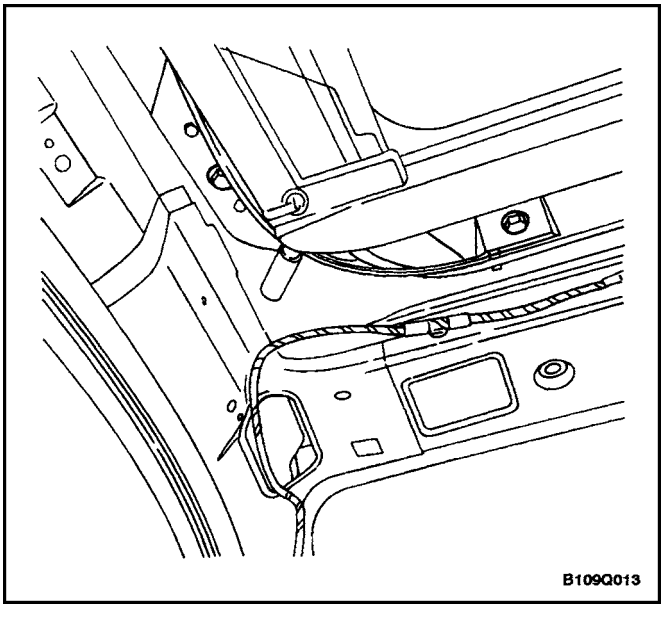

6. Remove the motor control module.
7. Remove the bolts and the housing from the vehicle.V

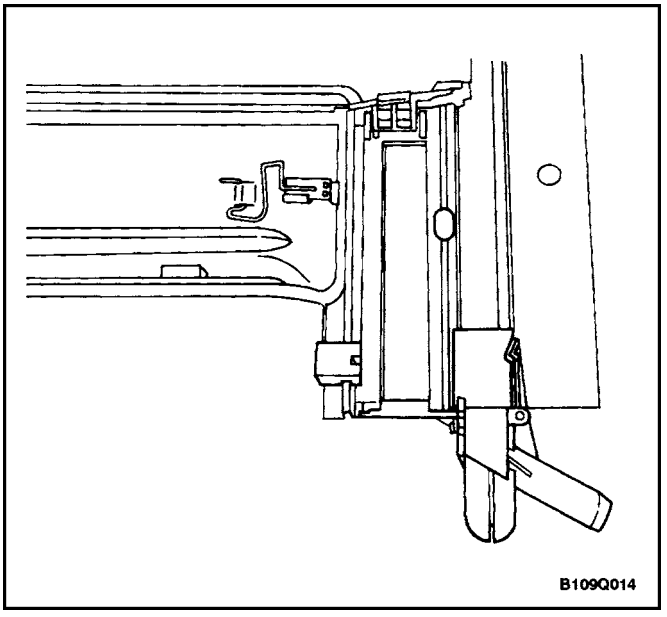

8. Remove the rubber end caps.
9. Remove the drain nozzles.
10. Remove the shade stops.
11. Remove the glass stops.

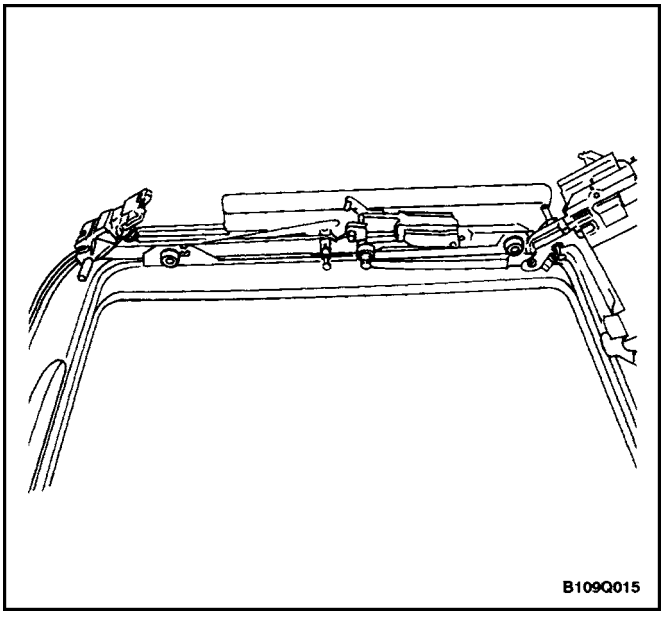

12. Remove the shade.
13. Remove the glass and the frame from the housing.
14. Remove the plastic trim.
15. Remove the screws and the glass from the frame.

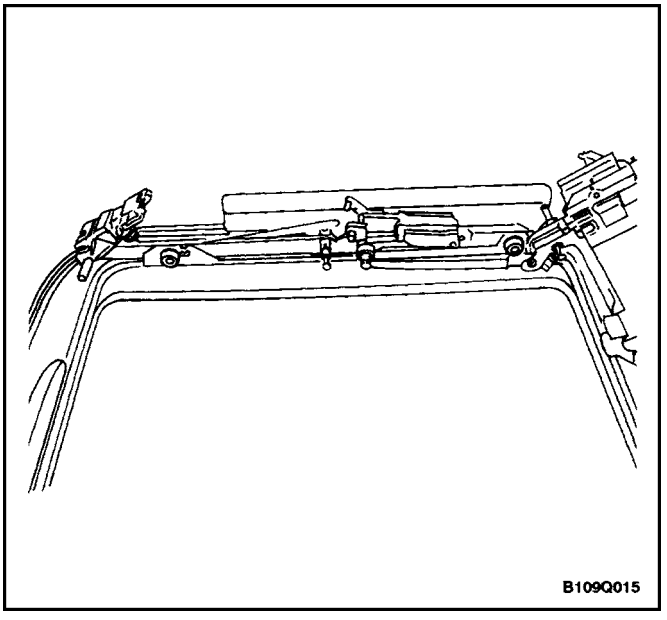

Installation Procedure

Notice : Dissimilar metals in direct contact with each other may corrode rapidly. Make sure to use the correct fasteners to prevent premature corrosion.

1. Install the glass to the frame with the screws.

   Tighten

   Tighten the sunroof glass screws to 7 N•m (62 lb–in).

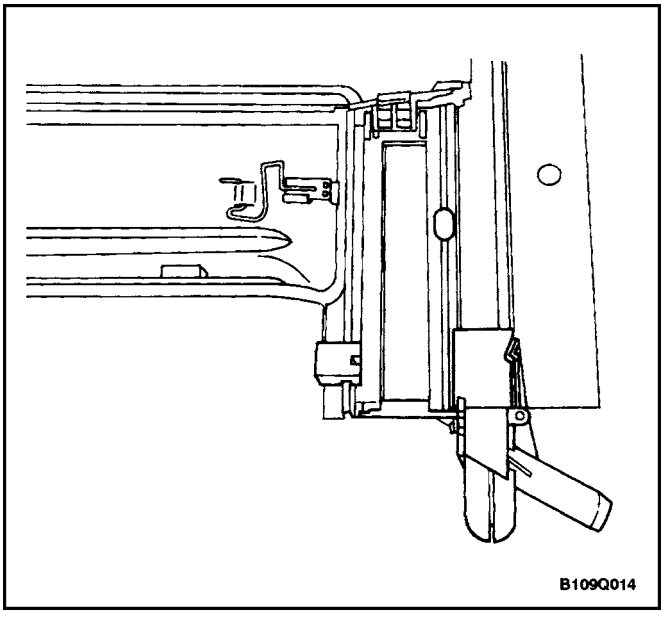

2. Install the plastic trim.
3. Install the glass and the frame to the housing.
4. Install the shade.
5. Install the glass stops.
6. Install the shade stops.
7. Install the drain nozzles.
8. Install the rubber end caps.

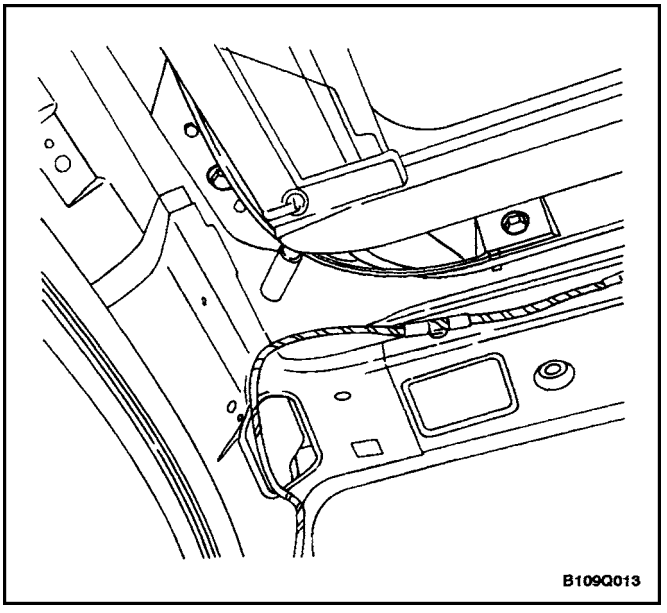

9. Install the housing to the roof of the vehicle with the bolts.

Tighten

Tighten the sunroof housing bolts to 7 N•m (62 lb–in).

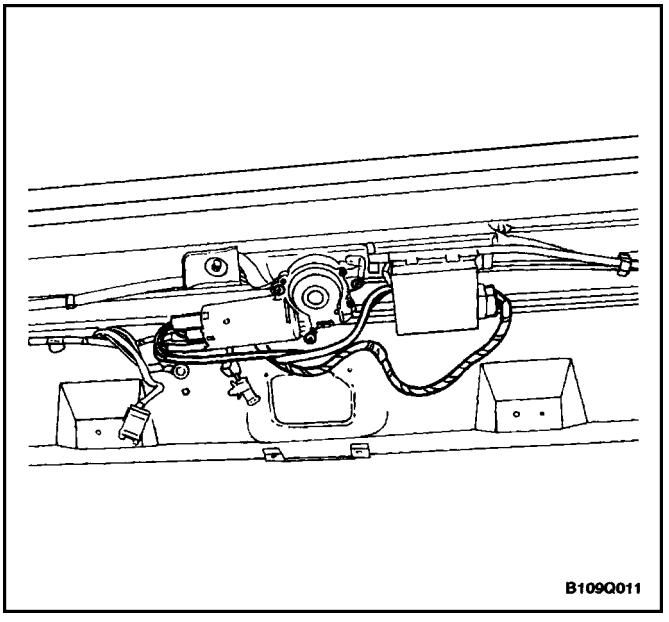

10. Install the motor control module.
11. Install the motor with the screws.

Tighten

Tighten the sunroof motor screws to 5 N•m (44 lb–in).

12. Connect the electrical connectors.

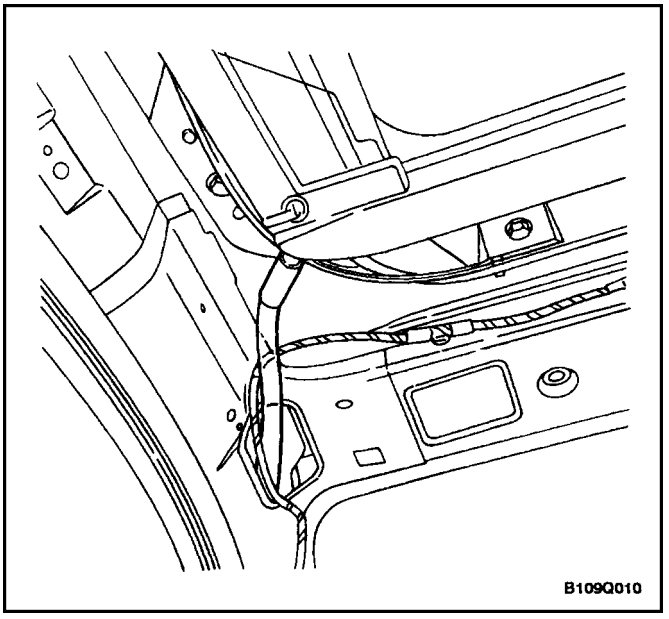

13. Install the drain hoses.
14. Install the headliner. Refer to"Formed Headliner" in this section.
15. Connect the negative battery cable.

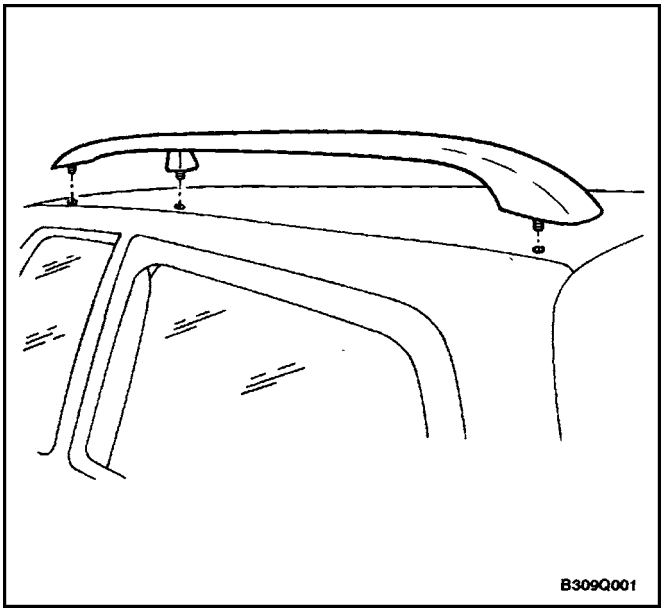

ROOF RACK (WAGON)

Removal Procedure

1. Remove the headliner. Refer to"Formed Headliner" in this section.
2. Remove the nuts and the roof rack.

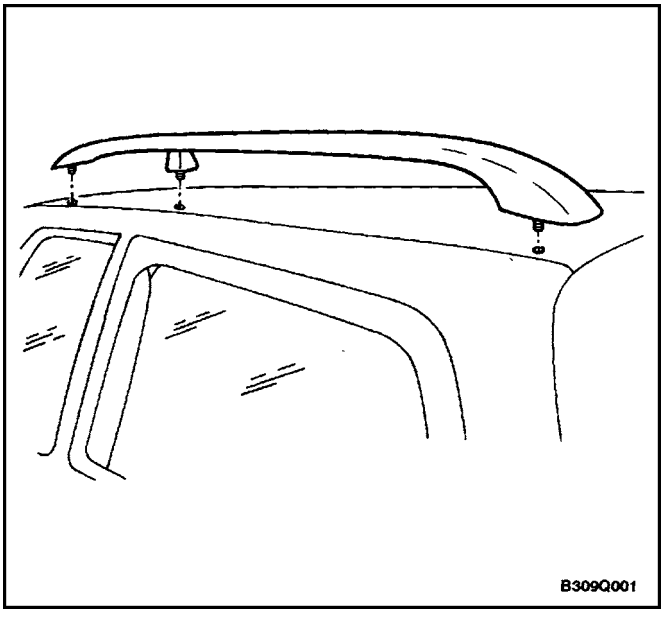

Installation Procedure

Notice : Dissimilar metals in direct contact with each other may corrode rapidly. Make sure to use the correct fasteners to prevent premature corrosion.

1. Install the roof rack with the nuts.

   Tighten

   Tighten the roof rack nuts to 27 N•m (20 lb–ft).
2. Install the headliner. Refer to"Formed Headliner" in this section.

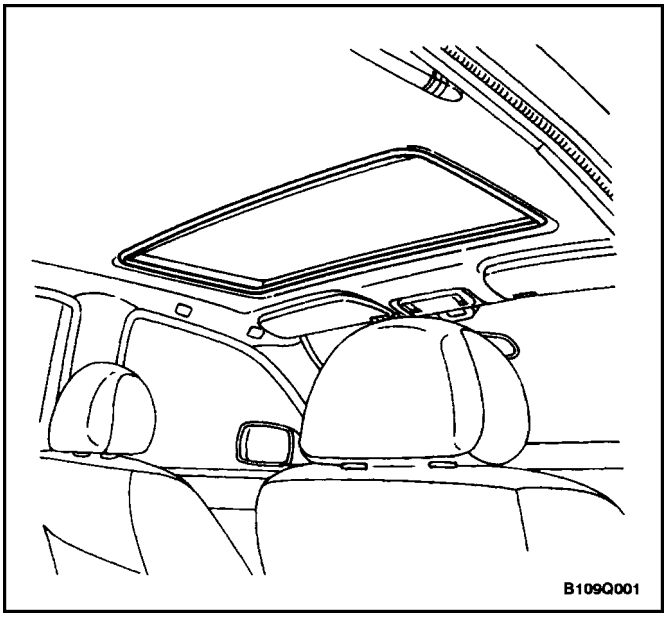

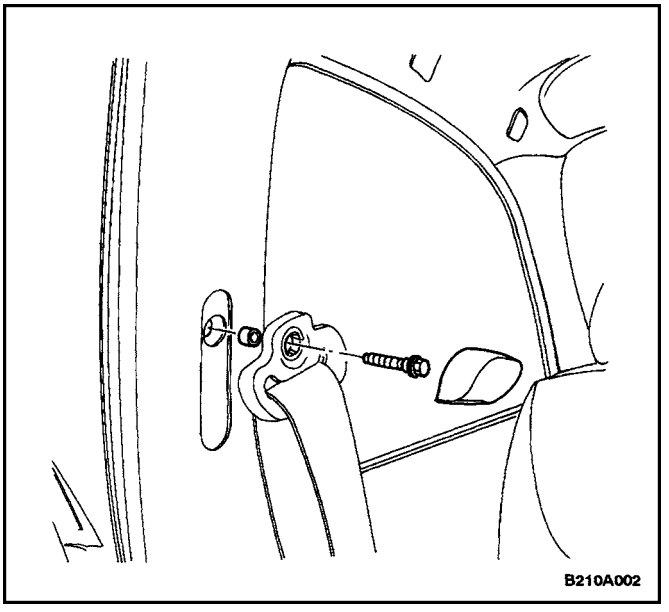

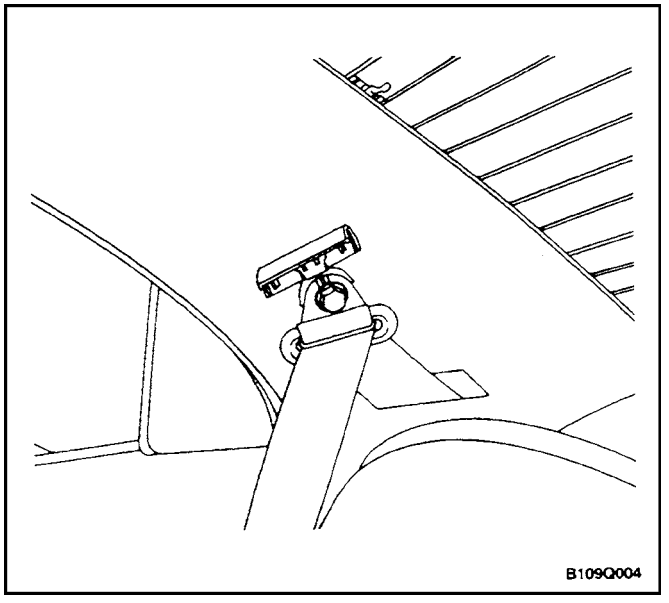

FORMED HEADLINER

(Notchback Shown, Hatchback and Wagon Similar)

Removal Procedure

1. Disconnect the negative battery cable.
2. Remove the headliner/sunroof molding, if equipped.
3. Remove the passenger assist handles. Refer to"Passenger Assist Handles" in this section.
4. Remove the ticket holder. Refer to*Section 9E, Instrumentation/Driver Information.*
5. Remove the sun visors and the sun visor supports from the headliner. Refer to"Sun Visors" in this section.
6. Remove the interior courtesy lamp or the interior courtesy lamp/power sunroof control switch, if equipped. Refer to *Section 9B, Lighting Systems* or"Interior Courtesy Lamp/Power Sunroof Control Switch" in this section.
7. Remove the cargo area lamp (wagon only). Refer to *Section 9B, Lighting Systems*
8. Remove the clock. Refer to*Section 9E, Instrumentation/Driver Information.*
9. Remove the left and the right A–pillar trim panels.
10. Remove the bolts and the seat belt anchors from the left and the right B–pillars.
11. Disconnect the top of the left and the right B–pillar trim panels.
12. Remove the bolts and the rear seat belt anchors from the left and the right C–pillars.

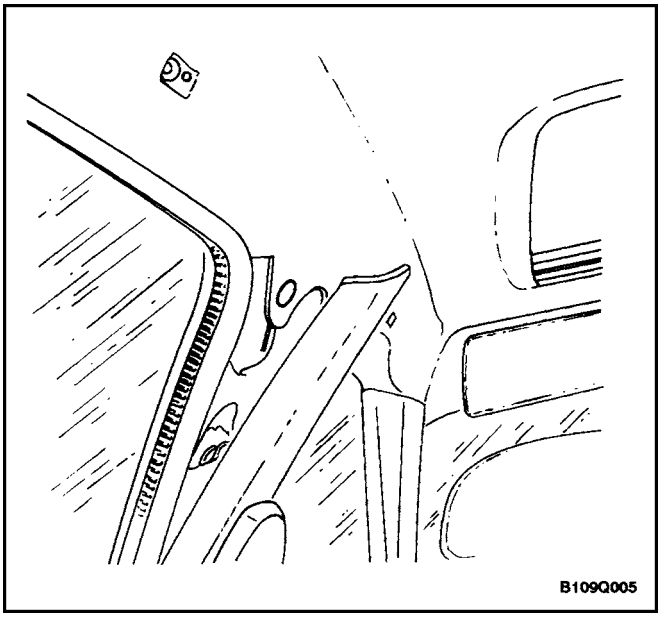

13. Remove the left and the right C–pillar trim panels.
14. Remove the left and right D–pillar trim panels (waon only). Refer to *Section 9G, Interior Trim.*
15. Remove the retaining clips behind the upper B–pillar trim panel.

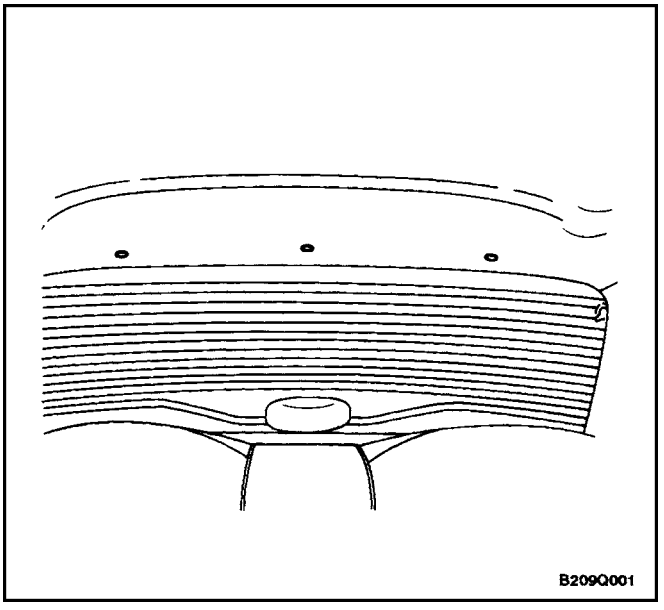

16. Remove the plastic retainers in the headliner along the rear window.
17. Recline both front seats.
18. Remove the headliner through a rear door or the hatchback door.

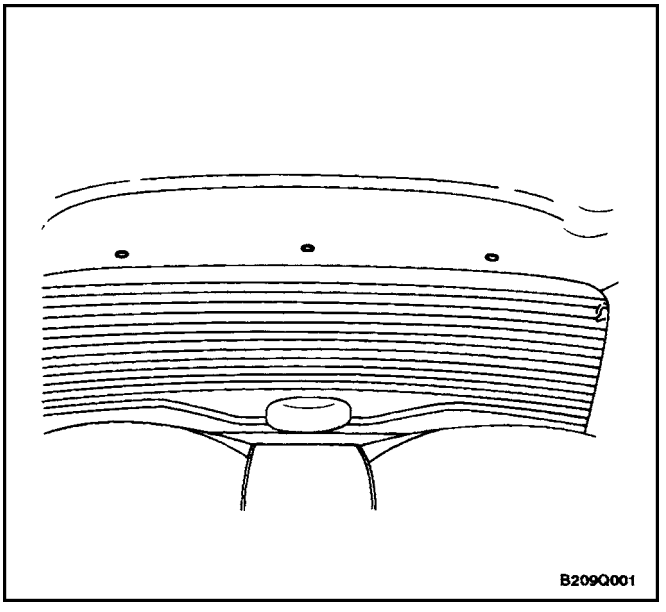

Installation Procedure

1. Recline both front seats.
2. Insert the headliner through a rear door or the hatchback door.
3. Install the headliner behind the trim panels and the seals around the doors.
4. Install the plastic retainers along the rear window.

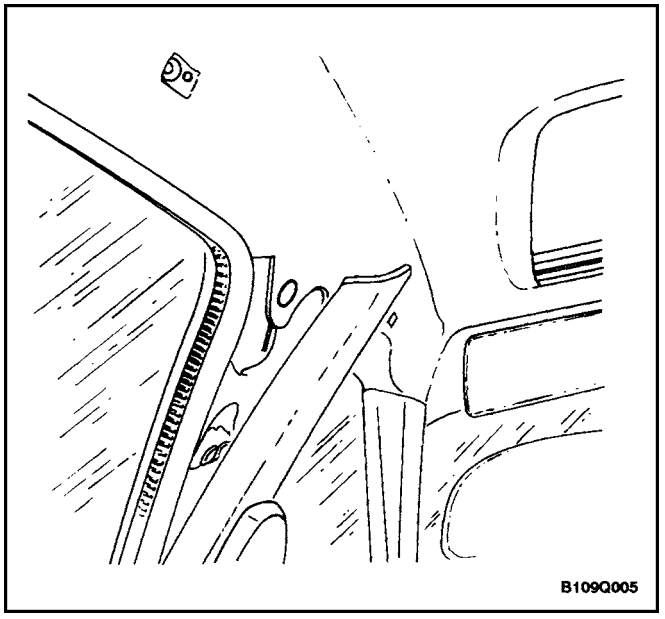

5. Install the retaining clips behind the upper B–pillar trim panels.

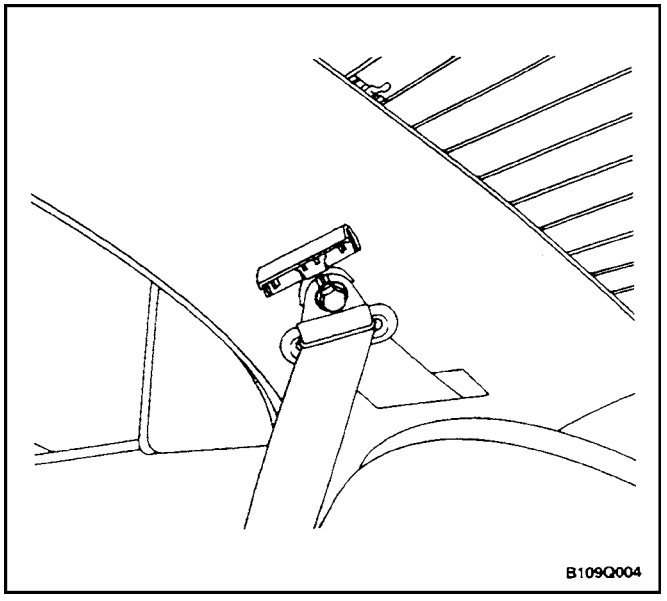

6. Install the left and right D–pillar trim panels (wagon only). Refer to *Section 9G, Interior Trim.*
7. Install the left and the right C–pillar trim panels.

Notice : Dissimilar metals in direct contact with each other may corrode rapidly. Make sure to use the correct fasteners to prevent premature corrosion.

8. Install the rear seat belt anchors and the bolts to the left and the right C–pillars.

Tighten

Tighten the rear seat belt anchor bolts to 35 N•m (26 lb–ft).

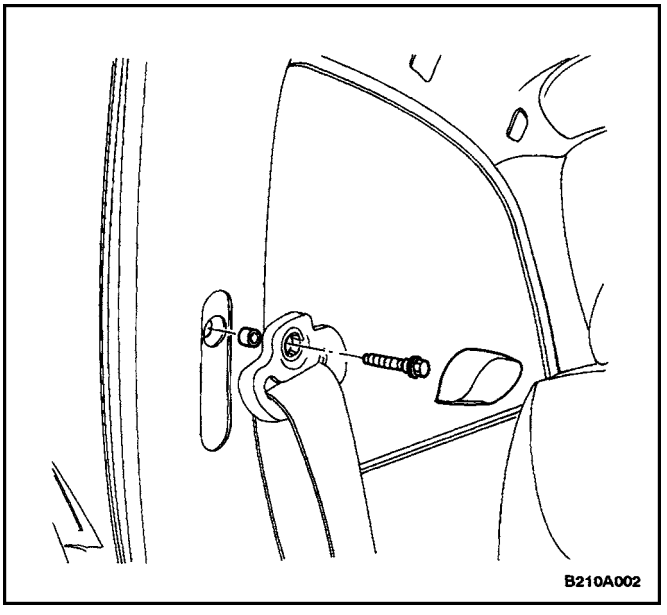

9. Install the top of the left and the right B–pillar trim panels.
10. Install the seat belt anchors with the bolts in the left and the right B–pillar panels.

Tighten

Tighten the rear seat belt anchor bolts to 35 N•m (26 lb–ft).

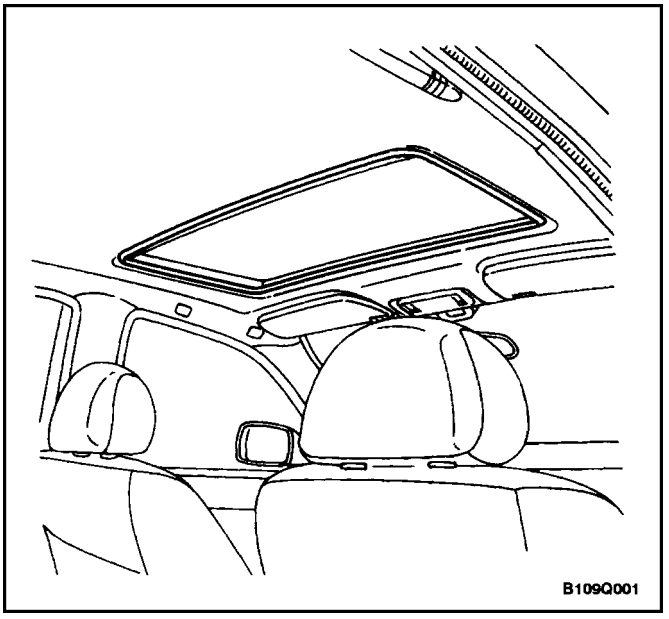

11. Install the left and the right A–pillar trim panels.
12. Install the clock. Refer to *Section 9E, Instrumentation/ Driver Information.*
13. Install the cargo area lamp (wagon only). Refer to *Section 9B, Lighting Systems*
14. Install the interior courtesy lamp or the interior courtesy lamp/power sunroof switch, if equipped. Refer to *Section 9B, Lighting Systems*or"Interior Courtesy Lamp/Power Sunroof ControlSwitch"in this section.
15. Install the sun visor and the sun visor supports. Refer to"Sun Visors" in this section.
16. Install the ticket holder. Refer to *Section 9E, Instrumentation/ Driver Information.*
17. Install the passenger assist handles. Refer to"Passenger Assist Handles" in this section.
18. Install the headliner/sunroof molding, if equipped.
19. Connect the negative battery cable.

SUN VISORS

Removal Procedure

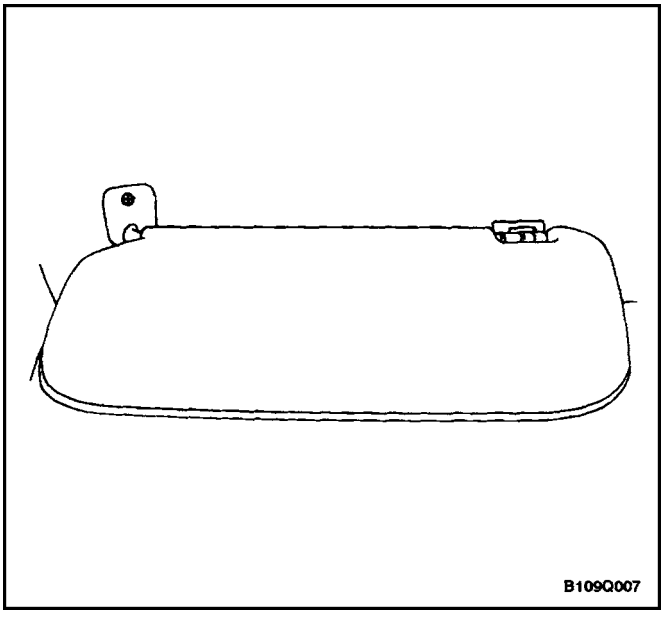

1. Remove the screw and the sun visor from the headliner.

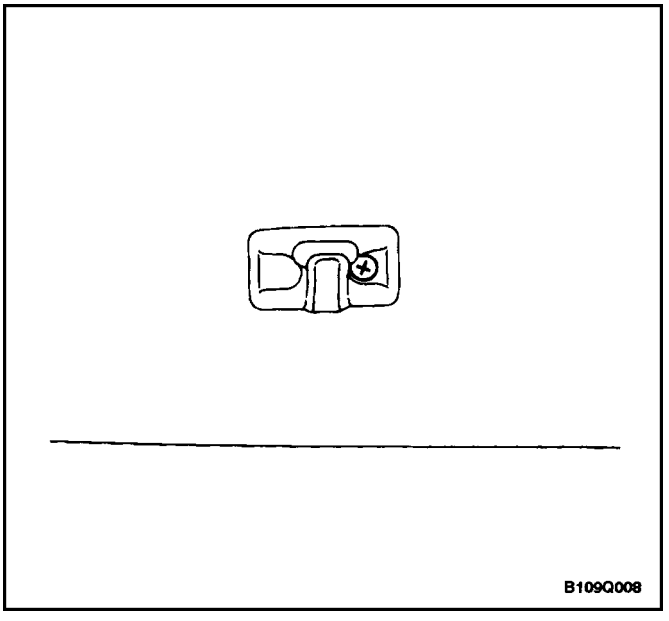

2. Remove the screw and the sun visor support from the headliner.

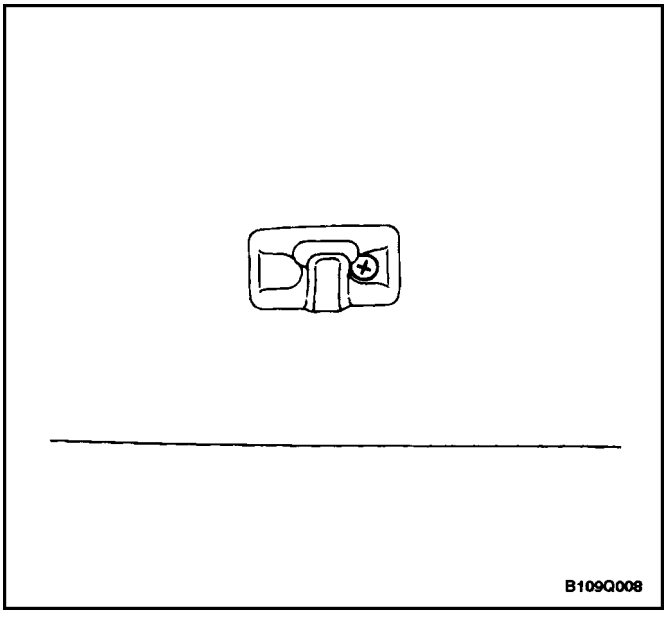

Installation Procedure

Notice : Dissimilar metals in direct contact with each other may corrode rapidly. Make sure to use the correct fasteners to prevent premature corrosion.

1. Install the sun visor support to the headliner with the screw.

   Tighten

   Tighten the sun visor support screw to 2 N•m (18 lbin).

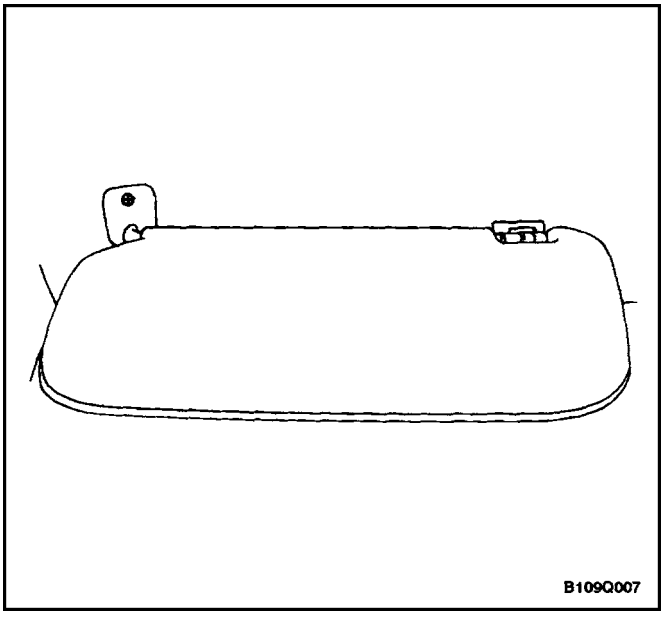

2. Install the sun visor to the headliner with the screw.

   Tighten

   Tighten the sun visor screw to 2 N•m (18 lb–in).

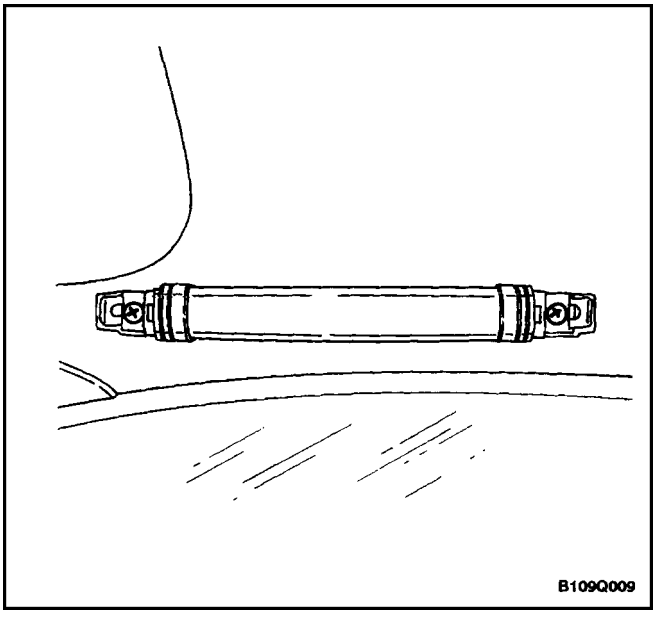

PASSENGER ASSIST HANDLES

Removal Procedure

1. Remove the plastic caps to reveal the assist handle screws.
2. Remove the screws and the assist handle from the headliner.

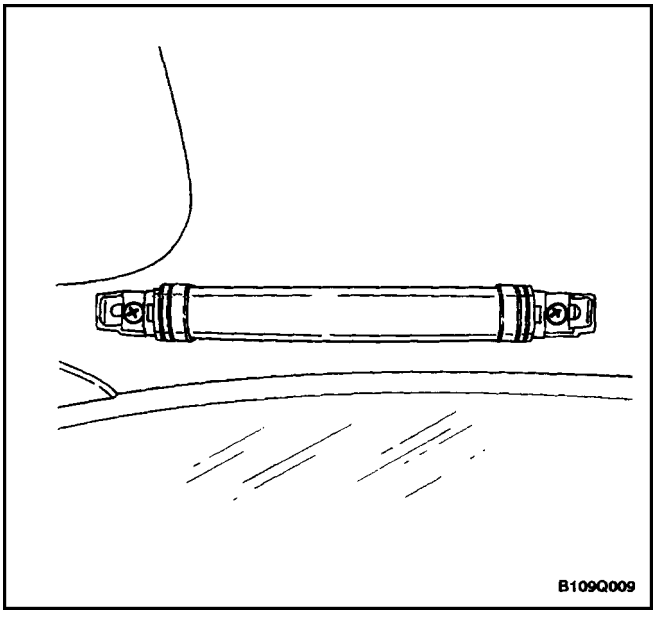

Installation Procedure

Notice : Dissimilar metals in direct contact with each other may corrode rapidly. Make sure to use the correct fasteners to prevent premature corrosion.

1. Install the assist handle to the headliner with the screws.

   Tighten

   Tighten the passenger assist handle screws to 3.5 N•m (31 lb–in).
2. Install the plastic caps over the assist handle screws.

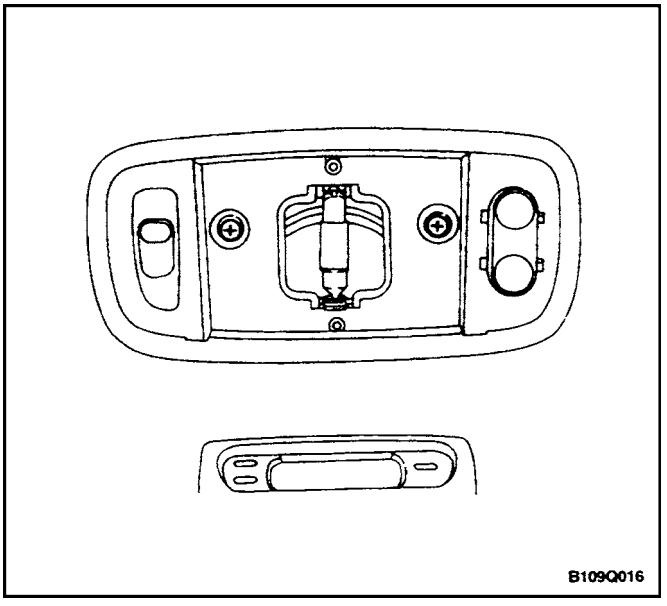

INTERIOR COURTESY LAMP/POWER SUNROOF CONTROL SWITCH

Removal Procedure

1. Disconnect the negative battery cable.
2. Pry off the lamp lens.
3. Remove the screws and the lamp/power sunroof control switch.

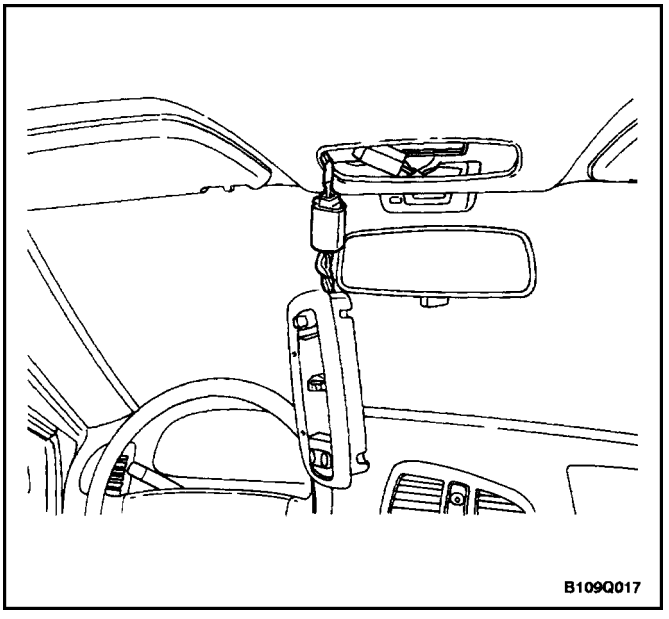

4. Disconnect the electrical connector.

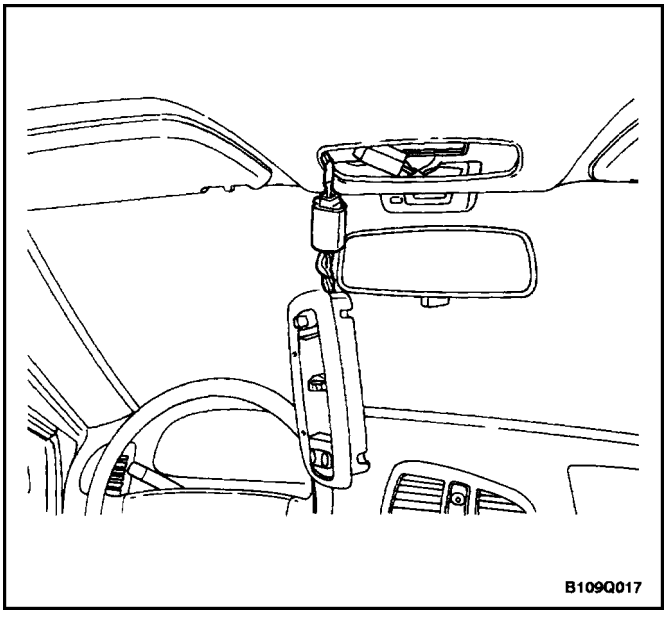

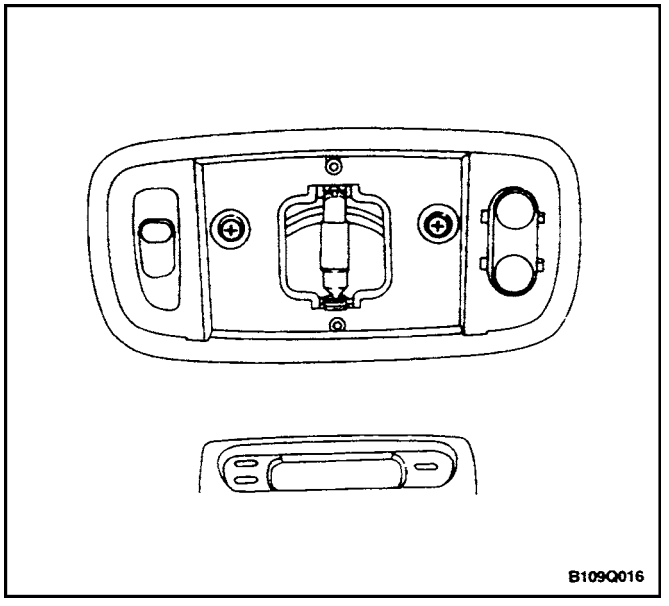

Installation Procedure

1. Connect the electrical connector.

Notice : Dissimilar metals in direct contact with each other may corrode rapidly. Make sure to use the correct fasteners to prevent premature corrosion.

2. Install the lamp/power sunroof control switch with the screws.

   ### Tighten

   Tighten the lamp/power sunroof control switch screws to 4 N•m (35 lb–in).

3. Install the lamp lens.
4. Connect the negative battery cable.

GENERAL DESCRIPTION AND SYSTEM OPERATION

ROOF

The roof is a one–piece paintedmetal unit which incorporates a single solid headliner. There are two moldings, one per side on the vehicle's roof, which enclose and hide the roof rail seams. The roof moldings are serviceable as individual units.

The one–piece formed headliner consists of a molded substrate covered with a foam–backed cloth facing. The one–piece construction requires the headliner be serviced as a complete assembly.

POWER SUNROOF

The sunroof is

- Intended to provide light and air through the roof the vehicle.
- Built into the roof.
- Made of glass.
- Equipped with a sunshade that opens and closes manually.
- Powered by an electric motor.

The sunroof control switch is a toggle button located on the right side of the interior courtesy lamp/power sunroof control switch assembly.

To operate the sunroof, the ignition must be in the ON position.

To tilt open the rear end of the sunroof, press and hold the forward portion of the toggle button until the sunroof tilts open.

To close the sunroof from a tilted–open position, press and hold the rear portion of the toggle button until the sunroof tilts closed.

To slide open the sunroof, press the rear portion of the toggle button until the sunroof slides. If the sun shade is closed, the sunroof will pull the sunshade open when the sunroof slides open.

To close the sunroof from a slid–open position, press the forward portion of the toggle button until the sunroof slides closed.

To close the sunroof from a slid–open position,

ROOF RACK (WAGON)

The sun visors swing down in order to block out glare. They also swing to the side when they are released from the support.

SUN VISORS

The sun visors swing down and to the side to block out glare.

PASSENGER ASSIST HANDLES

There is a passenger assist handle for each rear outboard seat and for the front passenger seat. Passengers can use these handles to assist in keeping their balance over rough roads or during sharp turns.

INTERIOR COURTESY LAMP/POWER SUNROOF CONTROL SWITCH

The courtesy lamp is located on the headliner above the rearview mirror. The lamp switch is located on the left side of the lamp/switch assembly and has three positions. If the switch is in the center position, the lamp will go on whenever a door is opened and go off when it is closed. In the forward position, the lamp will stay on until it is turned off. In the rear position, the lamp will not come on, even when a door is opened. The sunroof control switch is also located on the interior courtesy lamp assembly.

COAT HOOK

A coat hook is located on the left rear passenger assist handle for convenience. The coat hook will not interfere with passenger assist handle operation.

SECTION : 9D

WIPERS/WASHER SYSTEMS

CAUTION : Disconnect the negative battery cable before removing or installing any electrical unit or when a tool or equipment could easily come in contact with exposed electrical terminals. Disconnecting this cable will help prevent personal injury and damage to the vehicle. The ignition must also be in LOCK unless otherwise noted.

TABLE OF CONTENTS

SPECIFICATIONS 9D–1
FASTENER TIGHTENING SPECIFICATIONS . 9D–1
SCHEMATIC AND ROUTING DIAGRAMS 9D–2
WIPERS AND WASHER SYSTEM (NOTCHBACK) 9D–2
WIPERS AND WASHER SYSTEM (HATCHBACK) 9D–3
DIAGNOSIS 9D–4
WINDSHIELD WIPERS 9D–4
WINDSHIELD WASHER SYSTEM 9D–8
REAR WINDOW WIPER (HATCHBACK AND WAGON) 9D–9
REAR WINDOW WASHER SYSTEM (HATCHBACK AND WAGON) 9D–11
MAINTENANCE AND REPAIR 9D–12
ON–VEHICLE SERVICE 9D–12
WINDSHIELD WIPER ARM 9D–12
WINDSHIELD WIPER MOTOR 9D–12
WINDSHIELD WIPER BLADE 9D–14
WINDSHIELD WIPER BLADE INSERT 9D–14
WINDSHIELD WASHER RESERVOIR 9D–15
WINDSHIELD WASHER PUMP(S) 9D–17
WINDSHIELD WASHER NOZZLES 9D–18
WINDSHIELD WASHER HOSES 9D–18
REAR WINDOW WIPER ARM 9D–20
REAR WINDOW WIPER MOTOR (HATCHBACK) 9D–20
REAR WINDOW WIPER MOTOR (WAGON) . 9D–21
REAR WINDOW WASHER NOZZLE (HATCHBACK) 9D–22
GENERAL DESCRIPTION AND SYSTEM OPERATION 9D–24
WINDSHIELD WIPER SYSTEM 9D–24
WINDSHIELD WASHER SYSTEM 9D–24
REAR WINDOW WIPER/WASHER SYSTEM 9D–24

SPECIFICATIONS

FASTENER TIGHTENING SPECIFICATIONS

Application	N•m	Lb–Ft	Lb–In
Front Wheel Well Splash Shield Bolts	1.5	–	13
Washer Fluid Reservoir Bolts	8	–	71
Wiper Arm Linkage Nut	5	–	44
Wiper Arm Nut	11	–	97
Wiper Motor Bolts	8	–	71

SCHEMATIC AND ROUTING DIAGRAMS

WIPERS AND WASHER SYSTEM (NOTCHBACK)

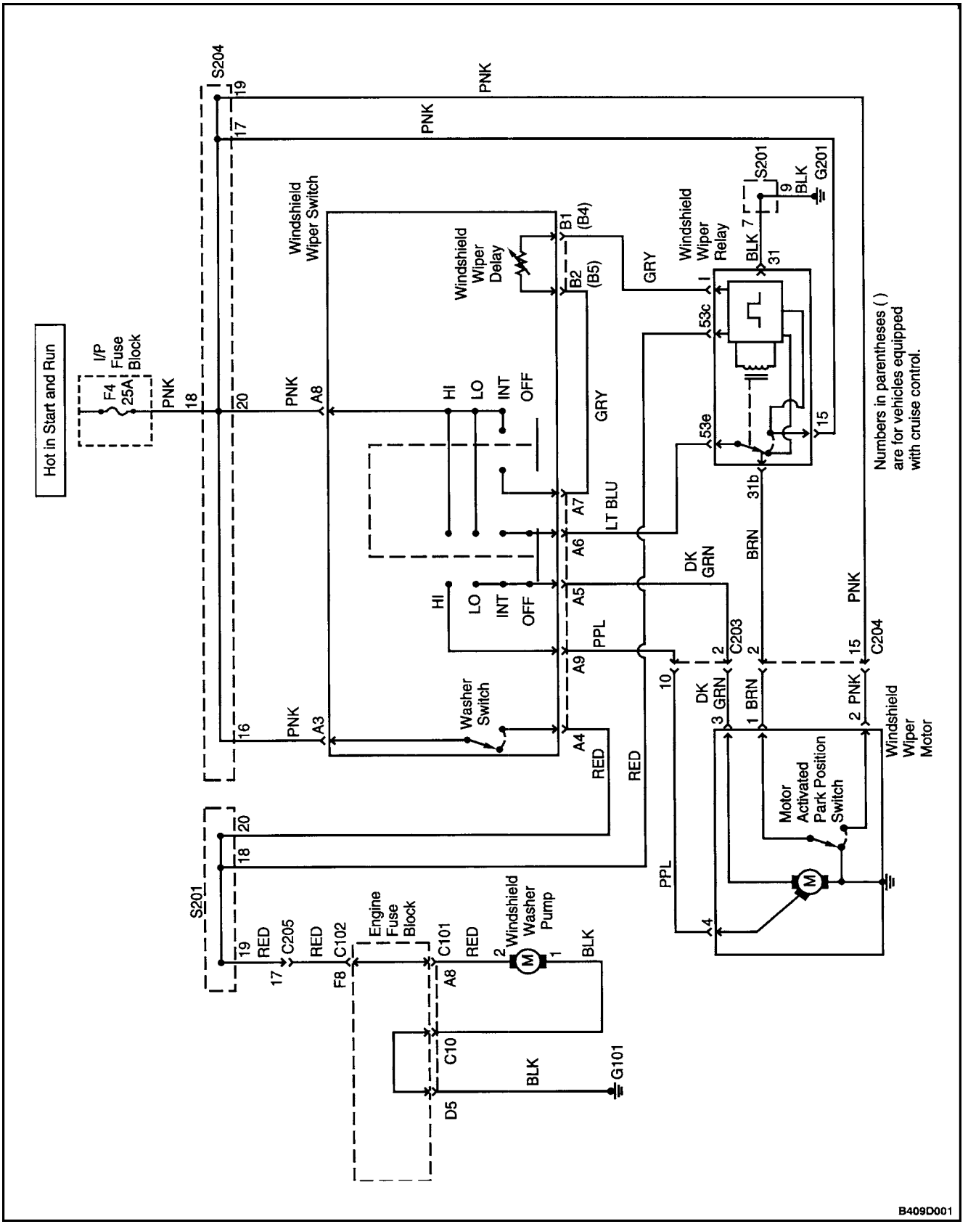

WIPERS AND WASHER SYSTEM (HATCHBACK)

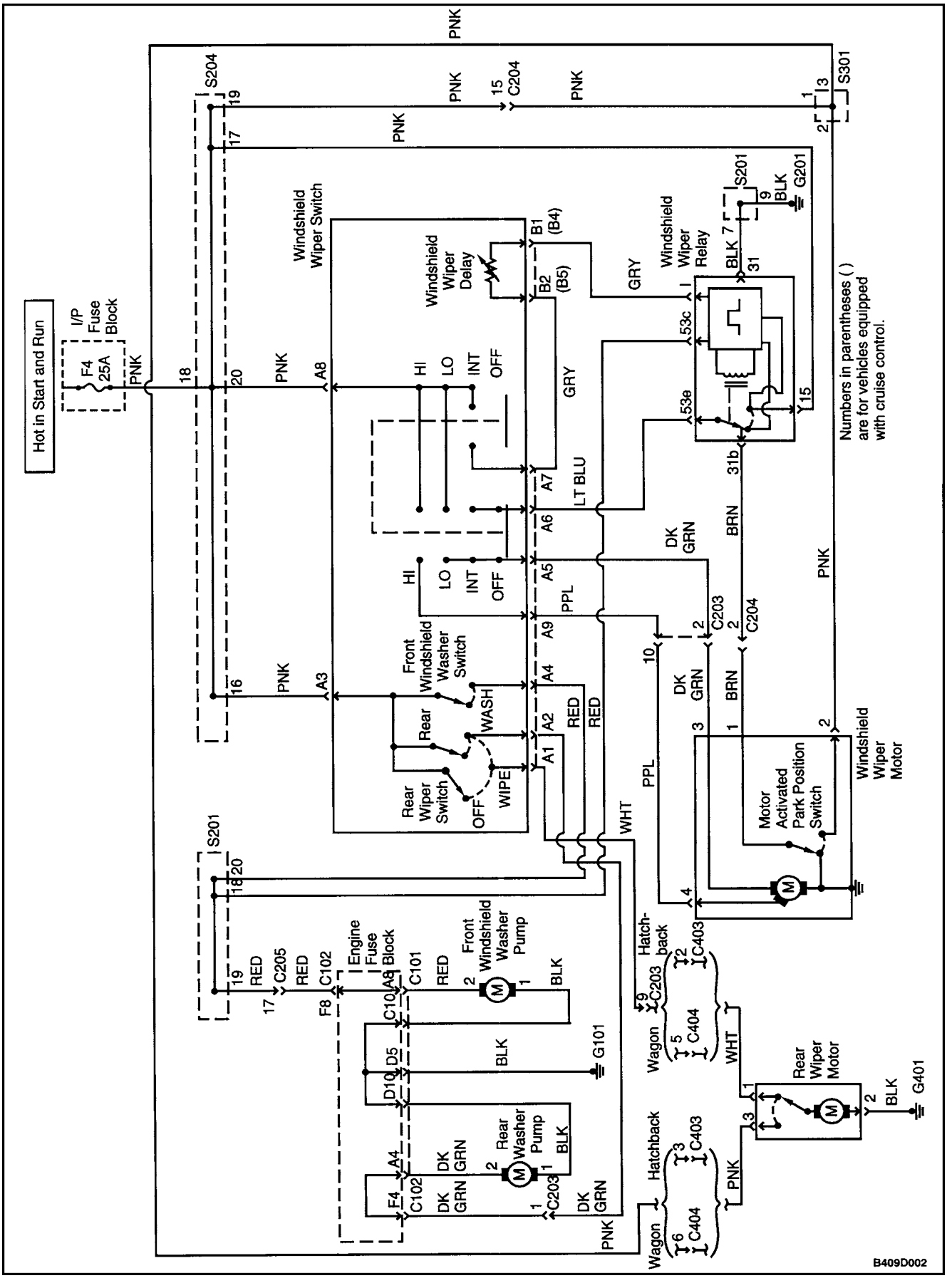

DIAGNOSIS

WINDSHIELD WIPERS

Windshield Wipers Do Not Work At Any Speed

Step	Action	Value(s)	Yes	No
1	Check fuse F4. Is fuse F4 blown?		Go to *Step 2*	Go to *Step 3*
2	1. Check for a short circuit and repair it, if necessary. 2. Replace the fuse. Is the repair complete?		System OK	
3	Check the voltage at fuse F4. Is the voltage equal to the specified value?	11–14 v	Go to *Step 5*	Go to *Step 4*
4	Repair the open power supply circuit to fuse F4. Is the repair complete?		System OK	
5	1. Disconnect the wiper motor connector. 2. Turn the ignition ON. 3. Turn the wiper switch to HI. 4. Check the voltage at the wiper motor connector terminal 6. Is the voltage equal to the specified value?	11–14 v	Go to *Step 6*	Go to *Step 7*
6	Replace the wiper motor. Is the repair complete?		System OK	
7	1. The wiper switch is still disconnected. 2. Turn the ignition ON. 3. Check for battery voltage at the wiper switch connector terminal A8. Is the voltage equal to the specified value?	11–14 v	Go to *Step 9*	Go to *Step 8*
8	Repair the open circuit between the wiper switch connector terminal A8 and fuse F4. Is the repair complete?		System OK	
9	1. The wiper switch is still disconnected. 2. Turn the wiper switch to HI. 3. Use an ohmmeter to check for continuity between wiper switch terminal A8 and A9. Does the ohmmeter indicate the specified value?	$\approx$ 0 Ω	Go to *Step 11*	Go to *Step 10*
10	Replace the wiper switch. Is the repair complete?		System OK	
11	Repair the open circuit between the wiper switch and the wiper motor. Is the repair complete?		System OK	

Wipers Do Not Work On HI Speed, LO Speed OK

Step	Action	Value(s)	Yes	No
1	1. Turn the ignition ON. 2. Turn the wiper switch to HI. 3. Check the voltage at the wiper motor connector terminal 4. Is voltage equal to the specified value?	11–14 v	Go to *Step 2*	Go to *Step 3*
2	Replace the wiper motor. Is the repair complete?		System OK	
3	1. Disconnect the wiper switch. 2. Turn the wiper switch to HI. 3. Use an ohmmeter to check for continuity between wiper switch terminal A8 and A9. Does the ohmmeter indicate the specified value?	≈ 0 Ω	Go to *Step 5*	Go to *Step 4*
4	Replace the wiper switch. Is the repair complete?		System OK	
5	Repair the open circuit between wiper switch connector terminal A9 and wiper motor connector terminal 4. Is the repair complete?		System OK	

Wipers Do Not Work On LO Speed, HI Speed OK

Step	Action	Value(s)	Yes	No
1	1. Turn the ignition ON. 2. Turn the wiper switch to LO. 3. Check the voltage at the wiper motor connector, terminal 3. Is the voltage equal to the specified value?	11–14 v	Go to *Step 2*	Go to *Step 3*
2	Replace the wiper motor. Is the repair complete?		System OK	
3	1. Disconnect the wiper switch. 2. Turn wiper switch to LO. 3. Use an ohmmeter to check for continuity between wiper switch terminal A8 and A5. Does the ohmmeter indicate the specified value?	≈ 0 Ω	Go to *Step 5*	Go to *Step 4*
4	Replace the wiper switch. Is the repair complete?		System OK	
5	Repair the open circuit between wiper switch connector terminal A5 and wiper motor connector terminal 3. Is the repair complete?		System OK	

Wipers Do Not Work On Intermittent (INT), Other Speeds OK

Step	Action	Value(s)	Yes	No
1	1. Turn the ignition ON. 2. Use a voltmeter to test the voltage at wiper relay connector terminal 15. Is voltage equal to the specified value?	11–14 v	Go to *Step 3*	Go to *Step 2*
2	Repair the open circuit between the wiper relay connector terminal 15 and fuse F4. Is the repair complete?		System OK	
3	1. Turn the ignition on. 2. Turn the wiper switch to INT. 3. Check the voltage at wiper relay connector terminal I. Does the voltmeter indicate a voltage equal to the specified value?	11–14 v	Go to *Step 7*	Go to *Step 4*
4	Check for an open circuit between wiper switch connector terminal A7 and wiper relay connector terminal I. Is there an open circuit?		Go to *Step 6*	Go to *Step 5*
5	Replace the wiper switch. Is the repair complete?		System OK	
6	Repair the open circuit between wiper switch connector terminal A7 and wiper relay connector terminal I. Is the repair complete?		System OK	
7	1. Turn the ignition on. 2. Turn the wiper switch to INT. 3. Check for pulsing voltage at wiper switch connector terminal A6. Does the voltmeter indicate a pulsating voltage equal to the specified value?	11–14 v	Go to *Step 11*	Go to *Step 8*
8	Using an ohmmeter, check the resistance between ground and the wiper relay connector terminal 31. Is resistance equal to the specified value?	$\approx$ 0 Ω	Go to *Step 10*	Go to *Step 9*
9	Repair the open ground circuit. Is the repair complete?		System OK	
10	Replace the wiper relay. Is the repair complete?		System OK	
11	1. Ignition ON. 2. Turn the wiper switch to INT. 3. Backprobe to check the voltage at the wiper switch connector terminal A5. Does the voltmeter indicate a pulsating voltage equal to the specified value?	11–14 v	Go to *Step 12*	Go to *Step 13*
12	Replace the wiper relay. Is the repair complete?		System OK	
13	Repair the open circuit between the wiper switch and the wiper relay. Is the repair complete?		System OK	

Windshield Wipers Do Not Return To Park Position

Step	Action	Value(s)	Yes	No
1	1. Turn the ignition ON. 2. Check the voltage at the wiper motor connector terminal 2. Is the voltage equal to the specified value?	11–14 v	Go to *Step 3*	Go to *Step 2*
2	Repair the open circuit between the wiper motor connector terminal 2 and fuse F4. Is the repair complete?		System OK	
3	1. Turn the wiper switch to HI. 2. While turning the wiper switch OFF, check the voltage at the wiper motor connector terminal 1. Is the specified voltage indicated when the wiper switch is turned OFF?	11–14 v	Go to *Step 5*	Go to *Step 4*
4	Replace the wiper motor. Is there an open circuit?		System OK	
5	1. Disconnect the wiper relay. 2. Check continuity between wiper relay terminal 31b and 53e. Does the ohmmeter indicate the specified value?	$\approx$ 0 Ω	Go to *Step 6*	Go to *Step 7*
6	Repair the open circuit between the wiper motor and the wiper relay. Is the repair complete?		System OK	
7	Replace the wiper relay. Is the repair complete?		System OK	

WINDSHIELD WASHER SYSTEM

Windshield Washer Inoperative, Wipers Work OK

Step	Action	Value(s)	Yes	No
1	Activate the windshield washer switch. Do the windshield wipers operate when the washer switch is activated?		Go to *Step 4*	Go to *Step 2*
2	1. Turn the ignition ON. 2. While activating the washer switch, test the voltage at windshield wiper switch connector terminal A4. Is voltage equal to the specified value?	11–14 v	Go to *Step 8*	Go to *Step 3*
3	Replace windshield wiper switch. Is the repair complete?		System OK	
4	Check the windshield washer fluid reservoir. Is there washer fluid in the fluid reservoir?		Go to *Step 6*	Go to *Step 5*
5	Fill the windshield washer fluid reservoir. Is the repair complete?		System OK	
6	Check the windshield washer hoses and nozzles. Are the windshield washer hoses and nozzles clogged or damaged?		Go to *Step 7*	Go to *Step 8*
7	Repair the washer hoses and nozzles. Is the repair complete?		System OK	
8	1. Turn the ignition ON. 2. With the windshield washer activated, test the voltage at the windshield washer pump. Is the voltage equal to the specified value?	11–14 v	Go to *Step 10*	Go to *Step 9*
9	Repair the open circuit between the windshield washer pump and the windshield wiper switch. Is the repair complete?		System OK	
10	Use an ohmmeter to measure resistance between ground and the windshield washer pump connector terminal 1. Is the resistance equal to the specified value?	$\approx 0\ \Omega$	Go to *Step 12*	Go to *Step 11*
11	Repair the windshield washer pump ground circuit. Is the repair complete?		System OK	
12	Replace the windshield washer pump. Is the repair complete?		System OK	

REAR WINDOW WIPER (HATCHBACK AND WAGON)

Diagnostic Aid

If the front wiper is operating correctly, it is not necessary to check the fuse or the power supply circuit. Begin the diagnostic check at *Step 5* of the table below.

Step	Action	Value(s)	Yes	No
1	Check fuse F4. Is fuse F4 blown?		Go to *Step 2*	Go to *Step 3*
2	1. Check for a short circuit and repair it, if necessary. 2. Replace the fuse. Is the repair complete?		System OK	
3	1. Turn the ignition ON. 2. Check the voltage at fuse F4. Is the specified voltage available at fuse F4?	11 – 14 v	Go to *Step 5*	Go to *Step 4*
4	Repair the open power supply circuit for fuse F4. Is the repair complete?		System OK	
5	1. Disconnect the rear window wiper motor electrical connector. 2. Turn the ignition ON. 3. Check the voltage at rear wiper motor connector terminal 3. Does the voltage equal the specified value?	11 – 14 v	Go to *Step 7*	Go to *Step 6*
6	Repair the open circuit between fuse F4 and rear window wiper motor connector terminal 3. Is the repair complete?		System OK	
7	With the rear window wiper still disconnected, use an ohmmeter to check continuity between rear wiper motor connector terminal 2 and ground. Does the ohmmeter indicate the specified value?	$\approx 0\ \Omega$	Go to *Step 9*	Go to *Step 8*
8	Repair the open ground circuit for the rear window wiper motor. Is the repair complete?		System OK	
9	1. Turn the ignition ON. 2. Turn the rear window wiper to ON. 3. Check the voltage at rear window wiper motor connector terminal 1. Does the voltmeter indicate the specified value?	11 – 14 v	Go to *Step 10*	Go to *Step 11*
10	Replace the rear window wiper motor. Is the repair complete?		System OK	
11	1. Disconnect the rear window wiper switch electrical connector. 2. Turn the ignition ON. 3. Check the voltage at wiper switch connector terminal A3 (PNK wire). Does the voltmeter indicate the specified value?	11 – 14 v	Go to *Step 13*	Go to *Step 12*
12	Repair the open circuit between fuse F4 and rear window wiper switch connector terminal A3. Is the repair complete?		System OK	

Step	Action	Value(s)	Yes	No
13	1. Connect an ohmmeter between terminals A1 and A3 of the rear window wiper switch. 2. Move the rear window wiper switch to the WIPE position. Does the ohmmeter indicate the specified value?	≈ 0 Ω	Go to *Step 14*	Go to *Step 15*
14	Repair the open circuit between terminal A1 of the rear window wiper connector (WHT wire) and the rear window wiper motor. Is the repair complete?		System OK	
15	Replace the rear window wiper switch. Is the repair complete?		System OK	

REAR WINDOW WASHER SYSTEM (HATCHBACK AND WAGON)

Step	Action	Value(s)	Yes	No
1	Check the washer fluid level. Is there fluid in the washer reservoir?		Go to *Step 3*	Go to *Step 2*
2	Fill the washer reservoir. Is the repair complete?		System OK	
3	Verify that the hoses are not obstructed or leaking. 1. Disconnect the washer hose. 2. Blow through the washer hose toward the reservoir and also toward the nozzle. Are the hoses obstructed or leaking?		Go to *Step 4*	Go to *Step 5*
4	Repair or replace the hoses. Is the repair complete?		System OK	
5	Check the function of the rear window wiper. Does the rear window wiper function correctly?		Go to *Step 7*	Go to *Step 6*
6	Repair the rear window wiper. Is the rear window wiper functioning correctly?		Go to *Step 7*	
7	1. Disconnect the electrical connector at the rear window washer pump. 2. Use an ohmmeter to check continuity between terminal 1 and ground. Does the ohmmeter indicate the specified value?	≈ 0 Ω	Go to *Step 9*	Go to *Step 8*
8	Repair the open or high–resistance ground connection. Is the repair complete?		System OK	
9	1. Turn the rear window washer ON. 2. Check the voltage at terminal 2 of the rear window washer pump connector (DK GRN wire). Is the voltage equal to the specified value?	11 – 14 v	Go to *Step 10*	Go to *Step 11*
10	Replace the rear window washer pump. Is the repair complete?		System OK	
11	1. Disconnect the rear window wiper switch. 2. Connect an ohmmeter between terminal A3 and terminal A2 of the rear window wiper switch. 3. Observe the ohmmeter when the switch is moved to the rear WASH position. Does the ohmmeter indicate the specified value?	≈ 0 Ω	Go to *Step 12*	Go to *Step 13*
12	Repair the open circuit between terminal A2 (DK GRN wire) of the rear window wiper switch connector and terminal 2 (DK GRN wire) of the rear window washer pump. Is the repair complete?		System OK	
13	Replace the rear window wiper switch. Is the repair complete?		System OK	

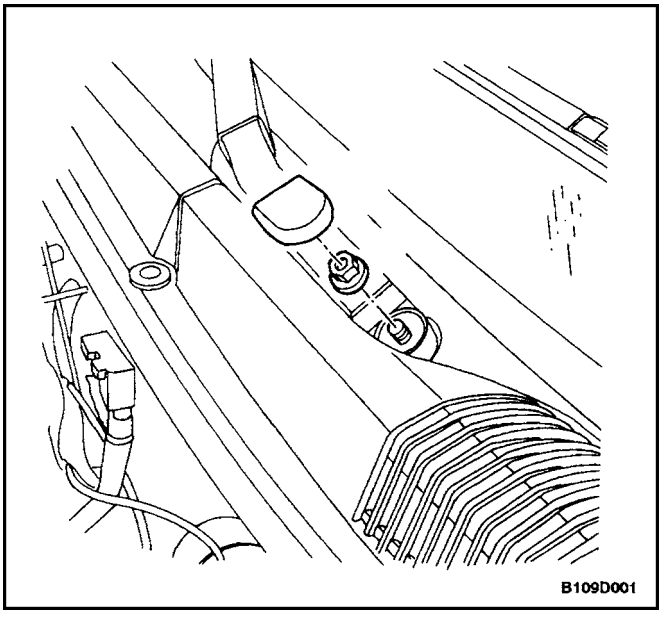

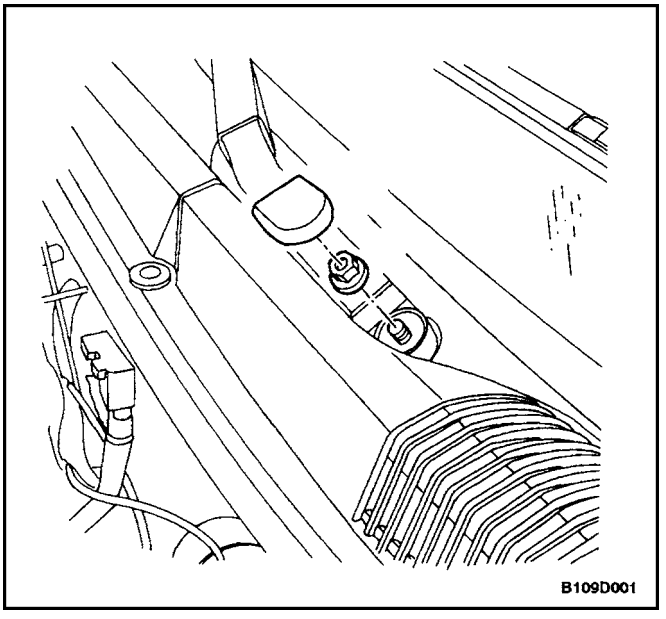

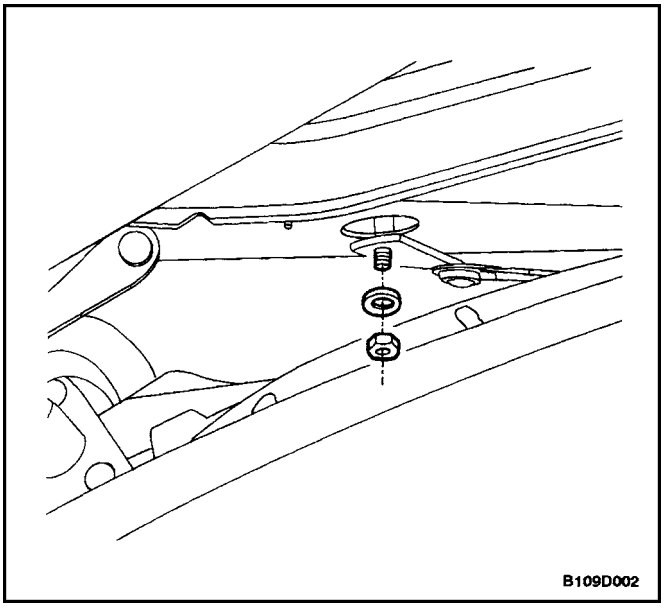

MAINTENANCE AND REPAIR

ON–VEHICLE SERVICE

WINDSHIELD WIPER ARM

(Left–Hand Drive Shown, Right–Hand Drive Similar)

Removal Procedure

1. Open the hood.
2. Remove the cap to reveal the wiper arm nut, if necessary.
3. Remove the nut from the wiper arm.
4. Pull the wiper arm off.

Installation Procedure

1. Install the wiper arm.

Notice : Dissimilar metals in direct contact with each other may corrode rapidly. Make sure to use the correct fasteners to prevent premature corrosion.

2. Secure the wiper arm with the nut.

   Tighten

   Tighten the wiper arm nut to 11 N•m (97 lb–in).

3. Install the wiper arm nut cap, if necessary.
4. Close the hood.

WINDSHIELD WIPER MOTOR

(Left–Hand Drive Shown, Right–Hand Drive Similar)

Removal Procedure

1. Disconnect the negative battery cable.
2. Remove the left–side portion of the cowl vent grille. Refer to *Section 9R, Body Front End.*
3. Remove the nut and the washer that secure the wiper arm linkage to the motor drive shaft.

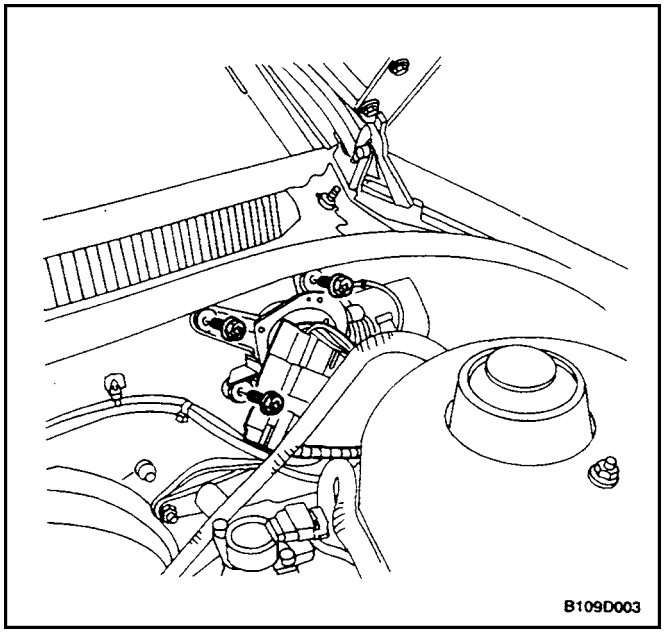

4. Pry the wiper arm linkage off the motor drive shaft.
5. Remove the nuts and reposition the engine coolant reservoir.
6. Disconnect the electrical connector.
7. Remove the bolts and the wiper motor.

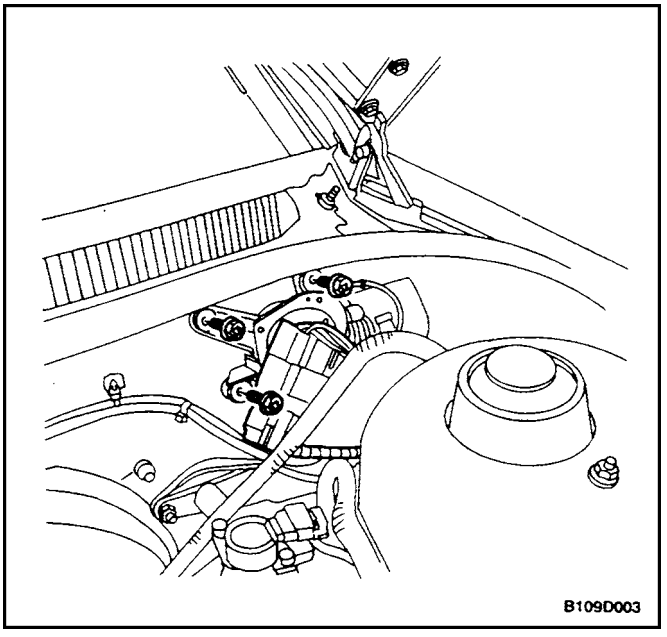

Installation Procedure

Notice : Dissimilar metals in direct contact with each other may corrode rapidly. Make sure to use the correct fasteners to prevent premature corrosion.

1. Install the wiper motor with the bolts.

   Tighten

   Tighten the wiper motor bolts to 8 N•m (71 lb–in).
2. Connect the electrical connector.

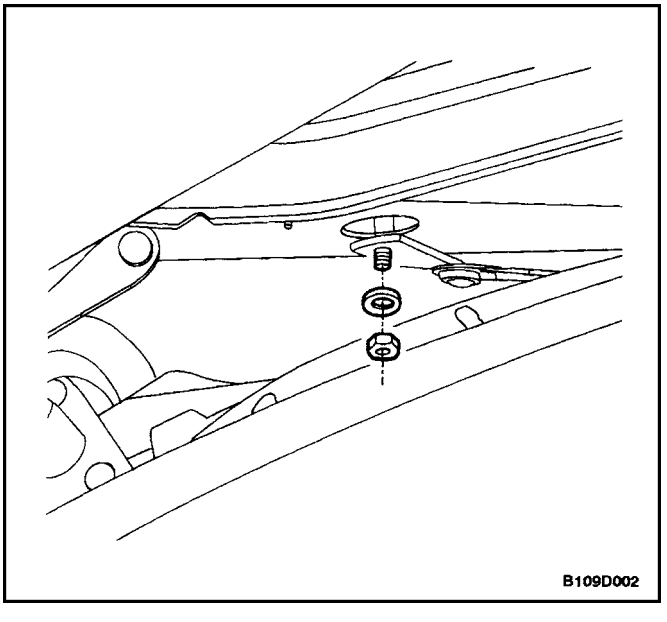

3. Press the wiper arm linkage onto the motor drive shaft.
4. Install the wiper arm linkage to the motor drive shaft with the washer and the nut.

   Tighten

   Tighten the wiper arm linkage nut to 5 N•m (44 lb–in).
5. Install the left side portion of the cowl vent grille. Refer to*Section 9R, Body Front End.*
6. Connect the negative battery cable.

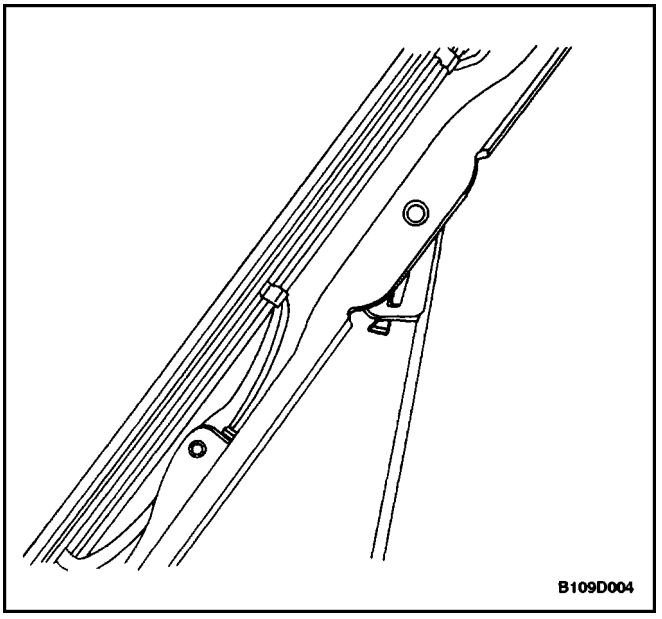

WINDSHIELD WIPER BLADE

(Typical)

Removal Procedure

1. Rotate the wiper blade on the arm.
2. While pressing the retainer clip, slide the wiper blade down the wiper arm and remove the blade.

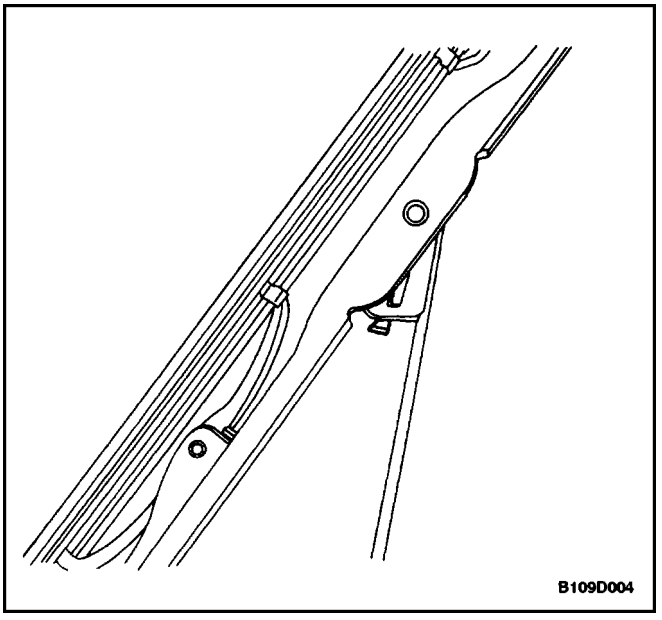

Installation Procedure

1. Install the wiper blade by sliding it onto the arm until the retainer clip engages.

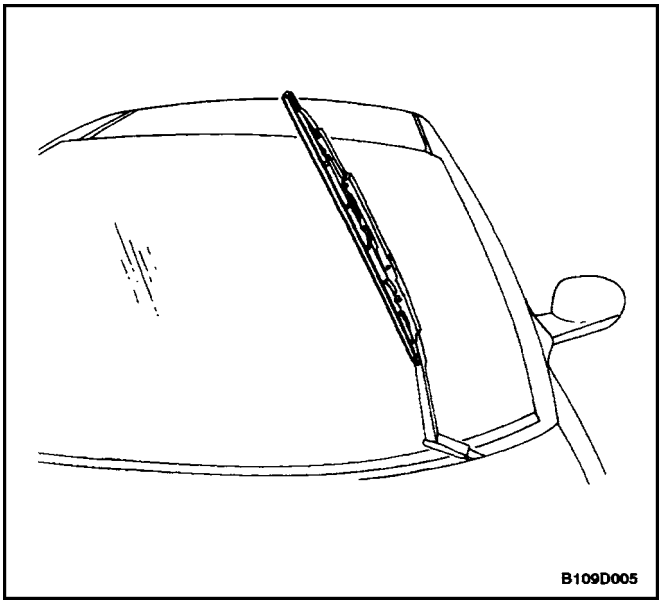

WINDSHIELD WIPER BLADE INSERT

(Front Shown, Rear Similar)

Removal Procedure

1. Slide the insert out of the wiper blade.

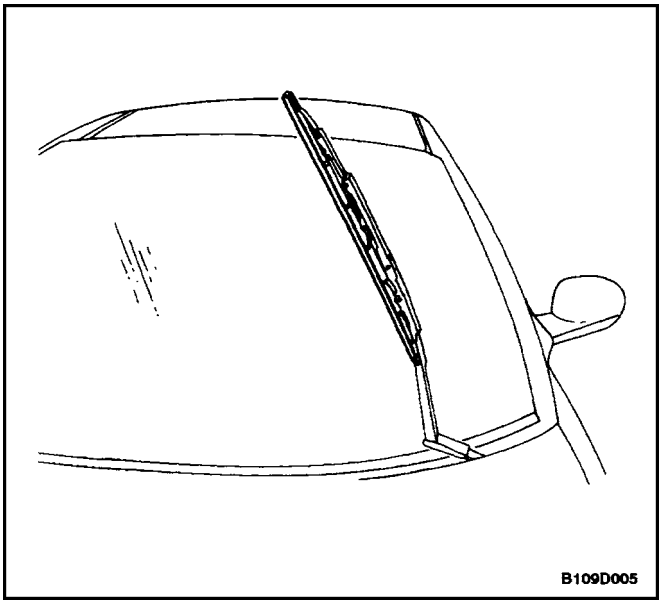

Installation Procedure

1. Slide the insert into the wiper blade.

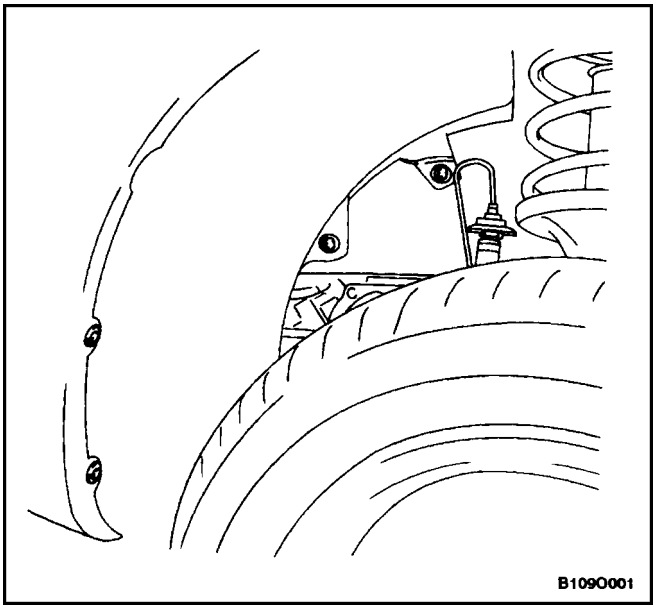

WINDSHIELD WASHER RESERVOIR (Typical)

Removal Procedure

1. Disconnect the negative battery cable.
2. Remove the front left wheel. Refer to *Section 2E, Tires and Wheels.*
3. Remove the bolts and the screws and the front wheel well splash shield.

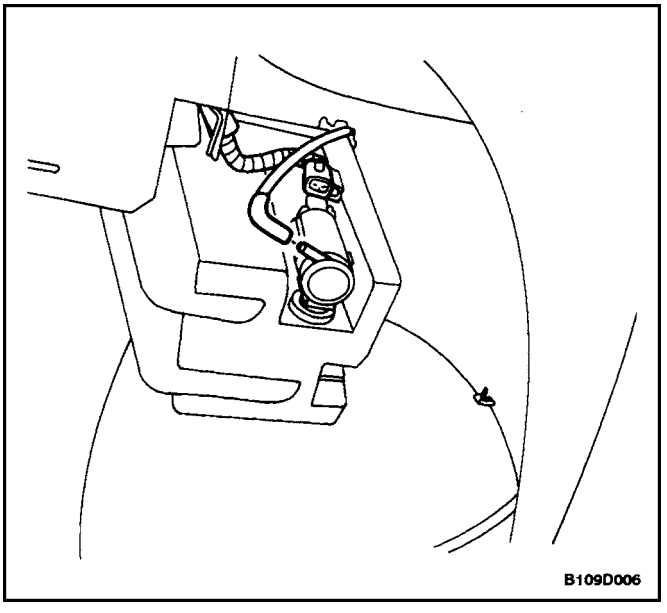

4. Disconnect the washer hose from the washer pump.
5. Disconnect the reservoir pump electrical connector.

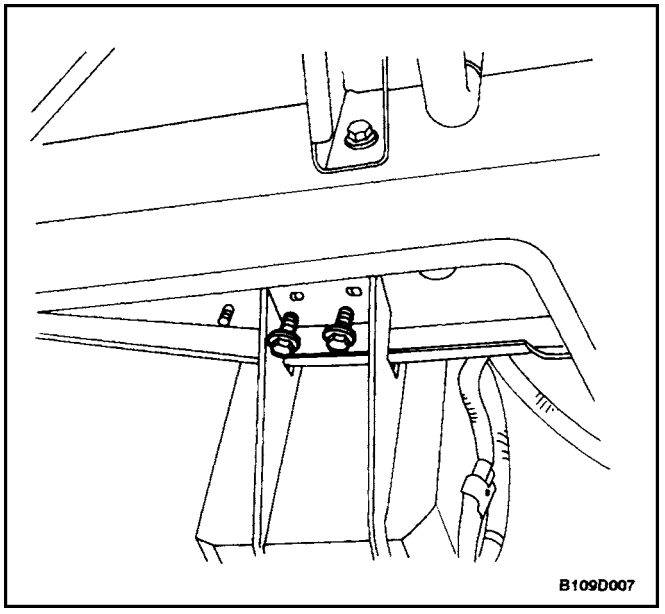

6. Remove the bolts and the reservoir.

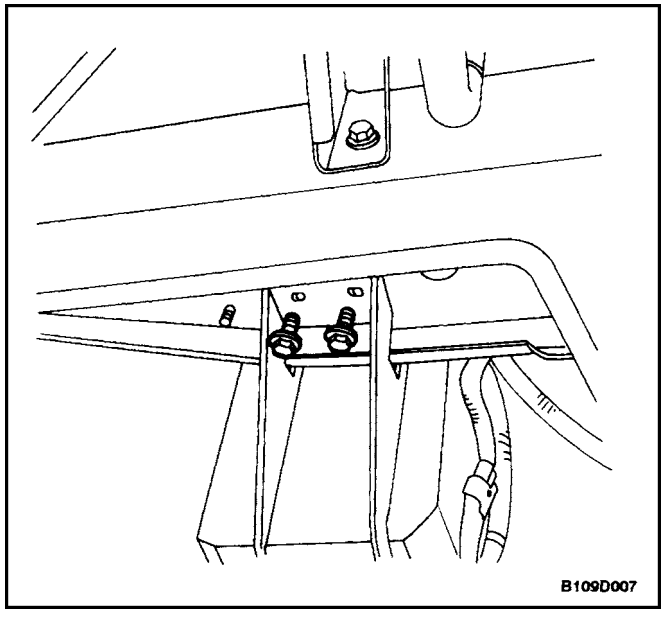

Installation Procedure

Notice : Dissimilar metals in direct contact with each other may corrode rapidly. Make sure to use the correct fasteners to prevent premature corrosion.

1. Install the reservoir with the bolts.

   Tighten

   Tighten the washer fluid reservoir bolts to 8 N•m (71 lb–in).

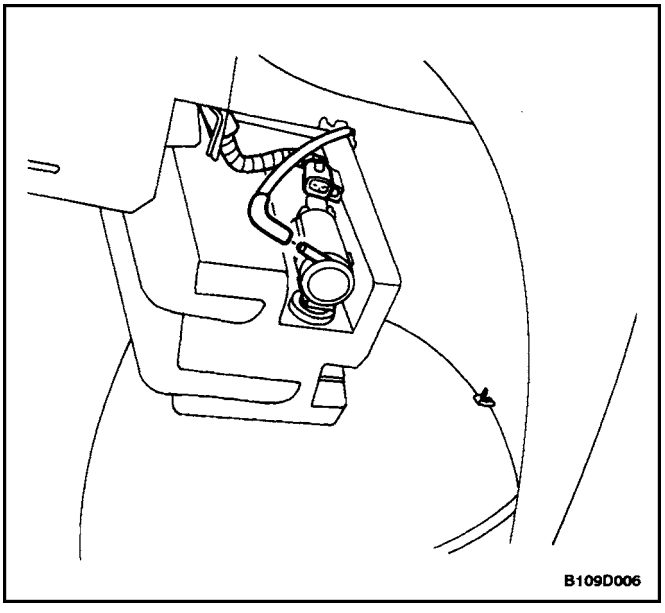

2. Connect the reservoir pump electrical connector.
3. Connect the washer hose to the washer pump.

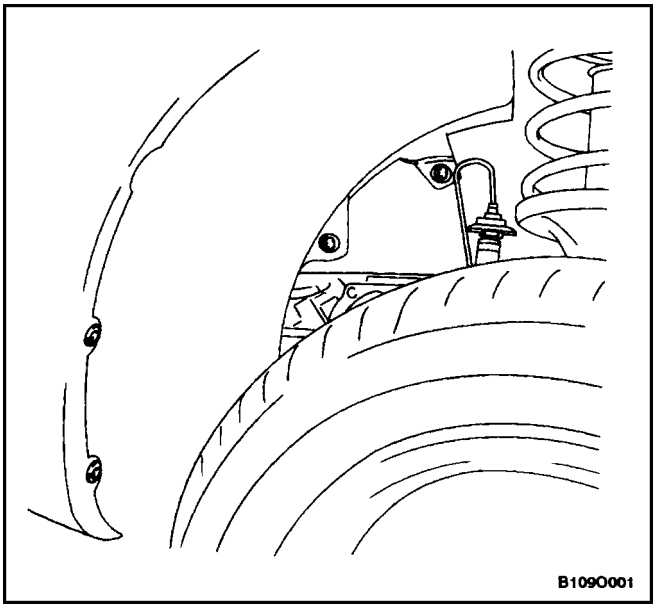

4. Install the front wheel well splash shield with the bolts and the screws.

   Tighten

   Tighten the front wheel well splash shield bolts to 1.5 N•m (13 lb–in).
5. Install the front left wheel. Refer to *Section 2E, Tires and Wheels.*
6. Connect the negative battery cable.

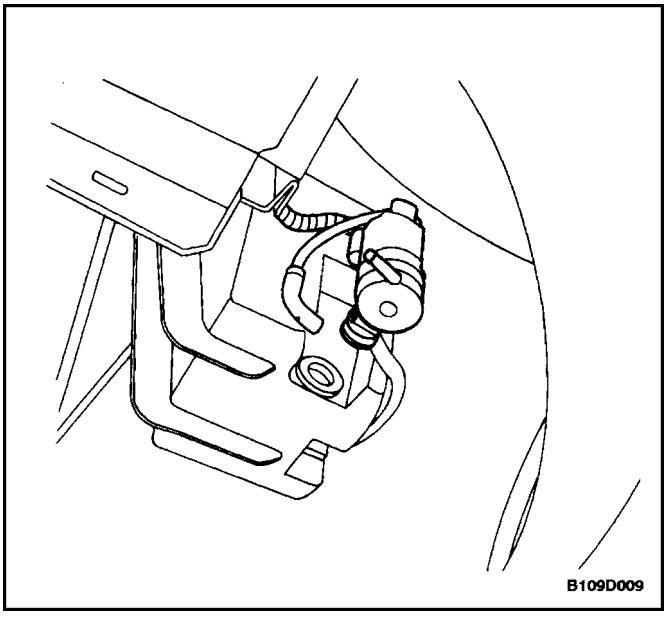

WINDSHIELD WASHER PUMP(S)

(Typical)

Removal Procedure

1. Disconnect the negative battery cable.
2. Remove the front left wheel. Refer to *Section 2E, Tires and Wheels.*
3. Remove the bolts and the screws and the front wheel well splash shield.
4. Disconnect the electrical connector.
5. Disconnect the washer hose from the washer pump.
6. Remove the washer pump.

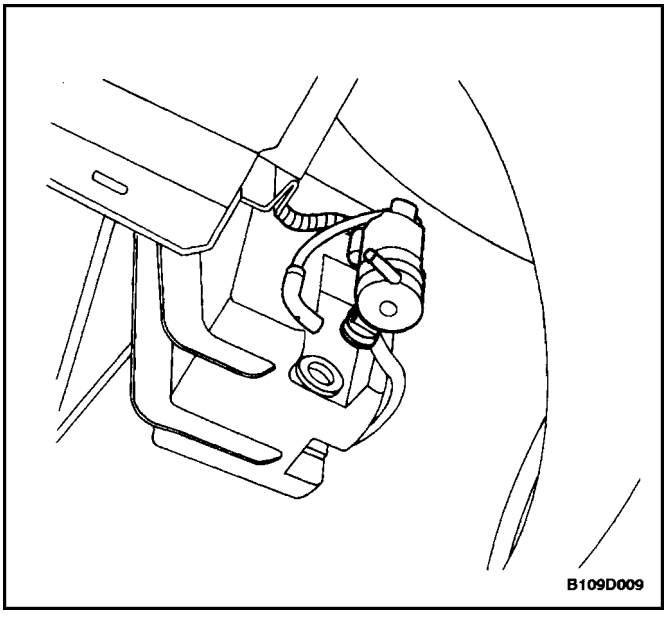

Installation Procedure

1. Install the washer pump.
2. Connect the washer hose to the washer pump.
3. Connect the electrical connector.

Notice : Dissimilar metals in direct contact with each other may corrode rapidly. Make sure to use the correct fasteners to prevent premature corrosion.

4. Install the front wheel well splash shield with the bolts and the screws.

   Tighten

   Tighten the front wheel well splash shield bolts to 1.5 N•m (13 lb–in).
5. Install the front left wheel. Refer to *Section 2E, Tires and Wheels.*
6. Connect the negative battery cable.

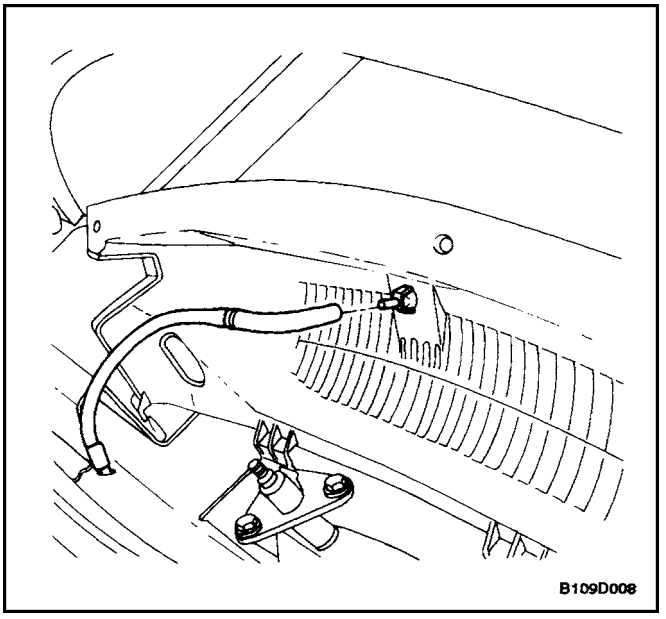

WINDSHIELD WASHER NOZZLES

Removal Procedure

1. Remove the cowl vent grille. Refer to *Section 9R, Body Front End.*
2. Disconnect the washer hose from the nozzle.
3. Remove the nozzle from the cowl vent grille.

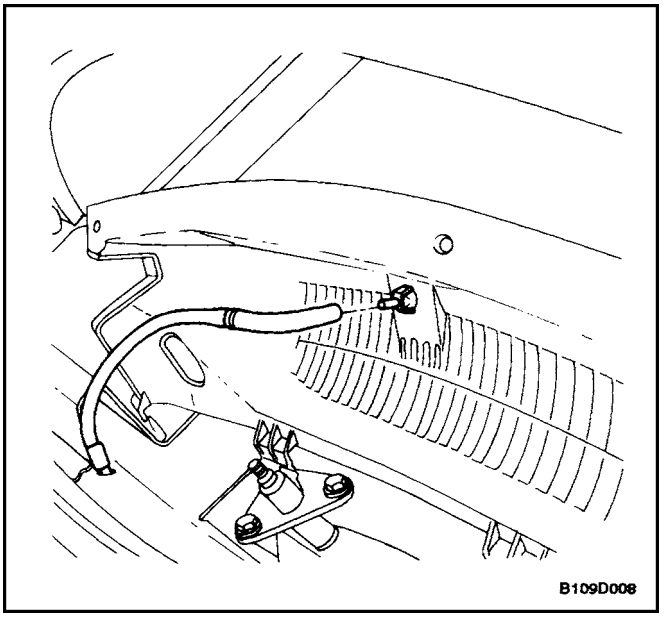

Installation Procedure

1. Install the nozzle onto the cowl vent grille.
2. Connect the washer hose to the nozzle.
3. Install the cowl vent grille. Refer to *Section 9R, Body Front End.*

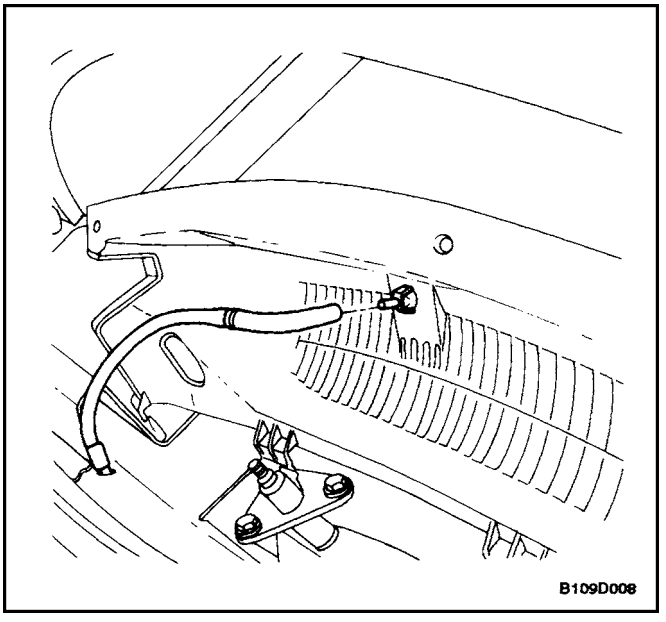

WINDSHIELD WASHER HOSES

(Typical)

Removal Procedure

1. Remove the cowl vent grille. Refer to *Section 9R, Body Front End.*
2. Disconnect the windshield washer hose from the washer nozzles.

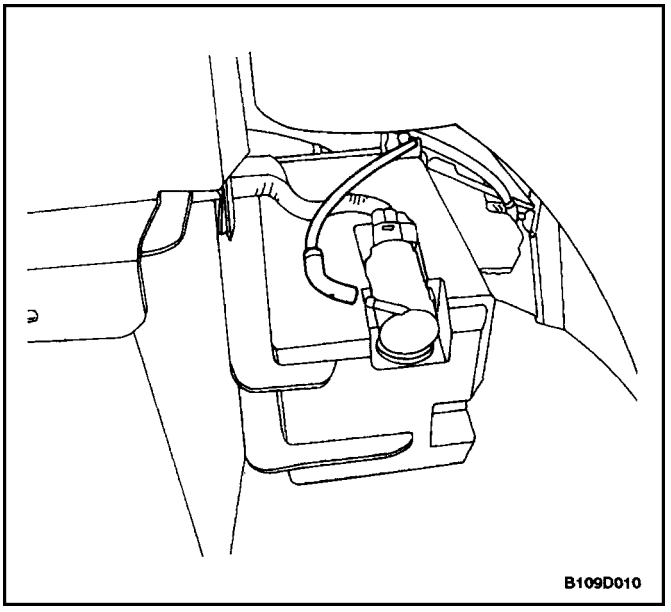

3. Remove the front left wheel. Refer to *Section 2E, Tires and Wheels.*
4. Remove the bolts and the screws and the front wheel well splash shield.
5. Disconnect the washer hose from the washer reservoir.
6. Remove the washer hose.

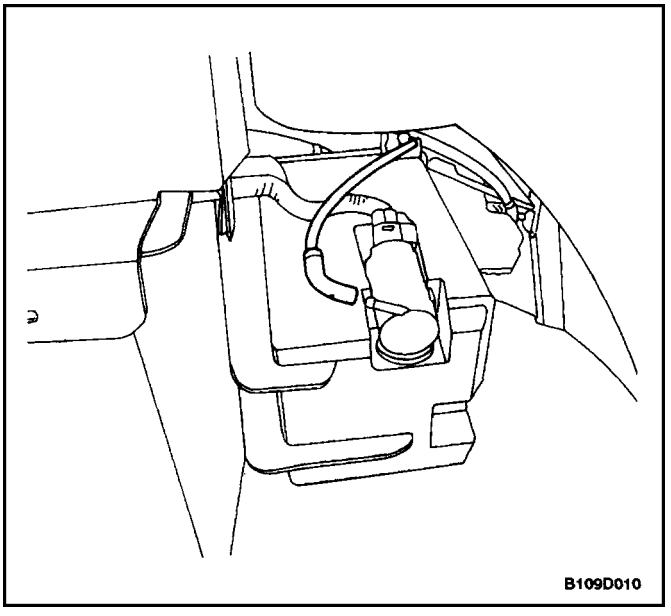

Installation Procedure

1. Install the washer hose.
2. Connect the washer hose to the washer pump.

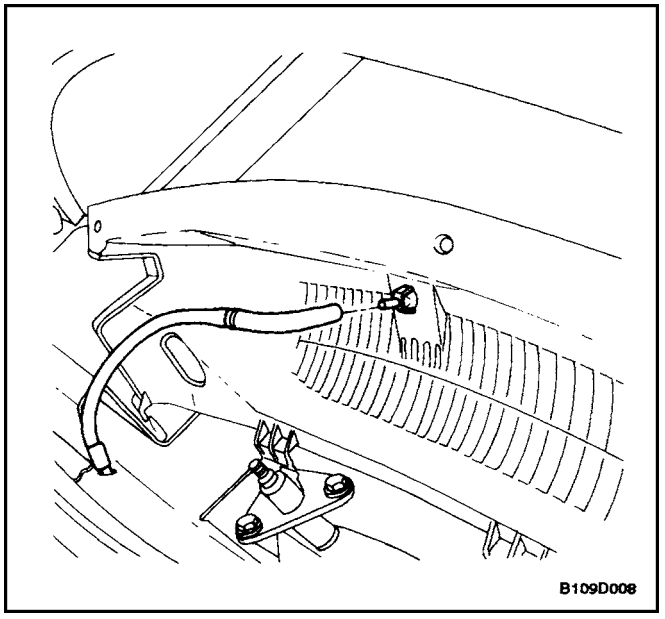

Notice : Dissimilar metals in direct contact with each other may corrode rapidly. Make sure to use the correct fasteners to prevent premature corrosion.

3. Install the front wheel well splash shield with the bolts and the screws.

   Tighten

   Tighten the front wheel well splash shield bolts to 1.5 N•m (13 lb–in).
4. Remove the front left wheel. Refer to *Section 2E, Tires and Wheels.*
5. Connect the windshield washer hose to the washer nozzles.
6. Install the cowl vent grille. Refer to *Section 9R, Body Front End.*

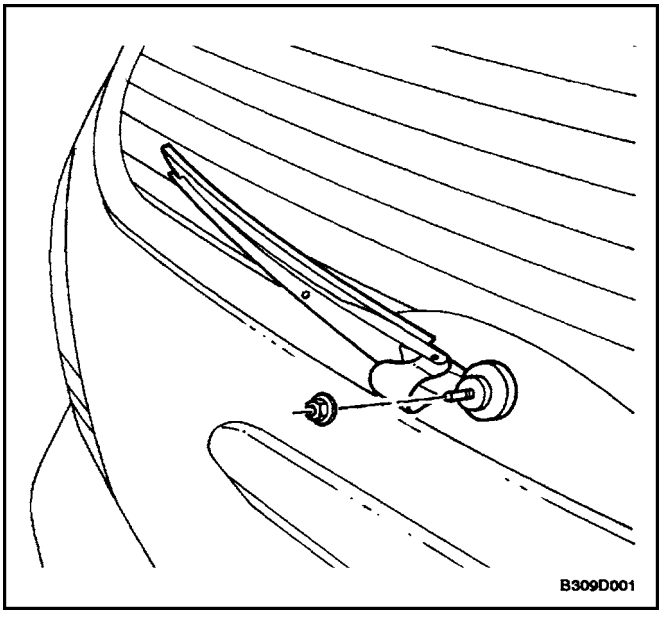

REAR WINDOW WIPER ARM

(Wagon Shown, Hatchback Similar)

Removal Procedure

1. Open the wiper arm access cap.
2. Remove the nut and the rear wiper arm.

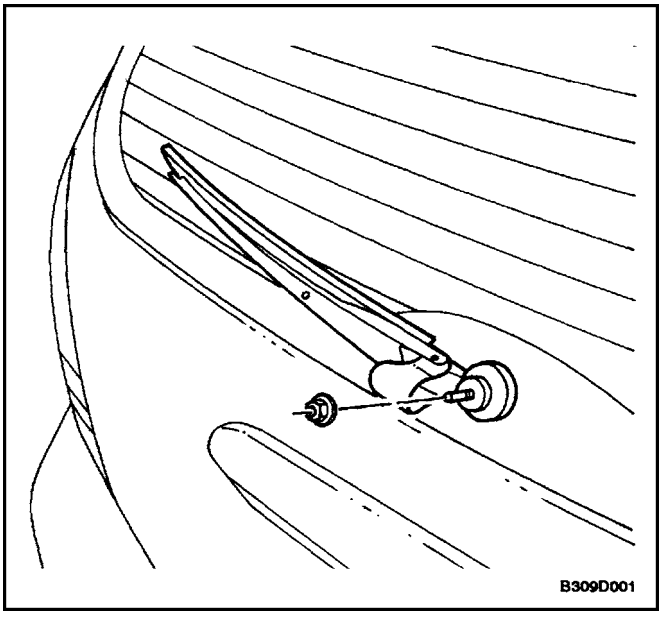

Installation Procedure

Notice : Dissimilar metals in direct contact with each other may corrode rapidly. Make sure to use the correct fasteners to prevent premature corrosion.

1. Install the rear wiper arm with the nut.

   Tighten

   Tighten the wiper arm nut to 11 N•m (97 lb–in).
2. Close the wiper arm access cap.

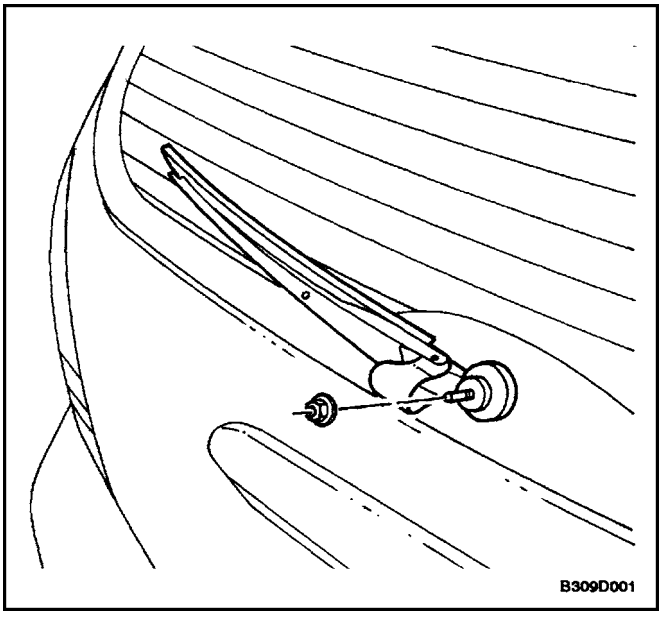

REAR WINDOW WIPER MOTOR (HATCHBACK)

Removal Procedure

1. Disconnect the negative battery cable.
2. Remove the rear window wiper arm. Refer to ”Rear Window Wiper Arm” in this section.
3. Remove the hatchback door lower garnish molding. Refer to *Section 9G, Interior Trim.*
4. Remove the bolts and the rear wiper motor.
5. Disconnect the electrical connector.

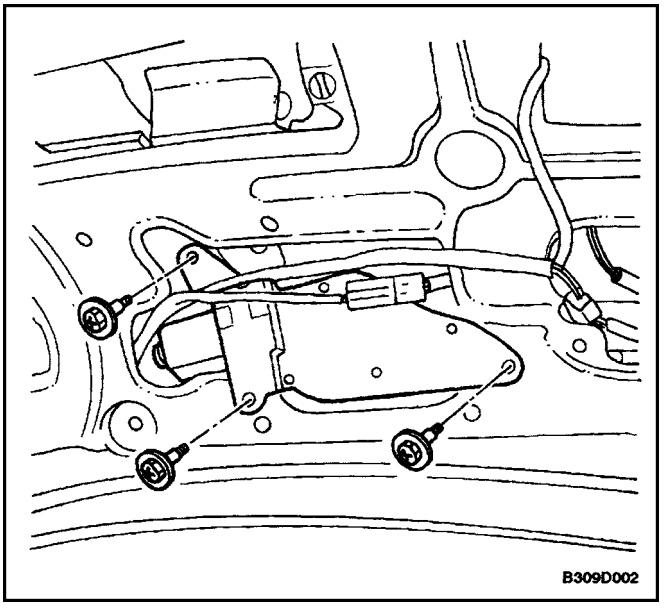

Installation Procedure

1. Connect the electrical connector.

Notice : Dissimilar metals in direct contact with each other may corrode rapidly. Make sure to use the correct fasteners to prevent premature corrosion.

2. Install the rear wiper motor with the bolts.

   Tighten

   Tighten the wiper motor bolts to 8 N•m (71 lb–in).
3. Install the hatchback door lower garnish molding. Refer to*Section 9G, Interior Trim.*
4. Install the rear window wiper arm. Refer to ”Rear Window Wiper Arm” in this section.
5. Close the wiper arm access cap.

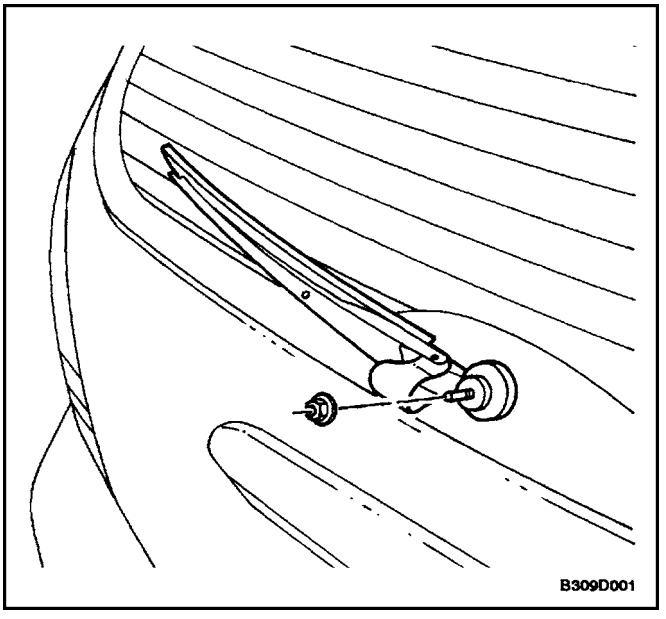

REAR WINDOW WIPER MOTOR (WAGON)

Removal Procedure

1. Disconnect the negative battery cable.
2. Remove the rear window wiper arm. Refer to ”Rear Window Wiper Arm” in this section.
3. Remove the wiper motor exterior retaining clip and nut from the tailgate.

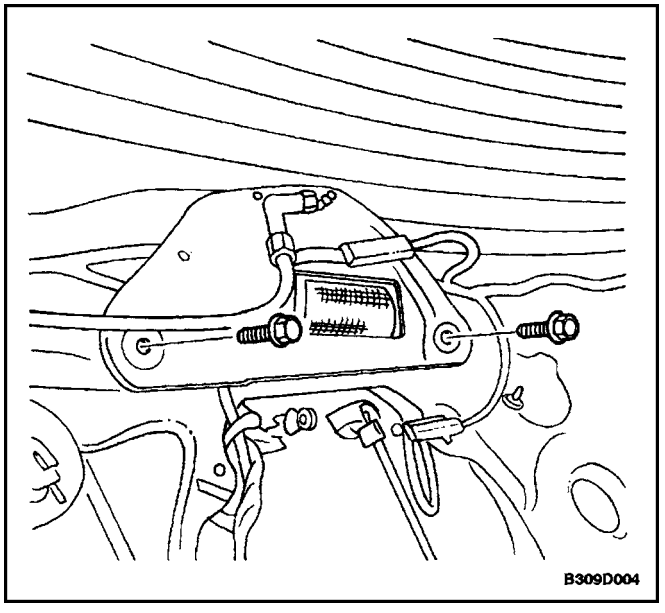

4. Remove the tailgate lower garnish molding.
5. Disconnect the electrical connector and the washer hose.
6. Remove the bolts and the rear wiper motor.

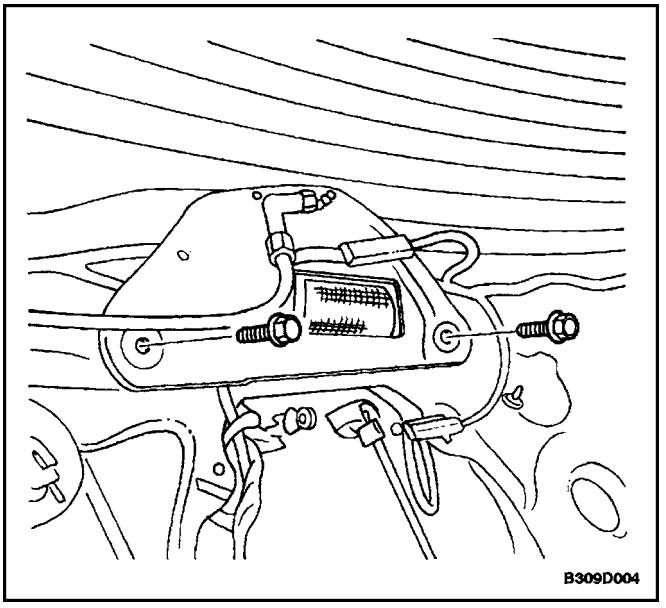

Installation Procedure

Notice : Dissimilar metals in direct contact with each other may corrode rapidly. Make sure to use the correct fasteners to prevent premature corrosion.

1. Install the rear wiper motor with the bolts.

   Tighten

   Tighten the wiper motor bolts to 8 N•m (71 lb–in).
2. Connect the electrical connector and the washer hose.

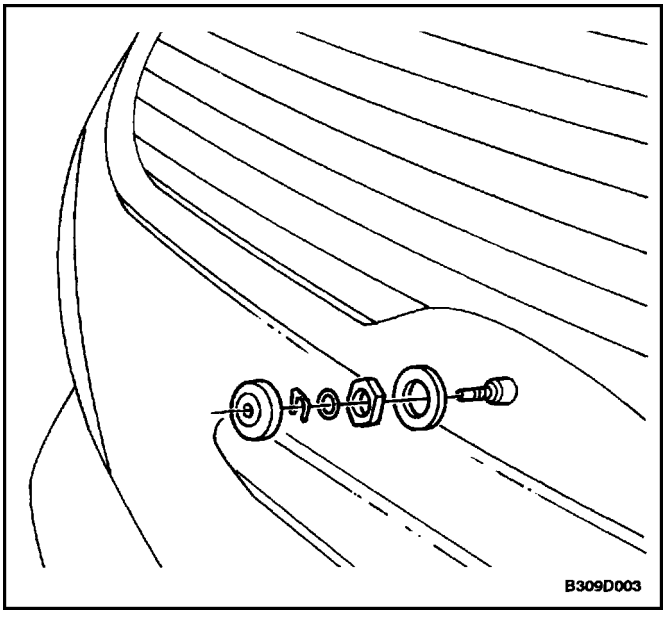

3. Install the tailgate lower garnish molding.
4. Install the wiper motor nut and exterior retaining clip to the tailgate.
5. Install the rear window wiper arm. Refer to ”Rear Window Wiper Arm” in this section.
6. Connect the negative battery cable.

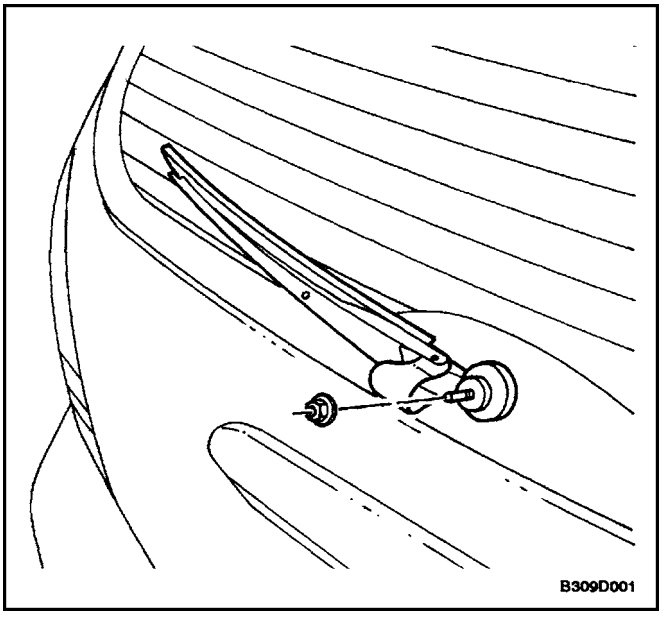

REAR WINDOW WASHER NOZZLE (HATCHBACK)

Removal Procedure

1. Remove the hatchback door upper garnish molding. Refer to *Section 9G, Interior Trim.*
2. Remove the washer hose from the nozzle.
3. Remove the nut and the washer nozzle.

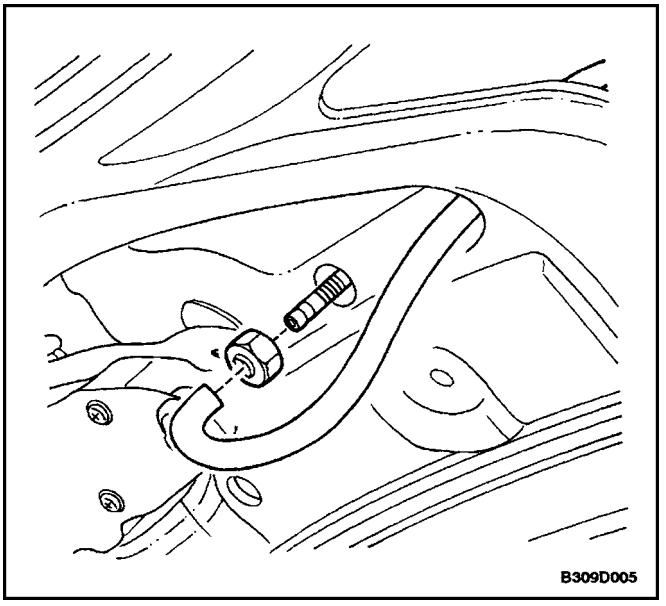

Installation Procedure

1. Install the washer nozzle with the nut.
2. Install the washer hose to the nozzle.
3. Install the hatchback door upper garnish molding. Refer to*Section 9G, Interior Trim.*

GENERAL DESCRIPTION AND SYSTEM OPERATION

WINDSHIELD WIPER SYSTEM

The windshield wiper system consists of a wiper motor, a linkage, a wiper arm and a blade, and a wiper/washer switch. The windshield wiper circuit incorporates a self-parking device which consists of a worm gear and a cam plate in order to keep the circuit engaged temporarily when the switch is turned off. The wiper system is driven by a permanent magnet–type motor. The windshield wiper motor is mounted on the bulkhead and is directly connected to the windshield wiper linkage.

The windshield wiper motor has two speeds, LO and HI, and also has intermittent wiper capability. The wiper switch is an integral part of the wiper/washer switch. Windshield wiper operation is actuated through the lever on the right side of the steering column.

WINDSHIELD WASHER SYSTEM

The windshield washer system is equipped with a washer fluid reservoir, a washer fluid pump, hoses, nozzles, and a wiper/washer switch. The windshield washer reservoir is mounted behind the front left wheel well splash shield. Attached to the reservoir is a washer pump, which pumps fluid through the hoses to the two nozzles mounted on the hood. The washer switch is an integral part of the wiper/washer switch. Windshield washer operation is actuated through the lever on the right side of the steering column.

REAR WINDOW WIPER/WASHER SYSTEM

The rear window wiper system consists of a wiper motor, a wiper arm, and a blade. The rear window wiper motor is located inside the hatchback/tailgate door and is directly connected to the rear window wiper. The rear window washer system is equipped with a separate washer fluid pump and hose. The hatchback has a hatch–mounted rear window washer nozzle and on the wagon, the washer nozzle is incorporated into the rear wiper motor. The rear window washer reservoir is mounted behind the front left wheel well splash shield. Attached to the reservoir is a washer pump, which pumps fluid through a hose to the rear washer nozzle.

SECTION : 4F

ANTILOCK BRAKE SYSTEM

CAUTION : Disconnect the negative battery cable before removing or installing any electrical unit or when a tool or equipment could easily come in contact with exposed electrical terminals. Disconnecting this cable will help prevent personal injury and damage to the vehicle. The ignition must also be in LOCK unless otherwise noted.

TABLE OF CONTENTS

SPECIFICATIONS 4F–3
FASTENER TIGHTENING SPECIFICATIONS 4F–3
SPECIAL TOOLS 4F–3
SPECIAL TOOLS TABLE 4F–3
COMPONENT LOCATOR 4F–4
ABS COMPONENT LOCATOR 4F–4
SCHEMATIC AND ROUTING DIAGRAMS 4F–5
ABS CIRCUIT (1 OF 4) 4F–5
ABS CIRCUIT (2 OF 4) 4F–6
ABS CIRCUIT (3 OF 4) 4F–7
ABS CIRCUIT (4 OF 4) 4F–8
VISUAL IDENTIFICATION 4F–9
EBCM CONNECTOR FACE VIEW (1 OF 2) ... 4F–9
EBCM CONNECTOR FACE VIEW (2 OF 2) ... 4F–11
DIAGNOSIS 4F–12
ABS (AMBER) INDICATOR ON CONSTANTLY, NO DTCS STORED 4F–12
ABS (AMBER) INDICATOR ON INTERMITTENTLY, NO DTCS STORED 4F–14
ABS (AMBER) INDICATOR OFF CONSTANTLY, NO DTCS STORED 4F–16
SELF–DIAGNOSTICS 4F–18
DISPLAYING DTCS 4F–18
CLEARING DTCS 4F–18
INTERMITTENTS AND POOR CONNECTIONS 4F–18
SCAN TOOL DIAGNOSTICS 4F–18
DIAGNOSTIC CIRCUIT CHECK 4F–20
DTC A014 ABS ENABLE RELAY CONTACT CIRCUIT OPEN 4F–23
DTC A015 ABS ENABLE RELAY CIRCUIT SHORTED TO BATTERY OR ALWAYS CLOSED 4F–29
DTC A016 ABS ENABLE RELAY COIL CIRCUIT OPEN 4F–31
DTC A017 ABS ENABLE RELAY COIL CIRCUIT SHORTED TO GROUND 4F–34
DTC A018 ABS RELAY COIL CIRCUIT SHORTED TO BATTERY 4F–36
DTC A021 LEFT FRONT WHEEL SPEED = 0 ..... 4F–38
DTC A022 RIGHT FRONT WHEEL SPEED = 0 ..... 4F–42
DTC A023 LEFT REAR WHEEL SPEED = 0 ..... 4F–46
DTC A024 RIGHT REAR WHEEL SPEED = 0 ..... 4F–51
DTC A025 LEFT FRONT EXCESSIVE WHEEL SPEED VARIATION 4F–56
DTC A026 RIGHT FRONT EXCESSIVE WHEEL SPEED VARIATION 4F–60
DTC A027 LEFT REAR EXCESSIVE WHEEL SPEED VARIATION 4F–64
DTC A028 RIGHT REAR EXCESSIVE WHEEL SPEED VARIATION 4F–69
DTC A032 LEFT FRONT SPEED SENSOR CIRCUIT OPEN OR SHORTED TO GROUND OR BATTERY 4F–75
DTC A033 RIGHT FRONT SPEED SENSOR CIRCUIT OPEN OR SHORTED TO GROUND OR BATTERY 4F–79
DTC A034 LEFT REAR SPEED SENSOR CIRCUIT OPEN OR SHORTED TO GROUND OR BATTERY 4F–83
DTC A035 RIGHT REAR SPEED SENSOR CIRCUIT OPEN OR SHORTED TO GROUND OR BATTERY 4F–87
DTC A036 LOW SYSTEM VOLTAGE 4F–91
DTC A037 HIGH SYSTEM VOLTAGE 4F–94
DTC A038 LEFT FRONT ESB WILL NOT HOLD MOTOR 4F–96
DTC A041 RIGHT FRONT ESB WILL NOT HOLD MOTOR 4F–98
DTC A042 REAR AXLE ESB WILL NOT HOLD MOTOR 4F–100
DTC A044 LEFT FRONT CHANNEL WILL NOT MOVE 4F–103

DTC A045 RIGHT FRONT CHANNEL WILL NOT MOVE 4F–106
DTC A046 REAR AXLE CHANNEL WILL NOT MOVE 4F–109
DTC A047 LEFT FRONT MOTOR FREE SPINS 4F–112
DTC A048 RIGHT FRONT MOTOR FREE SPINS 4F–116
DTC A051 REAR MOTOR FREE SPINS . . . 4F–120
DTC A052 LEFT FRONT CHANNEL IN RELEASE TOO LONG 4F–124
DTC A053 RIGHT FRONT CHANNEL IN RELEASE TOO LONG 4F–127
DTC A054 REAR CHANNEL IN RELEASE TOO LONG 4F–130
DTC A055 EBCM MALFUNCTION 4F–132
DTC A056 LEFT FRONT MOTOR CIRCUIT OPEN 4F–134
DTC A057 LEFT FRONT MOTOR CIRCUIT SHORTED TO GROUND 4F–136
DTC A058 LEFT FRONT MOTOR CIRCUIT SHORTED TO BATTERY OR MOTOR SHORTED 4F–138
DTC A061 RIGHT FRONT MOTOR CIRCUIT OPEN 4F–140
DTC A062 RIGHT FRONT MOTOR CIRCUIT SHORTED TO GROUND 4F–142
DTC A063 RIGHT FRONT MOTOR CIRCUIT SHORTED TO BATTERY OR MOTOR SHORTED 4F–144
DTC A064 REAR AXLE MOTOR CIRCUIT OPEN 4F–146
DTC A065 REAR AXLE MOTOR CIRCUIT SHORTED TO GROUND 4F–148
DTC A066 REAR AXLE MOTOR CIRCUIT SHORTED TO BATTERY OR MOTOR SHORTED 4F–150
DTC A076 LEFT FRONT SOLENOID CIRCUIT OPEN OR SHORTED TO GROUND 4F–152
DTC A077 LEFT FRONT SOLENOID CIRCUIT SHORTED TO BATTERY 4F–155
DTC A078 RIGHT FRONT SOLENOID CIRCUIT OPEN OR SHORTED TO GROUND 4F–157
DTC A081 RIGHT FRONT SOLENOID CIRCUIT SHORTED TO BATTERY 4F–160
DTC A082 CALIBRATION MALFUNCTION . 4F–162
DTC A086 EBCM TURNED ON THE RED BRAKE WARNING LAMP 4F–163
DTC A087 RED BRAKE WARNING LAMP CIRCUIT OPEN OR SHORT TO BATTERY 4F–164
DTC A091 OPEN STOPLAMP SWITCH DURING DECELERATION 4F–168
DTC A092 OPEN STOPLAMP SWITCH WHEN ABS WAS REQUIRED 4F–171
DTC A093 CODE A091 OR A092 SET IN CURRENT OR PREVIOUS IGNITION CYCLE 4F–174
DTC A094 STOPLAMP SWITCH CONTACTS ALWAYS CLOSED 4F–176
DTC A095 STOPLAMP SWITCH CIRCUIT OPEN 4F–178
AUTOMATED MODULATOR TEST 4F–180
AUTOMATED MOTOR PACK DIAGNOSIS TEST 4F–180
NO GEAR MOVEMENT 4F–180
HYDRAULIC FUNCTIONAL CONTROL 4F–180
MOTOR TESTING 4F–180
MOTOR PACK FUNCTIONAL TEST 4F–181
SOLENOID TEST 4F–181
ABS ENABLE RELAY TEST 4F–181
VOLTAGE LOAD TEST 4F–181
GEAR TENSION RELIEF SEQUENCE 4F–182
ABS AND BRAKE INDICATOR CONTROL . . 4F–182
MOTOR REHOME FUNCTION 4F–182
MAINTENANCE AND REPAIR 4F–183
ON–VEHICLE SERVICE 4F–183
SERVICE PRECAUTIONS 4F–183
BLEEDING SYSTEM 4F–183
HYDRAULIC MODULATOR BLEEDER VALVE 4F–186
ABS SOLENOID 4F–187
HYDRAULIC MODULATOR/MOTOR PACK ASSEMBLY 4F–188
ELECTRONIC BRAKE CONTROL MODULE (EBCM) 4F–190
FRONT WHEEL SPEED SENSOR 4F–192
FRONT WHEEL SPEED SENSOR JUMPER HARNESS 4F–193
REAR WHEEL SPEED SENSOR 4F–194
REAR WHEEL SPEED SENSOR JUMPER HARNESS 4F–196
SYSTEM FUSE 4F–198
ABS ENABLE RELAY 4F–199
ABS SOLENOID FUSE 4F–200
INDICATORS 4F–200
LAMP DRIVER MODULE 4F–200
UNIT REPAIR 4F–202
GEAR COVER 4F–202
MOTOR PACK 4F–203
GEAR REPLACEMENT 4F–204

HYDRAULIC MODULATOR 4F–205
GENERAL DESCRIPTION AND SYSTEM OPERATION 4F–206
BASE BRAKING MODE 4F–206
ANTILOCK BRAKING MODE 4F–207
TIRES AND ABS 4F–208
ABS SYSTEM COMPONENTS 4F–208
ELECTRONIC BRAKE CONTROL MODULE (EBCM) 4F–208
FRONT WHEEL SPEED SENSORS 4F–209
FRONT WHEEL SPEED SENSOR RINGS . . 4F–209
REAR WHEEL SPEED SENSORS AND RINGS 4F–209
ABS ENABLE RELAY 4F–209
BRAKE FLUID LEVEL SWITCH 4F–209
WIRING HARNESS 4F–209
INDICATORS 4F–209

SPECIFICATIONS

FASTENER TIGHTENING SPECIFICATIONS

Application	N•m	Lb–Ft	Lb–In
ABS Solenoid Torx® Head Bolts	4.5	–	40
Bleeder Valve	9	–	80
Brake Pipe Nuts	15	11	–
Front Wheel Speed Sensor Bolt	7.8	–	69
Gear Cover Torx® Head Screws	4	–	35
Gear Nuts	8.5	–	75
Hydraulic Modulator/Motor Pack Assembly Bolt	5.4	–	48
Motor Pack Torx® Head Screws	4.5	–	40
Rear Wheel Speed Sensor Bolt	7.8	–	69
Surge Tank Mounting Bolts	8	–	71

SPECIAL TOOLS

SPECIAL TOOLS TABLE

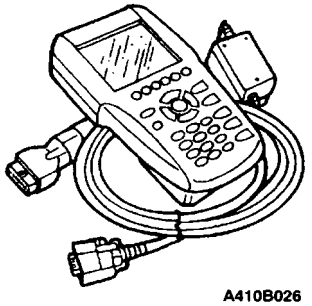 A410B026	Scan Tool

COMPONENT LOCATOR

ABS COMPONENT LOCATOR

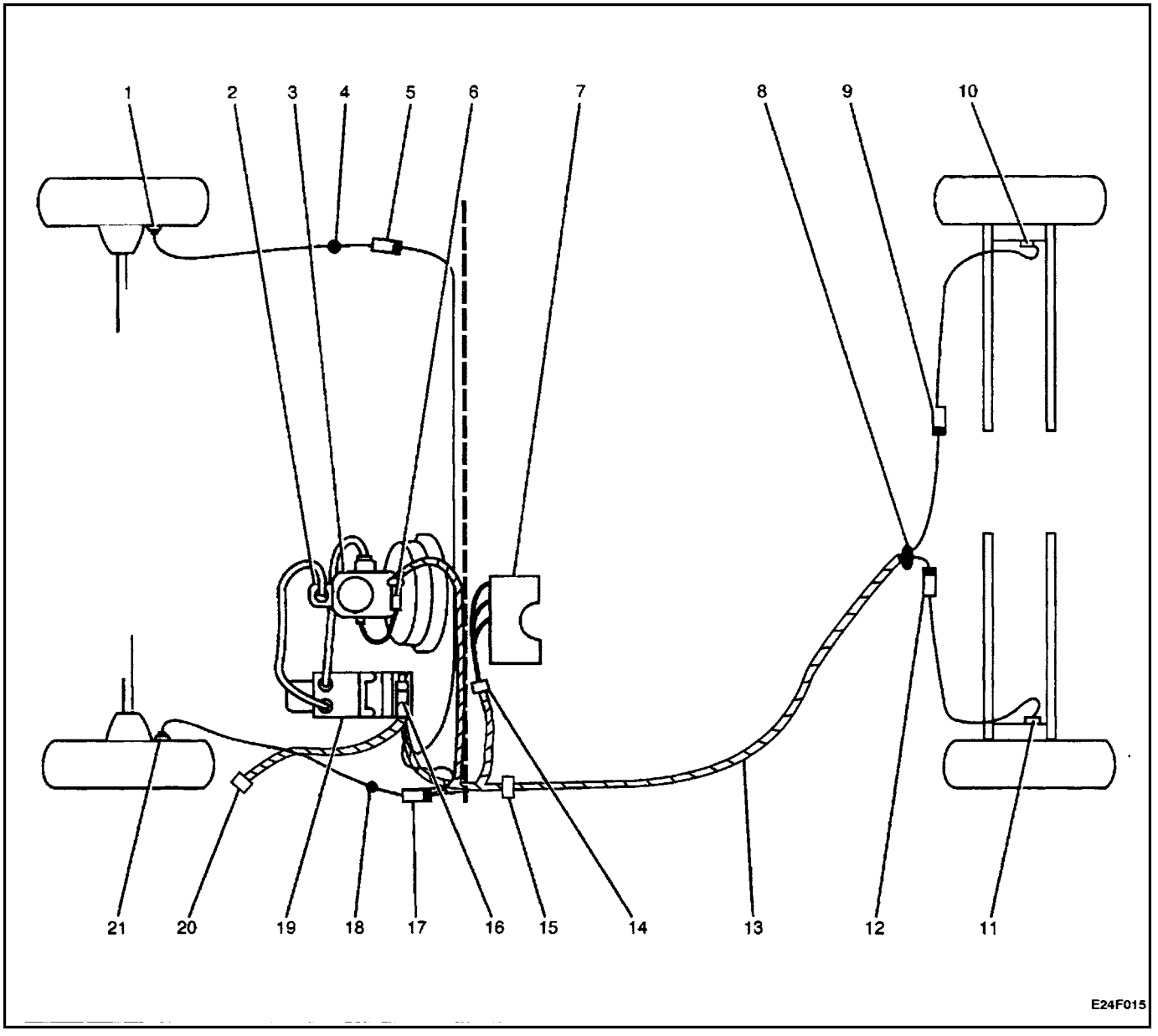

1. Right Front Wheel Speed Sensor
2. Right Front Wheel Speed Sensor Harness
3. Brake Master Cylinder
4. Brake Fluid Level Switch
5. Instrument Cluster
6. Rear Wheel Speed Sensor Harness
7. Right Rear Wheel Speed Sensor Connector
8. Right Rear Wheel Speed Sensor
9. Left Rear Wheel Speed Sensor
10. Connector C902
11. Body Wiring Harness
12. I/P Fuse Block
13. ABS Relay
14. EBCM
15. EBCM Connector J1
16. EBCM Connector J2
17. Connector C207
18. Lamp Driver Module
19. Connector C206
20. Right–Side Hydraulic Modulator Bleeder Valve
21. Right–Side Isolation Solenoid
22. Proportioning Valves
23. Hydraulic Modulator/Motor Pack Assembly
24. Motor Pack Electrical Connector
25. Left–Side Isolation Solenoid
26. Left–Side Hydraulic Modulator Bleeder Valve
27. Left Front Wheel Speed Sensor Harness
28. Left Front Wheel Speed Sensor

SCHEMATIC AND ROUTING DIAGRAMS

ABS CIRCUIT (1 OF 4)

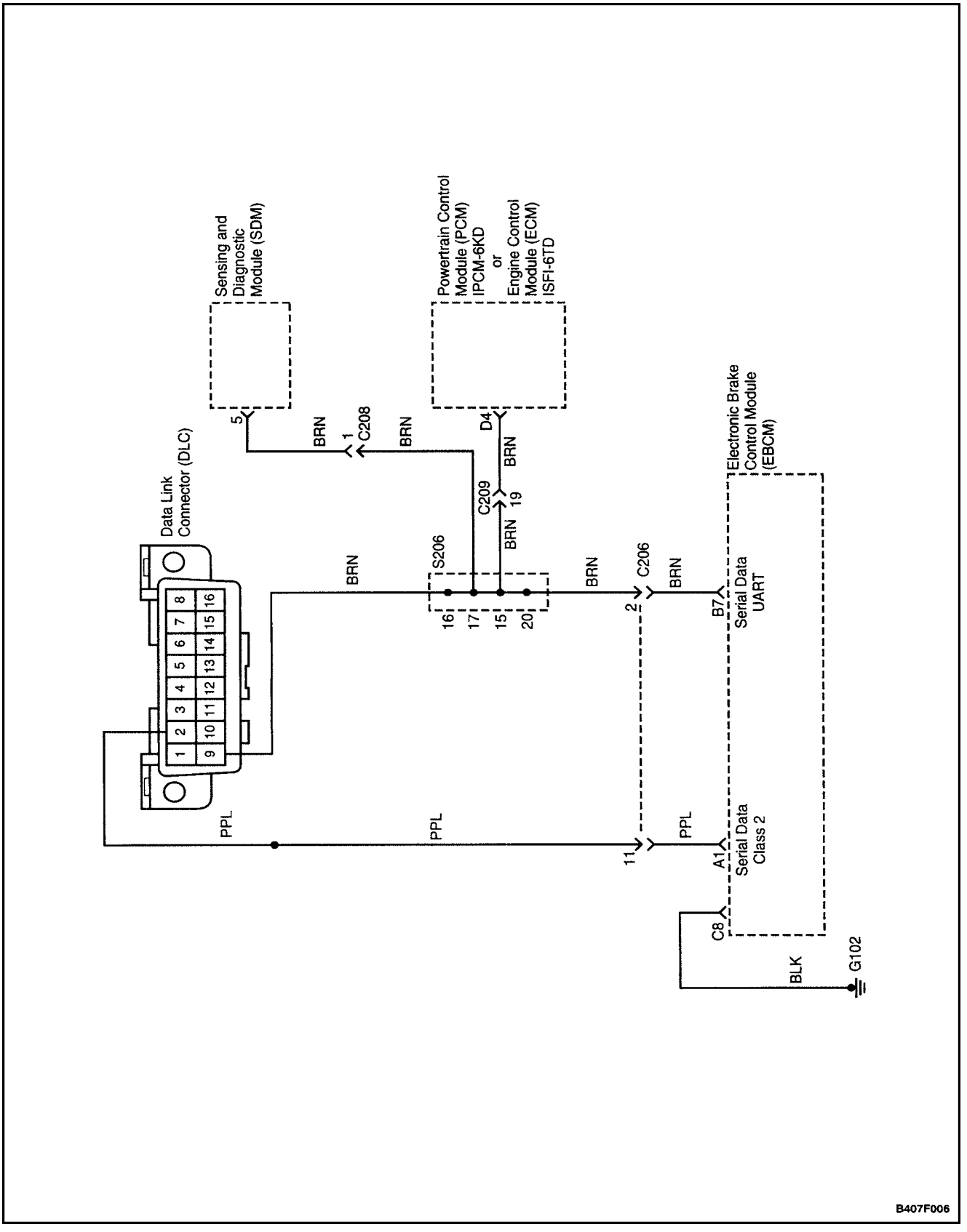

ABS CIRCUIT (2 OF 4)

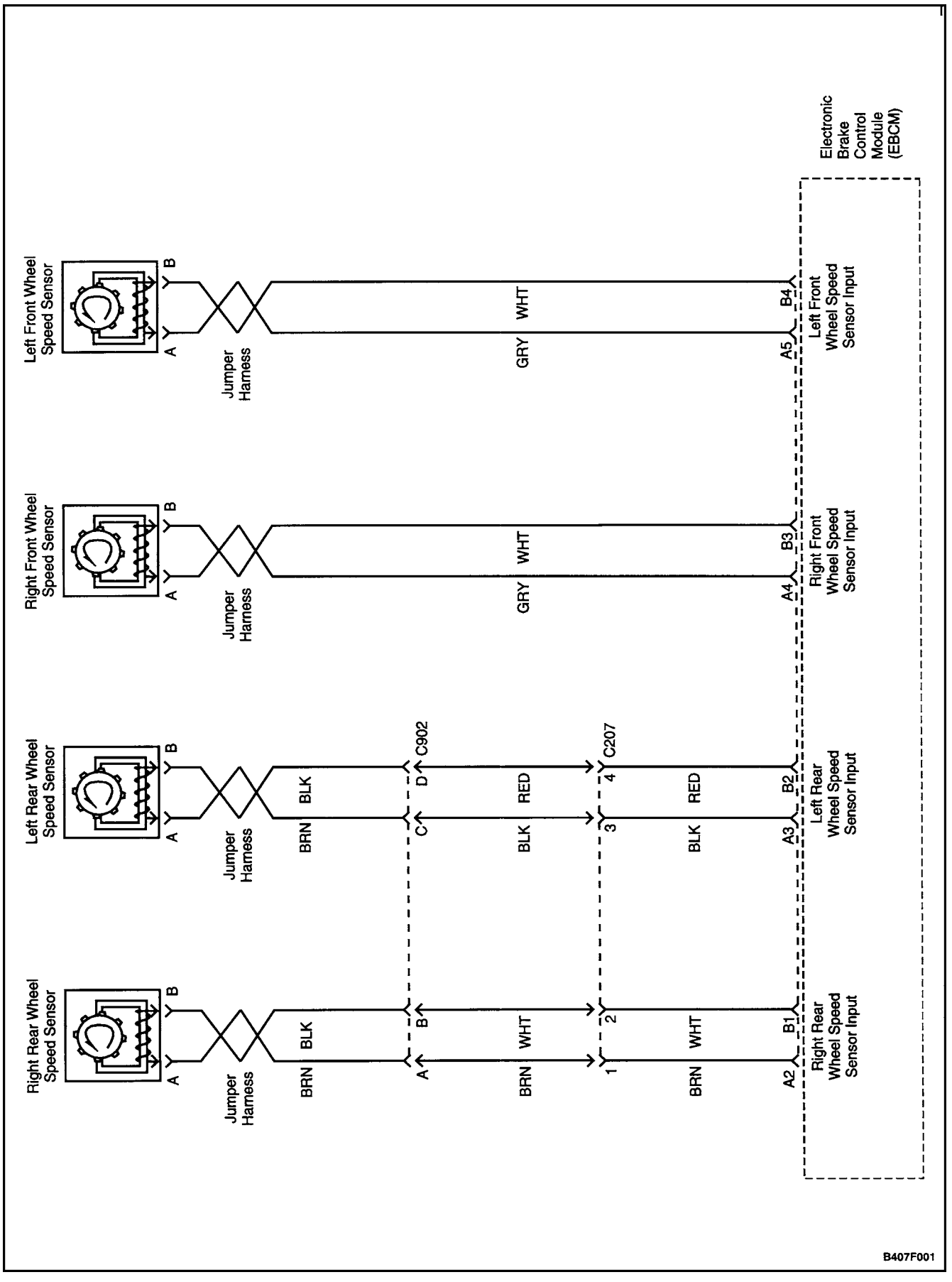

ABS CIRCUIT (3 OF 4)

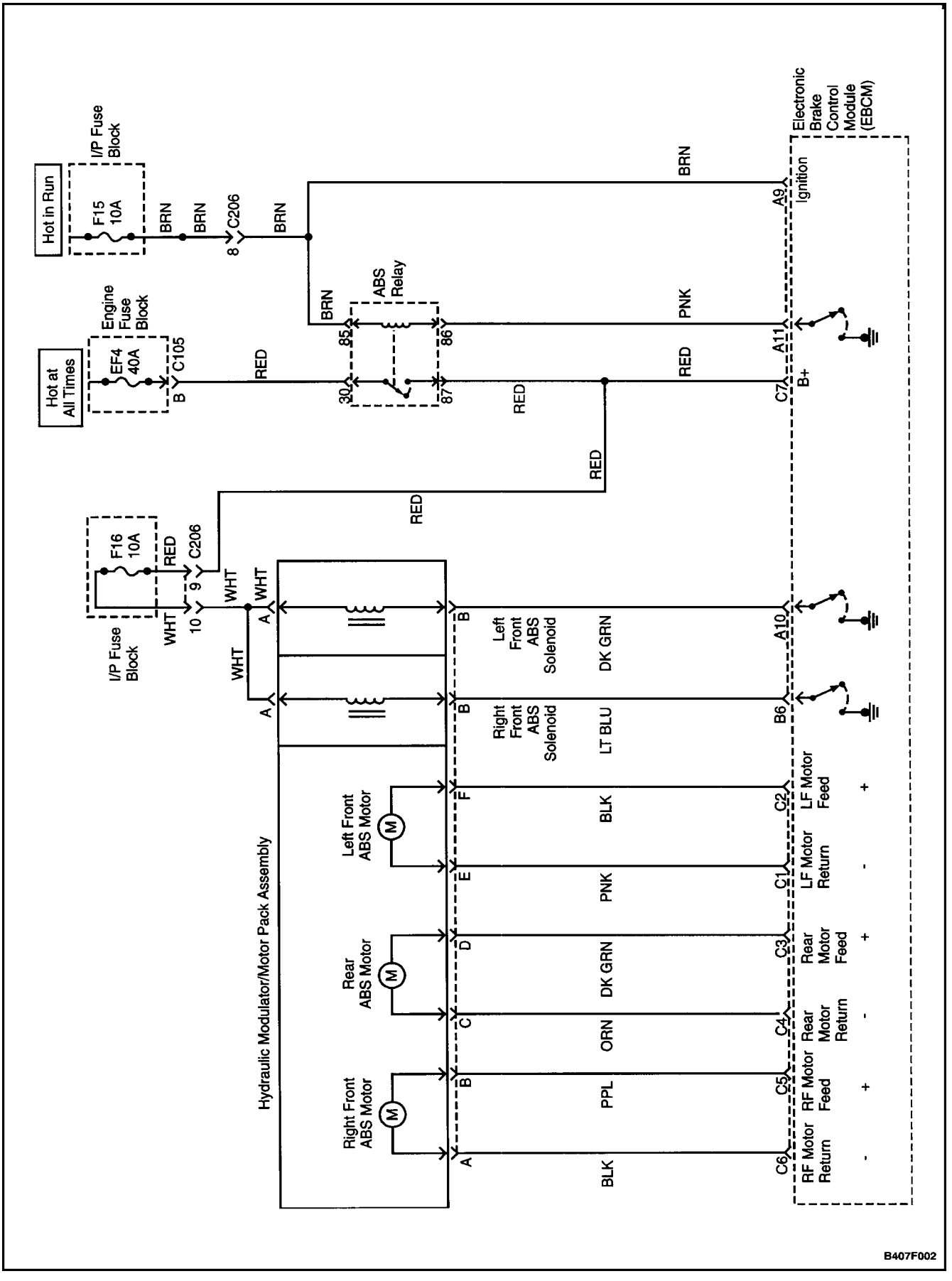

ABS CIRCUIT (4 OF 4)

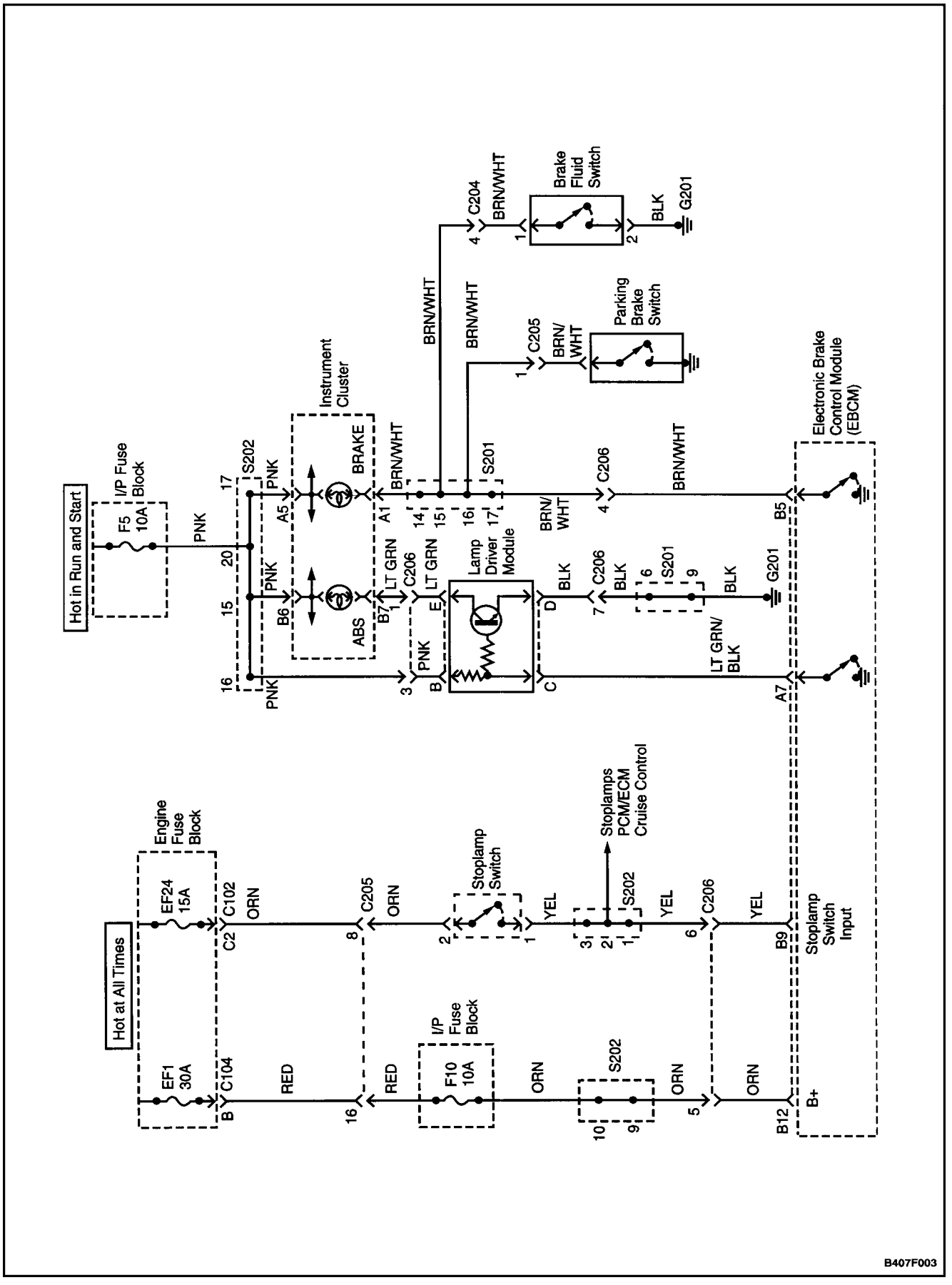

VISUAL IDENTIFICATION

EBCM CONNECTOR FACE VIEW (1 OF 2)

EBCM Connector J1

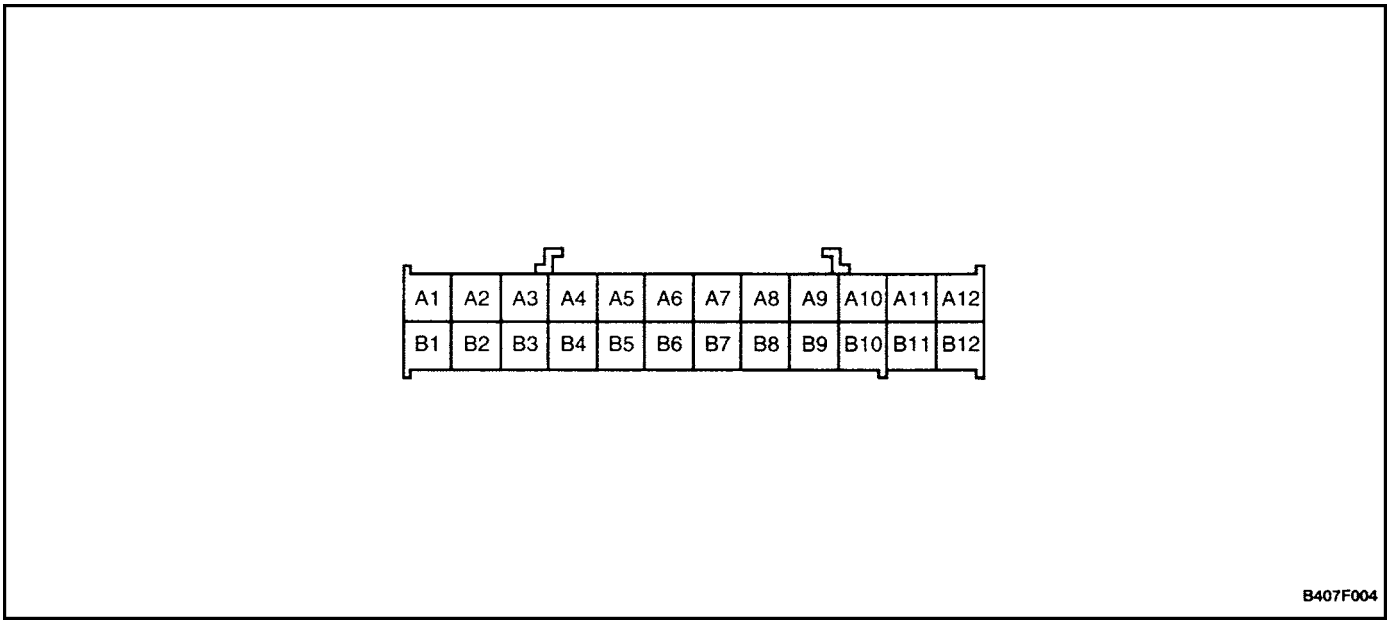

Pin	Signal Name	Color	Circuit
A1	SDLCLASS2	PPL	Serial Data Link, Class 2
A2	RRWSHI	BRN	Right Rear Wheel Speed High
A3	LRWSHI	BLK	Left Rear Wheel Speed High
A4	RFWSHI	GRY	Right Front Wheel Speed High
A5	LFWSHI	GRY	Left Front Wheel Speed High
A6	–	–	Not Used
A7	ABSWARN	LT GRN/BLK	ABS Warning Indicator
A8	–	–	Not Used
A9	IGN	BRN	Ignition
A10	LFABSOL	DK GRN	Left Front ABS Isolation Solenoid
A11	ENRELAY	PNK	ABS Enable Relay
A12	–	–	Not Used
B1	RRWSLO	WHT	Right Rear Wheel Speed Low
B2	LRWSLO	RED	Left Rear Wheel Speed Low
B3	RFWSLO	WHT	Right Front Wheel Speed Low
B4	LFWSLO	WHT	Left Front Wheel Speed Low
B5	BRAKETT	BRN/BLK	BRAKE Lamp
B6	REABSOL	LT BLU	Right Front ABS Isolation Solenoid
B7	SDLUART	BLK/WHT	Serial Data
B8	–	–	Not Used
B9	BRAKESW	BRN/BLK	Stoplamp Switch
B10	–	–	Not Used

Pin	Signal Name	Color	Circuit
B11	–	–	Not Used
B12	BATT	ORN	Battery (+)

EBCM CONNECTOR FACE VIEW (2 OF 2)

EBCM Connector J2

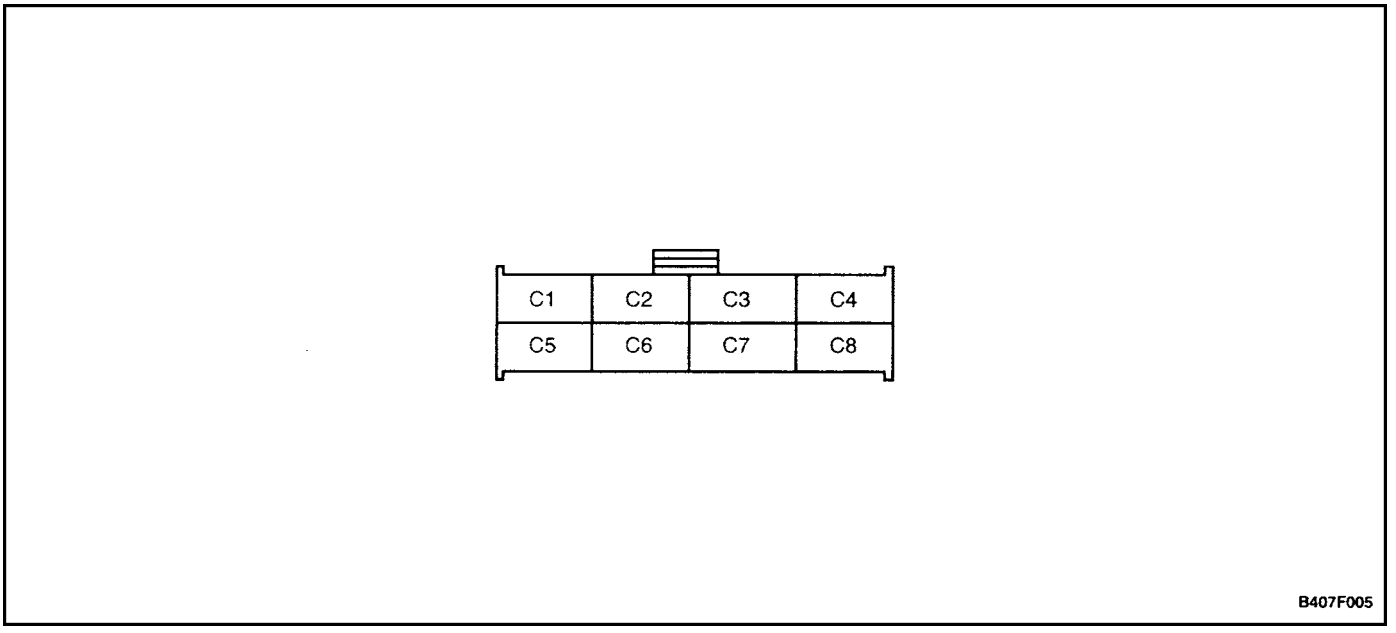

Pin	Signal Name	Color	Circuit
C1	LFMOTLO	PNK	Left Front Motor Low
C2	LFMOTHI	BLK	Left Front Motor HIgh
C3	RFMOTHI	DK GRN	Right Front Motor HIgh
C4	RFMOTLO	ORN	Right Front Motor Low
C5	RAMOTLO	BLK	Rear Axle Motor Low
C6	RAMOTHI	PPL	Rear Axle Motor HIgh
C7	SWBATT	RED	Battery (+) through ABS relay
C8	GND	BLK	Ground (–)

SECTION : 4D

FRONT DISC BRAKES

TABLE OF CONTENTS

SPECIFICATIONS 4D–1
FASTENER TIGHTENING SPECIFICATIONS . 4D–1
DIAGNOSIS 4D–1
LINING INSPECTION 4D–1
ROTOR INSPECTION 4D–1
MAINTENANCE AND REPAIR 4D–3
ON–VEHICLE SERVICE 4D–3
SHOE AND LINING 4D–3
CALIPER 4D–4
ROTOR 4D–6
SPLASH SHIELD 4D–7
UNIT REPAIR 4D–9
CALIPER OVERHAUL 4D–9
GENERAL DESCRIPTION AND SYSTEM OPERATION 4D–11
DISC BRAKE CALIPER ASSEMBLY 4D–11

SPECIFICATIONS

FASTENER TIGHTENING SPECIFICATIONS

Application	N•m	Lb–Ft	Lb–In
Brake Hose Inlet Fitting–to–Caliper Bolt	40	30	–
Caliper–to–Steering Knuckle Mounting Bolts	95	70	–
Retaining Frame–to–Caliper Housing Bolts	22–32	16–24	–
Rotor–to–Front Wheel Hub Detent Screw	4	–	35
Splash Shield–to–Steering Knuckle Screws	5	–	44

DIAGNOSIS

LINING INSPECTION

1. Raise and suitably support the vehicle.
2. Remove the front wheels. Refer to*Section 2E, Tires and Wheels.*
3. Visually check the linings for minimum thickness and wear.
4. Measure the thickness.

Important : The minimum thickness of the inner or outer pad is 9 mm(0.35 inch).

1. Install the brake pads in axle sets only.
2. Install the front wheels. Refer to*Section 2E, Tires and Wheels.*
3. Lower the vehicle.

ROTOR INSPECTION

Thickness variation can be checked by measuring the thickness of the rotor at four or more points around the circumference of the rotor. All measurements must be made at the same distance in from the edge of the rotor.

A rotor that varies by more than 0.005 mm (0.0005 inch) can cause pedal pulsations and/or front end vibration during brake applications. A rotor that does not meet these specifications should be refinished to specifications or replaced.

During manufacturing, the brake rotor and the tolerances of the braking surface regarding flatness, thickness variation, and lateral runout are held very close. The maintenance of close tolerances on the shape of the braking surfaces is necessary to prevent brake roughness.

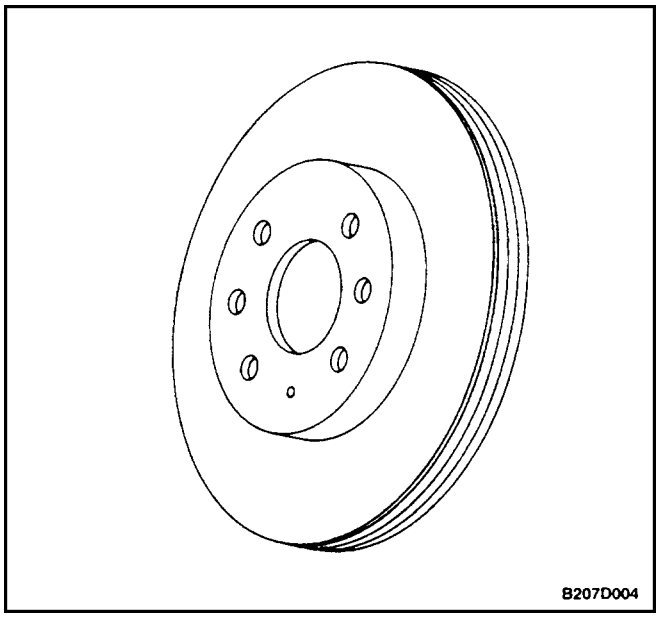

In addition to these tolerances, the surface finish must be held to a specified range. The control of the braking surface finish is necessary to avoid pulls and erratic performance and to extend lining life.

Using a commercially available dial indicator, check lateral runout as follows:

Notice : Permissible lateral runout is a maximum 0.03 mm (0.0012 inch). If lateral runout exceeds the specification, ensure that there is no dirt between the rotor and the hub and that contact surfaces are smooth and free from burrs.

1. Position the transaxle in NEUTRAL.
2. Remove the rotor. Refer to ”Rotor” in this section.
3. Fasten the brake rotor to the wheel hub with two wheel bolts.
4. Fasten a dial indicator to the brake caliper.
5. Set the gauge probe tip to approximately 10 mm (0.39 inch) from the outer edge of the brake rotor, perpendicular to the disc and under slight preload.
6. Remove the dial indicator and the wheel bolts connecting the rotor to the hub.

Important : Since accurate control of the rotor tolerances is necessary for proper performance of the disc brakes, refinishing of the rotor should be done only with precision equipment.

7. If required, refinish the rotor with precision equipment. Discard the rotor if it fails to meet the above specifications after refinishing. Install the rotor. Refer to ¡°Rotor¡±in this section.

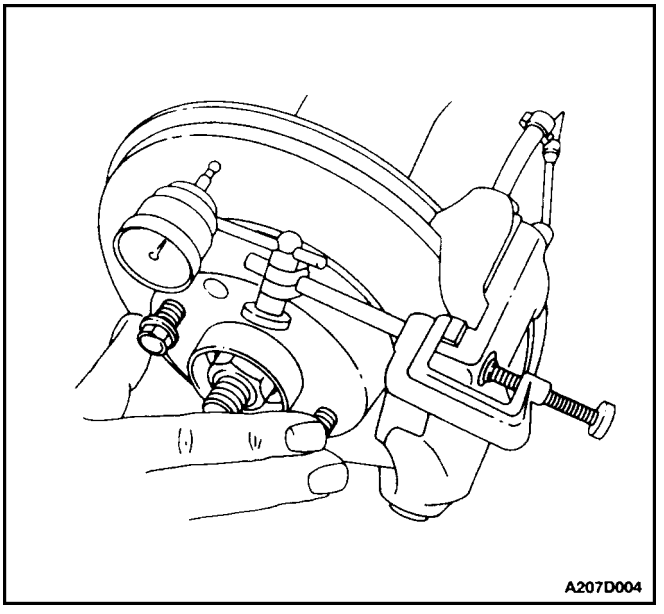

8. Install the rotor. Refer to ”Rotor” in this section.

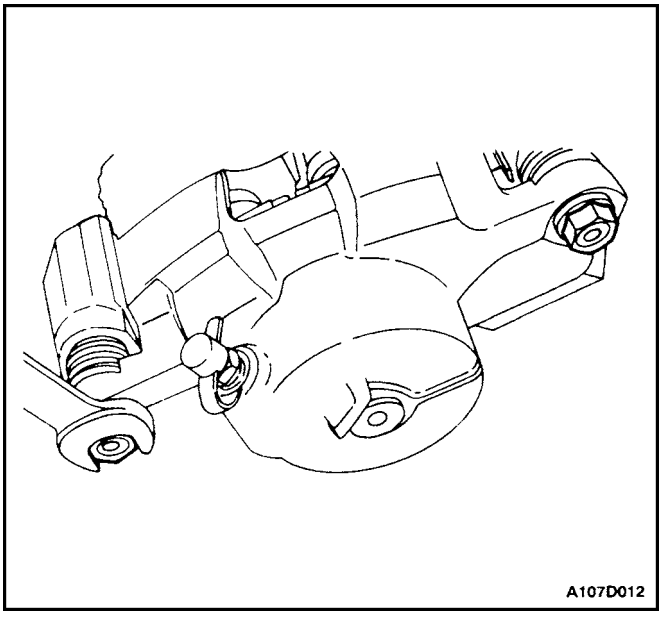

MAINTENANCE AND REPAIR

ON–VEHICLE SERVICE

SHOE AND LINING

Removal Procedure

1. Raise and suitably support the vehicle.
2. To preserve wheel balance, mark the position of the front wheel relative to the wheel hub. Remove the front wheel. Refer to *Section 2E, Tires and Wheels.*
3. Remove the lower caliper mounting bolt.

Important : Caliper removal is not necessary to service the brake shoes.

4. Pivot the caliper upward.

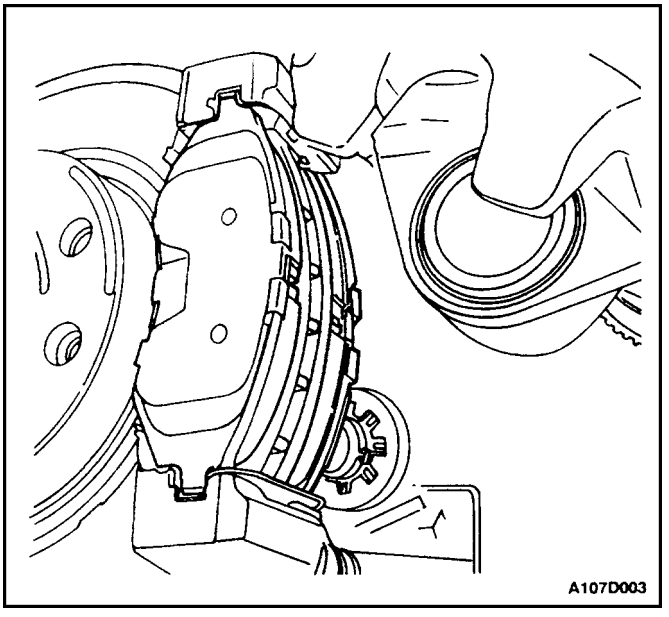

5. Remove the brake shoes.

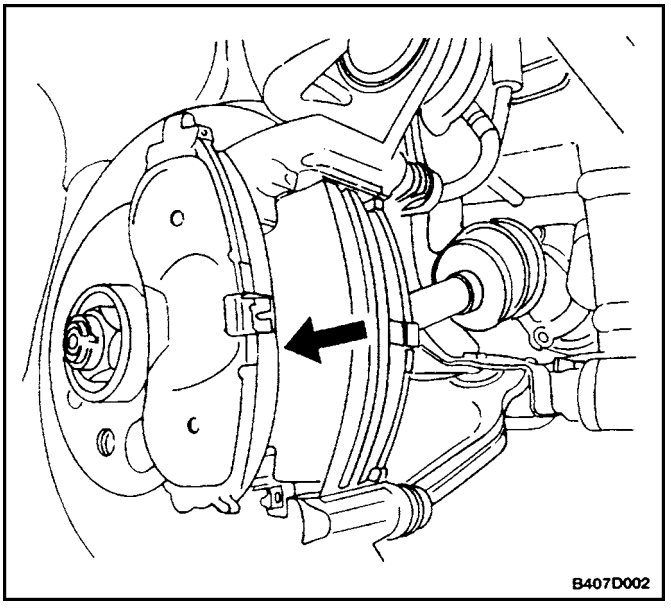

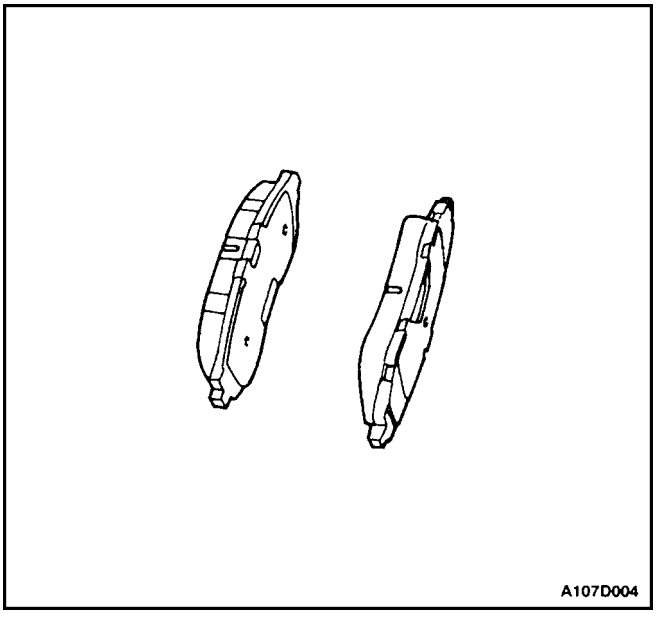

Installation Procedure

1. Install the brake shoes.
2. If new brake shoes are being installed, they will be thicker than the worn pads that were removed. Push the caliper piston inward, if necessary.

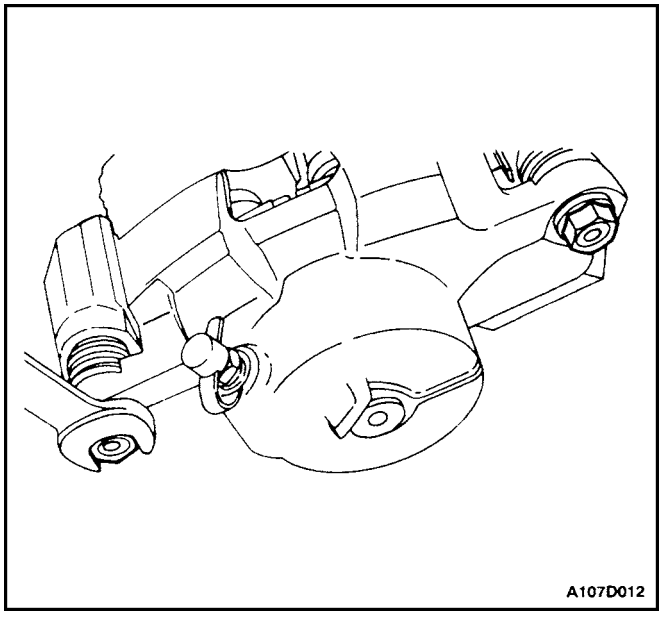

3. Pull the caliper downward and install the lower mounting bolt.

Important : Do not damage the piston dust seal when the caliper is pulled downward to reinstall the lowermounting bolt.

Tighten

Tighten the caliper mounting bolt to 22–32 N•m (16–24 lb–ft).

4. Align the marks that were made when removing the front wheel, and install the wheel. Refer to*Section 2E, Tires and Wheels.*
5. Lower the vehicle.

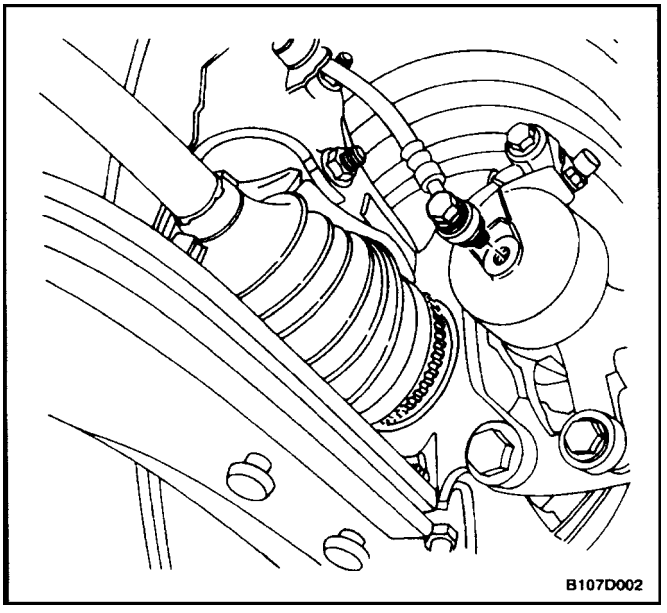

CALIPER

Removal Procedure

1. Raise and suitably support the vehicle.
2. To preserve wheel balance, mark the position of the front wheel relative to the wheel hubs. Remove the wheel. Refer to*Section 2E, Tires and Wheels.*
3. Remove the bolt which attaches the brake hose to the caliper. Remove the washers.

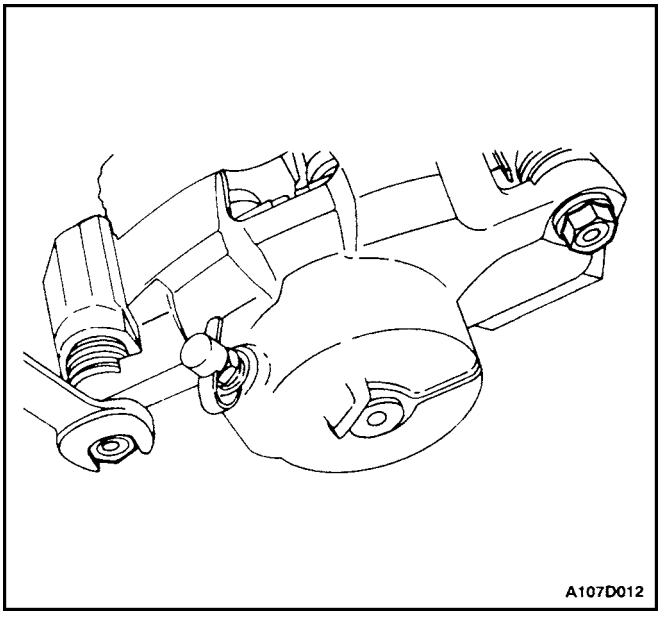

4. Plug the openings at the caliper inlet and the brake hose to prevent fluid loss or contamination.
5. Remove the caliper mounting bolts.
6. Remove the caliper.

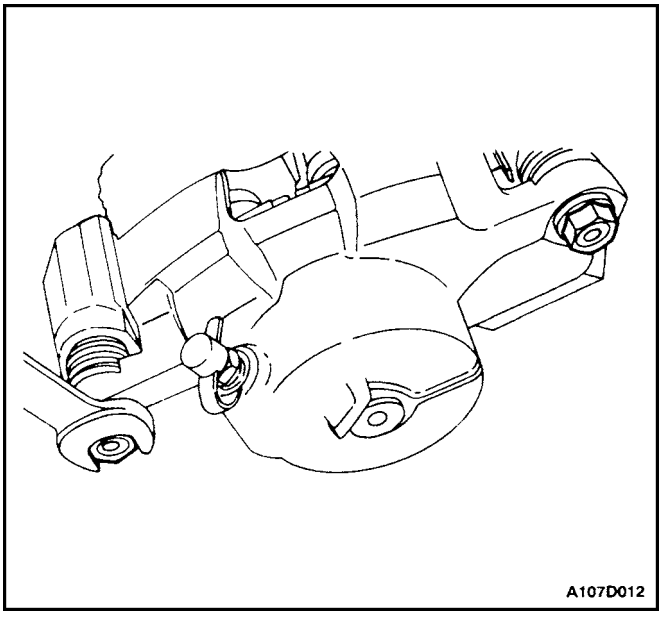

Installation Procedure

1. Install the caliper
2. Install the caliper mounting bolts.

   Tighten

   Tighten the caliper mounting bolts to 22–32 N•m (16–24 lb–ft).

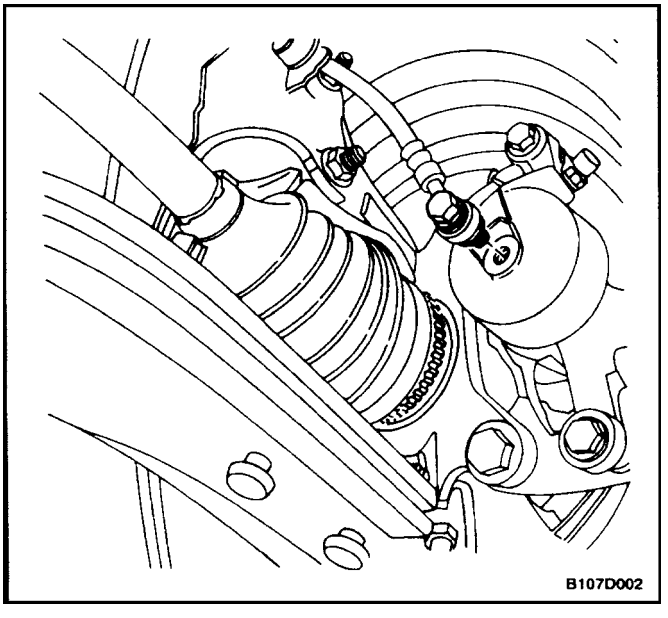

3. Connect the caliper inlet hose with the bolt and the washers.

   Tighten

   Tighten the brake hose–to–caliper bolt to 40 N•m (30 lb–ft).

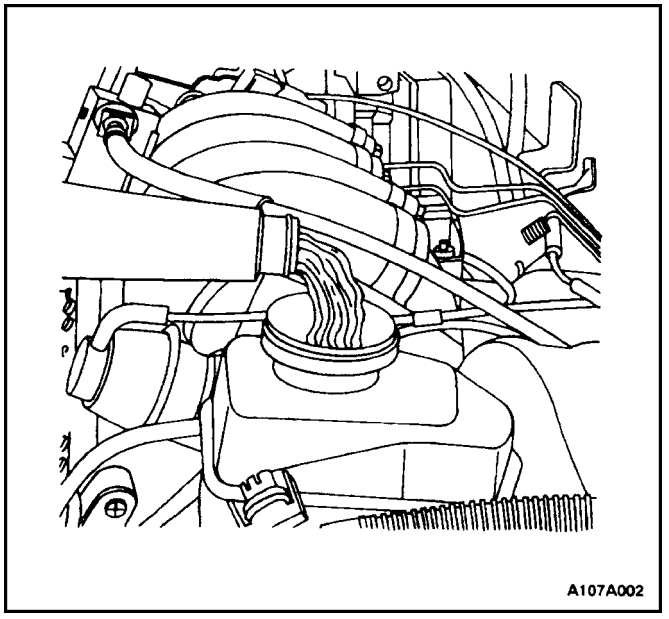

4. Align the marks that were made when removing the front wheel, and install the wheel. Refer to*Section 2E, Tires and Wheels.*
5. Lower the vehicle.
6. Fill the master cylinder reservoir to the proper level with clean brake fluid.
7. Bleed the air out of the brake system. Refer to*Section 4A, Hydraulic Brakes*or*Sec–tion 4F, Antilock Brake System.*
8. Recheck the fluid level in the master cylinder.
9. Repeatedly press the brake pedal to bring the pads into contact with the rotor. Do not move the vehicle until a firm pedal is obtained.

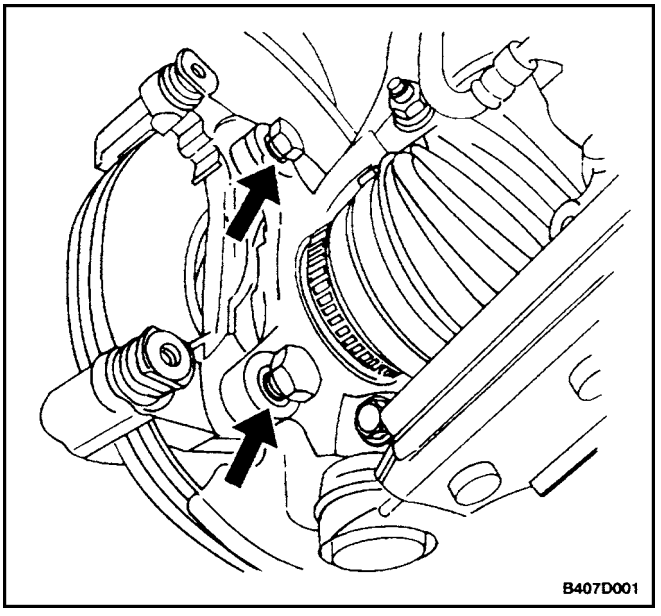

ROTOR

Removal Procedure

1. Remove the caliper. Refer to ”Caliper”in this section.
2. Remove the brake pads.
3. Remove the caliper mounting bracket.

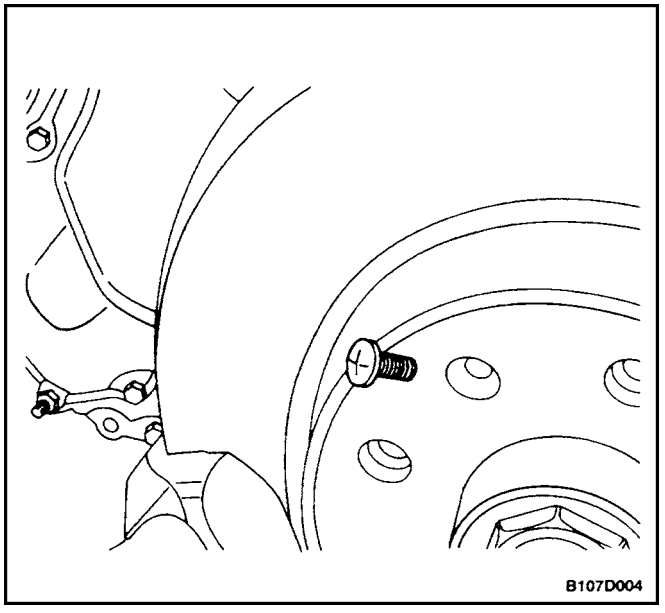

4. Remove the rotor detent screw.
5. Remove the rotor.

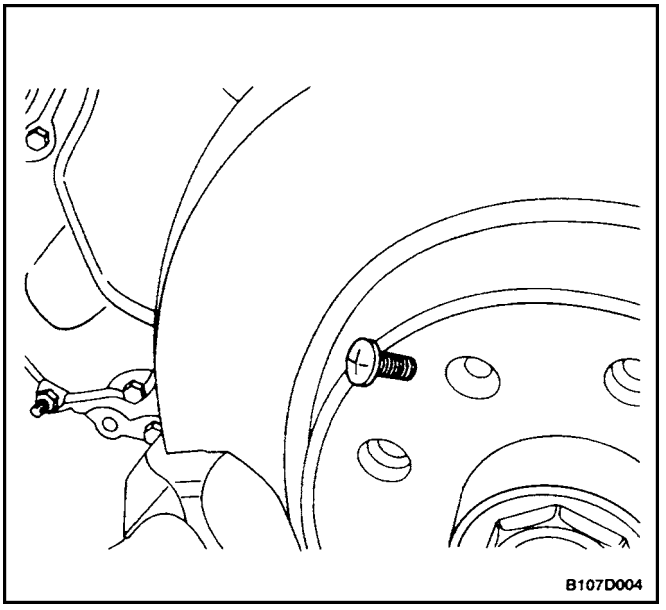

Installation Procedure

Important : To guarantee uniform braking, always refinish both rotors even if only one rotor is defective. If a rotor is being replaced, use a new rotor on both sides of the vehicle.

1. Install the rotor on the front wheel hub and install the detent screw.

   Tighten

   Tighten the rotor detent screw to 4 N•m (35 lb–in).

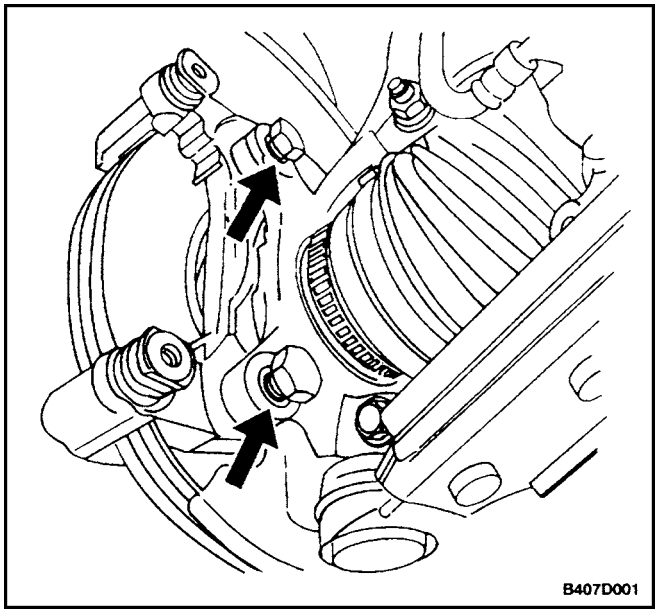

2. Apply a few drops of thread–locking compound to the bolts and install the caliper bracket.

   Tighten

   Tighten the caliper bracket–to–steering knuckle mounting bolts to 95 N•m (70 lb–ft).

3. Install the brake pads and the caliper. See”Caliper” in this section.

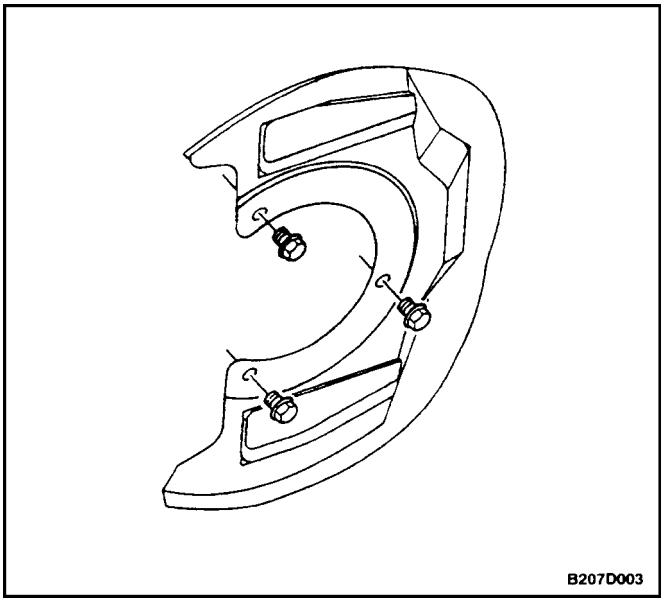

SPLASH SHIELD

Removal Procedure

1. Remove the rotor. Refer to ”Rotor” in this section.
2. Remove the screws for the splash shield from the steering knuckle.
3. Remove the splash shield.

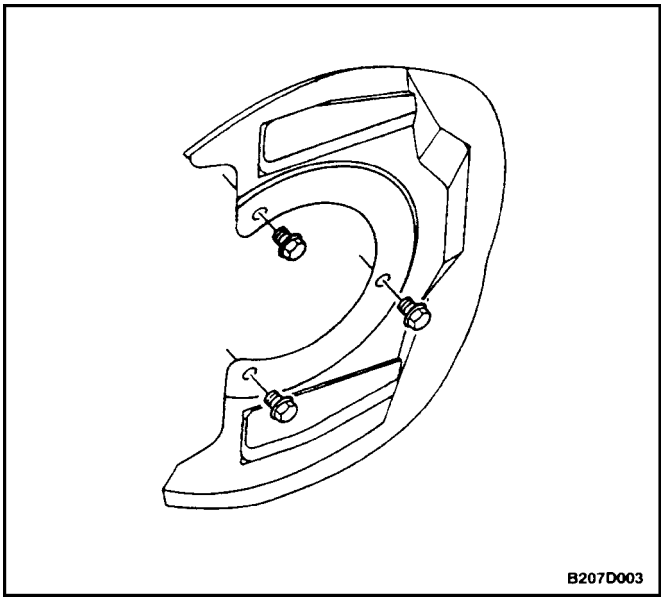

Installation Procedure

1. Install the splash shield.
2. Secure the splash shield to the steering knuckle with the screws.

   Tighten

   Tighten the splash shield screws to 5 N•m (44 lb–in).
3. Install the rotor. Refer to ”Rotor” in this section.

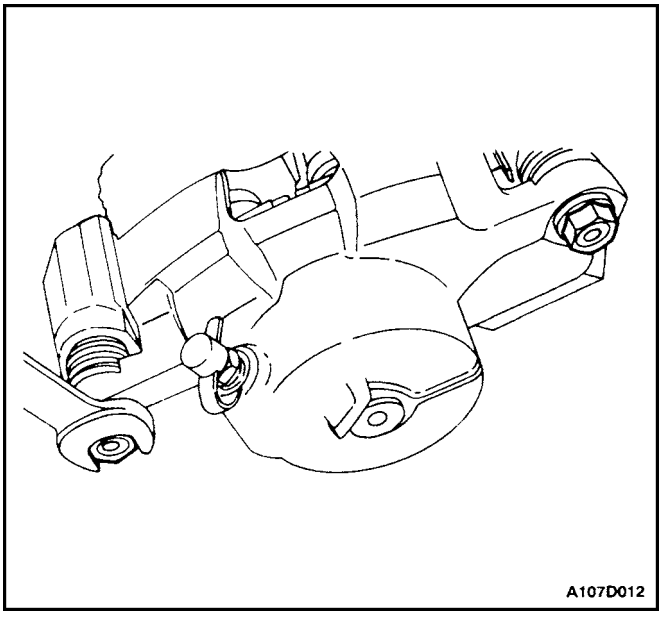
A107D012

UNIT REPAIR

CALIPER OVERHAUL

Disassembly Procedure

1. Remove the caliper. Refer to ”Caliper” in this section.

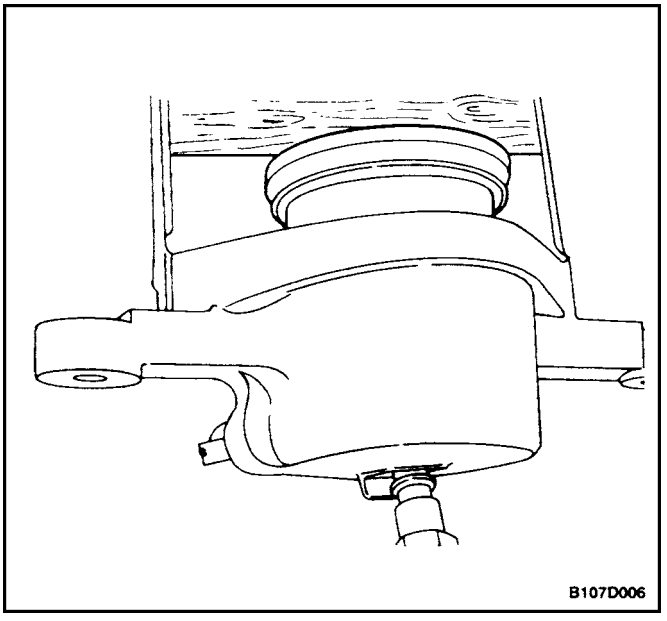
B107D006

CAUTION : Do not attempt to catch the piston when attempting to remove the piston with compressed air. The piston will pop out of its bore with enough force to damage a hand or fingers.

Important : When removing the caliper piston with compressed air, insert a piece of hardwood into the caliper to prevent damage to the piston.

2. Apply unlubricated compressed air at the hose inlet of the caliper.

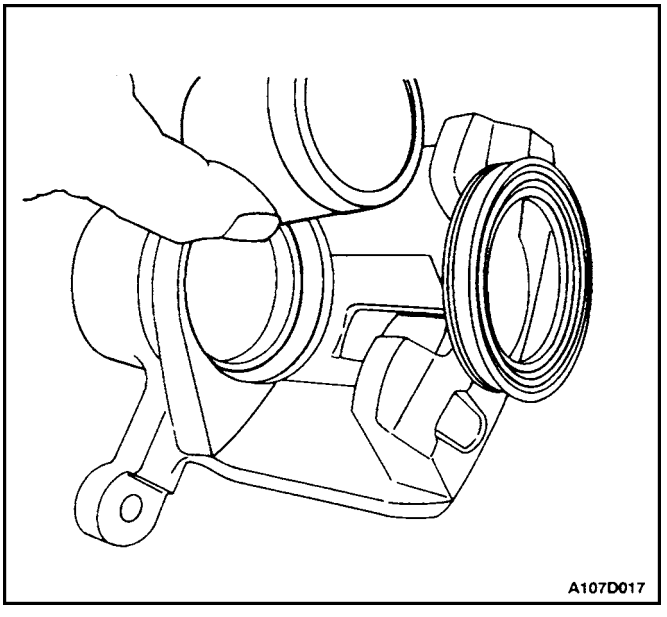
A107D017

3. Remove the piston from its bore, and remove the piston dust seal.

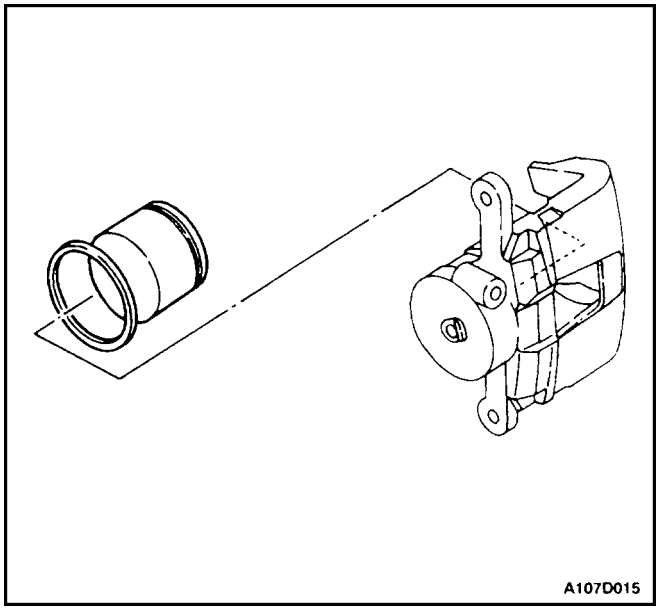

4. Remove the inner seal from the bore.
5. Remove the bleeder valve protector and the bleeder valve.

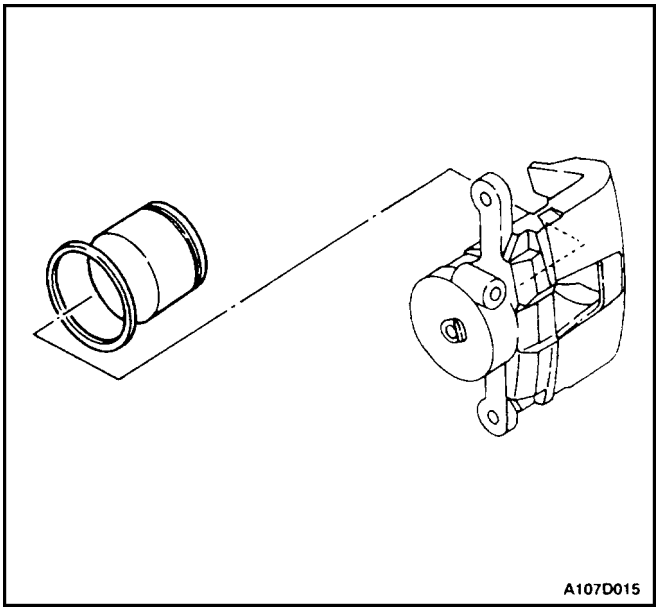

Assembly Procedure

1. Clean all parts in denatured alcohol or brake fluid. Dry the parts with unlubricated compressed air and blow out all passages in the housing and bleeder valve.
2. Inspect the piston and caliper for scoring, nicks, or corrosion. Replace any components which show these conditions.
3. Install the caliper bleeder valve.

Important : Do not use a hone or any other procedure to remove material from the caliper bore or piston.

4. Lubricate a new piston inner seal with brake fluid.
5. Install the piston inner seal into the groove in the caliper bore.

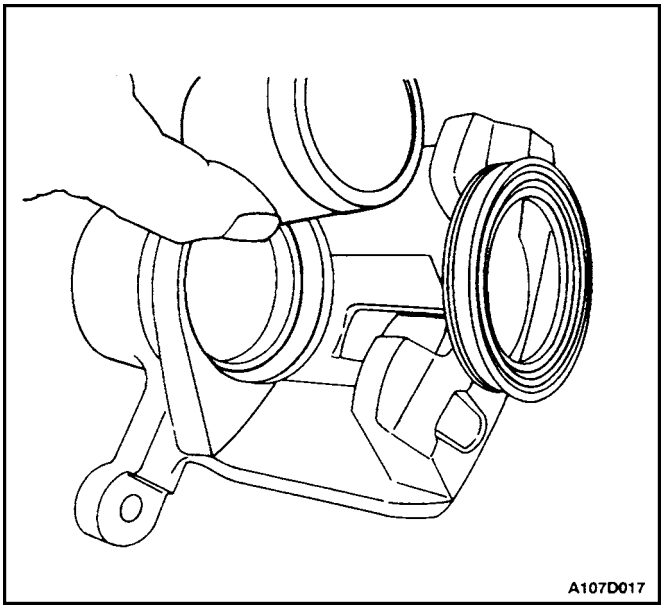

6. Install the piston dust seal in its groove.
7. Lubricate the piston with brake fluid.
8. Push the piston inward until it is properly seated. Make sure that the dust seal is in the correct groove in the piston and caliper.
9. Reinstall the caliper. Refer to”Caliper”in this section.
10. Bleed the brake system. Refer to*Section 4A, Hydraulic brake*s or *Section 4F, Antilock Brakes*, if applicable.

GENERAL DESCRIPTION AND SYSTEM OPERATION

DISC BRAKE CALIPER ASSEMBLY

This caliper has a single bore and is mounted to the steering knuckle with two mounting bolts. Hydraulic pressure, created by pressing the brake pedal, is converted by the caliper to a stopping force. This force acts equally against the piston and the bottom of the caliper bore. It moves the piston outward and slides the caliper inward, resulting in a clamping action on the rotor. This clamping action forces the linings against the rotor, creating friction to stop the vehicle.

- Replace all components included in the repair kits used to service the caliper.
- Lubricate the rubber parts with clean brake fluid to ease assembly.
- Do not use lubricated shop air on brake parts, as damage to the rubber components may result.
- If any hydraulic component is removed or disconnected, it may be necessary to bleed all or part of the brake system.
- Replace the pads in axle sets only.
- The torque values specified are for dry, unlubricated fasteners.
- Perform the service operations on a clean bench, free from all mineral oil materials.

SECTION : 4G

PARKING BRAKE

CAUTION : Disconnect the negative battery cable before removing or installing any electrical unit or when a tool or equipment could easily come in contact with exposed electrical terminals. Disconnecting this cable will help prevent personal injury and damage to the vehicle. The ignition must also be in LOCK unless otherwise noted.

TABLE OF CONTENTS

SPECIFICATIONS 4G–1
FASTENER TIGHTENING SPECIFICATIONS . 4G–1
MAINTENANCE AND REPAIR 4G–2
ON–VEHICLE SERVICE 4G–2
PARKING BRAKE ADJUSTMENT 4G–2
PARKING BRAKE LEVER 4G–3
PARKING BRAKE CABLE 4G–5
PARKING BRAKE HANDLE 4G–10
GENERAL DESCRIPTION AND SYSTEM OPERATION 4G–11
PARKING BRAKE 4G–11

SPECIFICATIONS

FASTENER TIGHTENING SPECIFICATIONS

Application	N•m	Lb–Ft	Lb–In
Fuel Tank Retaining Strap Nut	12.5	–	111
Parking Brake Cable–to–Underbody Side Bracket Nuts	12	–	106
Parking Brake Lever Assembly–to–Vehicle Underbody Bolts	22	16	–
Parking Brake Switch–to–Parking Brake Lever Screw	4	–	35

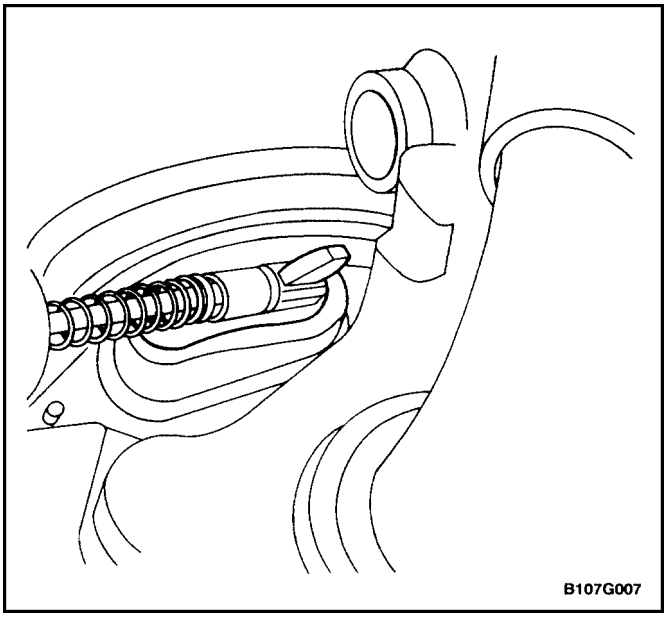

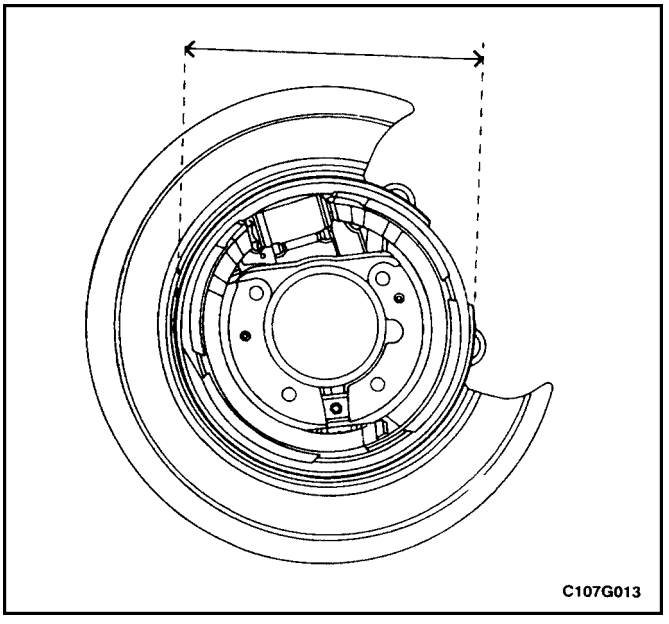

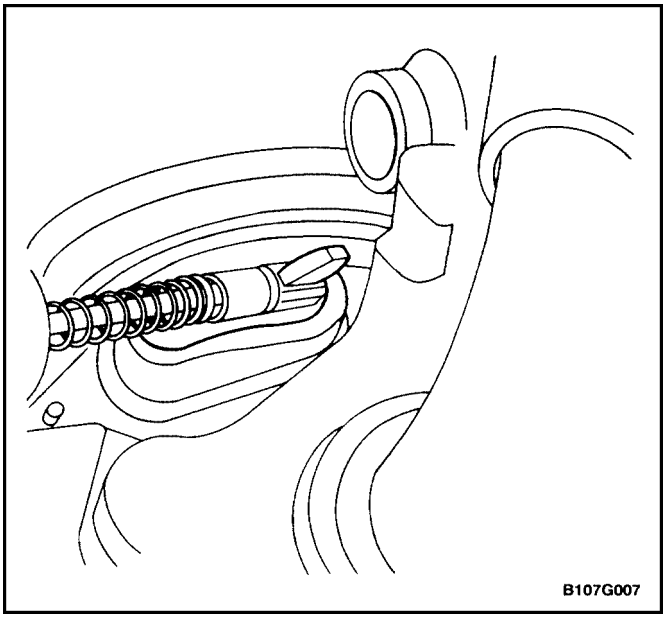

MAINTENANCE AND REPAIR

ON–VEHICLE SERVICE

PARKING BRAKE ADJUSTMENT

Adjustment Procedure

1. Release the parking brake.
2. Raise and suitably support the vehicle.
3. Remove the rear wheels. Refer to*Section 2E, Tires and Wheels.*
4. Remove the caliper and rotor assemblies. Refer to*Section 4E, Rear Brakes.*
5. Remove the brake rotors on each side of the vehicle. Refer to*Section 4E, Rear Brakes.*
6. Disconnect the parking brake cable from the backplate operating lever on each side of the vehicle.
7. Inspect and replace any parts of doubtful strength or quality. This can be shown by discoloration from heat or stress.
8. Adjust the shoe assembly to 167.6 to 167.8 mm (6.60 to 6.61 inches) by turning the adjuster nut clockwise to increase the diameter. Measure the shoe assembly diameter as closely as possible to the center of the lining material.
9. Inspect and install the rotors and calipers. Refer to*Section 4E, Rear Brakes.*
10. Install the parking brake cable to the backplate lever on each side of the vehicle.
11. In the vehicle, pull on the parking brake handle. Stop after hearing two clicks.
12. Turn the rear wheel by hand until the wheel begins to drag.
13. Release the parking brake.
14. Turn the rear wheel by hand to check the drag. Readjust the cable, if necessary.
15. Repeat the process for the other rear wheel.
16. Lower the vehicle.

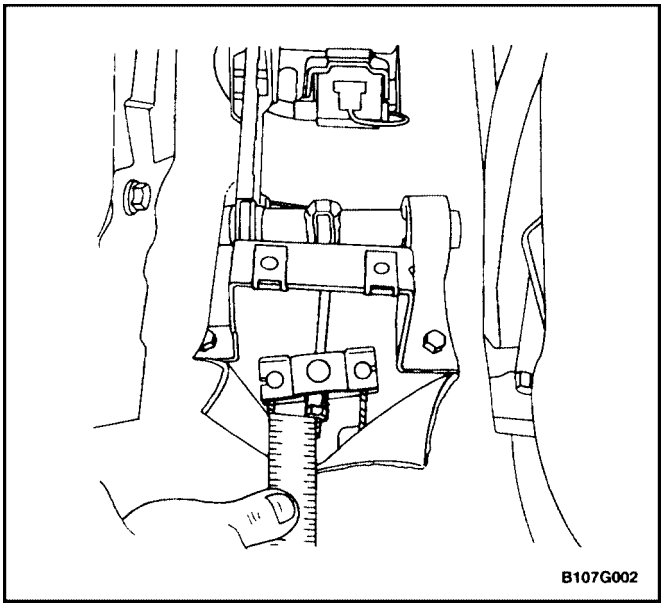

PARKING BRAKE LEVER

Removal Procedure

1. Release the parking brake.
2. Remove the center console. Refer to*Section 9G, Interior Trim.*
3. Measure the thread length from the end of the pull rod to the adjustment nut.

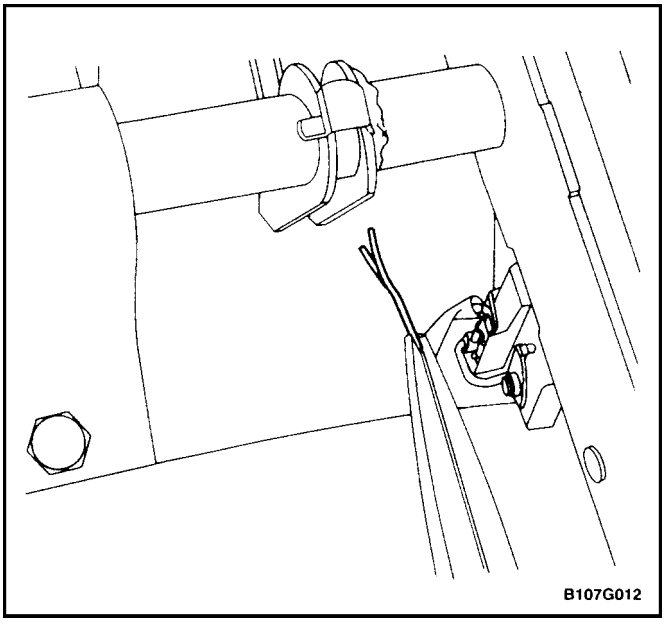

4. Remove the split pin which holds the eye bolt pull rod to the parking brake lever assembly.

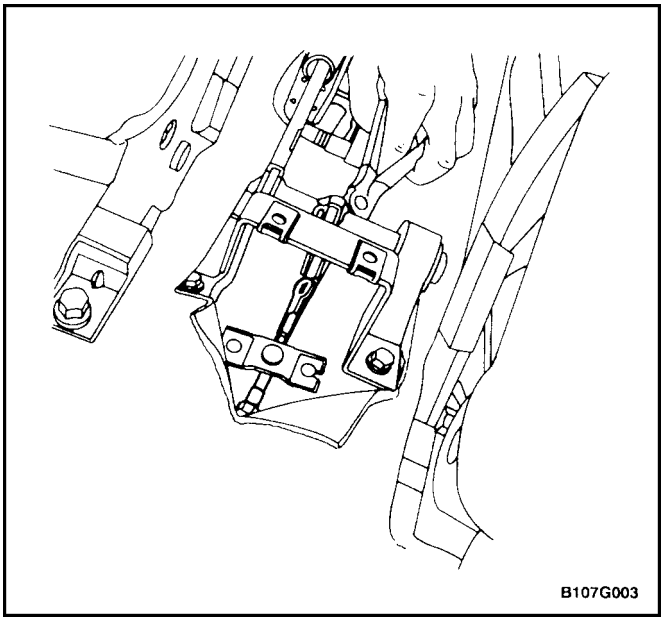

5. Detach the eye bolt pull rod but leave the pull rod connected to the equalizer which is attached to the parking brake cables.

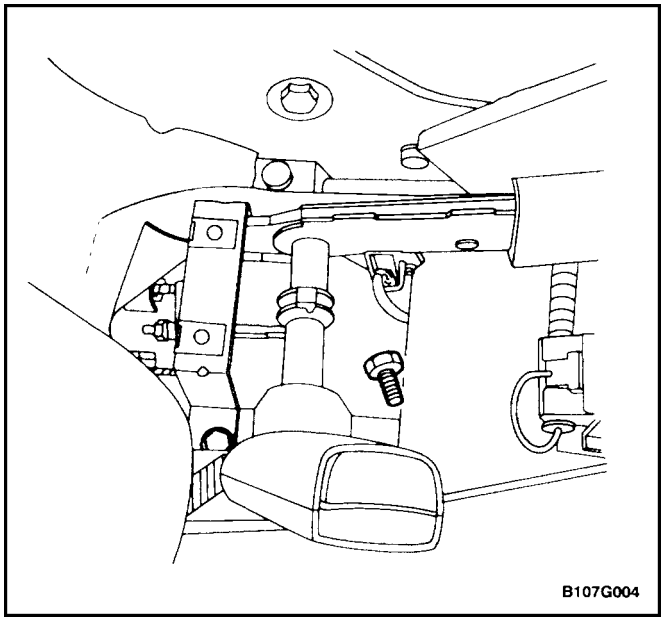

6. Remove the bolts and the washers which secure the parking brake assembly to the underbody.

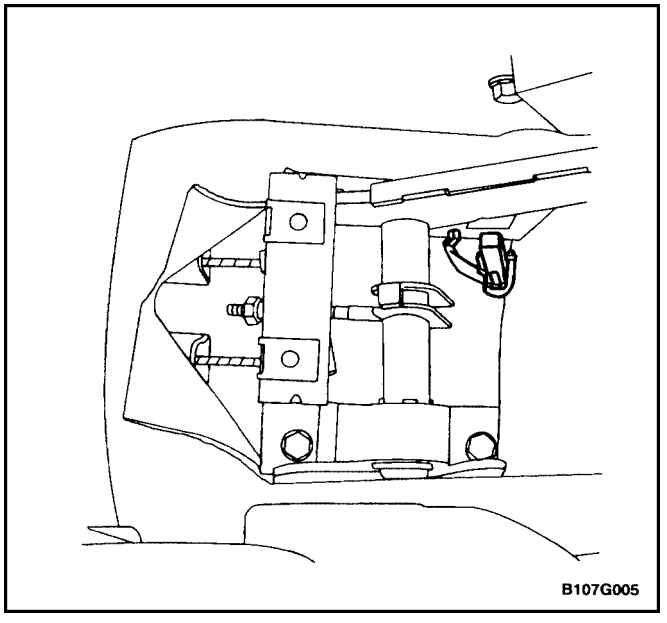

7. If necessary, remove the parking brake switch attached to the parking brake lever assembly by a small screw, and remove the switch.

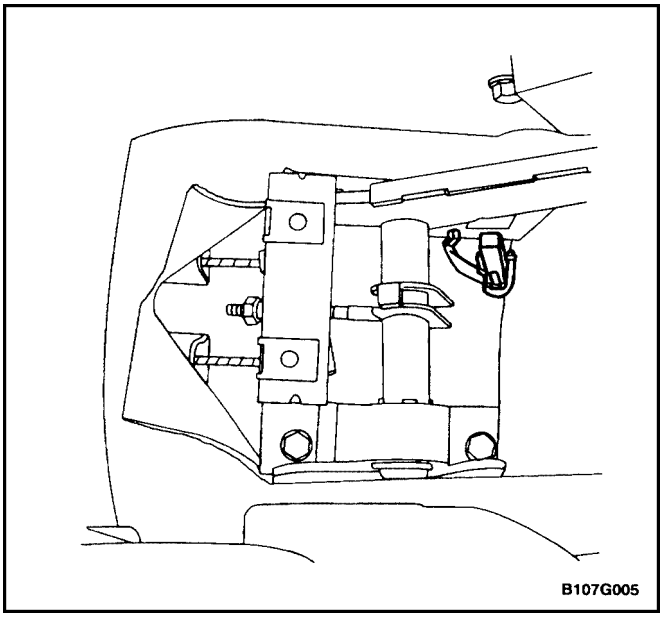

Installation Procedure

Notice : If the parking brake lever is bent or damaged, replace the entire parking brake lever assembly.

1. Fasten the parking brake switch to the parking brake lever assembly with the screw.

   ### Tighten

   Tighten the parking brake switch–to–parking brake lever screw to 4 N•m (35 lb–in).

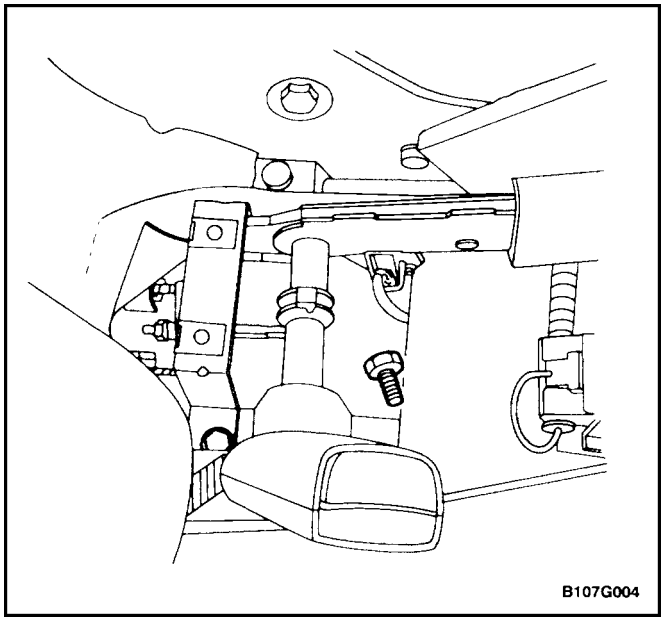

2. Install the parking brake lever bolts, and fasten the parking brake lever assembly to the vehicle underbody.

Tighten

Tighten the parking brake lever assembly–to–vehicle underbody bolts to 22 N•m (16 lb–ft).

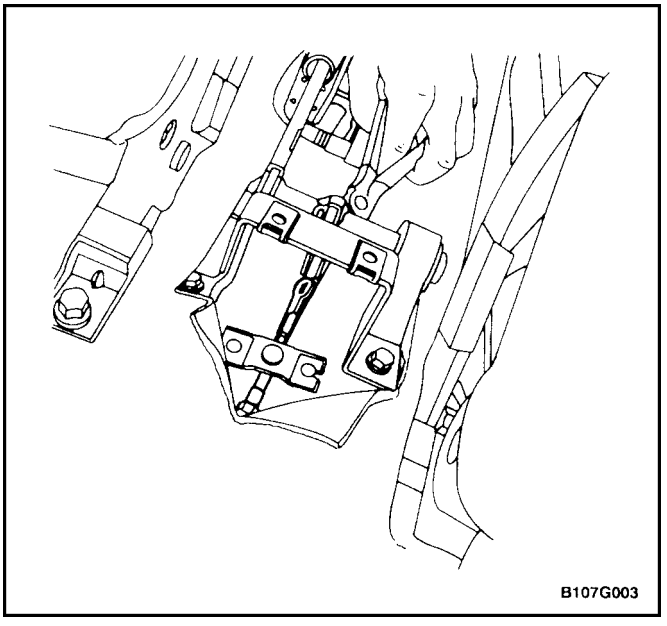

3. Install the eye bolt pull rod to the brake lever operating pawl fastening the pull rod with a split pin.
4. Check the parking brake adjustment referring to the original removal adjustment nut measurement taken in the removal procedure. Refer to ”Parking Brake Adjustment”in this section.
5. Install the center console. Refer to*Section 9G, Interior Trim.*

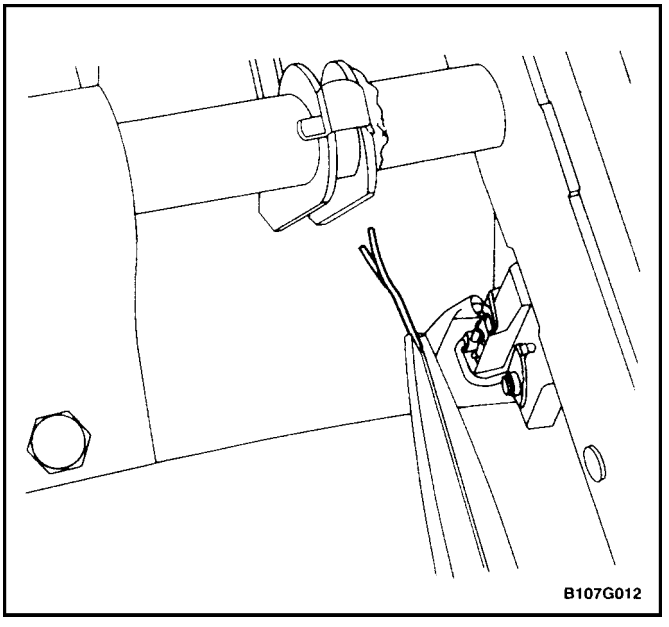

PARKING BRAKE CABLE

Removal Procedure

1. Remove the center console. Refer to*Section 9G, Interior Trim.*
2. Remove the split pin which holds the eye bolt pull rod to the parking brake lever assembly.

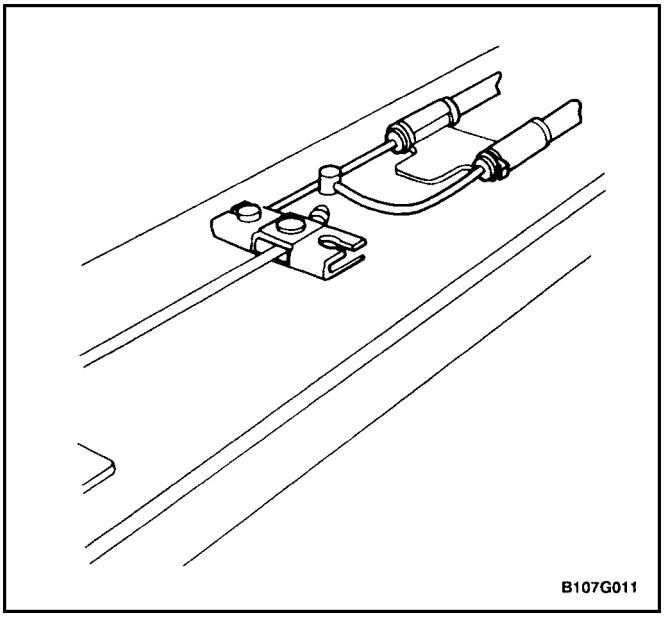

3. Remove the parking brake cable ends from the equalizer.
4. Raise and suitably support the vehicle.
5. Remove the rear wheels. Refer to*Section 2E, Tires and Wheels.*

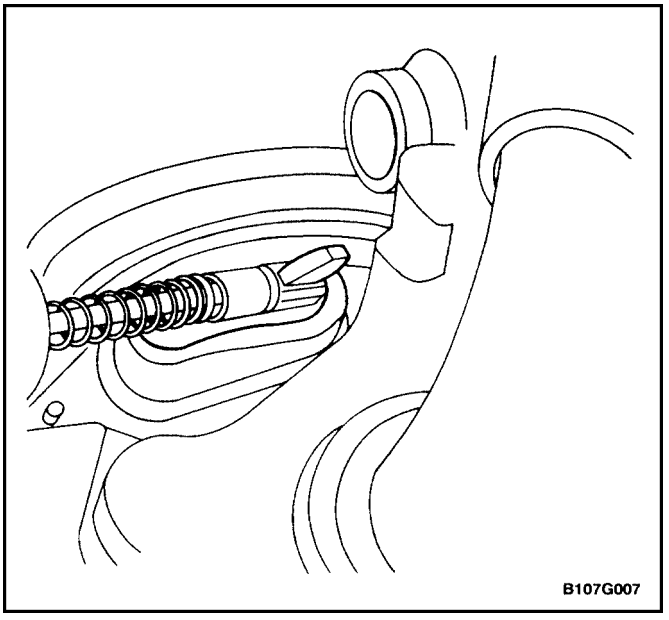

6. Unfasten the parking brake cable from the lever at the rear of the backing plate.
7. Remove the clip that holds the cable into the protruding hole on the steering knuckle assembly.

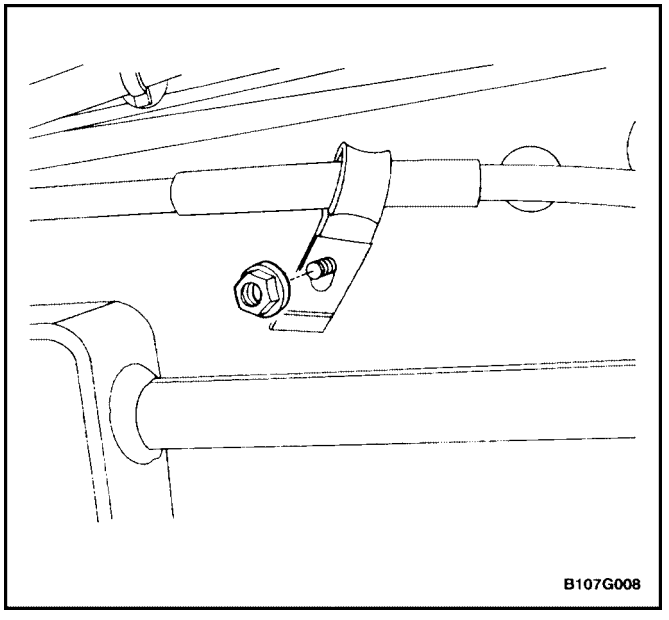

8. Remove the nut securing the parking brake cable to the underbody clip on both the driver and passenger sides of the vehicle.

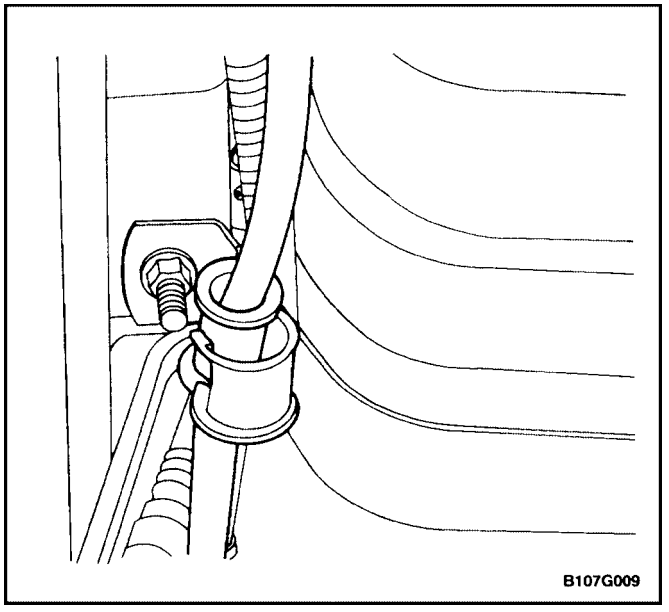

9. Remove the parking brake cable from the clip near the fuel tank strap (passenger side).
10. Suitably support the fuel tank.

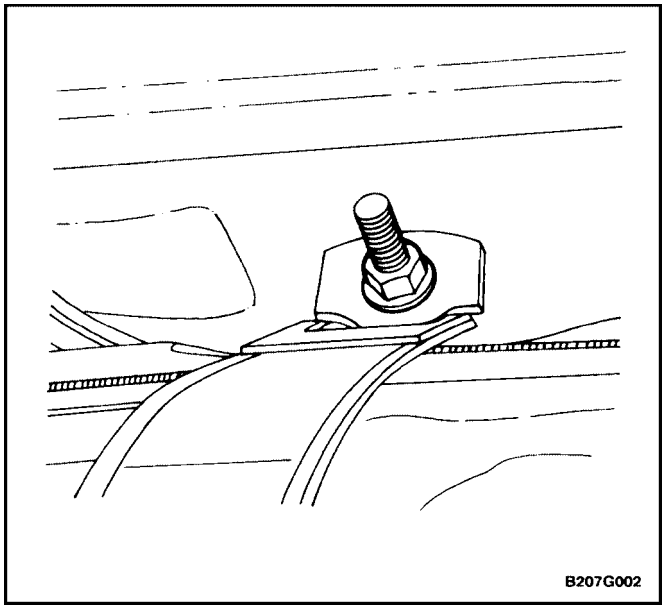

11. Remove the fuel tank retaining strap nut on the driver's side and remove the parking brake cable. Pull the cable through the loop of the welded underbody bracket.

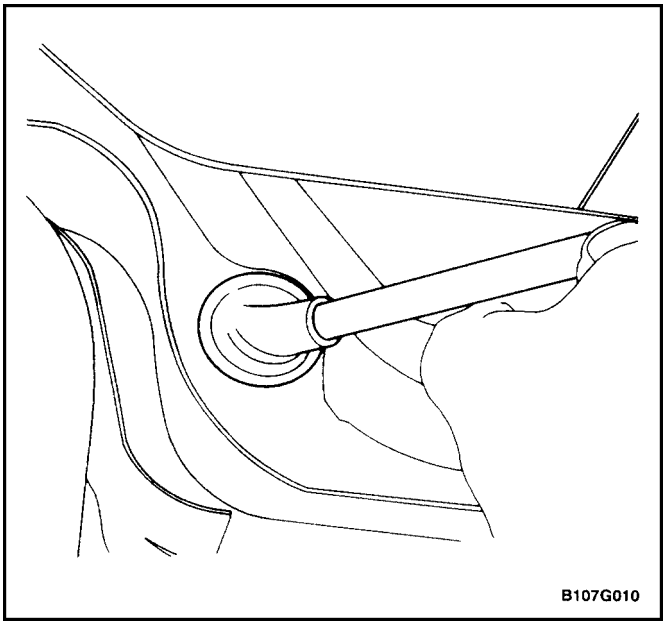

12. Remove the parking brake cable and rubber grommet.

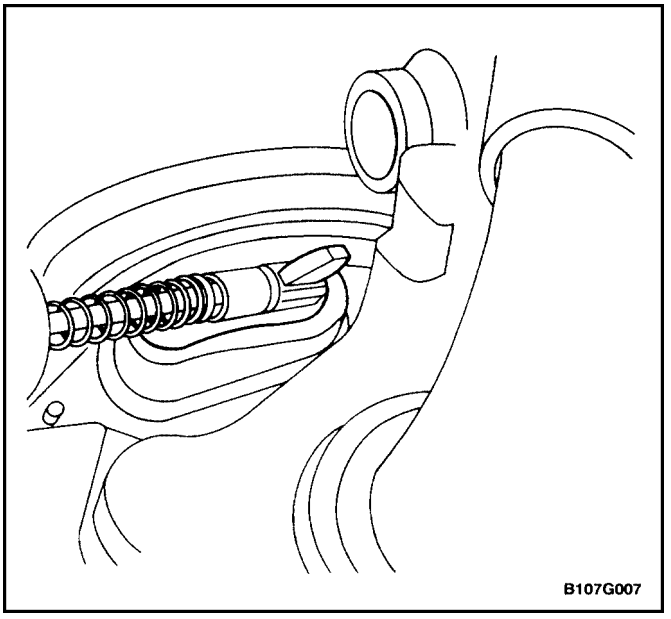

Installation Procedure

1. Route the cable to the hole on the steering knuckle assembly.
2. Fasten the parking brake cable to the lever at the rear of the disc brake backing plate.
3. Install the clip that secures the parking brake cable to the routing hole on the steering knuckle assembly.

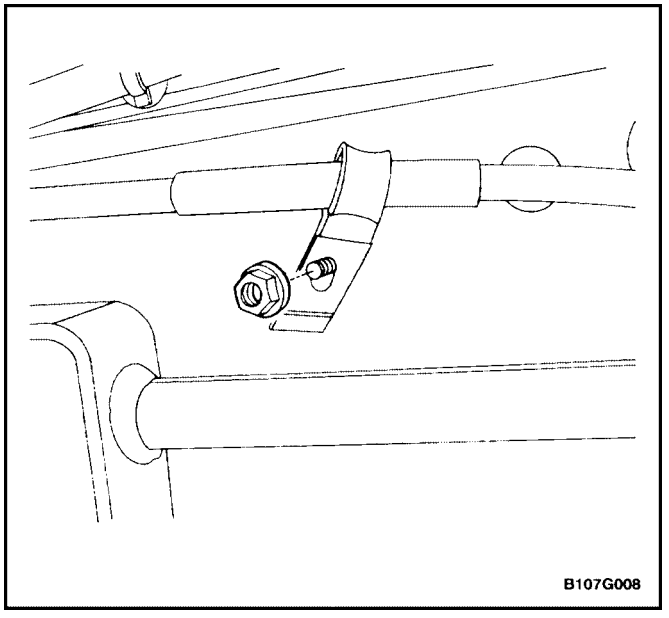

4. Install the nut securing the parking brake cable to a bracket on both the driver and passenger sides of the vehicle.

Tighten

Tighten the parking brake cable–to–underbody side bracket nuts to 12 N•m (106 lb–in).

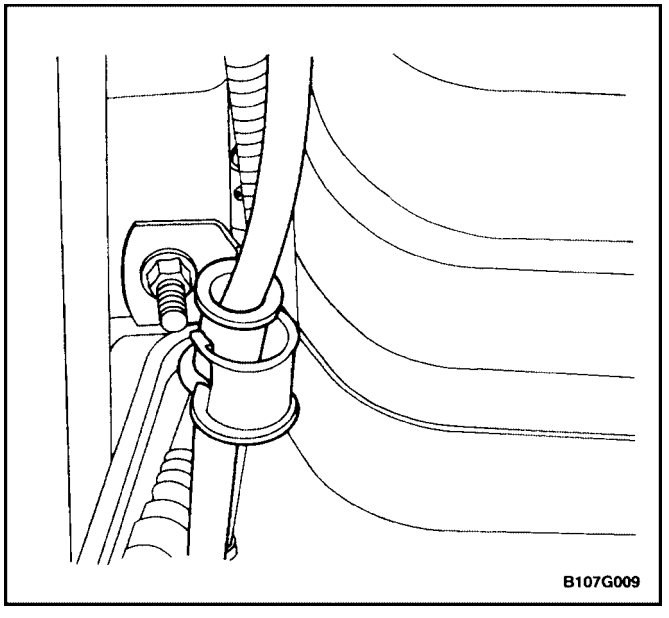

5. Install the parking brake cable (passenger's side) to the clip near the fuel tank strap.
6. Route the parking brake cable through the loop of a welded underbody bracket and under the fuel tank retaining strap (driver's side).

Tighten

Tighten the fuel tank retaining strap nut to 12.5 N•m (111 lb–in).

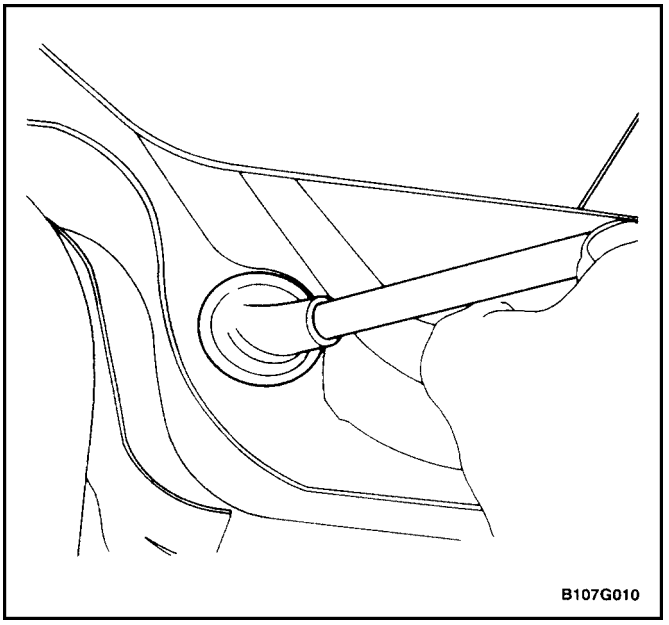

7. Route the parking brake cables through the access holes to the parking brake/gearshift console.
8. Install the rubber grommet for each cable.

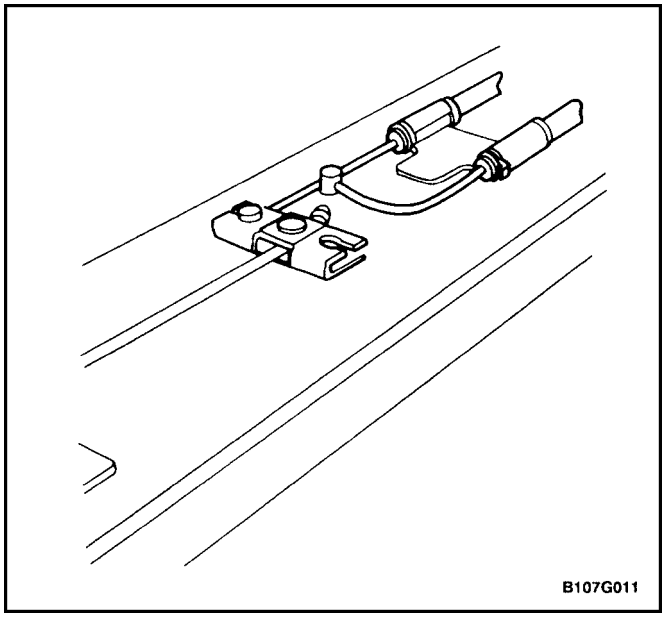

9. Install the rear wheels. Refer to*Section 2E, Tires and Wheels.*
10. Lower the vehicle.
11. Attach the parking brake cable ends to the equalizer.

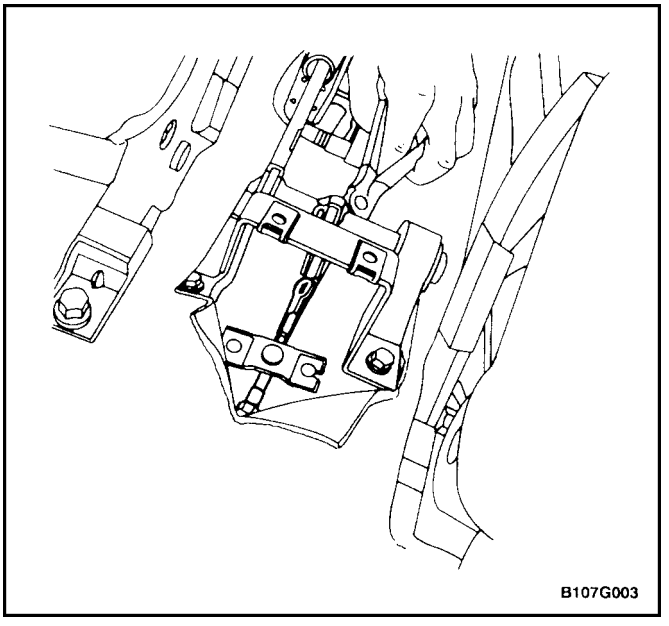

12. Attach the eye bolt pull rod to the parking brake lever assembly and fasten the split pin.
13. Install the parking brake/gearshift console hood. Refer to*Section 9G, Interior Trim.*
14. If the parking brake shoe lever was pressed backward before removing the brake drum, now press it forward and adjust the parking brake. Refer to”Parking Brake Adjustment”in this section.

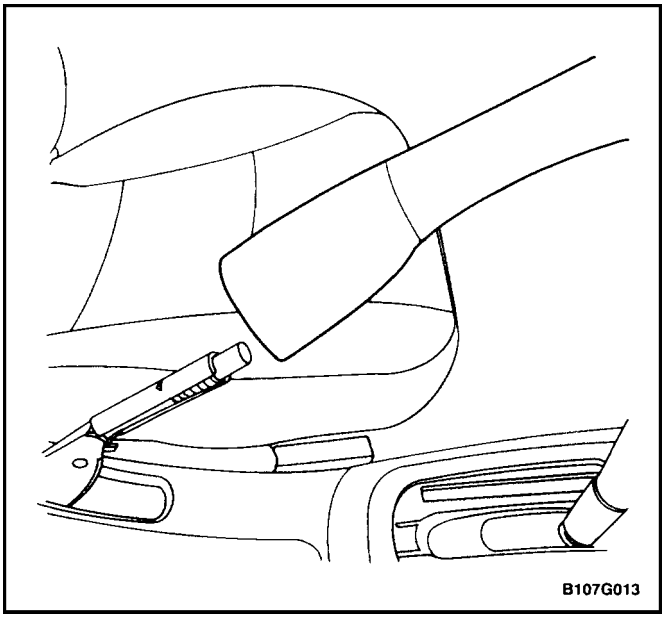

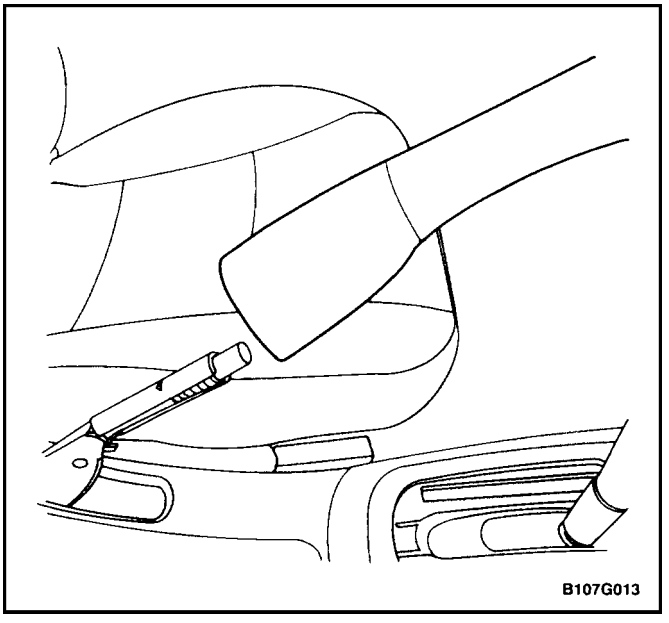

PARKING BRAKE HANDLE

Removal Procedure

1. Remove the center console and detach the parking brake lever boot. Refer to*Section 9G, Interior Trim.*
2. Slip the parking brake handle off the parking brake lever.

Installation Procedure

1. Push the parking brake handle as far as it will go on the parking brake lever.
2. Install the center console and the parking brake lever boot. Refer to*Section 9G, Interior Trim.*

GENERAL DESCRIPTION AND SYSTEM OPERATION

PARKING BRAKE

The braking system uses a BRAKE warning light located in the instrument panel cluster. When the ignition switch is in START, the BRAKE warning light should glow and go off when the the ignition switch returns to RUN. Whenever the parking brake is applied and the ignition switch is ON, the BRAKE warning light should glow.

When the brake is firmly applied, the parking brake should hold the vehicle with ample pedal travel remaining. Check for frayed cables, rust, etc., or any condition that many inhibit present (or future) free movement of the parking brake lever assembly.

SECTION : 4A

HYDRAULIC BRAKES

CAUTION : Disconnect the negative battery cable before removing or installing any electrical unit or when a tool or equipment could easily come in contact with exposed electrical terminals. Disconnecting this cable will help prevent personal injury and damage to the vehicle. The ignition must also be in LOCK unless otherwise noted.

TABLE OF CONTENTS

SPECIFICATIONS 4A–1
GENERAL SPECIFICATIONS 4A–1
FASTENER TIGHTENING SPECIFICATIONS . 4A–2
COMPONENT LOCATOR 4A–3
BRAKE SYSTEM (ABS) 4A–3
BRAKE SYSTEM (NON–ABS) 4A–4
DIAGNOSIS 4A–5
BRAKE SYSTEM TESTING 4A–5
BRAKE HOSE INSPECTION 4A–5
WARNING LAMP OPERATION 4A–5
BRAKE LAMP WARNING CIRCUIT DIAGNOSIS 4A–6
MAINTENANCE AND REPAIR 4A–10
ON–VEHICLE SERVICE 4A–10
MANUAL BLEEDING THE BRAKES 4A–10
PRESSURE BLEEDING THE BRAKES 4A–13
BRAKE HOSE REAR 4A–14
BRAKE HOSE FRONT 4A–15
STOPLAMP SWITCH 4A–17
BRAKE PEDAL 4A–17
GENERAL DESCRIPTION AND SYSTEM OPERATION 4A–19
HYDRAULIC FLUID 4A–19

SPECIFICATIONS

GENERAL SPECIFICATIONS

Application	2.0 DOHC Engine	
	Millimeters	Inches
Brake Drums:		
Inside Diameter	200	7.87
Maximum Rebore Diameter	201	7.91
Out–of–Round	0.08	0.0032
Front Brake Rotors:		
Discard Thickness	22.00	0.87
Lateral Runout (Installed)	0.030	0.001
Rotor Diameter	256	10.07
Rotor Thickness (New)	24.00	0.95
Thickness Variation	0.005	0.0005

Application	Millimeters	Inches
Rear Brake Rotors:		
Discard Thickness	8.4	0.33
Lateral Runout (Installed)	0.03	0.004
Rotor Diameter	258.00	10.16
Rotor Thickness (New)	10.40	0.41
Thickness Variation	0.005	0.0004
Master Cylinder:		
Bore Diameter (Nominal)	23.81	0.937
Bore Diameter (Maximum)	23.86	0.937
Caliper:		
Minimum Piston Diameter (Front)	57.00	2.244
Minimum Piston Diameter (Rear)	35.00	1.377
Wheel Cylinder Diameter:		
Maximum	–	–
Nominal	–	–

FASTENER TIGHTENING SPECIFICATIONS

Application	N•m	Lb–Ft	Lb–In
Bleeder Screw	8	–	53
Brake Lines	16	12	–
Front Disc Brake Hose–to–Caliper Bolt	40	30	–
Rear Disc Brake Hose–to–Caliper Bolt	32	24	–
Shaft Nut	18	13	–

COMPONENT LOCATOR

BRAKE SYSTEM (ABS)

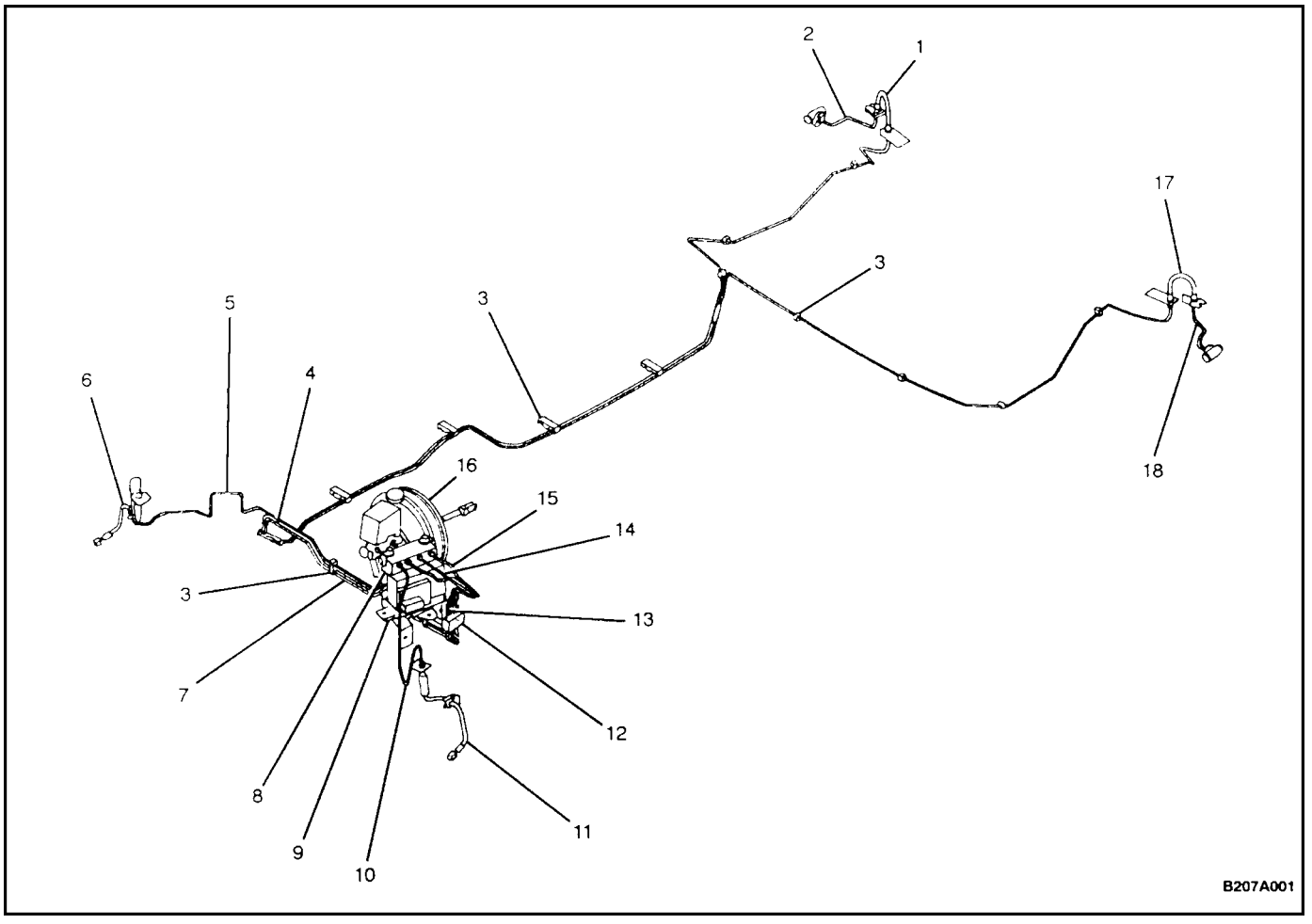

1. RH Rear Brake Hose
2. RH 3rd Rear Brake Pipe
3. Clip
4. 2nd Rear Brake Pipe (A)
5. 2nd Front Brake Pipe
6. RH Front Brake Hose
7. 2nd Rear Brake Pipe (B)
8. ABS Modulator
9. Bracket
10. Front Brake Pipe
11. LH Front Brake Hose
12. Connector
13. 1st Rear Brake Pipe (A)
14. 1st Front Brake Pipe
15. 1st Rear Brake Pipe (B)
16. LHD Master Cylinder/Booster Assembly
17. LH Rear Brake Hose
18. LH 3rd Rear Brake Pipe

BRAKE SYSTEM (NON–ABS)

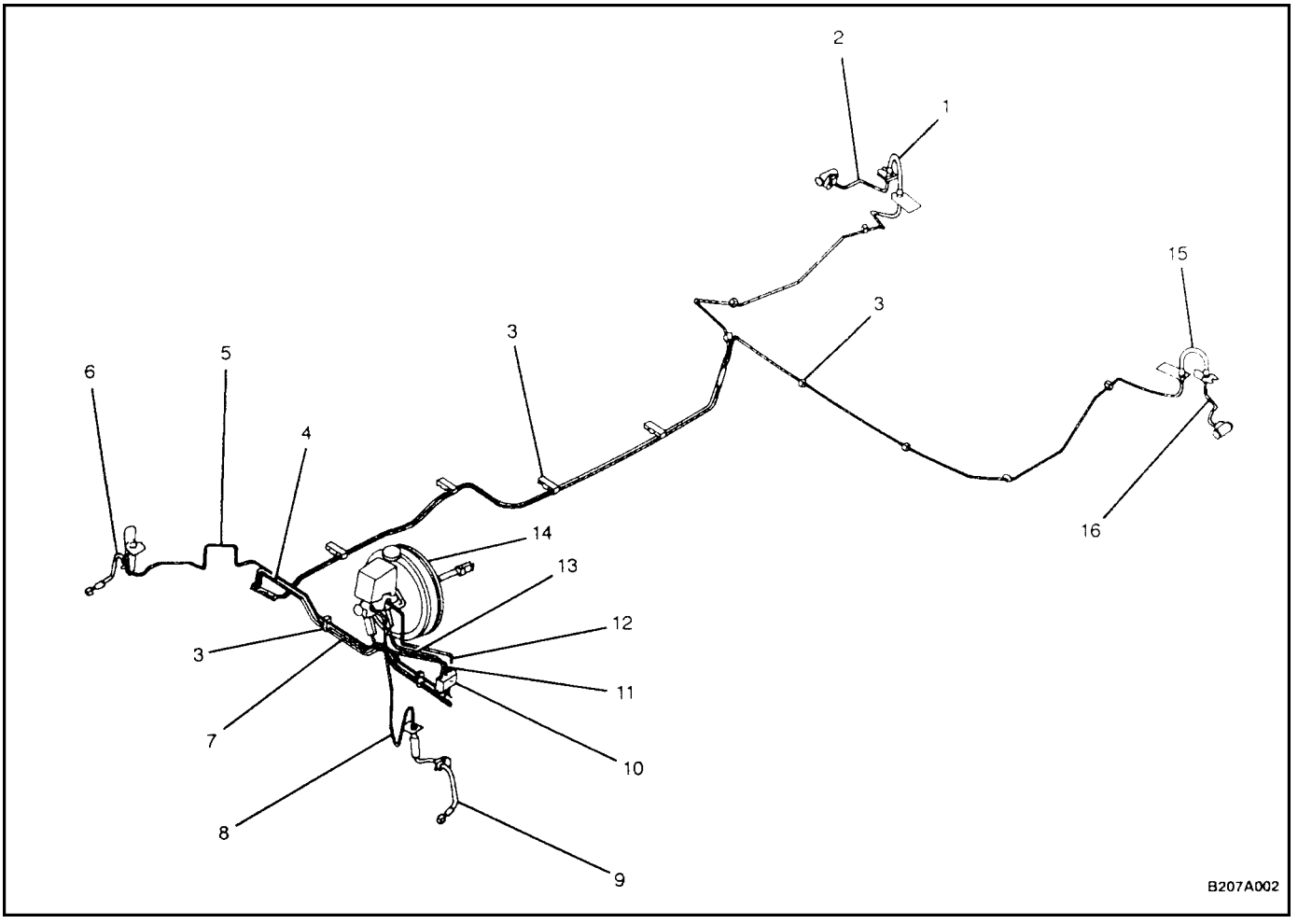

1. RH Rear Brake Hose
2. RH 3rd Rear Brake Pipe
3. Clip
4. 2nd Rear Brake Pipe
5. 2nd Front Brake Pipe
6. RH Front Brake Hose
7. 2nd Rear Brake Pipe
8. Front Brake Pipe
9. LH Front Brake Hose
10. Connector
11. 1st Rear Brake Pipe (A)
12. 1st Front Brake Pipe
13. 1st Rear Brake Pipe (B)
14. LHD Master Cylinder/Booster Assembly
15. LH Rear Brake Hose
16. LH 3rd Rear Brake Pipe

DIAGNOSIS

BRAKE SYSTEM TESTING

Brakes should be tested on a dry, clean, reasonably smooth and level roadway. A true test of brake performance cannot be made if the roadway is wet, greasy, or covered with loose dirt whereby all tires do not grip the road equally. Testing will also be adversely affected if the roadway is crowned so as to throw the weight so roughly that the wheels tend to bounce.

Test the brakes at different vehicle speeds with both light and heavy pedal pressure; however, avoid locking the brakes and sliding the tires. Locked brakes and sliding tires do not indicate brake efficiency since heavily braked, but turning, wheels will stop the vehicle in less distance than locked brakes. More tire–to–road friction is present with a heavily–braked, turning tire than with a sliding tire.

Because of the high deceleration capability, a firmer pedal may be felt at higher deceleration levels.

There are three major external conditions that affect brake performance:

- Tires having unequal contact and grip of the road will cause unequal braking. Tires must be equally inflated, and the tread pattern of the right and the left tires must be approximately equal.
- Unequal loading of the vehicle can affect the brake performance since the most heavily loaded wheels require more braking power, and thus more braking effort, than the others.
- Misalignment of the wheels, particularly conditions of excessive camber and caster, will cause the brakes to pull to one side.

To check for brake fluid leaks, hold constant foot pressure on the pedal with the engine running at idle and the shift lever in NEUTRAL. If the pedal gradually falls away with the constant pressure, the hydraulic system may be leaking. Perform a visual check to confirm any suspected leaks.

Check the master cylinder fluid level. While a slight drop in the reservoir level results from normal lining wear, an abnormally low level indicates a leak in the system. The hydraulic system may be leaking either internally or externally. Refer to the procedure below to check the master cylinder. Also, the system may appear to pass this test while still having a slight leak. If the fluid level is normal, check the vacuum booster pushrod length. If an incorrect pushrod length is found, adjust or replace the rod.

Check themaster cylinder using the following procedure:

- Check for a cracked master cylinder casting or brake fluid leaking around the master cylinder. Leaks are indicated only if there is at least one drop of fluid. A damp condition is not abnormal.
- Check for a binding pedal linkage and for an incorrect pushrod length. If both of these parts are in satisfactory condition, disassemble the master cylinder and check for an elongated or swollen primary cylinder or piston seals. If swollen seals are found, substandard or contaminated brake fluid should be suspected. If contaminated brake fluid is found, all the components should be disassembled and cleaned, and all the rubber components should be replaced. All of the pipes must also be flushed.

Improper brake fluid, or mineral oil or water in the fluid, may cause the brake fluid to boil or cause deterioration of the rubber components. If the primary piston cups in the master cylinder are swollen, then the rubber parts have deteriorated. This deterioration may also be evidenced by swollen wheel cylinder piston seals on the drum brake wheels.

If deterioration of rubber is evident, disassemble all the hydraulic parts and wash the parts with alcohol. Dry these parts with compressed air before reassembly to keep alcohol out of the system. Replace all the rubber parts in the system, including the hoses. Also, when working on the brake mechanisms, check for fluid on the linings. If excessive fluid is found, replace the linings.

If the master cylinder piston seals are in satisfactory condition, check for leaks or excessive heat conditions. If these conditions are not found, drain the fluid, flush the master cylinder with brake fluid, refill the master cylinder, and bleed the system. Refer to”Manual Bleeding the Brakes” or”Pressure Bleeding the Brakes” in this section.

BRAKE HOSE INSPECTION

The hydraulic brake hoses should be inspected at least twice a year. The brake hose assembly should be checked for road hazard damage, cracks, chafing of the outer cover, and for leaks or blisters. Inspect the hoses for proper routing and mounting. A brake hose that rubs on a suspension component will wear and eventually fail. A light and a mirror may be needed for an adequate inspection. If any of the above conditions are observed on the brake hose, adjust or replace the hose as necessary.

WARNING LAMP OPERATION

This brake system uses a BRAKE warning lamp located in the instrument panel cluster. When the ignition switch is in the START position, the BRAKE warning lamp should glow and go OFF when the ignition switch returns to the RUN position.

The following conditions will activate the BRAKE lamp:

- Parking brake applied. The light should be ON whenever the parking brake is applied and the ignition switch is ON.
- Low fluid level. A low fluid level in the master cylinder will turn the BRAKE lamp ON.
- As a test of the lamp circuit, vehicles with antilock brakes will momentarily illuminate the lamp for about 4 seconds when the ignition

BRAKE LAMP WARNING CIRCUIT DIAGNOSIS

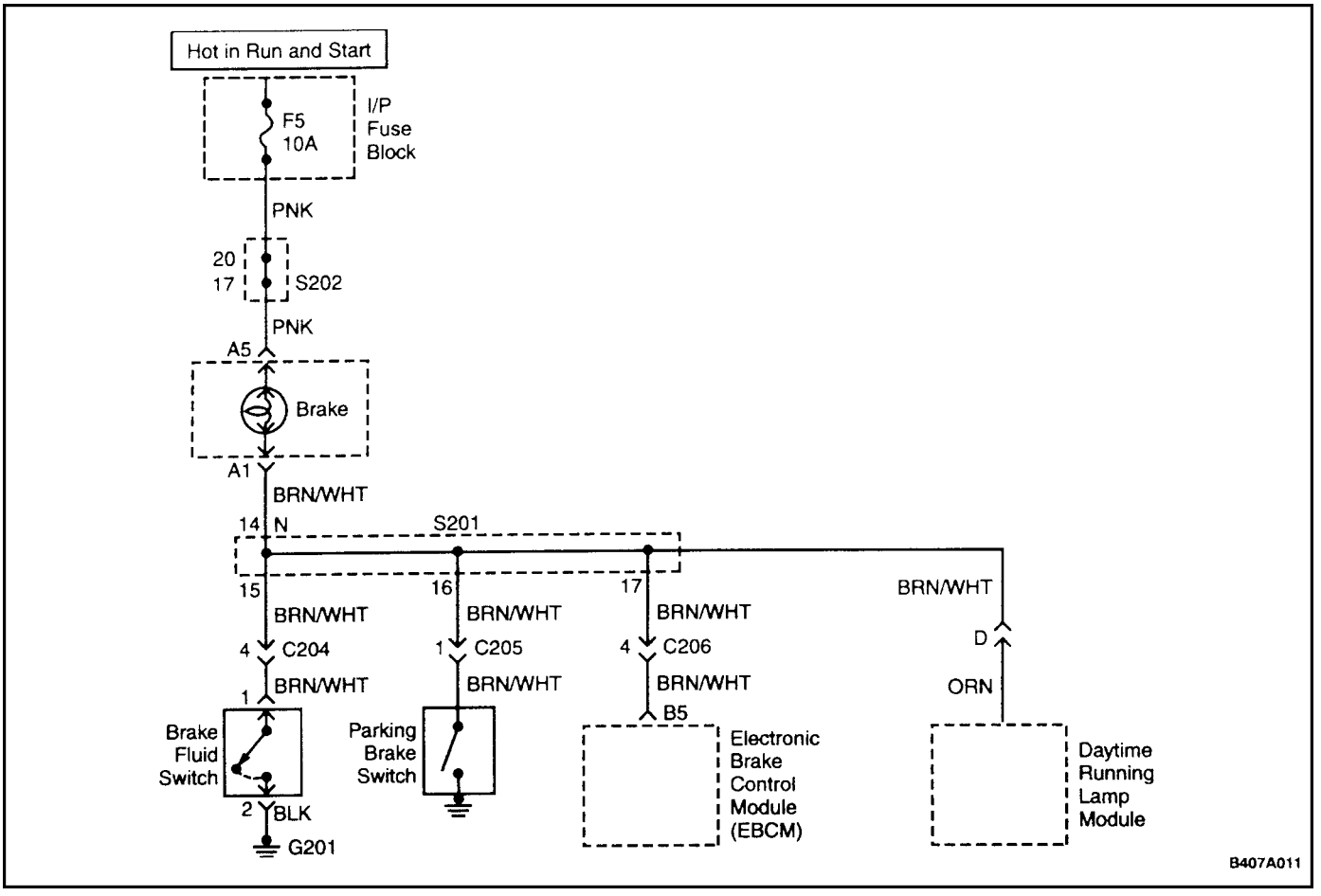

Test Description

The number(s) below refer to step(s) on the diagnostic table.

1. When the ignition is turned ON, the brake warning lamp should initially illuminate and then dim for ABS equipped vehicles. This is done as a bulb check. On vehicles that are not equipped with ABS, the brake warning lamp should only illuminate when either the brake fluid reservoir is low or the parking brake is applied.
7. The brake fluid level switch is a normally open switch. If the brake warning lamp is off after disconnecting the switch, the brake fluid level switch is stuck closed.
9. If the brake warning lamp is still on after disconnecting the parking brake switch, there is a short to ground in the wire to the parking brake switch.
12. If the other checks have been properly performed and the brake warning lamp is off after disconnecting the electronic brake control module (EBCM) J1 connector, the EBCM is faulty.
19. If the brake warning lamp does not operate while performing any of the functions, the fault should be in the ignition feed to the circuit.
24. This step determines if the problem is in the ignition feed to the circuit or in the instrument cluster.
30. The brake warning lamp should illuminate when jumpering the parking brake connector to ground.
32. If the brake warning lamp is on after jumpering the brake fluid level switch terminals, the switch is faulty.

Brake Lamp Warning Circuit Diagnosis

Step	Action	Value(s)	Yes	No
1	Turn the ignition ON. Is the brake warning lamp always on?		Go to*Step 2*	Go to*Step 18*
2	Check the ABS warning lamp. Is the ABS warning lamp also on?		Go to*Step 3*	Go to*Step 4*
3	Use a scan tool to check for diagnostic trouble codes (DTCs) and follow the procedures for any DTCs found. Is the lamp still on?		Go to*Step 4*	System OK
4	Release the parking brake fully. Is the lamp off?		System OK	Go to*Step 5*
5	Check the brake fluid level. Is the fluid level OK?		Go to*Step 7*	Go to*Step 6*
6	1. Fill the brake fluid reservoir with clean DOT 3 equivalent hydraulic fluid. 2. Replace the cap on the fluid reservoir. Is the lamp on?		Go to*Step 7*	System OK
7	Disconnect the harness connector from the brake fluid level switch. Is the lamp on?		Go to*Step 9*	Go to*Step 8*
8	Replace the brake fluid level switch. Is the repair complete?		System OK	
9	1. Connect the brake fluid level switch. 2. Disconnect the parking brake switch. Is the lamp on?		Go to*Step 11*	Go to*Step 10*
10	Replace the parking brake switch. Is the repair complete?		System OK	
11	Connect the parking brake switch. Is the vehicle equipped with ABS?		Go to*Step 12*	Go to*Step 14*
12	1. Turn the ignition OFF. 2. Disconnect the electronic brake control module (EBCM) connector. 3. Turn the ignition ON. Is the lamp on?		Go to*Step 14*	Go to*Step 13*
13	Replace the electronic brake control module (EBCM). Is the repair complete?		System OK	
14	1. Turn the ignition OFF. 2. Connect the EBCM connector. 3. Check for a short to ground in the wiring between the instrument cluster terminal A2 and the brake fluid level switch. Is the problem found?		Go to*Step 17*	Go to*Step 15*
15	Check for a short to ground in the wiring between the instrument cluster terminal A2 and the parking brake switch. Is the problem found?		Go to*Step 17*	Go to*Step 16*

Step	Action	Value(s)	Yes	No
16	Check for a short to ground in the wiring between the instrument cluster terminal A2 and the EBCM connector terminal 21. Is the problem found?		Go to*Step 17*	Go to*Step 18*
17	Repair the wiring as needed. Is the repair complete?		System OK	
18	Check the brake lamp after doing each of the following functions: • Apply the parking brake. • Remove the cap from the brake fluid reservoir. • On vehicles equipped with ABS, command the lamp on using a scan tool. Does the brake warning lamp operate for all of these conditions?		System OK	Go to*Step 19*
19	When the operations listed in step 18 were performed, the brake warning lamp did not function. Did the brake warning lamp fail to light for all of the operations listed in step 18?		Go to*Step 20*	Go to*Step 27*
20	1. Turn the ignition OFF. 2. Inspect the kick panel fuse F5. Is the fuse OK?		Go to*Step 22*	Go to*Step 21*
21	Replace the fuse. Is the repair complete?		System OK	
22	Inspect the brake warning lamp bulb. Is the bulb OK?		Go to*Step 24*	Go to*Step 23*
23	Replace the bulb. Is the repair complete?		System OK	
24	1. Disconnect the instrument cluster connector. 2. Turn the ignition ON. 3. Measure the voltage at the instrument cluster connector terminal A2. Does the voltagemeasurewithin the value specified?	11–14 v	Go to*Step 25*	Go to*Step 26*
25	1. Turn the ignition OFF. 2. Repair the open in the instrument cluster. Is the repair complete?		System OK	
26	1. Turn the ignition OFF. 2. Repair the open in the wiring between the instrument cluster connector terminal A2 and the ignition switch. Is the repair complete?		System OK	
27	Apply the parking brake again. Does the parking brake warning lamp operate with the parking brake applied?		Go to*Step 28*	Go to*Step 30*
28	Remove the brake fluid reservoir cap. Does the parking brake warning lamp operate with the cap from the brake fluid reservoir removed?		Go to*Step 29*	Go to*Step 32*
29	Check for an open between the instrument cluster connector terminal B13 and the EBCM connector terminal 21. Is the problem found?		Go to*Step 17*	Go to*Step 13*

Step	Action	Value(s)	Yes	No
30	1. Turn the ignition ON. 2. Disconnect the parking brake switch. 3. Jumper the parking brake switch connector terminal to ground. Is the lamp on?		Go to*Step 10*	Go to*Step 31*
31	1. Turn the ignition OFF. 2. Repair the open in the wire between the instrument cluster connector terminal B13 and the parking brake switch connector terminal. Is the repair complete?		System OK	
32	1. Disconnect the brake fluid level switch. 2. Turn the ignition ON. 3. Jumper the brake fluid level switch connector terminals. Is the lamp on?		Go to*Step 8*	Go to*Step 33*
33	1. Turn the ignition OFF. 2. Connect a test light between battery positive and the BRN/WHT wire terminal of the brake fluid level switch. Is the test light on?		Go to*Step 34*	Go to*Step 35*
34	Repair the open in the wiring between ground and the brake fluid level switch. Is the repair complete?		System OK	
35	Repair the open in the wiring between the instrument cluster connector terminal B13 and the brake fluid level switch. Is the repair complete?		System OK	

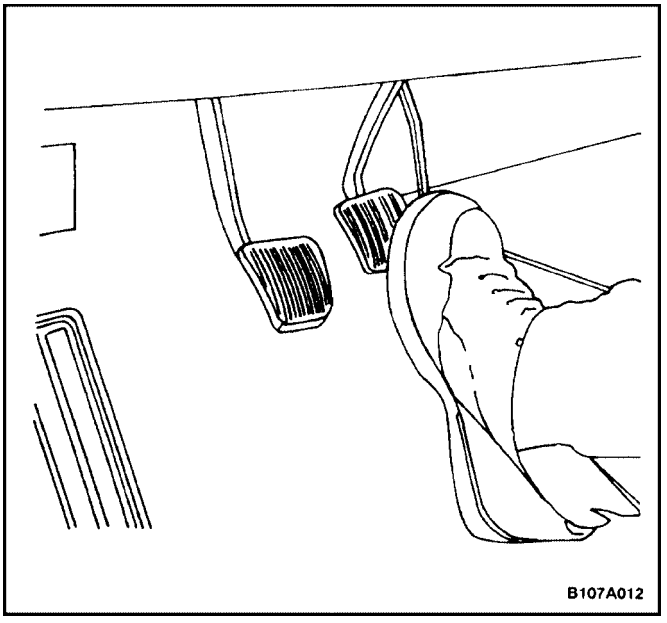

MAINTENANCE AND REPAIR

ON–VEHICLE SERVICE

MANUAL BLEEDING THE BRAKES

1. Remove the booster reserve by applying the brakes several times with the engine OFF until all the reserve is depleted.

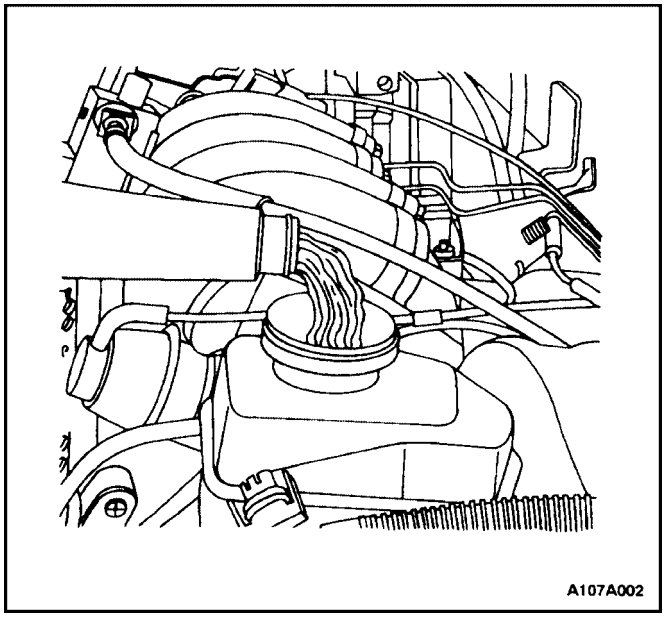

Important : If the master cylinder is known or suspected to have air in the bore, then it must be bled before any wheel cylinder or caliper is bled.

2. Fill the master cylinder reservoir with brake fluid. Keep the master cylinder at least one–half full of fluid during the bleeding operation.

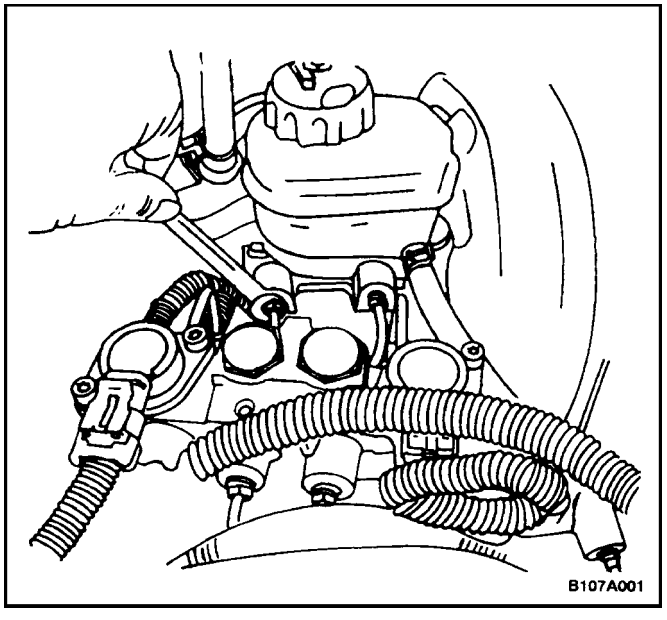

3. Disconnect the front brake line(s) at the master cylinder.
4. Allow the brake fluid to fill the master cylinder until it begins to flow from the front pipe connector port.
5. Connect the front brake line(s) to the master cylinder.

Tighten

Tighten the brake lines to 16 N•m (12 lb–ft).

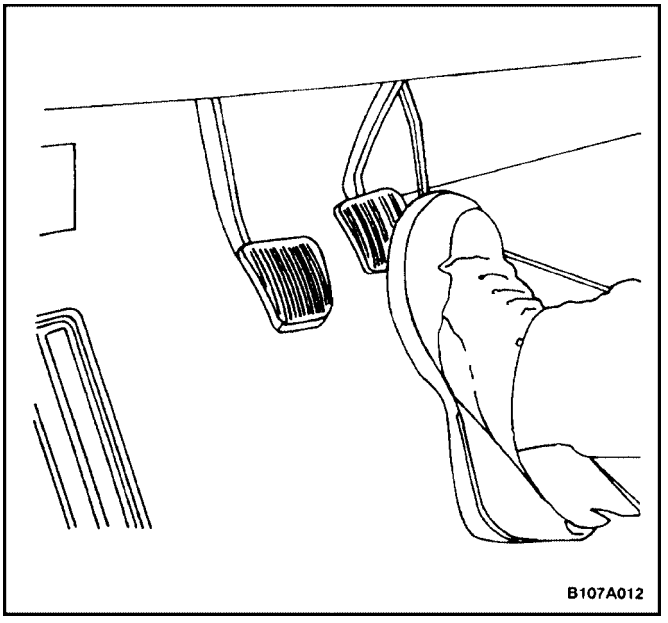

6. Slowly push and hold the brake pedal one time.

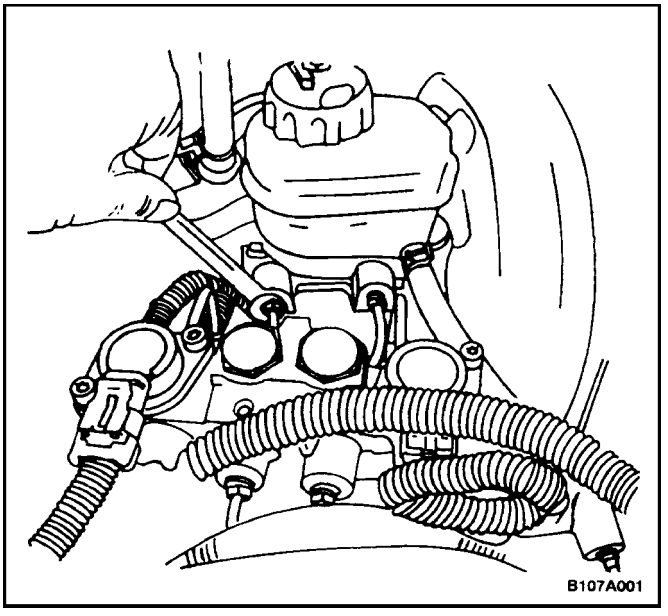

7. Loosen the front brake line at the master cylinder to purge air from the cylinder.
8. Tighten the brake line (as in step 5), and then release the brake pedal slowly. Wait 15 seconds before proceeding to the next step.
9. Repeat the sequence, including the 15–second wait, until all the air is removed from the master cylinder bore.

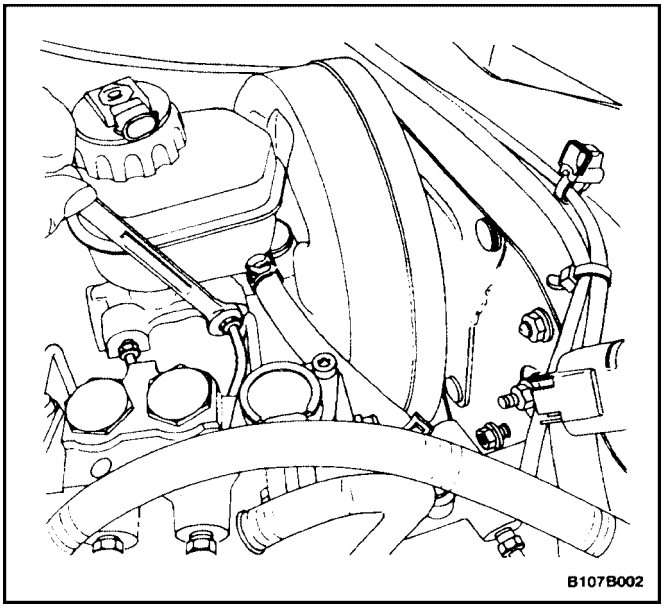

Notice : Care must be taken to prevent brake fluid from contacting any painted surface to prevent damage to the paint finish.

10. After all the air has been removed at the forward connection(s), bleed the master cylinder at the rear (cowl) connection(s) in the same manner as with the front connections.

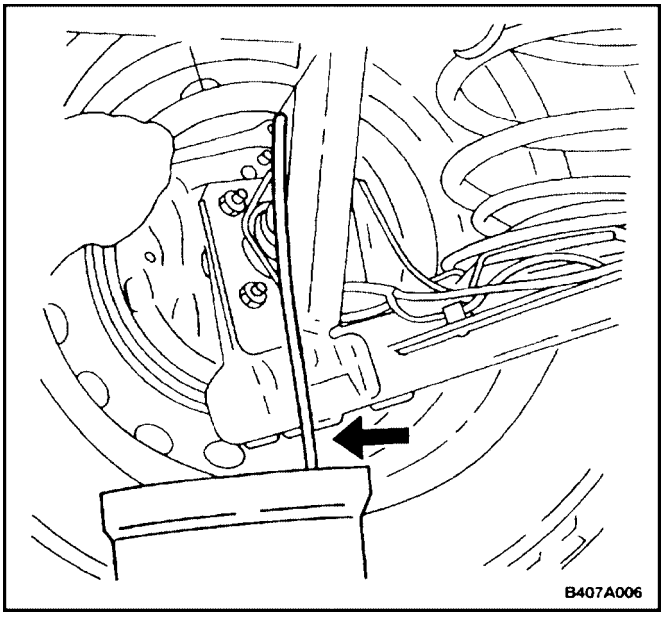

Important : For vehicles equipped with a non–antilock braking system, the bleeding sequence is as follows: right rear, left rear, left front and right front. For ABS vehicles, refer to*Section 4F, Antilock Brake System* for the correct sequence and bleeding procedure.

11. Attach a transparent tube over the valve. Allow the tube to hang submerged in brake fluid in a transparent container.

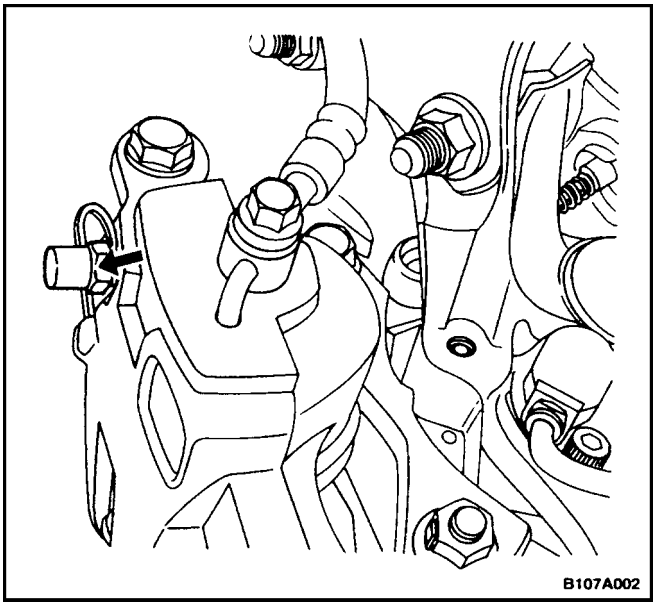

12. Slowly push and hold the brake pedal one time.
13. Remove the bleeder valve dust cover and loosen the bleeder screw to purge the air from the cylinder.
14. Slowly release the brake pedal. Wait 15 seconds before proceeding with the next step.

Important : Rapid pumping of the brake pedal pushes the master cylinder secondary piston down the bore in a manner that makes it difficult to bleed the system.

15. Repeat the sequence, including the 15–second wait, until all the air is removed. It may be necessary to repeat the sequence 10 or more times to remove all the air.
16. Tighten the bleeder screw.

    Tighten

    Tighten the bleeder screw to 8 N•m (71 lb–in).

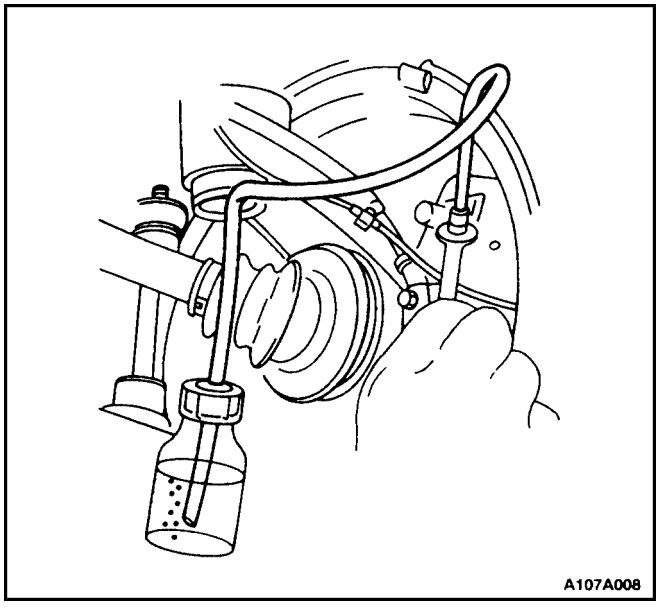

17. Proceed to bleed the front brakes following the appropriate sequence, beginning with step 12.
18. Check the brake pedal for sponginess. Repeat the entire bleeding procedure to correct this condition.

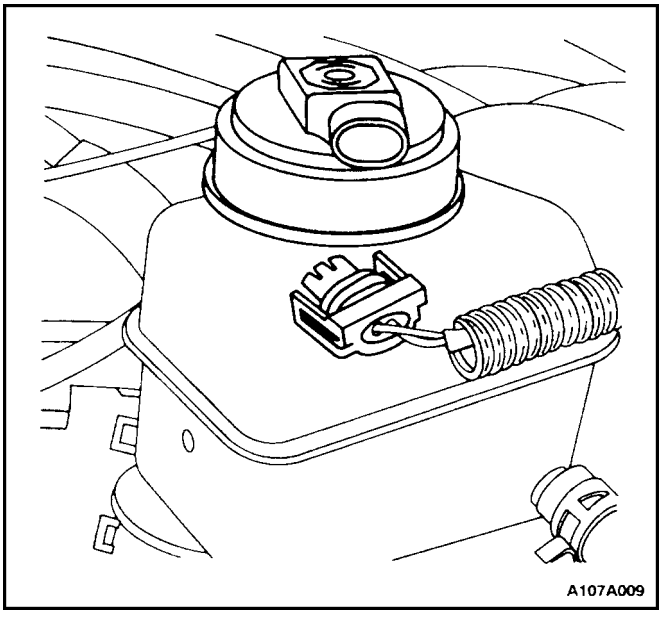
A107A009

PRESSURE BLEEDING THE BRAKES

Notice : Pressure bleeding equipment must be of the diaphragmtype. It must have a rubber diaphragm between the air supply and the brake fluid to preventir, moisture, oil, and other contaminants from entering the hydraulic system. Contamination could lead to deterioration of the raking components and loss of braking action.

1. Disconnect the master cylinder electrical connector.
2. Remove the master cylinder reservoir cap.

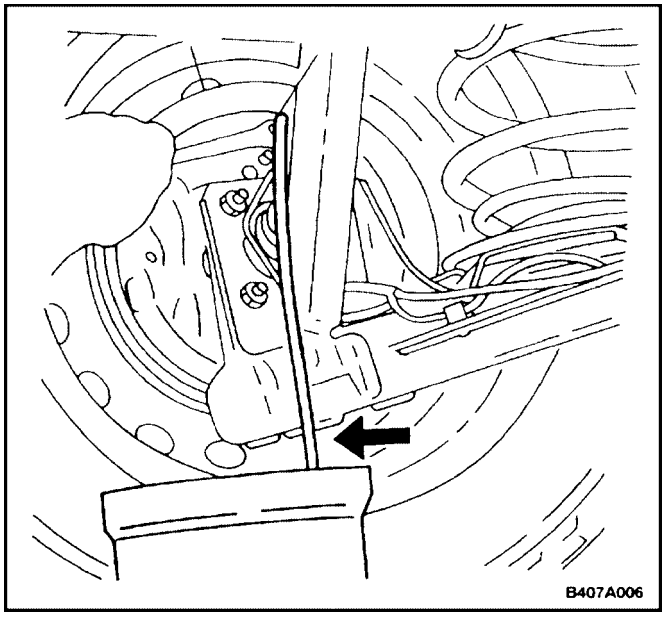
B407A006

3. Connect the bleeder with the adapter to the master cylinder reservoir.
4. For vehicles with the antilock braking system (ABS), locate and remove the hydraulic modulator bleeder valves. Refer to*Section 4F, Antilock Brake System*
5. Charge the bleeder ball to 140 to 172 kPa (20 to 25 psi).
6. Connect the line to the adapter. Open the line valve.
7. Raise and suitably support the vehicle.

Important : The bleeding sequence is as follows: right rear, left front, left rear and right front.

8. Attach the bleeder hose to the bleeder valve. Submerge the opposite end of the hose in a clean container partially filled with brake fluid.
9. A107A006 Open the bleeder valve one–half to three–fourths turn and allow the fluid to flow until no air is seen in the fluid.

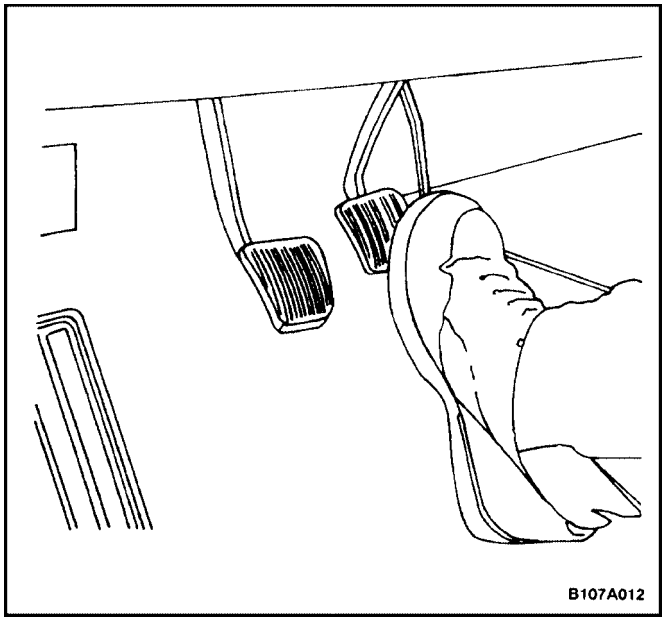
B107A012

Notice : After the bleeding operation, the brake reservoir may be pressurized. While disconnecting the bleeder hose or the unthreaded adapter cap, cover the cap and the connection with a shop towel to protect painted surfaces from contact with the brake fluid.

10. Inspect the brake pedal for sponginess. Repeat the entire bleeding procedure to correct this condition.
11. Tighten the bleeder valve and replace the dust covers.

Tighten

Tighten the bleeder valve to 8 N•m (71 lb–in).

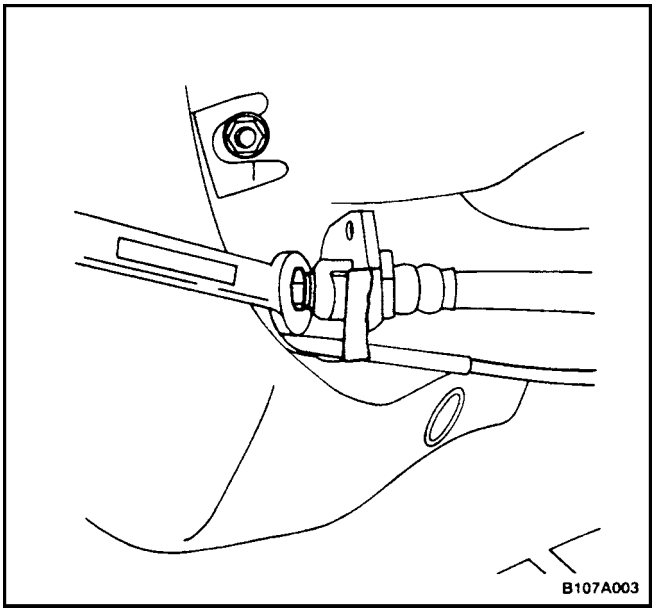

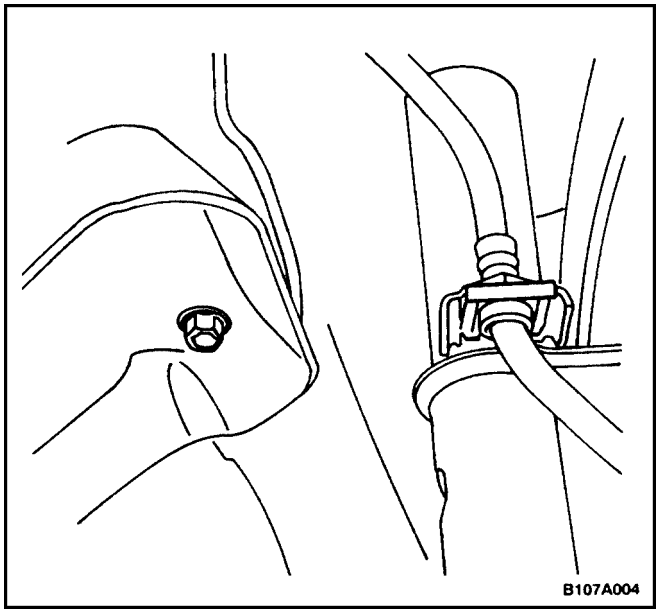

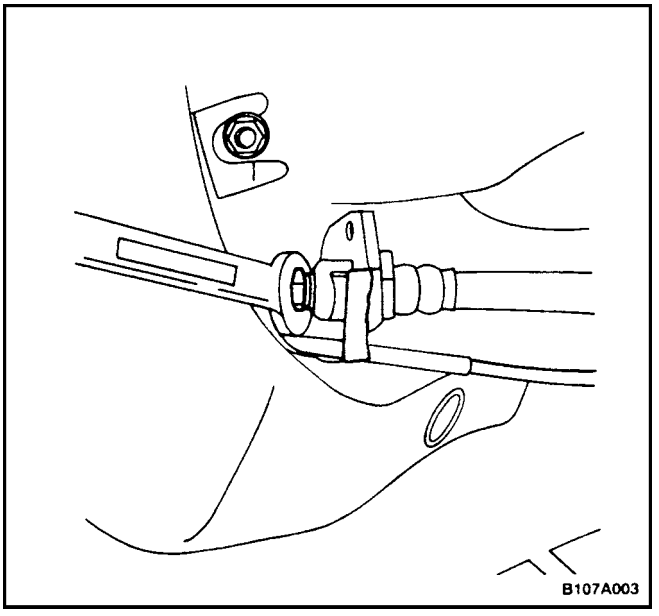

BRAKE HOSE REAR

Removal Procedure

1. Raise and suitably support the vehicle.
2. Disconnect the brake line from the disc brake hose at the wheel housing bracket on each side of the vehicle.
3. Remove the brake hose retainer.
4. Remove the rear disc brake hose retainer and the brake hose from the bracket on the steering knuckle shaft.
5. Remove the rear disc brake hose from the caliper.

Installation Procedure

1. Install the rear disc brake hose to the caliper.

   ### Tighten

   Tighten the rear disc brake hose–to–caliper bolt to 32 N•m (24 lb–ft).

2. Install the rear disc brake hose and retainer on the bracket on the steering knuckle shaft
3. Install the rear disc brake line to the brake hose on the wheel housing bracket.

   ### Tighten

   Tighten the brake line to 16 N•m (12 lb–ft).

4. Lower the vehicle.
5. Bleed the brake system. Refer to”Manual Bleeding the Brakes”in this section, or *Section 4F, Antilock Brakes,* if applicable.
6. Check the brake system for leaks.

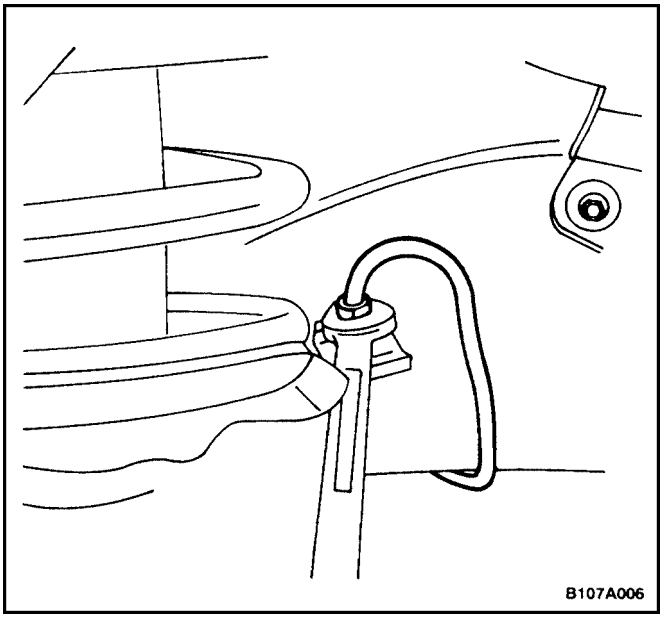

BRAKE HOSE FRONT

Removal Procedure

1. Raise and suitably support the vehicle.
2. Disconnect the brake line from the brake hose support bracket on the wheel housing on each side of the vehicle.
3. Remove the retainer.

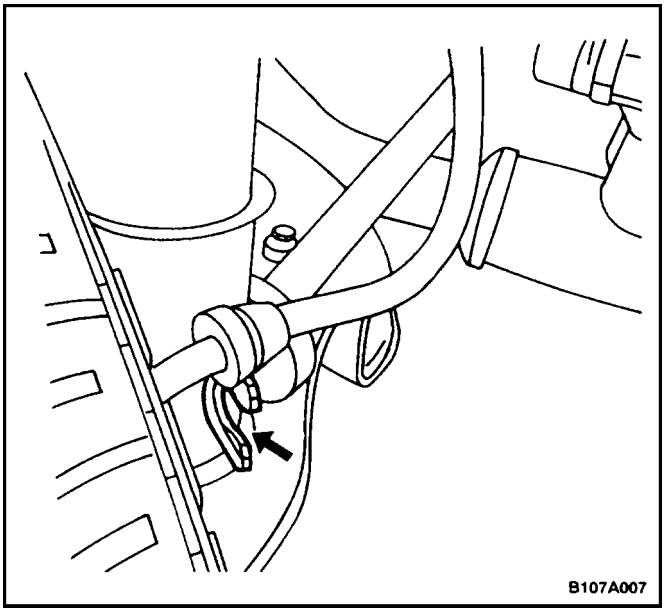

4. Disconnect the brake hose from the ”C” bracket on the steering knuckle shaft.

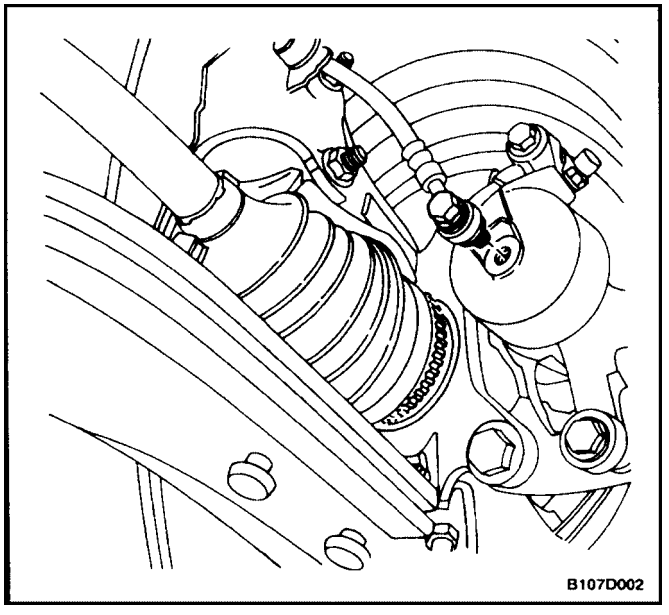

5. Remove the bolt from the brake caliper.
6. Remove the seal rings and the disc brake hose.

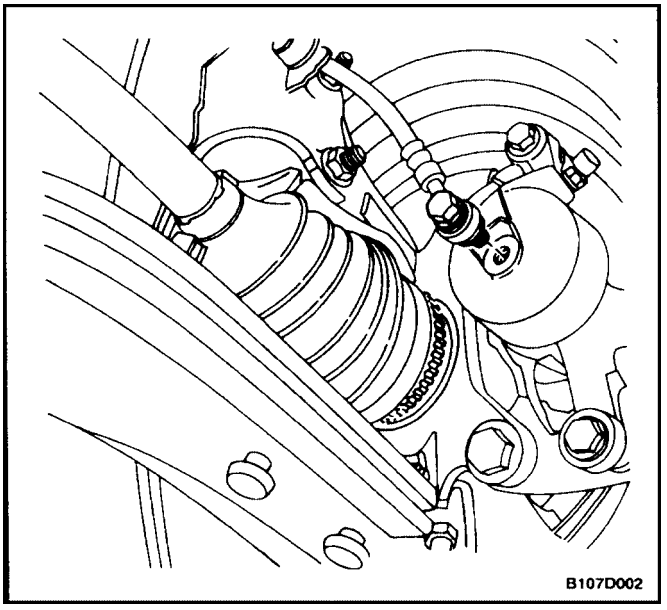

Installation Procedure

1. Install the new disc brake hose to the caliper with new seal rings and the bolt.

   Tighten

   Tighten the front disc brake hose–to–caliper bolt to 40 N•m (30 lb–ft).

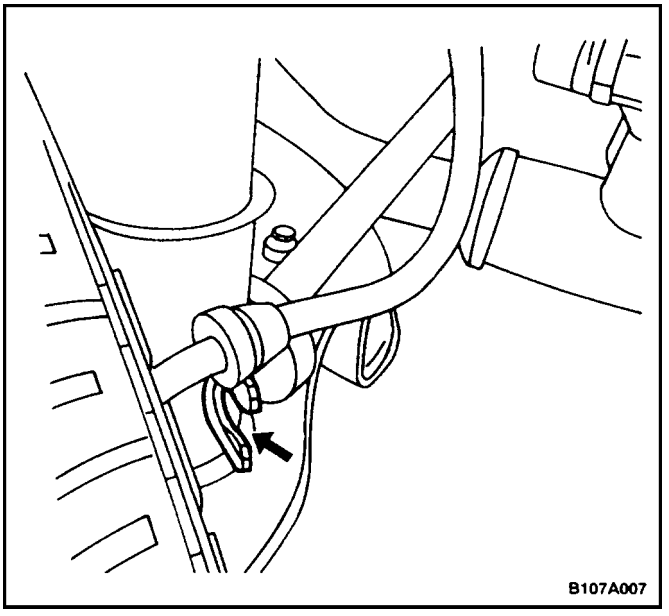

2. Slide the brake hose on the steering knuckle shaft ”C” bracket.

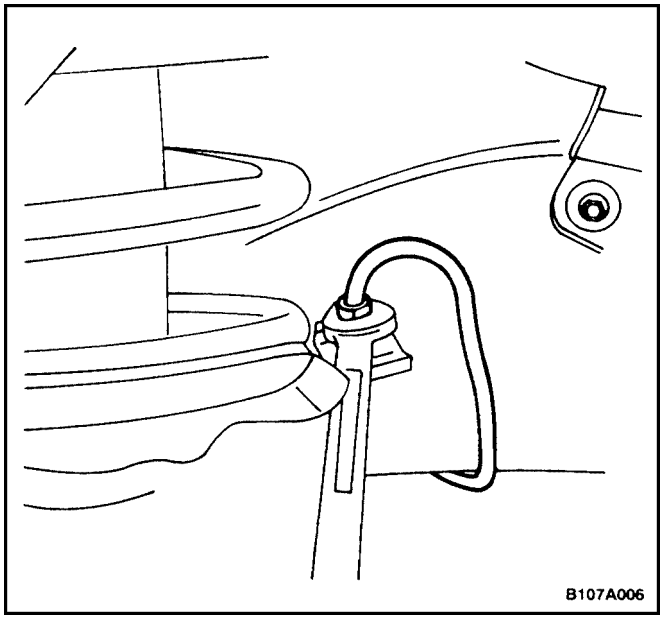

3. Connect the brake line to the brake hose on the wheel housing bracket on each side of the vehicle.

   Tighten

   Tighten the brake line to 16 N•m (12 lb–ft).
4. Lower the vehicle.
5. Bleed the brake system. Refer to”Manual Bleeding the Brakes” in this section.
6. Check the brake system for leaks.

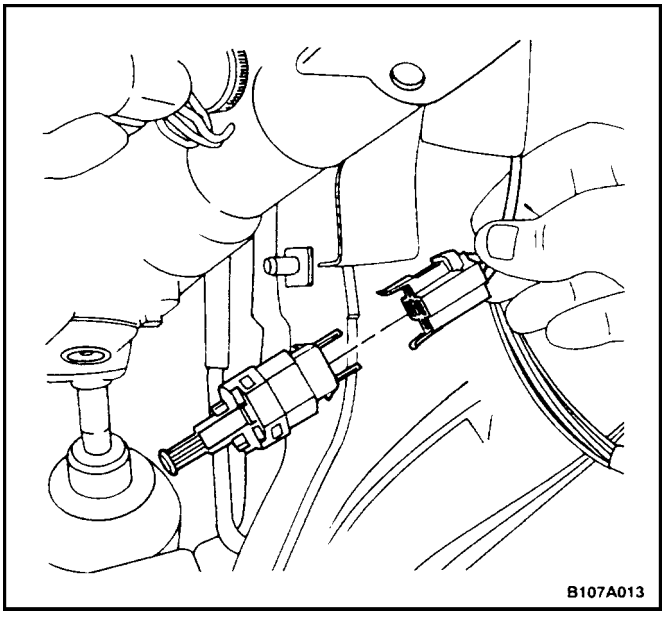

STOPLAMP SWITCH

Removal Procedure

1. Disconnect the negative battery cable.
2. Disconnect the connector from the stoplamp switch.
3. Rotate the switch and remove it from the brake pedal bracket.

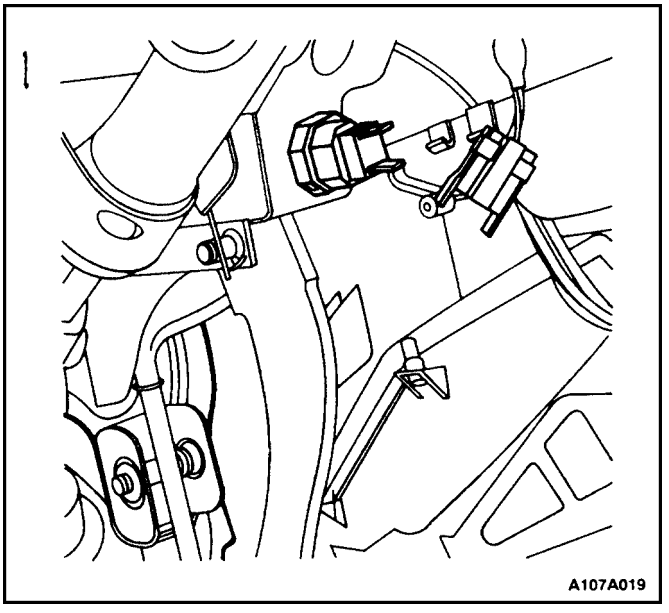

Installation Procedure

1. Insert the stoplamp switch into the brake pedal bracket and rotate the switch to lock it.
2. Connect the electrical connector to the stoplamp switch.
3. Press the brake pedal and pull the switch plunger to its maximum setting to adjust the switch.
4. Release the plunger and pull up on the pedal.
5. Connect the negative battery cable.

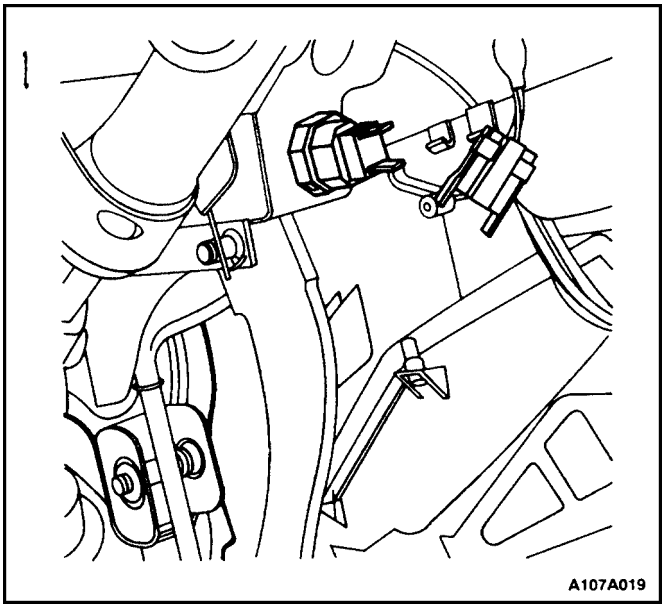

BRAKE PEDAL

Removal Procedure

1. Remove the stoplamp switch.

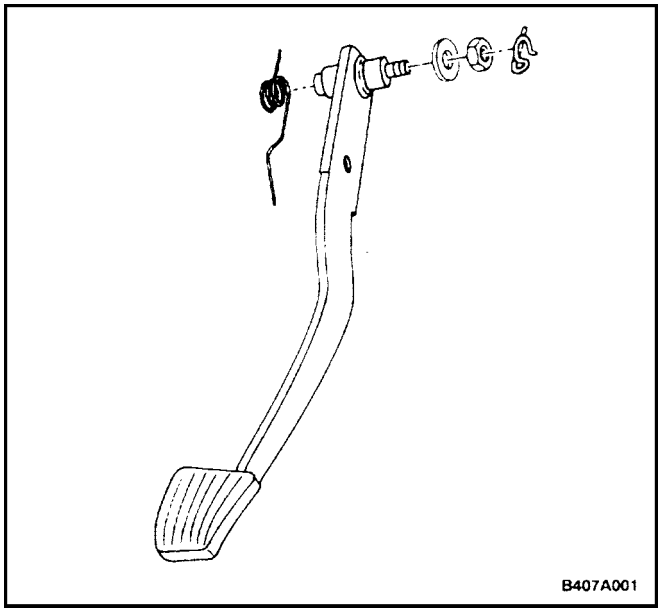

2. Notice how the brake pedal return spring is installed so that it can be reinstalled the same way. Move the end of the brake return spring away from the clevis retainer on the brake pedal.
3. Remove the clip, the retainer, and the clevis pin from the brake pedal.
4. Remove the retaining clip from the brake pedal shaft, and remove the nut and the washer from the shaft.
5. Remove the pedal shaft and the brake pedal.

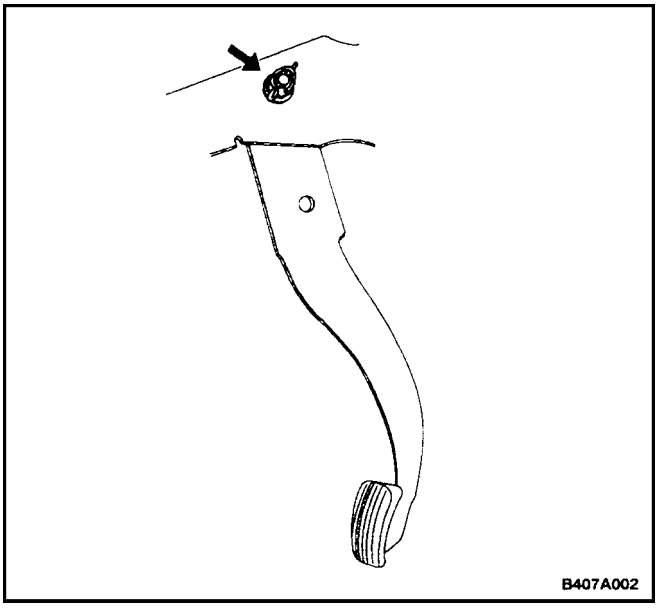

Installation Procedure

1. Coat the pedal shaft with grease.
2. Place the brake pedal and the return spring in the brake pedal bracket, and install the shaft, the washer, and the nut.

   Tighten

   Tighten the shaft nut to 18 N•m (13 lb–ft).
3. Install the retaining clip into the hole in the pedal shaft.
4. Align the clevis with the holes in the brake pedal, and install the clevis pin, the clevis retainer, and the clip.

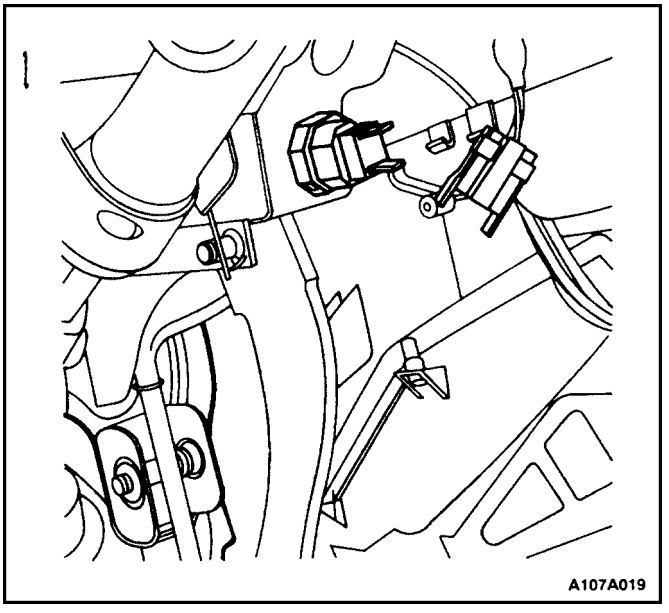

5. Install the stoplamp switch.

GENERAL DESCRIPTION AND SYSTEM OPERATION

HYDRAULIC FLUID

Brake fluid should meet the DOT–3 specification. Use DOT–4 fluid for heavy duty applications such as trailer towing or mountain driving. Use only clean fluid from a sealed container. Fluid exposed to air will absorb moisture from the air. Water in the brake fluid will cause the fluid to boil, and the rubber components to deteriorate.

Thoroughly cleanthemaster cylinder reservoir capbefore removing it. Do not let any dirt or foreignmaterial fall into thefluidreservoir.

There is a fluid level switch in the master cylinder reservoir. When the fluid level is low, the BRAKE lamp in the instrument cluster will turn on. The correct brake fluid level is marked on the driver's side of the master cylinder reservoir. If the fluid level is below the MIN indicator mark, check the hydraulic brake system for leaks and then refill the reservoir to the MAX indicator mark.

SECTION : 4B

MASTER CYLINDER

CAUTION : Disconnect the negative battery cable before removing or installing any electrical unit or when a tool or equipment could easily come in contact with exposed electrical terminals. Disconnecting this cable will help prevent personal injury and damage to the vehicle. The ignition must also be in LOCK unless otherwise noted.

TABLE OF CONTENTS

SPECIFICATIONS 4B–1
FASTENER TIGHTENING SPECIFICATIONS . 4B–1
DIAGNOSIS 4B–1
CHECKING BRAKE PROPORTIONING VALVE 4B–1
MAINTENANCE AND REPAIR 4B–3
ON–VEHICLE SERVICE 4B–3
MASTER CYLINDER ASSEMBLY 4B–3
BRAKE FLUID RESERVOIR 4B–5
PROPORTIONING VALVE 4B–7
UNIT REPAIR 4B–8
MASTER CYLINDER OVERHAUL 4B–8
GENERAL DESCRIPTION AND SYSTEM OPERATION 4B–11
MASTER CYLINDER 4B–11
PROPORTIONING VALVE 4B–11
FLUID LEVEL SENSOR 4B–11

SPECIFICATIONS

FASTENER TIGHTENING SPECIFICATIONS

Application	N•m	Lb–Ft	Lb–In
Brake Lines	16	12	–
Master Cylinder Attaching Nuts	18	13	–
Proportioning Valves	22	16	–

DIAGNOSIS

CHECKING BRAKE PROPORTIONING VALVE

Use two brake pressure gauges to check the brake proportioning valves that are attached to the master cylinder on non–ABS braking systems. These valves limit the outlet pressure to the rear brakes after a predetermined master cylinder pressure has been reached. (On ABS braking systems, the hydraulic modulator/ motor pack assembly controls the hydraulic pressure to both the rear wheel cylinders or rear calipers, and the front calipers.)

When checking the brake proportioning valves, be sure that the hydraulic line pressure is measured simultaneously and diagonally on the front and the rear axles. To measure the pressure, use the following steps.

1. Remove the bleeder valve and install a pressure gauge to one of the rear brake cylinders.
2. Install another bleeder valve and install another pressure gauge to the diagonally opposite front brake.
3. Build pressure by pressing firmly on the brake pedal several times. (The pressure indicated on the gauge is not regulated and represents the actual brake system hydraulic pressure.)
4. Build pressure until the test values in the following proportioning valve test chart are achieved.

Engine	Reference Number for Gradient and Switching Pressure on the Valve Housing	Input Pressure Read on the Manometer at the Front Axle in kPa (psi)	Output Pressure Read on the Manometer at the Front Axle in kPa (psi)
2.0L	0.3/40	500 (73)	500 (73)
	5 500 (798)	4 450 ± 200 (645 ± 29)	
	10 000 (1,450)	5 800 ± 300 (841 ± 44)	

Important : If the pressure exceeds 10 000 kPa (1,450 psi), the pressure reading on the rear gauge will not be accurate.

5. Remove the gauges from the tested brake circuit and repeat the test on the remaining circuit.

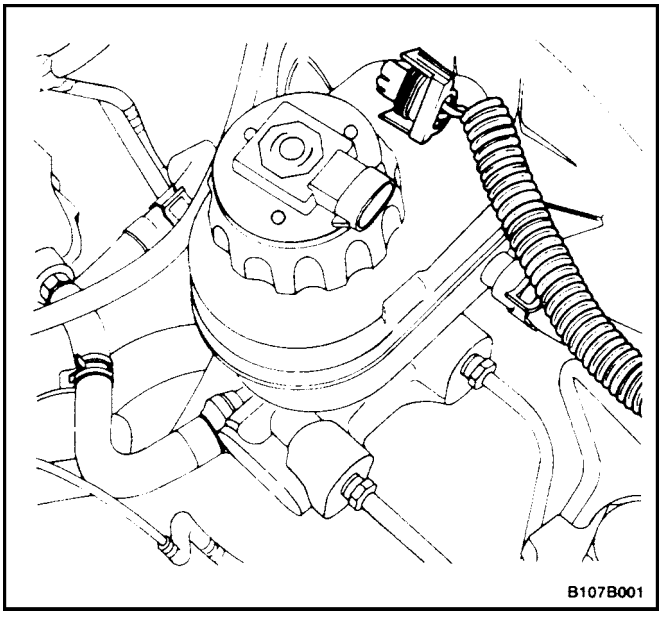

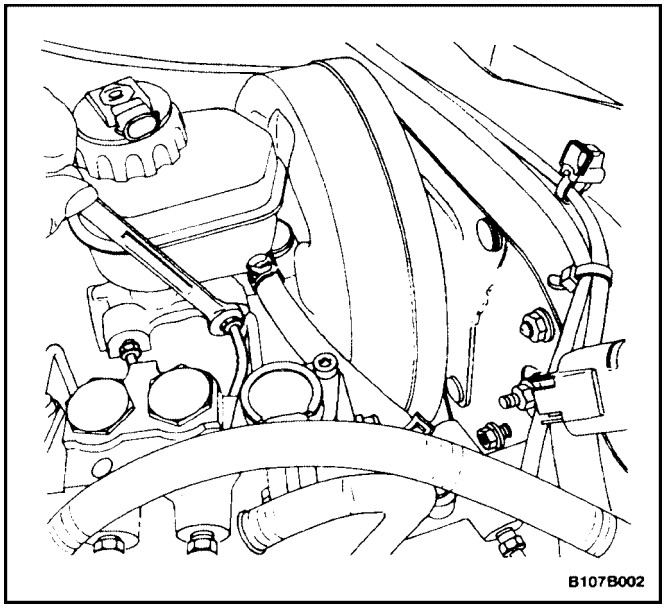

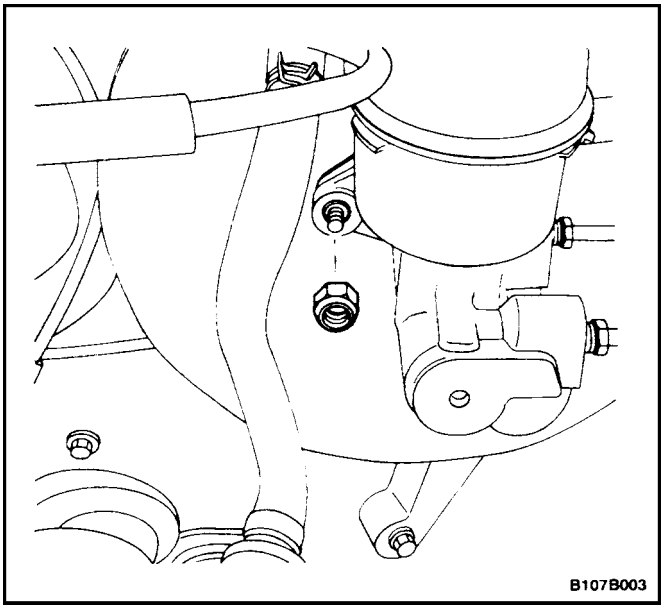

MAINTENANCE AND REPAIR

ON–VEHICLE SERVICE

MASTER CYLINDER ASSEMBLY

Removal Procedure

1. Disconnect the electrical connector from the reservoir cap.
2. For vehicles with the ABS braking system, disconnect the brake lines from the master cylinder body.
3. For vehicles with the non–ABS braking system, disconnect the brake lines from the proportioning valves.
4. For vehicles with the manual transaxle, disconnect the clip to the clutch hose connection to the master cylinder and move the clip out of the way.
5. Remove the clutch hose from the master cylinder if equipped.
6. Plug the opening to the brake lines to prevent fluid loss and contamination.
7. Remove the attaching nuts from the power booster.
8. Remove the master cylinder assembly.
9. Drain the brake fluid.

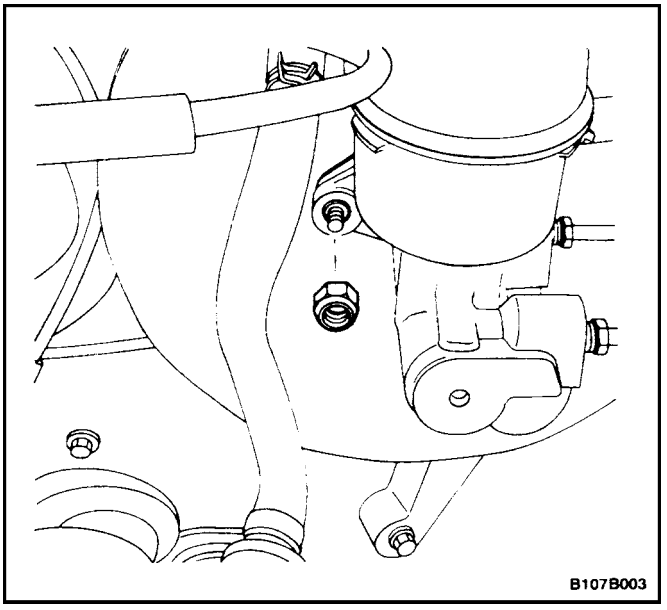

Installation Procedure

1. Install the master cylinder assembly with the new attaching nuts.

   Tighten

   Tighten the master cylinder attaching nuts to 18 N•m (13 lb–ft).

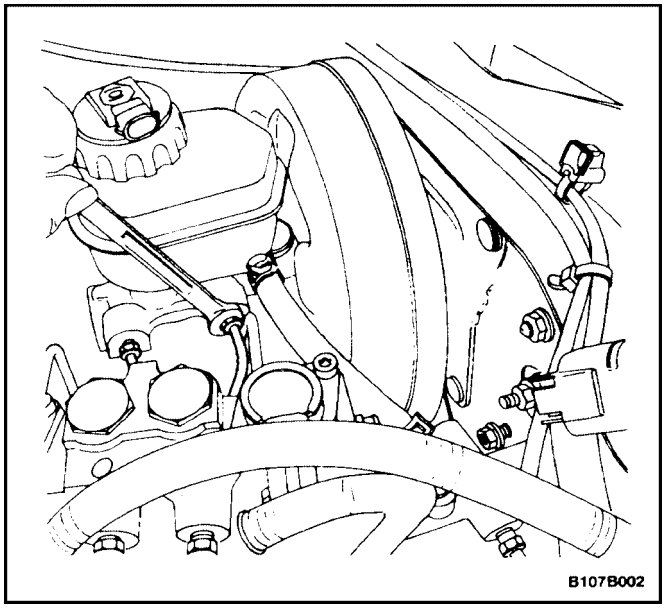

2. For vehicles with the ABS braking system (as shown), connect the brake lines to the cylinder body.
3. For vehicles with the non–ABS braking system, connect the brake lines to the proportioning valves.

   Tighten

   Tighten the brake lines to 16 N•m (12 lb–ft).
4. For vehicles with the manual transaxle, connect the clip to the clutch hose connection to the master cylinder reservoir if equipped.

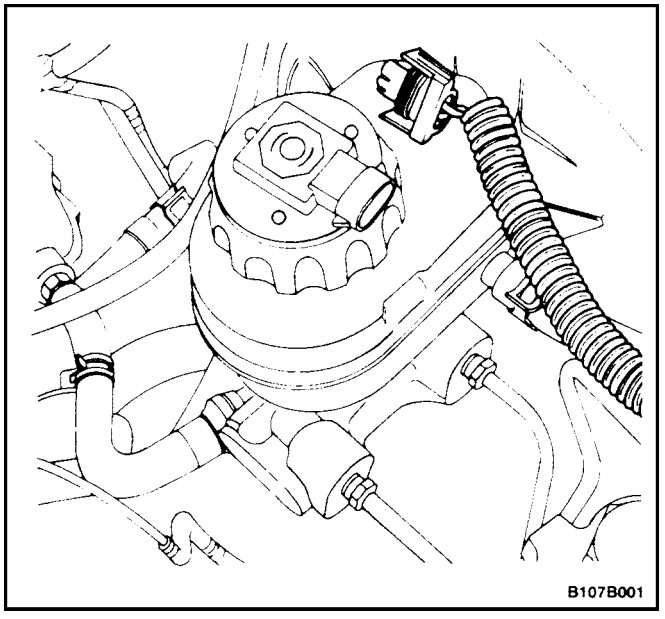

5. Connect the electrical connector on the reservoir cap.
6. Add brake fluid.
7. Check for leaks and recheck the fluid level.
8. Bleed the brake system. Refer to *Section 4A, Hydraulic Brakes*

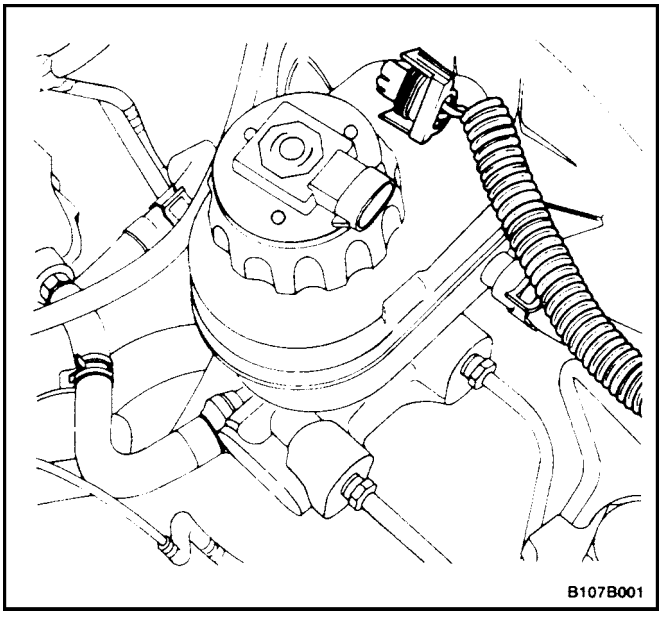

BRAKE FLUID RESERVOIR

Removal Procedure

Important : Remove the reservoir only when replacing a damaged or a leaking reservoir.

1. Disconnect the electrical connector from the reservoir cap.

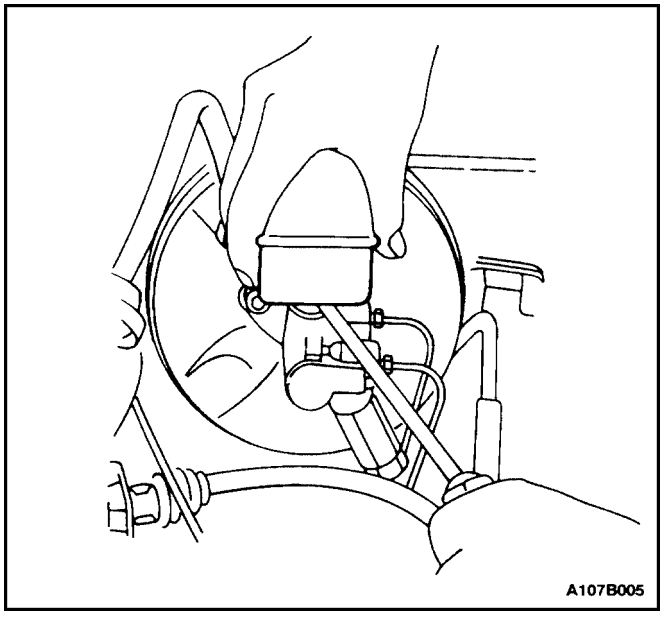

2. For vehicles with the manual transaxle, disconnect the clip to the clutch hose connection to the master cylinder, and move the clip out of the way.
3. Remove the clutch hose from the master cylinder.
4. Gently pry upwards with a screwdriver to release the reservoir.
5. Tilt the reservoir and pull it upward in order to remove it.

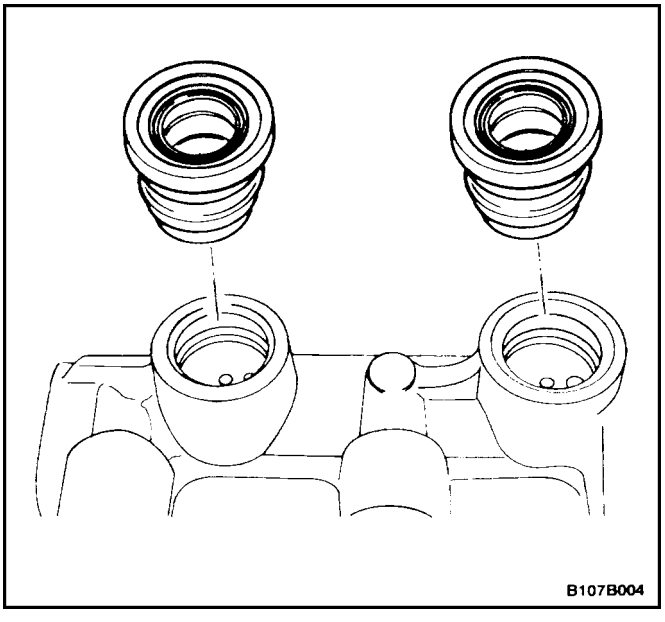

6. Remove the reservoir seals from the master cylinder body.

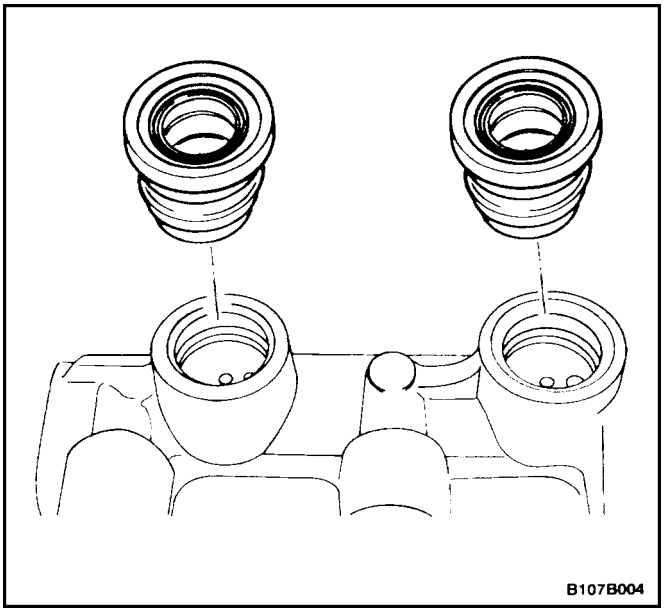

Installation Procedure

1. Lubricate the new seals with clean brake fluid. Install the seals into the cylinder body.
2. Install the reservoir on the master cylinder body.

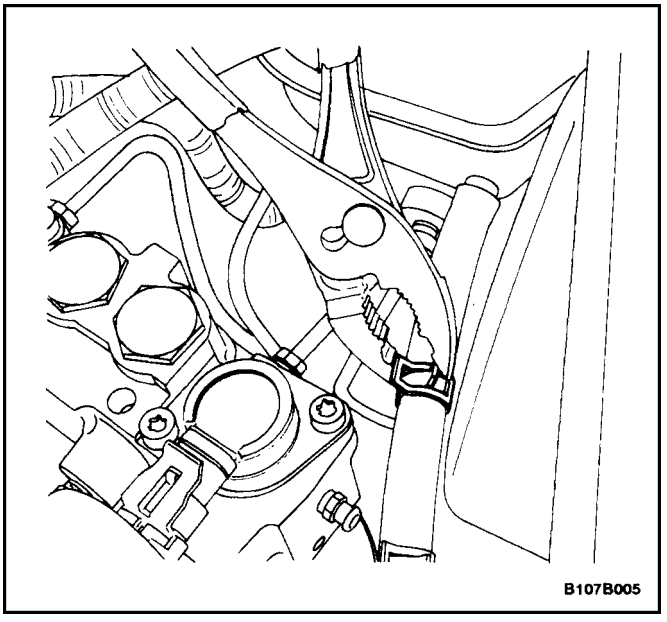

3. For vehicles with the manual transaxle, connect the clip to the clutch hose connection to the master cylinder.

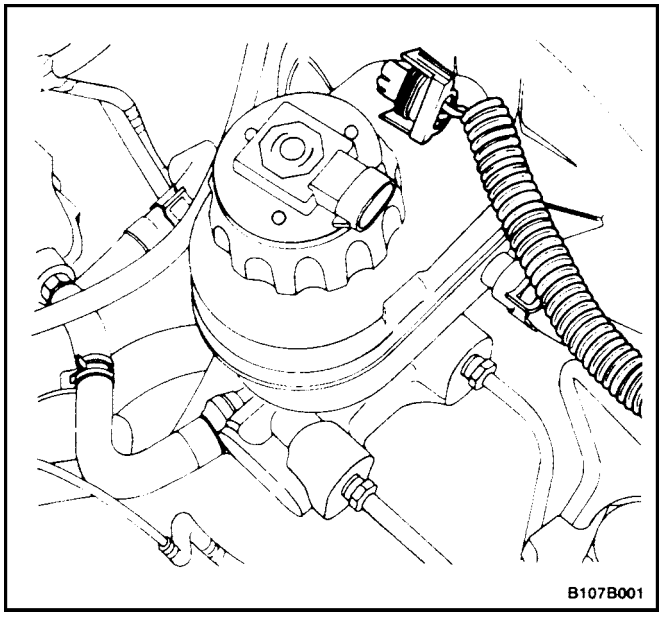

4. Add brake fluid.
5. Raise and suitably support the vehicle.
6. Bleed the braking system. Refer to*Section 4A, Hydraulic Brakes* or*Section 4F, Antilock Brake System.*
7. Bleed the clutch master cylinder. Refer to*Section 5C, Clutch.*
8. Lower the vehicle.
9. Connect the reservoir electrical connector.

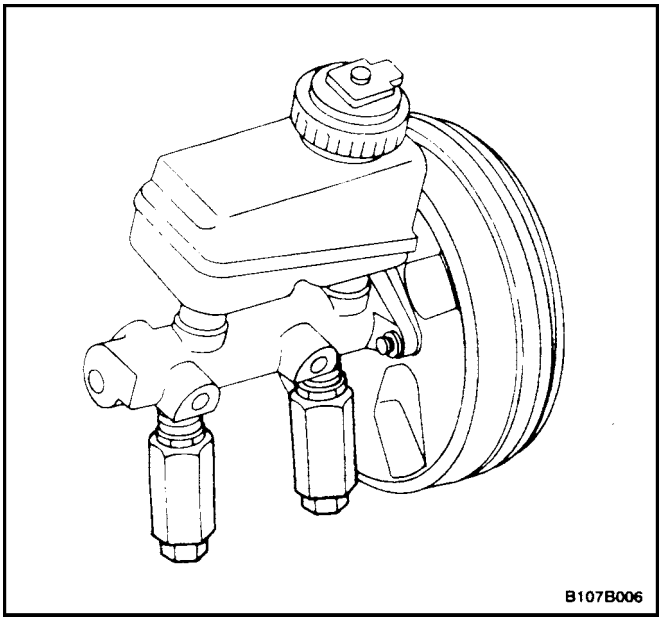

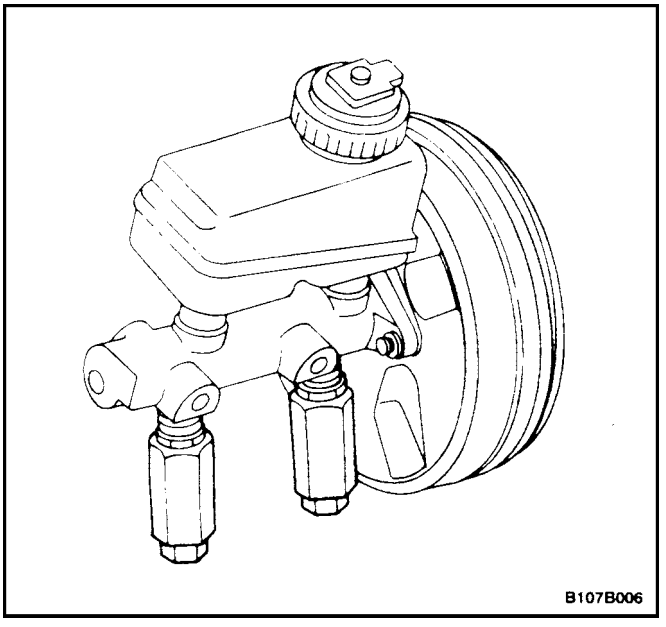

PROPORTIONING VALVE

Removal Procedure

1. Disconnect the brake lines from the proportioning valves.
2. Remove the valves from the master cylinder body.

Installation Procedure

Important : Since these valves are adjusted in pairs to the correct control range, they must be replaced in pairs.

1. Install the proportioning valves to the cylinder body.
   ### Tighten
   Tighten the proportioning valves to 22 N•m (16 lb–ft).
2. Connect the brake lines to the valves.
   ### Tighten
   Tighten the brake lines to 16 N•m (12 lb–ft).
3. Raise and suitably support the vehicle.
4. Bleed the braking system. Refer to*Section 4A, Hydraulic Brakes* or *Section 4F, Antilock Brake System.*
5. Lower the vehicle.

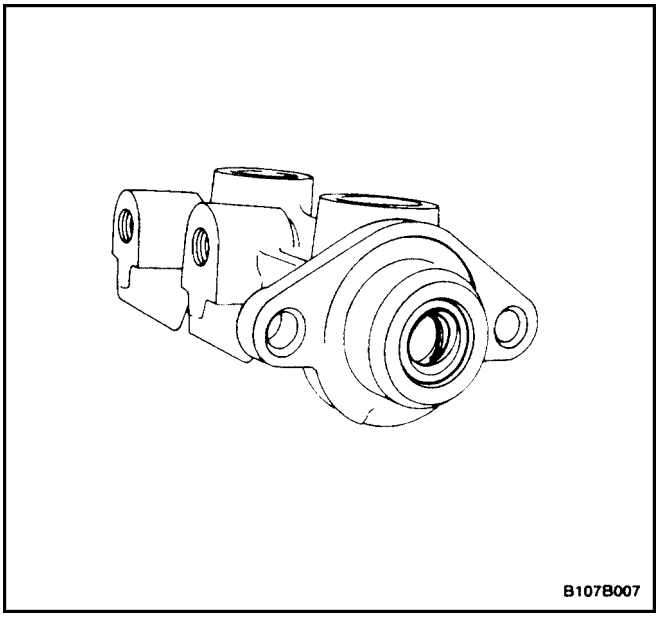

UNIT REPAIR

MASTER CYLINDER OVERHAUL

Disassembly Procedure

1. Remove the master cylinder. Refer to"Master Cylinder Assembly"in this section.
2. Remove the brake fluid reservoir. Refer to"Brake Fluid Reservoir"in this section.
3. Remove the seal ring from the cylinder bore.

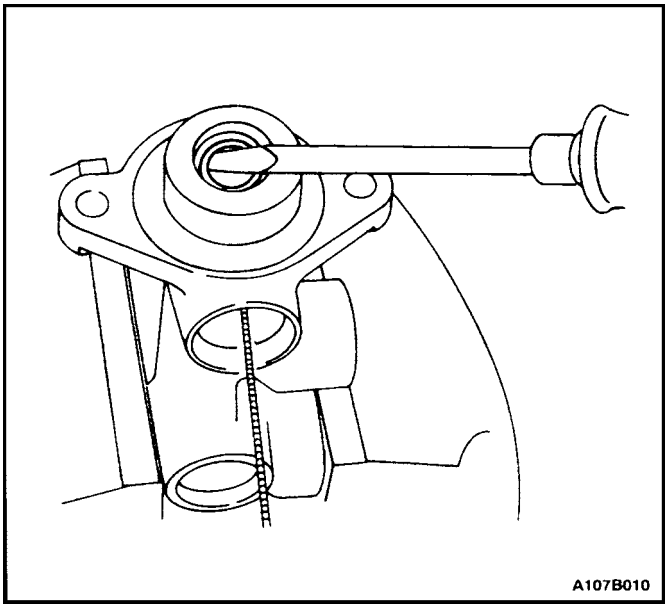

Notice : When removing the retaining ring, avoid damaging the piston or the cylinder wall.

Important : A welding rod or its equivalent can be used in a compensating port to keep the piston depressed.

4. Remove and discard the retaining ring from the cylinder body (the non–ABS master cylinder body is shown) using a suitable screwdriver.

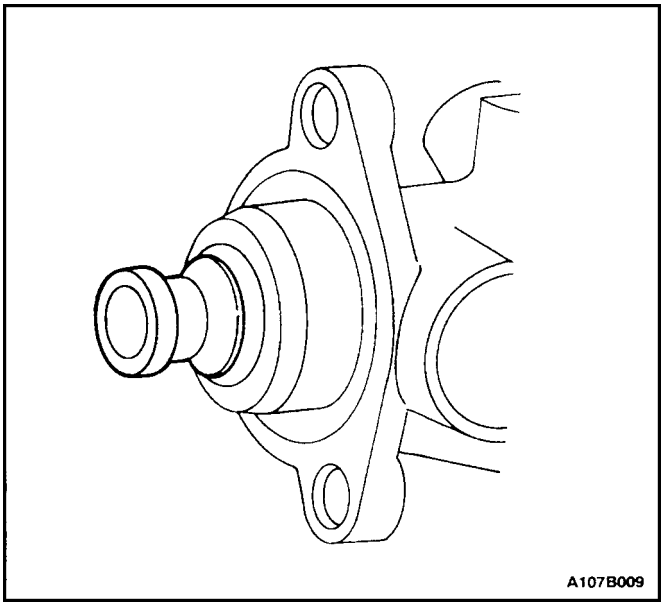

5. Remove the primary piston (the ABS master cylinder body is shown).
6. Carefully remove the secondary piston assembly, including the springs, from the master cylinder bore.

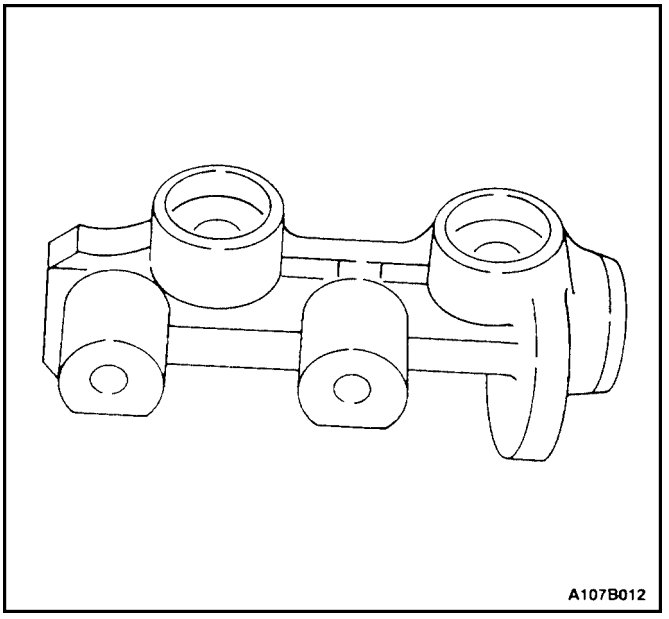
A107B012

Assembly Procedure

Notice : Do not use abrasives in the master cylinder bore. Abrasives can damage the bore.

Important : Rubber parts and retaining rings must be discarded and replaced with new parts.

1. Clean all parts with denatured alcohol or clean brake fluid. Dry the parts with compressed air. Do not use lubricated shop air on brake parts, as this may damage rubber components.
2. Inspect the master cylinder bore for scoring or corrosion. If scoring or corrosion is evident, replace the master cylinder body.
3. Lubricate the master cylinder bore (the non–ABS master cylinder is shown) with clean brake fluid.

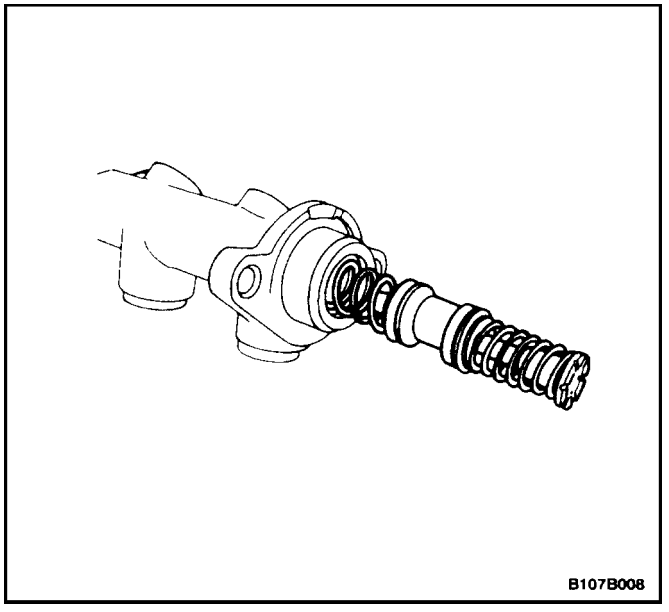
B107B008

4. Carefully insert the secondary piston assembly bore until the secondary piston contacts the base of the cylinder body. Use a wood or a plastic drift, if necessary.
5. Insert the primary piston.

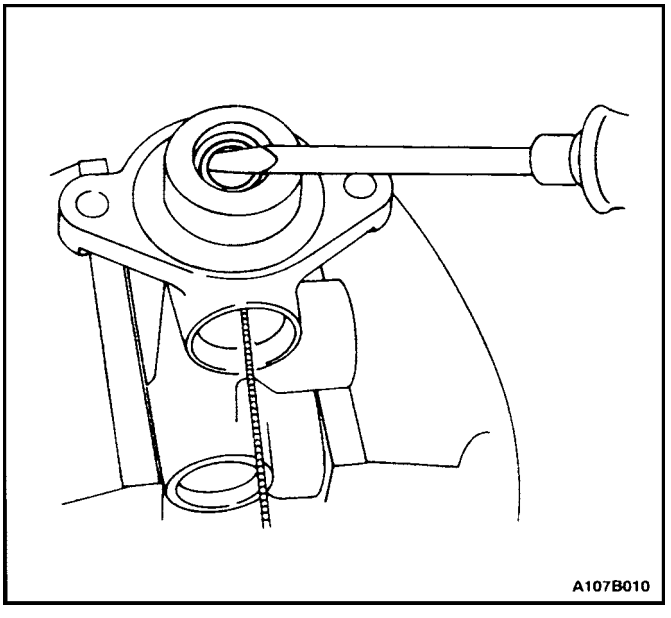
A107B010

6. Press the pistons into the cylinder bore using a wooden or a plastic drift.

Notice : When installing the new retaining ring, take care not to damage the cylinder bore.

7. Insert the new retaining ring into the groove in the cylinder bore (the non–ABS cylinder body is shown). Remove the welding rod.
8. Move the pistons backward and forward after installation to check for free movement.

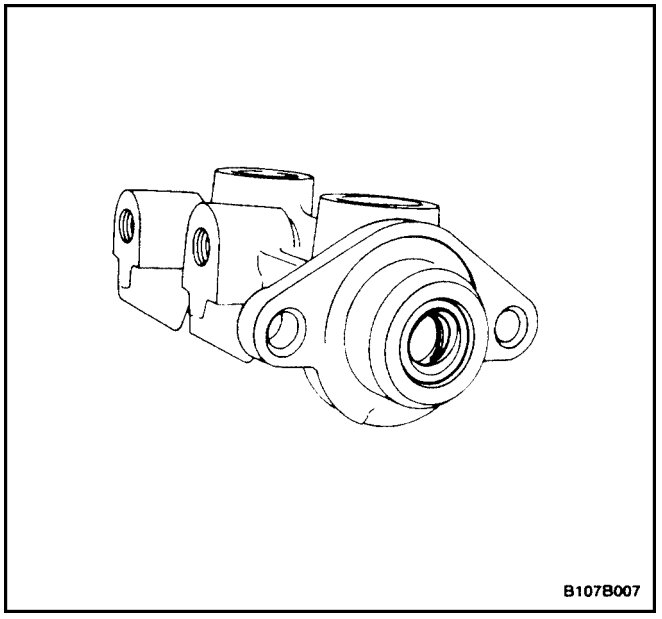

9. Lubricate the seal ring and insert the seal into the cylinder bore. The open side must face outward until the seal rests on the piston.
10. Install the brake fluid reservoir to the master cylinder. Refer to”Brake Fluid Reservoir”in this section.
11. Install the master cylinder assembly. Refer to the”Master Cylinder Assembly”in this section.
12. Raise and suitably support the vehicle.
13. Bleed the braking system. Refer to*Section 4A, Hydraulic Brakes* or *Section 4F, Antilock Brake System.*
14. Lower the vehicle.

GENERAL DESCRIPTION AND SYSTEM OPERATION

MASTER CYLINDER

The master cylinder is designed for use in a diagonalsplit system. One front and one diagonally opposite rear brake are served by the primary piston. The opposite front and rear brakes are served by the secondary piston. The master cylinder incorporates the functions of the standard dual master cylinder, plus a low fluid level indicator and the proportioning valves in the non–antilock braking system. The proportioning valves limit the outlet pressure to the rear brakes after a predetermined master cylinder pressure has been reached.

- Replace all the components included in the repair kits used to service this master cylinder.
- Lubricate rubber parts with clean brake fluid to ease assembly.
- Do not use lubricated shop air on brake parts, as this may damage rubber components.
- If any hydraulic component is removed or disconnected, it may be necessary to bleed all or part of the brake system.
- The torque values specified are for dry, unlubricated fasteners.
- Perform all service operations on a clean bench, free from all traces of mineral oil.

PROPORTIONING VALVE

The proportioning valves limit the outlet pressure to the rear brakes on the non–antilock braking system after a predetermined master cylinder pressure has been reached. This is used when less rear apply force is needed to obtain optimum braking and is usually found on disc/drum brake configurations. On ABS–equipped vehicles, refer to*Section 4F, Antilock Brake System.*

FLUID LEVEL SENSOR

The master cylinder is equipped with a fluid level sensor. This sensor will activate the BRAKE light if a low fluid level condition is detected. Once the fluid level is corrected, the BRAKE light will go out.

SECTION : 4C

POWER BOOSTER

CAUTION : Disconnect the negative battery cable before removing or installing any electrical unit or when a tool or equipment could easily come in contact with exposed electrical terminals. Disconnecting thes cable will help prevent personal injury and damage to the vehicle. The ignition must also be in LOCK unless otherwise noted.

TABLE OF CONTENTS

SPECIFICATIONS 4C–1
FASTENER TIGHTENING SPECIFICATIONS . 4C–1
DIAGNOSIS 4C–1
POWER BOOSTER FUNCTIONAL CHECK . . . 4C–1
MAINTENANCE AND REPAIR 4C–2
ON–VEHICLE SERVICE 4C–2
VACUUM HOSE 4C–2
POWER BOOSTER ASSEMBLY 4C–3
GENERAL DESCRIPTION AND SYSTEM OPERATION 4C–7
POWER BOOSTER 4C–7

SPECIFICATIONS

FASTENER TIGHTENING SPECIFICATIONS

Application	N•m	Lb–Ft	Lb–In
Booster–to–Dash Panel Nuts (Right–Hand Drive)	22	16	–
Booster Pushrod Hex Nut	18	13	–
Brake Line Fittings	16	12	–

DIAGNOSIS

POWER BOOSTER FUNCTIONAL CHECK

1. With the engine stopped, eliminate vacuum in the booster by pumping the brake pedal several times.
2. Push the pedal down and hold in this position.
3. Start the engine.
4. The booster is OK if the pedal drops further because of extra force produced.

If the brake pedal does not drop, the vacuum system (vacuum hoses, check valve, etc.) is probably defective and should be checked.

If no defect is revealed by checking the vacuum system, the defect is in the booster itself.

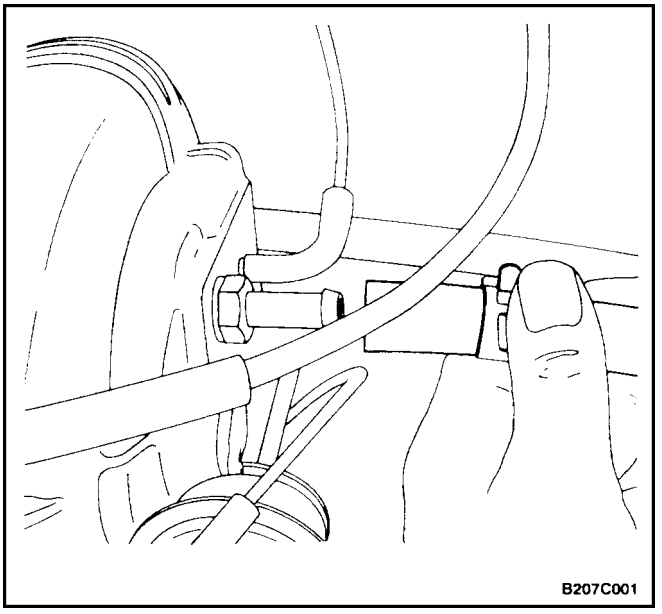

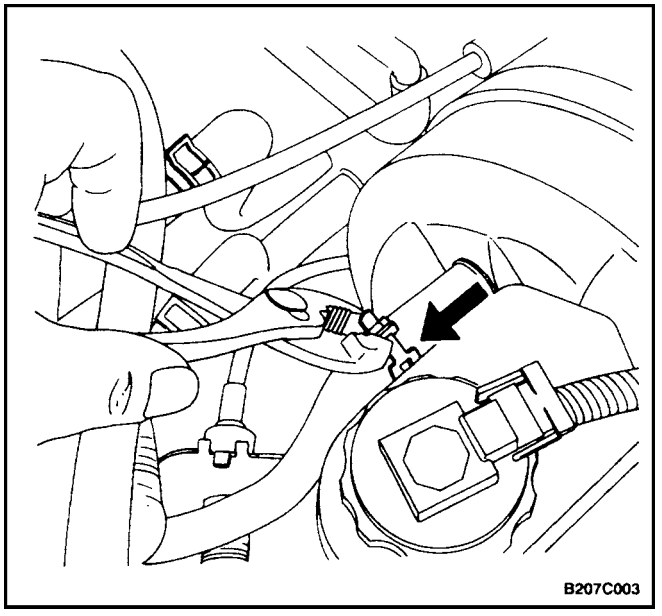

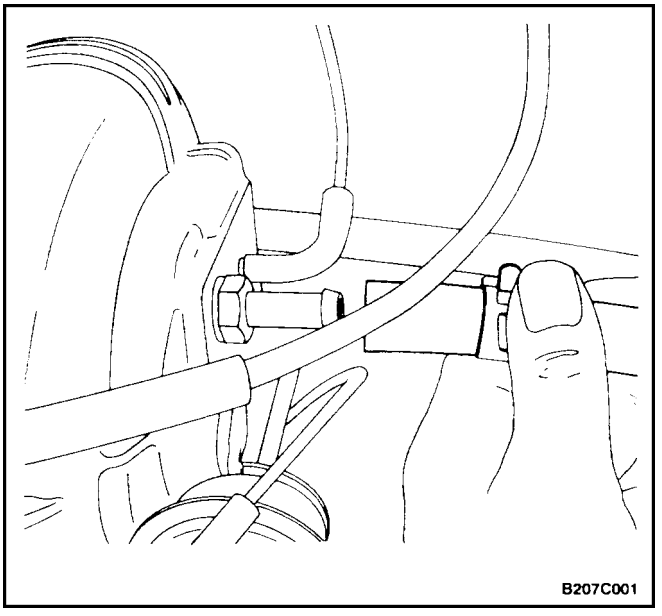

MAINTENANCE AND REPAIR

ON–VEHICLE SERVICE

VACUUM HOSE

Removal Procedure

1. Spread the clip on the vacuum hose connection at the intake manifold and move the clip slightly toward the brake booster.
2. Pull the hose from the union nut connection. If the hose does not remove easily or is deteriorated, pry off and discard the hose.
3. Spread the clip on the vacuum hose connection to the brake booster, and move the clip clear of the booster.
4. Remove the vacuum hose.

Installation Procedure

1. Mount the vacuum hose and ensure the connections are tight on each end.
2. Install the vacuum hose clips.
3. Check the function of the booster. Refer to the”Power Booster Functional Check”in this section.

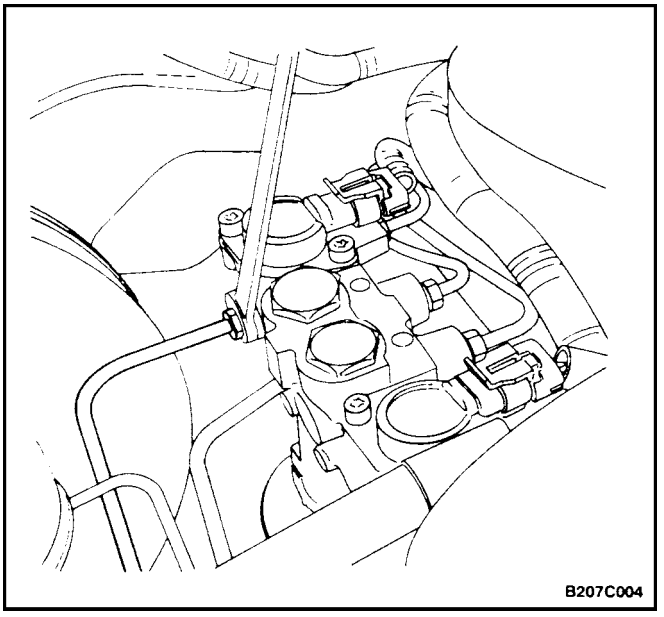

POWER BOOSTER ASSEMBLY

Removal Procedure

1. Remove the master cylinder. Refer to*Section 4B, Master Cylinder.*
2. Remove the brake lines to the hydraulic modulator for vehicles equipped with ABS.

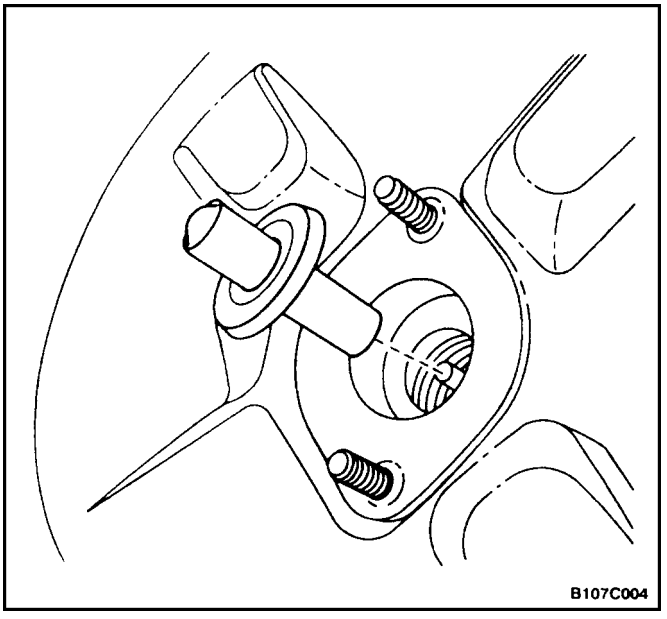

3. Remove the shaft and the rubber O–ring.

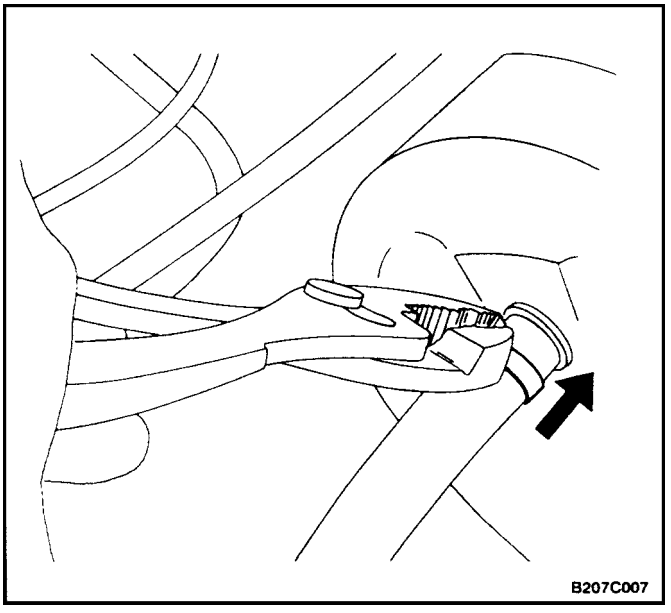

4. Remove the clip on the vacuum hose connection on the booster.
5. Disconnect the brake stoplamp switch from the brake pedal bracket.
6. Remove the brake pedal spring.
7. Disconnect the clip and the pushrod pin from the pedal bracket assembly. Refer to*Section 4A, Hydraulic Brakes.*

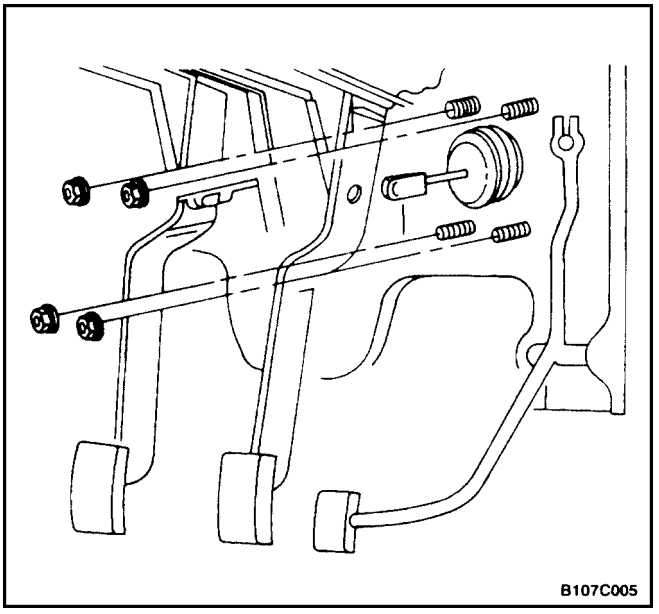

8. Remove the booster mounting nuts from the studs protruding from the dash panel and remove the booster.

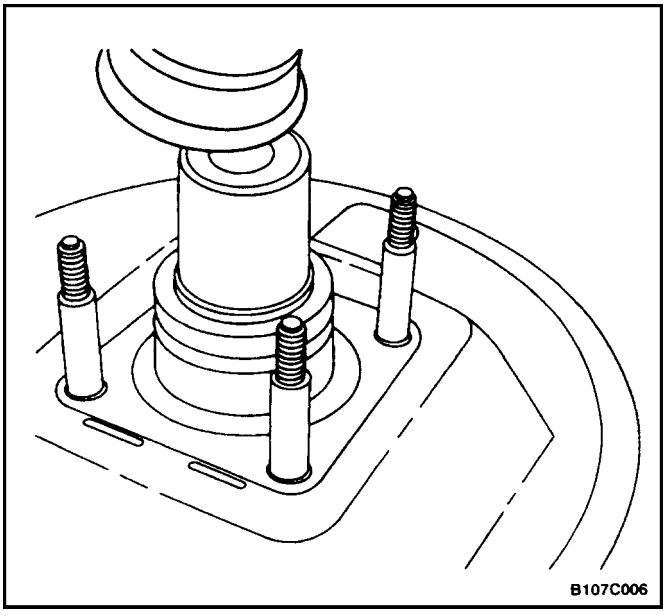

9. Remove the rubber boot.

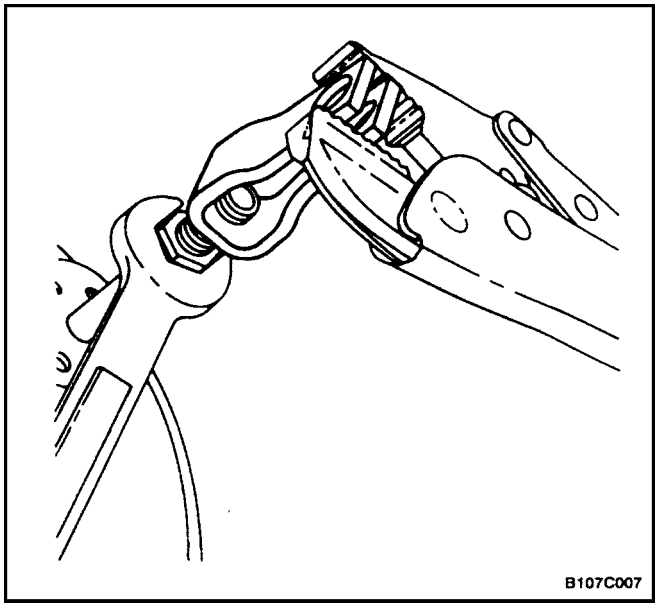

10. Holding the hex nut, twist off the pushrod clevis.
11. Remove the hex nut from the pushrod.

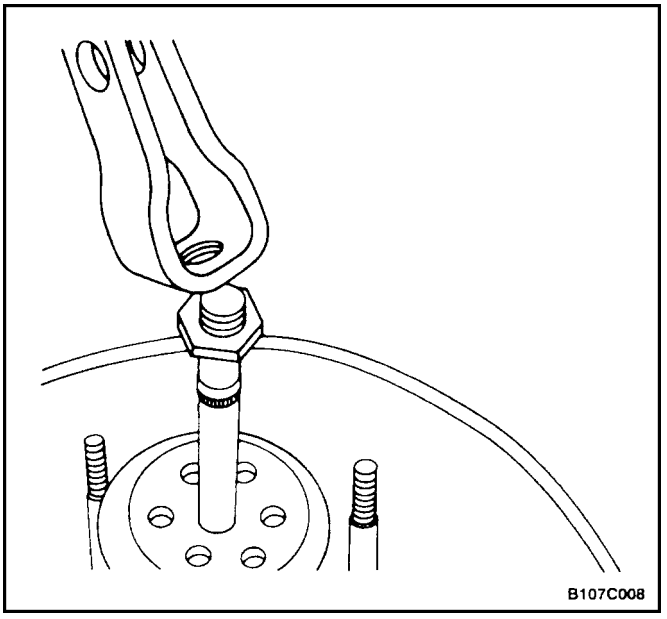

Installation Procedure

1. Check the pushrod and the pushrod clevis for damage and proper fit.
2. Install the hex nut and the pushrod clevis on the booster shaft.

Tighten

Tighten the booster hex nut and the pushrod clevis to 18 N•m (13 lb–ft).

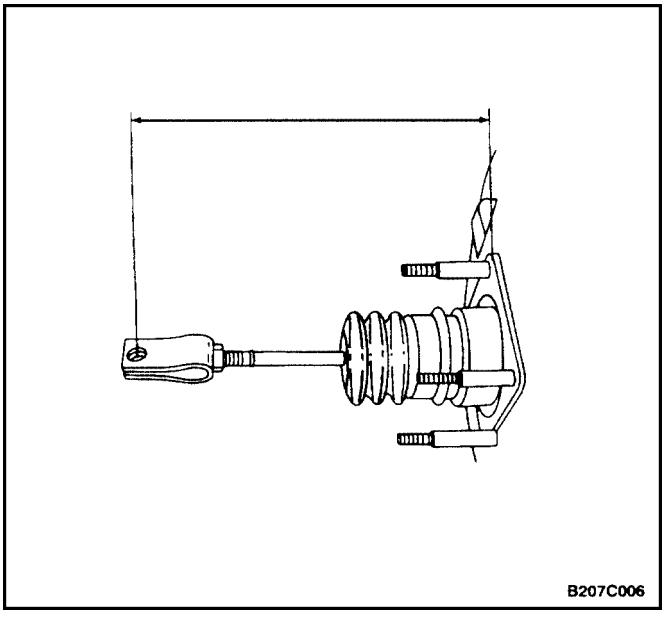

3. Measure the distance from the booster to the center of the clevis bore.

Important : This measurement should be 203 mm (8 inches).

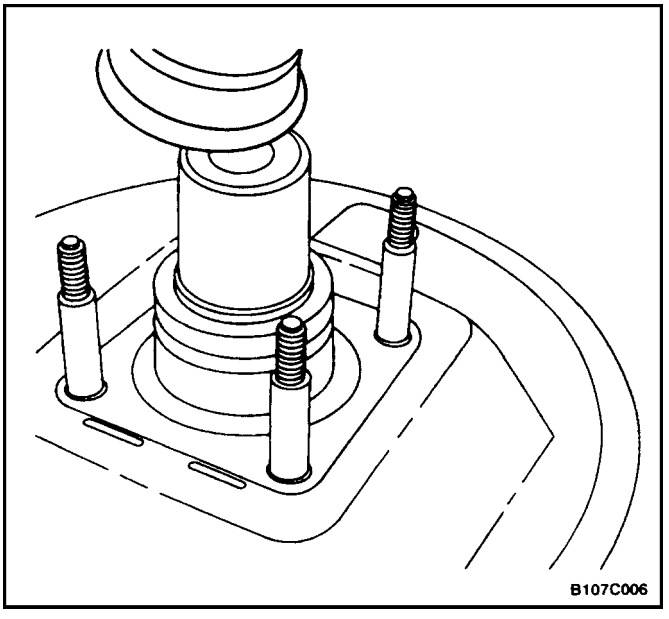

4. Install the rubber boot on the booster.

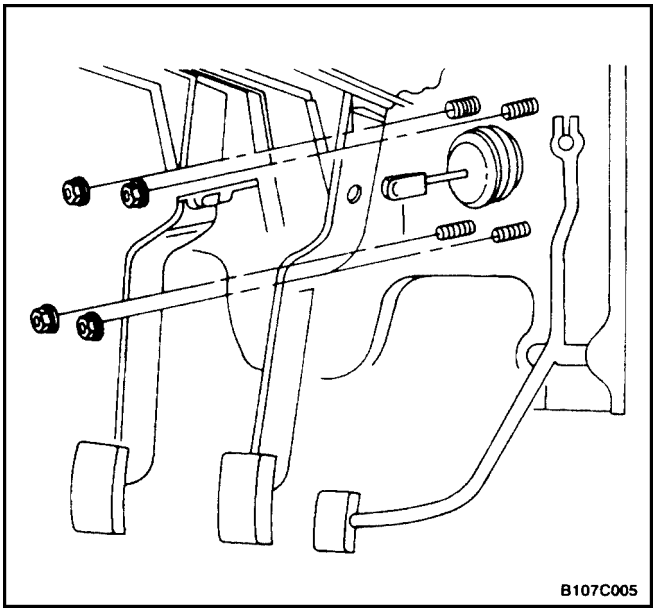

5. Install the booster and the mounting nuts to the dash panel.

Tighten

Tighten the booster–to–dash panel nuts to 22 N•m (16 lb–ft).

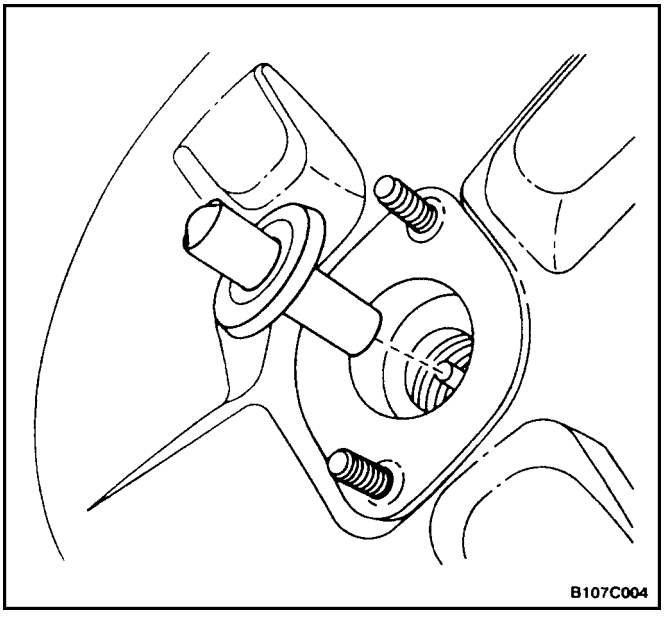

6. Insert the shaft and the rubber O–ring into the power booster.
7. Connect the master cylinder to the booster. Refer to*Section 4B, Master Cylinder.*
8. Connect the brake line fittings to the hydraulic modulator, if applicable.

Tighten

Tighten the brake line fittings to 16 N•m (12 lb–ft).

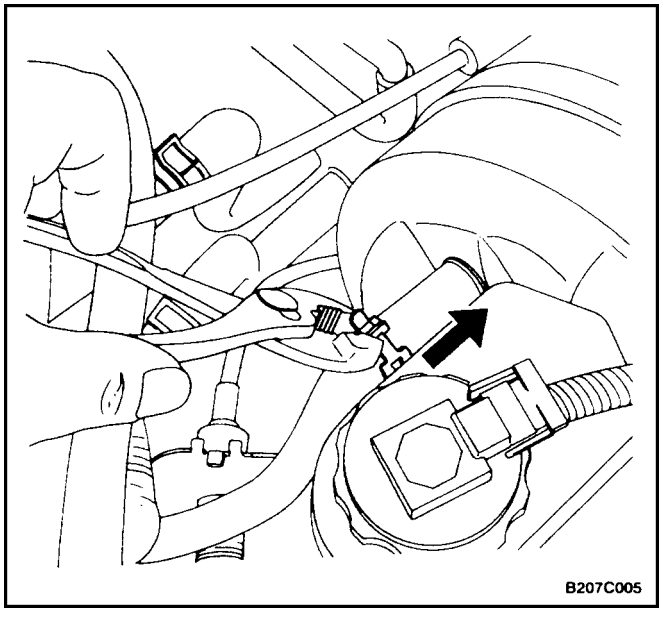

9. Install the new vacuum hose to the booster. Refer to"Vacuum Hose"in this section.
10. Install the hose clamps on the vacuum hose, and snap the vacuum hose in the revolving clip.
11. Install the pushrod pin to the brake pedal bracket assembly and connect the clip and the spring. Refer to*Section 4A, Hydraulic Brakes.*
12. Install the brake stoplamp switch onto the brake pedal bracket.

GENERAL DESCRIPTION AND SYSTEM OPERATION

POWER BOOSTER

The power booster is a single diaphragm, vacuum operated unit. When the brakes are not applied, there is no power assist because equal pressure (vacuum) exists on both sides of the power booster diaphragm. When the brakes are applied, vacuum is present on one side of the diaphragm, and air, at atmospheric pressure, is admitted to the other side. Power assist is provided when there is unequal pressure on opposite sides of the diaphragm. When the brakes are released, atmospheric pressure is shut off, and the vacuum source creates equal pressure on both sides of the diaphragm by means of a one–way valve in the power booster.

Important : If any hydraulic component is removed or disconnected, it may be necessary to bleed all or part of the brake system.

SECTION : 4E

REAR DISC BRAKES

CAUTION : Disconnect the negative battery cable before removing or installing any electrical unit or when a tool or equipment could easily come in contact with exposed electrical terminals. Disconnecting thes cable will help prevent personal injury and damage to the vehicle. The ignition must also be in LOCK unless otherwise noted.

TABLE OF CONTENTS

SPECIFICATIONS 4E–1
FASTENER TIGHTENING SPECIFICATIONS . 4E–1
DIAGNOSIS 4E–2
LINING INSPECTION 4E–2
ROTOR INSPECTION 4E–2
MAINTENANCE AND REPAIR 4E–3
ON–VEHICLE SERVICE 4E–3
SHOE AND LINING 4E–3
CALIPER 4E–4
ROTOR 4E–6
SPLASH SHIELD/BACKPLATE AND PARKING BRAKE LEVER 4E–7
UNIT REPAIR 4E–15
CALIPER OVERHAUL 4E–15
GENERAL DESCRIPTION AND SYSTEM OPERATION 4E–18
DISC BRAKE CALIPER 4E–18

SPECIFICATIONS

FASTENER TIGHTENING SPECIFICATIONS

Application	N•m	Lb–Ft	Lb–In
Bleeder Valve	11	–	97
Brake Hose Caliper Inlet Bolt	32	24	–
Caliper Bracket Mounting Bolts	56	41	–
Caliper Mounting Bolts	31	23	–
Parking Brake Shoe Hold–Down Spring Assembly Screw	3.5	–	31
Rotor Detent Screw	4	–	35
Splash Shield Bolts	25	18	–
Wheel Hub Assembly–to–Spindle Shaft Castle Nut	25 + 1*	18 + 0.7	–

* Tighten the castle nut up to 1 N•m (9 lb–in) as needed to align the castle nut cotter pin notch with the spindle shaft hole.

DIAGNOSIS

LINING INSPECTION

1. Raise and suitably support the vehicle.
2. Remove the rear wheels. Refer to*Section 2E, Tires and Wheels.*
3. Visually check the linings for minimum thickness and wear.
4. Measure the thickness.

Important : The minimum thickness of the lining is 0.2 mm (0.08 inch).

5. Install the shoe and linings in axle sets only.
6. Install the rear wheels. Refer to*Section 2E, Tires and Wheels.*
7. Lower the vehicle.

ROTOR INSPECTION

Brake rotors are manufactured with close tolerances for thickness variation, flatness, and lateral runout. However, pits and grooves are created in the rotors during usage. The lack of uniformity of the braking surfaces of the rotor can cause inadequate braking and a pulsating pedal during braking. The surface finish of the rotor is also important because an unsuitable surface finish can cause pulling and rapid wear of the brake shoe lining.

If a rotor does not meet specifications, it should be refinished to specification or replaced. Refinishing of the rotor should only be done with precision equipment.

Thickness variation can be checked by measuring the thickness of the rotor at four or more points around the circumference of the rotor. All measurements must be made at the same distance from the edge of the rotor. A rotor that varies by more than 0.10 mm (0.004 inches) can cause pedal pulsations and/or front end vibration during braking. Thickness can be measured with a commercially available micrometer.

Light scoring of the rotor surfaces is acceptable if it does not exceed 0.40 mm (0.016 inches) in depth. Scoring measurements can be made with a commercially available brake micrometer.

Lateral runout cannot exceed 0.10 mm (0.004 inches). If lateral runout exceeds the specification, make sure there is no dirt between the rotor and the hub and that hub–to–rotor contact surfaces are smooth and free from burrs. Use a commercially available dial indicator to check the lateral runout according to the following procedure:

1. Position the transaxle in NEUTRAL and raise the vehicle.
2. To preserve wheel balance, mark the relative positions of the wheel and the hub, and remove the front wheel.
3. Fasten the brake rotor to the wheel hub with two wheel bolts.
4. Fasten a dial indicator to the brake caliper.

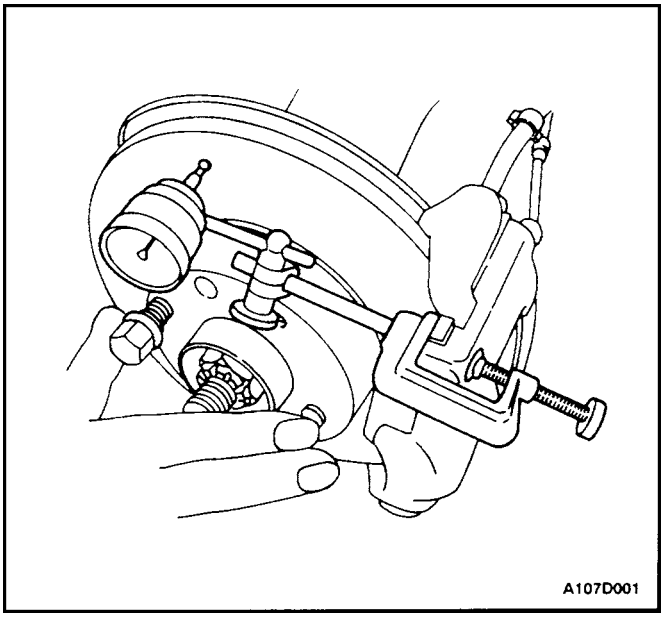

5. Place the gauge tip approximately 234 mm (9.2 inches) from the center of the rotor hole, perpendicular to the disc and under slight preload. Observe the gauge while rotating the rotor.
6. After the measuring is completed, remove the dial indicator and wheel bolts.
7. If necessary, refinish the rotor with precision equipment. Measure the runout again after refinishing. If the runout exceeds 0.10 mm (0.004 inches) after refinishing, the rotor should be replaced.
8. Align the marks that weremade before the wheel was removed and install the front wheel.
9. Lower the vehicle.

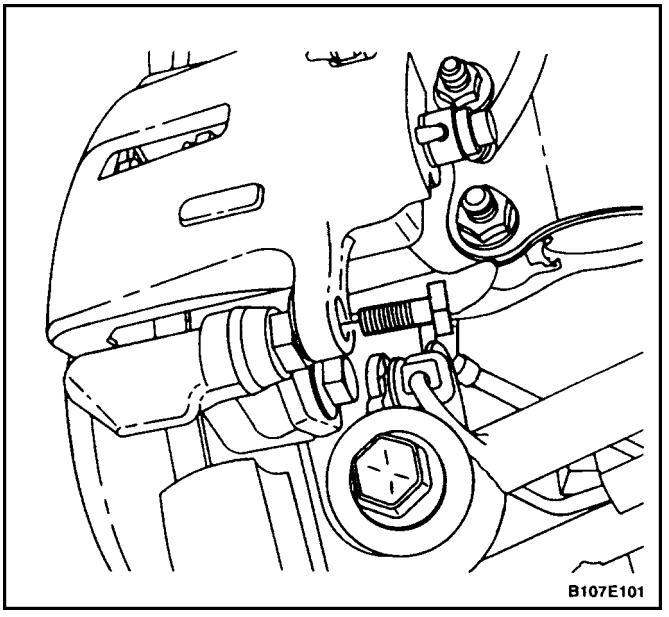

MAINTENANCE AND REPAIR

ON–VEHICLE SERVICE

SHOE AND LINING

Removal Procedure

1. Raise and suitably support the vehicle.
2. To preserve wheel balance, mark the position of the rear wheels relative to the wheel hubs and remove the wheels. Refer to*Section 2E, Tires and Wheels.*
3. Remove the lower caliper mounting bolt.

Important : It is not necessary to remove the caliper to service the brake shoes.

4. Pivot the caliper upward.

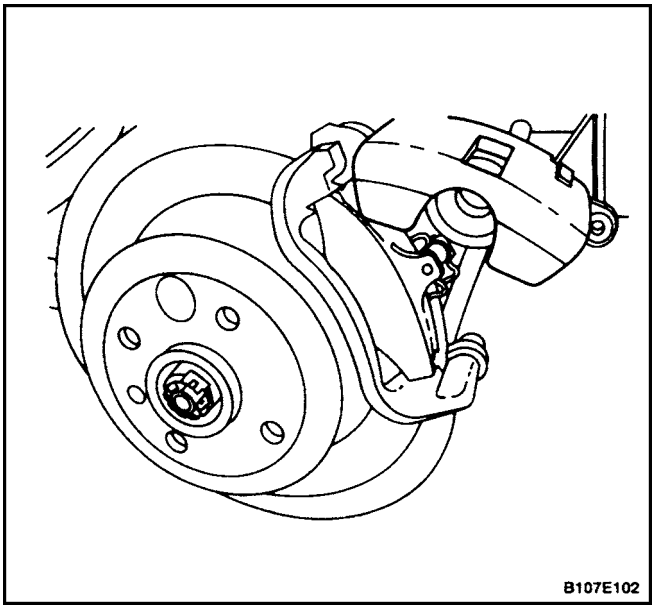

5. Remove the brake shoes.

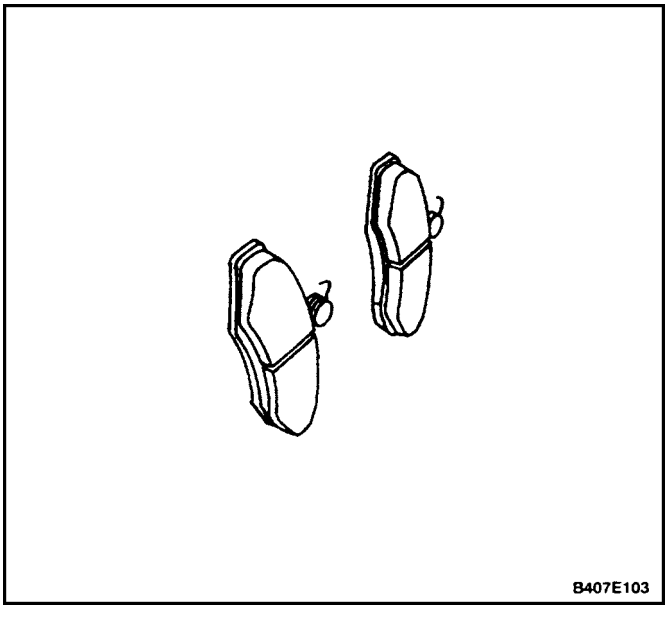

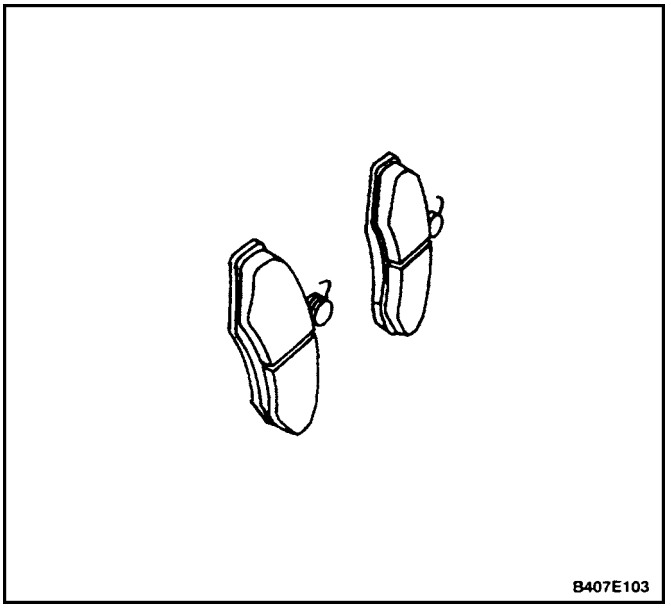
B407E103

Installation Procedure

1. Measure the minimum shoe lining thickness. Refer to”Lining Inspection”in this section.
2. Install the brake shoes.
3. Push the piston inward, if needed.

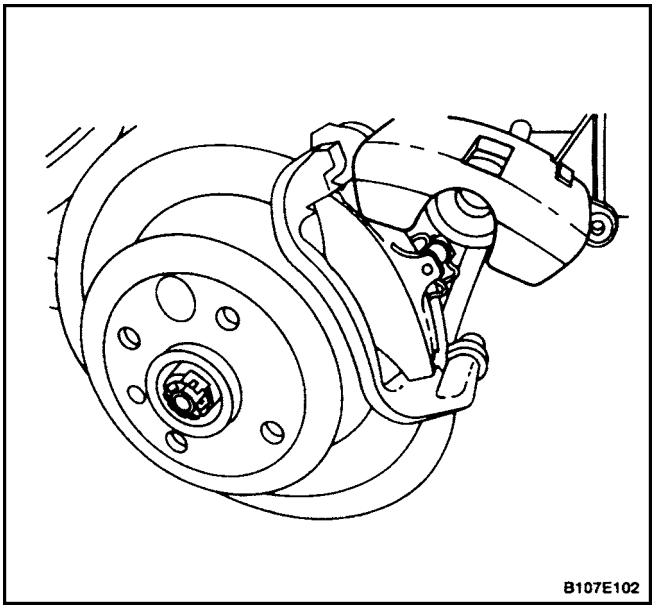
B107E102

Notice : Do not damage the piston seal when the caliper is pivoted downward.

4. Pivot the caliper downward and install the lower bolt.

   Tighten

   Tighten the lower caliper mounting bolt to 31 N•m (23 lb–ft).
5. Align the match marks that were made before removal and install the rear wheels. Refer to*Section 2E, Tires and Wheels.*
6. Lower the vehicle.

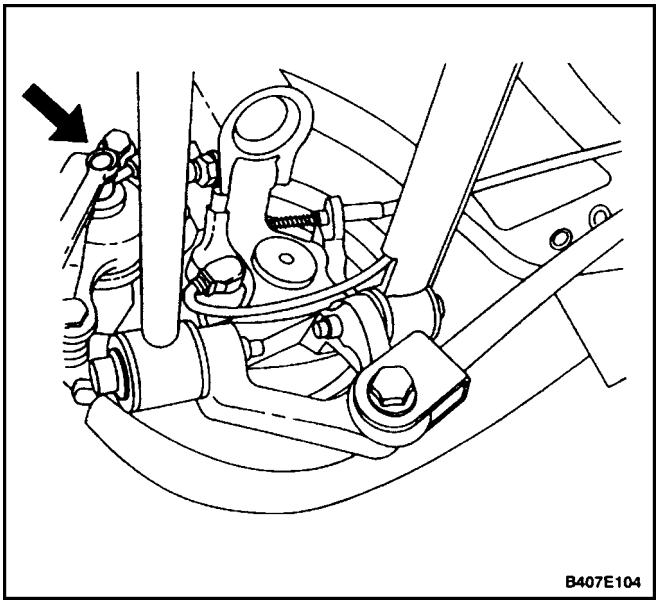
B407E104

CALIPER

Removal Procedure

1. Raise and suitably support the vehicle.
2. To preserve wheel balance, mark the position of the rear wheels relative to the wheel hubs and remove the wheels. Refer to*Section 2E, Tires and Wheels.*
3. Remove the brake hose caliper inlet bolt and the washers.

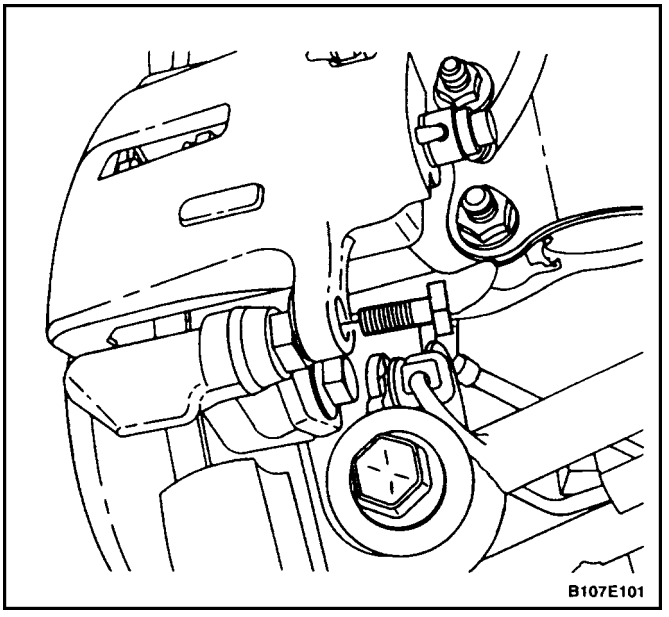

4. Plug the openings in the caliper and the brake hose to prevent fluid loss and contamination.
5. Remove the caliper mounting bolts and the caliper.

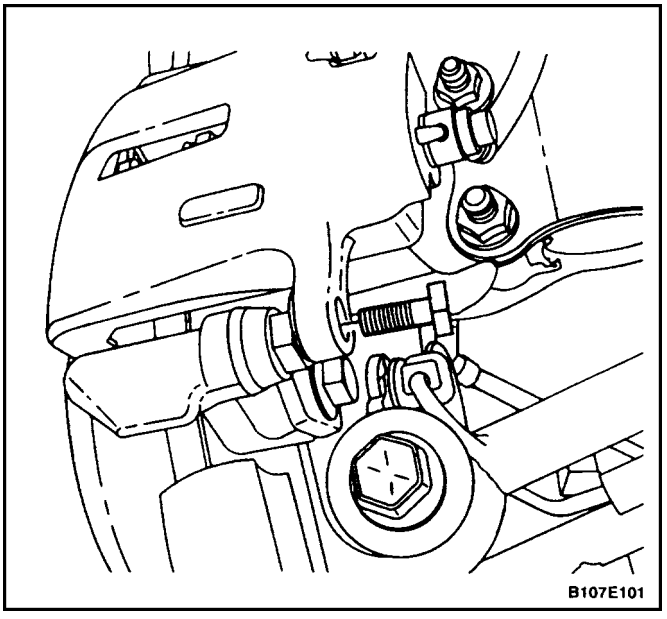

Installation Procedure

1. Install the caliper with the mounting bolts.

   Tighten

   Tighten the caliper mounting bolts to 31 N•m (23 lbft).

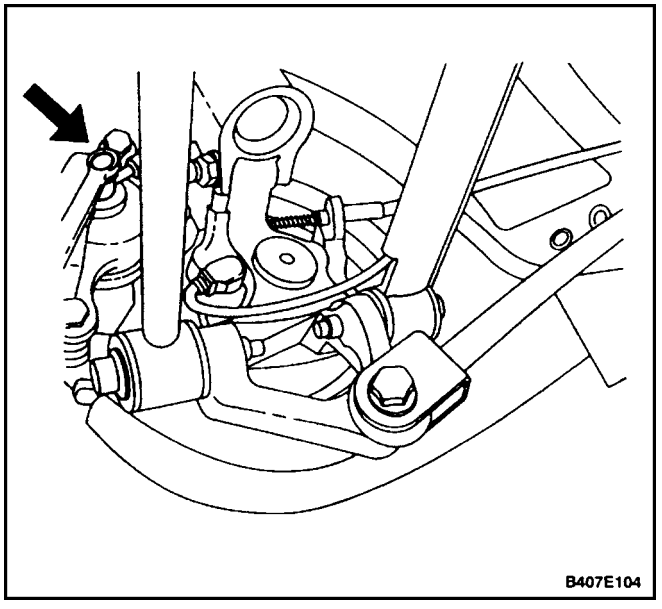

2. Connect the brake hose and the washers with the mounting bolt.

   Tighten

   Tighten the brake hose caliper inlet bolt to 32 N•m (24 lb–ft).

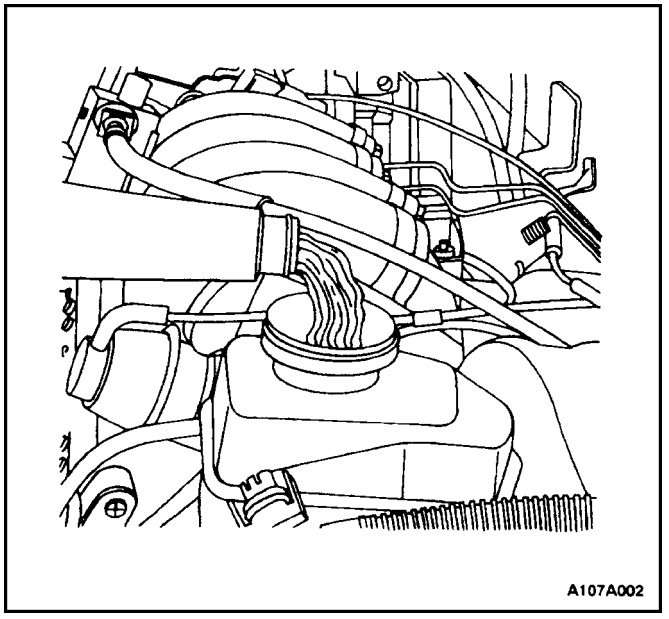

3. Align the match marks that were made before removal and install the rear wheels. Refer to*Section 2E, Tires and Wheels.*
4. Fill the master cylinder to the proper level with clean brake fluid.
5. Bleed the caliper. Refer to*Section 4A, Hydraulic Brakes.*or *Section 4F, Antilock Brakes,*if applicable.
6. Recheck the fluid level.
7. Repeatedly press the brake pedal to bring the pads into contact with the rotor. Do not move the vehicle until a firm pedal is obtained.

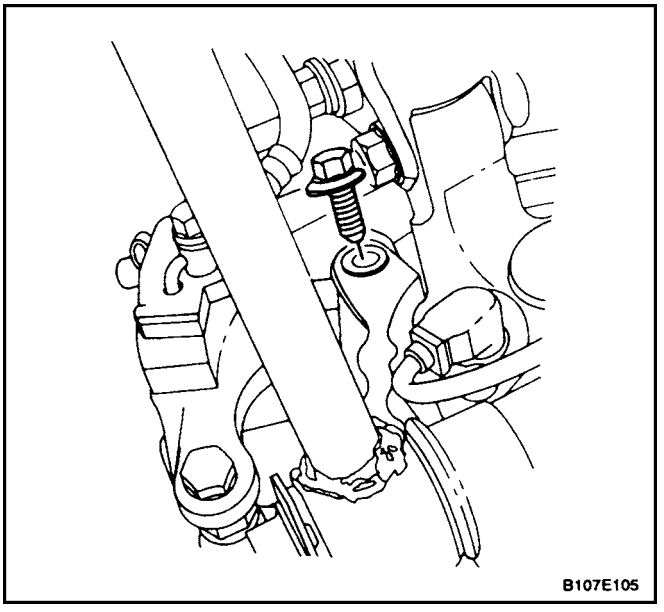

ROTOR

Removal Procedure

1. Raise and suitably support the vehicle.
2. To preserve wheel balance, mark the position of the rear wheels relative to the wheel hubs and remove the wheels. Refer to*Section 2E, Tires and Wheels.*

Notice : To prevent damage to the brake hose, do not hang the caliper from the brake hose.

3. Remove the caliper. Refer to"Caliper"in this section.
4. Remove the caliper bracket.

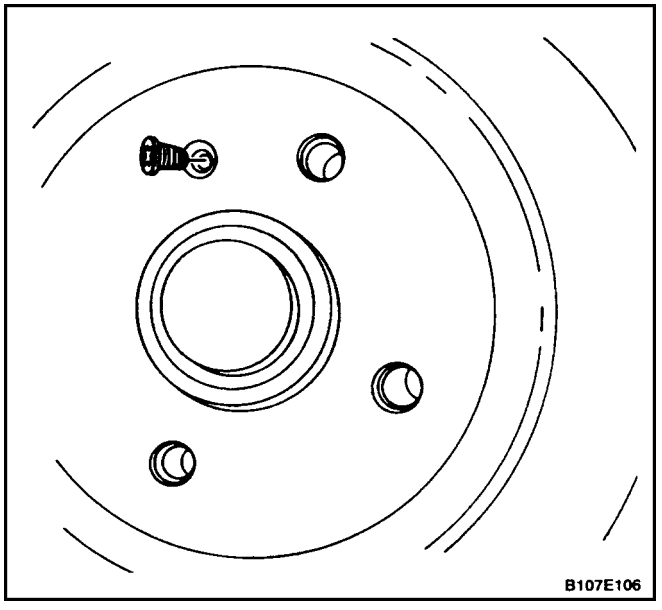

5. Remove the rotor detent screw.
6. Remove the rotor.

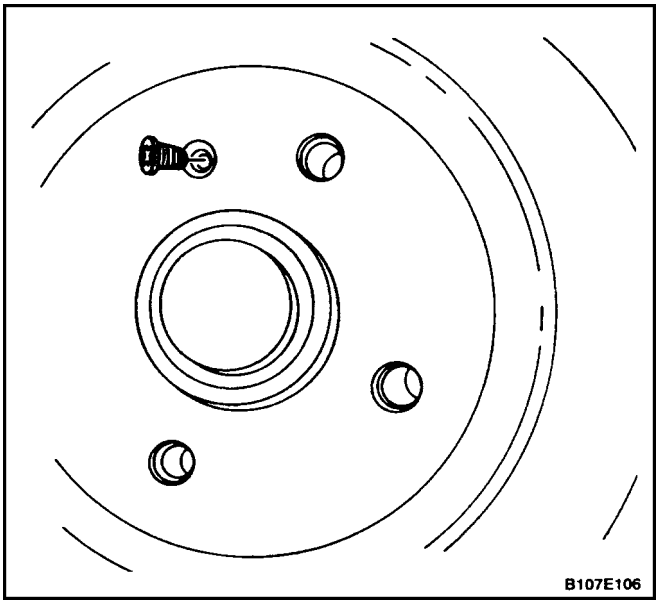

Installation Procedure

1. Inspect the rotor. Refer to”Rotor Inspection”in this section.
2. Install the rotor with the detent screw.

   Tighten

   Tighten the rotor detent screw to 4 N•m (35 lb–in).

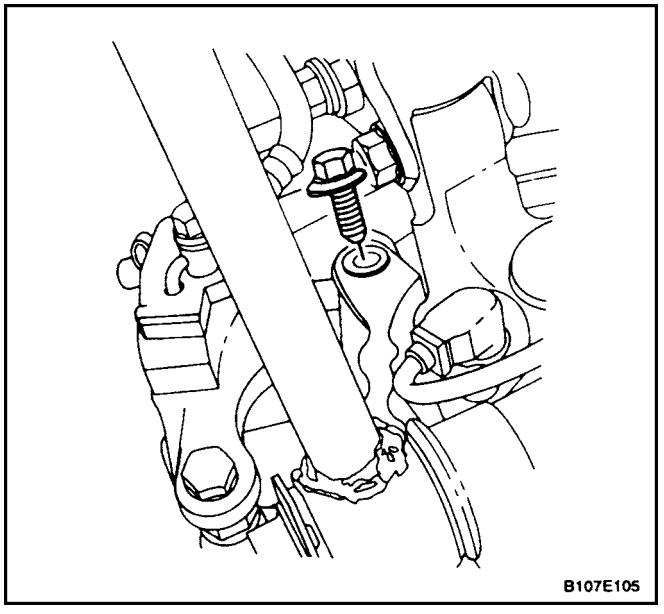

3. Install the caliper bracket.

   Tighten

   Tighten the caliper bracket mounting bolts to 56 N•m (41 lb–ft).
4. Install the caliper. Refer to”Caliper”in this section.
5. Align the match marks that were made before removal, and install the rear wheels. Refer to*Section 2E, Tires and Wheels.*
6. Lower the vehicle.

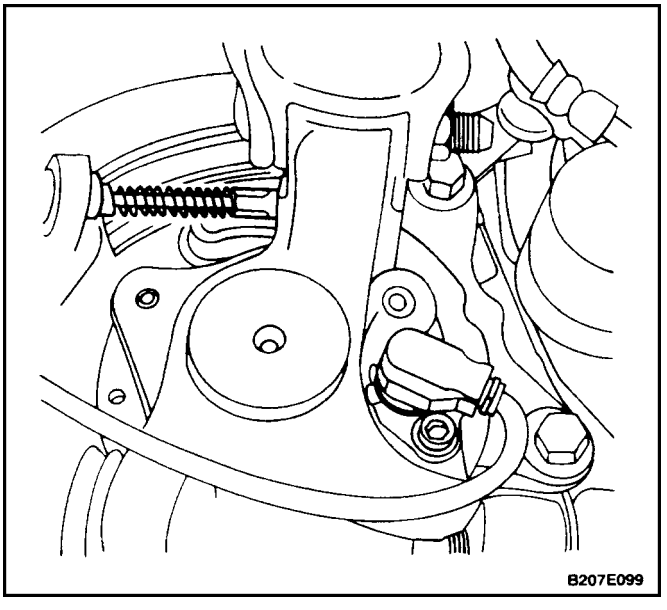

SPLASH SHIELD/BACKPLATE AND PARKING BRAKE LEVER

Removal Procedure

1. Remove the rotor. Refer to”Rotor”in this section.
2. Disconnect the parking brake cable from the brake backplate operating lever.

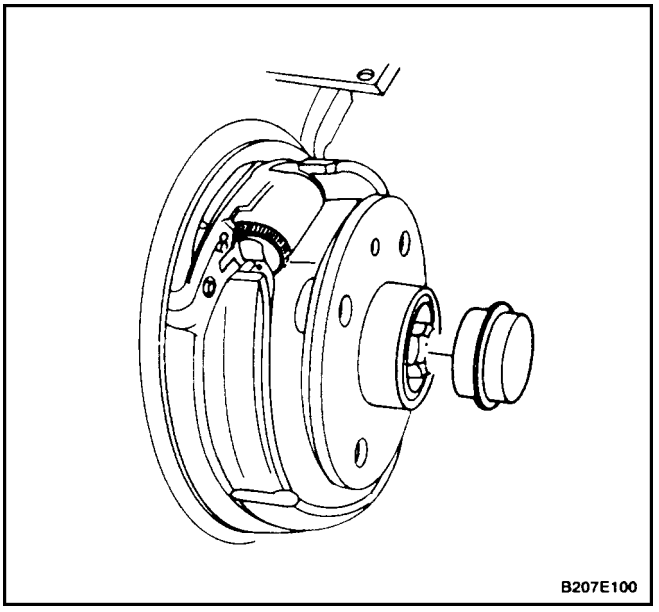

3. Pry off the shaft dust cover.
4. Remove the spindle shaft castle nut.

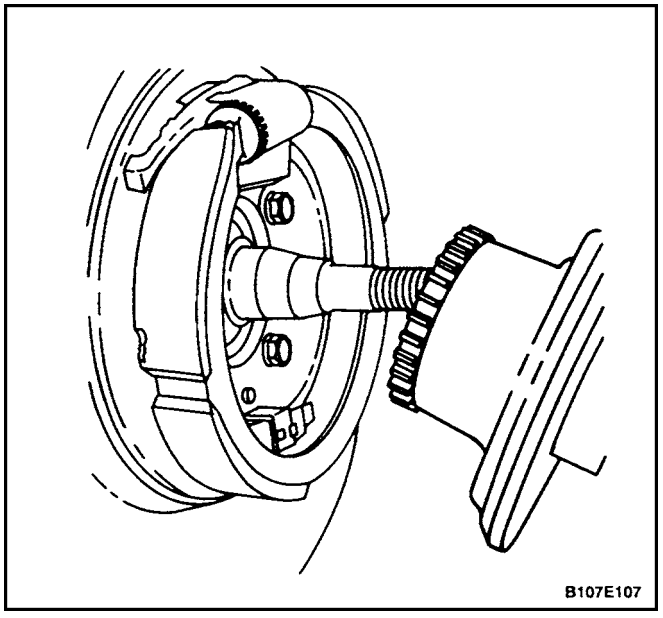

5. Remove the wheel hub assembly from the spindle shaft.

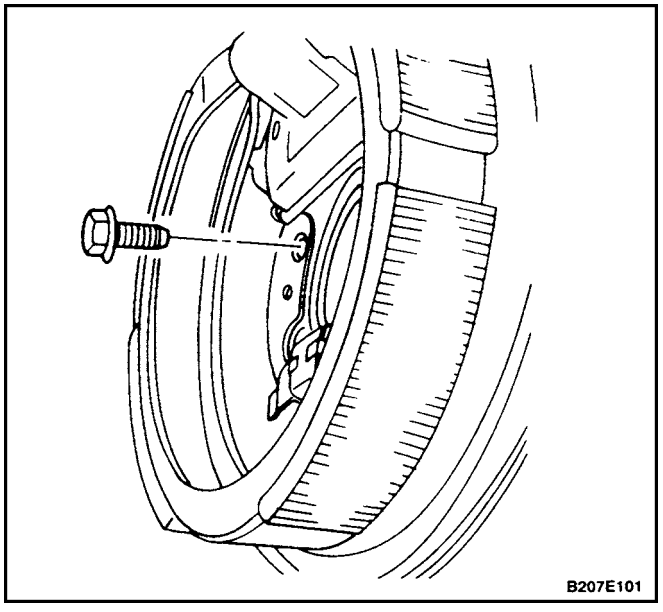

6. Remove the bolts that secure the splash shield/ backplate/ parking brake shoe assembly to the steering knuckle.
7. Remove the splash shield/backplate/parking brake shoe assembly from the steering knuckle.

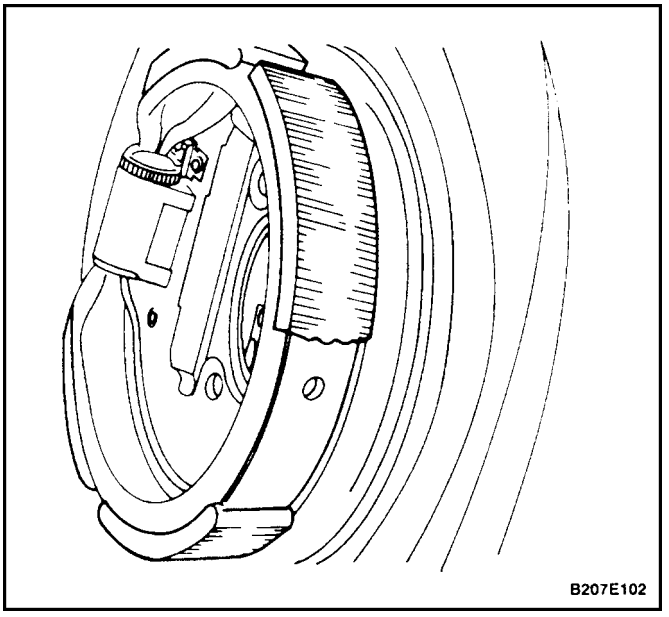

8. Remove the screw that secures the parking brake shoe hold–down spring assembly to the backplate.
9. Remove the parking brake shoe, sliding it away from the actuation mechanism.

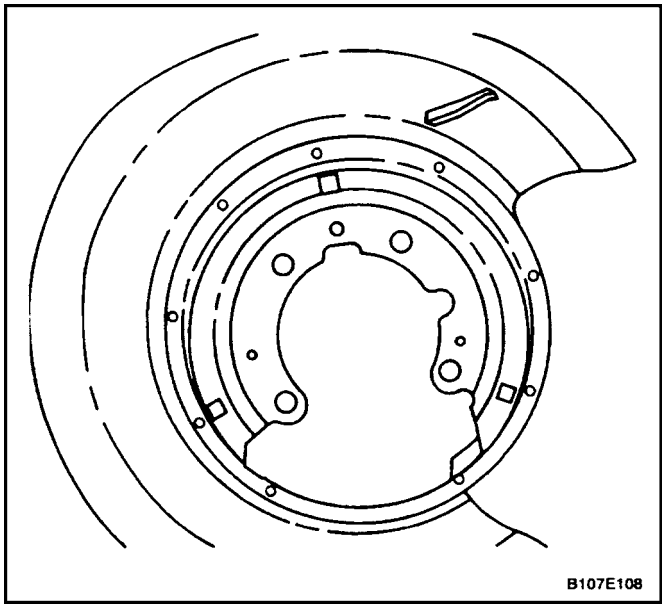

10. Remove the splash shield.

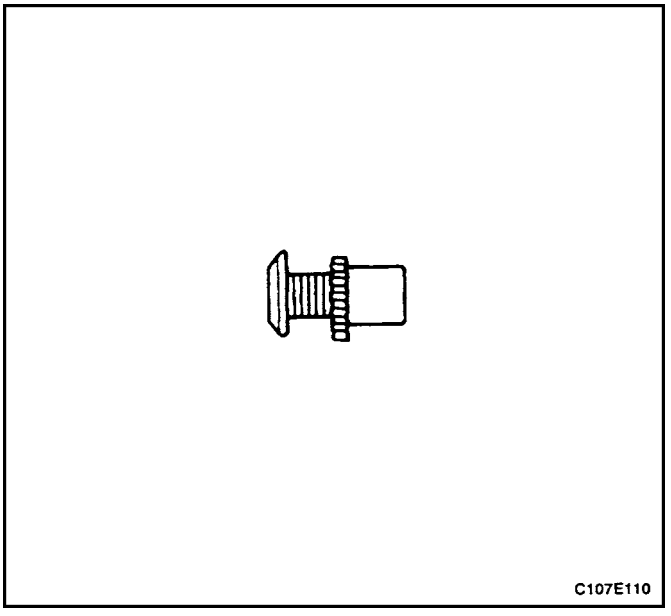

11. Remove and discard the adjuster screw and the nut.

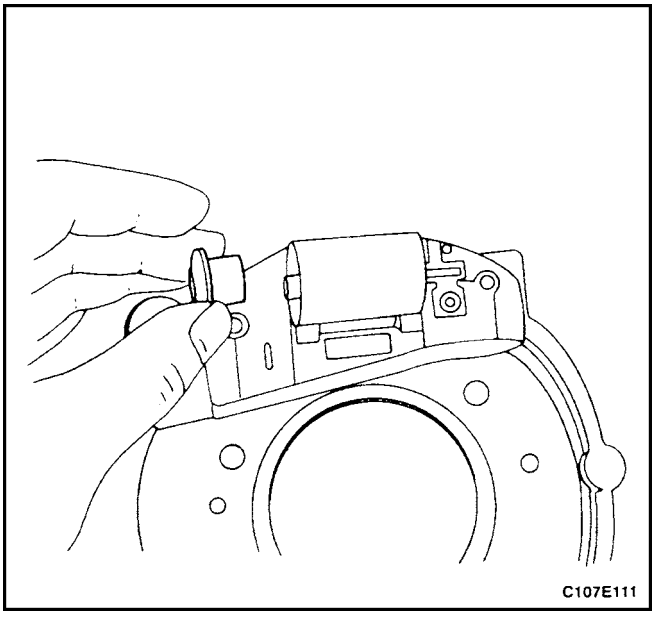

12. Remove and discard the tappet and the pushrod.

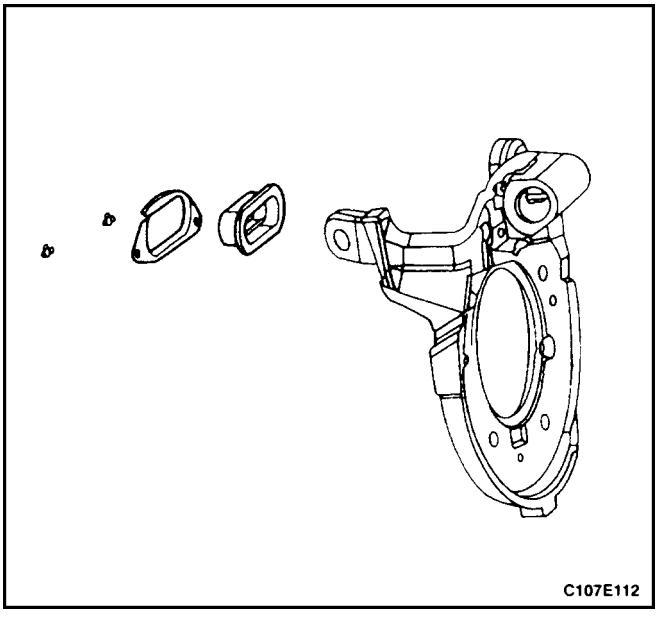

13. Using a 3.5 mm (0.14 inch) drill, remove the pop rivets holding the dust cover assembly and the adjuster pawl to the backplate.
14. Remove and discard the dust cover, and the dust cover retainer from the backplate.

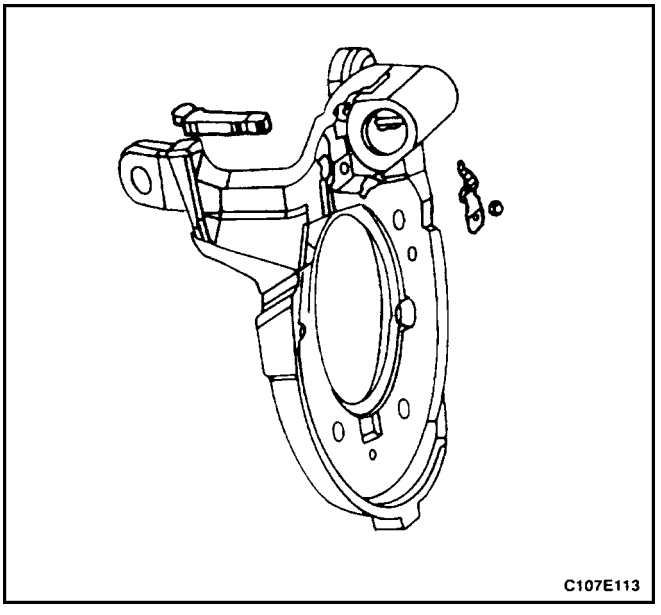

15. Remove and discard the lever and the adjuster pawl.

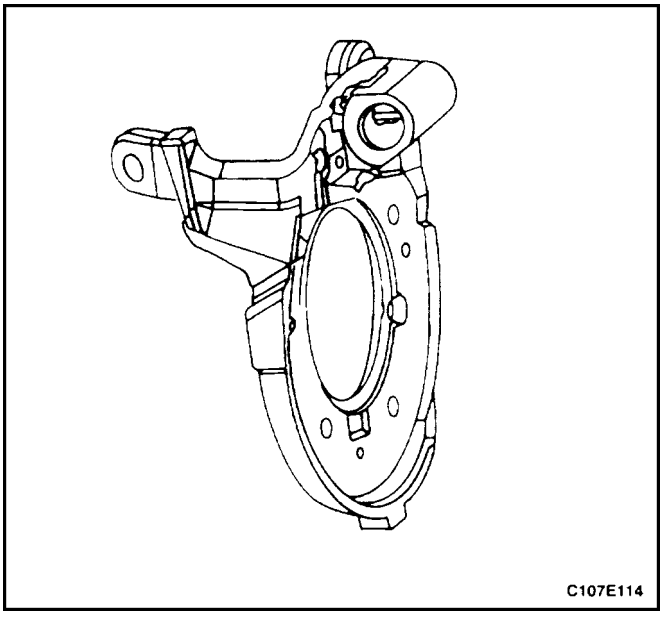
C107E114

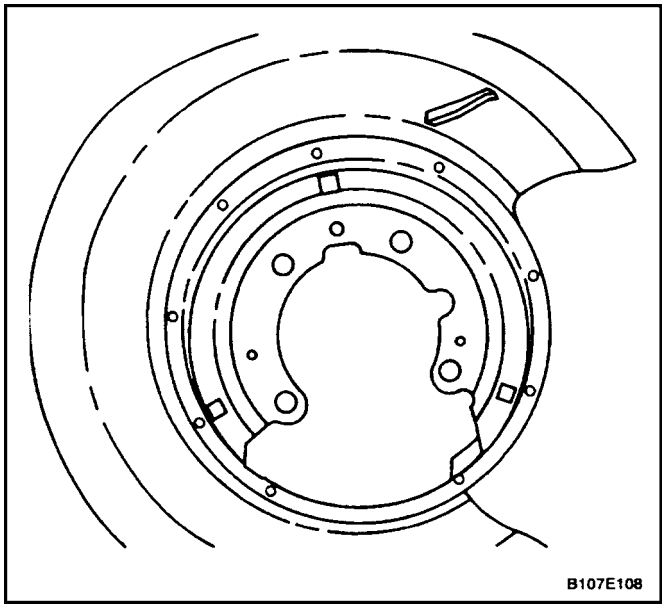
B107E108

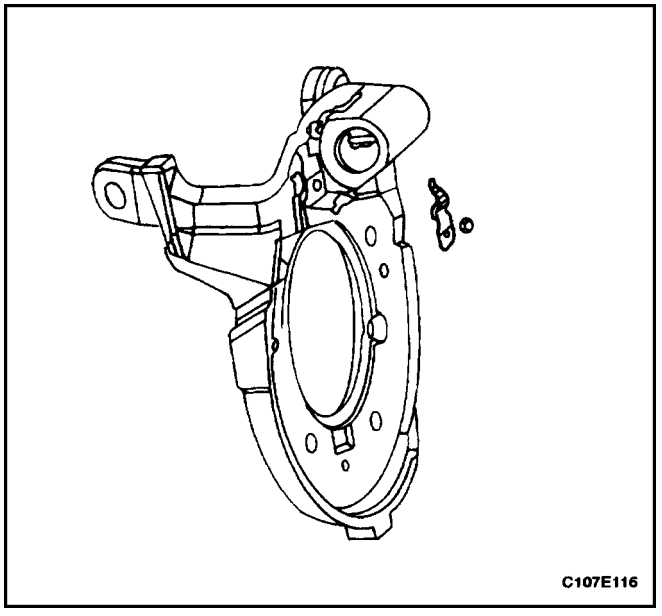
C107E116

Installation Procedure

CAUTION : A high flash point oil–free solvent such as tricloroethylene or acetane, used in cleaning brake components such as backing plates, is usually highly flammable and presents health hazards if inhaled for prolonged periods of time.

1. Clean the backing plate, ensuring the actuation cavity is free from grease and any other contamination.
2. Inspect the shoe assembly position. The shoe should fit centered on the splash shield with the shoe tips located correctly in the slots.
3. Inspect the splash shield for rust or any other damage. Replace the splash shield, if necessary.
4. Install the new adjuster pawl to the backing plate by securing it with a pop rivet.

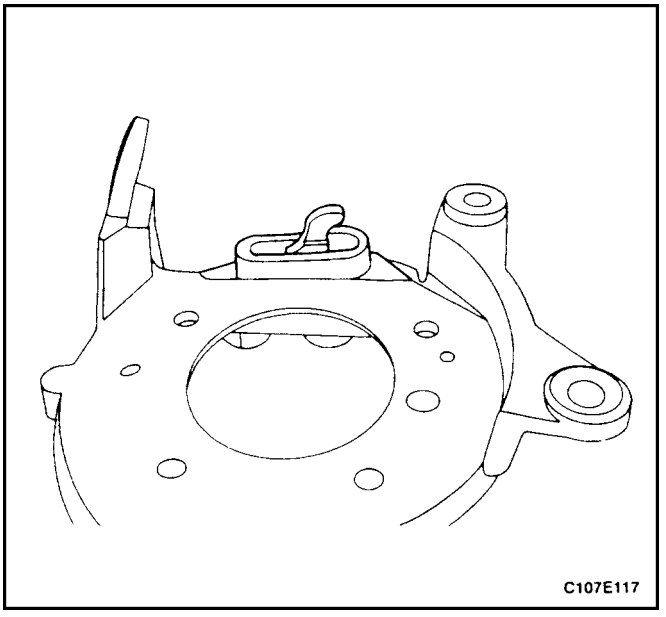

5. Slide the new dust cover onto the dust cover notches.
6. Insert the new lever and the dust cover assembly into the backing plate.
7. Secure the new dust cover retainer using pop rivets.

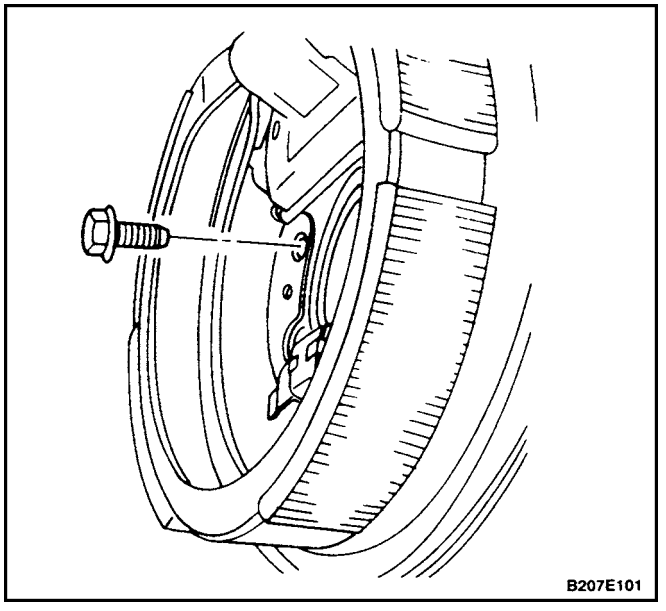

8. Lubricate the actuation cavity and the tappet with grease. Ensure that the internal bore of the cavity is covered with grease.
9. Secure the splash shield and the backplate to the steering knuckle with the bolts, and secure the parking brake shoe hold–down spring assembly with the screw.

Tighten

Tighten the splash shield bolts to 25 N•m (18 lb–ft).

Tighten the parking brake shoe hold–down spring assembly screw to 3.5 N•m (31 lb–in).

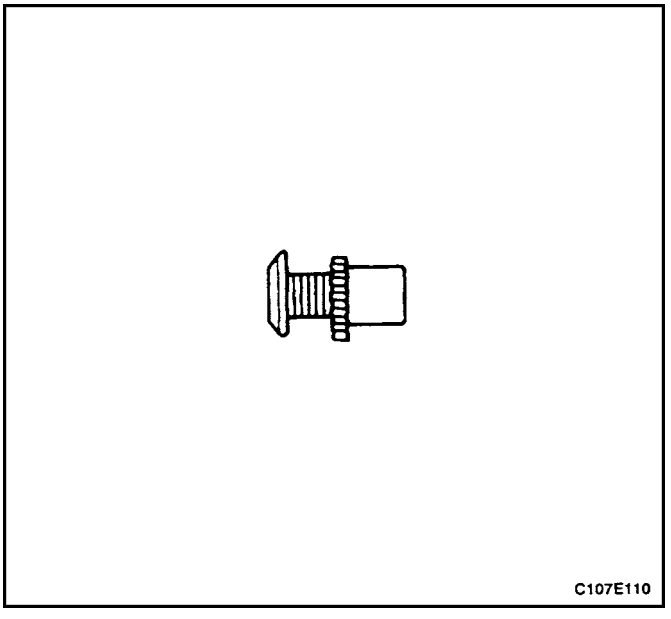

10. Connect the new parking brake adjustment screw to the new adjustment nut. Tighten the nut to where it meets the screw, and then back off one–quarter of a turn.

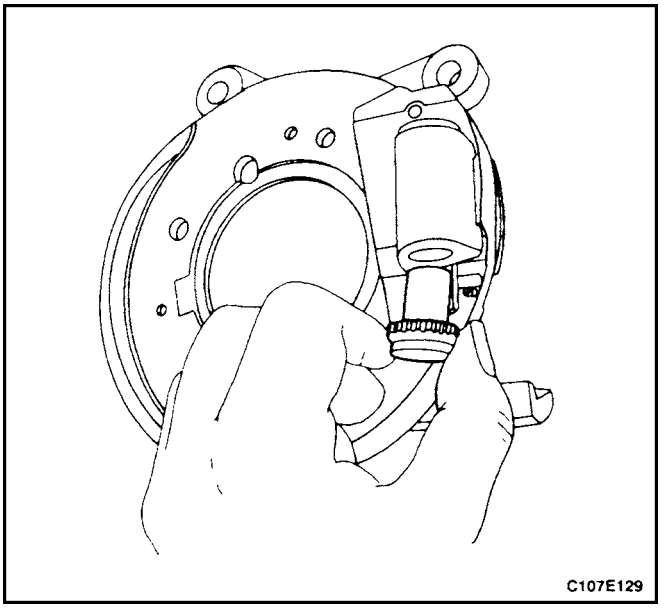

11. Install the adjustment screw and the adjustment nut into the backing plate actuation mechanism on the adjustment pawl side. Keep the shoe slot parallel with the backing plate face.

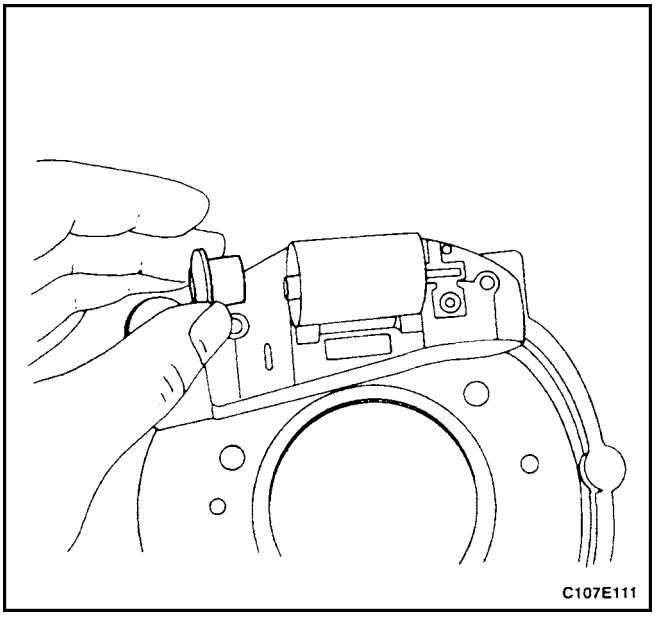

12. Install the new pushrod into the tappet. Ensure the pushrod is set correctly in the lever socket by holding the lever into the backing plate while inserting the pushrod and the tappet.

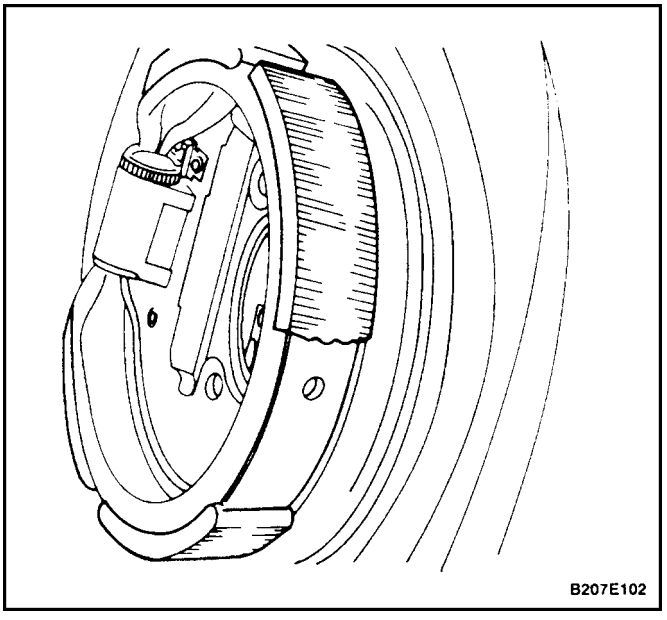

13. Clean excess grease using a clean rag.

Important : The shoe assembly must be resting on the splash shield with the brand side up.

Important : Clean hands are required when handling the parking brake shoe.

14. Install the parking brake shoe engaging the shoe tips in both the adjusting screw and the tappet slots.

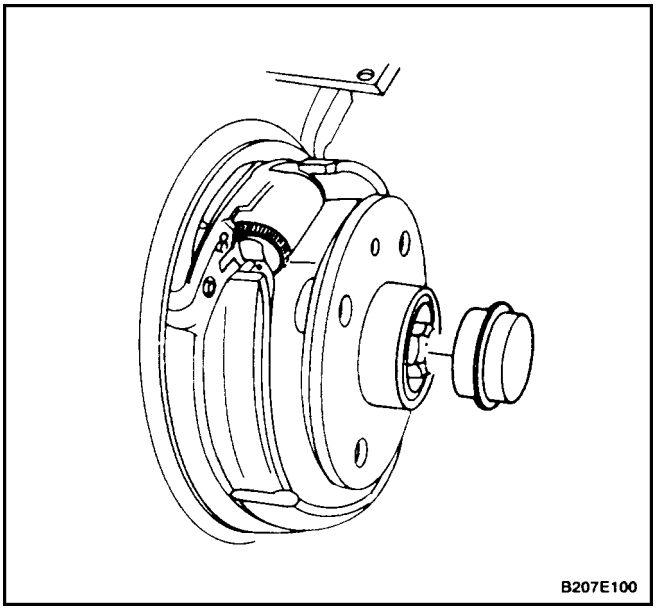

15. Install the wheel hub assembly, and secure it with the wheel hub assembly–to–spindle shaft castle nut.

    Tighten

    Tighten the wheel hub assembly–to–spindle shaft castle nut to 25 N•m (18 lb–ft), plus 1 N•m (9 lb–in).
16. Install the shaft dust cover.

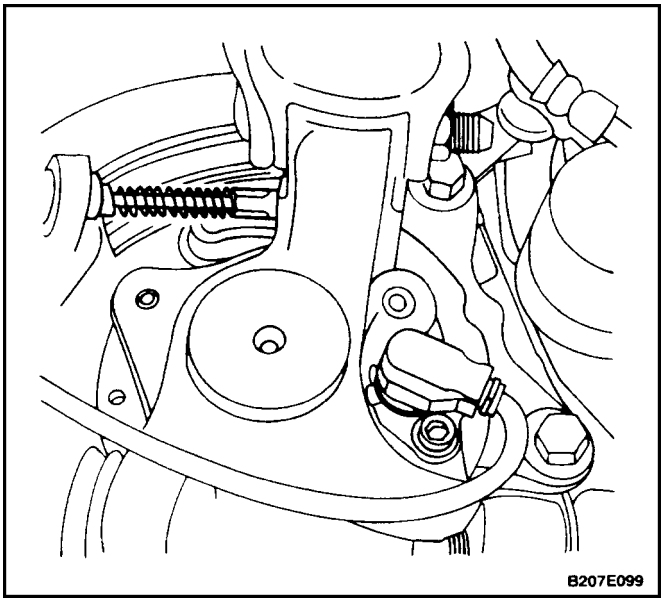

17. Install the parking brake cable to the parking brake lever on each side of the vehicle.
18. Adjust the parking brake. Refer to*Section 4G, Parking Brake.*
19. Install the rotor. Refer to”Rotor”in this section.

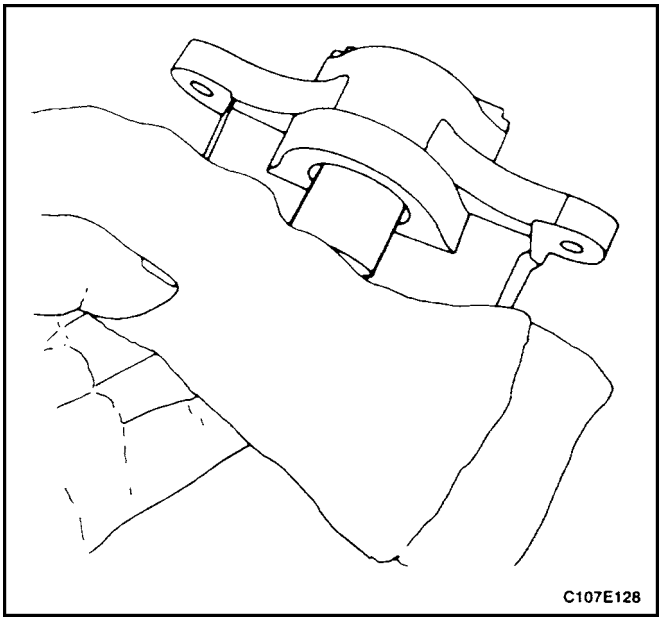

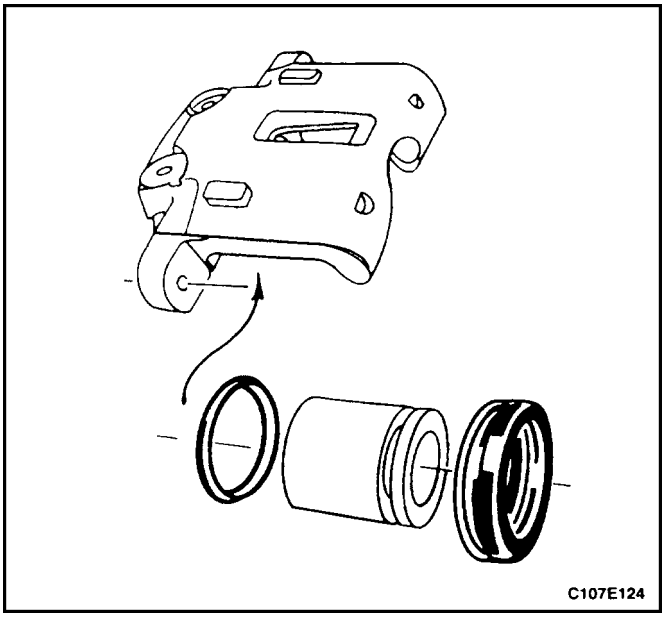

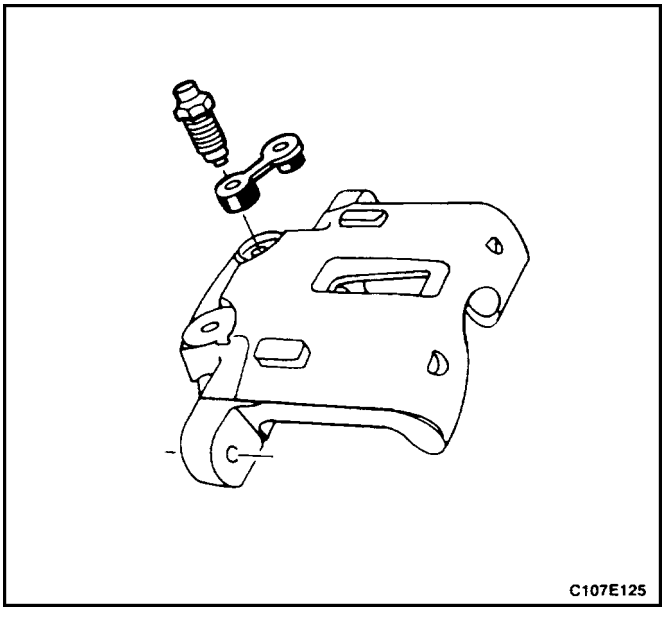

UNIT REPAIR

CALIPER OVERHAUL

Disassembly Procedure

1. Remove the caliper. Refer to"Caliper"in this section.
2. To prevent damage to the piston when removing it, place a clean shop towel between the piston and the caliper.

CAUTION : When applying air pressure at the caliper inlet port, do not place fingers in front of the piston. The piston will pop out of its bore with enough force to cause serious injury.

3. Apply unlubricated compressed air to the caliper inlet port, and progressively increase the air pressure until the piston is forced out of the bore.
4. Remove and discard the outer dust seal.
5. Remove the inner seal and discard it. Do not scratch the piston bore or the seal groove when removing the inner seal.

6. Remove the bleeder valve and the dust cover.

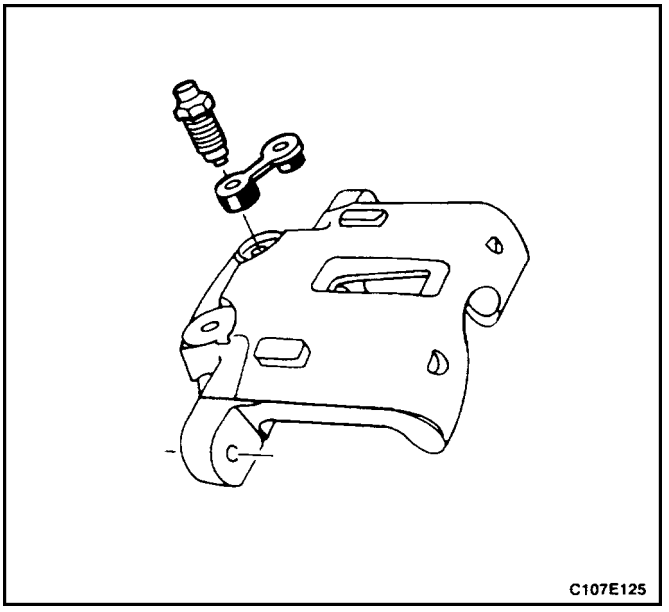

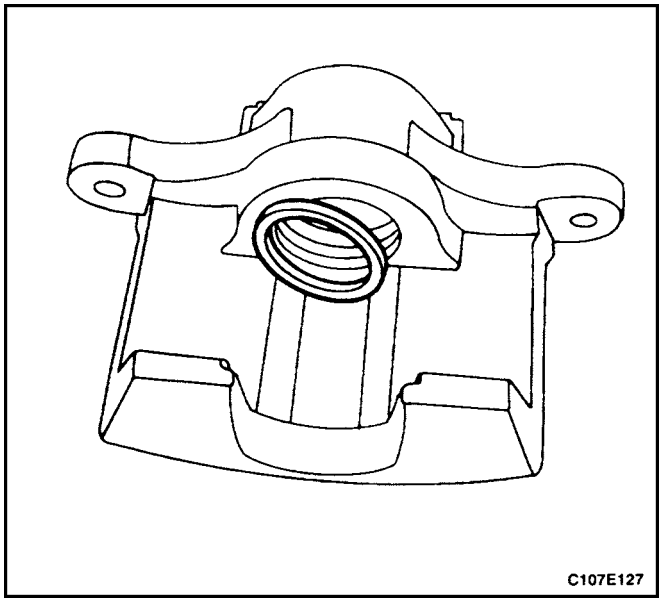

Assembly Procedure

CAUTION : Keep alcohol and brake fluid away from the eyes, as serious injury may result.

CAUTION : Keep rubber seals and brake parts away from oil. Oil can cause the seals to swell and deteriorate, and the braking system could become inoperative.

Important : Do not use a hone or any other procedure to remove material from the piston or caliper bore.

1. Clean all parts with denatured alcohol or brake fluid. Dry the parts with unlubricated compressed air, and blow out all passages in the caliper and the bleeder valve.
2. Inspect the piston and the caliper for scoring and corrosion. Replace any components that show these conditions.
3. Insert the bleeder valve and the dust cover.

Tighten

Tighten the bleeder valve to 11 N•m (97 lb–in).

4. Lubricate a new piston inner seal with brake fluid.
5. Install the piston inner seal into the groove in the cal–iper bore.

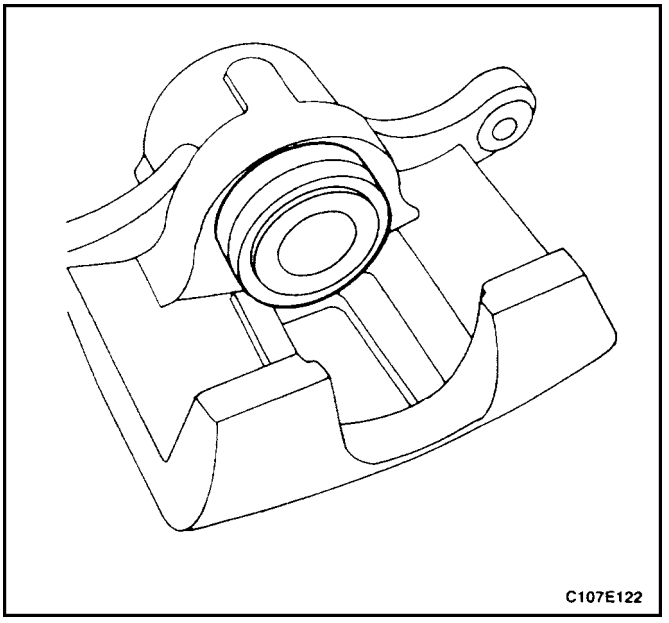
C107E122

6. Install the inner seal into the groove in the caliper bore.
7. Lubricate the piston with brake fluid.
8. Install the piston into the caliper.
9. Install the outer seal into the piston groove. Apply steady hand pressure until the piston is seated in the bore.

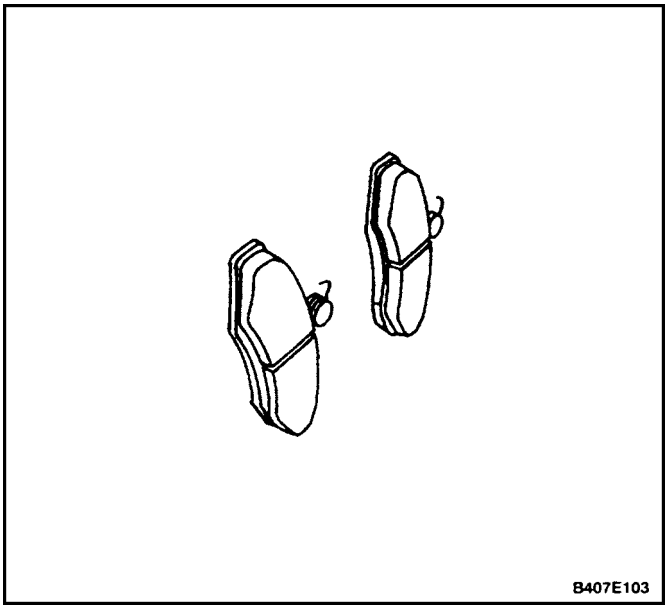
B407E103

10. Inspect the brake shoe linings for minimum thickness. Refer to”Lining Inspection”in this section. If necessary, install new shoes.

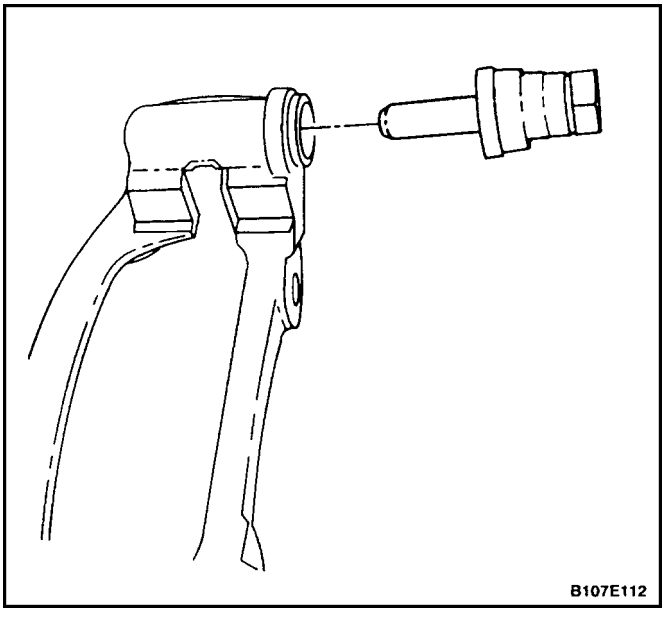
B107E112

11. Inspect the guide pins and boots. If the boots are damaged, or if the guide pins do not slide easily, replace these parts. Lubricate the guide pins with a lithium soap base glycol grease or other grease which will not deteriorate or swell the rubber boots.
12. Install the caliper. Refer to”Caliper”in this section.

GENERAL DESCRIPTION AND SYSTEM OPERATION

DISC BRAKE CALIPER

The caliper has a single bore and it is mounted to a bracket on the wheel knuckle. Hydraulic pressure, which is transmitted to the piston and the caliper, is created by pressing the brake pedal. During braking, the piston and the caliper apply a clamping force on the brake shoes. The vehicle is stopped as a result of the friction between the rotor and the brake shoes.

- When servicing a caliper, replace all parts included in the caliper repair kit.
- During caliper overhaul, lubricate the piston and the inner seal with clean brake fluid to ease assembly.
- Do not use lubricated shop air on brake parts because oil will deteriorate rubber seals.
- If any hydraulic component is removed or disconnected, it may be necessary to bleed all or part of the brake system.
- Replace the shoes in axle sets only.
- The torque values specified are for dry, unlubricated fasteners.
- Perform the service operations on a clean bench away from oily material.

SECTION : 5C

CLUTCH

CAUTION : Disconnect the negative battery cable before removing or installing any electrical unit or when a tool or equipment could easily come in contact with exposed electrical terminals. Disconnecting this cable will help prevent personal injury and damage to the vehicle. The ignition must also be in LOCK unless otherwise noted.

TABLE OF CONTENTS

SPECIFICATIONS 5C0–1
FASTENER TIGHTENING SPECIFICATIONS 5C0–1
SPECIAL TOOLS 5C0–2
SPECIAL TOOLS TABLE 5C0–2
DIAGNOSIS 5C0–2
CLUTCH OPERATION 5C0–2
COMPONENT LOCATOR 5C0–4
HYDRAULIC CLUTCH COMPONENTS 5C0–4
MAINTENANCE AND REPAIR 5C0–7
ON–VEHICLE SERVICE 5C0–7
CLUTCH PEDAL 5C0–7
CLUTCH PEDAL POSITION SWITCH 5C0–9
CLUTCH DISC AND RELATED COMPONENTS 5C0–10
CLUTCH PEDAL ADJUSTMENT (HYDRAULIC) 5C0–15
CLUTCH RELEASE POINT ADJUSTMENT (HYDRAULIC) 5C0–17
AIR BLEEDING 5C0–17
CLUTCH MASTER CYLINDER ASSEMBLY 5C0–17
CLUTCH RELEASE CYLINDER ASSEMBLY 5C0–20
UNIT REPAIR 5C0–21
CLUTCH MASTER CYLINDER 5C0–21
CLUTCH RELEASE CYLINDER 5C0–23
GENERAL DESCRIPTION AND SYSTEM OPERATION 5C0–25
DRIVING MEMBERS 5C0–25
DRIVEN MEMBERS 5C0–25
OPERATING MEMBERS 5C0–25

SPECIFICATIONS

FASTENER TIGHTENING SPECIFICATIONS

Application	N•m	Lb–Ft	Lb–In
Clutch Fork–to–Release Lever Shaft Bolt	35	26	
Clutch Master Cylinder Locknuts	22	18	
Clutch Pedal Nut	18	13	
Pressure Plate–to–Flywheel Bolt	15	11	
Release Bearing Guide Sleeve Bolts	5		45
Release Cylinder Bolts	60	44	

SPECIAL TOOLS

SPECIAL TOOLS TABLE

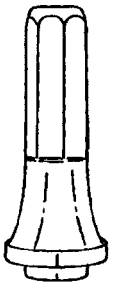 A103C009	J–36547 Input Shaft Seal Installer
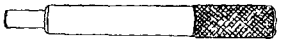 A103C045	J–42474 Clutch Arbor

DIAGNOSIS

CLUTCH OPERATION

Fails to Release

Checks	Action
DEFINITION: When the pedal is pressed to the floor, the shift lever does not move freely in and out of reverse gear.	
Check for a loose linkage.	Repair or replace loose linkage, if necessary.
Check for a damaged clutch disc.	Replace the damaged clutch disc.
Check for an improperly installed fork shaft.	Remove and properly reinstall the fork shaft. Very lightly lubricate the fork fingers at the release bearing with wheel bearing grease.
Check for the clutch disc hub binding on the input shaft splines.	Repair or replace the clutch disc hub.
Check for a warped or bent clutch disc.	Replace the warped or bent clutch disc.

Slipping

Checks	Action
Check for the driver improperly operating the vehicle.	Correct the driver's operation of the vehicle as necessary.
Check for an oil–soaked clutch disc.	Correct the leak at its source and install a new clutch disc.
Check for a worn facing or a facing torn from the disc.	Replace the worn disc with a new disc.
Check for a warped pressure plate or a warped flywheel.	Replace the warped pressure plate or the warped flywheel.
Check for a weak diaphragm spring.	Replace the pressure plate.
Check for a driven plate that is not seated.	Start the engine 30 to 40 times. Do not overheat the engine.
Check for a driven plate that is overheated.	Allow the driven plate to cool.

Grabbing (Chattering)

Checks	Action
Check for a burned or a glazed facing caused by oil on the facing.	Correct the leak at its source and install a new clutch disc.
Check for worn splines on the input shaft.	Replace the worn input shaft.
Check for a warped pressure plate or a warped flywheel.	Replace the warped pressure plate or the warped flywheel.
Check for burned or smeared resin on the flywheel or the pressure plate.	Sand off the burned or smeared resin if it is superficial. Replace any burned or heat–checked parts.

Rattling (Transaxle Click)

Checks	Action
Check for weak retracting springs.	Replace the pressure plate.
Check for a loose release fork.	Remove and reinstall the release fork properly.
Check for oil in the driven plate damper.	Correct the cause of the oil leak and replace the driven disc.
Check for a damaged driven plate damper spring.	Replace the driven disc.

Release Bearing Noise with Clutch Fully Engaged

Checks	Action
Check for the driver improperly operating the vehicle.	Correct the driver's operation of the vehicle as necessary.
Check for a binding release bearing.	Clean and re–lubricate the release bearing. Inspect the release bearing for burrs and nicks.
Check for an improperly installed release lever.	Remove and reinstall the release lever properly.
Check for a weak linkage return spring.	Replace the weak linkage return spring.

Noisy

Checks	Action
Check for a worn release bearing.	Replace the worn release bearing.
Check for an improperly installed release lever.	Remove and properly reinstall the fork shaft. Very lightly lubricate the fork fingers at the release bearing with wheel bearing grease.

Pedal Stays on Floor When Disengaged

Checks	Action
Check for binding in the linkage or the release bearing.	Lubricate and free–up the binding linkage or the release bearing.
Check for weak pressure plate springs.	Replace the pressure plate.

Hard Pedal Effort

Checks	Action
Check for binding in the linkage.	Lubricate and free–up the binding linkage.
Check for a worn driven plate.	Replace the worn driven plate.

COMPONENT LOCATOR

HYDRAULIC CLUTCH COMPONENTS

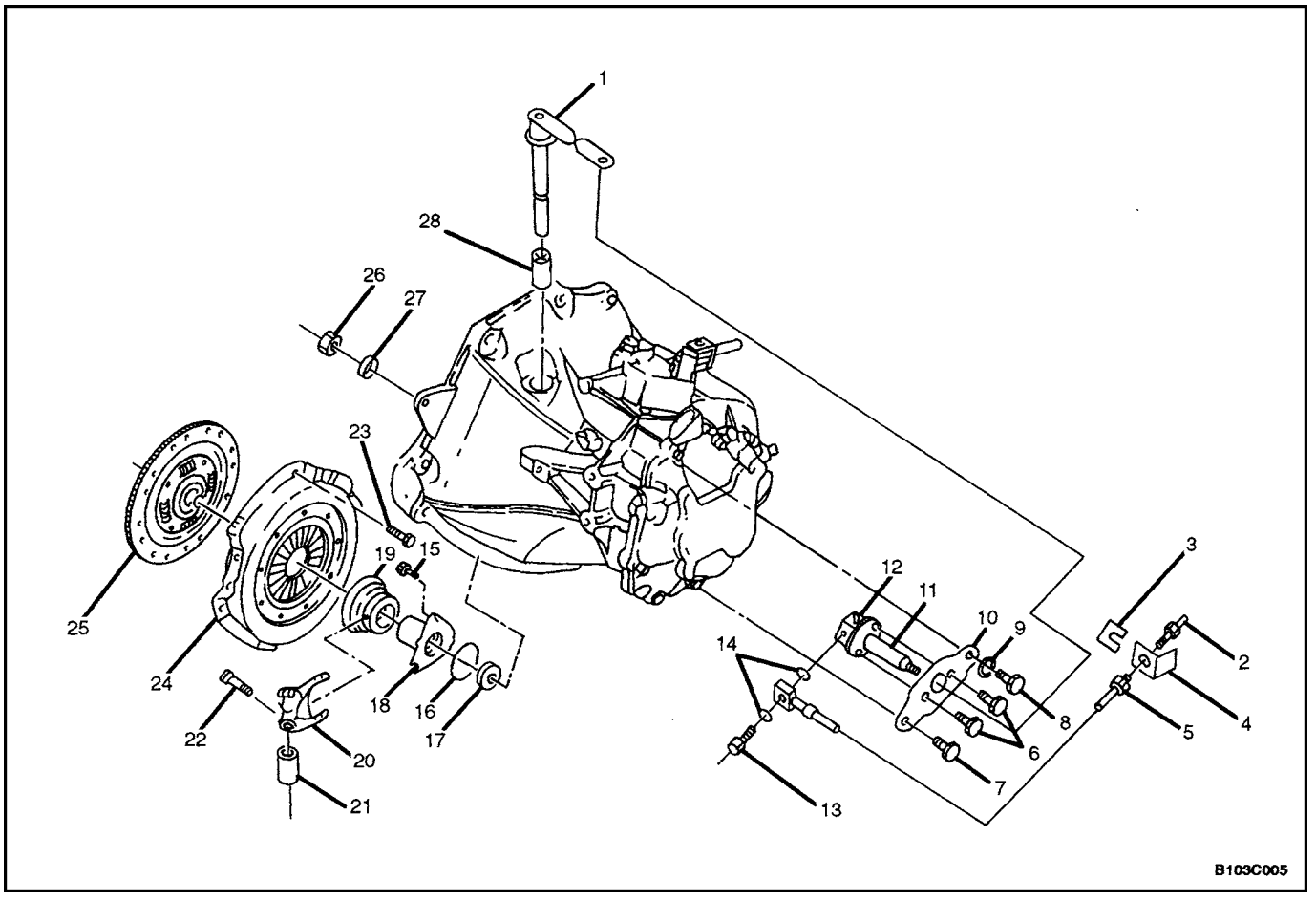

1. Release Lever
2. Pipe
3. Clip
4. Clamp
5. Hose
6. Bolt
7. Bolt
8. Bolt
9. Spring Washer
10. Release Cylinder Bracket
11. Release Cylinder
12. Air Bleeder
13. Bolt
14. Copper Washer
15. Bolt
16. O–ring
17. Input Shaft Seal
18. Bearing Guide Sleeve
19. Release Bearing
20. Fork
21. Bushing
22. Bolt
23. Bolt
24. Pressure Plate
25. Clutch Disc
26. Nut
27. Spring Washer
28. Bushing

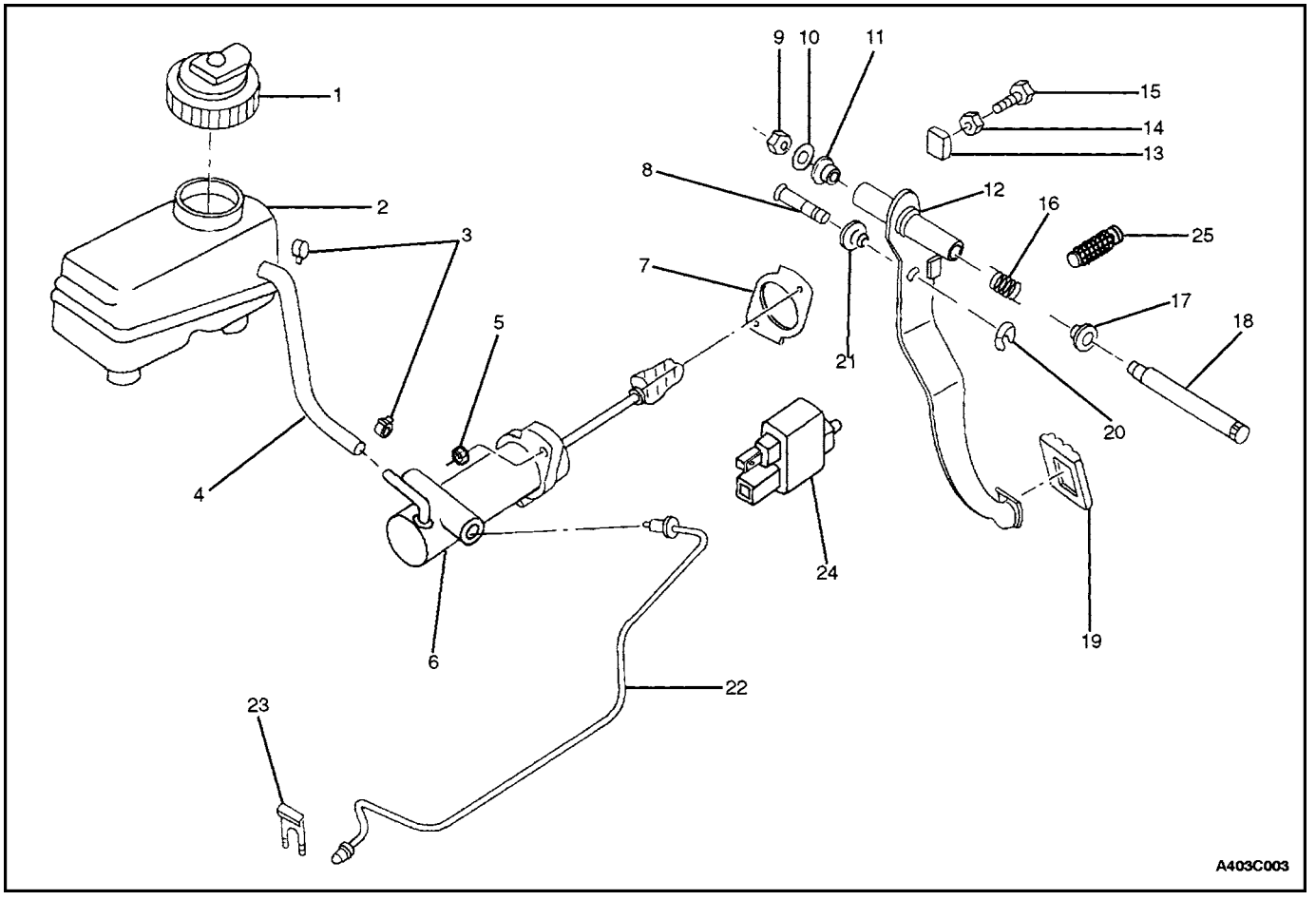

1. Reservoir Cap
2. Clutch/Brake Reservoir
3. Spring Clamps
4. Reservoir Hose
5. Nut
6. Master Cylinder
7. Gasket
8. Piston Rod Bolt
9. Nut
10. Washer
11. Clutch Pedal Bushing
12. Clutch Pedal
13. Clutch Pedal Buffer
14. Nut
15. Bolt
16. Return Spring
17. Clutch Pedal Bushing
18. Pedal Mounting Shaft
19. Clutch Pedal Pad
20. Locking Washer
21. Clutch Pedal Bushing
22. Hydraulic Clutch Pipe
23. Clip
24. Clutch Pedal Position Switch
25. Clutch Pedal Position Switch Adjusting Screw

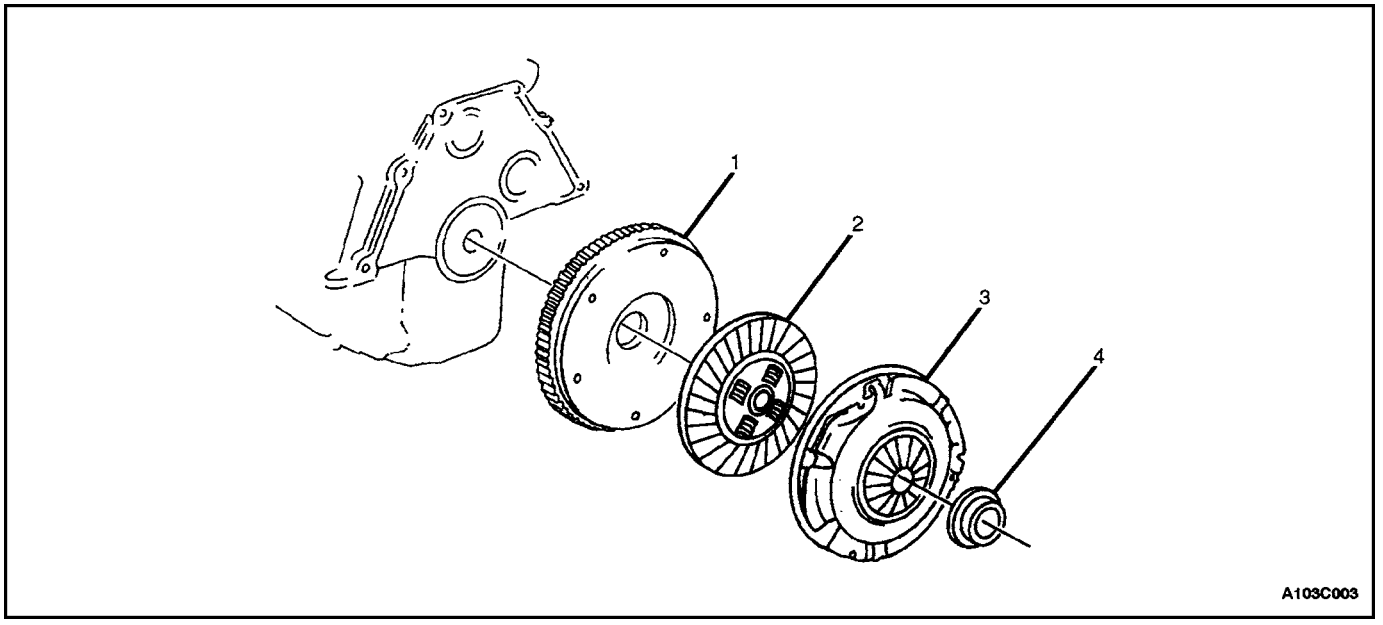

1. Flywheel
2. Clutch Disc
3. Pressure Plate
4. Release Bearing

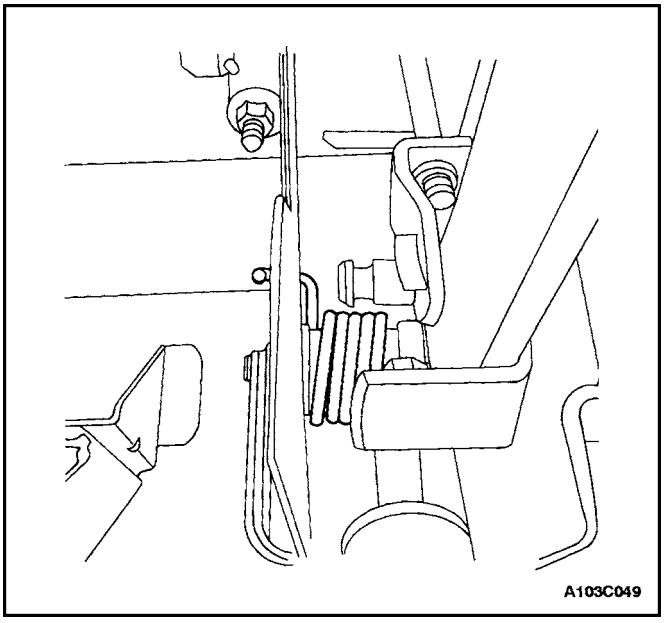

MAINTENANCE AND REPAIR

ON–VEHICLE SERVICE

CLUTCH PEDAL

Removal Procedure

1. Disconnect the negative battery cable.
2. Disconnect the return spring from the mount brace.

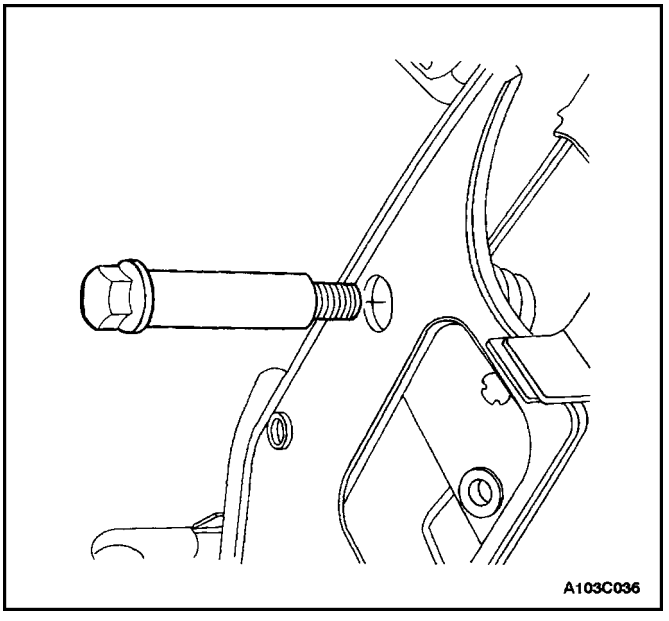

3. Remove the nut, the washer, and the pedal mounting shaft.

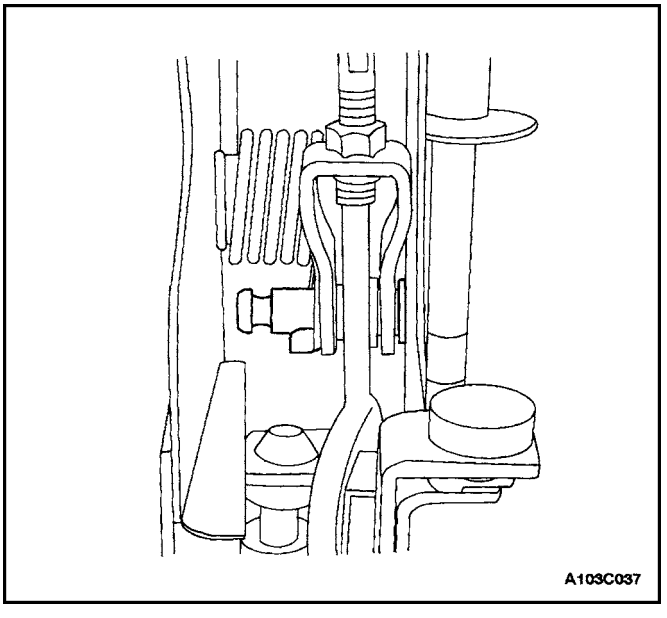

4. Remove the locking washer and the piston rod bolt.
5. Remove the clutch pedal with the return spring from the vehicle.

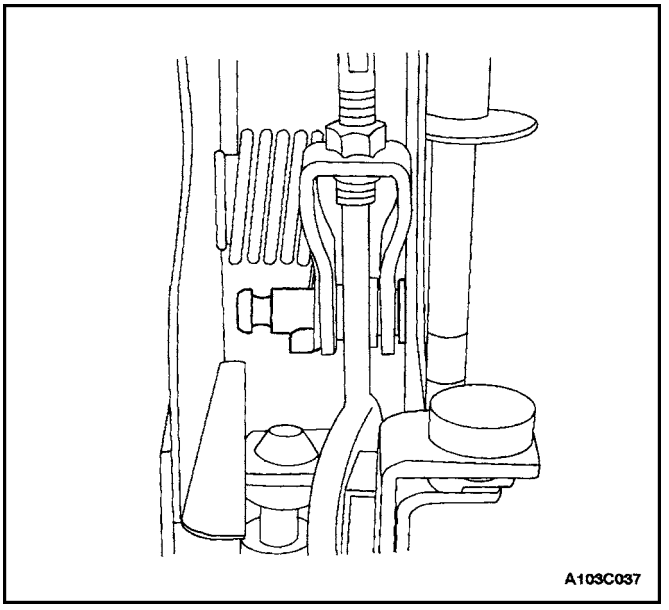

Installation Procedure

1. Install the clutch pedal with the return spring to the mount brace.
2. Coat the piston rod bolt with multi–purpose grease.
3. Install the piston rod bolt and the locking washer.

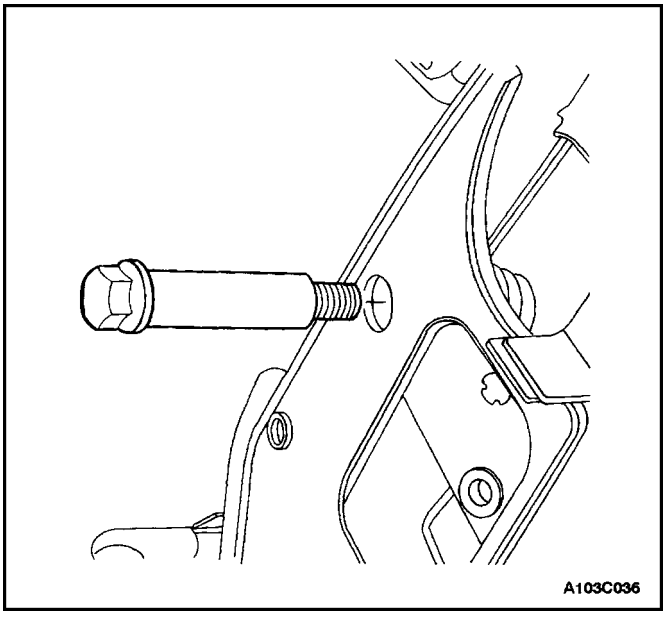

4. Coat the pedal mounting shaft with multi–purpose grease.
5. Install the pedal mounting shaft, the washer, and the nut.

Tighten

Tighten the clutch pedal nut to 18 N•m (13 lb–ft).

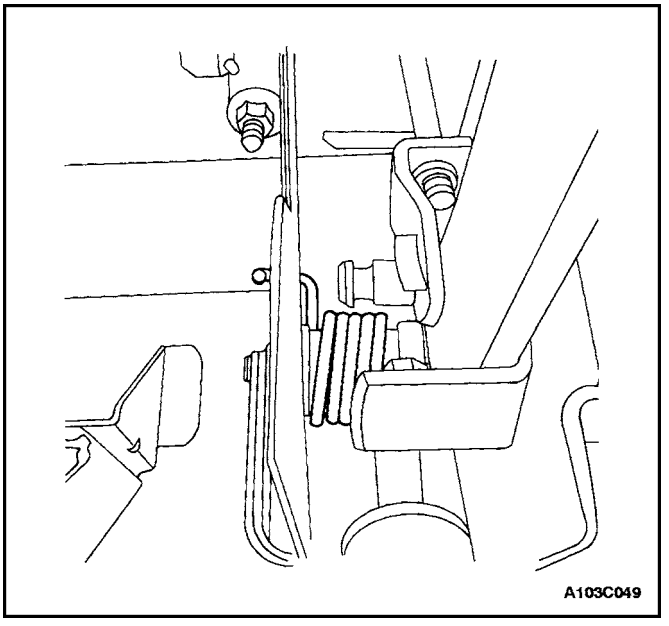

6. Connect the return spring to the mount brace.
7. Connect the negative battery cable.

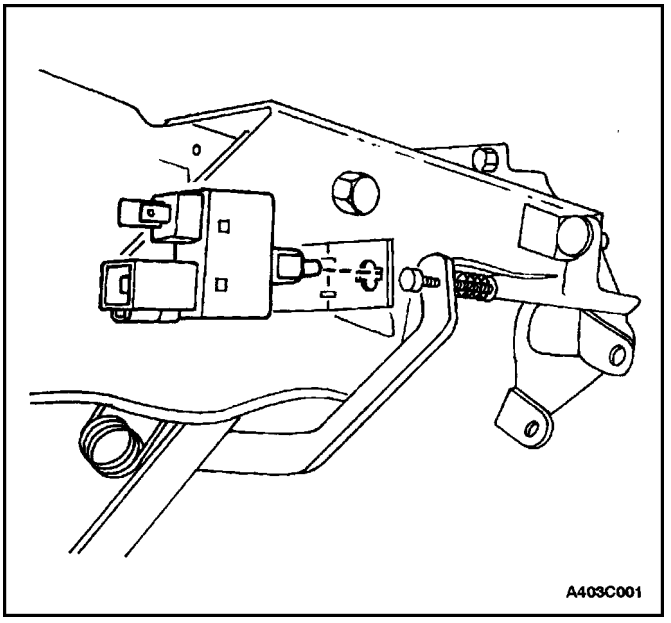

CLUTCH PEDAL POSITION SWITCH

Removal Procedure

1. Remove the clutch pedal position switch by rotating the switch and pulling it from the rear of the clutch pedal bracket.
2. Disconnect the electrical connector.

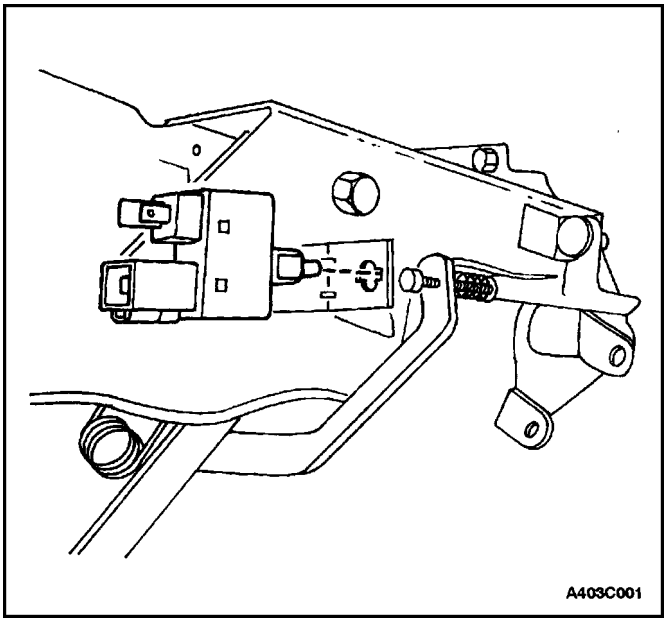

Installation Procedure

1. Connect the electrical connector.
2. Install the clutch pedal position switch by inserting it from the rear of the clutch pedal bracket and rotating the switch until it locks into position.

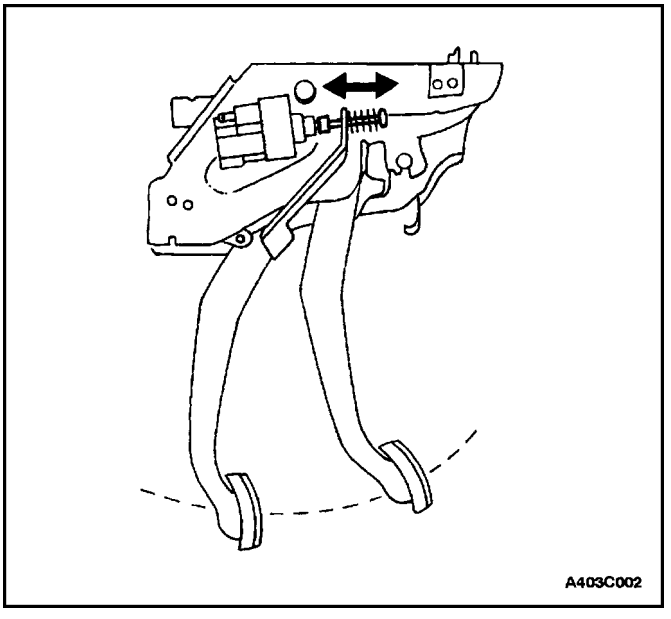

Adjustment Procedure

After the clutch pedal position switch is installed, adjust it in the following manner:

1. Confirm that the engine starts when the clutch pedal is fully pressed down.
2. If the engine does not start when the clutch pedal is fully pressed down, turn the clutch pedal position switch adjusting screw until the clutch pedal position switch is engaged so that the engine will start. Do not adjust the screw so far down that it damages the clutch pedal position switch.
3. Confirm that the engine does not start when the clutch pedal is released.
4. If the engine starts when the clutch pedal is released completely, replace the clutch pedal position switch.

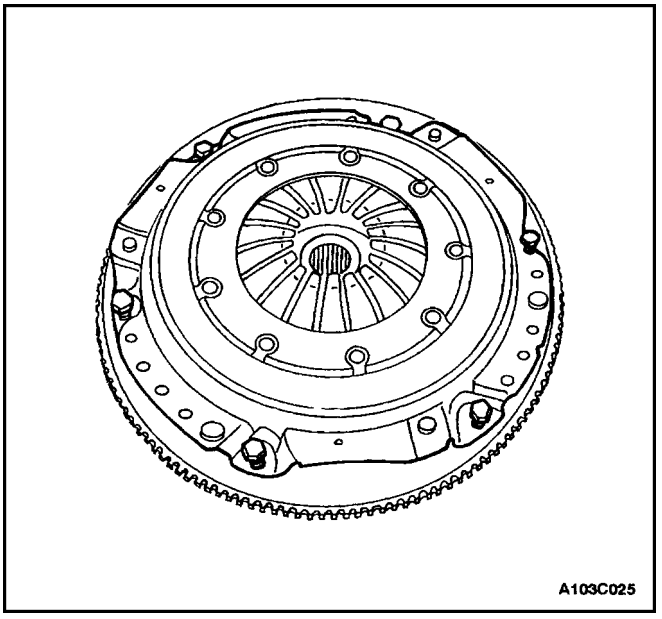

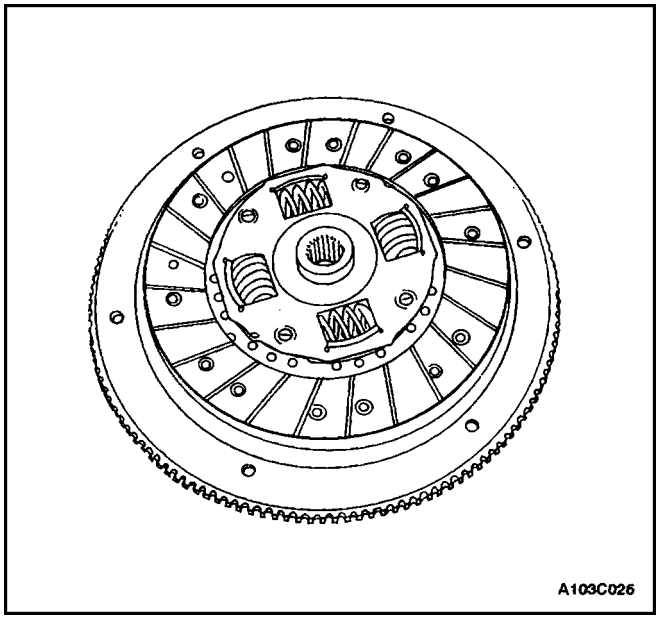

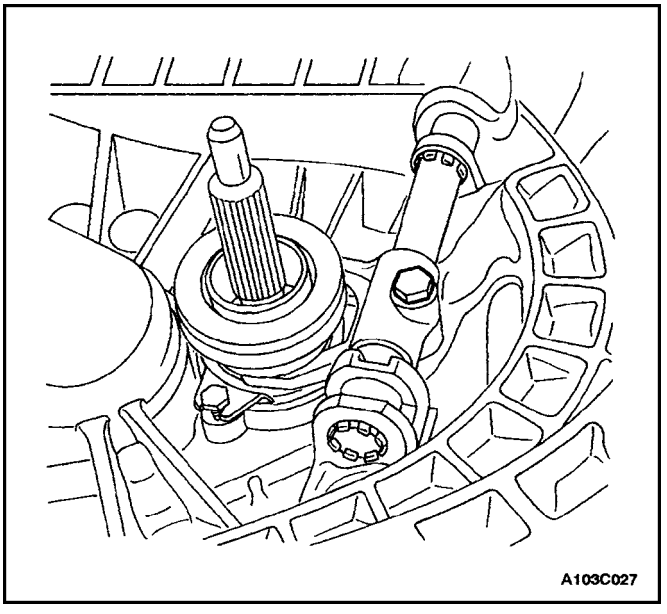

CLUTCH DISC AND RELATED COMPONENTS

Removal Procedure

1. Disconnect the negative battery cable.
2. Raise and suitably support the vehicle.
3. Remove the left front wheel. Refer to *Section 2E, Tires and Wheels.*
4. Remove the engine under covers. Refer to *Section 9N, Frame and Underbody.*
5. Remove the transaxle from the vehicle. Refer to .*Section 5B, Five–Speed Manual Transaxle*
6. Remove the pressure plate bolts and the pressure plate. Support the pressure plate when you remove the last bolt.
7. Remove the clutch disc.
8. Remove the release fork bolt.

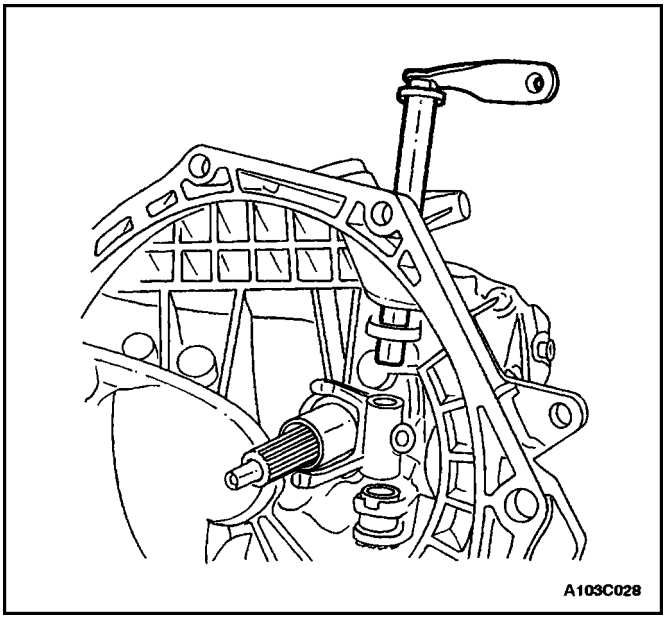

9. Pull the clutch release shaft upward, out of the transaxle.

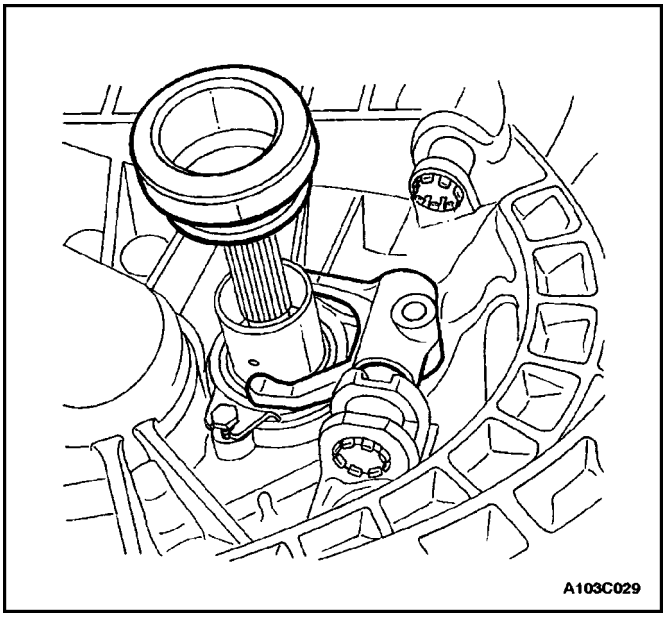

10. Remove the fork and the release bearing from the release bearing guide sleeve.

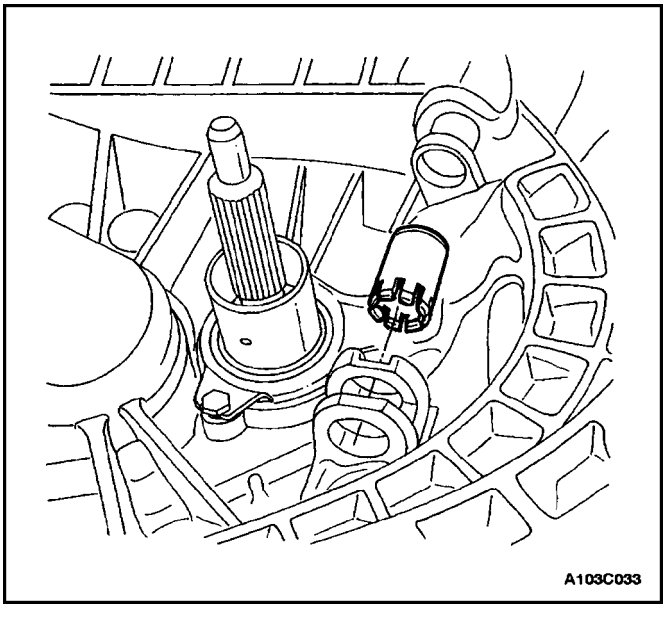

11. Remove the release lever shaft bushings.

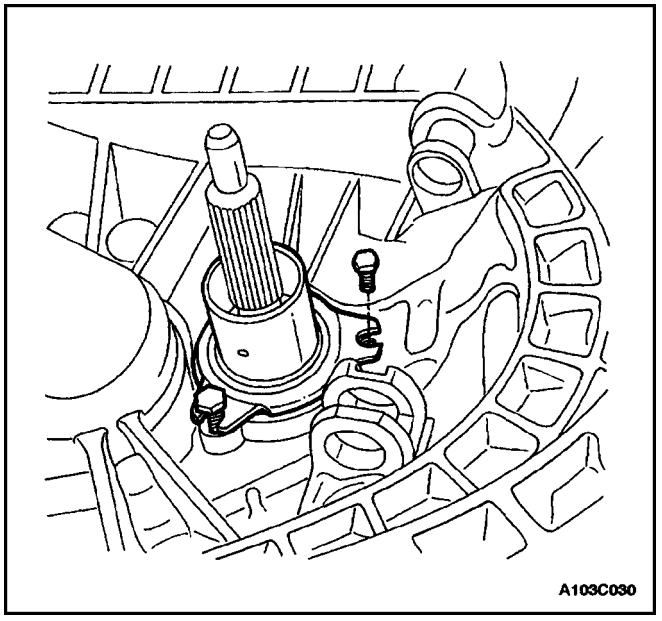

12. Remove the bolts and the release bearing guide sleeve.

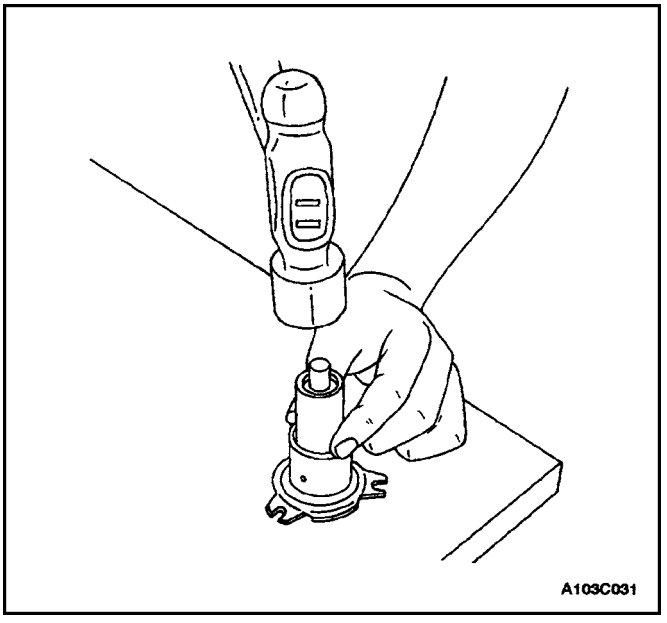

13. Remove the input shaft seal from the release bearing guide sleeve.

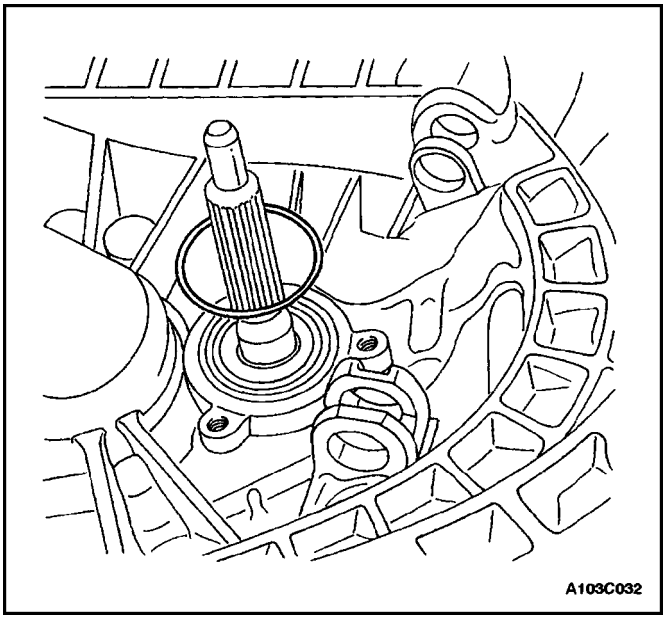

14. Remove the O–ring from the groove in the transaxle case.

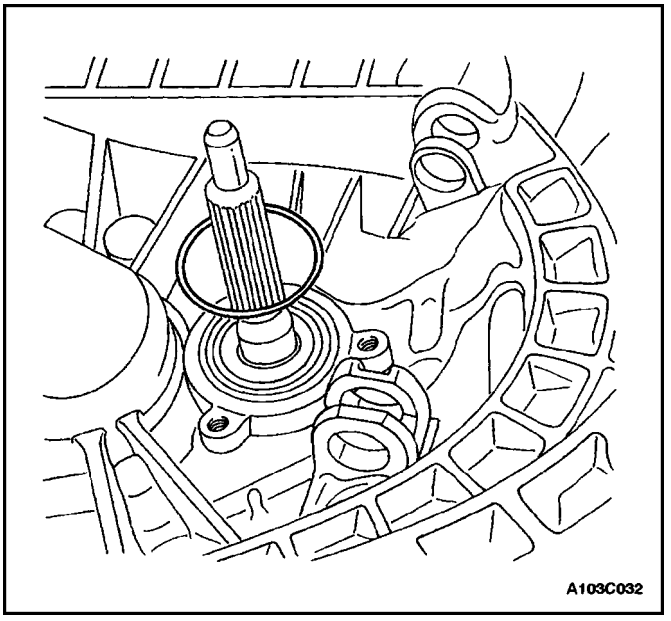
A103C032

Installation Procedure

Tools Required
J–36547 Input Shaft Seal Installer
J–42474 Clutch Arbor

1. Install the O–ring into the groove in the case.

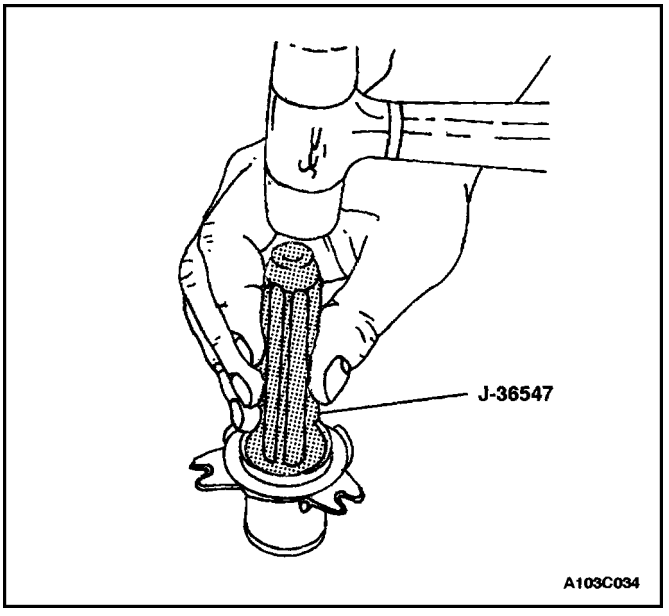

A103C034

2. Install the input shaft seal into the release bearing guide sleeve. Use input shaft seal installer J–36547 with a hammer.

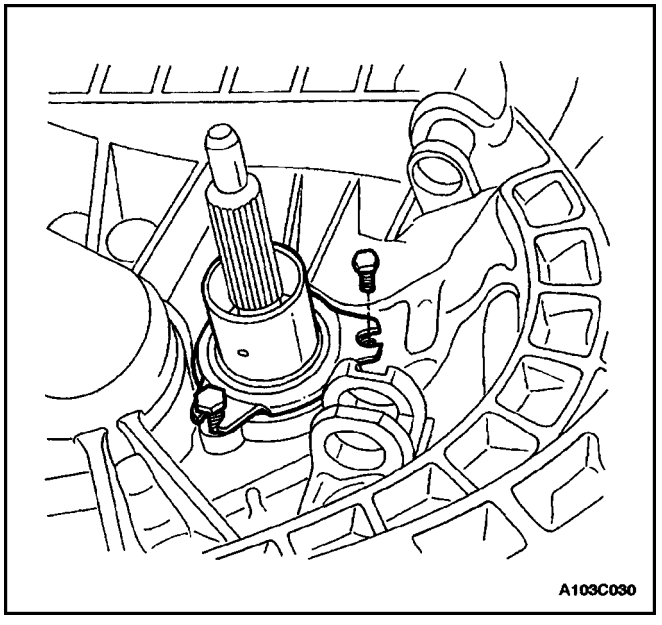
A103C030

3. Install the release bearing guide sleeve and the bolts.

   Tighten

   Tighten the release bearing guide sleeve bolts to 5 N•m (45 lb–in).

4. Coat the sleeve surface with multi–purpose grease.

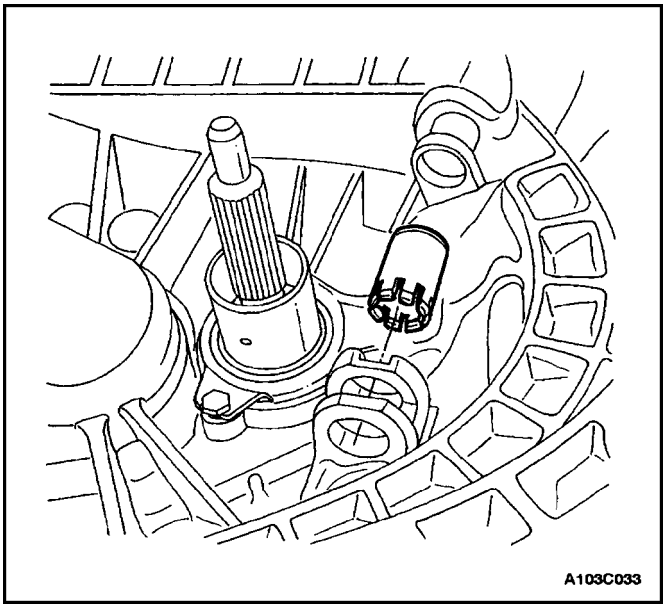

5. Install the release lever shaft bushings. Coat the bushing bores with multi–purpose grease.

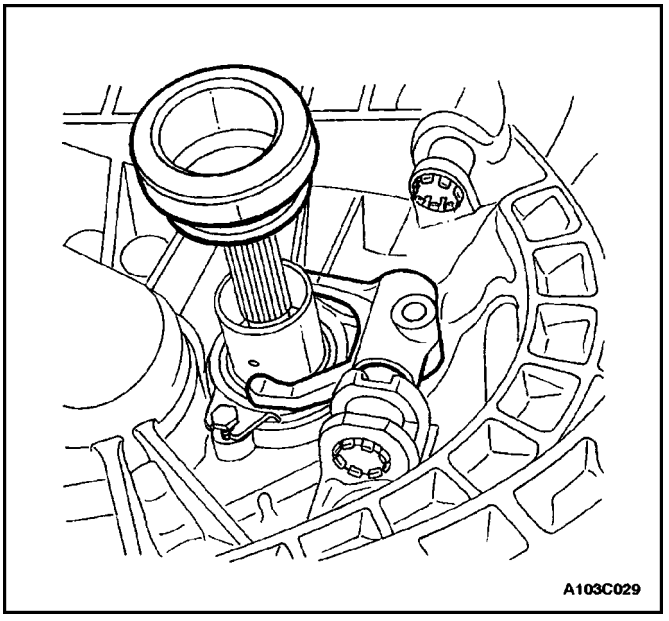

6. Coat the release bearing bore with multi–purpose grease.
7. Install the release bearing, with the clutch fork, onto the release bearing guide sleeve.

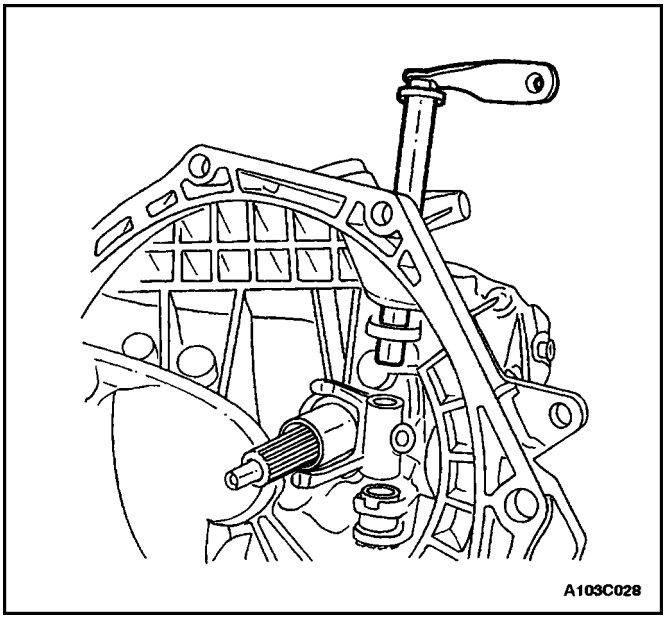

8. Install the release lever shaft from the top of the transaxle. Guide the shaft through the clutch fork.

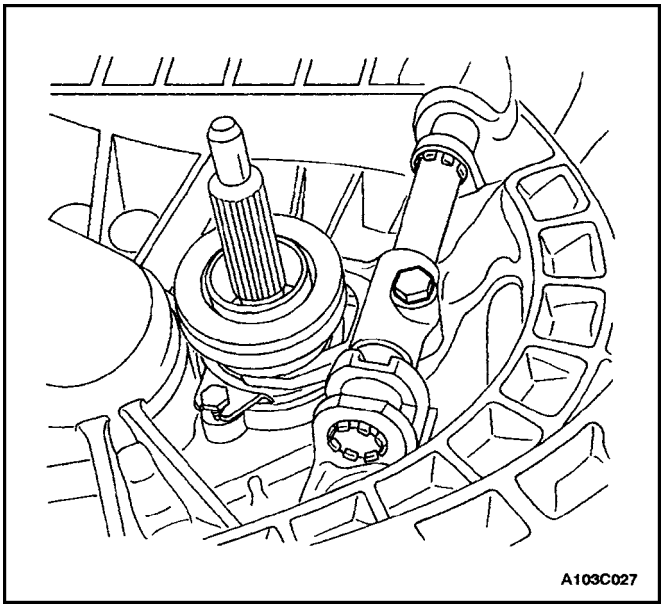

9. Align the shaft to the fork and install the bolt.

Tighten

Tighten the clutch fork–to–release lever shaft bolt to 35 N•m (26 lb–ft).

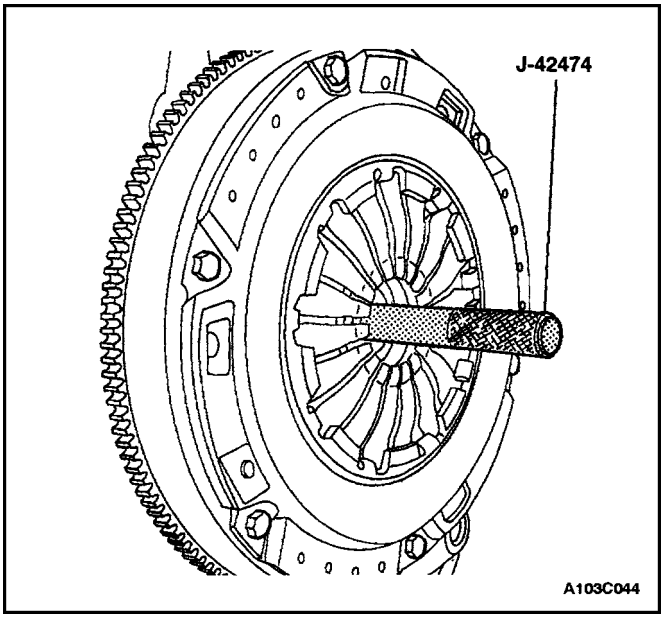

10. Coat the spline on the clutch disc with multi–purpose grease.
11. Align the pressure plate and the clutch disc onto the flywheel using the clutch arbor J–42474.
12. Install the pressure plate bolts.

Tighten

Tighten the pressure plate–to–flywheel bolts to 15 N•m (11 lb–ft).

13. Remove the clutch arbor J–42474.
14. Install the transaxle into the vehicle. Refer to *Section 5B, Five–Speed Manual Transaxle*
15. Install the engine under covers. Refer to *Section 9N, Frame and Underbody.*
16. Install the left front wheel. Refer to *Section 2E, Tires and Wheels.*
17. Lower the vehicle.
18. Connect the negative battery cable.

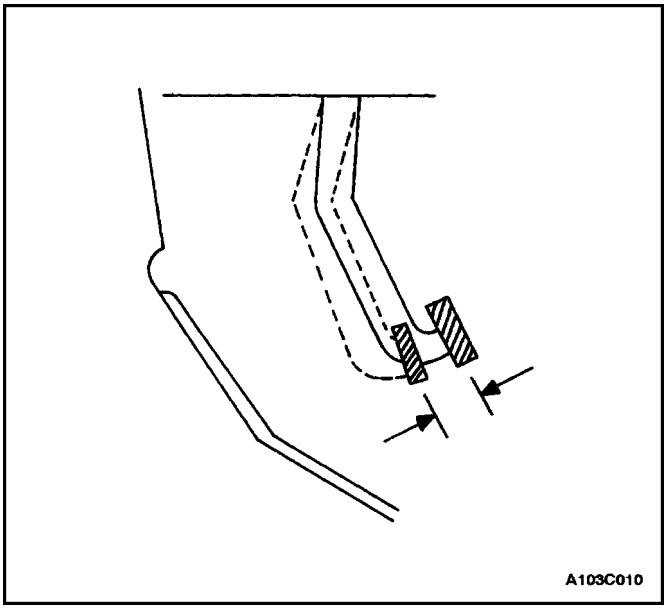

CLUTCH PEDAL ADJUSTMENT (HYDRAULIC)

Removal Procedure

1. Determine the clutch pedal play. Press the clutch pedal lightly with your hand andmeasure the distance when you feel resistance.

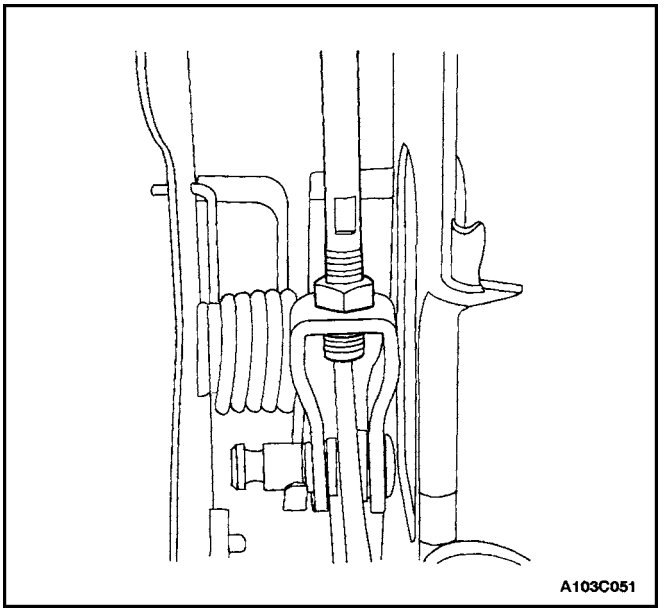

2. Adjust the clutch pedal play. Loosen the locknut and turn the pushrod. Clutch pedal play should measure 6 to12 mm (0.2 to 0.5 inch). Tighten the locknut after adjustment.

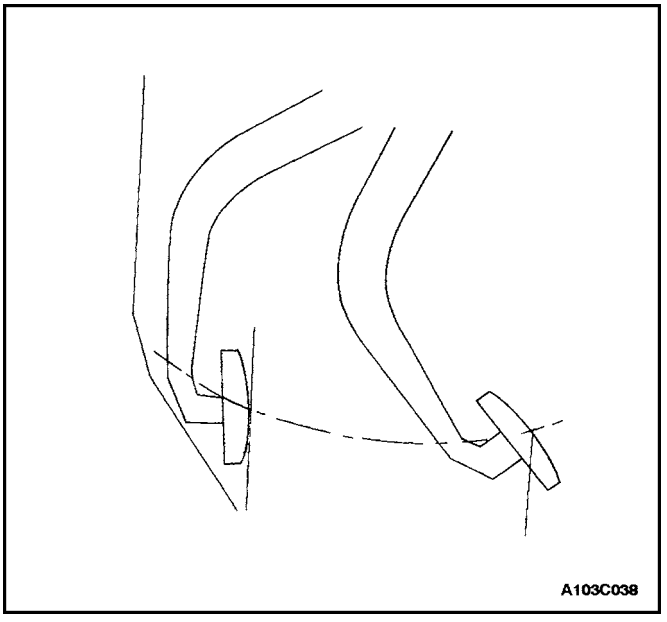

3. Measure the clutch pedal travel. Press the clutch pedal all the way to the floor. Measure from the starting position to the ending position.

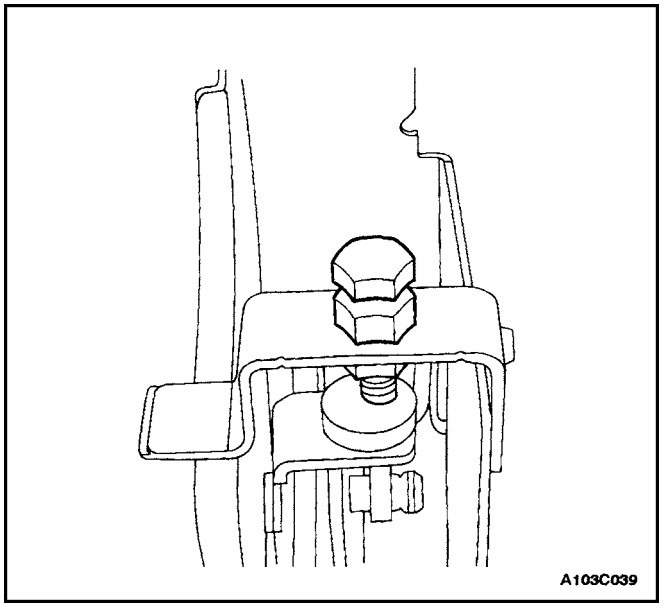

4. Adjust the clutch pedal travel. Loosen the locknut and turn the bolt. Clutch pedal travel should measure more than 130 mm (5.1 inches). Tighten the locknut after adjustment.

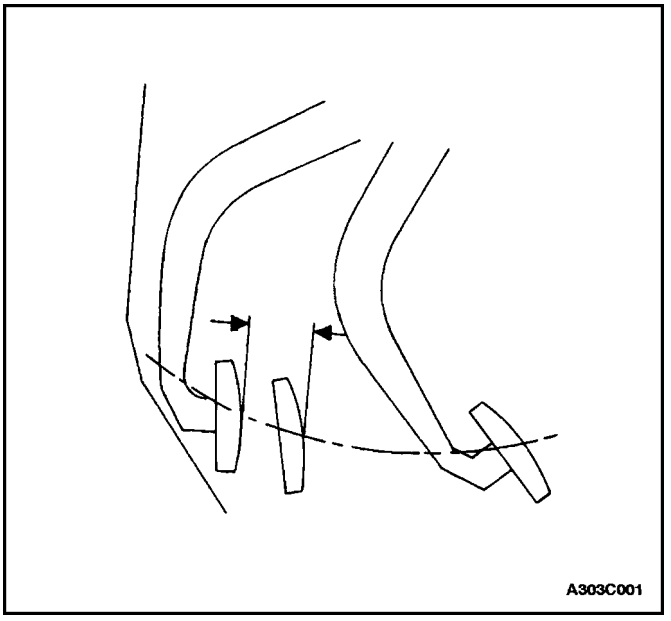

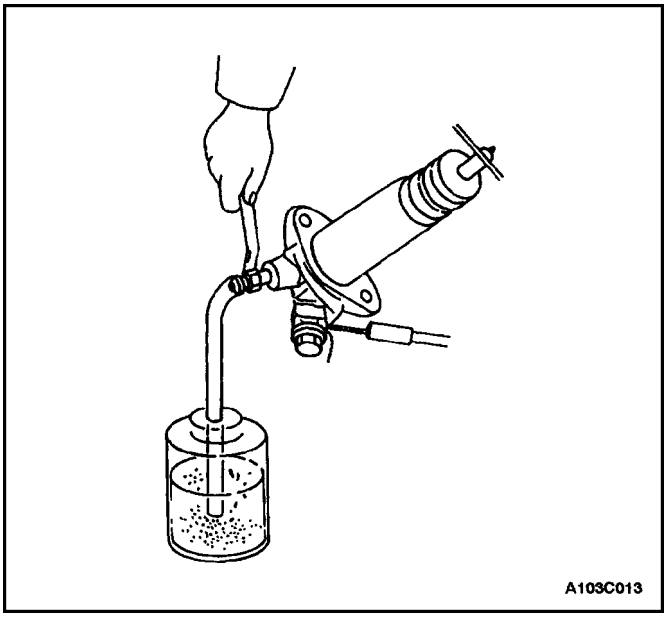

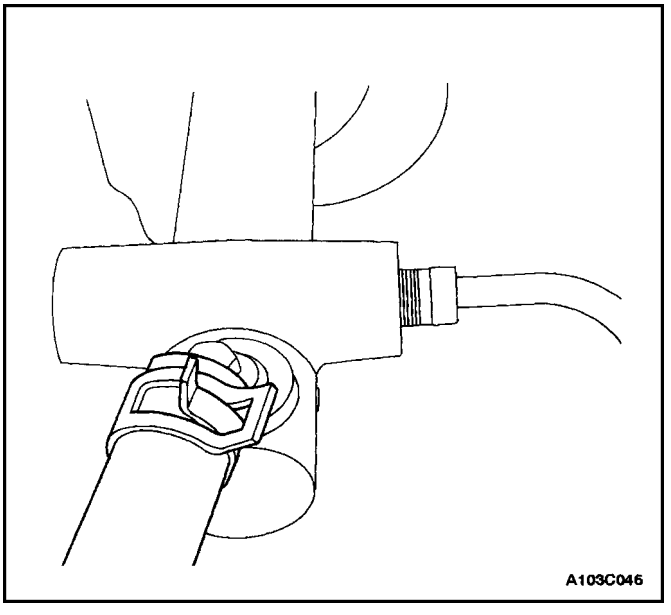

CLUTCH RELEASE POINT ADJUSTMENT (HYDRAULIC)

Removal Procedure

1. Apply the parking brake.
2. Run the engine at idle speed.
3. While you move the shift lever into the reverse position, press the clutch pedal slowly and measure the distance between the point when gear noise is not heard and the point at which the clutch pedal is completely pressed down. The distance should be more than 30 mm (1.2 inches).
4. If the distance is not more than 30 mm (1.2 inches), check the following:

   - Clutch pedal height.
   - Clutch pedal play.
   - Air in the system.
   - Clutch cover and disc.

AIR BLEEDING

Bleed the hydraulic system to remove the air which entered when the pipes were disconnected for repairs. The clutch/brake fluid in the clutch/brake reservoir must be maintained at theMIN level or higher during air bleeding.

1. Attach a vinyl hose to the bleeder plug. Place the other end of the vinyl tube in a glass container half–filled with brake fluid.
2. Slowly pump the clutch pedal several times.
3. While you press the clutch pedal, loosen the bleeder screw until the fluid starts to run out. Close the bleeder screw.
4. Repeat Step 3 until there are no air bubbles in the fluid.
5. Fill the reservoir with brake fluid up to the MAX level.

CLUTCH MASTER CYLINDER ASSEMBLY

Removal Procedure

1. Before disconnecting the reservoir tank hose, remove the clutch/brake fluid from the reservoir tank.
2. Disconnect the negative battery cable.
3. Disconnect the spring clamp on the master cylinder.
4. Remove the reservoir hose.

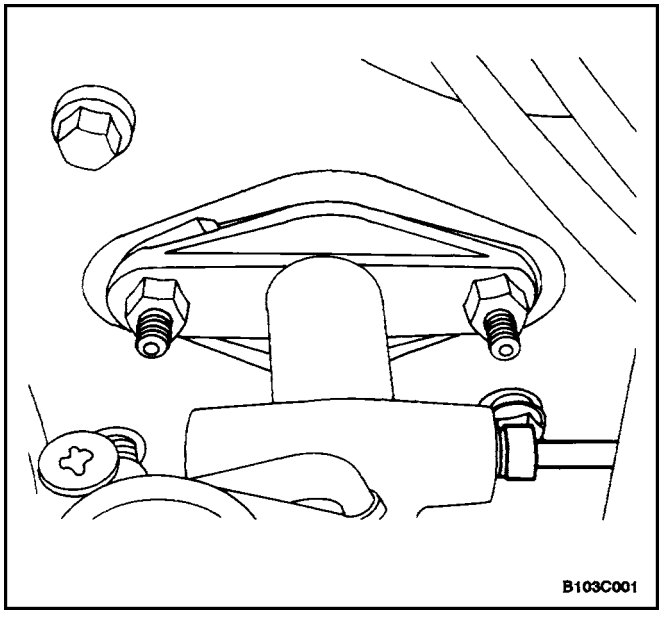

5. Disconnect the pipe connected to the master cylinder.

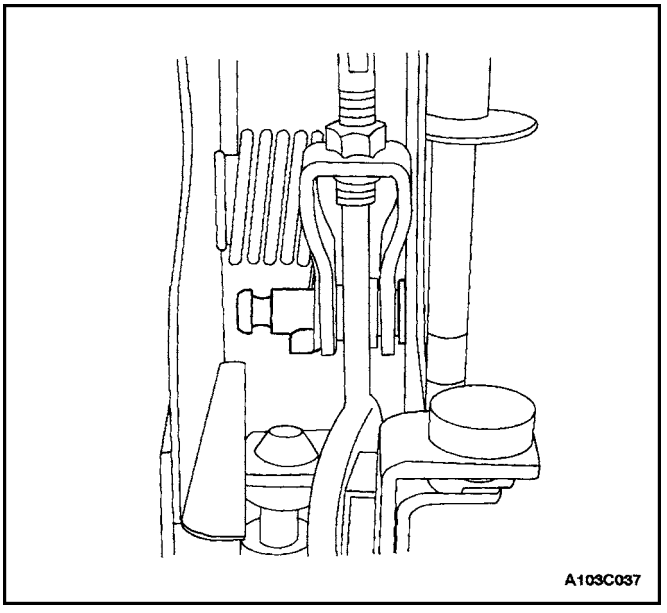

6. Remove the locking washer and the piston rod bolt from the clutch pedal and piston rod clevis.

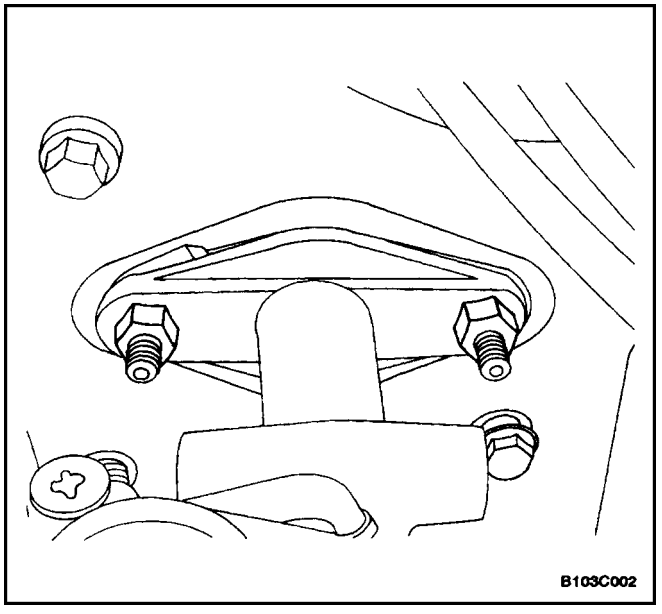

7. Remove the locknuts on the master cylinder bracket.
8. Remove the master cylinder in the direction of the engine compartment.

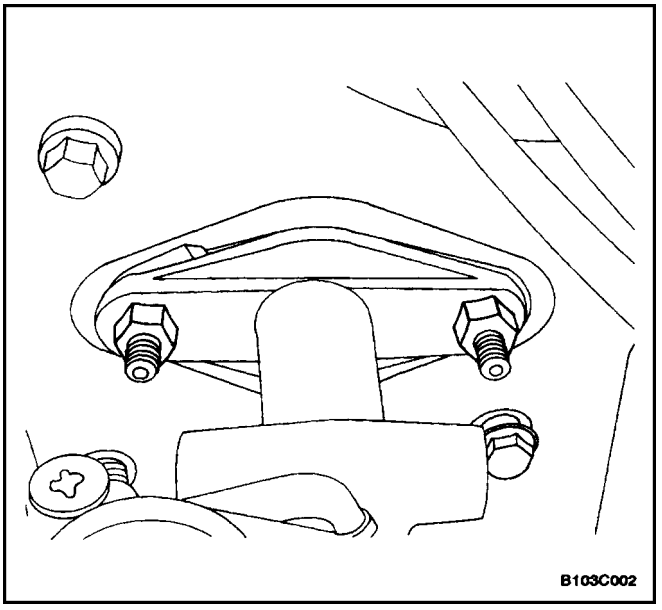

Installation Procedure

1. Install the master cylinder to the mounting bolts and install the locknuts.

   Tighten

   Tighten the clutch master cylinder locknuts to 22 N•m (18 lb–ft).

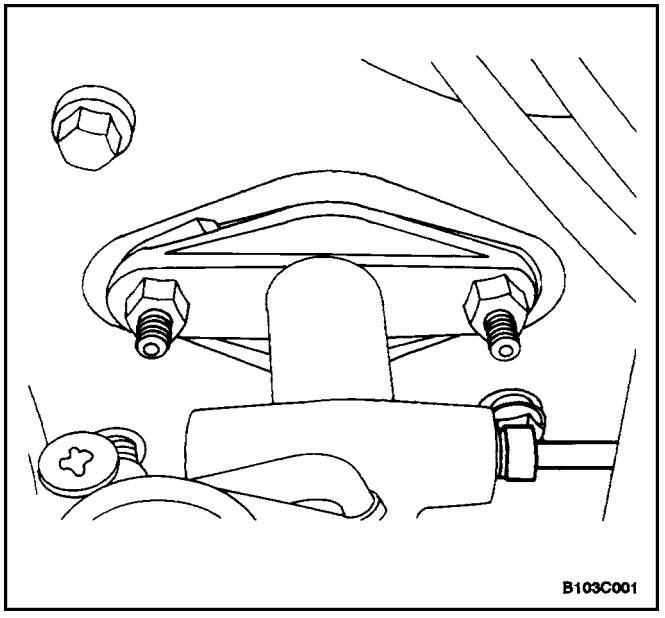

2. Connect the pipe to the master cylinder.

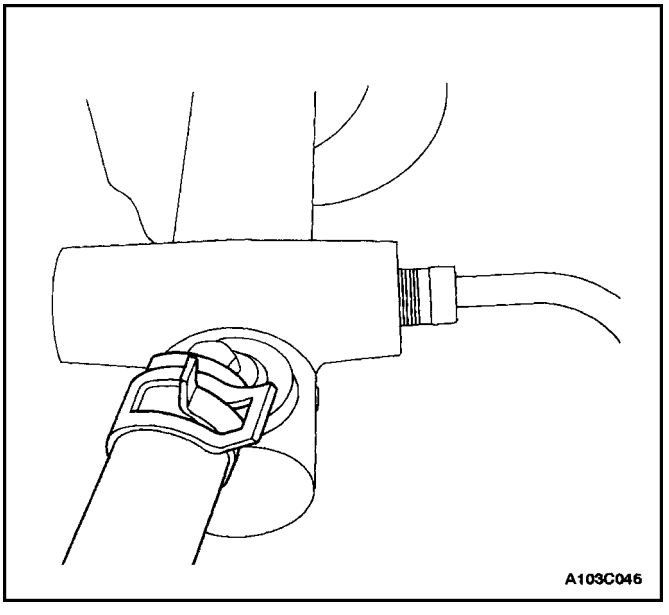

3. Connect the reservoir hose to themaster cylinder and tighten the spring clamp.

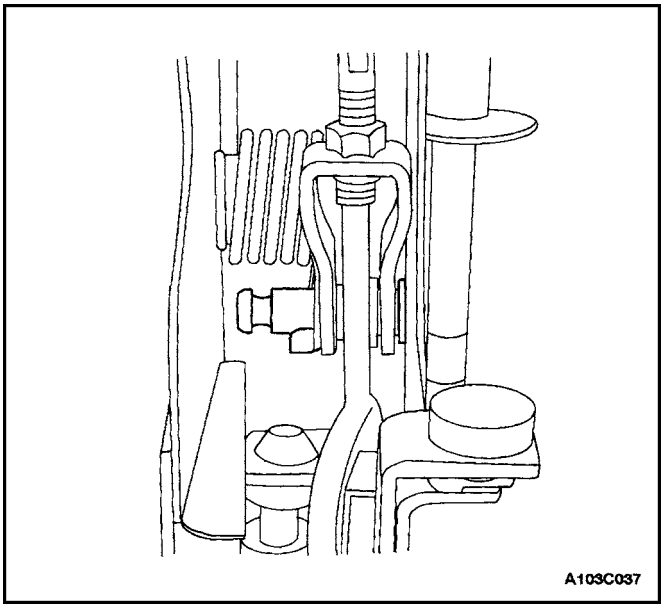

4. Coat the piston rod bolt with multi–purpose grease.
5. Install the piston rod clevis, the piston rod bolt, and the locking washer onto the clutch pedal.
6. Bleed the air. Refer to ”Air Bleeding” in this section.
7. Adjust the clutch pedal. Refer to ”Clutch Pedal Adjustment ” in this section.
8. Fill the reservoir with clutch/brake fluid up to the MAX level.
9. Connect the negative battery cable.

CLUTCH RELEASE CYLINDER ASSEMBLY

Removal Procedure

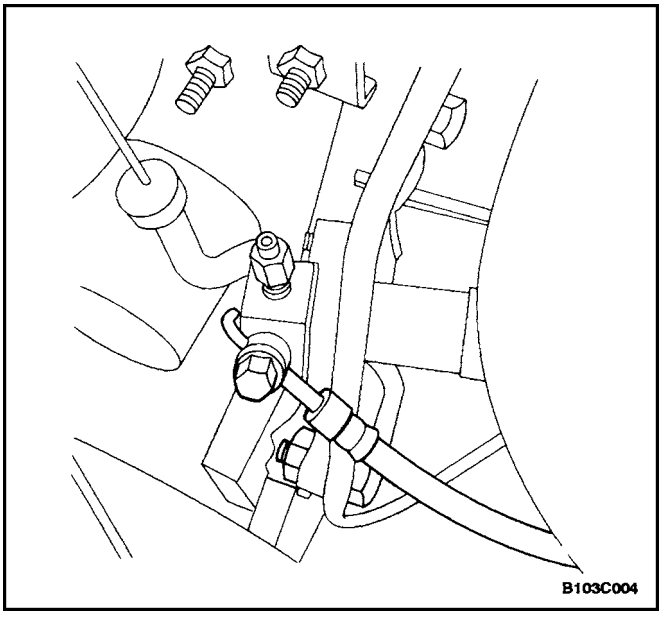

1. Disconnect the negative battery cable.
2. Remove the bolt and disconnect the hose from the clutch release cylinder.

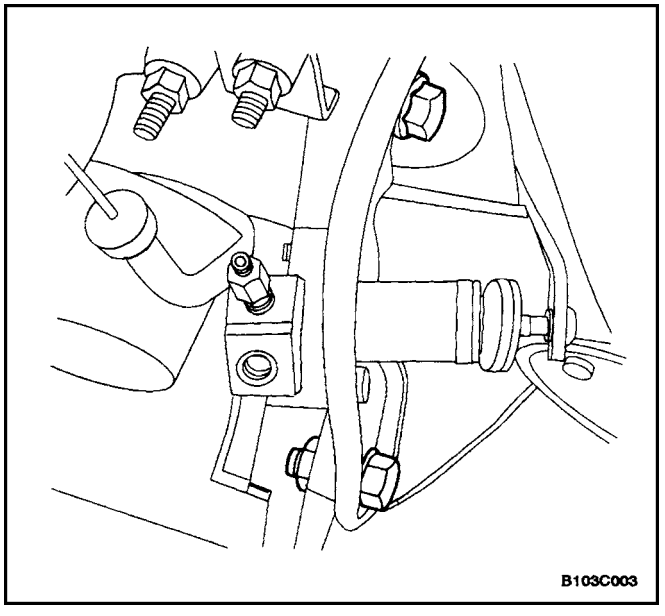

3. Remove the clutch release cylinder bolts and remove the release cylinder from the transaxle.

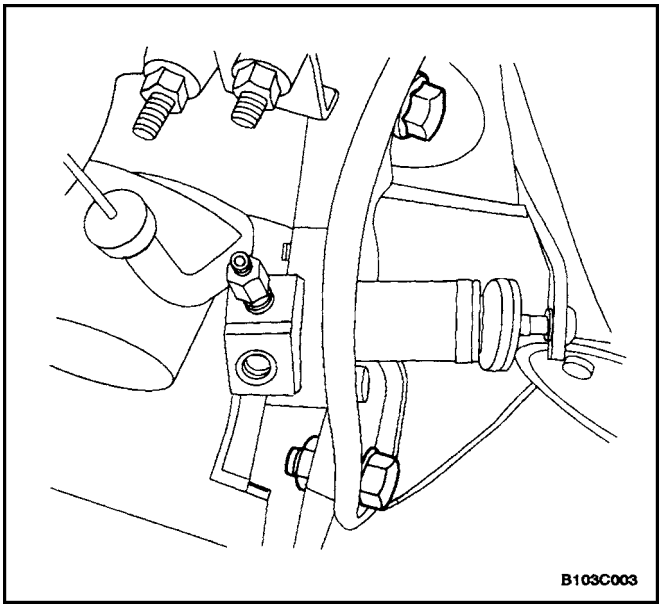

Installation Procedure

1. Connect the release cylinder to the transaxle and install the bolts.

   Tighten

   Tighten the release cylinder bolts to 60 N•m (44 lb–ft).

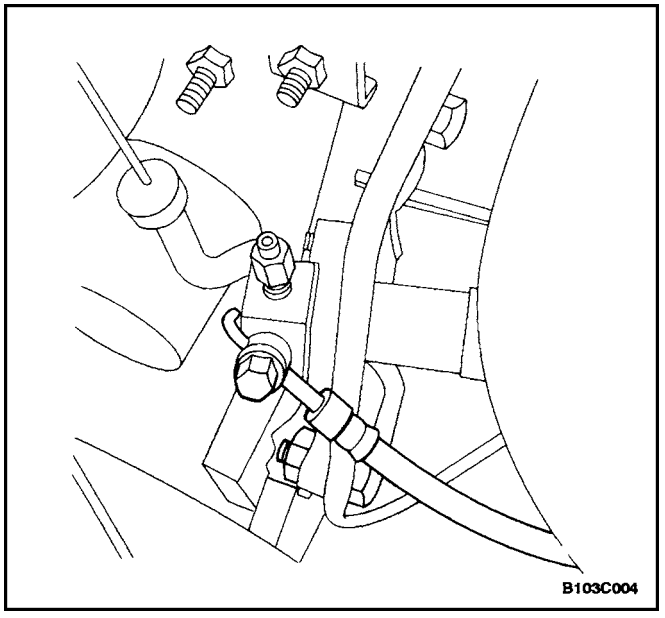

2. Connect the hose assembly to the cylinder body.
3. Apply grease where the pushrod connects to the release lever. Be careful not to stain the boot.
4. Bleed the air. Refer to ”Air Bleeding” in this section.
5. Adjust the clutch pedal. Refer to ”Clutch Pedal Adjustment (Hydraulic)” in this section.
6. Fill the reservoir with clutch/brake fluid up to the MAX level.
7. Connect the negative battery cable.

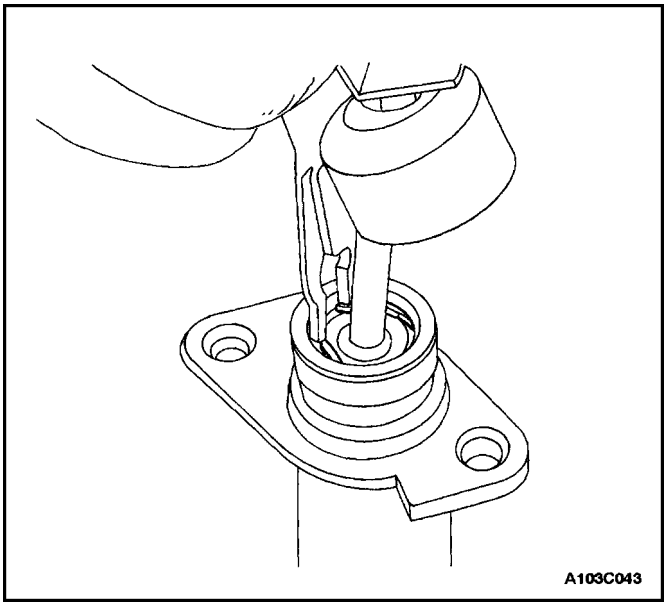

UNIT REPAIR

CLUTCH MASTER CYLINDER

Disassembly Procedure

1. Remove the clutch master cylinder assembly from the vehicle. Refer to ”Clutch Master Cylinder Assembl” in this section.
2. Remove the boot and disconnect the piston stop ring using ring pliers.

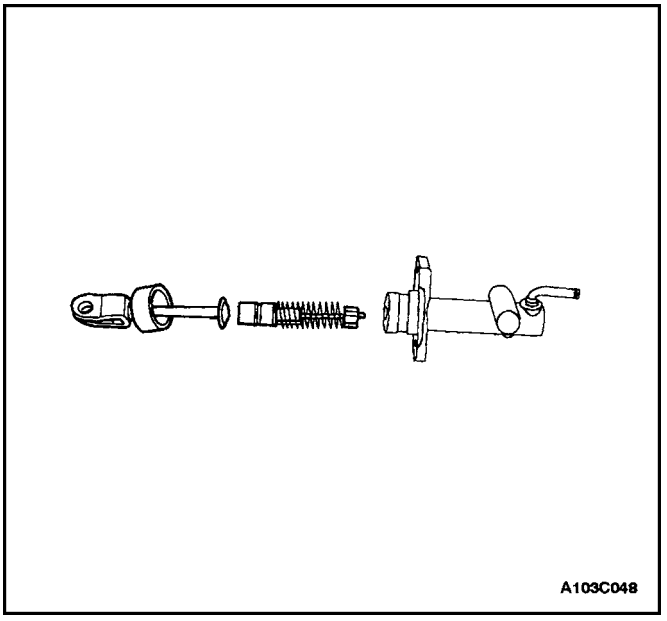

3. Remove the pushrod assembly and the piston assembly.
4. Inspect the cup and the piston for wear. Fluid leaks will show wear on the cup and the piston. Replace the cup and the piston if necessary.
5. Remove the pushrod assembly and the piston assembly.
6. Inspect the pushrod for wear. Repair the pushrod if necessary.

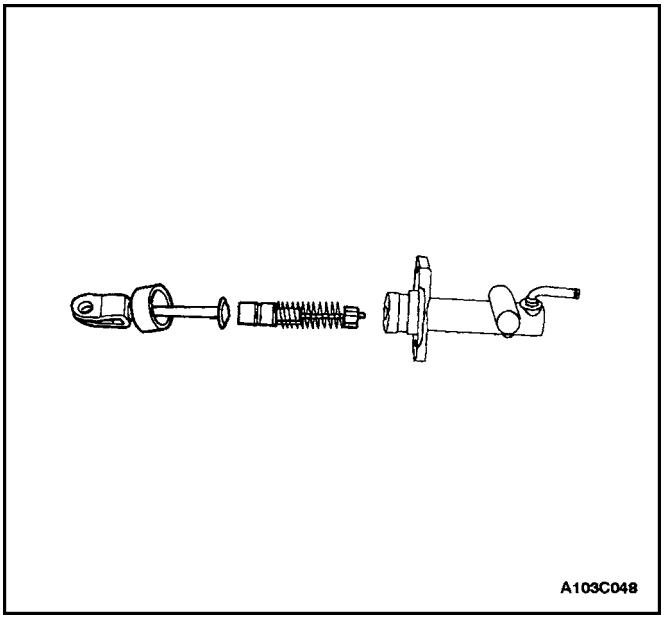

Assembly Procedure

1. Apply clean fluid to the piston assembly cup and insert the piston assembly and the pushrod assembly into the master cylinder body.

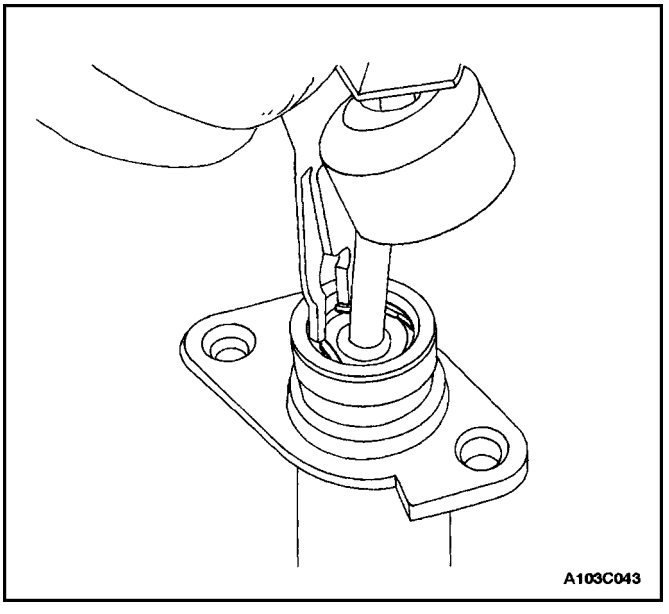

2. Install the piston stop ring using ring pliers. Install the boot.
3. Install the clutch master cylinder assembly into the vehicle. Refer to ”Clutch Master Cylinder Assembl” in this section.

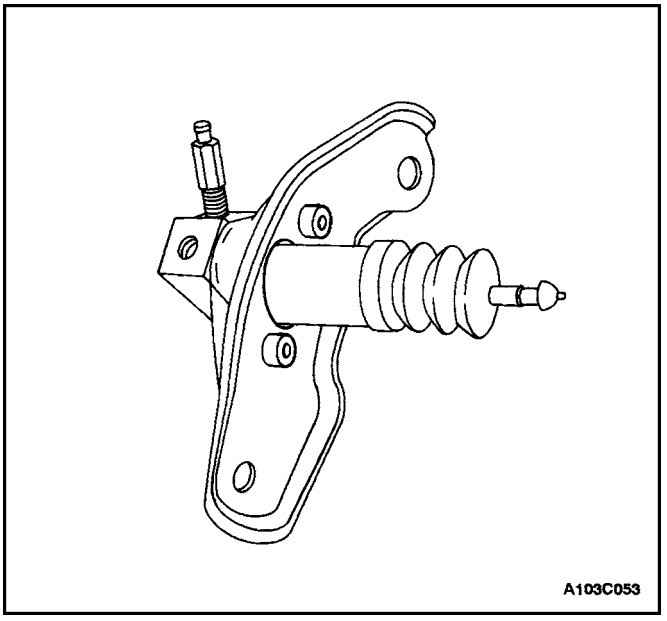

CLUTCH RELEASE CYLINDER

Disassembly Procedure

1. Remove the clutch release cylinder assembly from the vehicle. Refer to"Clutch Master Cylinder Assembl" in this section.
2. Remove the bolts and brackets.

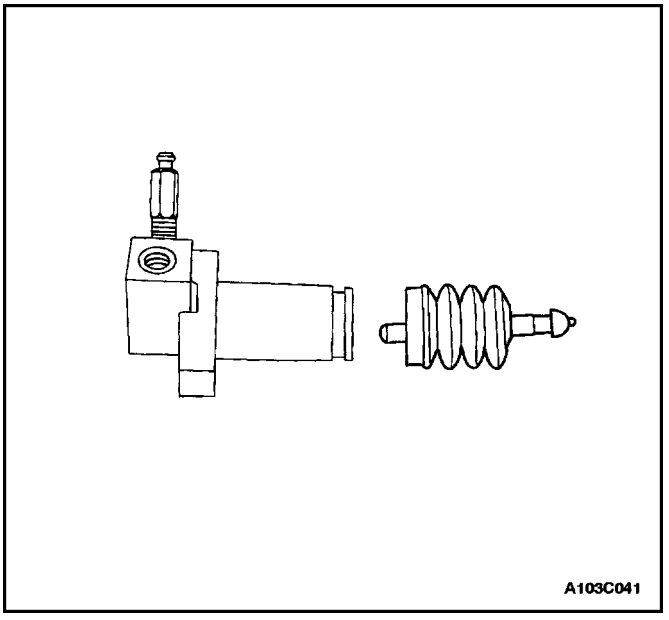

3. Remove the boot and the pushrod.

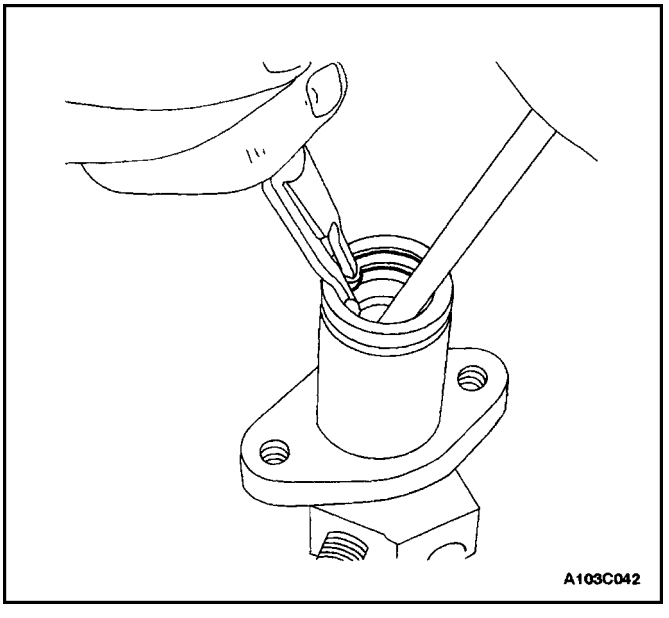

4. Compress the piston with a driver, then remove the snap ring with snap ring pliers.
5. Remove the piston assembly.

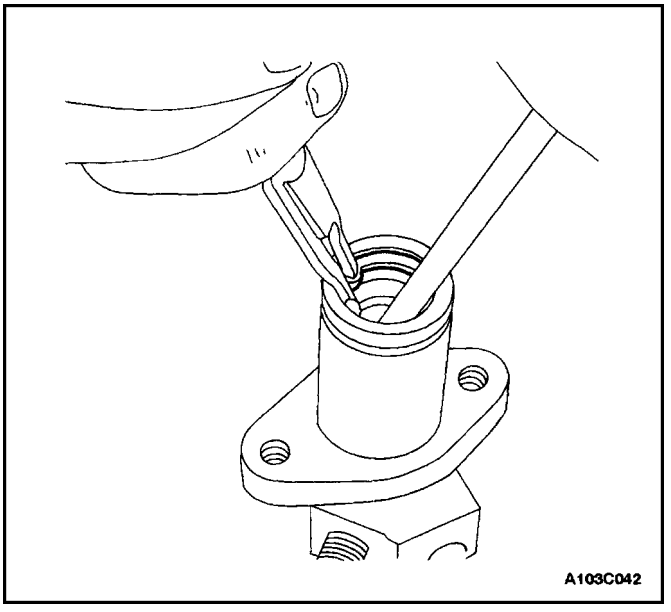

Assembly Procedure

1. Apply clean clutch fluid to the piston and the cup.
2. Install the spring to the piston, and insert the assembly into the cylinder body.
3. Compress the piston with a driver, then install the snap ring with snap ring pliers.

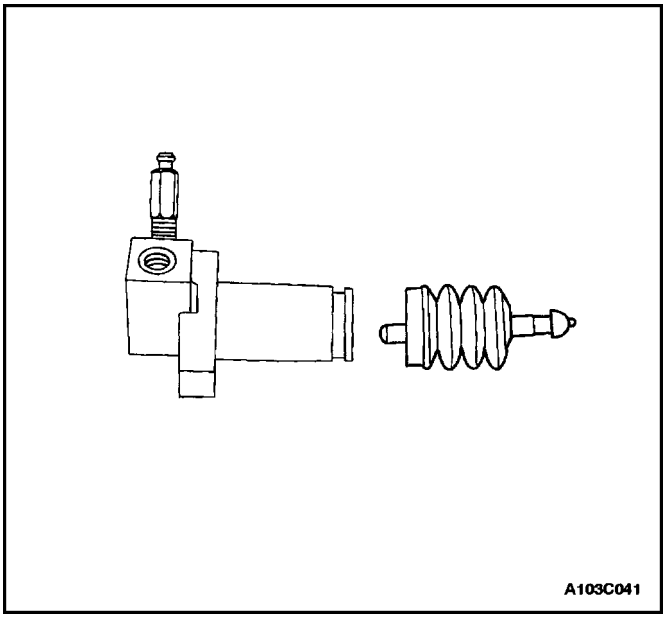

4. Install the pushrod and the boot.

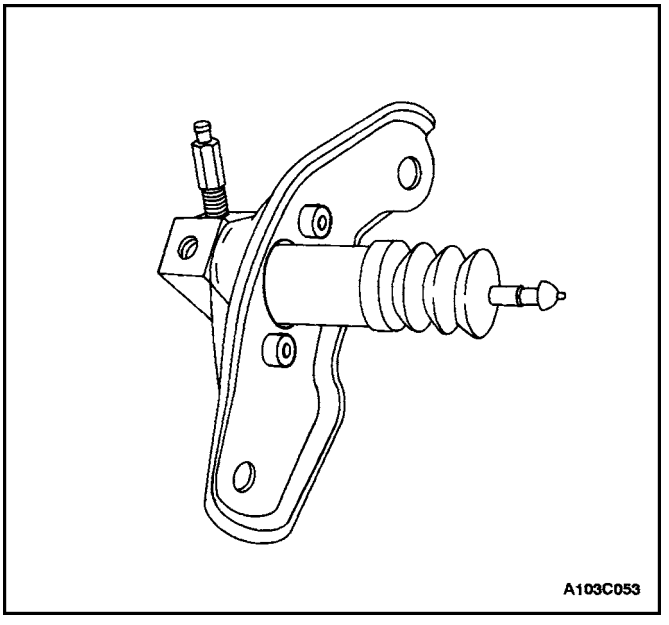

5. Install the brackets and the bolts.
6. Install the clutch release cylinder assembly. Refer to”Clutch Master Cylinder Assembl” in this section.

GENERAL DESCRIPTION AND SYSTEM OPERATION

DRIVING MEMBERS

The driving members consist of two flat surfaces machined to a smooth finish. One of these is the rear face of the engine flywheel, and the other is the pressure plate. The pressure plate is fitted into a steel cover, which is bolted to the flywheel.

DRIVEN MEMBERS

The driven member is the clutch disc with a splined hub which is free to slide lengthwise along the splines of the input shaft, but which drives the input shaft through these same splines.

The driving and driven members are held in contact by spring pressure. This pressure is exerted by a diaphragm spring in the pressure plate assembly.

OPERATING MEMBERS

The clutch release system consists of the clutch pedal, the clutch shaft, the fork, and the release bearing. When pressure is applied to the clutch pedal, the fork pivots on its shaft and the inner end pushes against the release bearing. The bearing then pushes against the release levers in the pressure plate assembly, thereby releasing the clutch.

SECTION : 9F

AUDIO SYSTEMS

CAUTION : Disconnect the negative battery cable before removing or installing any electrical unit or when a tool or equipment could easily come in contact with exposed electrical terminals. Disconnecting this cable will help prevent personal injury and damage to the vehicle. The ignition must also be in LOCK unless otherwise noted.

TABLE OF CONTENTS

SPECIFICATIONS 9F–1
FASTENER TIGHTENING SPECIFICATIONS . 9F–1
SCHEMATIC AND ROUTING DIAGRAMS 9F–2
AUDIO SYSTEM CIRCUIT 9F–2
DIAGNOSIS 9F–3
STEREO CASSETTE AM/FM RADIO 9F–3
SPEAKERS 9F–5
ANTENNA 9F–6
MAINTENANCE AND REPAIR 9F–8
ON–VEHICLE SERVICE 9F–8
STEREO CASSETTE AM/FM RADIO 9F–8
FRONT DOOR SPEAKERS 9F–9
TWEETER SPEAKERS 9F–10
REAR SPEAKERS (NOTCHBACK) 9F–10
REAR SPEAKERS (HATCHBACK) 9F–11
MAST ANTENNA 9F–12
ROOF ANTENNA 9F–13
POWER ANTENNA MAST(NOTCHBACK) ... 9F–13
POWER ANTENNA MOTOR (NOTCHBACK) 9F–14
COMPACT DISC CHANGER 9F–15
GENERAL DESCRIPTION AND SYSTEM OPERATION 9F–17
AUDIO SYSTEMS 9F–17
AUDIO SECURITY SYSTEM 9F–17
FRONT AND REAR SPEAKERS 9F–17
TWEETER SPEAKERS 9F–17
MAST ANTENNA 9F–17
POWER ANTENNA 9F–17
ROOF ANTENNA 9F–17
TAPE PLAYER AND CASSETTE CARE 9F–17
COMPACT DISC CARE 9F–17

SPECIFICATIONS

FASTENER TIGHTENING SPECIFICATIONS

Application	N•m	Lb–Ft	Lb–In
Antenna Cap Nut	7	–	62
Antenna Motor Nuts	7	–	62
Audio System Bolts	4	–	35
CD Changer Nuts	7	–	62
Mast Antenna Base Nut	4	–	35
Front Door Speaker Screws	4	–	35
Rear Speaker Screws	4	–	35
Roof Antenna Nut	10	–	89

SCHEMATIC AND ROUTING DIAGRAMS

AUDIO SYSTEM CIRCUIT

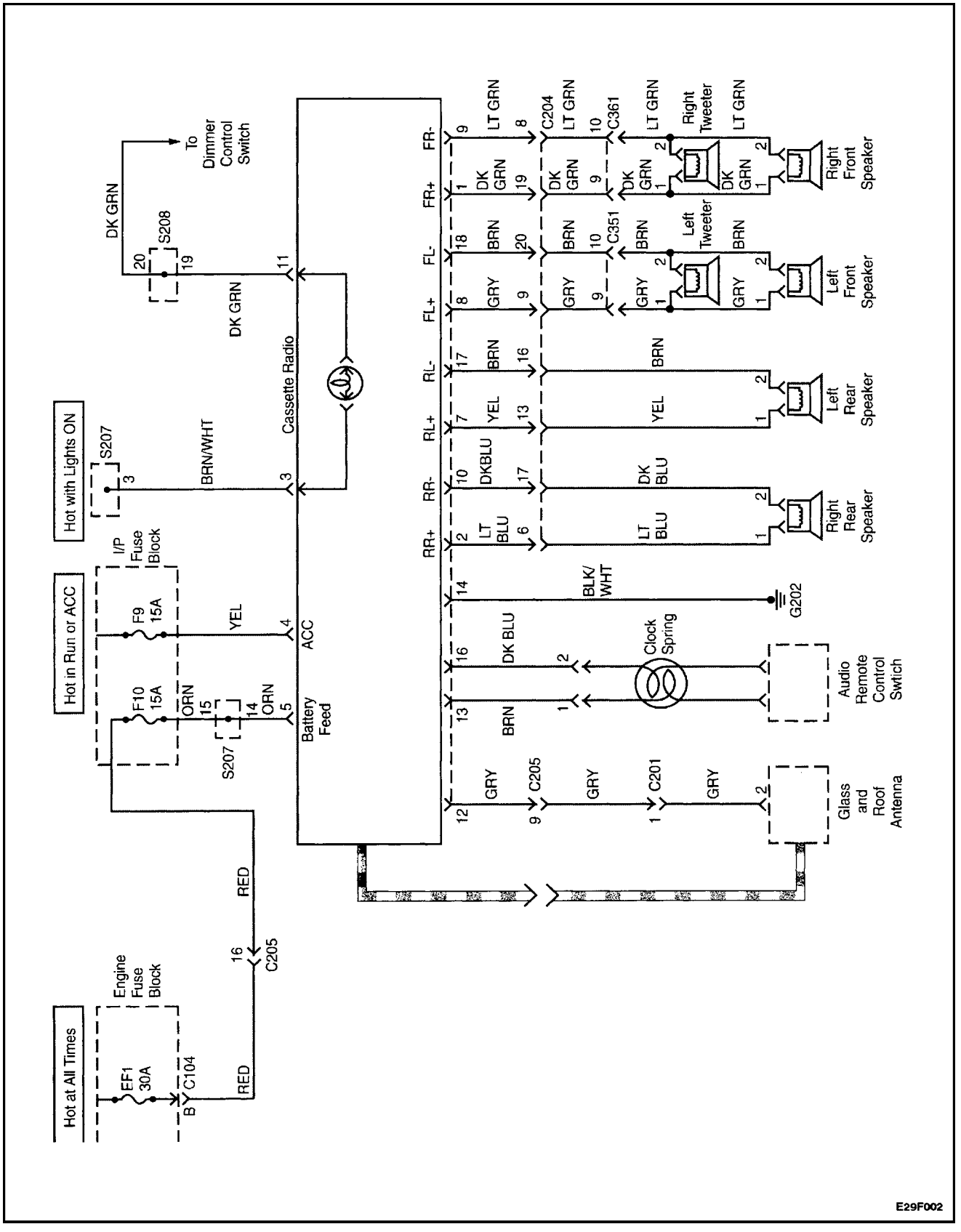

DIAGNOSIS

STEREO CASSETTE AM/FM RADIO

Cassette AM/FM Radio Inoperative

Step	Action	Value(s)	Yes	No
1	Check fuses EF1, F9, and F10. Are fuses EF1, F9, and F10 blown?		Go to *Step 2*	Go to *Step 3*
2	1. Check for a short circuit and repair if necessary. 2. Replace the blown fuses. Is the repair complete?		System OK	
3	1. Use a voltmeter to test for battery voltage at fuses EF1 and F10. 2. Turn the ignition ON and test for battery voltage at fuse F9. Does the battery voltage match the specified value at fuses EF1, F9, and F10?	11–14 v	Go to *Step 5*	Go to *Step 4*
4	Repair the power supply circuit to the fuses. Is the repair complete?		System OK	
5	1. Disconnect the radio electrical connector. 2. Turn the ignition ON. 3. Use a voltmeter to test for battery voltage at the radio connector terminals 4 and 5. Does the battery voltage match the specified value at both terminals?	11–14 v	Go to *Step 7*	Go to *Step 6*
6	Repair the open circuit between the radio connector and the fuse. Is the repair complete?		System OK	
7	Use an ohmmeter to test the ground circuit at the radio connector terminal 14. Does the resistance match the specified value?	0–0.5 Ω	Go to *Step 9*	Go to *Step 8*
8	Repair the open ground circuit between the radio connector and ground G105. Is the repair complete?		System OK	
9	Replace the radio. Is the repair complete?		System OK	

Cassette Player Inoperative, AM/FM Functions OK

Step	Action	Value(s)	Yes	No
1	Verify the customer complaint. Does the cassette player destroy tapes?		Go to *Step 5*	Go to *Step 2*
2	Using a good–quality tape, determine whether the cassette player performs poorly or is inoperative. Does the cassette player perform poorly?		Go to *Step 5*	Go to *Step 3*
3	Check the cassette player for obstructions behind the tape door. Is an obstruction found?		Go to *Step 4*	Go to *Step 8*

Step	Action	Value(s)	Yes	No
4	Check to see if the obstruction can be removed using gentle force. Is the obstruction removed?		Go to *Step 5*	Go to *Step 6*
5	Clean the cassette player head, the capstan, and the drive system. Does the tape play properly?		Go to *Step 7*	Go to *Step 6*
6	Replace the radio. Is the repair complete?		System OK	
7	Check the cassette player for normal operation. Is the repair complete?		System OK	
8	Advise the owner of a defective or worn tape. Is the repair complete?		System OK	

AM Does Not Work, FM and Cassette OK

Step	Action	Value(s)	Yes	No
1	Replace the radio. Is the repair comlpete?			

FM Radio Does Not Work, AM and Cassette OK

Step	Action	Value(s)	Yes	No
1	1. Unplug the antenna cable from the antenna. 2. Connect the test antenna to the antenna cable. 3. Check the FM radio reception. Is the FM radio operating properly?		Go to *Step 2*	Go to *Step 3*
2	Replace the antenna. Is the repair complete?		System OK	
3	1. Remove the radio from the instrument panel. 2. Unplug the antenna cable from the radio. 3. Plug the test antenna into the radio. 4. Check the FM radio reception. Is the FM radio operating properly?		Go to *Step 4*	Go to *Step 5*
4	Replace the antenna cable between the radio and the antenna. Is the repair complete?		System OK	
5	Replace the radio. Is the repair complete?		System OK	

SPEAKERS

Front Speakers Distorted or Inoperative, Rest of Audio System OK

Step	Action	Value(s)	Yes	No
1	1. Turn the ignition and the radio ON. 2. Check for distorted or inoperative front speakers using the fader and the balance controls with all of the sources (AM, FM, tape, CD). Are the front speakers distorted?		Go to *Step 2*	Go to *Step 4*
2	Check the speaker and the door area for damage, rattles, or vibration. Is there anything loose or in the way of the speaker causing the distortion?		Go to *Step 3*	Go to *Step 4*
3	Make the necessary repairs to secure the component causing the distortion. Is the repair complete?		System OK	
4	1. Remove the front speakers and disconnect the speaker connector. 2. Using an ohmmeter, test the speaker wires for a short to ground. Does the ohmmeter show the specified value?	∞	Go to *Step 6*	Go to *Step 5*
5	Repair the short circuit between the front speaker connector and the radio connector. Is the repair complete?		System OK	
6	Substitute a known good speaker for the speaker causing the distortion. Is the distortion eliminated?		Go to *Step 7*	Go to *Step 8*
7	Replace the speaker. Is the repair complete?		System OK	
8	Replace the radio. Is the repair complete?		System OK	

Rear Speakers Distorted or Inoperative, Rest of Audio System OK

Step	Action	Value(s)	Yes	No
1	1. Turn the ignition and the radio ON. 2. Check for distorted or inoperative rear speakers using the fader and the balance controls with all the of the sources (AM, FM, tape, CD). Are the rear speakers distorted?		Go to *Step 2*	Go to *Step 4*
2	Check the speakers, the rear deck, and the trunk area for damage, rattles, or vibration. Is there anything loose or in the way of the speaker causing the distortion?		Go to *Step 3*	Go to *Step 4*
3	Make the necessary repairs to secure the component causing the distortion. Is the repair complete?		System OK	
4	1. Disconnect the rear speakers. 2. Using an ohmmeter, test the speaker wires for a short to ground. Does the ohmmeter show the specified value?	∞	Go to *Step 6*	Go to *Step 5*

Step	Action	Value(s)	Yes	No
5	Repair the short circuit between the rear speaker connector and the radio connector. Is the repair complete?		System OK	
6	Substitute a known good speaker for the speaker causing the distortion. Is the distortion eliminated?		Go to *Step 7*	Go to *Step 8*
7	Replace the speaker. Is the repair complete?		System OK	
8	Replace the radio. Is the repair complete?		System OK	

ANTENNA

Power Antenna Does Not Work

Step	Action	Value(s)	Yes	No
1	Check fuse EF29. Is fuse EF29 blown?		Go to *Step 2*	Go to *Step 3*
2	1. Check for a short circuit and repair if necessary. 2. Replace the blown fuse. Is the repair complete?		System OK	
3	Use a voltmeter to test for battery voltage at fuse EF29. Does the battery voltage match the specified value?	11–14 v	Go to *Step 5*	Go to *Step 4*
4	Repair the open power supply circuit to fuse EF29. Is the repair complete?		System OK	
5	Use a voltmeter to test for battery voltage at power antenna connector terminal 1. Does the battery voltage match the specified value?	11–14 v	Go to *Step 7*	Go to *Step 6*
6	Repair the open circuit between power antenna connector terminal 1 and fuse EF29. Is the repair complete?		System OK	
7	Use an ohmmeter to test the ground circuit at power antenna connector terminal 2. Does the resistance match the specified value?	0 – 0.5 Ω	Go to *Step 9*	Go to *Step 8*
8	Repair the open ground circuit between power antenna connector terminal 2 and ground G303. Is the repair complete?		System OK	
9	1. Turn the ignition ON. 2. Turn the radio ON. 3. Use a voltmeter to test for battery voltage at power antenna connector terminal 3. Does the battery voltage match the specified value?	11–14 v	Go to *Step 10*	Go to *Step 11*
10	Replace the power antenna. Is the repair complete?		System OK	
11	1. Turn the ignition ON. 2. Turn the radio ON. 3. Use a voltmeter to test for battery voltage at radio terminal 12. Is the repair complete?	11–14 v	Go to *Step 12*	Go to *Step 13*

Step	Action	Value(s)	Yes	No
12	Repair the open circuit between radio terminal 12 and power antenna connector terminal 3. Is the repair complete?		System OK	
13	Replace the audio system. Is the repair complete?		System OK	

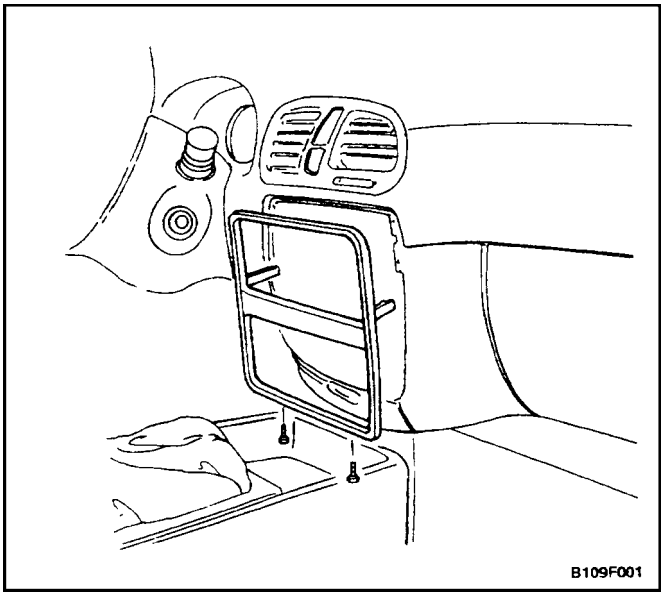

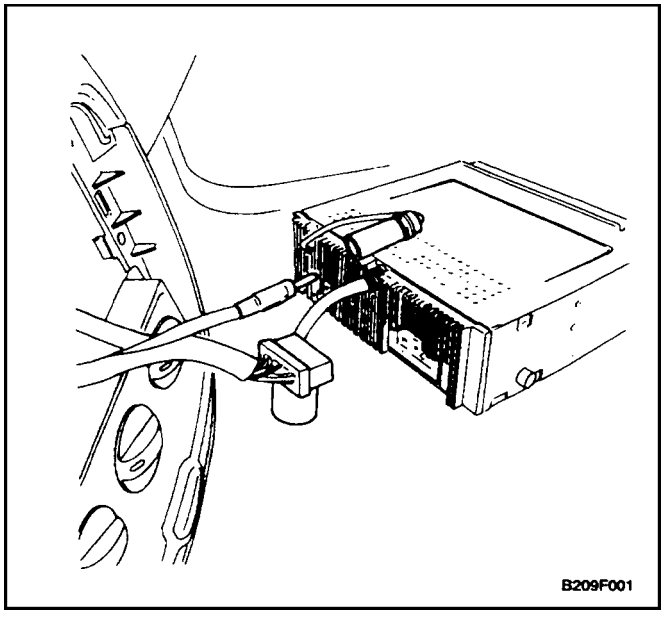

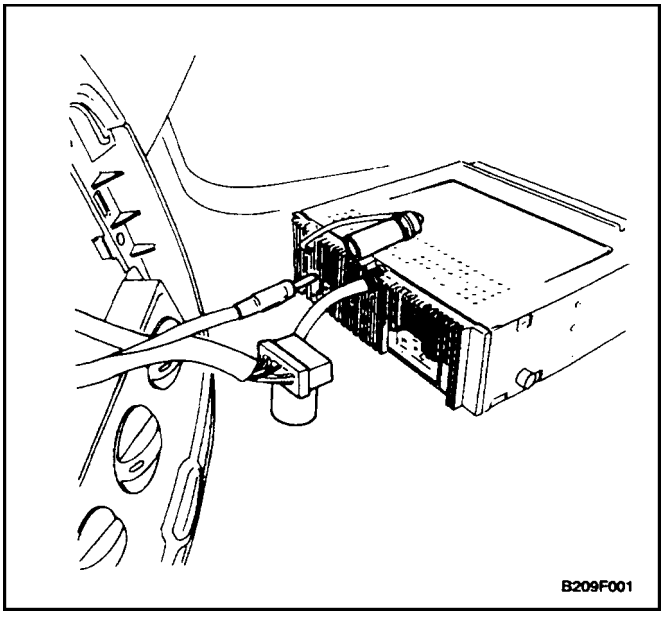

MAINTENANCE AND REPAIR

ON–VEHICLE SERVICE

STEREO CASSETTE AM/FM RADIO

Removal Procedure

1. Disconnect the negative battery cable.
2. Remove the audio system trim plate screws and the audio system trim plate.
3. Remove the audio system bolts and the audio system.
4. Disconnect the audio system electrical connector and the antenna cable.

Installation Procedure

1. Connect the audio system electrical connector and the antenna cable.

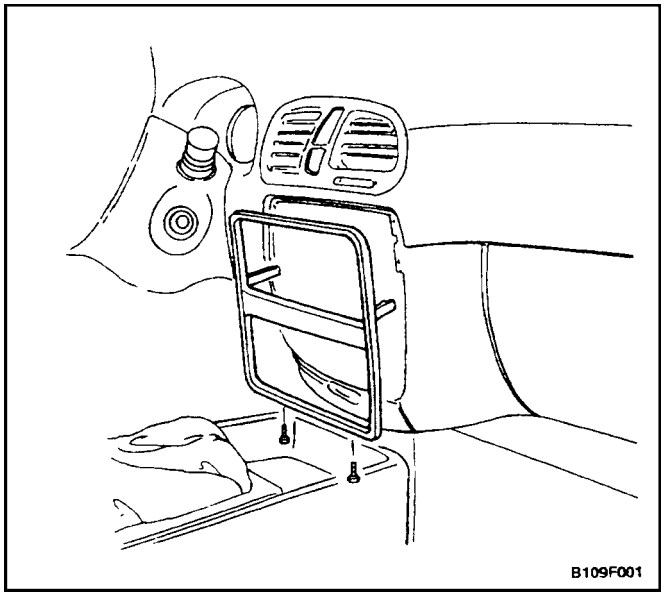

2. Install the audio system with the bolts.

   Tighten

   Tighten the audio system bolts to 4 N•m (35 lb–in).
3. Install the audio system trim plate with the screws.
4. Connect the negative battery cable.
5. Enter the security code. Refer to ”Audio Security Sys–tem” in this section.

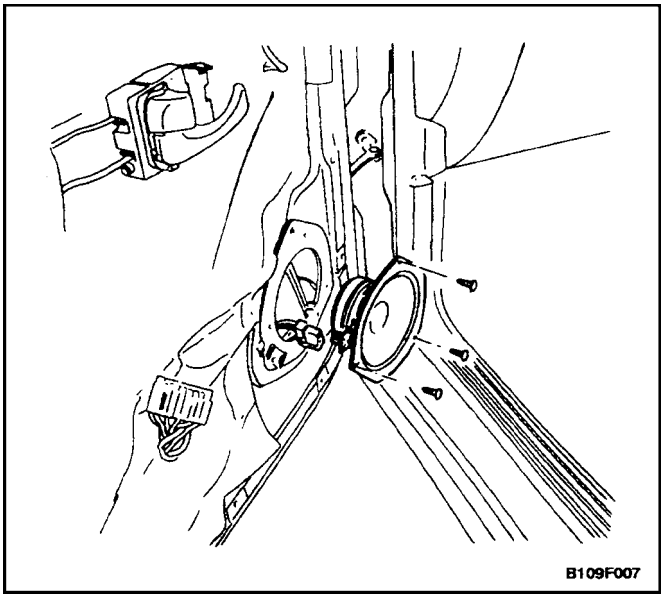

FRONT DOOR SPEAKERS

Removal Procedure

1. Disconnect the negative battery cable.
2. Remove the front door trim panel. Refer to *section 9G, Interior Trim.*
3. Remove the front door speaker screws and the front door speaker.
4. Disconnect the electrical connector.

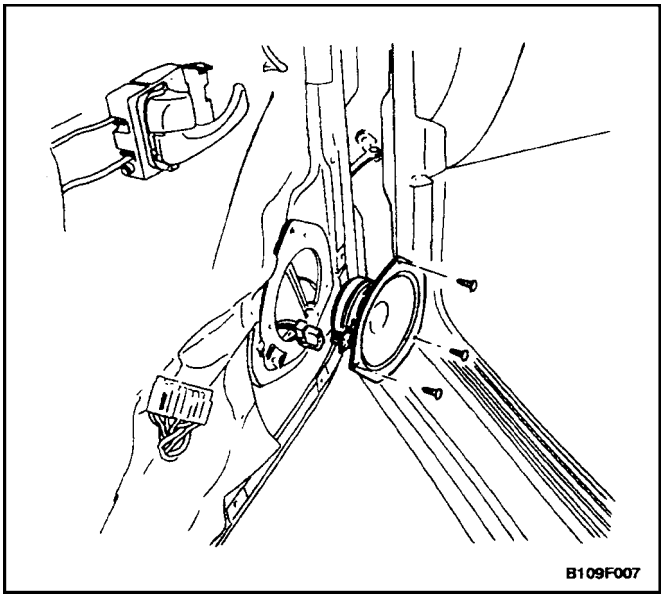

Installation Procedure

1. Connect the electrical connector.
2. Install the front door speaker with the screws.

   Tighten

   Tighten the front door speaker screws to 4 N•m (35 lb–in).
3. Install the front door trim panel. Refer to *section 9G, Interior Trim.*
4. Connect the negative battery cable.

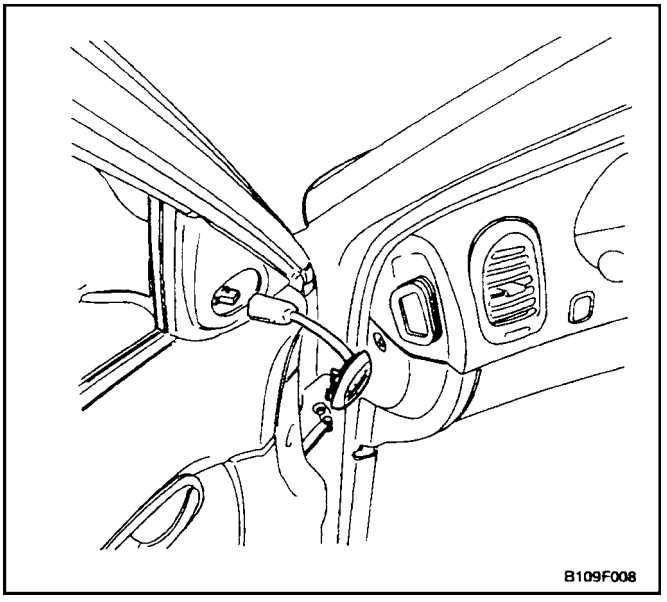

TWEETER SPEAKERS

Removal Procedure

1. Disconnect the negative battery cable.
2. Remove the tweeter speaker by prying the tweeter speaker off of the front door eschutcheon.
3. Disconnect the electrical connector.

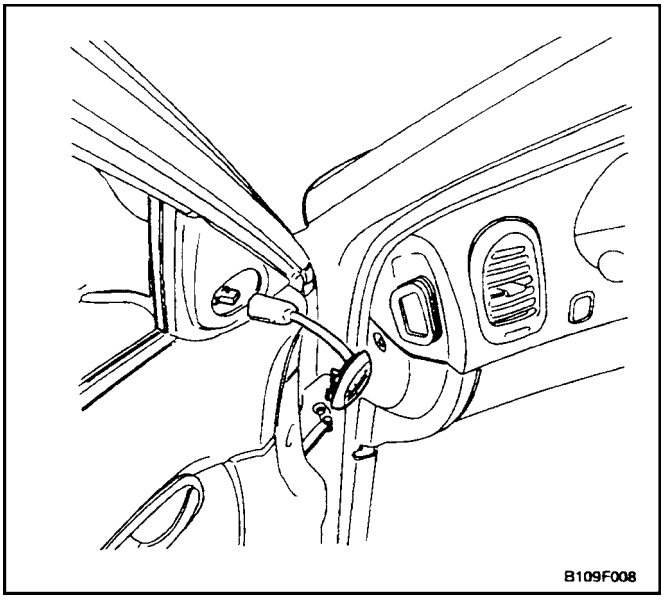

Installation Procedure

1. Connect the electrical connector.
2. Install the tweeter speaker by snapping the tweeter speaker onto the front door eschutcheon.
3. Connect the negative battery cable.

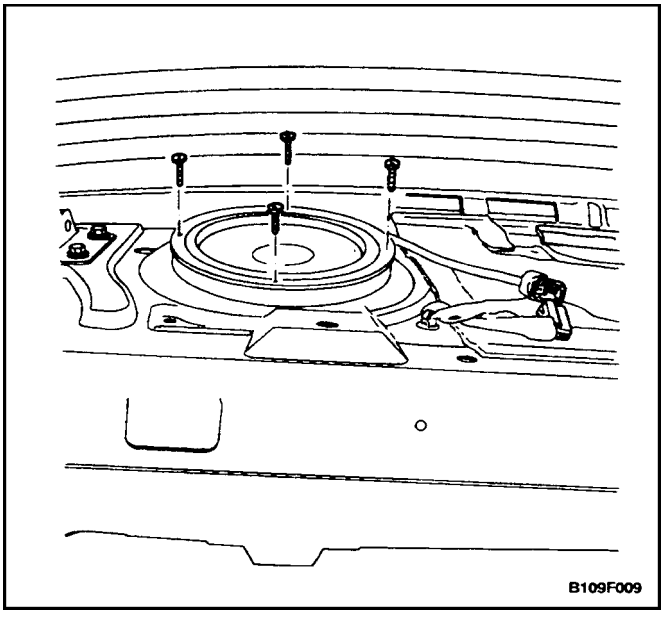

REAR SPEAKERS (NOTCHBACK)

Removal Procedure

1. Disconnect the negative battery cable.
2. Remove the rear seat cushion and the rear seat-back. Refer to *Section 9H, Seats.*
3. Remove the right side C–pillar trim panel and the deck lid sill plate trim cover. Refer to *section 9G, Interior Trim.*
4. Disconnect the electrical connector.
5. Remove the screws and the rear speakers.

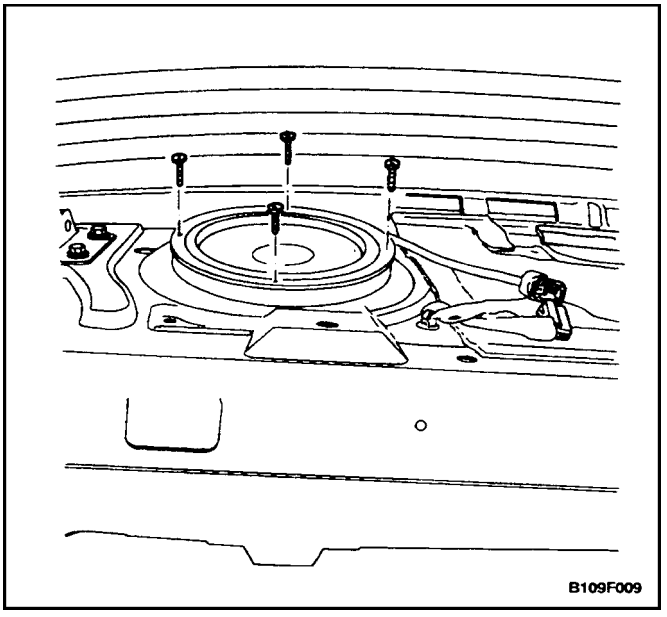

Installation Procedure

1. Install the rear speakers with the screws.

   Tighten

   Tighten the rear speaker screws to 4 N•m (35 lb–in).
2. Connect the electrical connector.
3. Install the deck lid sill plate trim cover and the right side C–pillar trim panel. Refer to*section 9G, Interior Trim.*
4. Install the rear seatback and the rear seat cushion. Refer to *Section 9H, Seats.*
5. Connect the negative battery cable.

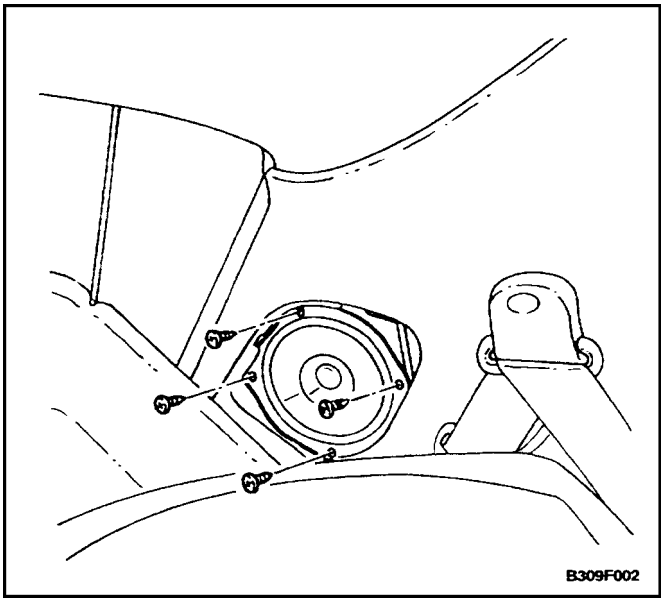

REAR SPEAKERS (HATCHBACK)

Removal Procedure

1. Disconnect the negative battery cable.
2. Remove the rear speaker access cover.
3. Remove the screws and the rear speaker.
4. Disconnect the electrical connector.

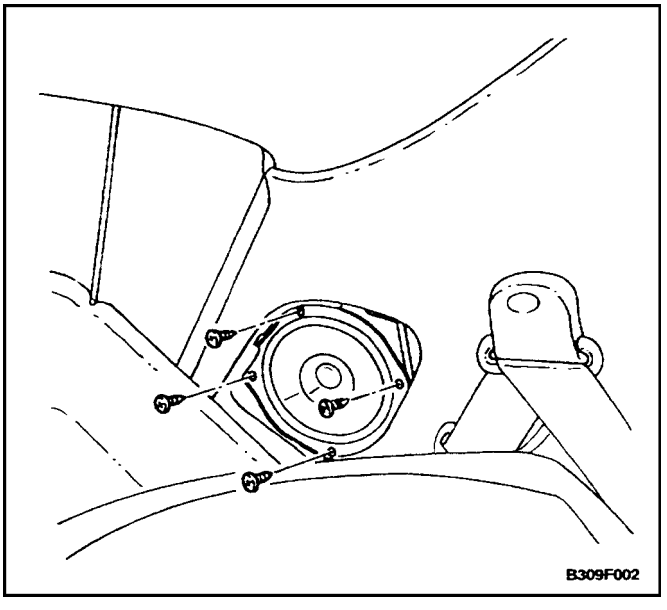

Installation Procedure

1. Connect the electrical connector.

Notice : Dissimilar metals in direct contact with each other may corrode rapidly. Make sure to use the correct fasteners to prevent premature corrosion.

2. Install the rear speaker with the screws.

   Tighten

   Tighten the rear speaker screws to 4 N•m (35 lb–in).
3. Install the rear speaker access cover.
4. Connect the negative battery cable.

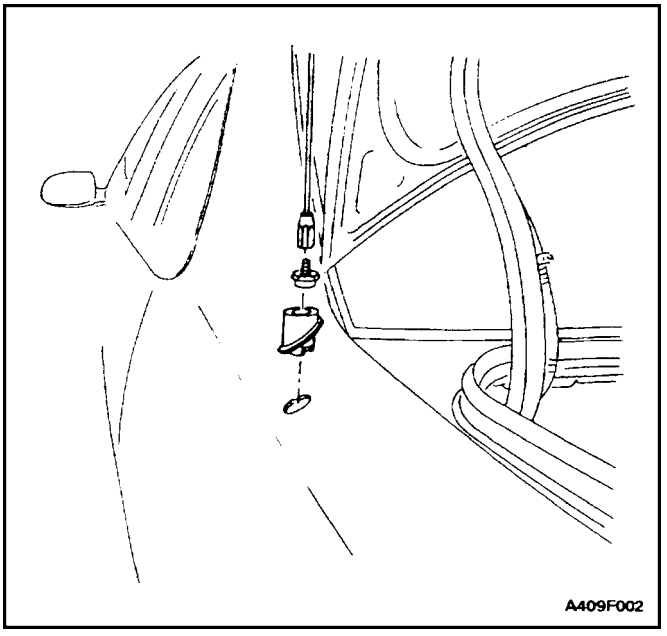

MAST ANTENNA

Removal Procedure

1. Disconnect the negative battery cable.
2. Remove the luggage compartment rear quarter trim panel. Refer to*Section 9G, Interior Trim.*
3. Unscrew and remove the mast antenna.
4. Remove the antenna cap nut and the rubber grommet.

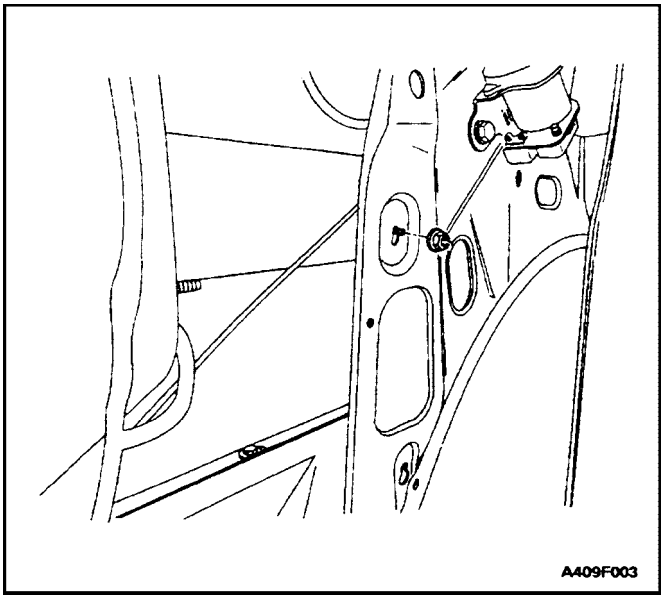

Installation Procedure

Notice : Dissimilar metals in direct contact with each other may corrode rapidly. Make sure to use the correct fasteners to prevent premature corrosion.

1. Install the mast antenna base with the nut.

   Tighten

   Tighten the mast antenna base nut to 4 N•m (35 lbin).

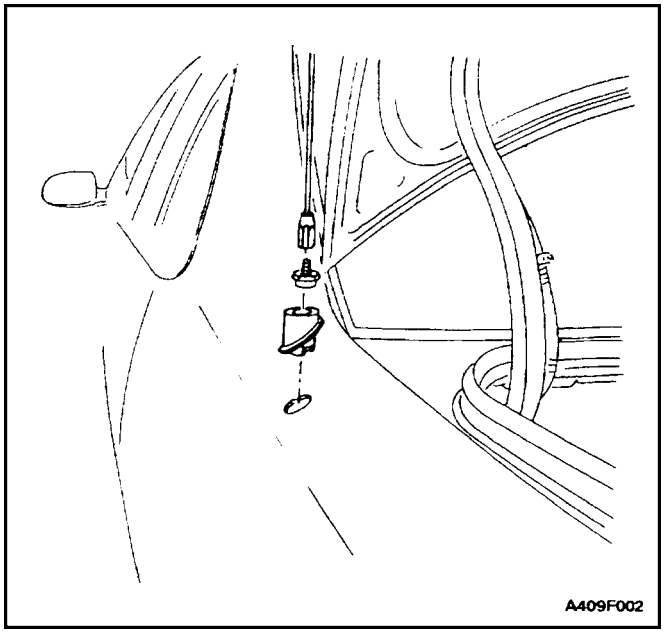

2. Connect the antenna cable.
3. Install the rubber grommet and the antenna cap nut.

   Tighten

   Tighten the antenna cap nut to 7 N•m (62 lb–in).
4. Install the mast antenna.
5. Install the luggage compartment rear quarter trim panel. Refer to*Section 9G, Interior Trim.*
6. Connect the negative battery cable.

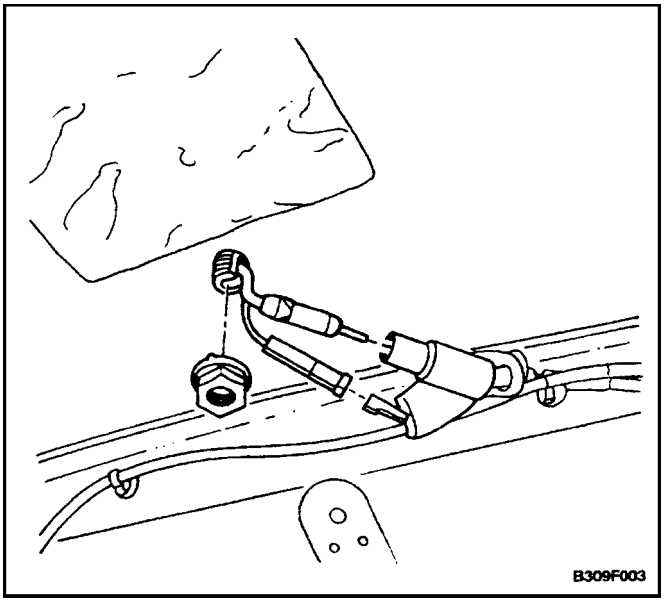

ROOF ANTENNA

(Wagon Shown, Hatchback Similar)

Removal Procedure

1. Disconnect the negative battery cable.
2. Remove the formed headliner. Refer to *Section 9Q, Roof.*
3. Disconnect the antenna cable and the electrical connector.
4. Remove the nut and the antenna.

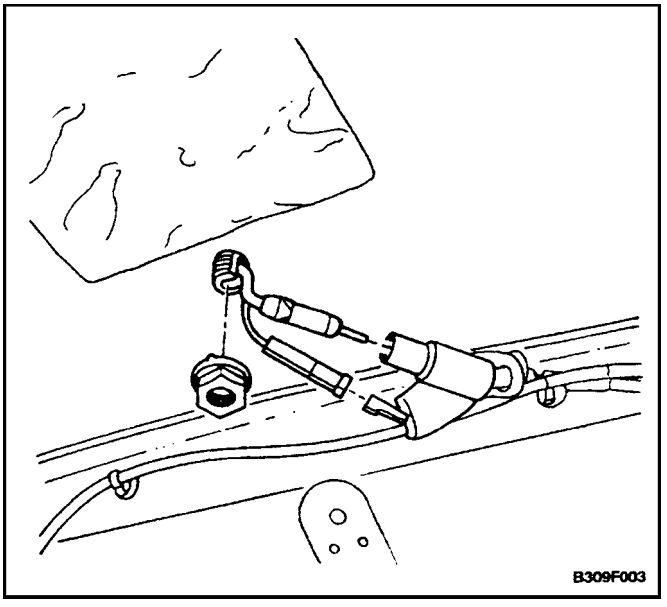

Installation Procedure

Notice : Dissimilar metals in direct contact with each other may corrode rapidly. Make sure to use the correct fasteners to prevent premature corrosion.

1. Install the roof antenna with the nut.

   Tighten

   Tighten the roof antenna nut to 10 N•m (89 lb–in).
2. Connect the antenna cable and the electrical connector.
3. Install the formed headliner. Refer to *Section 9Q, Roof.*
4. Connect the negative battery cable.

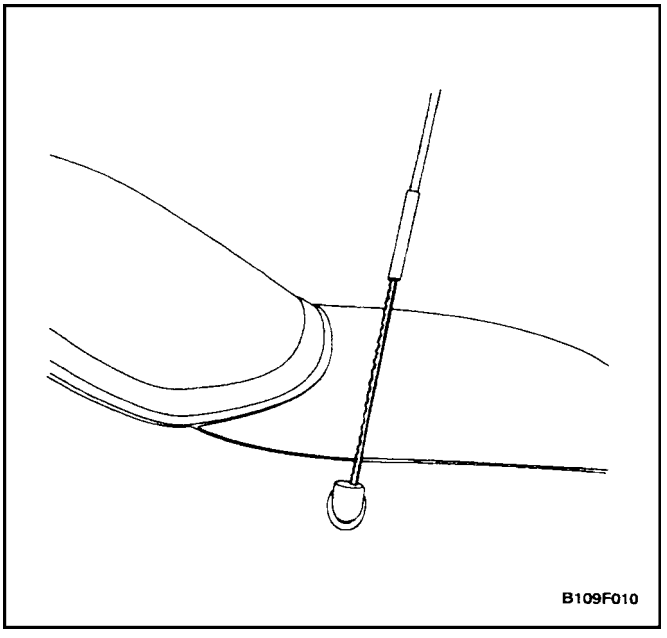

POWER ANTENNA MAST(NOTCHBACK)

Removal Procedure

1. Remove the antenna cap nut and the rubber grommet.
2. Turn on the radio and remove the antenna mast and cable.
3. Turn off the radio.

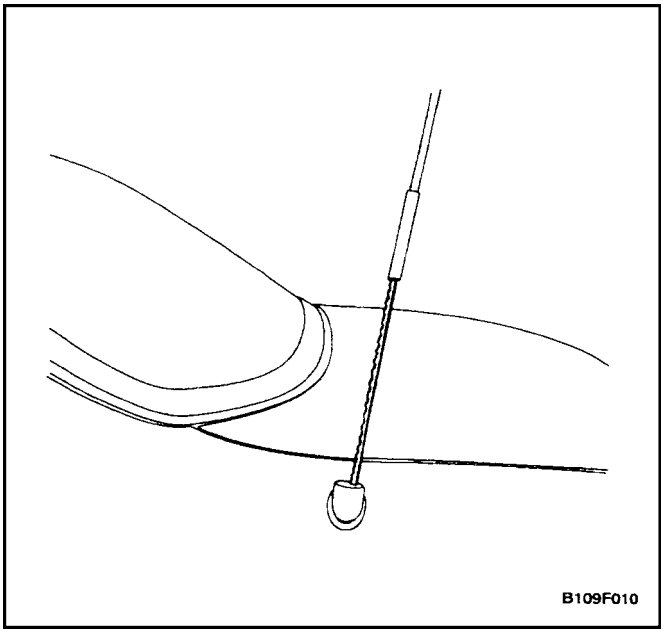

Installation Procedure

1. Install the antenna mast with the teeth of the cable facing the front of the vehicle.
2. Install the rubber grommet and the antenna cap nut.

Tighten

Tighten the antenna cap nut to 7 N•m (62 lb–in).

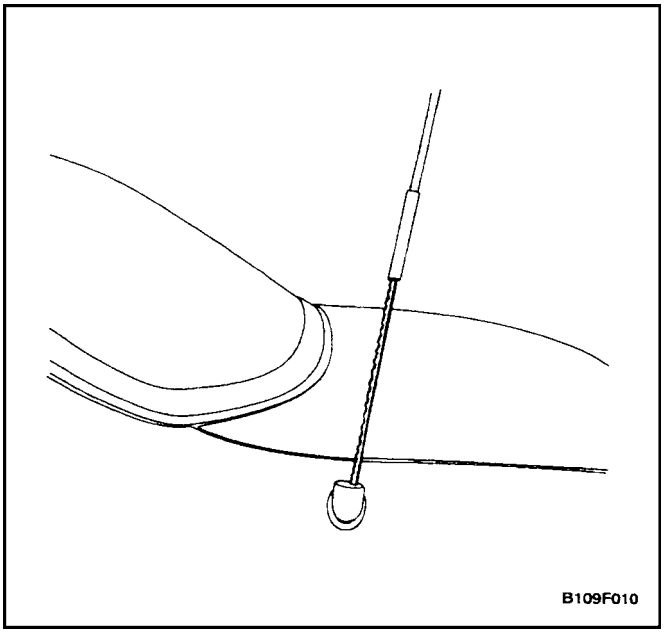

POWER ANTENNA MOTOR (NOTCHBACK)

Removal Procedure

1. Disconnect the negative battery cable.
2. Remove the luggage compartment rear quarter trim panel. Refer to*Section 9G, Interior Trim.*
3. Remove the antenna cap nut and the rubber grommet.

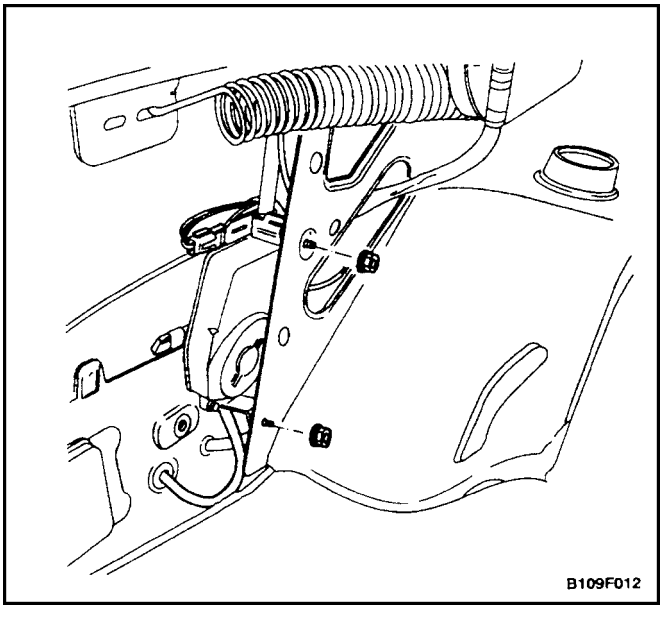

4. Loosen the nuts securing the antenna motor to the vehicle.
5. Remove the antenna motor.
6. Disconnect the electrical connector and the drain hose from the antenna motor.

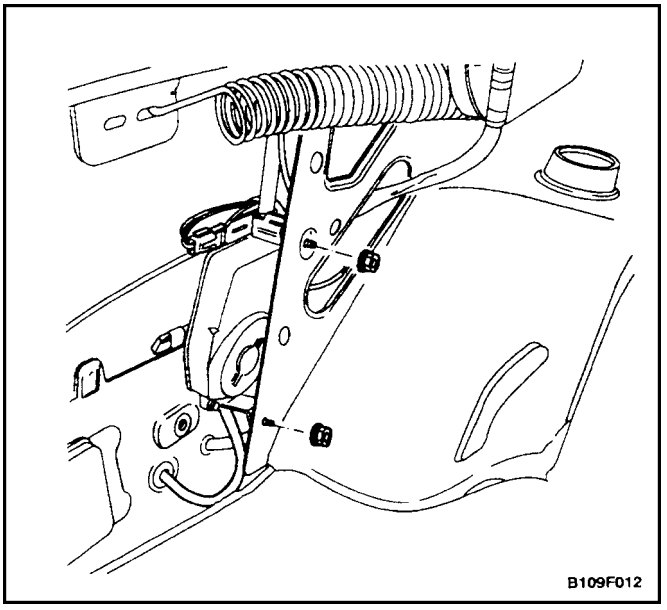

Installation Procedure

1. Connect the electrical connector and the drain hose to the antenna motor.
2. Install the antenna motor with the nuts.

   Tighten

   Tighten the antenna motor nuts to 7 N•m (62 lb–in).

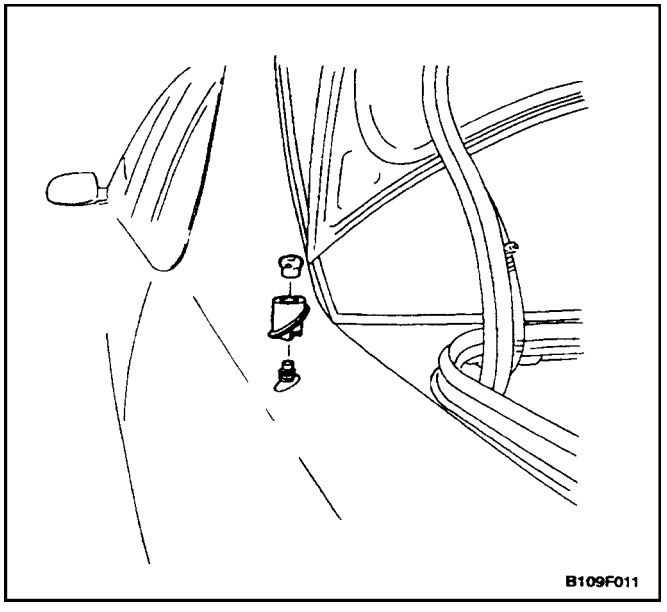

3. Install the antenna cap nut.
4. Install the luggage compartment rear quarter trim panel. Refer to Section 9G, Interior Trim.

   Tighten

   Tighten the antenna cap nut to 7 N•m (62 lb–in).
5. Connect the negative battery cable.

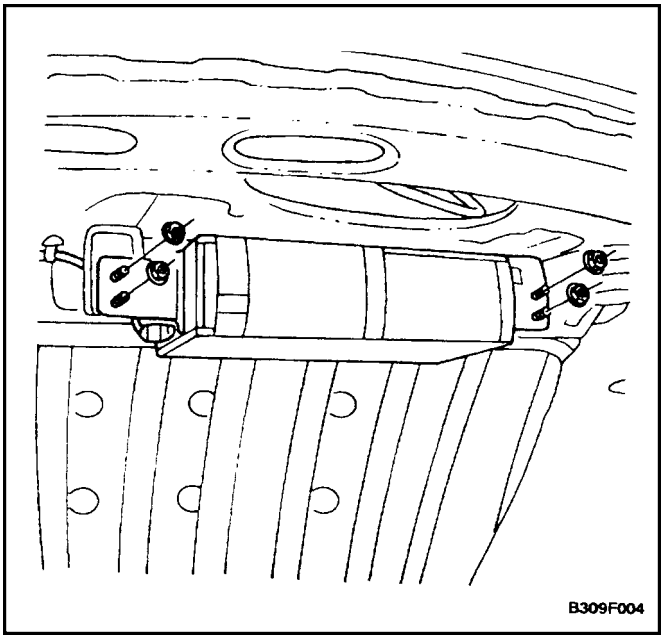

COMPACT DISC CHANGER

Removal Procedure

1. Disconnect the negative battery cable.
2. Disconnect the CD changer electrical connector.
3. Remove the nuts and the CD changer.

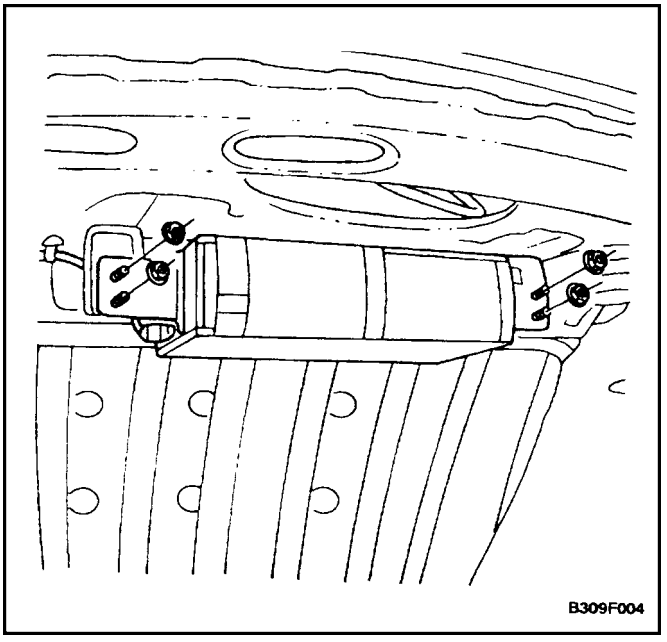

Installation Procedure

1. Install the CD changer with the nuts.

   Tighten

   Tighten the CD changer nuts to 7 N•m (62 lb–in).
2. Connect the CD changer electrical connector.
3. Connect the negative battery cable.

GENERAL DESCRIPTION AND SYSTEM OPERATION

AUDIO SYSTEMS

There are three audio systems available:

- Stereo digital logic cassette AM/FM radio with electronic tape ejection.
- Stereo digital logic AM/FM radio with CD player.
- Trunk mounted CD changer which is available with the cassette AM/FM radio.

AUDIO SECURITY SYSTEM

The audio security system is activated whenever the audio system circuit is disconnected from the battery. A four–digit security code must be entered in order for the audio system to resume functioning. The security code is stamped on a card located in the vehicle (usually in the glove box). The following security code entering procedure must be used to deactivate the audio security system:

1. After connecting the audio security system to the battery, ”COdE”will flash on the display.
2. Enter the proper security number into the unit, using the preset buttons No. 1 through 8. For example, if the security number is ”1234”:
    1) Press the preset button No. 1. ”COdE”: will disappear and ”1——” will appear on the display.
    2) Press the preset button No. 2, and ”12—” will appear.
    3) Press the preset button No. 3, and ”123–” will appear.
    4) Press the preset button No. 4, and ”1234”will appear.
1. The audio system will function and will transfer to the radio.

If you fail to enter the correct security number into the unit, ”Err” will appear followed by ”COdE” and there will be several audible beeps. If this happens, repeat the security entering procedure beginning with step 2.

FRONT AND REAR SPEAKERS

All audio systems use four speakers: two speakers mounted in the front doors and two speakers mounted in the rear. A coaxial two–way rear speaker is offered as an option.

TWEETER SPEAKERS

The tweeter speakers are mounted on the front door escutcheon next to the dash panel.

MAST ANTENNA

The manual antenna is designed to withstand most car washes without damage. If the mast becomes slightly bent, it can be straightened by hand. The manual antenna can be replaced if it is severely bent. Manual antennas must be kept clean for good performance.

POWER ANTENNA

The optional power antenna is controlled by the radio. When the radio power is turned on, the antenna is extended. When the radio is turned off, either by turning the power off or by turning the ignition off, the antenna is retracted.

ROOF ANTENNA

The two–piece roof antenna is standard equipment on the hatchback and the wagon. The top half of the anten–na can be unscrewed and removed if height clearance problems occur.

TAPE PLAYER AND CASSETTE CARE

The head and the capstan are the two parts of the tape player that should be cleaned. To clean the head and the capstan, use a cotton swab dipped in rubbing alcohol. A cassette cleaning kit may also be used to clean the head and the capstan. Follow the cleaning kit instructions to clean the tape player. This service should be performed every 100 hours of cassette operation.

Do not touch the tape head with magnetized tools. If the head becomes magnetized, it will degrade cassettes played in the player. No service is performed on the cassettes. The cassette manufacturer handles warranties of the cassettes. Store cassettes away from extreme heat and direct sunlight.

COMPACT DISC CARE

Handle discs carefully. Store the discs in protective cases away from the sun, heat, and dust. If the surface is soiled, dampen a clean, soft cloth in a solution of mild neutral detergent and wipe the disc clean.

SECTION : 9A

BODY WIRING SYSTEM

CAUTION : Disconnect the negative battery cable before removing or installing any electrical unit or when a tool or equipment could easily come in contact with exposed electrical terminals. Disconnecting this cable will help prevent personal injury and damage to the vehicle. The ignition must also be in LOCK unless otherwise noted..

TABLE OF CONTENTS

SCHEMATIC AND ROUTING DIAGRAMS 9A–1
WIRE COLOR CHART 9A–1
POWER DISTRIBUTION SCHEMATIC 9A–2
FUSE BLOCK LOCATOR (ENGINE) 9A–4
FUSE BLOCK LOCATOR (PASSENGER COMPARTMENT) 9A–4
FUSE CHART 9A–5
REAR HARNESS ROUTING 9A–7
FRONT HARNESS ROUTING 9A–8
FLOOR HARNESS ROUTING 9A–9
INSTRUMENT HARNESS ROUTING 9A–10
DOOR HARNESS ROUTING 9A–11

SCHEMATIC AND ROUTING DIAGRAMS

WIRE COLOR CHART

Wire Color	Abbreviation On Schematic
Green	DK GRN
Light Green	LT GRN
Blue	DK BLU
Brown	BRN
Orange	ORN
Yellow	YEL
Grey	GRY
Sky Blue	LT BLU
Red	RED
Black	BLK
Pink	PNK
White	WHT
Purple	PPL

Wires With Tracers

Wire Color	Abbreviation On Schematic
Red with White Tracer	RED/WHT

POWER DISTRIBUTION SCHEMATIC

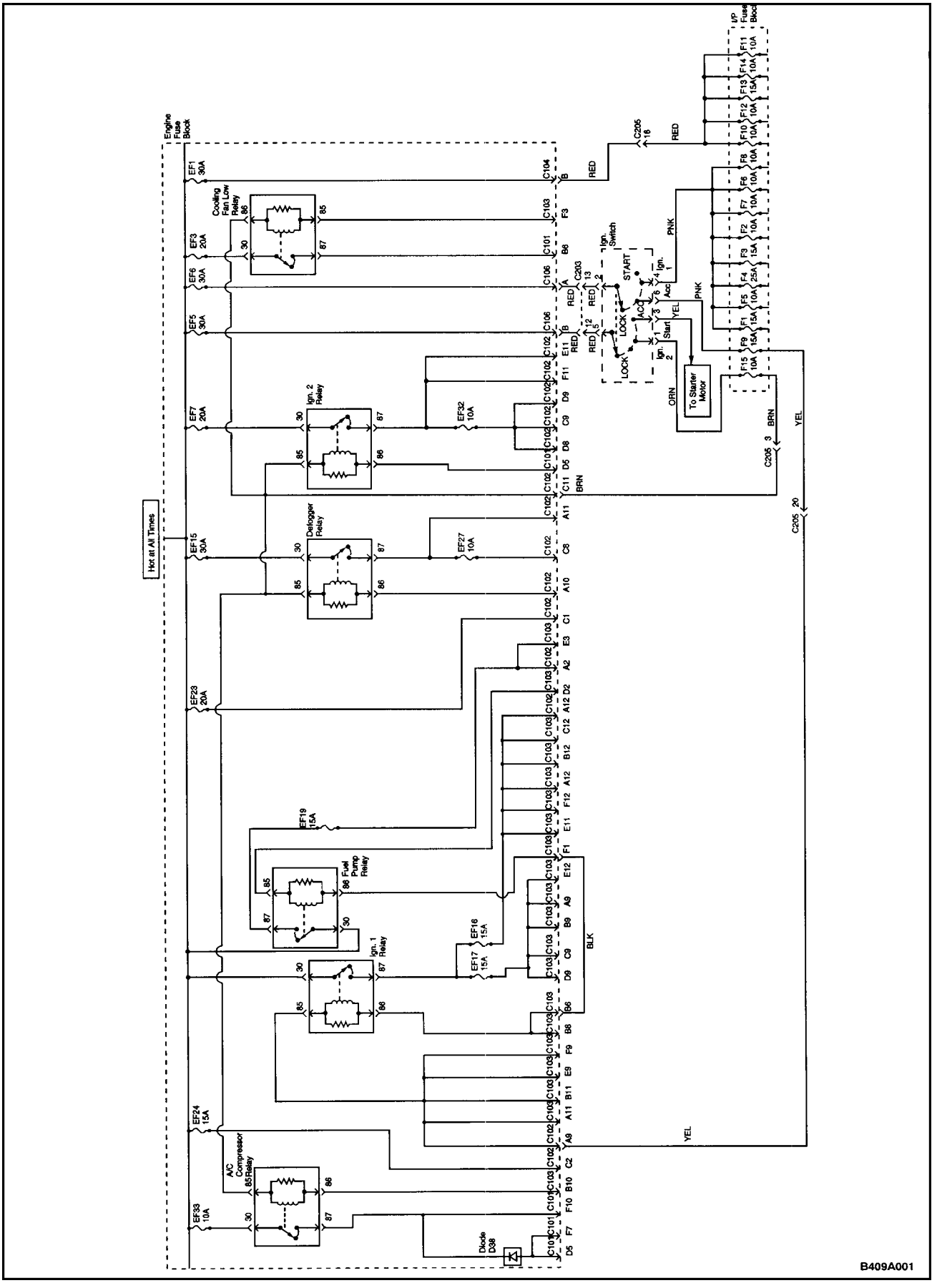

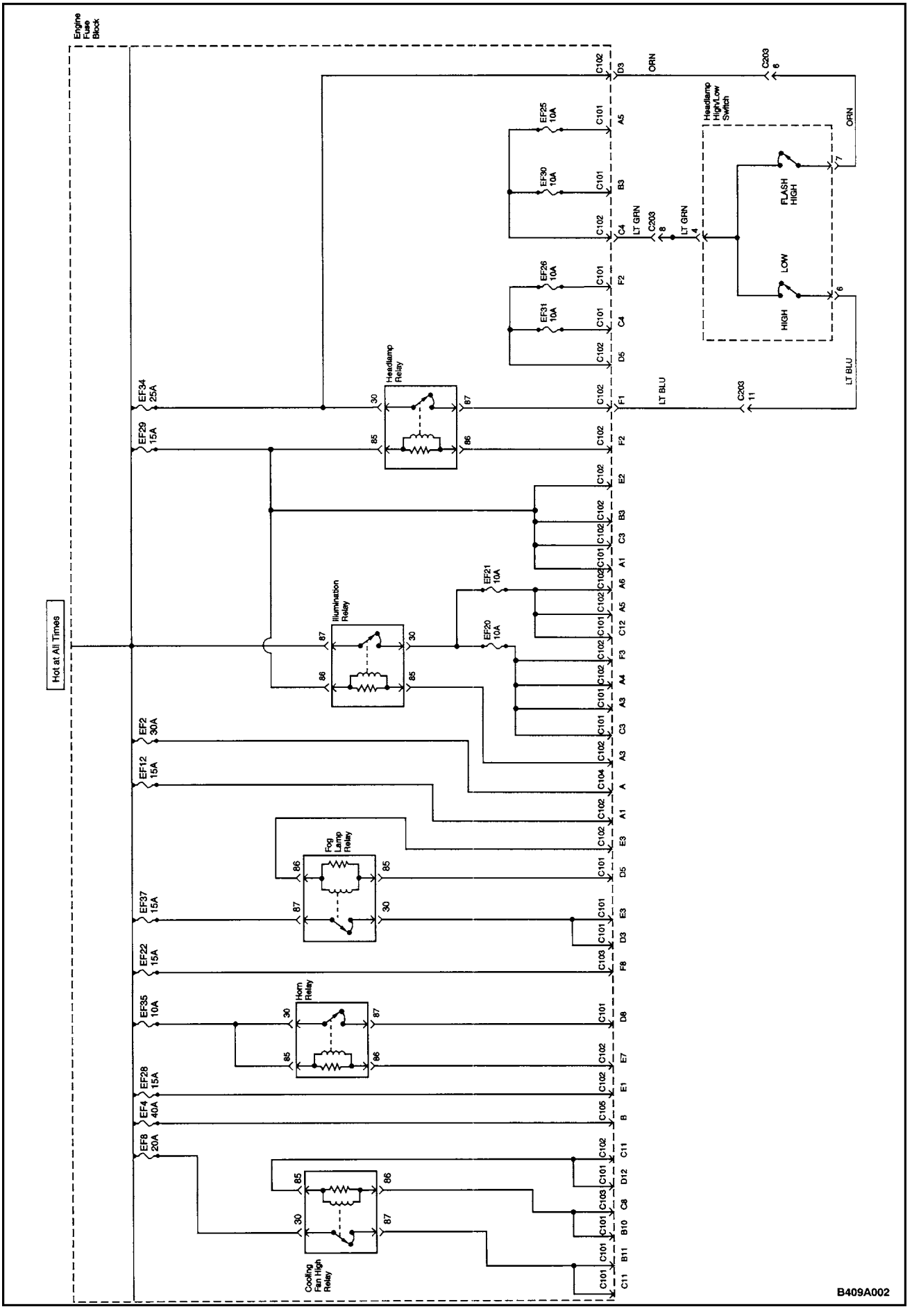
Engine Fuse Block
Hot at All Times
EF34 25A
EF29 15A
EF2 30A
EF12 15A
EF37 15A
EF22 15A
EF35 10A
EF28 15A
EF4 40A
EF8 20A
Headlamp Relay
Illumination Relay
Fog Lamp Relay
Horn Relay
Cooling Fan High Relay
EF25 10A
EF30 10A
EF26 10A
EF31 10A
EF21 10A
EF20 10A
Headlamp High/Low Switch
FLASH HIGH
LOW
HIGH
ORN
LT GRN
LT BLU
B409A002

FUSE BLOCK LOCATOR (ENGINE)

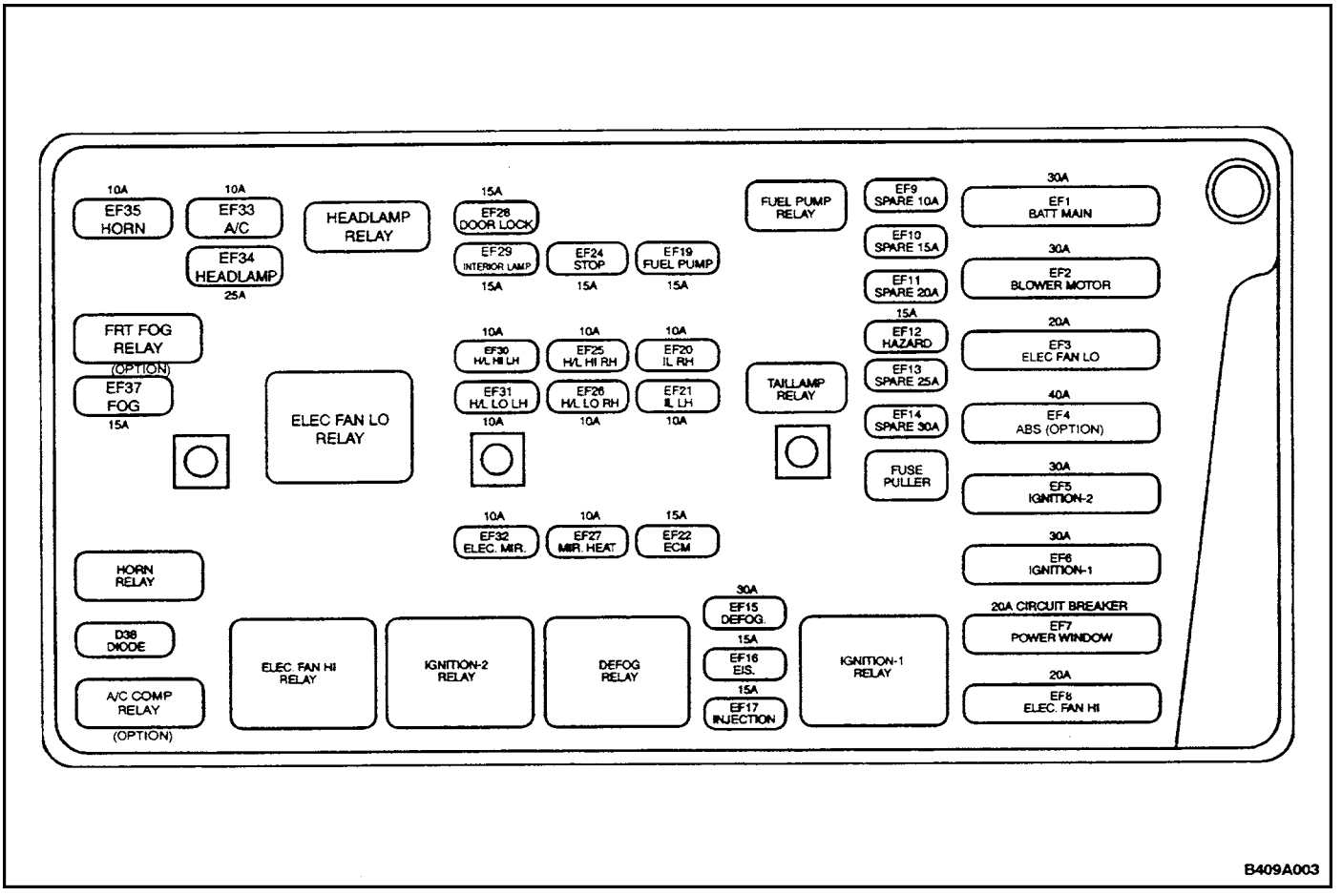

B409A003

FUSE BLOCK LOCATOR (PASSENGER COMPARTMENT)

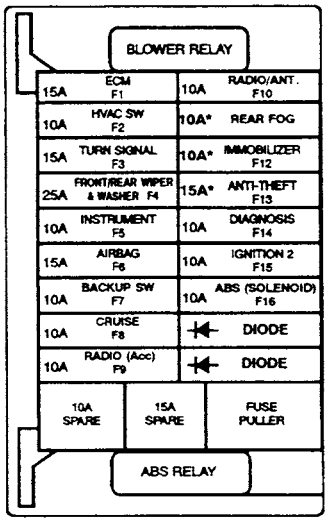

B409A004

FUSE CHART

Fuse	Rating/Source		Circuit
EF1 (Engine Fuse)	30A	B+	I/P Fuse Block, Engine Control Module
EF2	30A	B+	Blower Motor
EF3	20A	B+	Cooling Fan (Low) Relay, Cooling Fan
EF4	40A	B+	ABS Relay
EF5	30A	B+	Ign 2 (Ign Key)
EF6	30A	B+	Ign 1 (Ign Key)
EF7	20A	B+	Ign 2 Relay, EF32, Sun Roof, Power Windows
EF8	20A	B+	Cooling Fan (High) Relay, Cooling Fan Control Relay, Cooling Fan
EF12	15A	B+	Hazard Switch
EF15	30A	B+	Defogger Relay, EF27, Back Window Defogger
EF16	15A	B+	EVAP Solenoid, VGIS Solenoid, Generator Terminal F, Electronic Ignition System Coil
EF17	15A	B+	Injector 1, Injector 2, Injector 3, Injector 4
EF19	15A	B+	Fuel Pump
EF20	10A	B+	Parking Lamp, RH Taillamp
EF21	10A	B+	Parking Lamp, License Lamp, LH Taillamp
EF23	20A	B+	Cigar Lighter
EF24	15A	B+	Stoplamp Switch
EF25	10A	EF12	Headlamp High RH
EF26	10A	EF12	Headlamp Low RH
EF27	10A	EF32	Electric Outside Rearview Mirror Defogger
EF28	15A	B+	Auto Door Lock
EF29	15A	B+	Illumination Relay, Siren, Power Antenna, Luggage Compartment Lamp, Interior Courtesy Lamp, Headlamp Relay
EF30	10A	EF12	Headlamp High LH
EF31	10A	EF12	Headlamp Low LH
EF32	10A	EF7	Electric Outside Rearview Mirror, Keyless Entry System Unit

Fuse	Rating/Source		Circuit
EF33	10A	B+	A/C Compressor Relay, A/C Compressor, D38 (diode)
EF34	25A	B+	Headlamp Relay, EF30, EF25, EF31, EF26, High Headlamp Switch, Passenger Switch
EF35	10A	B+	Horn Switch and Horn
EF37	15A	B+	Fog Lamp Relay, Front Fog Lamps
F1 (Fuse)	15A	EF6	Ign 1 Relay, Engine Control Module, CMP
F2	10A	EF6	HVAC Switch
F3	15A	EF6	Hazard Switch/Turn Signal, Digital Clock
F4	25A	EF6	Wiper Switch, Intermittent Wiper Relay, Wiper Motor, Rear Wiper Motor, Rear Wiper Motor Switch
F5	10A	EF6	ABS Warning Lamp, Chime Module, Transmission Range Switch, Instrument Cluster. BTSI Solenoid
F6	10A	EF6	SIR System
F7	10A	EF6	Backup Switch
F8	10A	EF6	Cruise Control, Immobilizer
F9	15A	EF6	Radio, Key Interlock Solenoid, Cigarette Lighter
F10	10A	EF1	Instrument Cluster
F12	10A	EF1	Engine Immobilizer
F13	15A	EF1	Anti–Theft System
F14	10A	EF1	Data Link Connector
F15	10A	EF5	Ign 2 Relay, A/C Relay, Defogger Relay, ABS Relay, ABS EBCM

REAR HARNESS ROUTING

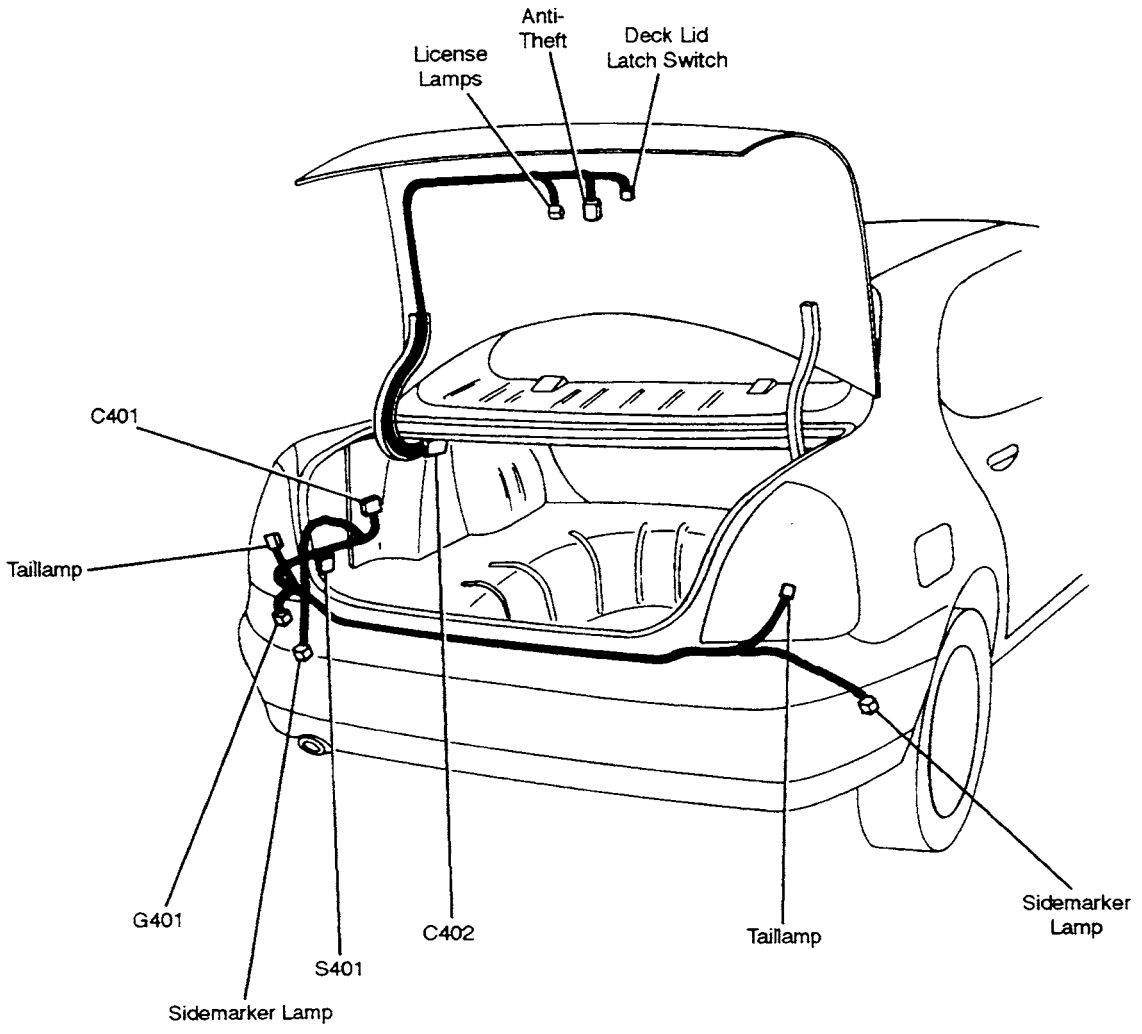

FRONT HARNESS ROUTING

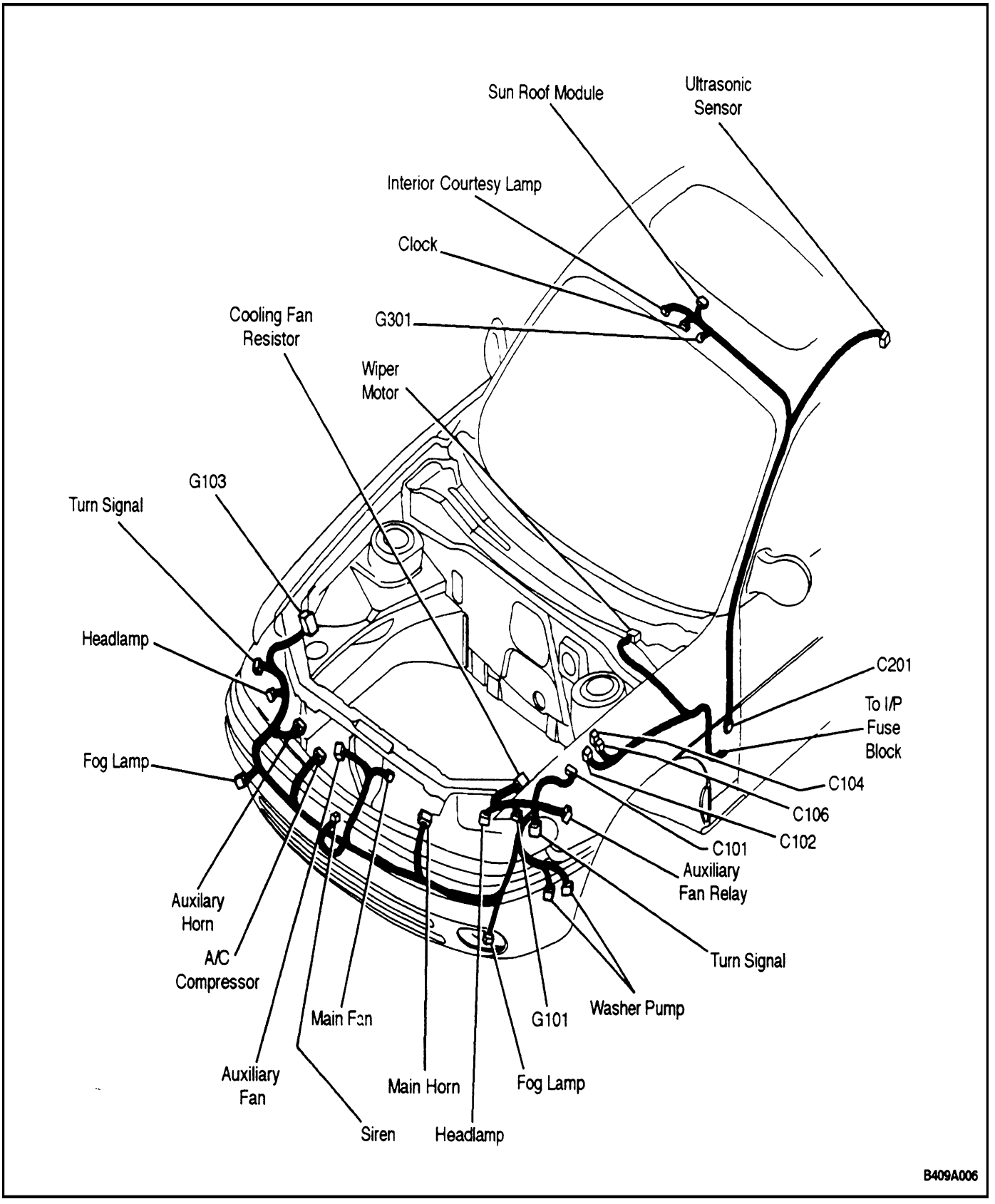

FLOOR HARNESS ROUTING

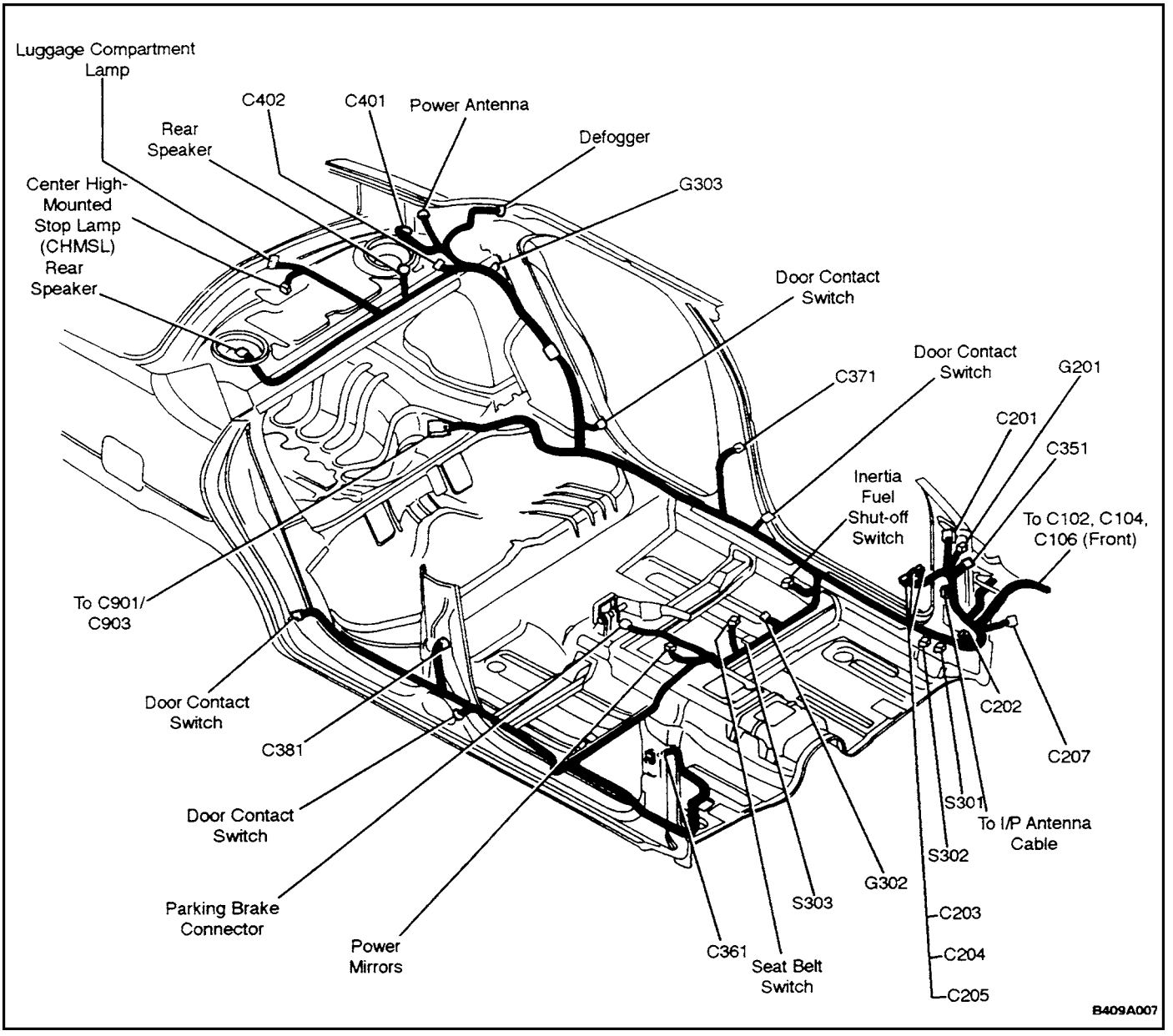

INSTRUMENT HARNESS ROUTING

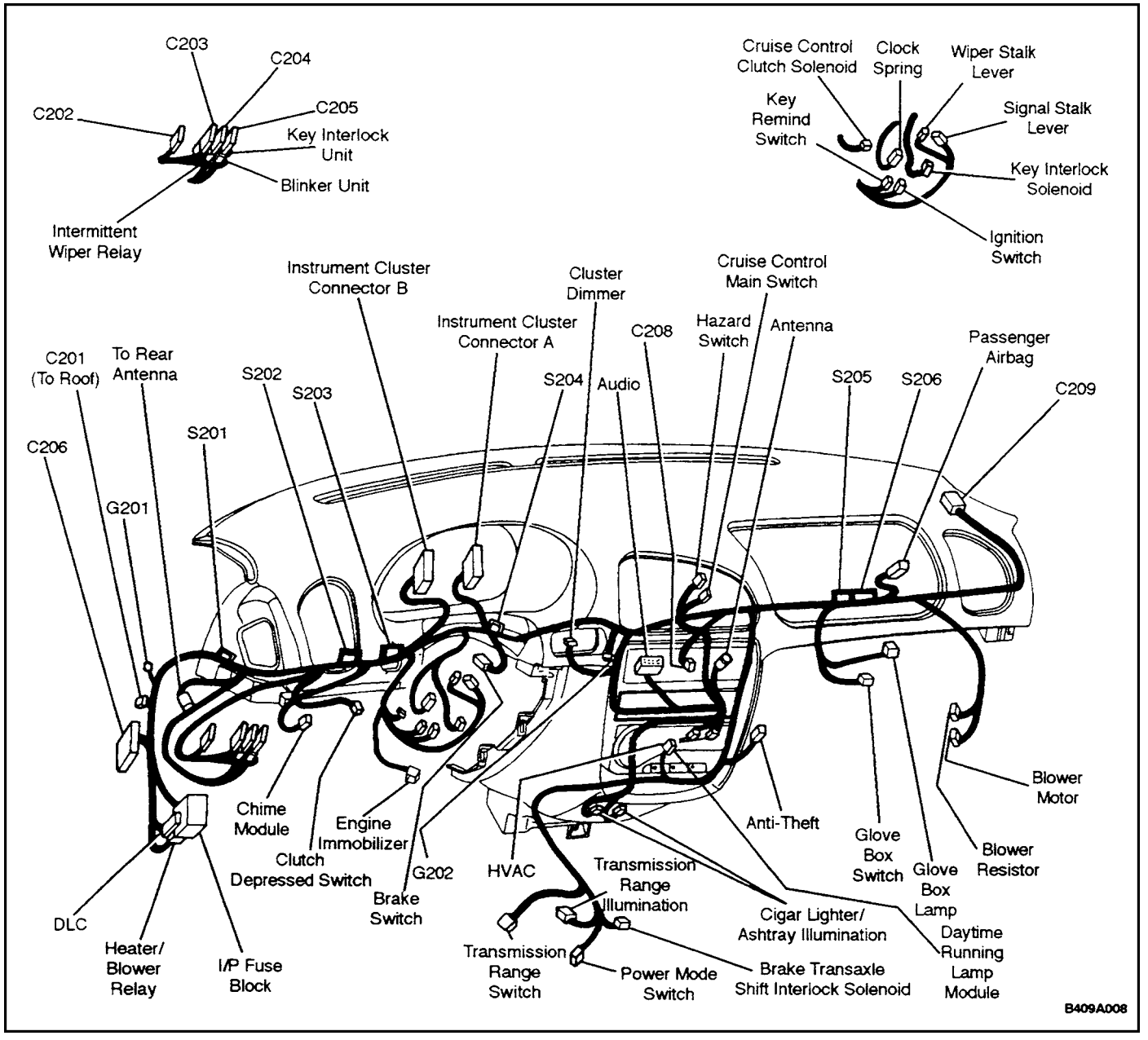

DOOR HARNESS ROUTING

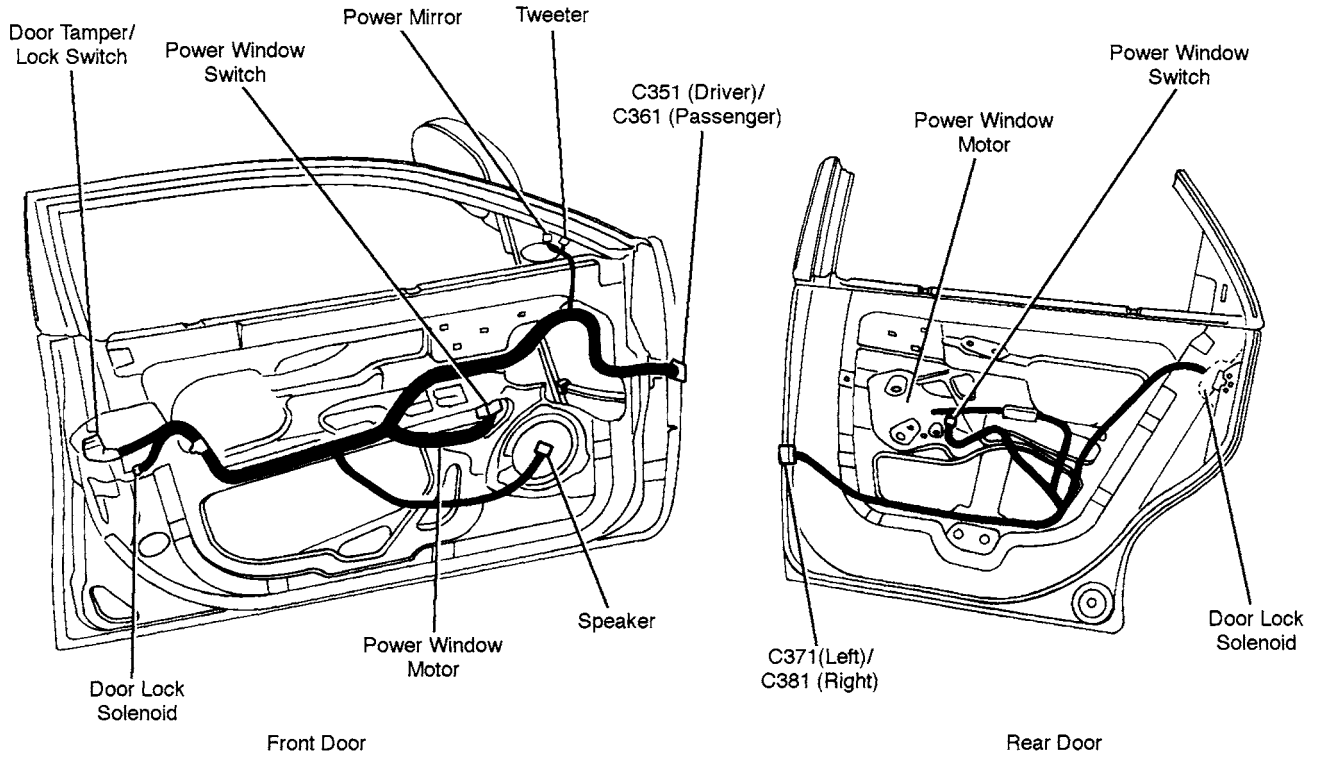

SECTION : 9U

CRUISE CONTROL SYSTEM

CAUTION : Disconnect the negative battery cable before removing or installing any electrical unit or when a tool or equipment could easily come in contact with exposed electrical terminals. Disconnecting this cable will help prevent personal injury and damage to the vehicle. The ignition must also be in LOCK unless otherwise noted.

TABLE OF CONTENTS

SPECIFICATIONS 9U–1
FASTENER TIGHTENING SPECIFICATIONS . 9U–1
SCHEMATIC AND ROUTING DIAGRAMS 9U–2
CRUISE CONTROL SYSTEM (AUTOMATIC TRANSAXLE) (1 OF 2) 9U–2
CRUISE CONTROL SYSTEM (AUTOMATIC TRANSAXLE) (2 OF 2) 9U–3
CRUISE CONTROL SYSTEM (MANUAL TRANSAXLE) (1 OF 2) 9U–4
CRUISE CONTROL SYSTEM (MANUAL TRANSAXLE) (2 OF 2) 9U–5
DIAGNOSIS 9U–6
CRUISE CONTROL DIAGNOSIS 9U–6
MAINTENANCE AND REPAIR 9U–11
ON–VEHICLE SERVICE 9U–11
CRUISE CONTROL ACTUATOR 9U–11
ACTUATOR CONTROL CABLE 9U–15
MAIN SWITCH 9U–17
GENERAL DESCRIPTION AND SYSTEM OPERATION 9U–19
CRUISE CONTROL SYSTEM OPERATION . 9U–19
CRUISE CONTROL ACTUATOR 9U–19
MAIN SWITCH 9U–19
LEVER SWITCH 9U–19

SPECIFICATIONS

FASTENER TIGHTENING SPECIFICATIONS

Application	N•m	Lb–Ft	Lb–In
Actuator Bolts	4	–	35
Actuator Bracket Nuts	18	13	–

SCHEMATIC AND ROUTING DIAGRAMS

CRUISE CONTROL SYSTEM (AUTOMATIC TRANSAXLE) (1 OF 2)

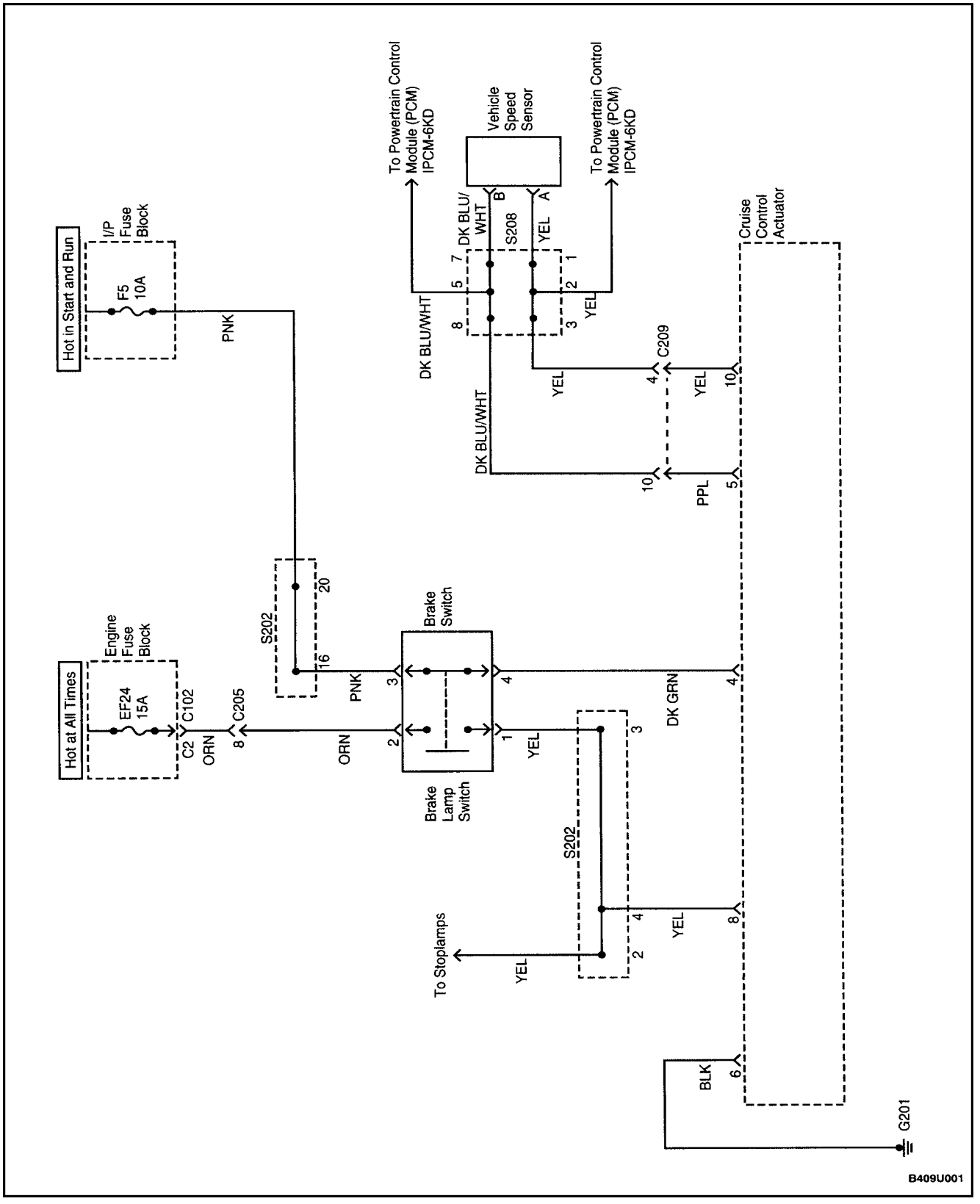

CRUISE CONTROL SYSTEM (AUTOMATIC TRANSAXLE) (2 OF 2)

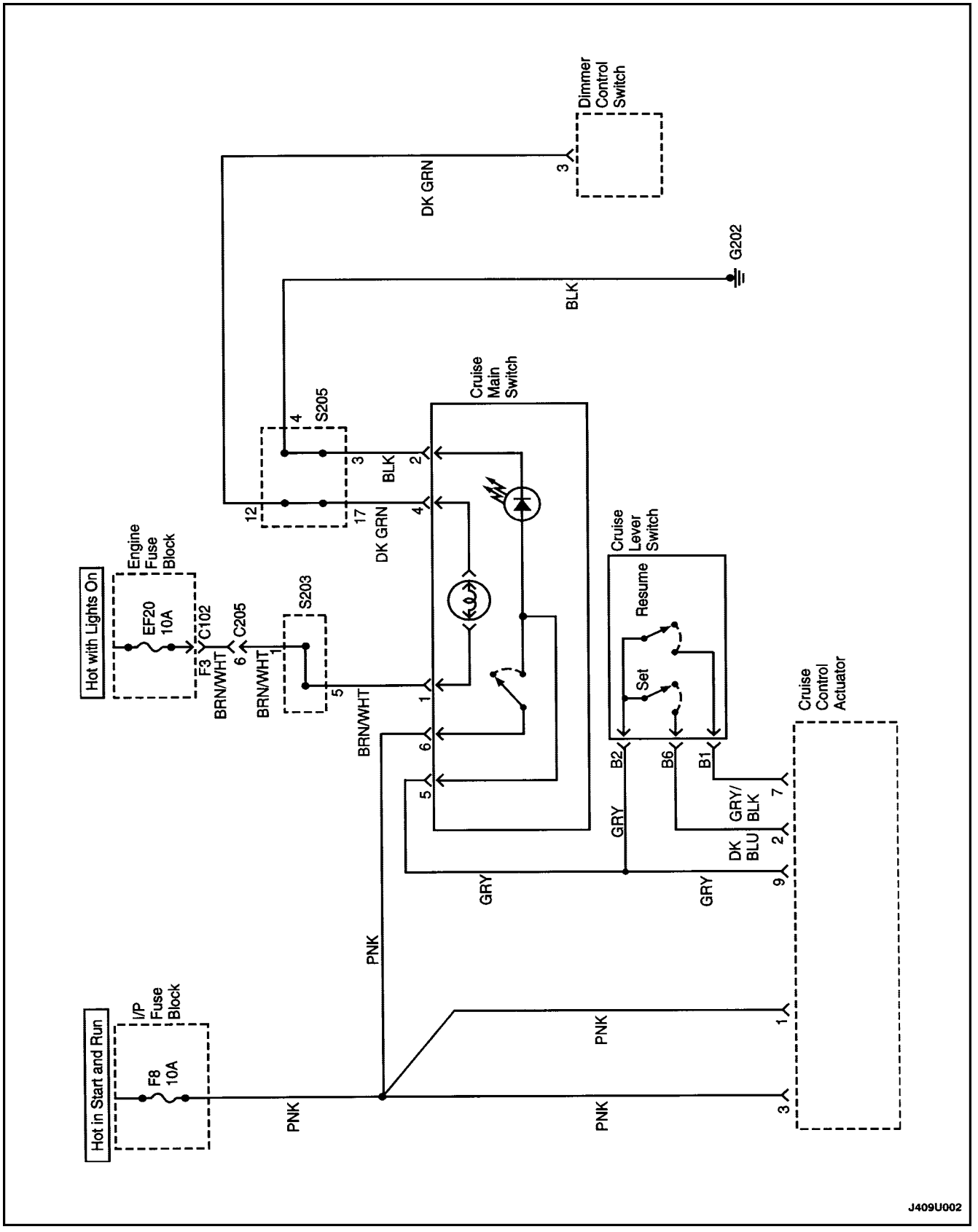

CRUISE CONTROL SYSTEM (MANUAL TRANSAXLE) (1 OF 2)

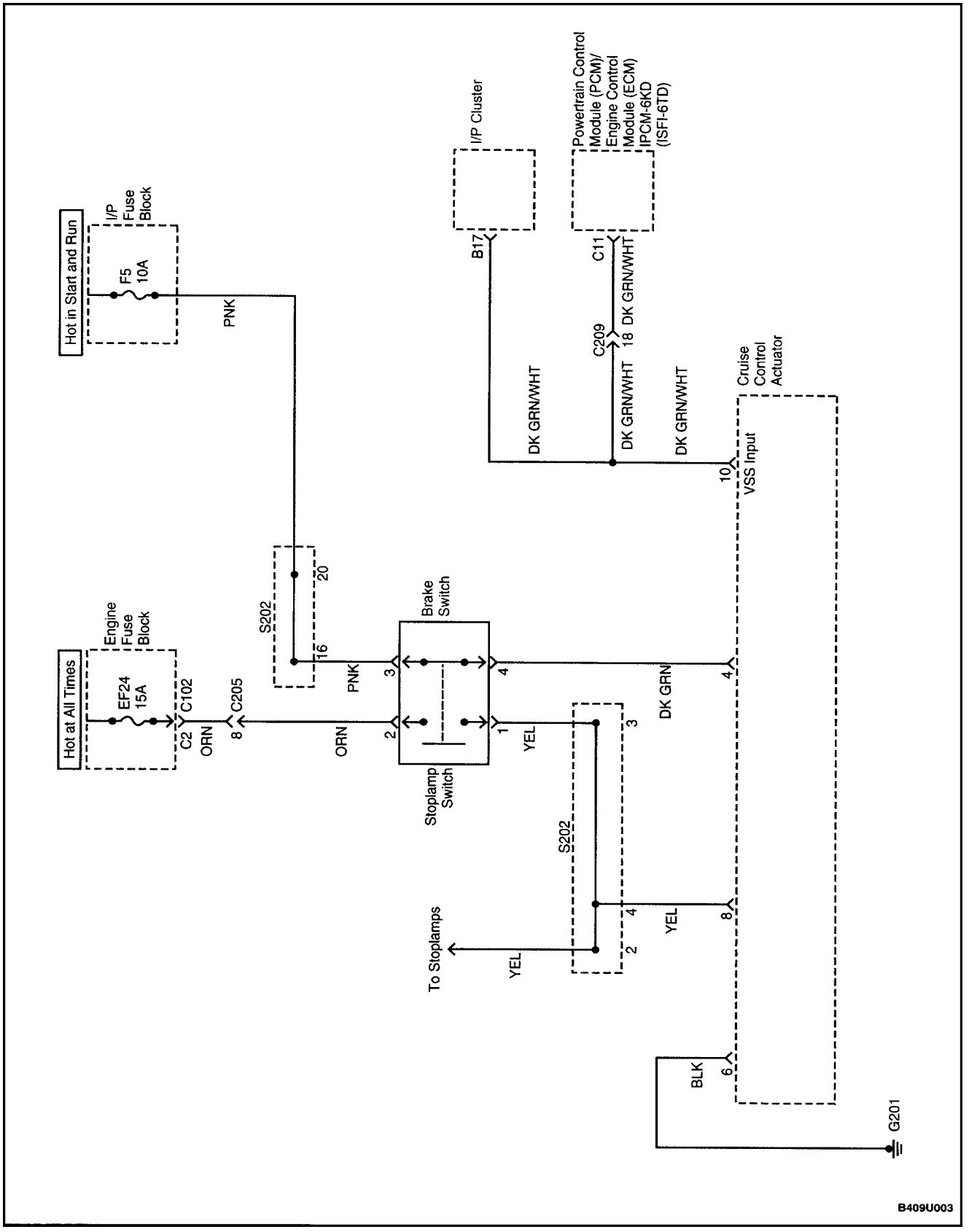

CRUISE CONTROL SYSTEM (MANUAL TRANSAXLE) (2 OF 2)

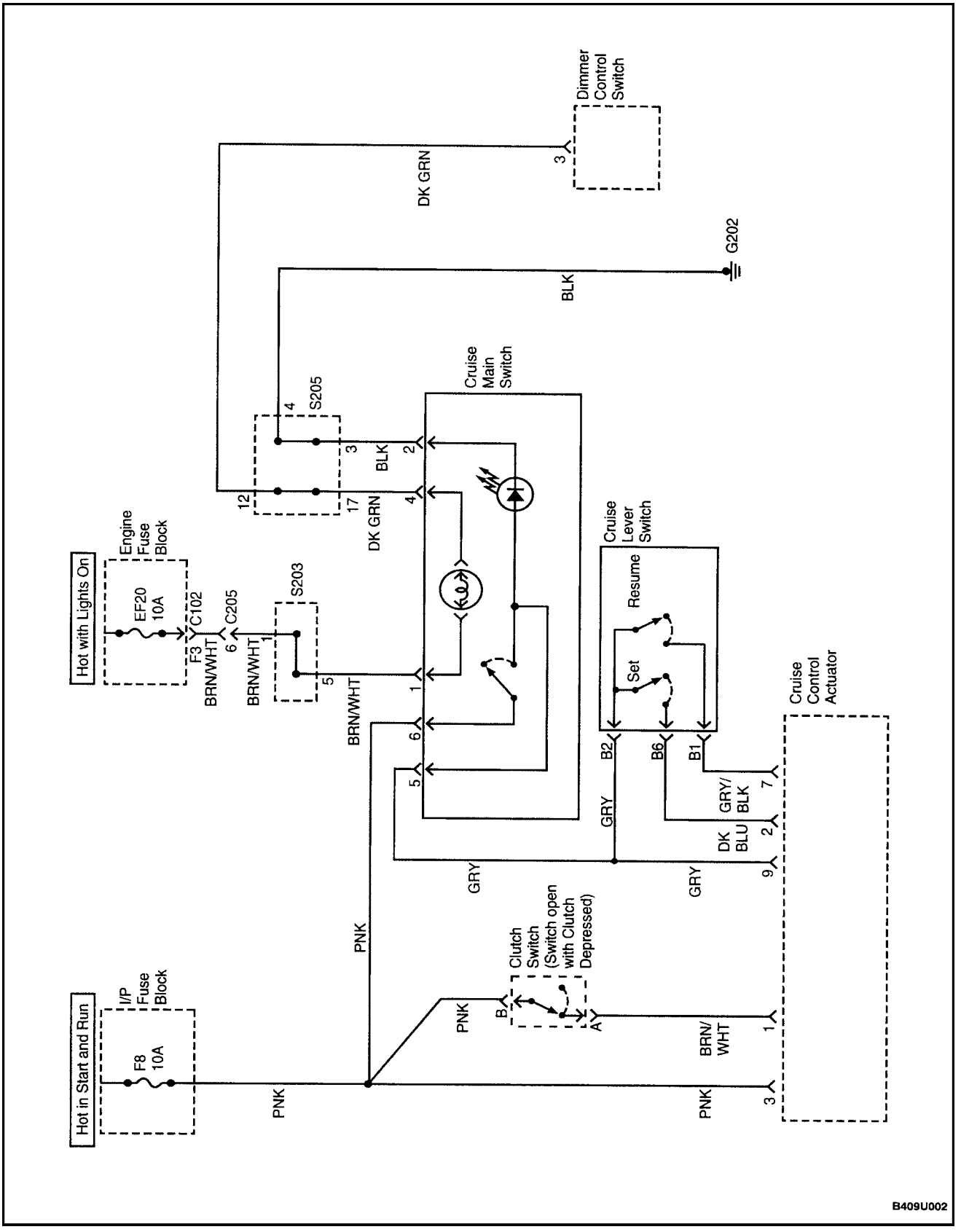

DIAGNOSIS

CRUISE CONTROL DIAGNOSIS

Test Description

The number(s) below refer to step(s) on the diagnostic table.

5. This test is performed because the electromagnetic clutch in the cruise control actuator is grounded through the brake lamps.

Cruise Control Does Not Operate

Step	Action	Value(s)	Yes	No
1	Visually inspect the cruise control system and verify the following conditions: • The electrical connector is correctly attached to the cruise control actuator. • The actuator and the bracket are not loose. • The cable is not bent or kinked. • The cable adjuster is correctly attached to its bracket. • The cable and bushing are correctly attached to the accelerator assembly. • The cable is properly adjusted. Are all of the above conditions verified?		Go to *Step 3*	Go to *Step 2*
2	Make repairs to the components of the cruise control system that were observed to be faulty in Step 1. Is the repair complete?		System OK	
3	1. Connect a scan tool to the data link connector (DLC). 2. Check for engine control diagnostic trouble codes (DTCs). Is a vehicle speed sensor (VSS)DTCorDTC722 or DTC723 present?		Go to *Step 5*	Go to *Step 4*
4	Diagnose and repair the cause of theDTCs. Is the cruise control still inoperative?		Go to *Step 5*	System OK
5	Observe the brake lamps when the brakes are applied. Do the brake lamps turn on when the brakes are applied and turn off when the brakes are not applied?		Go to *Step 7*	Go to *Step 6*
6	Repair the brake lamp system. Does the cruise control operate after the brake lamp system has been repaired?		System OK	Go to *Step 7*
7	Check fuses F5 andF8. Is a fuse blown?		Go to *Step 9*	Go to *Step 8*
8	1. Check for a short circuit and repair it, if necessary. 2. Replace any blown fuses. Is the repair complete?		System OK	
9	1. Turn the ignition ON. 2. Check the voltage at fuses F5 and F8. Is the specified voltage available at fuses F5 andF8?	11–14 v	Go to *Step 11*	Go to *Step 10*
10	Repair the power supply to the fuse(s). Is the repair complete?		System OK	

Step	Action	Value(s)	Yes	No
11	1. Disconnect the electrical connector from the cruise control actuator. 2. Turn the ignition ON. 3. Check the voltage at terminal H of the actuator connector. Is the voltage equal to the specified value?	11–14 v	Go to *Step 13*	Go to *Step 12*
12	Repair the open circuit between fuseF8 and the cruise control actuatorconnector terminal 3. Is the repair complete?		System OK	
13	With the electrical connectorstill removed fromthe cruise control actuator, use an ohmmeter tomeasure the resistance between connector terminal 6 and ground. Does the ohmmeter indicate the specified value?	≈ 0 Ω	Go to *Step 15*	Go to *Step 14*
14	Repair the open circuit between ground and terminal 6 of the actuatorconnector. Is the repair complete?		System OK	
15	With the electrical connectorstill disconnected from the cruise control actuator, use an ohmmeter to measure the resistance between connector terminal 8 and ground. Does the ohmmeter indicate the specified value?	≈ 0 Ω	Go to *Step 17*	Go to *Step 16*
16	Repair the open circuit between the actuator connector terminal 8 and the instrument splice pack S202. Is the repair complete?		System OK	
17	1. Turn the ignition ON. 2. With the electrical connector still disconnected from the cruise control actuator, use a voltmeter to check the voltage at terminal 4 of the connector. Is the voltage equal to the specified value?	11–14 v	Go to *Step 19*	Go to *Step 18*
18	Repair the open circuit between fuseF5 and terminal 4 of the cruise control actuatorconnector. Is the repair complete?		System OK	
19	1. Turn the ignition ON. 2. With the electrical connector still disconnected from the cruise control actuator, use a voltmeter to check the voltage at terminal 1 of the connector. Is the voltage equal to the specified value?	11–14 v	Go to *Step 21*	Go to *Step 20*
20	Repair the open circuit between fuseF8 and terminal 1 of the cruise control actuator. Is the repair complete?		System OK	
21	1. Turn the ignition ON. 2. Make sure that the cruise main switch is OFF. 3. With the electrical connector still disconnected from the cruise control actuator, use a voltmeter to check the voltage at terminal 9 of the actuator connector. Is the voltage equal to the specified value?	≈ 0 v	Go to *Step 23*	Go to *Step 22*

Step	Action	Value(s)	Yes	No
22	Repair the short to voltage between the cruisemain switch and the cruise control actuatorconnector terminal 9. Is the repair complete?		System OK	
23	1. Turn the ignition ON. 2. Make sure that the cruise main switch is ON. 3. With the electrical connector still disconnected from the cruise control actuator, use a voltmeter to check the voltage at terminal 9 of the connector. Is the voltage equal to the specified value?	11–14 v	Go to *Step 29*	Go to *Step 24*
24	1. Remove the cruise control main switch for testing, but leave the electrical connector attached. 2. Turn the ignition ON. 3. Check the voltage at the PNK wire at the cruise main switch. Is the voltage equal to the specified value?	11–14 v	Go to *Step 26*	Go to *Step 25*
25	Repair the open circuit in thePNK wire between fuse F8 and the cruise controlmain switch. Is the repair complete?		System OK	
26	1. With the cruise control main switch removed for testing, turn the ignition ON. 2. Turn the cruise control main switch ON. 3. Check the voltage at the GRY wire at the cruise main switch. Is the voltage equal to the specified value?	11–14 v	Go to *Step 27*	Go to *Step 25*
27	Replace the cruise control main switch. Is the repair complete?		System OK	
28	Repair the open circuit between the cruise control main switch connector terminal 5 and the cruise control actuatorconnector terminal 9. Is the repair complete?		System OK	
29	1. Turn the ignition ON. 2. Turn the cruise control main switch ON. 3. With the electrical connector still disconnected from the cruise control actuator, check the voltage at terminals 7 and 2 of the connector. Is the voltage equal to the specified value?	≈ 0 v	Go to *Step 33*	Go to *Step 30*
30	1. Disconnect the 6–pin connector at the cruise control lever switch. 2. Turn the ignition ON. 3. Turn the cruise control main switch ON. 4. With the electrical connector still disconnected from the cruise control actuator, check the voltage at terminals 7 and 2 of the cruise control actuator. Is the voltage equal to the specified value?	0 v	Go to *Step 31*	Go to *Step 32*
31	Replace the cruise control lever switch. Is the repair complete?		System OK	
32	Repair the short to voltage between the cruise control lever switch and the cruise control actuator. Is the repair complete?		System OK	

Step	Action	Value(s)	Yes	No
33	1. Turn the ignition ON. 2. Turn the cruise control main switch ON. 3. Select SET on the cruise control lever switch. 4. While holding the lever switch in the SET position, check the voltage at terminal 2 of the connector for the cruise control actuator. Does the voltmeter indicate the specified value?	11–14 v	Go to *Step 39*	Go to *Step 34*
34	1. Disconnnect the 6–pin connector from the lever switch. 2. Turn the ignition ON. 3. Turn the cruise control main switch ON. 4. Check the voltage at terminal 3 of the wiring harness side of the 6–pin lever switch connector. Is the voltage equal to the specified value?	11–14 v	Go to *Step 36*	Go to *Step 35*
35	Repair the open circuit between the cruise control main switch and the cruise control lever switch. Is the repair complete?		System OK	
36	1. Disconnect the 6–pin connector from the lever switch. 2. Connect an ohmmeter between terminals 3 and 8 at the switch side of the 6–pin connector. 3. Observe the ohmmeter when moving the lever switch to the SET position. Does the ohmmeter indicate the specified value?	≈ 0 Ω	Go to *Step 38*	Go to *Step 37*
37	Replace the lever switch. Is the repair complete?		System OK	
38	Repair the open circuit between the leverswitch connector terminalB6 and the cruise control actuator connector terminal 2. Is the repair complete?		System OK	
39	1. Turn the ignition ON. 2. Turn the cruise control main switch ON. 3. Select RESUME on the cruise control lever switch. 4. While holding the lever switch in the RESUME position, check the voltage at terminal 7 of the connector for the cruise control actuator. Does the voltmeter indicate the specified value?	11–14 v	Go to *Step 42*	Go to *Step 40*
40	Use the ohmmeter to check foran open circuit between terminalB1 of thewiring harness at the lever switch and terminal 7 of the actuatorconnector. Does the ohmmeter indicate the specified value?	≈ 0 Ω	Go to *Step 37*	Go to *Step 41*
41	Repair the open circuit between terminalB1 of the leverswitch connectorand terminal 7 of the cruise control actuatorconnector. Is the repair complete?		System OK	

Step	Action	Value(s)	Yes	No
42	1. Turn the ignition OFF. 2. If the vehicle has amanual transaxle, disconnect the VSS electrical connector. 3. If the vehicle has an automatic transaxle, disconnect the electrical connector from the transaxle output shaft sensor. • If the vehicle has a manual transaxle, use an ohmmeter to check continuity between the DK GRN/WHT wire at the VSS and terminal 10 of the cruise control actuator connector. • If the vehicle has an automatic transaxle, check the continuity of the following wires: – The YEL wire between cruise control actuator connector terminal 10 and VSS connector terminal A. – The PPL wire between cruise control actuator connector terminal 5 and VSS connector terminal B. Does the ohmmeter indicate the specified value when checking the wire(s) between the cruise control module and the VSS, for vehicles with amanual transaxle, or the output shaft sensor, for vehicles with an automatic transaxle?	≈ 0 Ω	Go to *Step 44*	Go to *Step 43*
43	Repair the open circuit between the cruise control actuatorconnector terminal 10 and theVSS, for vehicles with amanual transaxle, or the output shaft sensor forvehicles with an automatic transaxle. Is the repair complete?		System OK	
44	Replace the cruise control actuator. Is the repair complete?		System OK	

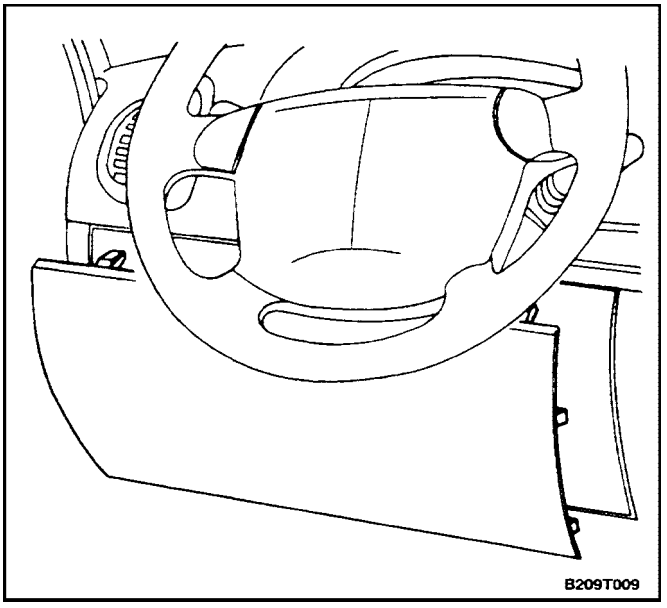

MAINTENANCE AND REPAIR

ON–VEHICLE SERVICE

CRUISE CONTROL ACTUATOR

Removal Procedure

1. Carefully pull the knee bolster trim panel until it is loose from its retaining clips.
2. Remove the knee bolster. Refer to *Section 9G, Interior Trim.*

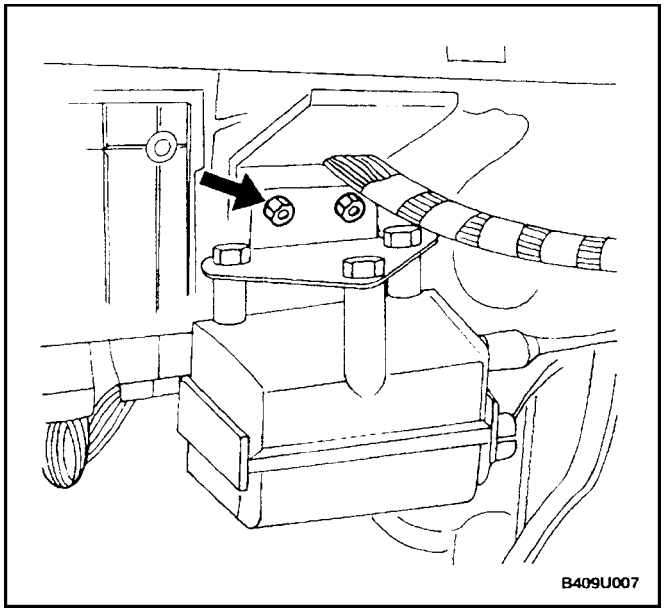

3. Remove the actuator bracket with the actuator still attached.

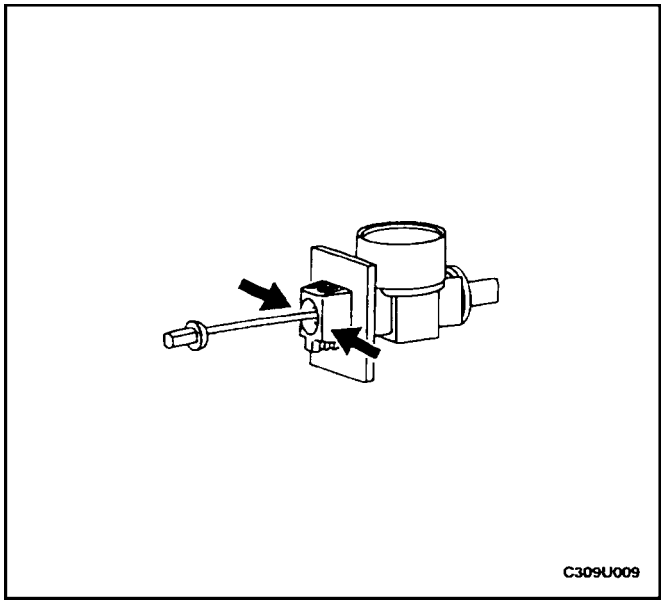

4. Press the tabs on the cable adjuster, and remove the cable and the adjuster from the adjuster bracket.

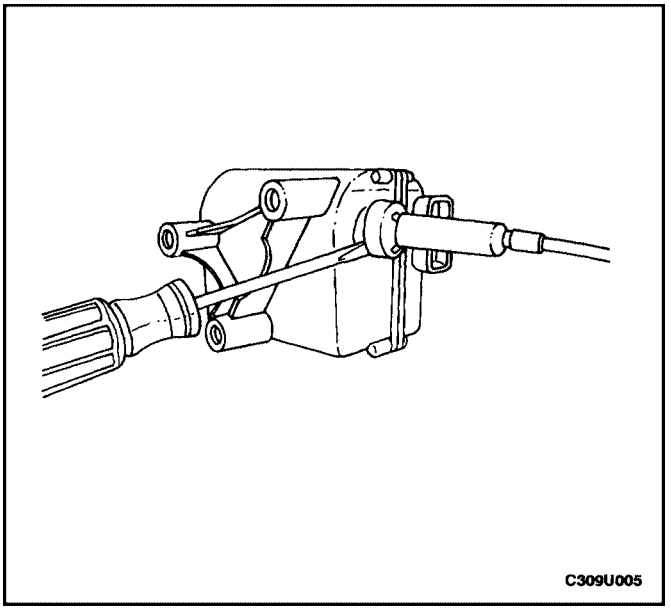
C309U005

5. Tilt the cable housing to expose one of the slots in the actuator, and insert the tip of a flathead screwdriver into one of the slots.

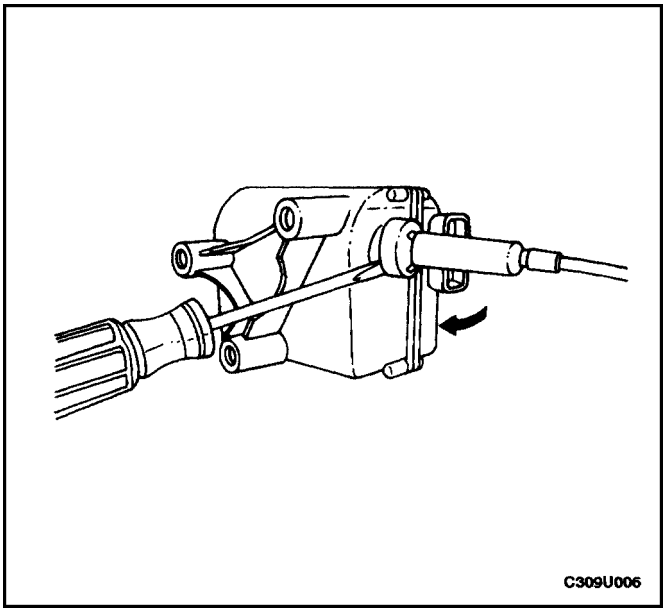
C309U006

6. Tilt the cable housing toward the screwdriver to release the cable housing retainers.

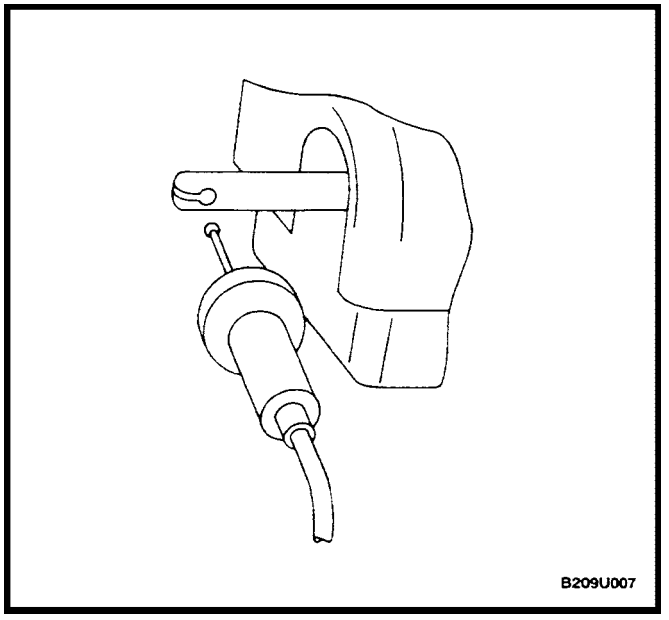
B209U007

7. Remove the cable ball from the actuator rod.

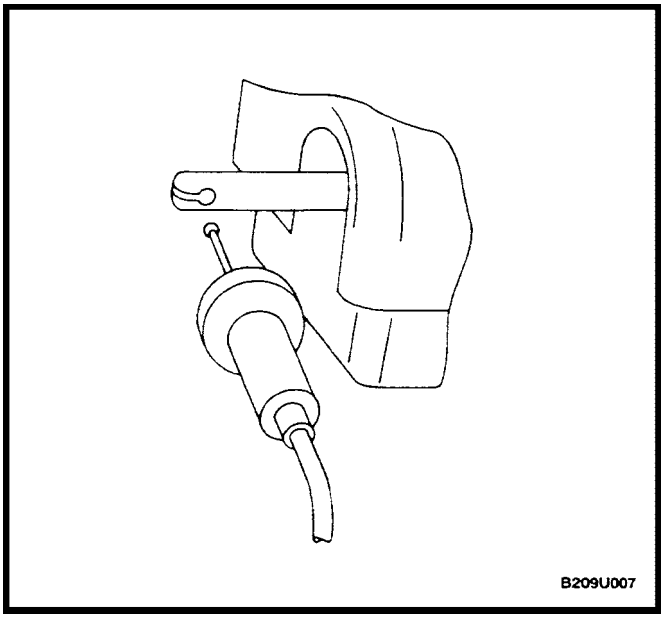

Installation Procedure

1. Insert the cable ball into the actuator rod.

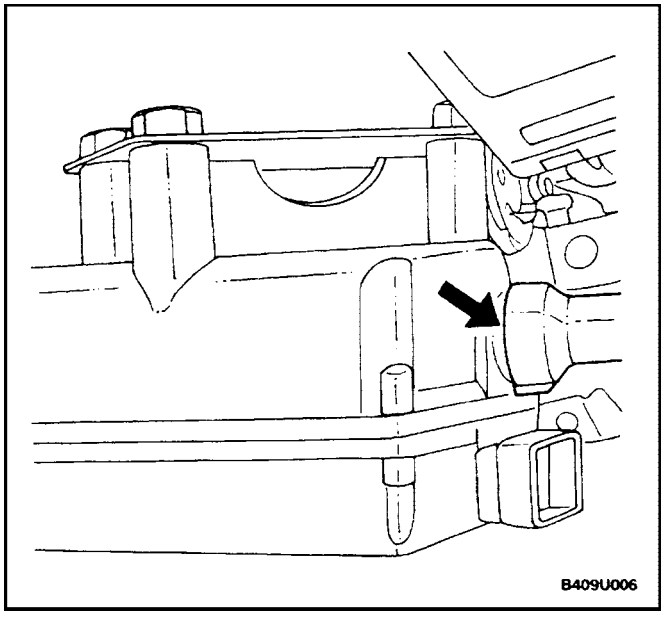

2. Align the cable housing and push the cable housing onto the actuator until it is locked in place by the retainers.

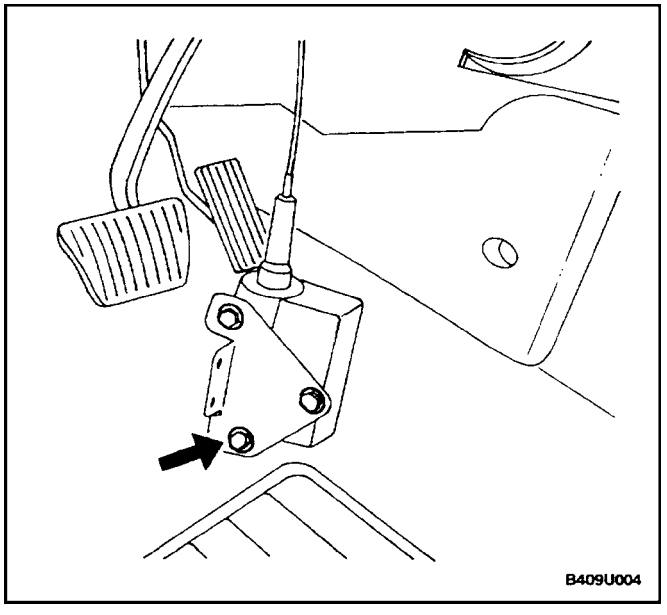

3. If a new actuator is being installed, attach it to the mounting bracket.

   Tighten

   Tighten the actuator bolts to 4 N•m (35 lb–in).

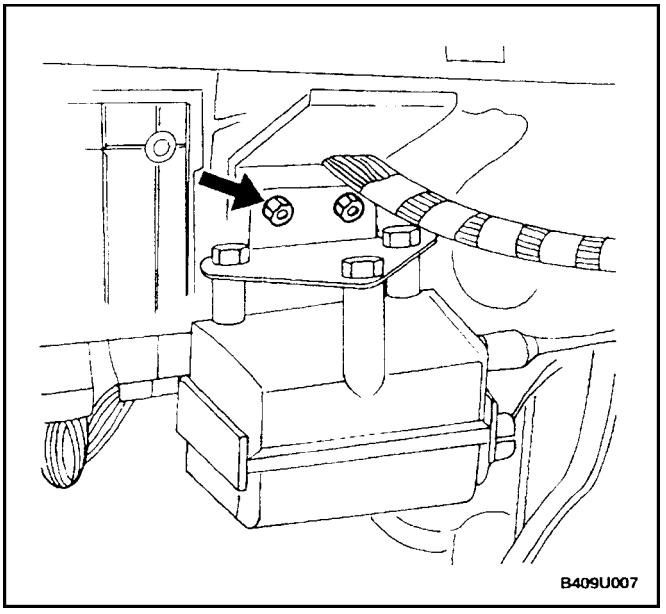

4. Install the mounting bracket.

Tighten

Tighten the actuator bracket nuts to 18 N•m (13 lb–ft).

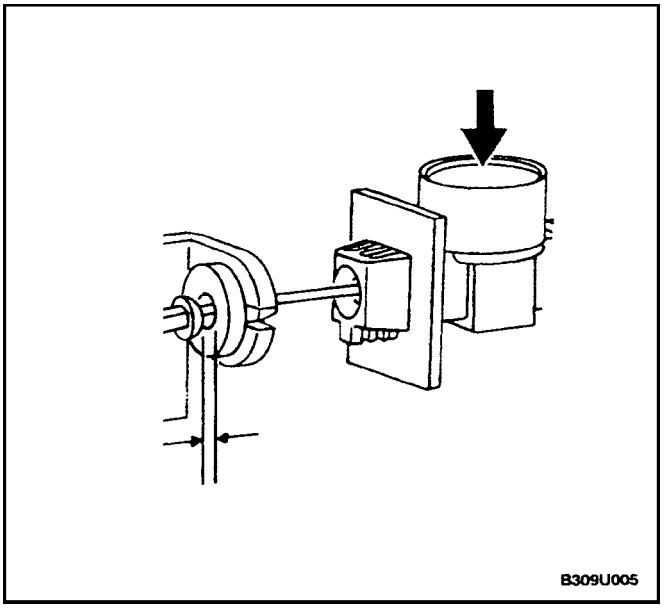

5. If the adjuster spring is not fully compressed, press the cable release button and slide the cable into the adjuster until the spring is fully compressed.

Notice : When the adjuster button is pressed, do not allow the adjuster spring to expand to a length of more than 2 cm (3/4 inch) or the adjuster rack will come out of the adjuster, and will have to be re–inserted. To keep the adjuster in one piece during adjustment, hold the cable when the adjuster button is pressed.

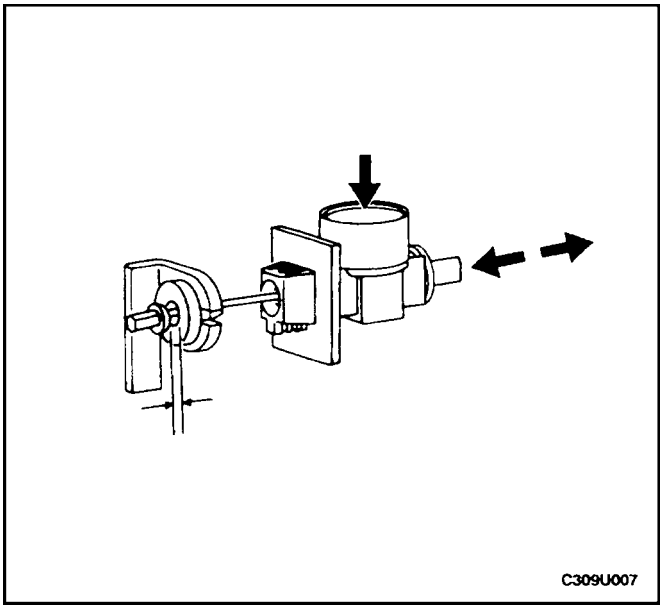

6. Insert the cable adjuster into the adjuster bracket.
7. Press the cable release button and adjust the cable to achieve a gap of 0.5 mm (0.02 inches) between the bushing and the nipple of the cable ball.
8. Install the knee bolster. Refer to *Section 9G, Interior Trim.*
9. Install the knee bolster trim panel.

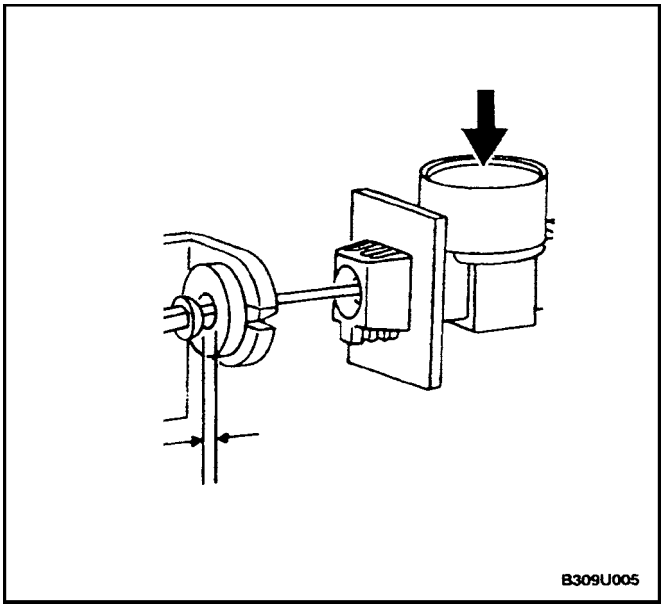

ACTUATOR CONTROL CABLE

Removal Procedure

1. Press the release button on the cable adjuster, and push the cable toward the adjuster until the adjuster spring is compressed.

Notice : When the adjuster button is pressed, do not allow the adjuster spring to expand to a length of more than 2 cm (3/4 inch) or the adjuster rack will come out of the adjuster, and will have to be re–inserted. To keep the adjuster in one piece during adjustment, hold the cable when the adjuster button is pressed.

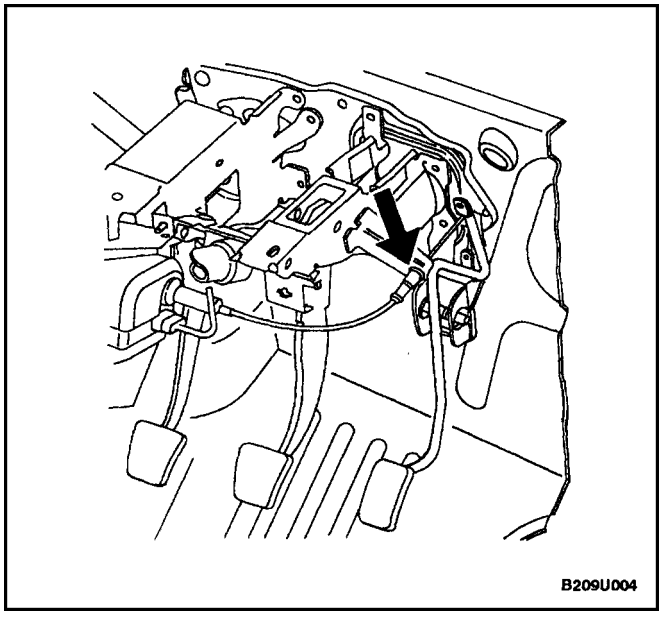

2. Press the retaining tabs of the cable adjuster, and remove the adjuster from the mounting bracket.

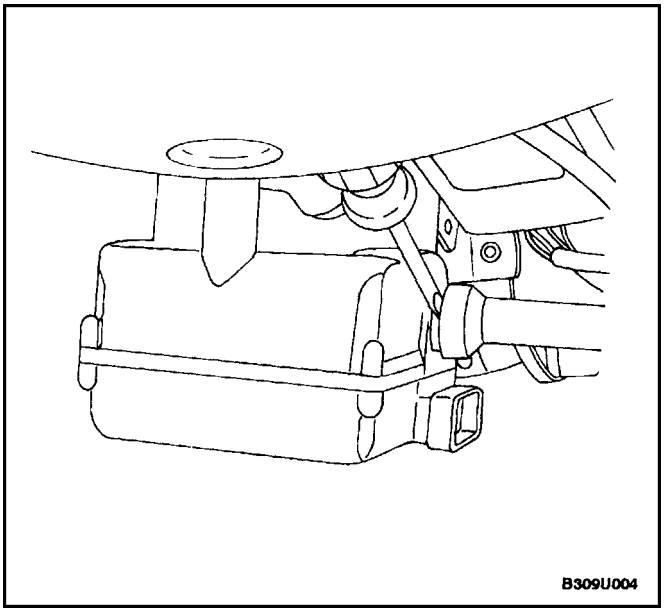

3. Tilt the cable housing and insert a flathead screwdriver into one of the slots in the actuator.
4. Tilt the cable housing toward the screwdriver, so that the cable housing retainers will release.

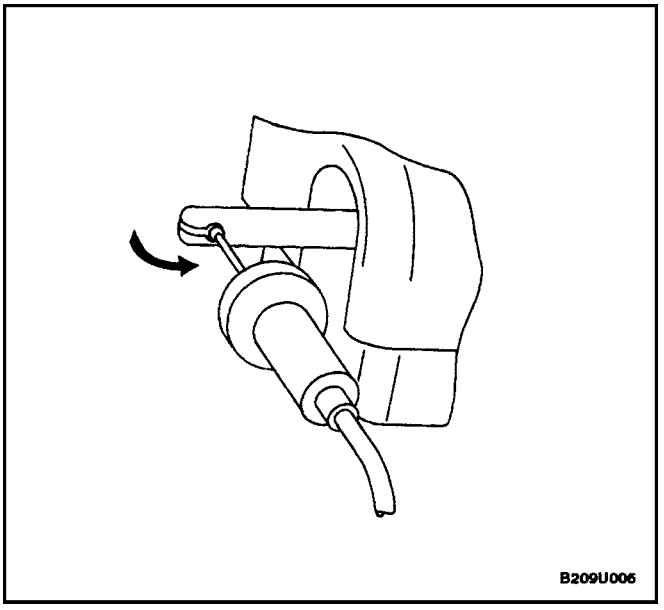

5. Slide the sleeve and the cable out of the actuator and rotate the cable so it can be removed from the slot in the actuator rod.

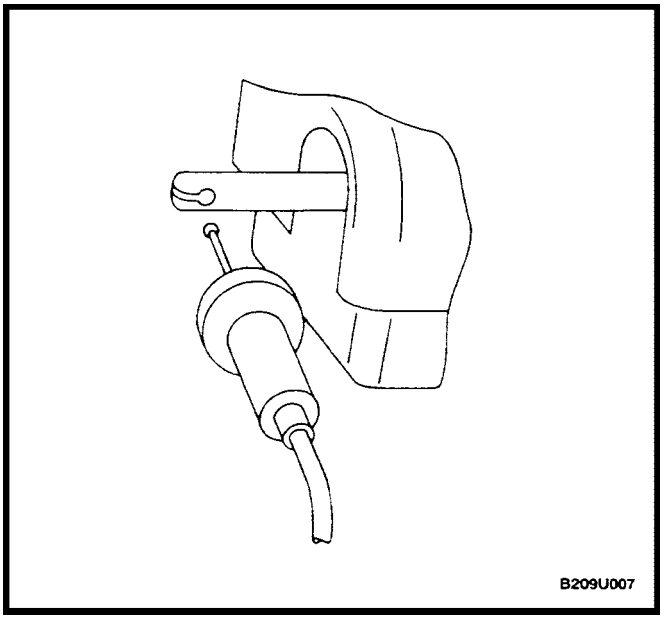

6. Remove the cable ball from the actuator rod.

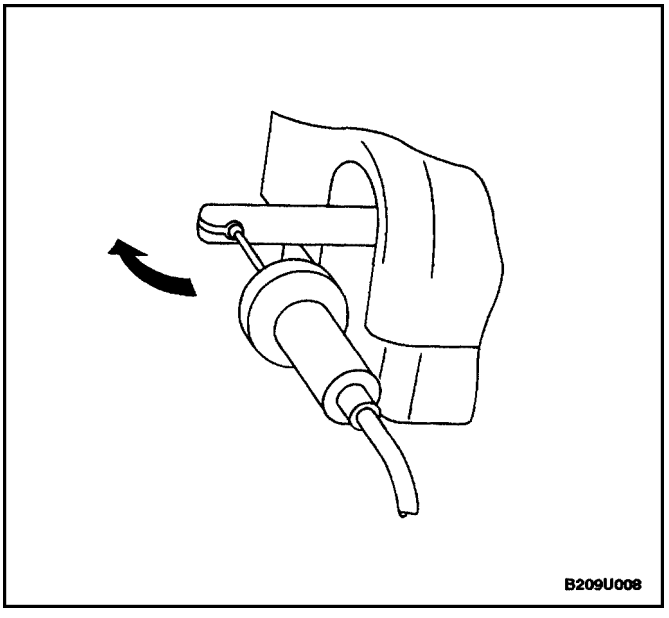

Installation Procedure

1. Insert the ball nipple of the cable assembly into the slot in the actuator rod, and then rotate the cable 90 degrees.

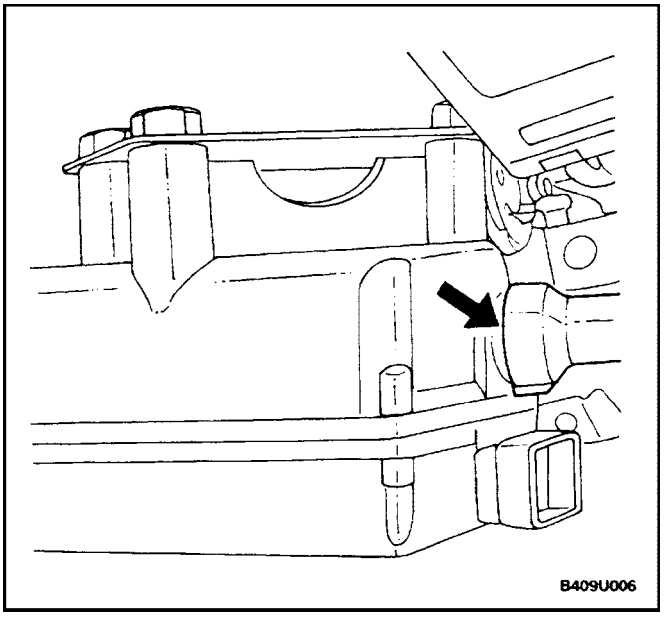

2. Align the cable housing and push the cable housing onto the actuator until it is locked in place by the retainers.

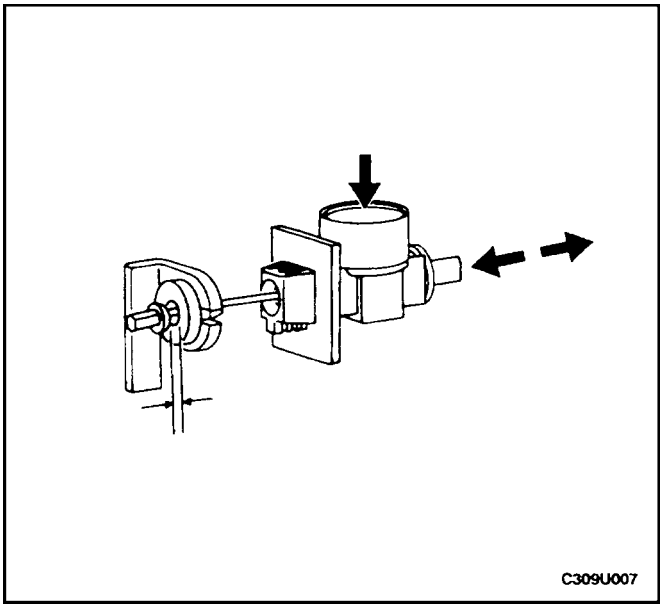

3. Insert the cable adjuster into the bracket of the pedal mount assembly.
4. If the adjuster spring is not fully compressed, press the cable release button and slide the cable into the adjuster until the spring is fully compressed.
5. Install the cable bushing into the pedal assembly.
6. Press the cable release button and adjust the cable to achieve a gap of 0.5 mm (0.02 inches) between the bushing and the nipple of the ball.

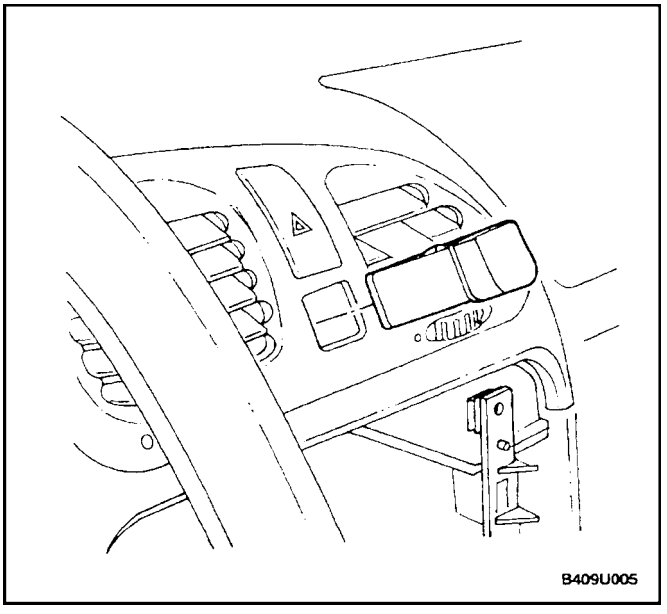

MAIN SWITCH

Removal Procedure

1. Remove the radio, taking care not to scratch the instrument panel or trim with the corners of the radio case. Refer to *Section 9F, Audio Systems.*
2. Reach through the radio opening in the instrument panel and wiggle the cruise control main switch to loosen it.
3. Push the cruise control main switch out of the instrument panel.
4. Disconnect the electrical connector from the cruise control main switch.

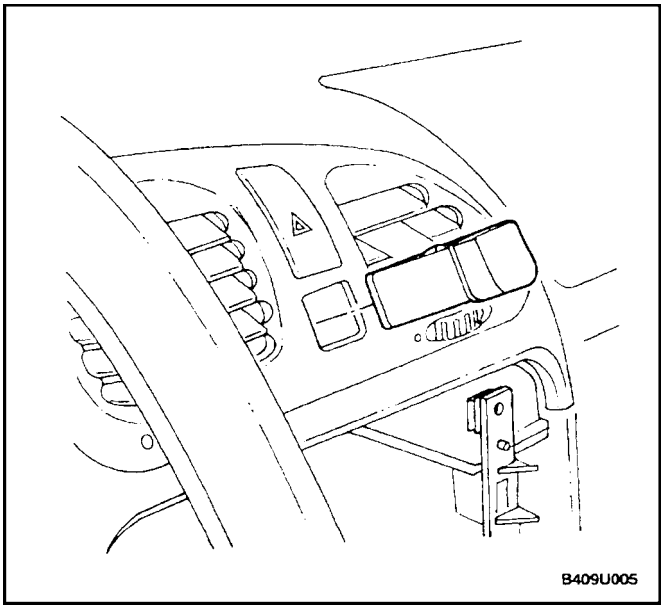

Installation

1. Connect the electrical connector to the cruise control main switch.
2. Push the cruise control main switch into the instrument panel until it is locked in place by its retainers.
3. Reinstall the radio, taking care not to scratch the instrument panel or trim when installing the radio case. Refer to *Section 9F, Audio Systems.*

GENERAL DESCRIPTION AND SYSTEM OPERATION

CRUISE CONTROL SYSTEM OPERATION

The cruise control system automatically maintains a vehicle speed set by the driver. When the cruise control system is activated, speed is maintained or increased by means of an electronically controlled cable attached to the accelerator assembly. If the vehicle must be slowed to maintain the speed set by the driver, the cruise control system allows the throttle return spring to close the throttle.

If driving conditions require sudden acceleration after the cruise control has been set, speed can be increased in the normal manner by manually pressing the accelerator. The cruise control is disengaged if the brakes (or the clutch, with a manual transaxle) are applied.

The minimum speed for setting the cruise control is 38.6 km/h (24 mph). When cruise control is operating, the CRUISE indicator lamp is turned ON in the instrument cluster.

The cruise control system is capable of monitoring internal software and hardware faults as well as external faults in the connectors and the wire harness. If a fault is detected, cruise control is stopped immediately, and the program logic and hardware logic both prevent the cruise control from opening the throttle.

The cruise control will function in temperatures ranging from –40˚C (–40˚F) to 85˚C (185˚F). Maximum temperature could cause the regulation properties to be out of tolerance, but the safety shutdown is still operational under maximum temperature conditions. If high temperature interferes with the cruise control operation, the actuator electromagnetic clutch will open, and the throttle return spring will close the throttle unless the accelerator pedal is pressed.

CRUISE CONTROL ACTUATOR

The cruise control actuator is a single–component system. The electronic controls are combined in one housing with the mechanical components. The actuator is mounted in the passenger compartment..

The mechanical components of the cruise control actuator are listed below:

- Permanent field DC motor.
- Single stage belt transfer gearing.
- Spindle drive.
- Electromagnetic clutch.
- Clutch plate with cable attachment.
- End switches.
- Plastic housing with noise reduction cover.
- Damping unit for clutch plate slap.

The electronics of the cruise control system include the following items:

- A microprocessor which controls speed regulation and monitors input signals.
- A clutch activation circuit which energizes the clutch magnet in order to couple the DC motor to the control cable.
- A driver circuit which activates the DC motor in a clockwise or counterclockwise direction.
- A control unit for lamp activation.

The parts of the cruise control actuator are not serviceable. The entire actuator must be replaced if there is an electronic or mechanical defect in one of the systems.

MAIN SWITCH

The cruise control main switch is on the center of the instrument panel.

Cruise control can only be set with the lever switch when the main switch is ON.

The main switch has an indicator which turns ON when the main switch is pressed. If the switch is pressed again, the indicator and the switch turn OFF.

The main switch also is connected to the instrument illumination system, so the dimmer switch controls switch illumination when the headlamps or parking lamps are ON.

LEVER SWITCH

After the main switch is turned ON and the neutral position of the lever switch is detected by the cruise control actuator, the following operations can be performed by using the cruise control lever switch:

Set – If the cruise control is ON and the minimum speed is 38.6 km/h (24 mph) but not more than 155 km/h (96 mph), the target speed can be set by selecting the SET function for 10 to 300 milliseconds. If SET is selected for more than 300 milliseconds, the cruise will be activated in the COAST function. If the accelerator is pressed by the driver after the cruise control has been set, the previous target speed will be maintained when the accelerator is released. If the accelerator is pressed by the driver until the actual speed is more than 35 km/h (22 mph) over the target speed, or until the vehicle exceeds 160 km/h (99 mph), the cruise control will disengage.

Coast – If a target speed has been set and COAST is selected for at least 300 milliseconds, the throttle is allowed to return to idle and the vehicle will coast. When the COAST switch is released, the current speed will be maintained as the new target speed. If the vehicle speed drops

below 32.2 km/h (20 mph) while coasting, the cruise control will be disengaged. If the switch is released between 32.2 km/h (20 mph) and 38.6 km/h (24 mph), the minimum target speed of 38.6 km/h (24 mph) will be used.

Resume – If the cruise control is ON and the system is disengaged by using the brake or the clutch, exceeding the maximum speed, failing to maintain the minimum speed, or exceeding the target speed by more than 35 km/h (22 mph), the last memorized speed can be reset by selecting RESUME, if the time since disengagement is not greater than 5 seconds. The RESUME function is selected by switching to RESUME for 10 to 300 milliseconds. If the actual speed is below the target speed when RESUME is selected, the vehicle will be accelerated at 3.4 km/h per second (2.1 mph/second) until the vehicle is within 10 km/h (6 mph) of the target speed, and then acceleration will be reduced in order to achieve a smooth transition from acceleration to cruising. If the actual speed is above the target speed when RESUME is selected, the throttle will be allowed to return to idle until the target speed is achieved. RESUME can be canceled by selecting SET. In that case, the current speed will be maintained as the new target speed.

Accelerate – If cruise control is ON, and the ACCEL function is selected for more than 300 milliseconds, the vehicle will accelerate. The acceleration is maintained at the rate of 3.4 km/h per second (2.1 mph/second) as long as vehicle performance is sufficient; otherwise full throttle is applied. When the switch is released, the current speed will be stored and used as the new target speed. The ACCEL function cannot be used for acceleration above 155 km/h (96 mph). If 155 km/h (96 mph) is attained, acceleration will stop and 155 km/h (96 mph) will be set as the new target speed.

Tap–Up – If the cruise control has been set, and RESUME is selected again for more than 10 milliseconds but less than 300 milliseconds, the target speed will be increased by 2 km/h (1.2 mph) each time the RESUME function is selected (or tapped). If the driver has used the accelerator to increase speed more than 8 km/h over the current target speed, a tap–up signal will be interpreted as a normal SET signal. The cruise control will not accept a tap–up target speed above 155 km/h (96 mph). If the actual speed has fallen 16.1 km/h (10 mph) below the target speed, tap–up signals are not accepted.

Tap–Down – If the cruise control is already set and SET is selected for between 10 and 300 milliseconds, the target speed will be decreased by 2 km/h (1.2 mph) each time SET is selected (or tapped). Tap–down signals will not be accepted for a target speed below 38.6 km/h (24 mph). If the vehicle speed has increased to 8 km/h (5 mph) over the target speed, the cruise control system will interpret a tap–down signal as a SET.

If the cruise control is turned OFF with the main switch, all cruise control functions are stopped, the actuator cable is driven toward idle, and the electromagnetic clutch for the cable actuator is opened. The cable actuator clutch is not opened immediately in order to accomplish a smooth transition in vehicle speed. If the cruise control is OFF for more than 5 seconds, the memorized target speed is erased.

SECTION : 9C

HORNS

CAUTION : Disconnect the negative battery cable before removing or installing any electrical unit or when a tool or equipment could easily come in contact with exposed electrical terminals. Disconnecting this cable will help prevent personal injury and damage to the vehicle. The ignition must also be in LOCK unless otherwise noted.

TABLE OF CONTENTS

SPECIFICATIONS 9C–1
FASTENER TIGHTENING SPECIFICATIONS . 9C–1
SCHEMATIC AND ROUTING DIAGRAMS 9C–2
HORN WIRING SYSTEM 9C–2
MAINTENANCE AND REPAIR 9C–3
ON–VEHICLE SERVICE 9C–3
HORNS 9C–3
GENERAL DESCRIPTION AND SYSTEM OPERATION 9C–5
HORNS 9C–5

SPECIFICATIONS

FASTENER TIGHTENING SPECIFICATIONS

Application	N•m	Lb–Ft	Lb–In
Horn Bolt	20	15	–

SCHEMATIC AND ROUTING DIAGRAMS

HORN WIRING SYSTEM

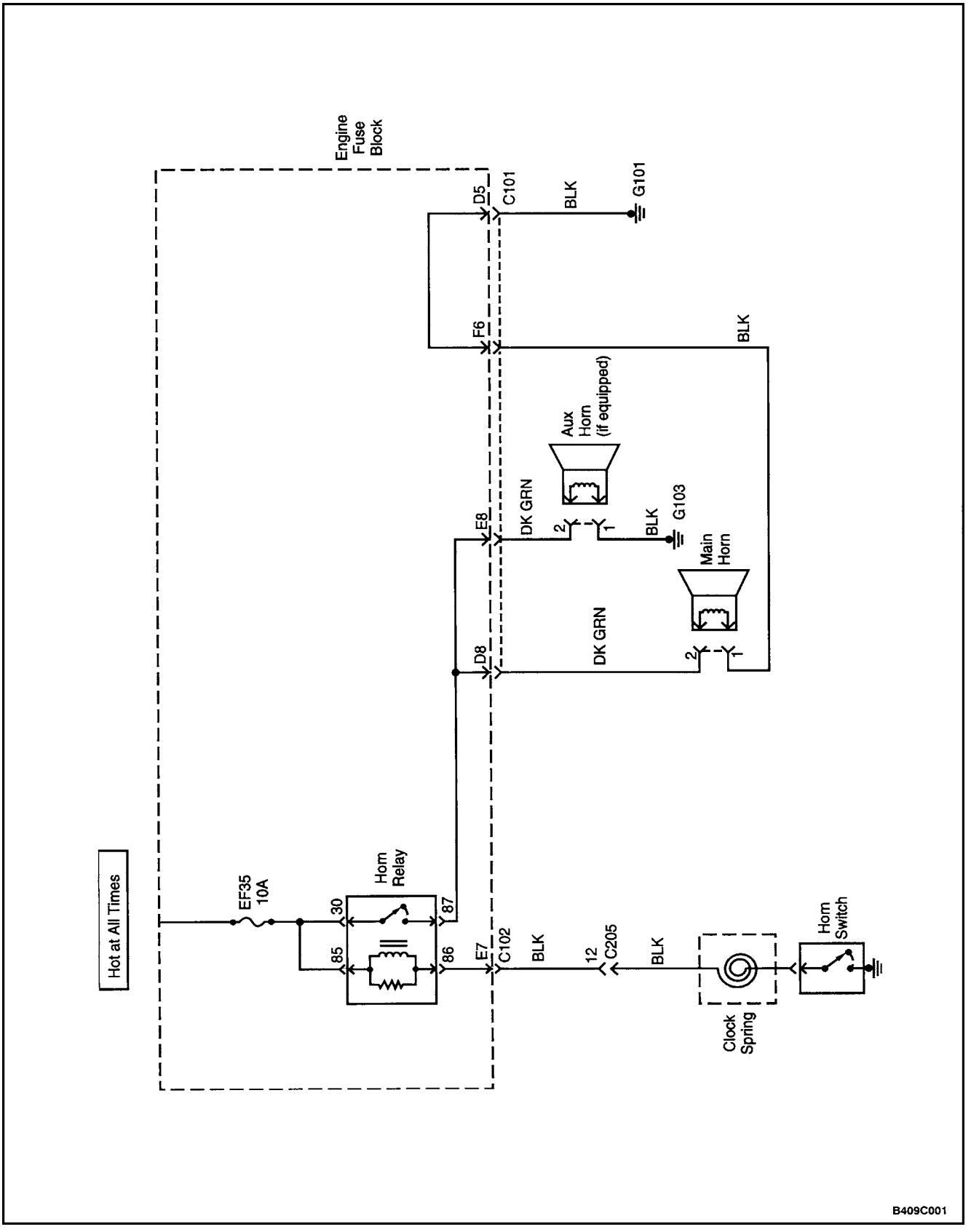

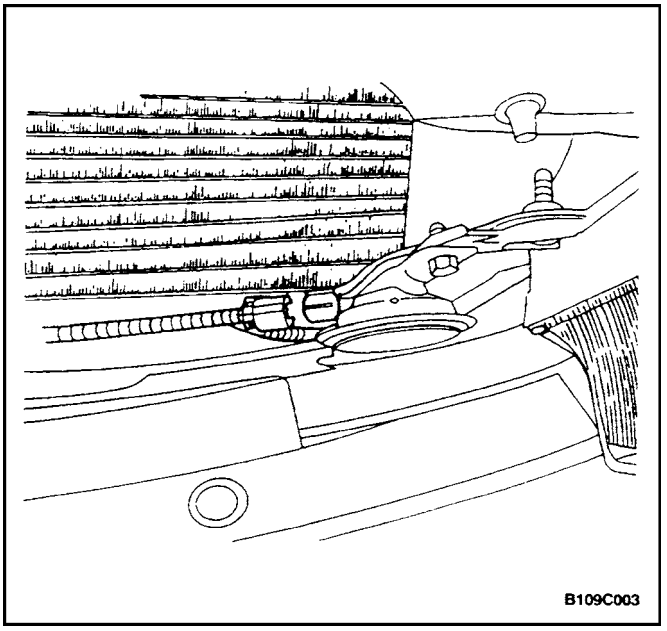

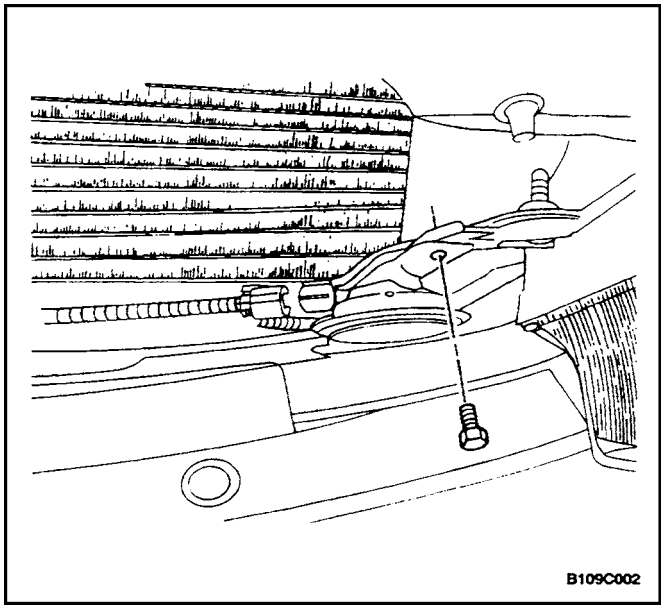

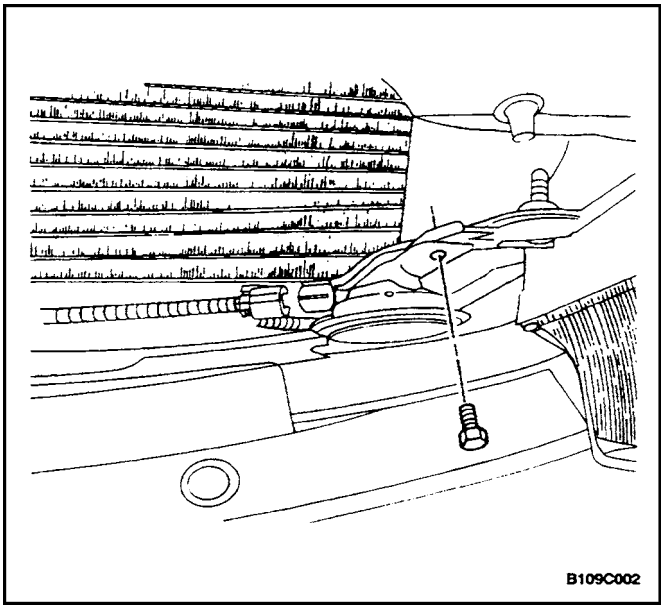

MAINTENANCE AND REPAIR

ON–VEHICLE SERVICE

HORNS

(Left Horn Shown, Right Horn Similar, If Equipped)

Removal Procedure

1. Disconnect the negative battery cable.
2. Disconnect the electrical connector.
3. Remove the bolt and the horn.

Installation Procedure

Notice : Dissimilar metals in direct contact with each other may corrode rapidly. Make sure to use the correct fasteners to prevent premature corrosion.

1. Install the horn with the bolt.

   Tighten

   Tighten the horn bolt to 22 N•m (16 lb–ft)

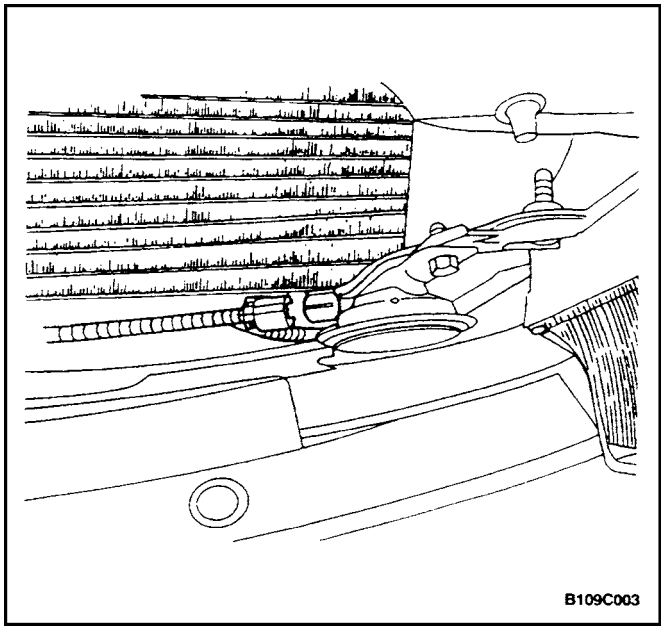

2. Connect the electrical connector.
3. Connect the negative battery cable.

GENERAL DESCRIPTION AND SYSTEM OPERATION

HORNS

The horns are located under the hood. They are attached near the radiator at the front of the vehicle. The horns are actuated by pressing the steering wheel pad, which grounds the horns' electrical circuit.

SECTION : 9B

LIGHTING SYSTEMS

CAUTION : Disconnect the negative battery cable before removing or installing any electrical unit or when a tool or equipment could easily come in contact with exposed electrical terminals. Disconnecting this cable will help prevent personal injury and damage to the vehicle. The ignition must also be in LOCK unless otherwise noted.

TABLE OF CONTENTS

SPECIFICATIONS 9B–2
BULB USAGE CHART 9B–2
FASTENER TIGHTENING SPECIFICATIONS . 9B–2
SCHEMATIC AND ROUTING DIAGRAMS 9B–3
HEADLAMPS–ON REMINDER CHIME CIRCUIT 9B–3
PARKING, TAIL, POSITION AND LICENSE LAMPS CIRCUIT 9B–4
TURN AND HAZARD LAMPS CIRCUIT 9B–5
BRAKE AND BACKUP LAMPS CIRCUIT 9B–6
INTERIOR COURTESY LAMP AND LUGGAGE COMPARTMENT LAMP CIRCUIT 9B–7
HEADLAMPS CIRCUIT 9B–8
DAYTIME RUNNING LAMPS CIRCUIT 9B–9
FOG LAMPS CIRCUIT 9B–10
DIAGNOSIS 9B–11
HEADLAMPS–ON REMINDER CHIME 9B–11
HEADLAMPS 9B–12
FOG LAMPS 9B–18
REAR COMBINATION LAMPS 9B–19
INTERIOR COURTESY AND LUGGAGE COMPARTMENT LAMPS 9B–28
MAINTENANCE AND REPAIR 9B–31
ON–VEHICLE SERVICE 9B–31
HEADLAMPS/FRONT TURN SIGNAL LAMPS 9B–31
HEADLAMP AIMING 9B–34
PARKING LAMPS 9B–35
SIDE MARKER LAMPS 9B–36
FOG LAMPS 9B–37
REAR COMBINATION LAMPS 9B–39
CENTER HIGH–MOUNTED STOPLAMP (NOTCHBACK) 9B–40
CENTER HIGH–MOUNTED STOPLAMP (HATCHBACK) 9B–40
CENTER HIGH–MOUNTED STOPLAMP (WAGON) 9B–41
LICENSE PLATE LAMPS 9B–42
DOOR JAMB SWITCH 9B–42
INTERIOR COURTESY LAMP 9B–43
MAP LAMP 9B–44
GLOVE BOX LAMP 9B–44
ASHTRAY LAMP 9B–45
LUGGAGE COMPARTMENT LAMP 9B–46
CARGO AREA LAMP (WAGON) 9B–46
DAYTIME RUNNING LAMP MODULE 9B–47
GENERAL DESCRIPTION AND SYSTEM OPERATION 9B–48
HEADLAMPS–ON REMINDER 9B–48
HEADLAMPS 9B–48
DAYTIME RUNNING LAMPS 9B–48
PARKING AND TURN SIGNAL LAMPS 9B–48
SIDE MARKER LAMPS 9B–48
FOG LAMPS 9B–48
REAR COMBINATION LAMPS 9B–48
LICENSE PLATE LAMP 9B–49
INTERIOR COURTESY LAMP 9B–49
GLOVE BOX LAMP 9B–49
ASHTRAY LAMP 9B–49
LUGGAGE COMPARTMENT LAMP 9B–49

SPECIFICATIONS

BULB USAGE CHART

Bulb	Replacement Bulb Number
Backup Lamp	27W
Center High–Mounted Stoplamp	21W
Fog Lamp	55W
Glove Box Lamp	10W
Headlamp	Double 60/55W
Interior Courtesy Lamp	10W
License Plate Lamp	5W
Luggage Compartment Lamp	10W
Park and Front Turn Signal Lamp	Double 27/8W
Rear Turn Signal Lamp	Single 27/8W
Side Marker Lamp	8W
Taillamp and Stoplamp	Double 27/8W

FASTENER TIGHTENING SPECIFICATIONS

Application	N•m	Lb–Ft	Lb–In
CHMSL Mounting Nuts	4	–	35
CHMSL Mounting Screws	4	–	35
Daytime Running Lamp Module Screws	4	–	35
Door Jamb Switch Screw	4	–	35
Fog Lamp Nuts	4	–	35
Headlamp Assembly Bolts	4	–	35
Headlamp Assembly Nut	4	–	35
License Plate Lamp Screws	4	–	35
Map Lamp Screws	1	–	9
Rear Combination Lamp Assembly Screws	4	–	35

SCHEMATIC AND ROUTING DIAGRAMS

HEADLAMPS–ON REMINDER CHIME CIRCUIT

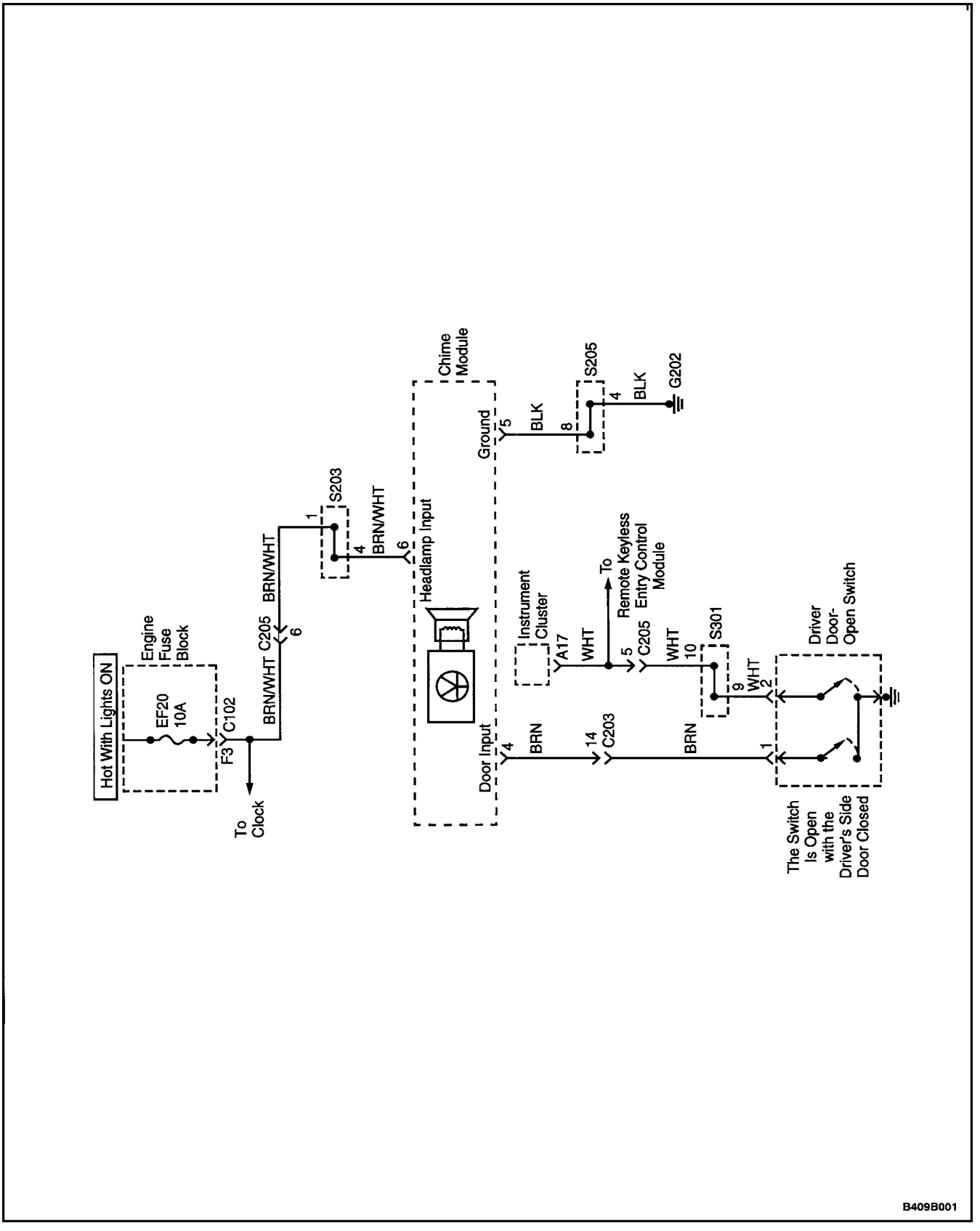

PARKING, TAIL, POSITION AND LICENSE LAMPS CIRCUIT

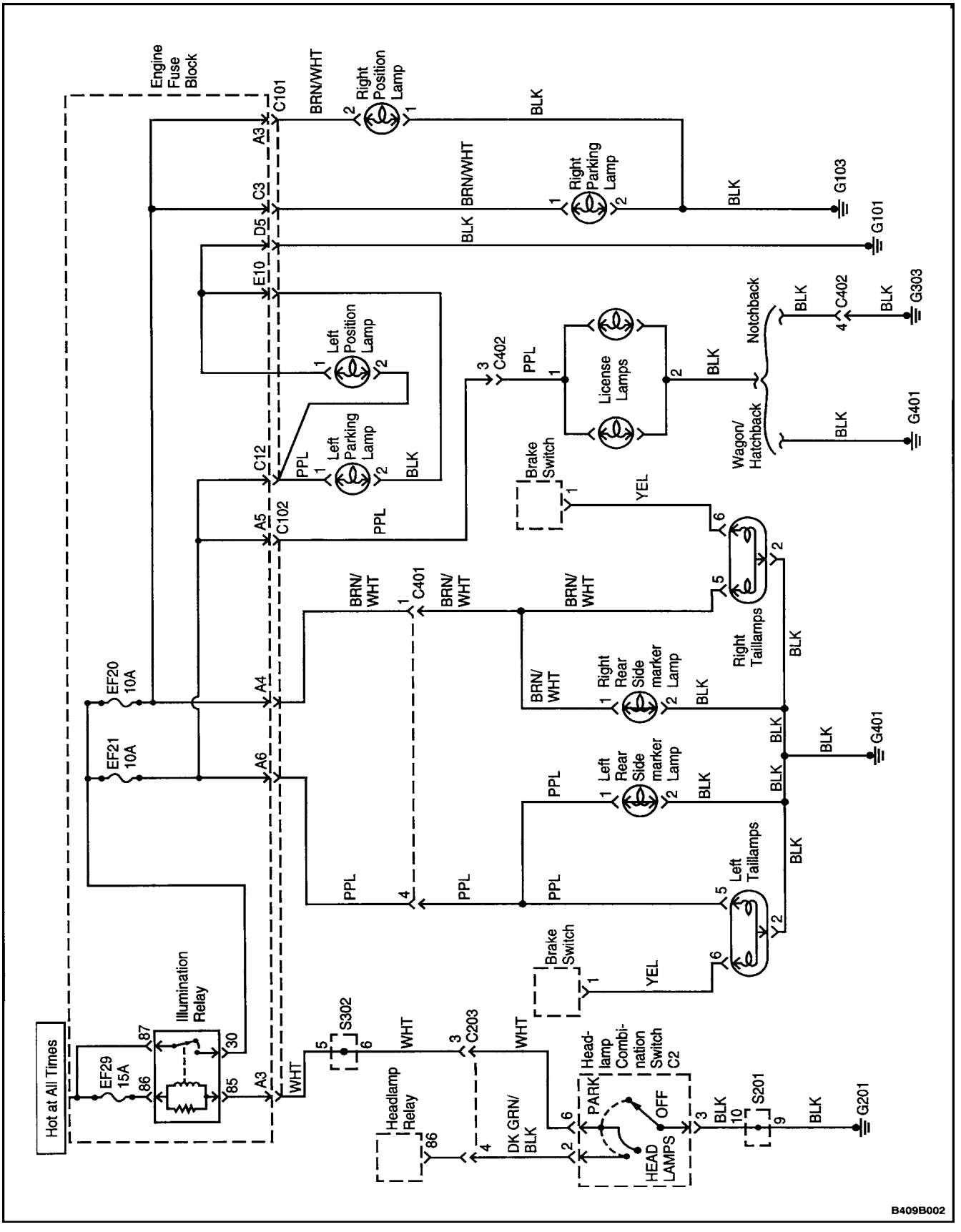

TURN AND HAZARD LAMPS CIRCUIT

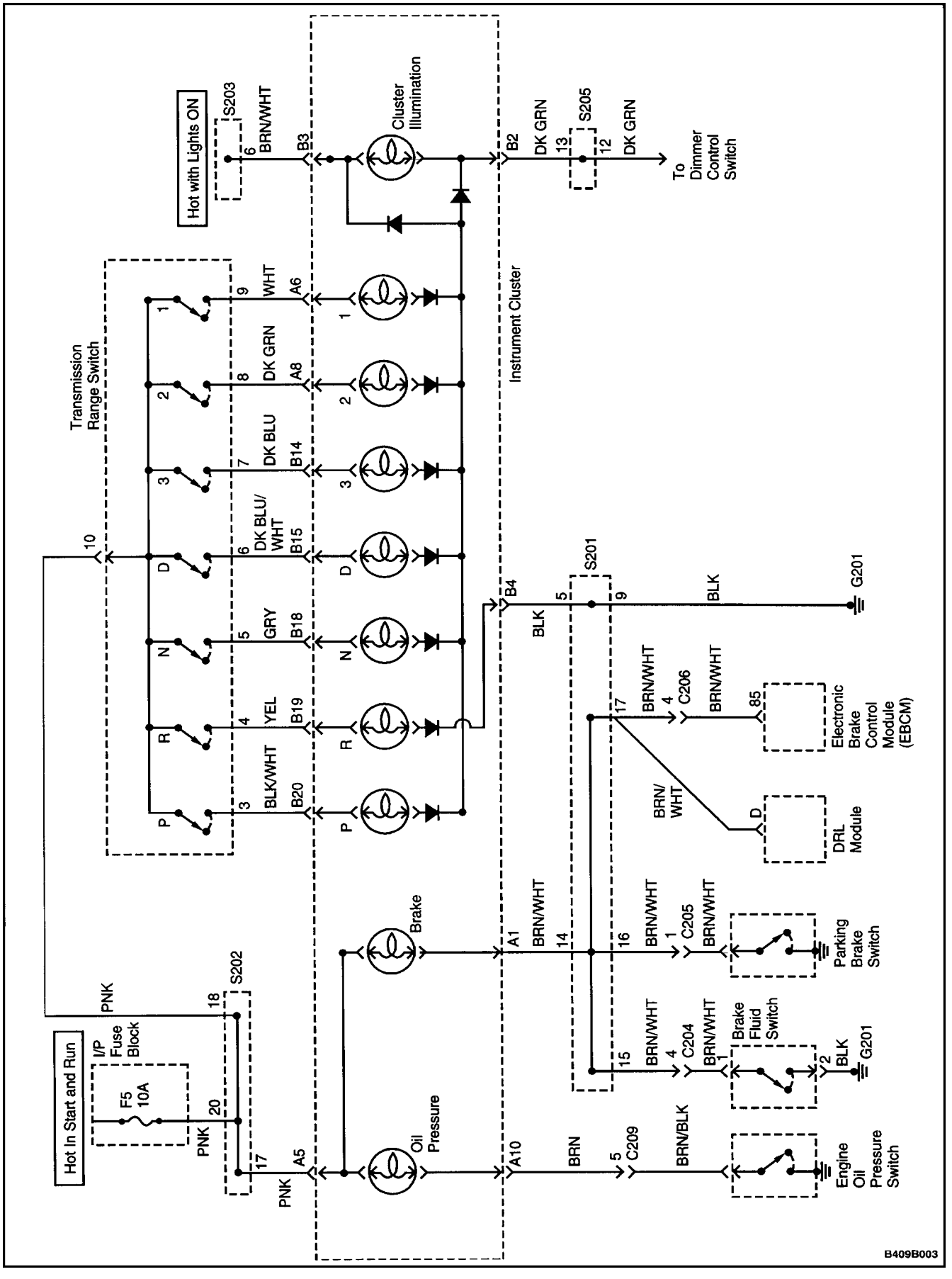

BRAKE AND BACKUP LAMPS CIRCUIT

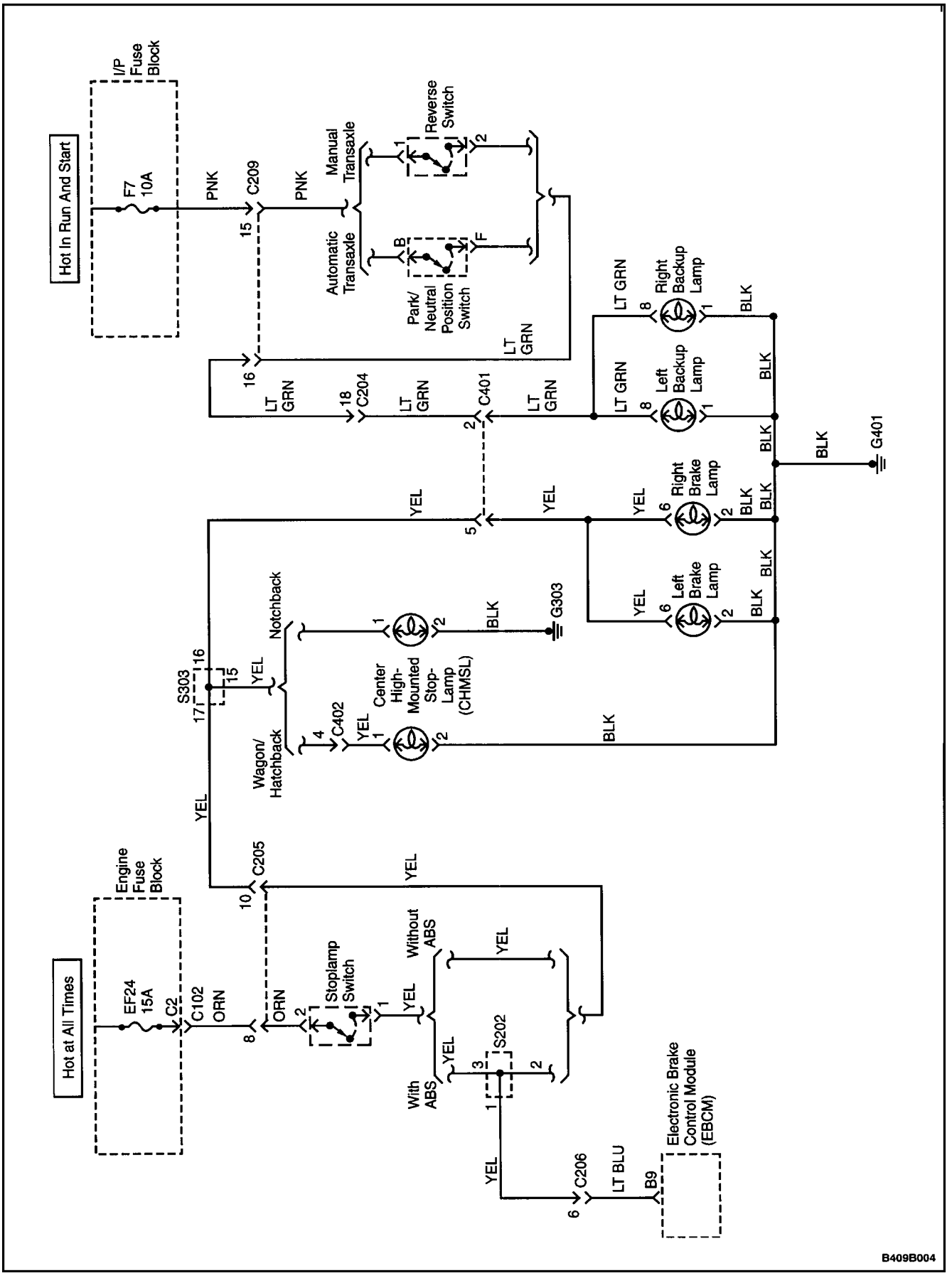

INTERIOR COURTESY LAMP AND LUGGAGE COMPARTMENT LAMP CIRCUIT

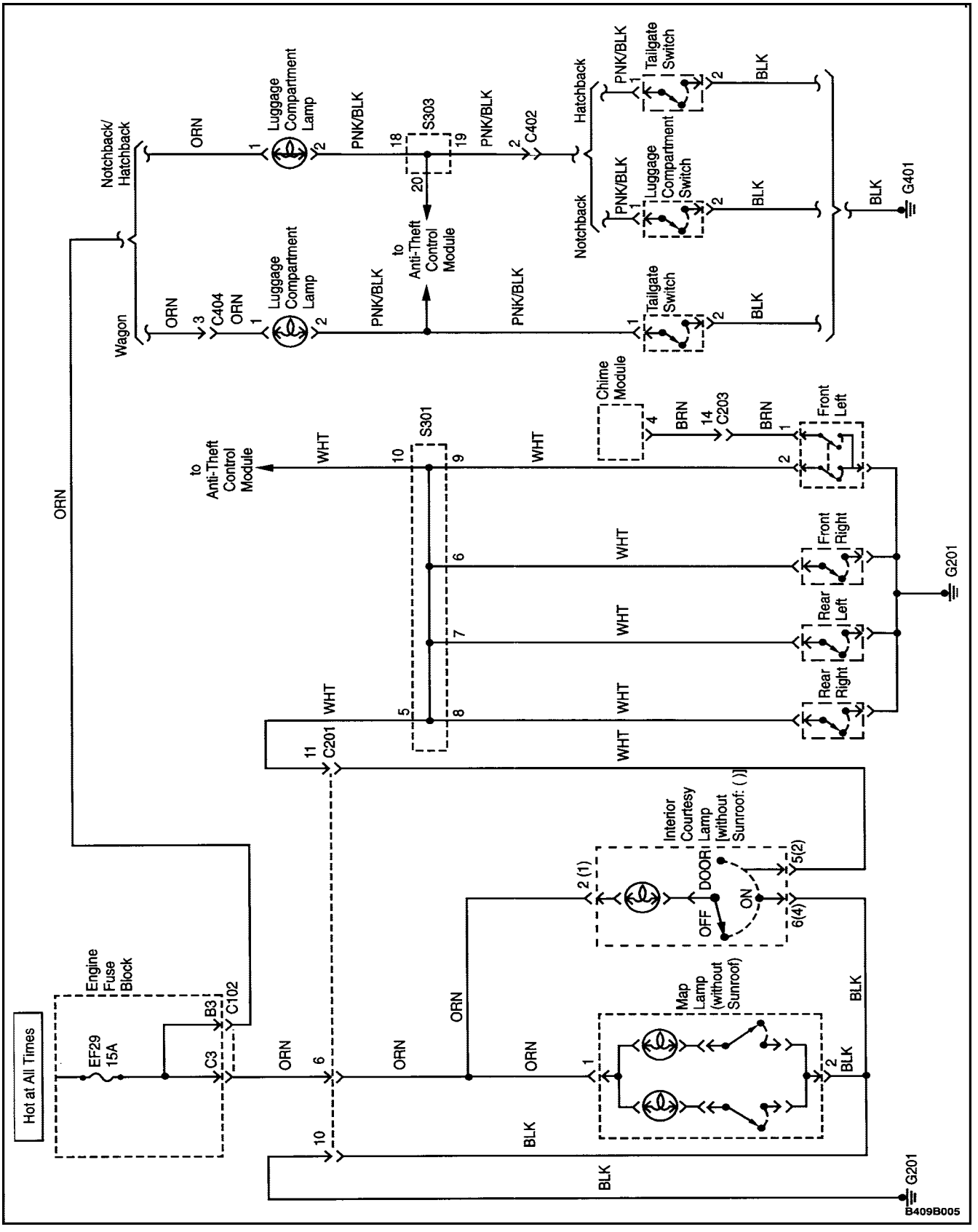

HEADLAMPS CIRCUIT

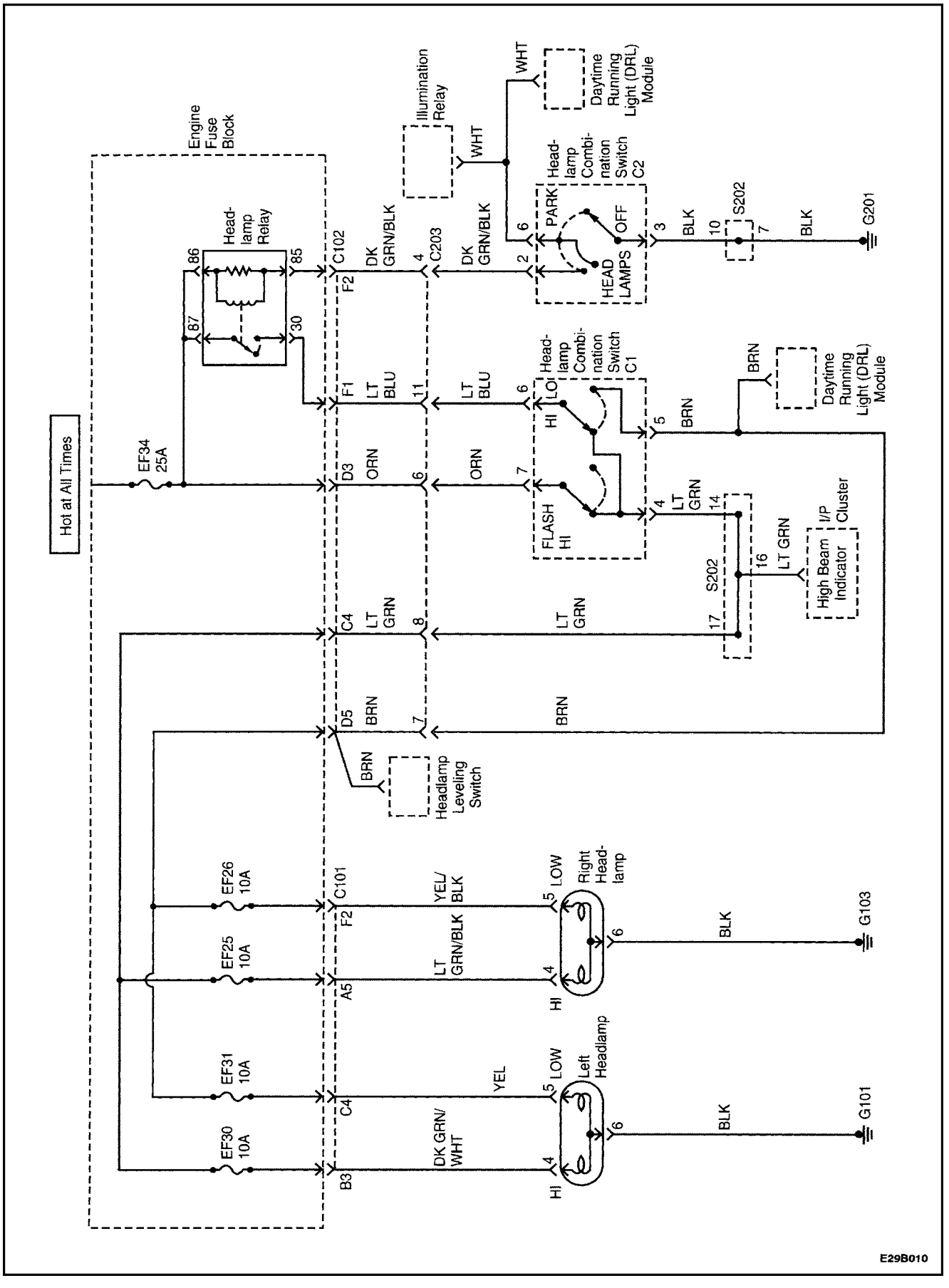

DAYTIME RUNNING LAMPS CIRCUIT

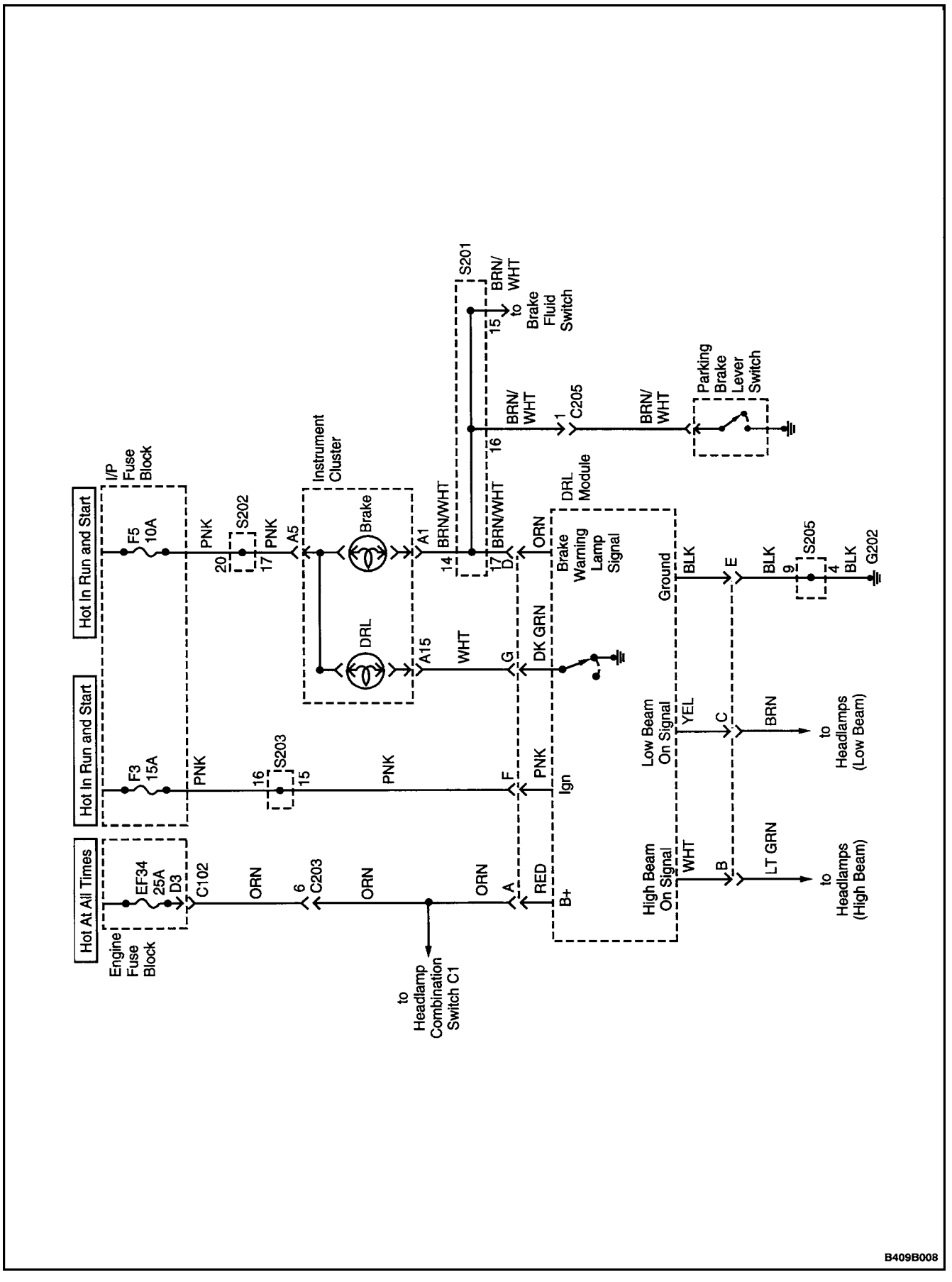

FOG LAMPS CIRCUIT

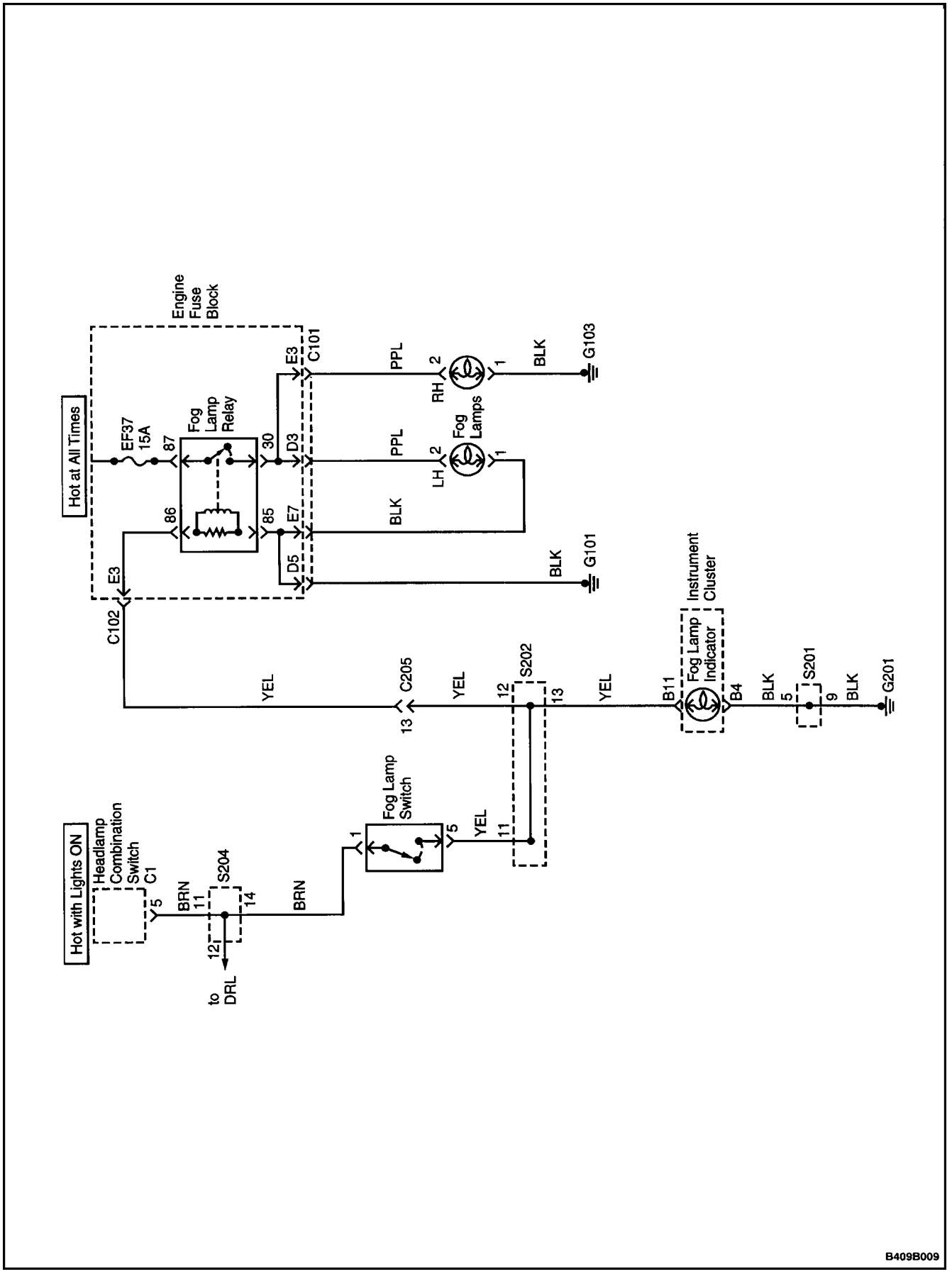

DIAGNOSIS

HEADLAMPS–ON REMINDER CHIME

Headlamp Reminder Chime Is Inoperative

Step	Action	Value(s)	Yes	No
1	Check the parking lamps. Do the parking lamps work?		Go to *Step 3*	Go to *Step 2*
2	Repair the parking lamps. Is the repair complete?		Go to *Step 3*	Go to *Step 2*
3	Check fuse EF20. Is fuse EF20 blown?		Go to *Step 4*	Go to *Step 5*
4	1. Check for a short circuit and repair it, if necessary. 2. Replace fuse EF20. Is the repair complete?		System OK	
5	1. Turn the parking lamps on. 2. Use a voltmeter to check the voltage at fuseEF20. Is the specified voltage available at fuse EF21?	11–14 v	Go to *Step 7*	Go to *Step 6*
6	Repair the open powersupply circuit for fuseEF20. Is the repair complete?		System OK	
7	1. Disconnect the chime module. 2. Turn the parking lamps on. 3. Check the voltage at terminal 6 of the chime module connector. Is the voltage equal to the specified value?	11–14 v	Go to *Step 9*	Go to *Step 8*
8	Repair the open circuit between fuse EF20 and terminal 6 of the chime module. Is the repair complete?		System OK	
9	With the chime module disconnected, use an ohmmeter to check the resistance between ground and terminal 5 of the chime module connector. Is the resistance equal to the specified value?	≈ 0 Ω	Go to *Step 11*	Go to *Step 10*
10	Repair the open circuit between ground and terminal 5 of the chime module. Is the repair complete?		System OK	
11	1. Open the driver door. 2. With the chime module disconnected, use an ohmmeter to check the resistance between ground and terminal 4 of the chime module connector. Is the resistance equal to the specified value?	≈ 0 Ω	Go to *Step 15*	Go to *Step 12*
12	1. Remove the driver door–open switch. 2. Use an ohmmeter to check the resistance between terminal 4 of the chime module connector and terminal 1 of the driver door–open switch. Does the ohmmeter show the specified value?	≈ 0 Ω	Go to *Step 14*	Go to *Step 13*

Step	Action	Value(s)	Yes	No
13	Repair the open wire between the driver door–open switch and terminal 4 of the chime module connector. Is the repair complete?		System OK	
14	Replace the driver door–open switch. Is the repair complete?		System OK	
15	Replace the chime module. Is the repair complete?		System OK	

HEADLAMPS

Low–Beam Headlamps Are Inoperative, High–Beam Headlamps Are OK

Step	Action	Value(s)	Yes	No
1	Check fuses EF31 (left side headlamps) and EF26 (right side headlamps). Is fuse EF31 or EF26 blown?		Go to *Step 2*	Go to *Step 3*
2	1. Check for a short circuit and repair if necessary. 2. Replace the fuse. Is the repair complete?		System OK	
3	Check the voltage at fuses EF31 and EF26. Are the voltages equal to the specified value?	11–14 v	Go to *Step 4*	Go to *Step 9*
4	1. Disconnect both headlamp connectors. 2. Turn the headlamps ON. 3. Select the low beams. Is the voltage at each headlamp connector terminal 5 equal to the specified value?	11–14 v	Go to *Step 6*	Go to *Step 5*
5	Repair the open circuit between fuses EF31 or EF26 and the low beam headlamps. Is the repair complete?		System OK	
6	1. Disconnect the headlamp connectors. 2. Connect an ohmmeter between ground and either headlamp connector terminal 6. Is the resistance equal to the value specified?	0 Ω	Go to *Step 8*	Go to *Step 7*
7	Repair the ground circuit. Is the repair complete?		System OK	
8	Replace the faulty headlamps. Is the repair complete?		System OK	
9	1. Disconnect the headlamp combination switch connector C1. 2. Select the low beams. 3. Use an ohmmeter to check the continuity between terminals 6 and 5 of the headlamp combination switch. Does the ohmmeter indicate the value specified?	0 Ω	Go to *Step 10*	Go to *Step 11*

Step	Action	Value(s)	Yes	No
10	Replace the headlamp combination switch. Is the repair complete?		System OK	
11	Repair the open circuit between fuses EF31 and EF26 and the headlamp combination switch connector C1 (terminal 5). Is the repair complete?		System OK	

High–Beam Headlamps Are Inoperative, Low–Beam Headlamps Are OK

Step	Action	Value(s)	Yes	No
1	Check the high–beam headlamps in the ”flash–to–pass” mode. Do the high–beam headlamps work in the ”flash–to–pass” mode?		Go to *Step 8*	Go to *Step 2*
2	Check fuses EF30 and EF25. Is either fuse blown?		Go to *Step 3*	Go to *Step 4*
3	1. Check for a short circuit. Repair it if necessary. 2. Replace the fuse. Is the repair complete?		System OK	
4	1. Turn the high–beam headlamps ON. 2. Check the voltage at fuses EF21 and EF22. Are the voltages equal to the specified value?	11–14 v	Go to *Step 5*	Go to *Step 10*
5	1. Turn the high–beam headlamps ON. 2. Check the voltage at headlamp terminal 4. Does the voltage available at the headlamp connector terminal 4 equal the value specified?	11–14 v	Go to *Step 7*	Go to *Step 6*
6	Repair the open circuit between fuse EF30 or EF25 and the high–beam headlamps. Is the repair complete?		System OK	
7	Replace the faulty headlamps. Is the repair complete?		System OK	
8	1. Disconnect the headlamp combination switch connector. 2. Put the switch in the high–beam position. 3. Use an ohmmeter to check the continuity of the headlamp switch between terminals 7 and 4. Does the ohmmeter indicate the specified value?	0 Ω	Go to *Step 10*	Go to *Step 9*
9	Replace the headlamp combination switch. Is the repair complete?		System OK	
10	Repair the open circuit between headlamp combination switch connector C1 (terminal 4) and fuse EF30 or EF25. Is the repair complete?		System OK	

High–Beam and Low–Beam Headlamps Are Inoperative On Both Left and Right Sides

Step	Action	Value(s)	Yes	No
1	Check fuses EF34, EF30, EF25, EF31, EF26, and EF24. Is any fuse blown?		Go to *Step 2*	Go to *Step 3*
2	1. Check for a short circuit and repair if necessary. 2. Replace the fuse. Is the repair complete?		System OK	
3	1. Turn the low–beam headlamps ON. 2. Check the voltage at fuses EF24 and EF25. 3. Check the voltage at fuses EF21 and EF22 with high beams selected. Is the voltage equal to the specified value?	11–14 v	Go to *Step 4*	Go to *Step 9*
4	1. Turn the low–beam headlamps ON. 2. Check the voltage at the headlamp connector terminal 5. 3. Turn the high–beam headlamps ON. 4. Check the voltage at headlamp connector terminal 4. Does the battery voltage available at the headlamps equal the value specified?	11–14 v	Go to *Step 6*	Go to *Step 5*
5	Repair the open circuit between fuses EF30, EF25, EF31, and EF26 and the headlamps. Is the repair complete?		System OK	
6	Use an ohmmeter to check between ground and the headlamp connector terminal 6. Is the resistance equal to the specified value?	0 Ω	Go to *Step 8*	Go to *Step 7*
7	Repair the ground circuit. Is the repair complete?		System OK	
8	1. Replace the faulty headlamps. 2. Check the charging system to make sure that charging voltage is not excessively high. Repair if necessary. Is the repair complete?		System OK	
9	Use a voltmeter to check for power to fuses EF34 and EF29. Is the voltage equal to the specified value?	11–14 v	Go to *Step 11*	Go to *Step 10*
10	Repair the power supply circuit to fuses EF34 and EF29. Is the repair complete?		System OK	
11	Temporarily substitute the illumination relay in place of the headlamp relay. Do the headlamps operate with the substituted relay?		Go to *Step 12*	Go to *Step 13*
12	Install the illumination relay in its original position, and install a new headlamp relay. Is the repair complete?		System OK	
13	1. Return the illumination relay to its original position, but do not install the headlamp relay. 2. Use a voltmeter to check the headlamp relay connector for terminal 30. Does the voltmeter indicate the value specified?	11–14 v	Go to *Step 15*	Go to *Step 14*

Step	Action	Value(s)	Yes	No
14	Replace the engine fuse block. Is the repair complete?		System OK	
15	With the headlamp relay removed, use a voltmeter to check the headlamp relay connector terminal 85. Does the voltmeter indicate the value specified?	11–14 v	Go to *Step 16*	Go to *Step 14*
16	1. With the headlamp relay removed, turn the headlamps to low–beam. 2. Use an ohmmeter to check the continuity between connector relay terminal 86 and ground. Does the ohmmeter indicate the specified value?	≈ 0 Ω	Go to *Step 22*	Go to *Step 17*
17	1. Reinstall the headlamp relay. 2. Check the voltage at the headlamp switch connector C2 (terminal 2). Does the voltage equal the specified value?	11–14 v	Go to *Step 19*	Go to *Step 18*
18	Repair the open circuit between headlamp relay terminal 85 and the headlamp switch connector C2 terminal 2. Is the repair complete?		System OK	
19	1. Disconnect the headlamp switch connector C2. 2. Turn the low–beam headlamps ON. 3. Use an ohmmeter to check the continuity between terminals 2 and 3 of headlamp combination switch C2. Does the ohmmeter indicate the specified value?	≈ 0 Ω	Go to *Step 21*	Go to *Step 20*
20	Replace the headlamp switch. Is the repair complete?		System OK	
21	Repair the open circuit between terminal 3 of headlamp switch connector C2 and ground. Is the repair complete?		System OK	
22	Check the voltage at headlamp switch connector C1, (terminal 6). Does the voltage equal the specified value?	11–14 v	Go to *Step 24*	Go to *Step 23*
23	Repair the open circuit between headlamp switch connector C1 and terminal 87 of the headlamp relay. Is the repair complete?		System OK	
24	1. Disconnect headlamp switch connector C1. 2. Turn the headlamps to the low–beam position. 3. Connect an ohmmeter between terminals 5 and 6 of headlamp switch connector C1. 4. Turn the high–beam headlamps ON. 5. Connect an ohmmeter between terminals 4 and 6 of the headlamp switch. Does the ohmmeter show the specified value for both of the tests?	≈ 0 Ω	Go to *Step 25*	Go to *Step 20*
25	Repair the open circuit between the headlamp switch and fuses EF30, EF25, EF31, and EF26. Is the repair complete?		System OK	

Diagnostic Aids

The daytime running lamp (DRL) system will not work if the parking brake is applied. The system is designed to work only when the engine is running and the parking brake is released. If the parking brake circuit is shorted to ground or the switch stays closed when the engine is running, the DRL system will not work.

Daytime Running Lamps Do Not Turn ON

Step	Action	Value(s)	Yes	No
1	Turn the headlamps ON. Do the headlamps work?		Go to *Step 3*	Go to *Step 2*
2	Repair the headlamp system. Is the repair complete?		System OK	Go to *Step 3*
3	Check fuse EF34. Is fuse EF34 blown?		Go to *Step 4*	Go to *Step 5*
4	1. Check for a short circuit and repair it, if necessary. 2. Replace fuse EF34. Is the repair complete?		System OK	
5	1. Turn the ignition ON. 2. Check the voltage at fuse EF34. Is the voltage equal to the specified value?	11–14 v	Go to *Step 7*	Go to *Step 6*
6	Repair the power supply circuit to fuse EF34. Is the repair complete?		System OK	
7	• Disconnect the electrical connector from the daytime running lamp (DRL) module. • Turn the ignition ON. • Check the voltage at terminal A of the DRL module. Is the voltage equal to the specified value?	11–14 v	Go to *Step 9*	Go to *Step 8*
8	Repair the open circuit between fuse EF34 and terminal A of the DRL module connector. Is the repair complete?		System OK	
9	With the DRL module still disconnected, use an ohmmeter to check the resistance between ground and terminal E of the DRL module connector. Is the resistance equal to the specified value?	≈ 0 Ω	Go to *Step 11*	Go to *Step 10*
10	Repair the circuit between ground and terminal E of the DRL module connector. Is the repair complete?		System OK	
11	• Release the parking brake. • Turn the ignition ON. • Observe the parking brake indicator lamp. Is the parking brake indicator lamp ON?		Go to *Step 12*	Go to *Step 15*
12	Disconnect the electrical connector to the parking brake switch. Is the parking brake indicator lamp still ON?		Go to *Step 13*	Go to *Step 14*
13	Repair the short to ground in the parking brake circuit. Is the repair complete?		System OK	
14	Replace the parking brake switch. Is the repair complete?		System OK	
15	• Turn the headlamps OFF. • With the DRL module disconnected, turn the ignition ON. • Check the voltage at terminal F of the DRL module. Is the voltage equal to the specified value?	0 v	Go to *Step 17*	Go to *Step 16*

Step	Action	Value(s)	Yes	No
16	Repair the open circuit between fuse F3 and terminal F of the DRL module. Is the repair complete?		System OK	
17	Replace the DRL module. Is the repair complete?		System OK	

FOG LAMPS

Diagnostic Aids

The front fog lamp switch is powered by the headlamp switch, so the fog lamps may not operate if the headlamps or taillamps will not turn ON.

Fog Lamps Do NotWork on Either Side

Step	Action	Value(s)	Yes	No
1	Check the headlamps and the exterior lamps. Are the headlamps and the exterior lamps working?		Go to *Step 3*	Go to *Step 2*
2	Repair the headlamps and exterior lamp systems. Is the repair complete?		Go to *Step 3*	
3	Check fuse EF20. Is fuse EF20 blown?		Go to *Step 5*	Go to *Step 4*
4	1. Check for a short circuit and repair if necessary. 2. Replace fuse EF20. Is the repair complete?		System OK	
5	Use a voltmeter to check if battery voltage is available at fuse EF20. Is the voltage equal to the specified value?	11–14 v	Go to *Step 7*	Go to *Step 6*
6	Repair the power supply to fuse EF20. Is the repair complete?		System OK	
7	1. Disconnect the connectors at the front fog lamps. 2. Use an ohmmeter to check the resistance between ground and the BLK wire at the fog lamps. Does the ohmmeter indicate the specified value?	≈ 0 Ω	Go to *Step 9*	Go to *Step 8*
8	Repair the open ground circuit for the front fog lamps. Is the repair complete?		System OK	
9	1. With the fog lamps disconnected, turn the front fog lamps to the ON position. 2. Turn the headlamps ON. 3. Check the voltage at the PPL wire at the front fog lamp connectors. Is the voltage equal to the specified value?	11–14 v	Go to *Step 10*	Go to *Step 11*
10	Replace the fog lamp bulbs. Is the repair complete?		System OK	
11	1. Temporarily substitute the exterior illumination relay (taillamp relay) in place of the front fog lamp relay. 2. Turn the headlamps ON. 3. Turn the fog lamps. Do the front fog lamps work with the substituted relay?		Go to *Step 12*	Go to *Step 13*
12	1. Return the substituted relay to its original position. 2. Replace the front fog lamp relay. Is the repair complete?		System OK	

Step	Action	Value(s)	Yes	No
13	1. Return the substituted relay to its original position, but do not reinstall the fog lamp relay. 2. Use a voltmeter to probe each of the four terminals in the front fog lamp relay socket. Does one of the four terminals in the relay socket indicate the specified value?	11–14 v	Go to *Step 15*	Go to *Step 14*
14	Replace the engine fuse block. Is the repair complete?		System OK	
15	1. Turn the headlamps ON. 2. Turn the fog lamps ON. 3. Probe the front fog lamp relay socket with the voltmeter. Besides the terminal which indicated battery voltage in Step 13, does another terminal in the relay socket (relay coil positive terminal) now indicate the specified value?	11–14 v	Go to *Step 21*	Go to *Step 16*
16	1. Turn the headlamps ON. 2. Check the voltage at the BRN wire at the front fog lamp switch. Does the voltmeter indicate the specified value?	11–14 v	Go to *Step 18*	Go to *Step 17*
17	Repair the open circuit between the headlamp switch and the front fog lamp switch. Is the repair complete?		System OK	
18	1. With the front fog lamp switch disconnected, connect an ohmmeter between the two terminals of the front fog lamp switch. 2. Turn the front fog lamp switch to the ON position. Does the ohmmeter indicate the specified value?	0 Ω	Go to *Step 20*	Go to *Step 19*
19	Replace the front fog lamp switch. Is the repair complete?		System OK	
20	Repair the open circuit between the front fog lamp switch and the front fog lamp relay. Is the repair complete?		System OK	
21	Check the resistance between ground and the ground terminal at the fog lamp relay socket. Does the ohmmeter indicate the specified value?	≈ 0 Ω	Go to *Step 23*	Go to *Step 22*
22	Repair the ground circuit for the front fog lamp relay. Is the repair complete?		System OK	
23	Repair the open circuit between the front fog lamp relay and the front fog lamps. Is the repair complete?		System OK	

REAR COMBINATION LAMPS

Exterior Illumination Lamps Do Not Work

Step	Action	Value(s)	Yes	No
1	Check the headlamps. Do the headlamps work?		Go to *Step 3*	Go to *Step 2*
2	Repair the headlamps. After the headlamps have been repaired, are the rear combination lamps still inoperative?		Go to *Step 3*	System OK
3	1. Turn the illumination lamps ON. 2. Use a voltmeter to check voltage at the bulb socket positive terminal. Is the voltage equal to the specified value?	11–14 v	Go to *Step 4*	Go to *Step 7*
4	Connect an ohmmeter between ground and the lamp socket negative terminal. Is the resistance equal to the specified value?	0 Ω	Go to *Step 6*	Go to *Step 5*
5	Repair the ground circuit for the lamps. Is the repair complete?		System OK	
6	Replace the faulty bulbs. Is the repair complete?		System OK	
7	Check fuses EF20 and EF21. Is either of the fuses blown?		Go to *Step 8*	Go to *Step 9*
8	1. Check for a short circuit and repair if necessary. 2. Replace the fuse. Is the repair complete?		System OK	
9	1. Temporarily substitute the headlamp relay in place of the illumination relay. 2. Turn the illumination lamps ON. Do the taillamps illuminate?		Go to *Step 10*	Go to *Step 11*
10	1. Return the headlamp relay to its original position. 2. Replace the illumination relay. Is the repair complete?		System OK	
11	1. Remove the illumination relay. 2. Use a voltmeter to check the illumination relay socket at connector terminal 87. Is the voltage equal to the specified value?	11–14 v	Go to *Step 13*	Go to *Step 12*
12	Replace the engine fuse block. Is the repair complete?		System OK	
13	With the illumination relay removed, use a voltmeter to check the illumination relay socket at connector terminal 86. Is the voltage equal to the specified value?	11–14 v	Go to *Step 14*	Go to *Step 12*
14	With the illumination relay removed, connect an ohmmeter between ground and connector terminal 85. the resistance equal to the specified value?	≈ 0 Ω	Go to *Step 15*	Go to *Step 17*
15	1. Reinstall the illumination relay. 2. Turn the illumination lamps ON. 3. Check the voltage at EF20 and EF21. Is the voltage equal to the specified value?	11–14 v	Go to *Step 16*	Go to *Step 12*

Step	Action	Value(s)	Yes	No
16	Repair the open circuit between the fuses EF 21 and EF20 and the illumination lamps. Is the repair complete?		System OK	
17	1. Disconnect the headlamp switch connector C2. 2. Connect a fused jumper wire between ground and terminal 6 of connector C2 (instrument harness side). Do the illumination lamps turn ON with the jumper in place?		Go to *Step 19*	Go to *Step 18*
18	Repair the open circuit between terminal 85 of the illumination relay and terminal 6 of headlamp switch connector C2. Is the repair complete?		System OK	
19	1. Disconnect headlamp switch connector C2. 2. On the disconnected switch, select the illumination lamp ON position. 3. At the switch side of the connector C2, use an ohmmeter to check resistance between terminal 3 and terminal 6. Is the resistance equal to the specified value?	$\approx$ 0 Ω	Go to *Step 20*	Go to *Step 21*
20	Repair the open circuit between headlamp switch connector C2 terminal 3 and ground. Is the repair complete?		System OK	
21	Replace the headlamp switch. Is the repair complete?		System OK	

Stoplamps Do Not Work

Step	Action	Value(s)	Yes	No
1	Check fuse EF24. Is fuse EF24 blown?		Go to *Step 2*	Go to *Step 3*
2	1. Check for a short circuit and repair if necessary. 2. Replace the fuse. Is the repair complete?		System OK	
3	1. Depress the brake pedal. 2. With the brake pedal depressed, check the positive terminals of the bulb sockets with a test lamp. Does the test lamp illuminate?		Go to *Step 4*	Go to *Step 6*
4	Connect an ohmmeter between ground and the stoplamp ground terminal. Is the resistance equal to the specified value?	0 Ω	Go to *Step 6*	Go to *Step 5*
5	Repair the ground circuit. Is the repair complete?		System OK	
6	1. Disconnect the wiring connector from the brakelamp switch. 2. Press the brake pedal. 3. Use an ohmmeter to check the continuity between terminals 2 and 1 of the stoplamp switch. Is the resistance equal to the specified value?	0 Ω	Go to *Step 8*	Go to *Step 7*
7	Replace the brakelamp switch. Is the repair complete?		System OK	
8	1. Disconnect the stoplamp switch electrical connector. 2. Check the voltage at terminal 2. Does the voltmeter show the specified value?	11–14 v	Go to *Step 10*	Go to *Step 9*
9	Repair the open circuit between the fuse EF24 and the stoplamp switch. Is the repair complete?		System OK	
10	Repair the open circuit between the stoplamp switch and the stoplamps. Is the repair complete?		System OK	

Center High–Mounted Stoplamp (CHMSL) Does Not Work

Step	Action	Value(s)	Yes	No
1	Check the stoplamps. Do the stoplamps work?		Go to *Step 3*	Go to *Step 2*
2	Repair the stoplamps. Does the center high–mounted stoplamp (CHMSL) work after the stoplamps have been repaired?		System OK	Go to *Step 3*
3	1. Remove the CHMSL bulb. 2. Visually and physically check the CHMSL bulb. Is the lamp bulb defective?		Go to *Step 4*	Go to *Step 5*
4	Replace the CHMSL bulb. Is the repair complete?		System OK	
5	1. Disconnect the CHMSL connector. 2. Use an ohmmeter to measure the resistance between ground and the BLK wire in the CHMSL connector. Is the resistance equal to the specified value?	0 Ω	Go to *Step 7*	Go to *Step 6*
6	Repair the open circuit between ground and the BLK wire in the CHMSL connector. Is the repair complete?		System OK	
7	Repair the open circuit between the stoplamp switch and the CHMSL. Is the repair complete?		System OK	

Backup Lamps Inoperative

Step	Action	Value(s)	Yes	No
1	1. Block the wheels. 2. Apply the parking brake. 3. Turn the ignition ON. 4. Put the transaxle in REVERSE. 5. Remove one of the backup lamps from its socket. 6. Test the lamp socket positive terminal with a voltmeter. Is the voltage equal to the specified value?	11–14 v	Go to *Step 3*	Go to *Step 2*
2	Repair the open circuit between fuse F7 and the backup lamps. Is the repair complete?		System OK	
3	Connect an ohmmeter between ground and the negative terminal at the bulb socket. Is the resistance equal to the specified value?	0 Ω	Go to *Step 4*	Go to *Step 5*
4	Replace the faulty backup lamps. Is the repair complete?		System OK	
5	1. Install the backup lamps. 2. Disconnect the electrical connector at the reverse switch. (On automatic transaxle vehicles, disconnect the neutral safety/backup switch). 3. Turn the ignition ON. 4. Put the transaxle in REVERSE. 5. Use a voltmeter to check the reverse switch terminal 1. (On automatic transaxle vehicles, test terminal B of the neutral safety/backup switch). Is the voltage equal to the specified value?	11–14 v	Go to *Step 7*	Go to *Step 6*
6	Repair the open circuit between the backup lamps and the reverse switch (or the neutral safety/backup switch, if equipped with A/T). Is the repair complete?		System OK	
7	1. Put the transaxle in REVERSE. 2. Use an ohmmeter to check the continuity between reverse switch terminal 1 and terminal 2 terminals B and F on the neutral safety/backup switch in automatic transaxle vehicles). Does the continuity between terminals 1 and 2 (terminals D and F with A/T) equal the specified value?	0 Ω	Go to *Step 9*	Go to *Step 8*
8	Replace the REVERSE switch (neutral safety/backup switch in automatic transaxle vehicles). Is the repair complete?		System OK	
9	Repair the ground circuit between the REVERSE switch (neutral safety/backup switch if equipped with A/T) and the backup lamps. Is the repair complete?		System OK	

Turn Signal Lamps and Hazard Lamps Do Not Work

Step	Action	Value(s)	Yes	No
1	Check fuses F3 and EF12. Is either fuse blown?		Go to *Step 2*	Go to *Step 3*
2	1. Check for a short circuit and repair if necessary. 2. Replace the fuse. Is the repair complete?		System OK	
3	1. Turn the ignition ON. 2. Check the voltage at fuse EF12 and F3. Is the voltage equal to the specified value?	11–14 v	Go to *Step 4*	Go to *Step 7*
4	1. Turn the hazard switch ON. 2. Remove each of the inoperative lamps from its socket. 3. Test each lamp socket positive terminal with a voltmeter. Is the voltage equal to the specified value?	11–14 v	Go to *Step 5*	Go to *Step 9*
5	At each bulb socket, use an ohmmeter to check the ground circuit. Is the resistance equal to the specified value?	≈ 0 Ω	Go to *Step 6*	Go to *Step 8*
6	Replace any faulty turn signal/hazard bulbs. Is the repair complete?		System OK	
7	Repair the power supply circuit to fuses. Is the repair complete?		System OK	
8	Repair the open ground wires. Is the repair complete?		System OK	
9	1. Turn the hazard lamps ON. 2. Test blinker unit connector terminal 49a with a voltmeter. Is the voltage equal to the specified value?	11–14 v	Go to *Step 15*	Go to *Step 10*
10	1. Turn the hazard lamps ON. 2. Test blinker unit connector terminal 49 with a voltmeter. Is the voltage equal to the specified value?	11–14 v	Go to *Step 11*	Go to *Step 14*
11	1. Disconnect the blinker unit from the connector. 2. Use an ohmmeter to check between ground and the connector for terminal 31 of the blinker connector. Is the resistance equal to the specified value?	≈ 0 Ω	Go to *Step 13*	Go to *Step 12*
12	Repair the blinker unit ground circuit. Is the repair complete?		System OK	
13	Replace faulty blinker unit. Is the repair complete?		System OK	
14	1. Disconnect the hazard switch connector. 2. Check for voltage at terminal 8. 3. Turn the ignition ON. 4. Check for voltage at terminal 10. Does the voltage available at both terminals equal the specified value?	11–14 v	Go to *Step 16*	Go to *Step 15*

Step	Action	Value(s)	Yes	No
15	Repair the open circuit between the hazard switch and fuses F3 or EF12. Is the repair complete?		System OK	
16	With the hazard switch disconnected, use an ohmmeter to check for an open circuit between blinker unit terminal 49 and hazard switch connector terminal 7. Is there an open circuit?		Go to *Step 17*	Go to *Step 18*
17	Repair the open circuit between the hazard switch and the blinker unit. Is the repair complete?		System OK	
18	1. Remove the hazard switch. 2. Turn the hazard switch OFF. 3. Use an ohmmeter to check for continuity between terminals 7 and 10. 4. Turn the hazard switch ON. 5. Use an ohmmeter to check for continuity between terminals 7 and 8. Does the ohmmeter show the specified value for both tests?	0 Ω	Go to *Step 20*	Go to *Step 19*
19	Replace the hazard switch. Is the repair complete?		System OK	
20	1. With the hazard switch still removed for testing, turn the hazard switch to the ON position. 2. Use an ohmmeter to check the continuity between terminals 5, 6, and 9. Is there continuity between terminals 5, 6, and 9?		Go to *Step 19*	Go to *Step 21*
21	1. Disconnect connector C204. 2. Use an ohmmeter to check the continuity of the wire between the hazard switch terminal 5 and C204 terminal 1. Does the ohmmeter show the value specified?	∞	Go to *Step 23*	Go to *Step 22*
22	Repair the open wire between the hazard switch and C204. Is the repair complete?		System OK	
23	Use an ohmmeter to check the continuity of the wire between the hazard switch terminal 6 and C204 terminal 11. Does the ohmmeter show the specified value?	∞	Go to *Step 24*	Go to *Step 22*
24	Repair the open circuit between C204 and the turn signal bulbs. Is the repair complete?		System OK	

Hazard Lamps Do Not Operate, Turn Signals Are OK

Step	Action	Value(s)	Yes	No
1	Check fuse EF12. Is fuse EF12 blown?		Go to *Step 2*	Go to *Step 3*
2	1. Check for a short circuit and repair if necessary. 2. Replace the fuse. Is the repair complete?		System OK	
3	Use a voltmeter to check the voltage at fuse EF12. Is the voltage equal to the specified value?	11–14 v	Go to *Step 5*	Go to *Step 4*
4	Repair the power supply circuit to fuse EF12. Is the repair complete?		System OK	
5	1. Disconnect the hazard lamp switch connector. 2. Use a voltmeter to check the voltage at hazard switch terminal 8. Is the voltage equal to the specified value?	11–14 v	Go to *Step 6*	Go to *Step 9*
6	1. Remove the hazard lamp switch. 2. Turn the hazard lamps ON. 3. Use an ohmmeter to check the resistance between terminals 7 and 8. Is the resistance equal to the specified value?	0 Ω	Go to *Step 7*	Go to *Step 10*
7	1. With the hazard lamp switch still removed and disconnected for testing, turn the hazard lamp switch to the ON position. 2. Use an ohmmeter to check between terminals 5, 6, and 9. Is the resistance equal to the specified value?	0 Ω	Go to *Step 8*	Go to *Step 10*
8	Repair the open circuit between the hazard lamp switch connector and splice S204. Is the repair complete?		System OK	
9	Repair the open circuit between the hazard lamp switch connector terminal H and fuse EF12. Is the repair complete?		System OK	
10	Replace the faulty hazard lamp switch. Is the repair complete?		System OK	

INTERIOR COURTESY AND LUGGAGE COMPARTMENT LAMPS

Interior Courtesy Lamp Inoperative

CAUTION : Always make sure there is an electrical load (lamp bulb, etc.) in any circuit between battery terminals. Do not make a short circuit between battery terminals with a jumper wire. Hazardous sparking would result.

Test Description

The number(s) below refer to step(s) on the diagnostic table.

1. Bulb test. Clip one end of a jumper wire to the negative battery terminal. Clip the other end of the jumper wire to the end of the bulb. Take the free end of the bulb (the end without the jumper attached) and touch it to the positive battery terminal.

Step	Action	Value(s)	Yes	No
1	1. Remove the interior courtesy lamp bulb and inspect the filament. 2. If the filament is not broken, test the bulb using the vehicle's battery and a jumper wire. Does the bulb pass the visual and physical checks?		Go to *Step 3*	Go to *Step 2*
2	Replace the bulb. Is the repair complete?		System OK	
3	1. Reinstall the interior courtesy lamp bulb. 2. Check fuse EF29. Is fuse EF29 blown?		Go to *Step 4*	Go to *Step 5*
4	1. Check for a short circuit and repair if necessary. 2. Replace the fuse. Is the repair complete?		System OK	
5	Check fuse EF29. Is the voltage equal to the specified value?	11–14 v	Go to *Step 7*	Go to *Step 6*
6	Repair the open circuit between the battery and fuse EF29. Is the repair complete?		System OK	
7	1. Disconnect the interior courtesy lamp electrical connector. 2. Check the voltage at the ORN wire. Is the voltage equal to the specified value?	11–14 v	Go to *Step 8*	Go to *Step 9*
8	Repair the open circuit between fuse EF29 and the interior courtesy lamp. Is the repair complete?		System OK	
9	Use an ohmmeter to check the resistance between ground and the BLK wire of the interior courtesy lamp connector (harness side). Is the resistance equal to the specified value?	0 Ω	Go to *Step 10*	Go to *Step 11*
10	Replace the interior courtesy lamp switch assembly. Is the repair complete?		System OK	
11	Repair the ground circuit for the interior courtesy lamp. Is the repair complete?		System OK	

Luggage Compartment Lamp Inoperative

CAUTION : Always make sure there is an electrical load (lamp bulb, etc.) in any circuit between battery terminals. Do not make a short circuit between battery terminals with a jumper wire. Hazardous sparking will result.

Test Description

The number(s) below refer to step(s) on the diagnostic table.

1. Bulb test. Clip one end of a jumper wire to the negative battery terminal. Clip the other end of the jumper wire onto one end of the bulb. Take the free end of the bulb (the end without the jumper attached) and touch it to the positive battery terminal.

Step	Action	Value(s)	Yes	No
1	1. Remove the luggage compartment lamp bulb and inspect the filament. 2. If the filament is not broken, test the bulb using the vehicle's battery and a jumper wire. Does the bulb pass the visual and physical check?		Go to *Step 3*	Go to *Step 2*
2	Replace the bulb. Is the repair complete?		System OK	
3	1. Reinstall the luggage compartment lamp bulb. 2. Check fuse EF29. Is fuse EF29 blown?		Go to *Step 4*	Go to *Step 5*
4	1. Check for a short circuit and repair it, if necessary. 2. Replace the fuse. Is the repair complete?		System OK	
5	Check fuse EF29. Is the voltage equal to the specified value?	11–14 v	Go to *Step 7*	Go to *Step 6*
6	Repair the open circuit between the battery and fuse EF29. Is the repair complete?		System OK	
7	1. Disconnect the luggage compartment lamp electrical connector. 2. Check the voltage at the ORN wire. Does the voltage at the ORN wire equal the specified value?	11–14 v	Go to *Step 8*	Go to *Step 9*
8	Repair the open circuit between fuse EF29 and the luggage compartment lamp. Is the repair complete?		System OK	
9	1. Reconnect the luggage compartment lamp. 2. Remove the luggage compartment lamp (tailgate) switch. 3. With a voltmeter, test the PNK/BLK wire at the luggage compartment lamp (tailgate) switch. Is the voltage equal to the specified value?	11–14 v	Go to *Step 11*	Go to *Step 10*
10	Repair the open circuit between the luggage compartment lamp and the luggage compartment lamp (tailgate) switch. Is the repair complete?		System OK	
11	Use an ohmmeter to check the resistance between ground and the BLK wire at the luggage compartment (tailgate) lamp switch connector (harness side). Is the resistance equal to the specified value?	0 Ω	Go to *Step 12*	Go to *Step 13*

Step	Action	Value(s)	Yes	No
12	Replace the luggage compartment lamp (tailgate) switch. Is the repair complete?		System OK	
13	Repair the ground circuit for the interior courtesy lamp. Is the voltage equal to the specified value?		System OK	

SECTION 2

POSITION OF CONNECTORS AND GROUNDS

1. CONNECTOR, GROUND AND SPLICE PACK INFORMATION

1) WIRING HARNESS & GROUND & SPLICE PACK LOCATION

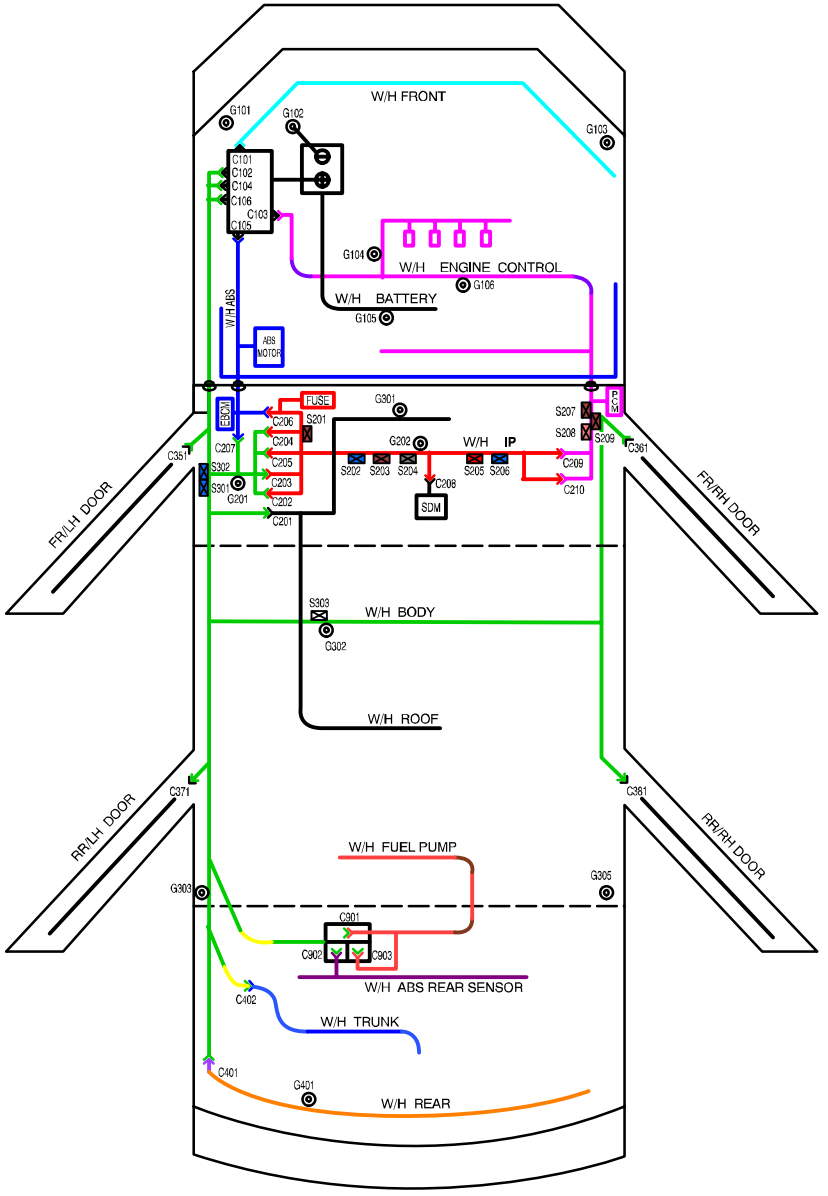

2) CONNECTOR

Connector Number	Terminal Number	Color	Connecting Wiring Harness	Connector Position
C101	68	Gray	Engine Room Fuse Box – Front	Engine Room Fuse Box
C102	68	Brown	Engine Room Fuse Box – Body	Engine Room Fuse Box
C103	68	Black	Engine Room Fuse Box – Engine Control	Engine Room Fuse Box
C104	2	Gray	Engine Room Fuse Box – Body	Engine Room Fuse Box
C105	2	Black	Engine Room Fuse Box – ABS	Engine Room Fuse Box
C106	2	Green	Engine Room Fuse Box – Body	Engine Room Fuse Box
C201	13	White	Body – Roof	Behind Driver Left Kick Panel
C202	12	White	I/P – Body(Remote Control)	Next to Driver Leg Room Connector Holder
C203	15	White	I.P – Body	Left Driver Leg Room Connector Holder
C204	22	Yellow	I.P – Body	Center Driver Leg Room Connector Holder
C205	20	Colorless	I.P – Body	Right Driver Leg Room Connector Holder
C206	11	White	I/P – ABS	Upper Driver Leg Room
C207	4	White	Body – ABS	Upper Driver Leg Room
C208	6	White	I/P – Air Bag	Behind Car Audio
C209	20	Colorless	I/P – Engine Control	Upper Co–driver Right Kick Panel
C210	10	White	I/P – Engine Control	Upper Co–driver Right Kick Panel
C351	29	White	Body – Driver Door	Inside Left A Pillar
C361	29	White	Body – Co–driver Door	Inside Right A Pillar
C371	8	Colorless	Body – Rear Left Door	Inside Left B Pillar
C381	8	Colorless	Body – Rear Right Door	Inside Right B Pillar
C401	8	White	Body – Rear	Upper Trunk Room Left Wheel House
C402	4	White	Body – Trunk/Tailgate(H/B, S/W)	Upper Trunk Room Left
C403	3	White	Body – Tailgate (H/B)	Upper Trunk Room Left
C404	6	White	Body – Tailgate (Station Wagon)	Upper Trunk Room Left
C901	8	Black	Body – Fuel Pump	Under Body Near Trunk
C902	4	Black	Body – ABS Rear Speed Sensor	Under Body Near Trunk
C903	4	Black	Body – Fuel Pump	Under Body Near Trunk

3) GROUND

Ground Number	Wiring Harness	Ground Position
G101	W/H Front	Left Fender in Front of Fuse Box
G102	Battery & ABS	Between Battery and Fuse Box
G103	W/H Front	Engine Room Right Fender (Splice Pack)
G104	Engine Control	Cylinder Head Next to #4 Intake Manifold
G105	Battery	Next to Starter Motor
G106	Engine Control	Engine Block Below #2 Intake Manifold
G201	I/P & Body	Behind Driver Left Kick Panel
G202	I.P	Right Side of I/P
G301	Roof	Next to Room Lamp
G302	Body	Below Driver Seat
G303	Body	Left Rear Seat Back
G305	Body	Passenger Room Right C Pillar
G401	Rear	Trunk Room End Panel
G402	Tailgate	Upper Luggage Left (H/B, S/W)

4) SPLICE PACK

Splice Pack Number	Color	Wiring Harness	Splice Pack Position
S201	Brown	I.P	Upper Driver Leg Room
S202	Blue	I.P	Upper Driver Leg Room
S203	Brown	I.P	Upper Driver Leg Room
S204	Gray	I.P	Upper Driver Leg Room
S205	Red	I.P	Left Behind Glove Box
S206	Blue	I/P	Right Behind Glove Box
S207	Blue	Engine Control	Behind Co–driver Right Kick Panel
S208	White	Engine Control	Behind Co–driver Right Kick Panel
S301	Blue	Body	Behind Driver Left Kick Panel
S302	Blue	Body	Behind Driver Left Kick Panel
S303	Black	Body	Below Driver Seat

2. WIRING HARNESS & CONNECTOR & GROUND LOCATION

1) W/H FRONT, FRONT BUMPER

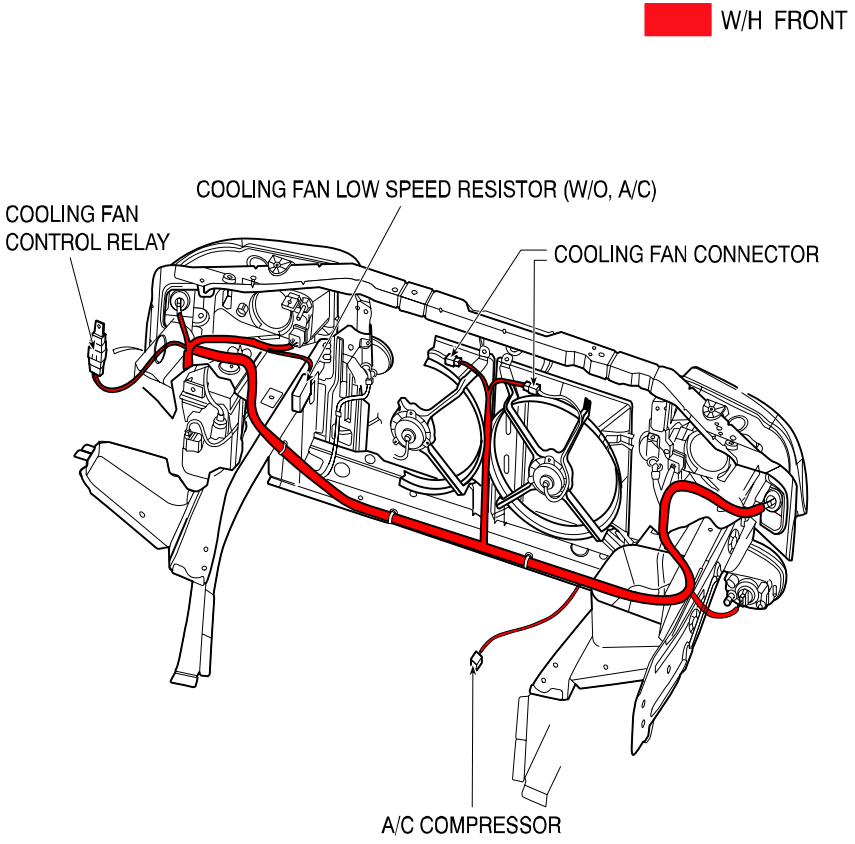

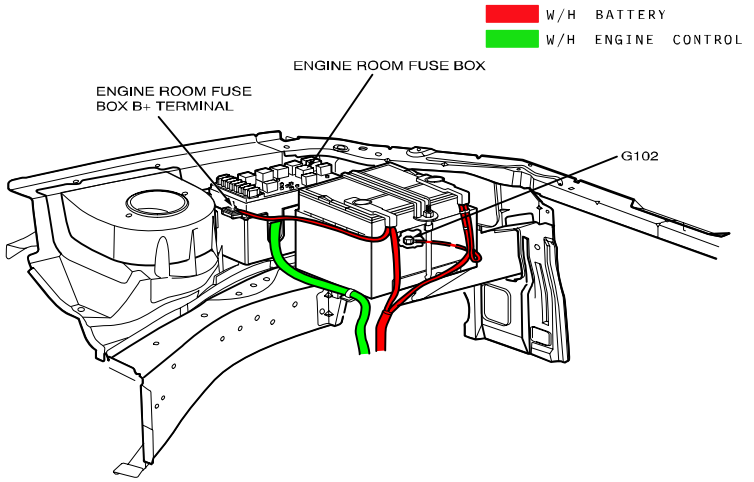

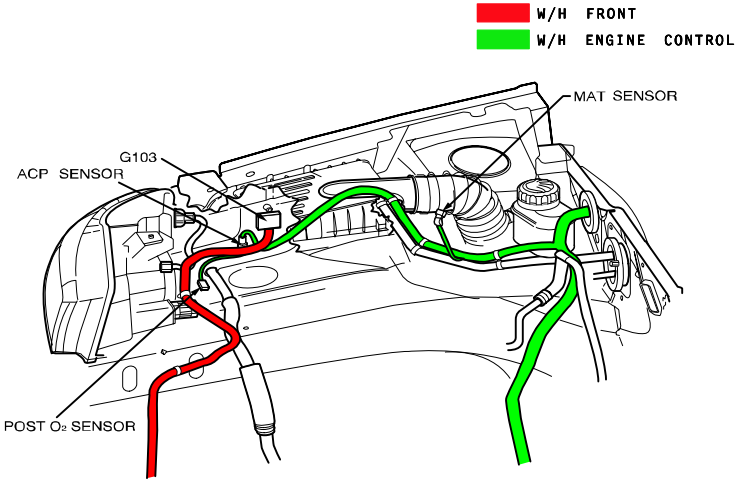

2) ENGINE CONTROL, BATTERY

- **2.0 DOHC ENGINE**

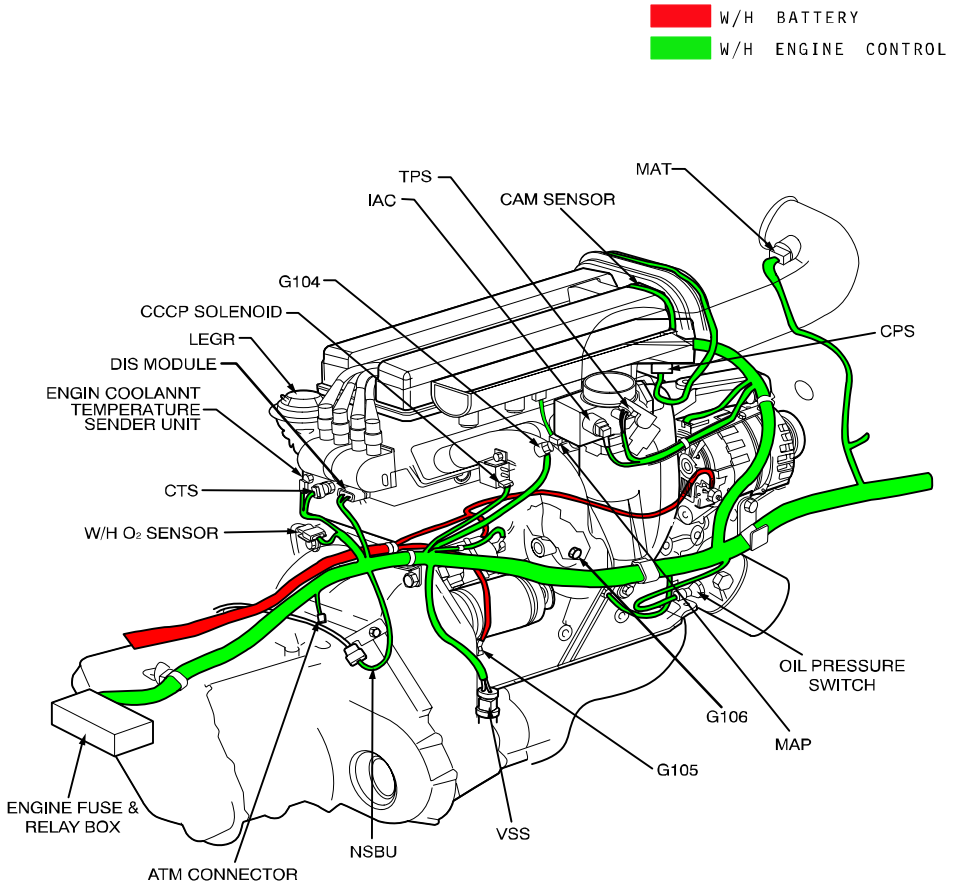

3) INSTRUMENT PANEL INSIDE

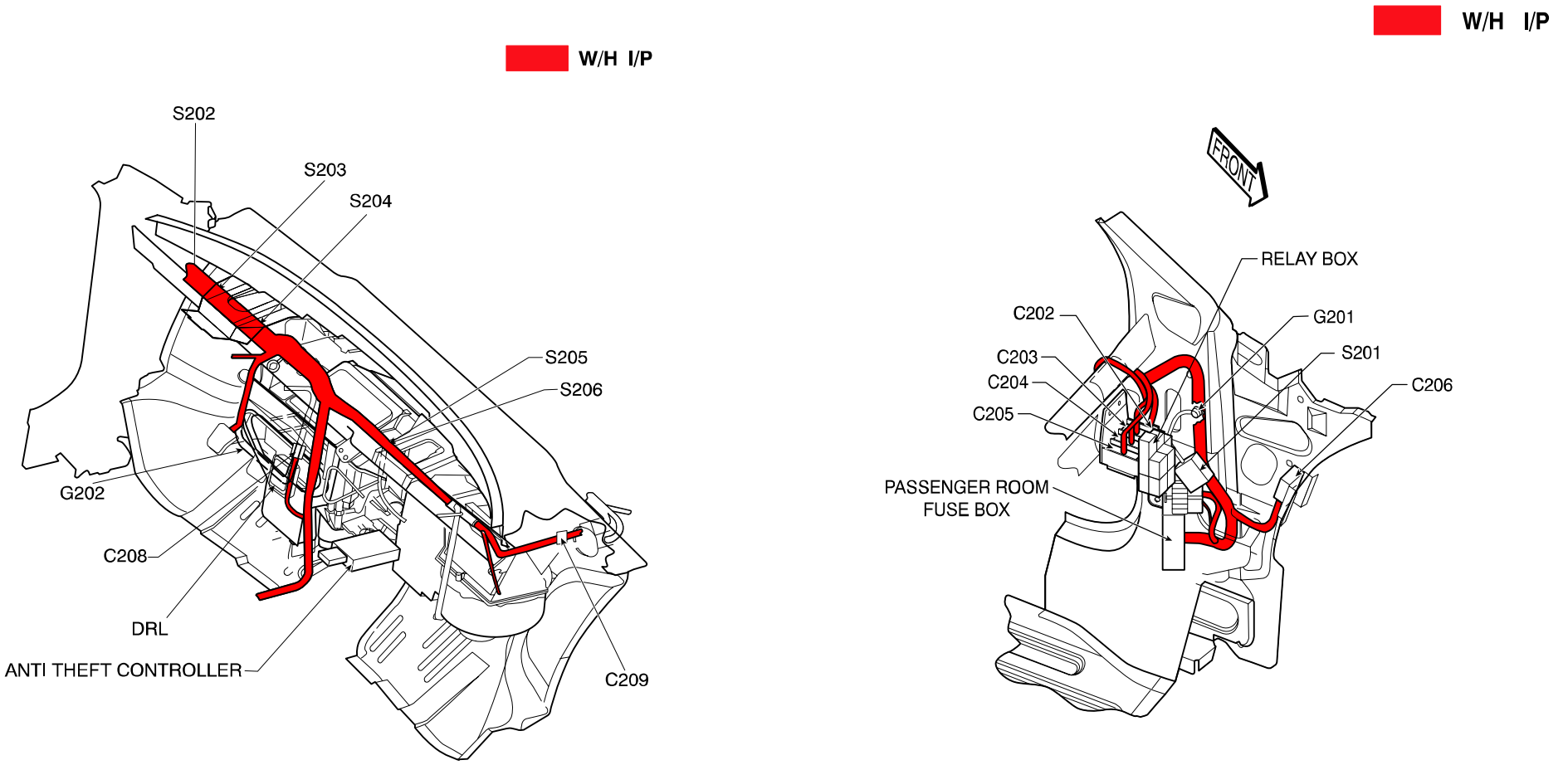

4) AIR BAG, INSTRUMENT PANEL

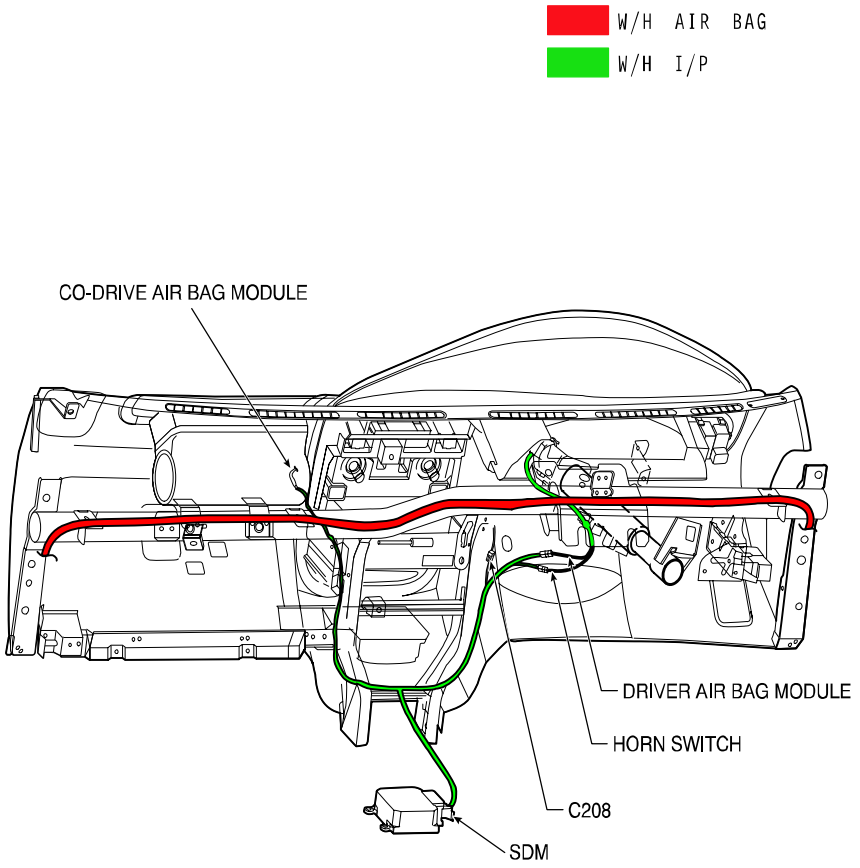

5) BODY

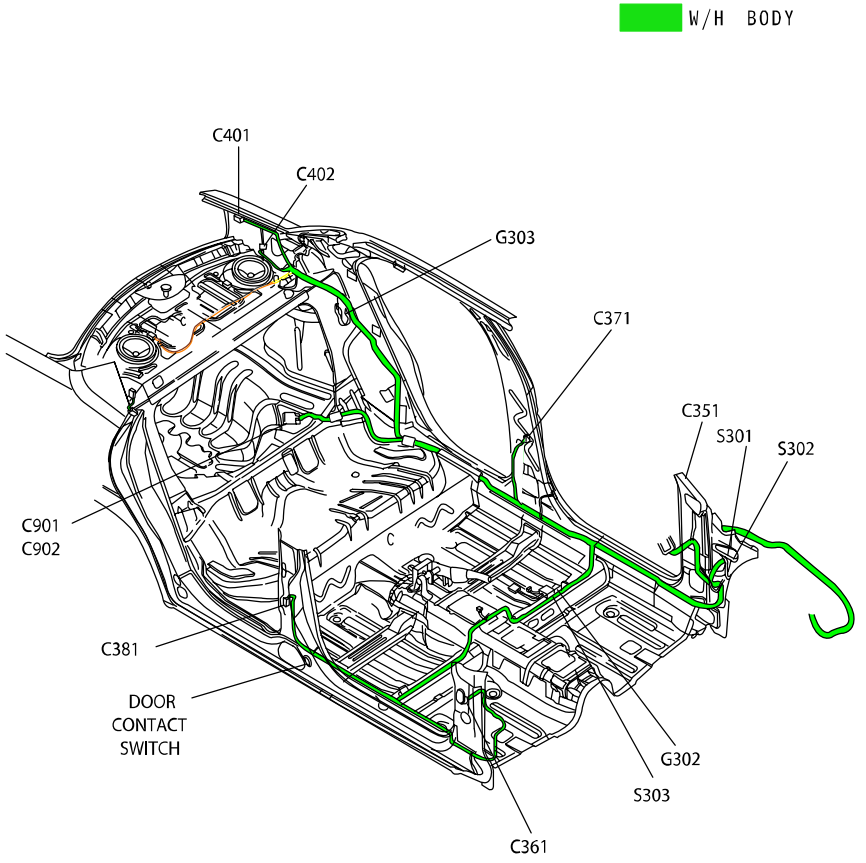

W/H BODY

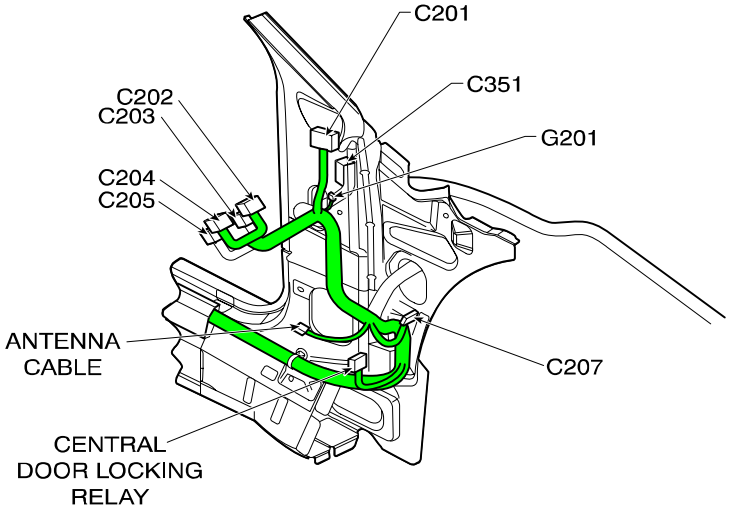

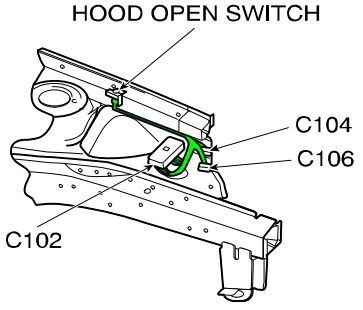

6) W/H DOOR

1. Front Door

W/H DOOR

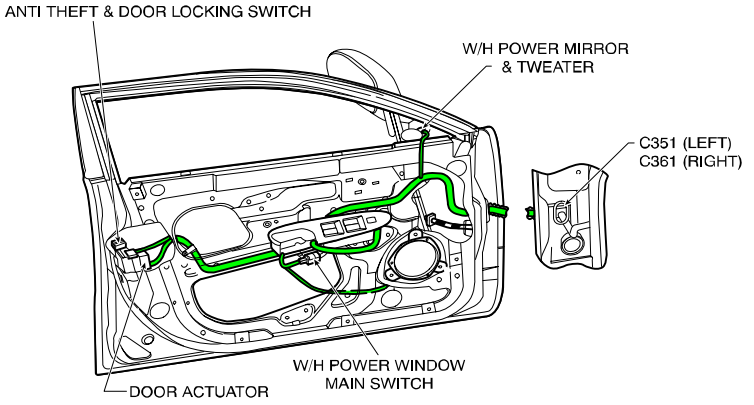

2. Rear Door

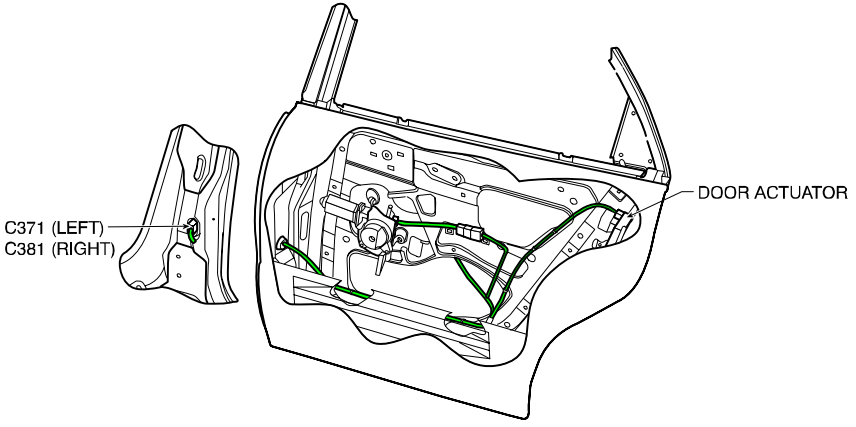

7) ABS WHEEL SPEED SENSOR

1. With Sun Roof

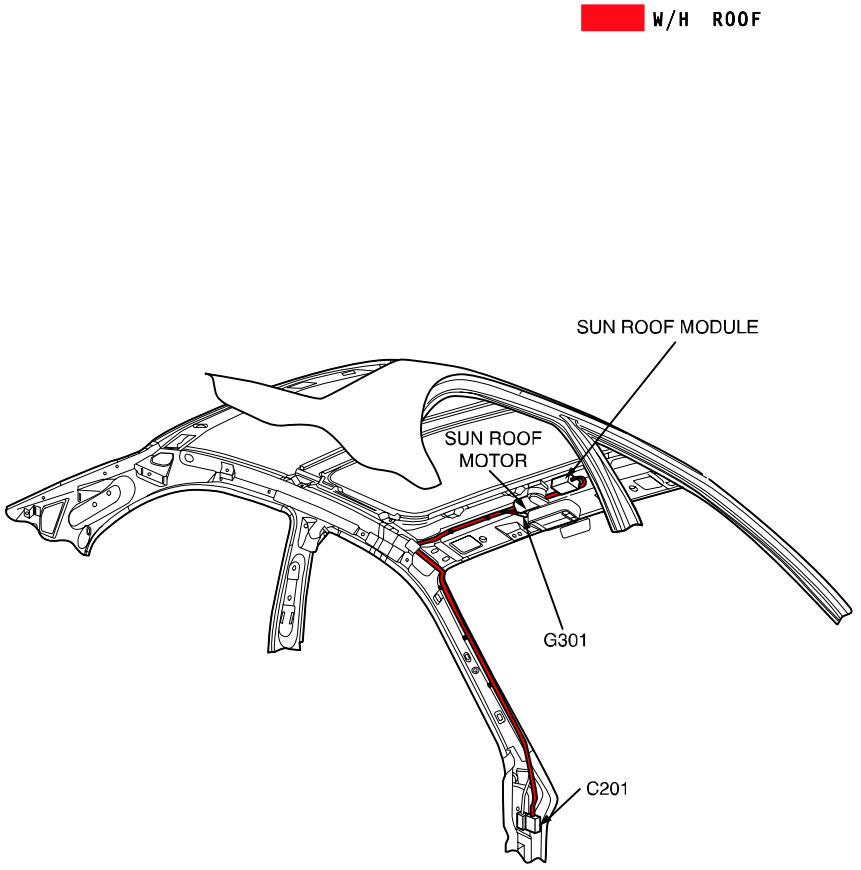

2. Without Sun Roof

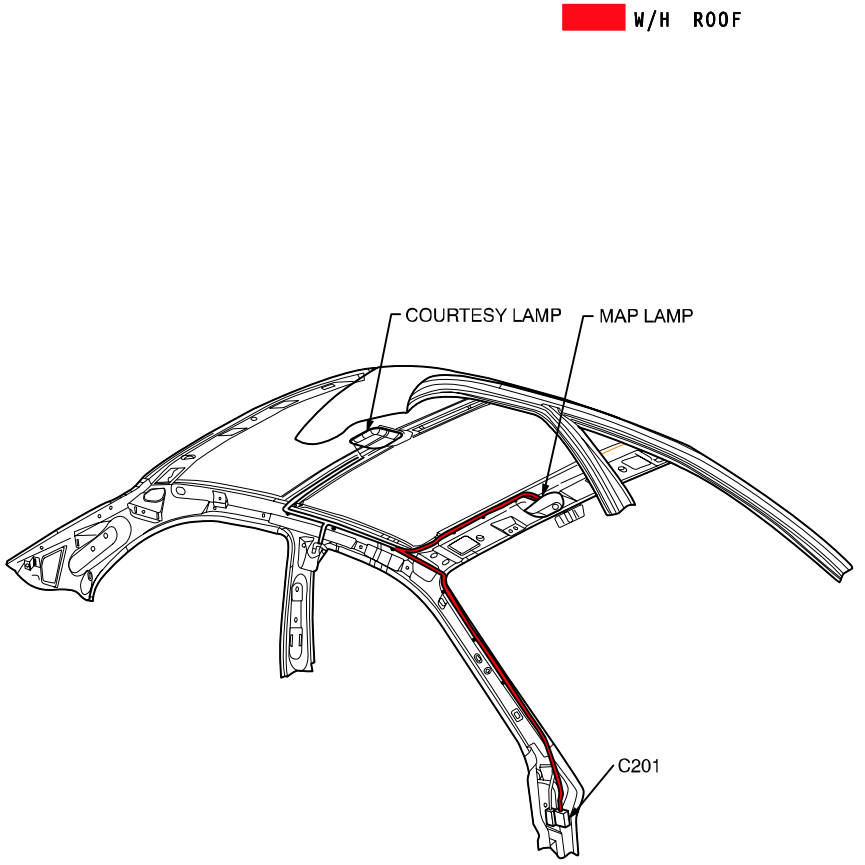

8) ABS MODULE & WHEEL SPEED SENSOR

W/H ABS

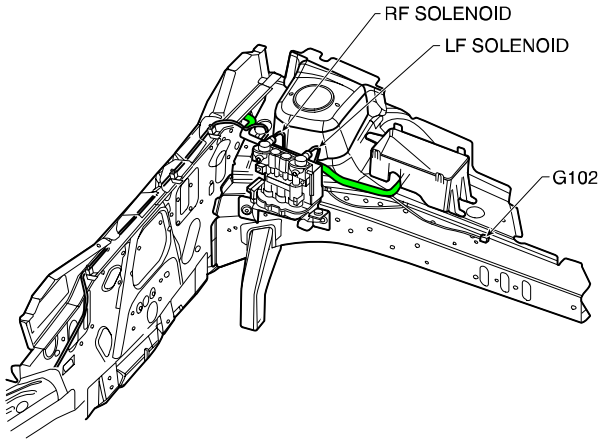

W/H ABS

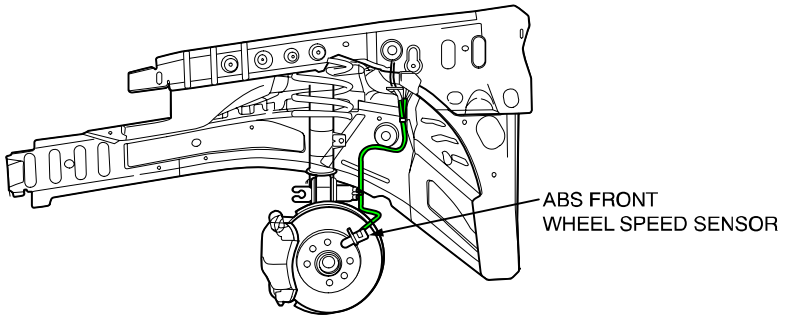

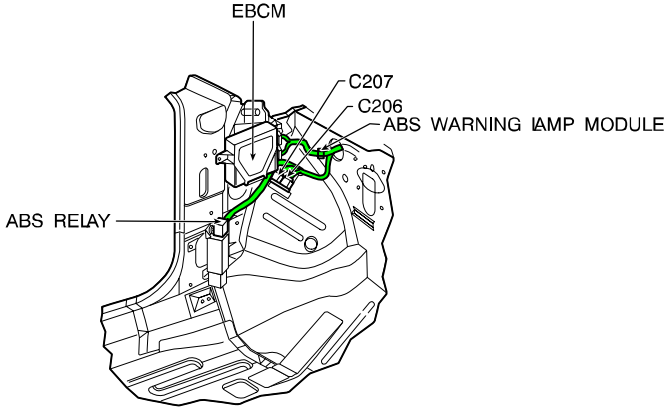

W/H REAR ABS SENSOR

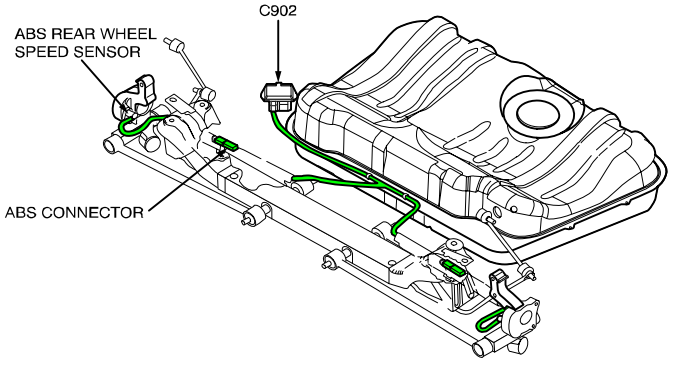

9) REAR

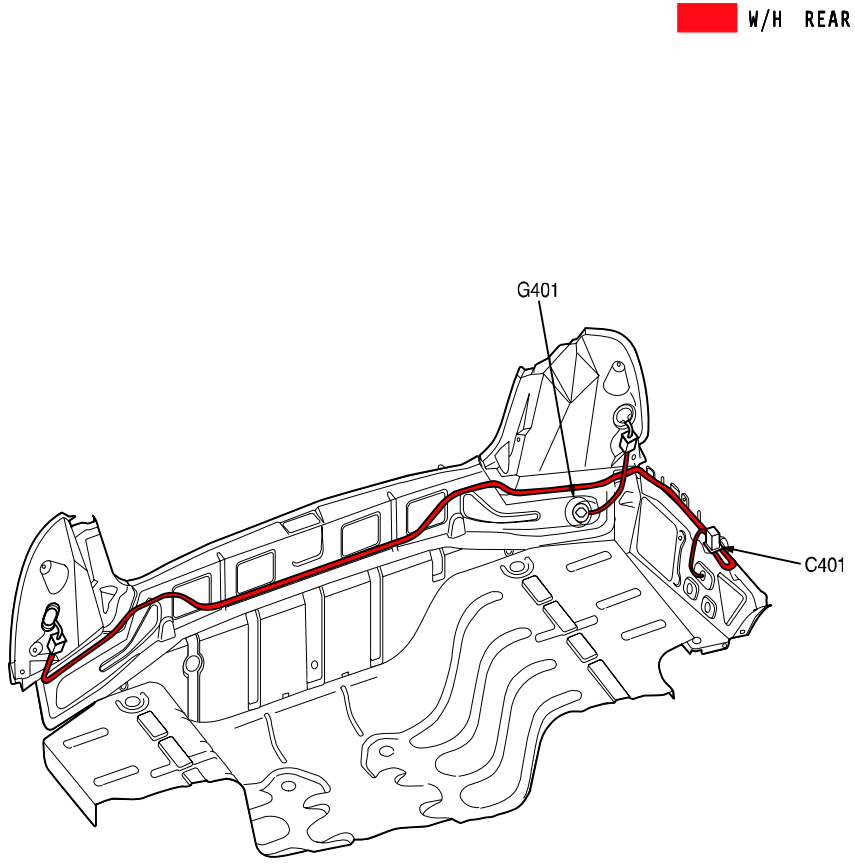

10) FUEL TANK, TRUNK LID

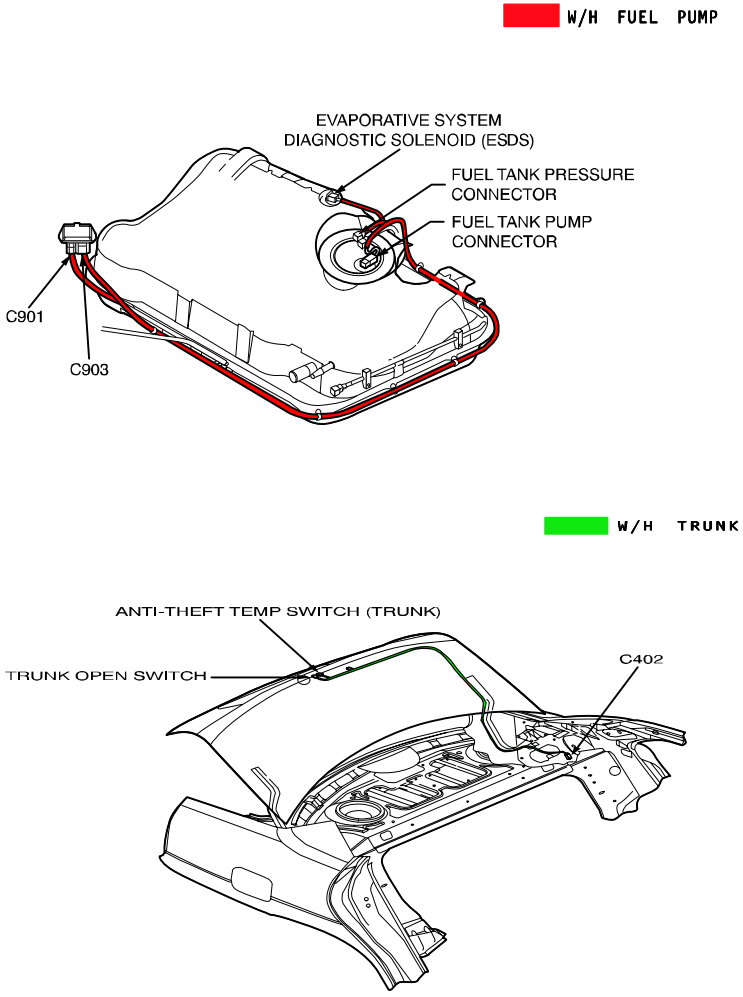

11) SPLICE PACK

S201 (BROWN)

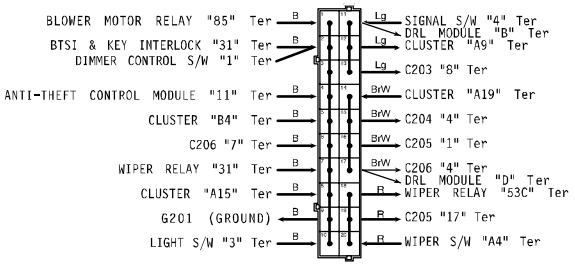

S202 (BLUE)

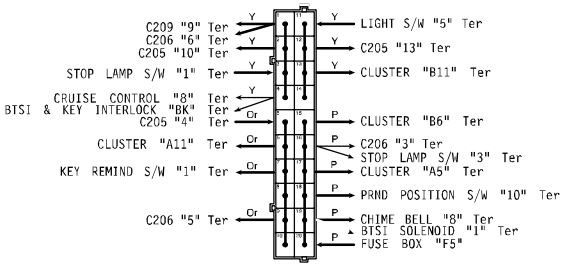

S203 (BROWN)

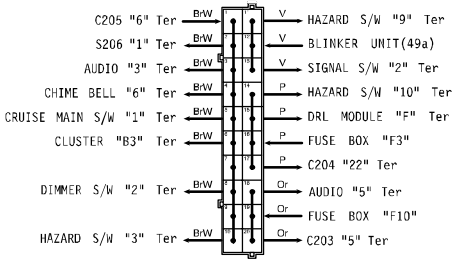

S204 (GRAY)

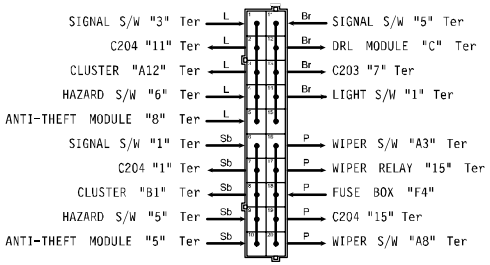

S205 (RED)

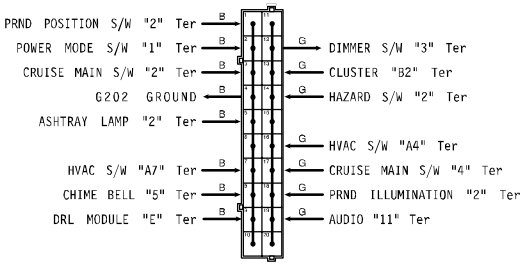

S206 (BLUE)

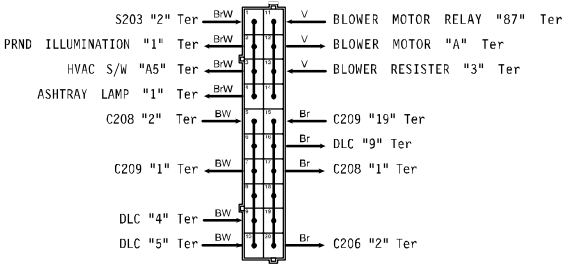

S207 (BLUE)

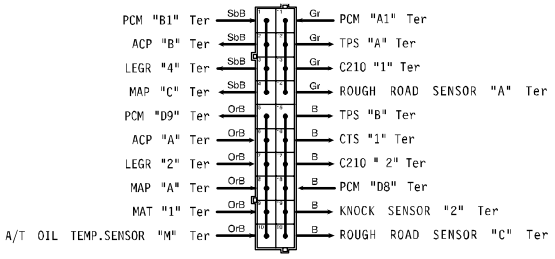

S208 (WHITE)

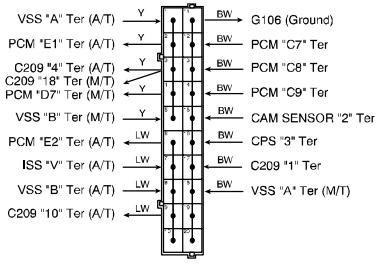

S301 (BLUE), N/B

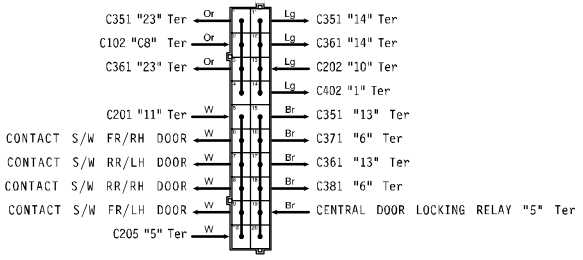

S301 (BLUE), H/B

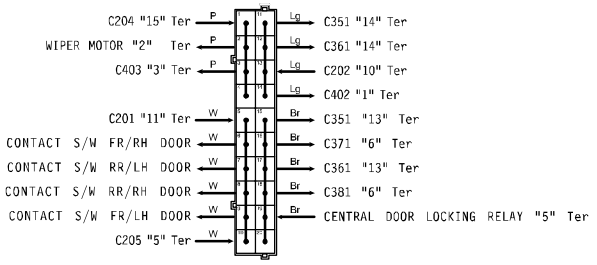

S301 (BLUE), S/W

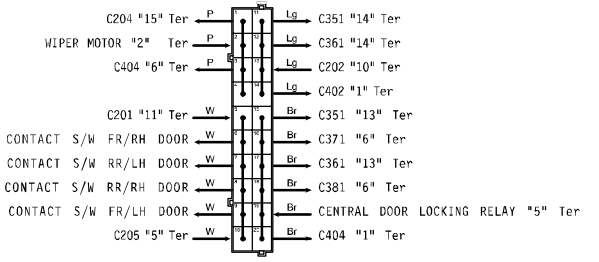

S302 (BLACK)

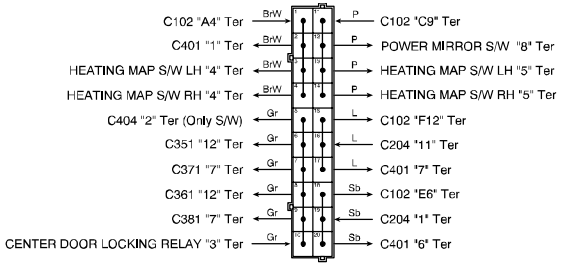

S303 (BLACK) – N/B & H/B

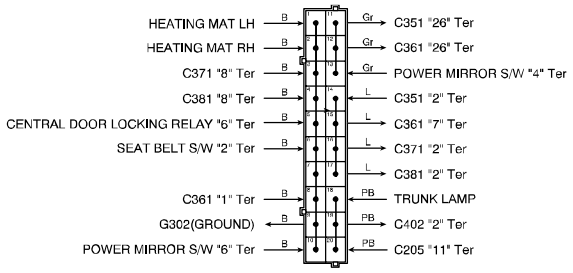

S303 (BLACK) – S/W

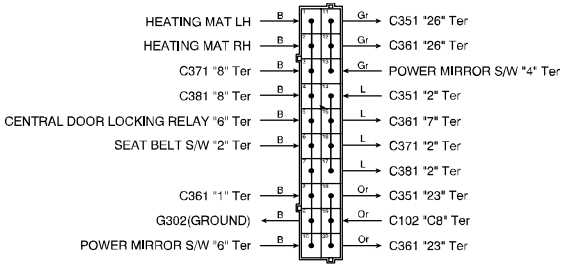

SECTION 4

USAGE AND CAPACITY OF FUSES

1. ENGINE COMPARTMENT RELAY AND FUSE BOX

1) POSITION OF RELAY AND FUSE

- **Front View**

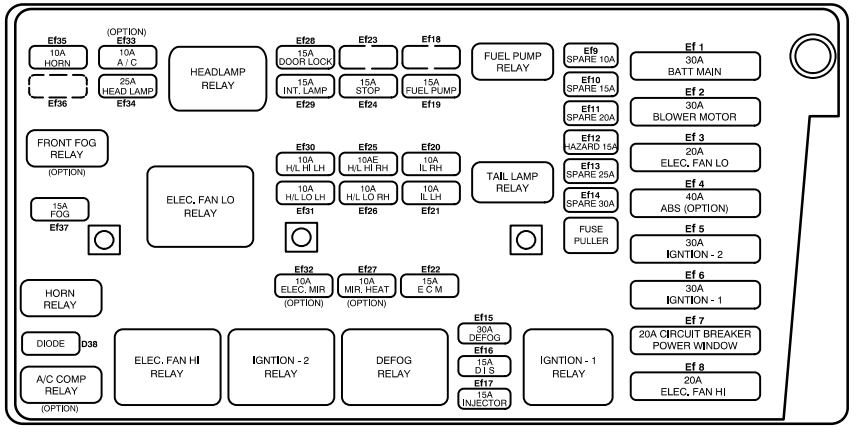

- **Rear View**

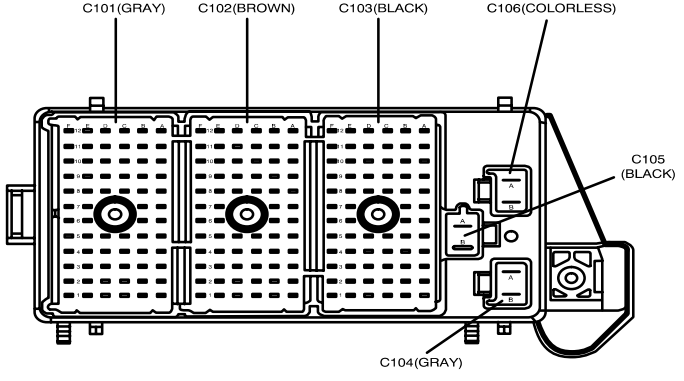

2) USAGE OF FUSES IN ENGINE COMPARTMENT FUSE BOX

Power Supply	Classification	Fuse No	Capacity	Usage
30 BAT(+)	SB(Slow–Blown Fuse)	Ef 1	30A	Battery Main (F10, F11, F12, F13, F14)
		Ef 2	30A	Blower Motor
		Ef 3	20A	Cooling Fan Low Speed
		Ef 4	40A	ABS (Option)
		Ef 5	30A	Ignition–2(Key)
		Ef 6	30A	Ignition–1(Key)
	Circuit Brake	Ef 7	20A	Ignition Relay "2"(Power Window)
	SB Fuse	Ef 8	20A	Cooling Fan High Speed
Spare	Blade Type Fuse	Ef 9	10A	Not Used
		Ef 10	15A	Not Used
		Ef 11	20A	Not Used
30 BAT(+)		Ef 12	15A	Hazard
Spare		Ef 13	25A	Not Used
		Ef 14	30A	Not Used
30 BAT(+)		Ef 15	30A	Defroster
IGN 1 (15)		Ef 16	15A	DIS
		Ef 17	15A	Injector
		Ef 18		Not Used
		Ef 19	15A	Fuel pump
Illumination (58)		Ef 20	10A	Illumination RH
		Ef 21	10A	Illumination LH
30 BAT(+)		Ef 22	15A	ECM
		Ef 23	–	Not Used
		Ef 24	15A	Brake Lamp (Stop Lamp)
Light (58)		Ef 25	10A	Head Lamp Hi Beam RH
		Ef 26	10A	Head Lamp Low Beam RH
IGN 2(15A)		Ef 27	10A	Electric Mirror Heat
30 BAT(+)		Ef 28	15A	Central Door Locking
		Ef 29	15A	ABS, Cluster, Remind S/W, Clock
Light (58)		Ef 30	10A	Heat Lamp Hi Beam LH
		Ef 31	10A	Heat Lamp Low Beam LH
IGN 2(15A)		Ef 32	10A	Electric Mirror, Heating Mat
30 BAT(+)		Ef 33	10A	Air Conditioner
		Ef 34	25A	Head Lamp
		Ef 35	10A	Horn
		Ef 36	–	Not Used
		Ef 37	15A	Fog Lamp
Diode		D 38	–	A/C Compressor

2. PASSENGER ROOM FUSE BOX

1) POSITION OF FUSE AND RELAY

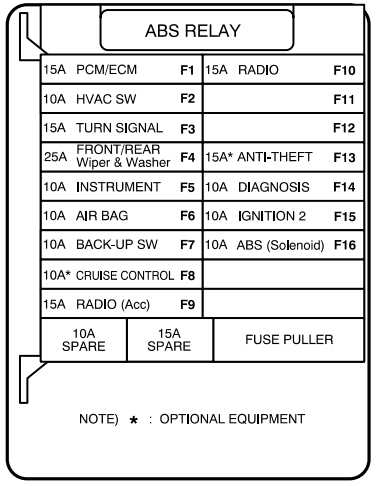

2) USAGE OF FUSES IN PASSENGER ROOM FUSE BOX

Power Supply	Classification	Fuse No	Capacity	Usage
15 IGN "1" ON	Blade Type	F1	15A	PCM, Ignition Relay "1"
		F2	10A	Airconditioning System
		F3	15A	Hazard, Clock, DRL
		F4	25A	Wiper System
		F5	10A	Cluster, ABS, Chime Bell, PRND Switch, Brake
		F6	10A	SDM(Air Bag)
		F7	10A	Reverse(Back Up) Lamp
		F8	10A	Cruise Control
15C ACC		F9	15A	Audio, Cigarette Lighter, Key & BTSI
BAT+ 30A		F10	15A	Auto Antenna, Audio
		F11	–	Not Used
		F12	–	Not Used
		F13	15A	Anti Theft
		F14	10A	DLC "16" Terminal
System Voltage		F15	10A	ABS, A/C, Defroster, Ignition Relay "2"
		F16	10A	ABS

* 30 : BAT(+) Power Supply Through Ef1.

3. POSITION OF CONTROL UNIT, RELAY AND PART NUMBER

1) ENGINE ROOM FUSE BOX

Part Name	Part No	Remarks
Fuel Pump Relay	96190187	4 Pin
Fog Lamp Relay	96190187	
Horn Relay	96190187	
Illumination Relay	96190187	
Head Lamp Relay	96190187	
A/C Compressor Relay	96190187	
Rear Window Defroster Relay	96190189	4 Pin
Radiator Cooling Fan High Speed Relay	96190189	
Radiator Cooling Fan Low Speed Relay	96190189	
IGN 1 Relay	96190189	
IGN 2 Relay	96190189	

2) PASSENGER ROOM FUSE BOX

Part Name	Part No	Remarks
ABS Relay	12088595	

3) BEHIND DRIVER LEG ROOM CONNECTOR HOLDER

Part Name	Part No	Remarks
Blinker Unit(Turn Signal Relay)	96312545	
Wiper Relay	96250544	
Blower Motor 4th Speed Relay	96190189	
BTSI & Key Interlock Unit	96312299	

4) UPPER DRIVER LEG ROOM

Part Name	Part No	Remarks
Chime Bell	96219056	

5) BEHIND LEFT HEAD LAMP

Part Name	Part No	Remarks
Radiator Cooling Fan Control Relay	96312958	

6) BEHIND DRIVER SIDE LEFT KICK PANEL

Part Name	Part No	Remarks
E B C M	96313430	
Central Door Locking Relay	96312298	

7) FLOOR PANEL BEHIND I/P CENTER PART

Part Name	Part No	Remarks
Anti–Theft Control Unit	96190181	
DRL (Day Time Runing Light) Module	96240514	

8) FLOOR PANEL BELOW FRONT CONSOLE

Part Name	Part No	Remarks
S D M	96312354	

SECTION 3

WIRING DIAGRAM FOR POWER SUPPLIES

1. IGNITION SWITCH CIRCUIT

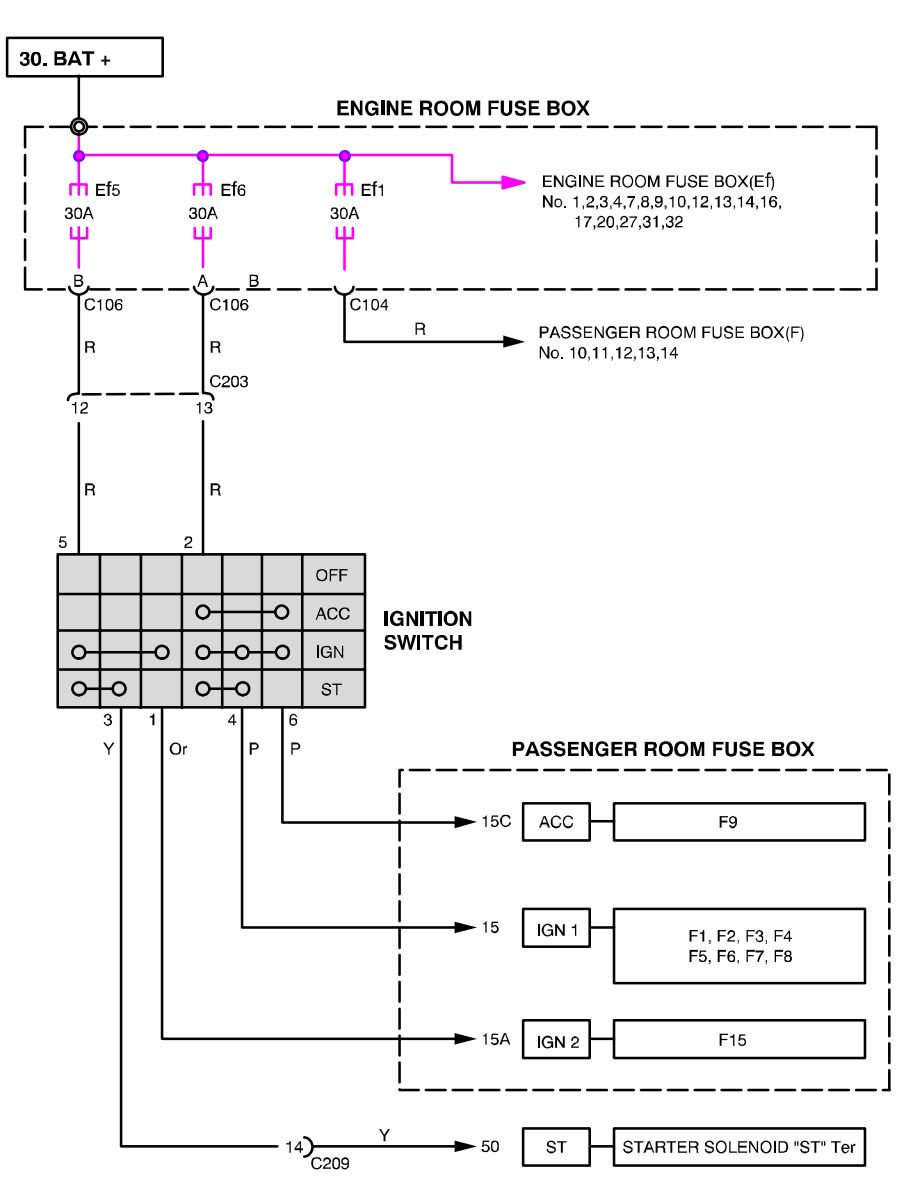

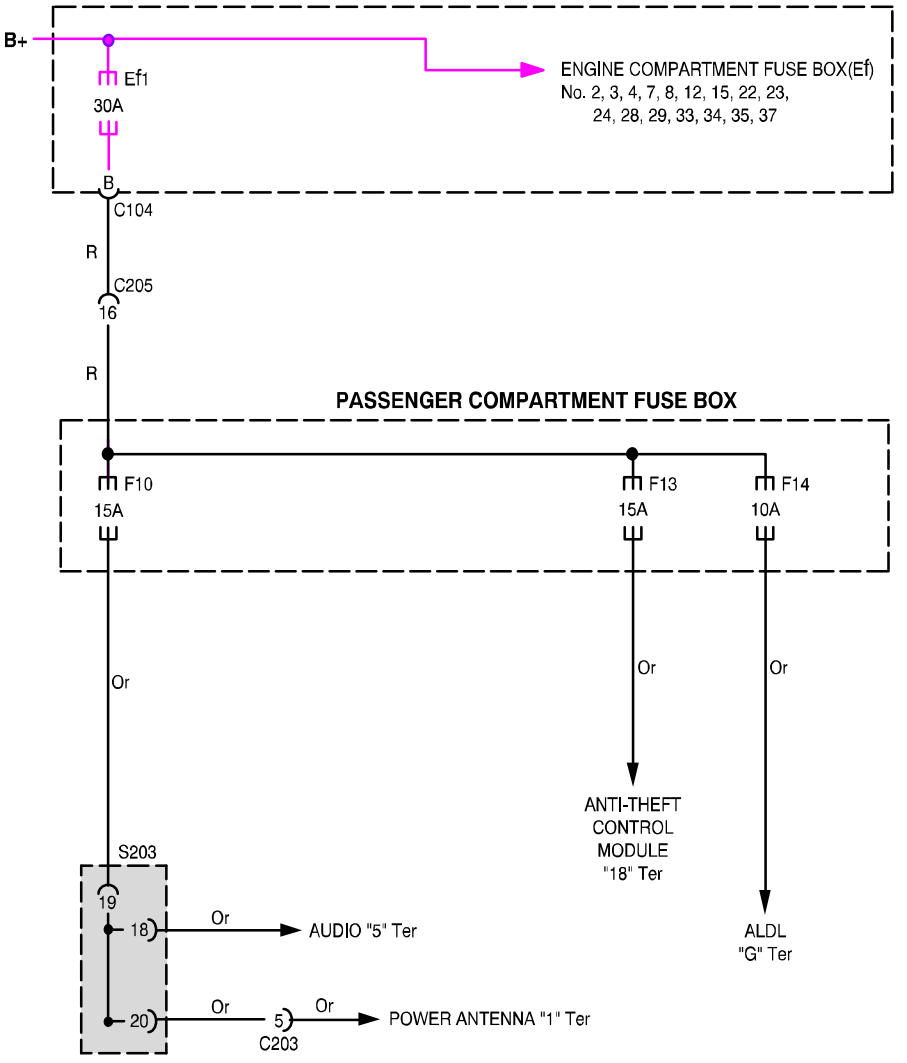

2. 30 Ter BAT+ POWER SUPPLY CIRCUIT(PASSENGER ROOM FUSE BOX)

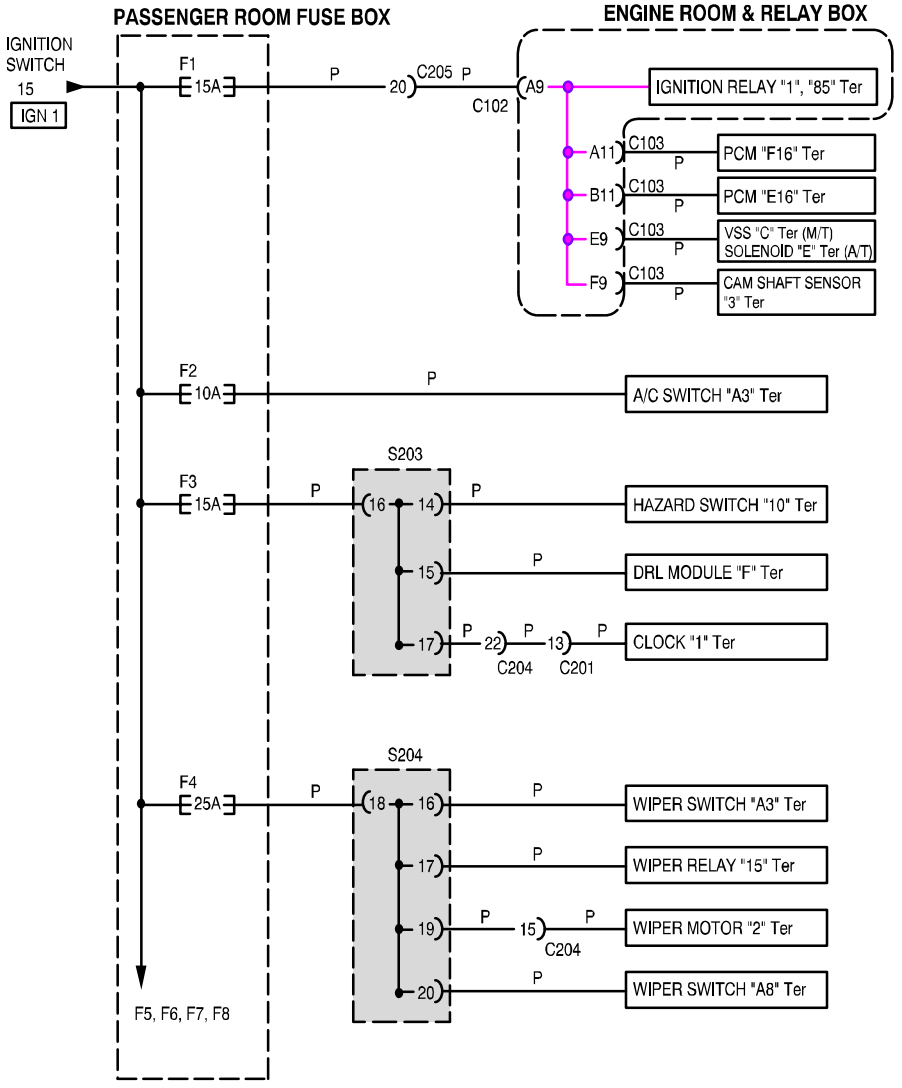

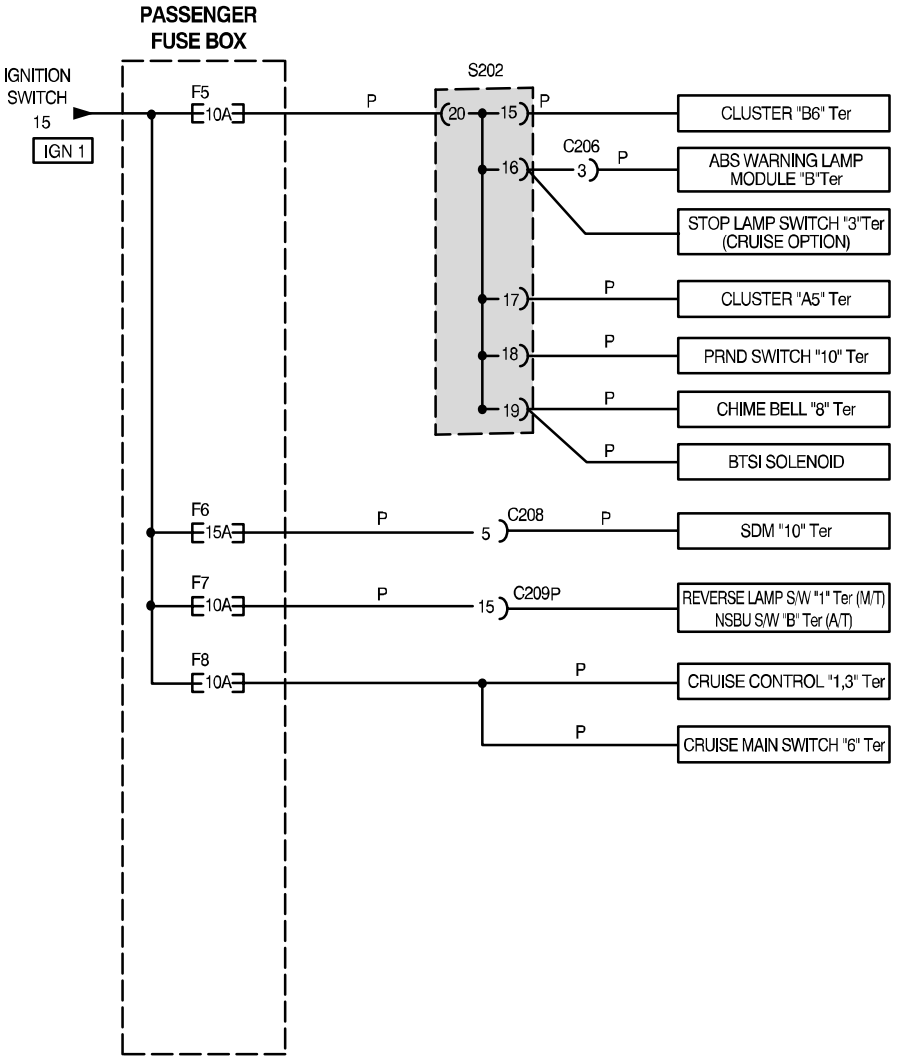

3. 15A IGN 2, 15C ACC POWER SUPPLY CIRCUIT(PASSENGER ROOM FUSE BOX)

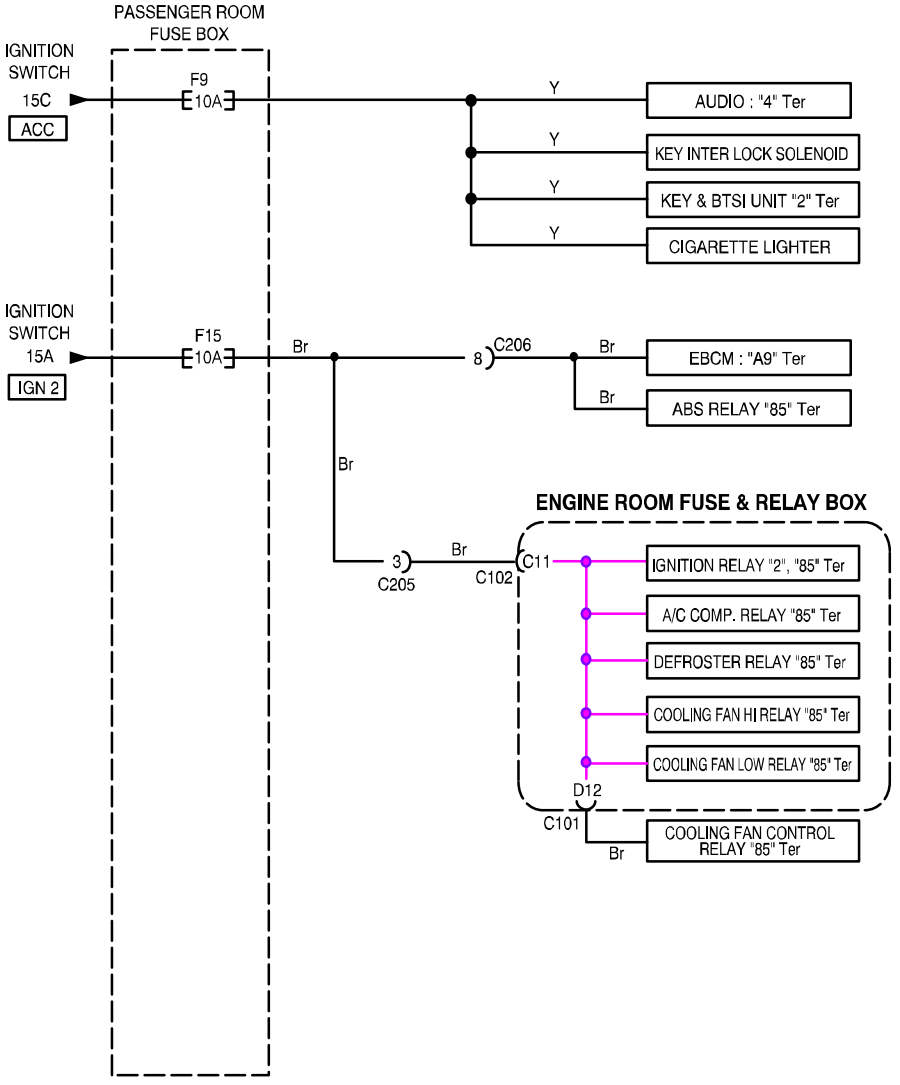

4. ENGINE ROOM FUSE & RELAY CIRCUIT

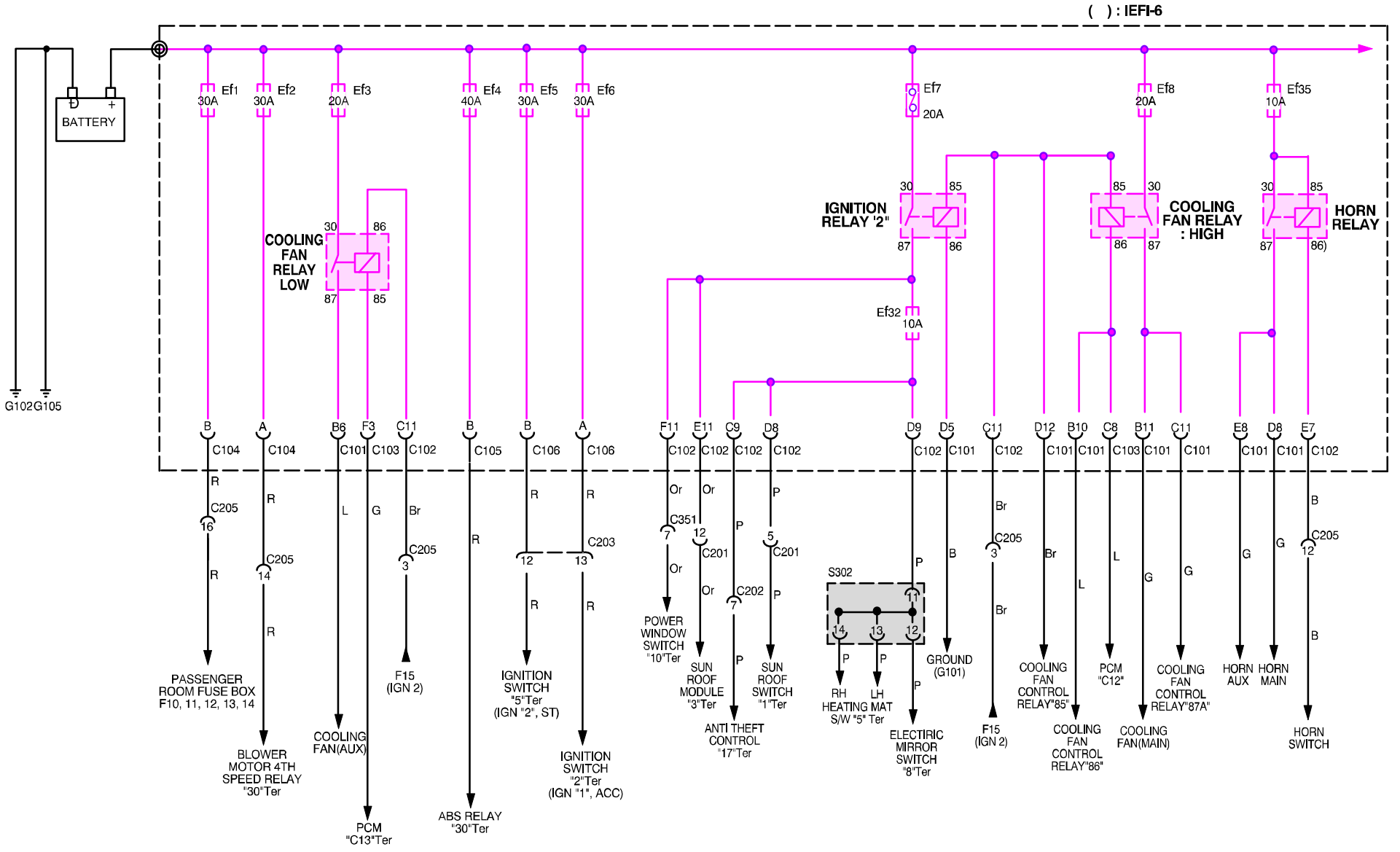

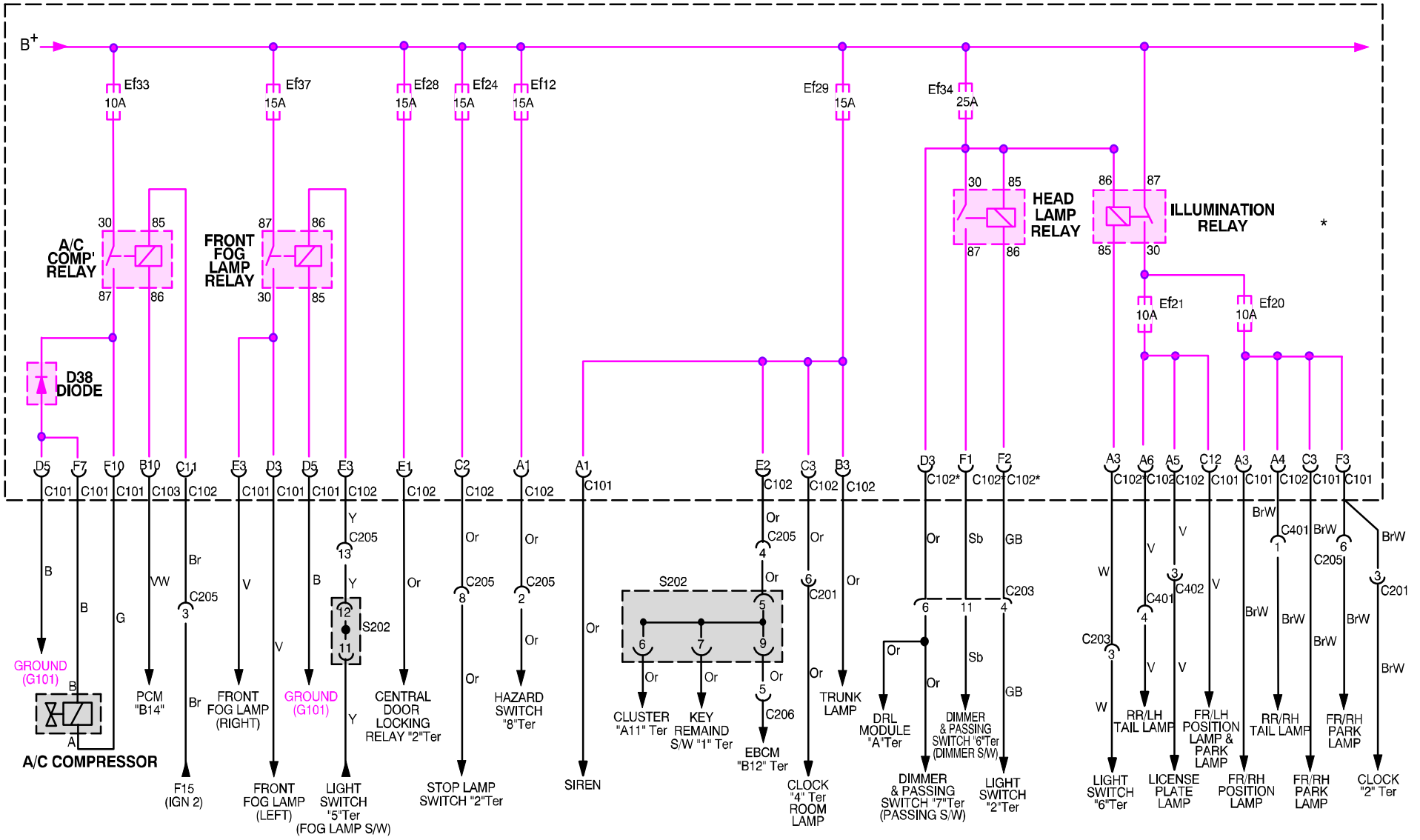
B+
Ef33
10A
Ef37
15A
Ef28
15A
Ef24
15A
Ef12
15A
Ef29
15A
Ef34
25A
A/C COMP' RELAY
FRONT FOG LAMP RELAY
HEAD LAMP RELAY
ILLUMINATION RELAY
*
Ef21
10A
Ef20
10A
D38 DIODE
GROUND (G101)
A/C COMPRESSOR
PCM "B14"
F15 (IGN 2)
FRONT FOG LAMP (RIGHT)
FRONT FOG LAMP (LEFT)
GROUND (G101)
LIGHT SWITCH "5"Ter (FOG LAMP S/W)
CENTRAL DOOR LOCKING RELAY "2"Ter
STOP LAMP SWITCH "2"Ter
HAZARD SWITCH "8"Ter
SIREN
S202
CLUSTER "A11" Ter
KEY REMAIND S/W "1" Ter
EBCM "B12" Ter
CLOCK "4" Ter ROOM LAMP
TRUNK LAMP
DRL MODULE "A"Ter
DIMMER & PASSING SWITCH "7"Ter (PASSING S/W)
DIMMER & PASSING SWITCH "6"Ter (DIMMER S/W)
LIGHT SWITCH "2"Ter
LIGHT SWITCH "6"Ter
RR/LH TAIL LAMP
LICENSE PLATE LAMP
FR/LH POSITION LAMP & PARK LAMP
FR/RH POSITION LAMP
RR/RH TAIL LAMP
FR/RH PARK LAMP
CLOCK "2" Ter

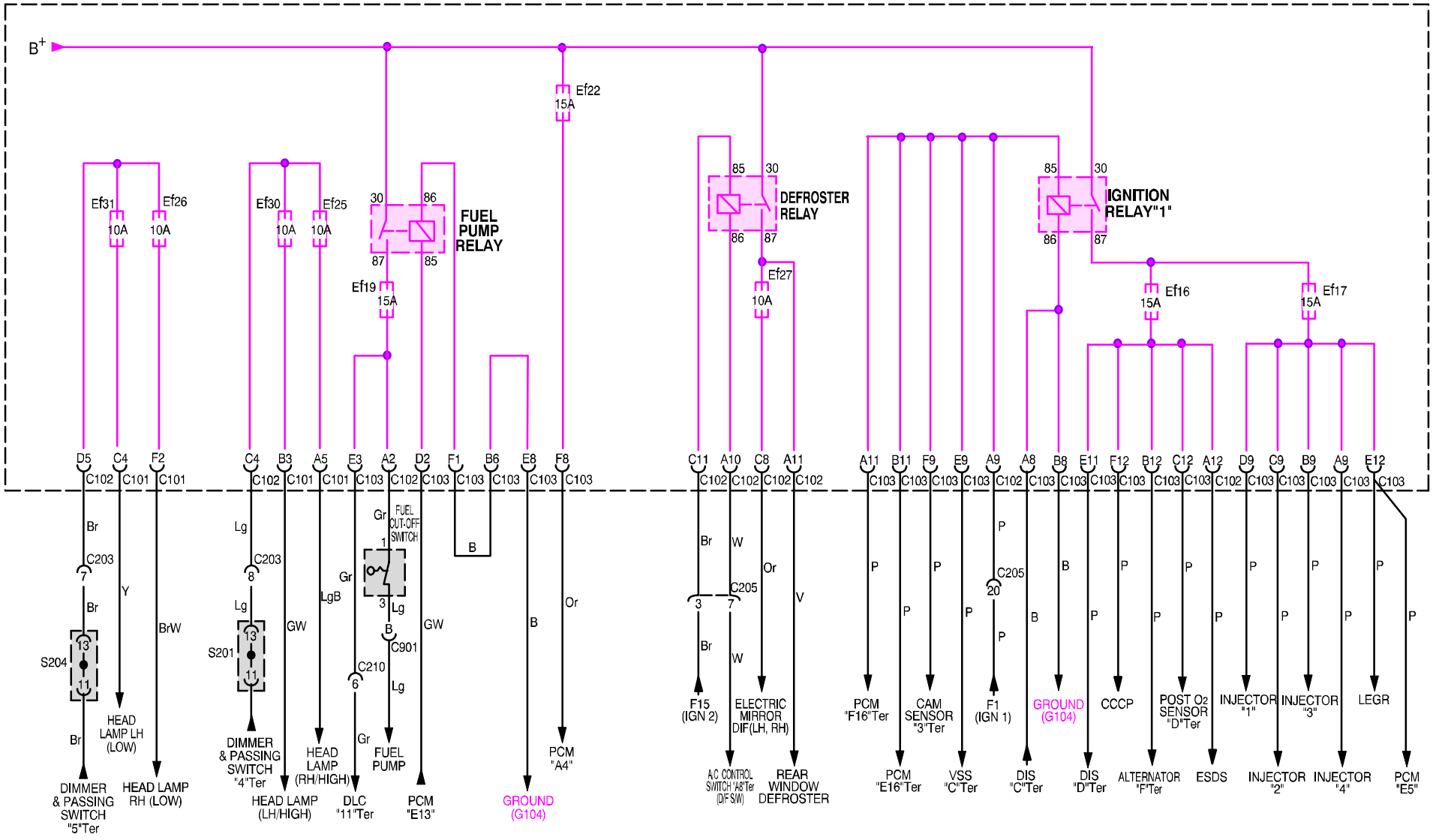
B+
Ef22
15A
Ef31
10A
Ef26
10A
Ef30
10A
Ef25
10A
FUEL PUMP RELAY
Ef19
15A
DEFROSTER RELAY
Ef27
10A
IGNITION RELAY"1"
Ef16
15A
Ef17
15A
D5 C4 F2 C4 B3 A5 E3 A2 D2 F1 B6 E8 F8 C11 A10 C8 A11 A11 B11 F9 E9 A9 A8 B8 E11 F12 B12 C12 A12 D9 C9 B9 A9 E12
C102 C101 C101 C102 C101 C101 C103 C102 C103 C103 C103 C103 C103 C102 C102 C102 C102 C103 C103 C103 C103 C102 C103 C103 C103 C103 C103 C103 C103 C103 C103 C103
S204
S201
C203
C210
C901
FUEL CUT-OFF SWITCH
C205
HEAD LAMP LH (LOW)
HEAD LAMP RH (LOW)
DIMMER & PASSING SWITCH "5"Ter
DIMMER & PASSING SWITCH "4"Ter
HEAD LAMP (LH/HIGH)
HEAD LAMP (RH/HIGH)
DLC "11"Ter
FUEL PUMP
PCM "E13"
GROUND (G104)
PCM "A4"
F15 (IGN 2)
A/C CONTROL SWITCH "A8"Ter (D/F S/W)
ELECTRIC MIRROR DIF(LH, RH)
REAR WINDOW DEFROSTER
PCM "F16"Ter
PCM "E16"Ter
CAM SENSOR "3"Ter
VSS "C"Ter
F1 (IGN 1)
DIS "C"Ter
GROUND (G104)
DIS "D"Ter
CCCP
ALTERNATOR "F"Ter
POST O2 SENSOR "D"Ter
ESDS
INJECTOR "1"
INJECTOR "2"
INJECTOR "3"
INJECTOR "4"
LEGR
PCM "E5"

SECTION 5

ELECTRICAL WIRING DIAGRAMS

1. STARTING & CHARGING SYSTEM

1) BATTERY, IGNITION SWITCH, STARTER MOTOR, ALTERNATOR & SWITCH (CLUTCH(M/T), NSBU(A/T))

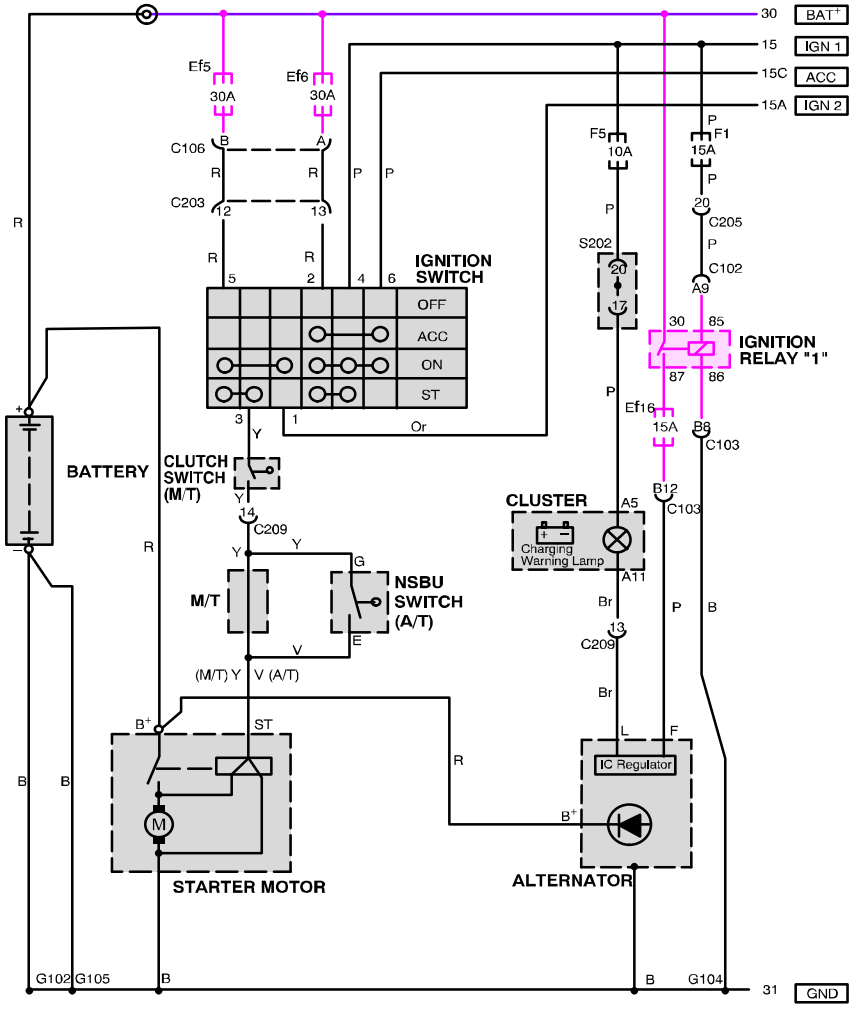

a. CONNECTOR INFORMATION

CONNECTOR(NO) (PIN NO. COLOR)	CONNECTING, WIRING HARNESS	CONNECTOR POSITION
C102(68 Pin, Brown)	Engine Room Fuse Box – Body	Engine Room Fuse Box
C103(68Pin, Black)	Engine Room Fuse Box – Engine Control	Engine Room Fuse Box
C106(2 Pin, Colorless)	Engine Room Fuse Box – Body	Engine Room Fuse Box
C203(15 Pin, White)	I.P – Body	Left Driver Leg Room Connector Holder
C205(20 Pin, Colorless)	I.P – Body	Right Driver Leg Room Connector Holder
C209(20 Pin, Colorless)	I/P – Engine Control	Upper Co–driver Right Kick Panel
S202(Blue)	IP	Upper Driver Leg Room
G102	Battery & ABS	Between Battery and Fuse Box
G104	Engine Control	Cylinder Head Next to #4 Intake Manifold
G105	Battery	Next to Starter Motor

b. CONNECTOR IDENTIFICATION SYMBOL & PIN NUMBER POSITION

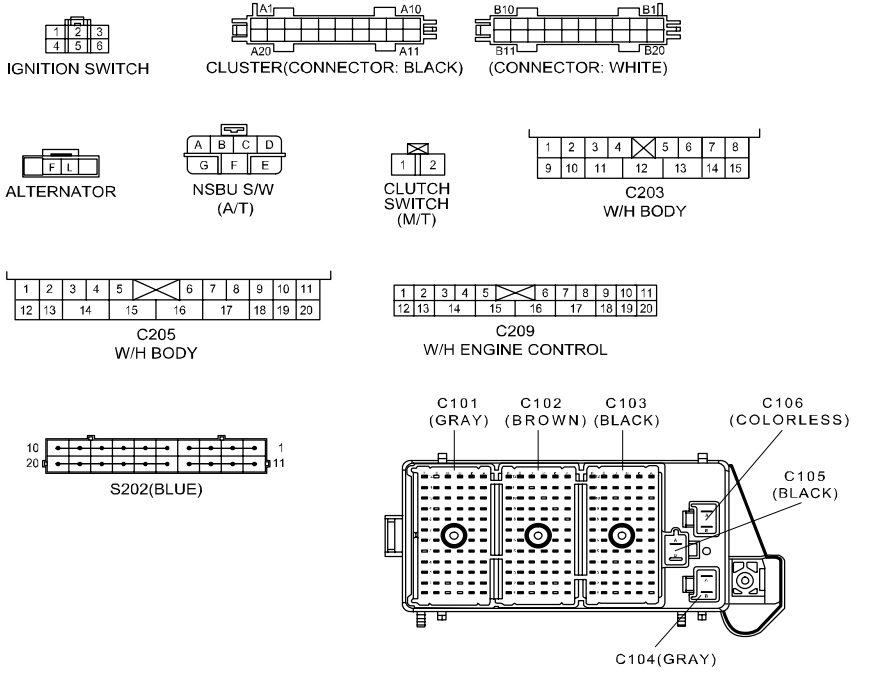

c. POSITION OF CONNECTORS AND GROUNDS

- **ENGINE ROOM FUSE BLOCK**

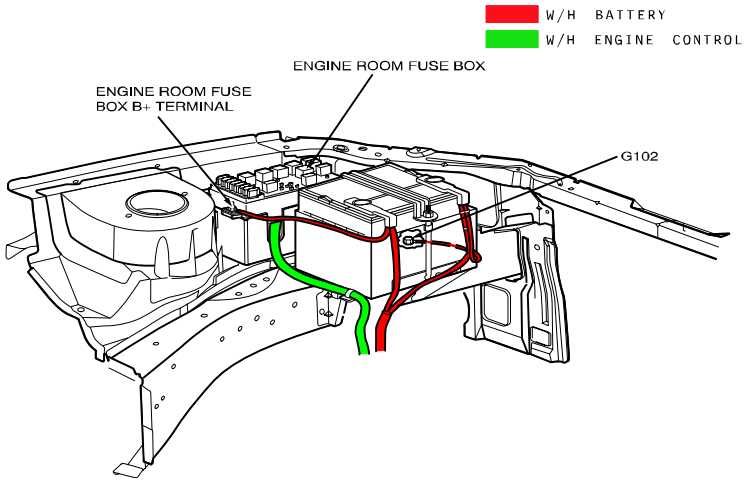

- **LEFT "A" PILLAR INSIDE**

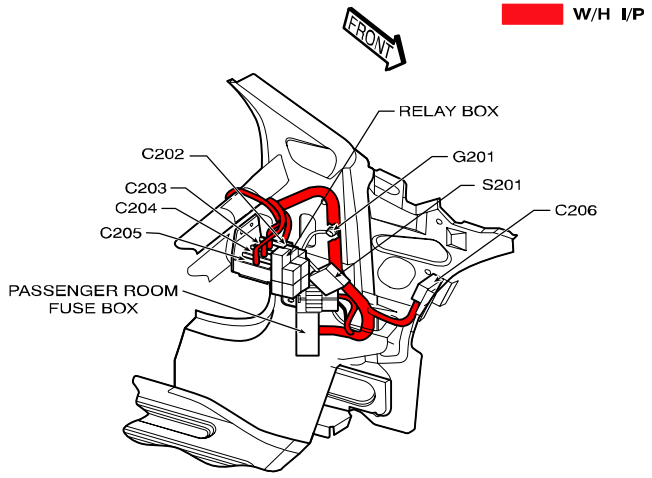

- **2.0 DOHC ENGINE**

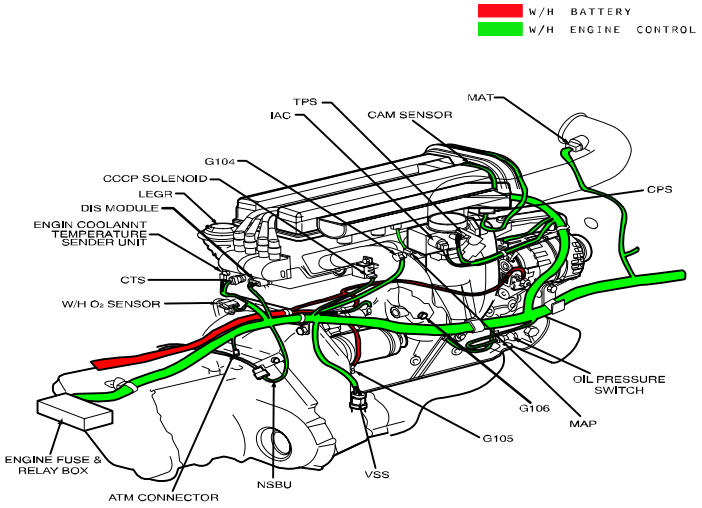

d. SPLICE PACK

S202 (BLUE)

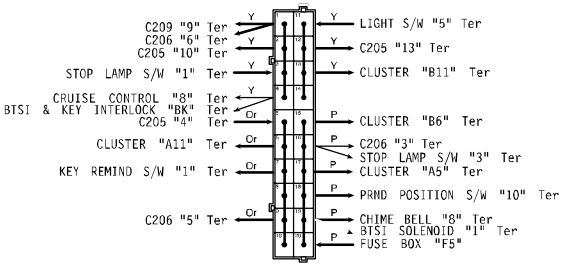

SECTION : 1C

DOHC ENGINE MECHANICAL

CAUTION : Disconnect the negative battery cable before removing or installing any electrical unit or when a tool or equipment could easily come in contact with exposed electrical terminals. Disconnecting this cable will help prevent personal injury and damage to the vehicle. The ignition must also be in LOCK unless otherwise noted.

TABLE OF CONTENTS

SPECIFICATIONS 1C–2
- ENGINE SPECIFICATIONS 1C–2
- FASTENER TIGHTENING SPECIFICATIONS 1C–4

SPECIAL TOOLS 1C–6
- SPECIAL TOOLS TABLE 1C–6

COMPONENT LOCATOR 1C–8
- UPPER END 1C–8
- LOWER END 1C–10

MAINTENANCE AND REPAIR 1C–12

ON–VEHICLE SERVICE 1C–12
- VALVE COVER 1C–12
- CYLINDER HEAD AND GASKET 1C–14
- CAMSHAFTS 1C–24
- TIMING BELT CHECK AND ADJUST 1C–27
- TIMING BELT 1C–31
- OIL PAN 1C–36
- OIL PUMP 1C–39
- ENGINE MOUNT 1C–44
- INTAKE MANIFOLD 1C–46
- EXHAUST MANIFOLD 1C–49
- CAMSHAFT GEARS 1C–51
- REAR TIMING BELT COVER 1C–53
- ENGINE 1C–55
- PISTONS AND RODS 1C–63

UNIT REPAIR 1C–68
- CYLINDER HEAD AND VALVE TRAIN COMPONENTS 1C–68
- CRANKSHAFT 1C–77
- CRANKSHAFT BEARINGS AND CONNECTING ROD BEARINGS – GAUGING PLASTIC 1C–88

GENERAL DESCRIPTION AND SYSTEM OPERATION 1C–91
- CYLINDER HEAD AND GASKET 1C–91
- CRANKSHAFT 1C–91
- TIMING BELT 1C–91
- OIL PUMP 1C–91
- OIL PAN 1C–91
- EXHAUST MANIFOLD 1C–91
- INTAKE MANIFOLD 1C–91
- CAMSHAFTS 1C–91

SPECIFICATIONS

ENGINE SPECIFICATIONS

Application	Description (Manual and Automatic)
General Data:	
Engine Type	4–Cylinder (in–line)
Displacement	1,998 cm^3 (121.92 in^3)
Bore Stroke	86 x 86 mm (3.38 in. x 3.38 in.)
Compression Ratio	9.6 0.2 :1
Firing Order	1–3–4–2
Cylinder Bore:	
Diameter	85.995~86.485 mm (3.3856~3.4049 in.)
Out of Round (Maximum)	0.013 mm (0.0005 in.)
Taper (Maximum)	0.013 mm (0.0005 in.)
Piston:	
Diameter	85.955–86.485 mm (3.384–3.404 in.)
Clearance to Bore	0.0100~0.0300 mm (0.00039~0.00110 in.)
Piston Protrusion	0.5 mm (0.019 in.) Maximum
Piston Taper	0.013 mm (0.0005 in.)
Piston Rings:	
Ring, End Gap, Top Compression	0.3~0.5 mm (0.011~0.019 in.)
Ring, End Gap, Second Compression	0.3~0.5 mm (0.011~0.019 in.)
Piston Pin:	
Diameter	20.9970~20.9985 mm (0.82665~0.82671 in.)
Pin Offset	0.8 mm (0.03 in.) Toward Thrust Side
Clearance: In Piston	0.0035~0.0140 mm (0.00013~0.00055 in.)
Clearance: In Rod	Interference Fit in Rod
Length	61.5 mm (2.42 in.)
Camshaft:	
Lift – Intake	10.0 mm (0.39 in.)
Lift – Exhaust	10.0 mm (0.39 in.)
End Play	0.040~0.144 mm (0.0015~0.0056 in.)
Bearing Journal OD	42.455~43.470 mm (1.6714~1.7114 in.)
Crankshaft:	
Main Journal Diameter (All)	57.974~57.995 mm (2.2824~2.2832 in.)
Out of Round (Maximum)	0.003 mm (0.0001 in.)
Main Bearing Clearance (All)	0.015–0.061 mm (0.00059~0.00239 in.)
Crankshaft End Play	0.070~0.302 mm (0.0027~0.0118 in.)
Service Oversize	Available in 2 sizes 0.25 mm and 9.50 mm (0.0098~0.0196 in.)

Application	Description (Manual and Automatic)
Connecting Rod Journal: Diameter (All)	48.981~ 48.987 mm (1.9283~1.9286 in.)
Out of Round (Maximum)	0.004 mm (0.00015 in.)
Rod Bearing Play	0.006~0.031 mm (0.00023~0.00122 in.)
Cylinder Head:	
Valve Stem Protrusion	39.2~39.8 mm (1.54~1.56 in.)
Valve Guide Height	13.7–14.0 mm (0.54~0.57 in.)
Overall Height	134~0.025 mm (5.2755~0.0009 in.)
Minimum Overall Height After Machining	133.9 mm (5.27 in.)
Valve System:	
Valve Lash Compensators	Hydraulic
Seat Runout (Maximum, All)	0.03 mm (0.00118 in.)
Face Runout (Maximum, All)	0.03 mm (0.00118 in.)
Valve Stem Diameter Intake	6.998~7.012 mm (0.2755~0.2760 in.)
Exhaust	6.078~6.992 mm (0.2747~0.2752 in.)
Valve Diameter Intake	32 0.1 mm (1.2598 0.0039 in.)
Exhaust	29 0.1 mm (1.1417 0.0039 in.)
Valve Seat Width Intake	1.0~1.5 mm (0.039~0.059 in.)
Exhaust	1.7~2.2 mm (0.066~0.086 in.)
Valve Face Angle	44˚~40˚
Valve Guide Inside Diameter	6.000~6.012 mm (0.236~0.237 in.)
Oil Pump:	
Gear Lash	0.10~0.20 mm (0.003~0.007 in.)
Outer Gear to Body	0.11~0.19 mm (0.004~0.007 in.)
Outer Gear to Crescent	0.40~0.50 mm (0.015~0.019 in.)
Inner Gear to Crescent	0.35~0.40 mm (0.013~0.015 in.)
End Clearance	0.030~0.10 mm (0.001~0.003 in.)
Sealants and Adhesives:	
Rear Main Bearing Cap	GE p/n RTV 159
Camshaft Carrier to Cylinder Head	HN 1581 (Loctite® 515)
Oil Pan Bolts	HN 1256 (Loctite® 242)
Oil Pump Bolts	HN 1256 (Loctite® 242)
Oil Pan Pickup Tube Bolts	HN 1256 (Loctite® 242)
Oil Gallery Plug	HN 1256 (Loctite® 242)
Coolant Jacket Caps and Plugs (Freeze Plugs)	HN 1756 (Loctite® 176)
Exhaust Manifold Studs/Nuts	Anti–seize Compound (HMC Spec HN1325)

FASTENER TIGHTENING SPECIFICATIONS

Application	N•m	Lb–Ft	Lb–In
A/C Compressor Hose Assembly Bolt	33	24	–
Air Filter Housing Bolts	10	–	89
Automatic Tensioner Bolt	25	18	–
Auxiliary Catalytic Converter–to–Exhaust Manifold Nuts	40	30	–
Camshaft Bearing Cap Bolts, Intake and Exhaust	8	–	71
Camshaft Gear Bolt, Intake and Exhaust	50 + 60˚+ 15˚	37 + 60˚+ 15˚	–
Camshaft Position Sensor Bolts	12	–	106
Connecting Rod Cap Bolts	36 + 45˚+ 15˚	26 + 45˚+ 15˚	–
Coolant Bypass Housing and Mounting Bolts	15	11	–
Coolant Pump Retaining Bolts	25	18	–
Coolant Temperature Sensor	25	18	–
Crankshaft Bearing Cap Bolts	50 + 45˚ + 15˚	37 + 45˚ + 15˚	–
Crankshaft Position Sensor Retaining Bolt	8	–	71
Crankshaft Pulley Bolts	20	15	–
Crankshaft Timing Belt Drive Gear Bolt	135+ 30˚ +10˚	100+ 30˚ +10˚	–
Cylinder Head Bolts	25 + 90˚ +90˚ + 90˚	18 + 90˚ +90˚ + 90˚	–
EI System Ignition Coil and EGR Mounting Bracket Bolts	25	18	–
Engine Block Lower Support Bracket/Splash Shield Bolts	35	26	–
Engine Mount Bracket Retaining Bolts and Nuts	55	41	–
Engine Mount Bracket–to–Engine Mount Retaining Bolts	60	44	–
Engine Mount Retaining Bolts	60	44	–
Engine–to–Intake Manifold Support Bracket Bolts	20	15	–
Evaporative Emission Canister Purge Solenoid Bracket Bolt	5	–	44
Exhaust Gas Recirculation Valve Bolts	20	15	–
Exhaust Manifold Heat Shield Bolts	8	–	71
Exhaust Manifold Retaining Nuts	15	11	–
Exhaust Pipe Support Bracket Bolts	40	30	–
Flexible Plate Bolts	65	48	–
Flywheel Bolts	65 + 30˚ + 15˚	48 + 30˚ + 15˚	–
Front Muffler Pipe–to–Main Catalytic Converter Nuts	30	22	–
Fuel Rail Retaining Bolts	25	18	–
Front Timing Belt Cover Bolts, Upper and Lower	6	–	53
Generator–to–Intake Manifold and Cylinder Head Support Bracket Bolts	37	27	–
Generator–to–Intake Manifold Strap Bracket Bolt, Upper and Lower	22	16	–
Generator–to–Intake Manifold Support Bracket Bolts	35	26	–
Ignition Coil Mounting Bolts	10	–	89
Intake Manifold Retaining Nuts and Bolts	18	13	–
Intake Manifold Support Bracket Bolts	20	15	–

Application	N•m	Lb–Ft	Lb–In
Lower Block Support Bracket Bolts	35	26	–
Oil Pan Drain Plug	35	26	–
Oil Pan Flange–to–Transaxle Retaining Bolts	40	30	–
Oil Pan Retaining Bolts	10	–	89
Oil Pressure Switch	40	30	–
Oil Pump Bolts	10	–	89
Oil Pump Rear Cover Bolts	6	–	53
Oil Pump/Pick–up Tube Bolts	10	–	89
Oil Pump Retaining Bolts	10	–	89
Pulse Pick–up Sensor Disc	13	–	115
Rear Timing Belt Cover Bolts	7	–	62
Safety Relief Valve Bolt	30	22	–
Spark Plug Cover Bolts	8	–	71
Spark Plugs	20	15	–
Support Bracket Bolts	40	30	–
Thermostat Housing Mounting Bolts	15	11	–
Throttle Cable Bracket Bolts	8	–	71
Timing Belt Automatic Tensioner Bolt	25	18	–
Timing Belt Idler Pulley Bolt	25	18	–
Timing Belt Idler Pulley Nut	25	18	–
Transmission/Transaxle Bell Housing Bolts	75	55	–
Transmission/Transaxle Torque Converter Bolts	60	44	–
Valve Cover Bolts	8	–	71

SPECIAL TOOLS

SPECIAL TOOLS TABLE

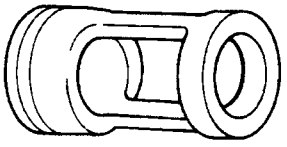 A102C153	KM–653 Adapter	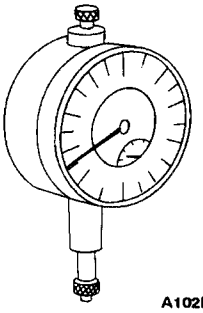 A102B154	MKM–571–B Gauge
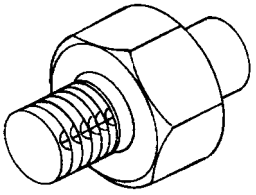 B102C044	KM–135 Adapter	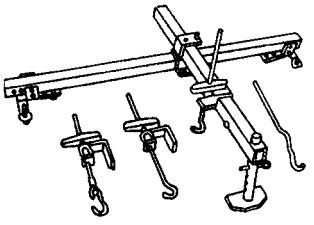 A102B152	J–28467–B Engine Assembly Lift Support
A102C154	KM–805 Valve Guide Reamer	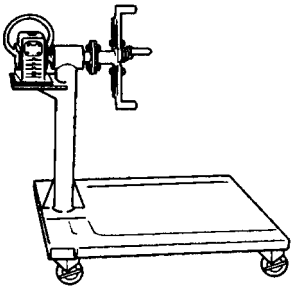 A102B159	KM–412 Engine Overhaul Stand
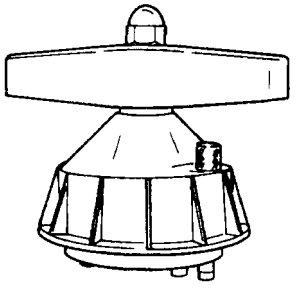 A102C155	J–36792 Crankshaft Rear Oil Seal Installer	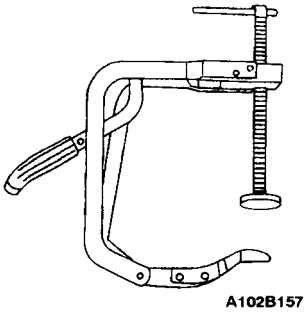 A102B157	KM–348 Spring Compressor

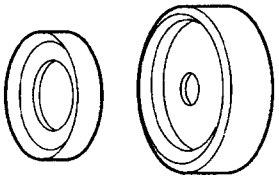 A102B160	KM–635 Crankshaft Rear Oil Seal Installer
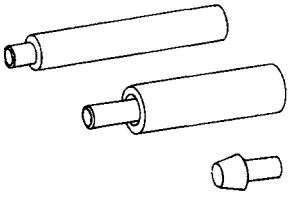 A102B153	KM–427 Piston Pin Service Set
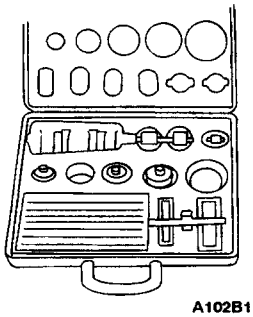 A102B156	KM–340–0 Cutter Set Includes: KM–340–7 Guide Drift KM–340–13 Cutters KM–340–26 Cutters

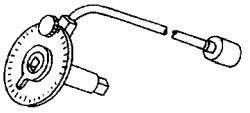 A102B161	KM–470–B Angular Torque Gauge
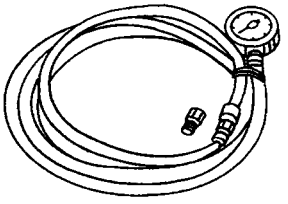 A202B005	KM–498–B Pressure Gauge

COMPONENT LOCATOR

UPPER END

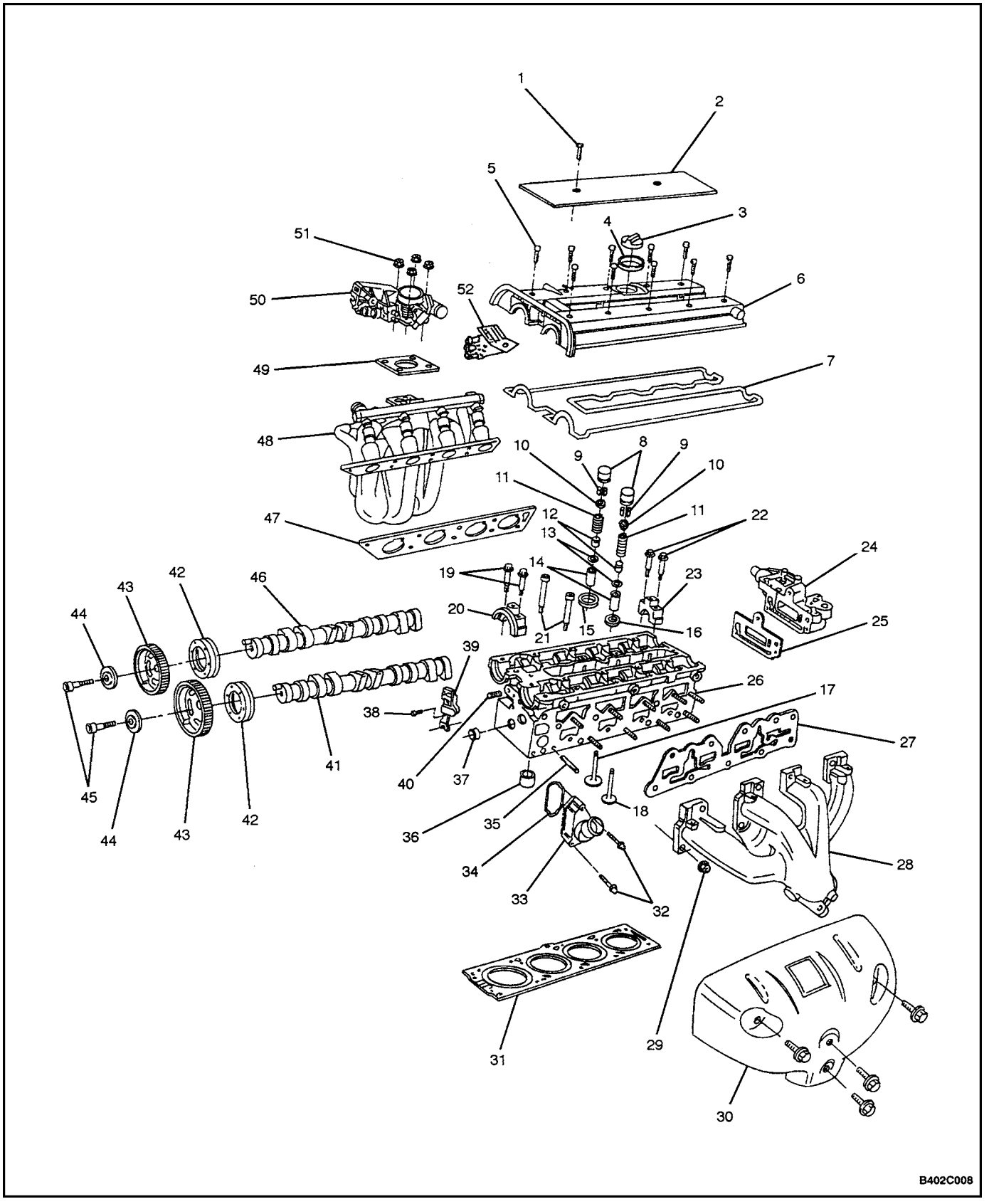

1. Bolt
2. Spark Plug Cover
3. Oil Cap
4. Oil Cap Seal
5. Bolt
6. Valve Cover
7. Valve Cover Gasket
8. Value Lash Adjuster
9. Retainer
10. Valve Cab
11. Valve Spring
12. Valve Stem Seal
13. Valve Spring Seat
14. Valve Guide
15. Valve Spring Seat
16. Exhaust Seat
17. Intake Valve
18. Exhaust Valve
19. Bolt
20. Front Bearing Cap
21. Head Bolt
22. Bolt
23. Bearing Cap
24. EGR Adapter
25. EGR Adapter Gasket
26. Cylinder Head
27. Exhaust Manifold Gasket
28. Exhaust Manifold
29. Nut
30. Exhaust Manifold Heat Shield
31. Cylinder Head Gasket
32. Bolt
33. Thermostat Housing
34. Thermostat Housing Gasket
35. Stud
36. Sleeve
37. Plug
38. Bolt
39. Camshaft Position Sensor
40. Oil Gallery Plug
41. Exhaust Camshaft
42. Oil Seal Ring
43. Camshaft Gear
44. Washer
45. Camshaft Gear Bolt
46. Intake Camshaft
47. Intake Manifold Gasket
48. Intake Manifold
49. Throttle Body Gasket
50. Throttle Body
51. Nut
52. Exhaust Gas Recirculation Solenoid

LOWER END

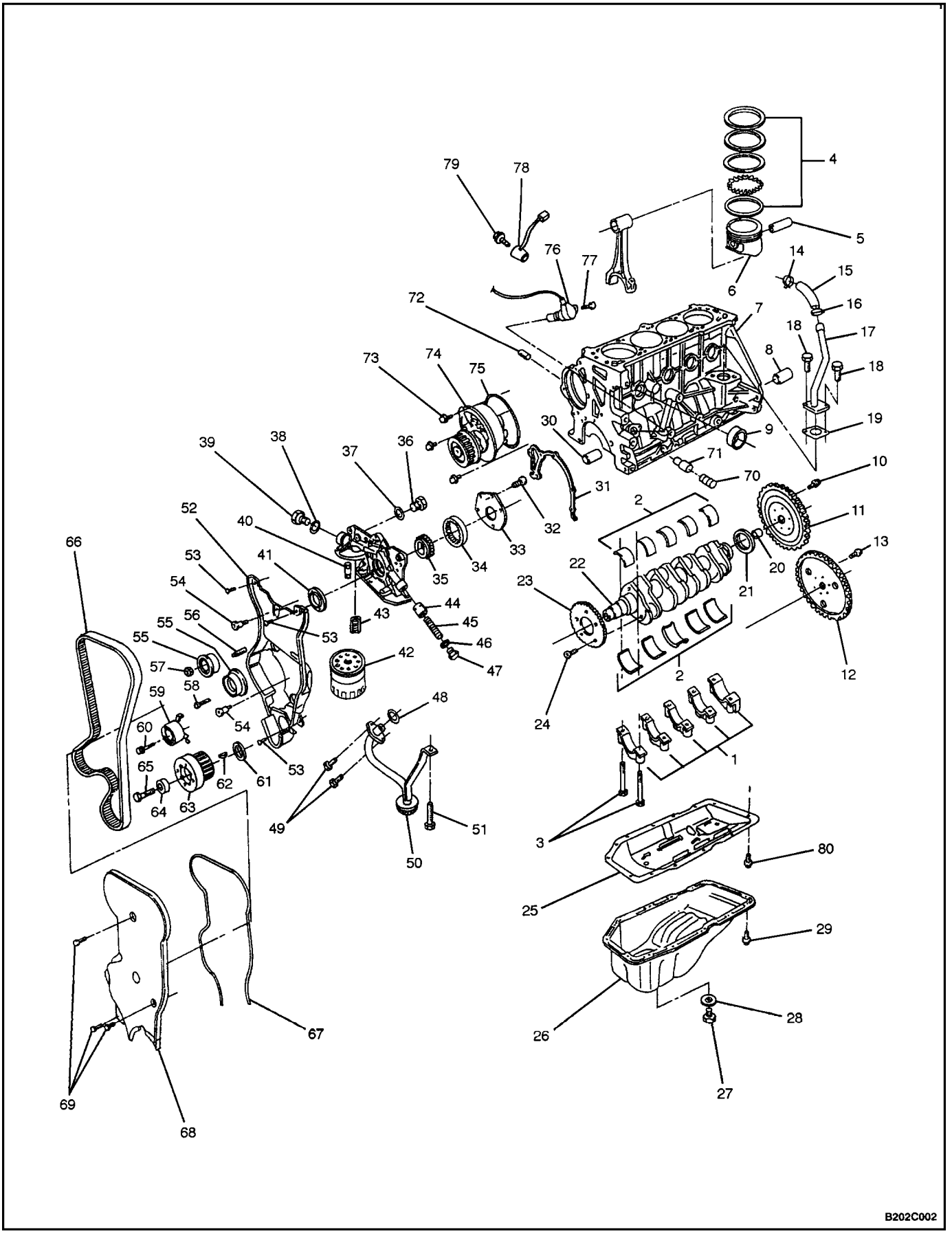

1. Connecting Rod
2. Bearing
3. Connecting Rod Bolt
4. Piston Ring Set
5. Piston Pin
6. Piston
7. Engine Block
8. Sleeve
9. Water Jacket Cap
10. Bolt (Manual Transaxle)
11. Flywheel (Manual Transaxle)
12. Flexible Plate (Automatic Transaxle)
13. Bolt (Automatic Transaxle)
14. Clamp
15. Hose
16. Clamp
17. Engine Vent Pipe
18. Bolt
19. Gasket
20. Transaxle Input Shaft Bearing
21. Rear Main Seal
22. Crankshaft
23. Ignition Transmitter Disk
24. Bolt
25. Splash Pan
26. Oil Pan
27. Drain Plug
28. Seal Ring
29. Bolt
30. Sleeve
31. Gasket
32. Bolt
33. Oil Pump Cover
34. Ring Gear
35. Gear
36. Plug
37. Washer
38. Washer
39. Bypass Valve Plug
40. Special Screw
41. Seal
42. Oil Filter
43. Bypass Valve
44. Pressure Relief Valve Plunger
45. Pressure Relief Valve Spring
46. Washer
47. Pressure Relief Valve Plug
48. Ring Seal
49. Bolt
50. Oil Suction Pipe
51. Bolt
52. Rear Timing Belt Cover
53. Bolt
54. Special Bolt
55. Idler Pulley
56. Stud
57. Nut
58. Bolt
59. Tensioner
60. Bolt
61. Thrust Inner Washer
62. Woodruff Key
63. Crankshaft Gear
64. Thrust Outer Washer
65. Bolt
66. Camshaft Drive Belt
67. Seal
68. Front Timing Belt Cover
69. Bolt
70. Bushing Plug
71. Bushing
72. Oil Gallery Plug
73. Bolt
74. Water Pump
75. Seal Ring
76. Crankshaft Revolution Sensor
77. Bolt
78. Knock Sensor
79. Bolt
80. Bolt

SCHEMATIC AND ROUTING DIAGRAMS

PCM/ECM WIRING DIAGRAM (1 OF 6)
(IPCM–6KD/ISFI–6TD)

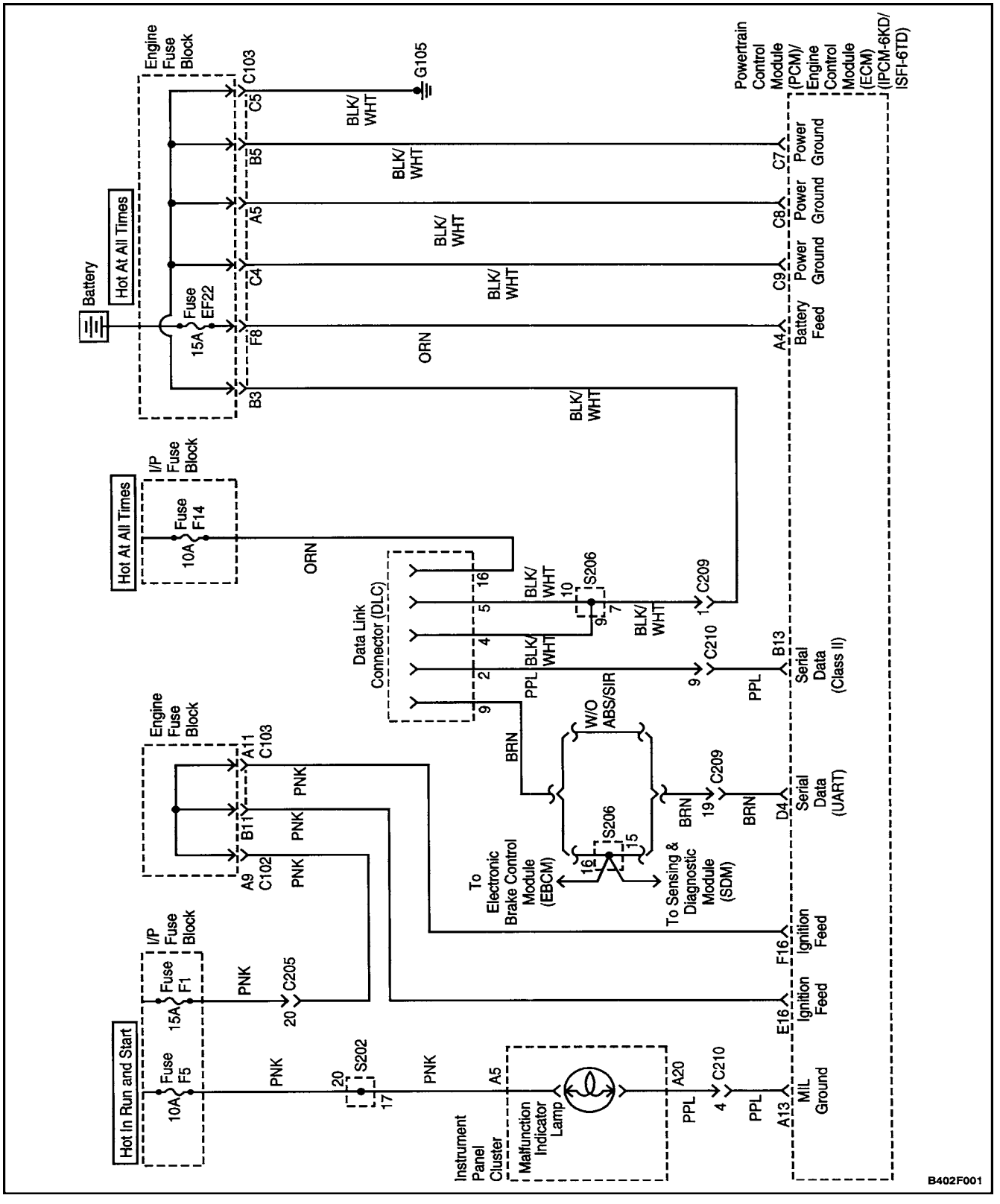

PCM/ECM WIRING DIAGRAM (2 OF 6)
(IPCM–6KD/ISFI–6TD)

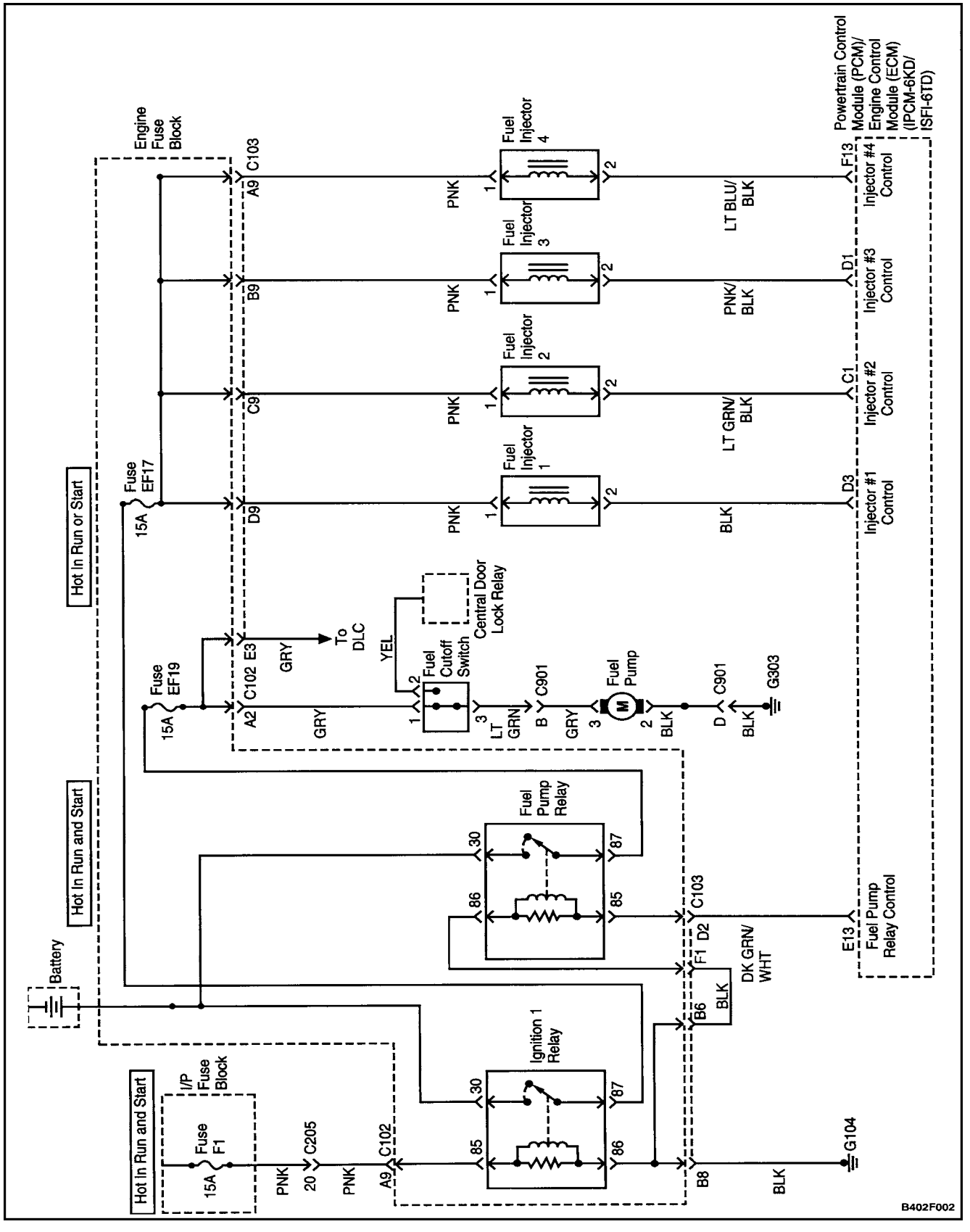

PCM/ECM WIRING DIAGRAM (3 OF 6)
(IPCM–6KD/ISFI–6TD)

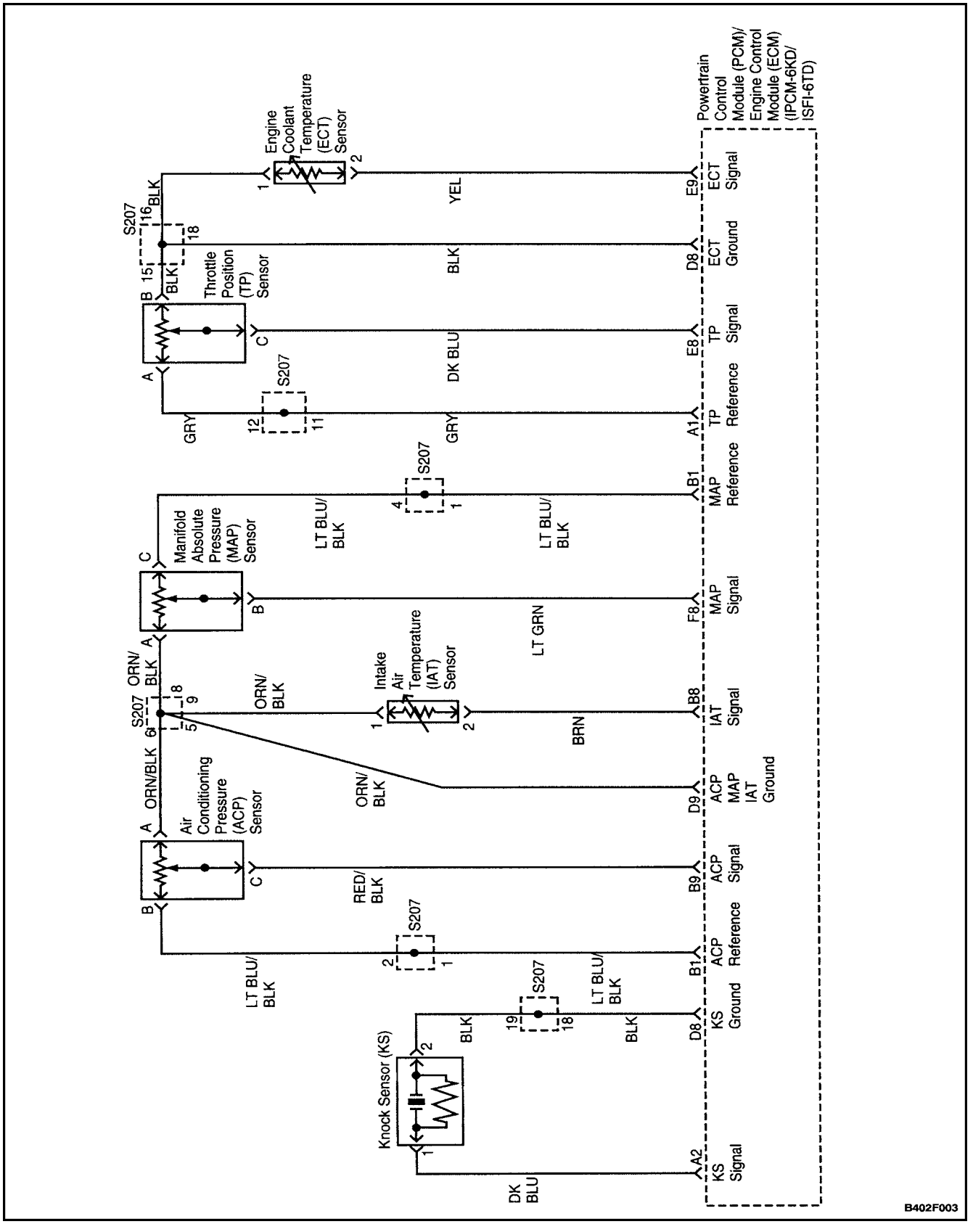

PCM/ECM WIRING DIAGRAM (4 OF 6)
(IPCM–6KD/ISFI–6TD)

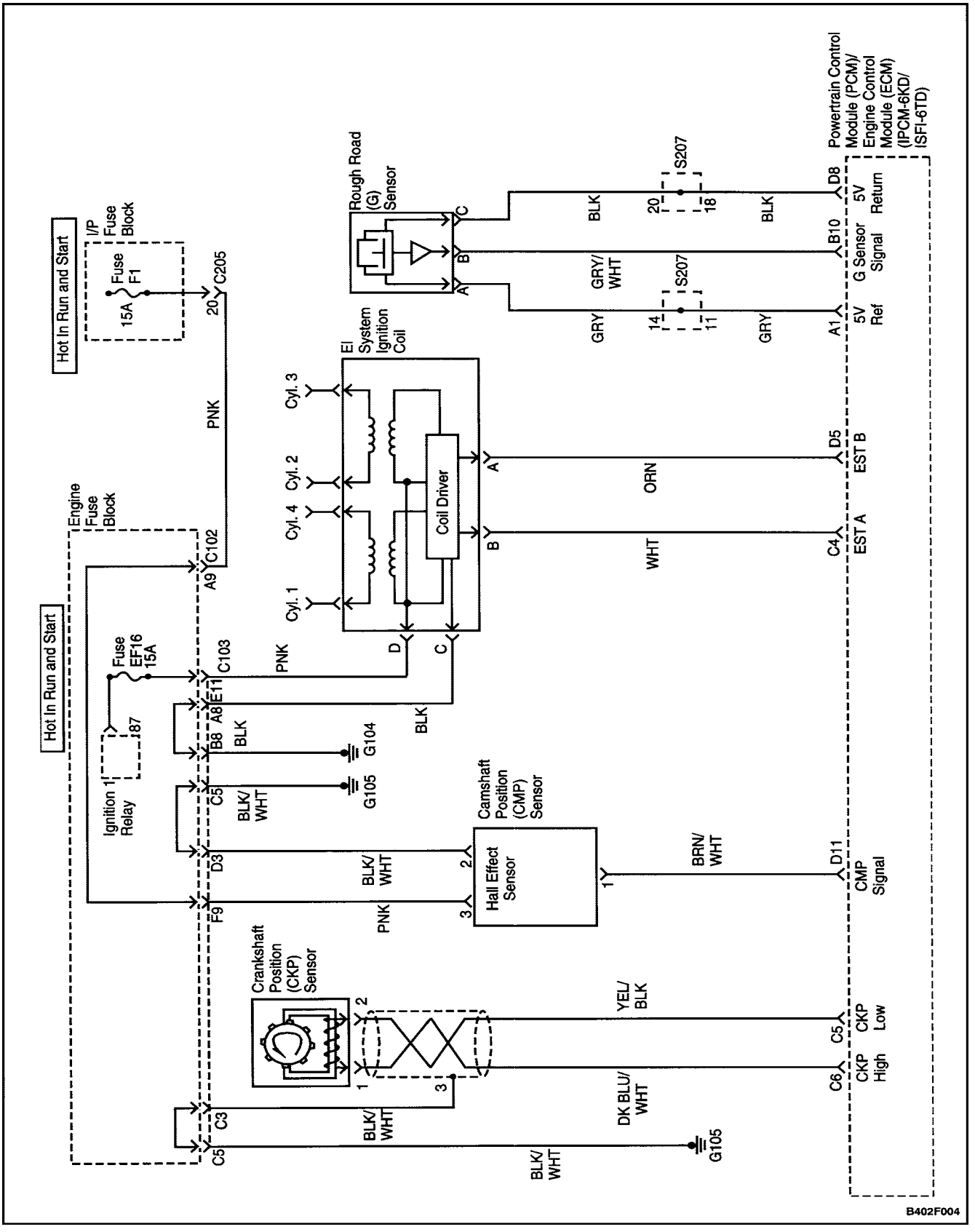

PCM/ECM WIRING DIAGRAM (5 OF 6)
(IPCM–6KD/ISFI–6TD)

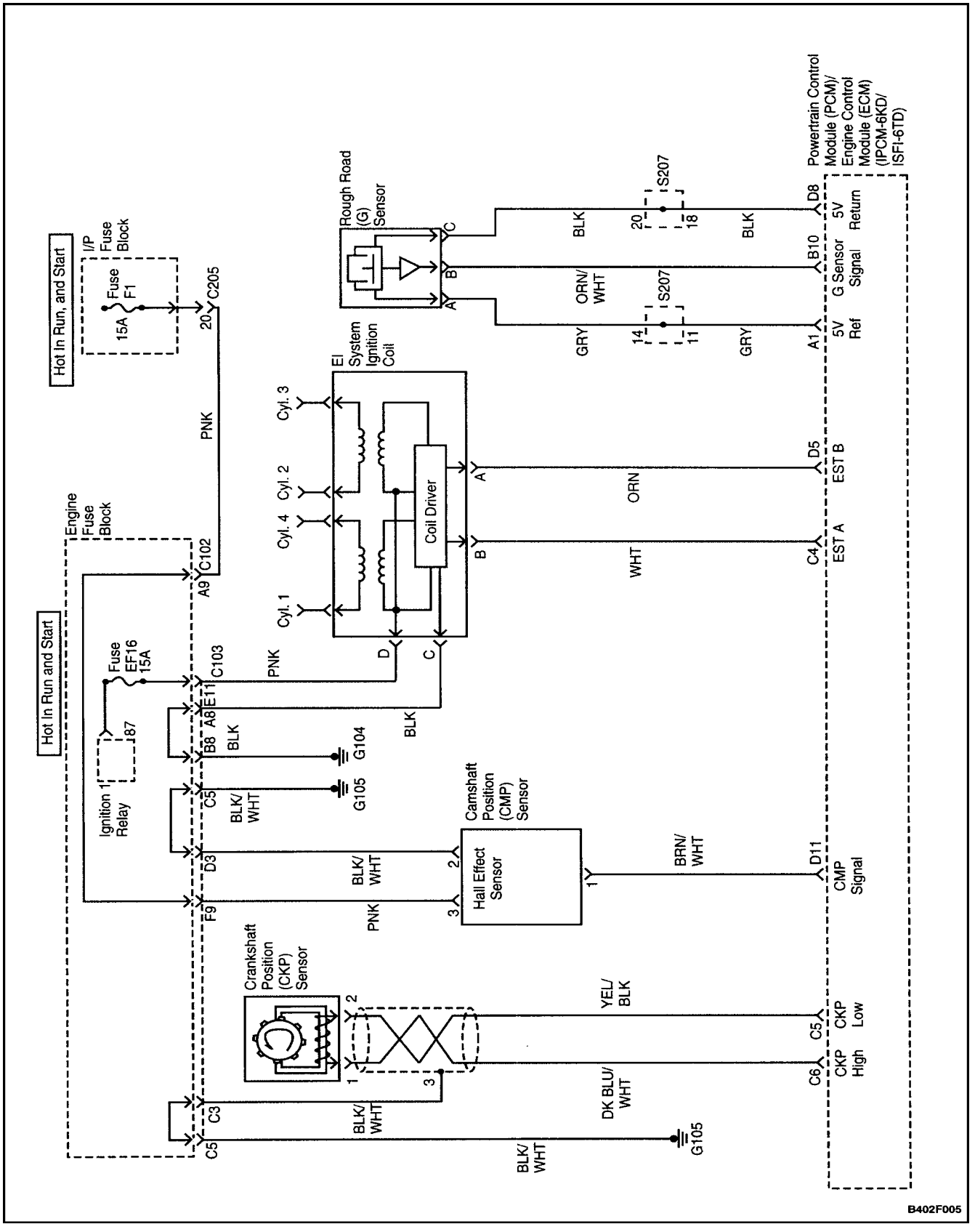

PCM/ECM WIRING DIAGRAM (6 OF 6)
(IPCM–6KD/ISFI–6TD)

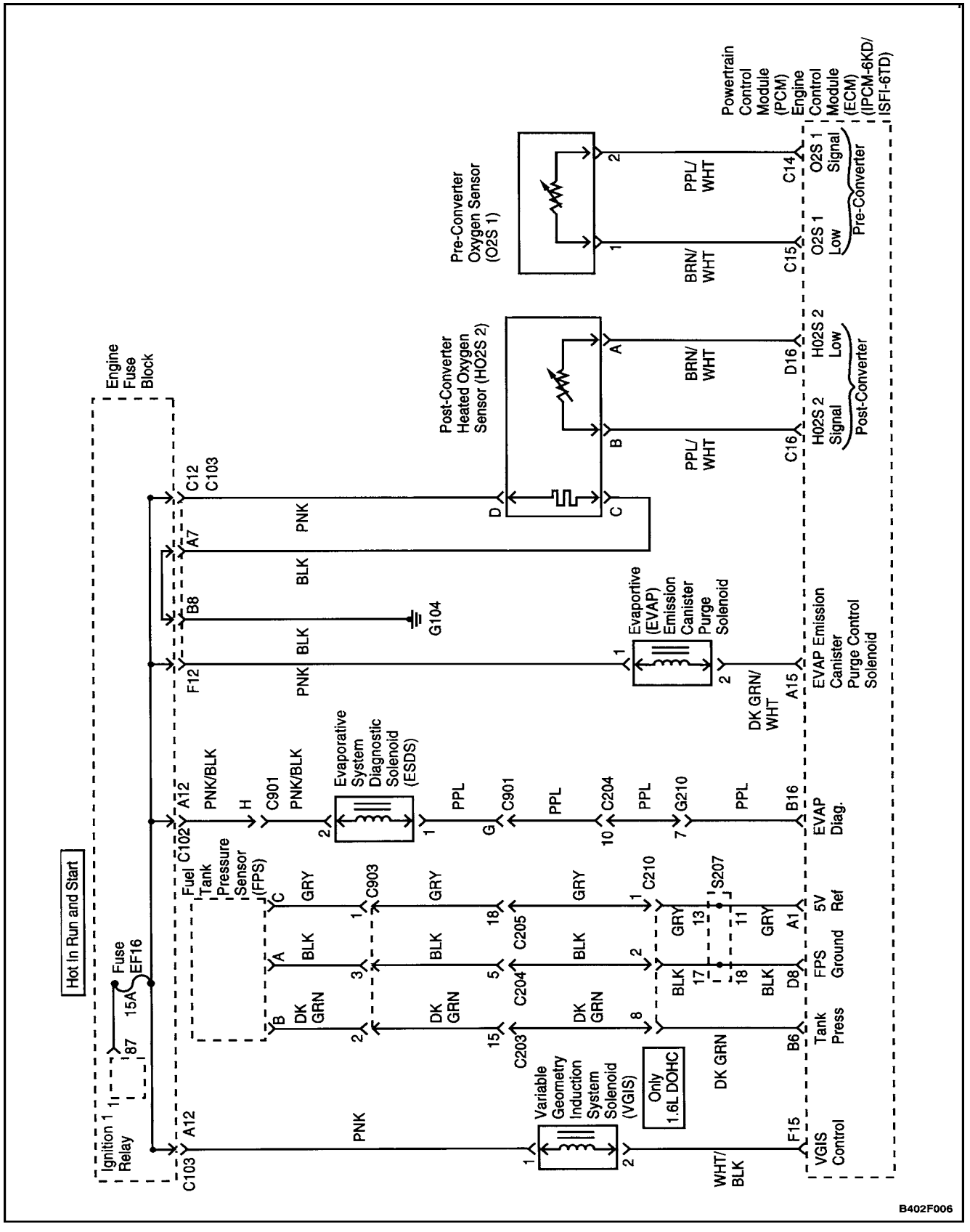

CONNECTOR END VIEW

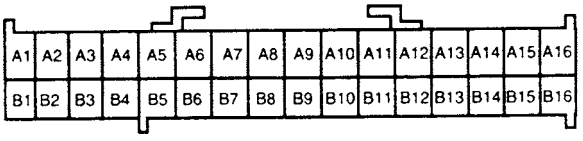

Powertrain Control Module (PCM)/
Engine Control Module (ECM)
Connector 1 (Red)

A402F014

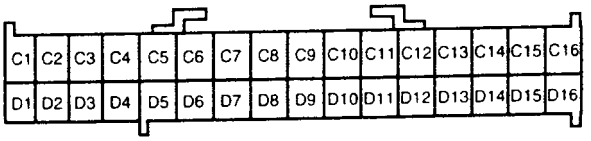

Powertrain Control Module (PCM)/
Engine Control Module (ECM)
Connector 2 (White)

A402F015

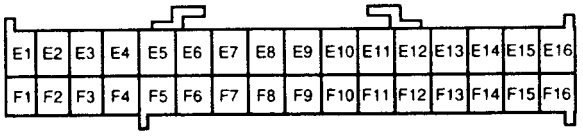

Powertrain Control Module (PCM)/
Engine Control Module (ECM)
Connector 3 (Blue)

A402F016

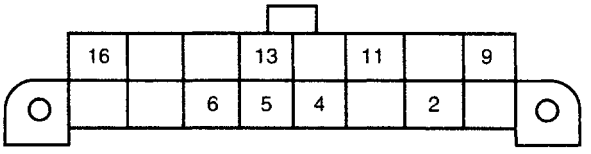

Data Link
Connector (DLC)

A402F050

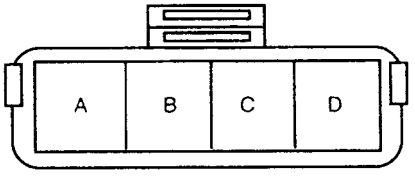

Electronic Ignition (EI) System
Ignition Coil
Connector

A402F080

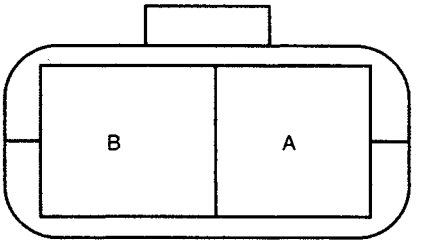

Engine Coolant Temperature (ECT)
Sensor Connector

A402F081

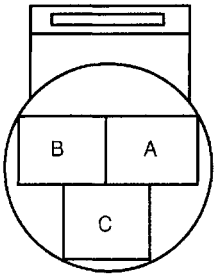

Air Conditioning(A/C)
Pressure Sensor
Connector

A102F088

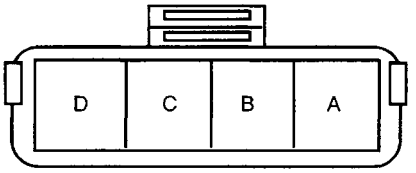

Idle Air Control (IAC) Valve
Connector

A102F076

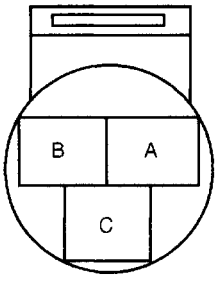

Throttle Position (TP)
Sensor Connector

A102F074

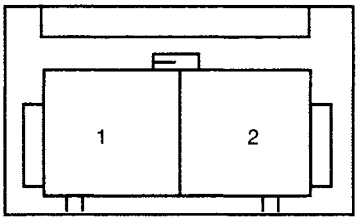

Intake Air
Temperature (IAT) Sensor
Connector

A402F017

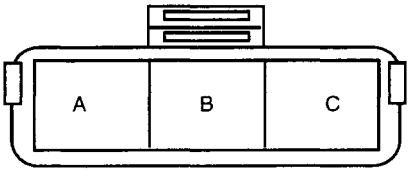

Vehicle Speed
Sensor (VSS) (M/T)
Connector

A102F086

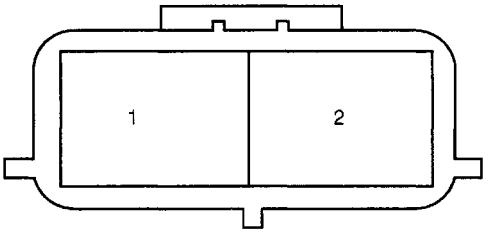

Evaporative Emission (EVAP)
Canister Purge (CCP)
Solenoid Connector

A102F078

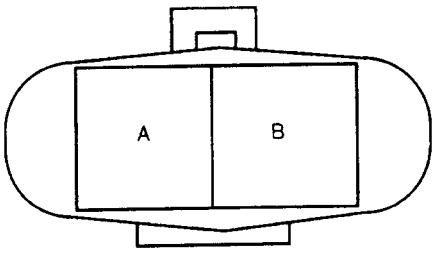

Cooling Fan
Connector

A102F089

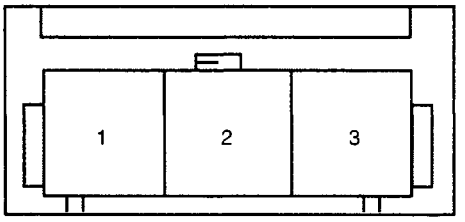

Crankshaft Position
(CKP) Sensor Connector

A402F020

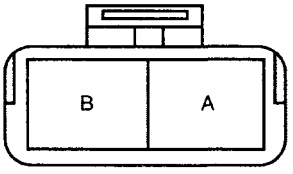

Automatic Transaxle
Vehicle Speed
Sensor (A/T VSS)
Connector

A402F019

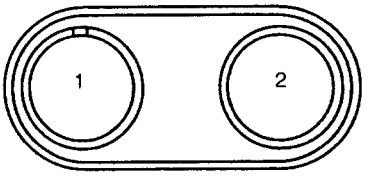

Pre-Converter Oxygen
Sensor (O2S 1)
Connector

B402F008

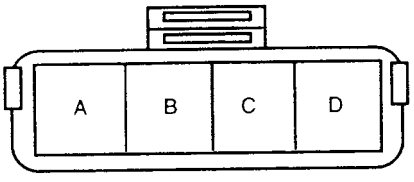

Post- Converter Heated
Oxygen Sensor (HO2S 2)
Connector

A402F022

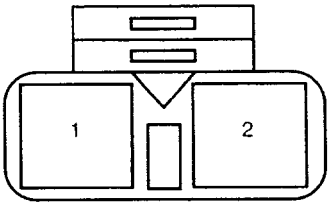

Evaporative System
Diagnostic Solenoid (ESDS)
Connector

B402F051

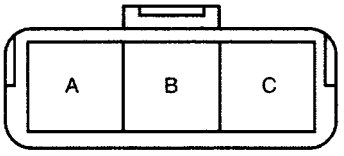

Fuel Tank Pressure
Sensor Connector

A402F025

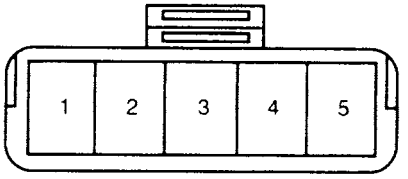

Exhaust Gas Recirculation
(EGR) Value
Connector

A402F027

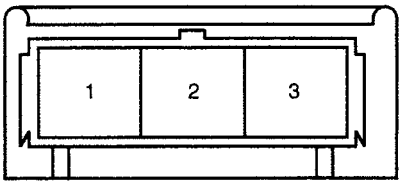

Camshaft Position
(CMP) Sensor Connector

B402F009

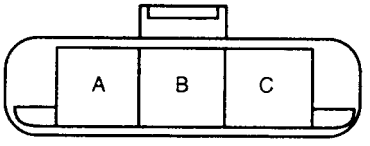

Rough Road (G)
Sensor (RRS) Connector

B402F052

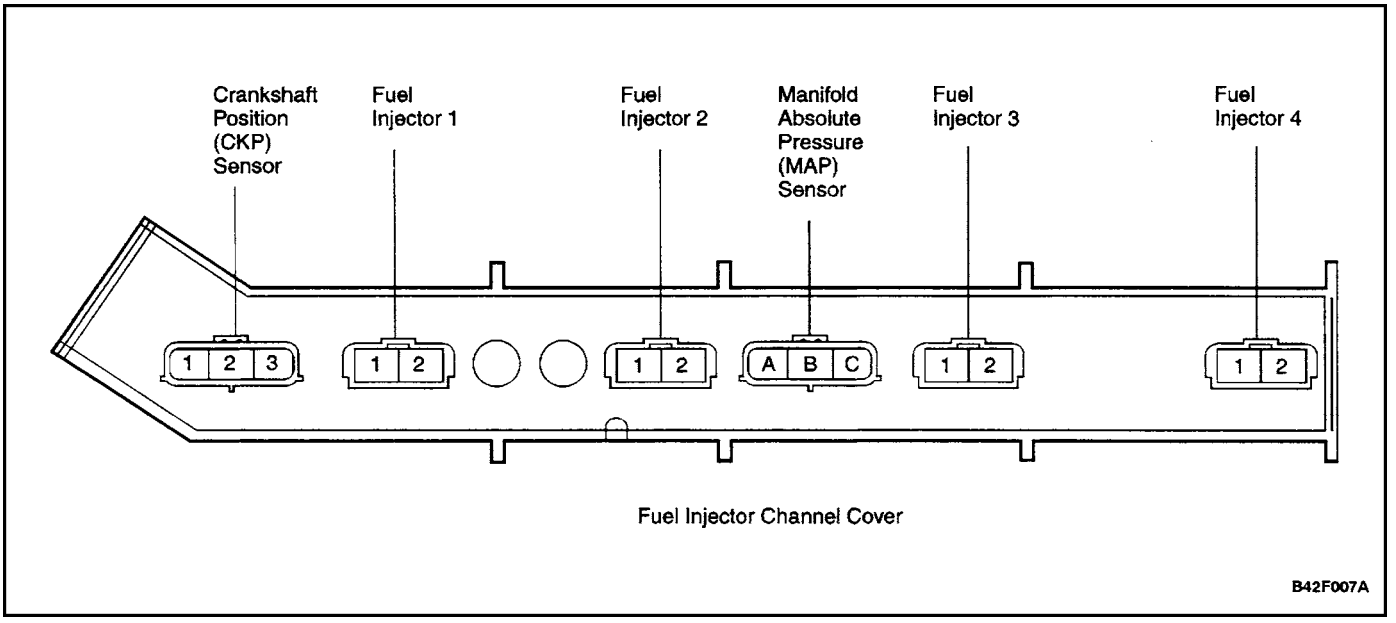
Crankshaft Position (CKP) Sensor
Fuel Injector 1
Fuel Injector 2
Manifold Absolute Pressure (MAP) Sensor
Fuel Injector 3
Fuel Injector 4
1 2 3
1 2
1 2
A B C
1 2
1 2
Fuel Injector Channel Cover
B42F007A

COMPONENT LOCATOR

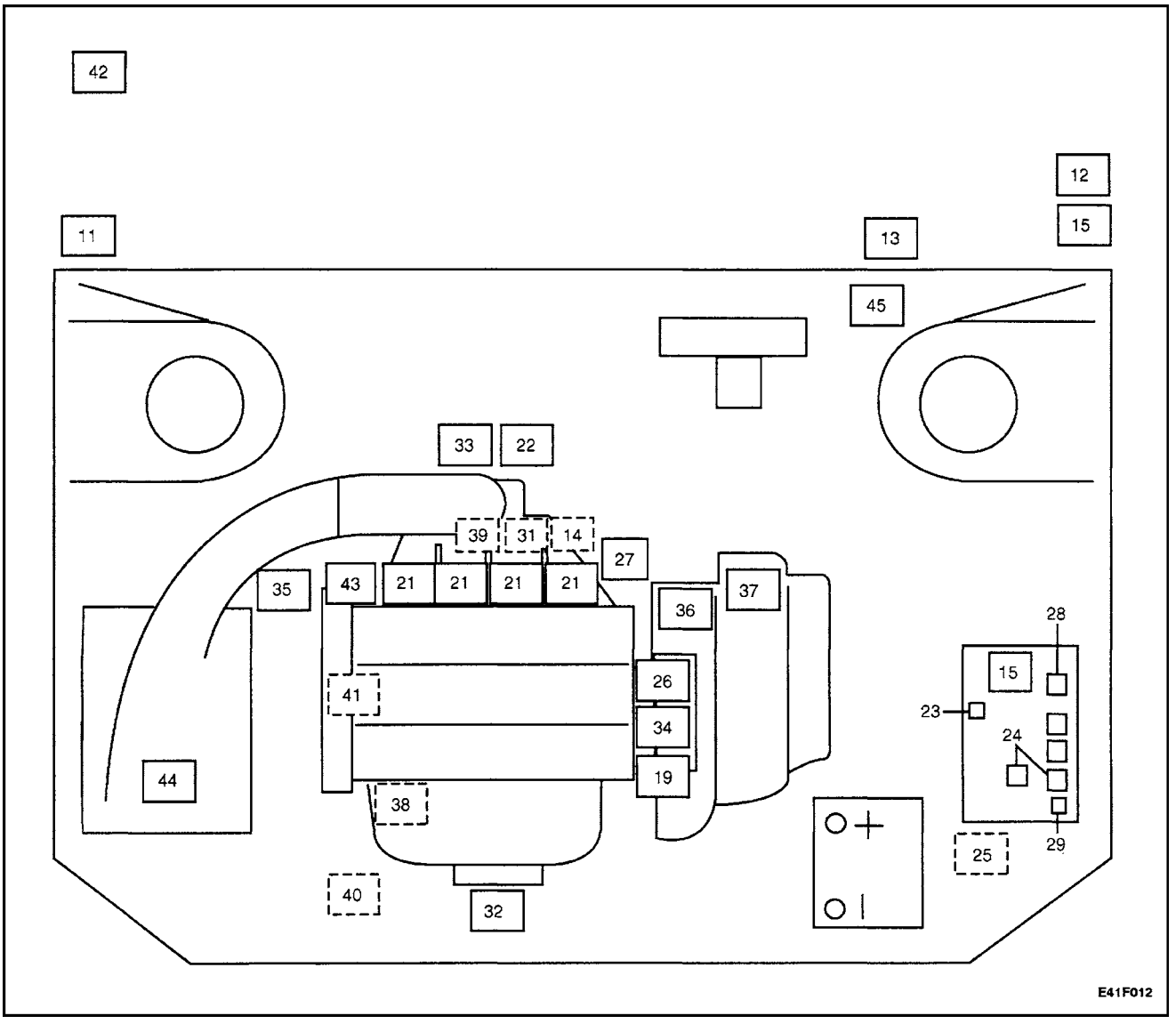

Components on PCM/ECM Harness

11. Powertrain Control Module (PCM)/Engine Control Module (ECM)
12. Data Link Connector (DLC)
13. Service Reminder Indicator Lamp/Malfunction Indicator Lamp
14. PCM/ECM/ABS Harness Ground
15. Fuse Panel (2)

PCM/ECM Controlled Devices

19. Exhaust Gas Recirculation (EGR) Valve
21. Fuel Injector (4)
22. Idle Air Control (IAC) Valve
23. Fuel Pump Relay
24. Cooling Fan Relays
25. Series/Parallel Cooling Fan Relay (A/C Only)
26. Electronic Ignition (EI) System Ignition Coil
27. Evaporative Emission (EVAP) Controlled Canister Purge Solenoid
28. Ignition 1 Relay
29. A/C Compressor Relay
30. Variable Geometry Induction System (VGIS)

Information Sensors

31. Manifold Absolute Pressure (MAP) Sensor
32. Pre–Converter Oxygen Sensor (O2S 1)
33. Throttle Position (TP) Sensor
34. Engine Coolant Temperature (ECT) Sensor
35. Intake Air Temperature (IAT) Sensor
36. Vehicle Speed Sensor (VSS)
37. P/N Position Switch (Automatic Transaxle only)
38. Crankshaft Position (CKP) Sensor
39. Knock Sensor
40. Post–Converter Oxygen (HO2S 2) Sensor
41. Camshaft Position (CMP) Sensor

PCM/Not ECM Connected

42. Evaporative Emission Canister (under vehicle, behind right rear wheel)
43. Oil Pressure Switch
44. Air Cleaner

DIAGNOSIS

SYSTEM DIAGNOSIS

DIAGNOSTIC AIDS

If an intermittent problem is evident, follow the guidelines below.

Preliminary Checks

Before using this section you should have already performed the ”On–Board Diagnostic System Check.”

Perform a thorough visual inspection. This inspection can often lead to correcting a problem without further checks and can save valuable time. Inspect for the following conditions:

- Powertrain control module (PCM)/engine control module (PCM/ECM) grounds for being clean, tight, and in their proper location.
- Vacuum hoses for splits, kinks, collapsing and proper connections as shown on the Vehicle Emission Control Information label. Inspect thoroughly for any type of leak or restriction.
- Air leaks at the throttle body mounting area and the intake manifold sealing surfaces.
- Ignition wires for cracks, hardness, proper routing, and carbon tracking.
- Wiring for proper connections.
- Wiring for pinches or cuts.

Diagnostic Trouble Code Tables

Do not use the diagnostic trouble code (DTC) tables to try to correct an intermittent fault. The fault must be present to locate the problem.

Incorrect use of the DTC tables may result in the unnecessary replacement of parts.

Faulty Electrical Connections or Wiring

Most intermittent problems are caused by faulty electrical connections or wiring. Perform a careful inspection of suspect circuits for the following:

- Poor mating of the connector halves.
- Terminals not fully seated in the connector body.
- Improperly formed or damaged terminals. All connector terminals in a problem circuit should be carefully inspected, reformed, or replaced to insure contact tension.
- Poor terminal–to–wire connection. This requires removing the terminal from the connector body.

Road Test

If a visual inspection does not find the cause of the problem, the vehicle can be driven with a voltmeter or a scan tool connected to a suspected circuit. An abnormal voltage or scan tool reading will indicate that the problem is in that circuit.

If there are no wiring or connector problems found and a DTC was stored for a circuit having a sensor, except for DTC P0171 and DTC P0172, replace the sensor.

Intermittent Service Reminder Indicator (SRI) Lamp

An intermittent service reminder indicator (SRI) lamp with no DTC present may be caused by the following:

- Electrical system interference caused by a defective relay, PCM/ECM driven solenoid, or switch.
- Improper installation of electrical options such as lights, two–way radios, sound systems, or security systems.
- Ignition control wires should be routed away from ignition wires, ignition system components, and the generator.
- Ignition secondary wires shorted to ground.
- SRI lamp driver wire or diagnostic test terminal intermittently shorted to ground.
- Intermittent lose of PCM/ECM ground connections.

Fuel System

Some intermittent driveability problems can be attributed to poor fuel quality. If a vehicle is occasionally running rough, stalling, or otherwise performing badly, ask the customer about the following fuel buying habits:

- Do they always buy from the same source? If so, fuel quality problems can usually be discounted.
- Do they buy their fuel from whichever fuel station that is advertising the lowest price? If so, check the fuel tank forsigns of debris, water, orothercontamination.

IDLE LEARN PROCEDURE

Whenever the battery cables, the powetrain control module (PCM)/engine control module (PCM/ECM), or the PCM/ECM fuse is disconnected or replaced, the following idle learn procedure must be performed:

1. Turn the ignition ON for 5 seconds.
2. Turn the ignition OFF for 5 seconds.
3. Turn the ignition ON for 5 seconds.
4. Start the engine in park/neutral.
5. Allow the engine run until the engine coolant is above 85˚C (185˚F).
6. Turn the A/C ON for 10 seconds, if equipped.
7. Turn the A/C OFF for 10 seconds, if equipped.
8. If the vehicle is equipped with an automatic transaxle, apply the parking brake. While pressing the brake pedal, place the transaxle in D (drive).
9. Turn the A/C ON for 10 seconds, if equipped.
10. Turn the A/C OFF for 10 seconds, if equipped.
11. Turn the ignition OFF. The idle learn procedure is complete.

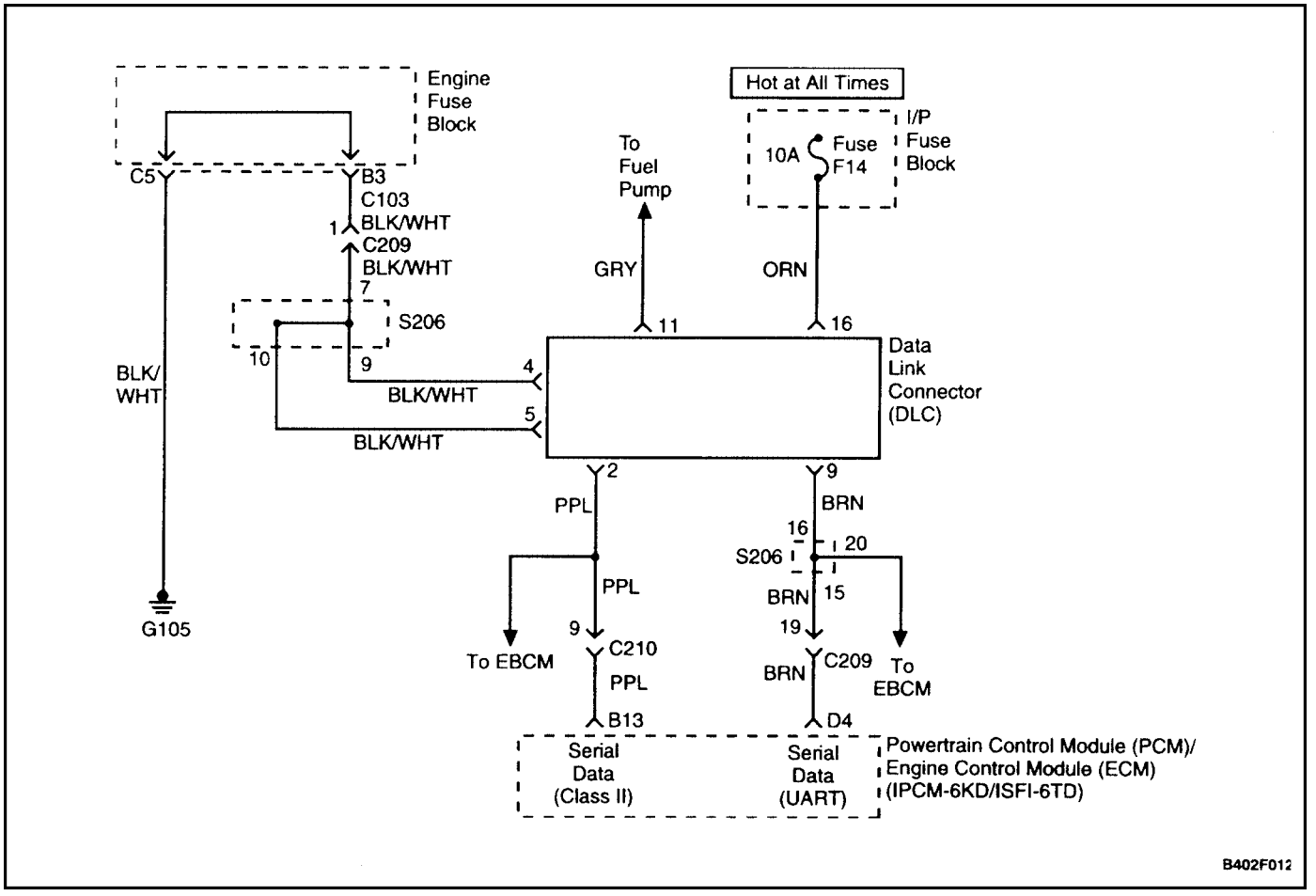

ON–BOARD DIAGNOSTIC (OBD II) SYSTEM CHECK

Circuit Description

The On–Board Diagnostic (OBD II) System Check is the starting point for any driveability complaint diagnosis. Before using this procedure, perform a careful visual/physical check of the powertrain control module (PCM)/engine control module (ECM) and the engine grounds for cleanliness and tightness.

The OBD II System Check is an organized approach to identifying a problem created by an electronic engine control system malfunction.

Diagnostic Aids

An intermittent may be caused by a poor connection, rubbed–through wire insulation or a wire broken inside the insulation. Check for poor connections or a damaged harness. Inspect the PCM/ECM harness and connections for improper mating, broken locks, improperly formed or damaged terminals, poor terminal–to–wire connection, and damaged harness.

Test Description

Numbers below refer to the step number on the Diagnostic Chart:

1. The Malfunction Indicator Lamp (MIL) should be ON steady with the ignition ON and the engine OFF. If not, go to ”Diagnostic Aids”.
2. Checks the Class 2 data circuit and ensures that the PCM/ECM is able to transmit serial data.
3. This test ensures that the PCM/ECM is capable of controlling the MIL and the MIL driver circuit is not shorted to ground.
4. If the engine will not start, refer to ”Engine Cranks But Will Not Run” in this section.
7. A scan tool parameter which is not within the typical range may help to isolate the area which is causing the problem.
10. This vehicle is equipped with a PCM/ECM which utilizes an electrically erasable programmable read only memory (EEPROM). The replacement PCM/ECM must be programmed. Refer to the latest Techline procedure for PCM/ECM reprogramming.

On–Board Diagnostic (OBD II) System Check

Step	Action	Value(s)	Yes	No
1	1. Ignition ON, engine OFF. 2. Observe the malfunction indicator lamp (MIL) Is the MIL on?		Go to *Step 2*	Go to ”No Malfunction Indicator Lamp”
2	1. Ignition OFF. 2. Install the scan tool. 3. Ignition ON. 4. Attempt to display the powertrain control module (PCM)/engine control module (ECM) engine data with the scan tool. Does the scan tool display the PCM/ECM engine data?		Go to *Step 3*	Go to *Step 8*
3	1. Using the scan tool output test function, select MIL dash lamp control and command the MIL OFF. 2. Observe the MIL. Does the MIL turn OFF?		Go to *Step 4*	Go to ”Malfunction Indicator Lamp on Steady”
4	Attempt to start the engine. Does the engine start and continue to run?		Go to *Step 5*	Go to ”Engine Cranks But Will Not Run”
5	Select DISPLAY DTC with the scan tool. Are any Diagnostic Trouble Codes (DTCs) stored?		Go to *Step 6*	Go to *Step 7*
6	Check the display for DTCs P0107, P0108, P0113, P0118, P0122, P0123, P0712, P1392. Are two or more of the following DTCs stored?		Go to ”Multiple PCM/ECM Information Sensor DTCs Set”	Go to applicable DTC table
7	Compare the PCM/ECM data values displayed on the scan tool to the typical engine scan data values. Are the displayed values normal or close to the typical values?		Go to ”PCM/ECM Output Diagnosis”	Go to indicated component system check
8	1. Ignition OFF, disconnect the PCM/ECM. 2. Ignition ON, engine OFF. 3. Check the class 2 data circuit for an open, short to ground, or short to voltage. Also, check the Data Link Connector (DLC) ignition feed circuit for an open or short to ground and the DLC ground circuits for an open. Is a problem found?		Go to *Step 9*	Go to *Step 10*
9	Repair the open, short to ground or short to voltage in the class 2 data circuit or the DLC ignition feed circuit or DLC ground circuts. Is the repair complete?		System OK	
10	1. Attempt to reprogram the PCM/ECM. 2. Attempt to display the PCM/ECM data with the scan tool. Does the scan tool display PCM/ECM engine data?		Go to *Step 2*	Go to *Step 11*
11	Replace the PCM/ECM. Is the repair complete?		System OK	

PCM/ECM OUTPUT DIAGNOSIS

Circuit Description

The powertrain control module (PCM)/engine control module (ECM) controls most components with electronic switches which complete a ground circuit when turned on. These switches are arranged in groups of 4 and 7, and are called either a surface mounted quad driver module, which can independently control up to 4 output terminals or an Output Driver Module (ODM), which can independently control up to 7 outputs. Not all of the outputs are always used.

Drivers are fault protected. If a relay or solenoid is shorted, having very low or zero resistance, or if the control side of the circuit is shorted to voltage, it would allow too much current flow into the PCM/ECM. The driver senses this and the output is turned OFF or its internal resistance increases to limit current flow and protect the PCM/ECM and driver. The result is high output terminal voltage when it should be low. If the circuit from B+ to the component or the component is open, or the control side of the circuit is shorted to ground, terminal voltage will be low. Either of these conditions is considered to be a driver fault.

Drivers also have a fault line to indicate the presence of a current fault to the PCM/ECM's central processor. A scan tool displays the status of the driver fault lines as 0=OK and 1=Fault.

Diagnostic Aids

The scan tool has the ability to command certain components and functions ON and OFF. If a component or function does not have this capability, operate the vehicle during its normal function criteria to check for an open or shorted circuit.

An open or short to ground will appear in the open positions on the scan tool only when it is not commanded by the PCM/ECM or the scan tool, while a short to voltage will appear in the short positions on the scan tool only while the component is being commanded by the PCM/ECM or scan tool.

Test Description

Number(s) below refer to the step number(s) on the Diagnostic Table.

1. The Powertrain On–Board Diagnostic (OBD II) System Check prompts the technician to complete some basic checks and store the freeze frame and failure records data on the scan tool if applicable. This creates an electronic copy of the data taken when the malfunction occurred. The information is then stored on the scan tool for later reference.
2. A 1 in any of the positions indicates that an open or short is present in the corresponding circuit for that position.
4. An open or short to ground will appear in the open positions on the scan tool only when it is not commanded by the PCM/ECM or scan tool, while a short to voltage will appear in the short positions on the scan tool only while the component is being commanded by the PCM/ECM or scan tool.
5. Proper operation of any component of function with no 1 in any operation of the positions indicates that system operation is normal at this time.
6. A component or function that failed to operate at this point indicates that the fault is not on the PCM/ECM side of the circuitry.
8. The 1 going away after disconnecting the component electrical connector indicates that the component or component side wiring is at fault. If the scan tool indicates a fault after disconnecting the component electrical connector and verifying that no open or short is present in the circuit, then the PCM/ECM is faulty.
9. The replacement PCM/ECM must be reprogrammed. Refer to the latest Techline procedure for PCM/ECM reprogramming.
10. If no faults have been found at this point, refer to "Diagnostic Aids" in this section for additional checks and information.

PCM/ECM Output Diagnosis

Step	Action	Value(s)	Yes	No
1	Perform an On–Board Diagnostic (OBD II) System Check. Is the check performed ?		Go to *Step 2*	Go to ”On–Board Diagnostic System Check”
2	Install the scan tool. Is there a number 1 below any of the numbered positions in the OUTPUT DRIVERS?		Go to *Step 3*	Go to *Step 4*
3	Check for an open or shorted circuit in any corresponding position (circuit) that contained a number 1 and repair as necessary. Is a repair necessary?		Go to *Step 10*	Go to *Step 8*
4	Command the output being checked with a scan tool while watching the corresponding position for each circuit. Do any of the positions change to a 1?		Go to *Step 7*	Go to *Step 5*
5	Command the output being checked with a scan tool while watching the corresponding position for each circuit. Does the component or function operate when commanded?		Go to *Step 10*	Go to the appropriate component repair
6	Repair the short to voltage in the corresponding circuit for position (circuit) that displayed a 1. Is the repair complete?		Go to *Step 10*	
7	Disconnect the electrical connector to the component connected to the faulty circuit. Is a 1 still displayed in the corresponding OUTPUT DRIVER position?		Go to *Step 9*	Go to the appropriate component repair
8	Replace the powertrain control module (PCM)/engine control module (ECM) Is the repair complete?		Go to *Step 10*	
9	Operate the vehicle within the conditions under which the original symptom was noted. Does the system now operate properly?		System OK	Go to *Step 2*

MULTIPLE PCM/ECM INFORMATION SENSOR DTCS SET

Circuit Description

The powertrain control module (PCM)/engine control module (ECM) monitors various sensors to determine engine operating conditions. The PCM/ECM controls fuel delivery, spark advance, transaxle operation, and emission control device operation based on the sensor inputs.

The PCM/ECM provides a sensor ground to all of the sensors. The PCM/ECM applies 5 volts through a pullup resistor and monitors the voltage present between the sensor and the resistor to determine the status of the Engine Coolant Temperature (ECT) sensor, the Intake Air Temperature (IAT) sensor, and the Transmission Fluid Temperature (TFT) sensor. The PCM/ECM provides the Exhaust Gas Recirculation (EGR) Pintle Position Sensor, the Throttle Position (TP) sensor, the Manifold Absolute Pressure (MAP) sensor, the Air Conditioning Temperature (ACT) sensor and the Fuel Tank Pressure Sensor with a 5 volt reference and a sensor ground signal. The PCM/ECM monitors the separate feedback signals from these sensors to determine their operating status.

Diagnostic Aids

Be sure to inspect PCM/ECM and engine grounds for being secure and clean.

A short to voltage in one of the sensor circuits can cause one or more of the following Diagnostic Trouble Codes (DTCs) to be set: P0108, P0113, P0118, P0123, P1106, P1111, P1115, P1121, P1625.

If a sensor input circuit has been shorted to voltage, ensure that the sensor is not damaged. A damaged sensor will continue to indicate a high or low voltage after the affected circuit has been repaired. If the sensor has been damaged, replace it.

An open in the sensor ground circuit between the PCM/ECM and the splice will cause one or more of the following DTCs to be set: P0108, P0113, P0118, P0123, P1106, P1111, P1115, P1121.

A short to ground in the 5 volt reference circuit or an open in the 5 volt reference circuit between the PCM/ECM and the splice will cause one or more of the following DTCs to be set: P0107, P0112, P0117, P0122, P1107, P1112, P1114, P1122.

Check for the following conditions:

- Inspect for a poor connection at the PCM/ECM. Inspect harness connectors for backed–out terminals, improper mating, broken locks, improperly formed or damaged terminals, and poor terminal–to–wire connection.
- Inspect the wiring harness for damage. If the harness appears to be OK, observe an affected sensor's displayed value on the scan tool with the ignition ON and the engine OFF while moving connectors and wiring harnesses related to the affected sensors. A change in the affected sensor's displayed value will indicate the location of the fault.

Test Description

Number(s) below refer to the step number(s) on the Diagnostic Table.

1. The Powertrain On–Board Diagnostic (OBD II) System Check prompts the technician to complete some basic checks and store the freeze frame and failure records data on the scan tool if applicable. This creates an electronic copy of the data taken when the malfunction occurred. The information is then stored on the scan tool for later reference.
9. A faulty EGR valve can leak a small amount of current from the ignition feed circuit to the 5 volt reference circuit. If the problem does not exist with the EGR valve disconnected, replace the EGR valve.
0. If a sensor input circuit has been shorted to voltage, ensure that the sensor has not been damaged. A damaged IAT or ECT sensor will continue to indicate a high voltage or low temperature after the affected circuit has been repaired. A damaged ACT, TP, MAP, Fuel Tank Pressure, or EGR Pintle Position sensor will indicate a high or low voltage or may be stuck at a fixed value after the affected circuit has been repaired. If the sensor has been damaged, replace it.
21. The replacement PCM/ECM must be reprogrammed. Refer to the latest Techline procedure for PCM/ECM reprogramming.

Multiple PCM/ECM Information Sensor DTCs Set

Step	Action	Value(s)	Yes	No
1	Perform an On–Board Diagnostic (OBD II) System Check. Is the system check complete?		Go to *Step 2*	Go to "On–Board Diagnostic System Check"
2	1. Ignition OFF, disconnect the powertrain control module (PCM)/engine control module (ECM). 2. Ignition ON, check the 5 volt reference circuit for the following conditions: • Poor connection at the PCM/ECM. • Open between the PCM/ECM connector affected sensors shorted to ground or voltage. 3. If a problem is found, locate and repair the open or short circuit as necessary. Is a problem found?		Go to *Step 21*	Go to *Step 3*
3	1. Check the sensor ground circuit for the following conditions: • Poor connection at the PCM/ECM or affected sensors. • Open between the PCM/ECM connector and the affected sensors. 2. If a problem is found, repair it as necessary. Is a problem found?		Go to *Step 21*	Go to *Step 4*
4	Measure the voltage between the Exhaust Gas Recirculation (EGR) Pintle Position Sensor signal circuit at the PCM/ECM harness connector and ground. Does the voltage measure near the specified value?	0 v	Go to *Step 5*	Go to *Step 9*
5	Measure the voltage between the Manifold Absolute Pressure (MAP) sensor signal circuit and the PCM/ECM harness connector and ground. Does the voltage measure near the specified value?	0 v	Go to *Step 6*	Go to *Step 12*
6	Measure the voltage between the Throttle Position (TP) sensor signal circuit and the PCM/ECM harness connector and ground. Does the voltage measure near the specified value?	0 v	Go to *Step 7*	Go to *Step 13*
7	Measure the voltage between the Intake Air Temperature (IAT) sensor signal circuit and the PCM/ECM harness connector and ground. Does the voltage measure near the specified value?	0 v	Go to *Step 8*	Go to *Step 14*
8	Measure the voltage between the Engine Coolant Temperature (ECT) sensor signal circuit and the PCM/ECM harness connector and ground. Does the voltage measure near the specified value?	0 v	Go to *Step 10*	Go to *Step 15*
9	1. Disconnect the EGR valve. 2. Measure the voltage between the EGR Pintle Position sensor signal circuit and the PCM/ECM harness connector and ground. Does the voltage measure near the specified value?	0 v	Go to *Step 11*	Go to *Step 16*

Step	Action	Value(s)	Yes	No
10	Measure the voltage between the Transmission Fluid Temperature (TFT) sensor signal circuit and the PCM/ECM harness connector and ground. Does the voltage measure near the specified value?	0 v	Go to *Step 18*	Go to *Step 17*
11	Replace the EGR valve. Is the repair complete?		Go to *Step 21*	
12	Locate and repair short to voltage in the MAP sensor signal circuit. Is the repair complete?		Go to *Step 21*	
13	Locate and repair short to voltage in the TP sensor signal circuit. Is the repair complete?		Go to *Step 21*	
14	Locate and repair short to voltage in the IAT sensor signal circuit. Is the repair complete?		Go to *Step 21*	
15	Locate and repair short to voltage in the ECT sensor signal circuit. Is the repair complete?		Go to *Step 21*	
16	Locate and repair short to voltage in the EGR Pintle Position sensor circuit. Is the repair complete?		Go to *Step 21*	
17	Locate and repair short to voltage in TFT sensor circuit. Is the repair complete?		Go to *Step 21*	
18	Measure the voltage between the Fuel Tank Pressure sensor signal circuit and the PCM/ECM harness connector and ground. Does the voltage measure near the specified value?	0 v	Go to *Step 20*	Go to *Step 19*
19	Locate and repair short to voltage in the Fuel Tank Pressure sensor signal circuit. Is the repair complete?		Go to *Step 21*	
20	Replace the PCM/ECM. Is the repair complete?		Go to *Step 21*	
21	1. Using the scan tool, clear the Diagnostic Trouble Codes (DTCs). 2. Start the engine and idle at normal operating temperature. 3. Operate the vehicle within the conditions for setting the DTCs as specified in the supporting text. Does the scan tool indicate that this diagnostic ran and passed?		Go to *Step 22*	Go to *Step 2*
22	Check if any additional DTCs are Are any DTCs displayed that have not been diagnosed?		Go to applicable DTC table	System OK

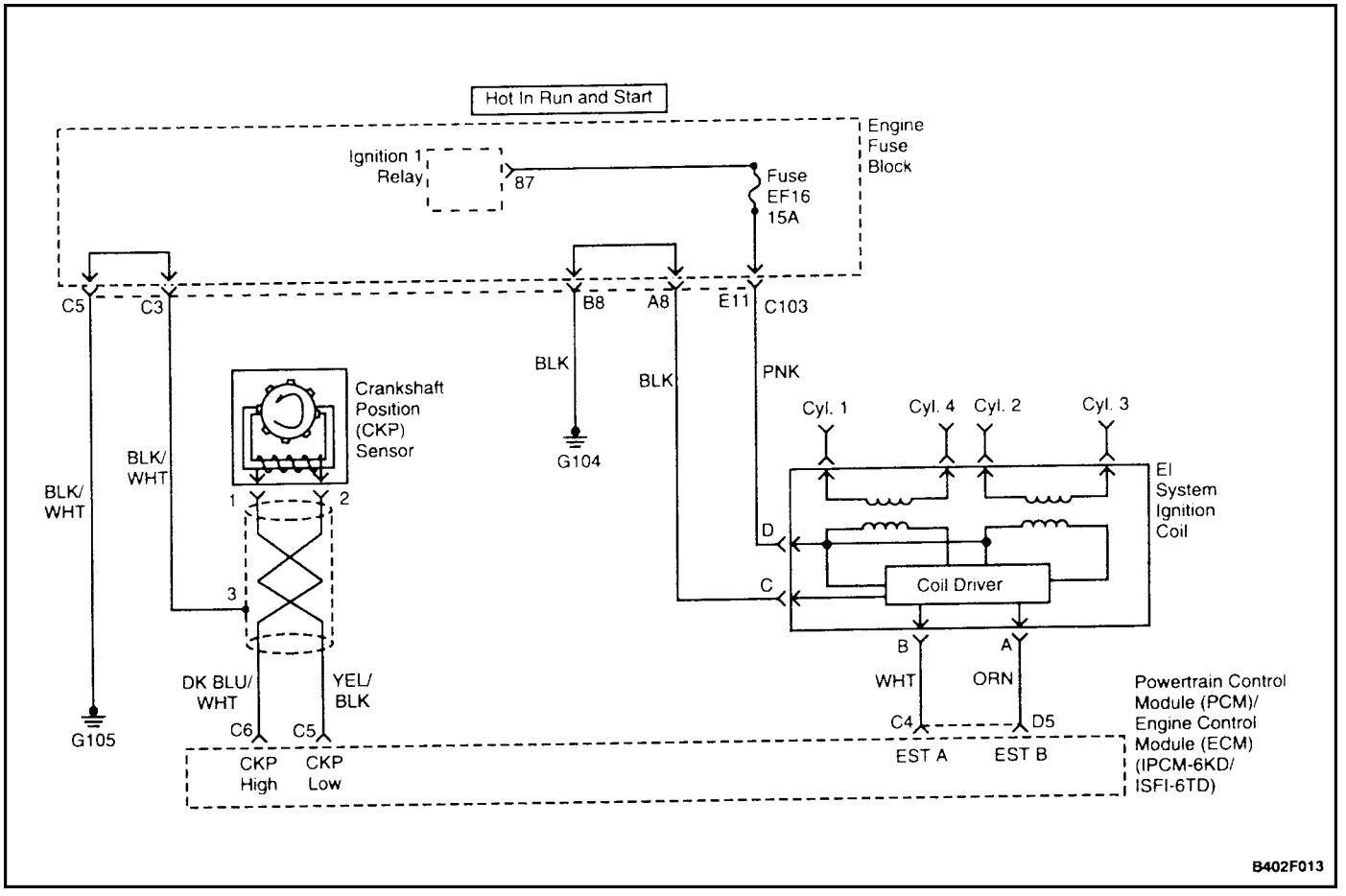
Hot In Run and Start
Ignition 1 Relay
87
Fuse EF16 15A
Engine Fuse Block
C5
C3
B8
A8
E11
C103
BLK
BLK
PNK
G104
Crankshaft Position (CKP) Sensor
BLK/ WHT
BLK/ WHT
1
2
3
Cyl. 1
Cyl. 4
Cyl. 2
Cyl. 3
EI System Ignition Coil
D
C
Coil Driver
B
A
WHT
ORN
C4
D5
EST A
EST B
Powertrain Control Module (PCM)/ Engine Control Module (ECM) (IPCM-6KD/ ISFI-6TD)
DK BLU/ WHT
YEL/ BLK
C6
C5
CKP High
CKP Low
G105
B402F013

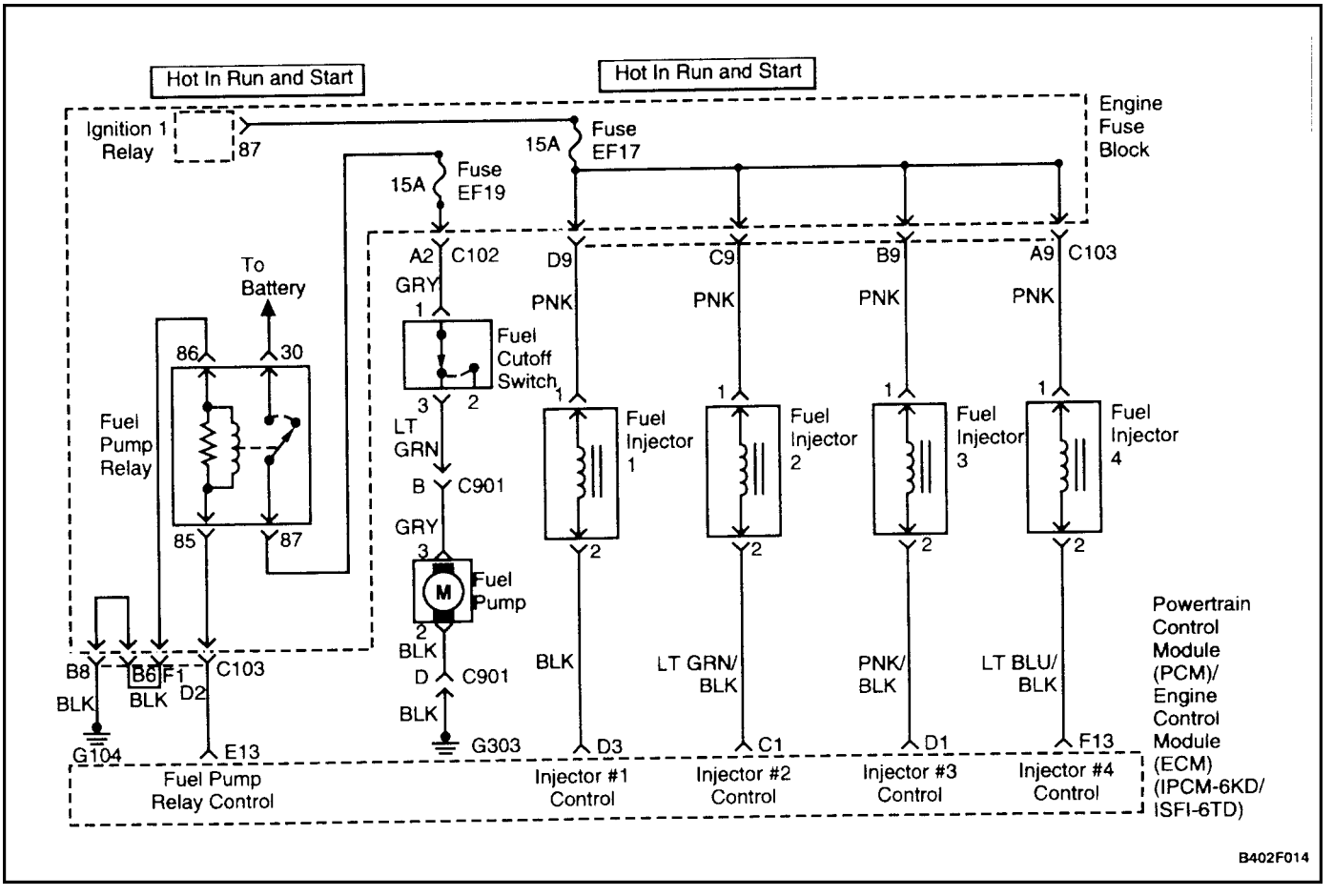
Hot In Run and Start
Hot In Run and Start
Ignition 1 Relay
87
Fuse EF17
15A
Fuse EF19
15A
Engine Fuse Block
A2
C102
GRY
1
To Battery
86
30
Fuel Pump Relay
85
87
Fuel Cutoff Switch
3
2
LT GRN
B
C901
GRY
3
M
Fuel Pump
2
BLK
D
C901
BLK
G303
D9
C9
B9
A9
C103
PNK
PNK
PNK
PNK
1
1
1
1
Fuel Injector 1
Fuel Injector 2
Fuel Injector 3
Fuel Injector 4
2
2
2
2
B8
B6
F1
C103
BLK
BLK
D2
G104
E13
Fuel Pump Relay Control
BLK
LT GRN/ BLK
PNK/ BLK
LT BLU/ BLK
D3
C1
D1
F13
Injector #1 Control
Injector #2 Control
Injector #3 Control
Injector #4 Control
Powertrain Control Module (PCM)/ Engine Control Module (ECM) (IPCM-6KD/ ISFI-6TD)
B402F014

ENGINE CRANKS BUT WILL NOT RUN

Test Description

The number(s) below refer to step(s) on the diagnostic table.

3. By performing a compression test, it can be determined if the engine has the mechanical ability to run.
9. It is important to check for the presence of spark from all of the ignition wires. If spark is present from one to three of the ignition coil terminals, the crankshaft position (CKP) sensor is OK.
19. In checking the powertrain control module (PCM)/engine control module (ECM) outputs for the electronic spark timing signal, it recommended to use an oscilloscope to view the varying voltage signals. In measuring these outputs with a voltmeter, intermittent errors may occur that cannot be seen by a voltmeter.
35. This step checks for proper operation of the PCM/ECM's control of the fuel pump circuit.
59. This step checks for a ground signal being supplied by the PCM/ECM to operate the fuel injectors. If there is no ground present during the cranking of the engine, and the fuel injector wiring is OK, the PCM/ECM is at fault.

Engine Cranks But Will Not Run

CAUTION : Use only electrically insulated pliers when handling ignition wires with the engine running to prevent an electrical shock.

CAUTION : Do not pinch or restrict nylon fuel lines to avoid damage that could cause a fuel leak, resulting in possible fire or personal injury.

Important : If engine cranks but will not start, make sure fuel cut–off switch has not been tripped.

Step	Action	Value(s)	Yes	No
1	Perform an On–Board Diagnostic (OBD II) System Check. Is the system check complete?		Go to *Step 2*	Go to "On–Board Diagnostic System Check"
2	Crank the engine. Does the engine start and continue to run?		System OK	Go to *Step 3*
3	Perform a cylinder compression test. Is the cylinder compression for all of the cylinders at or above the value specified?	689 kPa (100 psi)	Go to*Step 7*	Go to*Step 4*
4	Inspect the timing belt alignment. Is the timing belt in alignment?		Go to*Step 6*	Go to*Step 5*
5	Align or replace the timing belt as needed. Is the repair complete?		Go to*Step 2*	
6	Repair the internal engine damage as needed. Is the repair complete?		Go to*Step 2*	
7	Inspect the fuel pump fuse. Is the problem found?		Go to*Step 8*	Go to*Step 9*
8	Replace the fuse. Is the repair complete?		Go to*Step 2*	
9	Check for the presence of spark from all of the ignition wires while cranking the engine. Is spark present from all of the ignition wires?		Go to*Step 34*	Go to*Step 10*
10	1. Measure the resistance of the ignition wires. 2. Replace any of the ignition wire(s) with a resistance above the value specified. 3. Check for the presence of spark from all of the ignition wires. Is spark present from all of the ignition wires?	30,000 Ω	Go to*Step 2*	Go to*Step 11*

Step	Action	Value(s)	Yes	No
11	1. Turn the ignition OFF. 2. Disconnect the Crankshaft Position (CKP) sensor connector. 3. Turn the ignition ON. 4. Measure the voltage between the CKP connector terminals 1 and 3. Does the voltage measure near the value specified?	1.08 volts	Go to*Step 12*	Go to*Step 13*
12	Measure the voltage between the CKP connector terminals 2 and 3. Does the voltage measure near the value specified?	1.08 volts	Go to*Step 19*	Go to*Step 14*
13	Measure the voltage between the CKP connector terminals 1 and ground. Does the voltage measure near the value specified?	1.08 volts	Go to*Step 15*	Go to*Step 16*
14	Measure the voltage between the CKP connector terminals 2 and ground. Does the voltage measure near the value specified?	1.08 volts	Go to*Step 15*	Go to*Step 17*
15	Check for an open or short in the wire between the CKP connector terminal 3 and ground. Is the problem found?		Go to*Step 18*	Go to*Step 33*
16	Check for an open or short in the wire between the CKP connector terminal 1 and the powertrain control module (PCM)/engine control module (ECM) connector terminal C6. Is the problem found?		Go to*Step 18*	Go to*Step 33*
17	Check for an open or short in the wire between the CKP connector terminal 2 and the PCM/ECM connector terminal C5. Is the problem found?		Go to*Step 18*	Go to*Step 33*
18	Repair the wiring as needed. Is the repair complete?		Go to*Step 2*	
19	1. Disconnect the electronic ignition (EI) system ignition coil connector to prevent the vehicle from starting. 2. Measure the voltage at the PCM/ECM connector terminal C6 by backprobing the PCM/ECM connector. Are the voltage readings near the values specified?	1.08 v with ignition ON, 1.20 v during cranking	Go to*Step 20*	Go to*Step 21*
20	Measure the voltage at the PCM/ECM connector terminal C5 by backprobing the PCM/ECM connector. Are the voltage readings near the values specified?	1.08 v with ignition ON, 1.20 v during cranking	Go to*Step 22*	Go to*Step 21*
21	Replace the CKP sensor. Is the repair complete?		Go to*Step 2*	
22	1. Turn the ignition OFF. 2. Disconnect the electrical connector at the EI system ignition coil. 3. Connect a test light between terminal D of the EI system ignition coil connector and ground. 4. Turn the ignition ON. Is the test light on?		Go to*Step 23*	Go to*Step 24*

Step	Action	Value(s)	Yes	No
23	Connect a test light between terminal C of the EI system ignition coil connector and battery positive. Is the test light on?		Go to*Step 27*	Go to*Step 25*
24	Check for an open in the wiring between the battery and the EI system ignition coil connector terminal D. Is the problem found?		Go to*Step 26*	Go to"Ignition 1 Relay Circuit Check"
25	Check for an open in the wire from the EI system ignition coil to ground. Is the problem found?		Go to*Step 26*	
26	1. Repair the wiring as needed. 2. Connect the EI system ignition coil connector. 3. Check for the presence of spark from all of the ignition wires. Is spark present from all of the ignition wires?		Go to*Step 2*	Go to*Step 27*
27	1. Turn the ignition OFF. 2. Disconnect the EI system ignition coil connector. 3. While cranking the engine, measure the voltage at the EI system ignition coil connector terminal B. Does the voltage fluctuate within the values specified?	0.2–2.0 v	Go to*Step 28*	Go to*Step 29*
28	While cranking the engine, measure the voltage at the EI system ignition coil connector terminal A. Does the voltage fluctuatewithin the values specified?	0.2–2.0 v	Go to*Step 32*	Go to*Step 30*
29	Check for an open in the wire from the EI system ignition coil connector terminal B to the PCM/ECM connector terminal C4. Is the problem found?		Go to*Step 31*	Go to*Step 33*
30	Check for an open in the wire from the EI system ignition coil connector terminal A to the PCM/ECM connector terminal D5. Is the problem found?		Go to*Step 31*	Go to*Step 33*
31	1. Repair the wiring as needed. 2. Connect the EI system ignition coil connector. 3. Check for the presence of spark from all of the ignition wires. Is spark present from all of the ignition wires?		Go to*Step 2*	Go to*Step 32*
32	Replace the EI system ignition coil. Is the repair complete?		Go to*Step 2*	
33	Replace the PCM/ECM. Is the repair complete?		Go to*Step 2*	
34	1. Turn the ignition OFF. 2. Connect a fuel pressure gauge. 3. Crank the engine. Is any fuel pressure present?		Go to*Step 37*	Go to*Step 35*

Step	Action	Value(s)	Yes	No
35	1. Turn the ignition OFF. 2. Disconnect the electrical connector at the fuel pump. 3. Connect a test light between the fuel pump connector terminals 3 and 2. 4. Turn the ignition ON. 5. With the ignition ON, the test light should light for the time specified. Is the test light on?	2 sec	Go to*Step 36*	Go to*Step 46*
36	Replace the fuel pump. Is the repair complete?		Go to*Step 2*	
37	Is the fuel pressure within the value specified?	283–324 kPa (41–47 psi)	Go to*Step 41*	Go to*Step 38*
38	1. Check the fuel filter for a restriction. 2. Inspect the fuel lines for kinks and restrictions. Is the problem found?		Go to*Step 39*	Go to*Step 40*
39	1. Replace the fuel filter and/or the fuel lines as needed. 2. Connect a fuel pressure gauge. 3. Crank the engine. Is the fuel pressure within the value specified?	283–324 kPa (41–47 psi)	Go to*Step 2*	Go to*Step 40*
40	1. Disconnect the vacuum line from the fuel pressure regulator. 2. Inspect the vacuum line for the presence of fuel. 3. Inspect the fuel pressure regulator vacuum port for the presence of fuel. Is any fuel present?		Go to*Step 43*	Go to*Step 44*
41	Check the fuel for contamination. Is the fuel contaminated?		Go to*Step 42*	Go to*Step 58*
42	1. Remove the contaminated fuel from the fuel tank. 2. Clean the fuel tank as needed. Is the repair complete?		Go to*Step 2*	
43	Replace the fuel pressure regulator. Is the repair complete?		Go to*Step 2*	
44	1. Remove the fuel pump assembly from the fuel tank. 2. Inspect the fuel pump sender and the fuel coupling hoses for a restriction. 3. Inspect the in–tank fuel filter for a restriction. Is the problem found?		Go to*Step 45*	Go to*Step 36*
45	Replace the fuel pump sender, the in–tank fuel filter, and/or the fuel coupling hoses as needed. Is the repair complete?		Go to*Step 2*	

Step	Action	Value(s)	Yes	No
46	1. Turn the ignition OFF. 2. Disconnect the electrical connector at the fuel pump. 3. Connect a test light between the fuel pump connector terminal 3 and a known good ground. 4. Turn the ignition ON. 5. With the ignition ON, the test light should illuminate for the time specified. Is the test light on?	2 sec	Go to*Step 47*	Go to*Step 48*
47	Repair the open wire between the fuel pump connector terminal 2 and ground. Is the repair complete?		Go to*Step 2*	
48	1. Turn the ignition OFF. 2. Disconnect the fuel pump relay. 3. Connect a test light between the fuel pump relay connector terminal 85 and ground. 4. Turn the ignition ON. Is the test light on?		Go to*Step 49*	Go to*Step 60*
49	1. Turn the ignition OFF. 2. Connect a test light between the fuel pump relay connector terminal 86 and terminal 85. 3. Turn the ignition ON. 4. With the ignition ON, the test light should light for the time specified. Is the test light on?	2 sec	Go to*Step 50*	Go to*Step 52*
50	1. Turn the ignition OFF. 2. Connect a test light between the fuel pump relay connector terminal 30 and ground. Is the test light on?		Go to*Step 51*	Go to*Step 63*
51	1. Turn the ignition ON. 2. Measure the voltage at the fuse EF19 connection. Is the voltage within the specified value?	11–14 v	Go to*Step 53*	Go to*Step 52*
52	Replace the fuel pump relay. Is the repair complete?		Go to*Step 2*	
53	Measure the voltage at the fuse EF19 again. Is the voltage within the specified value?	11–14 v	Go to*Step 55*	Go to*Step 54*
54	Replace the engine fuse block. Is the repair complete?		Go to*Step 2*	
55	1. Disconnect the fuel cutoff switch connector. 2. Measure the voltage at terminal 1 of the fuel cutoff switch connector. Is the voltage within the specified value?	11–14 v	Go to*Step 57*	Go to*Step 56*
56	Repair the open or short between the fuel cutoff switch and fuse EF19. Is the repair complete?		Go to*Step 2*	
57	1. Reconnect the fuel cutoff switch. 2. Measure the voltage at terminal 3 of the fuel cutoff switch connector. Is the voltage within the specified value?	11–14 v	Go to*Step 58*	Go to*Step 59*

Step	Action	Value(s)	Yes	No
58	Repair the short or opening the circuit between the fuel cutoff switch and the fuel pump. Is the repair complete?		Go to*Step 2*	
59	Replace the fuel cutoff switch. Is the repair complete?		Go to*Step 2*	
60	Check the wire between the fuel pump relay connector terminal 85 to the PCM/ECM connector terminal E13 for an open. Is the problem found?		Go to*Step 61*	Go to*Step 33*
61	Repair the wire between the fuel pump relay connector terminal 85 to the PCM/ECM connector terminal E13. Is the repair complete?		Go to*Step 2*	
62	Repair the wire between the fuel pump relay connector terminal 30 and the battery. Is the repair complete?		Go to*Step 2*	
63	1. Turn the ignition OFF. 2. Disconnect the fuel injector harness connectors from all of the fuel injectors. 3. Turn the ignition ON. 4. Connect a test light between the fuel injector harness connector 1 and ground. 5. Repeat Step 4 for each of the remaining fuel injectors. Is the test light on at all of the fuel injectors?		Go to*Step 64*	Go to*Step 67*
64	1. Turn the ignition OFF. 2. Connect a test light between the fuel injector harness connector terminal 2 and battery positive. 3. Crank the engine. 4. Repeat Steps 3 and 4 for each of the remaining fuel injectors. Does the test light flash for all of the fuel injectors?		Go to*Step 65*	Go to*Step 68*
65	Measure the resistance of each fuel injector. Is the resistance within the value specified (the resistance will increase slightly at higher temperatures)?	11.6–12.4 Ω	System OK	Go to*Step 66*
66	Replace any of the fuel injectors with a resistance out of specification. Is the repair complete?		Go to*Step 2*	
67	Repair the open wire(s) between the fuel injector harness connector(s) terminal 1 and the battery. Is the repair complete?		Go to*Step 2*	
68	1. Check for an open between the fuel injector harness connector terminal 2 and the PCM/ECM connector terminal C4 for the fuel injectors one and four. 2. Check for an open between the fuel injector harness connector terminal 2 and the PCM/ECM connector terminal C6 for the fuel injectors two and three. Is the problem found?		Go to*Step 69*	Go to*Step 71*

Step	Action	Value(s)	Yes	No
69	Repair the open fuel injector harness wire(s). Is the repair complete?		Go to*Step 2*	
70	Replace the fuse or repair the wiring as needed. Is the repair complete?		Go to*Step 2*	
71	1. Inspect the engine fuse block fuse EF34. 2. Check for an open in the fuel injector connector terminals 1 and the ignition 1 relay connector terminal 87. Is the problem found?		Go to*Step 68*	Go to”Ignition System Check”

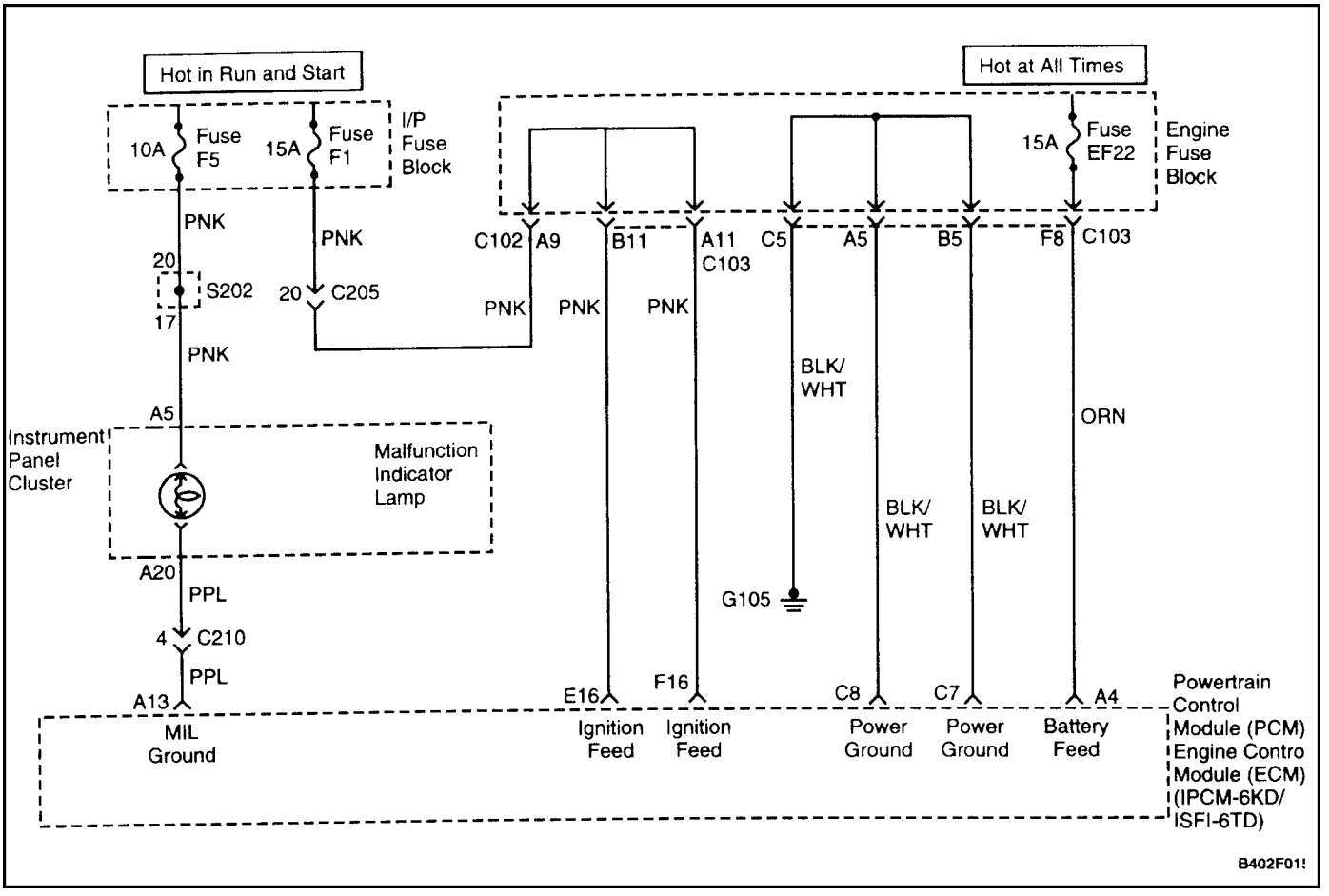

NO MALFUNCTION INDICATOR LAMP

Circuit Description

When the ignition is turned ON, the Malfunction Indicator Lamp (MIL) will momentarily flash on and off, then it will remain on until the engine is running if no Diagnostic Trouble Codes (DTC) are stored. Battery voltage is supplied through the ignition switch directly to the MIL telltale. The powertrain control module (PCM)/engine control module (ECM) controls the MIL by providing a ground path through the MIL control circuit to turn on the MIL.

Diagnostic Aids

An open ignition #5 fuse will cause the entire cluster to be inoperative, and may set DTC P1625.

Check the battery and ignition feed circuits for poor connections if the MIL is intermittent.

Any circuitry, that is suspected as causing an intermittent complaint, should be thoroughly checked for backed–out terminals, improper mating, broken locks, improperly formed or damaged terminals, poor terminals–to–wiring connections or physical damage to the wiring harness.

Test Description

Number(s) below refer to the step number(s) on the diagnostic table.

1. The On–Board Diagnostic (OBD II) System Check prompts the technician to complete some basic checks and store the freeze frame and failure records data on then scan tool, if applicable. This creates an electronic copy of the data taken when the malfunction occurred. The information is stored in the scan tool for later reference.
3. Connections that are suspected of being faulty should be thoroughly checked as described in the diagnostic aids.
4. If the engine fails to start and the MIL is inoperative, then the fault can be isolated to either the PCM/ECM ignition feed, The battery feed, or a poor ground at the engine block, or the PCM/ECM.
6. Probing the MIL circuit with a test light to ground stimulates the PCM/ECM's control of the MIL. If the MIL illuminates, then the malfunction can be isolated to the control of the MIL or a poor connection at the MIL terminal to the PCM/ECM. Connections that are suspected of being faulty should be thoroughly checked as described in the diagnostic aids.
8. It takes very little resistance for the battery and ignition feed circuits to cause an intermittent condition and should also be checked for a poor connection as described in diagnostic aids.

11. Before replacing the PCM/ECM, check for backed-out terminals, improper mating, broken locks, improperly formed or damaged terminals, poor terminal–to–wiring harness. Replacement PCM/ECM's must be reprogrammed. Refer to the latest Techline information for reprogramming procedures.
20. PCM/ECM grounds will only cause a problem if all of the grounds are not making a good connection. If a PCM/ECM ground problem is suspected, the most probable place to check is where all the grounds meet, at the engine block.
22. If not faults have been found at this point and no DTCs were set, refer to the diagnostic aids for additional checks and information.

No Malfunction Indicator Lamp

Step	Action	Value(s)	Yes	No
1	Perform an On–Board Diagnostic (OBD II) System Check. Is the system check complete?		Go to *Step 2*	Go to "On–Board Diagnostic System Check"
2	Turn the ignition switch ON, with the engine OFF. Is the Malfunction Indicator Lamp (MIL) on?		Go to *Step 3*	Go to *Step 4*
3	Check for a poor connection at the battery feed terminal A4 or ignition feed terminal F16. Is the problem found and repaired?		Go to *Step 22*	Go to *Step 5*
4	Attempt to start the engine. Does the engine start?		Go to *Step 6*	Go to *Step 5*
5	Check for a faulty powertrain control module (PCM)/engine control module (ECM) ground connection at the engine block or PCM/ECM connector ground terminals and repair as necessary. Is the repair complete?		Go to *Step 22*	
6	1. Turn the ignition OFF. 2. Disconnect the PCM/ECM connectors from the PCM/ECM. 3. Turn the ignition switch ON. Is the MIL ON?		Go to *Step 8*	Go to *Step 9*
7	Inspect the ignition and battery feed fuses. Are the fuses OK?		Go to *Step 10*	Go to *Step 11*
8	Check for a poor connection in the battery feed terminal A4, ignition feed terminal F16 or the MIL control circuits and repair as necessary. Is a repair necessary?		Go to *Step 22*	Go to *Step 12*
9	Probe the MIL control circuit with a test light connected to ground. Is the test light illuminated?		Go to *Step 13*	Go to *Step 14*
10	1. Turn the ignition switch OFF. 2. Disconnect the PCM/ECM connectors from the PCM/ECM. 3. Turn the ignition switch ON. 4. Probe the battery feed terminal A4 with a test light connected to ground. Does the test light illuminate?		Go to *Step 15*	Go to *Step 16*
11	1. Check for a short to ground in the circuit of the fuse that was open and repair if necessary. 2. Replace the open fuse. Is the repair complete?		Go to *Step 22*	

Step	Action	Value(s)	Yes	No
12	Replace the PCM/ECM. Is the repair complete?		Go to *Step 22*	
13	Repair the short to voltage in the MIL control circuit. Is the repair complete?		Go to *Step 22*	
14	Check for an open or a poor connection in the MIL control circuit and repair as necessary. Is the repair necessary?		Go to *Step 22*	Go to *Step 17*
15	With a test light still connected to the ground, probe the ignition feed terminal F16. Does the test light illuminate?		Go to *Step 18*	Go to *Step 19*
16	Repair the open battery feed circuit. Is the repair complete?		Go to *Step 22*	
17	Check for an open ignition feed circuit or fuse to the MIL and repair as necessary. Is the repair necessary?		Go to *Step 22*	Go to *Step 20*
18	Check for a poor connection in the battery feed terminal A4 or the ignition feed terminal F16 and repair as necessary. Is the repair necessary?		Go to *Step 22*	Go to *Step 21*
19	Repair the open in the ignition feed circuit from terminal F16. Is the repair complete?		Go to *Step 22*	
20	Replace the instrument panel cluster. Refer to *Section 9E, Instrumentation/Driver Information.* Is the repair complete?		Go to *Step 22*	
21	Check for a faulty PCM/ECM ground connection at the engine block or PCM/ECM connector and repair as necessary. Is the repair necessary?		Go to *Step 22*	Go to *Step 12*
22	1. Allow the engine to idle until normal operating temperature is reached. 2. Check if any Diagnostic Trouble Codes (DTCs) are set. Are any DTCs displayed that have not been diagnosed?		Go to the applicable DTC table	System OK

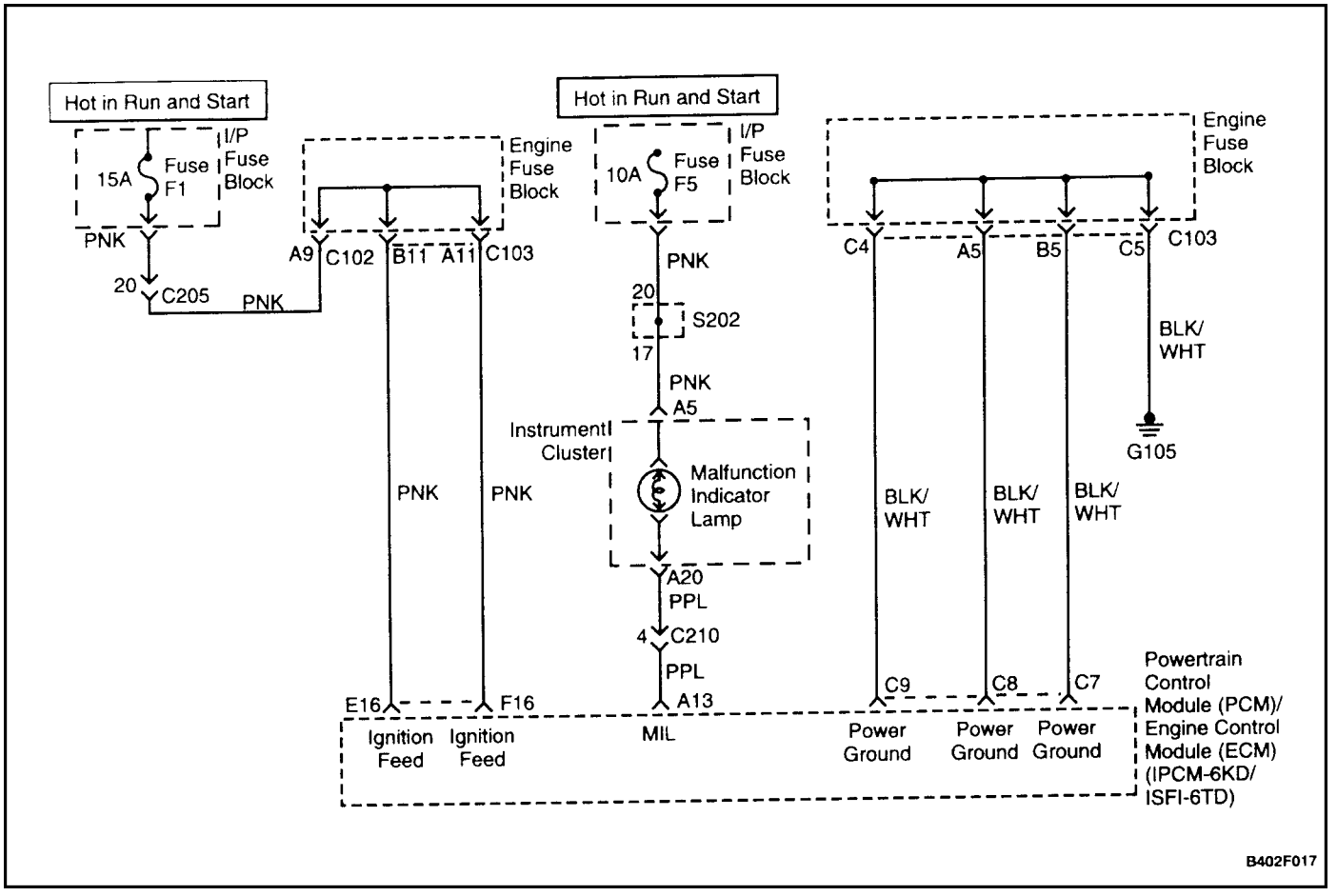

MALFUNCTION INDICATOR LAMP ON STEADY

Circuit Description

When the ignition is turned ON, the Malfunction Indicator Lamp (MIL) will momentarily flash on and off, then it will remain on until the engine is running if no Diagnostic Trouble Codes (DTCs) are stored. Battery voltage is supplied through the ignition switch directly to the MIL telltale. The powertrain control module (PCM)/engine control module (ECM) controls the MIL by providing a ground path through the MIL control circuit to turn on the MIL.

Test Description

Number(s) below refer to the step number(s) on the diagnostic table.

1. The On–Board Diagnostic (OBD II) System Check prompts the technician to complete some basic checks and store the freeze frame and failure records data on then scan tool, if applicable. This creates an electronic copy of the data taken when the malfunction occurred. The information is stored in the scan tool for later reference.
2. When the ignition is turned ON, the MIL should momentarily flash on and off, then remain on until the engine is running or if an emission related DTC is stored.
3. This step checks the ability of the PCM/ECM to control the MIL. The scan tool has the ability to command the MIL on and off.
5. A shorted MIL circuit can be diagnosed with a scan tool.
7. The replacement PCM/ECM must be reprogrammed. Refer to the latest Techline information for reprogramming procedures.

Malfunction Indicator Lamp On Steady

Step	Action	Value(s)	Yes	No
1	Perform an On–Board Diagnostic (OBD II) System Check. Is the system check complete?		Go to *Step 2*	Go to ”On–Board Diagnostic System Check”
2	Turn the ignition switch ON, with the engine OFF. Is the Malfunction Indicator Lamp (MIL) on?		Go to *Step 3*	Go to ”No Malfunction Indicator Lamp”
3	1. Install the scan tool. 2. Command the MIL on and off. Does the MIL turn on and off when commanded?		Go to *Step 8*	Go to *Step 4*
4	1. Turn the ignition switch OFF. 2. Disconnect the powertrain control module (PCM)/engine control module (ECM) connectors. 3. Turn the ignition switch ON. Is the MIL off?		Go to *Step 7*	Go to *Step 5*
5	Check the MIL control circuit for a short to ground and repair if necessary. Is the repair necessary?		Go to *Step 8*	Go to *Step 6*
6	Replace the instrument panel cluster. Refer to Section 9E, Instrumentation/Driver Information. Is the repair complete?		Go to *Step 8*	
7	Replace the PCM/ECM. Is the repair complete?		Go to *Step 8*	
8	1. Using the scan tool, clear the Diagnostic Trouble Codes (DTCs). 2. Attempt to start the engine. Does the engine start and continue to run?		Go to *Step 9*	Go to *Step 1*
9	1. Allow the engine to idle until normal operating temperature is reached. 2. Check if any DTCs are set. Are any DTCs displayed that have not been diagnosed?		Go to the applicable DTC table	System OK

FUEL SYSTEM DIAGNOSIS

Circuit Description

The fuel pump is an in–tank fuel pump mounted to a fuel sender assembly. The fuel pump will remain on as long as the engine is cranking or running and the powertrain control module (PCM)/engine control module (ECM) is receiving reference pulses from the crankshaft position (CKP) sensor. If there are no reference pulses, the PCM/ECM will turn off the fuel pump 2 seconds after the ignition switch is turned ON or 2 seconds after the engine stops running. The fuel pump delivers fuel to the fuel rail and the fuel injectors, where the fuel system pressure is controlled from 284 to 325 kPa (41 to 47 psi) by the fuel pressure regulator. The excess fuel is returned to the fuel tank.

Test Description

The number(s) below refer to step(s) on the diagnostic table.

2. When the engine is idling, the intake manifold vacuum is high. This vacuum is applied to the fuel pressure regulator diaphragm, offsetting the spring pressure inside the fuel pressure regulator and lowering the fuel pressure.
10. If there is fuel bleeding back through the fuel return outlet, this is due to a faulty fuel pressure regulator.
14. Another symptom often present when the fuel injectors are leaking is hard starting. Leaking fuel injectors can cause a flooding condition.
23. Fuel leaking from the fuel pump inlet is due to a faulty one–way check valve in the fuel pump.

CAUTION : The fuel system is under pressure. To avoid fuel spillage and the risk of personal injury or fire, it is necessary to relieve the fuel system pressure before disconnecting the fuel lines.

CAUTION : Do not pinch or restrict nylon fuel lines to avoid damage that could cause a fuel leak, resulting in possible fire or personal injury.

Fuel Pressure Relief Procedure

1. Remove the fuel cap.
2. Remove the fuel pump fuse EF18 from the engine fuse box.
3. Start the engine and allow the engine to stall.
4. Crank the engine for an additional 10 seconds.

Fuel System Diagnosis

Step	Action	Value(s)	Yes	No
1	1. Relieve the fuel system pressure. 2. Install a fuel pressure gauge. 3. Turn the ignition ON. Is the fuel pressure within the values specified and holding steady?	284–325 kPa (41–47 psi)	Go to *Step 2*	Go to *Step 5*
2	1. Disconnect the fuel pressure regulator vacuum hose. 2. Start the engine. 3. Allow the engine to idle. 4. Connect the fuel pressure regulator vacuum hose. Does the fuel pressure decrease?		System OK	Go to *Step 3*
3	1. Allow the engine to idle. 2. Disconnect the vacuum hose from the fuel pressure regulator. 3. Connect a vacuum pump with a gauge to the fuel pressure regulator vacuum port. 4. Apply 41–47 kPa (12–14 in. Hg) of vacuum to the fuel pressure regulator. Does the fuel pressure decrease?		Go to *Step 4*	Go to *Step 16*
4	1. Locate and correct the cause of the vacuum restriction to the fuel pressure regulator. 2. Confirm the operation of the fuel pressure regulator. Is the repair complete?		System OK	

Step	Action	Value(s)	Yes	No
5	1. Relieve the fuel system pressure. 2. Install a fuel pressure gauge. 3. Turn the ignition ON. Is the fuel pressure within the values specified but not holding steady?	284–325 kPa (41–47 psi)	Go to *Step 6*	Go to *Step 17*
6	Inspect the fuel lines for a leak. Is the problem found?		Go to *Step 7*	Go to *Step 8*
7	1. Replace the fuel line(s) as needed. 2. Install a fuel pressure gauge. 3. Turn the ignition ON. Is the fuel pressure within the values specified but not holding steady?	284–325 kPa (41–47 psi)	System OK	
8	1. Remove the fuel pump assembly. 2. With the fuel pump under pressure, inspect the fuel pump coupling hoses for leaking. Is the problem found?		Go to *Step 9*	Go to *Step 10*
9	1. Tighten or replace the fuel pump coupling hoses as needed. 2. Install a fuel pressure gauge. 3. Turn the ignition ON. Is the fuel pressure within the values specified but not holding steady?	284–325 kPa (41–47 psi)	System OK	
10	With the fuel system under pressure, inspect the fuel return outlet for leaking. Is the problem found?		Go to *Step 11*	Go to *Step 12*
11	1. Replace the fuel pressure regulator. 2. Install a fuel pressure gauge. 3. Turn the ignition ON. Is the fuel pressure within the values specified but not holding steady?	284–325 kPa (41–47 psi)	System OK	
12	With the fuel system under pressure, inspect the fuel inlet for leaking. Is the problem found?		Go to *Step 13*	Go to *Step 14*
13	1. Replace the fuel pump assembly. 2. Install a fuel pressure gauge. 3. Turn the ignition ON. Is the fuel pressure within the values specified but not holding steady?	284–325 kPa (41–47 psi)	System OK	
14	1. Remove the fuel rail and the fuel injectors as an assembly. 2. With the fuel system under pressure, inspect all of the fuel injectors for leaking. Is the problem found?		Go to *Step 15*	
15	1. Replace the leaking fuel injector(s). 2. Install a fuel pressure gauge. 3. Turn the ignition ON. Is the fuel pressure within the values specified but not holding steady?	284–325 kPa (41–47 psi)	System OK	

Step	Action	Value(s)	Yes	No
16	1. Replace the fuel pressure regulator. 2. Disconnect the fuel pressure regulator vacuum hose. 3. Start the engine. 4. Allow the engine to idle. 5. Connect the fuel pressure regulator vacuum hose. Does the fuel pressure decrease?		System OK	
17	1. Relieve the fuel system pressure. 2. Install a fuel pressure gauge. 3. Turn the ignition ON. Is the fuel system pressure below the values specified and holding steady?	284–325 kPa (41–47 psi)	Go to *Step 13*	Go to *Step 18*
18	1. Relieve the fuel system pressure. 2. Install a fuel pressure gauge. 3. Turn the ignition ON. Is the fuel system pressure below the values specified and holding steady?	284–325 kPa (41–47 psi)	Go to *Step 19*	
19	Inspect the fuel lines for leaks. Is the problem found?		Go to *Step 7*	Go to *Step 20*
20	1. Remove the fuel pump assembly. 2. With the fuel pump under pressure, inspect the fuel pump coupling hoses for leaking. Is the problem found?		Go to *Step 9*	Go to *Step 21*
21	1. Remove the fuel pump assembly. 2. With the fuel system under pressure, inspect the fuel return outlet for leaking. Is the problem found?		Go to *Step 11*	Go to *Step 22*
22	1. Remove the fuel pump assembly. 2. With the fuel system under pressure, inspect the fuel inlet for leaking. Is the problem found?		Go to *Step 13*	Go to *Step 23*
23	1. Remove the fuel rail and the fuel injectors as an assembly. 2. With the fuel system under pressure, inspect all of the fuel injectors for leaking. Is the problem found?		Go to *Step 15*	Go to *Step 13*

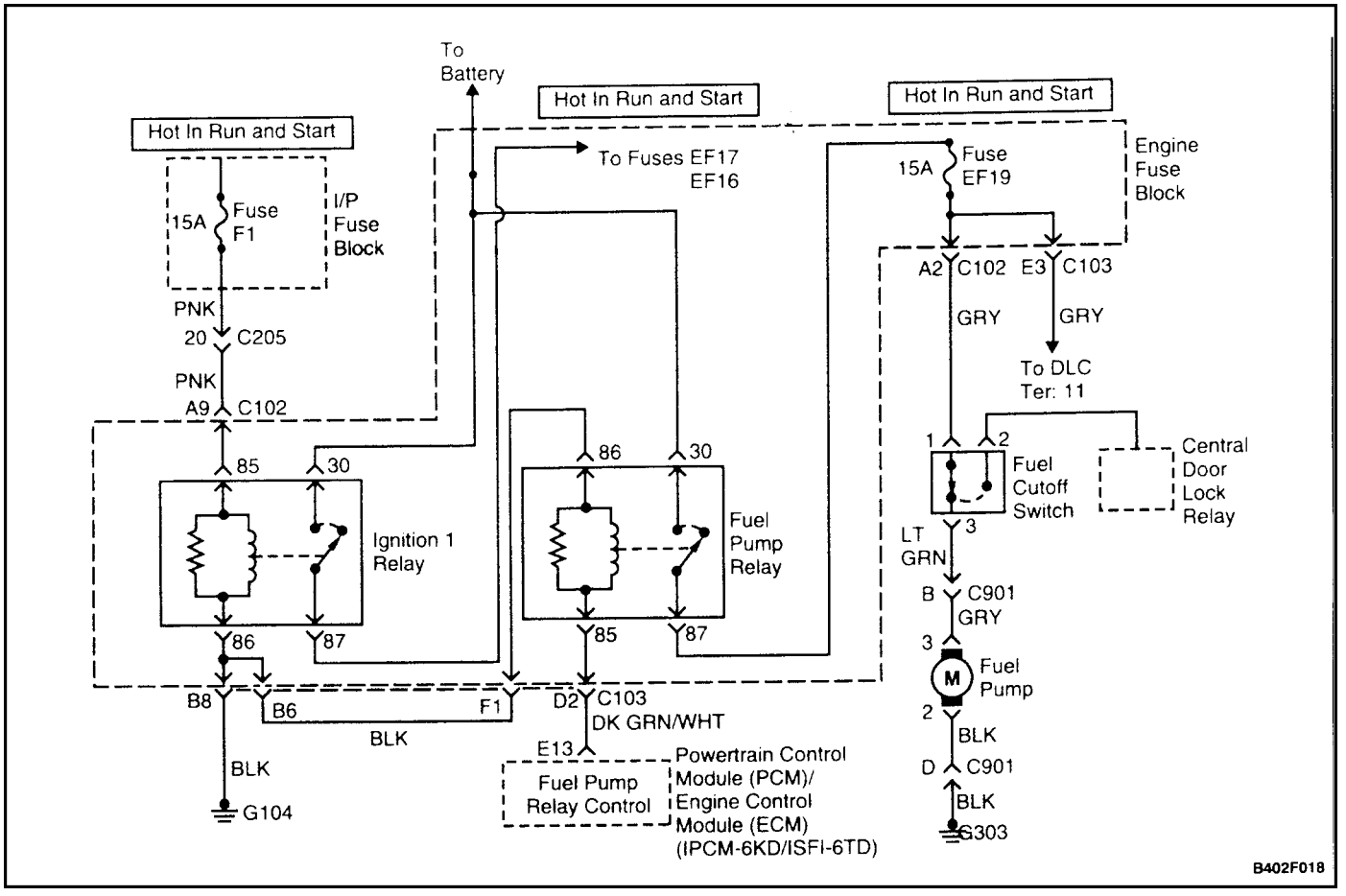

FUEL PUMP RELAY CIRCUIT CHECK

Circuit Description

When the ignition switch is turned ON, the powertrain control module (PCM)/engine control module (ECM) will activate the fuel pump relay and run the in–tank fuel pump. The fuel pump will operate as long as the engine is cranking or running and the PCM/ECM is receiving ignition reference pulses.

If there are no reference pulses, the PCM/ECM will shut off the fuel pump within 2 seconds after the ignition switch is turned ON.

Diagnostic Aids

An intermittent problem may be caused by a poor connection, rubbed through wire insulation, or a broken wire inside the insulation.

Test Description

The number(s) below refer to step(s) on the diagnostic table.

3. This step checks for the PCM/ECM providing a ground for the operation of the fuel pump relay.
7. By confirming that the wiring is OK using Steps 2 through 6, it can be determined that the fuel pump relay is at fault.
9. After determining that there is no ground being provided by the PCM/ECM to the fuel pump relay, the fault is either the PCM/ECM or the wiring between the PCM/ECM and the fuel pump relay.

Fuel Pump Relay Circuit Check

Step	Action	Value(s)	Yes	No
1	1. Turn the ignition OFF for 10 seconds. 2. Turn the ignition ON. 3. Listen for in–tank fuel pump operation. Does the fuel pump operate for the time specified?	2 sec	System OK	Go to *Step 2*
2	1. Turn the ignition OFF. 2. Disconnect the fuel pump relay. 3. Connect a test light between the fuel pump relay connector terminal 86 and battery positive. 4. Turn the ignition ON. Is the test light on?		Go to *Step 3*	Go to *Step 8*
3	1. Turn the ignition OFF. 2. Connect a test light between the fuel pump relay connector terminal 85 and battery positive. 3. Turn the ignition ON. 4. With the ignition ON, the test light should light for the time specified. Is the test light on?	2 sec	Go to *Step 4*	Go to *Step 9*
4	1. Turn the ignition OFF. 2. Connect a test light between the fuel pump relay connector terminal 30 and ground. Is the test light on?		Go to *Step 5*	Go to *Step 11*
5	Check for an open or short to ground in the wire between the fuel pump relay connector terminal 87 and the fuel cutoff switch terminal 1. Is the problem found?		Go to *Step 6*	Go to *Step 7*
6	1. Repair the wire between the fuel pump relay connector terminal 87 and the fuel cutoff switch terminal 1. 2. Install the fuel pump relay. 3. Turn the ignition OFF for 10 seconds. 4. Turn the ignition ON. Does the fuel pump operate for the time specified?	2 sec	System OK	
7	1. Replace the fuel pump relay. 2. Turn the ignition OFF for 10 seconds. 3. Turn the ignition ON. Does the fuel pump operate for the time specified?	2 sec	System OK	
8	Check for an open wire between the fuel pump relay connector terminal 86 and the ignition 1 relay connector terminal 86. Is the problem found?		Go to *Step 13*	Go to ”Ignition 1 Relay Circuit Check”
9	Check for an open wire between the fuel pump relay connector terminal 85 to the powertrain control module (PCM)/engine control module (ECM) connector terminal E13. Is the problem found?		Go to *Step 10*	Go to *Step 12*

Step	Action	Value(s)	Yes	No
10	1. Repair the wire between the fuel pump relay connector terminal 85 to the PCM/ECM connector terminal E13. 2. Install the fuel pump relay. 3. Turn the ignition OFF for 10 seconds. 4. Turn the ignition ON. Does the fuel pump operate for the time specified?	2 sec	System OK	
11	1. Repair the wire between the fuel pump relay connector terminal 30 and the battery. 2. Install the fuel pump relay. 3. Turn the ignition OFF for 10 seconds. 4. Turn the ignition ON. Does the fuel pump operate for the time specified?	2 sec	System OK	
12	1. Replace the PCM/ECM. 2. Turn the ignition OFF for 10 seconds. 3. Turn the ignition ON. Does the fuel pump operate for the time specified?	2 sec	System OK	
13	Repair the wire between the fuel pump relay connector terminal 86 and the ignition 1 relay connector terminal 86. Is the repair complete?		System OK	

SYMPTOM DIAGNOSIS

IMPORTANT PRELIMINARY CHECKS

Important : Several symptom procedures call for a careful visual/physical inspection. Always perform the visual/physical test first. Visual inspections may lead to correcting a problem without further checks and can save valuable time.

Step	Action	Value(s)	Yes	No
1	Perform an On–Board Diagnostic (OBD II) System Check. Is the check complete?		Go to*Step 2*	Go to"On–Board Diagnostic System Check"
2	1. Inspect all of the powertrain control module (PCM)/engine control module (ECM) ground connections. 2. Inspect all of the vacuum hoses for splits, kinks, and proper connections. 3. Check for air leaks at all of the mounting areas of the intake manifold sealing surfaces. 4. Inspect the ignition wires for cracking, hardness, proper routing, and carbon tracking. 5. Inspect the wiring for proper connections, pinches, and cuts. Are all checks complete?		Go to Appropriate Symptom Table	

INTERMITTENTS

The problem may or may not illuminate the Malfunction Indicator Lamp (MIL) or store a diagnostic trouble code (DTC).

Important : Do not use the DTC tables for intermittent problems. A fault must be present in order to locate the problem. If a fault is intermittent, use of DTC tables may result in the replacement of good parts.

Step	Action	Value(s)	Yes	No
1	Were the Important Preliminary Checks performed?		Go to*Step 2*	Go to"Important Preliminary Checks"
2	1. Perform a careful inspection of any suspect circuits. 2. Inspect for poor mating of the connector halves, or terminals not fully seated into the connector body. 3. Inspect for improperly formed or damaged terminals. 4. Inspect for poor terminal to wire connections. This requires removing the terminal from the connector body to inspect it. Are any problems present?		Go to*Step 3*	Go to*Step 4*
3	Repair the electrical connections as needed. Is the repair complete?		System OK	

Step	Action	Value(s)	Yes	No
4	Road test the vehicle with a voltmeter connected to a suspected circuit or a scan tool connected to the Data Link Connector (DLC). Did the voltmeter or the scan tool indicate an abnormal voltage or scan reading?		Go to*Step 5*	Go to*Step 6*
5	Replace the sensor in the affected circuit, if a Diagnostic Trouble Code (DTC) was stored for this circuit (except for the DTCs P0171 and P0172. Is the repair complete?		System OK	
6	Does an intermittent Malfunction Indicator Lamp (MIL) or DTC occur?		Go to*Step 7*	Go to*Step 8*
7	1. Check for a faulty relay, electronic control module (ECM) driven solenoid, or switch. 2. Check for improper installation of electrical devices, such as lights, two–way radios, electric motors, etc. 3. Inspect the ignition control wires for proper routing (away from ignition wires, ignition system components, and the generator). 4. Check for a short–to–ground in the MIL circuit or the DLC ”test” terminal. 5. Inspect the PCM/ECM ground connections. 6. Correct or repair the affected circuits as needed. Is the repair complete?		System OK	
8	1. Check for a loss of DTC memory. 2. Disconnect the Throttle Position Sensor. 3. Run the engine at idle until the MIL comes on. 4. Turn the ignition OFF. Is DTC P0122 stored in memory?		Go to*Step 10*	Go to*Step 9*
9	Replace the PCM/ECM. Is the repair complete?		System OK	
10	Does the vehicle stall while driving?		Go to*Step 11*	Go to*Step 12*
11	Monitor the oxygen sensor (O2S) and the injector base pulse width with the scan tool. Does the scan tool display a steady low voltage (about 0 mv) for the O2S sensor with the control module commanding an injector base pulse width of the value specified?	8 ms	Go to*Step 9*	Go to*Step 12*
12	1. Check for an open diode across the A/C clutch and for other open diodes. 2. Repair or replace any components as needed. Is the repair complete?		System OK	

HARD START

The engine cranks OK, but does not start for a long time. The engine eventually runs or may start and immediately die.

Important : Ensure that the driver is using the correct starting procedure. Before diagnosing, check service bulletins for updates.

Step	Action	Value(s)	Yes	No
1	Were the Important Preliminary Checks performed?		Go to*Step 2*	Go to"Important Preliminary Checks"
2	1. Connect the scan tool to the Data Link Connector (DLC). 2. Check the Engine Coolant Temperature (ECT) sensor and the Intake Air Temperature (IAT) sensor using the scan tool. 3. Compare the coolant temperature and the IAT with the ambient temperature when the engine is cold. Do the ECT and the IAT readings differ from the ambient temperature by more than the value specified?	5˚F (3˚C)	Go to*Step 3*	Go to*Step 4*
3	1. Measure the resistance of the ECT and the IAT sensor. 2. Compare the resistance value to specifications using the Temperature Vs. Resistance tables for diagnostic trouble codes (DTCs) P0118 and P0113. 3. If the resistance is not the same, replace the faulty sensor. Is the repair complete?		System OK	
4	1. Check for a sticking throttle shaft or a binding linkage that may cause a high Throttle Position (TP) sensor voltage. Repair or replace as needed. 2. Check the TP sensor voltage reading with the throttle closed. Does the voltage measure within the value specified?	0.4–0.8 v	Go to*Step 5*	Go to*Step 26*
5	1. Check the Manifold Absolute Pressure (MAP) sensor response and accuracy. 2. Replace the MAP sensor as needed. Is the repair complete?		System OK	Go to*Step 6*
6	Check the fuel pump operation. Does the fuel pump operate for the specified time when the ignition switch is turned ON?	2 sec	Go to*Step 7*	Go to"Fuel Pump Relay Circuit Check"
7	Check the fuel system pressure. Is the fuel pressure within the specifications?	(284–325 kPa) 41–47 psi	Go to*Step 29*	Go to*Step 8*
8	Check for water contamination in the fuel. Is fuel contaminated?		Go to*Step 9*	Go to*Step 10*
9	Replace the contaminated fuel. Is the repair complete?		System OK	

Step	Action	Value(s)	Yes	No
10	1. Check the fuel injector driver circuit. 2. Disconnect all of the fuel injector harness connectors at the fuel injectors. 3. Connect an injector test light between the harness terminals of each fuel injector connector. 4. Note the test light while cranking the engine. Does the test light blink at all connectors?		Go to*Step 13*	Go to*Step 11*
11	Check the fuel injector driver wiring harness, the connectors, and the connector terminals for the proper connections. Is the problem found?		Go to*Step 12*	Go to*Step 30*
12	Repair the wiring harness, the connector, or the connector terminal as needed. Is the repair complete?		System OK	
13	Measure the resistance of each fuel injector at 68˚F (20˚C). The resistance will increase slightly at higher temperatures. Is the fuel injector resistance within the value specified?	11.6–12.4 Ω	Go to*Step 15*	Go to*Step 14*
14	Replace any fuel injector with a resistance that is out of specifications. Is the repair complete?		System OK	
15	Perform an injector balance test. Is the problem found?		Go to*Step 16*	Go to*Step 17*
16	Replace any restricted or leaking fuel injectors as needed. Is the repair complete?		System OK	
17	1. Check for the proper ignition voltage output for each cylinder with a spark tester. 2. Inspect the spark plugs for cracks, wear, improper gap, burned electrodes, or heavy deposits. 3. Inspect the ignition wires for short conditions. 4. Inspect all of the ignition grounds for loose connections. 5. Inspect the powertrain control module (PCM)/engine control module (ECM) for the proper operation. Is the problem found?		Go to*Step 18*	Go to*Step 19*
18	Correct or replace any faulty ignition components. Is the repair complete?		System OK	
19	Does the engine misfire or cut out under load or at idle?		Go to”Ignition System Check”	Go to*Step 20*
20	Does the engine start, but then immediately stall?		Go to*Step 21*	Go to*Step 23*
21	1. Remove the Crankshaft Position (CKP) sensor. 2. Inspect for faulty connections and repair as needed. Is the problem found?		Go to*Step 22*	Go to*Step 25*
22	Repair the faulty connections as needed. Is the repair complete?		System OK	

Step	Action	Value(s)	Yes	No
23	1. Check for the proper valve timing. 2. Check the cylinder compression. 3. Inspect the pushrods, the rocker arms, the valve springs, and the camshaft lobes for excessive wear. 4. Inspect the intake manifold and the exhaust manifold passages for casting flash. Is the problem found?		Go to*Step 24*	Go to*Step 25*
24	Repair or replace any components as needed. Is the repair complete?		System OK	
25	Check the Idle Air Control (IAC) valve operation. Repair or replace components as needed. Is the repair complete?		System OK	
26	Check the base idle setting of the throttle body. Is the repair complete?		Go to*Step 27*	Go to*Step 28*
27	Check the Throttle Position (TP) sensor circuit for proper operation. Repair or replace components as needed. Is the repair complete?		System OK	
28	Adjust the base idle setting to specifications. Is the repair complete?		System OK	
29	Repair the fuel system as needed. Is the repair complete?		System OK	
30	Replace the PCM/ECM. Is the repair complete?		System OK	

SURGES OR CHUGGLES

Engine power varies under steady throttle or cruise, making it feel as if the vehicle speeds up and slows down with no change in the accelerator pedal position.

Important : Make sure the driver understands Torque Converter Clutch (TCC) and A/C compressor operation as described in the owner's manual

The speedometer reading and the speed reading on the scan tool should be equal.

Before diagnosing the symptom, check service bulletins for updates.

Step	Action	Value(s)	Yes	No
1	Were the Important Preliminary Checks performed?		Go to*Step 2*	Go to"Important Preliminary Checks"
2	Connect the scan tool to the Data Link Connector (DLC). Does the Oxygen Sensor (O2S) respond quickly to different throttle positions?		Go to*Step 4*	Go to*Step 3*
3	1. Check the O2S sensor for silicone or other contaminants from fuel or use of improper Room Temperature Vulcanizing (RTV) sealant. 2. Replace the contaminated O2S sensor. Is the repair complete?		System OK	

Step	Action	Value(s)	Yes	No
4	1. Drive the vehicle at the speed of the complaint. 2. Monitor the long term fuel trim reading using the scan tool. Is the long term fuel trim reading within the value specified?	115–150 counts	Go to*Step 7*	Go to*Step 5*
5	Is the long term fuel trim reading below the value specified?	115 counts	Go to"Diagnostic Aids for DTC P0172"	Go to*Step 6*
6	Is the long term fuel trim reading above the value specified?	150 counts	Go to"Diagnostic Aids for DTC P0171"	
7	Check the fuel system pressure while the condition exists. Is the fuel system pressure within specifications?	41–47 psi (284–325 kPa)	Go to*Step 8*	Go to*Step 17*
8	Check the in–line fuel filter. Is the filter dirty or plugged?		Go to*Step 18*	Go to*Step 9*
9	Perform an injector diagnosis. Does the injector balance test pinpoint the problem?		Go to*Step 19*	Go to*Step 10*
10	1. Check for proper ignition voltage output using a spark tester. 2. Inspect the spark plugs for cracks, wear, improper gap, burned electrodes, or heavy deposits. Is the problem found?		Go to*Step 11*	Go to*Step 12*
11	Repair or replace any ignition system components as needed. Is the repair complete?		System OK	
12	1. Inspect the powertrain control module (PCM)/engine control module (ECM) grounds to make sure they are clean, tight, and in their proper locations. 2. Inspect the vacuum lines for kinks or leaks. Is the problem found?		Go to*Step 13*	Go to*Step 14*
13	Repair the electrical connections or the vacuum lines as needed. Is the repair complete?		System OK	
14	Check the generator output voltage. Is the generator voltage within the value specified?	12–16 v	Go to*Step 16*	Go to*Step 15*
15	Repair the generator. Is the repair complete?		System OK	
16	1. Check for intermittent Exhaust Gas Recirculation (EGR) valve operation. 2. Check Torque Converter Clutch (TCC) operation. 3. Repair or replace any components as needed. Is the repair complete?		System OK	
17	Repair the fuel system as needed. Is the repair complete?		System OK	

Step	Action	Value(s)	Yes	No
18	Replace the fuel filter. Is the repair complete?		System OK	
19	Replace the leaking or restricted fuel injectors. Is the repair complete?		System OK	

LACK OF POWER, SLUGGISHNESS, OR SPONGINESS

The engine delivers less than expected power. There is little or no increase in speed when the accelerator pedal is partially applied.

Step	Action	Value(s)	Yes	No
1	Were the Important Preliminary Checks performed?		Go to*Step 2*	Go to"Important Preliminary Checks"
2	1. Verify the customer's complaint. 2. Compare the performance of the customer's vehicle with a similar unit. Does the problem exist?		Go to*Step 3*	System OK
3	1. Inspect the air filter for excessive contamination. 2. Replace the air filter as needed. 3. Check the transaxle shift pattern and downshift operation. Does the transaxle operate properly?		Go to*Step 4*	Go to*Step 5*
4	Check the fuel system pressure. Is the fuel system pressure within specifications?	41–47 psi (284–325 kPa)	Go to*Step 7*	Go to*Step 6*
5	Repair the transaxle as needed. Is the repair complete?		System OK	
6	Repair the fuel system as needed. Is the repair complete?		System OK	
7	Check for a restricted fuel filter or contaminated fuel. Is the problem found?		Go to*Step 8*	Go to*Step 9*
8	Repair or replace any components as needed. Is the repair complete?		System OK	
9	1. Check the ignition system output for all of the cylinders using a spark tester. 2. Check for proper ignition control operation. Is the ignition system operating properly?		Go to*Step 10*	Go to*Step 11*
10	1. With the engine at normal operating temperature, connect a vacuum gauge to a vacuum port on the intake manifold. 2. Operate the engine at 1,000 rpm. 3. Record the vacuum reading. 4. Increase the engine speed to 2,500 rpm. 5. Note the vacuum reading at a steady 2,500 rpm. Does the vacuum decrease more than the value specified?	10 kPa (3 in. Hg)	Go to*Step 12*	Go to*Step 15*
11	Repair or replace any ignition system components as needed. Is the repair complete?		System OK	
12	Inspect the exhaust system for restrictions and damaged or collapsed pipes. Is the problem found?		Go to*Step 13*	Go to*Step 14*
13	Repair or replace any components as needed. Is the repair complete?		System OK	

Step	Action	Value(s)	Yes	No
14	1. Check the cylinder compression and valve timing. 2. Inspect the camshaft for excessive wear. Is the problem found?		Go to*Step 15*	Go to*Step 16*
15	Repair or replace any engine components as needed. Is the repair complete?		System OK	
16	1. Check the powertrain control module (PCM)/engine control module (ECM) grounds for being clean, tight, and in their proper location. 2. Check the Exhaust Gas Recirculation (EGR) valve for being open or partially open all the time. 3. Check the Torque Converter Clutch (TCC) operation. 4. Check the A/C system operation. 5. Check the generator output. 6. Repair the generator if the output is not within the specified range. Are all checks and repairs complete?	12–16 v	System OK	

DETONATION/SPARK KNOCK

Step	Action	Value(s)	Yes	No
1	Were the Important Preliminary Checks performed?		Go to*Step 2*	Go to"Important Preliminary Checks"
2	1. Fill the fuel tank with a known good grade of gasoline that has the octane rating of the value specified. 2. Reevaluate the vehicle's performance. Does the detonation problem still exist?	87–89 octane	Go to*Step 3*	System OK
3	1. Inspect for low engine coolant. 2. Check for restricted airflow to the radiator or restricted coolant flow. 3. Check for a faulty thermostat. 4. Check for an incorrect coolant solution. Is the problem found?		Go to*Step 4*	Go to*Step 5*
4	Repair or replace any cooling system components as needed. Is the repair complete?		System OK	
5	1. Check the voltage using the scan tool. 2. Replace the Engine Coolant Temperature (ECT) sensor if the resistance is not within specifications as listed in the Diagnostic Aids for diagnostic trouble code (DTC) P0118. Is the problem found?		Go to*Step 6*	Go to*Step 7*
6	Replace the ECT sensor or repair the circuit as needed. Is the repair complete?		System OK	

Step	Action	Value(s)	Yes	No
7	1. Check the ignition system output with a spark tester. 2. Inspect the spark plugs for the proper heat range and gap. 3. Check for the proper operation of the ignition controls. Is the ignition system operating properly?		Go to*Step 9*	Go to*Step 8*
8	Repair or replace the ignition system components as needed. Is the repair complete?		System OK	
9	1. Connect the scan tool to the Data Link Connector (DLC). 2. Road test the vehicle at the speed of the complaint. 3. Monitor the long term fuel trim reading from the scanner data stream. Is the long term fuel trim reading above the value specified?	150 counts	Go to"Diagnostic Aids for DTC P0171"	Go to*Step 10*
10	Check the fuel system pressure. Is the problem found?	41–47 psi (284–325 kPa)	Go to*Step 11*	Go to*Step 12*
11	Repair or replace the fuel system components as needed. Is the repair complete?		System OK	
12	1. Inspect for carbon buildup inside the engine. 2. Remove the carbon with a top engine cleaner. Follow the instructions supplied with the product. 3. Check the basic engine parts such as the camshaft, the cylinder head, the pistons, etc. for excessive wear. 4. Replace any excessively worn parts. Is the procedure complete?		Go to*Step 13*	
13	1. Check the Exhaust Gas Recirculation (EGR) valve for proper operation. 2. Check the air intake system for proper operation. 3. Check the Torque Converter Clutch (TCC) operation and transaxle shift points. 4. Check the service bulletins for Programmable Read–Only Memory (PROM) updates. 5. Check the cylinder compression. 6. Repair or replace any faulty components. Are all checks and repairs complete?		System OK	

HESITATION, SAG, STUMBLE

Involves a momentary lack of response as the accelerator is pushed down. This can occur at any vehicle speed. It is usually the most severe when first trying to make the vehicle move, as from a stop. Hesitation, sag, or stumble may cause the engine to stall if severe enough.

Important : Before diagnosing this condition, check service bulletins for Programmable Read–Only Memory (PROM) updates.

Step	Action	Value(s)	Yes	No
1	Were the Important Preliminary Checks performed?		Go to*Step 2*	Go to"Important Preliminary Checks"
2	1. Check the fuel system pressure. If the pressure is not within the value specified, service the fuel system as needed. 2. Inspect the Throttle Position (TP) sensor for binding or sticking. The TP sensor voltage should increase at a steady rate as the throttle is moved toward Wide Open Throttle (WOT). Is the problem found?	41–47 psi (284–325 kPa)	Go to*Step 3*	Go to*Step 4*
3	Repair or replace any components as needed. Is the repair complete?		System OK	
4	1. Check the Manifold Absolute Pressure (MAP) sensor response and accuracy. 2. Inspect the fuel for water contamination. 3. Check the Evaporative (EVAP) Emission canister purge system for proper operation. Is the problem found?		Go to*Step 5*	Go to*Step 6*
5	Repair or replace any components as needed. Is the repair complete?		System OK	
6	1. Disconnect all of the fuel injector harness connectors. 2. Connect an injector test light between the harness terminals of each fuel injector. 3. Note the test light while cranking the engine. Does the test light blink on all connectors?		Go to*Step 8*	Go to*Step 7*
7	1. Repair or replace the faulty fuel injector drive harness, the connector, or the connector terminal. 2. If the connections and the harnesses are good, replace the powertrain control module PCM)/engine control module (ECM) for an internal open in the fuel injector driver circuit. Is the repair complete?		System OK	
8	Measure the resistance of each fuel injector. The resistance will increase slightly at higher temperatures. Is the fuel injector resistance within the value specified?	11.6–12.4 Ω	Go to*Step 10*	Go to*Step 9*
9	Replace any of the fuel injectors with a resistance that is out of specifications. Is the repair complete?		System OK	
10	Perform an injector balance test. Is the problem found?		Go to*Step 11*	Go to*Step 12*

Step	Action	Value(s)	Yes	No
11	Replace any restricted or leaking fuel injectors. Is the repair complete?		System OK	
12	Check the fuel system pressure after a cold start or during moderate or full throttle acceleration. Is the fuel pressure within specifications?	41–47 psi (284–325 kPa)	Go to*Step 14*	Go to*Step 13*
13	Repair the restriction in the fuel system or replace the faulty fuel pump. Is the repair complete?		System OK	
14	1. Check for faulty ignition wires. 2. Inspect for fouled spark plugs. 3. Check the ignition system output on each cylinder with a spark tester. Is the problem found?		Go to*Step 15*	Go to*Step 16*
15	Repair or replace any ignition components as needed. Is the repair complete?		System OK	
16	1. Check the generator output voltage. 2. Repair or replace the generator if the generator output is less than the value specified. 3. Check the Exhaust Gas Recirculation (EGR) valve operation. Are all checks and needed repairs complete?	12–16 v	System OK	

CUTS OUT, MISSES

This Involves a steady pulsation or jerking that follows engine speed, usually more pronounced as engine load increases. The exhaust has a steady spitting sound at idle or low speed.

Step	Action	Value(s)	Yes	No
1	Were the Important Preliminary Checks performed?		Go to*Step 2*	Go to"Important Preliminary Checks"
2	Check the ignition system output voltage for all of the cylinders using a spark tester. Is spark present on all of the cylinders?		Go to*Step 3*	Go to"Ignition System Check"
3	1. Inspect the spark plugs for excessive wear, insulation cracks, improper gap, or heavy deposits. 2. Check the resistance of the ignition wires. Replace any ignition wires that have a resistance greater than the value specified. Is the problem found?	30,000 Ω	Go to*Step 4*	Go to*Step 5*
4	Repair or replace any components as needed. Is the repair complete?		System OK	
5	With the engine running, spray the ignition wires with a fine water mist to check for arcing and shorting to ground. Is the problem found?		Go to*Step 6*	Go to*Step 7*
6	Replace the ignition wires. Is the repair complete?		System OK	

Step	Action	Value(s)	Yes	No
7	1. Perform a cylinder compression test. 2. If the compression is low, repair the engine as needed. 3. Inspect for proper valve timing, bent pushrods, worn rocker arms, broken or weak valve springs, and worn camshaft lobes. 4. Inspect the intake manifold and the exhaust manifold passages for casting flash. Is the problem found?		Go to*Step 8*	Go to*Step 9*
8	Repair or replace any components as needed. Is the repair complete?		System OK	
9	1. Check the fuel system for a plugged in–line fuel filter. 2. Check the fuel system for low fuel pressure. If the fuel pressure is below the value specified, service the fuel system as needed. 3. Inspect for contaminated fuel. Is the problem found?	41–47 psi (284–325 kPa)	Go to*Step 10*	Go to*Step 11*
10	Repair or replace any components as needed. Is the repair complete?		System OK	
11	1. Disconnect all of the fuel injector harness connectors at the fuel injectors. 2. Connect an injector test light to the harness terminals of each fuel injector connector. 3. Note the test light while cranking the engine for each fuel injector. Does the test light blink for all of the fuel injectors?		Go to*Step 13*	Go to*Step 12*
12	1. Repair or replace the faulty injector drive circuit harness, the connector, or the connector terminal. 2. If the harness, the connectors, and the terminals are OK, replace the powertrain control module (PCM)/engine control module (ECM). Is the repair complete?		System OK	
13	Measure the resistance of each fuel injector. The resistance will increase slightly at higher temperatures. Is the injector resistance within the value specified?	11.6–12.4 Ω	Go to*Step 15*	Go to*Step 14*
14	Replace any fuel injectors with a resistance that is out of specifications. Is the repair complete?		System OK	
15	Perform an injector balance test. Is the problem found?		Go to*Step 16*	Go to*Step 17*
16	Replace any restricted or leaking fuel injectors. Is the repair complete?		System OK	

Step	Action	Value(s)	Yes	No
17	1. Check for electromagnetic interference. 2. Monitor the engine rpm with a scan tool. Does the scan tool rpm change greatly with little change in actual engine rpm?		Go to*Step 18*	
18	1. Inspect the routing of the ignition wires. 2. Inspect all of the ignition system grounds. 3. Correct the routing or repair the ground connections as needed. Are all checks and needed repairs complete?		System OK	

POOR FUEL ECONOMY

Fuel economy, as measured by an actual road test, is noticeably lower than expected. Also, fuel economy is noticeably lower than it was on this vehicle at one time, as previously shown by an actual road test.

Important : Driving habits affect fuel economy. Check the owner's driving habits by asking the following questions:

1. Is the A/C system (i.e. defroster mode) turned on all the time?
2. Are the tires at the correct air pressure?
3. Have excessively heavy loads been carried?
4. Does the driver accelerate too much and too often? Suggest the driver read the section in the owner's manual about fuel economy.

Step	Action	Value(s)	Yes	No
1	Were the Important Preliminary Checks performed?		Go to*Step 2*	Go to"Important Preliminary Checks"
2	1. Inspect the air filter for excessive contamination. 2. Inspect for fuel system leaks. Are all needed checks complete?		Go to*Step 3*	
3	1. Inspect the spark plugs for excessive wear, insulation cracks, improper gap, or heavy deposits. 2. Replace any faulty spark plugs. 3. Inspect the ignition wires for cracking, hardness, and proper connections. Are all needed checks and repairs complete?		Go to*Step 4*	
4	1. Inspect the engine coolant level. 2. Check the thermostat for being always open or for an incorrect heat range. 3. Replace the thermostat as needed. Are all needed checks and repairs complete?		Go to*Step 5*	
5	1. Check the transaxle shift pattern. Ensure all transaxle gears are functioning. 2. Check the Torque Converter Clutch (TCC) operation with a scan tool. The scan tool should indicate rpm drop when the TCC is commanded on. 3. Check for proper calibration of the speedometer. 4. Check the brakes for dragging. 5. Check the cylinder compression. 6. Repair, replace, or adjust any components as needed. Are all checks and needed repairs complete?		System OK	

ROUGH, UNSTABLE, OR INCORRECT IDLE, STALLING

The engine runs unevenly at idle. If the condition is bad enough, the vehicle may shake. Also, the idle varies in rpm (called ”hunting”). Either condition may be severe enough to cause stalling. The engine idles at incorrect idle speed.

Important : Before diagnosing the symptom, check service bulletins for updates.

Step	Action	Value(s)	Yes	No
1	Were the Important Preliminary Checks performed?		Go to*Step 2*	Go to”Important Preliminary Checks”
2	1. Connect the scan tool to the Data Link Connector (DLC). 2. Monitor the Oxygen Sensor (O2S) reading at different throttle positions. Does the O2S sensor change quickly from rich to lean at the different throttle positions?		Go to*Step 5*	Go to*Step 3*
3	Check the O2S sensor for contamination from fuel or improper use of Room Temperature Vulcanizing (RTV) sealant. Is the O2S sensor contaminated?		Go to*Step 4*	Go to*Step 5*
4	Replace the contaminated O2S sensor as needed. Is the repair complete?		System OK	
5	1. Check for a sticking throttle shaft or binding throttle linkage that may cause incorrect Throttle Position (TP) sensor voltage. 2. Check the TP sensor voltage reading with the throttle closed. Is the TP sensor voltage within the value specified?	0.4–0.8 v	Go to*Step 6*	Go to”Diagnostic Aids for DTC P0123”
6	1. Check the Engine Coolant Temperature (ECT) sensor voltage reading using the scan tool. 2. Compare the ECT reading with the ambient temperature when the engine is cold. Does the ECT temperature reading differ from the ambient temperature by more than the value specified?	5˚F (3˚C)	Go to*Step 7*	Go to*Step 9*
7	Check for high resistance in the ECT sensor circuit or the sensor itself. Is the problem found?		Go to*Step 8*	Go to*Step 9*
8	Replace the ECT sensor or repair the circuit as needed. Is the repair complete?		System OK	
9	Check the Manifold Absolute Pressure (MAP) sensor for response and accuracy. Is the problem found?		Go to*Step 10*	Go to*Step 11*
10	Replace the MAP sensor or repair the MAP sensor circuit as needed. Is the repair complete?		System OK	

Step	Action	Value(s)	Yes	No
11	1. Road test the vehicle at the speed of the complaint. 2. Monitor the fuel trim reading using the scan tool. Is the fuel trim reading within the value specified?	115–150 counts	Go to*Step 14*	Go to*Step 12*
12	Is the fuel trim reading below the value specified?	115 counts	Go to"Diagnostic Aids for DTC P0172"	Go to*Step 13*
13	Is the fuel trim reading above the value specified?	150 counts	Go to"Diagnostic Aids for DTC P0171"	
14	1. Disconnect all of the fuel injector harness connectors at the fuel injectors. 2. Connect an injector test light between the harness terminals of each fuel injector connector. 3. Note the test light while cranking the engine. Does the test light blink for all of the fuel injectors?		Go to*Step 16*	Go to*Step 15*
15	1. Repair or replace the faulty injector drive circuit harness, the connector, or the connector terminals as needed. 2. If the harness, the connectors, and the terminals are OK, replace the powertrain control module (PCM)/engine control module (ECM). Is the repair complete?		System OK	
16	Measure the resistance of each of the fuel injectors. The resistance will increase slightly at higher temperatures. Is the resistance within the value specified?	11.6–12.4 Ω	Go to*Step 18*	Go to*Step 17*
17	Replace any fuel injectors with a resistance that is out of specifications. Is the repair complete?		System OK	
18	Perform an injector balance test. Is the problem found?		Go to*Step 19*	Go to*Step 20*
19	Replace any leaking or restricted fuel injectors. Is the repair complete?		System OK	
20	1. With the engine OFF, disconnect the fuel pressure regulator vacuum hose. 2. Thoroughly inspect the fuel pressure regulator vacuum port and the fuel pressure regulator vacuum hose for the presence of fuel. Is the problem found?		Go to*Step 21*	Go to*Step 22*
21	Replace the fuel pressure regulator as needed. Is the repair complete?		System OK	

Step	Action	Value(s)	Yes	No
22	1. Check the ignition system output voltage for all of the cylinders using a spark tester. 2. Inspect the spark plugs for excessive wear, insulation cracks, improper gap, or heavy deposits. 3. Inspect the ignitionwires for cracking, hardness, or improper connections. 4. Replace any ignition wires with a resistance over the value specified. Is the problem found?	30,000 Ω	Go to*Step 23*	Go to*Step 24*
23	Repair or replace any ignition system components as needed. Is the repair complete?		System OK	
24	1. Inspect for vacuum leaks. 2. Check for proper Positive Crankcase Ventilation (PCV) operation. 3. Check the Idle Air Control (IAC) valve operation. 4. Inspect the PCM/ECM ground connections. Is the problem found?		Go to*Step 25*	Go to*Step 26*
25	Repair or replace any components as needed. Is the repair complete?		System OK	
26	1. Check the Exhaust Gas Recirculation (EGR) valve for proper operation. 2. Inspect the battery cables and the ground straps for proper connections. 3. Check the generator voltage output. Repair or replace the generator if the voltage output is not within the value specified. Is the problem found?	12–16 v	Go to*Step 27*	Go to*Step 28*
27	Repair or replace any components as needed. Is the repair complete?		System OK	
29	1. Inspect for broken engine mounts. 2. Check for proper valve timing. 3. Perform a cylinder compression test. 4. Inspect for bent pushrods, worn rocker arms, broken or weak valve springs, and a worn camshaft. 5. Perform repairs as needed. Are all of the checks and needed repairs complete?		System OK	

EXCESSIVE EXHAUST EMISSIONS OR ODORS

A vehicle fails an emission test. The vehicle has an excessive rotten egg smell.

Important : Excessive odors do not necessarily indicate excessive emissions.

Step	Action	Value(s)	Yes	No
1	Were the Important Preliminary Checks performed?		Go to*Step 2*	Go to"Important Preliminary Checks"
2	1. Run the engine until it reaches operating temperature. 2. Perform an emission test. Does the vehicle pass the emission test?		System OK	Go to*Step 3*
3	1. Connect the scan tool to the Data Link Connector (DLC). 2. Road test the vehicle. 3. Monitor the long term fuel trim memory. Is the long term fuel trim memory within the value specified?	115–150 counts	Go to*Step 6*	Go to*Step 4*
4	Is the long term fuel trim memory below the value specified?	115 counts	Go to"Diagnostic Aids for DTC P0172"	Go to*Step 5*
5	Is the long term fuel trim memory above the value specified?	150 counts	Go to"Diagnostic Aids for DTC P0171"	
6	1. Check for a properly installed fuel cap. 2. Check the fuel system pressure. 3. Perform an injector balance test. Is the problem found?		Go to*Step 7*	Go to*Step 8*
7	1. Repair or replace any fuel system components as needed. 2. Perform an emission test. Does the vehicle pass the emission test?		System OK	
8	1. Check the ignition system for proper operation. 2. Inspect the spark plugs for excessive wear, insulation cracks, improper gap, or heavy deposits. 3. Check the ignition wires for cracking, hardness, or improper connections. Is the problem found?		Go to*Step 9*	Go to*Step 10*

Step	Action	Value(s)	Yes	No
9	1. Repair or replace any ignition system components as needed. 2. Perform an emission test. Does the vehicle pass the emission test?		System OK	
10	1. Inspect for vacuum leaks. 2. Inspect the catalytic converter for contamination. 3. Inspect for carbon buildup on the throttle body and the throttle plate and inside the engine. Remove with a top engine cleaner. 4. Check the Exhaust Gas Recirculation (EGR) valve to make sure it opens. 5. Check for proper Positive Crankcase Ventilation (PCV) operation. Are all checks and needed repairs complete?		System OK	

DIESELING, RUN–ON

An engine continues to run after the ignition switch is turned OFF.

Step	Action	Value(s)	Yes	No
1	Were the Important Preliminary Checks performed?		Go to*Step 2*	Go to"Important Preliminary Checks"
2	Does the engine run smoothly after the ignition switch is turned OFF?		Go to*Step 3*	Go to*Step 4*
3	1. Check the ignition switch and the ignition switch adjustment. 2. Replace the ignition switch if needed. Is the repair complete?		System OK	
4	1. Check the evaporative emission system. 2. Check for leaking fuel injectors. 3. Check the Idle Air Control (IAC) valve operation. 4. Inspect for vacuum leaks. 5. Check for the proper base idle setting. Are all checks and repairs complete?		System OK	

BACKFIRE

Fuel ignites in the intake manifold, or in the exhaust system, making a loud popping noise.

Important : Before diagnosing the symptom, check service bulletins for updates.

Step	Action	Value(s)	Yes	No
1	Were the Important Preliminary Checks performed?		Go to*Step 2*	Go to"Important Preliminary Checks"
2	1. Inspect for crossed or crossfiring ignition wires. 2. Check the ignition system output voltage for all cylinders using a spark tester. 3. Inspect the spark plugs for excessive wear, burned electrodes, improper gap, or heavy deposits.. Is the problem found?		Go to*Step 3*	Go to*Step 4*
3	Repair or replace any ignition system components as needed. Is the repair complete?		System OK	
4	1. Check the fuel system operation. 2. Check the fuel injectors by performing an injector diagnosis. Is the problem found?		Go to*Step 5*	Go to*Step 6*
5	Repair or replace any fuel system components as needed. Is the repair complete?		System OK	
6	1. Inspect the Exhaust Gas Recirculation (EGR) gasket for a leak or a loose fit. 2. Check the EGR valve for proper operation. 3. Inspect the intake manifold and the exhaust manifold for a casting flash. Is the problem found?		Go to*Step 7*	Go to*Step 8*
7	Repair or replace any components as needed. Is the repair complete?		System OK	
8	1. Inspect the timing belt for proper installation and tension. 2. Check the engine compression. 3. Inspect the intake manifold gasket and the exhaust manifold gasket for leaks. 4. Check for sticking or leaking valves. 5. Repair or replace any components as needed. Are all checks and corrections complete?		System OK	

GENERAL DESCRIPTION AND SYSTEM OPERATION

IGNITION SYSTEM OPERATION

This ignition system does not use a conventional distributor and coil. It uses a crankshaft position sensor input to the powertrain control module (PCM)/engine control module (ECM). The PCM/ECM then determines Electronic Spark Timing (EST) and triggers the direct ignition system ignition coil.

This type of distributorless ignition system uses a ”waste spark” method of spark distribution. Each cylinder is paired with the cylinder that is opposite it (1–4 or 2–3). The spark occurs simultaneously in the cylinder coming up on the compression stroke and in the cylinder coming up on the exhaust stroke. The cylinder on the exhaust stroke requires very little of the available energy to fire the spark plug. The remaining energy is available to the spark plug in the cylinder on the compression stroke.

These systems use the EST signal from the PCM/ECM to control the electronic spark timing. The PCM/ECM uses the following information:

- Engine load (manifold pressure or vacuum).
- Atmospheric (barometric) pressure.
- Engine temperature.
- Intake air temperature.
- Crankshaft position.
- Engine speed (rpm).

ELECTRONIC IGNITION SYSTEM IGNITION COIL

The Electronic Ignition (EI) system ignition coil provides the spark for two spark plugs simultaneously. The EI system ignition coil is not serviceable and must be replaced as an assembly.

CRANKSHAFT POSITION SENSOR

This direct ignition system uses a magnetic crankshaft position sensor. This sensor protrudes through its mount to within approximately 0.05 inch (1.3 mm) of the crankshaft reluctor. The reluctor is a special wheel attached to the crankshaft or crankshaft pulley with 58 slots machined into it, 57 of which are equally spaced in 6 degree intervals. The last slot is wider and serves to generate a ”sync pulse.” As the crankshaft rotates, the slots in the reluctor change the magnetic field of the sensor, creating an induced voltage pulse. The longer pulse of the 58th slot identifies a specific orientation of the crankshaft and allows the powertrain control module (PCM)/engine control module (ECM) to determine the crankshaft orientation at all times. The PCM/ECM uses this information to generate timed ignition and injection pulses that it sends to the ignition coils and to the fuel injectors.

CAMSHAFT POSITION SENSOR

The Camshaft Position (CMP) sensor sends a CMP sensor signal to the powertrain control module (PCM)/engine control module (ECM). The PCM/ECM uses this signal as a ”sync pulse” to trigger the injectors in the proper sequence. The PCM/ECM uses the CMP sensor signal to indicate the position of the #1 piston during its power stroke. This allows the PCM/ECM to calculate true sequential fuel injection mode of operation. If the PCM/ECM detects an incorrect CMP sensor signal while the engine is running, DTC P0341 will set. If the CMP sensor signal is lost while the engine is running, the fuel injection system will shift to a calculated sequential fuel injection mode based on the last fuel injection pulse, and the engine will continue to run. As long as the fault is present, the engine can be restarted. It will run in the calculated sequential mode with a 1–in–6 chance of the injector sequence being correct.

IDLE AIR SYSTEM OPERATION

The idle air system operation is controlled by the base idle setting of the throttle body and the Idle Air Control (IAC) valve.

The powertrain control module (PCM)/engine control module (ECM) uses the IAC valve to set the idle speed dependent on conditions. The PCM/ECM uses information from various inputs, such as coolant temperature, manifold vacuum, etc., for the effective control of the idle speed.

FUEL CONTROL SYSTEM OPERATION

The function of the fuel metering system is to deliver the correct amount of fuel to the engine under all operating conditions. The fuel is delivered to the engine by the individual fuel injectors mounted into the intake manifold near each cylinder.

The two main fuel control sensors are the manifold absolute pressure (MAP) sensor and the oxygen sensor O2S 1).

The MAP sensor measures or senses the intake manifold vacuum. Under high fuel demands the MAP sensor reads a low vacuum condition, such as wide open throttle. The powertrain control module (PCM)/engine control module (ECM) uses this information to richen the mixture, thus increasing the fuel injector on–time, to provide the correct amount of fuel. When decelerating, the vacuum increases. This vacuum change is sensed by the MAP sensor and read by the PCM/ECM, which then decreases the fuel injector on–time due to the low fuel demand conditions.

The O2S sensor is located in the exhaust manifold. The O2S sensor indicates to the PCM/ECM the amount of oxygen in the exhaust gas and the PCM/ECM changes the air/fuel ratio to the engine by controlling the fuel injectors. The best air/fuel ratio to minimize exhaust emissions is 14.7 to 1, which allows the catalytic converter to operate most effi-

ciently. Because of the constant measuring and adjusting of the air/fuel ratio, the fuel injection system is called a ”closed loop” system.

The PCM/ECM uses voltage inputs from several sensors to determine how much fuel to provide to the engine. The fuel is delivered under one of several conditions, called ”modes.”

Starting Mode

When the ignition is turned ON, the PCM/ECM turns the fuel pump relay on for two seconds. The fuel pump then builds fuel pressure. The PCM/ECM also checks the Engine Coolant Temperature (ECT) sensor and the Throttle Position (TP) sensor and determines the proper air/fuel ratio for starting the engine. This ranges from 1.5 to 1 at –97˚F (–36˚C) coolant temperature to 14.7 to 1 at 201˚F (94˚C) coolant temperature. The PCM/ECM controls the amount of fuel delivered in the starting mode by changing how long the fuel injector is turned on and off. This is done by ”pulsing” the fuel injectors for very short times.

Clear Flood Mode

If the engine floods with excessive fuel, it may be cleared by pushing the accelerator pedal down all the way. The PCM/ECM will then completely turn off the fuel by eliminating any fuel injector signal. The PCM/ECM holds this injector rate as long as the throttle stays wide open and the engine is below approximately 400. If the throttle position becomes less than approximately 80 percent, the PCM/ECM returns to the starting mode.

Run Mode

The run mode has two conditions called ”open loop” and ”closed loop.”

Open Loop

When the engine is first started and it is above 400 rpm, the system goes into ”open loop” operation. In ”open loop,” the PCM/ECM ignores the signal from the O2S and calculates the air/fuel ratio based on inputs from the ECT sensor and the MAP sensor. The sensor stays in ”open loop” until the following conditions are met:

- The O2S sensor has a varying voltage output, showing that it is hot enough to operate properly.
- The ECT sensor is above a specified temperature.
- A specific amount of time has elapsed after starting the engine.

Closed Loop

The specific values for the above conditions vary with different engines and are stored in the Electronically Erasable Programmable Read–Only Memory (EEPROM). When these conditions are met, the system goes into ”closed loop” operation. In ”closed loop,” the PCM/ECM calculates the air/fuel ratio (fuel injector ontime) based on the signal from the oxygen sensor. This allows the air/fuel ratio to stay very close to 14.7 to 1.

Acceleration Mode

The PCM/ECM responds to rapid changes in throttle position and airflow and provides extra fuel.

Deceleration Mode

The PCM/ECM responds to changes in throttle position and airflow and reduces the amount of fuel. When deceleration is very fast, the PCM/ECM can cut off fuel completely for short periods of time.

Battery Voltage Correction Mode

When battery voltage is low, the PCM/ECM can compensate for a weak spark delivered by the ignition module by using the following methods:

- Increasing the fuel injector pulse width.
- Increasing the idle speed rpm.
- Increasing the ignition dwell time.

Fuel Cut–Off Mode

No fuel is delivered by the fuel injectors when the ignition is OFF. This prevents dieseling or engine run–on. Also, the fuel is not delivered if there are no reference pulses received from the central power supply. This prevents flooding.

EVAPORATIVE EMISSION CONTROL SYSTEM OPERATION

The basic Evaporative (EVAP) Emission control system used is the charcoal canister storage method. This method transfers fuel vapor from the fuel tank to an activated carbon (charcoal) storage device (canister) to hold the vapors when the vehicle is not operating. When the engine is running, the fuel vapor is purged from the carbon element by intake airflow and consumed in the normal combustion process.

Gasoline vapors from the fuel tank flow into the tube labeled TANK. These vapors are absorbed into the carbon. The canister is purged by the powertrain control module (PCM)/engine control module (ECM) when the engine has been running for a specified amount of time. Air is drawn into the canister and mixed with the vapor. This mixture is then drawn into the intake manifold.

The PCM/ECM supplies a ground to energize the EVAP emission canister purge solenoid valve. This valve is PulseWidth Modulated (PWM) or turned on and off several times a second. The EVAP emission canister purge PWM duty cycle varies according to operating conditions determined by mass airflow, fuel trim, and intake air temperature.

Poor idle, stalling, and poor driveability can be caused by the following conditions:

- An inoperative EVAP emission canister purge solenoid valve.
- A damaged canister.
- Hoses that are split, cracked, or not connected to the proper tubes.

EVAPORATIVE EMISSION CANISTER

The Evaporative (EVAP) Emission canister is an emission control device containing activated charcoal granules. The EVAP emission canister is used to store fuel vapors from the fuel tank. Once certain conditions are met, the powertrain control module (PCM)/engine control module (ECM) activates the EVAP canister purge solenoid, allowing the fuel vapors to be drawn into the engine cylinders and burned.

POSITIVE CRANKCASE VENTILATION CONTROL SYSTEM OPERATION

A Positive Crankcase Ventilation (PCV) system is used to provide complete use of the crankcase vapors. Fresh air from the air cleaner is supplied to the crankcase. The fresh air is mixed with blowby gases which are then passed through a vacuum hose into the intake manifold.

Periodically inspect the hoses and the clamps. Replace any crankcase ventilation components as required.

A restricted or plugged PCV hose may cause the following conditions:

- Rough idle
- Stalling or low idle speed
- Oil leaks
- Oil in the air cleaner
- Sludge in the engine

A leaking PCV hose may cause the following conditions:

- Rough idle
- Stalling
- High idle speed

ENGINE COOLANT TEMPERATURE SENSOR

The Engine Coolant Temperature (ECT) sensor is a thermistor (a resistor which changes value based on temperature) mounted in the engine coolant stream. Low coolant temperature produces a high resistance (100,000 ohms at –40˚F [–40˚C]) while high temperature causes low resistance (70 ohms at 266˚F [130˚C]).

The powertrain control module (PCM)/engine control module (ECM) supplies 5 volts to the ECT sensor through a resistor in the PCM/ECM and measures the change in voltage. The voltage will be high when the engine is cold, and low when the engine is hot. By measuring the change in voltage, the PCM/ECM can determine the coolant temperature. The engine coolant temperature affects most of the systems that the PCM/ECM controls. A failure in the ECT sensor circuit should set a diagnostic trouble code P0117 or P0118. Remember, these diagnostic trouble codes indicate a failure in the ECT sensor circuit, so proper use of the chart will lead either to repairing a wiring problem or to replacing the sensor to repair a problem properly.

THROTTLE POSITION SENSOR

The Throttle Position (TP) sensor is a potentiometer connected to the throttle shaft of the throttle body. The TP sensor electrical circuit consists of a 5 volt supply line and a ground line, both provided by the powertrain control module (PCM)/engine control module (ECM). The PCM/ECM calculates the throttle position by monitoring the voltage on this signal line. The TP sensor output changes as the accelerator pedal is moved, changing the throttle valve angle. At a closed throttle position, the output of the TP sensor is low, about 0.5 volt. As the throttle valve opens, the output increases so that, at Wide Open Throttle (WOT), the output voltage will be about 5 volts.

The PCM/ECM can determine fuel delivery based on throttle valve angle (driver demand). A broken or loose TP sensor can cause intermittent bursts of fuel from the injector and an unstable idle, because the PCM/ECM thinks the throttle is moving. A problem in any of the TP sensor circuits should set a diagnostic trouble code (DTC) P0121 or P0122. Once the DTC is set, the PCM/ECM will substitute a default value for the TP sensor and some vehicle performance will return. A DTC P0121 will cause a high idle speed.

CATALYST MONITOR OXYGEN SENSORS

Three–way catalytic converters are used to control emissions of hydrocarbons (HC), carbon monoxide (CO), and oxides of nitrogen (NOx). The catalyst within the converters promotes a chemical reaction. This reaction oxidizes the HC and CO present in the exhaust gas and converts them into harmless water vapor and carbon dioxide. The catalyst also reduces NOx by converting it to nitrogen. The powertrain control module (PCM)/engine control module (ECM) can monitor this process using the Bank 1 Sensor 1 and Bank 1 Sensor 2 sensors. These sensors produce an output signal which indicates the amount of oxygen present in the exhaust gas entering and leaving the three–way converter. This indicates the catalyst's ability to efficiently convert exhaust gasses. If the catalyst is operating efficiently, the Bank 1 Sensor 1 sensor signals will be more active than the signals produced by the Bank 1 Sensor 2 sensor. The catalyst monitor sensors operate the same way as the fuel control sensors. The sensor's main function is catalyst monitoring, but they also have a limited role in fuel control. If a sensor output indicates a voltage either above or below the 450 mv bias voltage for an extended period of time, the PCM/ECM will make a slight adjustment to fuel trim to ensure that fuel delivery is correct for catalyst monitoring.

A problem with the Bank 1 Sensor 1 sensor circuit will set DTC P0131, P0132, P0133 or P0134 depending, on the special condition. A problem with the Bank 1 Sensor 2 sensor signal will set DTC P0137, P0138, P0140 or P0141, depending on the special condition.

A fault in the heated oxygen sensor (HO2S) heater element or its ignition feed or ground will result in lower oxygen sensor response. This may cause incorrect catalyst monitor diagnostic results.

EXHAUST GAS RECIRCULATION VALVE

The Exhaust Gas Recirculation (EGR) system is used on engines equipped with an automatic transaxle to lower NOx (oxides of nitrogen) emission levels caused by high combustion temperature. The EGR valve is controlled by the powertrain control module (PCM)/engine control module (ECM). The EGR valve feeds small amounts of exhaust gas into the intake manifold to decrease combustion temperature. The amount of exhaust gas recirculated is controlled by variations in vacuum and exhaust back pressure. If too much exhaust gas enters, combustion will not take place. For this reason, very little exhaust gas is allowed to pass through the valve, especially at idle.

The EGR valve is usually open under the following conditions:

- Warm engine operation.
- Above idle speed.

Results of Incorrect Operation

Too much EGR flow tends to weaken combustion, causing the engine to run roughly or to stop. With too much EGR flow at idle, cruise, or cold operation, any of the following conditions may occur:

- The engine stops after a cold start.
- The engine stops at idle after deceleration.
- The vehicle surges during cruise.
- Rough idle.

If the EGR valve stays open all the time, the engine may not idle. Too little or no EGR flow allows combustion temperatures to get too high during acceleration and load conditions. This could cause the following conditions:

- Spark knock (detonation)
- Engine overheating
- Emission test failure

INTAKE AIR TEMPERATURE SENSOR

The Intake Air Temperature (IAT) sensor is a thermistor, a resistor which changes value based on the temperature of the air entering the engine. Low temperature produces a high resistance (4,500 ohms at –40˚F [–40˚C]), while high temperature causes a low resistance (70 ohms at 266˚F [130˚C]).

The powertrain control module (PCM)/engine control module (ECM) provides 5 volts to the IAT sensor through a resistor in the PCM/ECM and measures the change in voltage to determine the IAT. The voltage will be high when the manifold air is cold and low when the air is hot. The PCM/ECM knows the intake IAT by measuring the voltage.

The IAT sensor is also used to control spark timing when the manifold air is cold.

A failure in the IAT sensor circuit sets a diagnostic trouble code P0112 or P0113.

IDLE AIR CONTROL VALVE

Notice : Do not attempt to remove the protective cap to readjust the stop screw. Misadjustment may result in damage to the Idle Air Control (IAC) valve or to the throttle body.

The IAC valve is mounted on the throttle body where it controls the engine idle speed under the command of the powertrain control module (PCM)/engine control module (ECM). The PCM/ECM sends voltage pulses to the IAC valve motor windings, causing the IAC valve pintle tomove in or out a given distance (a step or count) for each pulse. The pintle movement controls the airflow around the throttle valves which, in turn, control the engine idle speed.

The desired idle speeds for all engine operating conditions are programmed into the calibration of the PCM/ECM. These programmed engine speeds are based on the coolant temperature, the park/neutral position switch status, the vehicle speed, the battery voltage, and the A/C system pressure (if equipped).

The PCM/ECM ”learns” the proper IAC valve positions to achieve warm, stabilized idle speeds (rpm) desired for the various conditions (park/neutral or drive, A/C on or off, if equipped). This information is stored in PCM/ECM ”keep alive” memories. Information is retained after the ignition is turned OFF. All other IAC valve positioning is calculated based on these memory values. As a result, engine variations due to wear and variations in the minimum throttle valve position (within limits) do not affect engine idle speeds. This system provides correct idle control under all conditions. This also means that disconnecting power to the PCM/ECM can result in incorrect idle control or the necessity to partially press the accelerator when starting until the PCM/ECM relearns idle control.

Engine idle speed is a function of total airflow into the engine based on the IAC valve pintle position, the throttle valve opening, and the calibrated vacuum loss through accessories. The minimum throttle valve position is set at the factory with a stop screw. This setting allows enough airflow by the throttle valve to cause the IAC valve pintle to be positioned a calibrated number of steps (counts) from the seat during ”controlled” idle operation. The minimum throttle valve position setting on this engine should not be considered the ”minimum idle speed,” as on other fuel injected engines. The throttle stop screw is covered with a plug at the factory following adjustment.

If the IAC valve is suspected as the cause of improper idle speed, refer to ”Idle Air Control System Check” in this section.

MANIFOLD ABSOLUTE PRESSURE SENSOR

The Manifold Absolute Pressure (MAP) sensor measures the changes in the intake manifold pressure which result from engine load and speed changes. It converts these to a voltage output.

A closed throttle on engine coast down produces a relatively low MAP output. MAP is the opposite of vacuum. When manifold pressure is high, vacuum is low. The MAP sensor is also used to measure barometric pressure. This is performed as part of MAP sensor calculations. With the ignition ON and the engine not running, the powertrain control module (PCM)/engine control module (ECM) will read the manifold pressure as barometric pressure and adjust the air/fuel ratio accordingly. This compensation for altitude allows the system to maintain driving performance while holding emissions low. The barometric function will update periodically during steady driving or under a wide open throttle condition. In the case of a fault in the barometric portion of the MAP sensor, the PCM/ECM will set to the default value.

A failure in the MAP sensor circuit sets a diagnostic trouble code P0107 or P0108.

The following tables show the difference between absolute pressure and vacuum related to MAP sensor output, which appears as the top row of both tables.

MAP

Volts	4.9	4.4	3.8	3.3	2.7	2.2	1.7	1.1	0.6	0.3	0.3
kPa	100	90	80	70	60	50	40	30	20	10	0
in. Hg	29.6	26.6	23.7	20.7	17.7	14.8	11.8	8.9	5.9	2.9	0

VACUUM

Volts	4.9	4.4	3.8	3.3	2.7	2.2	1.7	1.1	0.6	0.3	0.3
kPa	0	10	20	30	40	50	60	70	80	90	100
in. Hg	0	2.9	5.9	8.9	11.8	14.8	17..7	20.7	23.7	26.7	29.6

POWERTRAIN CONTROL MODULE/ENGINE CONTROL MODULE

The powertrain control module (PCM)/engine control module (ECM), located inside the passenger kick–panel, is the control center of the fuel injection system. It constantly looks at the information from various sensors and controls the systems that affect the vehicle's performance. The PCM/ECM also performs the diagnostic functions of the system. It can recognize operational problems, alert the driver through the Malfunction Indicator Lamp (MIL), and store diagnostic trouble code(s) which identify problem areas to aid the technician in making repairs.

There are no serviceable parts in the PCM/ECM. The calibrations are stored in the PCM/ECM in the Programmable Read–Only Memory (PROM).

The PCM/ECM supplies either 5 or 12 volts to power the sensors or switches. This is done through resistances in the PCM/ECM which are so high in value that a test light will not come on when connected to the circuit. In some cases, even an ordinary shop voltmeter will not give an accurate reading because its resistance is too low. You must use a digital voltmeter with a 10 megohm input impedance to get accurate voltage readings. The PCM/ECM controls output circuits such as the fuel injectors, the idle air control valve, the A/C clutch relay, etc., by controlling the ground circuit through transistors or a device called a "quad–driver."

FUEL INJECTOR

The Multiport Fuel Injection (MFI) assembly is a solenoid–operated device controlled by the powertrain control module (PCM)/engine control module (ECM). It meters pressurized fuel to a single engine cylinder. The PCM/ECM energizes the fuel injector or the solenoid to a normally closed ball or pintle valve. This allows fuel to flow into the top of the injector, past the ball or pintle valve, and through a recessed flow director plate at the injector outlet.

The director plate has six machined holes that control the fuel flow, generating a conical spray pattern of finely atomized fuel at the injector tip. Fuel from the tip is directed at the intake valve, causing it to become further atomized and vaporized before entering the combustion chamber. A fuel injector which is stuck partially open will cause a loss of fuel pressure after the engine is shut down. Also, an extended crank time will be noticed on some engines. Dieseling can also occur because some fuel can be delivered to the engine after the ignition is turned OFF.

KNOCK SENSOR

The knock sensor detects abnormal knocking in the engine. The sensor is mounted in the engine block near the cylinders. The sensor produces an AC output voltage which increases with the severity of the knock. This signal

is sent to the powertrain control module (PCM)/engine control module (ECM). The PCM/ECM then adjusts the ignition timing to reduce the spark knock.

G SENSOR

The powertrain control module (PCM)/engine control module (ECM) receives rough road information from the G sensor. The PCM/ECM uses the rough road information to enable or disable the misfire diagnostic. The misfire diagnostic can be greatly affected by crankshaft speed variations caused by driving on rough road surfaces. The G sensor generates rough road information by producing a signal which is proportional to the movement of a small metal bar inside the sensor.

If a fault occurs which causes the PCM/ECM to not receive rough road information between 30 and 80 mph (50 and 132 km/h), DTC P1391 will set.

FUEL CUTOFF SWITCH

The fuel cutoff switch is a safety device. In the event of a collision or sudden impact, it automatically cuts off the fuel supply and activates the door lock relay. After the switch has been activated, it must be reset in order to restart the engine. To reset this fuel–cutoff feature, press the rubber top of the switch located near the left side of the driver's seat.

STRATEGY–BASED DIAGNOSTICS

Strategy–Based Diagnostics

The strategy–based diagnostic is a uniform approach to repair all Electrical/Electronic (E/E) systems. The diagnostic flow can always be used to resolve an E/E system problem and is a starting point when repairs are necessary. The following steps will instruct the technician on how to proceed with a diagnosis:

- Verify the customer complaint. To verify the customer complaint, the technician should know the normal operation of the system.
- Perform preliminary checks as follows:
  - Conduct a thorough visual inspection.
  - Review the service history.
  - Detect unusual sounds or odors.
  - Gather Diagnostic Trouble Code (DTC) information to achieve an effective repair.
- Check bulletins and other service information. This includes videos, newsletters, etc.
- Refer to service information (manual) system check(s).
- Refer to service diagnostics.

No Trouble Found

This condition exists when the vehicle is found to operate normally. The condition described by the customer may be normal. Verify the customer complaint against another vehicle that is operating normally. The condition may be intermittent. Verify the complaint under the conditions described by the customer before releasing the vehicle.

Re–examine the complaint.

When the complaint cannot be successfully found or isolated, a re–evaluation is necessary. The complaint should be re–verified and could be intermittent as defined in "Intermittents," or could be normal.

After isolating the cause, the repairs should be made. Validate for proper operation and verify that the symptom has been corrected. This may involve road testing or other methods to verify that the complaint has been resolved under the following conditions:

- Conditions noted by the customer.
- If a DTC was diagnosed, verify a repair by duplicating conditions present when the DTC was set as noted in the Failure Records or Freeze Frame data.

Verifying Vehicle Repair

Verification of the vehicle repair will be more comprehensive for vehicles with On–Board Diagnostic (OBD II) system diagnostics. Following a repair, the technician should perform these steps:

Important : Follow the steps below when you verify repairs on OBD II systems. Failure to follow these steps could result in unnecessary repairs.

- Review and record the Failure Records and the Freeze Frame data for the DTC which has been diagnosed (Freeze Fame data will only be stored for an A or B type diagnostic and only if the MIL has been requested).
- Clear the DTC(s).
- Operate the vehicle within conditions noted in the Failure Records and Freeze Frame data.
- Monitor the DTC status information for the specific DTC which has been diagnosed until the diagnostic test associated with that DTC runs.

OBD II SERVICEABILITY ISSUES

Based on the knowledge gained from On–Board Diagnostic (OBD II) experience in the 1994 and 1995 model years, this list of non–vehicle faults that could affect the performance of the OBD II system has been compiled. These non–vehicle faults vary from environmental conditions to the quality of fuel used. With the introduction of OBD II diagnostics across the entire passenger car and light–duty truck market in 1996, illumination of the MIL due to a non–vehicle fault could lead to misdiagnosis of the vehicle, increased warranty expense and customer dissatisfaction. The following list of non–vehicle faults does not include every possible fault and may not apply equally to all product lines.

Fuel Quality

Fuel quality is not a new issue for the automotive industry, but its potential for turning on the Malfunction Indicator Lamp (MIL) with OBD II systems is new.

Fuel additives such as ”dry gas” and ”octane enhancers” may affect the performance of the fuel. If this results in an incomplete combustion or a partial burn, it will set DTC P0300. The Reed Vapor Pressure of the fuel can also create problems in the fuel system, especially during the spring and fall months when severe ambient temperature swings occur. A high Reed Vapor Pressure could show up as a Fuel Trim DTC due to excessive canister loading. High vapor pressures generated in the fuel tank can also affect the Evaporative Emission diagnostic as well.

Using fuel with the wrong octane rating for your vehicle may cause driveability problems. Many of the major fuel companies advertise that using ”premium” gasoline will improve the performance of your vehicle. Most premium fuels use alcohol to increase the octane rating of the fuel. Although alcohol–enhanced fuels may raise the octane rating, the fuel’s ability to turn into vapor in cold temperatures deteriorates. This may affect the starting ability and cold driveability of the engine.

Low fuel levels can lead to fuel starvation, lean engine operation, and eventually engine misfire.

Non–OEM Parts

All of the OBD II diagnostics have been calibrated to run with Original Equipment Manufacturer (OEM) parts. Something as simple as a high–performance exhaust system that affects exhaust system back pressure could potentially interfere with the operation of the Exhaust Gas Recirculation (EGR) valve and thereby turn on the MIL. Small leaks in the exhaust system near the post catalyst oxygen sensor can also cause the MIL to turn on.

Aftermarket electronics, such as cellular phones, stereos, and anti–theft devices, may radiate electromagnetic interference (EMI) into the control system if they are improperly installed. This may cause a false sensor reading and turn on the MIL.

Environment

Temporary environmental conditions, such as localized flooding, will have an effect on the vehicle ignition system. If the ignition system is rain–soaked, it can temporarily cause engine misfire and turn on the MIL.

Refueling

A new OBD II diagnostic checks the integrity of the entire Evaporative (EVAP) Emission system. If the vehicle is restarted after refueling and the fuel cap is not secured correctly, the on–board diagnostic system will sense this as a system fault, turn on the MIL, and set DTC P0440.

Vehicle Marshaling

The transportation of new vehicles from the assembly plant to the dealership can involve as many as 60 key cycles within 2 to 3 miles of driving. This type of operation contributes to the fuel fouling of the spark plugs and will turn on the MIL with a set DTC P0300.

Poor Vehicle Maintenance

The sensitivity of OBD II diagnostics will cause the MIL to turn on if the vehicle is not maintained properly. Restricted air filters, fuel filters, and crankcase deposits due to lack of oil changes or improper oil viscosity can trigger actual vehicle faults that were not previously monitored prior to OBD II. Poor vehicle maintenance can not be classified as a ”non–vehicle fault,” but with the sensitivity of OBD II diagnostics, vehicle maintenance schedules must be more closely followed.

Severe Vibration

The Misfire diagnostic measures small changes in the rotational speed of the crankshaft. Severe driveline vibrations in the vehicle, such as caused by an excessive amount of mud on the wheels, can have the same effect on crankshaft speed as misfire and, therefore, may set DTC P0300.

Related System Faults

Many of the OBD II system diagnostics will not run if the powertrain control module (PCM)/engine controlmodule (ECM) detects a fault on a related system or component. One example would be that if the PCM/ECM detected a Misfire fault, the diagnostics on the catalytic converter would be suspended until the Misfire fault was repaired. If the Misfire fault is severe enough, the catalytic converter can be damaged due to overheating and will never set a Catalyst DTC until the Misfire fault is repaired and the Catalyst diagnostic is allowed to run to completion. If this happens, the customer may have to make two trips to the dealership in order to repair the vehicle.

SERIAL DATA COMMUNICATIONS

Class II Serial Data Communications

Government regulations require that all vehicle manufacturers establish a common communication system. This vehicle utilizes the ”Class II” communication system. Each bit of information can have one of two lengths: long or short. This allows vehicle wiring to be reduced by transmitting and receiving multiple signals over a single wire. The messages carried on Class II data streams are also prioritized. If two messages attempt to establish communications on the data line at the same time, only the message with higher priority will continue. The device with the lower priority message must wait. Themost significant result of this regulation is that it provides scan tool manufacturers with the capability to access data from any make or model vehicle that is sold.

The data displayed on the other scan tool will appear the same, with some exceptions. Some scan tools will only be able to display certain vehicle parameters as values that are a coded representation of the true or actual value. On this vehicle the scan tool displays the actual values for vehicle parameters. It will not be necessary to perform any conversions from coded values to actual values.

ON–BOARD DIAGNOSTIC (OBD II)

On–Board Diagnostic Tests

A diagnostic test is a series of steps, the result of which is a pass or fail reported to the diagnostic executive. When a diagnostic test reports a pass result, the diagnostic executive records the following data:

- The diagnostic test has been completed since the last ignition cycle.
- The diagnostic test has passed during the current ignition cycle.
- The fault identified by the diagnostic test is not currently active.

When a diagnostic test reports a fail result, the diagnostic executive records the following data:

- The diagnostic test has been completed since the last ignition cycle.
- The fault identified by the diagnostic test is currently active.
- The fault has been active during this ignition cycle.
- The operating conditions at the time of the failure.

Remember, a fuel trim Diagnostic Trouble Code (DTC) may be triggered by a list of vehicle faults. Make use of all information available (other DTCs stored, rich or lean condition, etc.) when diagnosing a fuel trim fault.

COMPREHENSIVE COMPONENT MONITOR DIAGNOSTIC OPERATION

Comprehensive component monitoring diagnostics are required to monitor emissions–related input and output powertrain components.

Input Components

Input components are monitored for circuit continuity and out–of–range values. This includes rationality checking. Rationality checking refers to indicating a fault when the signal from a sensor does not seem reasonable, i.e. Throttle Position (TP) sensor that indicates high throttle position at low engine loads or Manifold Absolute Pressure (MAP) voltage. Input components may include, but are not limited to, the following sensors:

- Vehicle Speed Sensor (VSS).
- Crankshaft Position (CKP) sensor.
- Throttle Position (TP) sensor.
- Engine Coolant Temperature (ECT) sensor.
- Camshaft Position (CMP) sensor.
- Manifold Absolute Pressure (MAP) sensor.

In addition to the circuit continuity and rationality check, the ECT sensor is monitored for its ability to achieve a steady state temperature to enable closed loop fuel control.

Output Components

Output components are diagnosed for proper response to control module commands. Components where functional monitoring is not feasible will be monitored for circuit continuity and out–of–range values if applicable. Output components to be monitored include, but are not limited to the following circuit:

- Idle Air Control (IAC) Motor.
- Control module controlled EVAP Canister Purge Valve.
- A/C relays.
- Cooling fan relay.
- VSS output.
- MIL control.
- Cruise control inhibit.

Refer to ”Powertrain Control Module/Engine Control Module” and Sensors in this section.

Passive and Active Diagnostic Tests

A passive test is a diagnostic test which simply monitors a vehicle system or component. Conversely, an active test, actually takes some sort of action when performing diagnostic functions, often in response to a failed passive test. For example, the Exhaust Gas Recirculation (EGR) diagnostic active test will force the EGR valve open during closed throttle deceleration and/or force the EGR valve closed during a steady state. Either action should result in a change in manifold pressure.

Intrusive Diagnostic Tests

This is any on–board test run by the Diagnostic Management System which may have an effect on vehicle performance or emission levels.

Warm–Up Cycle

A warm–up cycle means that engine temperature must reach aminimum of 160˚F (70˚C) and rise at least 72˚F (22˚C) over the course of a trip.

Freeze Frame

Freeze Frame is an element of the Diagnostic Management System which stores various vehicle information at the moment an emissions–related fault is stored in memory and when the Malfunction Indicator Lamp (MIL) is commanded on. These data can help to identify the cause of a fault.

Failure Records

Failure Records data is an enhancement of the OBD II Freeze Frame feature. Failure Records store the same vehicle information as does Freeze Frame, but it will store that information for any fault which is stored in onboard memory, while Freeze Frame stores information only for emission–related faults that command the MIL on.

COMMON OBD II TERMS

Diagnostic

When used as a noun, the word diagnostic refers to any on–board test run by the vehicle's Diagnostic Management System. A diagnostic is simply a test run on a system or component to determine if the system or component is operating according to specification. There are many diagnostics, shown in the following list:

- Misfire
- Oxygen Sensors (O2S)
- Heated Oxygen Sensor (HO2S)
- Exhaust Gas Recirculation (EGR)
- Catalyst monitoring

Enable Criteria

The term "enable criteria" is engineering language for the conditions necessary for a given diagnostic test to run. Each diagnostic has a specific list of conditions which must be met before the diagnostic will run.

"Enable criteria" is another way of saying "conditions required."

The enable criteria for each diagnostic is listed on the first page of the Diagnostic Trouble Code (DTC) description under the heading "Conditions for Setting the DTC." Enable criteria varies with each diagnostic and typically includes, but is not limited to, the following items:

- Engine speed.
- Vehicle speed
- Engine Coolant Temperature (ECT)
- Manifold Absolute Pressure (MAP)
- Barometric Pressure (BARO)
- Intake Air Temperature (IAT)
- Throttle Position (TP)
- High canister purge
- Fuel trim
- A/C on

Trip

Technically, a trip is a key–on run key–off cycle in which all the enable criteria for a given diagnostic are met, allowing the diagnostic to run. Unfortunately, this concept is not quite that simple. A trip is official when all the enable criteria for a given diagnostic are met. But because the enable criteria vary from one diagnostic to another, the definition of trip varies as well. Some diagnostics are run when the vehicle is at operating temperature, some when the vehicle first starts up; some require that the vehicle be cruising at a steady highway speed, some run only when the vehicle is at idle; some diagnostics function with the Torque Converter Clutch (TCC) disabled. Some run only immediately following a cold engine startup.

A trip then, is defined as a key–on run key–off cycle in which the vehicle was operated in such a way as to satisfy the enables criteria for a given diagnostic, and this diagnostic will consider this cycle to be one trip. However, another diagnostic with a different set of enable criteria (which were not met) during this driving event, would not consider it a trip. No trip will occur for that particular diagnostic until the vehicle is driven in such a way as to meet all the enable criteria

Diagnostic Information

The diagnostic charts and functional checks are designed to locate a faulty circuit or component through a process of logical decisions. The charts are prepared with the requirement that the vehicle functioned correctly at the time of assembly and that there are not multiple faults present.

There is a continuous self–diagnosis on certain control functions. This diagnostic capability is complimented by the diagnostic procedures contained in this manual. The language of communicating the source of the malfunction is a system of diagnostic trouble codes. When a malfunction is detected by the control module, a diagnostic trouble code is set and the Malfunction Indicator Lamp (MIL) is illuminated.

Malfunction Indicator Lamp (MIL)

The Malfunction Indicator Lamp (MIL) is required by On–Board Diagnostics (OBD II) that it illuminates under a strict set of guide lines.

Basically, the MIL is turned on when the powertrain control module (PCM)/engine control module (ECM) detects a DTC that will impact the vehicle emissions.

The MIL is under the control of the Diagnostic Executive. The MIL will be turned on if an emissions–related diagnostic test indicates a malfunction has occurred. It will stay on until the system or component passes the same test, for three consecutive trips, with no emissions related faults.

Extinguishing the MIL

When the MIL is on, the Diagnostic Executive will turn off the MIL after three consecutive trips that a "test passed" has been reported for the diagnostic test that originally caused the MIL to illuminate. Although the MIL has been turned off, the DTC will remain in the PCM/ECM memory (both Freeze Frame and Failure Records) until forty (40) warm–up cycles after no faults have been completed.

If the MIL was set by either a fuel trim or misfire–related DTC, additional requirements must be met. In addition to the requirements stated in the previous paragraph, these requirements are as follows:

- The diagnostic tests that are passed must occur with 375 rpm of the rpm data stored at the time the last test failed.
- Plus or minus ten percent of the engine load that was stored at the time the last test failed. Similar engine temperature conditions (warmed up or warming up) as those stored at the time the last test failed.

Meeting these requirements ensures that the fault which turned on the MIL has been corrected.

The MIL is on the instrument panel and has the following functions:

- It informs the driver that a fault that affects vehicle emission levels has occurred and that the vehicle should be taken for service as soon as possible.
- As a system check, the MIL will come on with the key ON and the engine not running. When the engine is started, the MIL will turn OFF.
- When the MIL remains ON while the engine is running, or when a malfunction is suspected due to a driveability or emissions problem, an OBD II System Check must be performed. The procedures for these checks are given in OBD II System Check. These checks will expose faults which may not be detected if other diagnostics are performed first.

Data Link Connector (DLC)

The provision for communicating with the control module is the Data Link Connector (DLC). The DLC is used to connect to a scan tool. Some common uses of the scan tool are listed below:

- Identifying stored DTCs.
- Clearing DTCs.
- Performing output control tests.
- Reading serial data.

DTC TYPES

Each Diagnostic Trouble Code (DTC) is directly related to a diagnostic test. The Diagnostic Management System sets DTC based on the failure of the tests during a trip or trips. Certain tests must fail two consecutive trips before the DTC is set. The following are the three types of DTCs and the characteristics of those codes:

Type A

- Emissions related.
- Requests illumination of the Malfunction Indicator Lamp (MIL) of the first trip with a fail.
- Stores a History DTC on the first trip with a fail.
- Stores a Freeze Frame (if empty).
- Stores a Fail Record.
- Updates the Fail Record each time the diagnostic test fails.

Type B

- Emissions related.
- ”Armed” after one trip with a fail.
- ”Disarmed” after one trip with a pass.
- Requests illumination of the MIL on the second consecutive trip with a fail.
- Stores a History DTC on the second consecutive trip with a fail (The DTC will be armed after the first fail).
- Stores a Freeze Frame on the second consecutive trip with a fail (if empty).
- Store Fail Record when the first test fails (not dependent on consecutive trip fails).
- Updates the Fail Record each time the diagnostic test fails.

Type D

(Type D non–emissions related are not utilized on certain vehicle applications).

- Non–Emissions related.
- Does not request illumination of any lamp.
- Stores a History DTC on the first trip with a fail.
- Does not store a Freeze Frame.
- Stores Fail Record when test fails.
- Updates the Fail Record each time the diagnostic test fails.

Important : Only four Fail Records can be stored. Each Fail Record is for a different DTC. It is possible that there will not be Fail Records for every DTC if multiple DTCs are set.

Special Cases of Type B Diagnostic Tests

Unique to the misfire diagnostic, the Diagnostic Executive has the capability of alerting the vehicle operator to potentially damaging levels of misfire. If a misfire condition exists that could potentially damage the catalytic converter as a result of high misfire levels, the Diagnostic Executive will command the MIL to flash at a rate of once per second during those the time that the catalyst damaging misfire condition is present.

Fuel trim and misfire are special cases of Type B diagnostics. Each time a fuel trim or misfire malfunction is detected, engine load, engine speed, and engine coolant temperature (ECT) are recorded.

When the ignition is turned off, the last reported set of conditions remain stored. During subsequent ignition cycles, the stored conditions are used as a reference for similar conditions. If a malfunction occurs during two consecutive trips, the Diagnostic Executive treats the failure as a normal Type B diagnostic, and does not use the stored conditions. However, if a malfunction occurs on two non–consecutive trips, the stored conditions are compared with the current conditions. The MIL will then illuminate under the following conditions:

- When the engine load conditions are within 10% of the previous test that failed.
- Engine speed is within 375 rpm of the previous test that failed.
- ECT is in the same range as the previous test that failed.

READING DIAGNOSTIC TROUBLE CODES

The procedure for reading diagnostic trouble code(s) is to use a diagnostic scan tool. When reading Diagnostic Trouble Codes (DTCs), follow the instructions supplied by tool manufacturer.

Clearing Diagnostic Trouble Codes

Important : Do not clear DTCs unless directed to do so by the service information provided for each diagnostic procedure. When DTCs are cleared, the Freeze Frame

and Failure Record data which may help diagnose an intermittent fault will also be erased from memory. If the fault that caused the DTC to be stored into memory has been corrected, the Diagnostic Executive will begin to count the ”warm–up” cycles with no further faults detected, the DTC will automatically be cleared from the powertrain control module (PCM)/engine control module (ECM) memory.

To clear DTCs, use the diagnostic scan tool. When a scan tool is not available, DTCs can also be cleared by disconnecting one of the following sources for at least thirty (30) seconds:

Notice : To prevent system damage, the ignition key must be OFF when disconnecting or reconnecting battery power.

- The power source to the control module. Examples: fuse, pigtail at battery PCM/ECM connectors etc.
- The negative battery cable. (Disconnecting the negative battery cable will result in the loss of other onboard memory data, such as preset radio tuning).

DTC Modes

On On–Board Diagnostic (OBD II) passenger cars there are five options available in the scan tool DTC mode to display the enhanced information available. A description of the new modes, DTC Info and Specific DTC, follows. After selecting DTC, the following menu appears:

- DTC Info.
- Specific DTC.
- Freeze Frame.
- Fail Records (not all applications).
- Clear Info.

The following is a brief description of each of the sub menus in DTC Info and Specific DTC. The order in which they appear here is alphabetical and not necessarily the way they will appear on the scan tool.

DTC Information Mode

Use the DTC info mode to search for a specific type of stored DTC information. There are seven choices. The service manual may instruct the technician to test for DTCs in a certain manner. Always follow published service procedures.

To get a complete description of any status, press the ”Enter” key before pressing the desired F–key. For example, pressing ”Enter” then an F–key will display a definition of the abbreviated scan tool status.

DTC Status

This selection will display any DTCs that have not run during the current ignition cycle or have reported a test failure during this ignition up to a maximum of 33 DTCs. DTC tests which run and pass will cause that DTC number to be removed from the scan tool screen.

Fail This Ign. (Fail This Ignition)

This selection will display all DTCs that have failed during the present ignition cycle.

History

This selection will display only DTCs that are stored in the PCM/ECM’s history memory. It will not display type B DTCs that have not requested the Malfunction Indicator Lamp (MIL). It will display all type A and B DTCs that have requested the MIL and have failed within the last 40 warm–up cycles. In addition, it will display all type C and type D DTCs that have failed within the last 40 warm–up cycles.

Last Test Fail

This selection will display only DTCs that failed the last time the test ran. The last test may have run during a previous ignition cycle if a type A or type B DTC is displayed. For type C and type D DTCs, the last failure must have occurred during the current ignition cycle to appear as Last Test Fail.

MIL Request

This selection will display only DTCs that are requesting the MIL. Type C and type D DTCs cannot be displayed using this option. This selection will report type B DTCs only after the MIL has been requested.

Not Run SCC (Not Run Since Code Clear)

This option will display up to 33 DTCs that have not run since the DTCs were last cleared. Since any displayed DTCs have not run, their condition (passing or failing) is unknown.

Test Fail SCC (Test Failed Since Code Clear)

This selection will display all active and history DTCs that have reported a test failure since the last time DTCs were cleared. DTCs that last failed more than 40 warm–up cycles before this option is selected will not be displayed.

Specific DTC Mode

This mode is used to check the status of individual diagnostic tests by DTC number. This selection can be accessed if a DTC has passed, failed or both. Many OBD II DTC mode descriptions are possible because of the extensive amount of information that the diagnostic executive monitors regarding each test. Some of the many possible descriptions follow with a brief explanation.

The ”F2” key is used, in this mode, to display a description of the DTC. The ”Yes” and ”No” keys may also be used to display more DTC status information. This selection will only allow entry of DTC numbers that are supported by the vehicle being tested. If an attempt is made to enter DTC numbers for tests which the diagnostic executive does not recognize, the requested information will not be displayed correctly and the scan tool may display an error message. The same applies to using the DTC trigger option in the Snapshot mode. If an invalid DTC is entered, the scan tool will not trigger.

Failed Last Test

This message display indicates that the last diagnostic test failed for the selected DTC. For type A and type B DTCs, this message will be displayed during subsequent ignition cycles until the test passes or DTCs are cleared. For type C and type D DTCs, this message will clear when the ignition is cycled.

Failed Since Clear

This message display indicates that the DTC has failed at least once within the last 40 warm–up cycles since the last time DTCs were cleared.

Failed This Ig. (Failed This Ignition)

This message display indicates that the diagnostic test has failed at least once during the current ignition cycle. This message will clear when DTCs are cleared or the ignition is cycled.

History DTC

This message display indicates that the DTC has been stored in memory as a valid fault. A DTC displayed as a History fault may not mean that the fault is no longer present. The history description means that all the conditions necessary for reporting a fault have been met (maybe even currently), and the information was stored in the control module memory.

MIL Requested

This message display indicates that the DTC is currently causing the MIL to be turned ON. Remember that only type A and type B DTCs can request the MIL. The MIL request cannot be used to determine if the DTC fault conditions are currently being experienced. This is because the diagnostic executive will require up to three trips during which the diagnostic test passes to turn OFF the MIL.

Not Run Since CI (Not Run Since Cleared)

This message display indicates that the selected diagnostic test has not run since the last time DTCs were cleared. Therefore, the diagnostic test status (passing or failing) is unknown. After DTCs are cleared, this message will continue to be displayed until the diagnostic test runs.

Not Run This Ig. (Not Run This Ignition)

This message display indicates that the selected diagnostic test has not run during this ignition cycle.

Test Ran and Passed

This message display indicates that the selected diagnostic test has done the following:

- Passed the last test.
- Run and passed during this ignition cycle.
- Run and passed since DTCs were last cleared.

If the indicated status of the vehicle is ”Test Ran and Passed” after a repair verification, the vehicle is ready to be released to the customer.

If the indicated status of the vehicle is ”Failed This Ignition” after a repair verification, then the repair is incomplete and further diagnosis is required.

Prior to repairing a vehicle, status information can be used to evaluate the state of the diagnostic test, and to help identify an intermittent problem. The technician can conclude that although the MIL is illuminated, the fault condition that caused the code to set is not present. An intermittent condition must be the cause.

PRIMARY SYSTEM–BASED DIAGNOSTICS

There are primary system–based diagnostics which evaluate system operation and its effect on vehicle emissions. The primary system–based diagnostics are listed below with a brief description of the diagnostic function:

Oxygen Sensor Diagnosis

The fuel control Oxygen Sensor (O2S) is diagnosed for the following conditions:

- Slow response.
- Response time (time to switch R/L or L/R).
- Inactive signal (output steady at bias voltage approx. 450 mv).
- Signal fixed high.
- Signal fixed low.

The catalyst monitor Heated Oxygen Sensor (HO2S) is diagnosed for the following conditions:

- Heater performance (time to activity on cold start).
- Signal fixed low during steady state conditions or power enrichment (hard acceleration when a rich-mixture should be indicated).
- Signal fixed high during steady state conditions or deceleration mode (deceleration when a lean mixture should be indicated).
- Inactive sensor (output steady at approximately 438 mv).

If the oxygen sensor pigtail wiring, connector or terminal are damaged, the entire oxygen sensor assembly must be replaced. Do not attempt to repair the wiring, connector or terminals. In order for the sensor to function properly, it must have clean reference air provided to it. This clean air reference is obtained by way of the oxygen sensor wire(s). Any attempt to repair the wires, connector or terminals could result in the obstruction of the reference air and degrade oxygen sensor performance.

Misfire Monitor Diagnostic Operation

The misfire monitor diagnostic is based on crankshaft rotational velocity (reference period) variations. The powertrain control module (PCM)/engine controlmodule (ECM) determines crankshaft rotational velocity using the Crankshaft Position (CKP) sensor and the Camshaft Position (CMP) sensor. When a cylinder misfires, the crankshaft slows down momentarily. By monitoring the CKP and CMP sensor signals, the PCM/ECM can calculate when a misfire occurs.

For a non–catalyst damaging misfire, the diagnostic will be required to monitor a misfire present for between 1000–3200 engine revolutions.

For catalyst–damaging misfire, the diagnostic will respond to misfire within 200 engine revolutions.

Rough roads may cause false misfire detection. A rough road will cause torque to be applied to the drive wheels and drive train. This torque can intermittently decrease the crankshaft rotational velocity. This may be falsely detected as a misfire.

A rough road sensor, or G sensor, works together with the misfire detection system. The G sensor produces a voltage that varies along with the intensity of road vibrations. When the PCM/ECM detects a rough road, the misfire detection system is temporarily disabled.

Misfire Counters

Whenever a cylinder misfires, the misfire diagnostic counts the misfire and notes the crankshaft position at the time the misfire occurred. These ”misfire counters” are basically a file on each engine cylinder. A current and a history misfire counter are maintained for each cylinder. The misfire current counters (Misfire Cur #1–4) indicate the number of firing events out of the last 200 cylinder firing events which were misfires. The misfire current counter will display real time data without a misfire Diagnostic Trouble Code (DTC) stored. The misfire history counters (Misfire Hist #1–4) indicate the total number of cylinder firing events which were misfires. The misfire history counters will display 0 until the misfire iagnostic has failed and a DTC P0300 is set. Once the misfire DTC P0300 is set, the misfire history counters will be updated every 200 cylinder firing events. A misfire counter is maintained for each cylinder.

If the misfire diagnostic reports a failure, the diagnostic executive reviews all of the misfire counters before reporting a DTC. This way, the diagnostic executive reports the most current information.

When crankshaft rotation is erratic, a misfire condition will be detected. Because of this erratic condition, the data that is collected by the diagnostic can sometimes incorrectly identify which cylinder is misfiring.

Use diagnostic equipment to monitor misfire counter data on On–Board Diagnostic (OBD II) compliant vehicles. Knowing which specific cylinder(s) misfired can lead to the root cause, even when dealing with amultiple cylinder misfire. Using the information in the misfire counters, identify which cylinders are misfiring. If the counters indicate cylinders numbers 1 and 4 misfired, look for a circuit or component common to both cylinders number 1 and 4.

The misfire diagnostic may indicate a fault due to a temporary fault not necessarily caused by a vehicle emission system malfunction. Examples include the following items:

- Contaminated fuel.
- Low fuel.
- Fuel–fouled spark plugs.
- Basic engine fault.

Fuel Trim System Monitor Diagnostic Operation

This system monitors the averages of short–term and long–term fuel trim values. If these fuel trim values stay at their limits for a calibrated period of time, a malfunction is indicated. The fuel trim diagnostic compares the averages of short–term fuel trim values and long–term fuel trim values to rich and lean thresholds. If either value is within the thresholds, a pass is recorded. If both values are outside their thresholds, a rich or lean DTC will be recorded.

The fuel trim system diagnostic also conducts an intrusive test. This test determines if a rich condition is being caused by excessive fuel vapor from the Evaporative (EVAP) Emission canister. In order to meet OBD II requirements, the control module uses weighted fuel trim cells to determine the need to set a fuel trim DTC. A fuel trim DTC can only be set if fuel trim counts in the weighted fuel trim cells exceed specifications. This means that the vehicle could have a fuel trim problem which is causing a problem under certain conditions (i.e., engine idle high due to a small vacuum leak or rough idle due to a large vacuum leak) while it operates fine at other times. No fuel trim DTC would set (although an engine idle speed DTC or HO2S DTC may set). Use a scan tool to observe fuel trim counts while the problem is occurring.

A fuel trim DTC may be triggered by a number of vehicle faults. Make use of all information available (other DTCs stored, rich or lean condition, etc.) when diagnosing a fuel trim fault.

Fuel Trim Cell Diagnostic Weights

No fuel trim DTC will set regardless of the fuel trim counts in cell 0 unless the fuel trim counts in the weighted cells are also outside specifications. This means that the vehicle could have a fuel trim problem which is causing a problem under certain conditions (i.e. engine idle high due to a small vacuum leak or rough due to a large vacuum leak) while it operates fine at other times. No fuel trim DTC would set (although an engine idle speed DTC or HO2S DTC may set). Use a scan tool to observe fuel trim counts while the problem is occurring.

SECTION : 1F

ENGINE CONTROLS

CAUTION : Disconnect the negative battery cable before removing or installing any electrical unit or when a tool or equipment could easily come in contact with exposed electrical terminals. Disconnecting this cable will help prevent personal injury and damage to the vehicle. The ignition must also be in LOCK unless otherwise noted.

TABLE OF CONTENTS

SPECIFICATIONS 1F–4
- ENGINE DATA DISPLAY TABLES 1F–4
- ENGINE DATA DISPLAY TABLE DEFINITIONS 1F–10
- FASTENER TIGHTENING SPECIFICATIONS 1F–13
- FUEL SYSTEM SPECIFICATIONS 1F–14
- TEMPERATURE VS RESISTANCE 1F–14

SCHEMATIC AND ROUTING DIAGRAMS 1F–15
- PCM/ECM WIRING DIAGRAM (1 OF 6) (IPCM–6KD–/ISFI–6TD) 1F–15
- PCM/ECM WIRING DIAGRAM (2 OF 6) (IPCM–6KD–/ISFI–6TD) 1F–16
- PCM/ECM WIRING DIAGRAM (3 OF 6) (IPCM–6KD–/ISFI–6TD) 1F–17
- PCM/ECM WIRING DIAGRAM (4 OF 6) (IPCM–6KD–/ISFI–6TD) 1F–18
- PCM/ECM WIRING DIAGRAM (5 OF 6) (IPCM–6KD–/ISFI–6TD) 1F–29
- PCM/ECM WIRING DIAGRAM (6 OF 6) (IPCM–6KD–/ISFI–6TD) 1F–30
- CONNECTOR END VIEW (DOHC) 1F–21

COMPONENT LOCATOR 1F–26

DIAGNOSIS 1F–28

SYSTEM DIAGNOSIS 1F–28
- IDLE LEARN PROCEDURE 1F–28
- ON–BOARD DIAGNOSTIC (OBD II) SYSTEM CHECK 1F–29
- PCM/ECM OUTPUT DIAGNOSIS 1F–31
- MULTIPLE PCM/ECM INFORMATION SENSOR DTCS SET 1F–33
- ENGINE CRANKS BUT WILL NOT RUN 1F–38
- NO MALFUNCTION INDICATOR LAMP 1F–45
- MALFUNCTION INDICATOR LAMP ON STEADY 1F–48
- FUEL SYSTEM DIAGNOSIS 1F–50
- FUEL PUMP RELAY CIRCUIT CHECK 1F–53
- IGNITION 1 RELAY CIRCUIT CHECK 1F–56
- MANIFOLD ABSOLUTE PRESSURE CHECK 1F–58
- PARK/NEUTRAL POSITION SWITCH 1F–60
- IDLE AIR CONTROL SYSTEM CHECK 1F–61
- IGNITION SYSTEM CHECK 1F–64
- ENGINE COOLING FAN CIRCUIT CHECK – WITH A/C 1F–68
- DATA LINK CONNECTOR DIAGNOSIS 1F–75
- FUEL INJECTOR BALANCE TEST 1F–78
- EVAP CONTROL SYSTEM DIAGNOSIS 1F–79

TROUBLE CODE DIAGNOSIS 1F–82
- CLEARING TROUBLE CODES 1F–82
- DIAGNOSTIC TROUBLE CODES 1F–82
- DTC P0106 MANIFOLD ABSOLUTE PRESSURE RATIONALITY 1F–85
- DTC P0107 MANIFOLD ABSOLUTE PRESSURE LOW VOLTAGE 1F–87
- DTC P0108 MANIFOLD ABSOLUTE PRESSURE HIGH VOLTAGE 1F–90
- DTC P0112 INTAKE AIR TEMPERATURE LOW VOLTAGE 1F–93
- DTC P0113 INTAKE AIR TEMPERATURE HIGH VOLTAGE 1F–95
- DTC P0117 ENGINE COOLANT TEMPERATURE LOW VOLTAGE 1F–98
- DTC P0118 ENGINE COOLANT TEMPERATURE HIGH VOLTAGE 1F–100
- DTC P0121 THROTTLE POSITION SENSOR RATIONALITY 1F–103
- DTC P0122 THROTTLE POSITION SENSOR LOW VOLTAGE 1F–106
- DTC P0123 THROTTLE POSITION SENSOR HIGH VOLTAGE 1F–109
- DTC P0125 ENGINE COOLANT TEMPERATURE INSUFFICIENT FOR CLOSED LOOP FUEL CONTROL 1F–112
- DTC P0131 O2 BANK 1 SENSOR 1 LOW VOLTAGE 1F–115
- DTC P0132 O2 BANK 1 SENSOR 1 HIGH VOLTAGE 1F–118

DTC P0133 O2 BANK 1 SENSOR 1 SLOW RESPONSE 1F–121
DTC P0134 O2 BANK 1 SENSOR 1 NO ACTIVITY 1F –125
DTC P0137 O2 BANK 1 SENSOR 2 LOW VOLTAGE 1F–128
DTC P0138 O2 BANK 1 SENSOR 2 HIGH VOLTAGE 1F–131
DTC P0140 O2 BANK 1 SENSOR 2 NO ACTIVITY 1F –134
DTC P0141 O2 BANK 1 SENSOR 2 HEATER 1F–137
DTC P0171 BANK 1 SYSTEM TOO LEAN . . 1F–140
DTC P0172 BANK 1 SYSTEM TOO RICH . . 1F–144
DTC P0201 INJECTOR 1 CIRCUIT FAULT . 1F–148
DTC P0202 INJECTOR 2 CIRCUIT FAULT . 1F–151
DTC P0203 INJECTOR 3 CIRCUIT FAULT . 1F–154
DTC P0204 INJECTOR 4 CIRCUIT FAULT . 1F–157
DTC P0300 MULTIPLE CYLINDER MISFIRE DETECTED 1F–160
DTC P0301 CYLINDER 1 MISFIRE 1F–165
DTC P0302 CYLINDER 2 MISFIRE 1F–169
DTC P0303 CYLINDER 3 MISFIRE 1F–173
DTC P0304 CYLINDER 4 MISFIRE 1F–177
DTC P0325 KNOCK SENSOR SNEF INTERNAL MALFUNCTION 1F–181
DTC P0327 KNOCK SENSOR CIRCUIT FAULT 1F–1 83
DTC P0336 58X CRANK POSITION EXTRA/MISSING PULSES 1F–186
DTC P0337 58X CRANK POSITION NO SIGNAL 1F– 189
DTC P0341 CAM RATIONALITY 1F–192
DTC P0342 CAM POSITION NO SIGNAL . . 1F–195
DTC P0351 IGNITION CONTROL A CIRCUIT FAULT 1F–198
DTC P0352 IGNITION CONTROL B CIRCUIT FAULT 1F–200
DTC P0401 EXHAUST GAS RECIRCULATION INSUFFICIENT FLOW 1F–202
DTC P0402 EXHAUST GAS RECIRCULATION EXCESSIVE FLOW 1F–204
DTC P0404 EXHAUST GAS RECIRCULATION OPEN VALVE POSITION ERROR 1F–208
DTC P0405 EXHAUST GAS RECIRCULATION PINTLE POSITION LOW VOLTAGE 1F–212
DTC P0406 EXHAUST GAS RECIRCULATION PINTLE POSITION HIGH VOLTAGE 1F–216
DTC P0420 CATALYST BANK 1 LOW EFFICIENCY 1 F–220
DTC P0440 EVAPORATIVE EMISSION SYSTEM LARGE LEAK/LOW TANK VACUUM 1F–222
DTC P0442 EVAPORATIVE EMISSION SYSTEM SMALL LEAK 1F–227
DTC P0443 EVAPORATIVE EMISSION SYSTEM PURGE CONTROL CIRCUIT 1F–231
DTC P0446 EVAPORATIVE EMISSION SYSTEM VENT CONTROL MALFUNCTION 1F–234
DTC P0449 EVAPORATIVE EMISSION SYSTEM VENT SOLENOID CIRCUIT FAULT 1F–237
DTC P0452 FUEL TANK PRESSURE SENSOR LOW VOLTAGE 1F–240
DTC P0453 FUEL TANK PRESSURE SENSOR HIGH VOLTAGE 1F–243
DTC P0461 FUEL LEVEL RATIONALITY . . . 1F–246
DTC P0462 FUEL LEVEL LOW VOLTAGE . . 1F–249
DTC P0463 FUEL LEVEL HIGH VOLTAGE . 1F–252
DTC P0480 COOLING FAN RELAY A FAN CONTROL CIRCUIT FAULT (WITH A/C) . . 1F–252
DTC P0481 COOLING FAN RELAY B FAN CONTROL CIRCUIT FAULT (WITH A/C) . . 1F–258
DTC P0502 VEHICLE SPEED (ENGINE SIDE) NO SIGNAL 1F–261
DTC P0506 IDLE SPEED RPM LOWER THAN DESIRED IDLE SPEED 1F–264
DTC P0507 IDLE SPEED RPM HIGHER THAN DESIRED IDLE SPEED 1F–267
DTC P0532 A/C PRESSURE SENSOR LOW 1F–270
DTC P0533 A/C PRESSURE SENSOR HIGH 1F–273
DTC P0562 SYSTEM VOLTAGE (ENGINE SIDE) TOO LOW 1F–276
DTC P0563 SYSTEM VOLTAGE (ENGINE SIDE) TOO HIGH 1F–279
DTC P0601 PCM/ECM (ENGINE SIDE) CHECKSUM FAULT 1F–282
DTC P1106 MANIFOLD ABSOLUTE PRESSURE INTERMITTENT HIGH VOLTAGE 1F–283
DTC P1107 MANIFOLD ABSOLUTE PRESSURE INTERMITTENT LOW VOLTAGE 1F–285
DTC P1109 VARIABLE GEOMETRY INDUCTION SOLENOID ELECTRICAL FAULT 1F–287
DTC P1111 INTAKE AIR TEMPERATURE INTERMITTENT HIGH VOLTAGE 1F–290
DTC P1112 INTAKE AIR TEMPERATURE INTERMITTENT LOW VOLTAGE 1F–293
DTC P1114 ENGINE COOLANT TEMPERATURE INTERMITTENT LOW VOLTAGE 1F–295
DTC P1115 ENGINE COOLANT TEMPERATURE INTERMITTENT HIGH VOLTAGE 1F–297
DTC P1121 THROTTLE POSITION SENSOR INTERMITTENT HIGH VOLTAGE 1F–300
DTC P1122 THROTTLE POSITION SENSOR INTERMITTENT LOW VOLTAGE 1F–302
DTC P1133 O2 BANK 1 SENSOR 1 TOO FEW TRANSITIONS 1F–304

DTC P1134 O2 BANK 1 SENSOR 1 TRANSITION RATIO 1F–308
DTC P1171 FUEL SUPPLY SYSTEM LEAN DURING POWER ENRICH 1F–311
DTC P1336 58X CRANK POSITION TOOTH ERROR NOT LEARNED 1F–313
DTC P1380 ABS ROUGH ROAD ROUGH ROAD DATA INVALID 1F–315
DTC P1381 ABS ROUGH ROAD SERIAL DATA FAULT 1F–317
DTC P1391 G SENSOR ROUGH ROAD RATIONALITY 1F–319
DTC P1392 G SENSOR ROUGH ROAD LOW VOLTAGE 1F–322
DTC P1393 G SENSOR ROUGH ROAD HIGH VOLTAGE 1F–325
DTC P1404 EXHAUST GAS RECIRCULATION CLOSED VALVE PINTLE ERROR 1F–328
DTC P1441 EVAPORATIVE EMISSION CONTINUOUS PURGE FLOW 1F–331
DTC P1508 IDLE AIR CONTROL COUNTS TOO LOW 1F–334
DTC P1509 IDLE AIR CONTROL COUNTS TOO HIGH 1F–337
DTC P1546 A/C CLUTCH OUTPUT CIRCUIT FAULT 1F–340
DTC P1618 PCM/ECM INTERNAL SPI COMMUNICATION 1F–343
DTC P1625 PCM/ECM INTERNAL SYSTEM RESET 1F–344
DTC P1626 PCM/ECM COMMON ANTI–THEFT ERROR NO PASSWORD 1F–345
DTC P1627 PCM/ECM A/D CONVERSION ERROR 1 F–348
DTC P1631 PCM/ECM COMMON ANTI–THEFT ERROR INCORRECT PASSWORD 1F–349
DTC P1635 PCM/ECM 5 VOLT REFERENCE LINE LOW 1F–351
DTC P1640 ODM INTERNAL SPI COMMUNICATION 1F–354

SYMPTOM DIAGNOSIS 1F–357
IMPORTANT PRELIMINARY CHECKS 1F–357
INTERMITTENTS 1F–357
HARD START 1F–359
SURGES OR CHUGGLES 1F–361
LACK OF POWER, SLUGGISHNESS, OR SPONGINESS 1F–364
DETONATION/SPARK KNOCK 1F–365
HESITATION, SAG, STUMBLE 1F–367
CUTS OUT, MISSES 1F–368
POOR FUEL ECONOMY 1F–370
ROUGH, UNSTABLE, OR INCORRECT IDLE, STALLING 1F–371
EXCESSIVE EXHAUST EMISSIONS OR ODORS 1F –374
DIESELING, RUN–ON 1F–375
BACKFIRE 1F–376

MAINTENANCE AND REPAIR 1F–377
ON–VEHICLE SERVICE 1F–377
FUEL TANK 1F–377
FUEL PUMP 1F–379
FUEL TANK PRESSURE SENSOR 1F–380
FUEL FILTER 1F–381
FUEL RAIL AND INJECTORS 1F–382
FUEL PRESSURE REGULATOR 1F–384
ENGINE COOLANT TEMPERATURE SENSOR 1F–3 85
THROTTLE POSITION SENSOR 1F–386
THROTTLE BODY 1F–386
OXYGEN SENSOR 1F–389
HEATED OXYGEN SENSOR 1F–389
INTAKE AIR TEMPERATURE SENSOR 1F–391
IDLE AIR CONTROL VALVE 1F–391
MANIFOLD ABSOLUTE PRESSURE SENSOR 1F–39 2
EXHAUST GAS RECIRCULATION VALVE . . 1F–394
G SENSOR 1F–394
EVAPORATIVE EMISSION CANISTER 1F–395
EVAPORATIVE EMISSION CANISTER PURGE SOLENOID 1F–396
CRANKSHAFT POSITION SENSOR 1F–396
CAMSHAFT POSITION SENSOR 1F–398
POWERTRAIN CONTROL MODULE/ENGINE CONTROL MODULE 1F–399
ELECTRONIC IGNITION SYSTEM IGNITION COIL 1 F–400
FUEL CUTOFF SWITCH 1F–401
KNOCK SENSOR 1F–402

GENERAL DESCRIPTION AND SYSTEM OPERATION 1F–404
IGNITION SYSTEM OPERATION 1F–404
ELECTRONIC IGNITION SYSTEM IGNITION COIL 1 F–404
CRANKSHAFT POSITION SENSOR 1F–404
CAMSHAFT POSITION SENSOR 1F–404
IDLE AIR SYSTEM OPERATION 1F–404
FUEL CONTROL SYSTEM OPERATION . . . 1F–404
EVAPORATIVE EMISSION CONTROL SYSTEM OPERATION 1F–405
EVAPORATIVE EMISSION CANISTER 1F–406

POSITIVE CRANKCASE VENTILATION SYSTEM OPERATION 1F–406
ENGINE COOLANT TEMPERATURE SENSOR 1F–406
THROTTLE POSITION SENSOR 1F–406
CATALYST MONITOR OXYGEN SENSOR . 1F–406
EXHAUST GAS RECIRCULATION VALVE . . 1F–407
INTAKE AIR TEMPERATURE SENSOR 1F–407
IDLE AIR CONTROL VALVE 1F–407
MANIFOLD ABSOLUTE PRESSURE SENSOR 1F–408
POWERTRAIN CONTROL MODULE/ENGINE CONTROL MODULE 1F–408
FUEL INJECTOR 1F–408
KNOCK SENSOR 1F–408
G SENSOR 1F–409
FUEL CUTOFF SWITCH 1F–409
STRATEGY–BASED DIAGNOSTICS 1F–409
OBD II SERVICEABILITY ISSUES 1F–409
SERIAL DATA COMMUNICATIONS 1F–410
ON–BOARD DIAGNOSTIC (OBD II) 1F–411
COMPREHENSIVE COMPONENT MONITOR DIAGNOSTIC OPERATION 1F–411
COMMON OBD II TERMS 1F–412
DTC TYPES 1F–413
READING DIAGNOSTIC TROUBLE CODES 1F–413
PRIMARY SYSTEM–BASED DIAGNOSTICS 1F–415

SPECIFICATIONS

ENGINE DATA DISPLAY TABLES

Engine Data Display

At idle / Upper Radiator / Closed Throttle / Park or Neutral / Closed loop / Acc. OFF		
Scan Tool Parameter	**Units Displayed**	**Typical Data Value**
Engine Speed	RPM	±100 rpm from the Desired rpm
Desired Idle Speed	RPM	PCM/ECM Idle Command (Varies with the calibration)
Engine Coolant Temperature	C – F	85˚–115˚C(185˚–239˚F) (Varies with the coolant temperature)
Intake Air Temperature	C – F	10˚–80˚C(50˚–176˚F) (Varies with the coolant temperature)
Throttle Position Angle	%	0% (up to 100% at wide open throttle)
Throttle Position Sensor	Volts	0.200–0.900 v (up to 5.0 at wide open throttle)
MAP	kPa	25–35 kPa
BARO	kPa	65–100 kPa (varies with altitude and with the BARO pressure)
EGR Actual Position	%	0
EGR Desired Position	%	0%
EGR Feedback	Volt	–
IAC Position	Counts	5–60
Cam Speed Activity	Counts	0–255
Ignition Voltage	Volts	12.0–15.0
Engine Run Time	Seconds	Varies (since start up)
BPW Bank 1	mS	0–999.9
Air Fuel Ratio	Ratio	14.6:1 (Varies)
Spark	Degrees	Varies
Knock Retard	Degrees	Varies

Scan Tool Parameter	Units Displayed	Typical Data Value
Knock Active Counter	Counts	0–255
Knock Present	Yes/No	No
Calculated Load	%	0–100
Vehicle Speed	mph	0
Air Condition Pressure	Volt	0–5
Oxygen Bank 1 Sensor 1	mV	0–1000 and varying
Oxygen Bank 1 Sensor 2	mV	0–1000 and varying
Decel Fuel Mode	Yes/No	–
Power Enrichment Mode	Yes/No	–
Closed Loop	Yes/No	Yes
Loop Status	Close/Open	Close
Hot Loop Open	Yes/No	–
Rich/Lean Bank 1	Rich/Lean	–
Short Term Fuel Trim	%	–100 to 100 (Varies)
Long Term Fuel Trim	%	–100 to 100 (Varies)
EVAP Purge Solenoid	%	0–100
EVAP Vent Solenoid	On/Off	–
IAC Base Position	Counts	–
Fuel Trim Cell	Cell Number	18–12 at idle (Varies with the air flow, RPM, P/N, and A/C)
Calculated Air Flow	g/sec	Varies
Weak Cylinder		–
Rough Road Sensor	Volt	
5 Volt Reference	Volt	
Throttle at Idle	Yes/No	–
Power Steering Cramp	Yes/No	–
Air Conditioning Request	On/Off	OFF
Air Conditioning Clutch	On/Off	OFF (On with the A/C request)
Fuel Pump	On/Off	ON
Malfunction Indicator Lamp	On/Off	–
Upshift Lamp	On/Off	–
Low Fuel Lamp	On/Off	–
Hot Open Loop Lamp	On/Off	–
Variable Gate Intake	Long/Short	Long
Fuel Trim Learned	On/Off	–
Fan 1	On/Off	OFF (Varies with fan request)
Fan 2	On/Off	OFF (Varies with fan request)
Park/Neutral	Yes/No	Yes

EVAP Data Display

At idle / Upper Radiator / Closed Throttle / Park or Neutral / Closed loop / Acc. OFF		
Scan Tool Parameter	**Units Displayed**	**Typical Data**
Engine Speed	RPM	±100 rpm from the Desired rpm
Ignition Voltage	Volts	12.0–15.0
Engine Coolant Temperature	C – F	85˚–115˚C (185˚–239˚F) (Varies with the coolant temperature)
Start Up Coolant Temperature	C – F	4˚–34˚C (39˚–93˚F) Varies with underhood temperature when start-ing
Intake Air Temperature	C – F	10˚–80˚C Varies with underhood temperature
Start Up Intake Air Temperature	C – F	12˚ – 42˚C (54˚ – 108˚F) Varies with underhood temperature when starting
Engine Run Time	Seconds	Varies (Since start up)
Fuel Level Sensor	Volt	0.4–4.5
Fuel Gauge	On/Off	On
EVAP Purge Solenoid	%	0–100
EVAP Vent Solenoid	On/Off	Off
EVAP Tank Vacuum	Inches of H2O	Depends on Pressure / Vacuum
Throttle Position Angle	%	0% (up to 100% at wide open throttle)
Throttle Position Sensor	Volts	0.200–0.900 v (up to 5.0 at wide open throttle)
IAC Position	Counts	5–60
BPW Bank 1	mS	0–999.9
Air Fuel Ratio	Ratio	14.6:1 (Varies)
Spark	Degrees	Varies
MAP	kPa	25–35 kPa
BARO	kPa	65–100 kPa (varies with altitude and with the BARO pressure)
Calculated Load	%	0–100
Vehicle Speed	mph	0
Oxygen Sensor Bank 1 Sensor 1	mV	0—1000 and varying
Oxygen Sensor Bank 1 Sensor 2	mV	0–1000 and varying

EGR Data Display

At idle / Upper Radiator / Closed Throttle / Park or Neutral / Closed loop / Acc. OFF		
Scan Tool Parameter	**Units Displayed**	**Typical Data**
Engine Speed	RPM	±100 rpm from the Desired rpm
Ignition Voltage	Volts	12.0–15.0
IAC Position	Counts	5–60
Engine Coolant Temperature	C – F	85˚–115˚C(185˚–239˚F) Varies with the coolant temperature
Throttle Position Angle	%	0% (up to 100% at wide open throttle)
Throttle Position Sensor	Volts	0.200–0.900v (up to 5.0 at wide open throttle)
EGR Actual Position	%	0%
EGR Desired Position	%	0%
EGR Feedback	Volt	
EGR Closed Pintle Position	Counts	–
EGR Trip Sample Count	Counts	0
EGR EWMA Threshold	Counts(signed)	
EGR EWMA	Counts(signed)	
EGR Pintle Position Error	Counts(signed)	
Engine Run Time	Seconds	Varies (Since start up)
BPW Bank 1	mS	0–999.9
Air Fuel Ratio	Ratio	14.6:1 (Varies)
Spark	Degrees	Varies
MAP	kPa	25–35 kPa
BARO	kPa	65–100 kPa (varies with altitude and with the BARO pressure)
Calculated Load	%	0–100
Vehicle Speed	mph	0

Oxygen Sensor Data Display

At idle / Upper Radiator / Closed Throttle / Park or Neutral / Closed loop / Acc. OFF		
Scan Tool Parameter	**Units Displayed**	**Typical Data**
Engine Speed	RPM	±100 rpm from the Desired rpm
Engine Run Time	Seconds	Varies (Since start up)
Loop Status	Open/Closed	Closed
O2S Bank 1 Sensor 1	mV	0–1132
O2S Bank 1 Sensor 1	Not Ready, Ready	Ready
Rich/Lean Bank 1	Lean, Rich	–
Injector Pulse Bank 1	mS	Varies
Start Up Coolant Temperature	C – F	4˚–34˚C (39˚–93˚F) Varies with the underhood temperature when starting
Engine Coolant Temperature	C – F	85˚–115˚C (185˚–239˚F) Varies with the coolant temperature
Start Up Intake Air Temperature	C – F	12˚–42˚C (54˚–108˚F) Varies with the underhood temperature when starting
Intake Air Temperature	C – F	Varies with the underhood temperature
O2S Time to Activity Bank 1 Sensor 1	Seconds	Varies
Short Term FT Bank 1	%	–100 to 100 (Varies)
Long Term FT Bank 1	%	–100 to 100 (Varies)
TP Angle	%	0% (up to 100% at wide open throttle)
Calculated Air Flow	g/sec	Varies
MAP	kPa	25–35 kPa
EVAP Purge PWM	%	0–100
Ignition 1	Volts	12.0–15.0
Air Fuel Ratio	Ratio	14.6:1 (Varies)
Decel Fuel Mode	Inactive/Active	–
Power Enrichment	Inactive/Active	–
O2S Warm Up Time Bank 1 – Senor 1	Seconds	Varies
HO2S Bank 1 Sensor 2	mV	0–1000 and varying

Misfire Data Display

At idle / Upper Radiator / Closed Throttle / Park or Neutral / Closed loop / Acc. OFF		
Scan Tool Parameter	**Units Displayed**	**Typical Data**
Misfire Current #1	0–255 counts	0 (increase with a misfire)
Misfire History #1	0–255 counts	0 (increase with a misfire)
Misfire Current #2	0–255 counts	0 (increase with a misfire)
Misfire History #2	0–255 counts	0 (increase with a misfire)
Misfire Current #3	0–255 counts	0 (increase with a misfire)
Misfire History #3	0–255 counts	0 (increase with a misfire)
Misfire Current #4	0–255 counts	0 (increase with a misfire)
Misfire History #4	0–255 counts	0 (increase with a misfire)
Misfire Failures First Fail	0–255 counts	0 (increase with a misfire)
Misfire Passes First Fail	0–255 counts	0 (increase with a misfire)
Total Misfire Current Count	0–255 counts	0 (increase with a misfire)
Weak Cylinder		–
Engine Speed	RPM	±100 rpm from the Desired RPM
TP Angle	%	0% (up to 100% at wide open throttle)
Calculated Load	%	0–100
Engine Coolant Temperature	C•F	85˚–115˚C(185˚–239˚F) Varies with the coolant temperature
Intake Air Temperature	C•F	10˚–80˚C(50˚–176˚F) Varies with the underhood temperature
Cam Active Counter	Counts	0–255
Spark Advance	Degrees	Varies
G Sensor	Volts	–
EGR Desired Position	%	0%
EGR Actual Position	%	0%
MAP	kPa	25–35 kPa
Vehicle Speed	mph	0
Air Conditioning Request	On/Off	Off
Air Conditioning Clutch	On/Off	Off
Knock Active Counter	Counts	0–255
Knock Retard	Degrees	Varies
Decel Fuel Mode	Yes/No	–
Power Enrichment Mode	Yes/No	–
Injector Pulse Bank 1	mS	Varies
O2S Bank 1 Sensor 1	mV	0–1000 and varying
HO2S Bank 1 Sensor 2	mV	0–1000 and varying
Short Term FT Bank 1	%	–100 to 100 (Varies)
Long Term FT Bank 1	%	–100 to 100 (Varies)

TEC Display Table

At idle / Upper Radiator / Closed Throttle / Park or Neutral / Closed loop / Acc. OFF		
Scan Tool Parameter	**Units Displayed**	**Typical Data**
Engine Speed	RPM	±100 rpm from the Desired RPM
TP Angle	%	0 (up to 100% at wide open throttle)
Engine Coolant Temperature	C,F	85˚–115˚C (185˚–239˚F) Varies with the coolant temperature
Intake Air Temperature	C,F	10˚–80˚C(50˚–176˚F) Varies with the underhood temperature
Cam Active Counter	Counts	0–255
Spark	Degrees	Varies
MAP	kPa	25–35 kPa
Vehicle Speed	mph	0
Decel Fuel Mode	Yes/No	–
Power Enrichment Mode	Yes/No	–
Injector Pulse Bank 1	mS	Varies
Crank Error Latched	Yes/No	–
Sum Out Of Range	Yes/No	–
Opposing Factor Out Of Range	Yes/No	–
Factor Out Of Range	Yes/No	–
Enable Criteria Not Met	Yes/No	–
Cat Damaging Misfire	Yes/No	–
Test is Running	Yes/No	–
Learned This Key Cycle	Yes/No	–
Attempts to Learn	Counts	

ENGINE DATA DISPLAY TABLE DEFINITIONS

PCM/ECM Data Description

The following information will assist in diagnosing emission or driveability problems. A first technician can view the displays while the vehicle is being driven by second technician. Refer to Powertrain On–Board Diagnostic (OBD II) System Check for additional information.

A/C Clutch

The A/C Relay represents the commanded state of the A/C clutch control relay. The A/C clutch should be engaged when the scan tool displays ON.

A/C Pressure

The A/C High Side displays the pressure value of the A/C refrigerant pressure sensor. The A/C High Side helps to diagnose the diagnostic trouble code (DTC) P0533.

A/C Request

The A/C Request represents whether the air conditioning is being requested from the HVAC selector. The input is received by the instrument panel cluster and then sent over universal asynchronous receiver transmitter (UART) serial data to the powertrain control module (PCM)/engine control module (ECM) and finally to the scan tool over class 2 serial data.

Air Fuel Ratio

The Air Fuel Ration indicates the air to fuel ratio based on the Oxygen Sensor (O2S 1) inputs. The PCM/ECM uses the fuel trims to adjust fueling in order to attempt to maintain an air fuel ratio of 14.7:1.

BARO

The Barometric Pressure (BARO) sensor measures the change in the intake manifold pressure which results from altitude changes. This value is updated at ignition ON and also at Wide Open Throttle (WOT).

BPW Bank 1

Indicates the base Pulse Width Modulation (PWM) or ON time of the indicated cylinder injector in milliseconds. When the engine load is increased, the injector pulse width will increase.

Calculated Air Flow

The calculated air flow is a calculation based on manifold absolute pressure. The calculation is used in several diagnostics to determine when to run the diagnostics.

Calculated Load

Indicates engine load based on Manifold Absolute Pressure (MAP). The higher the percentage, the more load the engine is under.

Camshaft Activity Counter

The Camshaft Position (CMP) activity counter displays the activity sent to the PCM/ECM from the CMP sensor. The counter will continually increment while the engine is running. The CMP activity counter is helpful in diagnosing DTC P0342.

Desired Idle

The PCM/ECM commands the idle speed. The PCM/ECM compensates for various engine loads in order to maintain the desired idle speed. The actual engine speed should remain close to the desired idle under the various engine loads with the engine idling.

Engine Coolant Temperature

The Engine Coolant Temperature (ECT) sensor sends engine temperature information to the PCM/ECM. The PCM/ECM supplies 5 volts to the engine coolant temperature sensor circuit. The sensor is a thermistor which changes internal resistance as temperature changes. When the sensor is cold (internal resistance high), the PCM/ECM monitors a high voltage which it interprets as a cold engine. As the sensor warms (internal resistance decreases), the voltage signal will decrease and the PCM/ECM will interpret the lower voltage as a warm engine.

EGR Desired Position

The desired exhaust gas recirculation (EGR) position is the commanded EGR position. The PCM/ECM calculates the desired EGR position. The higher the percentage, the longer the PCM/ECM is commanding the EGR valve ON.

Engine Run Time

The engine run time is a measure of how long the engine has been running. When the engine stops running, the timer resets to zero.

Engine Speed

Engine Speed is computed by the PCM/ECM from the fuel control reference input. It should remain close to desired idle under the various engine loads with the engine idling.

EVAP Purge

The Evaporative (EVAP) Emission purge valve solenoid is a proportional signal used in order to control the EVAP canister purge function. At 0% the valve is commanded fully closed. 100% implies that the valve is fully open.

EVAP Purge Solenoid

When energized, the EVAP Emission Canister Purge Solenoid allows the fuel vapor to flow from the EVAP Canister to the engine. The EVAP Emission Canister Purge Solenoid is normally closed. The EVAP Emission Canister Purge Solenoid is pulse width modulated by the PCM/ECM. The EVAP Emission Canister Purge Solenoid reads 0% when closed and 100% when fully opened.

EVAP Vent Solenoid

The EVAP Emission Vent Solenoid allows fresh outside air to the EVAP Emission Canister during purge mode. The EVAP Emission Vent Solenoid allows the diagnostic to pull a vacuum on the fuel tank by closing the vent solenoid.

Fan

The Fan Control (FC) Relay is commanded by the PCM/ECM. The FC Relay displays the command as ON or OFF.

Fuel Level Sensor

The Fuel Level Sensor monitors the fuel level in the tank. The Fuel Level Sensor monitors the rate of change of the air pressure in the EVAP Emission Canister Purge System. Several of the Enhanced EVAP Emission Canister Purge System diagnostics are dependent upon the correct fuel level.

Fuel Tank Pressure Sensor

The fuel tank pressure sensor measures the difference between the pressure or the vacuum in the fuel tank and the outside air pressure. When the air pressure in the fuel tank equals the outside air pressure, the output voltage of the sensor is 1.3 to 1.7 volts.

IAC Position

The scan tool displays the PCM/ECM command for the Idle Air Control (IAC) pintle position in counts. The higher the number of counts, the greater the commanded idle speed reads. The Idle Air Control responds to changes in the engine load in order to maintain the desired idle rpm.

Intake Air Temperature

The PCM/ECM converts the resistance of the Intake Air emperature (IAT) sensor to degrees in the same manner as the ECT sensor. Intake air temperature is used by the PCM/ECM to adjust fuel delivery and spark timing according to incoming air density.

Ignition 1 (Voltage)

The ignition volts represent the system voltage measured y the PCM/ECM at the ignition feed circuit.

Knock Retard

The Knock Sensor (KS) Retard indicates the amount of park advance the PCM/ECM is decreasing in response o the KS signal.

Knock Present

The KS Noise Channel indicates when the PCM/ECM etects the KS signal. The PCM/ECM should display O at idle.

Long Term FT

The Long Term Fuel Trim (FT) is derived from the short term fuel trim value. The Long Term FT is used for the long term correction of the fuel delivery. A value of 128 counts (0%) indicates that the fuel delivery requires no compensation in order to maintain a 14.7:1 air to fuel ratio. A value below 128 counts means that the fuel system is too rich and the fuel delivery is being reduced. The PCM/ECM is decreasing the injector pulse width. A value above 128 counts indicates that a lean condition exists for which the PCM/ECM is compensating.

Long Term FT Average

Long Term FT Average is derived from the long term fuel trim from all of the cells. The PCM/ECM then takes all of the values and then creates one average value.

Loop Status

The Closed Loop is displayed indicating that the PCM/ECM is controlling the fuel delivery according to the Oxygen Sensor (O2S 1) voltage as close to an air/fuel ratio of 14.7 to 1 as possible.

MAP

The MAP sensor measures the change in the intake manifold pressure which results from engine load and speed changes. As the intake manifold pressure increases, the air density in the intake also increases and the additional fuel is required.

Misfire Current #1–4

Indicates the number of current misfires that are present in the indicated cylinder. Increments only when misfire is current.

Misfire History #1–4

Indicates the number of misfires that have occurred after 195 current misfires have been counted. The current misfire counter will add its misfires to the history misfire counter after 195 total misfires have taken place. If 1 cylinder is misfiring, the misfiring current counter will have 195 misfires counted before adding to its history counter. If 2 cylinders are misfiring, the misfiring current counter will add to their history counters after 97 misfires. The counter increments only after a misfire diagnostic trouble code (DTC) has been set.

Oxygen Sensor Bank 1 Sensor 1

The pre–converter Oxygen Sensor (O2S 1) reading represents the exhaust oxygen sensor output voltage. This voltage will fluctuate constantly between 100 mv (lean exhaust) and 900 mv (rich exhaust) when the system is operating in a Closed Loop.

Oxygen Sensor Bank 1 Sensor 2

The post–converter Heated Oxygen Sensor (HO2S 2) represents the exhaust oxygen output voltage past the catalytic converter. This voltage remains inactive, or the voltage will appear lazy within a range of 100 mv (lean exhaust) and 900 mv (rich exhaust) when operating in a Closed Loop.

Short Term FT

The Short Term FT represents a short term correction to fuel delivery by the PCM/ECM in response to the amount of time the oxygen sensor voltage spends above or below the 450 mv threshold. If the oxygen sensor has mainly been below 450 mv, indicating a lean air/fuel mixture, short term fuel trim will increase to tell the PCM/ECM to add fuel. If the oxygen sensor voltage stays mainly above the threshold, the PCM/ECM will reduce fuel delivery to compensate for the indicated rich condition.

Short Term FT Average

The Short Term FT Average is derived from the short term fuel trim from all of the cells. The PCM/ECM takes all of the values and then creates one average value.

Spark

This is a display of the spark advance Ignition Coil (IC) calculation which the PCM/ECM is programming in the ignition system. It computes the desired spark advance using data such as engine temperature, rpm, engine load, vehicle speed and operating mode.

TCC Brake Switch

When the brake pedal is applied, the Torque Converter Clutch (TCC) brake switch sends a signal to the PCM/ECM to disengage the TCC and disable the cruise control.

Total Misfire Current Counter

Indicates the total number of misfires that have been detected in all the cylinders after 100 engine cycles. One cycle equals one complete 4 stroke cycle. The total misfire only increments during the steady state cruise conditions.

TP Angle

From the Throttle Position (TP) Sensor voltage input, the PCM/ECM computes the TP. The TP Angle will auto zero to 0% at idle (TP voltage below 0.90 volts). The TP Angle will read 100% at WOT.

TP Sensor

The PCM/ECM uses the TP Sensor in order to determine the amount of the throttle demanded by the vehicle's operator. The TP Sensor reads between 0.36–0.96 volts at idle to above 4 volts at WOT.

Vehicle Speed

The vehicle speed sensor signal is converted into mph or km/h for display. The vehicle speed output from the PCM/ECM is 4000 pulses per mile. The scan tool uses the class 2 serial data from the PCM/ECM to obtain vehicle speed,

while the Instrument Panel Cluster (IPC), cruise control module and the chime alarm module use the 4000 ppm output.

FASTENER TIGHTENING SPECIFICATIONS

Application	N•m	Lb–Ft	Lb–In
Accessory Mounting Bracket Bolts	35	26	–
Camshaft Position Sensor Bolts	12	–	106
Crankshaft Position Sensor Retaining Bolt	10	–	89
Electronic Ignition System Ignition Coil Retaining Bolts	10	–	89
Engine Coolant Temperature Sensor	25	18	–
Evaporative Emission Canister Flange Bolt	20	15	–
Evaporative Emission Canister Protective Cover	8	–	71
Evaporative Emission Canister Purge Solenoid Bracket Bolt	5	–	44
Exhaust Gas Recirculation Valve Retaining Bolts	20	15	–
Fuel Cutoff Switch Mounting Bolts	3	–	27
Fuel Filter Mounting Bracket Assembly Bolt	10	–	89
Fuel Pressure Regulator Retaining Screw	12	–	106
Fuel Rail Retaining Bolts	25	18	–
Fuel Tank Strap Retaining Nuts	13	–	115
Heated Oxygen Sensor	41	30	–
Idle Air Control Valve Retaining Bolts	3	–	27
Knock Sensor Bolt	20	15	–
Manifold Absolute Pressure Sensor Mounting Bracket Nuts	10	–	89
Manifold Absolute Pressure Sensor Retaining Bolts and Nuts	10	–	89
Oxygen Sensor	41	30	–
Rear A/C Compressor Mounting Bracket Bolts	35	26	–
Spark Plug Cover Bolts	3	–	27
Throttle Body Retaining Nuts	9	–	80
Throttle Position Sensor Retaining Bolts	2	–	18

FUEL SYSTEM SPECIFICATIONS

Gasoline

All engines are designed to use unleaded fuel only. Unleaded fuel must be used for proper emission control system operation. Its use will also minimize spark plug fouling and extend engine oil life. Using leaded fuel can damage the emission warranty coverage. The fuel should meet specification ASTM D4814 for the U.S. or CGSB 3.5 M93 for Canada. All engines are designed to use unleaded fuel with a minimum U(R+M)/2e (pump) octane number of 87, where R=research octane number, and M=motor octane number.

Ethanol

You may use fuel containing ethanol (ethyl alcohol) or grain alcohol providing that there is not more than 10 percent ethyl alcohol by volume.

Methanol

Do not use fuels containing methanol. Methanol can corrode metal parts and also cause damage to plastic and rubber parts in the fuel system.

Methyl Tertiary–Butyl Ether (MTBE)

You may use fuel containing Methyl Tertiary–Butyl Ether (MTBE) providing there is not more than 15 percent MTBE by volume.

TEMPERATURE VS RESISTANCE

˚C	˚F	OHMS
Temperature vs Resistance Values (Approximate)		
100	212	177
90	194	241
80	176	332
70	158	467
60	140	667
50	122	973
45	113	1188
40	104	1459
35	95	1802
30	86	2238
25	77	2796
20	68	3520
15	59	4450
10	50	5670
5	41	7280
0	32	9420
–5	23	12300
–10	14	16180
–15	5	21450
–20	–4	28680
–30	–22	52700
–40	–40	100700

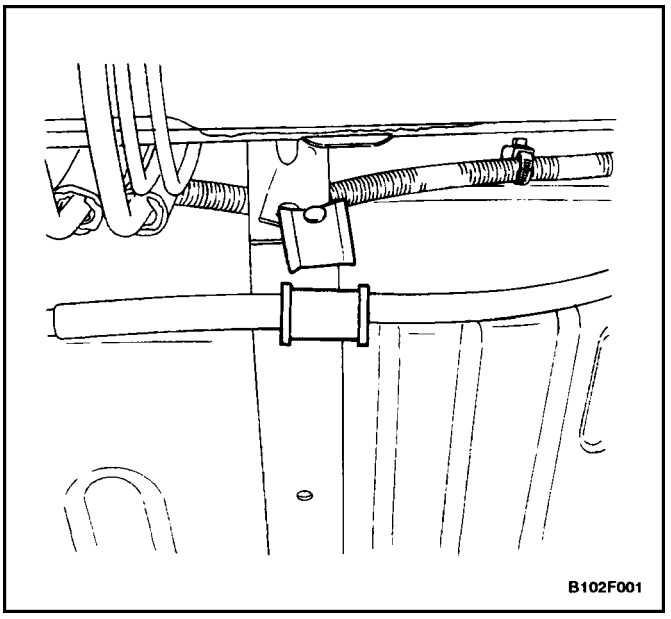
B102F001

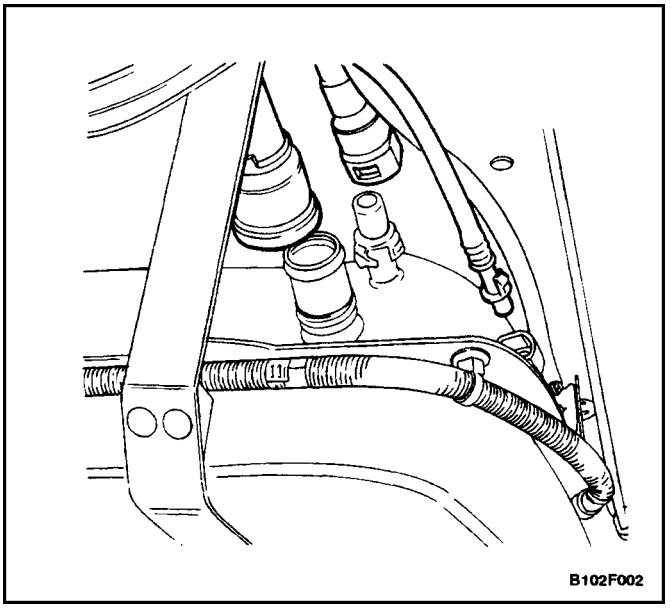
B102F002

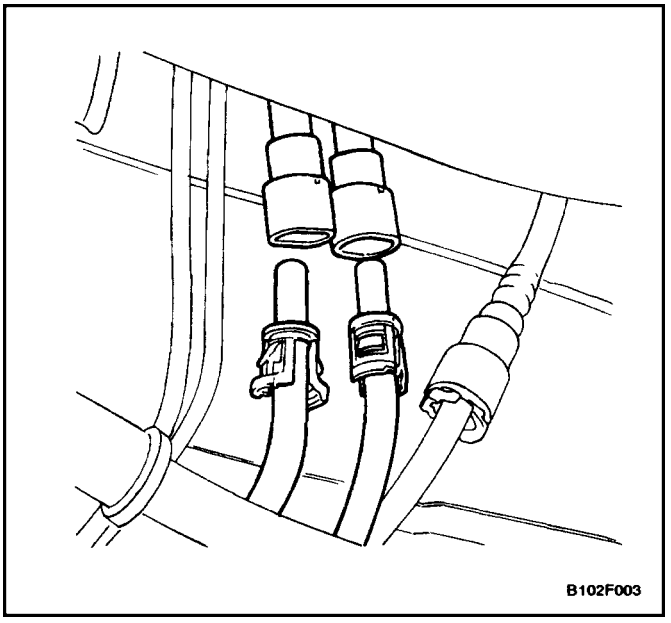
B102F003

MAINTENANCE AND REPAIR

ON–VEHICLE SERVICE

FUEL TANK

Removal Procedure

CAUTION : The fuel system is under pressure. To avoid fuel spillage and the risk of personal injury or fire, it is necessary to relieve the fuel system pressure before disconnecting the fuel lines.

1. Relieve the fuel pressure. Refer to ” Fuel System Pressure Relief ” in this section.
2. Disconnect the negative battery cable.
3. Drain the fuel tank.
4. Disconnect the right rear parking brake cable from the retaining bracket attached to the right side fuel tank strap.
5. Remove the fuel tank filler tube clamp at the fuel tank.
6. Disconnect the fuel tank filler tube.
7. Disconnect the fuel tank vent tube at the fuel tank.
8. Disconnect the fuel vapor line near the fuel tank filler tube.
9. Disconnect the fuel pump harness connector near the left rear corner of the fuel tank.
10. Disconnect the fuel inlet line and the fuel return line near the right front of the fuel tank.
11. Disconnect the wiring harness clips and the fuel line clips as needed.

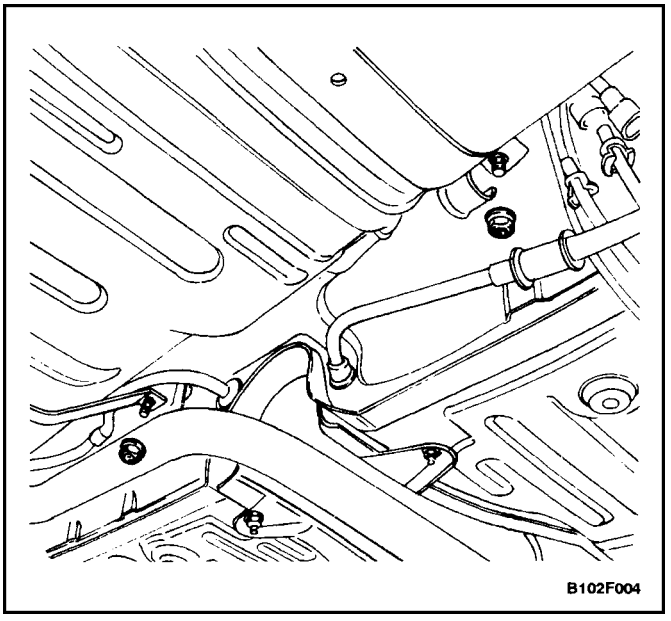
B102F004

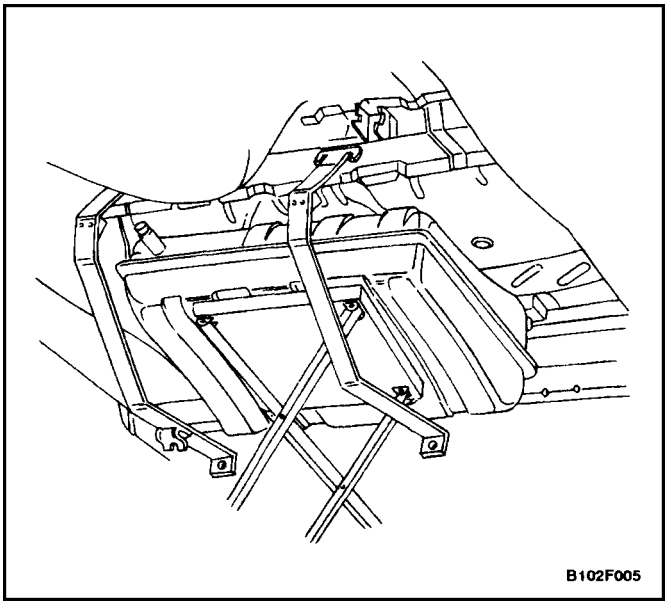
B102F005

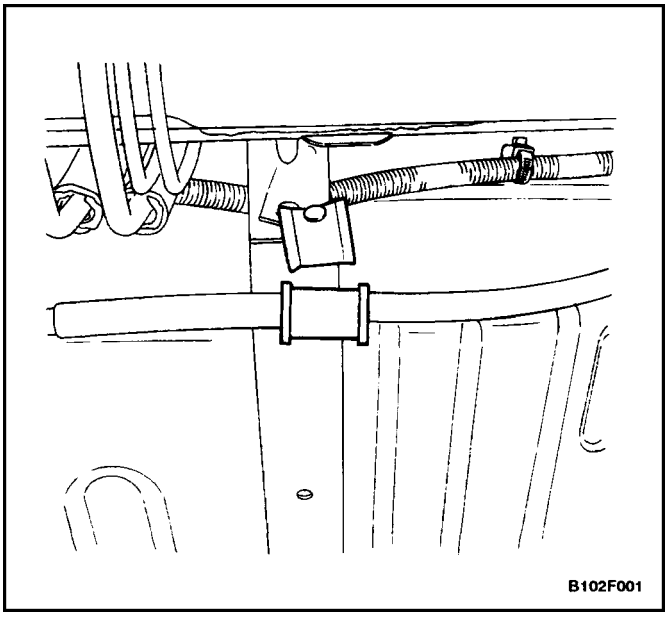
B102F001

12. Support the fuel tank.
13. Remove the fuel tank strap retaining nuts.
14. Remove the fuel tank straps.
15. Carefully lower the fuel tank.
16. Remove the fuel tank.
17. Transfer any parts as needed.

Installation Procedure

1. Raise the fuel tank into position.
2. Install the fuel tank straps.
3. Install the fuel tank strap retaining nuts.

   Tighten

   Tighten the fuel tank strap retaining nuts to 13 N•m (115 lb–ft).
4. Connect the fuel outlet line and the fuel return line.
5. Connect the wiring harness clips and the fuel line clips as needed.
6. Connect the fuel pump harness connector.
7. Connect the fuel vapor line.
8. Connect the fuel tank filler tube.
9. Connect the fuel tank vent tube.
10. Install the fuel tank filler tube clamp at the fuel tank.
11. Connect the right rear parking brake cable to the retaining bracket attached to the right side fuel tank strap.
12. Connect the negative battery cable.
13. Fill the fuel tank.
14. Perform a leak check of the fuel tank and the fuel line connections.

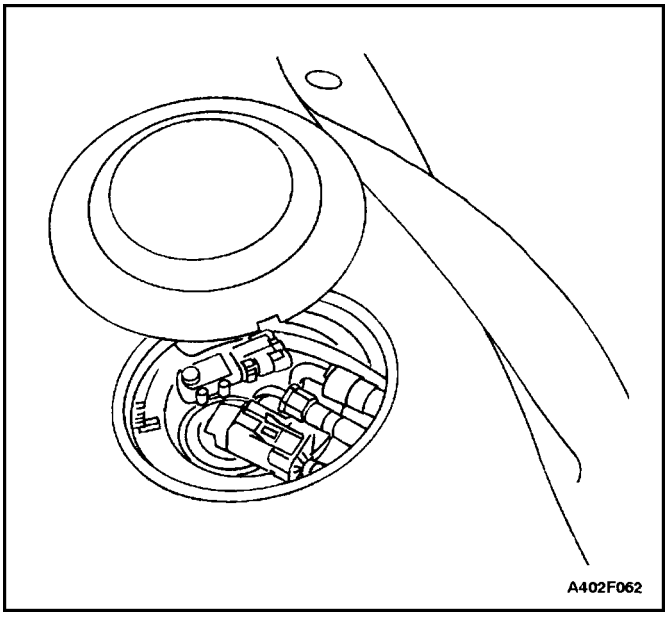

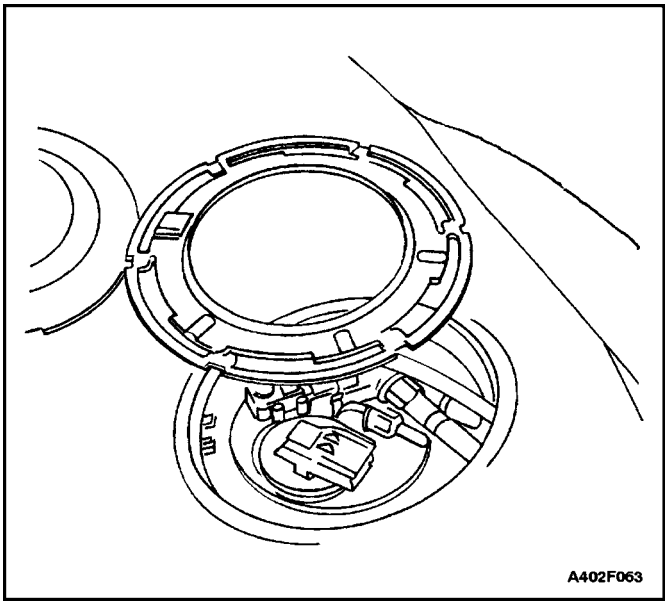

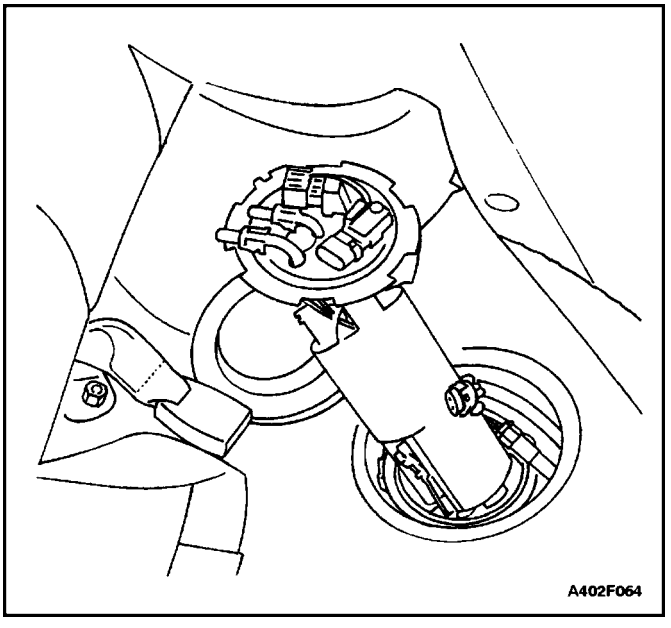

FUEL PUMP

Removal Procedure

CAUTION : The fuel system is under pressure. To avoid fuel spillage and the risk of personal injury or fire, it is necessary to relieve the fuel system pressure before disconnecting the fuel lines.

1. Relieve the fuel system pressure.
   1) Remove the fuel cap.
   2) Remove fuel pump fuse EF18 from the engine fuse block.
   3) Start the engine and allow the engine to stall.
   4) Crank the engine foran additional 10 seconds.
2. Disconnect the negative battery cable.
3. Remove the rear seat. Refer to *Section 9H, Seats.*
4. Remove the fuel pump access cover.
5. Disconnect the electrical connector at the fuel pump assembly.
6. Disconnect the fuel outlet line.
7. Disconnect the fuel tank return line.
8. Turn the lock ring counterclockwise to clear the tank tabs.
9. Remove the fuel pump assembly from the tank.
10. Remove and discard the gasket.

Installation Procedure

1. Clean the gasket mating surface on the fuel tank.
2. Position the new gasket in place.
3. Install the fuel pump into the fuel tank in the same location as removed for ease of line and connector installation.
4. Position the lock ring in place and turn it clockwise until it contacts the tank stop.
5. Connect the fuel pump assembly connector.
6. Install the fuel pump outlet line.
7. Install the fuel tank return line.
8. Install the fuel pump access cover.
9. Connect the negative battery cable.
10. Perform an operational check of the fuel pump.
11. Install the rear seat. Refer to *Section 9H, Seats.*

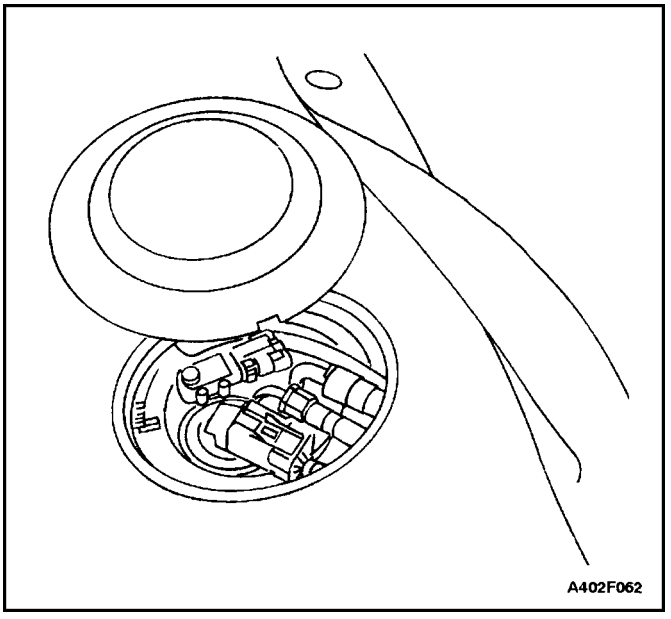

FUEL TANK PRESSURE SENSOR

Removal Procedure

CAUTION : The fuel system is under pressure. To avoid fuel spillage and risk of personal injury or fire, it is necessary to relieve the fuel system pressure before disconnecting the fuel lines.

1. Relieve the fuel pressure. Refer to ” Fuel System Pressure Relief ”in this section.
2. Disconnect the negative battery cable.
3. Remove the rear seat. Refer to *Section 9H, Seats.*
4. Remove the fuel pump access cover.

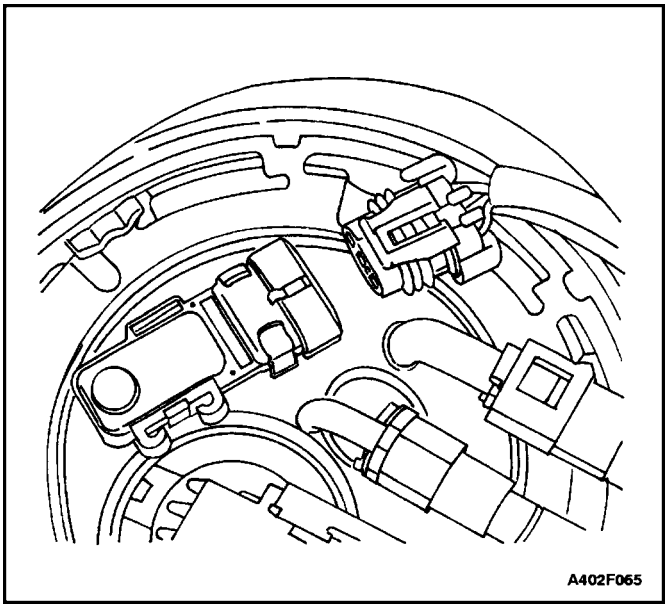

5. Disconnect the fuel tank pressure sensor electrical connector.
6. Bend the retaining tabs and remove the fuel tank pressure sensor.

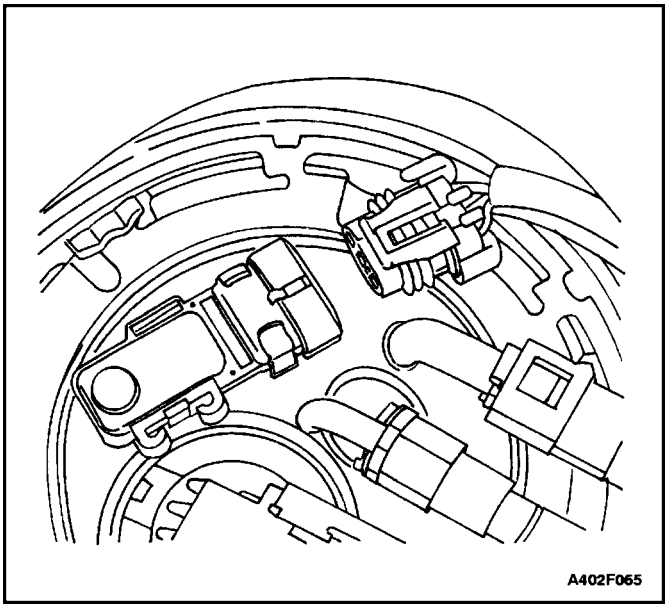

Installation Procedure

1. Install the fuel tank pressure sensor and bend the retaining tabs into place.
2. Connect the fuel tank pressure sensor electrical connector.

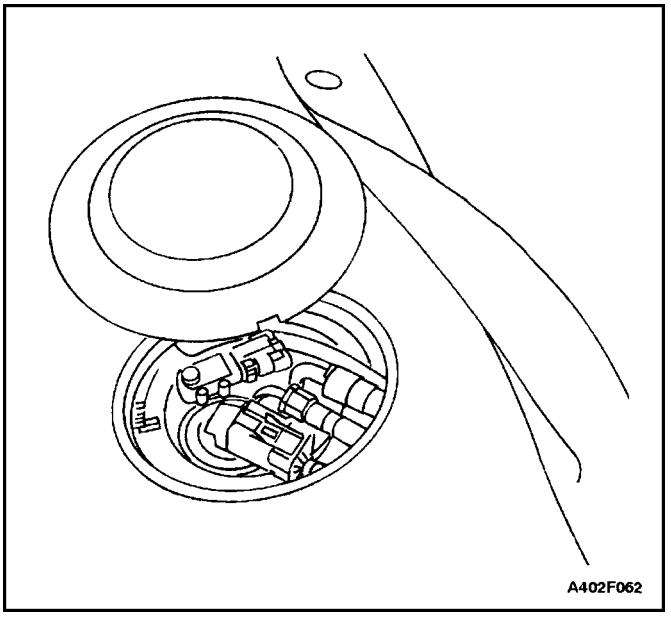

3. Install the fuel pump access cover.
4. Install the rear seat. Refer to *Section 9H, Seats.*
5. Install the fuel pump fuse and the gas cap.
6. Connect the negative battery cable.

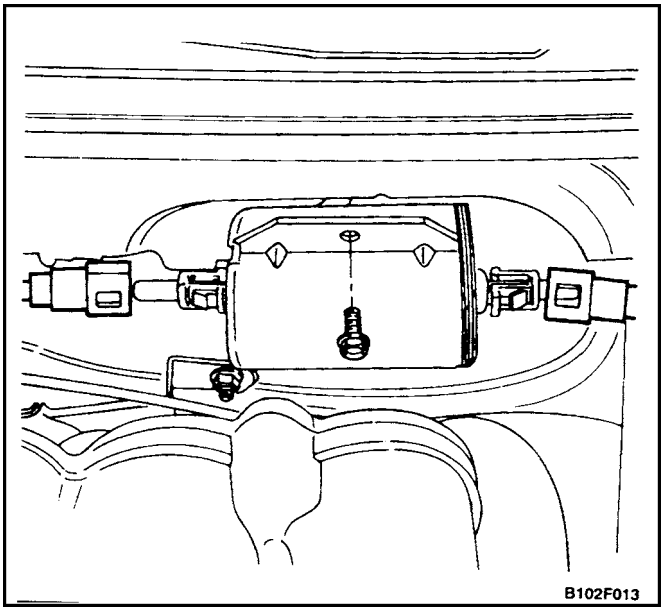

FUEL FILTER

Removal Procedure

Disconnect the negative battery cable.

CAUTION : The fuel system is under pressure. To avoid fuel spillage and the risk of personal injury or fire, it is necessary to relieve the fuel system pressure before disconnecting the fuel lines.

1. Relieve the fuel system pressure. Refer to ”Fuel System Pressure Relief”in this section.
2. Disconnect the inlet/outlet fuel lines by moving the line connector lock forward and pulling the hose off of the fuel filter tube.
3. Remove the fuel filter mounting bracket assembly bolt.
4. Remove the fuel filter.

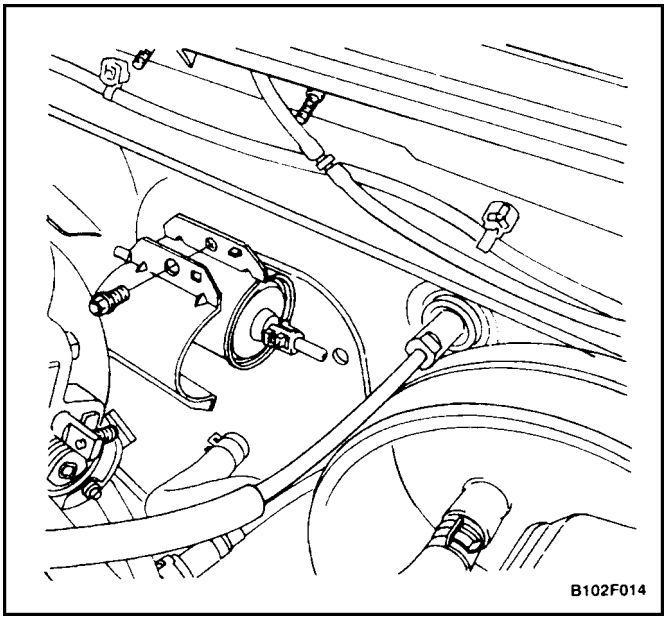

Installation Procedure

1. Install the new fuel filter into the retaining clamp. Note the flow direction.
2. Install the outer fuel filter mounting bracket and the mounting bracket assembly bolt.

   Tighten

   Tighten the fuel filter mounting bracket assembly bolt to 89 lb–in (10 N•m).
3. Connect the inlet/outlet lines. Secure the lines with the connector lock.
4. Connect the negative battery cable.
5. Perform a leak test of the fuel filter.

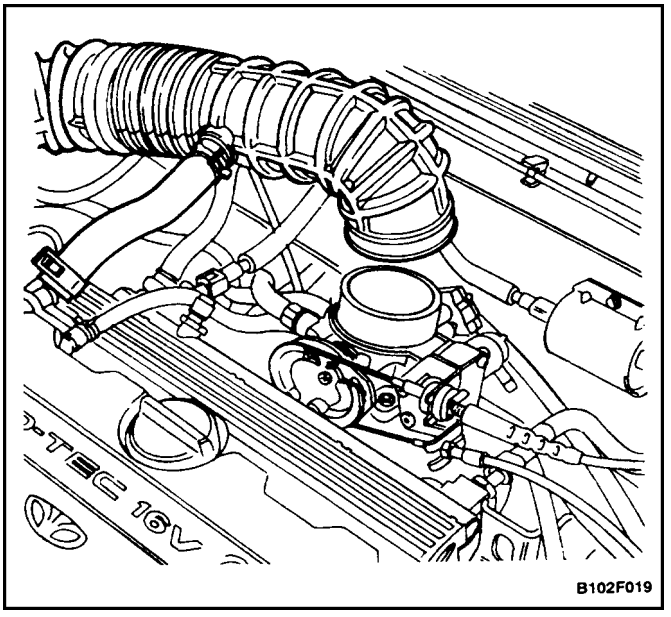

FUEL RAIL AND INJECTORS

Removal Procedure

CAUTION : The fuel system is under pressure. To avoid fuel spillage and the risk of personal injury or fire, it is necessary to relieve the fuel system pressure before disconnecting the fuel lines.

1. Relieve the fuel system pressure. Refer to ”Fuel System Pressure Relief”in this section.
2. Disconnect the negative battery cable.
3. Disconnect the intake air temperature (IAT) sensor connector.
4. Disconnect the breather hose from the valve cover.

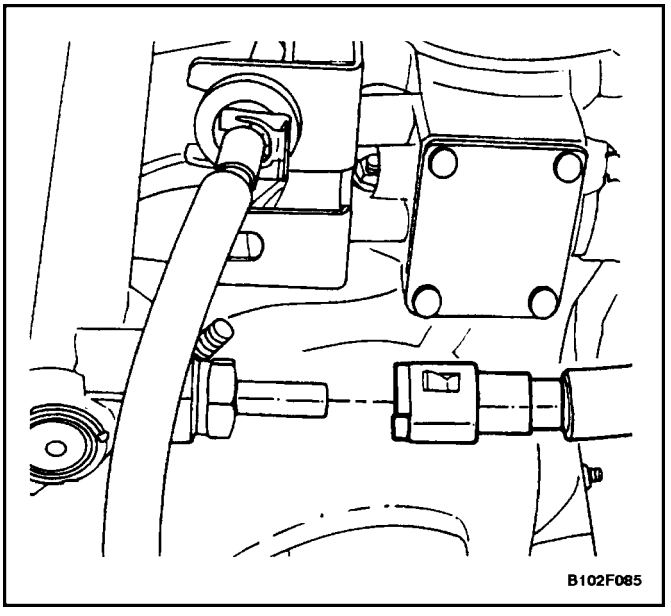

5. Remove the air intake tube and resonator.
6. Disconnect the positive crankcase ventilation (PCV) hose from the valve cover.
7. Disconnect the throttle cables from the throttle body and the bracket.
8. Remove the fuel pressure regulator. Refer to ” Fuel Pressure Regulator ” in this section.
9. Disconnect the fuel return line at the fuel rail.
10. Disconnect the fuel inlet line at the fuel rail.
11. Remove the fuel rail retaining bolts.

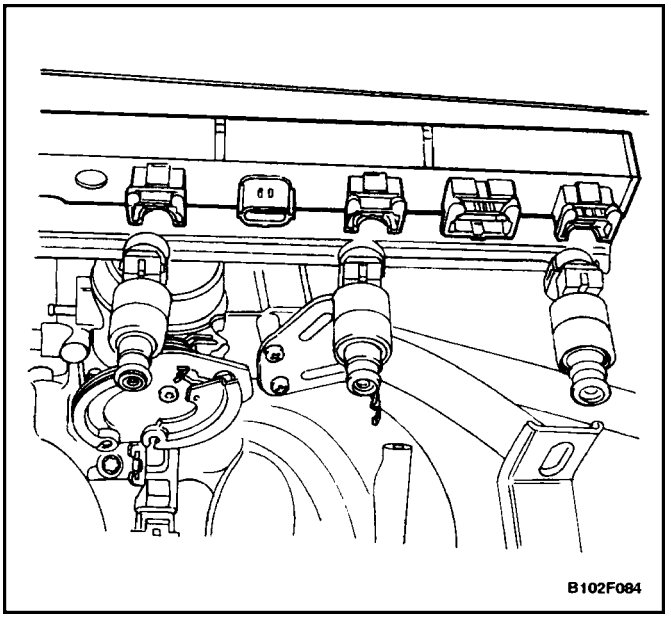

Notice : Before removal, the fuel rail assembly may be cleaned with a spray–type cleaner, following package instructions. Do not immerse the fuel rails in liquid cleaning solvent. Use care in removing the fuel rail assembly to prevent damage to the electrical connectors and the injector spray tips. Prevent dirt and other contaminants from entering open lines and passages. Fittings should be capped and holes plugged during service.

Important : If an injector becomes separated from the rail and remains in the cylinder head, replace the injector O–ring seals and the retaining clip.

12. Remove the fuel rail with the fuel injector channel cover and the injectors attached.
13. Disconnect the fuel injector channel cover connectors.

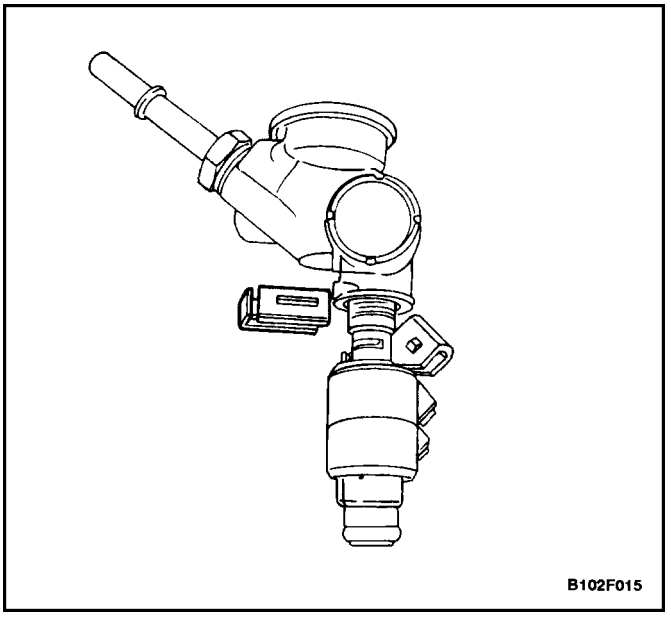
B102F015

14. Remove the fuel injector retainer clips.
15. Remove the fuel injectors by pulling them down and out.
16. Discard the fuel injector O–rings.

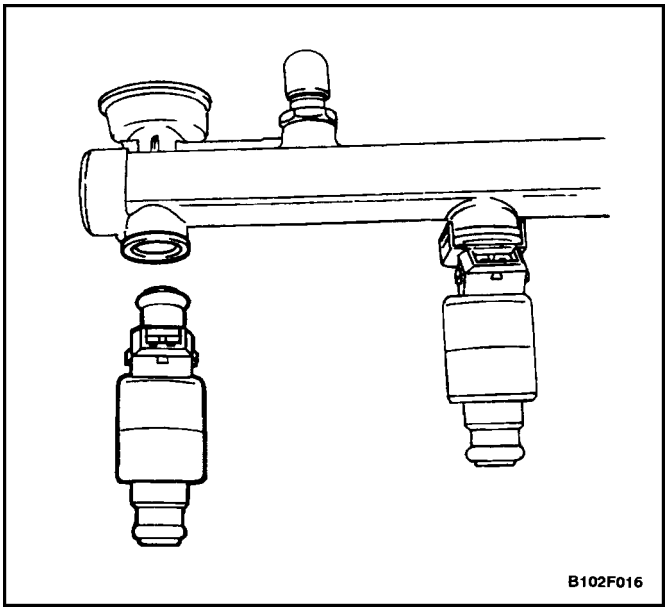
B102F016

Installation Procedure

Important : Important: Different injectors are calibrated for different flow rates. When ordering new fuel injectors, be certain to order the identical part number that is inscribed on the old injector.

1. Lubricate the new fuel injector O–rings with engine oil. Install the new O–rings on the fuel injectors.
2. Install the fuel injectors into the fuel rail sockets with the fuel injector terminals facing outward.
3. Install the fuel injector retaining clips onto the fuel injector and the fuel rail ledge.
4. Make sure that the retaining clip should be parallel to the fuel injector harness connector.

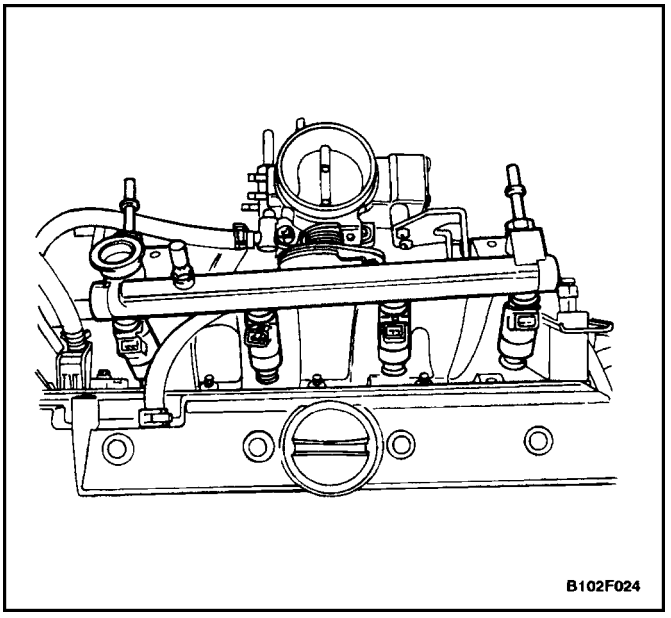
B102F024

5. Install the fuel rail assembly into the cylinder head.
6. Install the fuel rail retaining bolts.

Tighten

Tighten the fuel rail retaining bolts to 18 lb–ft (25 N•m).

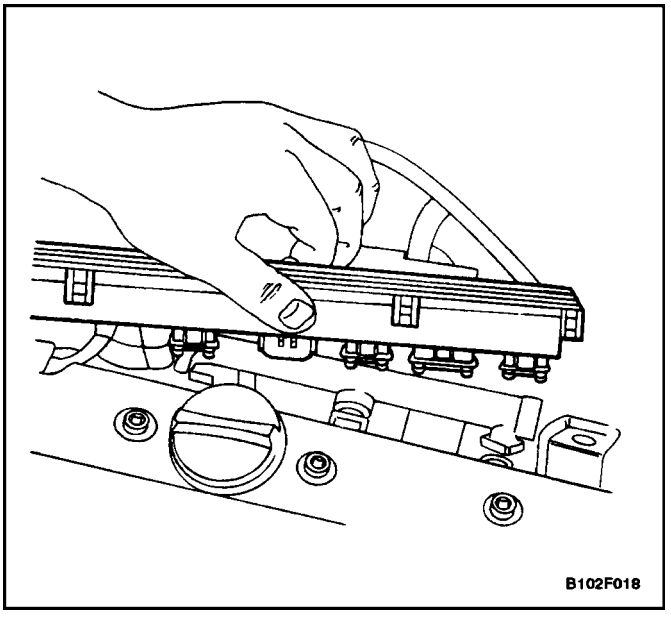
B102F018

7. Connect the fuel inlet line to the fuel rail.
8. Connect the fuel return line to the fuel rail
9. Install the fuel pressure regulator. Refer to ” Fuel Pressure Regulator ” in this section.
10. Connect the fuel injector channel cover and connectors. Rotate each fuel injector as required.
11. Connect the throttle cables to the throttle body bracket.
12. Connect the PCV hose to the valve cover.

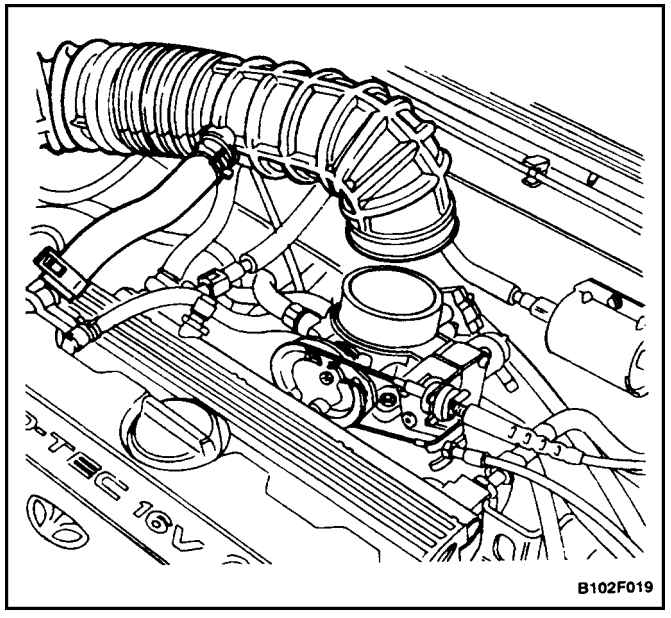

B102F019

13. Install the air intake tube.
14. Connect the breather hose to the valve cover.
15. Connect the IAT sensor connector.
16. Connect the negative battery cable.
17. Perform a leak check of the fuel rail and fuel injectors.

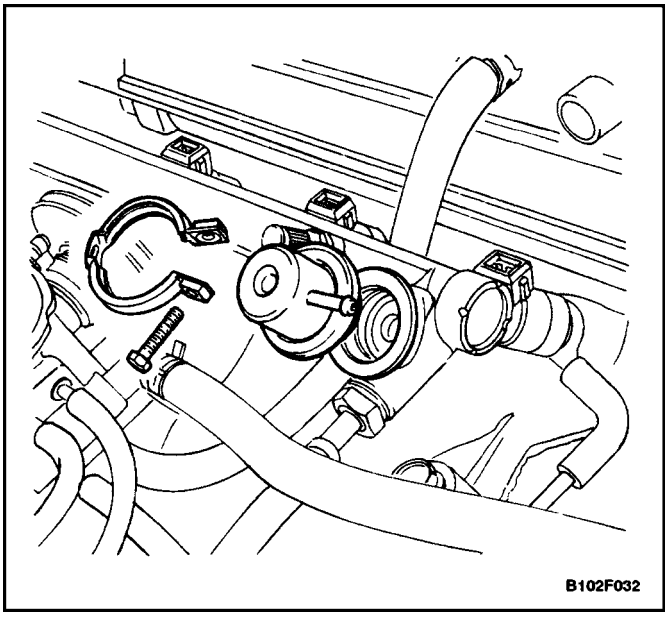
B102F032

FUEL PRESSURE REGULATOR

Removal Procedure

CAUTION : The fuel system is under pressure. To avoid fuel spillage and the risk of personal injury or fire, it is necessary to relieve the fuel system pressure before disconnecting the fuel lines.

1. Relieve the fuel pressure. Refer to ” Fuel System Pressure Relief”in this section.
2. Disconnect the negative battery cable.
3. Disconnect the intake air temperature (IAT) sensor connector.
4. Disconnect the breather hose from the valve cover.
5. Remove the air intake tube.
6. Disconnect the vacuum hose from the fuel pressure regulator.
7. Remove the fuel pressure regulator retaining clamp.
8. Remove the fuel pressure regulator by turning it back and forth and then pulling it out.

9. Discard the O–ring.

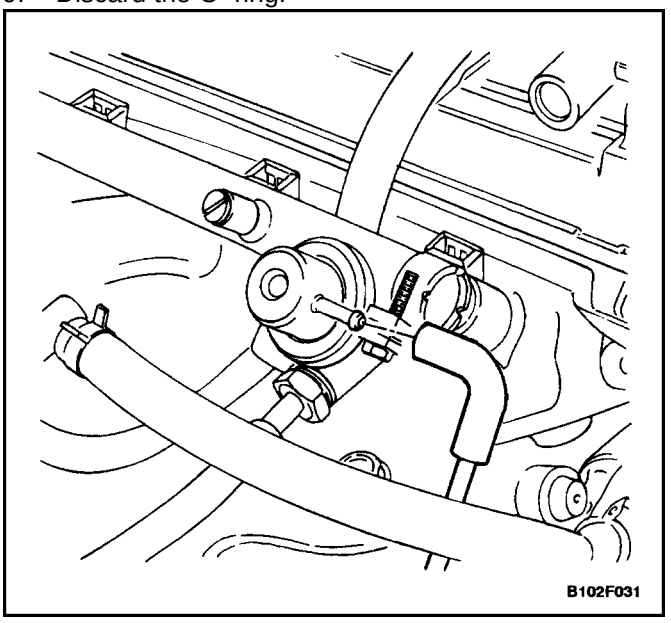

Installation Procedure

1. Lubricate a new O–ring. Install the new O–ring onto the fuel pressure regulator body.
2. Insert the fuel pressure regulator into the fuel rail body.
3. Install the fuel pressure regulator retaining clamp.

Tighten

Tighten the fuel pressure regulator retaining clamp to 106 lb–in (12 N•m).

4. Connect the vacuum hose to the fuel pressure regula–tor.
5. Install the air intake tube.
6. Connect the breather hose to the valve cover.
7. Connect the IAT sensor connector.
8. Connect the negative battery cable.
9. Perform a leak test of the fuel pressure regulator with the engine off and the ignition ON.

ENGINE COOLANT TEMPERATURE SENSOR

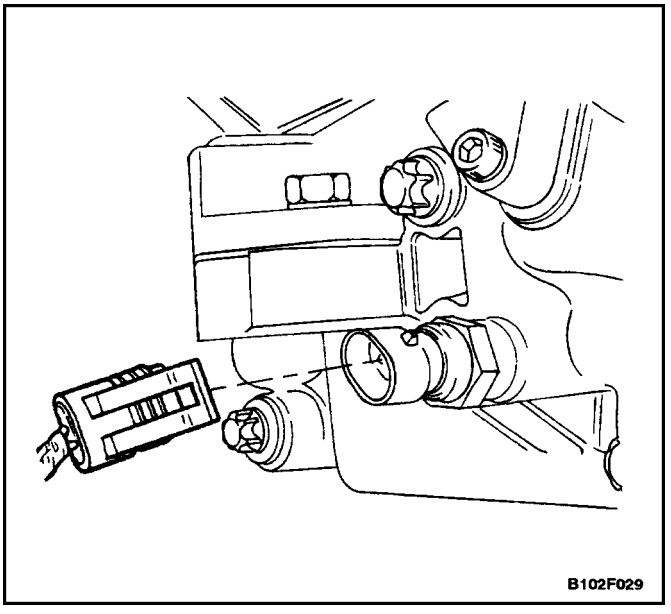

Removal Procedure

1. Relieve the coolant system pressure.
2. Disconnect the negative battery cable.
3. Disconnect the engine coolant temperature (ECT) sensor connector.

Notice : Take care when handling the engine coolant temperature sensor. Damage to the sensor will affect the proper operation of the fuel injection system.

4. Remove the ECT sensor from the electronic ignition (EI) system ignition coil adapter.

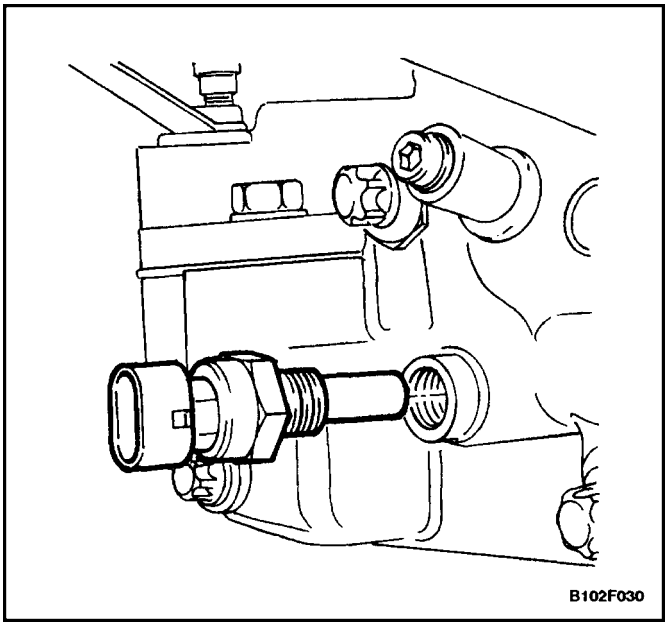

Installation Procedure

1. Coat the threads of the ECT sensor with sealer.
2. Install the ECT sensor into the EI system ignition coil adapter.

Tighten

Tighten the engine coolant temperature sensor to 18 lb–ft (25 N•m).

3. Connect the ECT sensor connector.
4. Fill the coolant system.
5. Connect the negative battery cable.

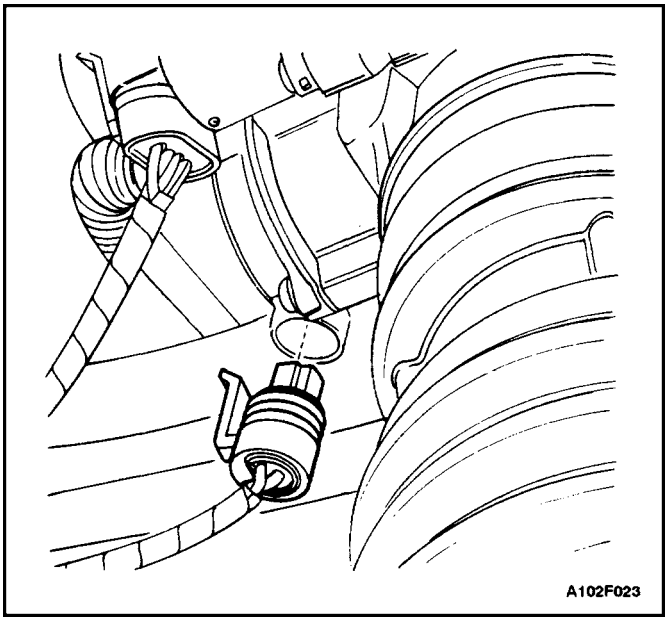
A102F023

THROTTLE POSITION SENSOR

Removal Procedure

1. Disconnect the negative battery cable.
2. Disconnect the throttle position (TP) sensor con-nec–tor.
3. Remove the TP sensor retaining bolts and the TP sensor.

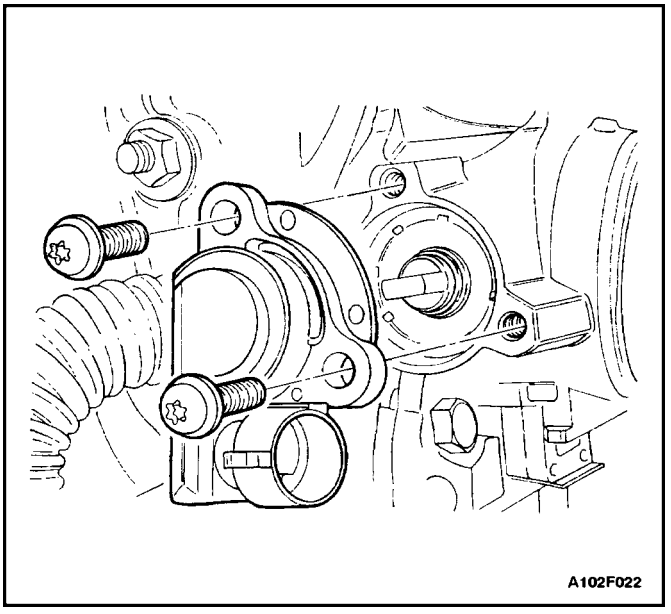
A102F022

Installation Procedure

1. With the throttle valve closed, position the TP sensor on the throttle shaft. Align the TP sensor with the bolt holes.
2. Install the TP sensor retaining bolts.

   Tighten

   Tighten the throttle position sensor retaining bolts to 18 lb–in (2 N•m).
3. Connect the TP sensor connector.
4. Connect the negative battery cable.

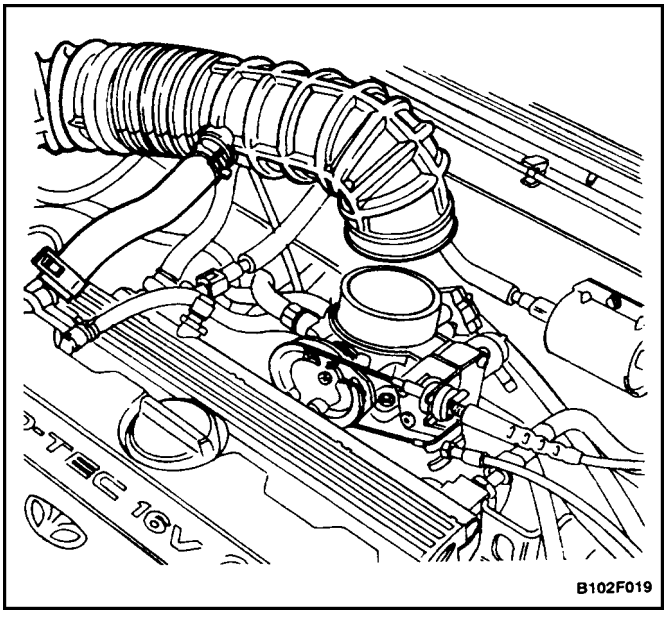

B102F019

THROTTLE BODY

Removal Procedure

1. Disconnect the negative battery cable.
2. Disconnect the intake air temperature (IAT) sensor connector.
3. Disconnect the breather hose from the valve cover.
4. Remove the air intake tube.

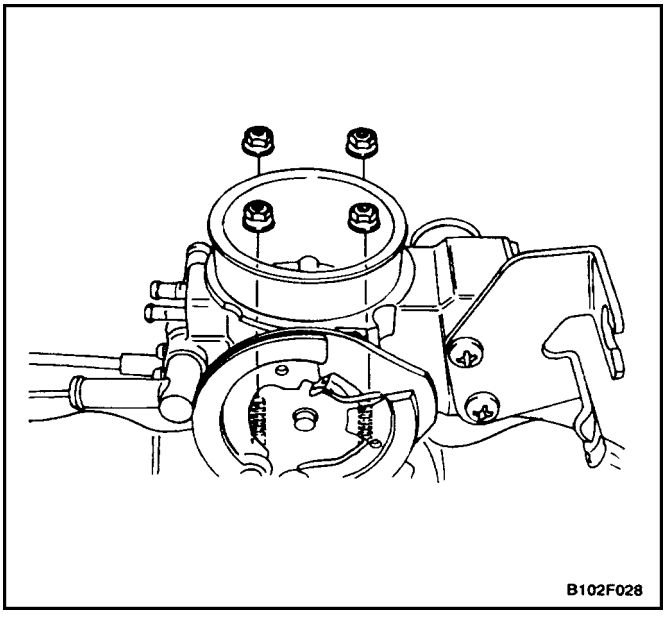
B102F028

5. Disconnect the throttle cables by opening the throttle and moving the cable through the release slot.
6. Disconnect the vacuum hoses from the throttle body.
7. Disconnect the Throttle Position (TP) sensor and the Idle Air Control (IAC) valve connectors.
8. Disconnect the coolant hoses from the throttle body.
9. Remove the throttle body retaining nuts.

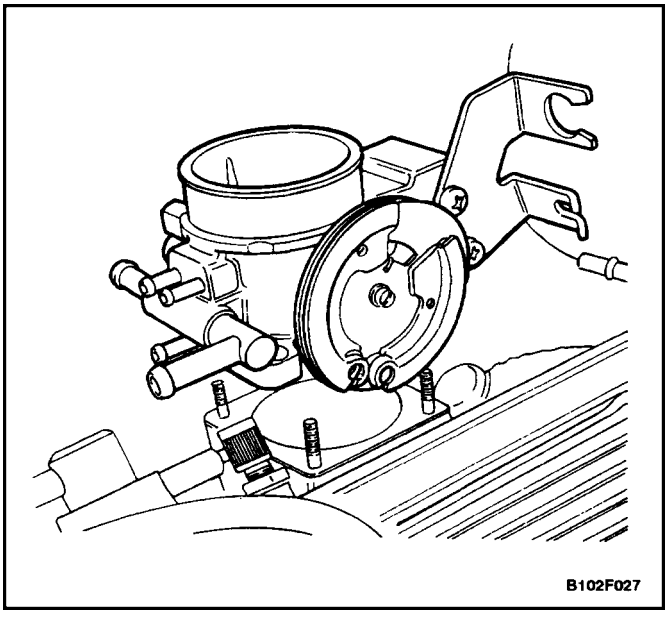
B102F027

Notice : Cover the opening of the intake manifold after removing the throttle body assembly. This will prevent any objects or debris from entering the engine which may cause damage.

10. Remove the throttle body and discard the gasket.
11. Remove the TP sensor. Refer to ” Throttle Position Sensor ” in this section.
12. Remove the IAC valve. Refer to ”Idle Air Control Valve”in this section.

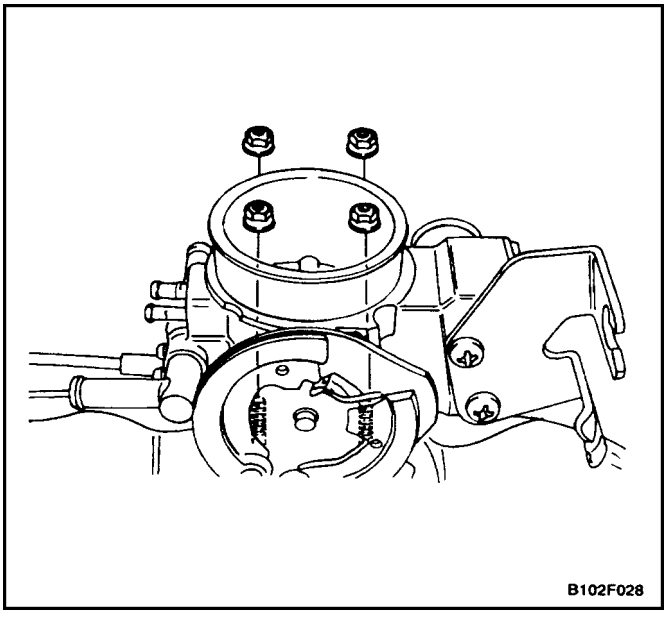
B102F028

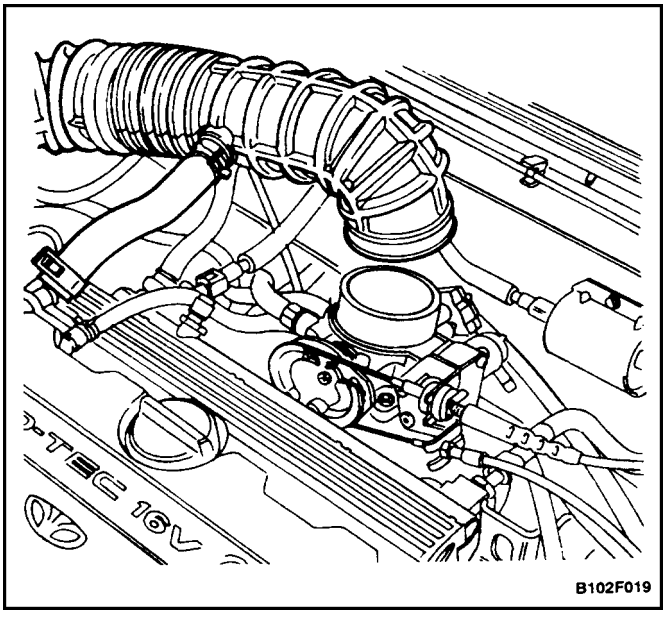

B102F019

Installation Procedure

Notice : Use care in cleaning old gasket material from machined aluminum surfaces. Sharp tools may damage sealing surfaces.

1. Clean the gasket mating surface on the intake man–ifold.

Notice : The throttle body may be cleaned following disassembly in a cold immersion–type cleaner. The TP sensor and the IAC valve should not come in contact with any solvent or cleaner, as they may be damaged.

2. Clean the throttle body.
3. Install the TP sensor. Refer to " Throttle Position Sensor " in this section.
4. Install the IAC valve. Refer to"Idle Air Control Valve"in this section.
5. Install the throttle body assembly with a new gasket to the intake manifold.
6. Install the throttle body retaining nuts.

   ### Tighten

   Tighten the throttle body retaining nuts to 80 lb–in (9 N•m).
7. Connect the TP sensor connector and the IAC valve connector.
8. Connect the coolant hoses to the throttle body.
9. Connect the vacuum hoses to the throttle body.

Important : Make sure the throttle/cruise control cables do not hold the throttle open. With the engine OFF, check to see that the accelerator pedal is free.

10. Connect the throttle/cruise cables.
11. Install the air intake tube.
12. Connect the breather hose to the valve cover.
13. Connect the IAT sensor connector.
14. Connect the negative battery cable.
15. Fill the cooling system.

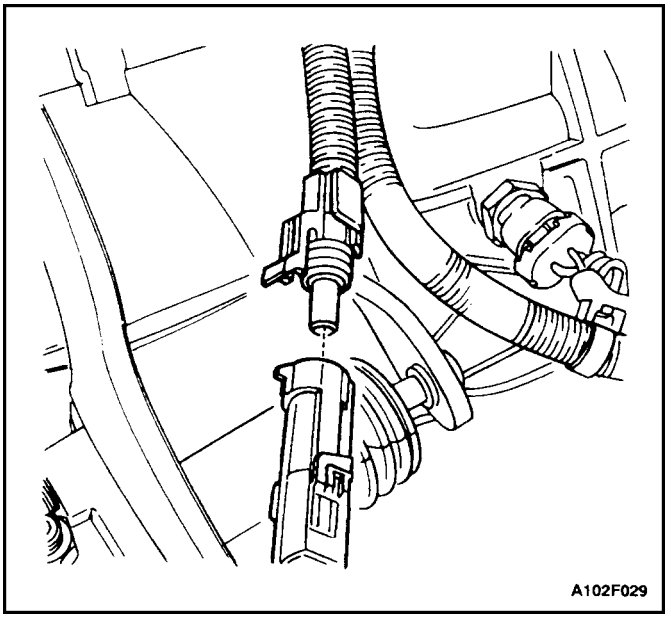
A102F029

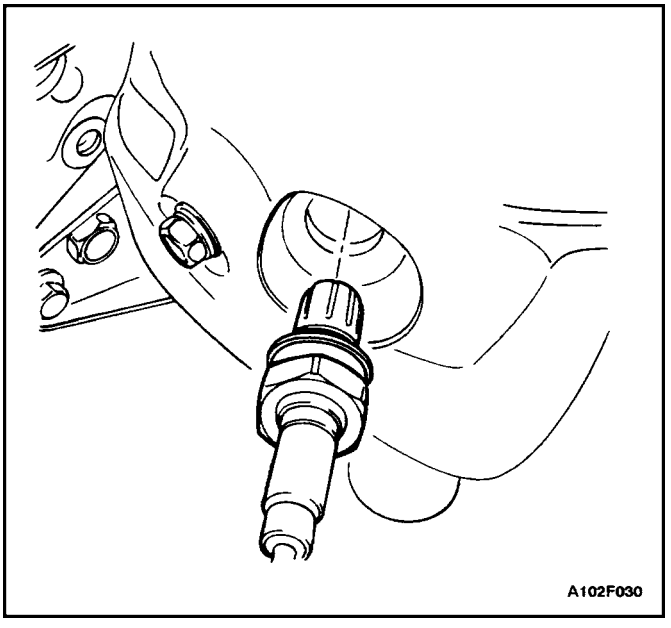
A102F030

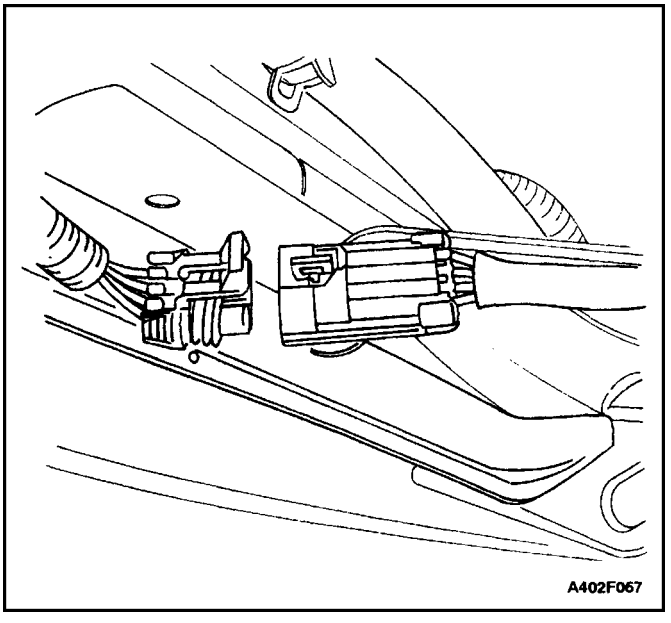
A402F067

OXYGEN SENSOR

Removal Procedure

1. Disconnect the negative battery cable.

Notice : The oxygen sensor (O2S 1) uses a permanently attached pigtail and connector. This pigtail should not be removed from the O2S 1. Damage or removal of the pigtail or the connector could affect proper operation of the O2S 1. Take care when handling the O2S 1. Do not drop or damage the O2S1.

2. Disconnect the O2S 1 connector.

Notice : The oxygen sensor may be difficult to remove when the engine temperature is below 118?F (48?C). Excessive force may damage the threads in the exhaust manifold.

3. Carefully remove the O2S 1 from the exhaust manifold.

Installation Procedure

Important : A special anti–seize compound is used on the O2S 1 threads. This compound consists of a liquid graphite and glass beads. The graphite will burn away, but the glass beads will remain, making the sensor easier to remove. New or service sensors will already have the compound applied to the threads. If a sensor is removed from any engine and if for any reason it is to be reinstalled, the threads must have anti–seize compound applied before reinstallation.

1. Coat the threads of the O2S with an anti–seize com–pound, if needed.
2. Install the O2S into the exhaust manifold.

Tighten

Tighten the oxygen sensor to 41 NSm (30 lb–ft).

3. Connect the O2S connector.
4. Connect the negative battery cable.

HEATED OXYGEN SENSOR

Removal Procedure

1. Disconnect the negative battery cable.
2. Disconnect the electrical connector.

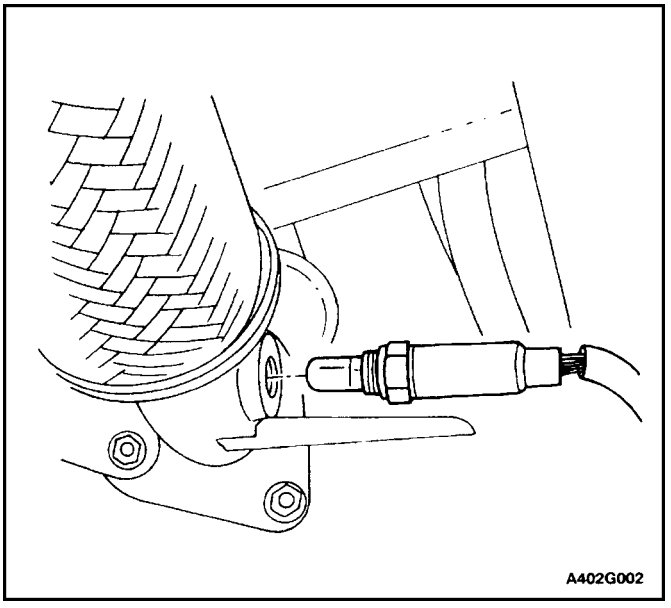

3. Remove the heated oxygen sensor (HO2S 2).

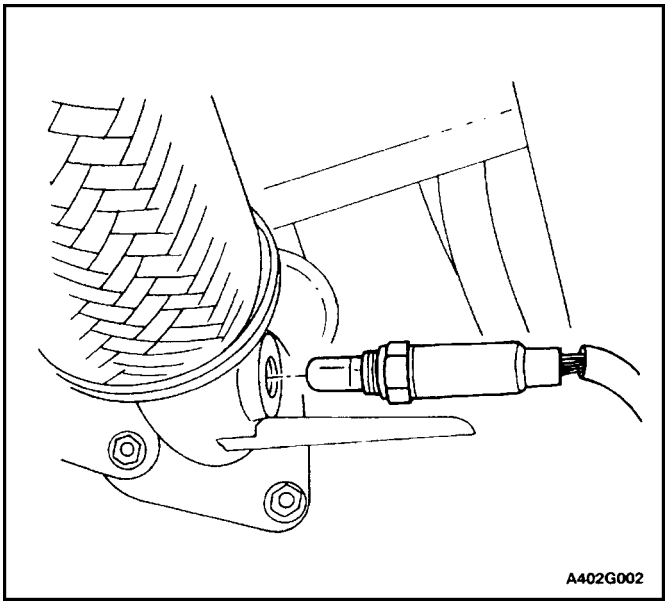

Installation Procedure

1. Install the HO2S 2.

   Tighten

   Tighten the heated oxygen sensor to 30 lb–ft 41 N•m).

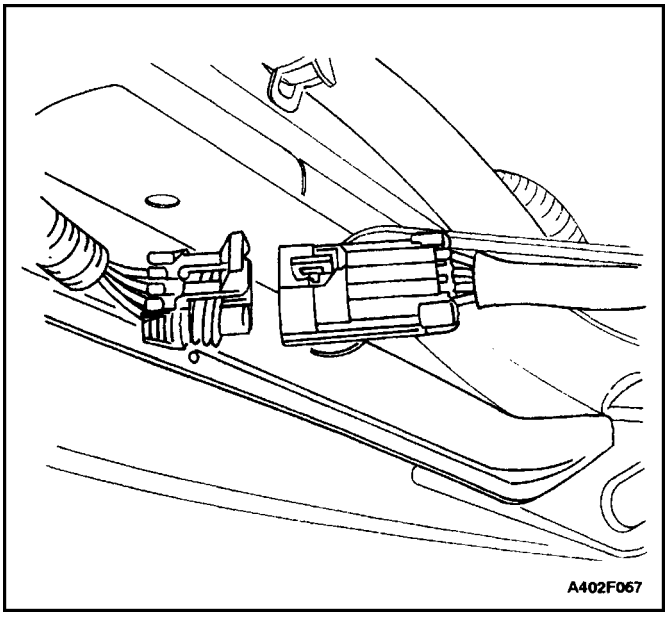

2. Connect the electrical connector.
3. Connect the negative battery cable.

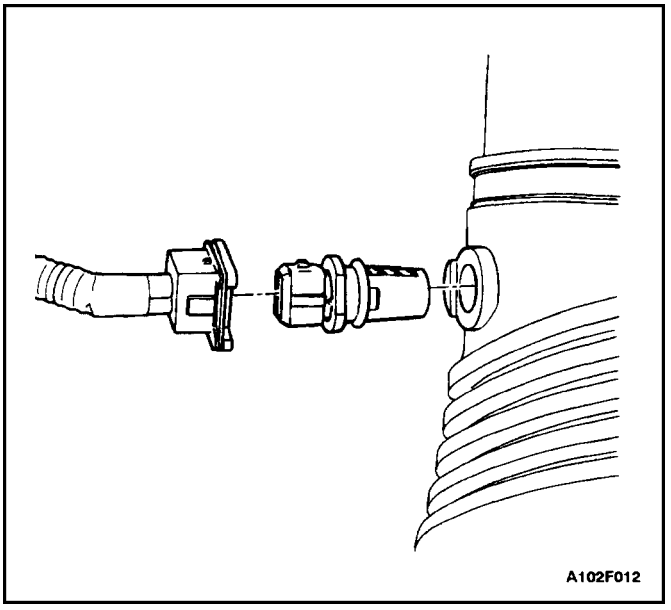

INTAKE AIR TEMPERATURE SENSOR

Removal Procedure

1. Disconnect the negative battery cable.
2. Disconnect the intake air temperature (IAT) sensor connector.
3. Remove the IAT sensor by pulling it out of the air in–take tube.

Installation Procedure

1. Insert the IAT sensor into the air intake tube.
2. Connect the IAT connector.
3. Connect the negative battery cable.

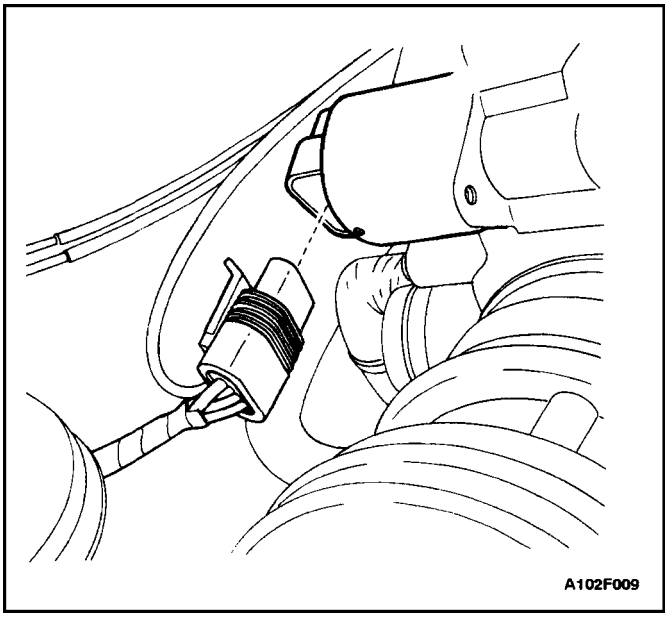

IDLE AIR CONTROL VALVE

Removal Procedure

1. Disconnect the negative battery cable.
2. Disconnect the Idle Air Control (IAC) valve connector.
3. Remove the IAC valve retaining bolts.

Notice : On IAC valves that have been in service, do not push on the valve pintle. The force required to move the pintle may damage the threads on the worm drive.

4. Remove the IAC valve.
5. Clean the IAC valve O–ring seal area, the pintle valve seat and the air passage with a suitable fuel system cleaner. Do not use methyl ethyl ketone.

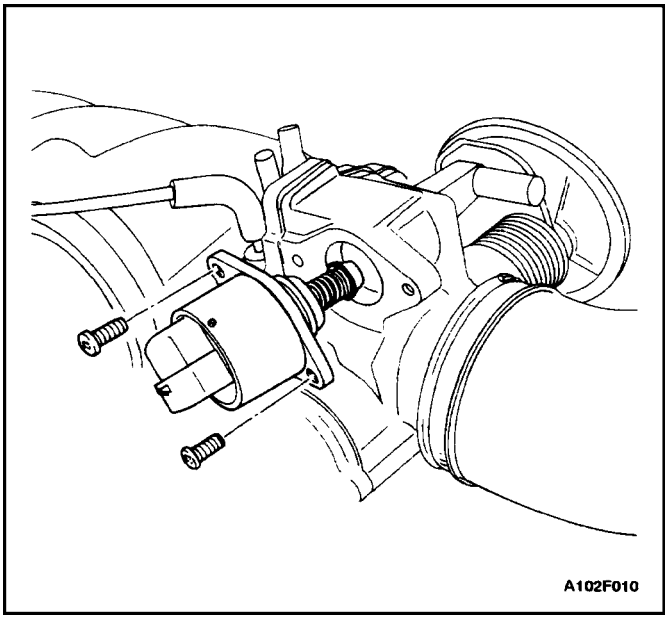

Installation Procedure

Important : If installing a new IAC valve, be sure to replace it with an identical part. The IAC valve pintle shape and diameter are designed for the specific application. Measure the distance between the tip of the IAC valve pintle and the mounting flange. If the distance is greater than 28 mm, use finger pressure to slowly retract the pintle. The force required to retract the pintlewill not damage the IAC valve. The purpose of the 28 mmsetting is to prevent the IAC pintle from bottoming out on the pintle seat. This 28 mm setting is also an adequate setting for controlled idle on a restart.

1. Lubricate a new O–ring with engine oil. Install the new O–ring onto the valve.
2. Install the IAC valve into the throttle body.

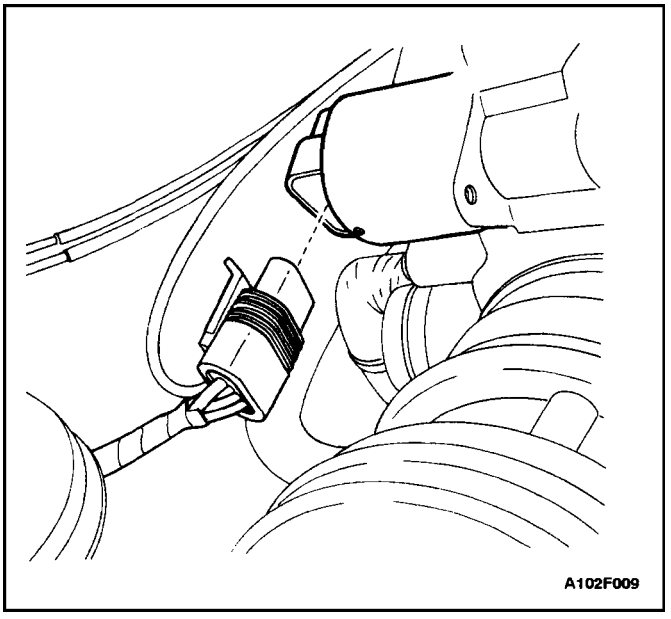
A102F009

3. Install the IAC valve retaining bolts.

Tighten

Tighten the idle air control valve retaining bolts to 27 lb–in (3 N•m).

4. Connect the IAC valve connector.
5. Connect the negative battery cable.
6. Start the engine and check for the proper idle speed.

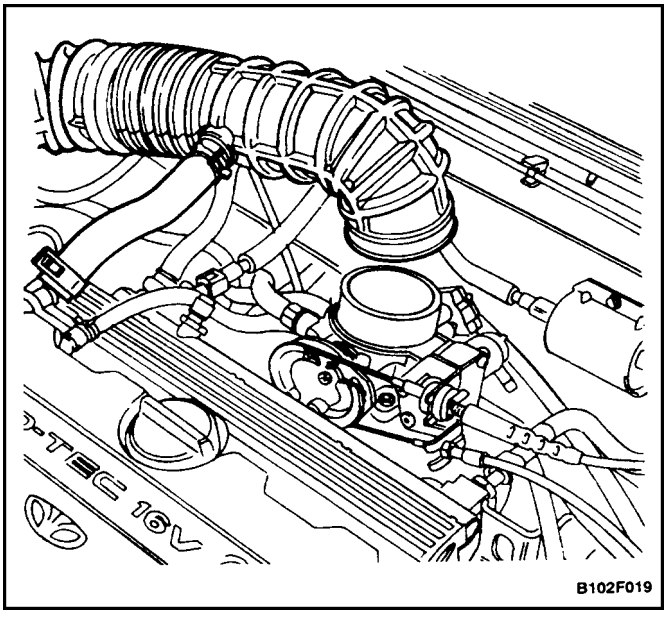

B102F019

MANIFOLD ABSOLUTE PRESSURE SENSOR

Removal Procedure

1. Disconnect the negative battery cable.
2. Disconnect the negative battery cable.
3. Disconnect the Intake Air Temperature (IAT) sensor connector.
4. Disconnect the breather hose from the valve cover. Remove the air intake tube.

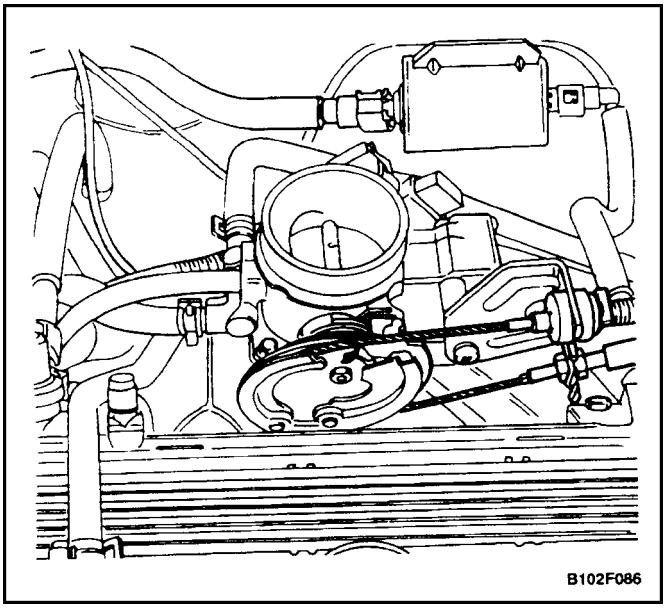
B102F086

5. Disconnect the throttle cable from the throttle body and bracket.

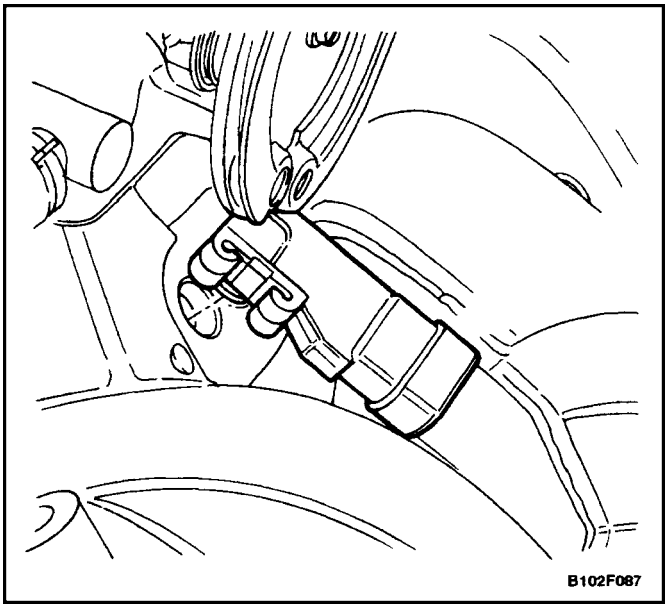
B102F087

6. Remove the Manifold Absolute Pressure (MAP) sensor from the intake manifold.
7. Disconnect the MAP sensor harness from the MAP sensor.

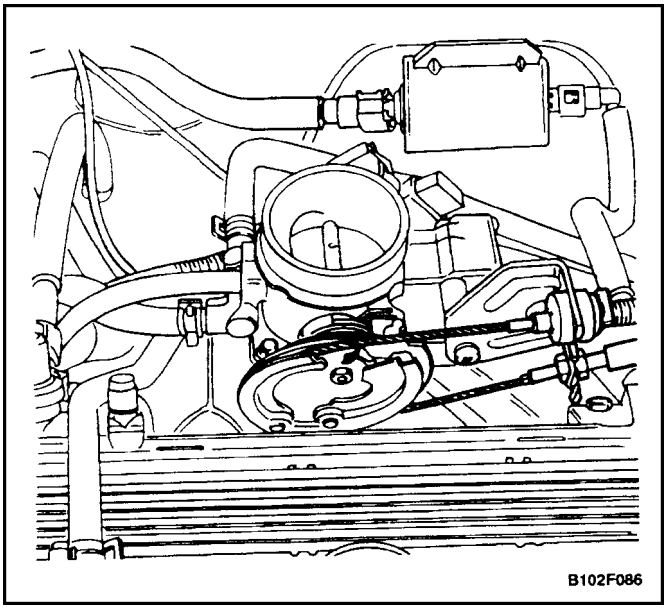
B102F086

Installation Procedure

1. Connect theMAP sensor harness to the MAP sensor.
2. Install the MAP sensor into the intake manifold.
3. Connect the throttle cable to the throttle body and bracket.

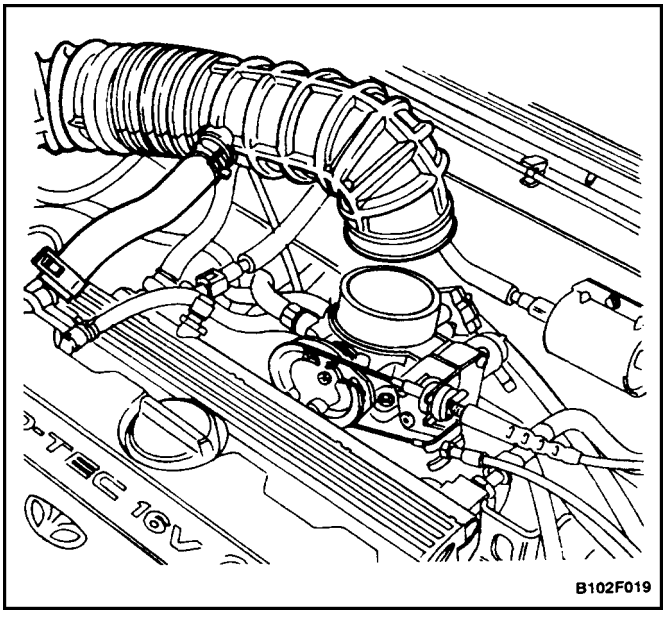

B102F019

4. Install the air intake tube.
5. Connect the breather hose to the valve cover.
6. Connect the IAT sensor connector.
7. Connect the negative battery cable.

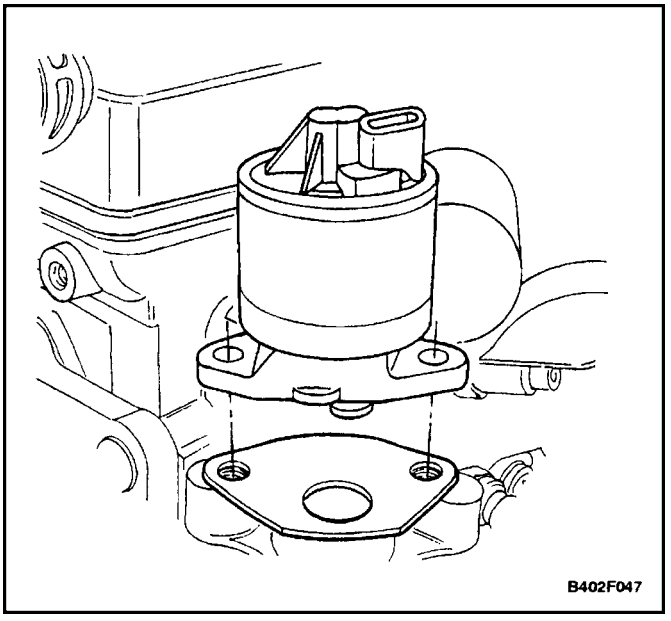

EXHAUST GAS RECIRCULATION VALVE

Removal Procedure

1. Disconnect the negative battery cable.
2. Disconnect the Exhaust Gas Recirculation (EGR) valve electrical connector.
3. Remove the EGR valve retaining bolts.
4. Remove the EGR valve from the Electronic Ignition (EI) system ignition coil adapter.

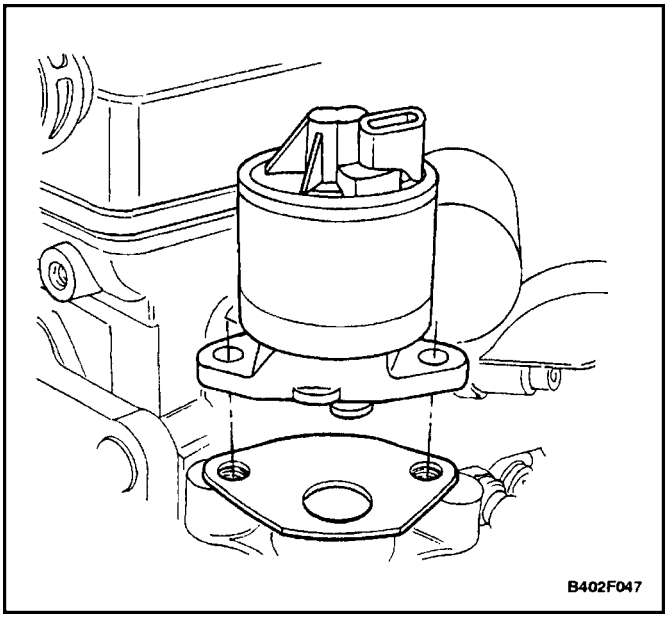

Installation Procedure

1. Clean the EI system ignition coil adapter mating sur–face.
2. Install a new EGR valve gasket.
3. Install the EGR valve with the bolts.

   Tighten

   Tighten the exhaust gas recirculation valve retaining bolts to 15 lb–ft (20 N•m).
4. Connect the EGR valve electrical connector.
5. Connect the negative battery cable.

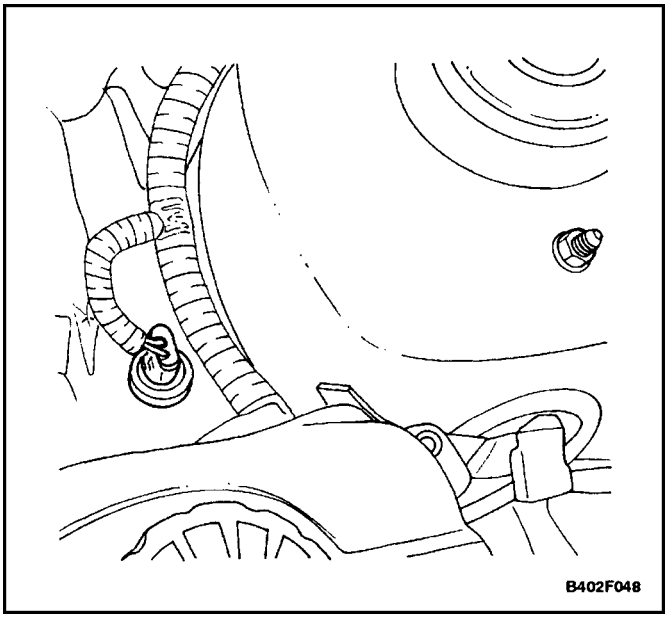

G SENSOR

Removal Procedure

1. Disconnect the negative battery cable.
2. Disconnect the G sensor electrical connector and re–move the G sensor.

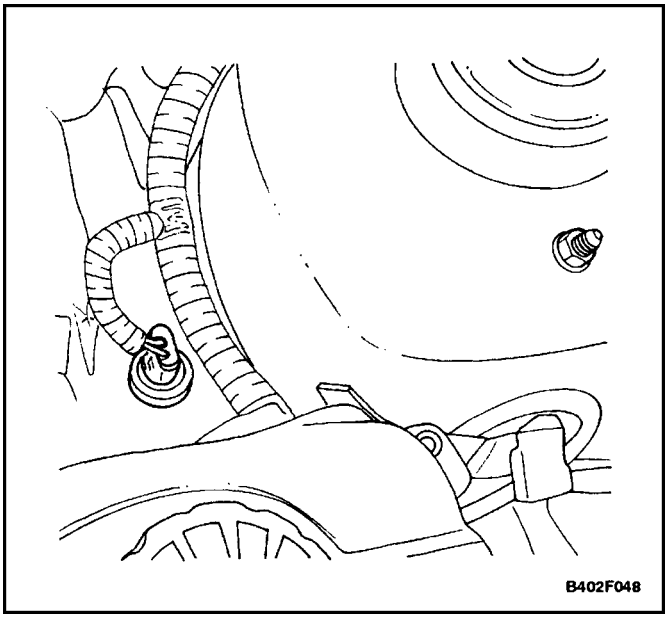

Installation Procedure

1. Install the G sensor and connect the electrical con–nector.
2. Connect the negative battery cable.

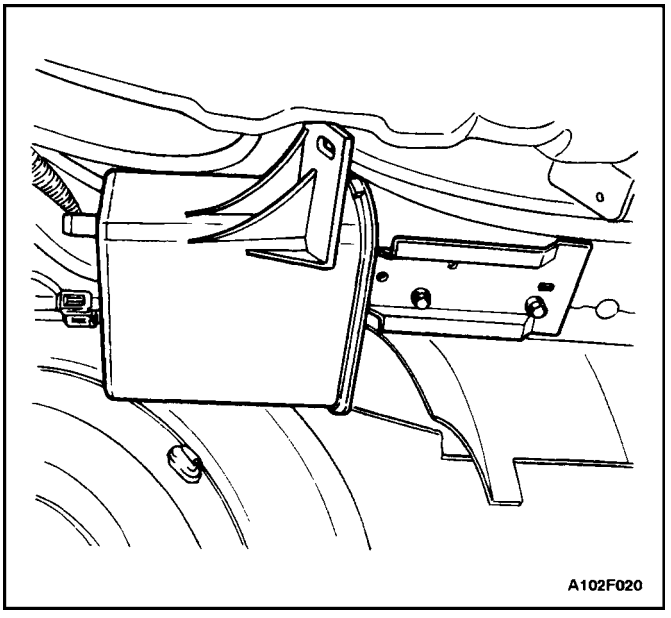

EVAPORATIVE EMISSION CANISTER

Removal Procedure

CAUTION : Canister and vacuum hoses contain fuel vapors. Do not smoke in the area or permit an open flame.

1. Remove the Evaporative (EVAP) Emission canister rotective cover.
2. Disconnect the canister fuel vapor hoses.
3. Remove the bolt that secures the canister flange to the vehicle.
4. Slide canister out of the track holder.
5. Remove the canister.

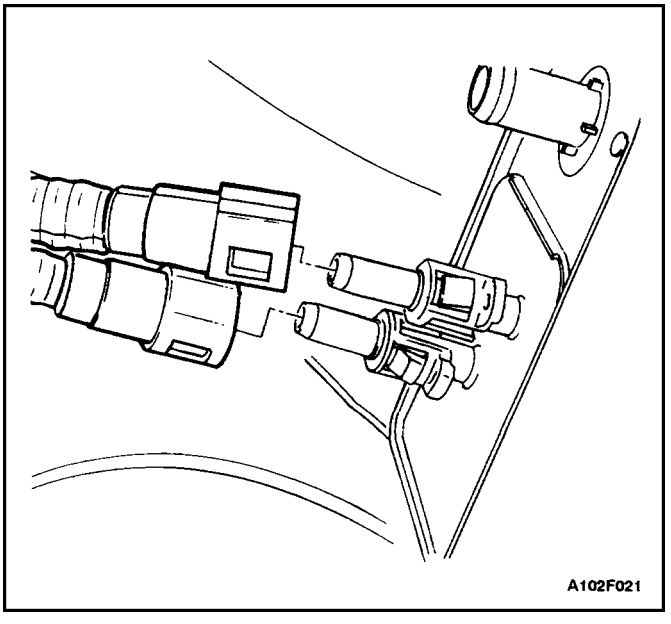

Installation Procedure

1. Insert the canister into the track and slide it into posi–tion.
2. Install the canister flange bolt.

   Tighten

   Tighten the evaporative emission canister flange bolt to 20 N•m(15 lb–ft).
3. Connect the canister fuel vapor hoses.
4. Install the canister protective cover.

   Tighten

   Tighten the evaporative emission canister protective cover to 71 lb–in (8 N•m).

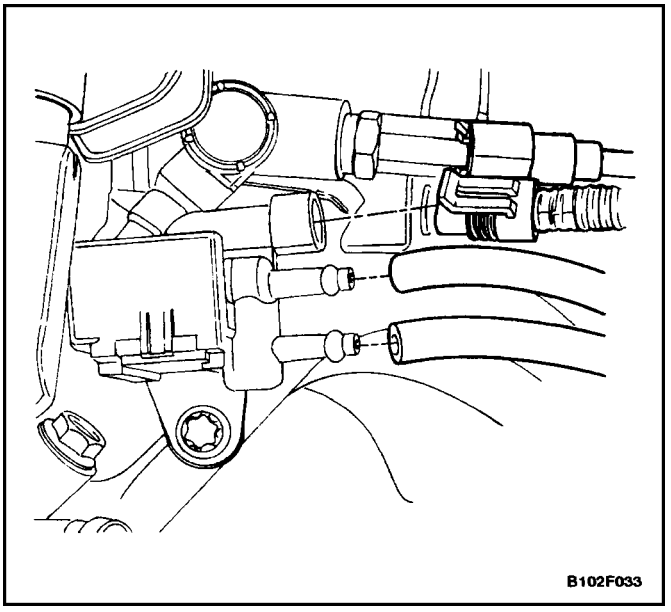

EVAPORATIVE EMISSION CANISTER PURGE SOLENOID

Removal Procedure

1. Disconnect the negative battery cable.
2. Disconnect the Evaporative (EVAP) Emission canister purge solenoid connector.
3. Disconnect the vacuum hoses from the EVAP emission canister purge solenoid.
4. Remove the EVAP emission canister purge solenoid bracket bolt from the intake manifold.
5. Unclip the EVAP emission canister purge solenoid from the mounting bracket.

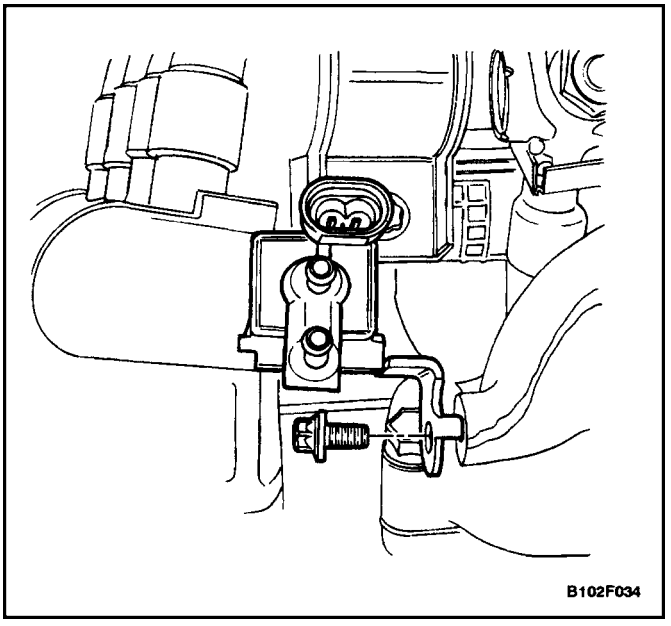

Installation Procedure

1. Attach the EVAP canister purge solenoid to the mounting bracket.
2. Install the EVAP canister purge solenoid and the mounting bracket to the intake manifold with the bracket bolt.

   Tighten

   Tighten the evaporative emission canister purge sole–noid bracket bolt to 44 lb–in (5 N•m).
3. Connect the vacuum hoses to the EVAP emission canister purge solenoid.
4. Connect the EVAP emission canister purge solenoid connector.
5. Connect the negative battery cable.

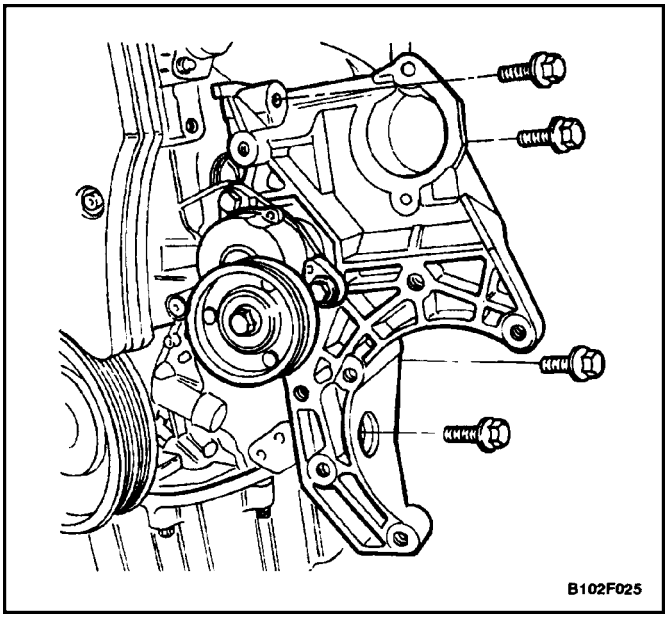

CRANKSHAFT POSITION SENSOR

Removal Procedure

1. Disconnect the negative battery cable.
2. Remove the power steering pump, if equipped. Refer to *Section 6B, Power Steering Pump.*
3. Remove the A/C compressor, if equipped. Refer to *Section 7B, Manual Control Heating, Ventilation, and Air Conditioning System.*
4. Remove the rear A/C compressor mounting bracket bolts and the rear A/C compressor mounting bracket, if equipped.
5. Remove the accessory mounting bracket by removing the bolts.

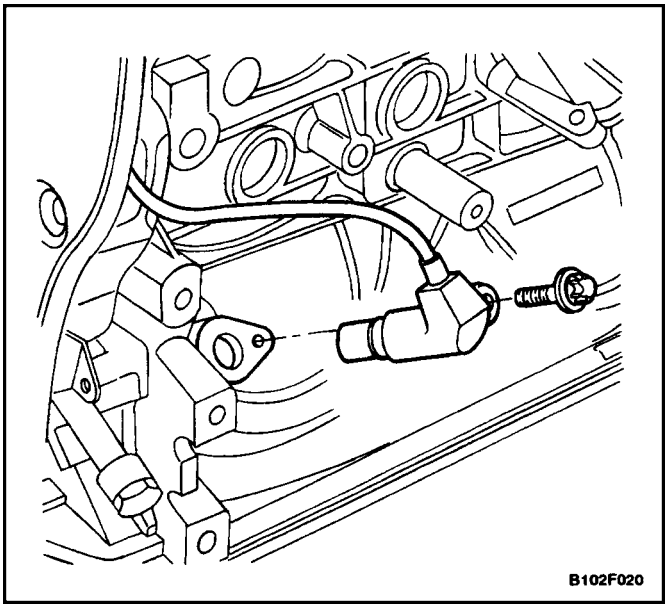

6. Disconnect the Crankshaft Position (CKP) sensor connector from the fuel injector channel cover.
7. Remove the CKP sensor retaining bolt.
8. Gently rotate and remove the CKP sensor from the engine block.

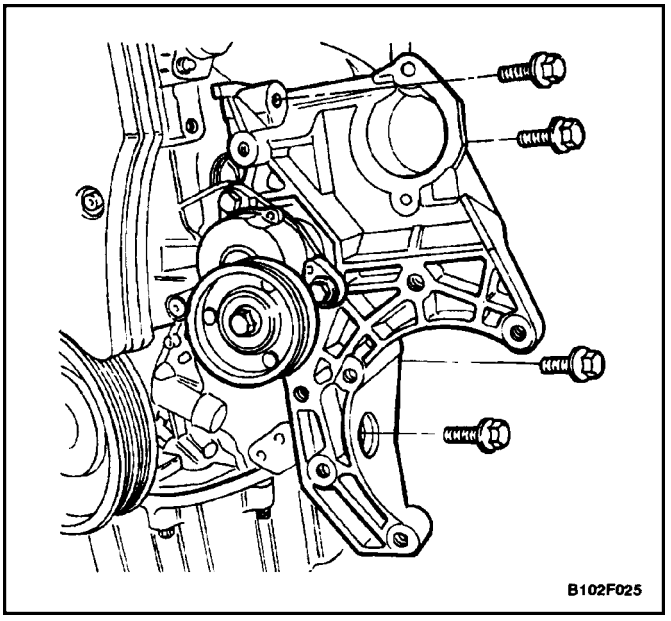

Installation Procedure

1. Insert the CKP sensor into the engine block.
2. Install the CKP sensor retaining bolt.

   Tighten

   Tighten the crankshaft position sensor retaining bolt to 89 lb–in (10 N•m).
3. Connect the CKP sensor connector to the fuel injector channel cover.
4. Install the accessory mounting bracket.

   Tighten

   Tighten the accessory mounting bracket bolts to 35 N•m (26 lb–ft).

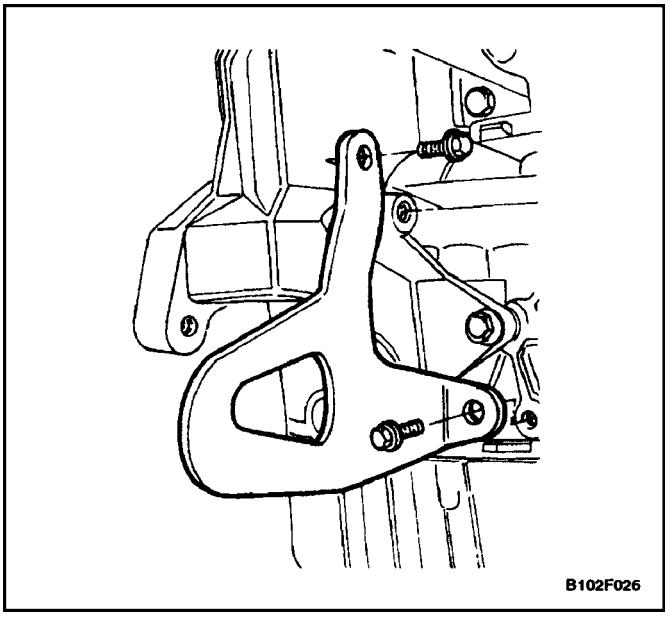

5. Install the rear A/C mounting bracket, if equipped.

   Tighten

   Tighten the rear A/C mounting bracket bolts to 26 lb–ft (35 N•m).
6. Install the A/C compressor, if equipped. Refer to *Section 7B, Manual Control Heating, Ventilation, and Air Conditioning System.*
7. Install the power steering pump, if equipped. Refer to*Section 6B, Power Steering Pump.*
8. Connect the negative battery cable.

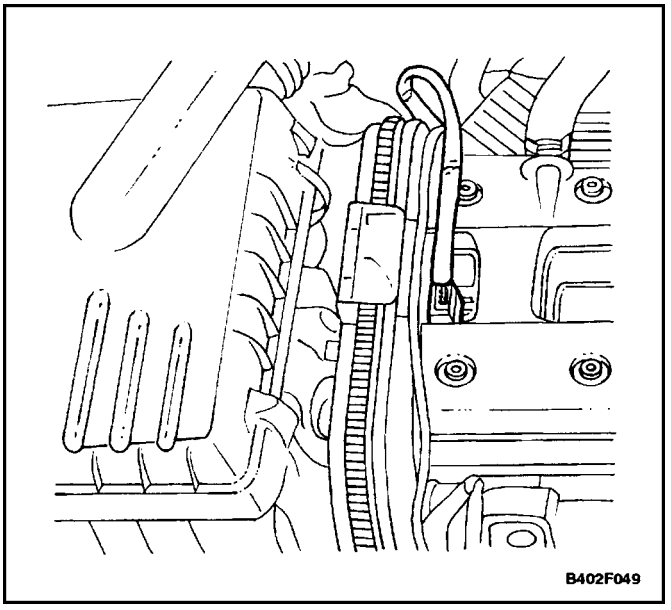
B402F049

CAMSHAFT POSITION SENSOR

Removal Procedure

1. Disconnect the negative battery cable.
2. Remove the engine cover.
3. Disconnect the sensor electrical connector.

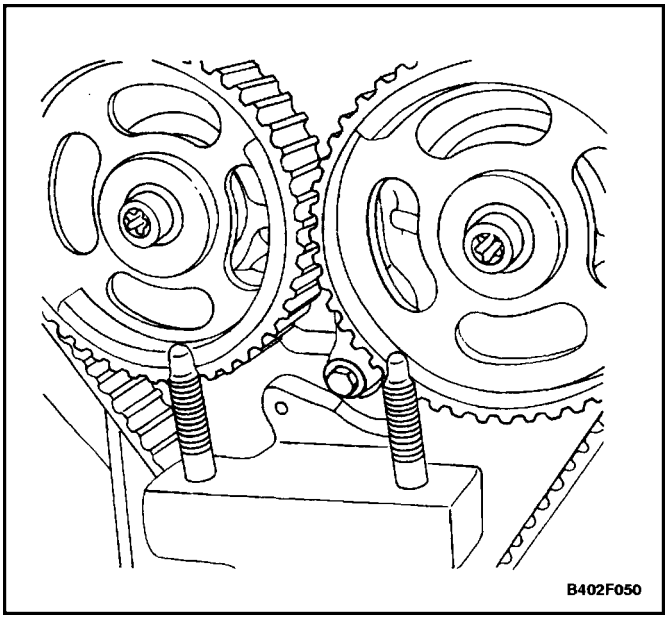
B402F050

4. Remove the timing belt front cover. Refer to *Section 1C, DOHC Engine Mechanical.*
5. Remove the camshaft position sensor bolts.
6. Remove the camshaft position sensor from the top.

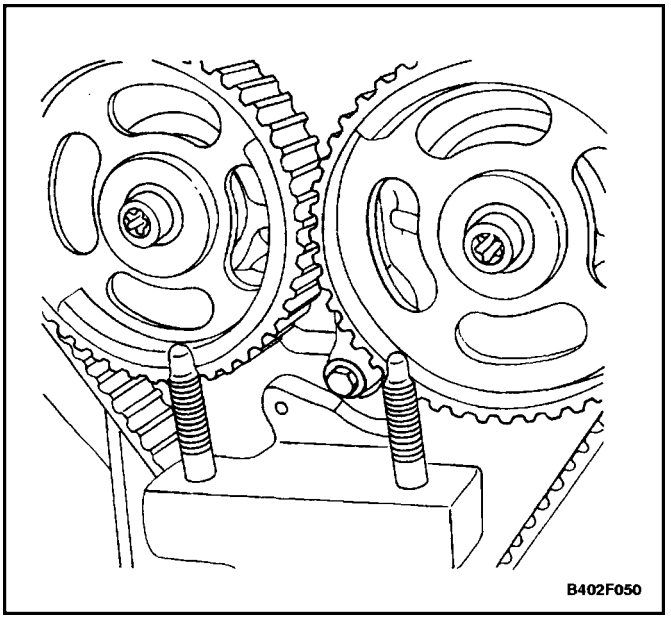
B402F050

Installation Procedure

1. Install the camshaft position sensor and bolts.

   Tighten

   Tighten the camshaft position sensor bolts to 12 N•m (106 lb–in).

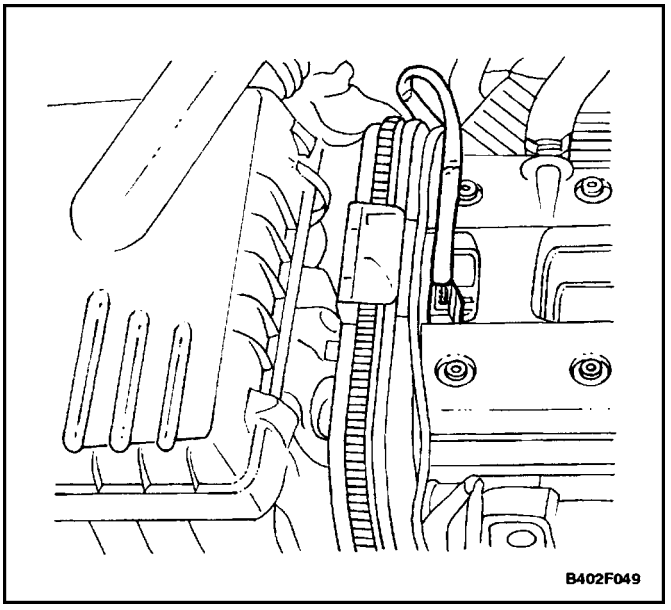
B402F049

2. Install the timing belt front cover, the crankshaft pulley, the accessory drive belt, and the air filter. Refer to *Section 1C, DOHC Engine Mechanical.*
3. Connect the sensor electrical connector.
4. Install the engine cover.
5. Connect the negative battery cable.

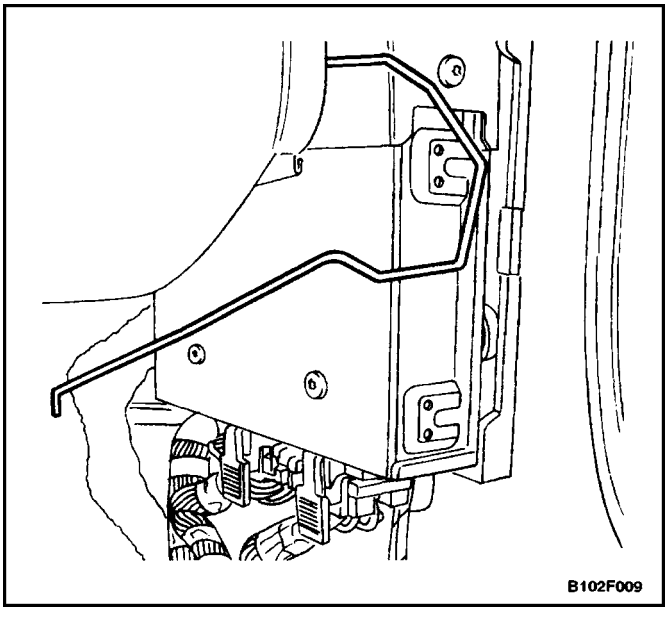
B102F009

POWERTRAIN CONTROL MODULE/ ENGINE CONTROL MODULE

Removal Procedure

1. Disconnect the negative battery cable.
2. Remove the right side kick panel. Refer to *Section 9G, Interior Trim.*
3. Disconnect the powertrain control module (PCM)/engine control module (ECM) retaining clip from the PCM/ECM mounting base.
4. Remove the retaining clip lower end from the mounting base.

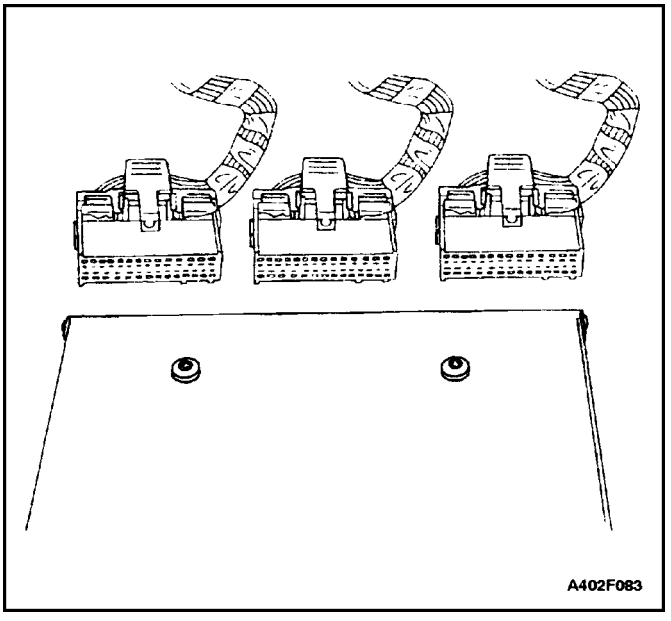
A402F083

5. Remove the PCM/ECM from the mounting base.
6. Disconnect the PCM/ECM connectors from the PCM/ ECM.

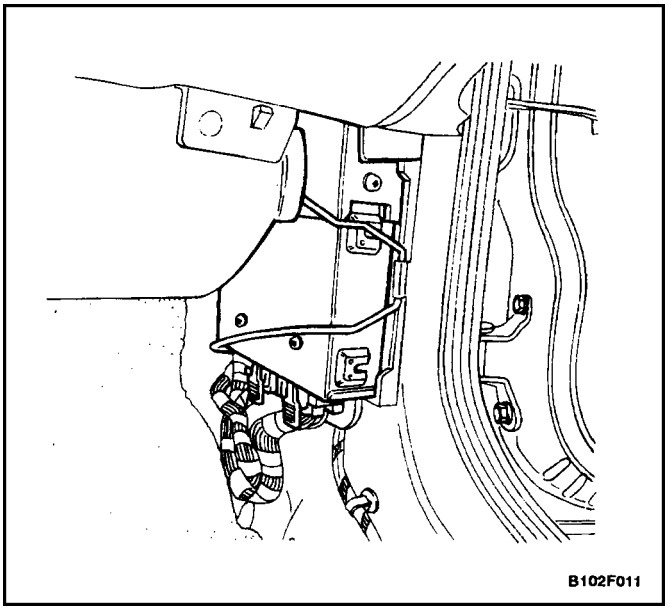

Installation Procedure

1. Connect the PCM/ECM connectors to the PCM/ECM.
2. Insert and align the PCM/ECM into the mounting base.
3. Insert the retaining clip lower end into the mounting base.
4. Connect the retaining clip to the mounting base.
5. Install the passenger side kick panel. Refer to *Section 9G, Interior Trim.*
6. Connect the negative battery cable.
7. Perform a crankshaft position system variation learning procedure. Refer to ” DTC P1336 ” in this section.

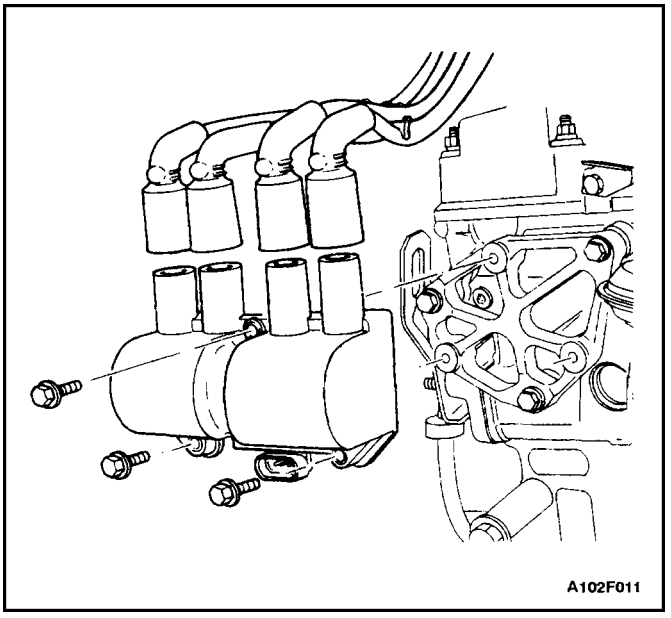

ELECTRONIC IGNITION SYSTEM IGNITION COIL

Removal Procedure

1. Disconnect the negative battery cable.
2. Disconnect the electronic ignition (EI) system ignition coil connector.
3. Note the ignition wire location and remove the ignition wires.
4. Remove the EI system ignition coil retaining bolts.
5. Remove the EI system ignition coil.

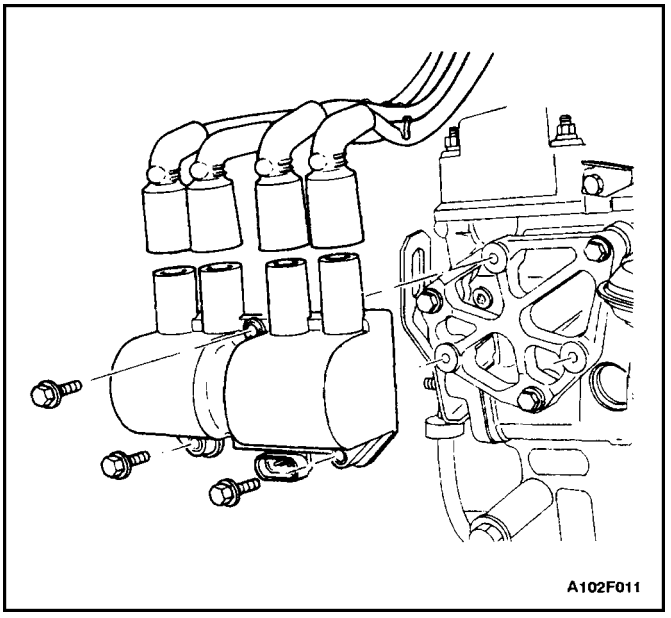

Installation Procedure

1. Install the EI system ignition coil into the mounting location and install the retaining bolts.

   Tighten

   Tighten the electronic ignition system ignition coil retaining bolts to 89 lb–in (10 N•m).
2. Connect the EI system ignition coil connector.
3. Install the ignition wires.
4. Connect the negative battery cable.

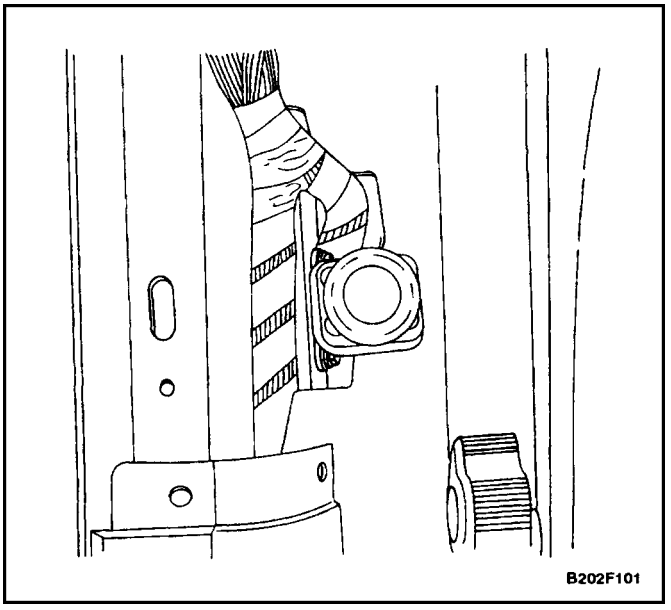
B202F101

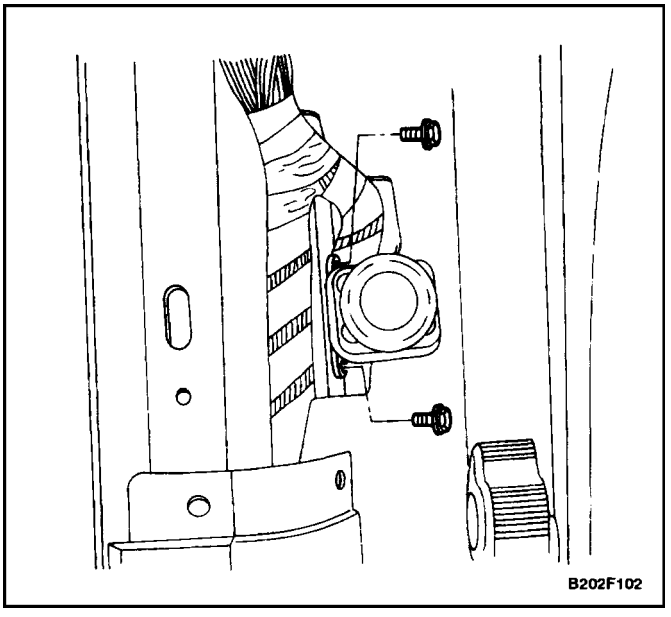
B202F102

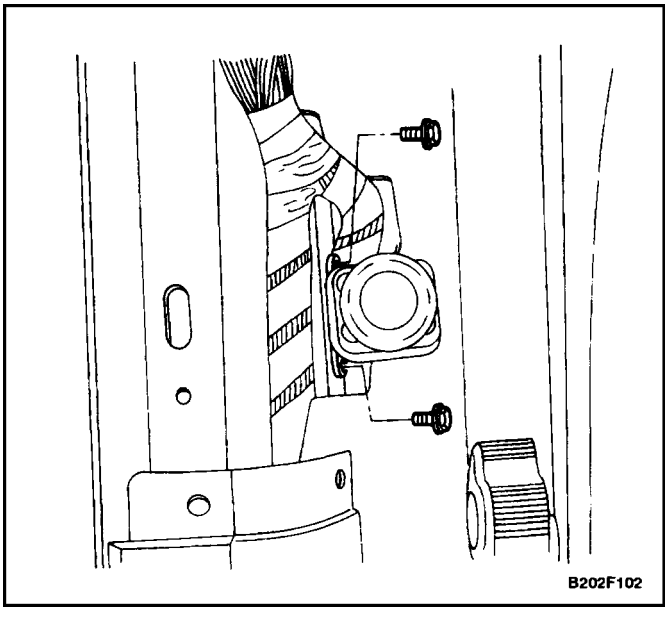
B202F102

FUEL CUTOFF SWITCH

Removal Procedure

1. Disconnect the negative battery cable.
2. Remove the passenger front rocker trim panel. Refer to *Section 9G, Interior Trim.*
3. Remove the lower B–pillar trim panel. Refer to *Section 9G, Interior Trim.*
4. Reposition the carpet.
5. Remove the fuel cutoff switch mounting bolts.
6. Disconnect the electrical connector at the fuel cutoff switch.

Installation Procedure

1. Connect the electrical connector at the fuel cutoff switch.
2. Install the fuel cutoff switch mounting bolts.

   Tighten

   Tighten the fuel cutoff switch mounting bolts to 27 lb–in (3 N•m).

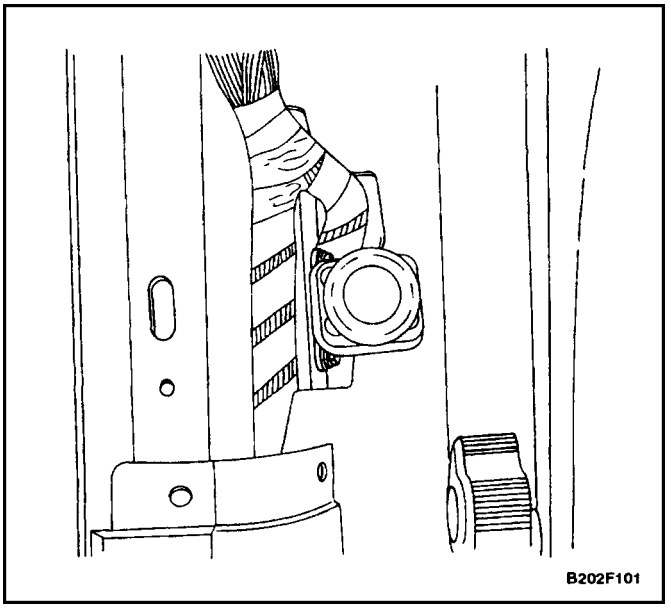
B202F101

3. Reposition the carpet.
4. Install the lower B–pillar trim panel. Refer to *Section 9G, Interior Trim.*
5. Install the passenger front rocker trim panel. Refer to *Section 9G, Interior Trim.*
6. Connect the negative battery cable.

Important : The fuel cutoff switch may have to be reset to enable the vehicle to start.

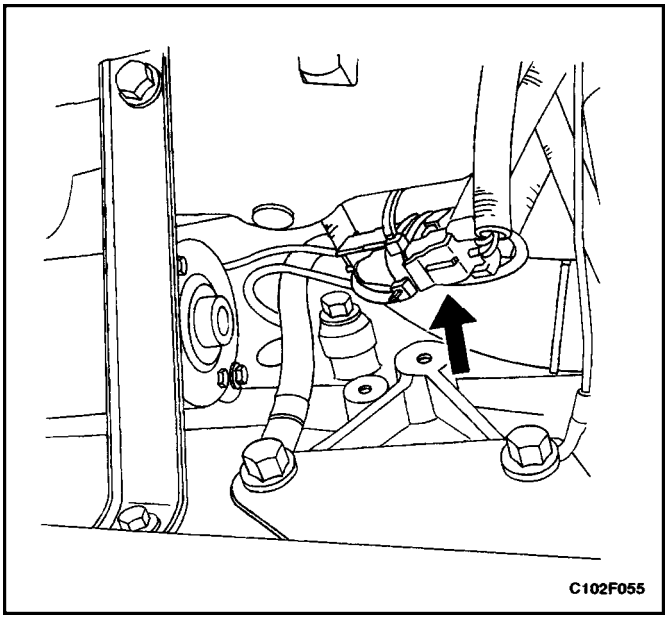
C102F055

KNOCK SENSOR

Removal Procedure

1. Disconnect the negative battery cable.
2. Remove the intake manifold. Refer to*Section 1C, DOHC Engine Mechanical.*
3. Disconnect the electrical connector at the Knock Sensor (KS).

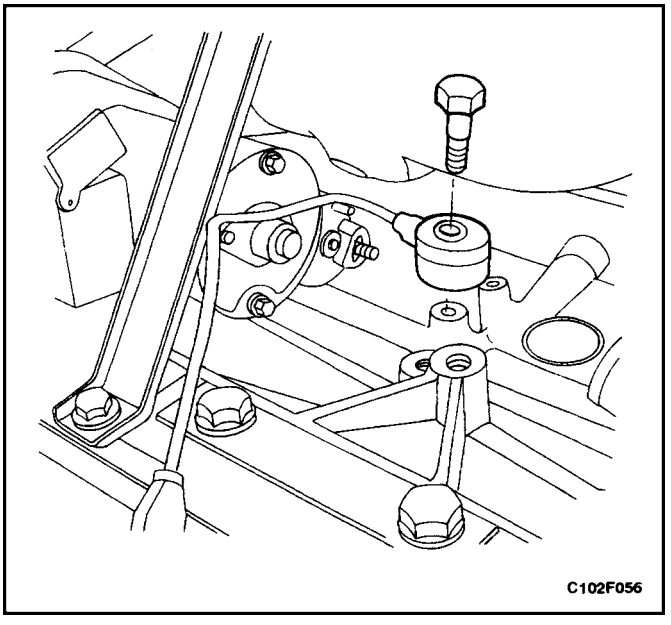
C102F056

4. Remove the KS.

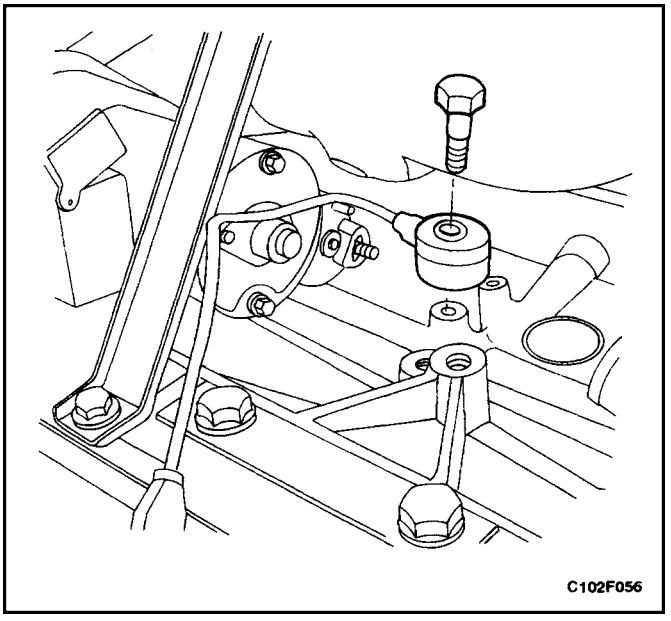

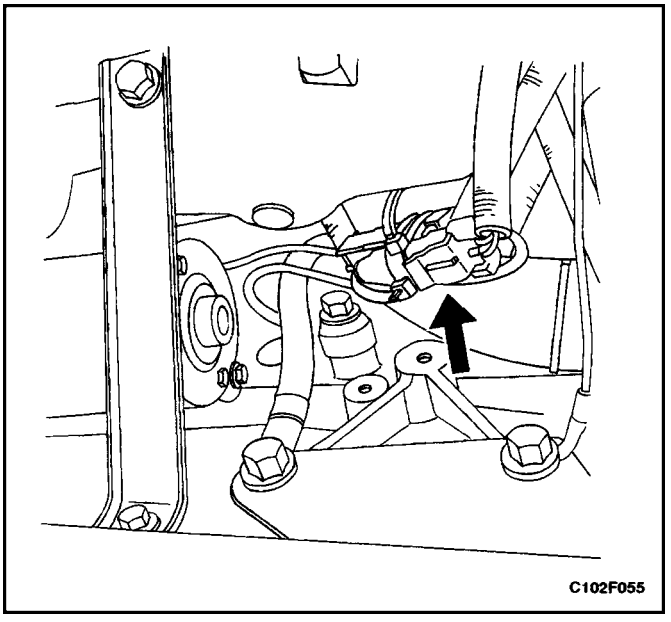

Installation Procedure

1. Install the KS.
   Tighten
   Tighten the knock sensor bolt to 15 lb–ft (20 N•m).
2. Connect the electrical connector at the KS.
3. Remove the intake manifold. Refer to*Section 1C, DOHC Engine Mechanical.*
4. Connect the negative battery cable.

SECTION : 1D

ENGINE COOLING

CAUTION : Disconnect the negative battery cable before removing or installing any electrical unit or when a tool or equipment could easily come in contact with exposed electrical terminals. Disconnecting this cable will help prevent personal injury and damage to the vehicle. The ignition must also be in LOCK unless otherwise noted.

TABLE OF CONTENTS

SPECIFICATIONS 1D–2
- CAPACITY 1D–2
- FASTENER TIGHTENING SPECIFICATIONS 1D–2

SPECIAL TOOLS 1D–2
- SPECIAL TOOLS TABLE 1D–2

DIAGNOSIS 1D–3
- THERMOSTAT TEST 1D–3
- SURGE TANK CAP TEST 1D–3
- COOLING SYSTEM DIAGNOSIS 1D–4

COMPONENT LOCATOR 1D–5
- RADIATOR/FAN 1D–5
- COOLANT PUMP/THERMOSTAT (2.0L DOHC) 1D–6

MAINTENANCE AND REPAIR 1D–7

On–Vehicle Service 1D–7
- DRAINING AND REFILLING THE COOLING SYSTEM 1D–7
- THERMOSTAT 1D–8
- COOLANT PUMP 1D–10
- ELECTRIC COOLING FAN– MAIN OR AUXILIARY 1D–11
- SURGE TANK 1D–13
- RADIATOR 1D–15
- ENGINE COOLANT TEMPERATURE SENSOR 1D–17

GENERAL DESCRIPTION AND SYSTEM OPERATION 1D–18
- GENERAL DESCRIPTION 1D–18
- RADIATOR 1D–18
- SURGE TANK 1D–18
- COOLANT PUMP 1D–18
- THERMOSTAT 1D–18
- ELECTRIC COOLING FAN 1D–18
- COOLANT TEMPERATURE SENSOR 1D–19
- ENGINE COOLANT TEMPERATURE SENSOR 1D–19
- ENGINE BLOCK HEATER 1D–19

SPECIFICATIONS

CAPACITY

Application	Description
Coolant in the Cooling System	7.0L (1.86 gal) for automatic transaxle 7.0L (1.86 gal) for manual transaxle

FASTENER TIGHTENING SPECIFICATIONS

Application	N•m	Lb–Ft	Lb–In
Coolant Pump Mounting Bolts	20	15	–
Engine Coolant Temperature Sensor	10	–	89
Fan Assembly Mounting Bolts	4	–	35
Fan Motor Nut	3.2	–	28
Fan Motor Retaining Screws	4	–	35
Radiator Retaining Bolts, Left Upper and Right Upper	4	–	35
Surge Tank Attaching Bolt	4	–	35
Thermostat Housing Mounting Bolts	15	11	–

SPECIAL TOOLS

SPECIAL TOOLS TABLE

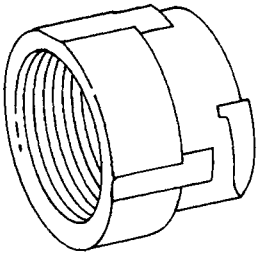 A102D020	KM–471 Adapter

DIAGNOSIS

THERMOSTAT TEST

1. Remove the thermostat from the vehicle. Refer to ”Thermostat” in this section.
2. Make sure the valve spring is tight when the thermostat is fully closed. If the spring is not tight, replace the thermostat.
3. Suspend the thermostat and a thermometer in a pan of 50/50 mixture of ethylene glycol and water. Do not let the thermostat or the thermometer rest on the bottom of the pan because the uneven concentration of heat on the bottom could result in inaccurate temperature measurements.
4. Heat the pan on a burner.
5. Use the thermometer to measure the temperature of the heated solution.
6. The thermostat should begin to open at 87˚C (189˚F) and it should be fully open at 102˚C (216˚F). If it does not open at these temperatures, replace the thermostat.

SURGE TANK CAP TEST

Tools Required
KM–471 Adapter

The surge tank cap maintains proper pressure, protects the system from high pressure by opening a pressure valve, and protects the coolant hoses from collapsing because of a vacuum.

1. Wash any sludge from the surge tank cap and the valve seat of the vacuum pressure valve for the surge tank cap.
2. Check for any damage or deformity to the vacuum pressure valve for the surge tank cap. If any damage or deformity is found, replace the cap.
3. Install a suitable cooling system pressure tester to the cap using the adapter KM–471.
4. Pull the vacuum pressure valve open. If the surge tank cap does not seal properly, replace the surge tank cap.
5. Pressurize the cap to 90 to 120 kPa (13.1 to 17.4 psi).
6. Wait 10 seconds and check the pressure held by the tank cap tester.

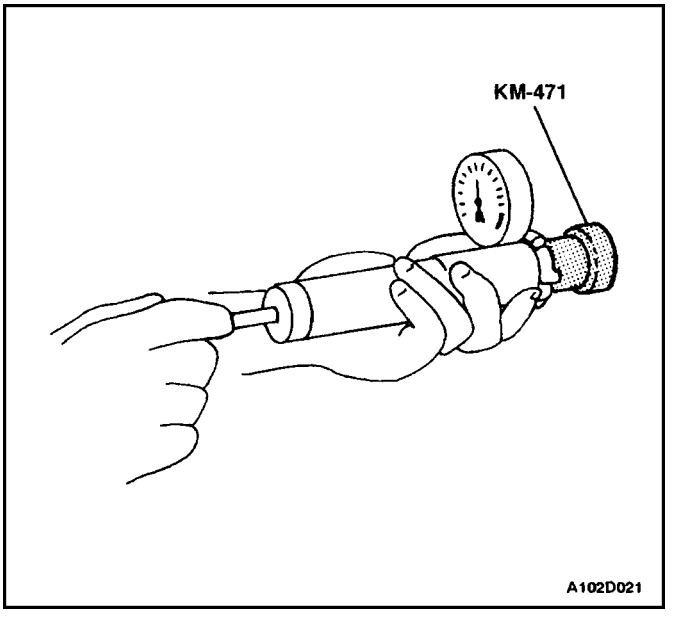

7. If the pressure held by the cooling system pressure tester falls below 80 kPa (11.6 psi), replace the surge tank cap.

COOLING SYSTEM DIAGNOSIS

Engine Overheats

Checks	Action
Check for a loss of the coolant.	Add the coolant.
Check for a weak coolant solution.	Confirm that the coolant solution is a 50/50 mixture of ethylene glycol and water.
Check the front of the radiator for any dirt, leaves, or insects.	Clean the front of the radiator.
Check for leakage from the hoses, the coolant pump, the heater, the thermostat housing, the radiator, the core plugs, or the head gasket.	Replace any damaged components.
Check for a faulty thermostat.	Replace a damaged thermostat.
Check for retarded ignition timing.	Perform an PCM/ECM code diagnosis. Confirm the integrity of the timing belt.
Check for an improperly operating electric cooling fan.	Replace the electric cooling fan.
Check for radiator hoses that are plugged or rotted.	Replace any damaged radiator hoses.
Check for a faulty water pump.	Replace the faulty water pump.
Check for a faulty surge tank cap.	Replace the faulty surge tank cap.
Check for a cylinder head or an engine block that is cracked or plugged.	Repair the damaged cylinder head or the damaged engine block.

Loss of Coolant

Checks	Action
Check for a leak in the radiator.	Replace the damaged radiator.
Check for a leak in the following locations: • Surge tank. • Hose.	Replace the following parts, as needed: • Surge tank. • Hose
Check for loose or damaged radiator hoses, heater hoses, and connections.	Reseat the hoses. Replace the hoses or the clamps.
Check for leaks in the coolant pump seal.	Replace the coolant pump seal.
Check for leaks in the coolant pump gasket.	Replace the coolant pump gasket.
Check for an improper cylinder head torque.	Tighten the cylinder head bolts to specifications. Replace the cylinder head gasket, if needed.
Check for leaks in the following locations: • Intake manifold. • Cylinder head gasket. • Cylinder block plug. • Heater core. • Radiator drain plug.	Repair or replace any components, as needed, to correct the leak.

Engine Fails to Reach Normal Operating Temperature or Cool Air from the Heater

Checks	Action
Check to determine if the thermostat is stuck open or is the wrong type of thermostat.	Install a new thermostat of the correct type and heat range.
Check the coolant level to determine if it is below the MIN mark on the surge tank.	Add sufficient coolant to raise the fluid to the specified mark on the surge tank.

COMPONENT LOCATOR

RADIATOR/FAN

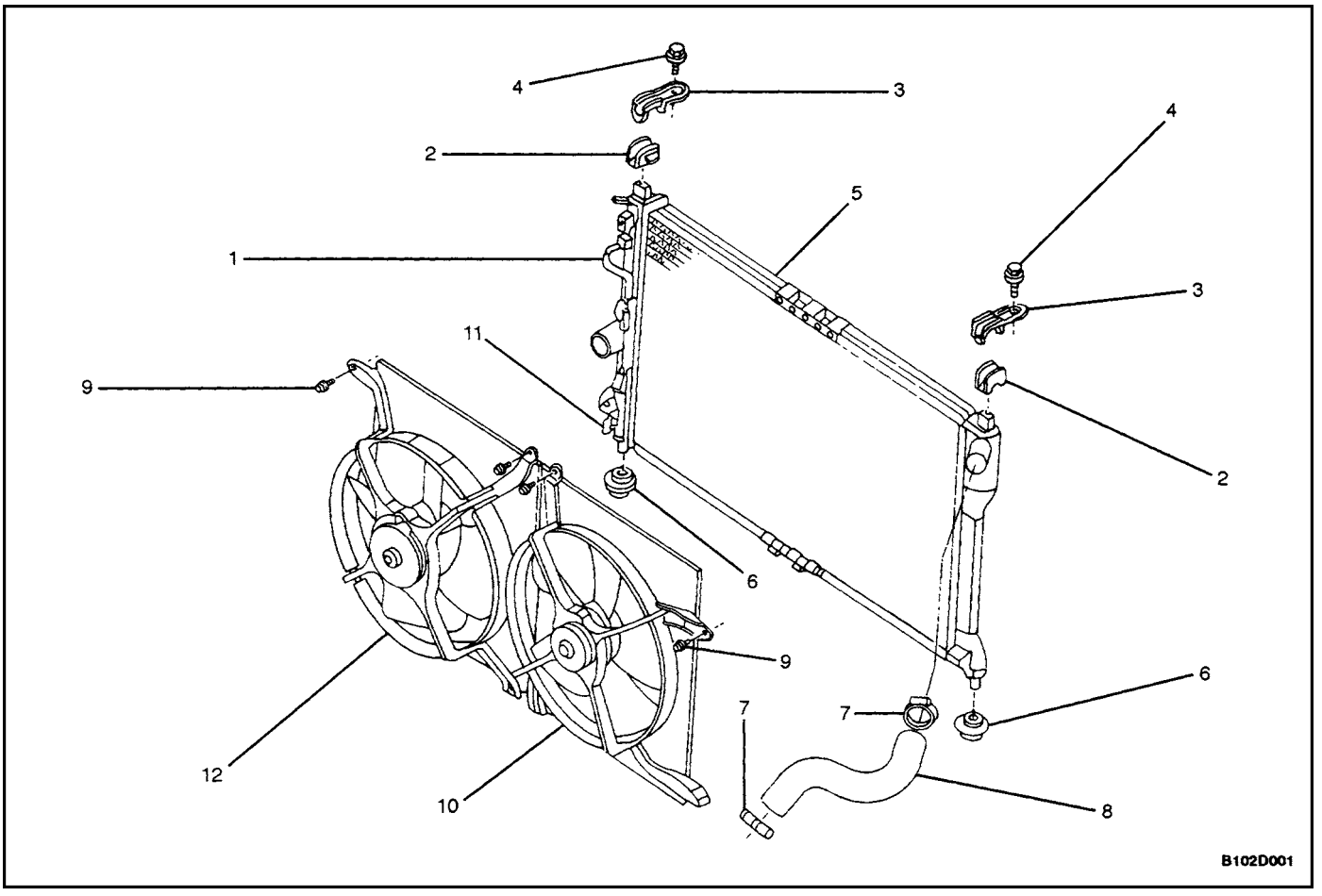

1. Holder Transmission Fluid Pipe (Automatic Transmission Only)
2. Upper Radiator Bumper
3. Radiator Bracket
4. Bolts
5. Radiator
6. Radiator Bumper
7. Spring Clamp
8. Upper Radiator Hose
9. Bolts
10. Auxiliary Cooling Fan (Air Conditioning Only)
11. Drain Cock
12. Main Cooling Fan

COOLANT PUMP/THERMOSTAT (2.0L DOHC)

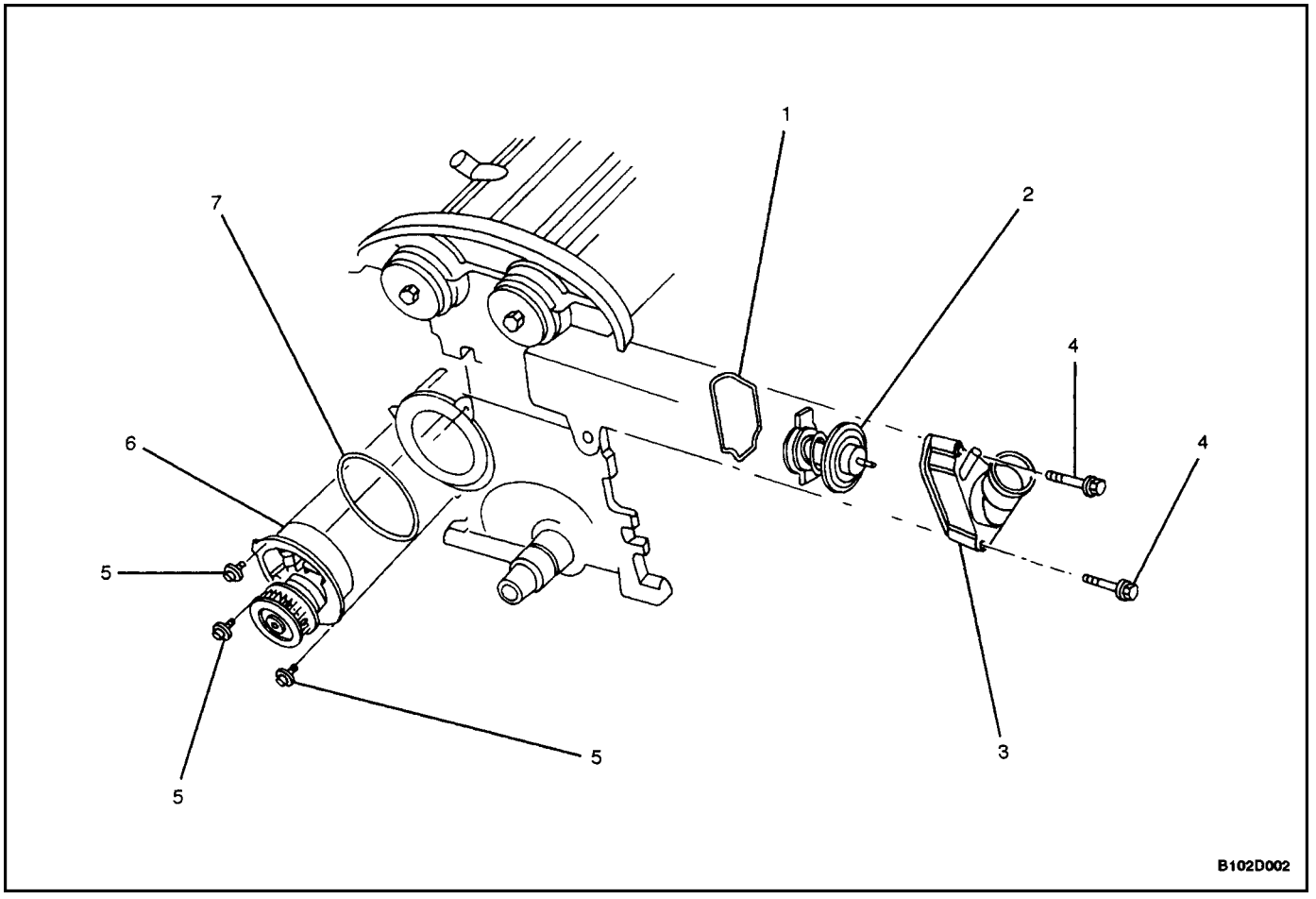

1. O–Ring Seal
2. Thermostat
3. Thermostat Housing
4. Bolt
5. Bolt
6. Coolant Pump
7. Ring Seal

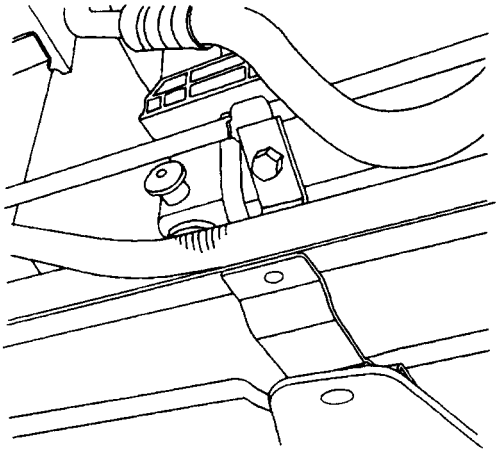
B102D003

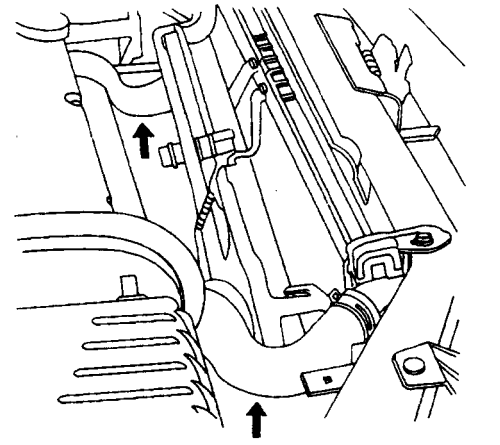
B102D021

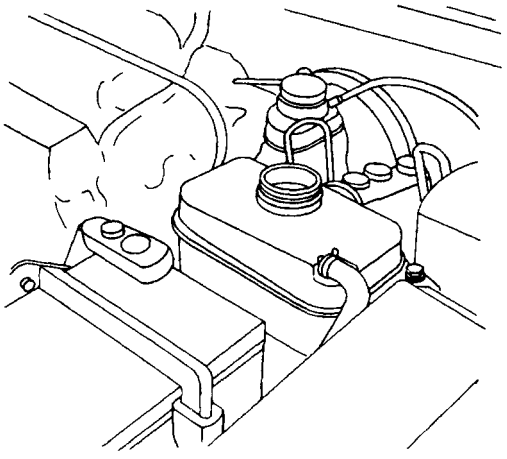
B102D004

MAINTENANCE AND REPAIR

On–Vehicle Service

DRAINING AND REFILLING THE COOLING SYSTEM

CAUTION : Do not remove the surge tank cap while the engine and the radiator are hot. Scalding fluid and steam may be blown out under pressure.

1. Place a pan below the vehicle to catch the draining coolant.
2. Remove the surge tank cap.
3. Unplug the drain plug.

CAUTION : Dispose of the used coolant to a used coolant holding tank to be picked up with the used oil for disposal. Never pour the used coolant down the drain. Ethylene glycol antifreeze is an extremely toxic chemical. Disposing of it into the sewer system or the ground water can contaminate the local environment.

4. Catch the escaping fluid in a drain pan.
5. Remove all sludge and dirt from inside the surge tank. Refer to ”Surge Tank” in this section.
6. Plug the drain cock.
7. Add the clean water to the surge tank.
8. Fill the tank slowly so that the upper reservoir hose remains above the water line. This allows the air inside the cooling system to escape.
9. Start the engine.
10. Run the engine until the thermostat opens. When both radiator hoses are hot to the touch, the thermostat is open.
11. Stop the engine.
12. Repeat Steps 1 through 9 until the drained water is clear and free of coolant and rust.

Notice : Never use an antifreeze mixture more concentrated than 60 percent antifreeze to 40 percent water. The solution freezing point increases above this concentration.

13. Fill the cooling system through the surge tank with a mixture of ethylene glycol antifreeze and water. The mixture must be at least 50 percent antifreeze, and not more than 60 percent antifreeze.
14. Fill the surge tank to the specified MAX mark on the outside of the tank.

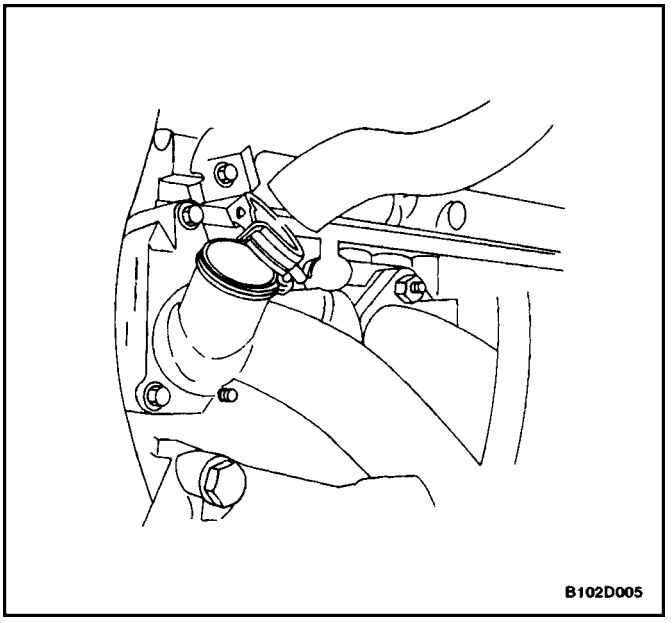
B102D005

THERMOSTAT

Removal Procedure

CAUTION : To prevent personal injury, do not remove the surge tank cap while the engine and the radiator are hot because the heat causes the system to remain under pressure. Scalding fluid and steam may be blown out under pressure.

1. Drain the coolant. Refer to ”Draining and Refilling the Cooling System” in this section.
2. Loosen the hose clamp on the upper radiator hose at the thermostat housing.
3. Disconnect the upper radiator hose from the thermostat housing.

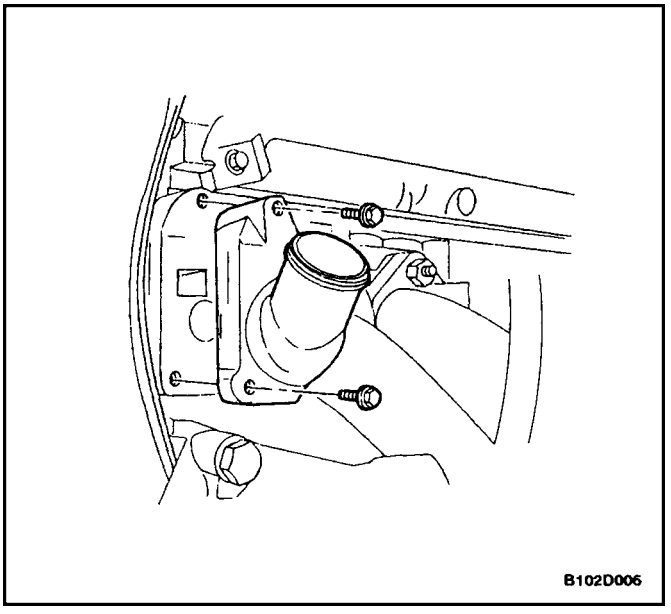
B102D006

4. Remove the mounting bolts that hold the thermostat housing to the cylinder head.
5. Remove the thermostat housing from the cylinder head.

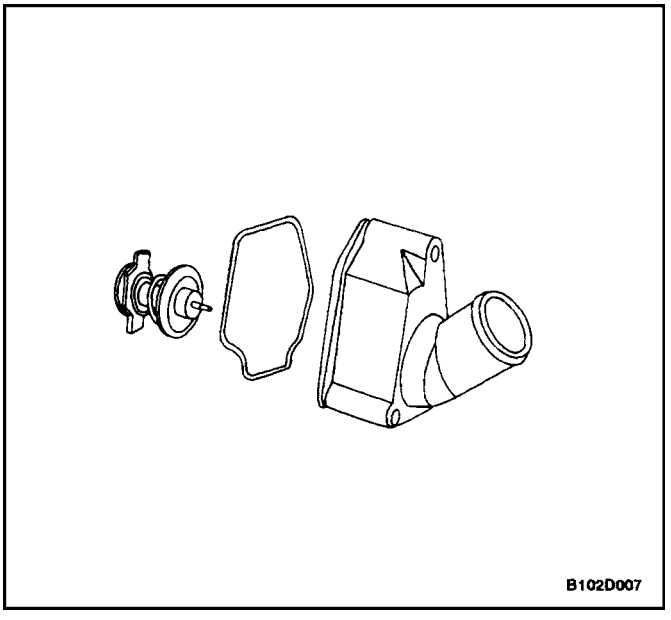
B102D007

6. Remove the O–ring seal from the thermostat housing.
7. Remove the thermostat from the thermostat housing by pressing the thermostat mounting flange downward and then rotating the flange clockwise.
8. Inspect the valve seat for foreign matter that could prevent the valve from sealing properly.
9. Inspect the thermostat for proper operation. Refer to ”Thermostat Test” in this section.
10. Clean the thermostat housing and the cylinder head mating surfaces.

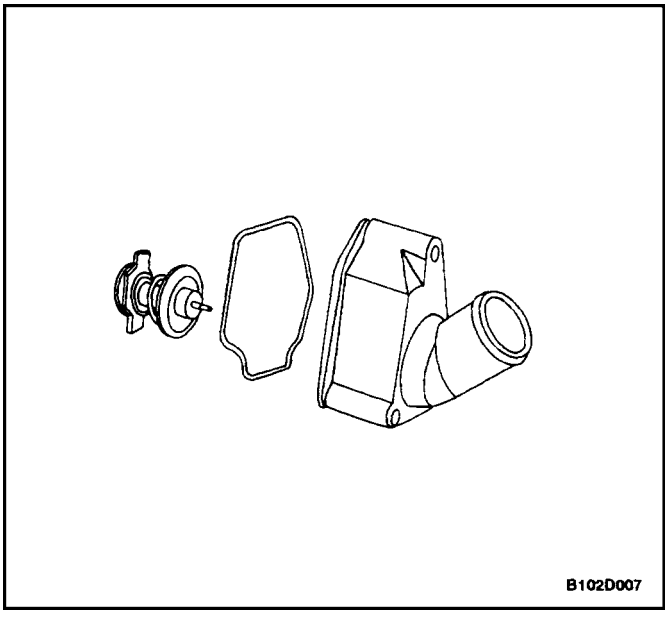

Installation Procedure

1. Install the thermostat into the thermostat housing by pressing the thermostat mounting flange downward and then rotating the flange counterclockwise. Rotate the thermostat mounting flange until it is seated in the thermostat housing recesses.
2. Coat the sealing surface of a new O–ring seal with Lubriplate®.
3. Install a new O–ring seal into the recess in the thermostat housing.

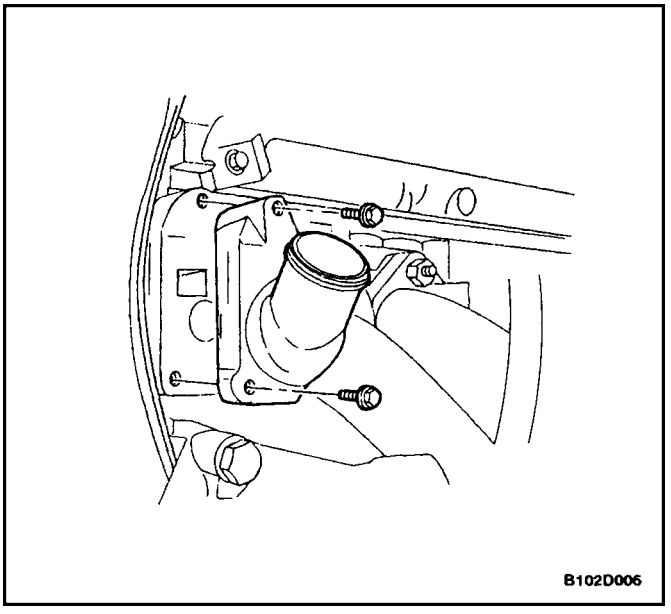

4. Install the thermostat housing to the cylinder head.
5. Secure the thermostat housing to the cylinder head with the mounting bolts.

Tighten

Tighten the thermostat housing mounting bolts (2.0L DOHC) to 15 N•m (11 lb–ft).

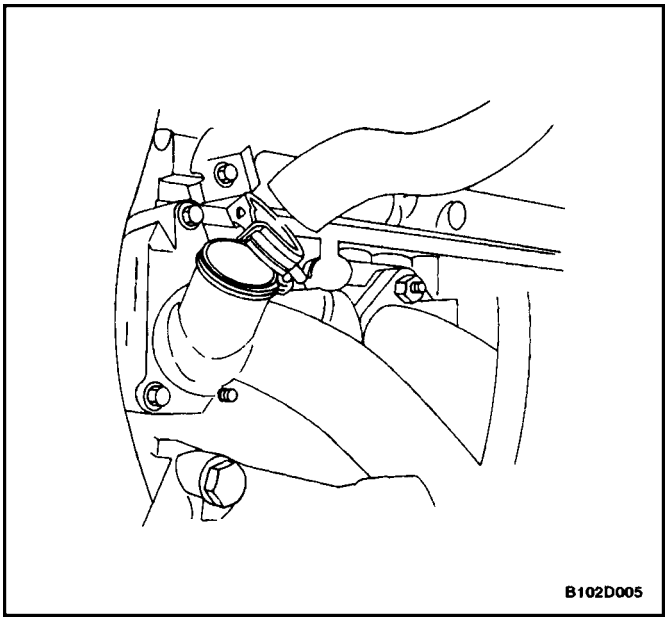

6. Connect the upper radiator hose to the thermostat housing.
7. Secure the upper radiator hose to the thermostat housing with a hose clamp.
8. Refill the engine cooling system. Refer to ”Draining and Refilling the Cooling System” in this section.

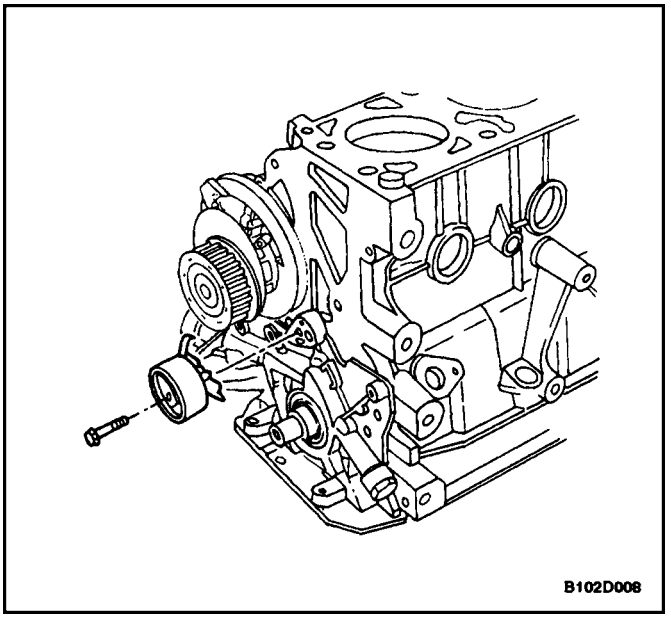

COOLANT PUMP

Removal Procedure

1. Drain the engine cooling system to a level below the thermostat housing. Refer to ”Draining and Refilling the Cooling System” in this section.
2. Remove the timing belt. Refer to*Section 1C, DOHC Engine Mechanical.*
3. Remove the timing belt tension roller retaining bolt.
4. Remove the timing belt tension roller.

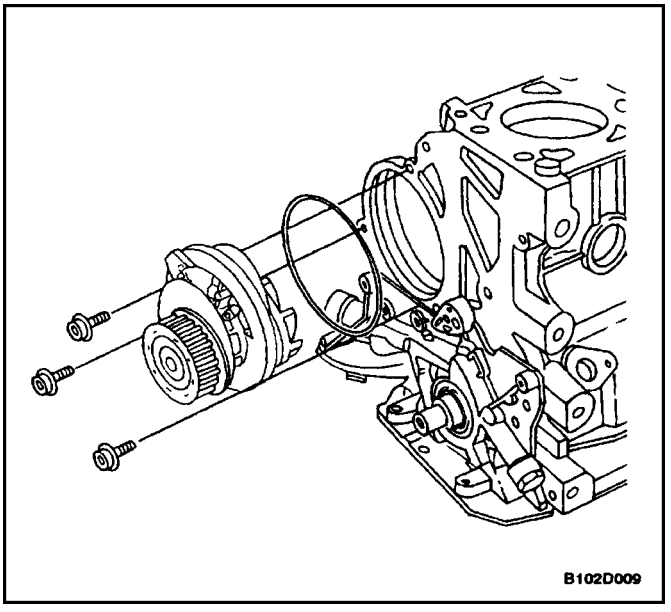

5. Remove the coolant pump mounting bolts.
6. Remove the coolant pump from the engine block.
7. Remove the ring seal from the coolant pump.

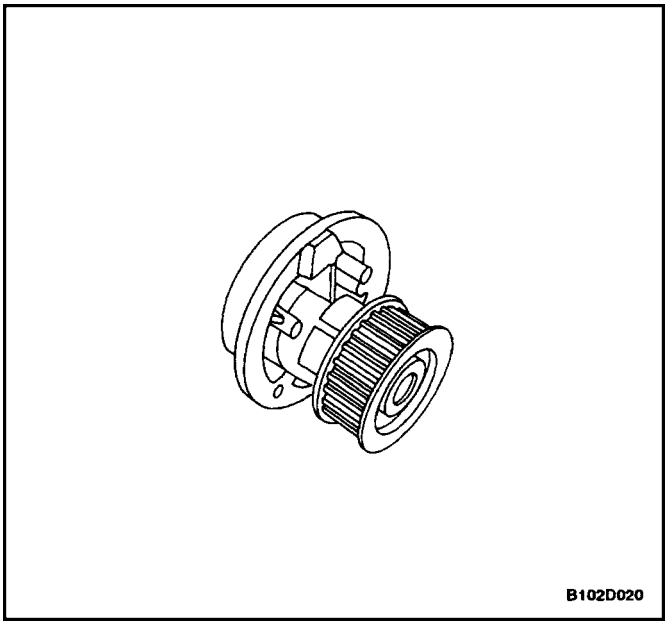

Inspection Cleaning Procedure

1. Inspect the coolant pump body for cracks and leaks.
2. Inspect the coolant pump bearing for play or abnormal noise.
3. Inspect the coolant pump pulley for excessive wear. If the coolant pump is defective, replace the coolant pump as a unit.
4. Clean the mating surfaces of the coolant pump and the engine block.

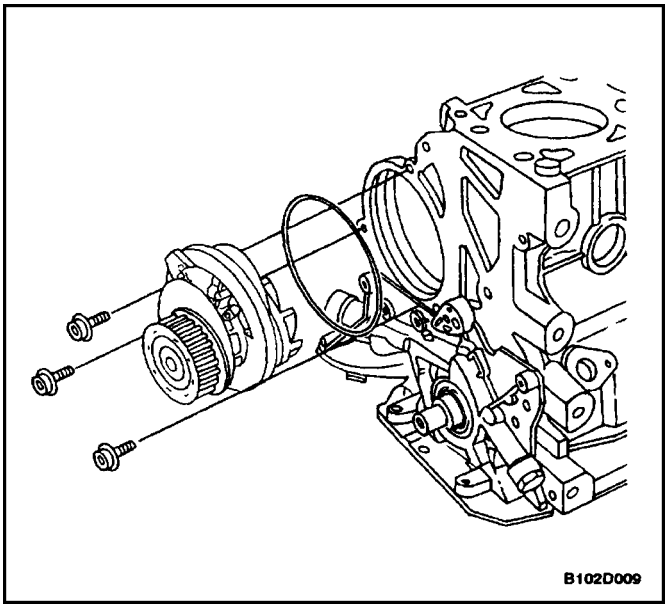

Installation Procedure

1. Install a new ring seal to the coolant pump.
2. Coat the sealing surface of the ring seal with Lubri–plate®.
3. Install the coolant pump to the engine block with the flange aligned with the recess of the rear timing belt cover.
4. Secure the coolant pump to the engine block with the mounting bolts.

Tighten

Tighten the coolant pump mounting bolts (DOHC) to 20 N•m (15 lb–ft).

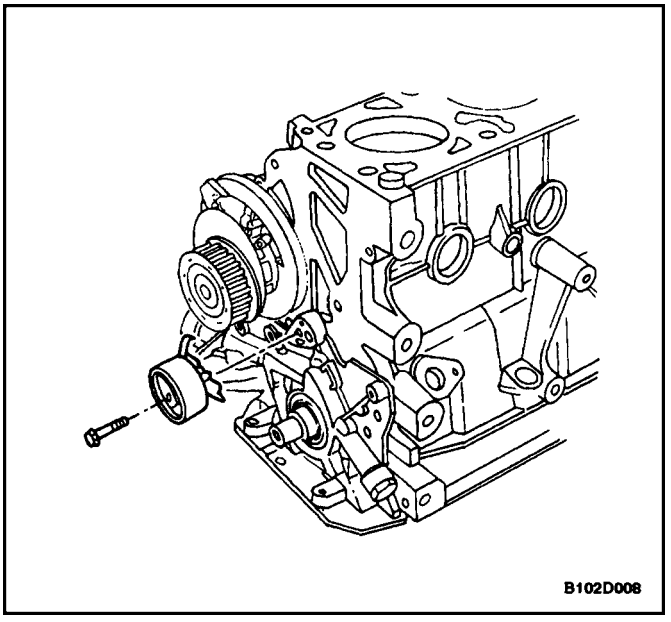

5. Install the timing belt tension roller to the oil pump with the flange inserted into the recess of the oil pump.
6. Install the timing belt tension roller bolt. Do not tighten the bolt at this time.
7. Install the timing belt. Refer to*Section 1C, DOHC En–gine Mechanical.*
8. Refill the engine cooling system. Refer to ”Draining and Refilling the Cooling System” in this section.

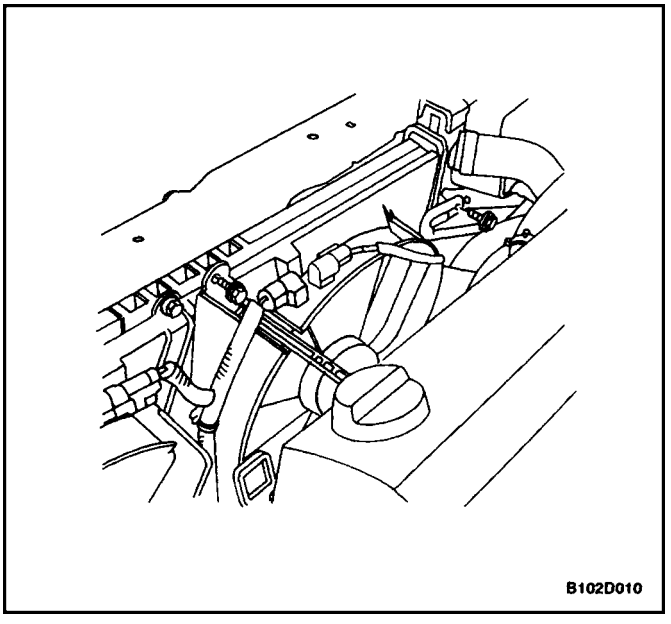

ELECTRIC COOLING FAN– MAIN OR AUXILIARY

Removal Procedure

1. Disconnect the negative battery cable.
2. Disconnect the cooling fan electrical connector.
3. Remove the fan shroud mounting bolts.
4. Lift the fan shroud assembly upward, and remove the fan shroud assembly from the vehicle.

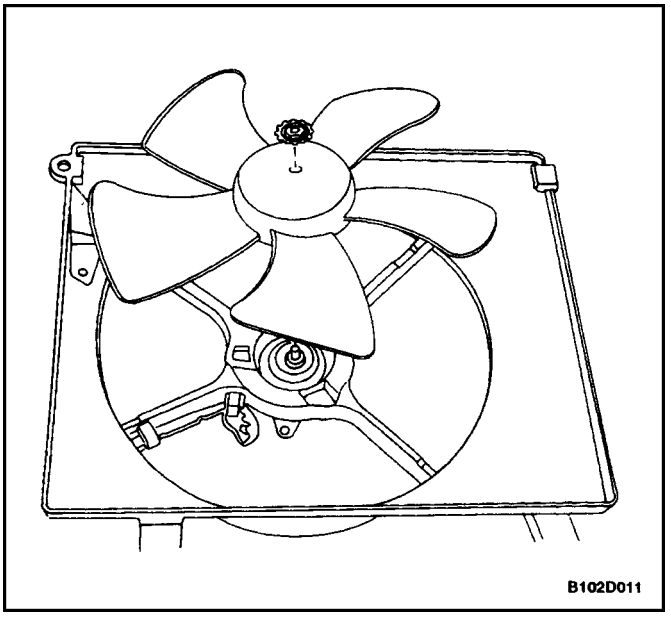

5. Remove the fan blade from the fan shroud assembly by removing the nut at the center of the fan hub.
6. Turn over the fan shroud assembly.

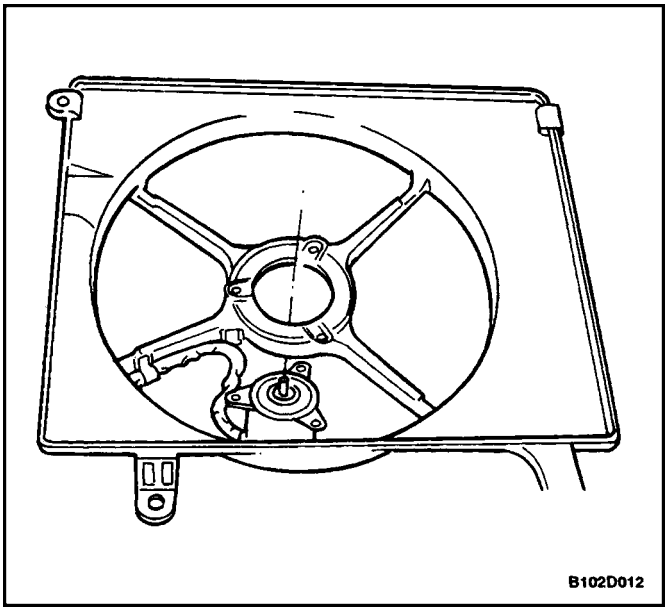

7. Remove the fan motor retaining screws.
8. Remove the fan motor from the shroud.

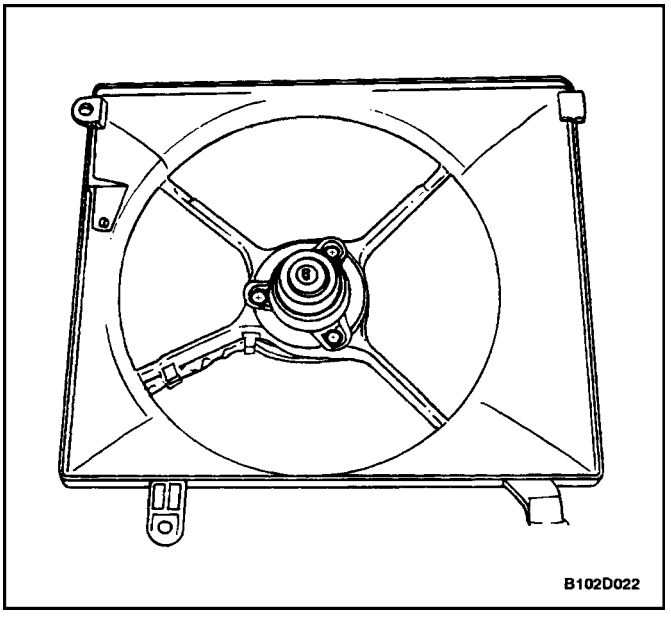

Installation Procedure

CAUTION : If a fan blade is bent or damaged in any way, no attempt should be made to repair or reuse the damaged part. A bent or damaged fan assembly must be replaced with a new fan assembly. It is essential that fan assemblies remain in proper balance. A fan assembly that is not in proper balance can fail and fly apart during use, creating extreme danger. Proper balance cannot be assured on a fan assembly that has been bent or damaged.

1. Install the fan motor to the shroud.
2. Secure the motor to the shroud with the retaining screws.

Tighten

Tighten the fan motor retaining screws to 4 N•m (35 lb–in).

3. Turn over the fan shroud assembly.

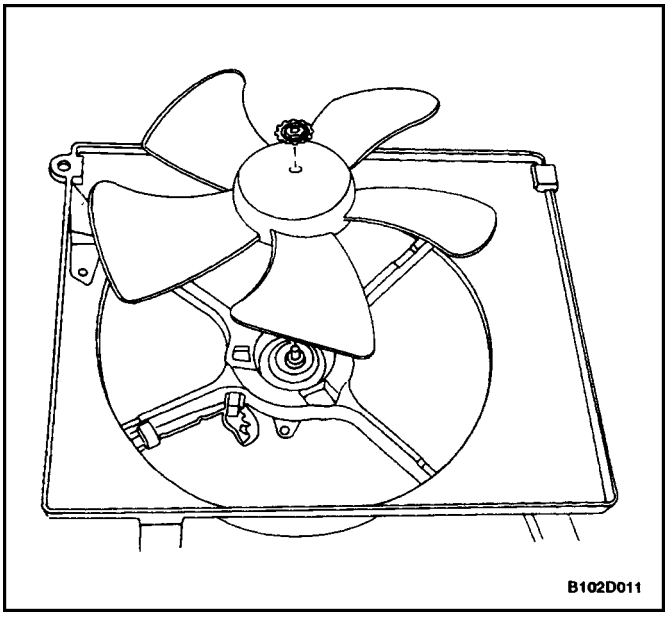

4. Install the fan to the fan shroud assembly with the single nut in the center of the fan hub.

Tighten

Tighten the fan motor nut to 3.2 N•m (28 lb–in).

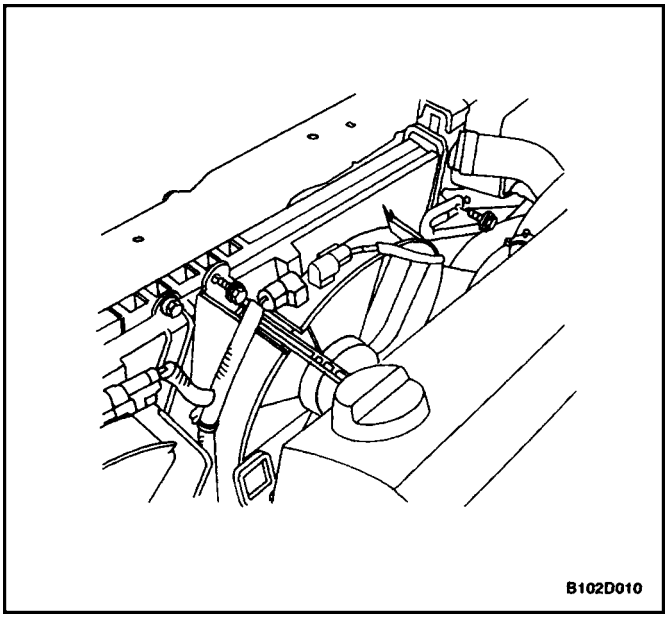

5. Install the fan shroud assembly to the radiator.

Important : Be careful to seat the mounting post on the fan shroud into the socket at the radiator left tank. Be sure to slip the tab at the bottom edge of the shroud into the retaining clip near the center of the radiator.

6. Secure the shroud to the top of the radiator with the mounting bolts.

Tighten

Tighten the fan assembly mounting bolts to 4 N•m (35 lb–in).

7. Connect the cooling fan electrical connector.
8. Connect the negative battery cable.

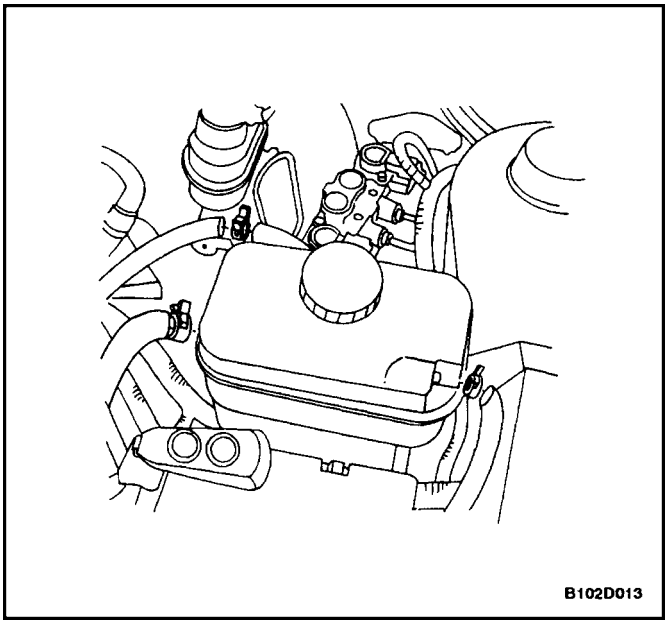

SURGE TANK

Removal Procedure

CAUTION : To prevent personal injury, do not remove the surge tank cap while the engine and the radiator are hot, because the heat causes the system to remain under pressure. Scalding fluid and steam may be blown out under pressure.

1. Drain the engine coolant to below the level of the surge tank.
2. Loosen the return hose clamp and disconnect the return hose from the top of the surge tank.
3. Loosen the throttle body hose clamp and disconnect the throttle body hose from the top of the surge tank.
4. Loosen the feed hose clamp and disconnect the feed hose from the bottom of the surge tank.

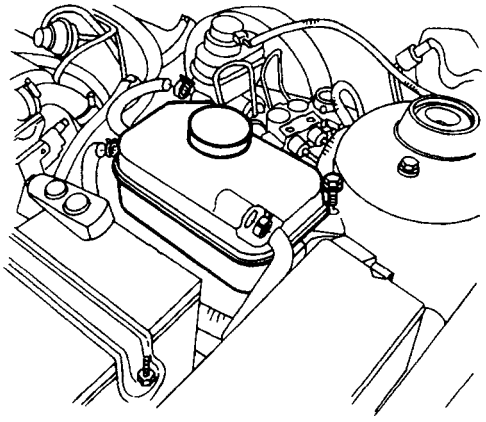

B102D014

5. Remove the surge tank attaching bolt.
6. Remove the surge tank from the support mount.
7. Clean the inside and the outside of the surge tank and the surge tank cap with soap and water.
8. Rinse the surge tank and the cap thoroughly.

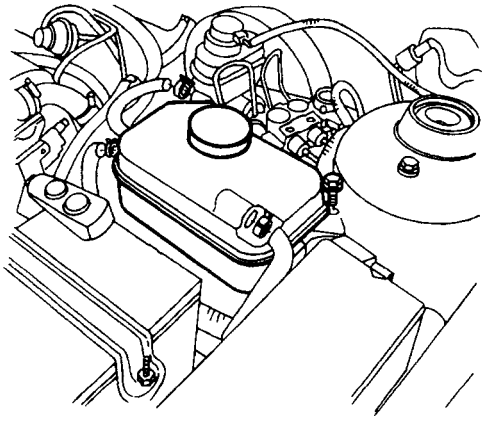

B102D014

Installation Procedure

1. Install the surge tank to the support mount.
2. Secure the surge tank with the attaching bolt.

Tighten

Tighten the surge tank attaching bolt to 4 N•m (35 lbin).

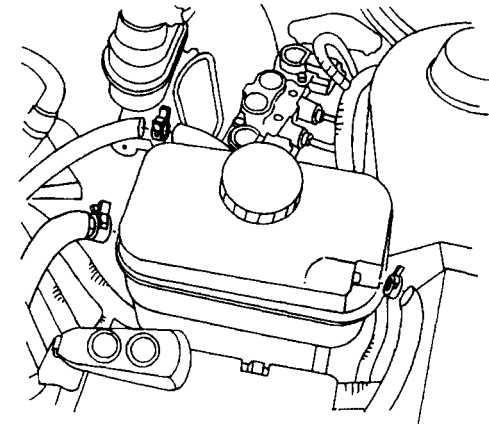

B102D013

3. Connect the return hose and the throttle body hose to the top of the surge tank.
4. Connect the feed hose to the bottom of the surge tank.
5. Secure the return hose, the throttle body hose, and the feed hose to the surge tank with the hose clamps.
6. Fill the surge tank with the coolant to the center ridge, or to the MAX mark.

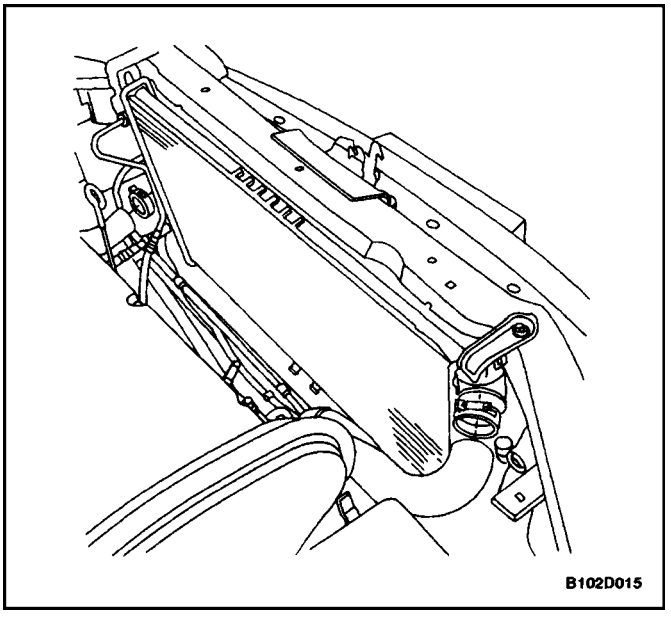

RADIATOR

Removal Procedure

1. Disconnect the negative battery cable.
2. Drain the engine cooling system. Refer to ”Draining and Refilling the Cooling System” in this section.
3. Remove the main and the auxiliary cooling fans. Refer to”Electric Cooling Fan – Main or Auxiliary” in this section.
4. Remove the lower radiator hose clamp.
5. Disconnect the lower radiator hose from the radiator.
6. Remove the upper radiator hose clamp.
7. Disconnect the upper radiator hose from the radiator.

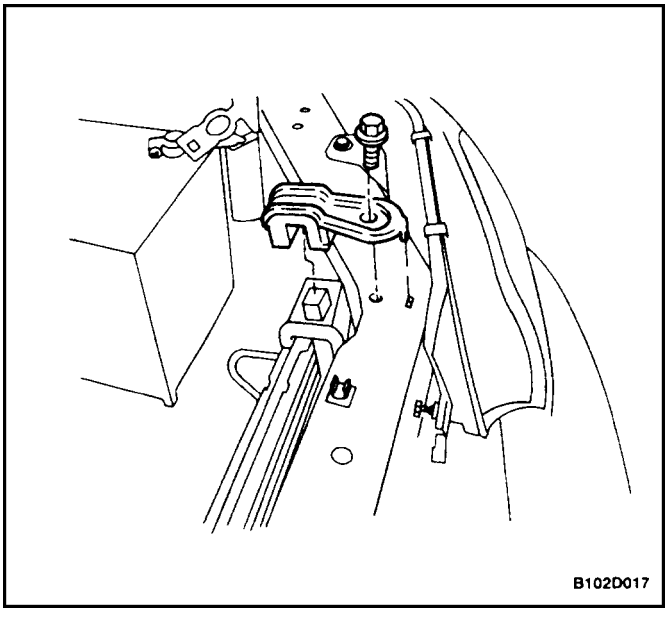

8. Remove the hose clamp from the surge tank hose at the radiator.
9. Disconnect the surge tank hose from the radiator.
10. Disconnect the transaxle fluid cooler pipes from the lower radiator tank, if equipped.
11. Remove the bolt and the transaxle pipe support clamp from the radiator.
12. Remove the left upper radiator retaining bolt.
13. Remove the left upper radiator retaining bracket.

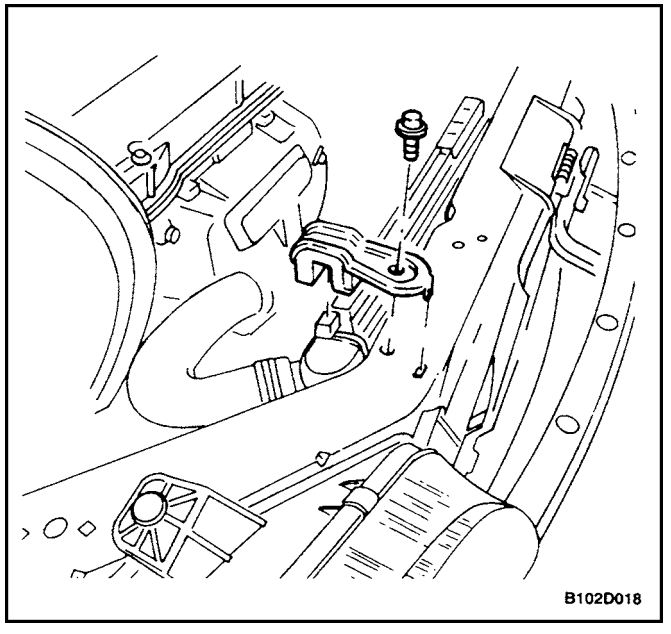

14. Remove the right upper radiator retaining bolt.
15. Remove the right upper radiator retaining bracket.
16. Remove the radiator from the vehicle.

Important : The radiator still contains a substantial amount of coolant. Drain the remainder of the coolant from the radiator into a drain pan.

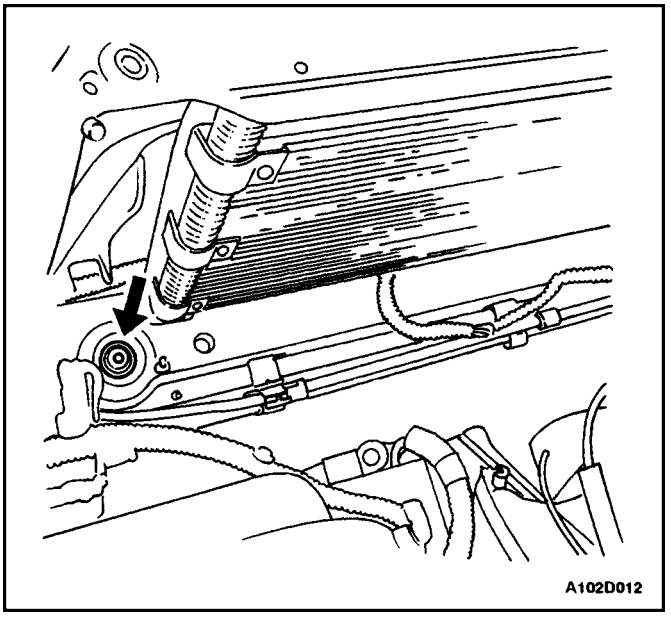

Installation Procedure

1. Set the radiator into place in the vehicle with the radiator bottom posts in the rubber shock bumpers.

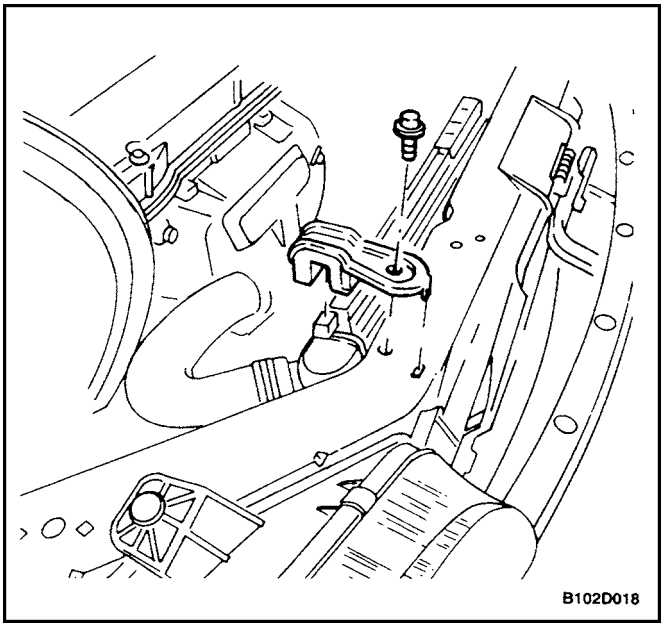

2. Position the radiator retainers in place.
3. Install the right upper radiator retainer bracket.
4. Install the right upper radiator retaining bolt.

Tighten

Tighten the right upper radiator retaining bolt to 4 N•m (35 lb–in).

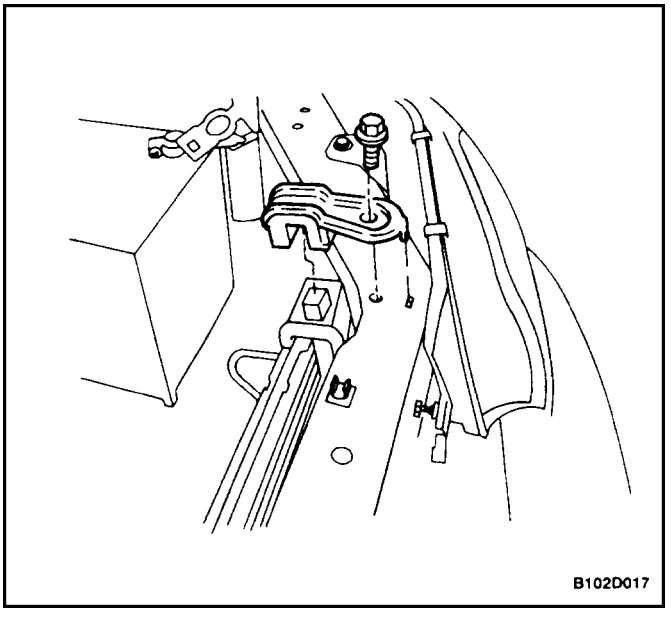

5. Install the left upper radiator retainer bracket.
6. Install the left upper radiator retaining bolt.

Tighten

Tighten the left upper radiator retaining bolt to 4 N•m (35 lb–in).

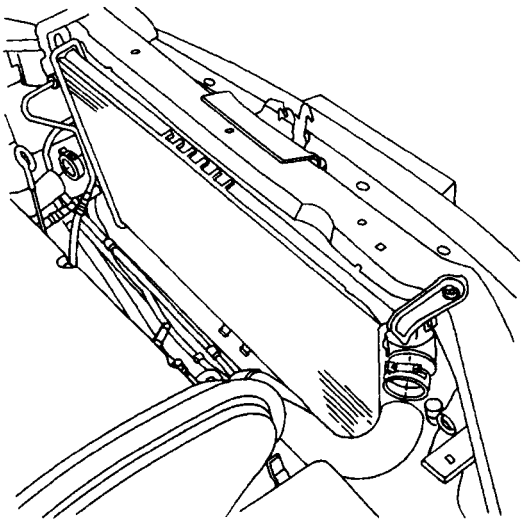
B102D015

7. Connect the transaxle cooler pipes to the lower radiator tank, if equipped.
8. Install the transaxle pipe and support clamp to the radiator with a bolt.
9. Connect the surge tank hose to the radiator.
10. Secure the surge tank hose with a hose clamp.
11. Connect the upper radiator hose and the lower radiator hose to the radiator.
12. Secure each hose with a hose clamp.
13. Install the main and the auxiliary cooling fans. Refer to ”Electric Cooling Fan – Main or Auxiliary” in this section.
14. Refill the engine cooling system. Refer to ”Draining and Refilling the Cooling System” in this section.
15. Connect the negative battery cable.

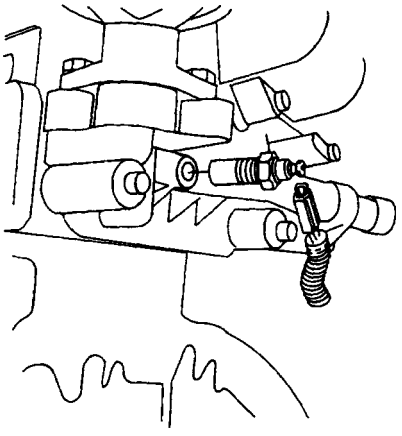
B102D019

ENGINE COOLANT TEMPERATURE SENSOR

Removal Procedure

1. Disconnect the negative battery cable.
2. Drain the coolant to a level below the engine coolant temperature sensor.
3. Disconnect the electrical connector from the engine coolant temperature sensor.
4. Remove the temperature sensor from the exhaust gas recirculation (EGR) valve mounting adapter.

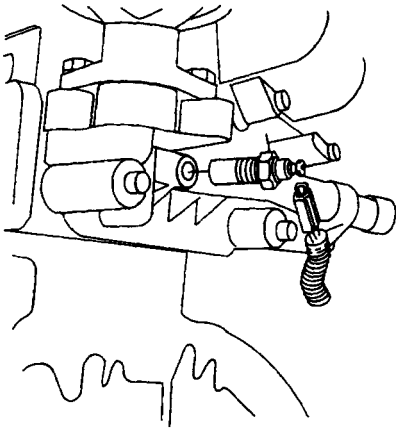
B102D019

Installation Procedure

1. Install the engine coolant temperature sensor into the threaded hole in the EGR valve mounting adapter.

   Tighten

   Tighten the engine coolant temperature sensor (2.0L DOHC) to 10 N•m (89 lb–in).
2. Connect the electrical connector to the engine coolant temperature sensor.
3. Refill the engine cooling system. Refer to ”Draining and Refilling the Cooling System” in this section.
4. Connect the negative battery cable.

GENERAL DESCRIPTION AND SYSTEM OPERATION

GENERAL DESCRIPTION

The cooling system maintains the engine temperature at an efficient level during all engine operating conditions. When the engine is cold, the cooling system cools the engine slowly, or not at all. The slow cooling of the engine allows the engine to warm up quickly.

The cooling system includes a radiator and recovery subsystem, cooling fans, a thermostat and housing, a coolant pump, and a coolant pump drive belt. The timing belt drives the coolant pump.

All components must function properly in order for the cooling system to operate. The coolant pump draws the coolant from the radiator. The coolant then circulates through water jackets in the engine block, the intake manifold, and the cylinder head. When the coolant reaches the operating temperature of the thermostat, the thermostat opens. The coolant then goes back to the radiator where it cools.

The system directs some coolant through the hoses to the heater core. This provides for heating and defrosting. The surge tank is connected to the radiator to recover the coolant displaced by expansion from the high temperatures. The surge tank maintains the correct coolant level.

The cooling system for this vehicle has no radiator cap or filler neck. The coolant is added to the cooling system through the surge tank.

RADIATOR

This vehicle has a lightweight tube–and–fin aluminum radiator. Three models of radiators are available: small, standard, and heavy duty. The three models vary only by size (capacity). Plastic tanks are mounted on the right and the left sides of the radiator core.

On vehicles equipped with automatic transaxles, the transaxle fluid cooler lines run through the left radiator tank.

A radiator drain cock is on the radiator. To drain the cooling system, open the drain cock.

SURGE TANK

The surge tank is a transparent plastic reservoir, similar to the windshield washer reservoir.

The surge tank is connected to the radiator by a hose and to the engine cooling system by another hose. As the vehicle is driven, the engine coolant heats and expands. The portion of the engine coolant displaced by this expansion flows from the radiator and the engine into the surge tank. The air trapped in the radiator and the engine is degassed into the surge tank.

When the engine stops, the engine coolant cools and contracts. The displaced engine coolant is then drawn back into the radiator and the engine. This keeps the radiator filled with the coolant to the desired level at all times and increases the cooling efficiency.

Maintain the coolant level between the MIN and the MAX marks on the surge tank when the system is cold.

COOLANT PUMP

The belt–driven centrifugal coolant pump consists of an impeller, a drive shaft, and a belt pulley. The coolant pump is mounted on the front of the transverse–mounted engine, and is driven by the timing belt.

The impeller is supported by a completely sealed bearing.

The coolant pump is serviced as an assembly and, therefore, cannot be disassembled.

THERMOSTAT

A wax pellet–type thermostat controls the flow of the engine coolant through the engine cooling system. The thermostat is mounted in the thermostat housing to the front of the cylinder head.

The thermostat stops the flow of the engine coolant from the engine to the radiator in order to provide faster warm–up, and to regulate the coolant temperature. The thermostat remains closed while the engine coolant is cold, preventing circulation of the engine coolant through the radiator. At this point, the engine coolant is allowed to circulate only throughout the heater core to warm it quickly and evenly.

As the engine warms, the thermostat opens. This allows the engine coolant to flow through the radiator, where the heat is dissipated through the radiator. This opening and closing of the thermostat permits enough engine coolant to enter the radiator to keep the engine within proper engine temperature operating limits.

The wax pellet in the thermostat is hermetically sealed in a metal case. The wax element of the thermostat expands when it is heated and contracts when it is cooled.

As the vehicle is driven and the engine warms, the engine coolant temperature increases. When the engine coolant reaches a specified temperature, the wax pellet element in the thermostat expands and exerts pressure against the metal case, forcing the valve open. This allows the engine coolant to flow through the engine cooling system and cool the engine.

As the wax pellet cools, the contraction allows a spring to close the valve.

The thermostat begins to open at 87˚C (189˚F) and is fully open at 102˚C (216˚F). The thermostat closes at 86˚C (187˚F).

ELECTRIC COOLING FAN

CAUTION : Keep hands, tools, and clothing away from the engine cooling fans to help prevent personal injury. This fan is electric and can turn on whether or not the engine is running.

CAUTION : If a fan blade is bent or damaged in any way, no attempt should be made to repair or reuse the damaged part. A bent or damaged fan assembly should always be replaced with a new one. Failure to do so can result in personal injury.

The cooling fans are mounted behind the radiator in the engine compartment. The electric cooling fans increase the flow of air across the radiator fins and across the condenser on air conditioned (A/C) equipped vehicles. This helps to speed cooling when the vehicle is at idle or moving at low speeds.

The main fan size is 300 mm (11.8 inches) in diameter with five blades to aid the air flow through the radiator and the condenser. An electric motor attached to the radiator support drives the fan.

A/C models have two fans – the main fan and the auxiliary fan. The auxiliary fan is 300 mm (11.8 inches) in diameter.

A/C Off or Non–A/C Model

- The cooling fans are actuated by the powertrain control module (PCM)/engine control module (ECM) using a low–speed cooling fan relay and a high–speed cooling fan relay. On A/C–equipped vehicles, a series/parallel cooling fan relay is also used.
- The PCM/ECM will turn the cooling fans on at low speed when the coolant temperature reaches 93˚C (199˚F) and at high speed when the coolant temperature reaches 97˚C (207˚F).
- The PCM/ECM will change the cooling fans from high speed to low speed at 94˚C (201˚F) and will turn the cooling fans off at 90˚C (194˚F).

A/C ON

- The PCM/ECM will turn the cooling fans on at low speed when the A/C system is on. The PCM/ECM will change to high speed when the coolant temperature reaches 115˚C (239˚F) or the high side A/C pressure reaches 1 882 kPa (273 psi).
- The cooling fans will return to low speed when the coolant temperature reaches 112˚C (234˚F) and the high side A/C pressure reaches 1 448 kPa (210 psi).

COOLANT TEMPERATURE SENSOR

The coolant temperature sensor (CTS) uses a thermistor to control the signal voltage to the powertrain control module (PCM)/engine control module (ECM).

ENGINE COOLANT TEMPERATURE SENSOR

The engine coolant temperature sensor controls the nstrument panel temperature indicator. The engine coolant temperature sensor is located on the intakemanifold near the throttle body on an SOHC engine, and on the cylinder head under the intake manifold on a DOHC engine.

ENGINE BLOCK HEATER

The vehicle is designed to accept an engine block heater that helps to warm the engine and to improve starting in cold weather. It also can help to reduce fuel consumption while a cold engine warms up.

The engine block heater is located under the intake manifold and uses an existing expansion plug for installation.

Contact your Daewoo Dealer for further information or installation.

SECTION : 1G

ENGINE EXHAUST

TABLE OF CONTENTS

SPECIFICATIONS 1G–1
FASTENER TIGHTENING SPECIFICATIONS . 1G–1
COMPONENT LOCATOR 1G–2
EXHAUST SYSTEM 1G–2
MAINTENANCE AND REPAIR 1G–3
ON–VEHICLE SERVICE 1G–3
MAIN CATALYTIC CONVERTER AND CONNECTING PIPE 1G–3
AUXILIARY CATALYTIC CONVERTER 1G–5
MUFFLER – FRONT 1G–7
MUFFLER – REAR 1G–9
GENERAL DESCRIPTION AND SYSTEM OPERATION 1G–12
EXHAUST SYSTEM 1G–12
MUFFLER 1G–12
CATALYTIC CONVERTERS 1G–12

SPECIFICATIONS

FASTENER TIGHTENING SPECIFICATIONS

Application	N•m	Lb–Ft	Lb–In
Auxiliary Catalytic Converter–to–Exhaust Manifold Nuts	40	30	–
Catalytic Converter–to–Front Muffler Pipe	30	22	–
Exhaust Manifold Cover Bolts	15	11	–
Front Connecting Pipe–to–Auxiliary Catalytic Converter Nuts	40	30	–
Front Muffler Pipe–to–Catalytic Converter Nuts	30	22	–
Front Muffler Pipe–to–Rear Muffler Pipe Holding Clamp Nut	50	37	–
Post–Converter Oxygen Sensor Electrical Connector	41	30	–

COMPONENT LOCATOR

EXHAUST SYSTEM

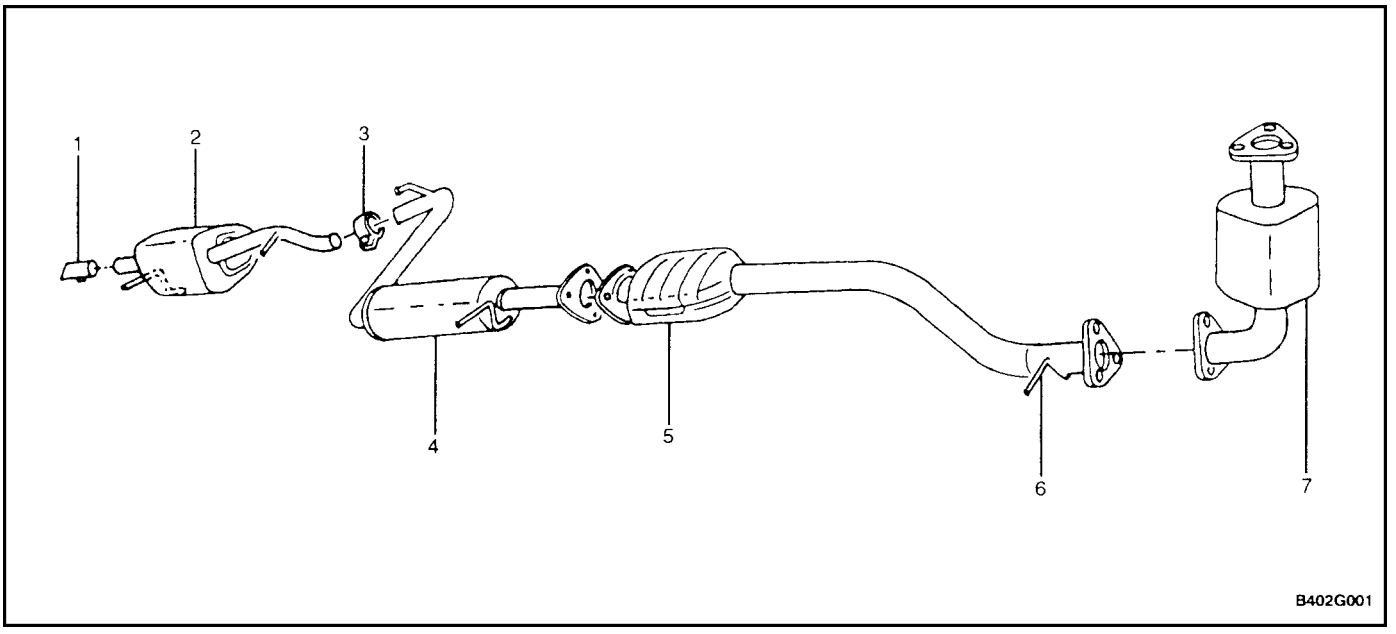

1. Trim Ring (if equipped)
2. Muffler
3. Metal Clamp
4. Front Muffler
5. Catalytic Converter
6. Post–Converter Heated Oxygen Sensor
7. Auxiliary Catalytic Converter

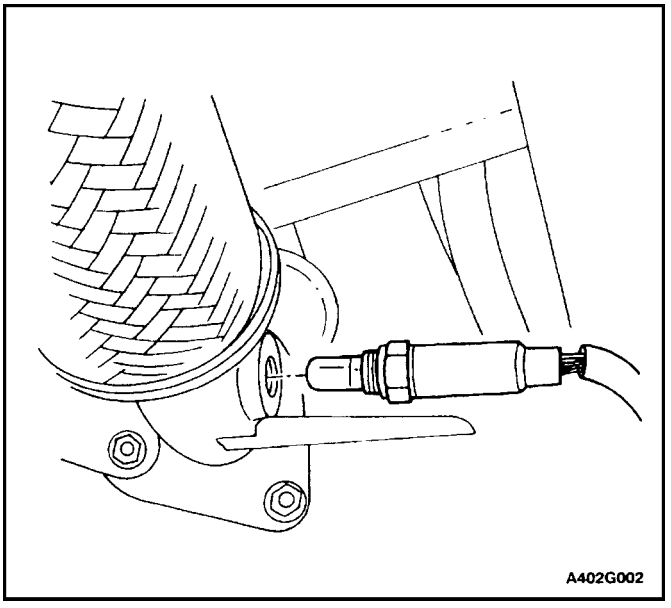

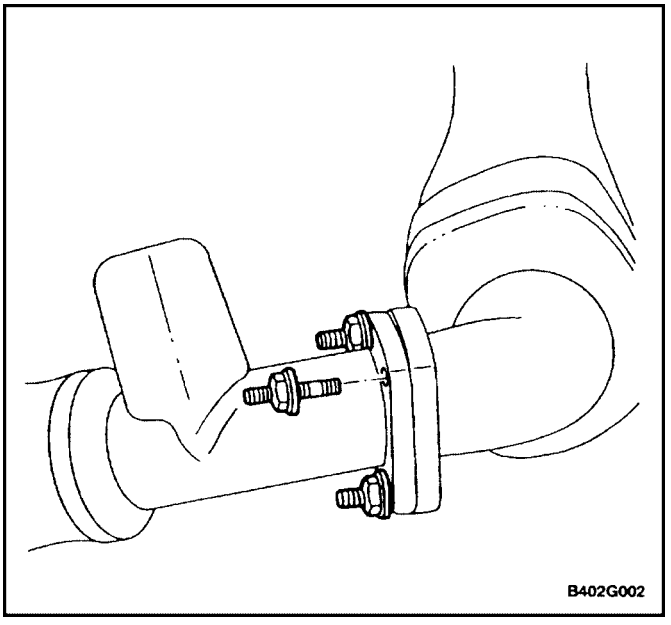

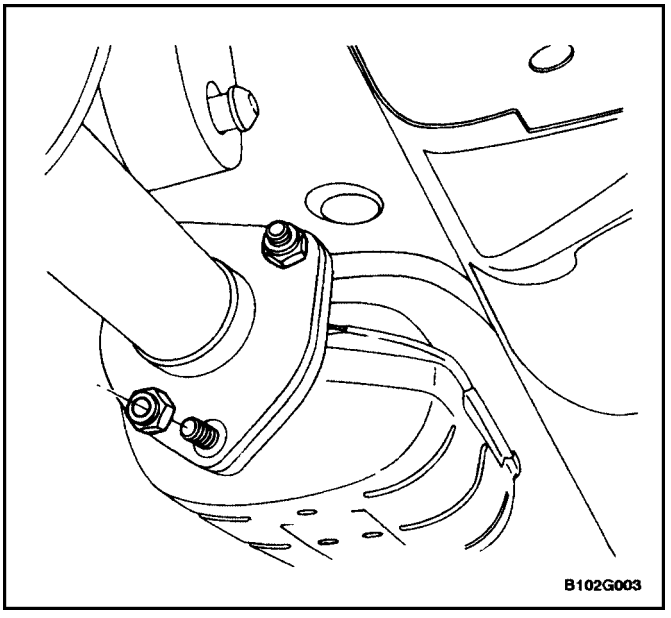

MAINTENANCE AND REPAIR

ON–VEHICLE SERVICE

MAIN CATALYTIC CONVERTER AND CONNECTING PIPE

Removal Procedure

1. Remove the post–converter heated oxygen sensor.
2. Remove the connecting pipe nuts and the gasket from the auxiliary catalytic converter.
3. Remove the catalytic converter nuts and the gasket from the front muffler.
4. Disconnect the main catalytic converter and the connecting pipe from the rubber hanger.

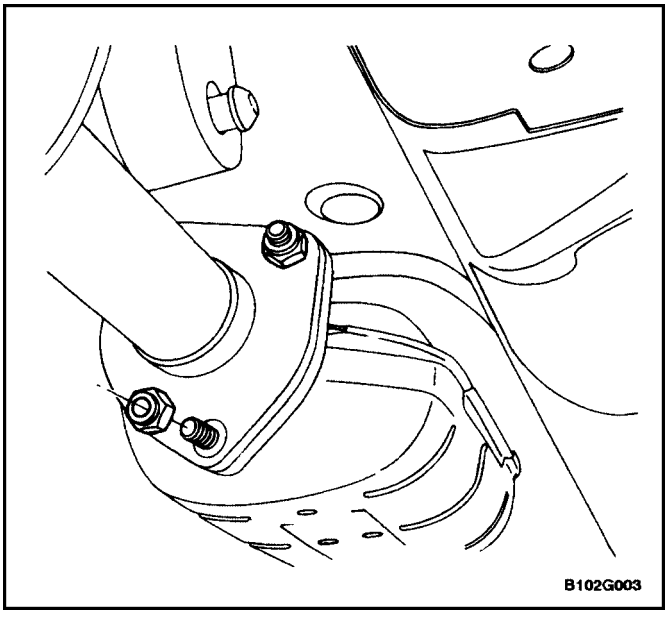

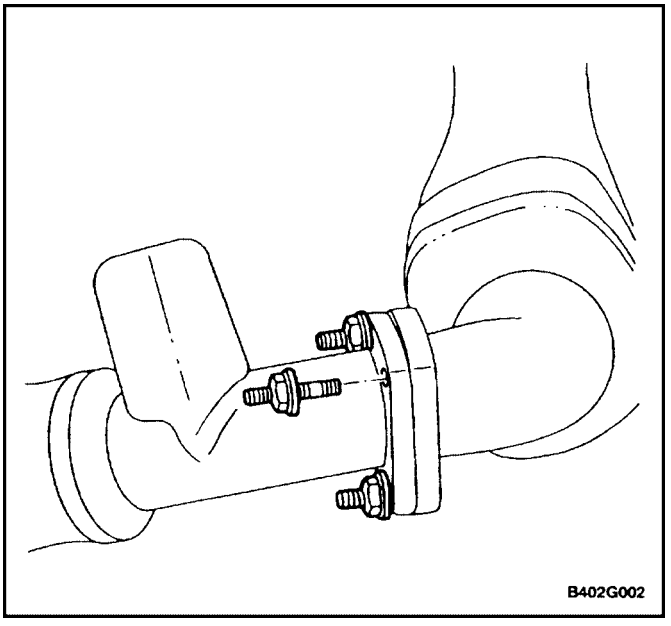

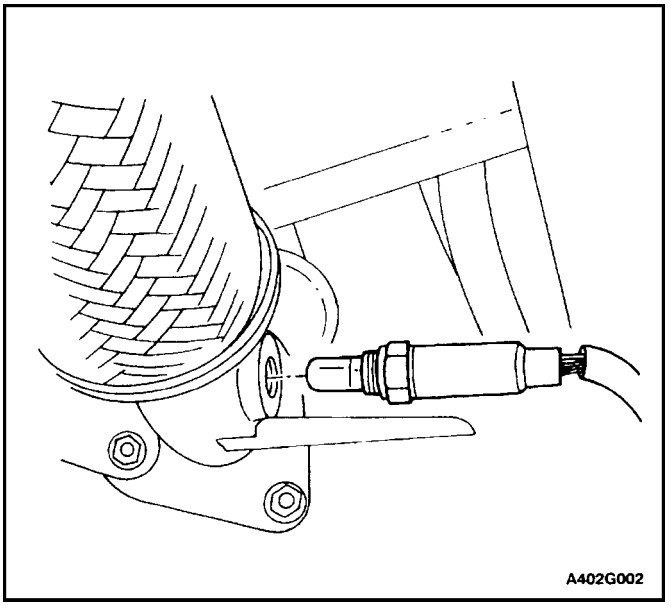

Installation Procedure

1. Install the catalytic converter and the gasket to the front muffler. Use the nuts to secure the converter.

   Tighten

   Tighten the catalytic converter–to–front muffler pipe nuts to 30 N•m (22 lb–ft).
2. Connect the main catalytic converter and the connecting pipe to the rubber hanger.
3. Install the gasket and the connecting pipe nuts to the auxiliary catalytic converter.

   Tighten

   Tighten the front connecting pipe–to–auxiliary catalytic converter nuts to 35 N•m (26 lb–ft).
4. Install the post–converter heated oxygen sensor.

   Tighten

   Tighten the post–converter heated oxygen sensor to 41 N•m (30 lb–ft).

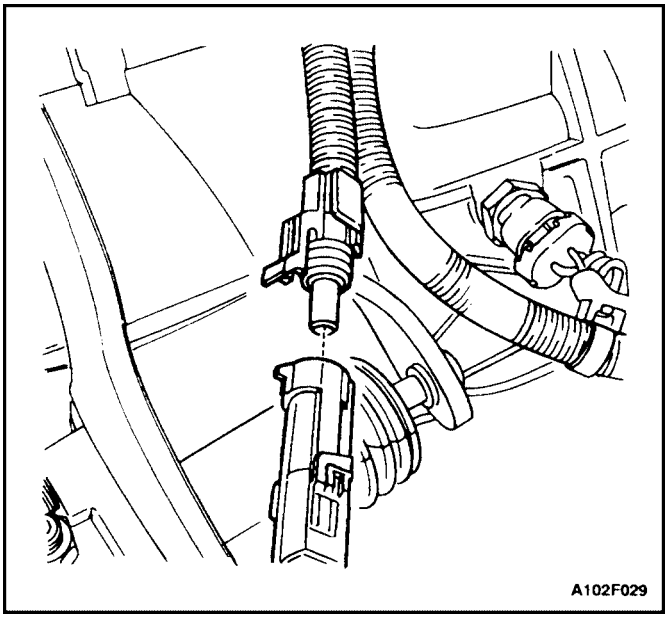

AUXILIARY CATALYTIC CONVERTER

Removal Procedure

1. Disconnect the pre–converter oxygen sensor electrical connector.

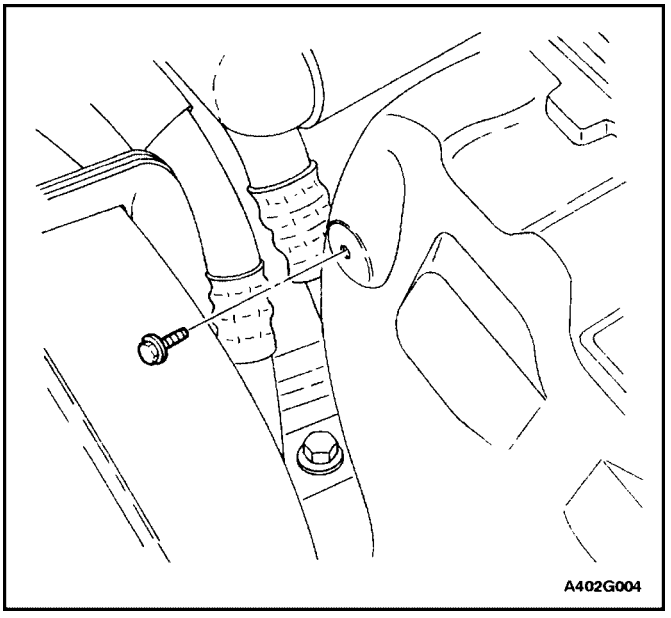

2. Remove the exhaust manifold cover bolts and the exhaust manifold cover.

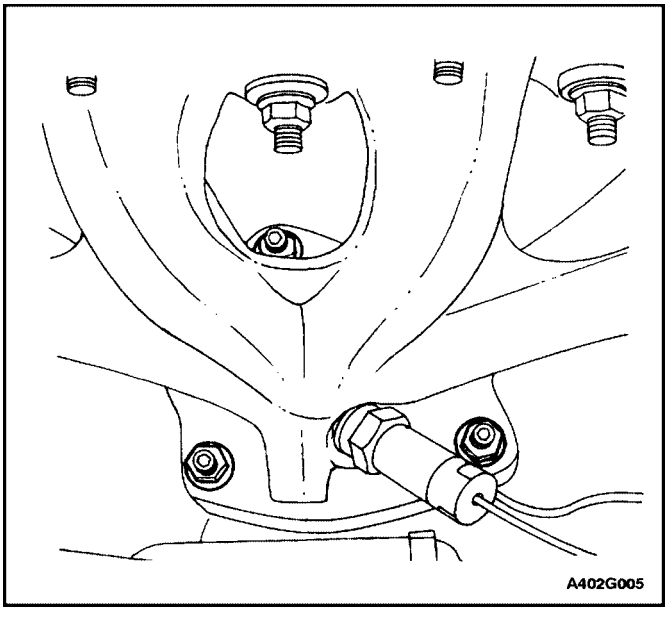

3. Remove the auxiliary catalytic converter upper flange nuts.

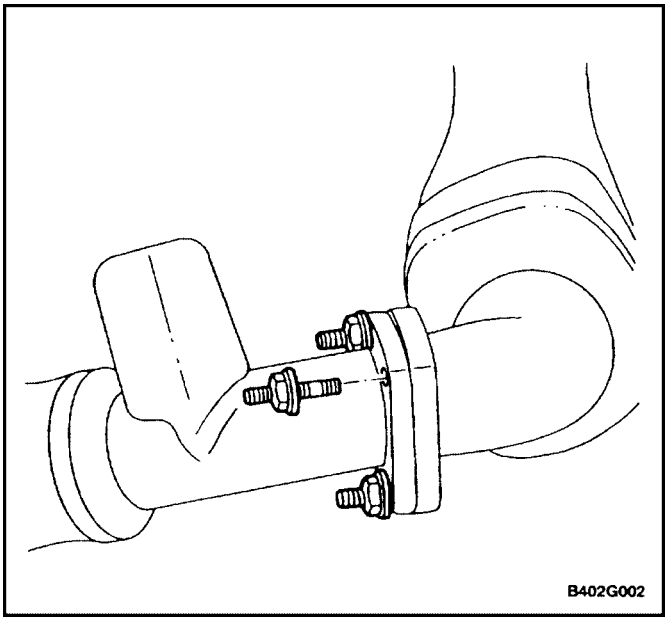

4. Remove the auxiliary catalytic converter lower flange nuts.
5. Remove the auxiliary catalytic converter and the gaskets.

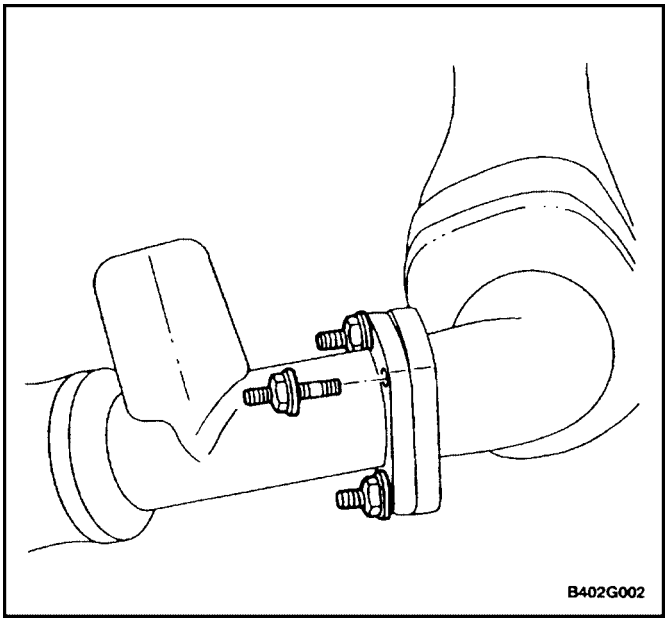

Installation Procedure

1. Install the auxiliary catalytic converter and the gaskets.

Important : Position the auxiliary catalytic converter onto the exhaust manifold flange with one upper flange nut and bolt.

2. Install the auxiliary catalytic converter lower flange nuts and the bolts.

Tighten

Tighten the front connecting pipe–to–auxiliary catalytic converter nuts to 35 N•m (26 lb–ft).

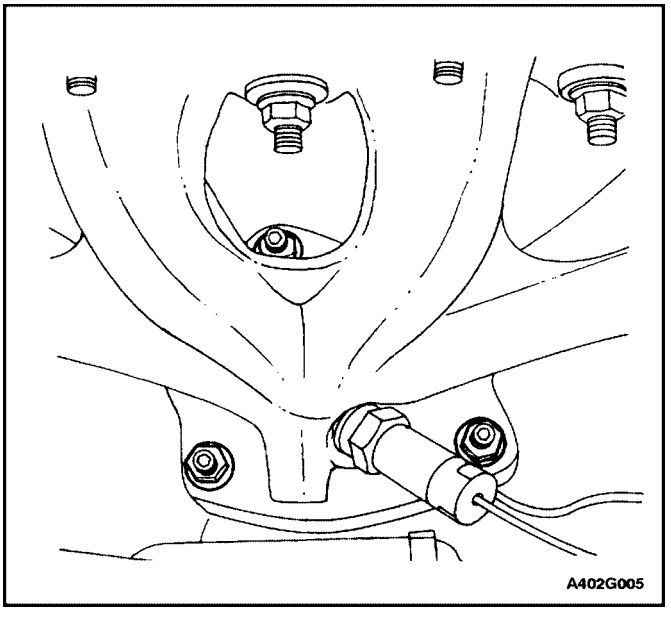

3. Install the remaining auxiliary catalytic converter upper flange nuts.

Tighten

Tighten the auxiliary catalytic converter–to–exhaust manifold nuts to 35 N•m (26 lb–ft).

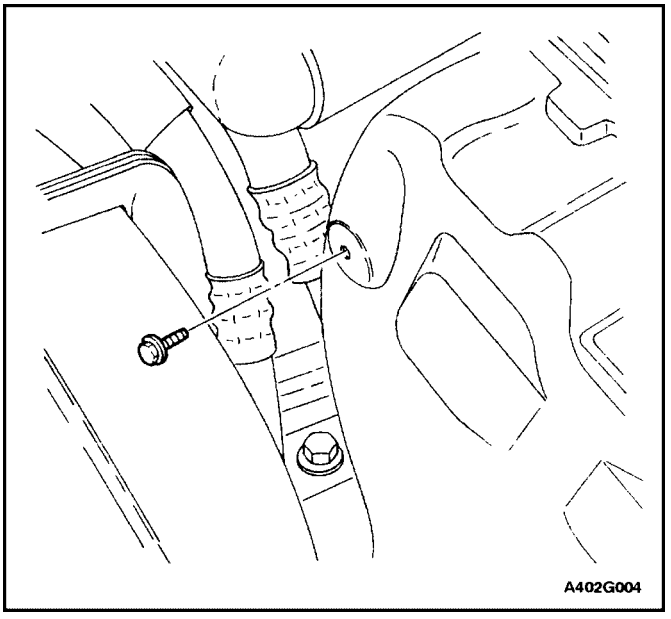

4. Install the exhaust manifold cover and the exhaust manifold cover bolts.

   Tighten

   Tighten the exhaust manifold cover bolts to 15 N•m (11 lb–ft).

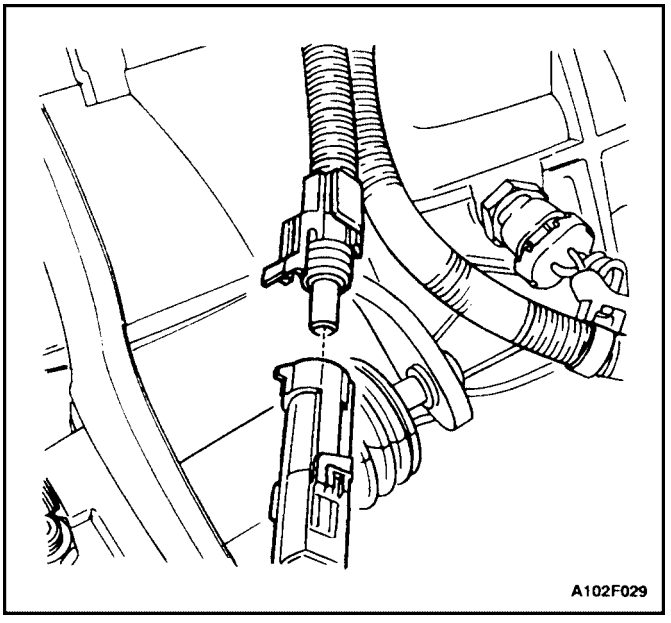

5. Connect the pre–converter oxygen sensor electrical connector.

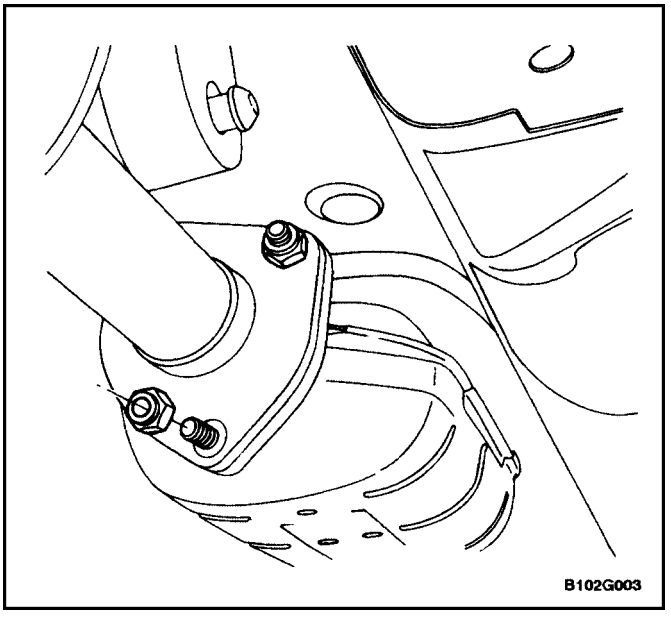

MUFFLER – FRONT

Removal Procedure

1. Remove the nuts and the gasket that secure the front muffler pipe to the catalytic converter flange.

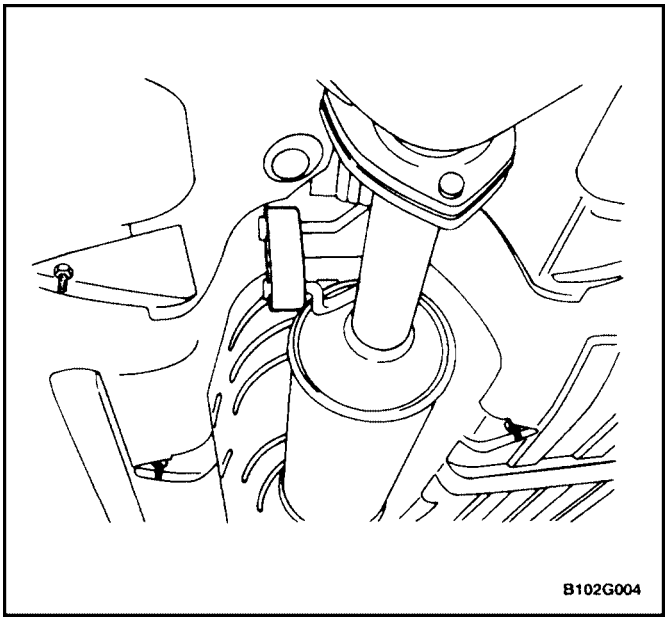

2. Detach the front muffler assembly from the front rubber hangers.

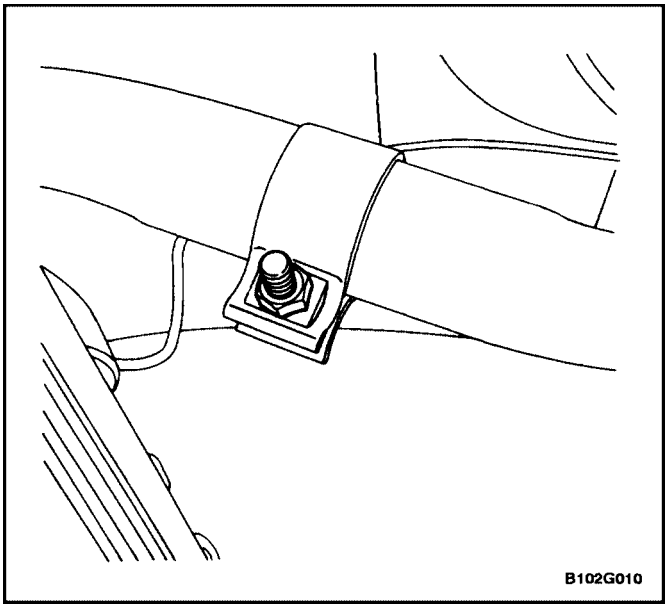

3. Loosen the front muffler pipe–to–rear muffler pipe holding clamp nut and the washer.
4. Disconnect the front muffler pipe from the rear rubber hanger.
5. Remove the front muffler pipe.
6. Check the exhaust pipe and the front muffler pipe for holes, damage, open seams, or other deterioration which could permit exhaust fumes to seep into the passenger compartment or the trunk.

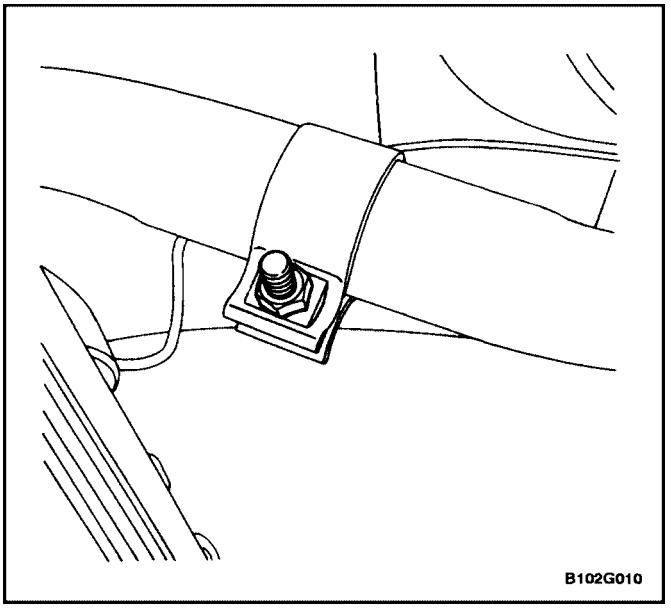

Installation Procedure

1. Secure the front muffler pipe to the rear rubber hanger near the rear muffler pipe holding clamp.
2. Place the front muffler pipe into the rear muffler pipe.
3. Secure the front muffler pipe to the rear muffler pipe with the holding clamp, the washer, and the nut.

Tighten

Tighten the front muffler pipe–to–rear muffler pipe holding clamp nut to 50 N•m (37 lb–ft).

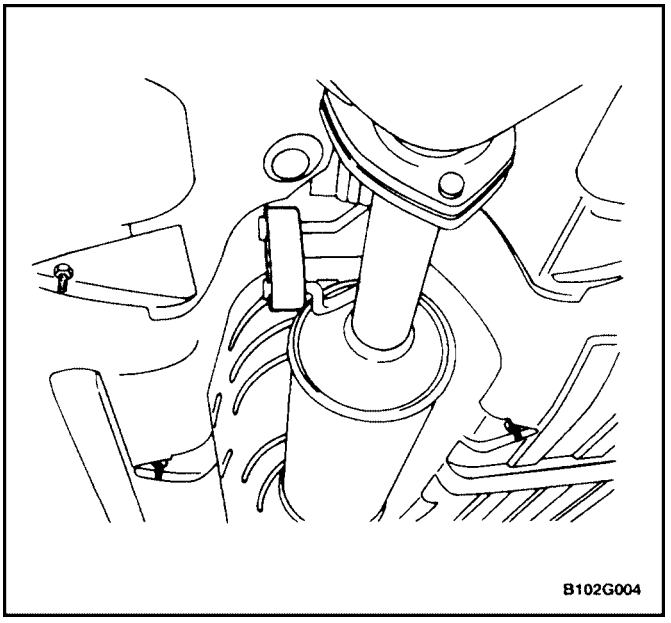

4. Attach the front muffler assembly to the front rubber hangers. Loosely secure the front muffler assembly to the catalytic converter flange.

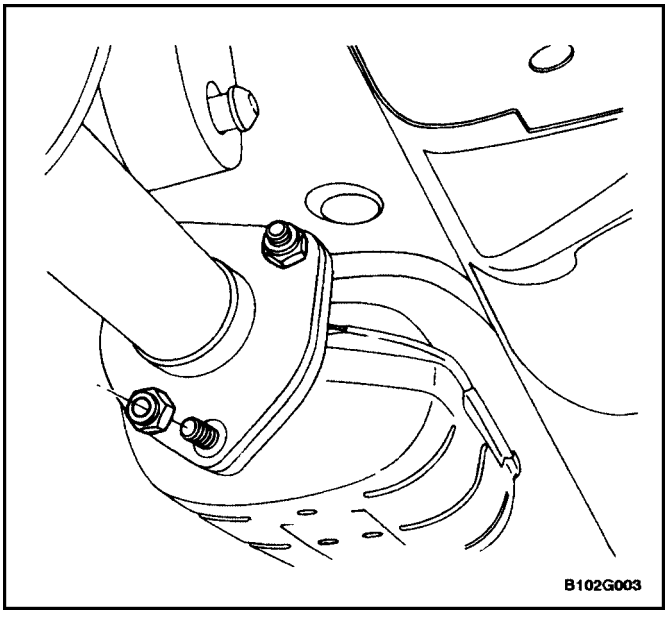

5. Secure the front muffler assembly to the catalytic converter with the nuts.

   Tighten

   Tighten the front muffler pipe–to–catalytic converter nuts to 35 N•m (26 lb–ft).

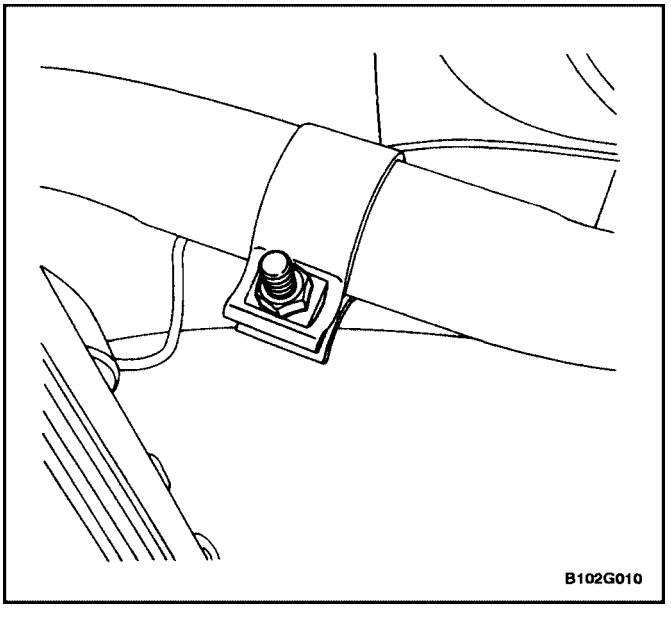

MUFFLER – REAR

Removal Procedure

1. Loosen the front muffler pipe–to–rear muffler pipe holding clamp nut and the washer.
2. Spread the loosened holding clamp and position it away from the junction of the front muffler pipe and the rear muffler pipe.
3. Separate the rear muffler pipe from the front muffler pipe.

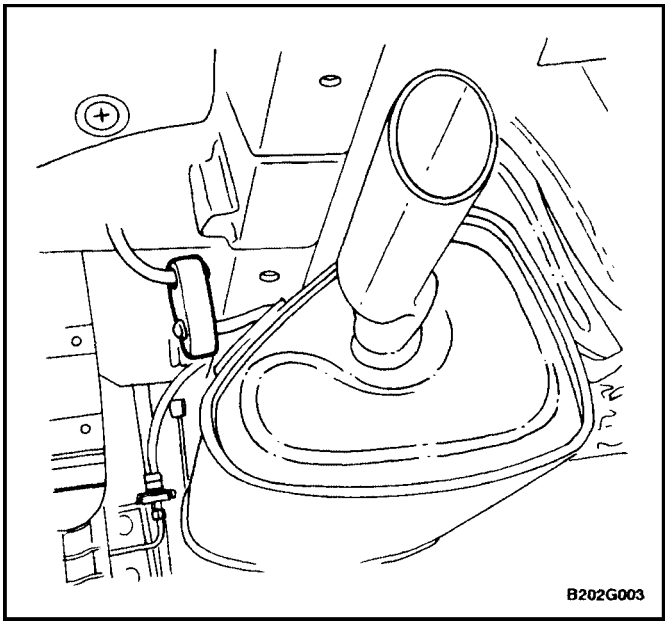

4. Remove the bolt that secures the trim ring, (if equipped), to the rear muffler pipe.
5. Remove the trim ring.
6. Detach the rear muffler pipe from the rear rubber hangers at the top of the rear muffler assembly near the exhaust tail pipe and near the junction of the rear muffler pipe with the front muffler pipe.
7. Remove the rear muffler assembly.
8. Check the rear muffler and the pipes for holes, damage, open seams, and other deterioration which could permit exhaust fumes to seep into the passenger compartment or the trunk.

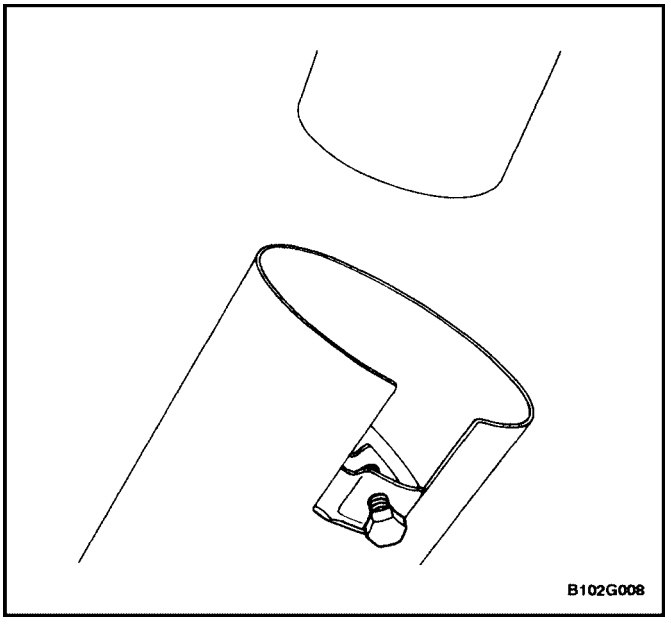

Installation Procedure

1. Place the exhaust tail pipe trim ring, (if equipped), on the rear muffler pipe.
2. Secure the exhaust pipe trim ring on the rear muffler pipe, and tighten the exhaust trim ring bolt until it bottoms out on the exhaust pipe. Tighten an additional quarter turn.

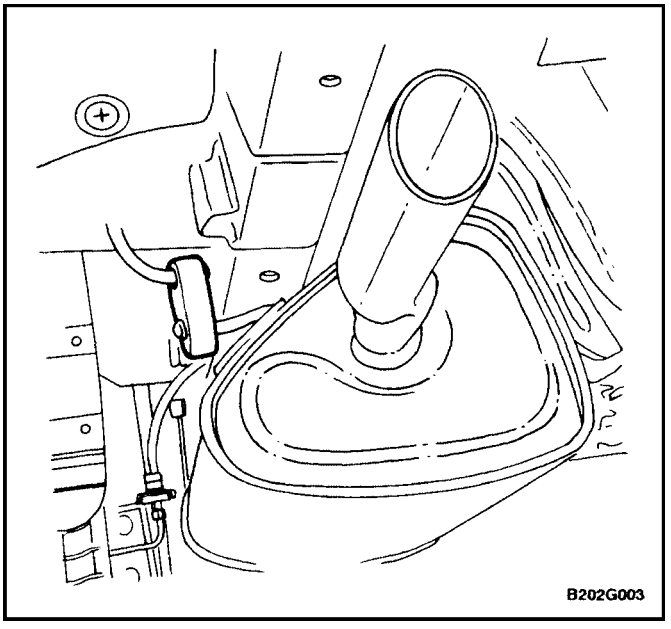

3. Secure the rear muffler assembly to the rear rubber hangers near the exhaust tail pipe and near the junction of the rear muffler pipe with the front muffler pipe.

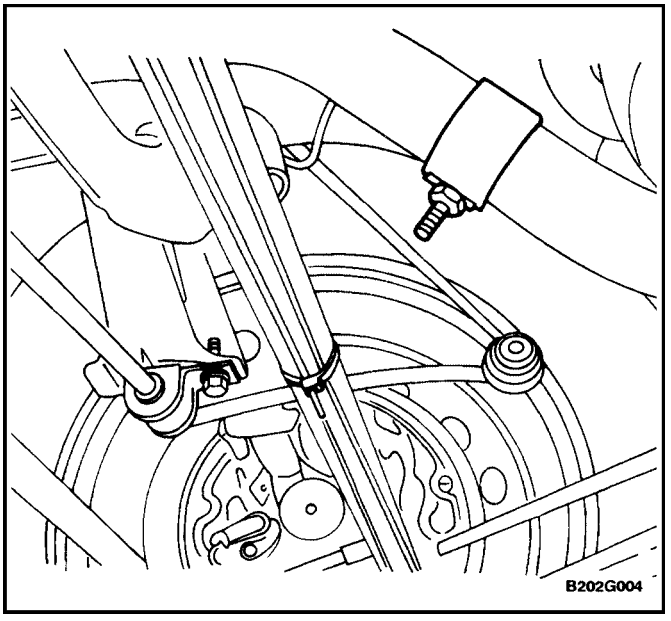

4. Place the rear muffler pipe into the front muffler pipe.
5. Secure the rear muffler pipe to the front muffler pipe with the holding clamp, the washer, and the nut.

Tighten

Tighten the front muffler pipe–to–rear muffler pipe holding clamp nut to 70 N•m (52 lb–ft).

GENERAL DESCRIPTION AND SYSTEM OPERATION

EXHAUST SYSTEM

Notice : When you are inspecting or replacing exhaust system components, make sure there is adequate clearance from all points on the underbody to avoid possible overheating of the floor pan and possible damage to the passenger compartment insulation and trim materials.

CAUTION : Check the complete exhaust system, the nearby body areas, and the trunk lid for broken, damaged, missing or mispositioned parts, open seams, holes, loose connections or other deterioration which could permit exhaust fumes to seep into the trunk or passenger compartment. Dust or water in the trunk may be an indication of a problem in one of these areas. Any defects should be corrected immediately.

MUFFLER

Aside from the exhaust manifold connection and the rear muffler–to–front muffler joint, the exhaust system uses a flange and seal joint design. The exhaust manifold– to–exhaust pipe connection is of the flex joint type.If holes, open seams or any deterioration is discovered upon inspection of the front muffler and pipe assembly, the complete assembly should be replaced. The same procedure is applicable to the rear muffler assembly.

Heat shields in the front and the rear muffler assembly positions as well as in the catalytic converter, protect the vehicle and the environment from high temperatures developed from the exhaust system.

CATALYTIC CONVERTERS

Notice : When jacking or lifting the vehicle from the body side rails, be certain the lift pads do not contact the catalytic converter, as this could damage the catalytic converter.

Notice : The catalytic converter requires the use of unleaded fuel only, or damage to the catalyst will result.

The catalytic converter is an emission control device added to the exhaust system to reduce pollutants escaping from the exhaust pipes.

The oxidation catalyst is coated with a catalytic material containing platinum and palladium, which reduces levels of hydrocarbon (HC) and carbon monoxide (CO) from the exhaust gas. The three–way catalyst has coatings which contain platinum and rhodium, which additionally lower the levels of oxides of nitrogen (NOx).

1999 Daewoo Nubira ESTATE L4-2.0L DOHC D-TEC MFI Service and Repair

Engine Removal Procedure

1. Remove the fuel pump fuse.
2. Start the engine. After it stalls, crank the engine for 10 seconds to rid the fuel system of fuel pressure.
3. Remove the hood.
4. Drain the engine oil.
5. Disconnect the negative battery cable.
6. Discharge the air conditioning system, if equipped. 7. Disconnect the intake air temperature sensor connector.
8. Remove the air intake tube from the throttle body and air filter housing.
9. Disconnect the breather tubes from the valve cover.
10. Remove the right front wheel.
11. Remove the right front splash shield.
12. Remove the accessory drive belt.
13. Drain the engine coolant.
14. Remove the cooling system radiator and the engine cooling fans.
15. Disconnect the upper radiator hose from the thermostat housing.
16. Disconnect the power steering return hose from the power steering pump.
17. Disconnect the power steering pressure hose from the power steering pump.
18. Disconnect the electrical connector at the electronic ignition system (EI System) ignition coil and the powertrain control module (PCM) /engine control module (ECM) ground terminal and at the starter motor.
19. Disconnect the pre-converter oxygen sensor connector.
20. Disconnect the idle air control valve connector.
21. Disconnect the throttle position sensor connector.
22. Disconnect the engine coolant temperature sensor connector.
23. Disconnect the coolant temperature sensor connector.
24. Disconnect the generator voltage regulator connector and power lead.
25. Disconnect all of the necessary vacuum lines including the brake booster vacuum hose.
26. Disconnect the fuel return line at the fuel pressure regulator.
27. Disconnect the fuel feed line at the fuel rail.
28. Remove the fuel rail and injector channel cover as an assembly.
29. Disconnect the throttle cable from the throttle body and the intake manifold bracket.
30. Disconnect the coolant hose at the throttle body
31. Disconnect the heater outlet hose at the coolant pipe.
32. Disconnect the coolant bypass hose from the cylinder head.
33. Disconnect the surge tank coolant hose from the coolant pipe.
34. Disconnect the lower radiator hose from the coolant pipe.
35. Disconnect the starter solenoid "S" terminal wire and power lead.
36. Remove the A/C compressor.
37. Remove the auxiliary catalytic converter upper flange nuts from the exhaust manifold and the bolts from the support bracket.
38. Remove the front muffler pipe retaining nuts from the main catalytic converter.
39. Remove both catalytic converters.
40. Remove the crankshaft pulley bolts.
41. Remove the crankshaft pulley
42. Disconnect the vacuum lines at the evaporative emission canister purge solenoid.
43. Disconnect the electrical connector at the evaporative emission canister purge solenoid.

44. Disconnect the electrical connector at the oil pressure switch.
45. Disconnect the crankshaft and camshaft position sensor connectors.
46. Disconnect the knock sensor.
47. Remove the transaxle torque converter bolts, if automatic transaxle equipped.
48. Remove the transmission/transaxle bell housing bolts and the oil pan flange bolts.
49. Support the transmission with a floor jack.
50. Install the engine lifting device.
51. Disconnect the right engine mount bracket from the engine mount by removing the retaining bolt.
52. Remove the right engine mount bracket from the engine block and frame mount.
53. Separate the engine block from the transmission. Remove the engine.

Installation Procedure

1. Install the engine into the engine compartment.
2. Align the engine alignment pins to the transmission.
3. Install the transmission/transaxle bell housing bolts. Tighten the transmission/transaxle bell housing bolts to 75 Nm (55 ft. lbs.).
4. Install the oil pan flange-to-transaxle bolts. Tighten the oil pan flange-to-transaxle bolts to 40 Nm (30 ft. lbs.).
5. Install the right engine mount to the engine block mount and the frame mount.
6. Install the right engine mount bracket retaining bolts and nuts. Tighten the right engine mount bracket retaining bolts and nuts to 60 Nm (44 ft. lbs.).
7. Remove the floor jack used for support of the transmission.
8. Remove the engine lifting device.
9. Install the transaxle torque converter bolts, if automatic transaxle equipped. Tighten the transaxle torque converter bolts to 60 Nm (44 ft. lbs.).
10. Connect the vacuum lines at the evaporative emission canister purge solenoid.
11. Connect the electrical connector to the evaporative emission canister purge solenoid.
12. Connect the oil pressure switch connector.
13. Install the crankshaft pulley.
14. Install the crankshaft pulley bolts. Tighten the crankshaft pulley bolts to 20 Nm (15 ft. lbs.) using a torque wrench.
15. Connect the crankshaft and camshaft position sensor connectors.
16. Install the catalytic converters. Tighten the front muffler pipe-to-main catalytic converter nuts to 30 Nm (22 ft. lbs.). Tighten the support bracket bolts to 40 Nm (30 ft. lbs.).
Tighten the auxiliary catalytic converter-to-exhaust manifold nuts to the catalytic converter to 40 Nm (30 ft. lbs.).
17. Connect the power steering pressure hose.
18. Connect the power steering return hose.
19. Install the A/C compressor, if equipped.
20. Install the accessory drive belt.
21. Install the right front splash shield.
22. Install the right front wheel.
23. Connect the fuel feed line to the fuel rail.
24. Connect the fuel return line to the fuel pressure regulator.
25. Install the fuel rail and injector channel cover as an assembly. Refer to Powertrain Management.
26. Connect all of the necessary vacuum lines including the brake booster vacuum hose.
27. Connect the pre-converter oxygen sensor connector.
28. Connect the starter solenoid "S" terminal wire and power lead.
29. Connect the generator voltage regulator connector.
30. Connect the coolant temperature sensor connector.

31. Connect the engine coolant temperature sensor connector.
32. Connect the throttle position sensor connector.
33. Connect the idle air control valve connector.
34. Connect the MAP sensor connector.
35. Connect the knock sensor.
36. Connect the electrical connector at the EI system ignition coil and the PCM/ECM ground terminal and at the starter motor.
37. Install the air intake tube between the throttle body and the air filter housing.
38. Connect the breather tubes to the valve cover.
39. Connect the intake air temperature sensor connector.
40. Install the cooling system radiator and the engine cooling fans.
41. Connect the lower radiator hose to the coolant pipe.
42. Connect the upper radiator hose to the thermostat housing.
43. Connect the heater inlet hose to the cylinder head.
44. Connect the heater outlet hose to the coolant pipe.
45. Connect the coolant surge tank hose to the coolant pipe.
46. Connect the coolant hose to the throttle body.
47. Connect the throttle cable to the throttle body and the intake manifold bracket.
48. Install the fuel pump fuse.
49. Connect the negative battery cable.
50. Refill the engine crankcase with engine oil.
51. Refill the engine coolant system.
52. Bleed the power steering system.
53. Refill the A/C refrigerant system, if equipped.
54. Install the hood.

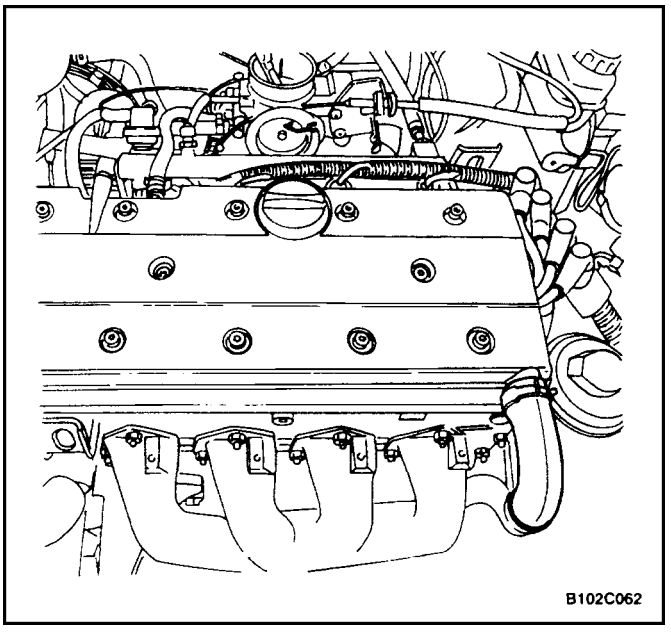

MAINTENANCE AND REPAIR

ON–VEHICLE SERVICE

VALVE COVER

Removal Procedure

1. Disconnect the negative battery cable.
2. Disconnect the breather tube from the valve cover.
3. Disconnect the camshaft position sensor.

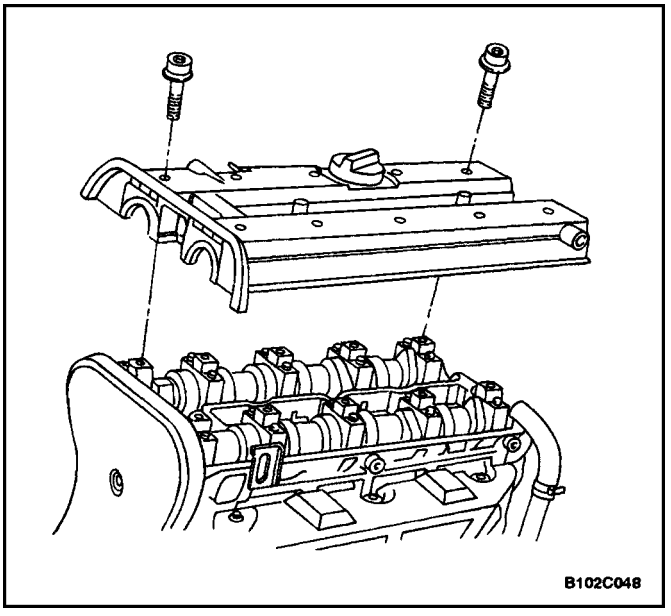

4. Disconnect all of the necessary vacuum lines.
5. Remove the spark plug cover bolts.
6. Remove the spark plug cover.
7. Disconnect the ignition wires from the spark plugs.
8. Remove the valve cover bolts.
9. Remove the valve cover washers.

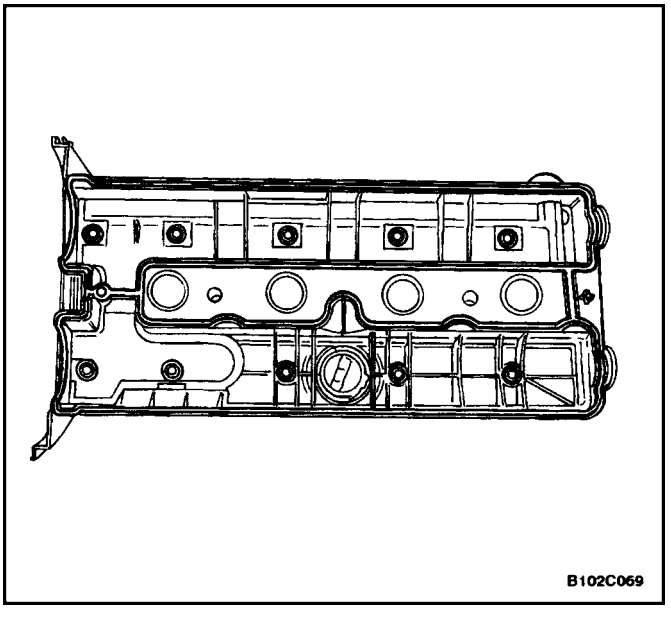

10. Remove the valve cover.
11. Remove the valve cover gasket from the valve cover.

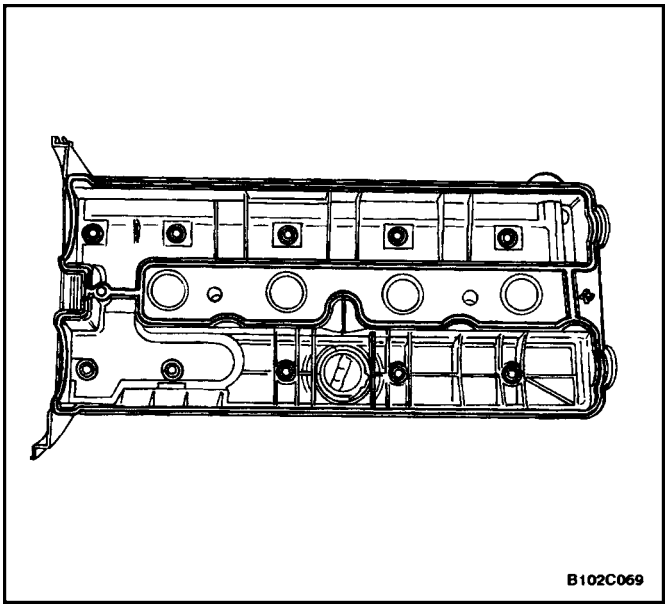

Installation Procedure

1. Apply a small amount of gasket sealant to the corners of the front camshaft caps and the top of the rear valve cover–to–cylinder head seal.
2. Install the new valve cover gasket to the valve cover.

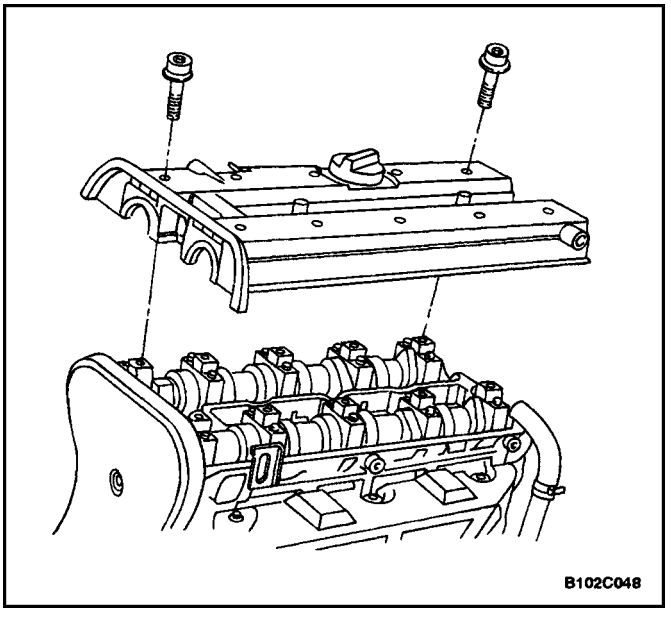

3. Install the valve cover.
4. Install the valve cover washers.
5. Install the valve cover bolts.

   Tighten

   Tighten the valve cover bolts to 8 N•m (71 lb–in).
6. Connect the camshaft position sensor.

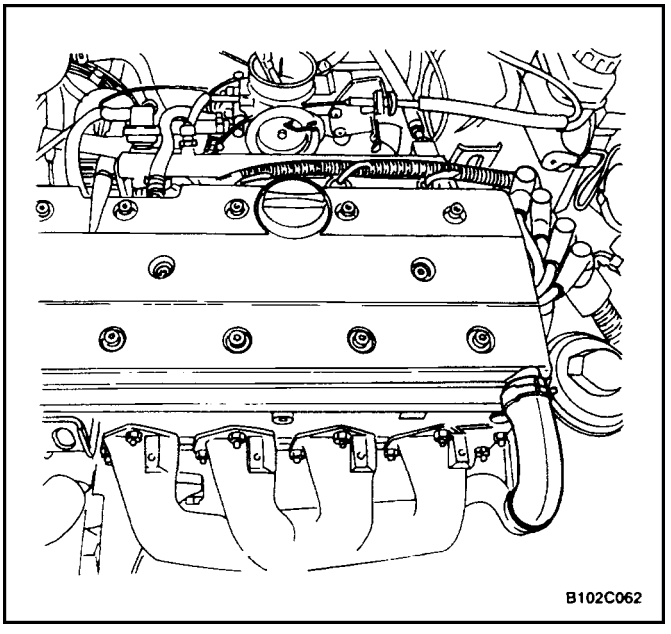

7. Connect the ignition wires to the spark plugs.
8. Install the spark plug cover.
9. Install the spark plug cover bolts.

   Tighten

   Tighten the spark plug cover bolts to 3 N•m (27 lb–in).
10. Connect all of the necessary vacuum lines.
11. Connect the breather tube to the valve cover.
12. Connect the negative battery cable.

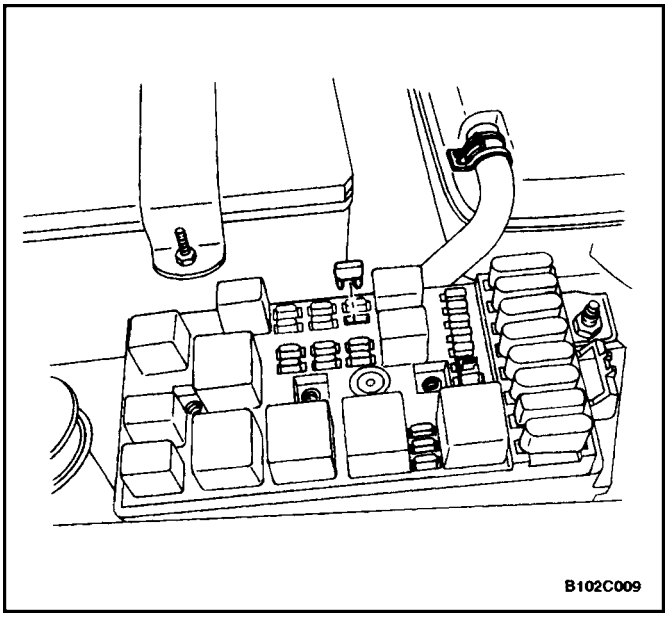
B102C009

CYLINDER HEAD AND GASKET

Tools Required

KM–470–B Angular Torque Gauge
J–28467–B Engine Assembly Lift Support

Removal Procedure

1. Remove the fuel pump fuse.
2. Start the engine. After it stalls, crank the engine for 10 seconds to rid the fuel system of fuel pressure.
3. Disconnect the negative battery cable.
4. Disconnect the powertrain control module (PCM)/engine control module (ECM) ground terminal.
5. Drain the engine coolant. Refer to *Section 1D, Engine Cooling.*

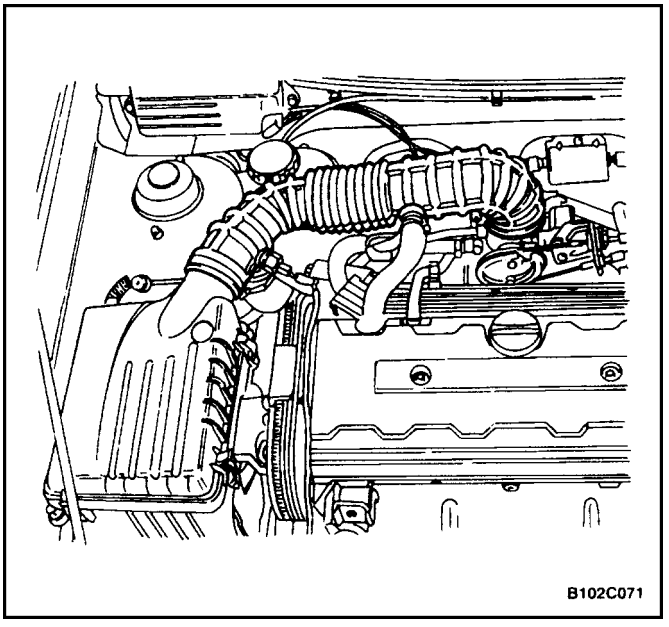
B102C071

6. Disconnect the intake air temperature sensor connector.
7. Disconnect the breather tube from the valve cover.
8. Disconnect the air intake tube from the throttle body.

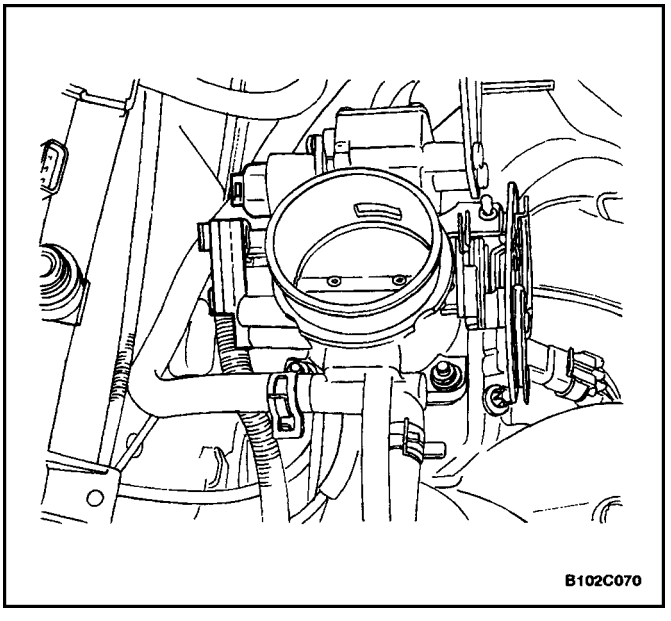
B102C070

9. Disconnect the electronic ignition system (EI system) ignition coil connector.
10. Disconnect the pre–converter oxygen sensor connector.
11. Disconnect the idle air control valve connector.
12. Disconnect the throttle position sensor connector.
13. Disconnect the engine coolant temperature sensor connector.
14. Disconnect the coolant temperature sensor connector.
15. Disconnect the camshaft position sensor.

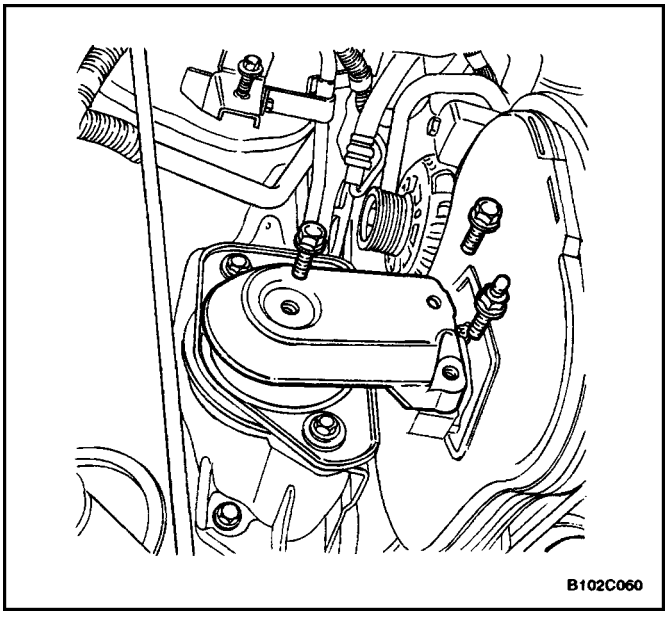

16. Remove the air filter housing bolts.
17. Remove the air filter housing.
18. Remove the right front wheel. Refer to *Section 2E, Tires and Wheels.*
19. Remove the right front splash shield.
20. Install the engine assembly lift support J–28467–B.
21. Remove the right engine mount bracket and bolts.

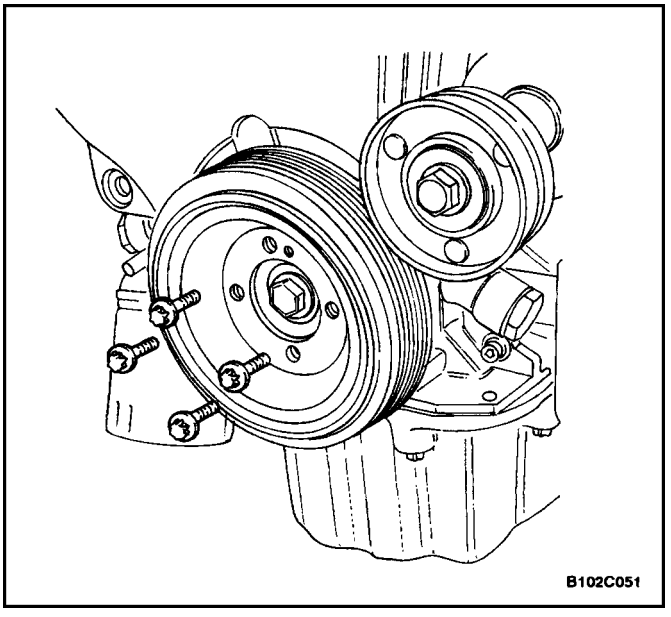

22. Disconnect the upper radiator hose at the thermostat housing.
23. Remove the serpentine accessory drive belt. Refer to *Section 6B, Power Steering Pump.*
24. Remove the crankshaft pulley bolts.
25. Remove the crankshaft pulley.

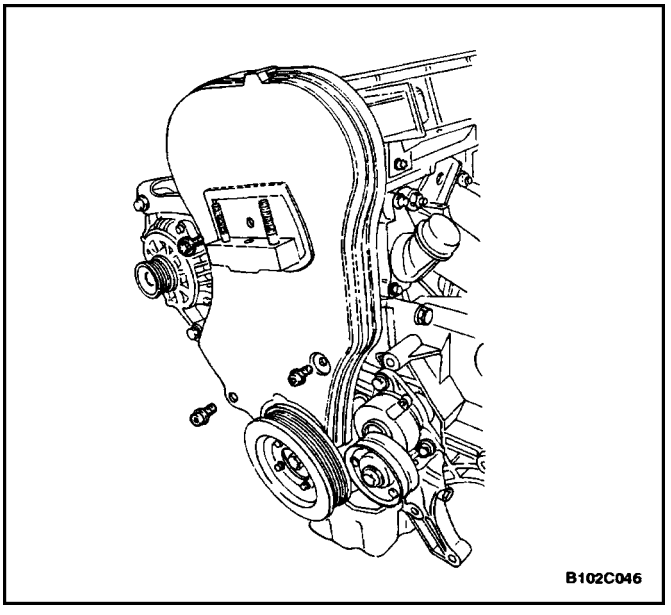

26. Remove the front timing belt cover bolts.
27. Remove the front timing belt cover.

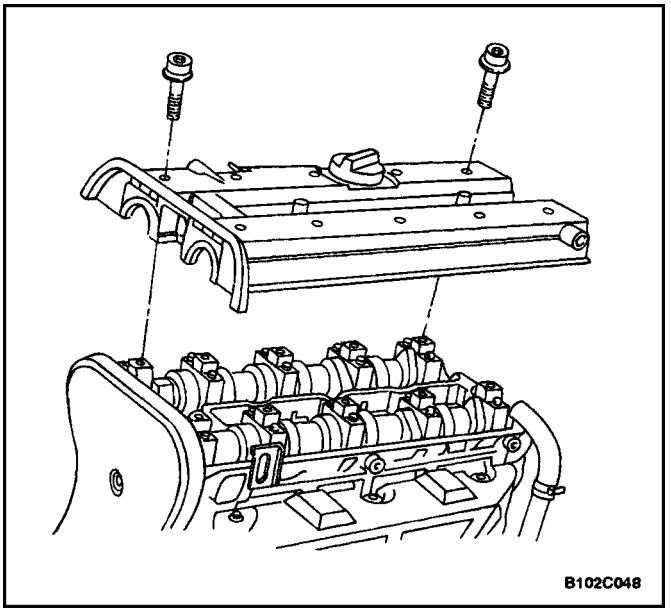
B102C048

28. Remove the timing belt. Refer to ”Timing Belt” in this section.
29. Disconnect the breather tube at the valve cover.
30. Remove the spark plug cover bolts.
31. Remove the spark plug cover.
32. Disconnect the ignition wires from the spark plugs.
33. Remove the valve cover nuts.
34. Remove the valve cover washers.
35. Remove the valve cover and the valve cover gasket.

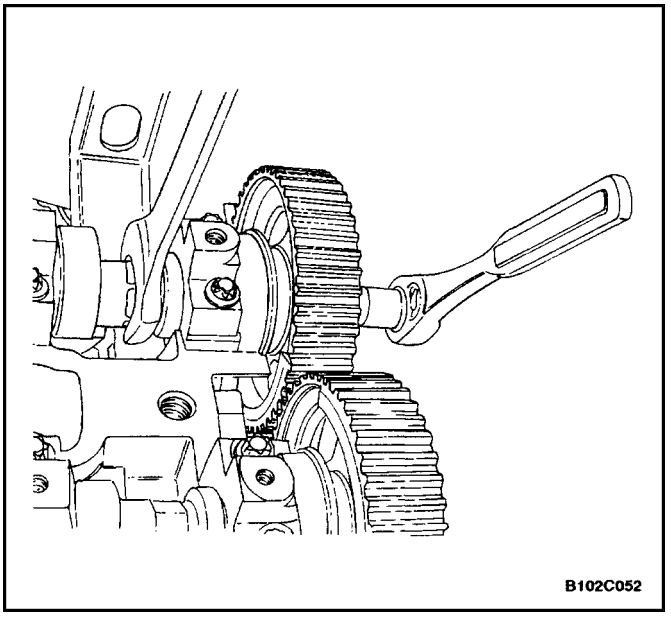
B102C052

Notice : Take extreme care to prevent any scratches, nicks or damage to the camshafts.

36. While holding the intake camshaft firmly in place, remove the intake camshaft gear bolt.
37. Remove the intake camshaft gear.
38. While holding the exhaust camshaft firmly in place, remove the exhaust camshaft gear bolt.
39. Remove the exhaust camshaft gear.

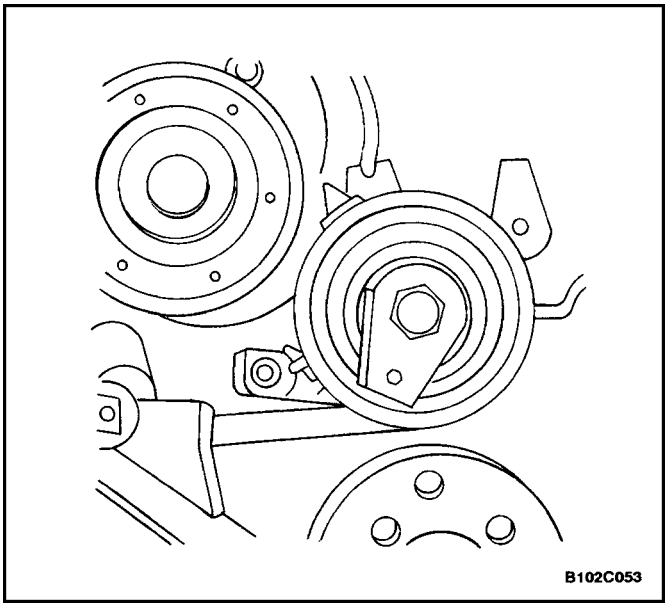
B102C053

40. Remove the timing belt automatic tensioner bolts.
41. Remove the timing belt automatic tensioner.

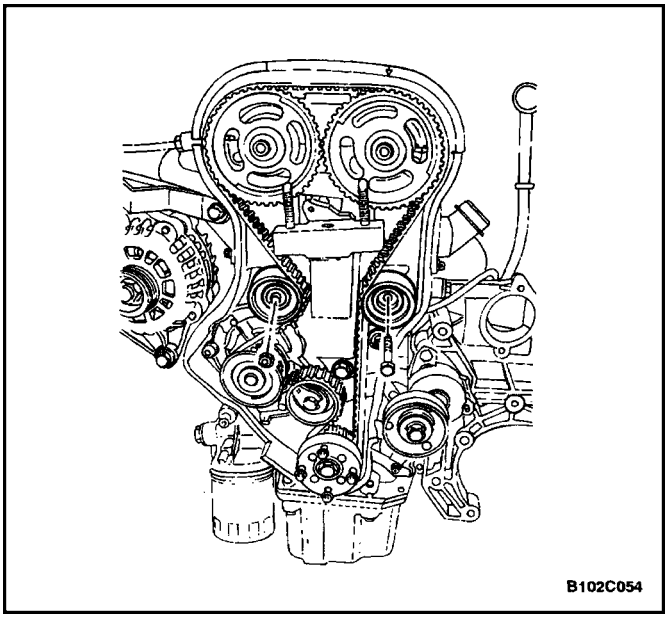

42. Remove the timing belt idler pulley bolt and nut.
43. Remove the timing belt idler pulleys.
44. Remove the engine mount bolts.
45. Remove the engine mount.

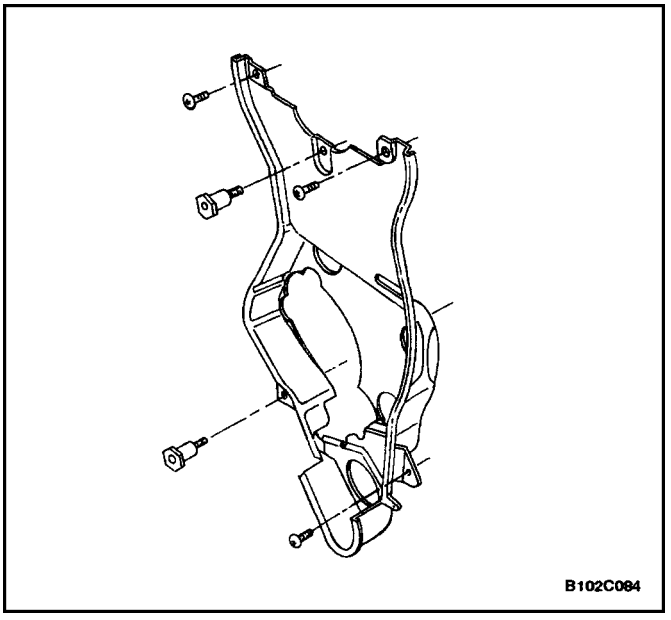

46. Remove the rear timing belt cover bolts.
47. Remove the rear timing belt cover.

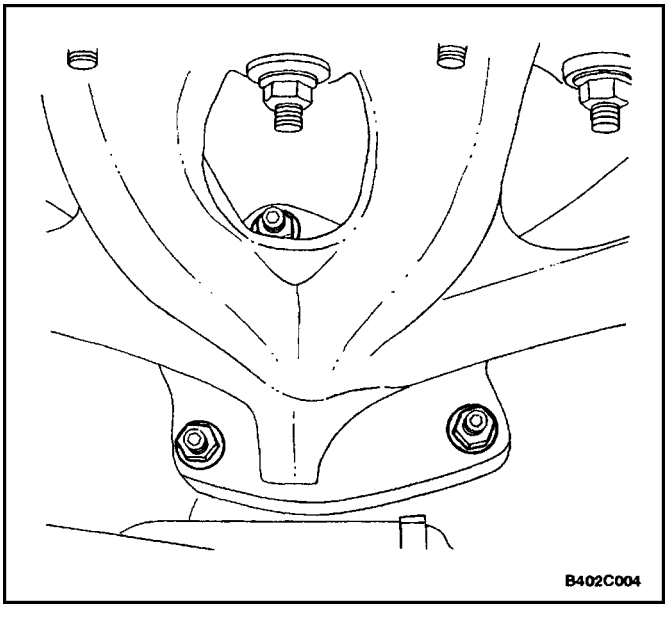

48. Remove the auxiliary catalytic converter nuts at the exhaust manifold.
49. Disconnect all of the necessary vacuum hoses.

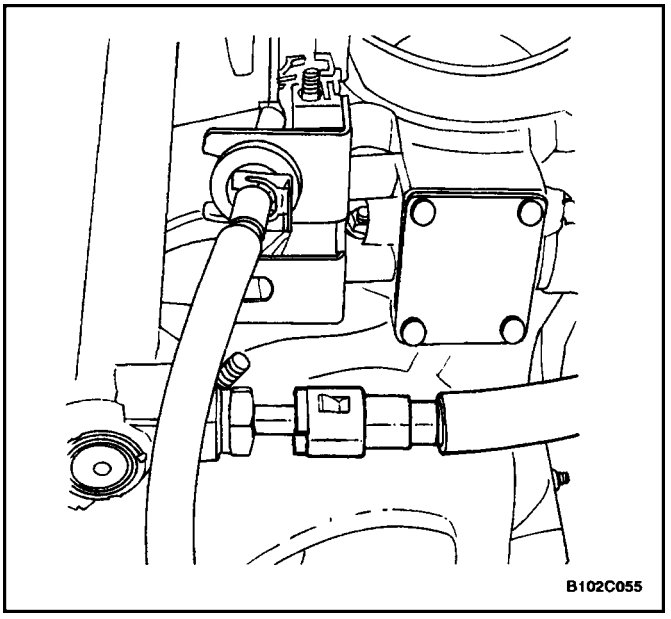
B102C055

50. Disconnect the fuel return line at the fuel pressure regulator.
51. Disconnect the fuel feed line at the fuel rail.
52. Remove the generator adjusting bracket retaining bolt and the bracket.
53. Disconnect the coolant hose at the rear cylinder head and ignition coil exhaust gas recirculation (EGR) bracket.
54. Disconnect the surge tank coolant hose at the throttle body.
55. Remove the fuel rail assembly. Refer to*Section 1F, Engine Controls.*

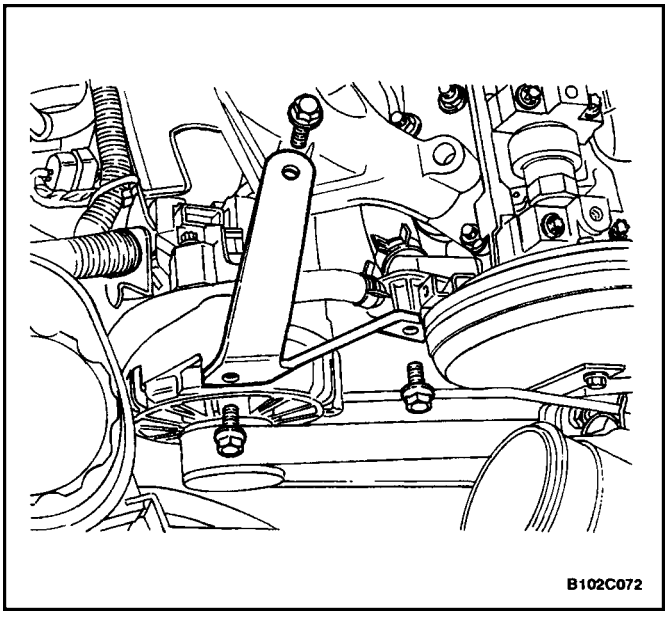
B102C072

56. Remove the generator–to–intake manifold support bracket bolts at the cylinder head and the intake manifold.
57. Remove the generator support bracket.
58. Remove the intake manifold–to–generator strap bracket bolt and loosen the bolt on the generator.
59. Move the strap clear of the intake manifold.
60. Remove the evaporative emission canister purge solenoid bracket bolt and move the bracket clear.

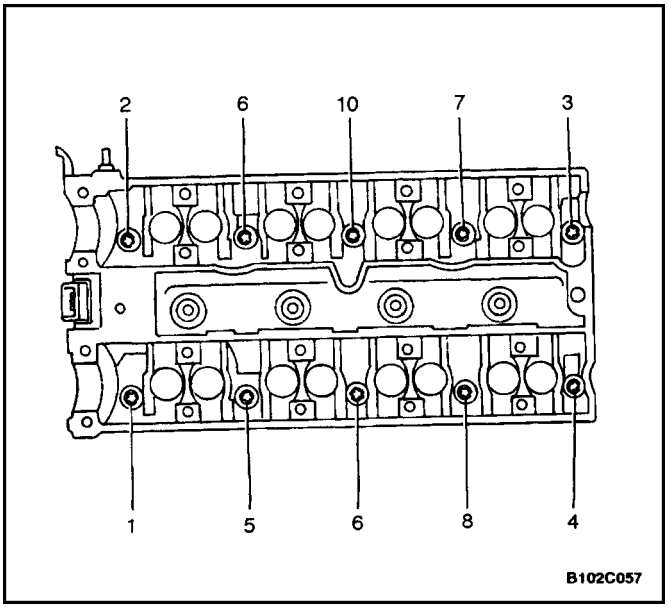

B102C057

61. Disconnect the throttle cable at the throttle body and the intake manifold.
62. Loosen all of the cylinder head bolts gradually and in the sequence shown.
63. Remove the cylinder head bolts.
64. Remove the cylinder head with the intake manifold and the exhaust manifold attached.

Notice : Prevent any engine oil or coolant from entering the cylinders when removing the cylinder head.

65. Remove the cylinder head gasket.

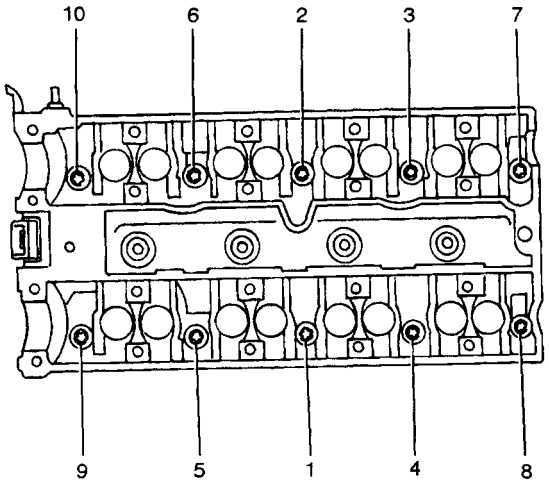

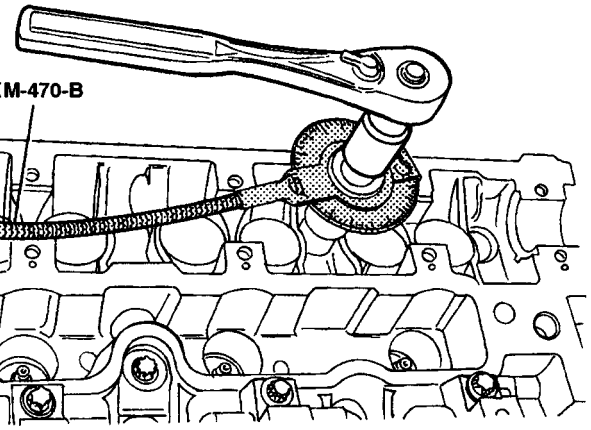

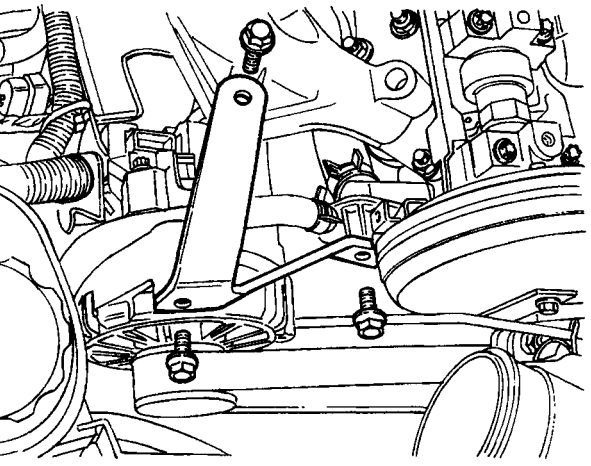

Cleaning Procedure

1. Clean the gasket surfaces of the cylinder head and the engine block.
2. Make sure the gasket surfaces of the cylinder head and the engine block are free of nicks and heavy scratches.
3. Clean the cylinder head bolts.
4. Inspect the cylinder head for warpage. Refer to ”Cylinder Head and Valve Train Components” in this section.

Installation Procedure

1. Install the cylinder head gasket.
2. Install the cylinder head with the intake manifold and the exhaust manifold attached.
3. Install the cylinder head bolts.
4. Tighten the cylinder head bolts gradually and in the sequence shown.

Tighten

Tighten the cylinder head bolts to 25 N•m (18 lb–ft) and turn the bolts another 3 turns of 90 degrees using the angular torque gauge KM–470–B.

5. Connect the throttle cable at the throttle body and the intake manifold.
6. Install the generator–to–intake manifold support bracket.
7. Install the intake generator–to–manifold support bracket bolts.

Tighten

Tighten the generator–to–intake manifold support bracket bolts to the intake manifold to 35 N•m (26 lb–ft).

8. Install the intake manifold support bracket bolt to the generator.

Tighten

Tighten the intakemanifold support bracket bolt at the generator to 20 N•m (15 lb–ft).

9. Connect the surge tank coolant hose at the throttle body.
10. Connect the coolant hose to the rear cylinder head and ignition coil EGR bracket.

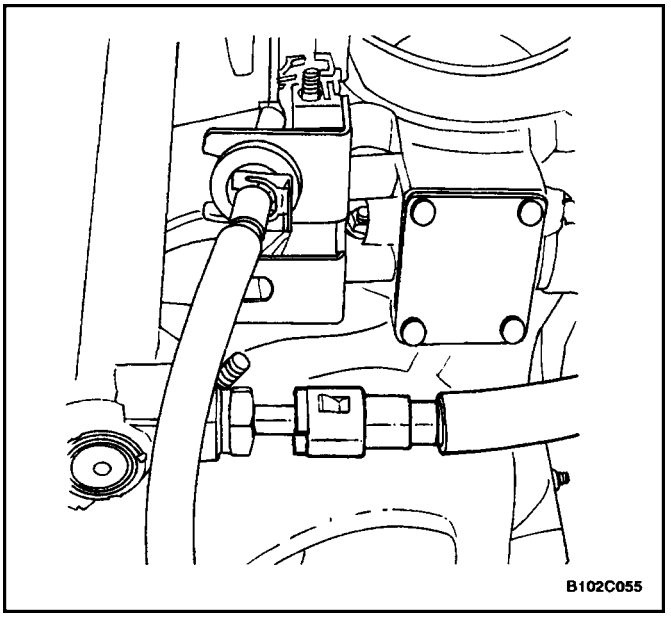
B102C055

11. Connect the fuel feed line at the fuel rail.
12. Connect the fuel return line at the fuel rail.
13. Connect all of the necessary vacuum hoses.
14. Install the fuel rail assembly. Refer to *Section 1F, Engine Controls (DOHC).*

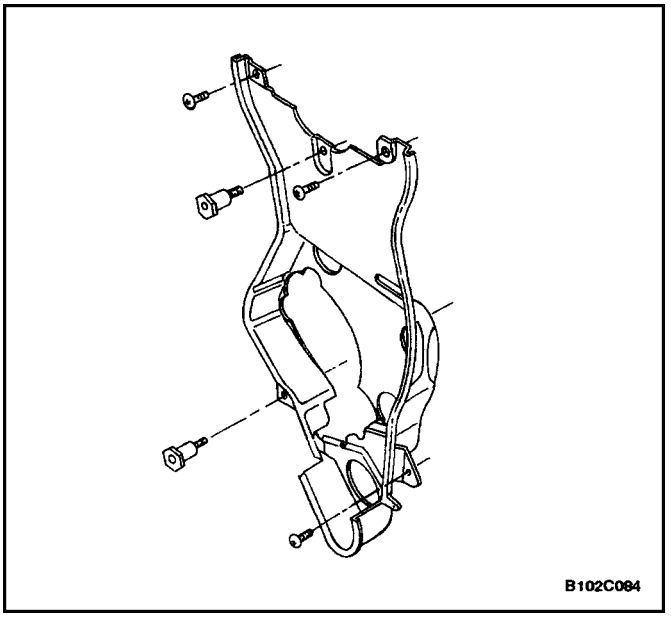
B102C084

15. Install the auxiliary catalytic converter nuts at the exhaust manifold flange.

Tighten

Tighten the auxiliary catalytic converter–to–exhaust manifold nuts to 40 N•m (30 lb–ft).

16. Install the rear timing belt cover.
17. Install the rear timing belt cover bolts.

Tighten

Tighten the rear timing belt cover bolts to 6 N•m (53 lb–in).

18. Install the engine mount and retaining bolts.

Tighten

Tighten the engine mount retaining bolts to 60 N·m (44 lb–ft).

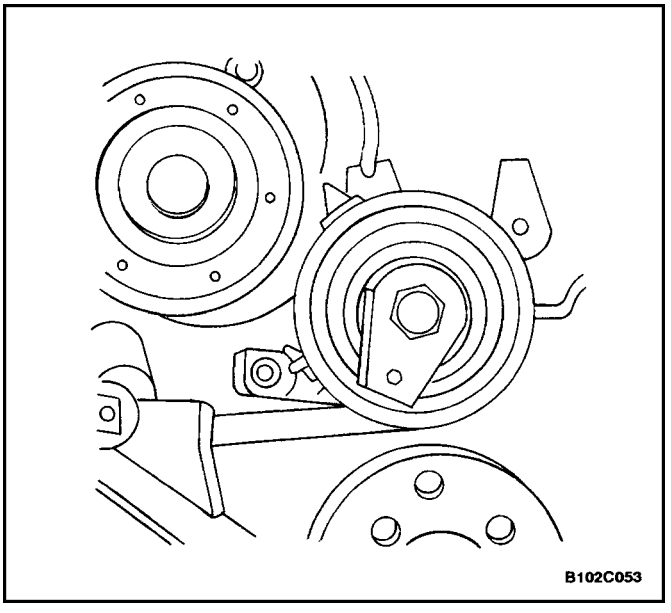
B102C053

19. Install the timing belt automatic tensioner.
20. Install the timing belt automatic tensioner bolt.

Tighten

Tighten the timing belt automatic tensioner bolts to 25 N•m (18 lb–ft).

21. Install the timing belt idler pulleys.
22. Install the timing belt idler pulley nuts.

Tighten

Tighten the timing belt idler pulley bolt to 25 N•m (18 lb–ft).

Tighten

Tighten the timing belt idler pulley nut to 25 N•m (18 lb–ft).

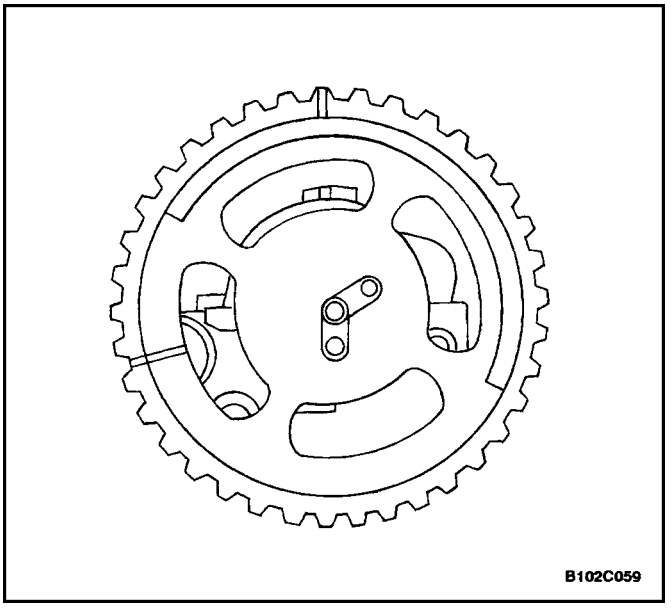

23. Install the camshaft gears with the timing marks at the front.
24. Insert the guide pin of the intake camshaft into the ”IN” bore.
25. Insert the guide pin of the exhaust camshaft into the ”EX” bore.

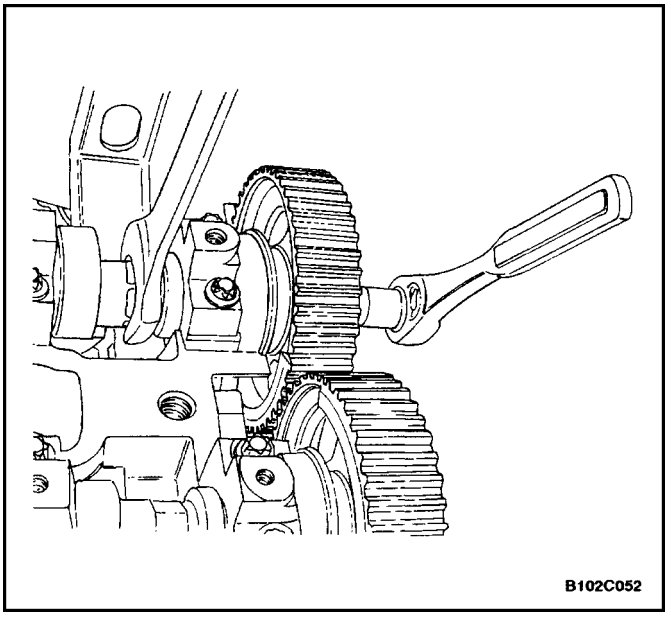

26. Install the camshaft gears by counterholding on the hex of the camshaft with an open–ended wrench.
27. Install the camshaft gear with a new bolt to the camshaft.

Tighten

Tighten the intake camshaft gear bolt to 50 N•m (37 lb–ft). Using the angular torque gauge KM–470–B, tighten the bolt another 60 degrees plus 15 degrees.

28. While holding the exhaust camshaft firmly in place, install the exhaust camshaft gear bolt.

Tighten

Tighten the exhaust camshaft gear bolt to 50 N•m (37 lb–ft). Using the angular torque gauge KM–470–B, tighten the bolt another 60 degrees plus 15 degrees.

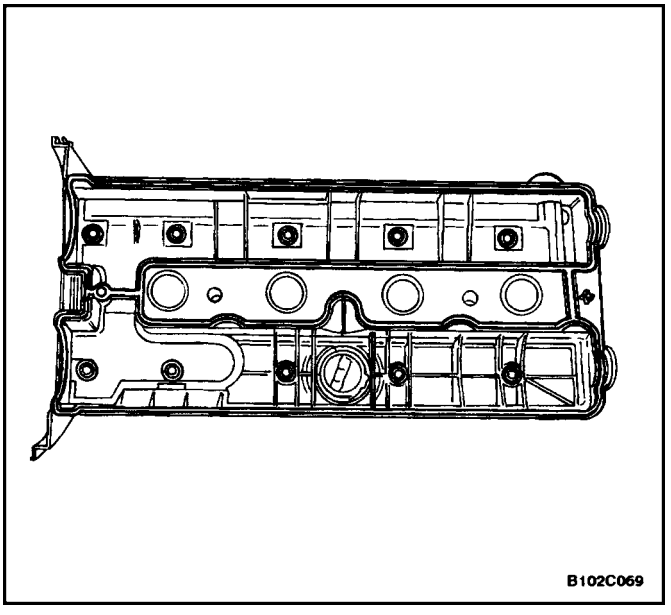

29. Apply a small amount of gasket sealant to the corners of the front camshaft caps and to the top of the rear valve cover–to–cylinder head seal.
30. Install the valve cover and the valve cover gasket.
31. Install the valve cover washers.
32. Install the valve cover bolts.

Tighten

Tighten the valve cover bolts to 8 N·m (71 lb–in).

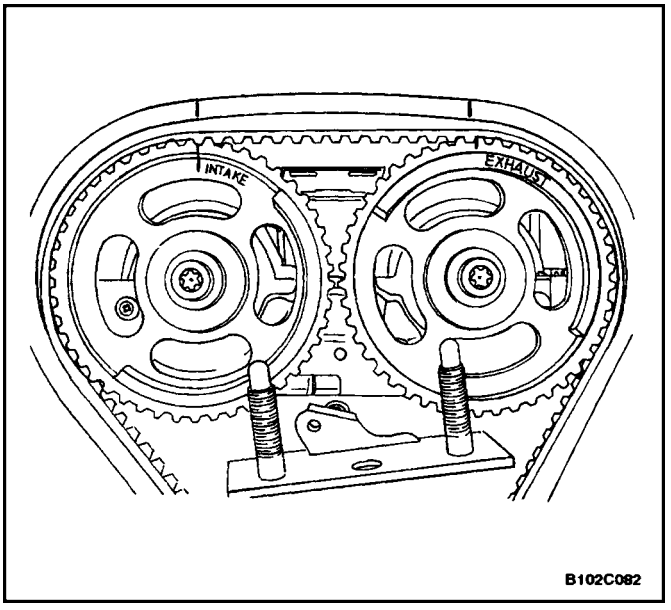

33. Connect the ignition wires to the spark plugs.
34. Install the spark plug cover.
35. Install the spark plug cover bolts.

Tighten

Tighten the spark plug cover bolts to 8 N•m (71 lb–in).

36. Connect the breather tube to the valve cover.
37. Align the timing marks on the camshaft gears to the notches on the valve cover, using the intake gear mark for the intake gear and the exhaust gear mark for the exhaust gear.

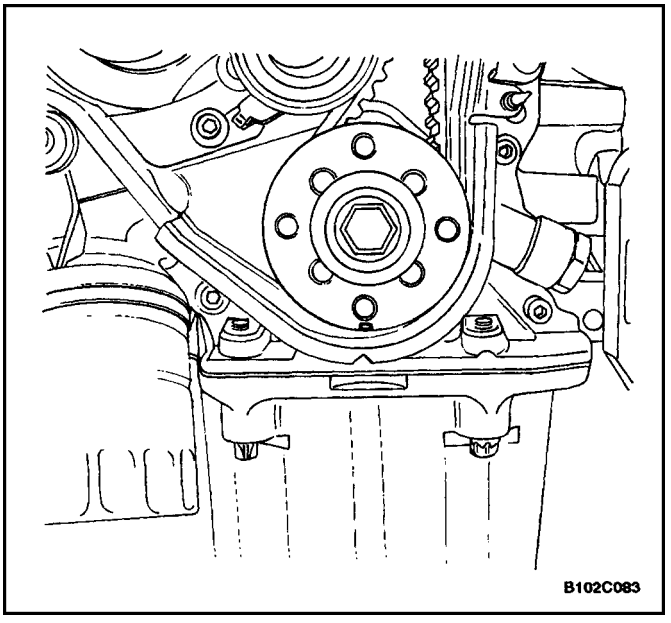

38. Align the mark on the crankshaft gear with the notch at the bottom of the rear timing belt cover.

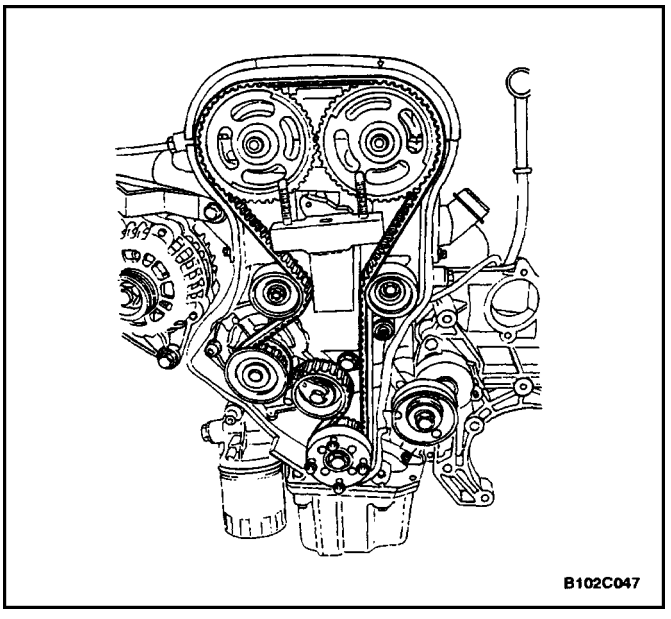

39. Install the timing belt.
40. Check and adjust the timing belt tension. Refer to ”Timing Belt Check and Adjust” in this section.

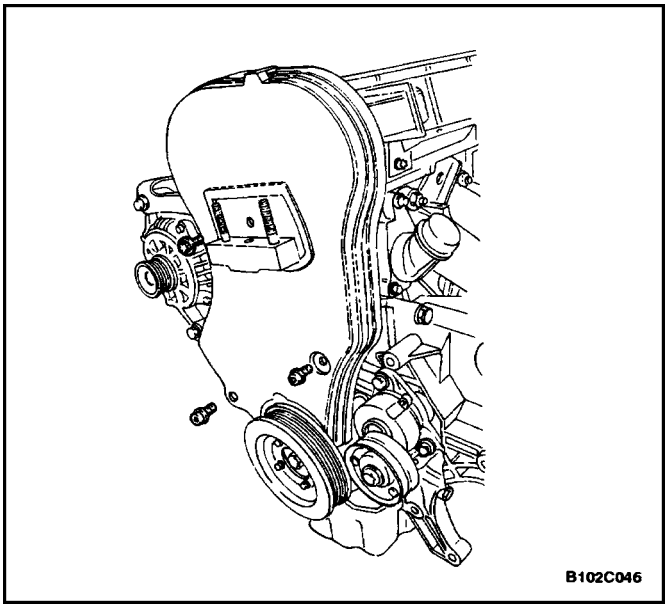

41. Install the front timing belt cover.
42. Install the front timing belt cover bolts.

Tighten

Tighten the upper and lower front timing belt cover bolts to 6 N•m (53 lb–in).

43. Install the crankshaft pulley.
44. Install the crankshaft pulley bolts.

Tighten

Tighten the crankshaft pulley bolts to 20 N•m (15 lb–ft).

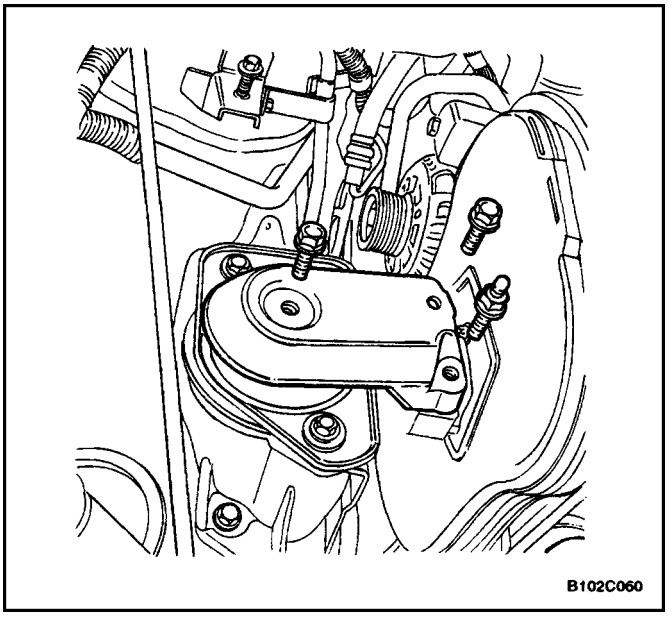

45. Install the right engine mount bracket and retaining bolts.

Tighten

Tighten the right engine mount bracket retaining bolts to 60 N•m (44 lb–ft).

46. Remove the engine assembly lift support J–28467–B.
47. Install the serpentine accessory drive belt. Refer to *Section 6B, Power Steering Pump.*
48. Connect the upper radiator hose to the thermostat housing.
49. Install the right front splash shield.
50. Install the right front wheel. Refer to *Section 2E, Tires and Wheels.*

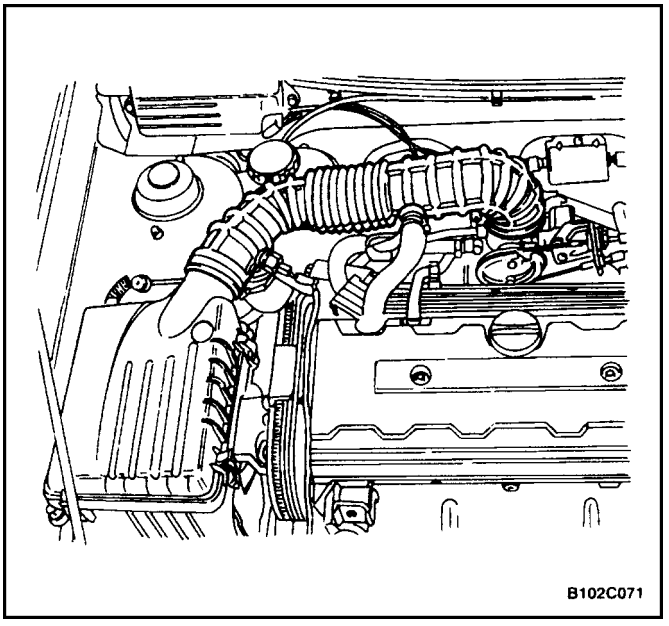

51. Install the air filter housing.
52. Install the air filter housing bolts.

Tighten

Tighten the air filter housing bolts to 8 N•m (71 lb–in).

53. Connect the air intake tube to the throttle body.
54. Connect the breather tube to the valve cover.
55. Connect the intake air temperature sensor connector.
56. Connect the camshaft position sensor.

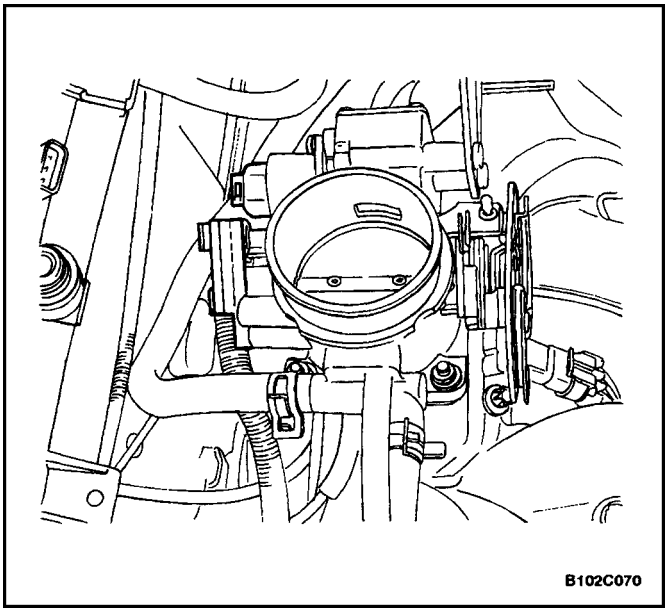
B102C070

57. Connect the coolant temperature sensor connector.
58. Connect the engine coolant temperature sensor connector.
59. Connect the idle air control valve connector.
60. Connect the throttle position sensor connector.
61. Install the evaporative emission canister purge solenoid bracket bolt.

Tighten

Tighten the evaporative emission canister purge solenoid bracket bolt to 5 N•m (44 lb–in).

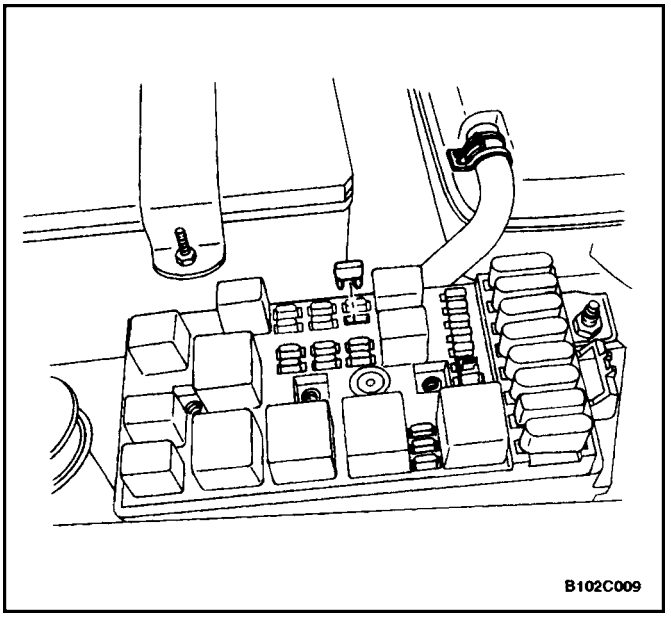
B102C009

62. Connect the EI system ignition coil connector.
63. Connect the pre–converter oxygen sensor connector.
64. Connect the PCM/ECM ground terminal.
65. Install the fuel pump fuse.
66. Connect the negative battery ground cable.
67. Refill the engine cooling system. Refer to *Section 1D, Engine Cooling.*

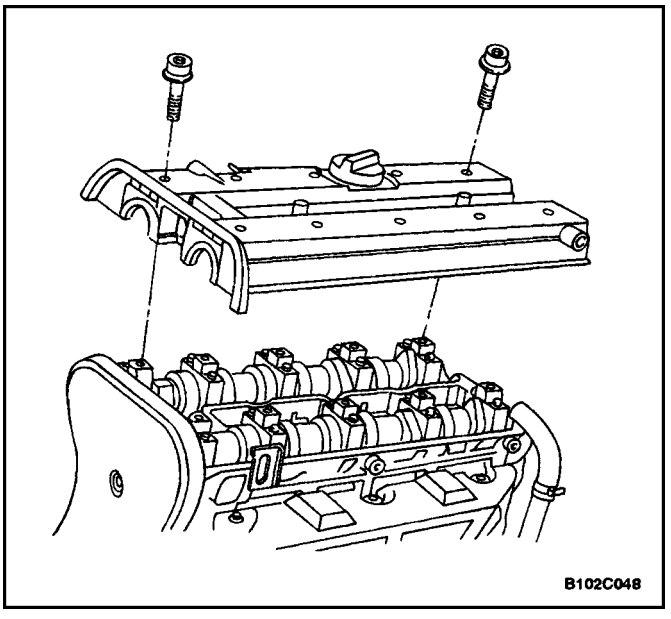
B102C048

CAMSHAFTS

Removal Procedure

1. Remove the timing belt. Refer to ”Timing Belt” in this section.
2. Disconnect the breather tube at the valve cover.
3. Disconnect the crankcase ventilation tube at the valve cover.
4. Remove the spark plug cover bolts.
5. Remove the spark plug cover.
6. Disconnect the ignition wires from the spark plugs.
7. Disconnect the camshaft position sensor.
8. Remove the valve cover bolts.
9. Remove the valve cover washers.
10. Remove the valve cover and the valve cover gasket.

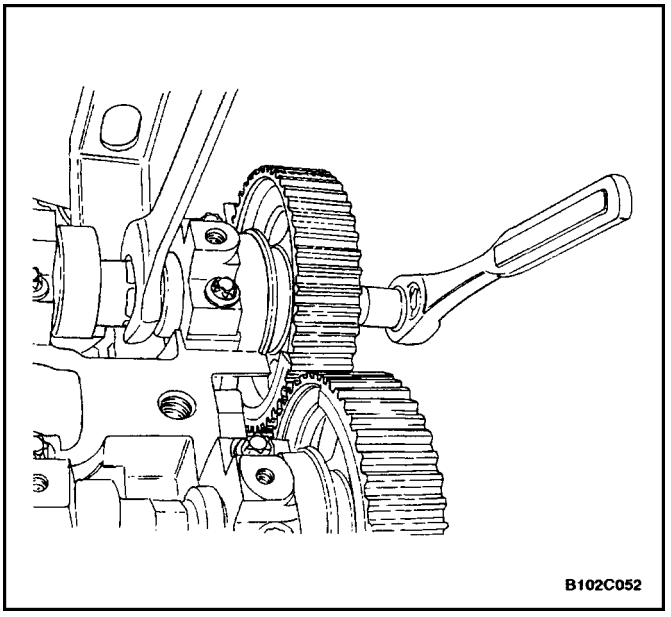
B102C052

Notice : Take extreme care to prevent any scratches, nicks or damage to the camshafts.

11. While holding the intake camshaft firmly in place, remove the intake camshaft gear bolt.
12. Remove the intake camshaft gear.
13. While holding the exhaust camshaft firmly in place, remove the exhaust camshaft gear bolt.
14. Remove the exhaust camshaft gear.

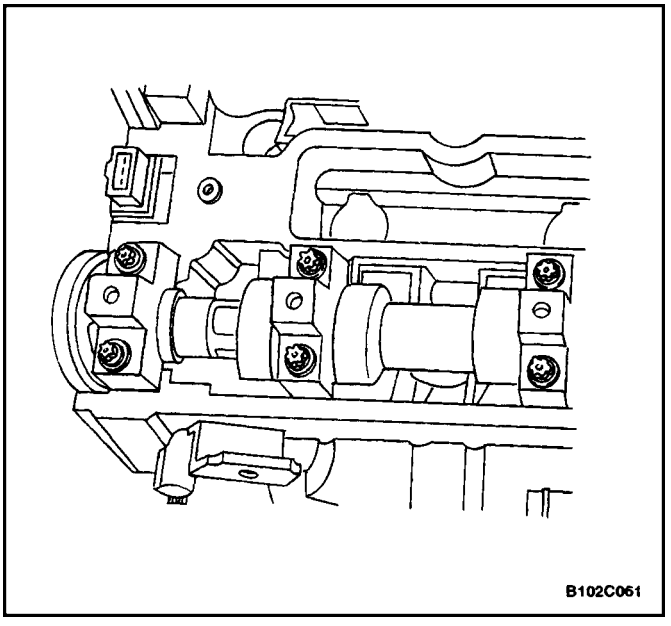
B102C061

15. Loosen the camshaft bearing cap bolts in stages of one–half to one turn.
16. Remove the camshaft bearing cap bolts from the cylinder head.
17. Remove the camshafts.
18. Remove the seal ring from the camshafts.

Important : The camshaft must detach evenly from the bearing seats in the front guide bearing.

19. Check the camshaft and bearing seats for wear and replace them if necessary.

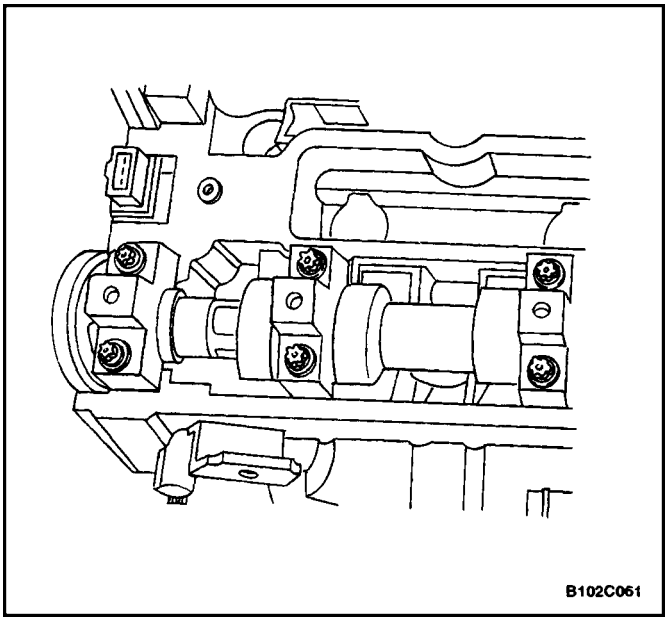
B102C061

Installation Procedure

Notice : Take extreme care to prevent any scratches, nicks or damage to the camshafts.

1. Lubricate the camshaft journals and the camshaft caps with engine oil.
2. Install the intake camshaft.
3. Install the intake camshaft bearing caps in their original positions.
4. Install the intake camshaft bearing cap bolts.
5. Install the exhaust camshaft.
6. Install the exhaust camshaft bearing caps in their original positions.
7. Install the exhaust camshaft bearing cap bolts.
8. Tighten the camshaft cap bolts gradually and in the sequence shown for each camshaft bearing cap.

Tighten

Tighten the camshaft cap bolts to 8 N•m (71 lb–in).

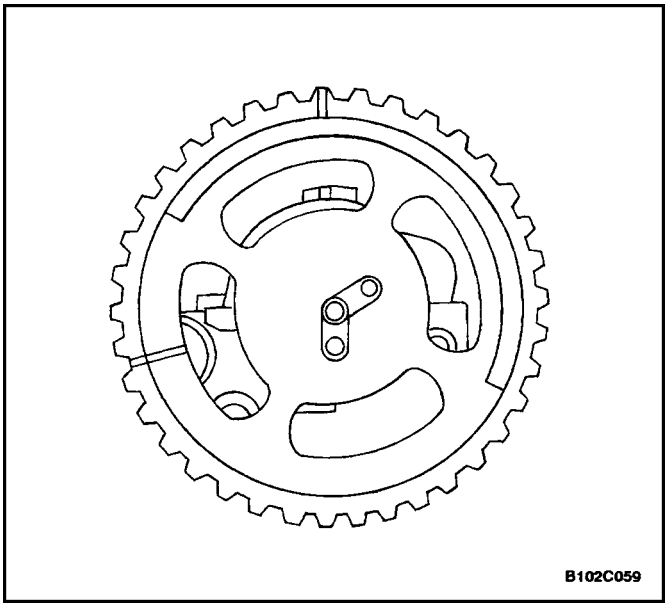
B102C059

9. Measure the intake camshaft end play and the exhaust camshaft end play. Refer to ”Engine Specifications” in this section.
10. Install the intake camshaft gear.
11. While holding the intake camshaft firmly in place, install the intake camshaft gear bolt.

Tighten

Tighten the intake camshaft gear bolt to 50 N•m (37 lb–ft). Using the angular torque gauge KM–470–B, tighten the bolt another 60 degrees plus 15 degrees.

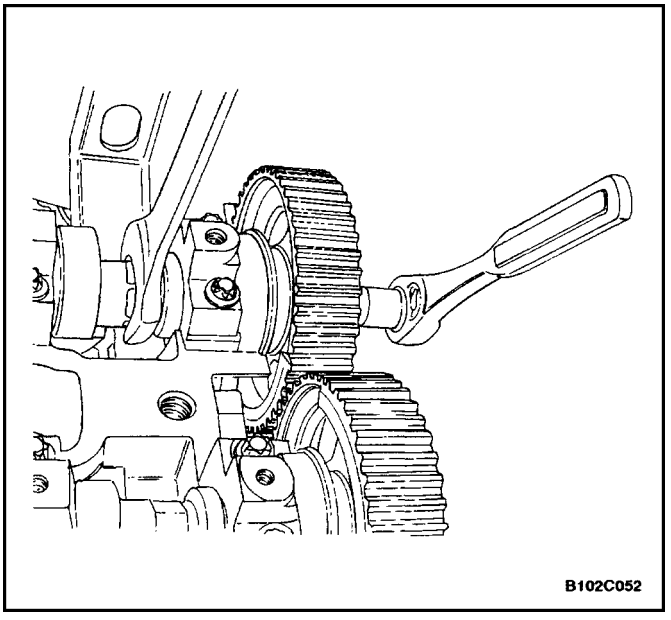
B102C052

12. Install the exhaust camshaft gear.
13. While holding the exhaust camshaft firmly in place, install the exhaust camshaft gear bolt.

Tighten

Tighten the exhaust camshaft gear bolt to 50 N•m (37 lb–ft). Using the angular torque gauge KM–470–B, tighten the bolt another 60 degrees plus 15 degrees.

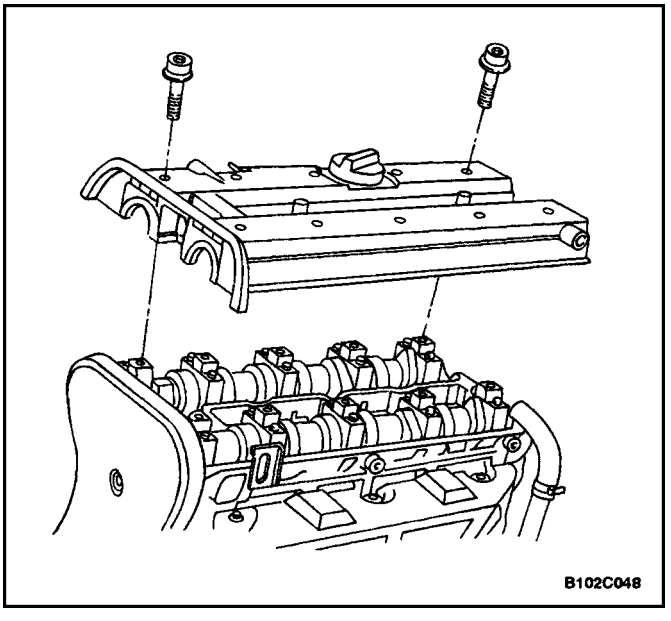
B102C048

14. Install the valve cover and the valve cover gasket.
15. Install the valve cover washers.
16. Install the valve cover bolts.

Tighten

Tighten the valve cover bolts to 8 N•m (71 lb–in).

17. Connect the camshaft position sensor.

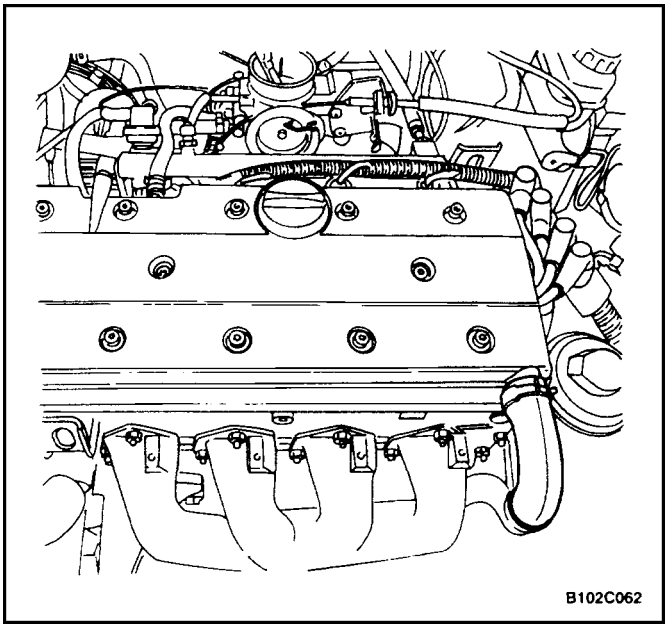

18. Connect the ignition wires to the spark plugs.
19. Install the spark plug cover.
20. Install the spark plug cover bolts.

Tighten

Tighten the spark plug cover bolts to 3 N•m (27 lb–in).

21. Connect the breather tube to the valve cover.
22. Connect the crankcase ventilation tube to the valve cover.
23. Install the timing belt. Refer to ”Timing Belt” in this section.

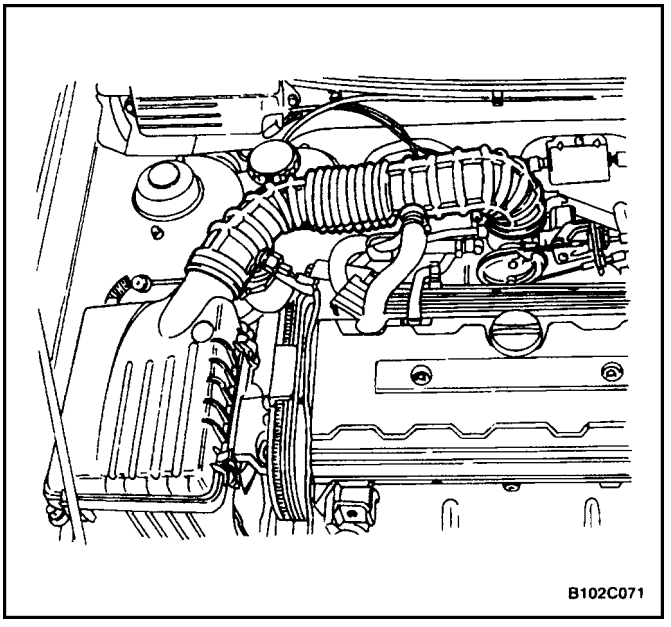

TIMING BELT CHECK AND ADJUST

Adjustment Procedure

1. Disconnect the negative battery cable.
2. Disconnect the intake air temperature sensor connector.
3. Remove the air intake tube from the throttle body.
4. Remove the breather tube from the valve cover.

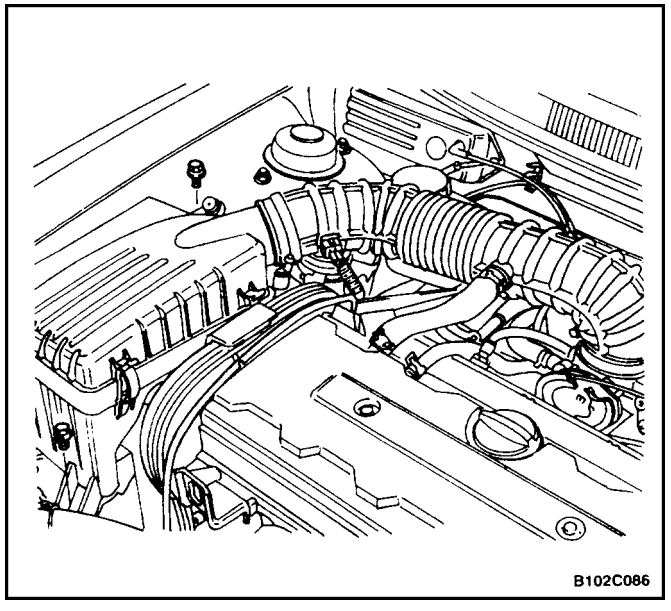

5. Remove the air filter housing bolts.
6. Remove the air filter housing.
7. Remove the right front wheel. Refer to *Section 2E, Tires and Wheels.*
8. Remove the right front splash shield.

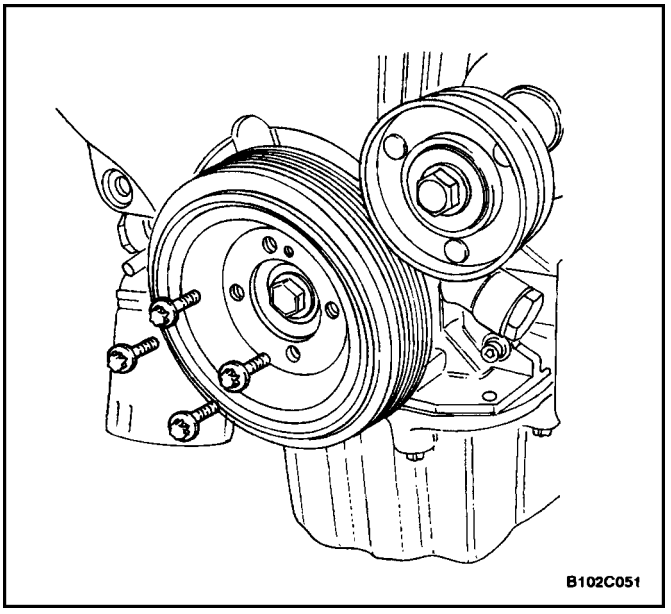

9. Remove the serpentine accessory drive belt. Refer to*Section 6B, Power Steering Pump.*
10. Remove the crankshaft pulley bolts.
11. Remove the crankshaft pulley.
12. Remove the right engine mount bracket. Refer to ”Engine Mount”in this section.

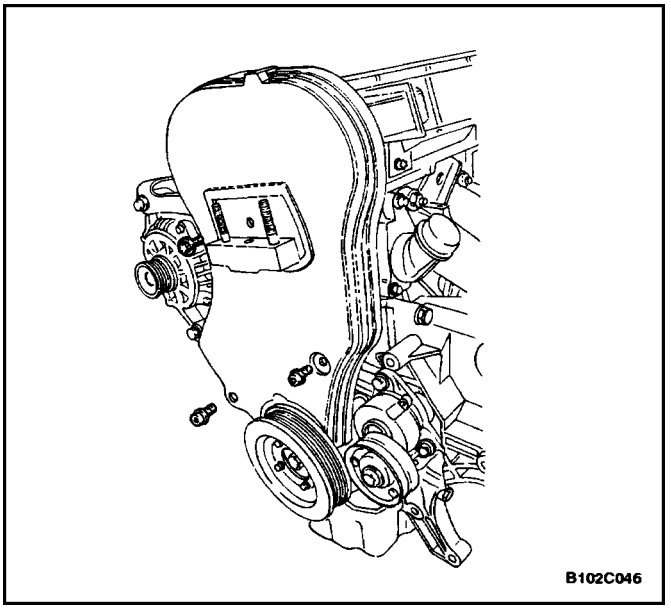

13. Remove the front timing belt cover bolts.
14. Remove the front timing belt cover.

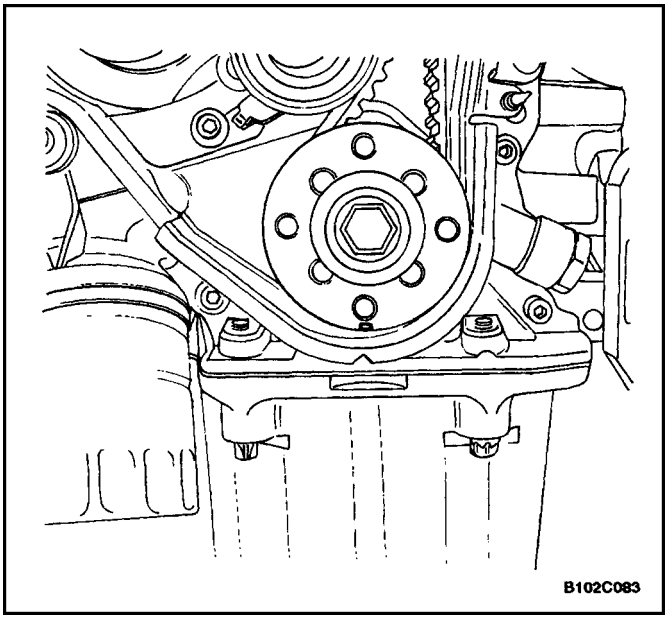

15. Rotate the crankshaft at least one full turn clockwise using the crankshaft gear bolt.
16. Align the mark on the crankshaft gear with the notch at the bottom of the rear timing belt cover.

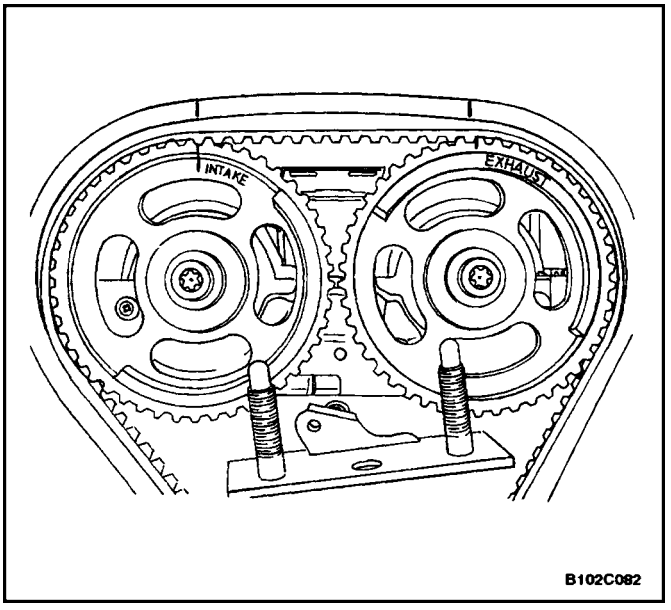

17. Align the camshaft gear timing marks. Use the exhaust gear mark for the exhaust gear and the intake gear mark for the intake gear, since the gears are interchangeable

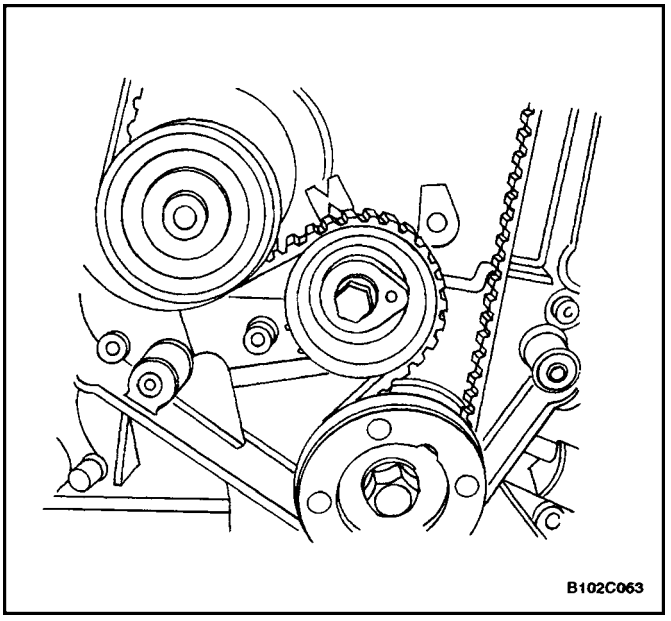

18. Loosen the automatic tensioner bolt. To relieve the belt tension, turn the hex–key tab counterclockwise.
19. Rotate the automatic tensioner hex–key tab clockwise until the adjust arm pointer of the timing belt automatic tensioner is aligned with the notch in the timing belt automatic tensioner bracket.

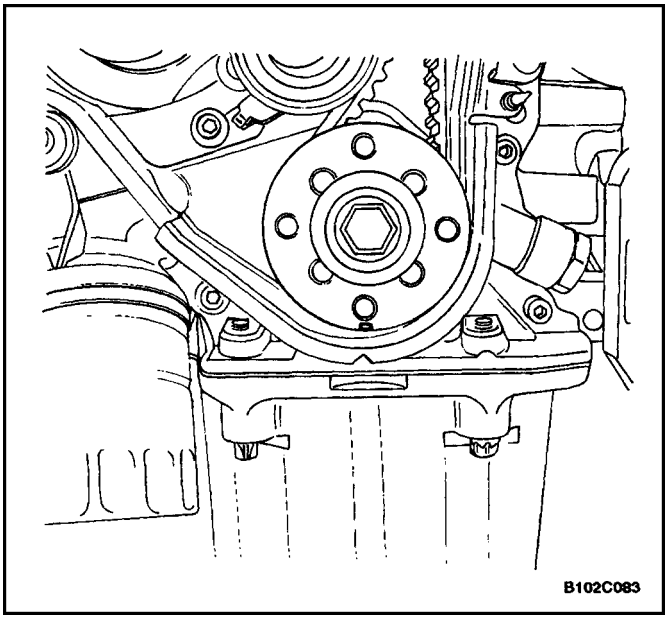

20. Tighten the automatic tensioner bolt.
21. Rotate the crankshaft two full turns clockwise using the crankshaft gear bolt.
22. Check the automatic tensioner pointer.

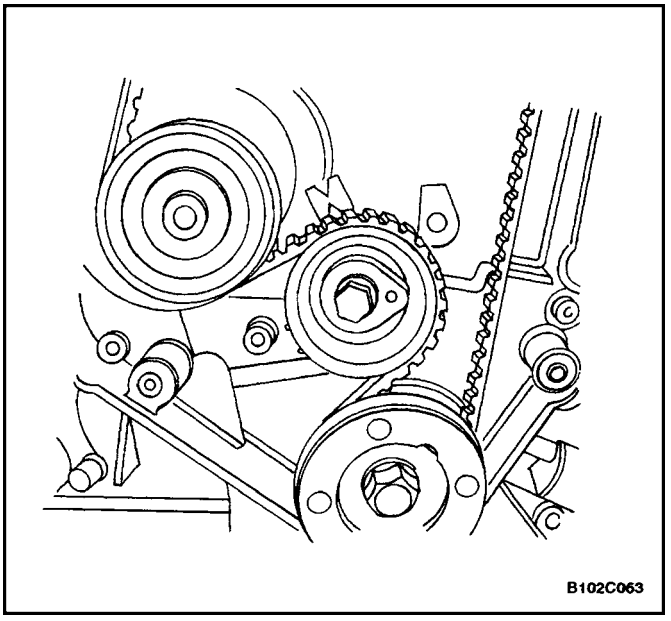

23. When the adjust arm pointer of the timing belt automatic tensioner is aligned with the notch on the timing belt automatic tensioner bracket, the belt is tensioned correctly.

Tighten

Tighten the automatic tensioner bolt to 25 N•m (18 lb–ft).

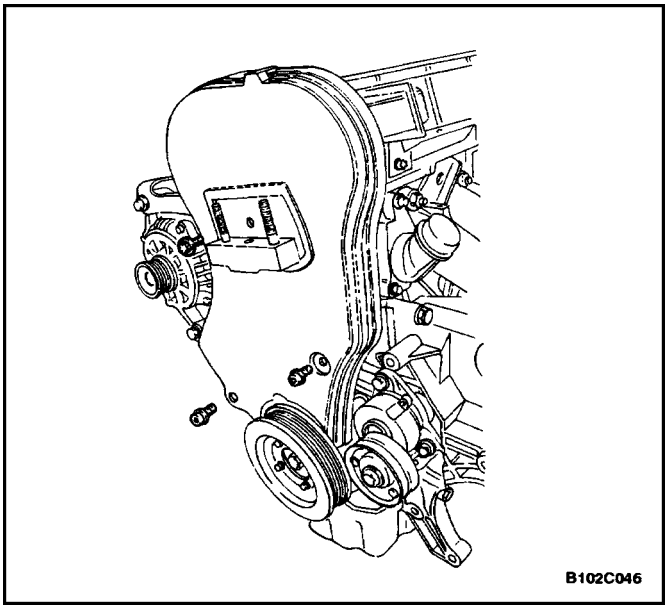

24. Install the front timing belt cover.
25. Install the front timing belt cover bolts.

Tighten

Tighten the front timing belt cover bolts to 6 N•m (53 lb–in).

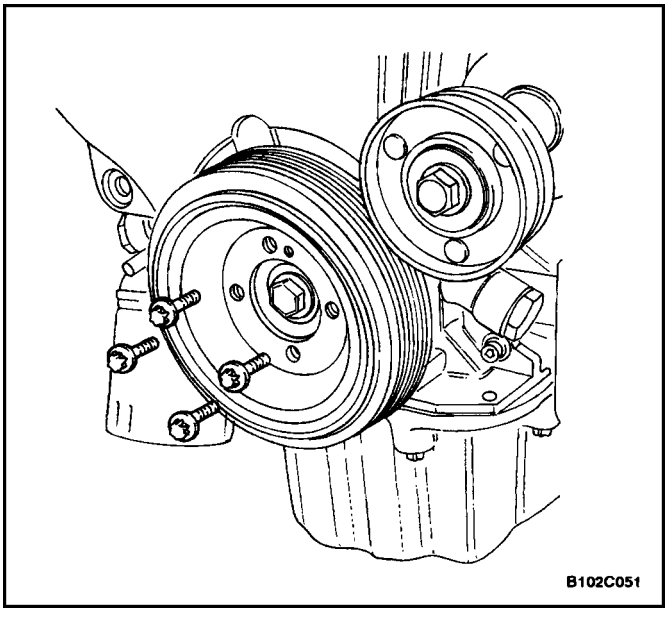

26. Install the crankshaft pulley.
27. Install the crankshaft pulley bolts.

Tighten

Tighten the crankshaft pulley bolt to 20 N•m (15 lb–ft).

28. Install the right engine mount bracket. Refer to”Engine Mount”in this section.
29. Install the serpentine accessory drive belt. Refer to *Section 6B, Power Steering Pump.*

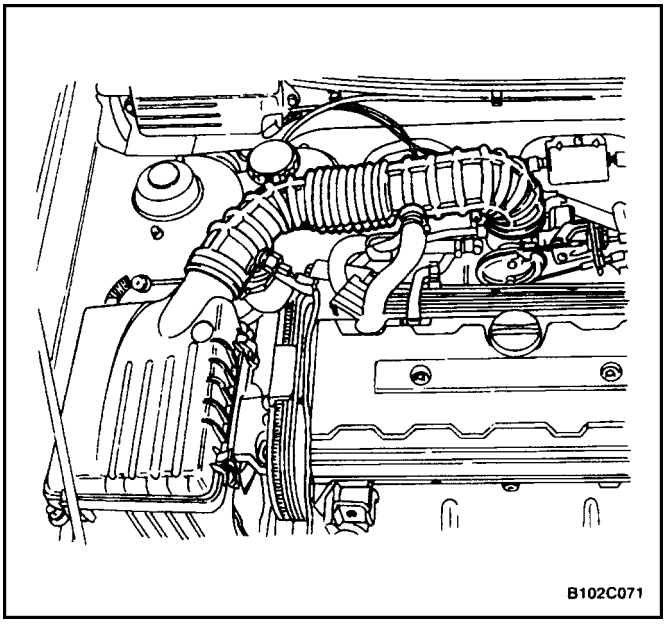
B102C071

30. Install the right front splash shield.
31. Install the right front wheel. Refer to *Section 2E, Tires and Wheels.*
32. Install the air filter housing.
33. Install the air filter housing bolts.

    Tighten

    Tighten the air filter housing bolts to 8 N•m (71 lb–in).
34. Connect the air intake tube to the throttle body.

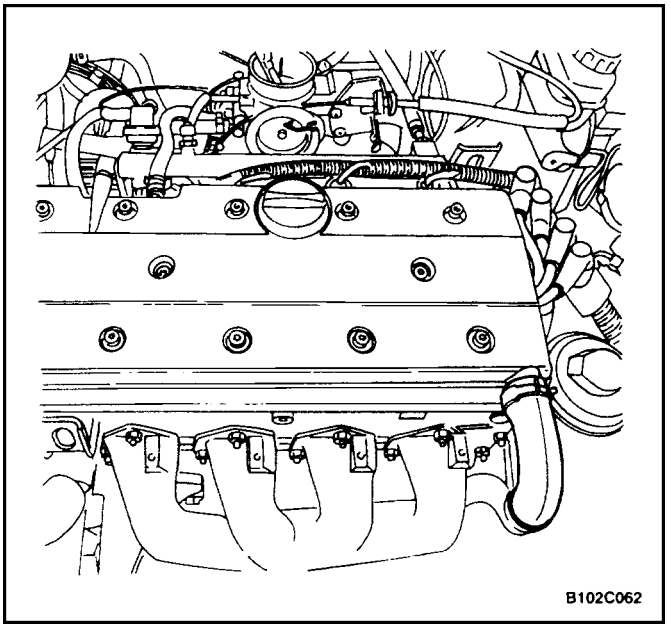
B102C062

35. Connect the breather tube to the valve cover.
36. Connect the intake air temperature sensor connector.
37. Connect the negative battery cable.

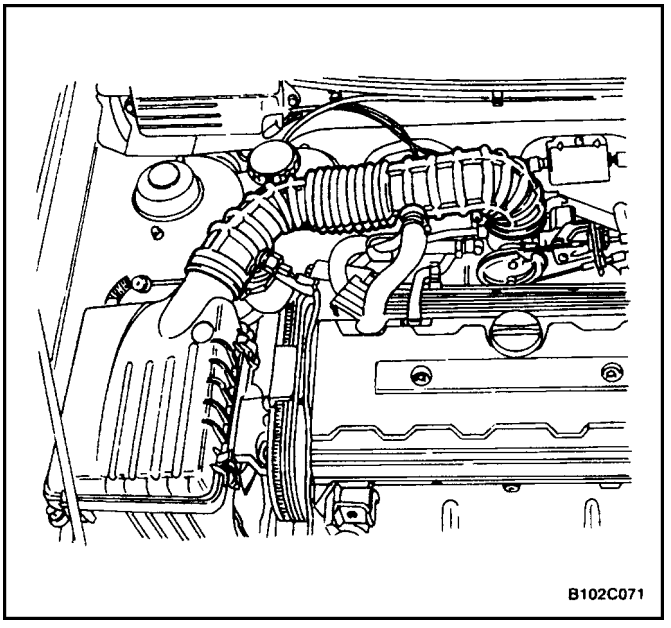
B102C071

TIMING BELT

Removal Procedure

1. Disconnect the negative battery cable.
2. Disconnect the intake air temperature sensor connector.
3. Disconnect the air intake tube from the throttle body.
4. Disconnect the breather tube from the valve cover.

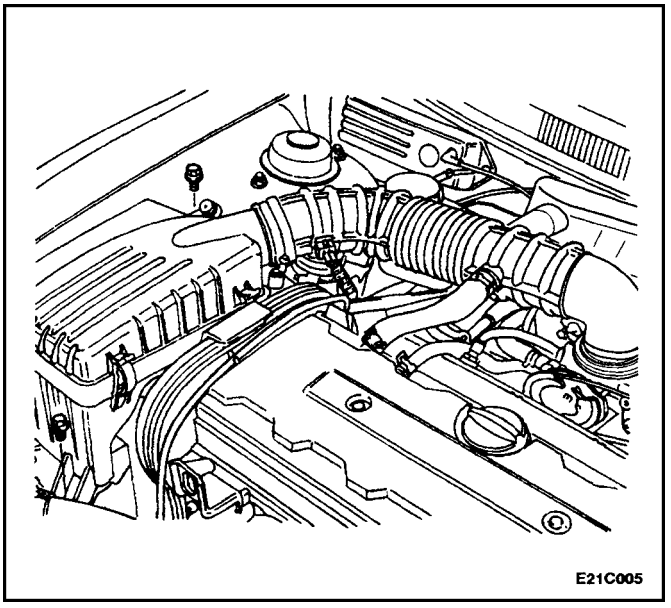
E21C005

5. Remove the air filter housing bolts.
6. Remove the air filter housing.
7. Remove the right front wheel. Refer to *Section 2E, Tires and Wheels.*
8. Remove the right front splash shield.

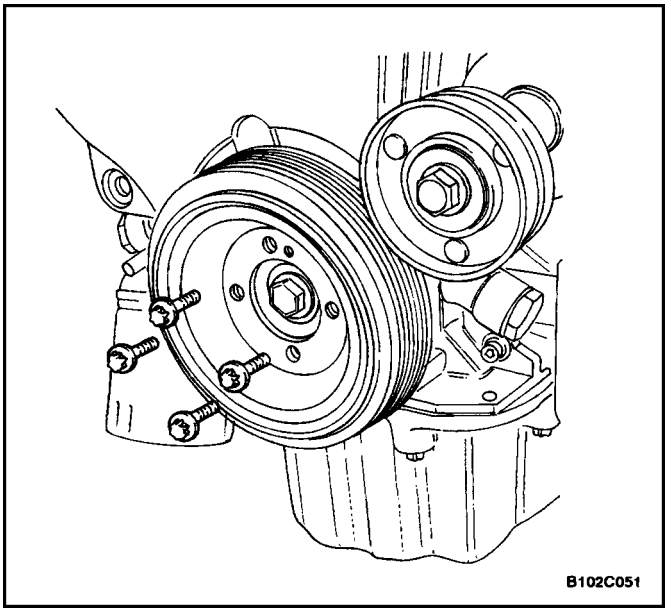
B102C051

9. Remove the serpentine accessory drive belt. Refer to*Section 6B, Power Steering Pump.*
10. Remove the crankshaft pulley bolts.
11. Remove the crankshaft pulley.
12. Remove the right engine mount bracket. Refer to ”Engine Mount” in this section.

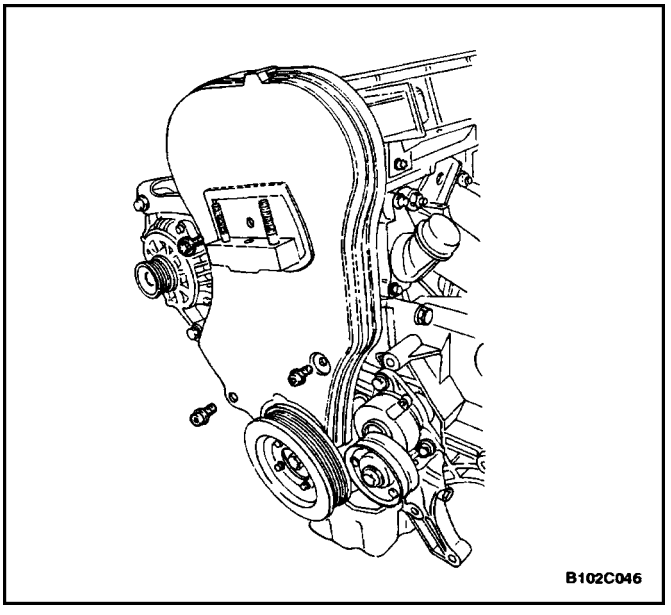
B102C046

13. Remove the front timing belt cover bolts.
14. Remove the front timing belt cover.

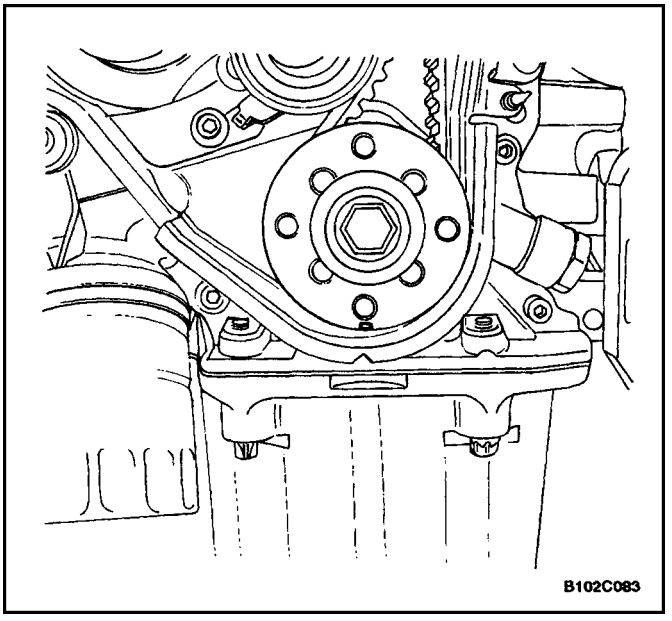

15. Using the crankshaft gear bolt, rotate the crankshaft clockwise until the timing mark on the crankshaft gear is aligned with the notch at the bottom of the rear timing belt cover.

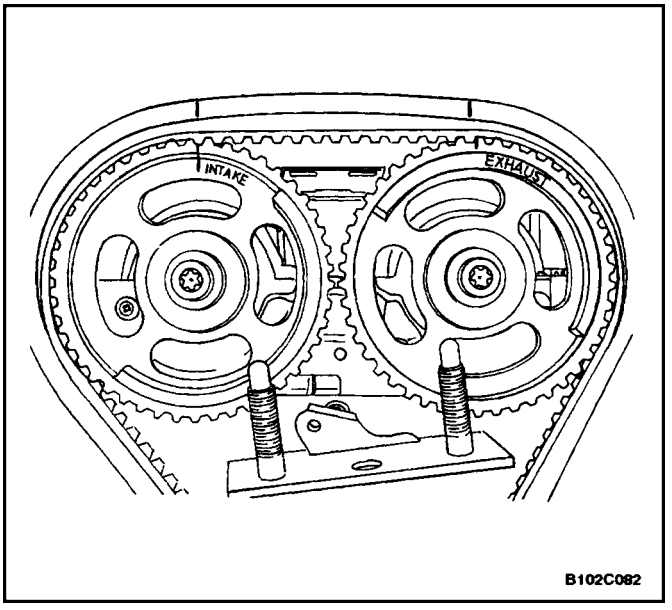

Notice : The camshaft gears must align with the notch on the valve cover or damage to the engine could result.

16. Align the camshaft gears with the notch on the valve cover.

Important : Use the intake gear mark for the intake camshaft gear and the exhaust gear mark for the exhaust camshaft gear since both gears are interchangeable.

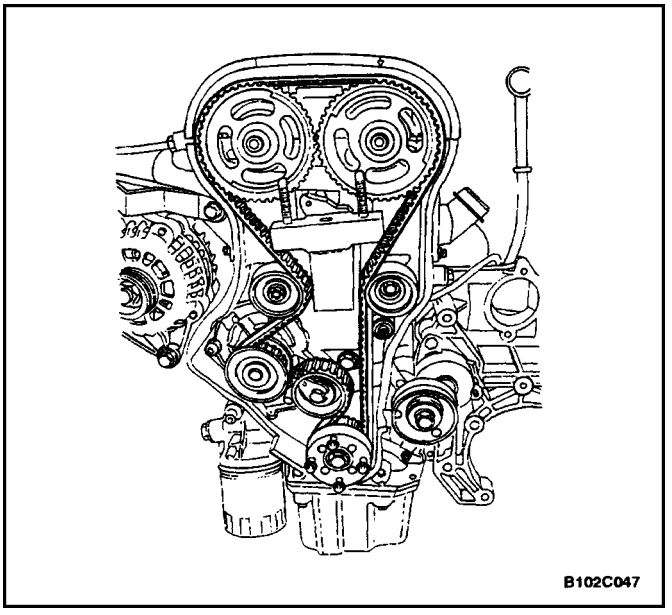

17. Remove the timing belt.
18. Loosen the automatic tensioner bolt. Turn the hexkey tab to relieve belt tension.

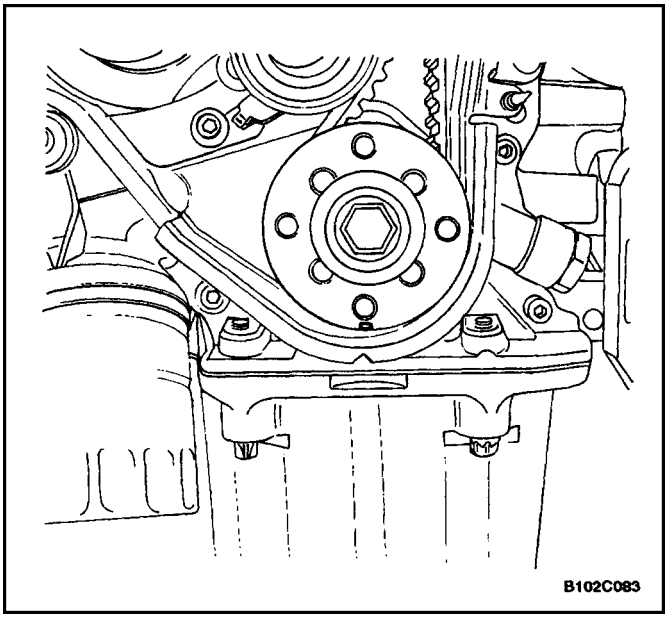
B102C083

Installation Procedure

1. Align the timing mark on the crankshaft gear with the notch on the bottom of the rear timing belt cover.

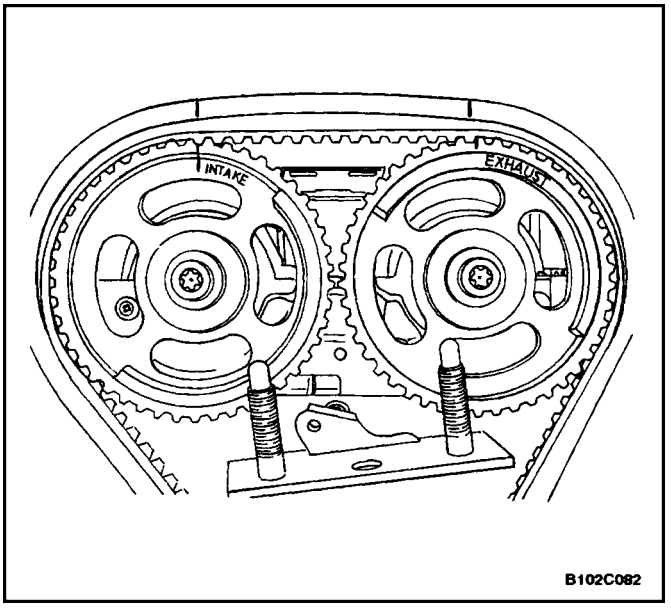

B102C082

2. Align the timing marks on the camshaft gears, using the intake gear mark for the intake gear and the exhaust gear mark for the exhaust gear.

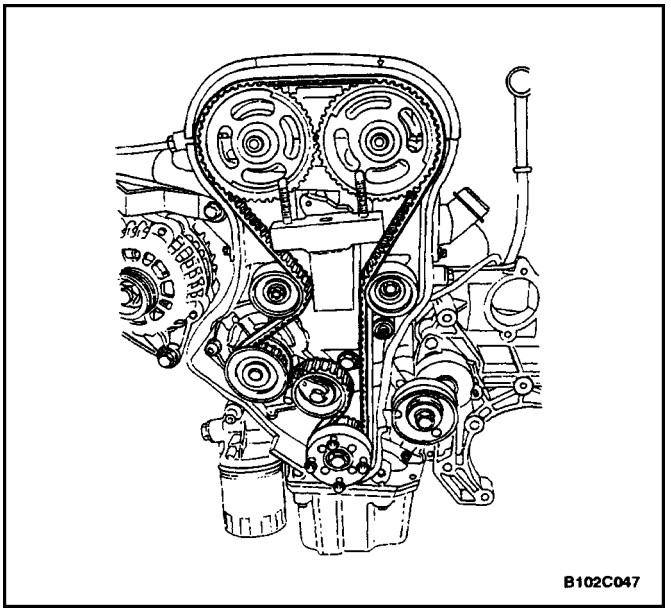
B102C047

3. Install the timing belt.

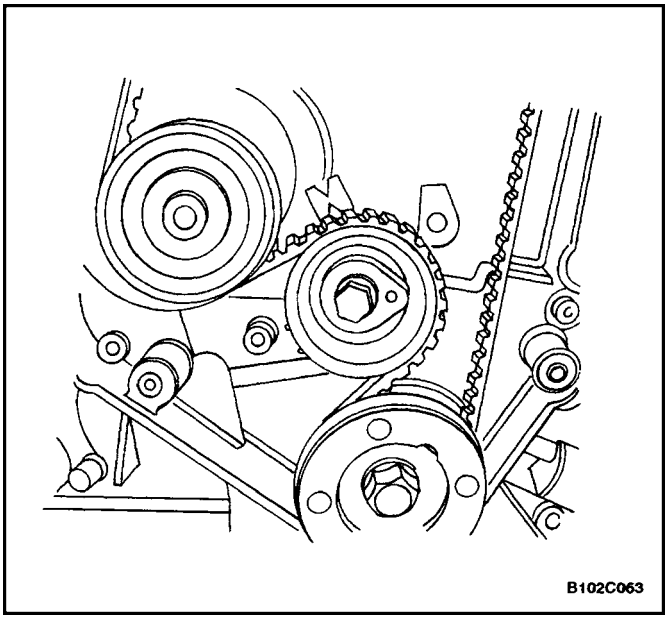

4. Turn the hex–key tab in a clockwise direction to tension the belt. Turn until the pointer aligns with the notch.
5. Install the automatic tensioner bolt.

Tighten

Tighten the automatic tensioner bolt to 25 N•m (18 lb–ft).

6. Rotate the crankshaft two full turns clockwise using the crankshaft pulley bolt.
7. Recheck the automatic tensioner pointer.

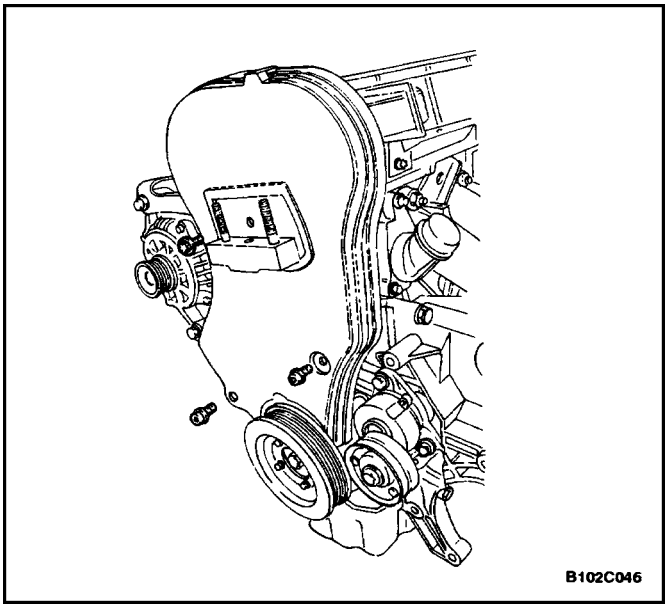

8. Install the front timing belt cover.
9. Install the front timing belt cover bolts.

Tighten

Tighten the front timing belt cover bolts to 6 N•m (53 lbin).

10. Install the right engine mount bracket. Refer to ”Engine Mounts” in this section.

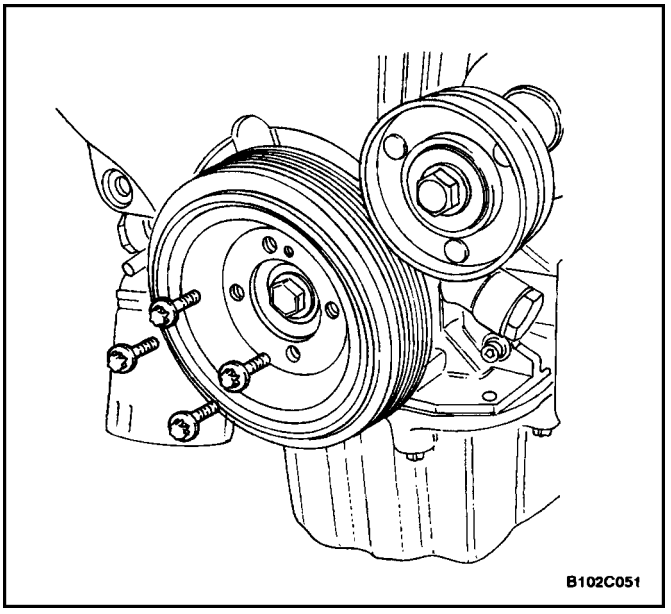

11. Install the crankshaft pulley.
12. Install the crankshaft pulley bolts.

Tighten

Tighten the crankshaft pulley bolts to 20 N•m (15 lb–ft).

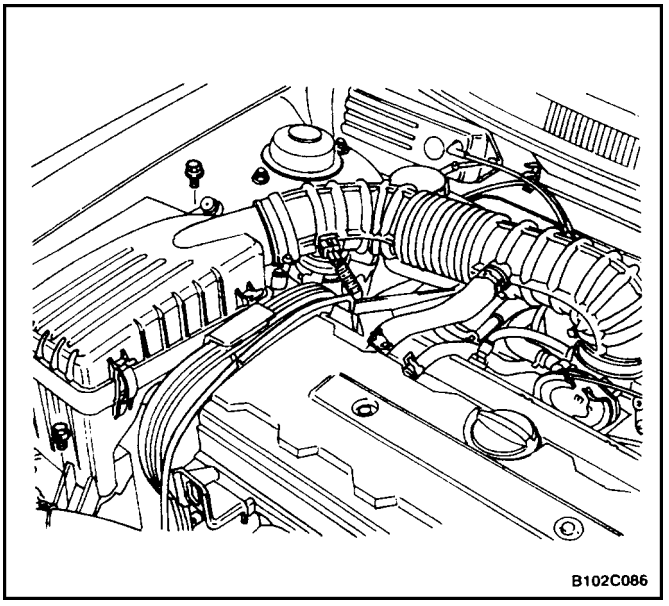
B102C086

13. Install the serpentine accessory drive belt. Refer to Section 2E, Tires and Wheels.
14. Install the right front splash shield.
15. Install the right front wheel. Refer to Section 6B, Power Steering Pump.
16. Install the air filter housing.
17. Install the air filter housing bolts.

    Tighten

    Tighten the air filter housing bolts to 8 N•m (71 lb–in).
18. Connect the air intake tube to the throttle body.
19. Connect the breather tube to the valve cover.
20. Connect the intake air temperature sensor connector.
21. Connect the negative battery cable.

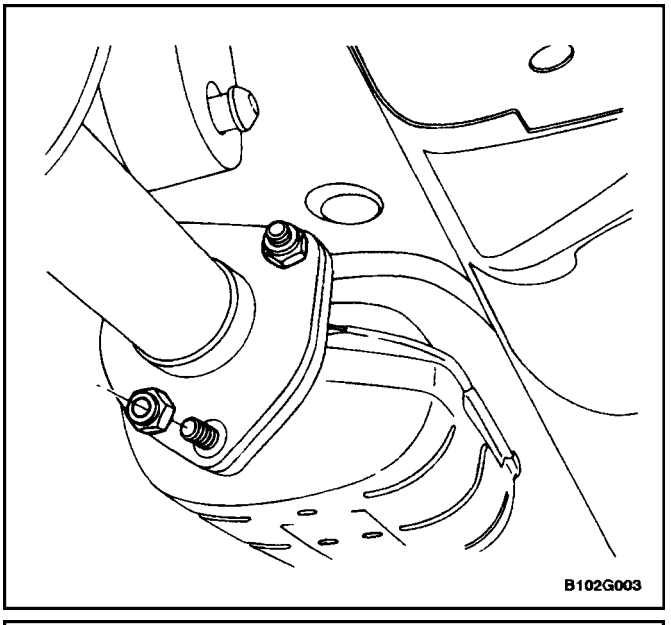
B102G003

OIL PAN

Removal Procedure

1. Disconnect the negative battery cable.
2. Drain the engine oil from the engine crankcase.
3. Disconnect the post–converter heated oxygen sensor.
4. Remove the auxiliary catalytic converter upper flange nuts from the exhaust manifold and the support bracket bolts.

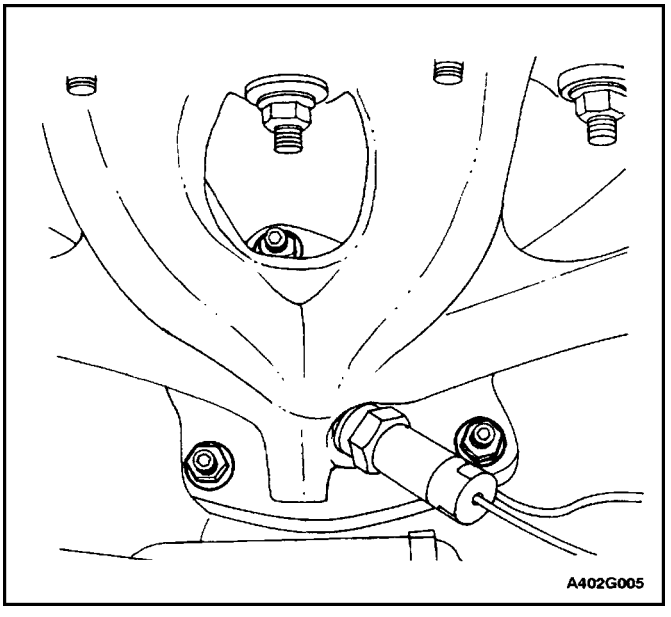
A402G005

5. Remove the front muffler pipe retaining nuts from the main catalytic converter.
6. Remove both catalytic converters as a unit.

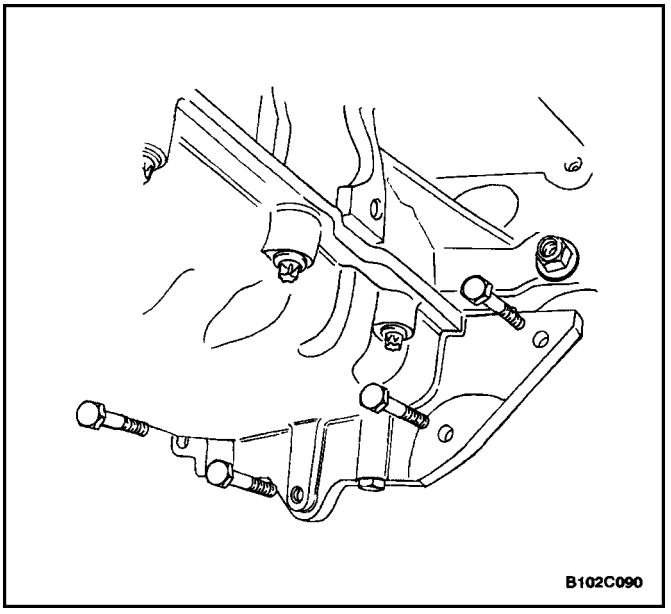

7. Remove the oil pan flange–to–transaxle retaining bolts.

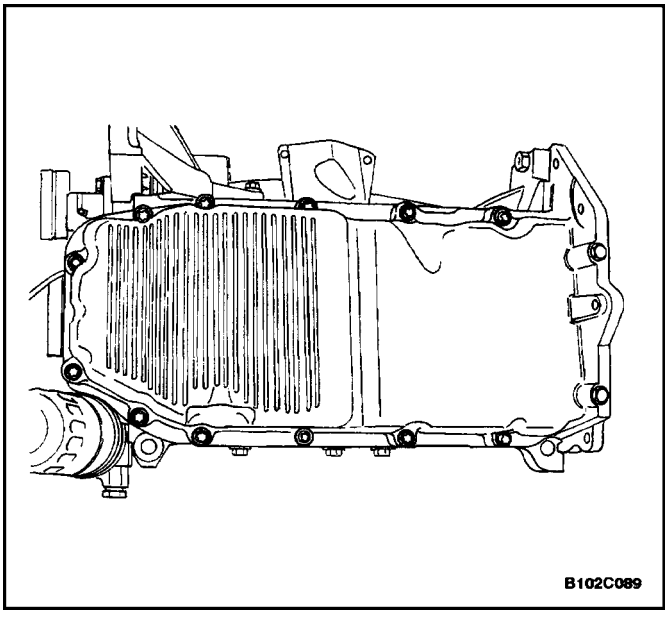

8. Remove the oil pan retaining bolts.
9. Remove the oil pan from the engine block.

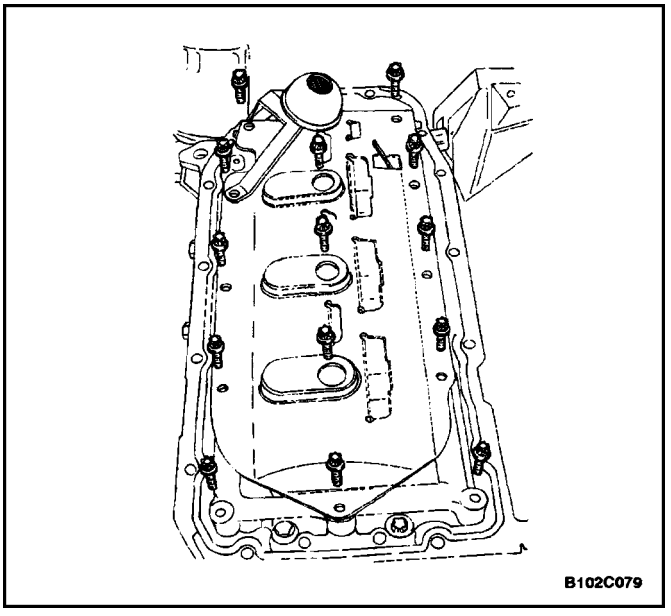

Cleaning Procedure

1. Clean the oil pan sealing surface.
2. Clean the engine block sealing surface.
3. Clean the oil pan retaining bolts.
4. Clean the oil pan attaching bolt holes in the engine block.
5. Clean the oil pan splash shield.

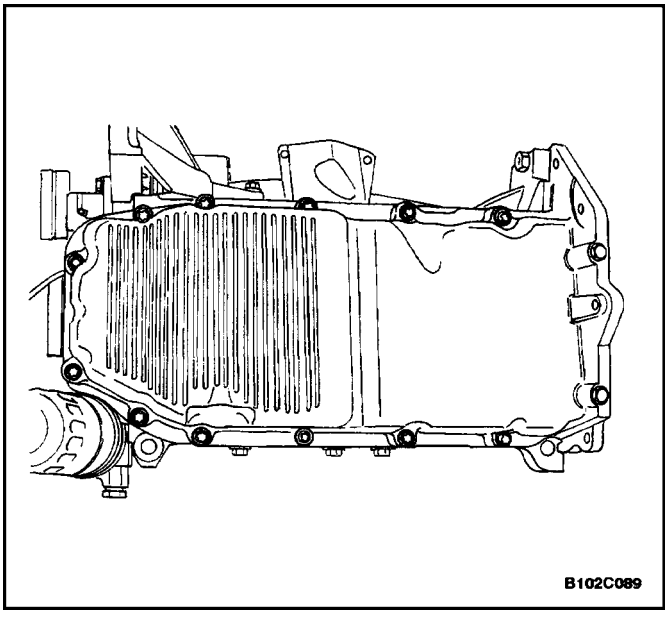

Installation Procedure

1. Coat the new oil pan gasket with sealant.

Important : Install the oil pan within 5 minutes after applying the liquid gasket to the oil pan.

2. Install the oil pan to the engine block.
3. Install the oil pan retaining bolts.

Tighten

Tighten the oil pan retaining bolts to 10 N•m (89 lb–in).

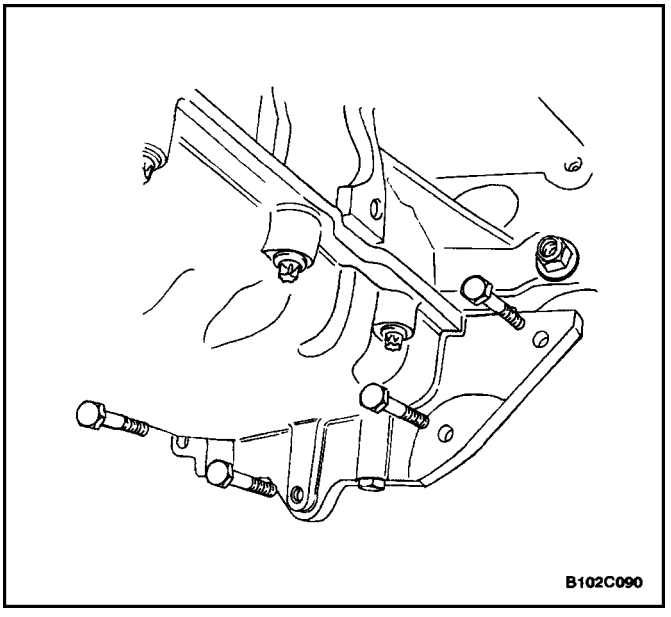

4. Install the oil pan flange–to–transaxle retaining bolts.

Tighten

Tighten the oil pan flange–to–transaxle bolts to 40 N•m (30 lb–ft).

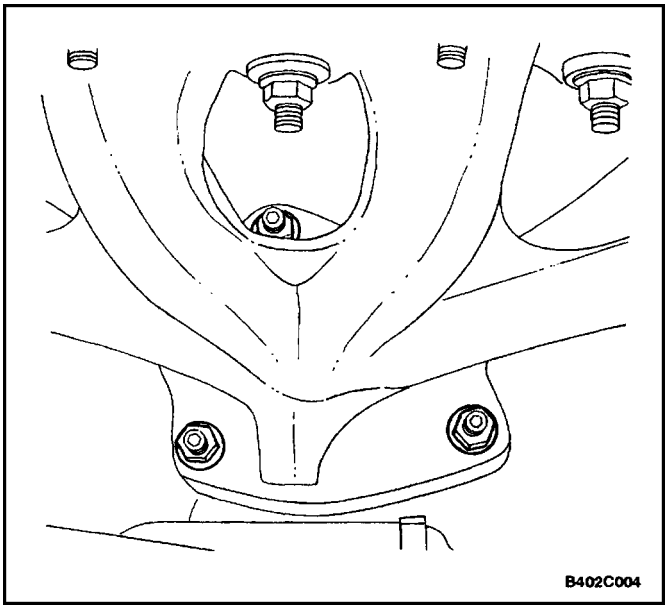

5. Install the catalytic converters.

Tighten

Tighten the auxiliary catalytic converter–to–exhaust manifold nuts to 40 N•m (30 lb–ft).

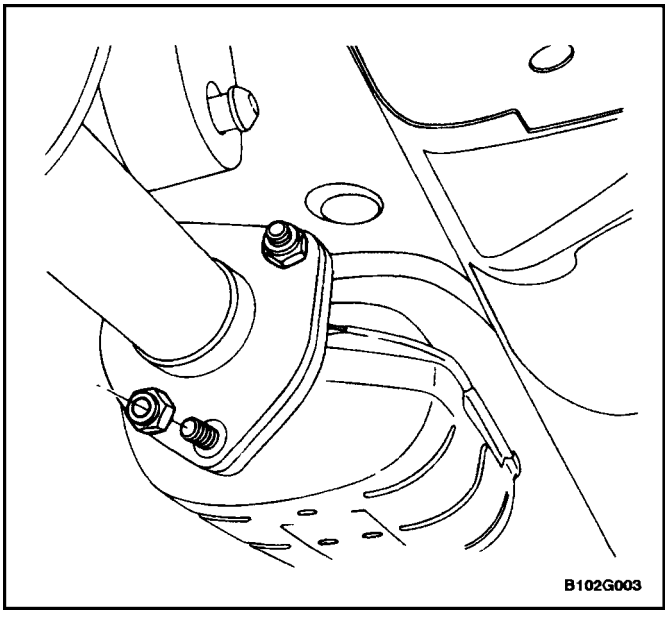

Tighten

Tighten the exhaust pipe support bracket bolts to 40 N•m (30 lb–ft).

Tighten

Tighten the front muffler pipe–to–main catalytic converter nuts to 30 N•m (22 lb–ft).

6. Connect the post–converter oxygen sensor.
7. Connect the negative battery cable.
8. Refill the engine crankcase with engine oil.

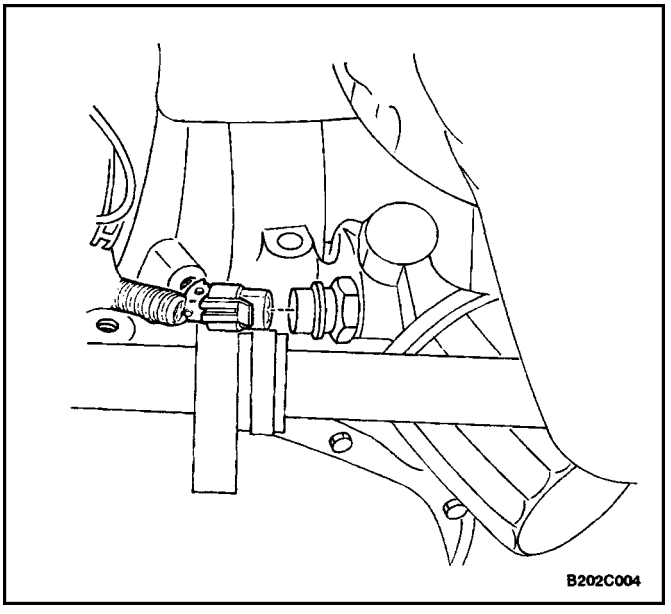

OIL PUMP

Tools Required

KM–498–B Pressure Gauge
KM–135 Adapter

Engine Oil Pressure Inspection Procedure

1. Remove the right front wheel well splash shield.
2. Disconnect the oil pressure switch connector.

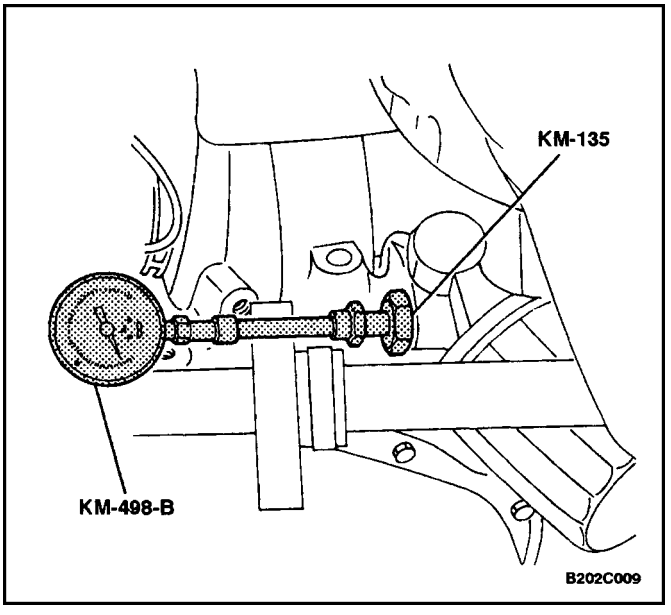

3. Install the adapter KM–135 in place of the oil pressure switch.
4. Connect the pressure gauge KM–498–B to the adapter.
5. Start the engine and check the oil pressure at idle speed and engine temperature of 80˚C (176˚F). The minimum oil pressure should be 30 kPa (4.35 psi).
6. Stop the engine and remove the pressure gauge KM–498–B and the adapter KM–135.

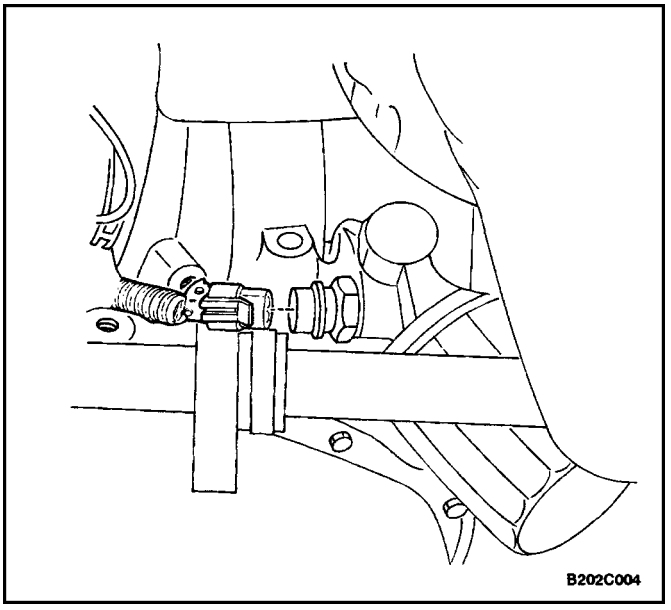

7. Install the oil pressure switch.

   Tighten

   Tighten the oil pressure switch to 40 N•m (30 lb–ft).
8. Connect the oil pressure switch connector.
9. Install the right front wheel well splash shield.
10. Check the oil level. Add oil until it reaches the full mark.

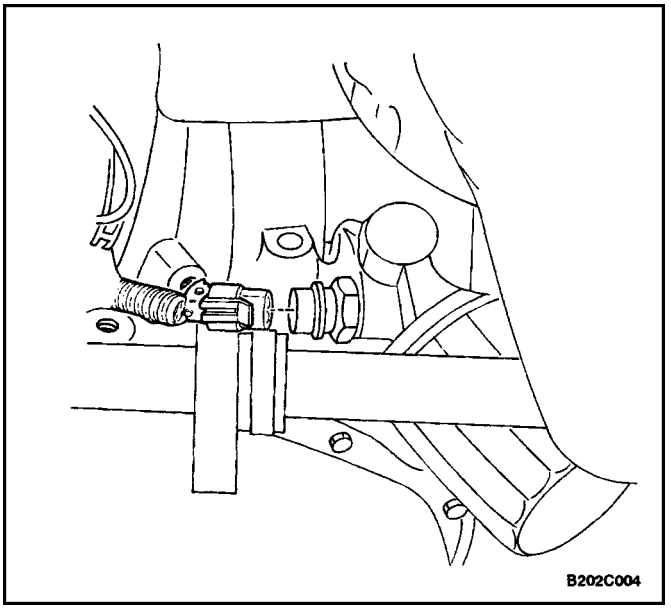

Removal Procedure

1. Disconnect the negative battery cable.
2. Remove the rear timing belt cover. Refer to ”Rear Timing Belt Cover” in this section.
3. Disconnect the oil pressure switch connector.

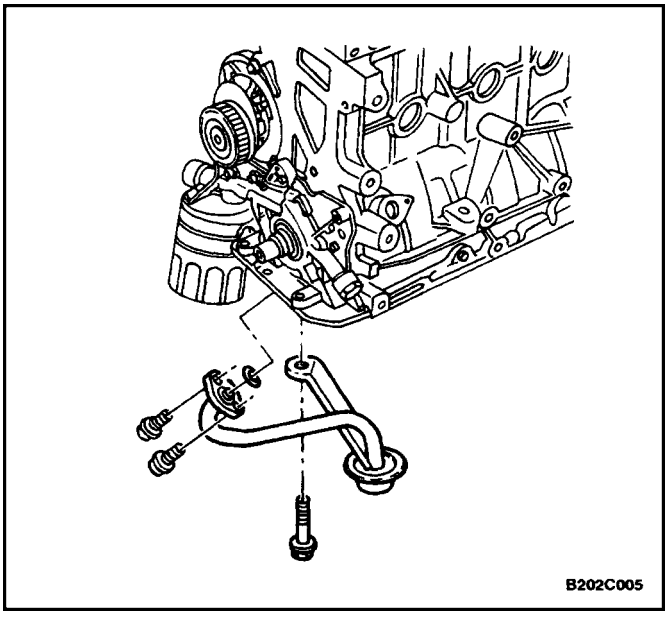

4. Remove the oil pan. Refer to ”Oil Pan” in this section.
5. Remove the oil pump/pickup tube and support bracket bolts.
6. Remove the oil pump/pickup tube.

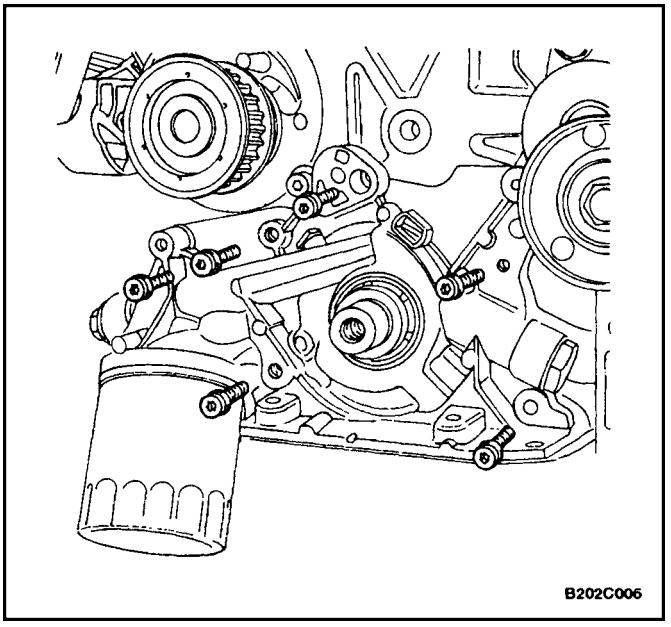

7. Remove the oil pump retaining bolts.
8. Carefully separate the oil pump and gasket from the engine block and oil pan.
9. Remove the oil pump.

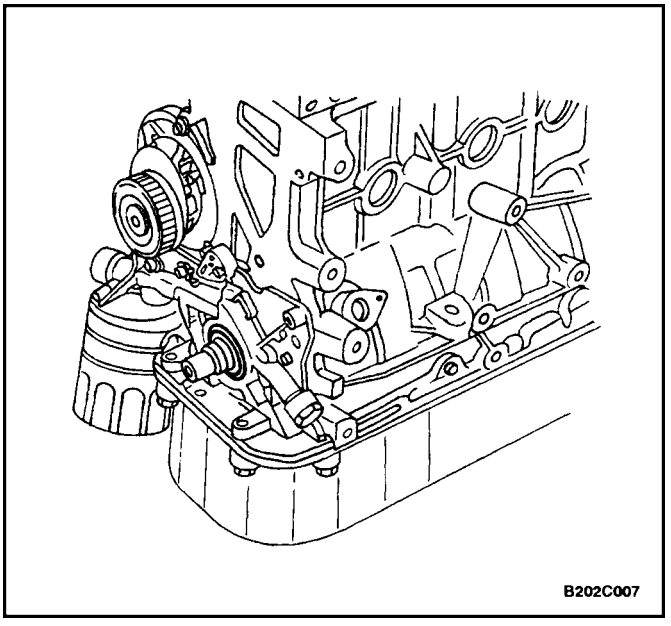

Inspection Procedure

1. Clean the oil pump and the engine block gasket mating surface areas.
2. Remove the safety relief valve bolt.
3. Remove the safety relief valve and the spring.
4. Remove the oil pump–to–crankshaft seal.

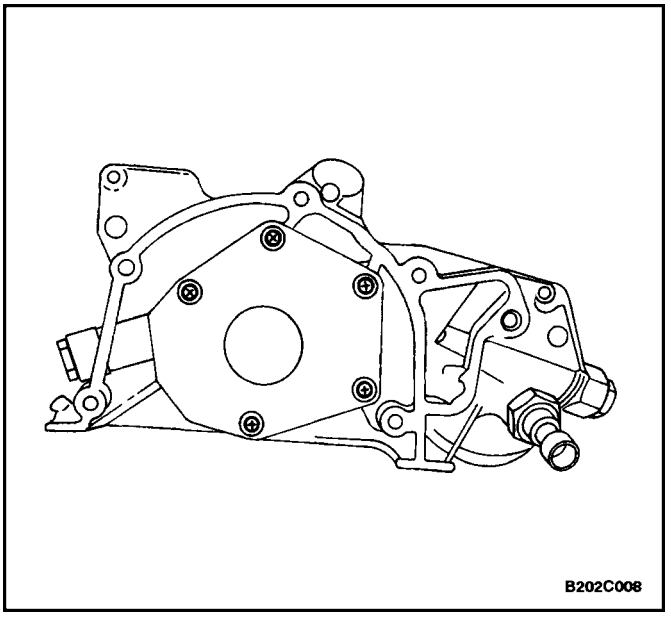
B202C008

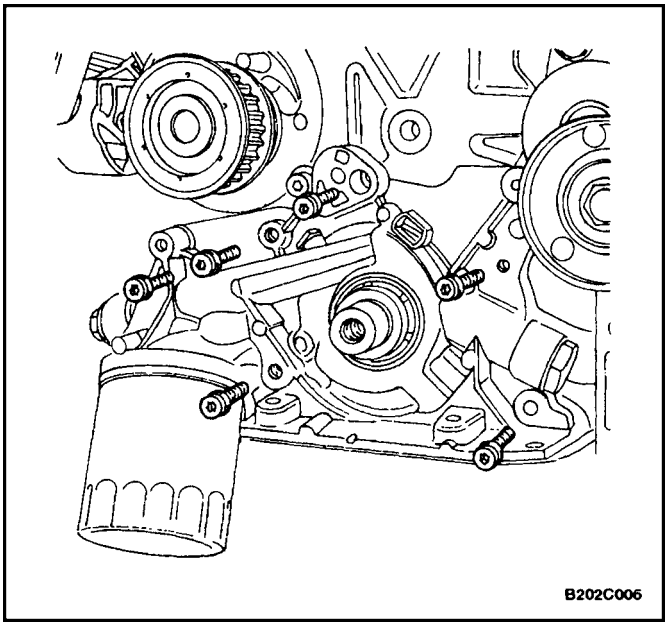
B202C006

5. Remove the oil pump rear cover bolts.
6. Remove the rear cover.
7. Clean the oil pump housing and all the oil pump parts.
8. Inspect all the oil pump parts for signs of wear. Refer to ”Engine Specifications” in this section. Replace the worn oil pump parts.

Notice : Pack the oil pump gear cavity with petroleum jelly to ensure an oil pump prime, or engine damage could result.

9. Coat all the oil pump parts with clean engine oil. Install the oil pump parts.
10. Apply Loctite® 242 to the oil pump rear cover bolts and install the cover and bolts.

    Tighten

    Tighten the oil pump rear cover bolts to 6 N•m (53 lb–in).
11. Install the safety relief valve, the spring, washer and the bolt.

    Tighten

    Tighten the safety relief valve bolt to 30 N•m (22 lb–ft).

Installation Procedure

1. Apply Loctite® 242 to the oil pump bolts and room temperature vulcanizing (RTV) sealant to the new oil pump gasket.
2. Install the gasket to the oil pump and install the oil pump to the engine block with the bolts.

   Tighten

   Tighten the oil pump bolts to 10 N•m (89 lb–in).

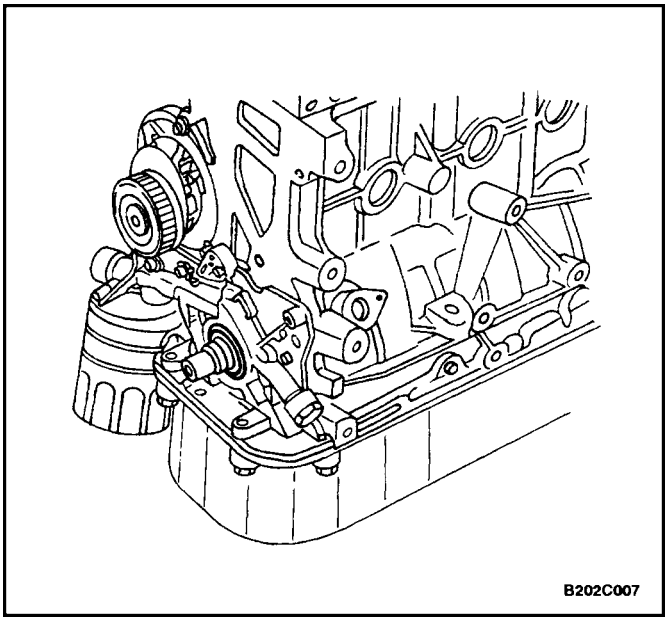

3. Install a new oil pump–to–crankshaft seal. Coat the lip of the seal with a thin coat of grease.

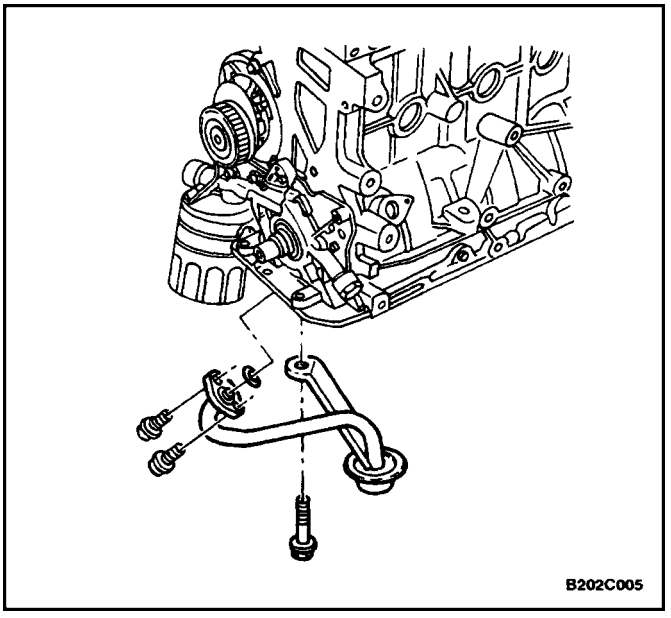

4. Coat the threads of the oil pump/pickup tube and support bracket bolts with Loctite® 242.
5. Install the oil pump/pickup tube and the bolts.

Tighten

Tighten the oil pump/pick–up tube and support bracket bolts to 10 N•m (89 lb–in).

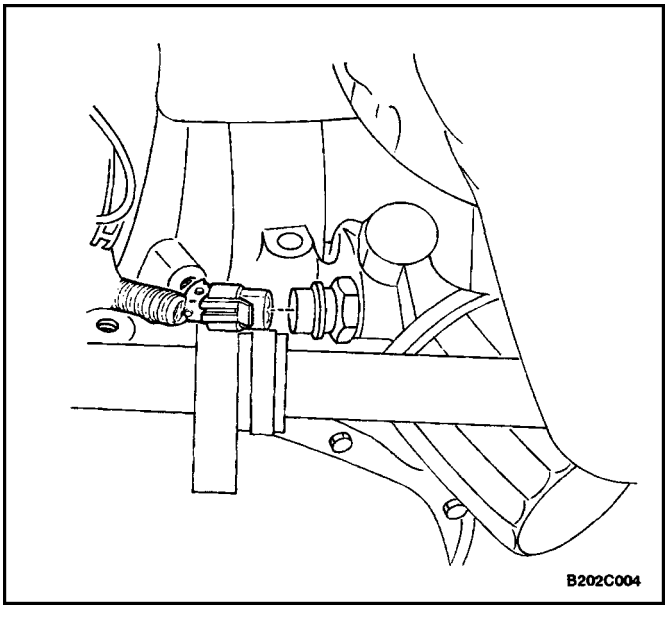

6. Install the oil pan. Refer to ”Oil Pan” in this section.
7. Connect the oil pressure switch connector.
8. Install the rear timing belt cover. Refer to ”Rear Timing Belt Cover” in this section.
9. Connect the negative battery cable.

UNIT REPAIR

CYLINDER HEAD AND VALVE TRAIN COMPONENTS

Tools Required

MKM–571–B Gauge
KM–340–0 Cutter Set
KM–340–7 Guide Drift
KM–340–13 Cutters
KM–340–26 Cutters
KM–348 Valve Spring Compressor
KM–653 Adapter
KM–805 Valve Guide Reamer

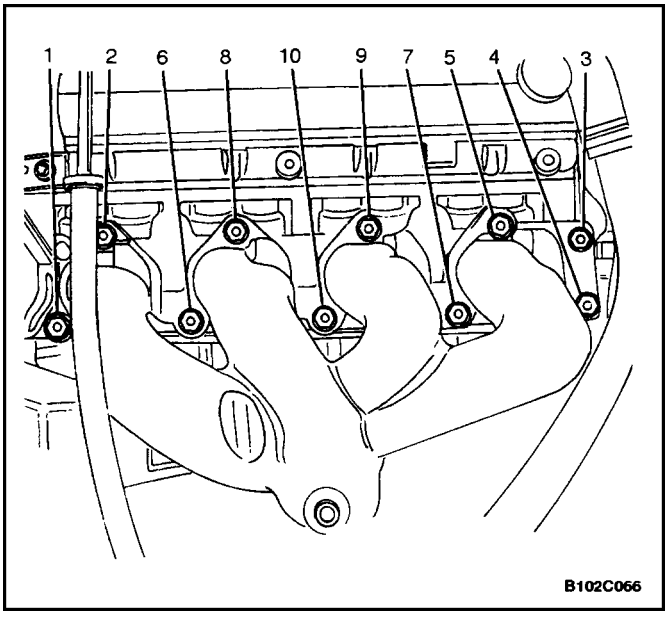

Disassembly Procedure

1. Remove the cylinder head with the intake manifold and the exhaust manifold attached. Refer to ”Cylinder Head and Gasket” in this section.
2. Remove the coolant temperature sensor.
3. Remove the camshaft position sensor.
4. Remove the exhaust manifold heat shield bolts.
5. Remove the exhaust manifold heat shield.
6. Remove the exhaust manifold retaining nuts in the sequence shown.
7. Remove the exhaust manifold.
8. Remove the exhaust manifold gasket.
9. Remove the exhaust manifold studs.

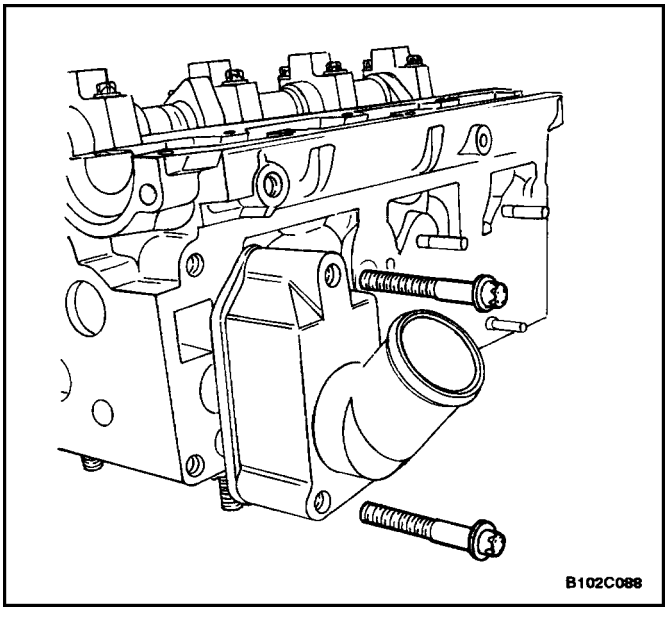

10. Remove the thermostat housing mounting bolts.
11. Remove the thermostat housing assembly.
12. Remove the fuel rail assembly. Refer to *Section 1F, Engine Controls (DOHC).*
13. Remove the coolant bypass housing mounting bolts and the housing.

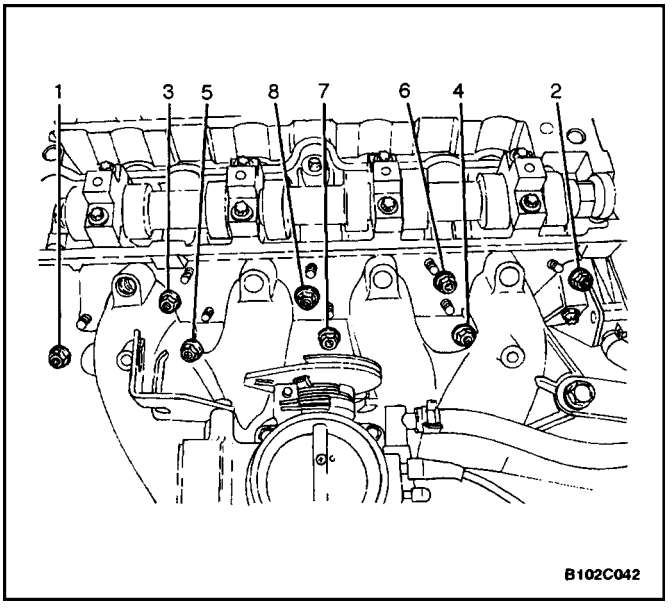

14. Remove the intake manifold retaining nuts and retaining bolt in the sequence shown.
15. Remove the intake manifold.
16. Remove the intake manifold gasket.
17. Remove the electronic ignition system (EI System) ignition coil and EGR mounting bracket bolts.
18. Remove the EI system ignition coil and EGRmounting bracket and ignition wires.
19. Remove the intake manifold studs.
20. Remove the spark plugs.

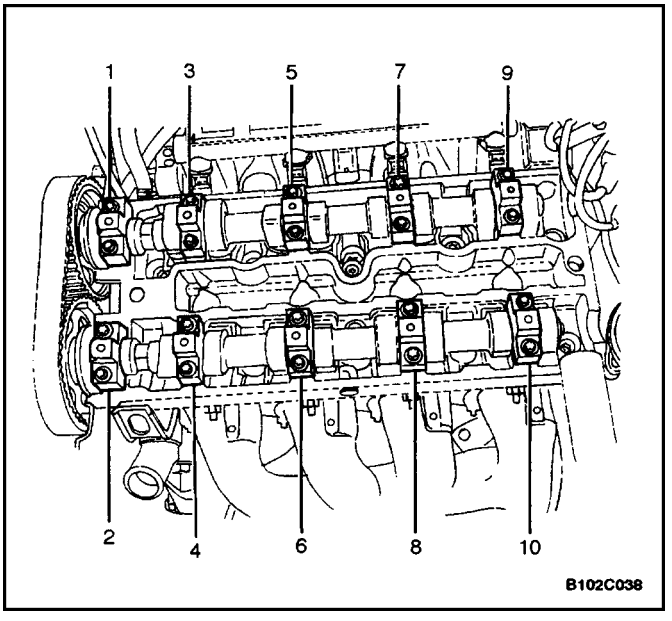

21. Remove the camshaft bearing cap bolts gradually and in the sequence shown for each camshaft cap.

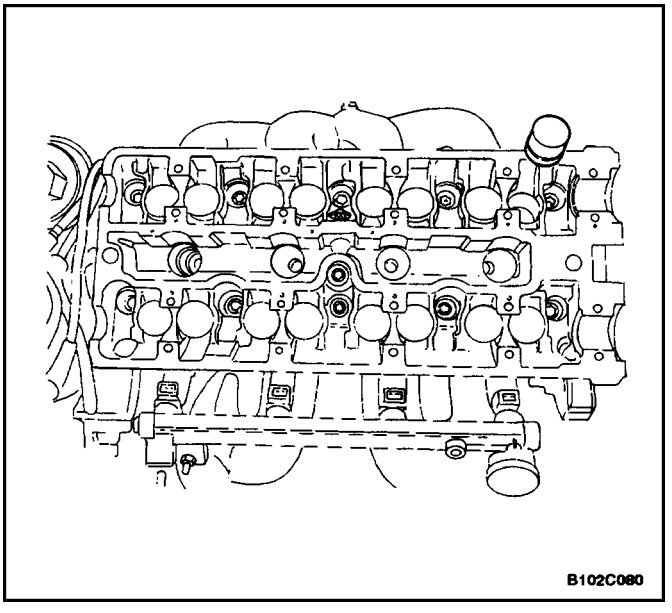

22. Remove the intake camshaft bearing caps. Maintain the correct positions for installation.
23. Remove the intake camshaft.
24. Remove the intake valve lash adjusters.
25. Remove the exhaust camshaft caps. Maintain the correct positions for installation.
26. Remove the exhaust camshaft.
27. Remove the exhaust valve lash adjusters.

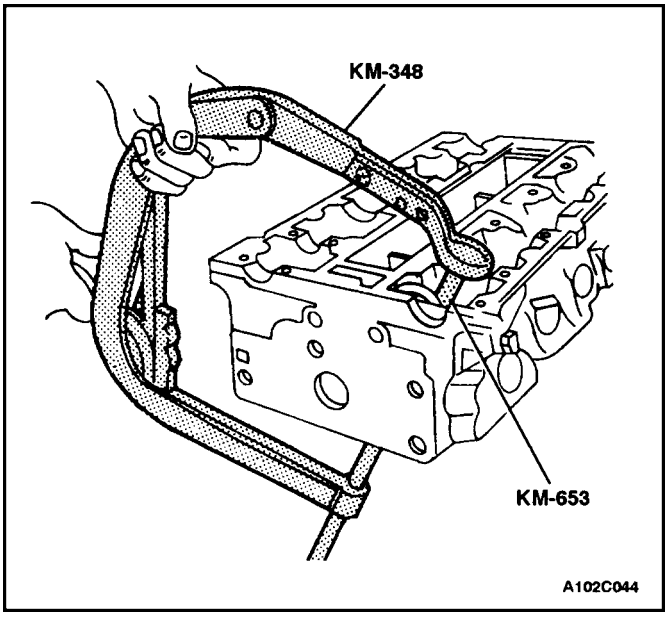

28. Compress the valve springs with the valve spring compressor KM–348 and the adapter KM–653.
29. Remove the valve retainers.
30. Remove the valve spring compressor KM–348 and the adapter KM–653.
31. Remove the valve spring caps.
32. Remove the valve springs. Maintain the original position of the valve springs for installation.

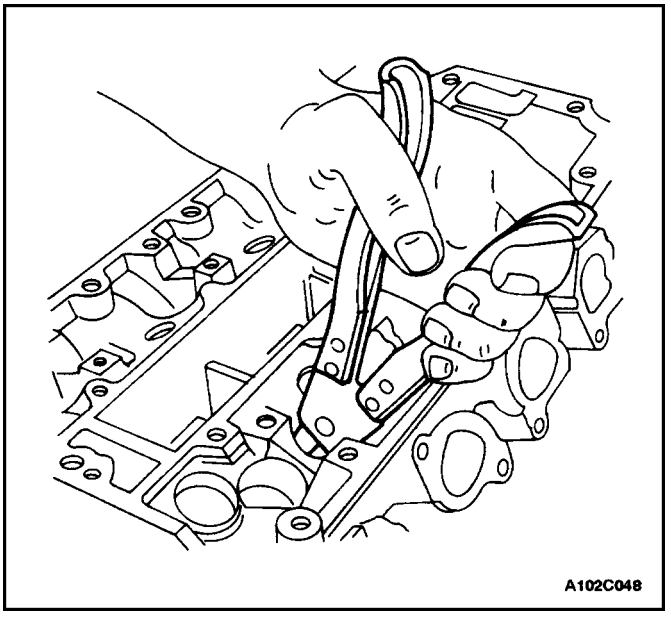

33. Remove the valves. Maintain the original position of the valves for installation.
34. Remove the valve stem seals.

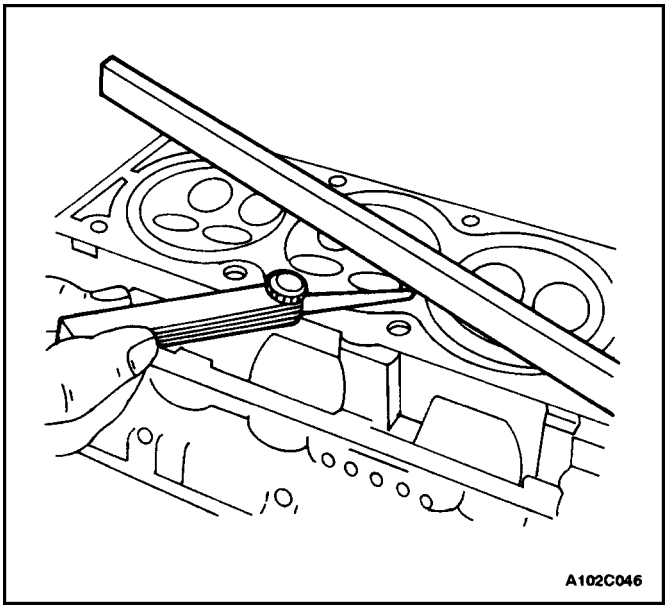

Cylinder Head Inspection

1. Clean the sealing surfaces.
2. Inspect the cylinder head gasket and mating surfaces for leaks, corrosion and blow–by.
3. Inspect the cylinder head for cracks.
4. Inspect the length and width of the cylinder head using a feeler gauge and a straight edge.
5. Check the sealing surfaces for deformation and warpage. The cylinder head sealing surfaces must be flat within 0.025 mm (0.001 inch) maximum.

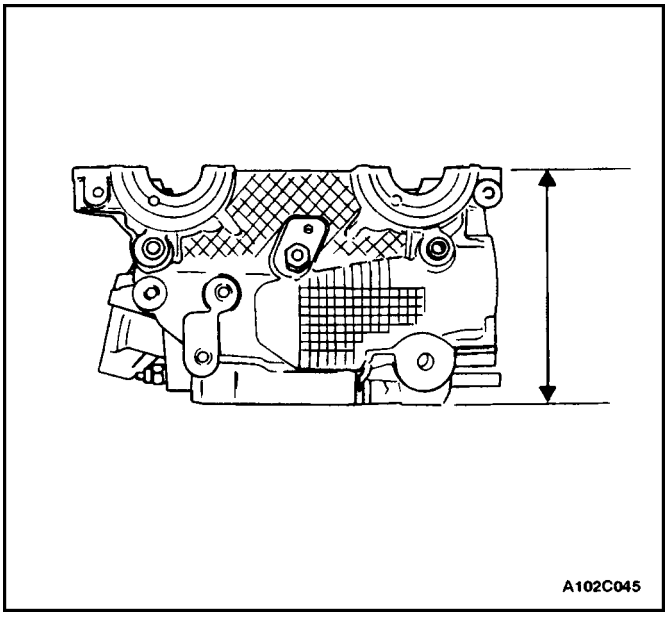

6. Measure the height of the cylinder head from sealing surface to sealing surface. The cylinder head height should be 133.975 to 134.025 mm (5.274 to 5.276 inches). If the cylinder head height is less than 133.9 mm (5.271 inches), replace the cylinder head.
7. Inspect all threaded holes for damage.
8. Inspect valve seats for excessive wear and burned spots.

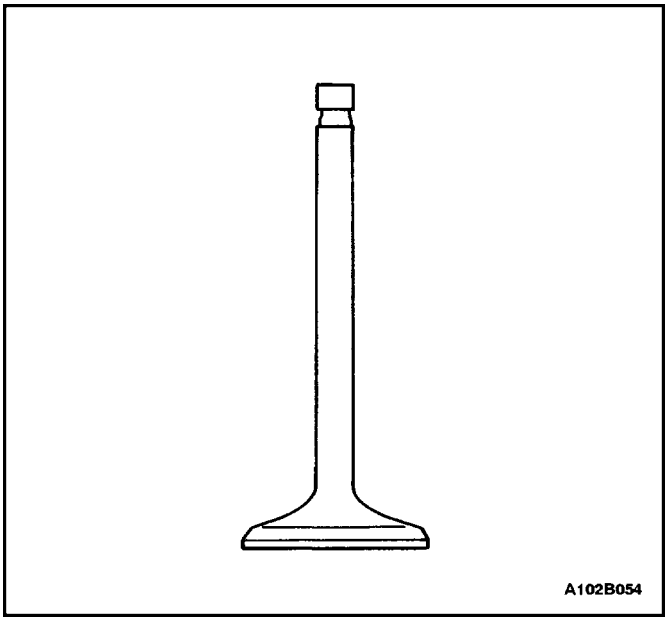

Valve Inspection

1. Inspect the valve stem tip for wear.
2. Inspect the valve retainer grooves and the oil seal grooves for chips and wear.
3. Inspect the valves for burns or cracks.
4. Inspect the valve stem for burrs and scratches.
5. Inspect the valve stem. The valve stem must be straight.
6. Inspect the valve face for grooving. If the groove is so deep that refacing the valve would result in a sharp edge, replace the valve.
7. Inspect the valve spring. If the valve spring ends are not parallel, replace the valve spring.
8. Inspect the valve spring seating surface of the valve rotators for wear or gouges. Replace as required.

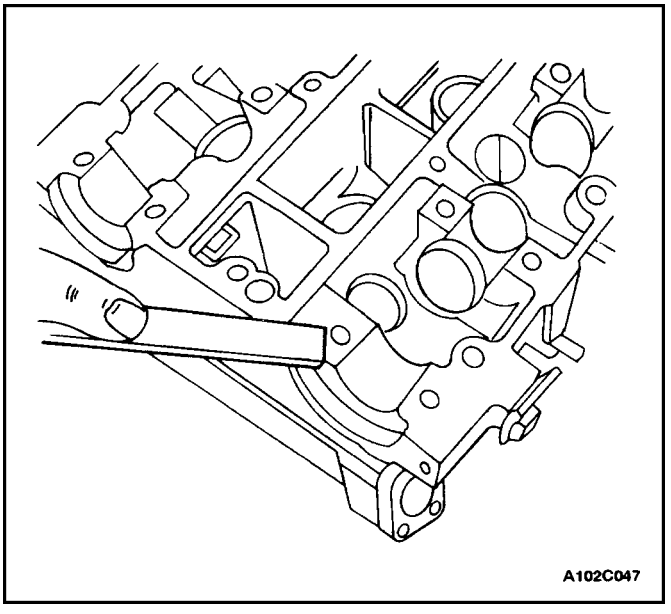

Cleaning Procedure

1. Clean the cylinder head.
2. Clean the valve guides.
3. Clean all of the threaded holes.
4. Clean the valves of carbon, oil, and varnish.

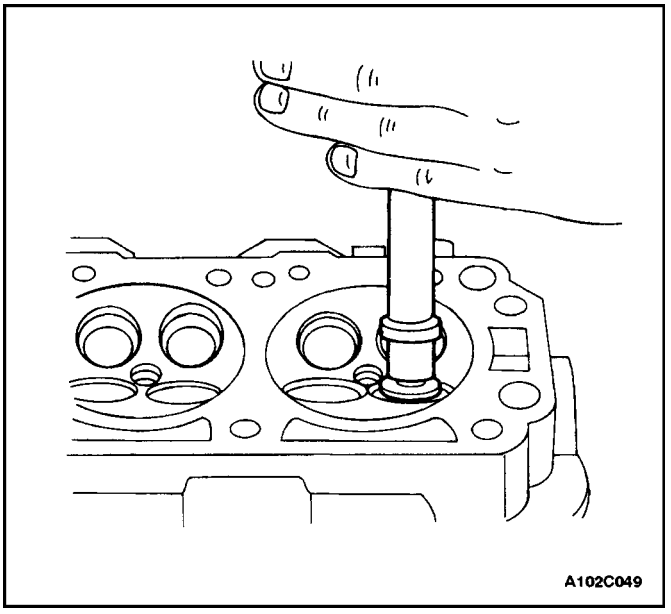

Cylinder Head Overhaul

Valve Grind–in

1. Lubricate the valve seat using a fine–grained paste.
2. Lift the valve rhythmically from the seat with a commercially–available valve grinding tool in order to distribute the paste.

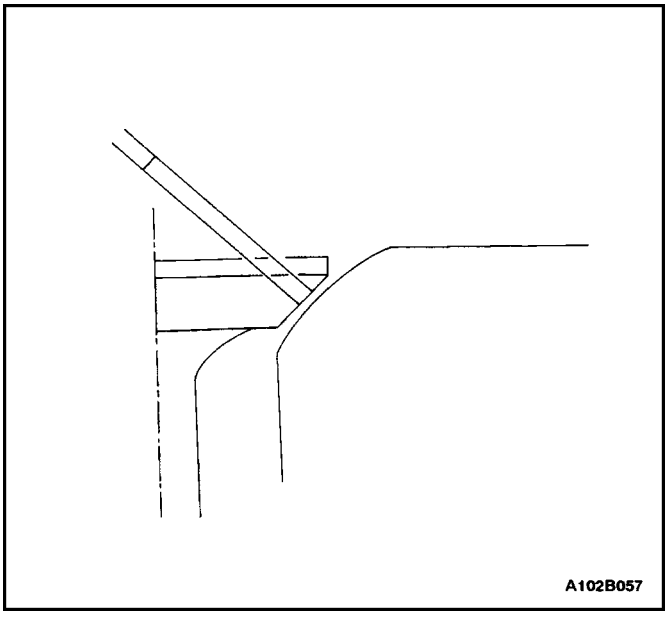

3. Check the contact pattern on the valve head and in the cylinder head.
4. Clean the valves, the valve guides, and the cylinder head.

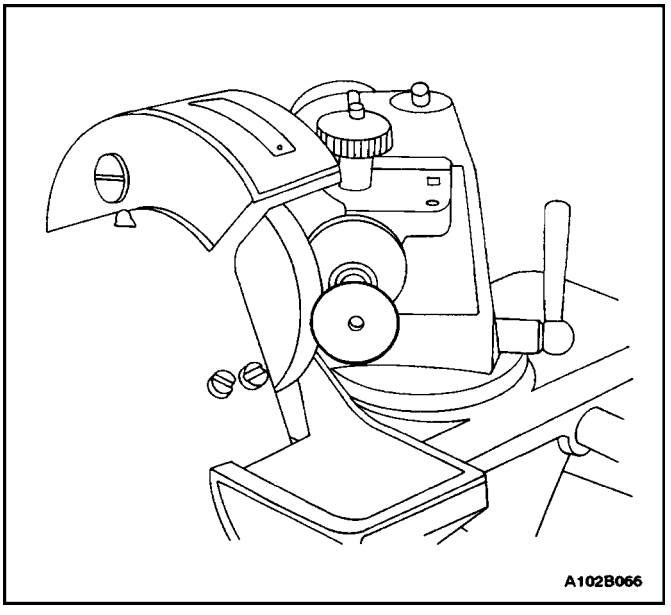

Valve Grind

1. Ensure that there are no crater line burns on the valve cone.
2. The valve may be reground only two times. Do not grind the valve stem end.
3. Ensure that the angle at the valve face is 45 degrees.
4. Inspect the assembly height of the intake valves and the exhaust valves.

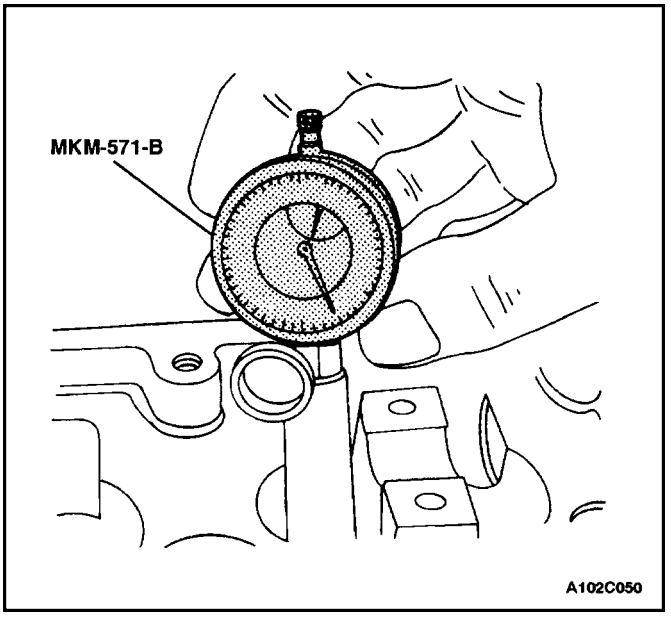

Valve Guide – Ream

1. Measure the diameter of the valve guide using gauge MKM–571–B and a commercially–available inside micrometer.

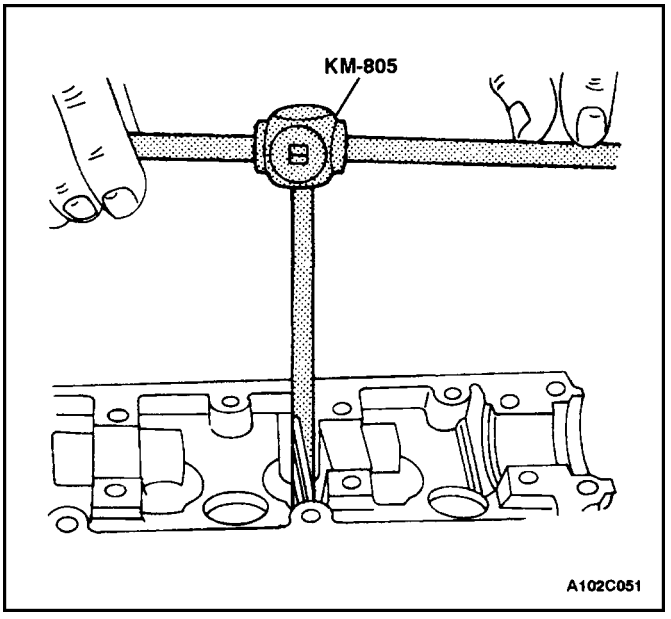

Important : Valve oversizes may already have been fitted in production.

2. An oversize service code is on the valve guide and the valve stem end. The following table gives the correct size, reamer, and production code for each service.

Size	Reamer	Production Code	Service Code
Normal	–	–	K
0.075	KM–805	1	K1
0.150		2	K2

3. Ream the valve guide from the upper side of the cylinder head to the next oversize.
4. After reaming, cross out the code and emboss the valve guide with the new code.

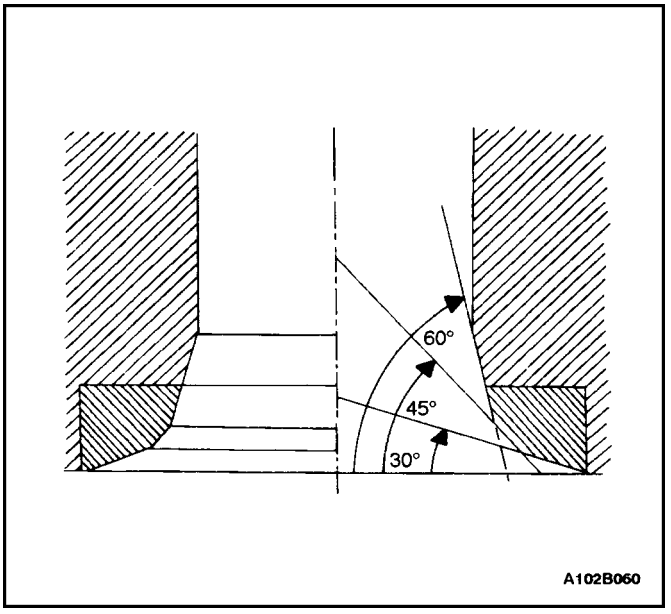

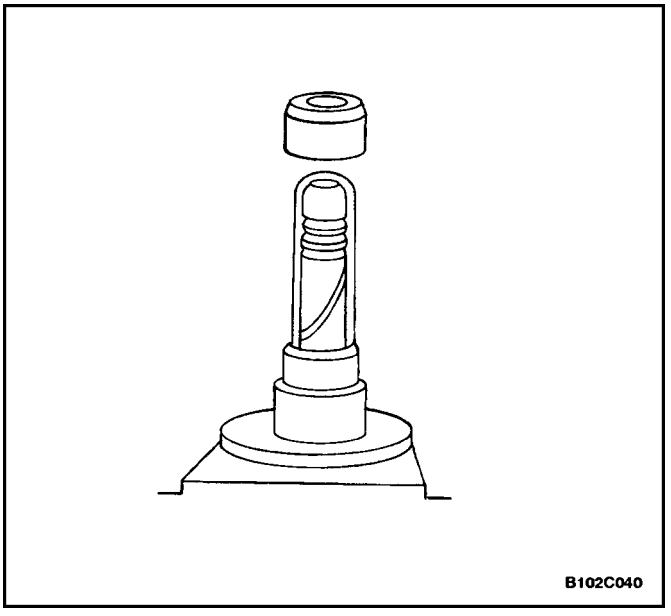

Valve Seat – Cut

1. Place the cylinder head on wooden blocks.
2. Cut the intake and the exhaust valve seats using the guide drift KM–340–7 as follows:
   - Valve seat – A 45–degree surface using the cutter KM–340–13.
   - Upper correction angle – A 30–degree surface using the cutter KM–340–13.
   - Lower correction angle – A 60–degree surface using the cutter KM–340–26.
3. Clean the chippings from the cylinder head.
4. Inspect the dimension for the valve seat width.
   - Intake: 1.2 to 1.4 mm (0.047 to 0.055 inch).
   - Exhaust: 1.4 to 1.8 mm (0.055 to 0.070 inch).
5. Inspect the assembly height of the intake valves and the exhaust valves. If the dimension is exceeded, install new valves. Inspect the assembly height of the intake valves and the exhaust valves again. If the valve assembly height is still too large despite replacing the valves, replace the cylinder head.

Assembly Procedure

1. Coat the valve stems with engine oil.
2. Insert the valves in the cylinder head in their original positions.
3. Insert the valve spring seats.
4. Push the accompanying assembly sleeve onto the valve stem.
5. Insert the new valve stem seat.
6. Carefully drive the valve stem seal onto the stop with light taps.
7. Install the valve springs in their original positions.
8. Install the valve spring caps.

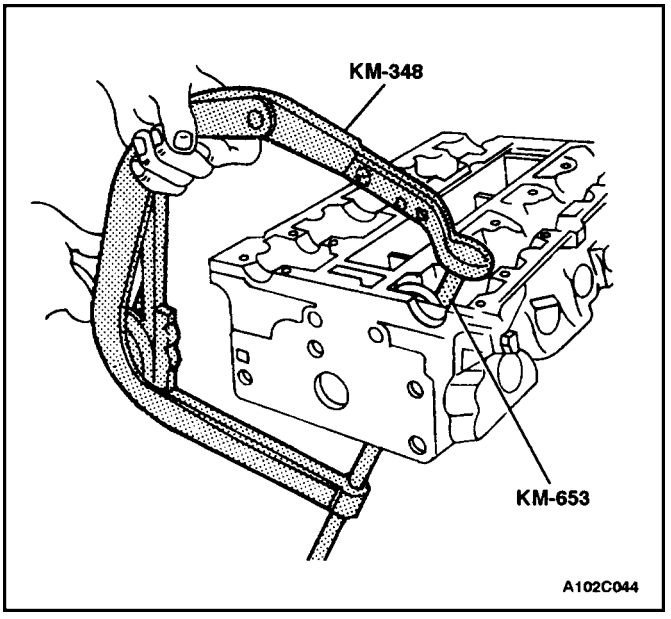

9. Compress the valve springs with the valve spring compressor KM–348 and adapter KM–653.
10. Install the valve retainers.
11. Remove the valve spring compressor KM–348 and adapter KM–653.

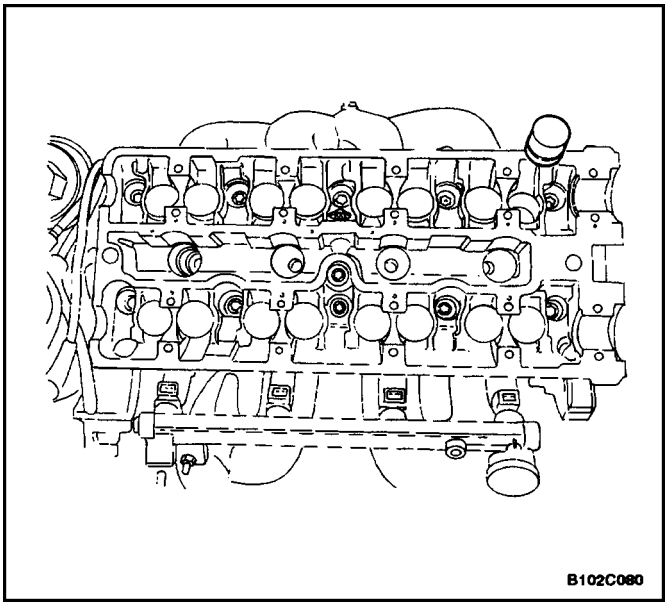

12. Lubricate the valve lash adjusters with engine oil.
13. Install the valve lash adjusters.

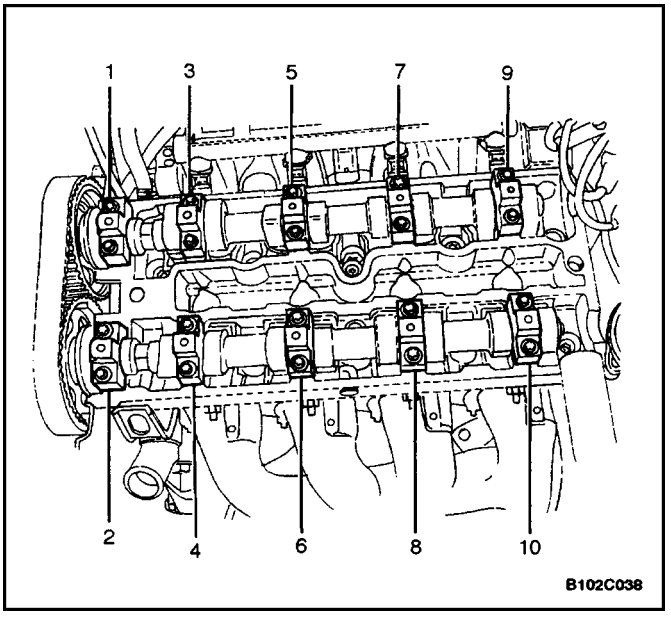

14. Install the intake camshaft.
15. Install the intake camshaft bearing caps in their original positions.
16. Install the exhaust camshaft.
17. Install the exhaust camshaft bearing caps in their original positions.
18. Install the camshaft bearing cap bolts.
19. Tighten the camshaft bearing cap bolts gradually and in the sequence shown for each camshaft cap.

Tighten

Tighten the camshaft bearing cap bolts to 8 N•m (71 lb–in).

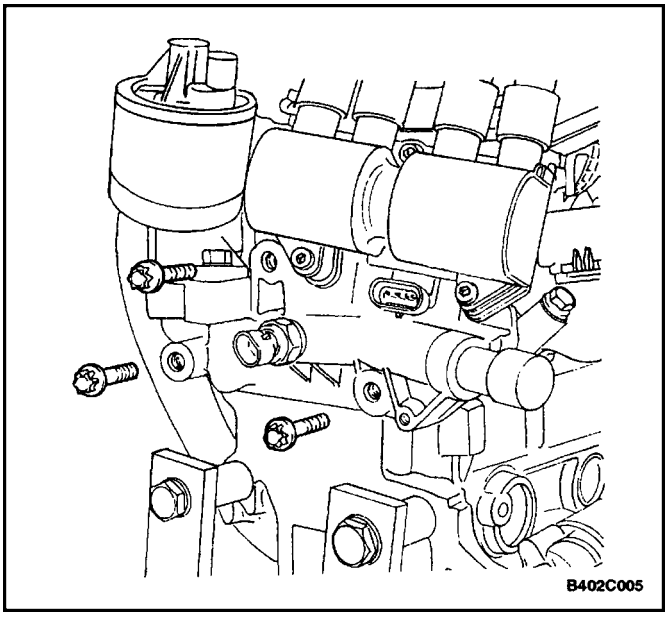

20. Install the spark plugs.

Tighten

Tighten the spark plugs to 20 N•m (15 lb–ft).

21. Install the EI system ignition coil and EGR mounting bracket.
22. Install the EI system ignition coil and EGR mounting bracket bolts.

Tighten

Tighten the EI system ignition coil and EGR mounting bracket bolts to 25 N•m (18 lb–ft).

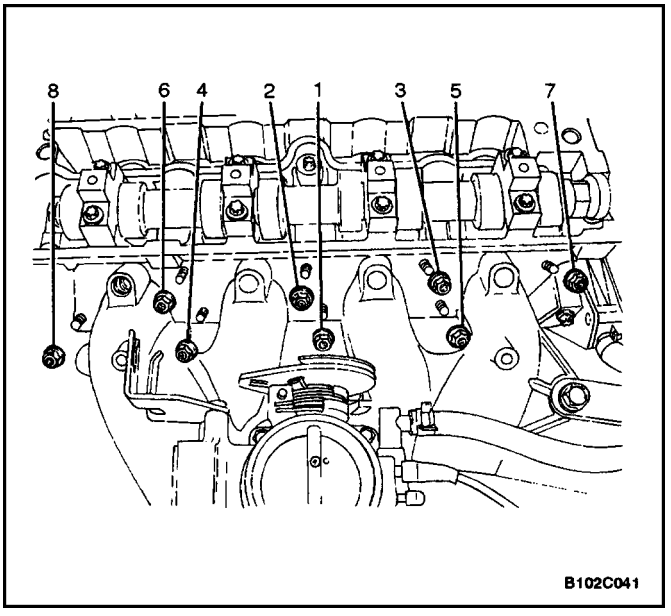

23. Install the intake manifold studs.
24. Install the intake manifold gasket.
25. Install the intake manifold.
26. Install the intake manifold retaining nuts and retaining bolt in the sequence shown.

Tighten

Tighten the intake manifold retaining nuts and retaining bolt to 22 N•m (16 lb–ft).

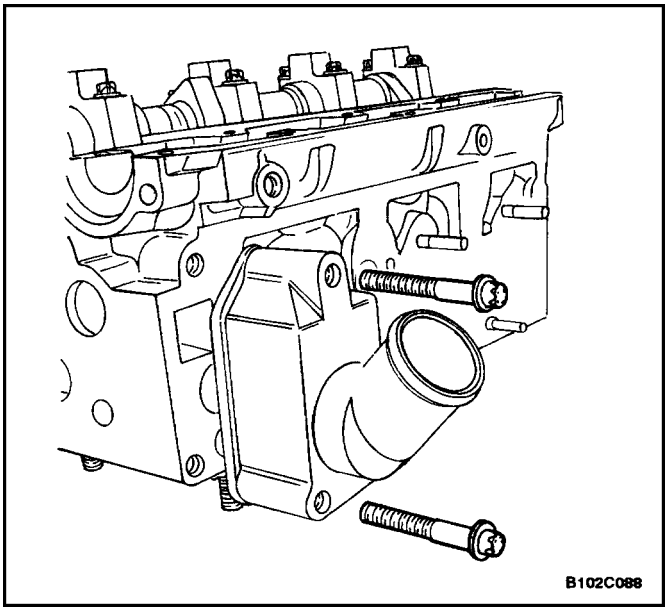

27. Install the fuel rail assembly. Refer to *Section 1F, Engine Controls.*
28. Install the thermostat housing assembly.
29. Install the thermostat housing mounting bolts.

Tighten

Tighten the thermostat housing mounting bolts to 15 N•m (11 lb–ft).

30. Install the coolant bypass housing and mounting bolts.

Tighten

Tighten the coolant bypass housing and mounting bolts to 15 N•m (11 lb–ft).

31. Install the camshaft position sensor.

Tighten

Tighten the camshaft position sensor bolts to 12 N•m (106 lb–in).

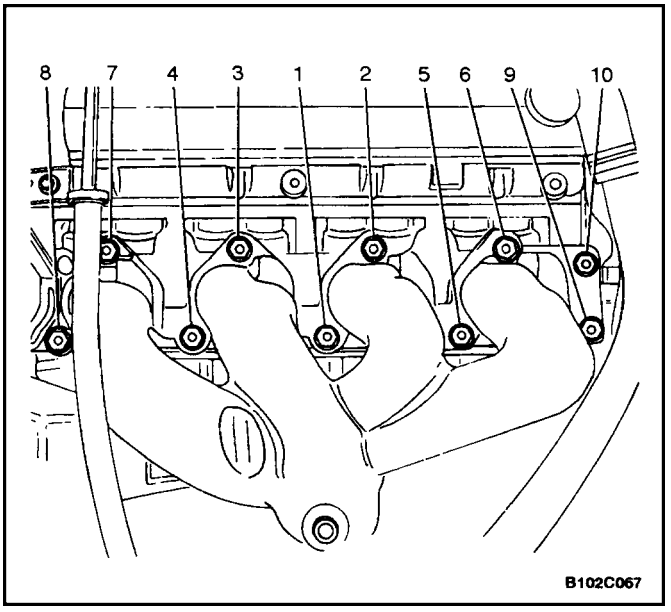

32. Install the exhaust manifold studs.
33. Install the exhaust manifold gasket.
34. Install the exhaust manifold.
35. Install the exhaust manifold retaining nuts in the sequence shown.

Tighten

Tighten the exhaust manifold retaining nuts to 15 N•m (11 lb–ft).

36. Install the exhaust manifold heat shield.
37. Install the exhaust manifold heat shield bolts.

Tighten

Tighten the exhaust manifold heat shield bolts to 8 N•m (71 lb–in).

38. Install the cylinder head with the intake manifold and the exhaust manifold attached. Refer to ”Cylinder Head and Gasket” in this section.

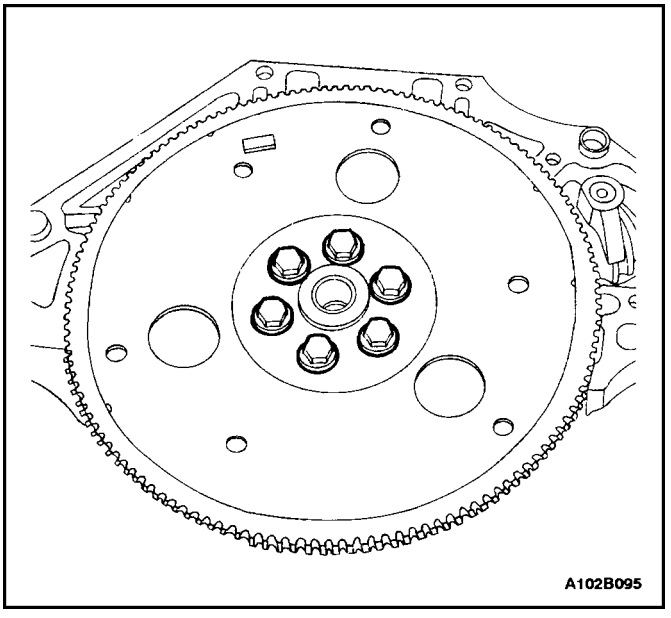

CRANKSHAFT

Tools Required

KM–412 Engine Overhaul Stand
KM–470–B Angular Torque Gauge
KM–635 or J–36972 Crankshaft Rear Oil Seal Installer

Notice : Take extreme care to prevent any scratches, nicks, or damage to the camshafts.

Disassembly Procedure

1. Remove the engine. Refer to ”Engine” in this section.
2. Remove the flywheel or flexible plate bolts.
3. Remove the flywheel or the flexible plate.

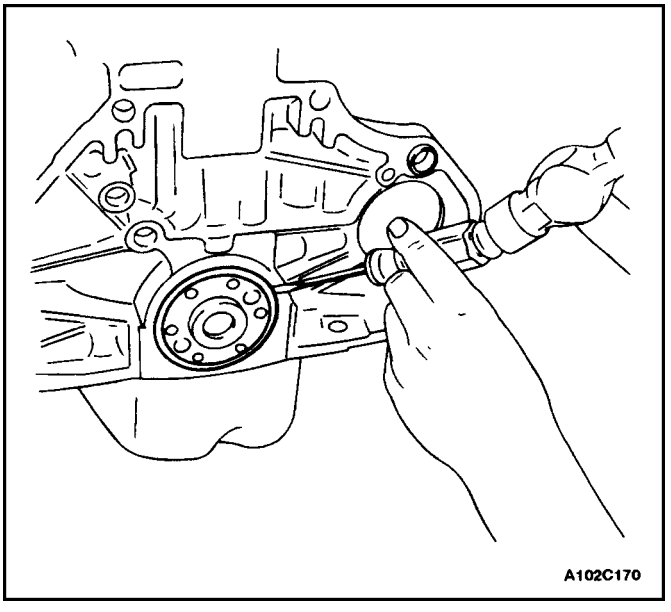

4. Remove the crankshaft rear oil seal.
5. Mount the engine assembly on the engine overhaul stand KM–412.

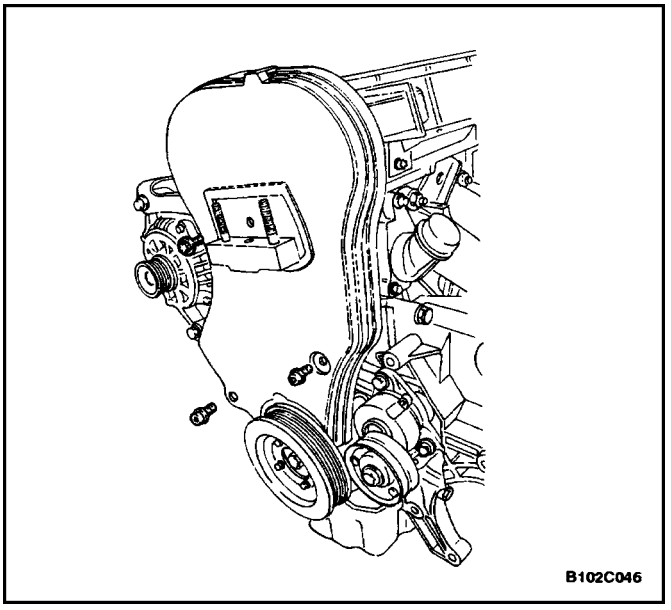

6. Remove the front timing belt cover bolts.
7. Remove the front timing belt cover.
8. Remove the crankshaft pulley bolts.
9. Remove the crankshaft pulley.

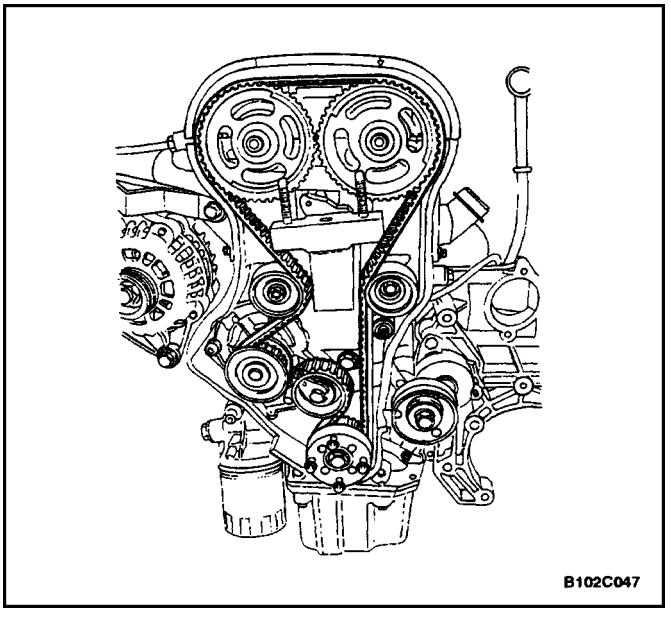

10. Loosen the timing belt automatic tensioner bolt.
11. Rotate the timing belt automatic tensioner hex–key clockwise to release the tension.
12. Remove the timing belt idler pulley bolt and nut.
13. Remove the timing belt idler pulleys.
14. Remove the timing belt.
15. Remove the engine mount retaining bolts.
16. Remove the engine mount.

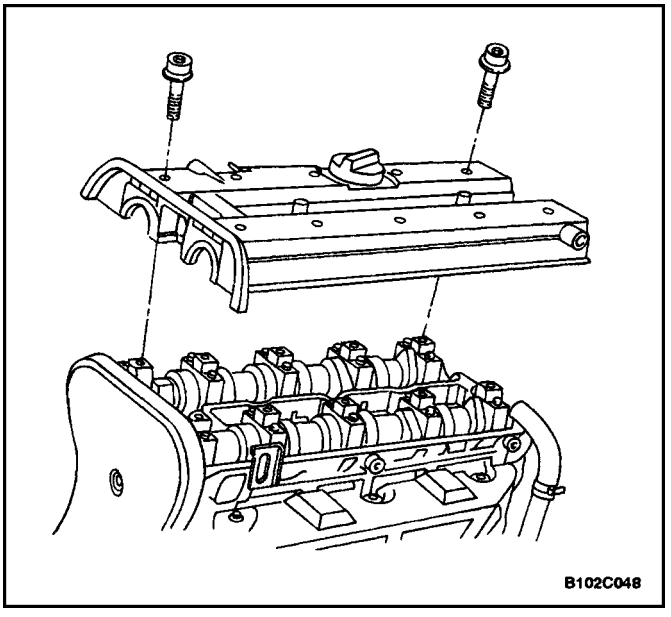

17. Disconnect the crankcase breather tubes from the valve cover.
18. Remove the spark plug cover bolts.
19. Remove the spark plug cover.
20. Disconnect the ignition wires from the spark plugs.
21. Remove the valve cover bolts.
22. Remove the valve cover washers.
23. Remove the valve cover and the valve cover gasket.

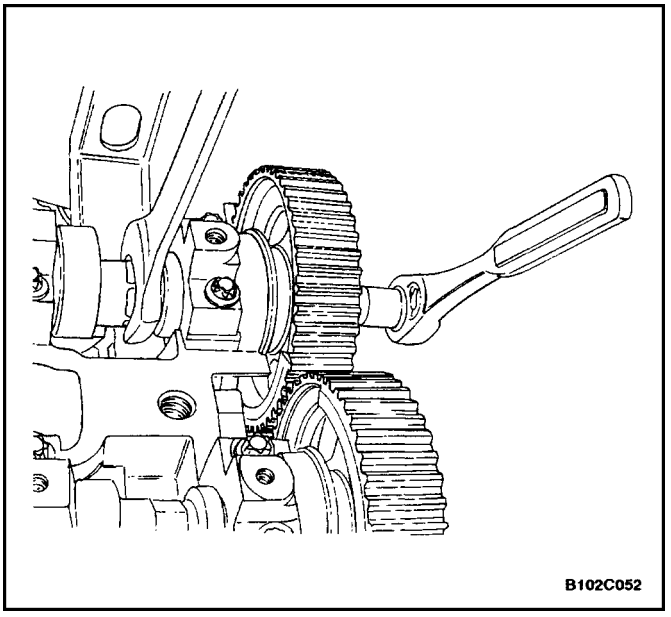

Notice : Take extreme care to prevent any scratches, nicks or damage to the camshafts.

24. While holding the intake camshaft firmly in place, remove the intake camshaft bolt.
25. Remove the intake camshaft gear.
26. While holding the exhaust camshaft firmly in place, remove the exhaust camshaft bolt.
27. Remove the exhaust camshaft gear.

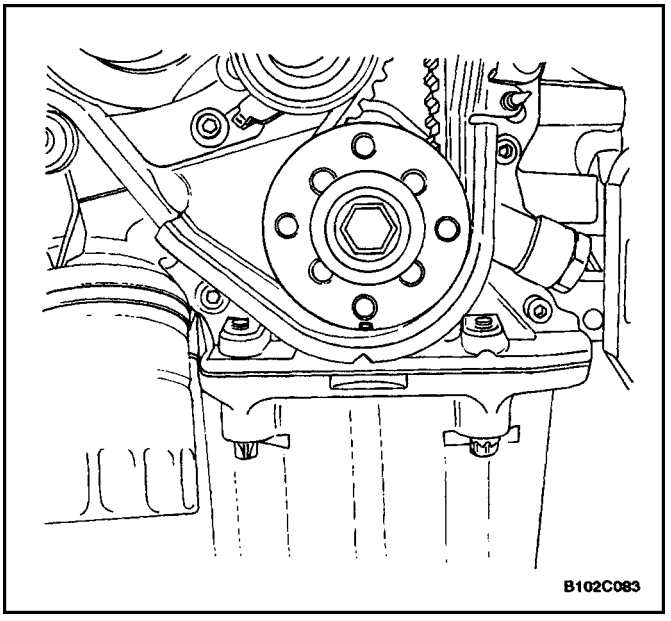

28. Remove the crankshaft timing belt gear.

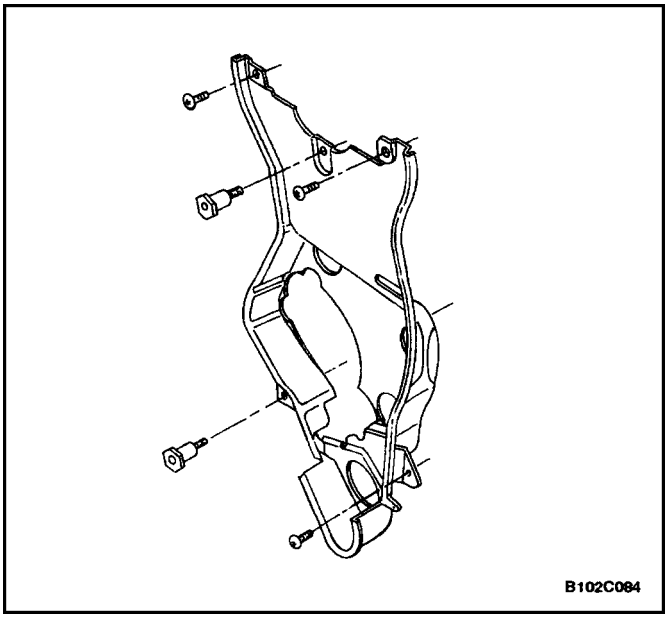

29. Remove the rear timing belt cover bolts and cover.

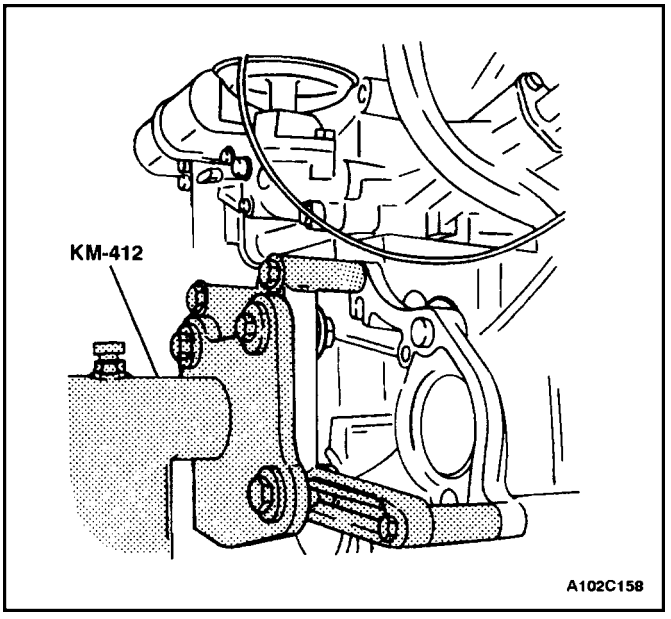

30. Rotate the engine on the engine overhaul stand KM–412.

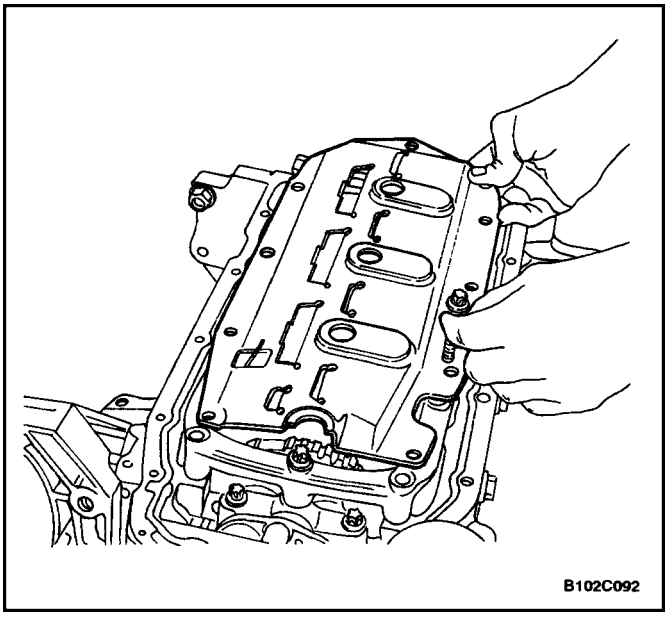

31. Remove the oil pan retaining bolts.
32. Remove the oil pan.
33. Remove the oil pump/pickup tube bolts.
34. Remove the oil pump/pickup tube.
35. Remove the lower block support bracket/splash shield bolts.
36. Remove the splash shield.
37. Remove the lower block support bracket bolts.
38. Remove the lower block support bracket.

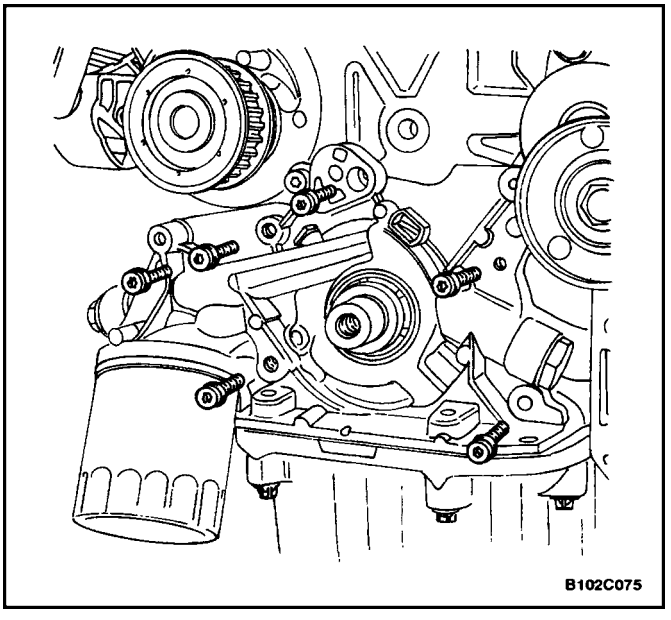

39. Remove the oil pump retaining bolts.
40. Remove the oil pump.

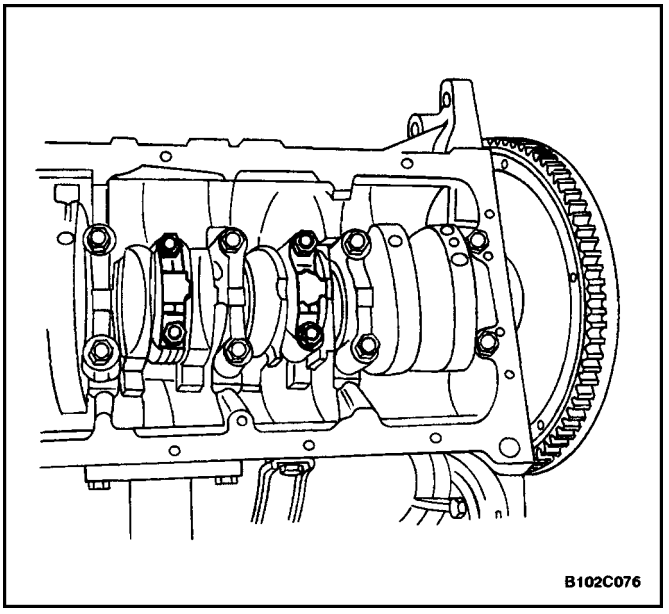

41. Mark the order of the connecting rod bearing caps.
42. Remove the connecting rod bearing cap bolts for all of the pistons.
43. Remove the connecting rod bearing caps and the lower connecting rod bearings.

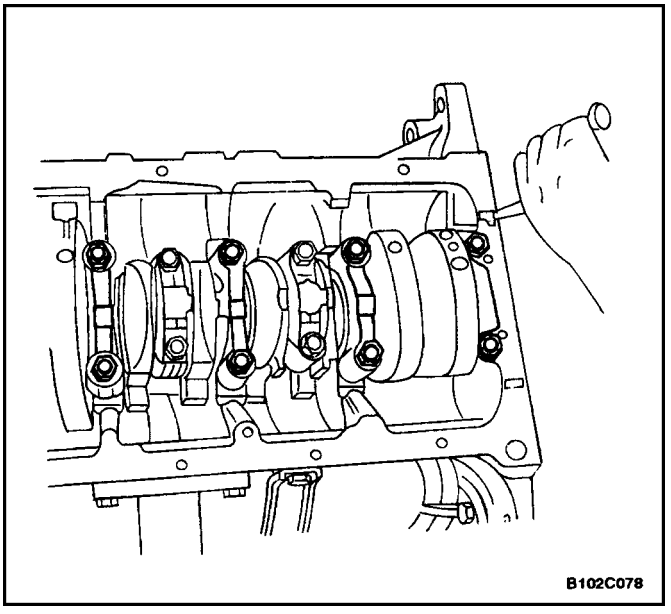

44. Mark the order of the crankshaft bearing caps.
45. Remove the crankshaft bearing cap bolts.
46. Remove the crankshaft bearing caps and the lower crankshaft bearings.
47. Remove the crankshaft.
48. Clean any necessary parts.

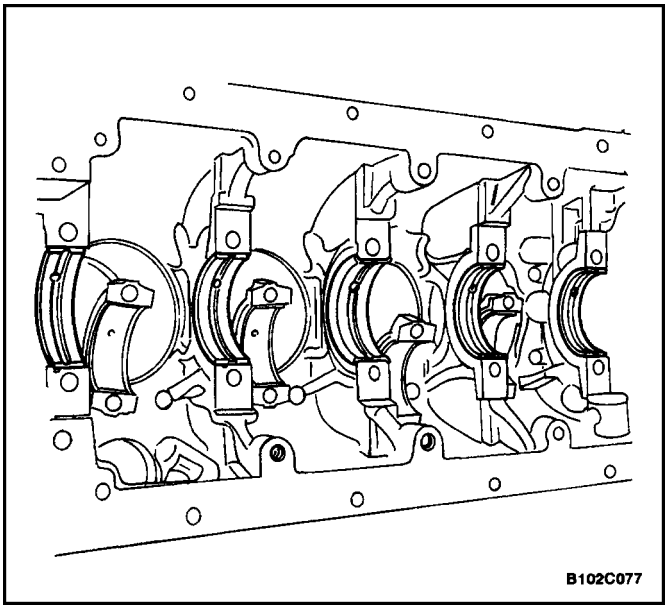

Assembly Procedure

1. Coat the crankshaft bearings with engine oil.
2. If replacing the crankshaft, transfer the pulse pick–up sensor disc to the new crankshaft.

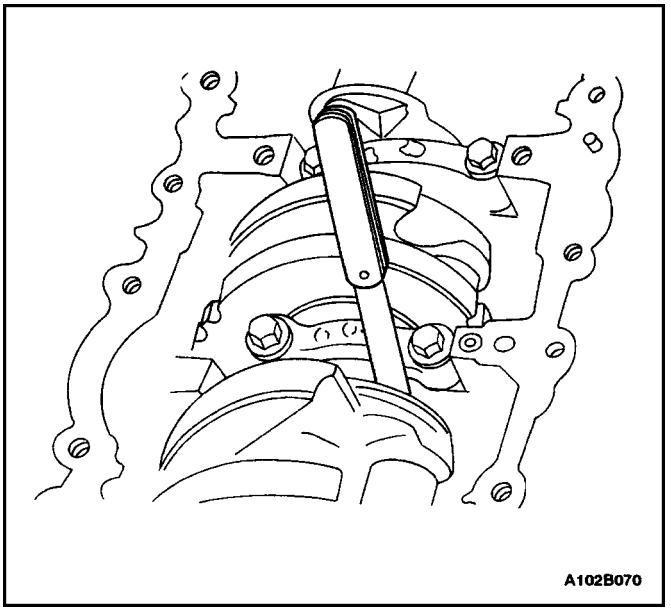
A102B070

3. Install the crankshaft.
4. Install the lower crankshaft bearings in the bearing caps.
5. Inspect the crankshaft end play with the crankshaft bearings installed.
6. Check for permissible crankshaft end play. Refer to”Engine Specifications”in this section.

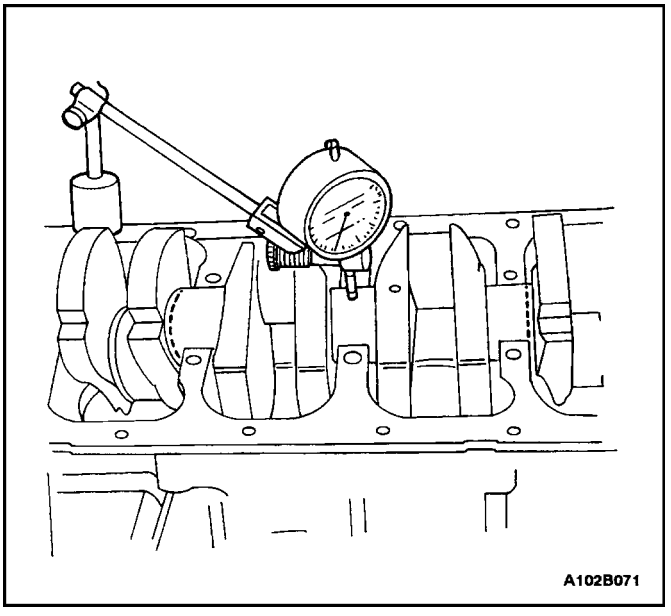
A102B071

7. With the crankshaft mounted on the front and rear crankshaft bearings, check the middle crankshaft journal for permissible out–of–round (runout). Refer to ”Engine Specifications”in this section.

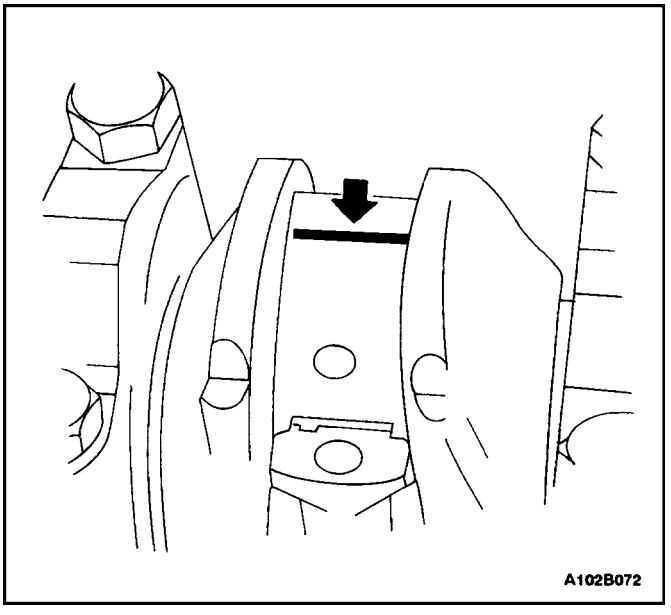
A102B072

Important : Grease the crankshaft journals and lubricate the crankshaft bearings slightly so that the plastic gauging thread does not tear when the crankshaft bearing caps are removed.

8. Inspect all of the crankshaft bearing clearances using a commercially available plastic gauging (ductile plastic threads).
9. Cut the plastic gauging threads to the length of the bearing width. Lay them axially between the crankshaft journals and the crankshaft bearings.
10. Install the crankshaft bearing caps and the bolts.

Tighten

Tighten the crankshaft bearing cap bolts to 50 N•m (26 lb–ft). Use the angular torque gauge, KM–470–B, to tighten the crankshaft bearings +45 degrees + another 15 degrees.

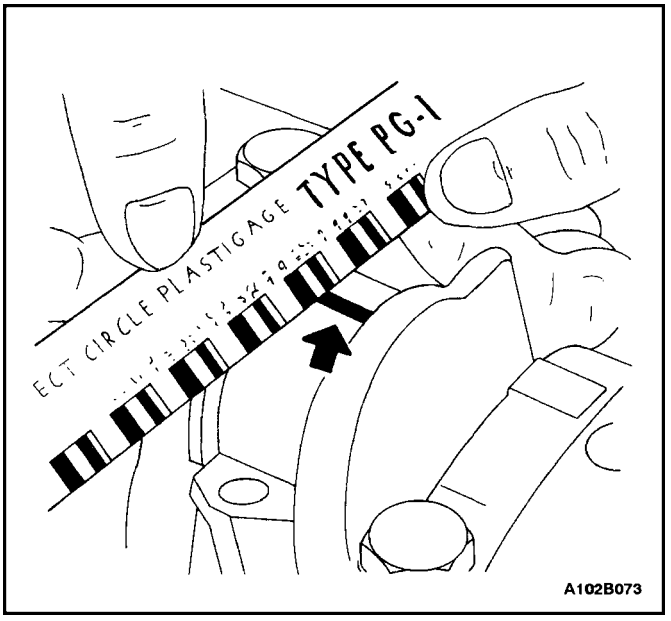

11. Remove the crankshaft bearing cap bolts and the caps.
12. Measure the width of the flattened plastic thread of the plastic gauging using a ruler. (Plastic gauging is available for different tolerance ranges.)
13. Inspect the bearing clearance for permissible tolerance ranges. Refer to ”Engine Specifications”in this section.

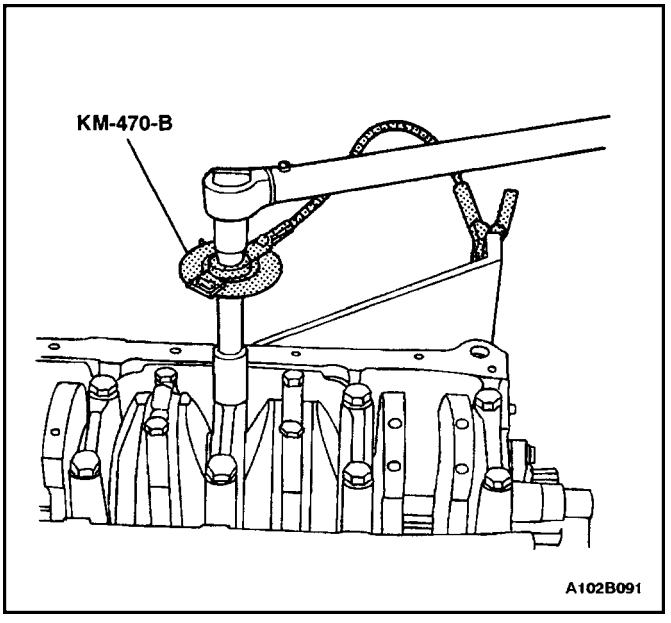

14. Apply a bead of adhesive sealing compound to the grooves of the crankshaft bearing caps.
15. Install the crankshaft bearing caps to the engine block.
16. Tighten the crankshaft bearing caps using new bolts.

Tighten

Tighten the crankshaft bearing cap bolts to 15 N•m (26 lb–ft). Use the angular torque gauge, KM–470–B, to tighten the crankshaft bearings +45 degrees + another 15 degrees.

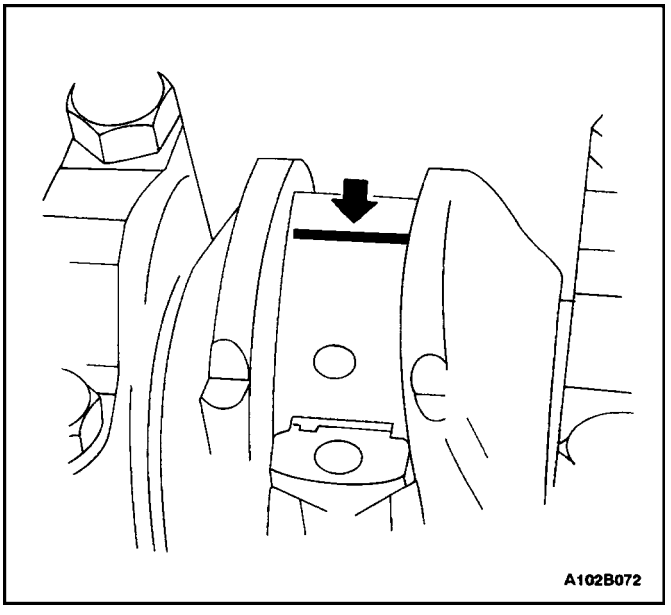

Important : Grease the connecting rod journals and lubricate the connecting rod bearings slightly so that the plastic gauging thread does not tear when the connecting rod bearing caps are removed.

17. Inspect all of the connecting rod bearing clearances using a commercially available plastic gauging (ductile plastic threads).
18. Cut the plastic gauging threads to the length of the connecting rod bearing width. Lay them axially between the connecting rod journals and the connecting rod bearings.
19. Install the connecting rod bearing caps.

Tighten

Tighten the connecting rod bearing cap bolts to 35 N•m (26 lb–ft). Use the angular torque gauge KM–470–B to tighten the connecting rod bearing cap bolts to +45 degrees plus one turn of 15 degrees.

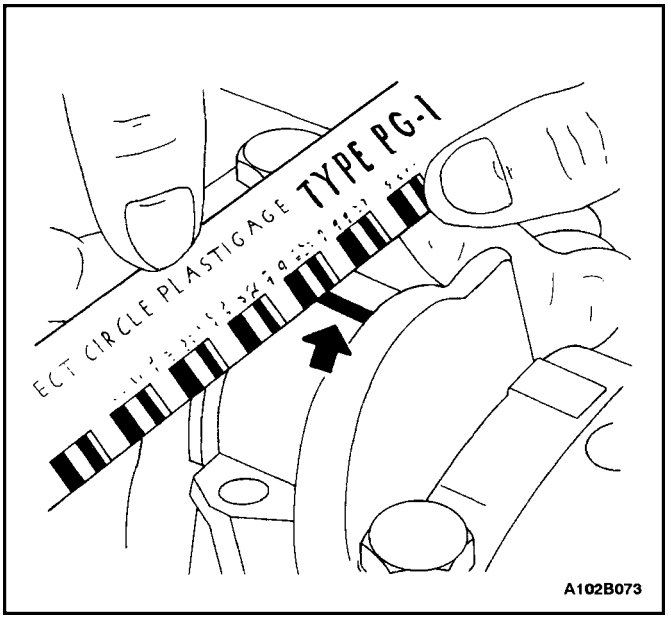

20. Remove the connecting rod bearing caps.
21. Measure the width of the flattened plastic thread of the plastic gauging using a ruler. (Plastic gauging is available for different tolerance ranges.)
22. Inspect the bearing clearance for permissible tolerance ranges. Refer to ”Engine Specifications”in this section.

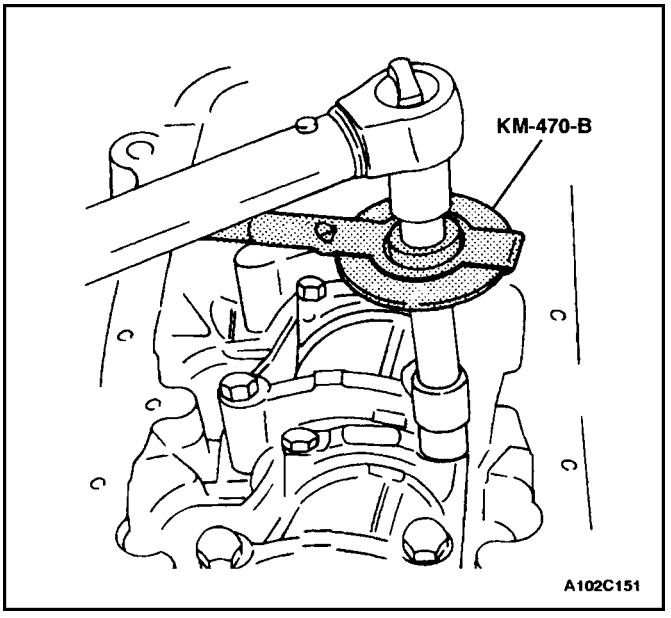

23. Install the connecting rod bearing caps to the connecting rods.
24. Tighten the connecting rod bearing caps using new bolts.

Tighten

Tighten the connecting rod bearing cap bolts to 35 N•m (26 lb–ft). Use the angular torque gauge, KM–470–B, to tighten the connecting rod cap bolts to +45 degrees plus one turn of 15 degrees.

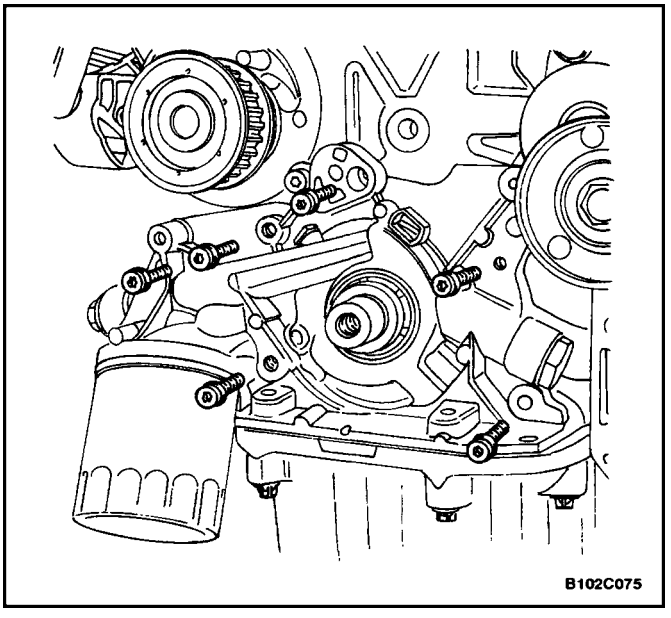

25. Install the oil pump.
26. Install the oil pump retaining bolts.

Tighten

Tighten the oil pump retaining bolts to 10 N•m (89 lb–in).

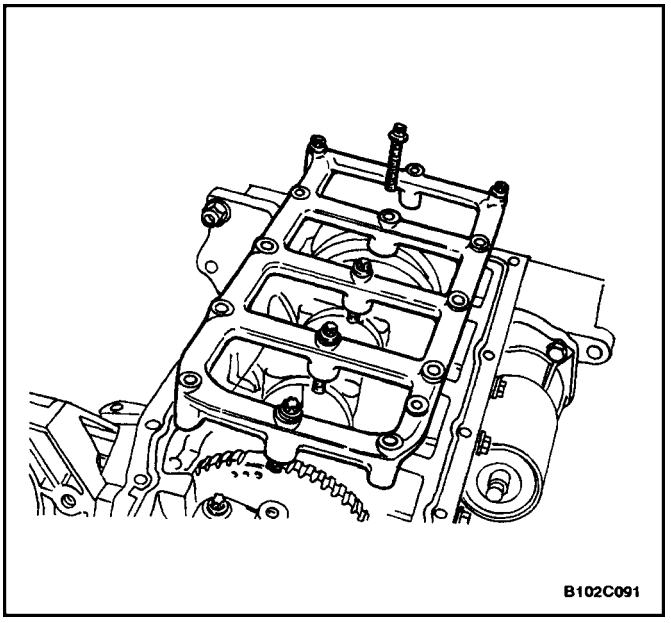
B102C091

27. Install the lower block support bracket and bolts.

Tighten

Tighten the lower block support bolts to 35 N•m (26 lb–ft).

28. Install the lower block support bracket splash shield and bolts.

Tighten

Tighten the lower block support bracket and splash shield bolts to 35 N•m (26 lb–ft).

29. Install the oil pump/pick–up tube.
30. Install the oil pump/pick–up tube bolts.

Tighten

Tighten the oil pump/pick–up tube bolts to 10 N•m (89 lb–in).

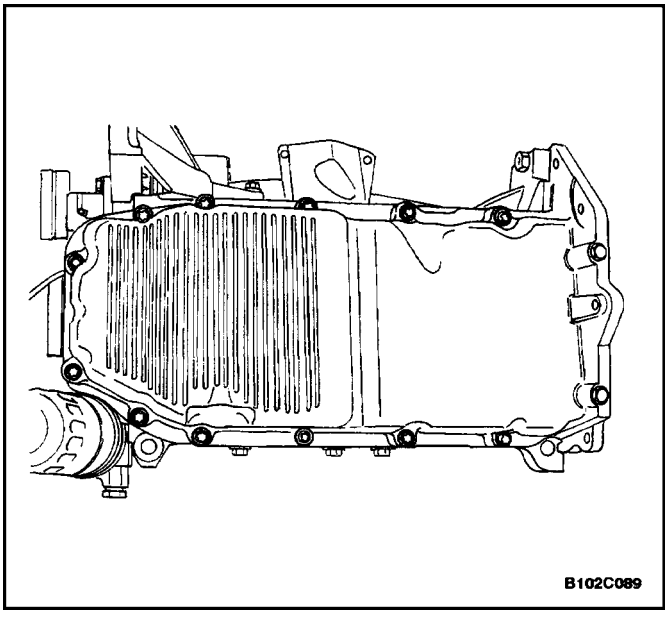
B102C089

31. Install the oil pan gasket to the oil pan.
32. Install the oil pan.

Important : Install the oil pan within 5 minutes after applying the liquid gasket to the oil pan.

33. Install the oil pan retaining bolts.

Tighten

Tighten the oil pan retaining bolts to 10 N•m (89 lb–in).

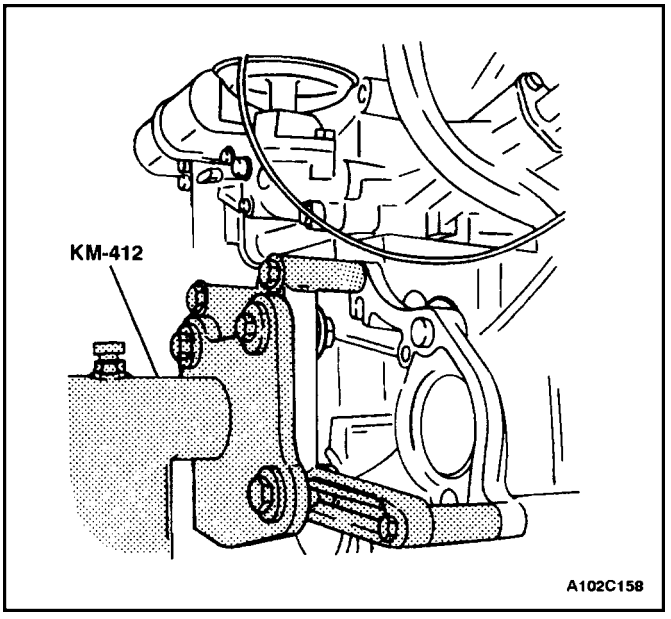

A102C158

34. Rotate the engine on the engine overhaul stand KM–412.

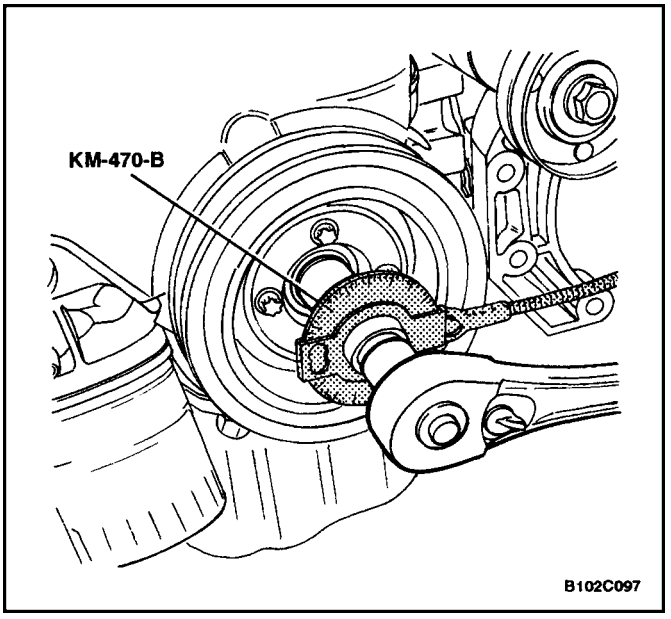

35. Install the rear timing belt cover.
36. Install the rear timing belt cover bolts.

Tighten

Tighten the rear timing belt cover bolts to 7 N•m (62 lb–in).

37. Install the crankshaft timing belt drive gear and the bolt.

Tighten

Tighten the crankshaft timing belt drive gear bolt to 135 N•m (100 lb–ft) plus 30˚ to 10˚ using the torque angular gauge KM–470–B.

38. Install the engine mount and the retaining bolts.

Tighten

Tighten the engine mount retaining bolts to 60 N•m (44 lb–ft).

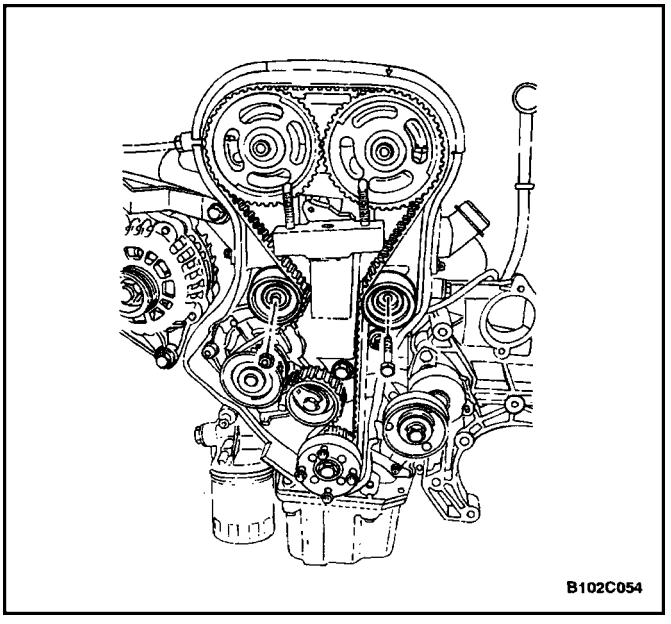

39. Install the timing belt automatic tensioner.
40. Install the timing belt automatic tensioner bolts.

Tighten

Tighten the timing belt automatic tensioner bolts to 25 N•m (18 lb–ft).

41. Install the timing belt idler pulley.
42. Install the timing belt idler pulley bolt and nut.

Tighten

Tighten the timing belt idler pulley bolt to 25 N·m (18 lb–ft).

Tighten

Tighten the timing belt idler pulley nut to 25 N•m (18 lb–ft).

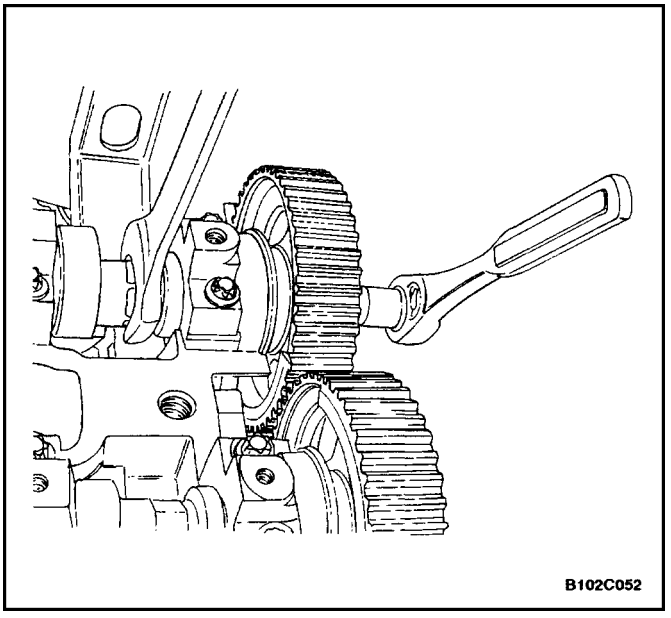

Notice : Take extreme care to prevent any scratches, nicks or damage to the camshafts.

43. Install the intake camshaft gear.
44. Install the intake camshaft gear bolt while holding the intake camshaft firmly in place.

Tighten

Tighten the intake camshaft gear bolt to 50 N•m (37 lb–ft).

45. Install the exhaust camshaft gear.
46. Install the exhaust camshaft gear bolt while holding the exhaust camshaft firmly in place.

Tighten

Tighten the exhaust camshaft gear bolt to 50 N•m (37 lb–ft). Using the angular torque gauge KM–470–B, tighten the intake and the exhaust camshaft gear bolts another 60 degrees plus 15 degrees.

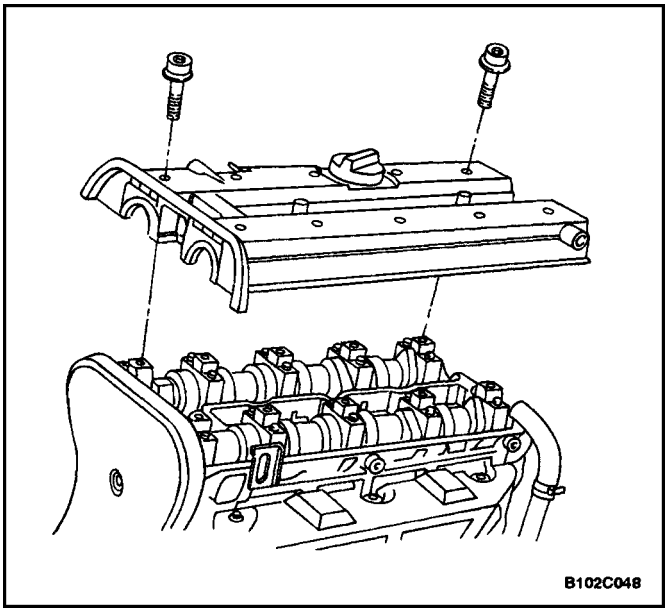

47. Install the timing belt. Refer to ”Timing Belt” in this section.
48. Adjust the timing belt tension. Refer to ”Timing Belt Check and Adjust” in this section.
49. Apply a small amount of gasket sealant to the corners of the front camshaft caps and to the top of the rear valve cover to cylinder head seal.
50. Install the valve cover and the valve cover gasket.
51. Install the valve cover washers.
52. Install the valve cover bolts.

Tighten

Tighten the valve cover bolts to 8 N•m (71 lb–in).

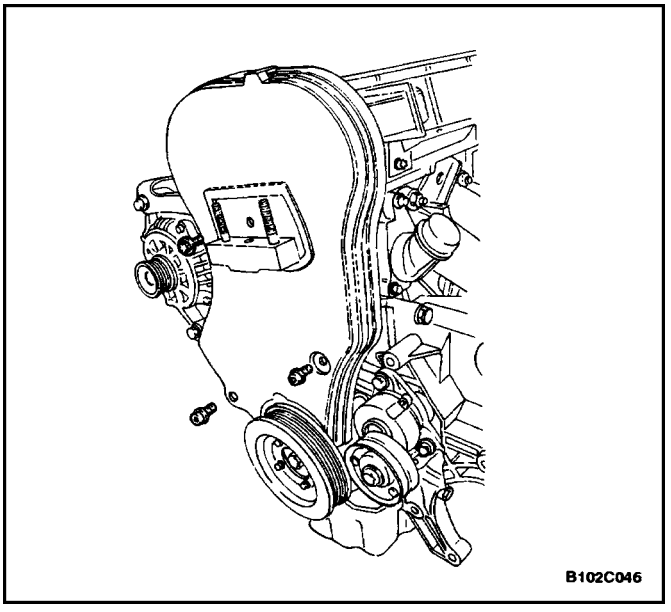

53. Connect the ignition wires to the spark plugs.
54. Install the spark plug cover.
55. Install the spark plug cover bolts.

Tighten

Tighten the spark plug cover bolts to 8 N•m (71 lb–in).

56. Connect the crankcase breather tube to the valve cover.
57. Install the front timing belt cover.
58. Install the front timing belt cover bolts.

Tighten

Tighten the front timing belt cover bolts to 6 N•m (53 lb–in).

59. Install the engine lifting device.
60. Remove the engine from the engine overhaul stand KM–412.

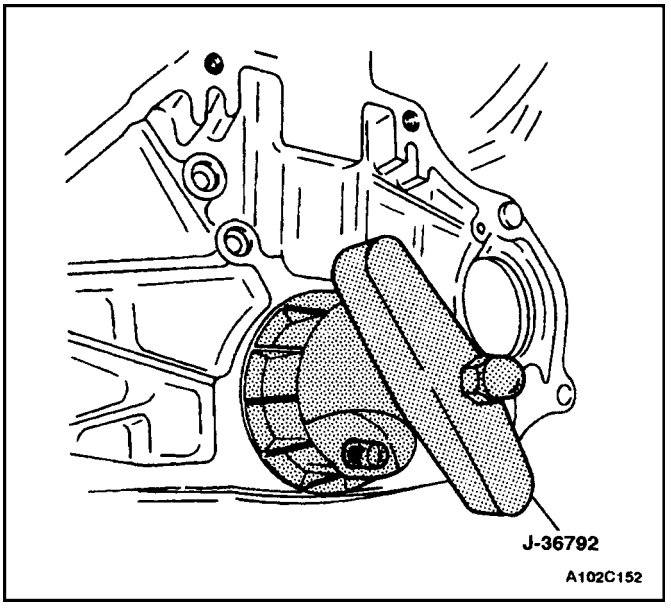

61. Install a new crankshaft rear oil seal using installer J–36972 (or KM–635).

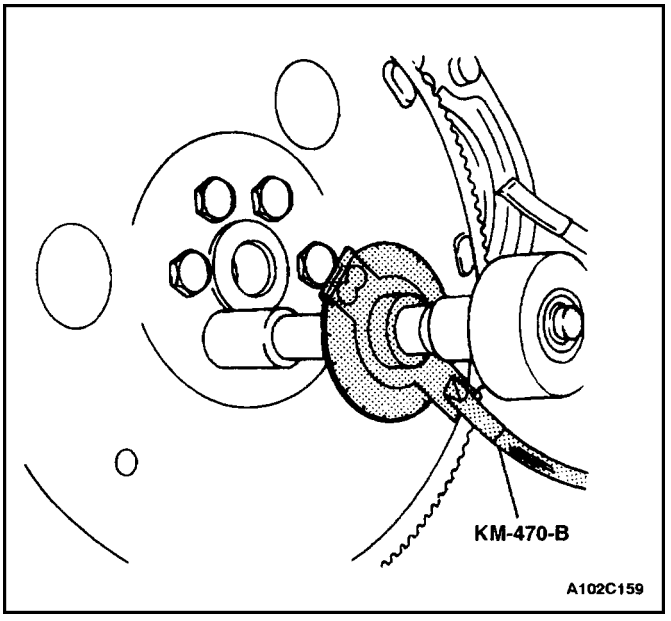

62. Install the flywheel or flexible plate.
63. Install the flywheel or the flexible plate bolts.

    Tighten

    Tighten the flywheel bolts to 65 N•m (48 lb–ft). Use the angular torque gauge KM–470–B to tighten the flywheel bolts to 30 degrees plus 15 degrees. For the automatic transmission, tighten the flexible plate bolts to 65 N•m (48 lb–ft).
64. Install the engine. Refer to ”Engine”in this section.

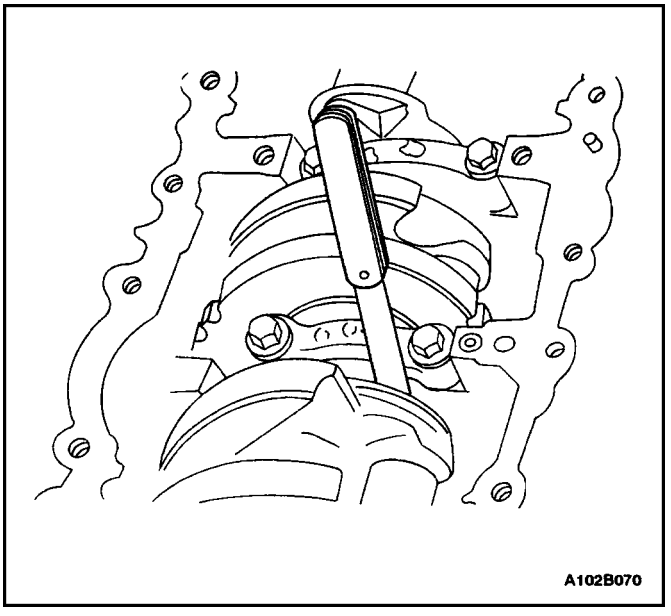

CRANKSHAFT BEARINGS AND CONNECTING ROD BEARINGS – GAUGING PLASTIC

Tools Required

KM–470–B Angular Torque Gauge

Inspection Procedure – Crankshaft

1. Coat the crankshaft bearings with engine oil.
2. Install the upper crankshaft bearings into the engine block crankshaft journals.
3. Install the lower crankshaft bearings into the crankshaft bearing caps.
4. Install the crankshaft.
5. Inspect the crankshaft end play with the crankshaft bearings installed.
6. Check for permissible crankshaft end play. Refer to ”Engine Specifications”in this section.
7. With the crankshaft mounted on the front and rear crankshaft bearings, check the middle crankshaft journal for permissible out–of–round (runout). Refer to ”Engine Specifications”in this section.

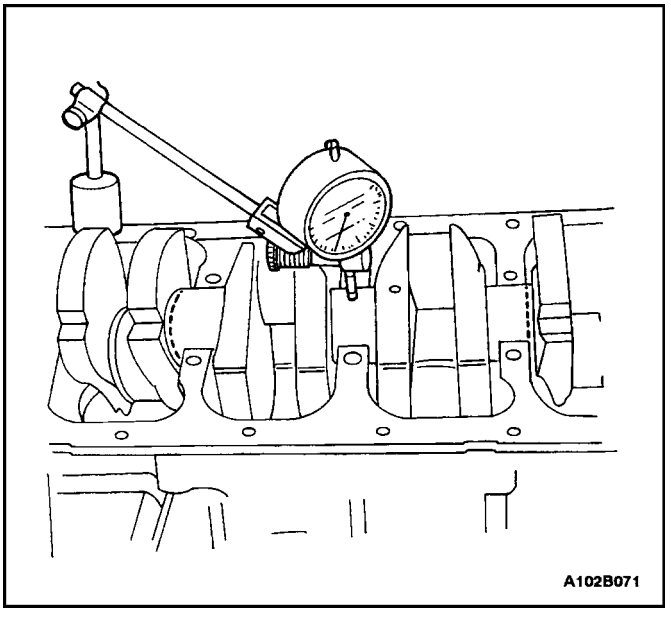

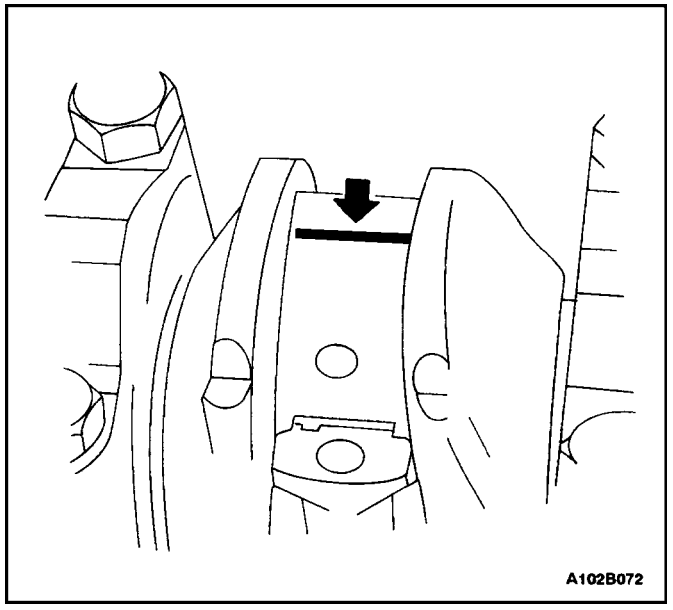

Important : Grease the crankshaft journals and lubricate the crankshaft bearings slightly so that the plastic gauging thread does not tear when the crankshaft bearing caps are removed.

8. Inspect all of the crankshaft bearing clearances using a commercially available plastic gauging (ductile plastic threads).
9. Cut the plastic gauging threads to the length of the bearing width. Lay them axially between the crankshaft journals and the crankshaft bearings.

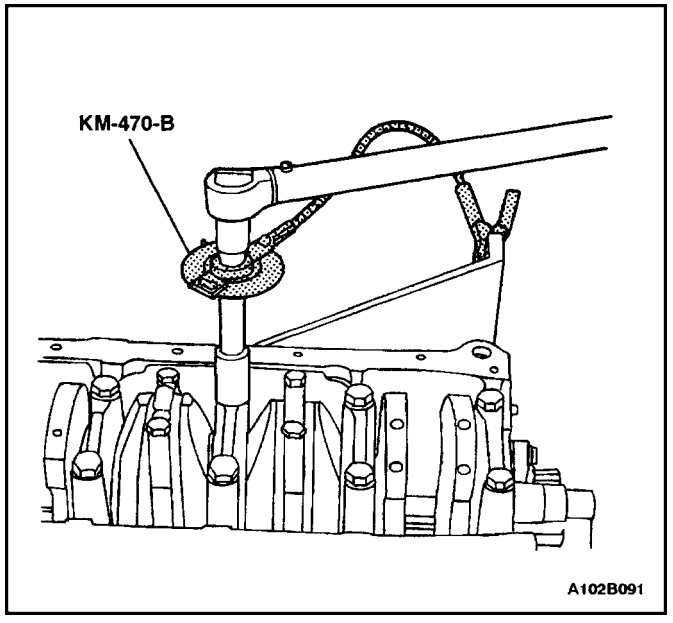

10. Install the crankshaft bearing caps.
11. Install the crankshaft bearing cap bolts.

Tighten

Tighten the crankshaft bearing cap bolts to 50 N•m (37 lb–ft). Using the angular torque gauge KM–470–B, tighten the crankshaft bearing cap bolts to +45 degrees +15 degrees.

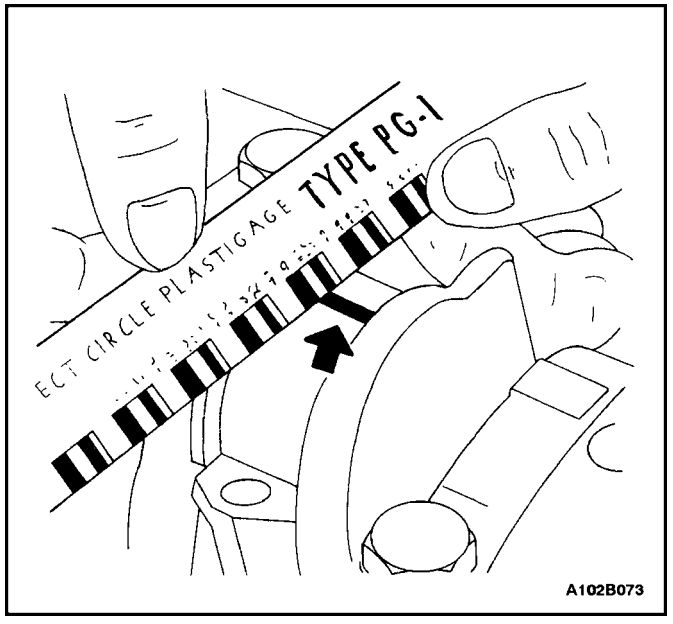

12. Remove the crankshaft bearing caps.
13. Measure the width of the flattened plastic thread of the plastic gauging using a ruler. (Plastic gauging is available for different tolerance ranges.)
14. Inspect the bearing clearances for permissible tolerance ranges. Refer to ”Engine Specifications”in this section.

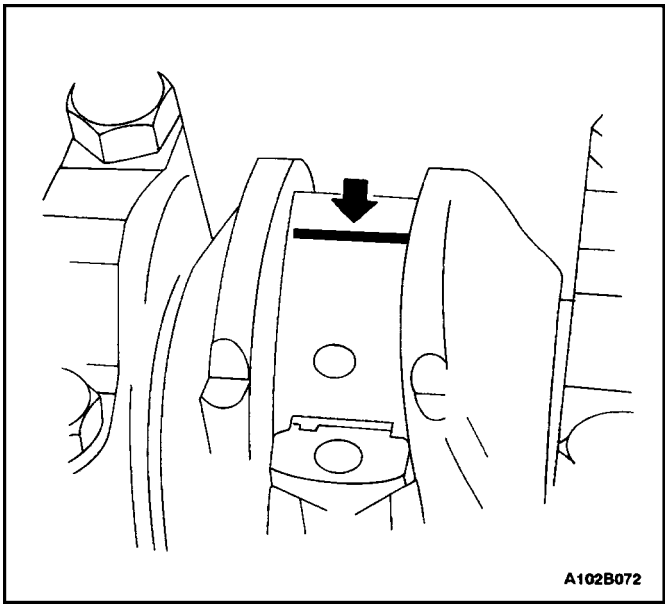

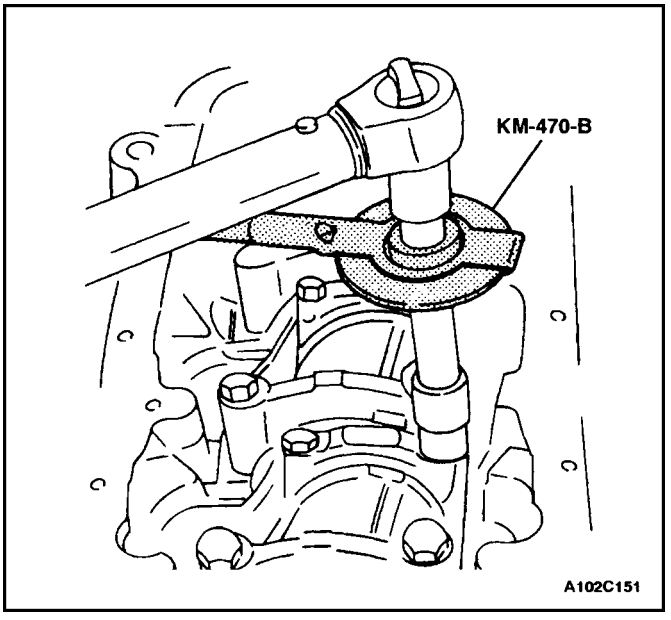

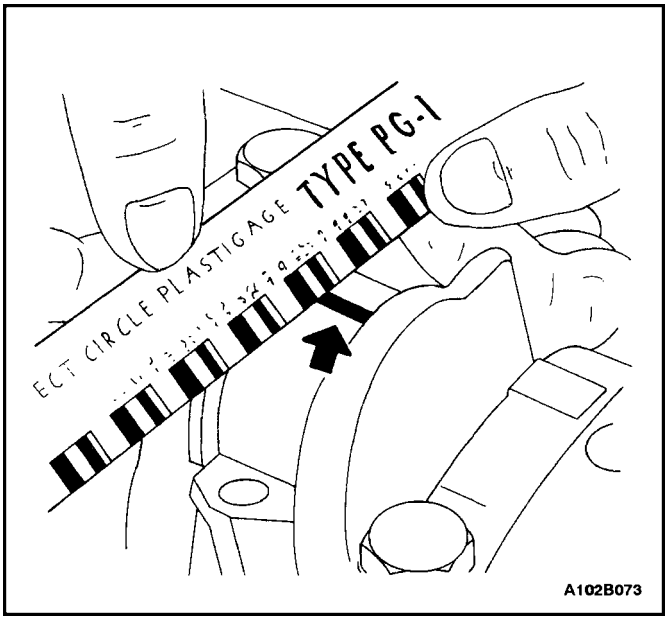

Inspection Procedure – Connecting Rods

1. Coat the connecting rod bearings with engine oil.
2. Install the upper connecting rod bearings into the connecting rod journals.
3. Install the lower connecting rod bearings into the connecting rod bearing caps.

Important : Grease the connecting rod journals and lubricate the connecting rod bearings slightly so that the plastic gauging thread does not tear when the connecting rod bearing caps are removed.

4. Inspect all of the connecting rod bearing clearances using a commercially available plastic gauging (ductile plastic threads).
5. Cut the plastic gauging threads to the length of the bearing width. Lay them axially between the connecting rod journals and the connecting rod bearings.
6. Install the connecting rod bearing caps.
7. Install the connecting rod bearing cap bolts.

Tighten

Tighten the connecting rod cap bolts to 35 N•m (26 lb–ft). Using the angular torque gauge KM–470–B, tighten the connecting rod cap bolts to +45 degrees plus one turn of 15 degrees.

8. Remove the connecting rod bearing caps.
9. Measure the width of the flattened plastic thread of the plastic gauging using a ruler. (Plastic gauging is available for different tolerance ranges.)
10. Inspect the bearing clearance for permissible tolerance ranges. Refer to ”Engine Specifications”in this section.

GENERAL DESCRIPTION AND SYSTEM OPERATION

CYLINDER HEAD AND GASKET

The cylinder head is made of an aluminum alloy and uses cross–flow intake and exhaust ports. A spark plug is located in the center of each combustion chamber. The cylinder head houses the dual camshafts.

CRANKSHAFT

The crankshaft has eight integral weights which are cast with it for balancing. Oil holes run through the center of the crankshaft to supply oil to the connecting rods, the bearings, the pistons, and the other components. The end thrust load is taken by the thrust washers installed at the center journal.

TIMING BELT

The timing belt coordinates and keeps the crankshaft and the dual overhead camshafts synchronized. The timing belt also turns the coolant pump. The timing belt and the pulleys are toothed so that there is no slippage between them. There are two idler pulleys. An automatic tensioner pulley maintains the timing belt's correct tension. The timing belt is made of a tough reinforced rubber similar to that used on the serpentine drive belt and requires no lubrication.

OIL PUMP

The oil pump draws engine oil from the oil pan and feeds it under pressure to the various parts of the engine. An oil strainer is mounted before the inlet of the oil pump to remove impurities which could clog or damage the oil pump or other engine components. When the crankshaft rotates, the oil pump driven gear rotates. This causes the space between the gears to constantly open and narrow, pulling oil in from the oil pan when the space opens and pumping the oil out to the engine as it narrows.

At high engine speeds, the oil pump supplies a much higher amount of oil than required for lubrication of the engine. The oil pressure regulator prevents too much oil from entering the engine lubrication passages. During normal oil supply, a coil spring and valve keep the bypass closed, directing all of the oil pumped to the engine. When the amount of oil being pumped increases, the pressure becomes high enough to overcome the force of the spring. This opens the valve of the oil pressure regulator, allowing the excess oil to flow through the valve and drain back to the oil pan.

OIL PAN

The engine oil pan is mounted to the bottom of the cylinder block. The engine oil pan houses the crankcase and is made of cast aluminum.

Engine oil is pumped from the oil pan by the oil pump. After it passes through the oil filter, it is fed through two paths to lubricate the cylinder block and the cylinder head. In one path, the oil is pumped through oil passages in the crankshaft to the connecting rods, and to the pistons and cylinders. It then drains back to the oil pan. In the second path, the oil is pumped through passages to the camshaft. The oil passes through the internal passage ways in the camshafts to lubricate the valve assemblies before draining back to the oil pan.

EXHAUST MANIFOLD

A single four–port, rear–takedown manifold is used. The manifold is designed to direct escaping exhaust gases out of the combustion chambers with a minimum of back pressure. The oxygen sensor is mounted to the exhaust manifold.

INTAKE MANIFOLD

The intakemanifold has four independent long ports and utilizes an inertial supercharging effect to improve engine torque at low and moderate speeds.

CAMSHAFTS

This engine is a dual overhead camshaft (DOHC) type, which means there are two camshafts. One camshaft operates the intake valves, and the other camshaft operates the exhaust valves. The camshafts sit in journals on the top of the engine (in the cylinder head) and are held in place by camshaft caps. The camshaft journals of the cylinder head are drilled for oil passages. Engine oil travels to the camshafts under pressure where it lubricates each camshaft journal. The oil returns to the oil pan through drain holes in the cylinder head. The camshaft lobes are machined into the solid camshaft to precisely open and close the intake and the exhaust valves the proper distance at the correct time. The camshaft lobes are oiled by splash action from pressurized oil escaping from the camshaft journals.

SECTION : 1A

GENERAL ENGINE INFORMATION

TABLE OF CONTENTS

DIAGNOSIS 1A–1
COMPRESSION TEST 1A–1
OIL PRESSURE TEST 1A–2
OIL LEAK DIAGNOSIS 1A–3
KNOCK DIAGNOSIS 1A–4
NOISE DIAGNOSIS 1A–8

GENERAL INFORMATION 1A–11
CLEANLINESS AND CARE 1A–11
ON–ENGINE SERVICE 1A–11

DIAGNOSIS

COMPRESSION TEST

Important : Disconnect the Crankshaft Position Sensor (CPS) connector to disable the fuel and the ignition systems.

Test the compression pressure for each cylinder. Low compression pressure may be the fault of the valves or the pistons. The following conditions should be considered when checking the cylinder compression:

- The engine should be at normal operating temperature.
- The throttle must be wide open.
- All the spark plugs should be removed.
- The battery must be at or near full charge.

1. Place approximately three squirts of oil from a plunger type oiler into each spark plug port.
2. Insert the engine compression gauge into each spark plug port.
3. Crank test each cylinder with four to five compression strokes using the starter motor.
4. The lowest reading should not be less than 70% of the highest reading. The compression gauge reading should not be less than 689 kPa (100 psi) for any of the cylinders.
5. Examine the gauge readings obtained after the four ”puffs” per cylinder are obtained from cranking the starter motor. The readings are explained in the following descriptions:

- Normal Condition – Compression builds up quickly and evenly to specified compression on each cylinder.
- Piston Rings Faulty – Compression is low on the first stroke and tends to build up on following strokes, but does not reach normal. The compression pressure improves considerably with the addition of oil into the cylinder.
- Valves Faulty – Low compression pressure on the first stroke. The compression pressure does not tend to build up on the following strokes. The compression pressure does not improve much with the addition of oil into the cylinder.

OIL PRESSURE TEST

Step	Action	Value(s)	Yes	No
1	Is the oil pressure warning lamp on?		Go to *Step 2*	System OK
2	Check the oil level in the crankcase. Is the oil level low?		Go to *Step 3*	Go to *Step 4*
3	Add oil so that the oil level is up to the MAX mark on the indicator. Is the repair complete?		Go to *Step 1*	
4	Check the idle speed. Is the idle speed below the value specified?	825 rpm	Go to *Step 5*	Go to *Step 6*
5	Increase the idle speed. Is the speed increased?		Go to *Step 1*	
6	Inspect the oil pressure switch. Is the oil pressure switch incorrect or malfunctioning?		Go to *Step 7*	Go to *Step 8*
7	Install a new oil pressure switch. Is the repair complete?		Go to *Step 1*	
8	Inspect the oil pressure gauge. Is the oil pressure gauge incorrect or malfunctioning?		Go to *Step 9*	Go to *Step 10*
9	Install a new oil pressure gauge. Is the repair complete?		Go to *Step 1*	
10	Inspect the engine oil. Is the engine oil in the crankcase diluted or of the improper viscosity?		Go to *Step 11*	Go to *Step 12*
11	Install new engine oil of the proper viscosity for the expected temperatures. Is the repair complete?		Go to *Step 1*	
12	Inspect the oil pump. Is the pump worn or dirty?		Go to *Step 13*	Go to *Step 14*
13	Replace the oil pump. Is the repair complete?		Go to *Step 1*	
14	Inspect the oil filter. Is the oil filter plugged?		Go to *Step 15*	Go to *Step 16*
15	Install a new oil filter. Is the repair complete?		Go to *Step 1*	
16	Inspect the oil pickup screen. Is the oil pickup screen loose or plugged?		Go to *Step 17*	Go to *Step 18*
17	Tighten or replace the oil pickup screen as necessary. Is the repair complete?		Go to *Step 1*	
18	Inspect the oil pickup tube. Are there any holes in the oil pickup tube?		Go to *Step 19*	Go to *Step 20*
19	Replace the oil pickup tube. Is the repair complete?		Go to *Step 1*	

Step	Action	Value(s)	Yes	No
20	Inspect the bearing clearances. Are the bearing clearances more than the values specified?	Crankshaft 0.005 mm (0.0001 in.) Connecting Rod 0.0019–0.070 mm (0.0007–0.0025 in.)	Go to *Step 21*	Go to *Step 22*
21	Replace the bearing, if necessary. Is the repair complete?		Go to *Step 1*	
22	Inspect the oil galleries. Are the oil galleries cracked, porous, or plugged?		Go to *Step 23*	Go to *Step 24*
23	Repair or replace the engine block. Is the repair complete?		Go to *Step 1*	
24	Inspect the gallery plugs. Are any of the gallery plugs missing or installed improperly?		Go to *Step 25*	Go to *Step 26*
25	Install plugs or repair, as necessary. Is the repair complete?		Go to *Step 1*	
26	Inspect the camshaft. Is the camshaft worn or is there evidence of poor machining?		Go to *Step 27*	System OK
27	Replace the camshaft. Is the repair complete?		Go to *Step 1*	

OIL LEAK DIAGNOSIS

Most fluid oil leaks are easily located and repaired by visually finding the leak and replacing or repairing the necessary parts. On some occasions, a fluid leak may be difficult to locate or repair. The following procedures may help you in locating and repairing most leaks.

Finding the Leak:

1. Identify the fluid. Determine whether it is engine oil,automatic transmission fluid, power steering fluid, etc.
2. Identify where the fluid is leaking from.
   1) After running the vehicle at normal operating temperature, park the vehicle over a large sheet of paper.
   2) Wait a few minutes.
   3) You should be able to find the approximate location of the leak by the drippings on the paper.
3. Visually check around the suspected component. Check around all the gasket mating surfaces for leaks. A mirror is useful for finding leaks in areas that are hard to reach.
4. If the leak still cannot be found, it may be necessary to clean the suspected area with a degreaser, steam or spray solvent.
   1) Thoroughly clean the area.
   2) Dry the area.
   3) Operate the vehicle for several miles at normal operating temperature and varying speeds.
   4) After operating the vehicle, visually check the suspected component.
   5) If you still cannot locate the leak, try using the powder or black light and dye method.

Powder Method:

1. Clean the suspected area.
2. Apply an aerosol–type powder (such as foot powder) to the suspected area.
3. Operate the vehicle under normal operating conditions.
4. Visually inspect the suspected component. You should be able to trace the leak path over the white powder surface to the source.

Black Light and Dye Method:

A dye and light kit is available for finding leaks. Refer to the manufacturer’s directions when using the kit.

1. Pour the specified amount of dye into the engine oil fill tube.

2. Operate the vehicle under normal operating conditions as directed in the kit.
3. Direct the light toward the suspected area. The dyed fluid will appear as a yellow path leading to the source.

Repairing the Leak:

Once the origin of the leak has been pinpointed and traced back to its source, the cause of the leak must be determined in order for it to be repaired properly. If a gasket is replaced, but the sealing flange is bent, the new gasket will not repair the leak. The bent flange must be repaired also. Before attempting to repair a leak, check for the following conditions and correct them as they may cause a leak.

Gaskets:

- The fluid level/pressure is too high.
- The crankcase ventilation system is malfunctioning.
- The fasteners are tightened improperly or the threads are dirty or damaged.
- The flanges or the sealing surface is warped.
- There are scratches, burrs or other damage to the sealing surface.
- The gasket is damaged or worn.
- There is cracking or porosity of the component.
- An improper seal was used, (where applicable).

Seals:

- The fluid level/pressure is too high.
- The crankcase ventilation system is malfunctioning.
- The seal bore is damaged (scratched, burred or nicked).
- The seal is damaged or worn.
- Improper installation is evident.
- There are cracks in the component.
- The shaft surface is scratched, nicked or damaged.
- A loose or worn bearing is causing excess seal wear.

KNOCK DIAGNOSIS

Definition for Knock

Engine knock refers to the various types of engine noise. Heavy knock is usually very loud and the result of broken or excessively worn internal engine components. Light knock is a noticeable noise, but not as loud. Light knock can be caused by worn internal engine components. Loose or broken external engine components can also cause heavy or light knock.

Engine Knocks Cold and Continues for Two–Three Minutes and/or Knock Increases with Engine Torque

Step	Action	Value(s)	Yes	No
1	Does the engine knock when it is cold and continue for two to three minutes or does the knock increase with torque?		Go to *Step 2*	System OK
2	Inspect the flywheel. Is the flywheel contacting the splash shield?		Go to *Step 3*	Go to *Step 4*
3	Reposition the splash shield. Is the repair complete?		Go to *Step 1*	
4	Inspect the balancer and the drive pulleys. Is either the balancer or the drive pulleys loose or broken?		Go to *Step 5*	Go to *Step 6*
5	Tighten or replace the balancer or the drive pulleys. Is the repair complete?		Go to *Step 1*	
6	Inspect the piston–to–bore clearance. Is the clearance more than the value specified?	0.030 mm (0.001 in.)	Go to *Step 7*	Go to *Step 8*
7	1. Rebore the cylinder and hone to size. 2. Replace the piston. Is the repair complete?*		Go to *Step 1*	
8	Inspect the connecting rod. Is the connecting rod bent?		Go to *Step 9*	System OK
9	Replace the connecting rod. Is the repair complete?		Go to *Step 1*	

* Cold engine piston knock usually disappears when the cylinder is grounded out. Cold engine piston knock, which disappears in about 1.5 minutes, is considered acceptable.

Heavy Knock Hot with Torque Applied

Step	Action	Value(s)	Yes	No
1	Is there a heavy knock when the engine is hot and torque is applied?		Go to *Step 2*	System OK
2	Inspect the balancer and the pulley hub. Is the balancer or the pulley hub broken?		Go to *Step 3*	Go to *Step 4*
3	Replace the broken balancer or the pulley hub. Is the repair complete?		Go to *Step 1*	
4	Inspect the torque converter bolts. Are the bolts tightened to specified value?	45N•m(33 lb–ft)	Go to *Step 5*	Go to *Step 6*
5	Tighten the torque converter bolts. Is the repair complete?		Go to *Step 1*	
6	Inspect the accessory belts. Are the belts too tight or nicked?		Go to *Step 7*	*Step 8*
7	Replace and/or tension the belts to specifications as necessary. Is the repair complete?		Go to *Step 1*	
8	Inspect the exhaust system. Is the system grounded?		Go to *Step 9*	Go to *Step 10*
9	Reposition the system as necessary. Is the repair complete?		Go to *Step 1*	
10	Inspect the flywheel. Is the flywheel cracked?		Go to *Step 11*	Go to *Step 12*
11	Replace the flywheel. Is the repair complete?		Go to *Step 1*	
12	Inspect the main bearing clearance. Is the clearance more than the specified value?	2.0 DOHC 0.015–0.040 mm (0.00059–0.001 5 in.)	Go to *Step 13*	Go to *Step 14*
13	Replace the main bearings as necessary. Is the repair complete?		Go to *Step 1*	
14	Inspect the rod bearing clearance. Is the clearance more than the specified value?	0.019–0.070 mm (0.0007–0.0027 in.)	Go to *Step 15*	System OK
15	Replace the rod bearings as necessary. Is the repair complete?		Go to*Step 1*	

Light Knock Hot

Step	Action	Value(s)	Yes	No
1	Is there a light knock when the engine is hot?		Go to *Step 2*	System OK
2	Is detonation or spark knock evident?		Go to *Step 3*	Go to *Step 4*
3	Check the engine timing and the fuel quality. Was the problem found?		Go to *Step 1*	
4	Inspect the torque converter bolts. Are the bolts loose?	45 N•m (33 lb–ft)	Go to *Step 5*	Go to *Step 6*
5	Tighten the torque converter bolts. Is the repair complete?		Go to *Step 1*	
6	Inspect the manifold. Is there an exhaust leak at the manifold?		Go to *Step 7*	Go to *Step 8*
7	Tighten the bolts or replace the gasket. Is the repair complete?		Go to *Step 1*	
8	Check the rod bearing clearance. Is the clearance within the specified value?	0.019–0.070 mm (0.0007–0.0027 in.)	Go to *Step 9*	System OK
9	Replace the rod bearings as necessary. Is the repair complete?		Go to *Step 1*	

Knocks During Initial Start–Up But Lasts Only a Few Seconds

Step	Action	Value(s)	Yes	No
1	Does the engine knock during initial start–up but last only a few seconds?		Go to *Step 2*	System OK
2	Check the engine oil. Is the proper viscosity oil used in the crankcase?		Go to *Step 4*	Go to *Step 3*
3	Install oil of the proper viscosity for the expected seasonal temperatures. Is the repair complete?		Go to *Step 1*	
4	Inspect the hydraulic lifters. Is there evidence of hydraulic lifter bleed–down?		Go to *Step 5*	Go to *Step 6*
5	Clean, test and replace the lifters as necessary. Is the repair complete?*		Go to *Step 1*	
6	Inspect the crankshaft end clearance. Is the clearance more than specified value?	0.01 mm (0.0039 in.)	Go to *Step 7*	Go to *Step 8*
7	Replace the crankshaft thrust bearing. Is the repair complete?		Go to *Step 1*	
8	Inspect the front main bearing clearance. Is the clearance more than the specified value?	2.0 DOHC 0.015–0.040 mm (0.00059–0.001 5 in.)	Go to *Step 9*	System OK
9	Replace the worn parts of the front main bearing. Is the repair complete?		Go to *Step 1*	

* When the engine is stopped, some valves will be open. Spring pressure against the lifters will tend to bleed the lifter down. Attempts to repair this should be made only if the problem is consistent.

An engine that is only operated for short periods between start–ups may have lifter noise that lasts for a few minutes. This is a normal condition.

Knocks at Idle Hot

Step	Action	Value(s)	Yes	No
1	Does the engine knock at idle when hot?		Go to *Step 2*	System OK
2	Inspect the drive belts. Are the belts loose or worn?		Go to *Step 3*	Go to *Step 4*
3	Tension or replace the belts as necessary. Is the repair complete?		Go to *Step 1*	
4	Inspect the A/C compressor and the generator. Is either the compressor or the generator faulty?		Go to *Step 5*	Go to *Step 6*
5	Replace the faulty A/C compressor or the generator. Is the repair complete?		Go to *Step 1*	
6	Inspect the valve train. Are valve train components faulty?		Go to *Step 7*	Go to *Step 8*
7	Replace the faulty valve train components. Is the repair complete?		Go to *Step 1*	
8	Check the engine oil. Is the proper viscosity oil used in the crankcase?		Go to *Step 10*	Go to *Step 9*
9	Install oil of the proper viscosity for the expected seasonal temperatures. Is the repair complete?		Go to *Step 1*	
10	Inspect the piston pin clearance. Is the clearance more than the specified value?	2.0L DOHC 0.014 mm (0.0005 in.)	Go to *Step 11*	Go to *Step 12*
11	Replace the piston and the pin. Is the repair complete?		Go to *Step 1*	
12	Check the connecting rod alignment. Is the alignment faulty?		Go to *Step 13*	Go to *Step 14*
13	Check and replace rods as necessary. Is the repair complete?		Go to *Step 1*	
14	Inspect the piston–to–bore clearance. Is the clearance within the specified value?	0.03 mm (0.0012 in.)	Go to *Step 16*	Go to *Step 15*
15	Hone the bore and fit a new piston. Is the repair complete?		Go to *Step 1*	
16	Inspect the crankshaft balancer. Is the balancer loose?		Go to *Step 17*	Go to *Step 18*
17	Torque or replace worn parts. Is the repair complete?		Go to *Step 1*	
18	Check the piston pin offset. Is the offset at the specified value?	0.5–0.7 mm (0.019–0.027 in.) Toward Thrust Side	Go to *Step 19*	System OK
19	Install the correct piston. Is the repair complete?		Go to *Step 1*	

NOISE DIAGNOSIS

Main Bearing Noise

Step	Action	Value(s)	Yes	No
1	Are dull thuds or knocks heard with every engine revolution?		Go to *Step 2*	System OK
2	Check the oil pump pressure. Is the oil pump pressure low?		Go to*Oil Pressure Test*	Go to *Step 3*
3	Inspect the crankshaft end play. Is there excessive crankshaft end play?	0.1 mm (0.0039 in.)	Go to*Crankshaft Replacement Procedure*	Go to *Step 4*
4	Inspect the crankshaft journals. Are the crankshaft journals out–of–round?	0.004 mm (maximum) (0.0006 in.)	Go to*Crankshaft Replacement Procedure*	Go to *Step 5*
5	Inspect the belt tension. Is there excessive belt tension?		Go to*Timing Belt Replacement Procedure*	Go to *Step 6*
6	Inspect the crankshaft pulley. Is the crankshaft pulley loose?		Go to*Crankshaft Replacement Procedure*	System OK

Connecting Rod Bearing Noise Symptom

Step	Action	Value(s)	Yes	No
1	Is a knock noise heard under all engine speeds?		Go to *Step 2*	System OK
2	Inspect the crankshaft connecting rod journal. Is the crankshaft connecting rod journal worn?		Go to*Crankshaft Replacement Procedure*	Go to *Step 3*
3	Check the oil pump pressure. Is the oil pump pressure low?		Go to*Oil Pressure Test*	Go to *Step 4*
4	Inspect the crankshaft connecting rod journals. Are the journals out–of–round?		Go to*Crankshaft Replacement Procedure*	Go to *Step 5*
5	Inspect the connecting rods. Is there a misaligned connecting rod?		Go to*Pistons and Rods Replacement Procedure*	Go to *Step 6*
6	Inspect the connecting rod bolts. Are the connecting rod bolts torqued properly?		System OK	Go to*Pistons and Rods Replacement Procedure*

Piston Noises

Step	Action	Value(s)	Yes	No
1	Are any of the following noises heard: a sharp double knock when the engine is idling, a light ticking with no load on the engine, or a ”slapping” noise when the engine is cold?		Go to *Step 2*	System OK
2	Inspect the piston pin and the bushing. Is the piston pin or the bushing worn or loose?		Go to*Pistons and Rods Replacement Procedure*	Go to *Step 3*
3	Inspect the piston. Is the piston broken or cracked?		Go to*Pistons and Rods Replacement Procedure*	Go to *Step 4*
4	Inspect the connecting rods. Is there a misaligned connecting rod?		Go to*Pistons and Rods Replacement Procedure*	Go to *Step 5*
5	Inspect the piston position. Is the piston 180˚ out of position?		Go to*Pistons and Rods Replacement Procedure*	System OK

Valve Mechanism or Valve Train Noises

Step	Action	Value(s)	Yes	No
1	Is a light tapping sound heard from the engine?		Go to *Step 2*	System OK
2	Inspect the valve springs. Are the springs weak or broken?		Go to*Cylinder Head and Valve Train Components Replacement Procedure*	Go to *Step 3*
3	Inspect the valves. Are the valves sticking or warped?		Go to*Cylinder Head and Valve Train Components Replacement Procedure*	Go to *Step 4*
4	Inspect the valve lifters. Are the valve lifters dirty, stuck or worn?		Go to*Cylinder Head and Valve Train Components Replacement Procedure*	Go to *Step 5*
5	Inspect the camshaft lobes. Are the camshaft lobes damaged or improperly machined?		Go to*Camshaft Replacement Procedure*	Go to *Step 6*
6	Check the oil supply to the valve train. Is the oil supply insufficient or poor?		Go to*Cylinder Head and Valve Train Components Replacement Procedure*	Go to *Step 7*
7	Inspect the valve guides. Are the valve guides worn?		Go to*Cylinder Head and Valve Train Components Replacement Procedure*	Go to *Step 8*
8	Inspect the valve spring seat. Is the valve spring seat incorrect?		Go to*Cylinder Head and Valve Train Components Replacement Procedure*	System OK

GENERAL INFORMATION

CLEANLINESS AND CARE

An automobile engine is a combination of many machined, honed, polished and lapped surfaces with tolerances that are measured in ten–thousandths of an inch. When any internal engine parts are serviced, care and cleanliness are important. A liberal coating of engine oil should be applied to friction areas during assembly, to protect and lubricate the surfaces on initial operation. Proper cleaning and protection of machined surfaces and friction areas is part of the repair procedure. This is considered standard shop practice even if not specifically stated.

Whenever valve train components are removed for service, they should be kept in order. They should be installed in the same locations and with the same mating surfaces, as when they were removed.

Battery cables should be disconnected before any major work is performed on the engine. Failure to disconnect cables may result in damage to wire harness or other electrical parts.

ON–ENGINE SERVICE

CAUTION : Disconnect the negative battery cable before removing or installing any electrical unit, or when a tool or equipment could easily come in contact with exposed electrical terminals. Disconnecting this cable will help prevent personal injury and damage to the vehicle. The ignition must also be in LOCK unless otherwise noted.

Notice : Any time the air cleaner is removed, the intake opening should be covered. This will protect against the accidental entrance of foreign material, which could follow the intake passage into the cylinder and cause extensive damage when the engine is started.

SECTION : 0B

GENERAL INFORMATION

TABLE OF CONTENTS

SPECIFICATIONS 0B–1
TECHNICAL DATA 0B–1
VEHICLE DIMENSIONS AND WEIGHTS 0B–5
STANDARD BOLT SPECIFICATIONS 0B–7
MAINTENANCE AND REPAIR 0B–8
MAINTENANCE AND LUBRICATION 0B–8
NORMAL VEHICLE USE 0B–8
EXPLANATION OF SCHEDULED MAINTENANCE SERVICES 0B–8
SCHEDULED MAINTENANCE CHARTS 0B–10
OWNER INSPECTIONS AND SERVICES 0B–12
WHILE OPERATING THE VEHICLE 0B–12
AT EACH FUEL FILL 0B–12
AT LEAST MONTHLY 0B–12
AT LEAST TWICE A YEAR 0B–12
EACH TIME THE OIL IS CHANGED 0B–13
AT LEAST ANNUALLY 0B–13
RECOMMENDED FLUIDS AND LUBRICANTS 0B–15
GENERAL DESCRIPTION AND SYSTEM OPERATION 0B–16
GENERAL REPAIR INSTRUCTIONS 0B–16
GENERAL DESCRIPTION 0B–17
ON BOARD REFUELING VAPOR RECOVERY SYSTEM 0B–17
VEHICLE IDENTIFICATION 0B–20
VEHICLE LIFTING PROCEDURES 0B–24

SPECIFICATIONS

TECHNICAL DATA

Performance – Manual Transaxle

Application	2.0L DOHC
Maximum Speed	195 km/h (122 mph)
Gradeability	0.446 (tan Ø)
Minimum Turning Radius	5.3 m (17 ft)

Performance – Automatic Transaxle

Application	2.0L DOHC
Maximum Speed	190 km/h (119mph)
Gradeability	0.668 (tan Ø)
Minimum Turning Radius	5.3 m (17 ft)

Engine

Application	2.0L DOHC
Engine Type	Dual Overhead Cam L–4
Bore	86 mm (3.4 in.)
Stroke	86 mm (3.4 in.)
Total Displacement	1 998 cm^3 (121.9 in^3)
Compression Ratio	9.5±0.2:1
Maximum Power	96 kW (128.7 bhp) (at 5,400 rpm)
Maximum Torque	184 N•m (135.7 lb–ft) (at 4,400 rpm)

Ignition System

Application	2.0L DOHC
Ignition Type	Direct Ignition System
Ignition Timing	8˚ BTDC
Ignition Sequence	1–3–4–2
Spark Plug Gap	0.8 mm (0.031 in)
Spark Plug Maker	Bosch
Spark Plug Type	FR8LDC4

Clutch – Manual Transaxle

Application	2.0L DOHC
Type	Single Dry Plate
Outside Diameter	225 mm (9.0 in.)
Inside Diameter	150 mm (5.9 in.)
Thickness	3.4 mm (0.13 in.)
Fluid Capacity	Common Use; Brake Fluid

Manual Transaxle

Application	2.2L DOHC
Maker	DWMC
Type or Model	D–20
Gear Ratio:	–
1st	3.545:1
2nd	2.158:1
3rd	1.478:1
4th	1.129:1
5th	0.886:1
Reverse	3.333:1
Final Drive Ratio	3.550:1
Oil Capacity	1.8L (2 qt)

* Puerto Rico only.

Automatic Transaxle

Application	2.0L DOHC
Maker	GM
Type or Model	4T40E
Gear Ratio:	–
1st	2.957:1
2nd	1.623:1
3rd	1.000:1
4th	0.682:1
Reverse	2.143:1
Final Drive Ratio	3.910:1
Oil Capacity	11.5L (12 qt)

Brake

Application	2.0L DOHC
Booster Size:	–
Single	228.6 mm (9 in.)
Master Cylinder Diameter	22.2 mm (0.87 in.)
Booster Ratio	5.0:1
Front Brake:	–
Disc Type	Ventilated
Disc Size	356 mm (14.0 in.)
Rear Brake:	–
Disc:	–
Disc Type	Solid
Disc Size	32 mm (1.3 in.)
Fluid Capacity	0.5L (0.53 qt)

Tire and Wheel

Application	2.0L DOHC
Standard Tire Size	185/65R14
Temporary Tire Size	T125/70D15
Standard Wheel Size	5.5JX14
Inflation Pressure at Full Load:	–
185/65R14:	—
Front	30 psi
Rear	28 psi
T127/70D15	60 psi

Steering System

Application	2.0L DOHC
Gear Type	Power Rack and Pinion
Overall Gear Ratio:	–
Manual Steering	–
Power Steering	16:1
Wheel Alignment:	–
Front:	–
Total Toe–In (2 Occupants)	–10′ to +10′
Caster:	–
Power Steering	2˚30′ to 3˚30′
Camber	–54′ to 6′
Rear:	–
Total Toe–In (2 Occupants)	–3′ to +17′
Camber	–1˚35′ to –5′
Oil Capacity	1.0L (1.1 qt)

Suspension

Application	2.0L DOHC
Front Type	MacPherson Strut
Rear Type	Compound Link

Fuel System

Application	2.0L DOHC
Fuel Delivery	MPI
Fuel Pump Type	Electric Motor Pump
Fuel Filter Type	Cartridge
Fuel Capacity	52L (13.7 gal)

Lubricating System

Application	2.0L DOHC
Lubricating Type	Forced Feed
Oil Pump Type	Duocentric Rotor
Oil Filter Type	Cartridge (Full Flow)
Oil Pan Capacity Including Oil Filter	3.8L (4.1 qt)

Cooling System

Application	2.0L DOHC
Cooling Type	Forced Water Circulation
Radiator Type	Cross–flow
Water Pump Type	Centrifugal
Thermostat Type	Pellet Type
Coolant Capacity:	–
Manual:	7.0L (7.4 qt)
Automatic:	7.0L (7.4 qt)

Electric System

Application	2.0L DOHC
Battery (55 AH, M/F)	630 Cold Cranking Amps
Alternator:	85 Amps
Starter (1.4 kW) No Load Test	Minimum 40 Amps Maximum 90 Amps (at 12.2 volts)

VEHICLE DIMENSIONS AND WEIGHTS

Vehicle Dimensions – Manual and Automatic

Application	2.0L DOHC
Overall Length:	–
4–Door Notchback	4 470 mm (176.0 in.)
4–Door Wagon	4 514 mm (177.7 in.)
5–Door	4 248 mm (167.2 in.)
Overall Width	1 700 mm (66.9 in.)
Overall Height:	–
4–Door Notchback	1 425 mm (56.1 in.)
4–Door Wagon	1 432 mm (56.4 in.)
5–Door	1 425 mm (56.1 in.)
Overall Height:	Overall Height:
4–Door Notchback	1 430 mm (56.2 in.)
4–Door Wagon	1 470 mm (58.0 in.)
5–Door	1 430 mm (56.2 in.)
Minimum Ground Clearance	151 mm (5.9 in.)
Wheel Base	2 570 mm (101.2 in.)
Tread:	–
Front	1 464 mm (57.6 in.)
Rear	1 454 mm (57.2 in.)

Vehicle Weights – 4 Door Notchback

Application	2.0L DOHC
Manual:	–
Curb Weight:	–
Standard	1 164 kg (2,566 lb)
Optional	1 233 kg (2,718 lb)
Gross Vehicle Weight	1 720 kg (3,792 lb)
Automatic:	–
Curb Weight	–
Standard	1 200 kg (2,645 lb)
Optional	1 269 kg (2,797 lb)
Gross Vehicle Weight	1 720 kg (3,792 lb)
Passenger Capacity	5

Vehicle Weights – 4 Door Wagon

Application	2.0L DOHC
Manual:	–
Curb Weight:	–
Standard	1 222 kg (2,694 lb)
Optional	1 291 kg (2,846 lb)
Gross Vehicle Weight	1 860 kg (4,101 lb)
Automatic:	–
Curb Weight	–
Standard	1 258 kg (2,773 lb)
Optional	1 327 kg (2,925 lb)
Gross Vehicle Weight	1 860 kg (4,101 lb)
Passenger Capacity	5

Vehicle Weights – 5 Door

Application	2.0L DOHC
Manual:	–
Curb Weight:	–
Standard	1 155 kg (2,546 lb)
Optional	1 224 kg (2,698 lb)
Gross Vehicle Weight	1 720 kg (3,792 lb)
Automatic:	–
Curb Weight:	–
Standard	1 191 kg (2,625 lb)
Optional	1 260 kg (2,778 lb)
Gross Vehicle Weight	1 720 kg (3,792 lb)
Passenger Capacity	5

Optional Weight: Air Conditioning, Power Steering, ABS, Sunroof, Airbag.

STANDARD BOLT SPECIFICATIONS

Bolt*	4T – Low Carbon Steel	7T – High Carbon Steel	7T – Alloy Steel
M6 X 1.0	4.1–8.1 N•m (36–72 lb–in)	5.4–9.5 N•m (48–84 lb–in)	–
M8 X 1.25	8.1–17.6 N•m (72–156 lb–in)	12.2–23.0 N•m (108–204 lb–in)	16–30 N•m (12–22 lb–ft)
M10 X 1.25	20–34 N•m (15–25 lb–ft)	27–46 N•m (20–34 lb–ft)	37–62 N•m (27–46 lb–ft)
M10 X 1.5	19–34 N•m (14–25 lb–ft)	27–45 N•m (20–33 lb–ft)	37–60 N•m (27–44 lb–ft)
M12 X 1.25	49–73 N•m (36–54 lb–ft)	61–91 N•m (45–67 lb–ft)	76–114 N•m (56–84 lb–ft)
M12 X 1.75	45–69 N•m (33–51 lb–ft)	57–84 N•m (42–62 lb–ft)	72–107 N•m (53–79 lb–ft)
M14 X 1.5	76–115 N•m (56–85 lb–ft)	94–140 N•m (69–103 lb–ft)	114–171 N•m (84–126 lb–ft)
M14 X 2.0	72–107 N•m (53–79 lb–ft)	88–132 N•m (65–97 lb–ft)	107–160 N•m (79–118 lb–ft)
M16 X 1.5	104–157 N•m (77–116 lb–ft)	136–203 N•m (100–150 lb–ft)	160–240 N•m (118–177 lb–ft)
M16 X 2.0	100–149 N•m (74–110 lb–ft)	129–194 N•m (95–143 lb–ft)	153–229 N•m (113–169 lb–ft)
M18 X 1.5	151–225 N•m (111–166 lb–ft)	195–293 N•m (144–216 lb–ft)	229–346 N•m (169–255 lb–ft)
M20 X 1.5	206–311 N•m (152–229 lb–ft)	270–405 N•m (199–299 lb–ft)	317–476 N•m (234–351 lb–ft)
M22 X 1.5	251–414 N•m (185–305 lb–ft)	363–544 N•m (268–401 lb–ft)	424–636 N•m (313–469 lb–ft)
M24 X 2.0	359–540 N•m (265–398 lb–ft)	431–710 N•m (318–524 lb–ft)	555–831 N•m (409–613 lb–ft)

* Diameter X pitch in millimeters

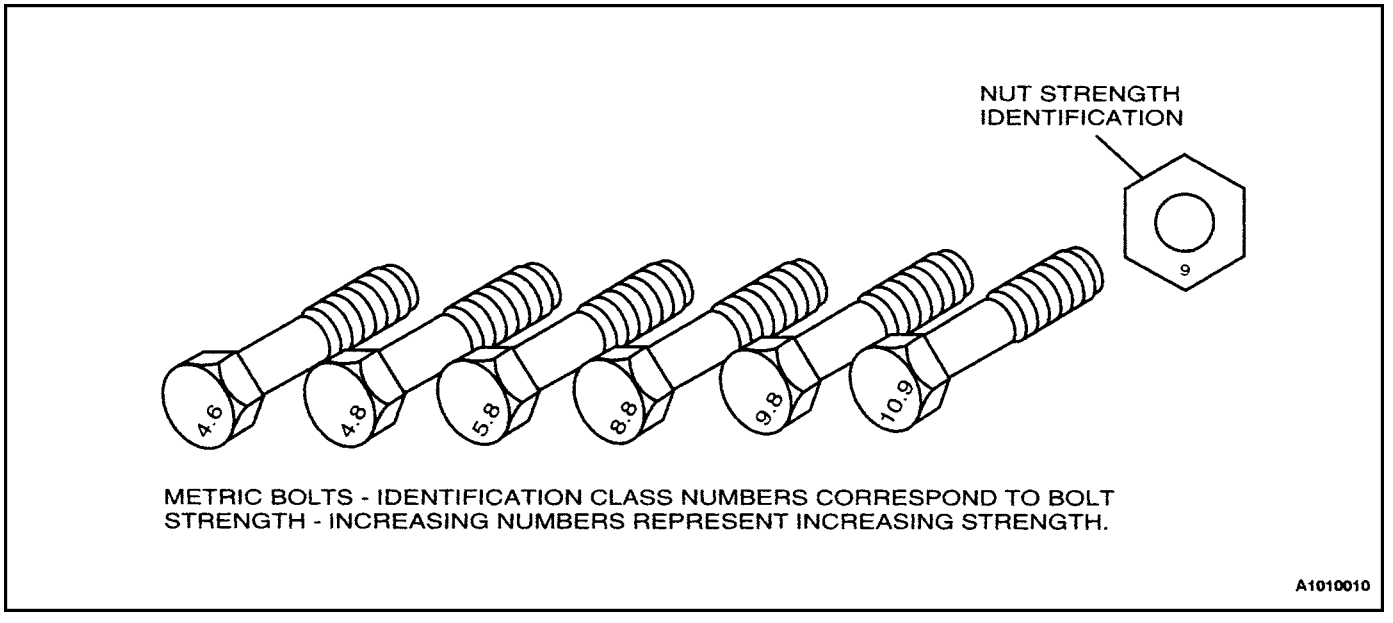

MAINTENANCE AND REPAIR

MAINTENANCE AND LUBRICATION

NORMAL VEHICLE USE

The maintenance instructions contained in the maintenance schedule are based on the assumption that the vehicle will be used for the following reasons:

- To carry passengers and cargo within the limitation indicated on the Tire Placard located on the edge of the driver's side door.
- To be driven on reasonable road surfaces and within legal operating limits.

EXPLANATION OF SCHEDULED MAINTENANCE SERVICES

The services listed in the maintenance schedule are further explained below. When the following maintenance services are performed, make sure all the parts are replaced and all the necessary repairs are done before driving the vehicle. Always use the proper fluid and lubricants.

Drive Belt Inspection

When a separate belt drives the power steering pump, the air conditioning compressor, and the generator, inspect it for cracks, fraying, wear, and proper tension. Adjust or replace the belt, as needed.

Engine Oil and Oil Filter Change

API Classifications of Engine Oil

The International Lubricant Standardization and Approval Committee (ILSAC) and American Petroleum Institute classifies engine oils according to their performance quality. Always use oil rated API–SJ (ILSAC GF–II) or better.

Engine Oil Viscosity

Engine oil viscosity (thickness) has an effect on fuel economy and cold weather operation. Lower viscosity engine oils can provide better fuel economy and cold weather performance; however, higher temperature weather conditions require higher viscosity engine oils for satisfactory lubrication. Using oils of any viscosity other than those viscosities recommended could result in engine damage.

Cooling System Service

Drain, flush and refill the system with new coolant. Refer to ”Recommended Fluids and Lubricants”in this section.

Fuel Micro–Filter Replacement

Replace the engine fuel filter every 48,000 km (30,000 miles).

The engine fuel filter is located on the center dash panel near the brake booster.

Air Cleaner Element Replacement

Replace the air cleaner element every 48 000 km (30,000 miles).

Replace the air cleaner more often under dusty conditions.

Throttle Body Mounting Bolt Torque

Check the torque of the throttle body mounting bolts. Tighten the throttle body mounting bolts to 17 N•m (13 lb–ft) if necessary.

Spark Plug Replacement

Replace spark plugs with the same type.

- Type: AC Type FR8LDC4 (2.0L DOHC)
- Gap: 0.8 mm (0.031 in.) (2.0L DOHC)

Spark Plug Wire Replacement

Clean the wires and inspect them for burns, cracks, or other damage. Check the wire boot fit at the direct ignition system (DIS) module and at the spark plugs. Replace the wires, as needed.

Brake System Service

Check the disc brake pads or the drum brake linings every 9,600 km (6,000 mi) or 6 months. Check the pad and the lining thickness carefully. If the pads or the linings are not expected to last another 9,600 km (6,000 mi), replace the pads or the linings. Check the breather hole in the brake fluid reservoir cap to be sure it is free from dirt and the passage is open.

Transaxle Service

The manual transaxle fluid does not require changing. For automatic transaxles, refer to ”Scheduled Maintenance Charts”in this section.

Tire and Wheel Inspection and Rotation

Check the tires for abnormal wear or damage. To equalize wear and obtain maximum tire life, rotate the tires. If irregular or premature wear exists, check the wheel alignment and check for damaged wheels. While the tires and wheels are removed, inspect the brakes. Refer to ”Each Time The Oil Is Changed”in this section.

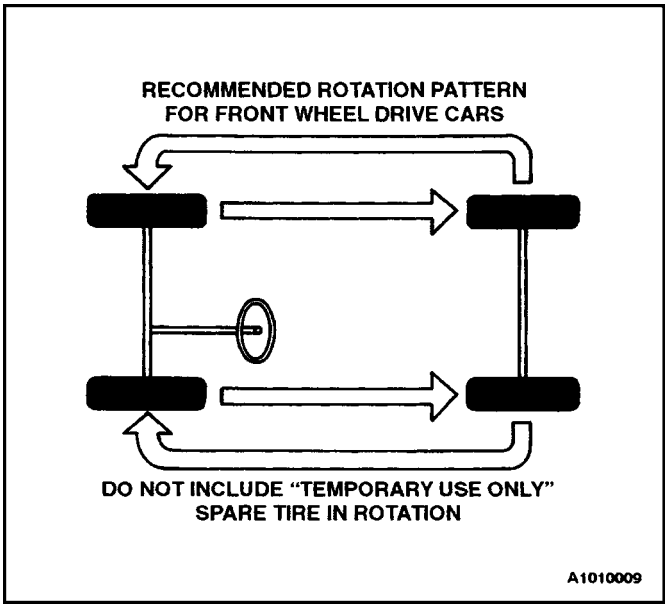

SCHEDULED MAINTENANCE CHARTS

Engine

Maintenance Item		Maintenance Interval																
		Miles (Kilometers) or time inmonths, whichever comes first																
x 1,000 miles		6	12	18	24	30	36	42	48	54	60	66	72	78	84	90	96	102
x 1,000 km		9.6	19.2	28.8	38.4	48	57.6	67.2	76.8	86.46	96	105.6	115.2	124.8	134.4	144	153.6	163.2
# Months		6	12	18	24	30	36	42	48	54	60	66	72	78	84	90	96	102
Drive belt (Generator and power Steering)				I			I			I			I			I		
Engine oil & engine oil filter (1)(3)		R	R	R	R	R	R	R	R	R	R	R	R	R	R	R	R	R
Cooling system hose & connections			I		I		I		I		I		I		I		I	
Engine coolant (3)		I	I	I	I	R	I	I	I	I	R	I	I	I	I	R	I	I
Fuel filter						R*					R*					R*		
Fuel line and connections			I*		I*		I*		I*		I*		I*		I*		I*	
Air cleaner element (2)		I*	I*	I*	I*	R	I*	I*	I*	I*	R	I*	I*	I*	I*	R	I*	I*
Ignition timing			I*		I*		I*		I*		I*		I*		I*		I*	
Spark plugs				I*		R			I*		R			I*		R		
Evaporative emission canister & vapor lines						I*					I*					I*		
PCV system				I*			I*			I*			I*			I*		
Camshaft belt(Timimg belt)	Out of California	Replace every 72,000 miles (115,200 km)																
	California	Inspect every 60,000 miles (96,000 km) and 90,000 miles (144,000 km) Replace every 102,000 miles (163,200 km)																

Chart Symbols:
I – Inspect these items and their related parts. If necessary, correct, clean, replenish, adjust or replace.
R – Replace or change.
(1) Change the engine oil every 3,000 miles (4,800 kilometers) or 3 months, whichever comes first, if the vehicle is operated under any of the following conditions :

- – Short–distance driving.
- – Extensive idling.
- – Driving on dusty roads.

(2) More frequent maintenance is required if driving under dusty conditions.
(3) Refer to ”Recommended Fluids And Lubricants”
Note : Check the engine oil and radiator coolant levels every week.
* : Replacement or inspection of these emissions components is recommended to be performed at the indicated intervals however, the California Air Resources Board has determined that performing thesemaintenance items are not required to maintained your vehicle emission warranty.

Chassis and Body

Maintenance Item	Maintenance Interval																
	Miles (Kilometers) or time inmonths, whichever comes first																
x 1,000 miles	**6**	**12**	**18**	**24**	**30**	**36**	**42**	**48**	**54**	**60**	**66**	**72**	**78**	**84**	**90**	**96**	**102**
x 1,000 km	**9.6**	**19.2**	**28.8**	**38.4**	**48**	**57.6**	**67.2**	**76.8**	**86.46**	**96**	**105.6**	**115.2**	**124.8**	**134.4**	**144**	**153.6**	**163.2**
# Months	**6**	**12**	**18**	**24**	**30**	**36**	**42**	**48**	**54**	**60**	**66**	**72**	**78**	**84**	**90**	**96**	**102**
Air Filter (A/C) (2)	R	R	R	R	R	R	R	R	R	R	R	R	R	R	R	R	R
Exhaust pipes & mountings		I*		I*		I*		I*		I*		I*		I*		I*	
Brake/Clutch fluid (3)(5)	I	I	R	I	I	R	I	I	R	I	I	R	I	I	R		I
Brake pads & discs(6)	I	I	I	I	I	I	I	I	I	I	I	I	I	I	I		I
Parking brake		I		I		I		I		I		I		I			
Brake line & connections (Including booster)	I	I	I	I	I	I	I	I	I	I	I	I	I	I	I		I
Rear hub bearing & clearance		I		I		I		I		I		I		I		I	
Manual Transaxle Oil (3)		I		I		I		I		I		I		I		I	
Clutch & brake pedal free play	I	I	I	I	I	I	I	I	I	I	I	I	I	I	I	I	I
Automatic transaxle fluid* (3) (7)		I		I		I		I		R		I		I		I	
Chassis & underbody bolts & nuts, tighten/secure	I	I	I	I	I	I	I	I	I	I	I	I	I	I	I	I	I
Tire condition & inflation pressure	I	I	I	I	I	I	I	I	I	I	I	I	I	I	I	I	I
Wheel alignment (8)	Inspect when abnormal condition is noted.																
Tire rotation	Rotate tires every 6,000 miles																
Steering wheel & linkage	I	I	I	I	I	I	I	I	I	I	I	I	I	I	I	I	I
Power steering fluid & lines*		I		I		I		I		I		I		I		I	
Drive shaft boots	I	I	I	I	I	I	I	I	I	I	I	I	I	I	I	I	I
Seat belts, buckles & anchors	I	I	I	I	I	I	I	I	I	I	I	I	I	I	I	I	I
Lubricate locks, hinges & hood latch		I		I		I		I		I		I		I		I	

Chart Symbols:
I – Inspect these items and their related parts. If necessary, correct, clean, replenish, adjust or replace.
R – Replace or change.
(2) More frequent maintenance is required if driving under dusty conditions.
(3) Refer to"Recommended Fluids And Lubricants."
(5) Change the brake/clutch fluid every 9,000 miles (14,400 kilometers) or 9months, whichever comes first, if the vehicle is operated under any of the following conditions :
– Driving in hilly or mountainous terrain.

(6) More frequent maintenance is required if the vehicle is operated under any of the following conditions:
– Short–distance driving.
– Extensive idling or slow–speed driving in stop–and–go traffic.
– Driving on dusty roads.

(7) Change the automatic transaxle fluid every 50,000miles (80,000 kilometers) if the vehicle is operated under any of the following conditions :
– Driving in hilly or mountainous terrain.
– Driving in heavy city traffic where the outside temperatures regularly reach 32˚C (90˚F) or higher.
– Driving a taxi, or police or delivery vehicles.

(8) If necessary, rotate and balance the wheels
Note : Check the engine oil and radiator coolant levels every week.

* Replacement or inspection of these emissions components is recommended to be performed at the indicated intervals however, the California Air Resources Board has determined that performing thesemaintenance items are not required to maintained your vehicle emission warranty.

OWNER INSPECTIONS AND SERVICES

WHILE OPERATING THE VEHICLE

Horn Operation
Blow the horn occasionally to make sure it works. Check all the button locations.

Brake System Operation
Be alert for abnormal sounds, increased brake pedal travel, or repeated pulling to one side when braking. Also, if the brake warning light goes on or flashes, something may be wrong with part of the brake system.

Exhaust System Operation
Be alert to any changes in the sound of the system or the smell of the fumes. These are signs that the system may be leaking or overheating. Have the system inspected and repaired immediately.

Tires,Wheels and Alignment Operation
Be alert to any vibration of the steering wheel or the seats at normal highway speeds. This may mean a wheel needs to be balanced. Also, a pull to the right or the left on a straight, level road may show the need for a tire pressure adjustment or a wheel alignment.

Steering System Operation
Be alert to changes in the steering action. An inspection is needed when the steering wheel is hard to turn, has too much free play, or if unusual sounds are noticed when turning or parking.

Headlamp Aim
Take note of the light pattern occasionally. Adjust the headlamps if the beams seem improperly aimed.

AT EACH FUEL FILL
A fluid loss in any (except windshield washer) system may indicate a problem. Have the system inspected and repaired immediately.

Engine Oil Level
Check the oil level and add oil, if necessary. The best time to check the engine oil level is when the oil is warm.

1. After stopping the engine, wait a few minutes for the oil to drain back to the oil pan.
2. Pull out the oil level indicator (dipstick).
3. Wipe it clean, and push the oil level indicator back down all the way.
4. Pull out the oil level indicator and look at the oil level on it.
5. Add oil, if needed, to keep the oil level above the MIN line and within the area labeled ”Operating Range.” Avoid overfilling the engine, since this may cause engine damage.
6. Push the indicator all the way back down into the engine after taking the reading.

If checking the oil level when the oil is cold, do not run the engine first. The cold oil will not drain back to the pan fast enough to give a true oil level reading.

Engine Coolant Level and Condition
Check the coolant level in the coolant reservoir tank and add coolant, if necessary. Inspect the coolant. Replace dirty or rusty coolant.

Windshield Washer Fluid Level
Check the washer fluid level in the reservoir. Add fluid, if necessary.

AT LEAST MONTHLY

Tire and Wheel Inspection and Pressure Check
Check the tires for abnormal wear or damage. Also, check for damaged wheels. Check the tire pressure when the tires are cold (check the spare tire, unless it is a stowaway). Maintain the recommended pressures that are on the tire placard that is on the driver’s side door.

Lamp Operation
Check the operation of the license plate lamp, the headlamps (including the high beams), the parking lamps, the fog lamps, the taillamp, the brake lamps, the turn signals, the backup lamps, and the hazardwarning flasher.

Fluid Leak Check
Periodically inspect the surface beneath the vehicle for water, oil, fuel or other fluids, after the vehicle has been parked for a while. Water dripping from the air conditioning system after use is normal. If you notice fuel leaks or fumes, find the cause and correct it immediately.

AT LEAST TWICE A YEAR

Power Steering System Reservoir Level
Check the power steering fluid level. Keep the power steering fluid at the proper level. Refer to *Section 6A, Power Steering System.*

Brake Master Cylinder Reservoir Level
Check the fluid and keep it at the proper level. A low fluid level can indicate worn disc brake pads andmay need to be serviced. Check the breather hole in the reservoir cover that it is free from dirt and check for an open passage.

Clutch Pedal Free Travel
Check clutch pedal free travel and adjust, as necessary, every 16,000 km (10,000 miles). Measure the distance from the center of the clutch pedal to the outer edge of the

steering wheel with the clutch pedal not pressed. Then, measure the distance from the center of the clutch pedal to the outer edge of the steering wheel with the clutch pedal fully pressed. The difference between the two values must be greater than 130 mm (5.1 in.).

Weatherstrip Lubrication

Apply a thin film of silicone grease using a clean cloth.

EACH TIME THE OIL IS CHANGED

Automatic Transaxle Fluid

Refer to"Transaxle Fluid Level Checking Procedure"in-*Section 5A, 4T40E Automatic Transaxle.*

Manual Transaxle

Check the fluid level and add fluid, as required. Refer to*Section 5B, Five–Speed Manual Transaxle.*

Brake System Inspection

This inspection should be done when the wheels are removed for rotation. Inspect the lines and the hoses for proper hookup, binding, leaks, cracks, chafing, etc. Inspect the disc brake pads for wear. Inspect the rotors for surface condition. Also, inspect the drum brake linings for wear and cracks. Inspect other brake parts, including the drums, the wheels cylinders, the parking brake, etc., at the same time. Check the parking brake adjustment. Inspect the brakes more often if habit or conditions result in frequent braking.

Steering, Suspension and Front Drive Axle Boot and Seal Inspection

Inspect the front and the rear suspension and the steering system for damaged, loose, or missing parts; signs of wear; or lack of lubrication. Inspect the power steering lines and the hoses for proper hookup, binding, leaks, cracks and chafing, etc. Clean and inspect the drive axle boot and seals for damage, tears, or leakage. Replace the seals, if necessary.

Exhaust System Inspection

Inspect the complete system (including the catalytic converter, if equipped). Inspect the body near the exhaust system. Look for broken, damaged, missing, or out of position parts, as well as open seams, holes, loose connections, or other conditions which could cause heat build-up in the floor pan or could let exhaust fumes seep into the trunk or passenger compartment.

Throttle Linkage Inspection

Inspect the throttle linkage for interference or binding, damaged or missing parts. Lubricate all linkage joints and throttle cable joints, the intermediate throttle shaft bearing, the return spring at the throttle valve assembly, and the accelerator pedal sliding face with suitable grease. Check the throttle cable for free movement.

Engine Drive Belts

Inspect all belts for cracks, fraying, wear, and proper tension. Adjust or replace the belts, as needed.

Hood Latch Operation

When opening the hood, note the operation of the secondary latch. It should keep the hood from opening all the way when the primary latch is released. The hood must close firmly.

AT LEAST ANNUALLY

Lap and Shoulder Belt Condition and Operation

Inspect the belt system, including the webbing, the buckles, the latch plates, the retractor, the guide loops and the anchors.

Movable Head Restraint Operation

On vehicles with movable head restraints, the restraints must stay in the desired position.

Spare Tire and Jack Storage

Be alert to rattles in the rear of the vehicle. The spare tire, all the jacking equipment, and the tools must be securely stowed at all times. Oil the jack ratchet or the screw mechanism after each use.

Key Lock Service

Lubricate the key lock cylinder.

Body Lubrication Service

Lubricate all the body door hinges including the hood, the fuel door, the rear compartment hinges and the latches, the glove box and the console doors, and any folding seat hardware.

Transaxle Neutral Switch Operation on Automatic Transaxle

CAUTION : Adhere to the following precautions. Failuretodosocancauseinjuriesandpropertydamage.

- Firmly apply the parking brake and the regular brakes.
- Do not use the accelerator pedal.
- Be ready to turn the ignition OFF if the vehicle starts.

On automatic transaxle vehicles, try to start the engine in each gear. The starter should crank only in P (PARK) and in N (NEUTRAL).

Parking Brake and Transaxle P (PARK) Mechanism Operation

CAUTION : To reduce the risk of personal injury or property damage, be prepared to apply the regular brakes if the vehicle begins to move.

Park on a fairly steep hillwith enough roomformovement in the downhill direction. To check the parking brake, with the engine running and the transaxle in N (NEUTRAL), slowly remove foot pressure fromthe regular brake pedal (until only the parking brake is holding the vehicle).
To check the automatic transaxle P (PARK) mechanism's holding ability, release all brakes after shifting the transaxle to P (PARK).

Underbody Flushing

Flushing the underbody will remove any corrosive materials used for ice and snow removal and dust control. At least every spring, clean the underbody. First, loosen the sediment packed in closed areas of the vehicle. Then, flush the underbodywith plainwater.

Engine Cooling System

Inspect the coolant and freeze protection fluid. If the fluid is dirty or rusty, drain, flush and refill the engine cooling system with new coolant. Keep the coolant at the proper mixture to ensure proper freeze protection, corrosion protection and engine operating temperature. Inspect the hoses. Replace the cracked, swollen, or deteriorated hoses. Tighten the clamps. Clean the outside of the radiator and the air conditioning condenser. Wash the filler cap and the neck. Pressure test the cooling system and the cap to help ensure proper operation.

RECOMMENDED FLUIDS AND LUBRICANTS

USAGE	CAPACITY	FLUID/LUBRICANT
Engine Oil	3.8L (4.1 qt)	ILSAC GF–II (API SJ) grade SAE 5W—30, SAE 10W—30
Engine Coolant	7.0L (7.4 qt)	Mixture of water and good quality ethylene glycol–base antifreeze (year–round coolant)
Brake and Clutch Fluid	0.5L (0.5 qt)	SSK–221 (DOT–3 and DOT–4 Fluid)
Power Steering System Fluid	1.0L (1.1 qt)	DEXRON®–III, DEXRON® II–D
Automatic Transaxle	11.5L (12.2 qt)	DEXRON®–III
Manual Transaxle	1.8L (2 qt)	Manual Transaxle Fluid (B0400075, SAE80 or eqivalent; Extremely cold area: SAE 75W)
Manual Transaxle Shift Linkage	As needed	Multipurpose–type grease meeting requirements NLGI No. 1 or 2
Key Lock Cylinders	As needed	Silicone lubricant
Automatic Transaxle Shift Linkage	As needed	Engine oil
Clutch Linkage Pivot Points	As needed	Engine oil
Floor Shift Linkage Points	As needed	Engine oil
Hood Latch Assembly 1. Pivots and Spring Anchor 2. Release Pawl	As needed	1. Engine oil 2. Multipurpose–type grease meeting requirements NLGI No. 1 or 2
Hood and door hinges Fuel door hinge Rear compartment lid hinges	As needed	Engine oil
Weatherstripping	As needed	Silicone grease

GENERAL DESCRIPTION AND SYSTEM OPERATION

GENERAL REPAIR INSTRUCTIONS

If a floor jack is used, the following precautions are recommended:

- Park the vehicle on level ground, ”block” the front or rear wheels, set the jack against the frame, raise the vehicle and support it with chassis stands, and then perform the service operation.
- Before performing the service operation, disconnect the negative battery cable to reduce the chance of cable damage and burning due to short–circuiting.
- Use a cover on the body, the seats, and the floor to protect them against damage and contamination.
- Handle brake fluid and antifreeze solution with care as they can cause paint damage.
- The use of proper tools, and the required special tools where specified, is important for efficient and reliable performance of the service repairs.
- Use genuine DAEWOO parts.
- Discard used cotter pins, gaskets, O–rings, oil seals, lock washers and self–locking nuts. Prepare new ones for installation. Normal functioning of the vehicle’s components cannot be maintained if these fasteners and seals are reused.
- Keep the disassembled parts to assist in reassembly.
- Keep attaching bolts and nuts separated, as they vary in hardness and design depending on the position of the installation.
- Clean the parts before inspection or reassembly.
- Clean the oil parts, etc. Use compressed air to make certain they are free of restrictions.
- Lubricate rotating and sliding faces of parts with oil or grease before installation.
- When necessary, use a sealer on gaskets to prevent leakage.
- Carefully observe all specifications for bolt and nut torques.

When service operation is complete, make a final check to be sure service was done properly and the problem was corrected.

GENERAL DESCRIPTION

ON BOARD REFUELING VAPOR RECOVERY SYSTEM

The NUBIRA 2.0 DOHC model is equipped with an On Board Diagnostic Stage II (OBD–II) system to meet enhanced emission control requirements. Within this OBD–II system, an On Board Refueling Vapor Recorvery (ORVR) system has been developed and equipped to meet enhanced evaporative emission control requirements during vehicle moving, parking, and refueling at gas stations. The Daewoo ORVR system adopts one canister to collect both evaporative vapors during the moving & parking as well as refueling vapor. Collected vapor is consurmed by the engine through the intake manfold during vehicle operation.
The mechanism of Daewoo ORVR system to meet the ORVR requirement is to create suction inside filler neck by the aid of fuel flow through a reduced diameter section in the filler pipe.
Therefore, Daewoo ORVR system adopts the so called ”Liquid Trap” or ”Liquid Seal” system that assures the long term durability.
The Daewoo ORVR system provides nozzle compatibility with conventional and stage II vapor recovery nozzle.
The Daewoo ORVR system has been designed to have the following functional features.

- To collect refueling vapors and to route to canister.
- To provide nozzle compatibility with conventional and stage II vapor recovery nozzles.
- To provide fill shut off signal.
- To prevent canister from liquid fuel during normal driving and vehicle rollover.
- To provide fuel tank venting to canister during vehicle operation.
- To protect fuel tank from over–pressure.
- To protect fuel vapor dome from overfill.

Any failures or malfunction of the ORVR system will be identified by OBD–II system and warned through Malfunction Indicator Lamp (MIL) on the instrument cluster.
No special refueling procedures and maintenance on ORVR system are required.
The Daewoo ORVR system and all fuel system components have been designed to prevent the electrostatic discharge phenomenon by adopting mitigation techniques recommended in SAE J1645. Daewoo’s own test procedure (EDS–T–5005) is similar to SAE J1113.

Schematic Of On Board Refueling Vapor Recovery System

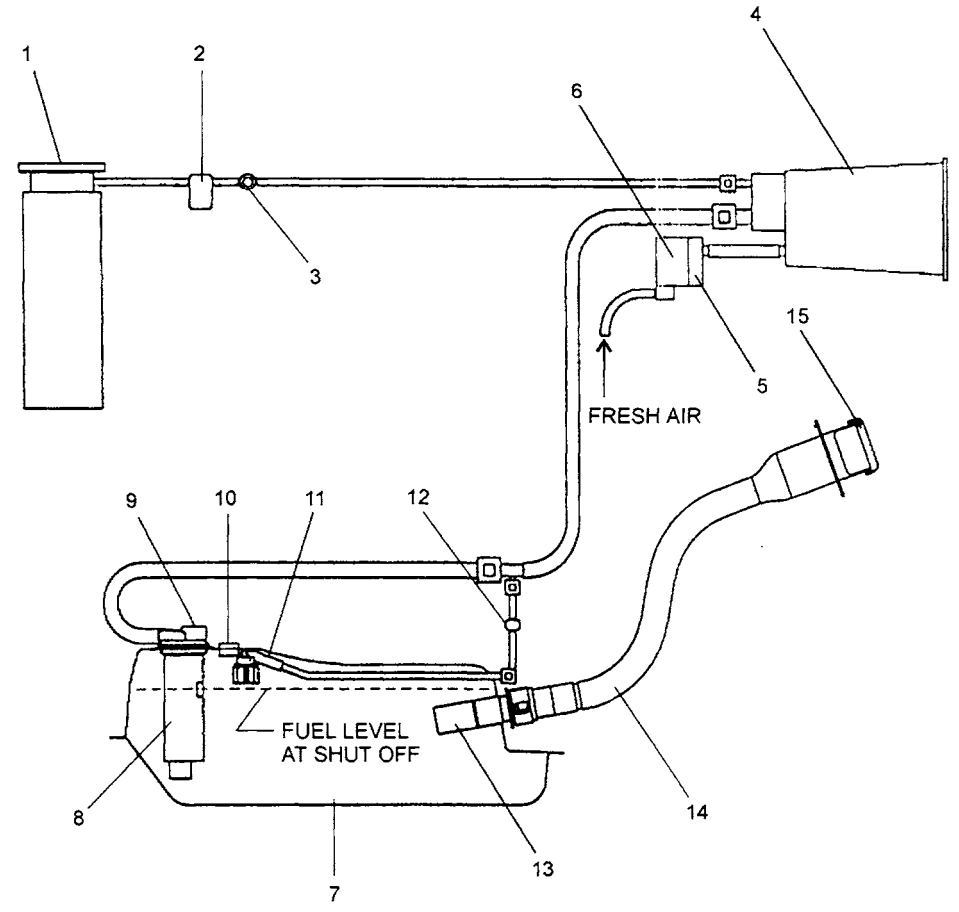

1. Manifold (Intake)
2. Canister Purge Valve (Electronic Pwm Control)
3. Service Port
4. Integrated Fuel Vapor Storage Canister
5. OBD–II Valve (Solenoid)OBD–II Valve (Solenoid)
6. Air Filter
7. Fuel Tank (Steel)
8. Fuel Fill Vent Control Valve & Liquid–Vapor Discriminator
9. Pressure Relief Valve
10. Tank Pressure Transducer (OBD–II)
11. Rollover Valve
12. 2–Way Check Valve
13. Check Valve
14. Fuel Filler Tube (Dynamic Seal During Fill)
15. Fuel Filler Cap (Pressure–Vacuum Relief)

Component Locator

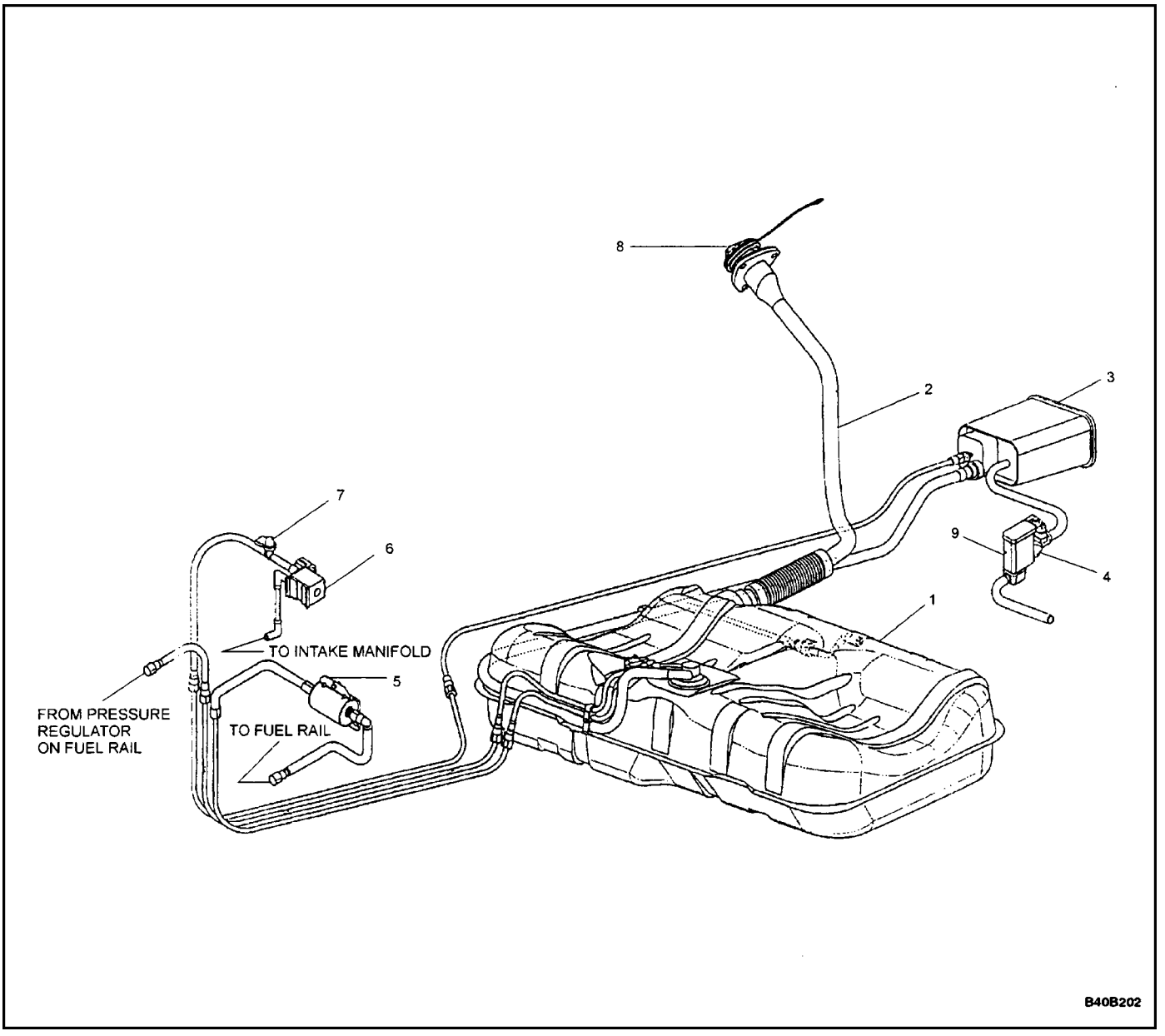

1. Fuel Tank
2. Filler Tube
3. Canister
4. OBD– II Valve
5. Fuel Filter
6. Purge Valve
7. Service port
8. Fuel Filler Cap
9. Air Filter

VEHICLE IDENTIFICATION

Passenger Car VIN

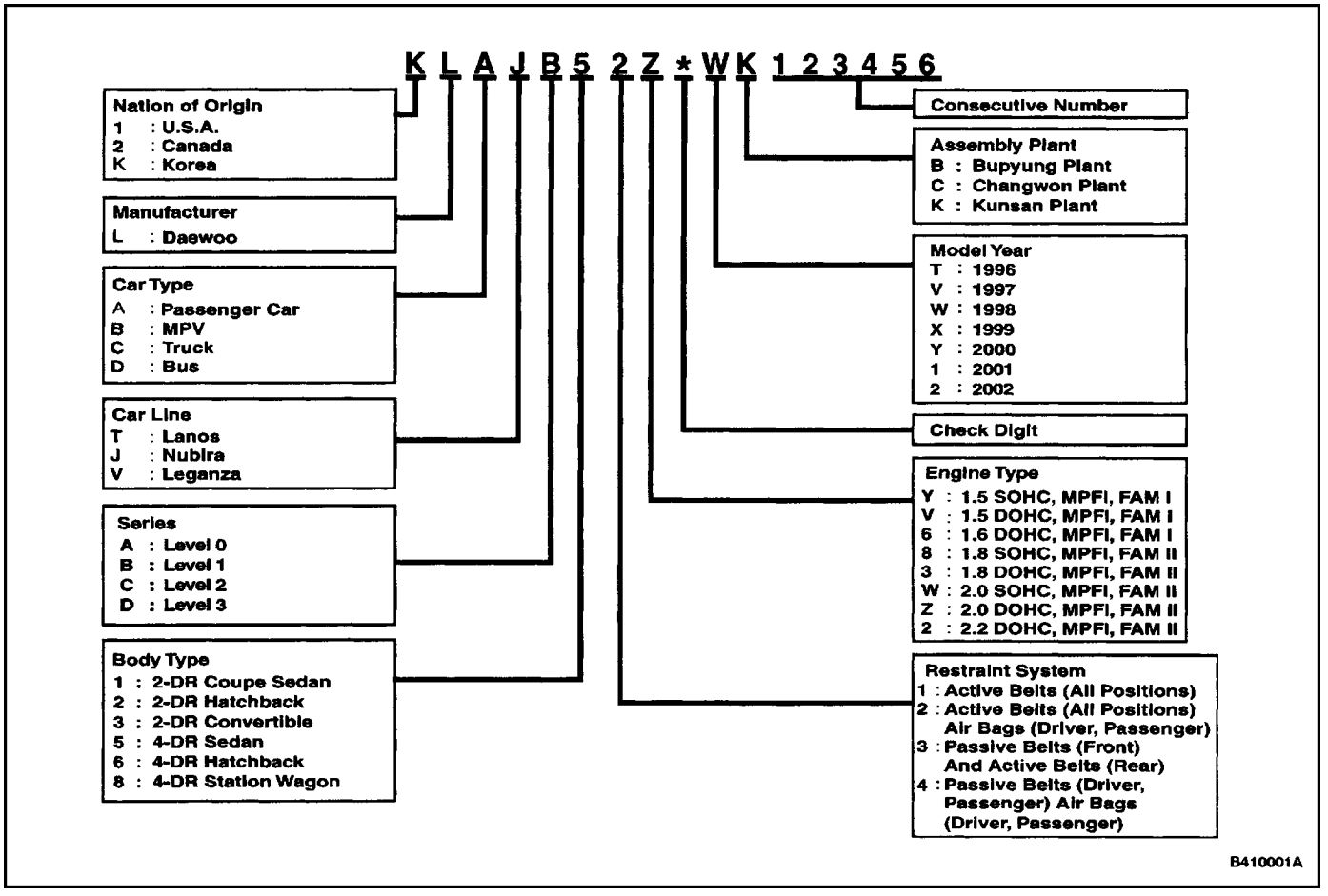

Certification plate

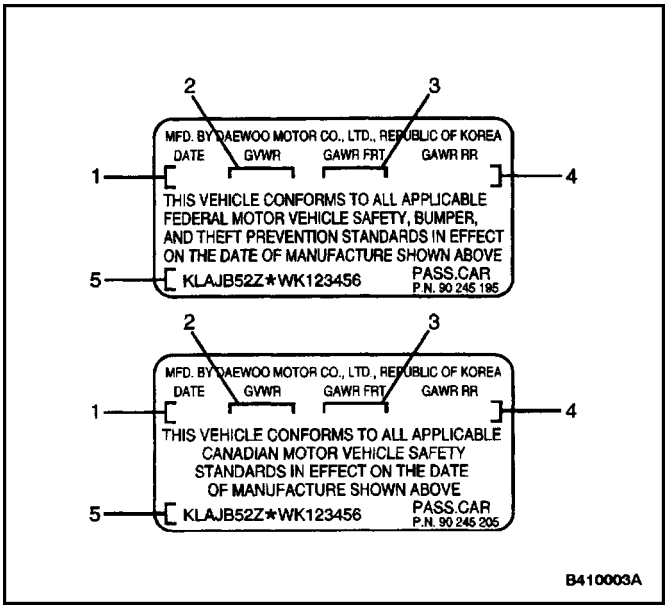

1. Production Date
2. Gross Vehicle Weight Rating
3. Gross Axle Weight Rating Front
4. Gross Axle Weight Rating Rear
5. Vehicle Identification Number

VIN Plate Location

The vehicle identification number (VIN) plate is attached to the top of the driver's side of the instrument panel.

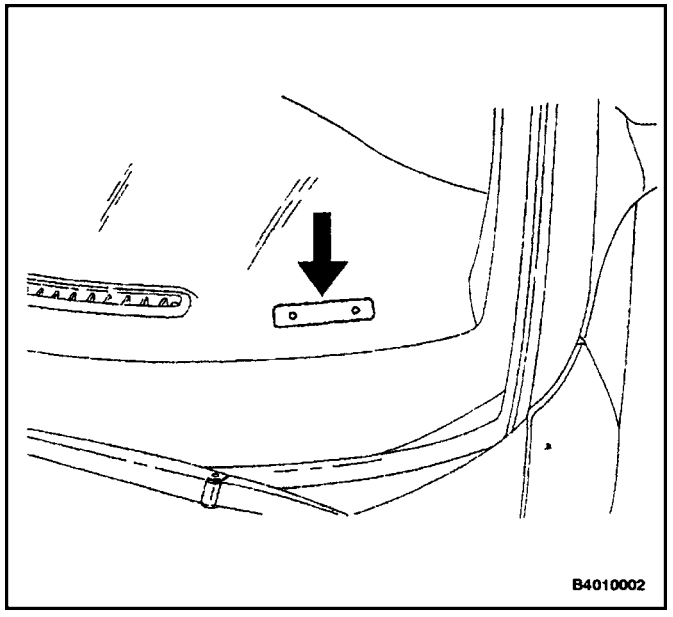

Certification Label

The Certification Label is attached to the driver's side B–pillar near door strike.

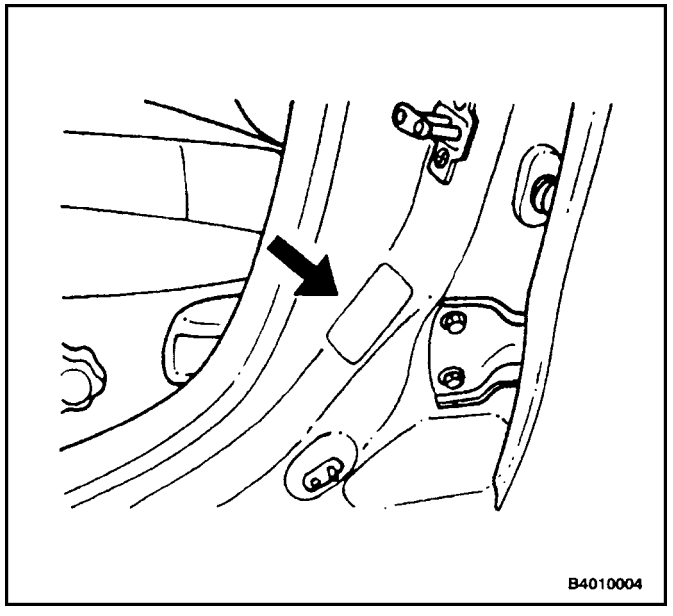

Engraved VIN Location

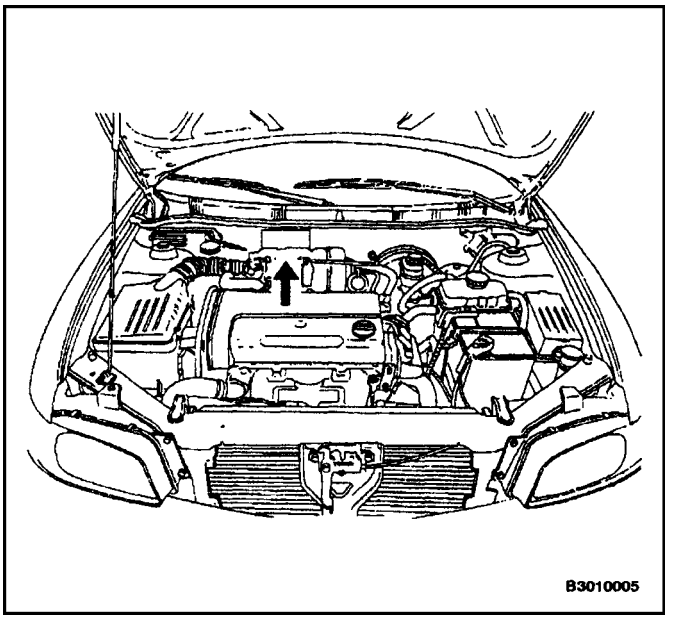

The vehicle identification number (VIN) is engraved in the top of the bulkhead, next to the ABS module.

Engine Number – Family II (2.0L DOHC Engine)

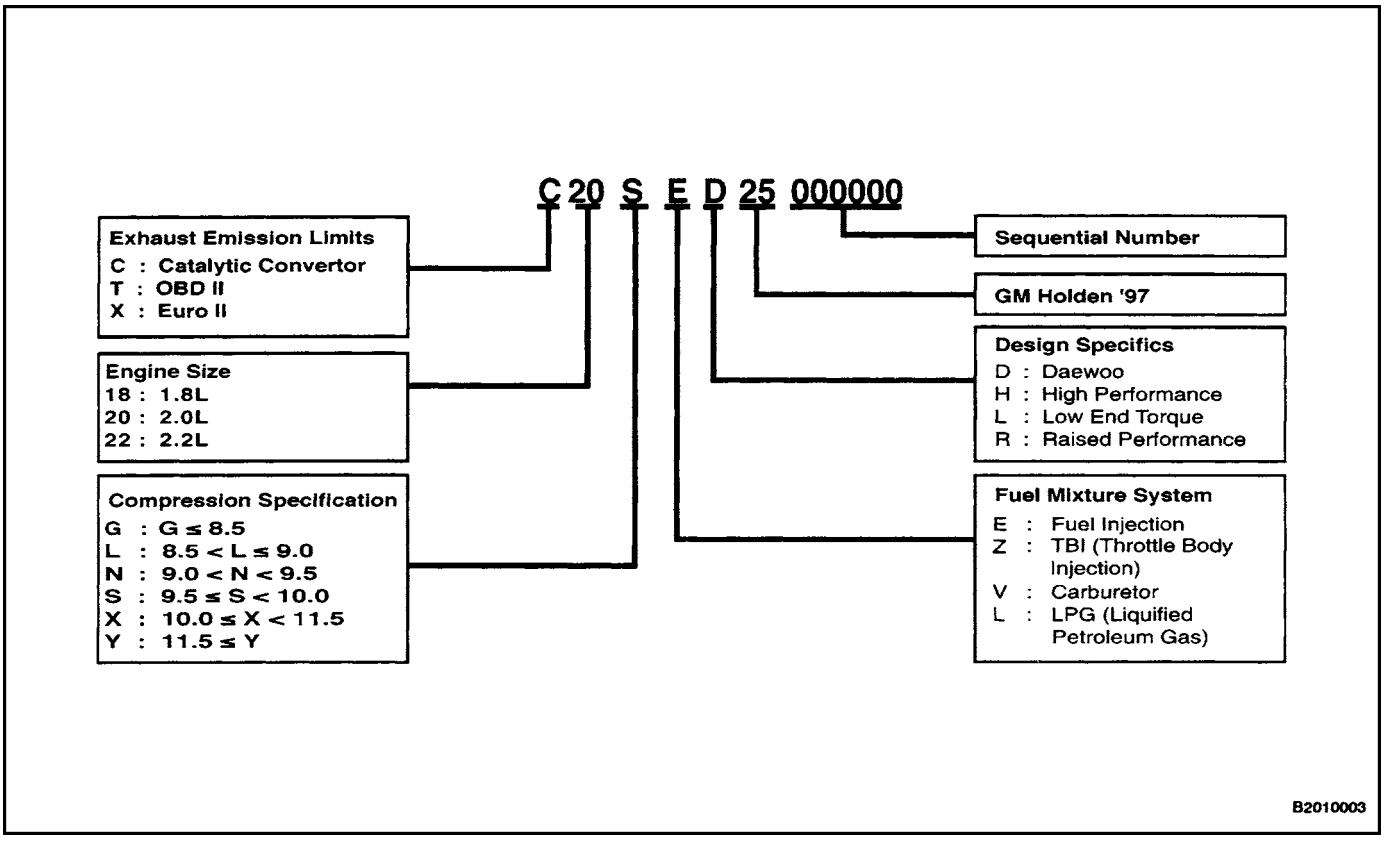

Engine Number Plate Location – Family II (2.0L DOHC Engine)

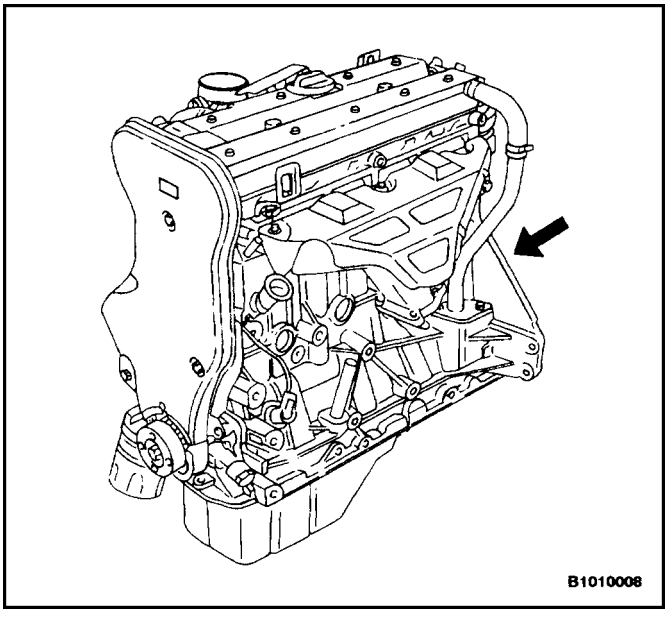

The engine number is stamped on the cylinder block under the No. 4 exhaust manifold of the engine.

Manual Transaxle Identification Number Plate

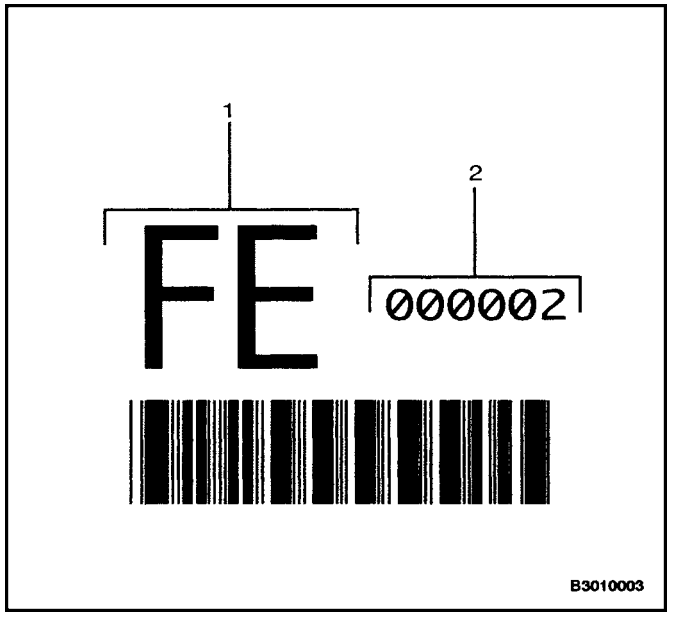

1. Identification Code
2. Sequential Number

Identification Code	Engine	Gear Ratio
FE	2.0L DOHC	3.545 C/R

Manual Transaxle Identification Number Plate Location

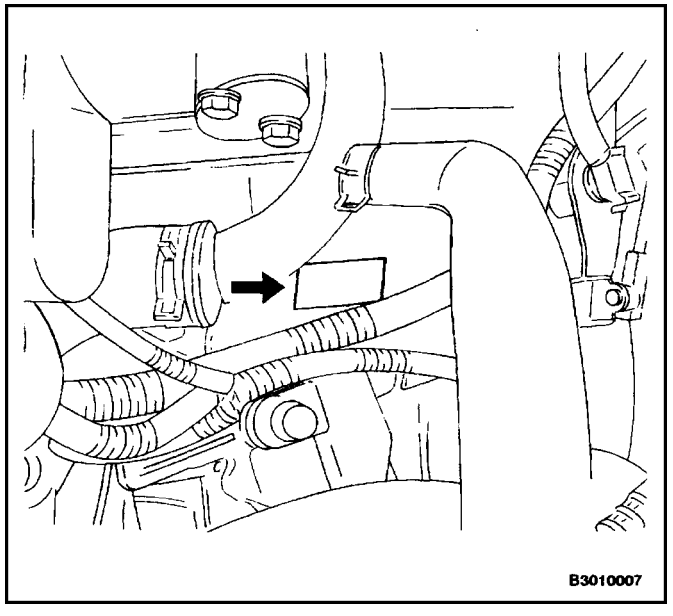

The manual transaxle identification number is attached to the top of the transaxle case near the engine.

Automatic Transaxle Identification Number Plate

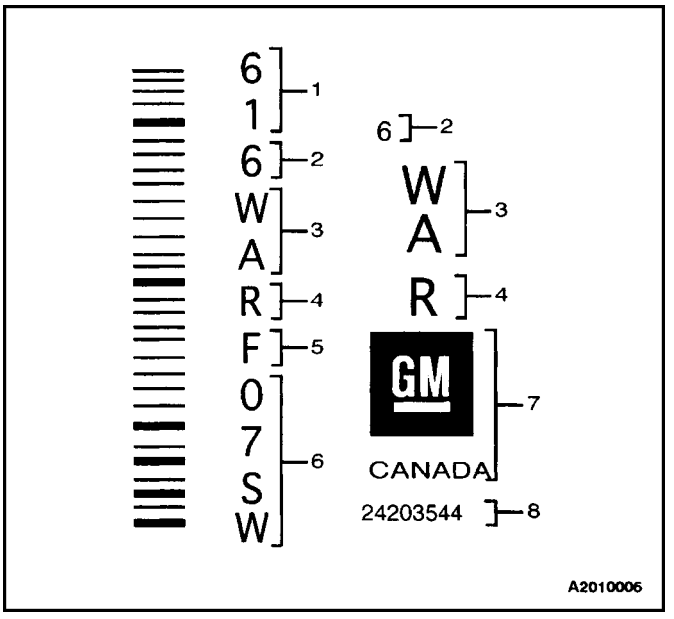

1. Assembly Plant (Windsor, Canada)
2. Model Year (1996)
3. Broadcast Code
4. Model Name (4T40E)
5. Update Level
6. Sequential Number
7. Manufacturer
8. Part Number

Identification Code	Engine
7ZZR	2.0L DOHC

Automatic Transaxle Identification Number Plate Location

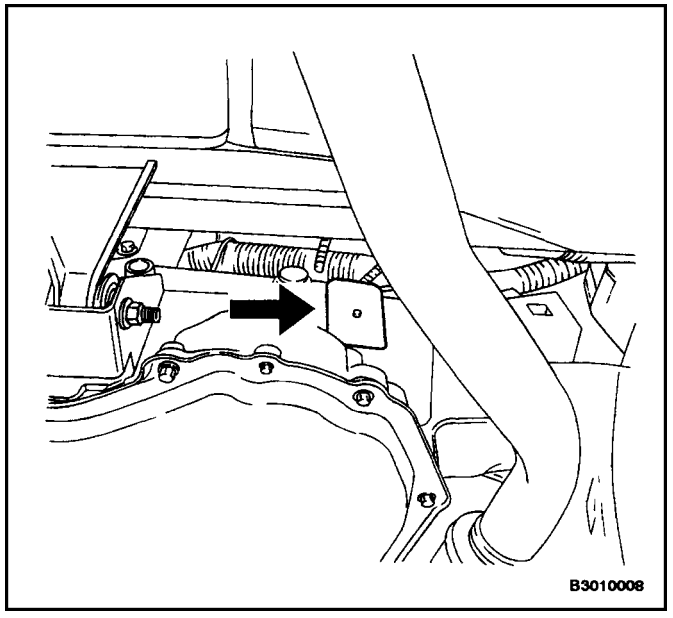

The automatic transaxle identification number plate is attached on the rear side of the transaxle near the bulkhead.

VEHICLE LIFTING PROCEDURES

Notice : To raise the vehicle, place the lifting equipment only at the points indicated. Failure to use these precise positions may result in permanent body deformation. Many dealer service facilities and service stations are equipped with automotive hoists that bear upon some parts of the frame to lift the vehicle. If any other hoist method is used, use special care to avoid damaging the fuel tank, the filler neck, the exhaust system, or the underbody.

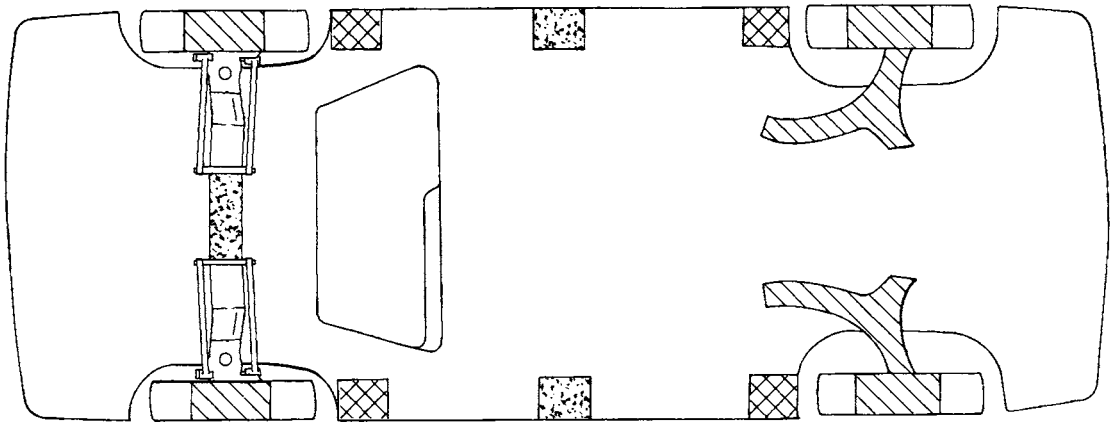

FRAME CONTACT HOIST SUSPENSION CONTACT HOIST FLOOR JACK

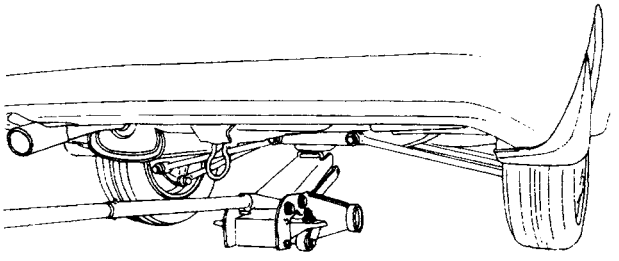

REAR SUSPENSION
AXLE LIFT POINT

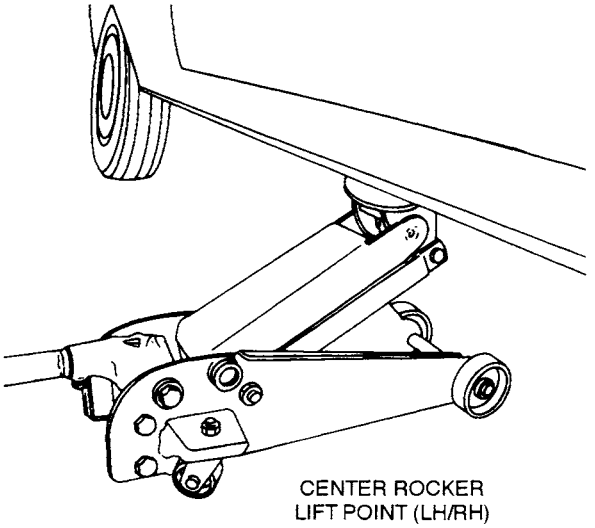

CENTER ROCKER
LIFT POINT (LH/RH)

B1010017

Vehicle Lifting Points

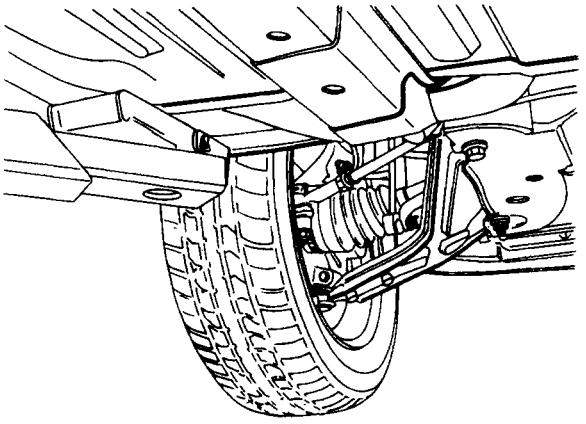

FRAME CONTACT HOIST
REARWARD OF FRONT TIRE

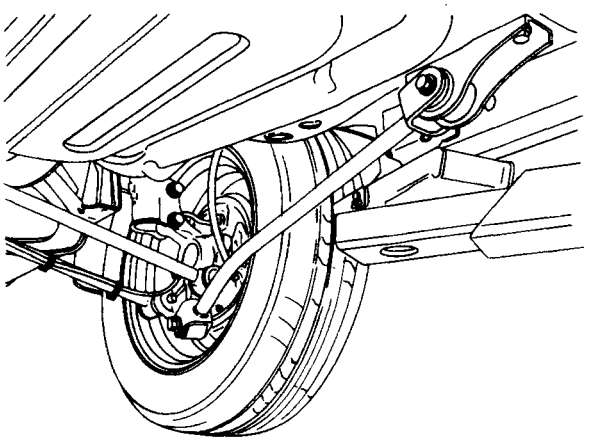

FRAME CONTACT HOIST
FORWARD OF REAR WHEEL

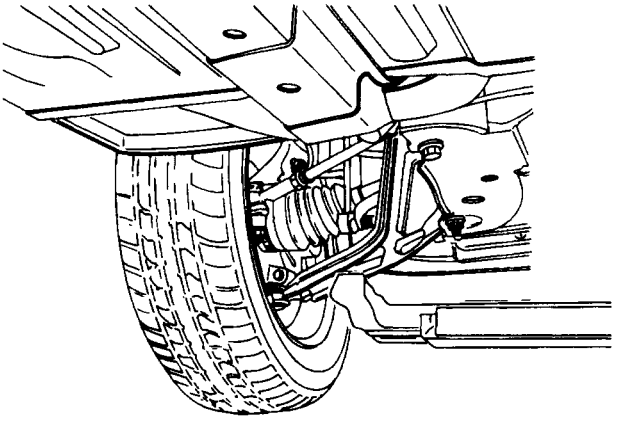

SUSPENSION CONTACT HOIST
UNDER FRONT LOWER CONTROL ARM

B1010018

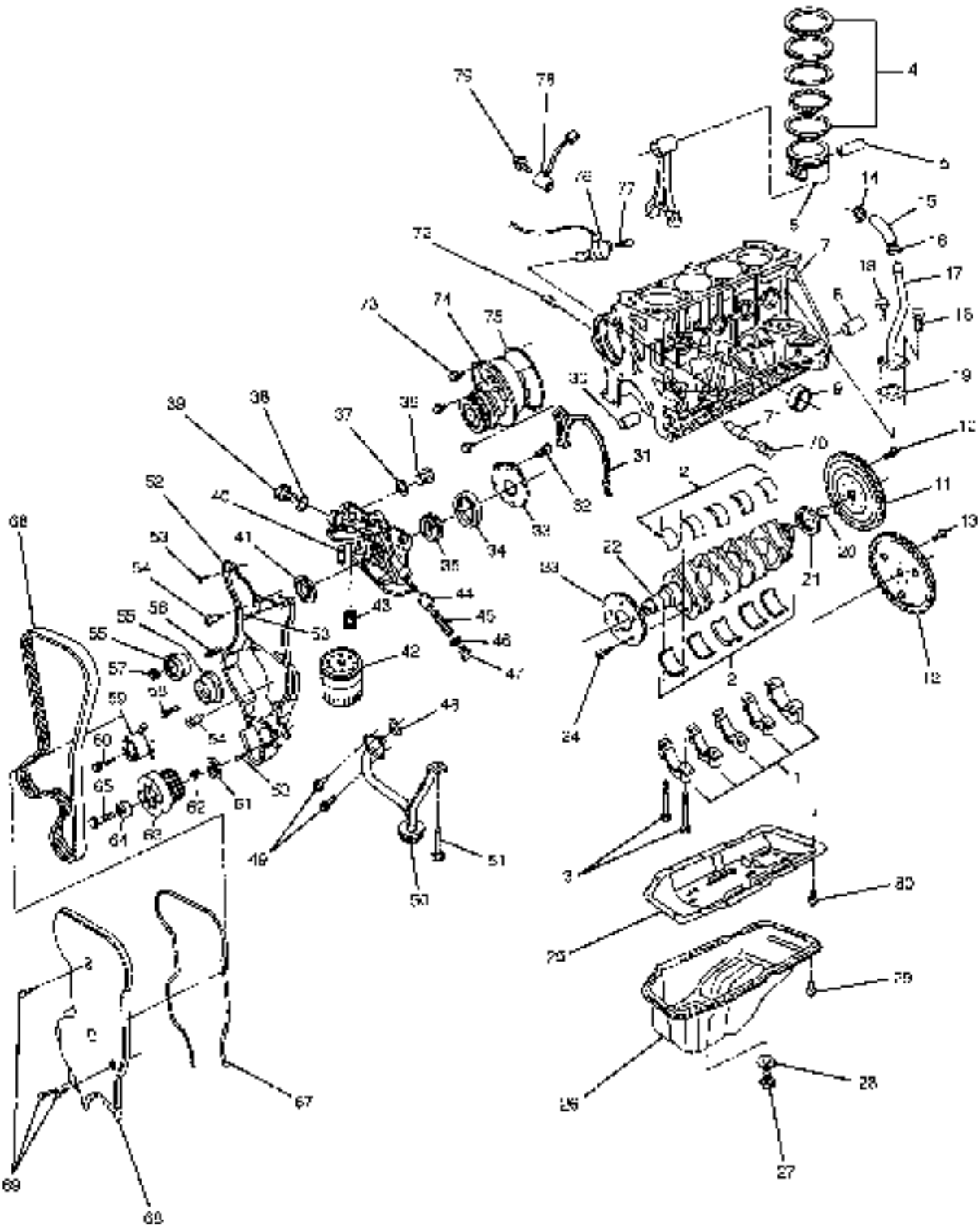
1
2
3
4
5
6
7
8
9
10
11
12
13
14
15
16
17
18
19
20
21
22
23
24
25
26
27
28
29
30
31
32
33
34
35
36
37
38
39
40
41
42
43
44
45
46
47
48
49
50
51
52
53
54
55
56
57
58
59
60
61
62
63
64
65
66
67
68
69
70
71
72
73
74
75
76
77
78
79
80

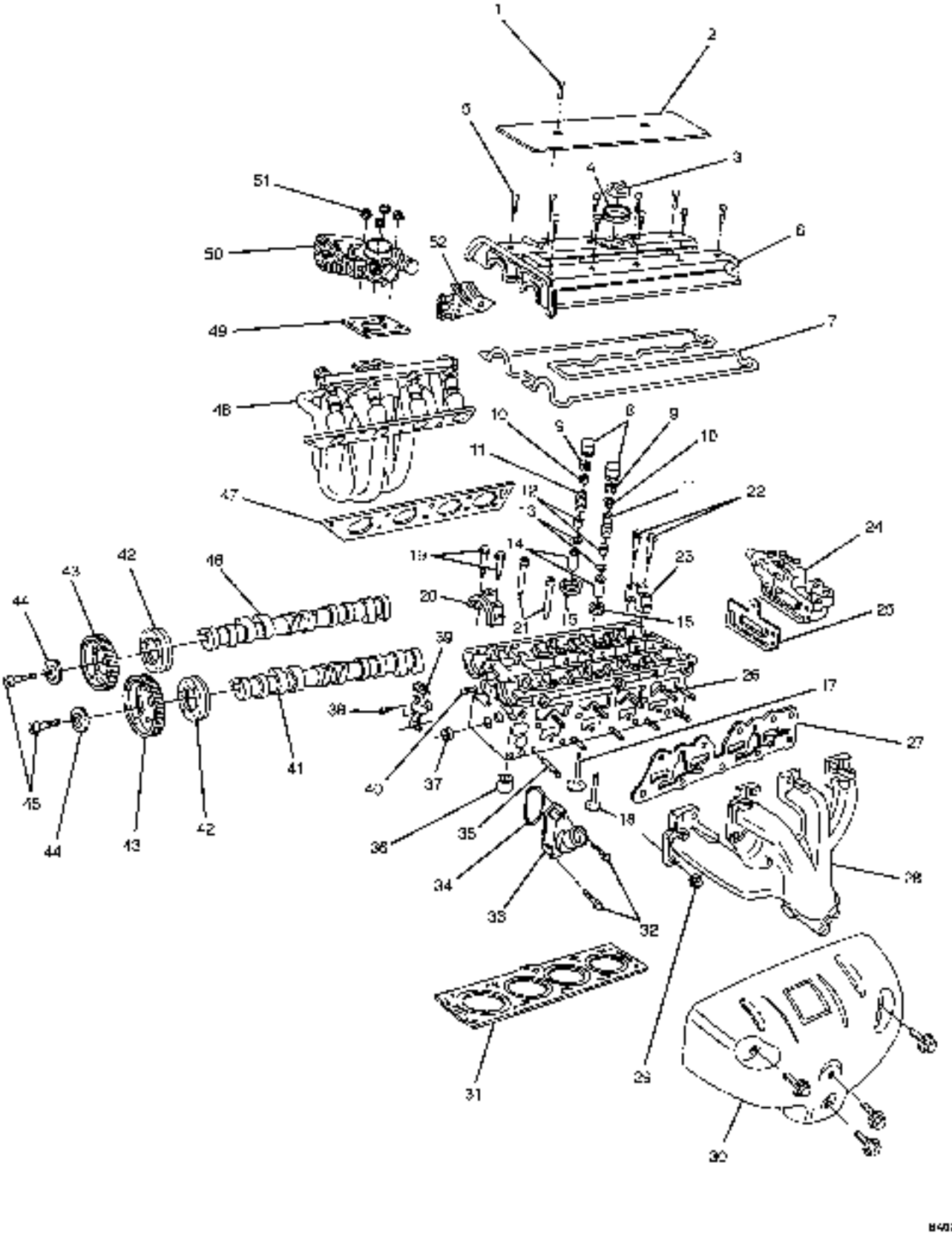
1
2
3
4
5
6
7
8
9
10
11
12
13
14
15
16
17
18
19
20
21
22
23
24
25
26
27
28
29
30
31
32
33
34
35
36
37
38
39
40
41
42
43
44
45
46
47
48
49
50
51
52

TECHNICAL SERVICE BULLETIN

Bulletin No.:	TSB-004-01	Description:	Fuel Level Sensor Availability
Model(s):	All	Group:	Engine
Date:	August 3, 2001	Reference:	N/A
VIN Range:	N/A	Prod. Dates:	N/A

Daewoo has determined that some Lanos, Nubira and Leganza models have experienced incorrect fuel gauge readings caused by a faulty Fuel Level Sensor unit in the Fuel Tank. Reported conditions include the Fuel Gauge failing to read above the “3/4” mark or below the “1/4” mark, which is caused by the resistor card “wiper” wearing the Fuel Level Sensor contacts prematurely resulting in a short or open circuit that triggers the false readings at the Fuel Gauge. The Fuel Level Sensor has been improved in all vehicles produced since October 9, 2000 by coating the resistor card with a special lubricant to prevent premature wear of the resistor card contacts.

To simplify the repair, the Fuel Level Sensor is now available as a separate replacement part. It is no longer necessary to replace the complete Fuel Pump Module to replace a faulty Fuel Level Sensor. Refer to TSB-005-01 for complete Fuel Level Sensor removal and replacement procedures.

Important: Daewoo has also noted a small number of customer comments regarding the rate of Fuel Gauge Indicator movement as compared to the actual amount of fuel used. If the Fuel Tank is filled to capacity, the vehicle may tend to travel more miles between the “Full” indicator and the “1/2” mark than between the “1/2” mark and the “Empty” indicator. This is a **normal characteristic** of the Fuel Level Sensor which has **not** been revised to change this characteristic. Attempts to address this customer concern by replacing the Fuel Level Sensor will **not** correct this condition.

Parts Information:

Vehicle	Part Name	Part Number	Qty. Required	Remarks
Lanos	Fuel Level Sensor	96388929	1	
Nubira	Fuel Level Sensor	96388676	1	
Leganza	Fuel Level Sensor	96405140	1	

Note: Fuel Level Sensor units are not interchangeable between models.

If additional information is needed regarding this bulletin, please contact your District Parts & Service Manager or the Daewoo Technical Assistance Center toll free at (877) 362-1234, selection 1.

Circulate To:				
	☑ General Manager	☑ Technician(s)	☑ Body Shop Manager	☐
	☑ Service Manager	☑ Service Advisor	☑ Parts Manager	☐

TECHNICAL SERVICE BULLETIN

Bulletin No.:	TSB-005-01	Description:	Fuel Level Sensor Procedures
Model(s):	All	Group:	Engine
Date:	August 3, 2001	Reference:	N/A
VIN Range:	N/A	Prod. Dates:	N/A

This bulletin supplements Technical Service Bulletin #TSB-004-01 “Fuel Level Sensor Availability” which identified specific customer concerns related to Lanos, Nubira and Leganza models that have experienced incorrect fuel gauge readings caused by a faulty Fuel Level Sensor unit in the Fuel Tank.

To simplify the repair, an improved Fuel Level Sensor is now available as a separate replacement part. It is no longer necessary to replace the complete Fuel Pump Module to replace a faulty Fuel Level Sensor.

Included in this bulletin is a procedure for diagnosing the Fuel Level Sensor (commonly referred to as a "Fuel Level Sending Unit") and the replacement procedure, if necessary, which involves the partial disassembly of the Fuel Pump Module.

Note: Fuel Level Sensor units are <u>not</u> interchangeable between models.

CAUTION: Removing components from a sealed fuel system exposes fuel vapors to outside oxygen and possible sources of combustion. The fuel system is under pressure which must first be relieved to avoid possible spillage or fire when removing system components. A fuel system should only be opened when absolutely necessary, and only in a properly ventilated area after the prescribed diagnostic procedures have determined that fuel system components must be removed. Special caution should be used when removing components from a fuel tank or fuel system. Removal of such components should only be done by an experienced, certified technician and away from open flame (torches, lit cigarettes, heater pilots or other flames however minor) or sparks (mechanical, electrical or otherwise) that could cause fuel vapors to ignite.

FUEL LEVEL SENSOR DIAGNOSTIC PROCEDURE:

Note: Ensure that the Ignition Switch is in the “OFF” position.

1. Remove the Rear Seat Cushion.

   Lanos ONLY - Remove and retain the retaining bolt located at the front center of the Rear Seat Cushion, then lift up the front edge of the cushion to release the two (2) retaining latches.

   Nubira & Leganza - Lift up on the front edge of the Rear Seat Cushion to release the two (2) retaining latches.

2. Remove the Rear Seat Bottom Cushion to gain access to the Fuel Tank.
3. Remove the Fuel Pump Module Access Cover.

Circulate To:				
	☑ General Manager	☑ Technician(s)	☑ Body Shop Manager	☐
	☑ Service Manager	☑ Service Advisor	☑ Parts Manager	☐

4. Disconnect the Wiring Harness Electrical Connector from the Fuel Pump Module.
5. Turn the ignition switch to the "ON" position.
6. Using a suitable DVOM, measure voltage at the Wiring Harness Electrical Connector between terminal 1 and chassis ground. If a 5-V reference voltage is **not** present, repair the open circuit between terminal B5 of the ECM/PCM and the Wiring Harness Electrical Connector. If a 5-V reference voltage is present, go to the next step.

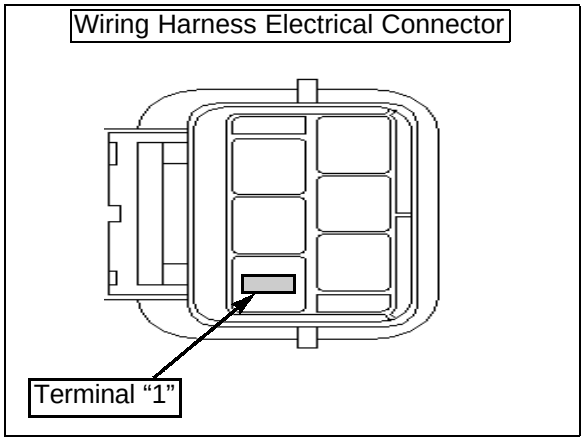

7. Measure the voltage at the Wiring Harness Electrical Connector between terminals 1 and 6. If a 5-V reference voltage is **not** present, repair the open circuit between terminal 6 of the Wiring Harness Electrical Connector and terminal D8 of the ECM/PCM. If a 5-V reference voltage is present, go to the next step.
8. Turn the Ignition Switch to the "OFF" position.
9. Reconnect the Wiring Harness Electrical Connector to the Fuel Pump Module.
10. Remove the Fuel Pump Relay from the Engine Compartment Fuse/Relay Box.

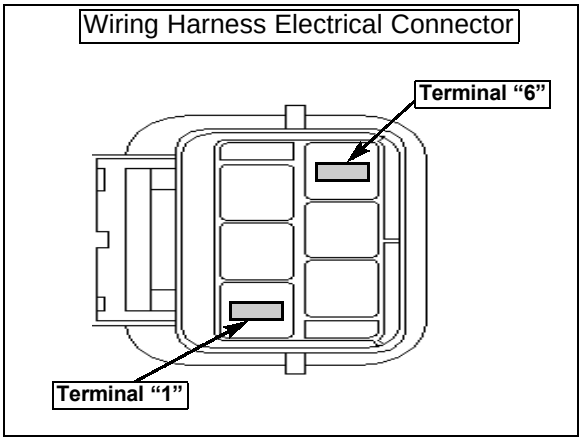

11. Start the engine and allow it to idle until the engine stalls. Crank the engine an additional 10 seconds, then turn the Ignition Switch to the "OFF" position.

Note: The engine should stall in less than 10 seconds once Fuel Pump Relay is removed.

12. Remove the Fuel Filler Cap.
13. Disconnect the Fuel Outlet Hose from the Fuel Pump Module.
14. Disconnect the Fuel Tank Return Hose from the Fuel Pump Module.
15. Disconnect the Wiring Harness Electrical Connector.
16. Using a suitable hammer and brass drift, release the Fuel Pump Module Retaining Ring by rotating it counterclockwise.
17. After removing the Fuel Pump Module Retaining Ring, remove the Fuel Pump Module from the Fuel Tank.

CAUTION: Removing components from a sealed fuel system exposes fuel vapors to outside oxygen and possible sources of combustion. A fuel system should only be opened in a properly ventilated area. Special caution should be used when removing components from a fuel tank or fuel system. Removal of such components should only be done away from open flame (torches, lit cigarettes, heater pilots or other flames however minor) or sparks (mechanical, electrical or otherwise) that could cause fuel vapors to ignite.

18. Reconnect the Wiring Harness Electrical Connector to the Fuel Pump Module.
19. Turn the Ignition Switch to the "ON" position.
20. Connect the Scan 100 Scan Tool to the vehicle Data-Link Connector (DLC) and go to the EVAP Data Screen to view the Fuel Level Sensor voltage

    Screen Navigation Order:

    Select “Diagnostic” ⏩ Choose “model year” ⏩ Choose “vehicle type” ⏩ Select “Powertrain” ⏩ Choose “transmission type” ⏩ Select “Data Display” ⏩ Select “Engine Data” ⏩ Select “EVAP Data”).
21. Slowly move the Fuel Level Sensor Float Arm from the “empty” position to the “full” position while observing the Fuel Level Sensor voltage indications on the Scan Tool EVAP Data Screen.
22. Confirm that the voltage makes a smooth transition from 0.7 to 2.7 volts.
23. If the voltage "dips" or "spikes," at any point throughout the voltage range, replace the Fuel Level Sensor.

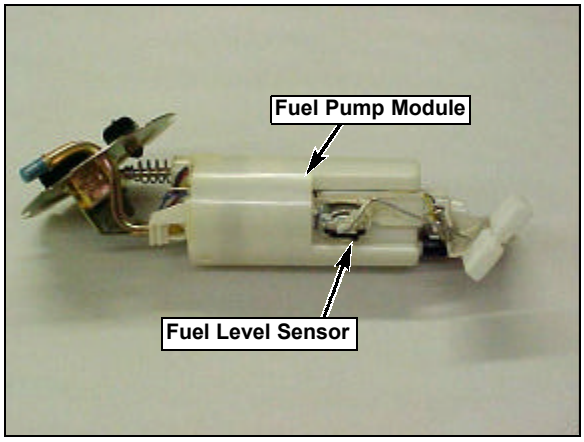

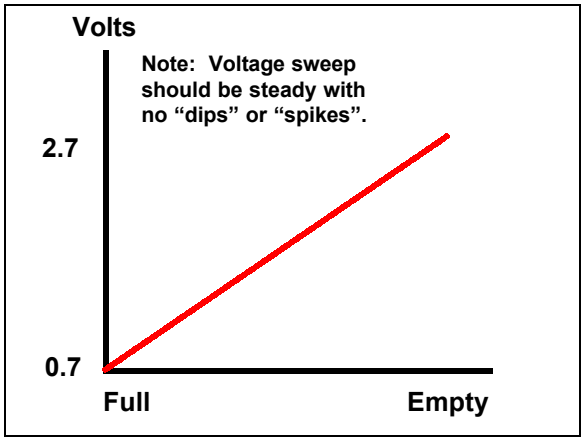

FUEL LEVEL SENSOR REPLACEMENT PROCEDURE:

Removal

1. The Fuel Pump Module has a single (in-tank) sub-harness that must be disconnected from the Fuel Pump Module Mounting Flange Connector.
2. Using a small pair of needle-nosed pliers, remove and retain the secondary terminal lock from the sub-harness electrical connector.

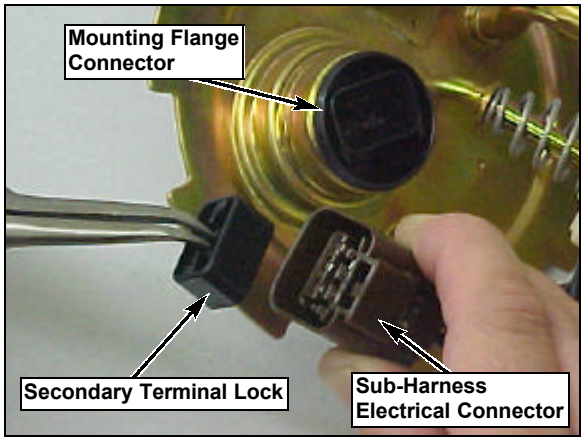

3. Using a suitable terminal release tool (similar to Snap-on #YA500GM), depress the lock tang for terminals 1 and 6, then pull the terminals out through the back of the connector.

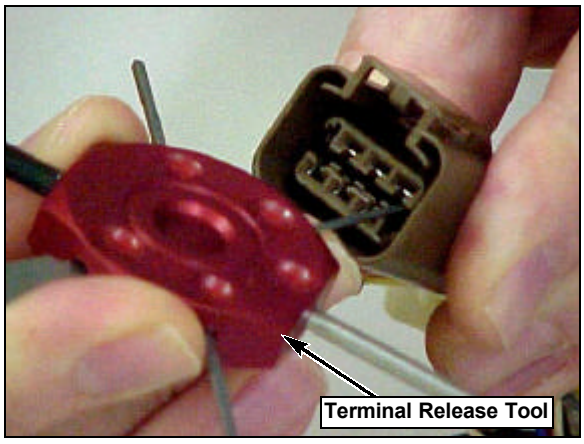

Note: The Fuel Level Sensor Terminals have a beveled edge which requires proper orientation when reinstalling in the connector. Carefully note their location by wire color in the connector prior to removal.

4. Using a suitable pair of diagonal cutters, cut off the two (2) Fuel Level Sensor Terminals previously released/removed from the sub-harness connector, then discard those terminals.

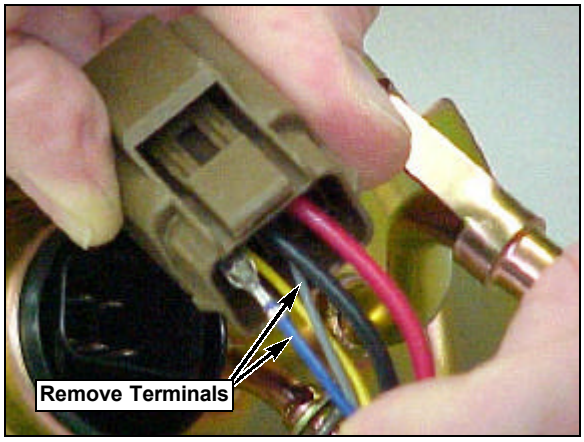

5. Disengage the Fuel Level Sensor wires from the retaining hook at the top of the Fuel Pump Module Body, then pull the cut wire ends out of the fuel pump body through the built-in tube.

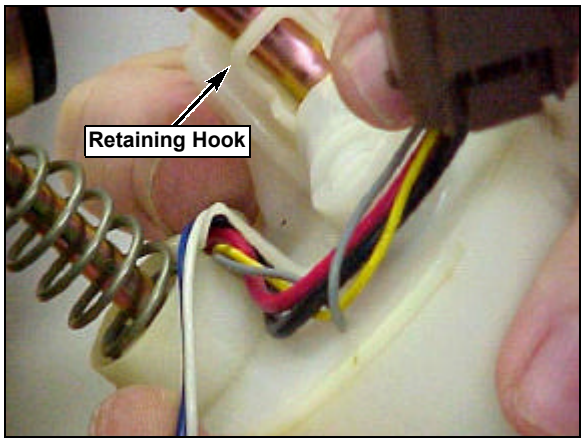

6. Pull the Low Fuel Level Sensor from its bracket.
7. Using a small flat-blade screwdriver, release the Low Fuel Level Sensor Bracket from the Fuel Pump Module Body by prying it in the direction shown. The bracket will slide through the retaining rail as you pull it free of the Fuel Pump Module Body.

Note: ***Prying in the opposite direction may cause damage to the lock that retains the Low Fuel Sensor Bracket.***

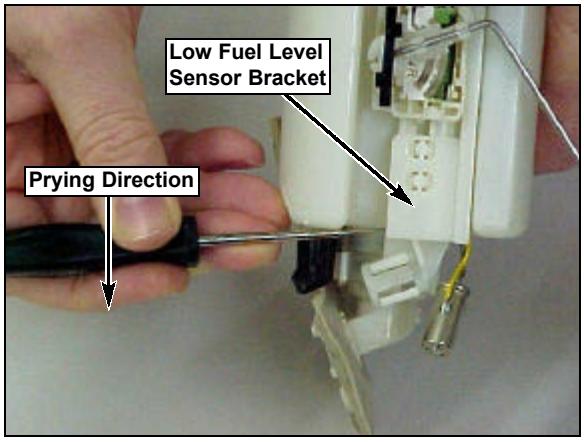

8. Remove the Fuel Level Sensor by prying it in the same direction from the same retaining rail that previously held the Low Fuel Sensor Bracket.

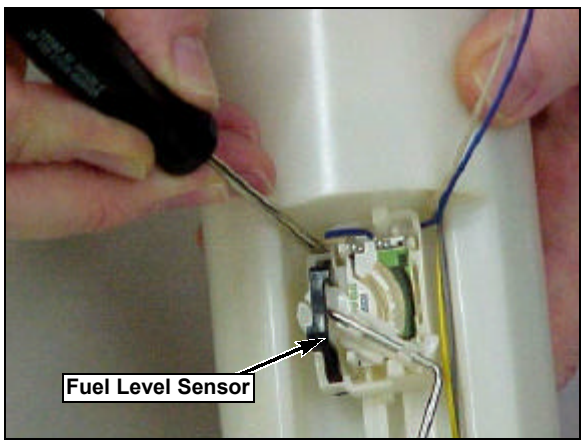

Installation

9. Temporarily wrap the new Fuel Level Sensor wire terminals with electrical tape.
10. Route the wire through the groove at the bottom of the Fuel Level Sensor as you route it around to the back of the Fuel Level Sensor Body.

Note: Failure to properly route the wire in the groove may cause the wire to be damaged as the Fuel Level Sensor is installed.

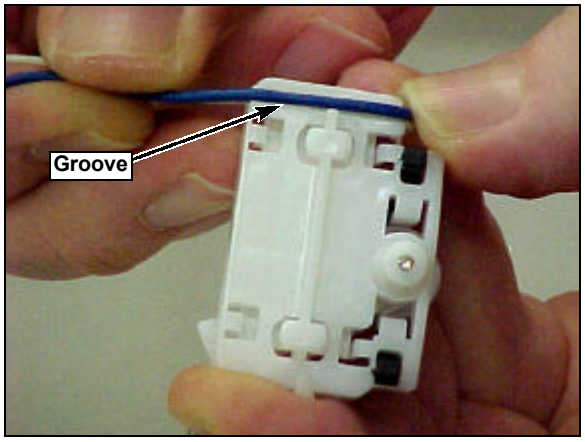

11. Guide the Fuel Level Sensor Body onto the retaining rail on the Fuel Pump Module Body. Slide it fully into place on the retaining rail. An audible "click" will be heard as it locks into it's proper position.

Note: Failure to properly lock the Fuel Level Sensor into place will affect its accuracy.

12. Route the Fuel Level Sensor wires through the built-in tube in the Fuel Pump Module Body.

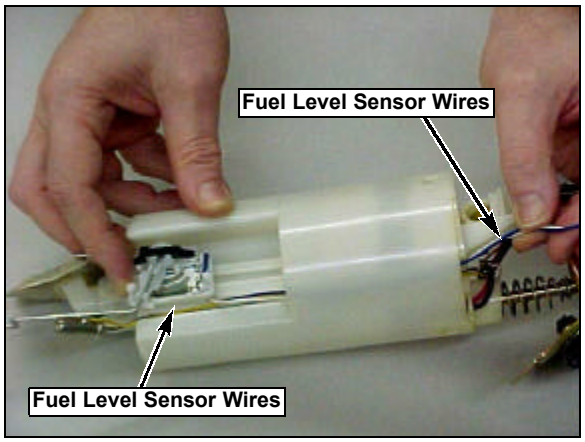

13. Route the Fuel Level Sensor wires through the retaining hook on top of the Fuel Pump Module Body.
14. Remove the electrical tape, then insert the Fuel Level Sensor Terminals into the Fuel Pump Module Sub-harness Electrical Connector. Ensure that the terminals are properly reinstalled (as noted previously) and that the correct wire colors are in their proper connector location. Also, verify that the terminals are locked into position by gently tugging on the wires after installation.

Note: The forward-most edge of the beveled terminal face should be oriented towards the "outboard" edges of the terminal housing.

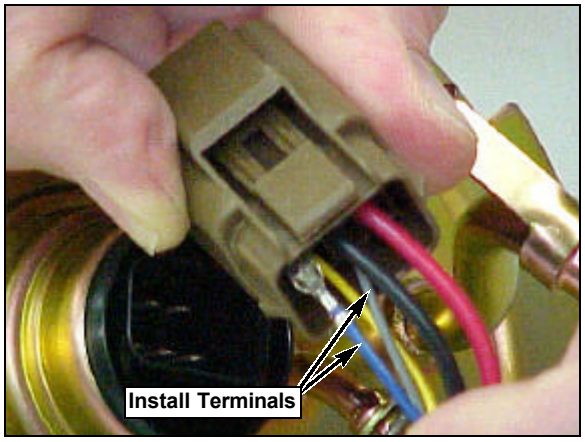

15. Once the terminals are properly positioned, reinstall the secondary terminal lock into the connector. Reconnect the sub-harness connector to the Fuel Pump Module Mounting Flange Connector.

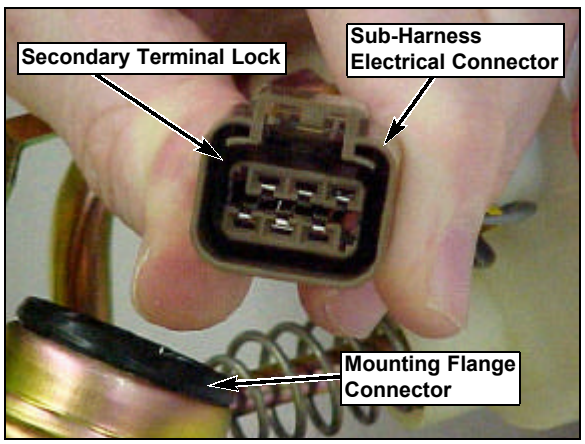

16. Guide the Low Fuel Level Sensor Bracket onto the retaining rail on the Fuel Pump Module Body. An audible "click" will be heard as it locks into it's proper position.
17. Reinsert the Low Fuel Level Sensor onto its bracket.
18. Test the new Fuel Level Sensor by using the procedure described in steps 18 through 23 of the Fuel Level Sensor Diagnostic Procedure before reinstalling the Fuel Pump Module into the Fuel Tank.

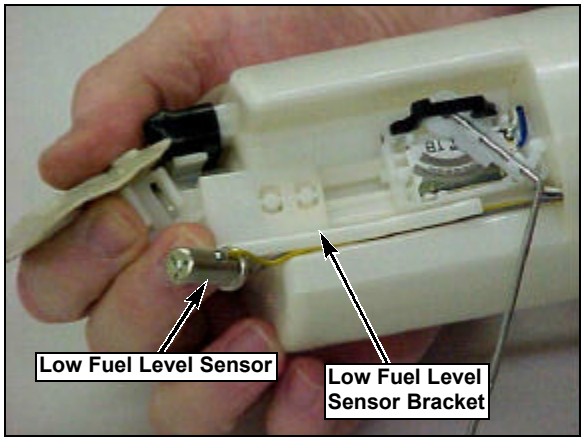

19. Using a new O-ring, carefully reinstall the Fuel Pump Module into the Fuel Tank. Take care not to damage the O-ring or bend the Fuel Level Sensor Float Arm.

CAUTION: Removing components from a sealed fuel system exposes fuel vapors to outside oxygen and possible sources of combustion. A fuel system should only be opened in a properly ventilated area. Special caution should be used when removing components from a fuel tank or fuel system. Removal of such components should only be done away from open flame (torches, lit cigarettes, heater pilots or other flames however minor) or sparks (mechanical, electrical or otherwise) that could cause fuel vapors to ignite.

20. Using a suitable hammer and brass drift, reinstall the Fuel Pump Module Retaining Ring by rotating it clockwise until it reaches it's stops.
21. Reconnect the Wiring Harness Connector to the Mounting Flange Connector on the Fuel Pump Module.
22. Reinstall the Fuel Pump Outlet Hose by pushing it firmly into place. An audible "click" will be heard when the hose is properly connected.
23. Reinstall the Fuel Tank Return Hose by pushing it firmly into place. An audible "click" will be heard when the hose is properly connected.
24. Reinstall the Fuel Pump Relay into the Engine Compartment Fuel/Relay Box.
25. Turn the Ignition Switch to the "ON" position and verify that the Fuel Pump operates for approximately 3 seconds by listening for pump motor operation, then check the Fuel Pump Module for leaks.
26. Road test the vehicle, then recheck the area around the Fuel Pump Module for fuel leaks.
27. Reinstall the Fuel Pump Module Access Cover by pressing it into place.
28. Reinstall the rear seat cushion.

    Lanos ONLY - Reinstall the Rear Seat Cushion retaining bolt removed previously.

Parts Information:

Vehicle	Part Name	Part Number	Qty. Required	Remarks
Lanos	Fuel Level Sensor	96388929	1	White & Blue wires
Nubira	Fuel Level Sensor	96388676	1	Gray & Blue wires
Leganza	Fuel Level Sensor	96405140	1	White & Blue wires
All	Fuel Tank O-ring	96183170	1	

Warranty Claim Information:

Operation Code	Operation Description	Labor Time
1711700	Fuel Level Sensor, Replace	0.5 hr. / veh.

Claim Type: 11 - In-Service Vehicles
Field Fix Number: TSB-004-01
Nature Code: N62
Cause Code: R18
Causal Part Number: Lanos - 96388929
Nubira - 96388676
Leganza - 96405140

If additional information is needed regarding this procedure, please contact your District Parts & Service Manager or the Daewoo Technical Assistance Center toll free at (877) 362-1234, selection 1.

SECTION : 3A

AUTOMATIC TRANSAXLE DRIVE AXLE

TABLE OF CONTENTS

SPECIFICATIONS 3A–1
FASTENER TIGHTENING SPECIFICATIONS 3A–1
SPECIAL TOOLS 3A–2
SPECIAL TOOLS TABLE 3A–2
COMPONENT LOCATOR 3A–2
FRONT DRIVE AXLE 3A–2
MAINTENANCE AND REPAIR 3A–4
ON–VEHICLE SERVICE 3A–4
DRIVE AXLE ASSEMBLY 3A–4
UNIT REPAIR 3A–8
OUTER JOINT SEAL 3A–8
INNER TRIPOT SEAL 3A–9
GENERAL DESCRIPTION AND SYSTEM OPERATION 3A–13
FRONT DRIVE AXLE 3A–13

SPECIFICATIONS

FASTENER TIGHTENING SPECIFICATIONS

Application	N·m	Lb–Ft	Lb–In
Axle Shaft Caulking Nut Initial Torque	180	134	–
Axle Shaft Caulking Nut Final Torque	50 + 60°	37 + 60°	–
Lower Ball Joint Nut and Bolt	60	44	–
Tie Rod Nut	60	44	–
Wheel Nuts (Steel Wheel)	90	66	–

SPECIAL TOOLS

SPECIAL TOOLS TABLE

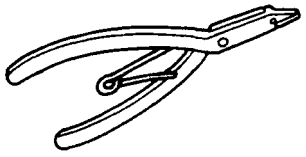 A104A001	J–8059 Snap Ring Pliers
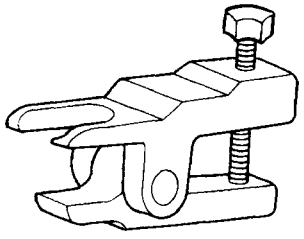 A106C034	KM–507–B Ball Joint Separator

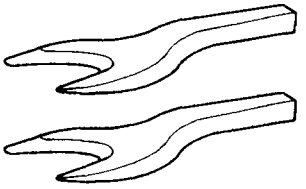 A106C032	KM–460–A Axle Shaft Remover
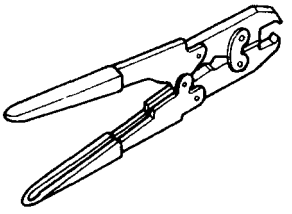 A104A008	J–35566 Seal Clamp Pliers

COMPONENT LOCATOR

FRONT DRIVE AXLE

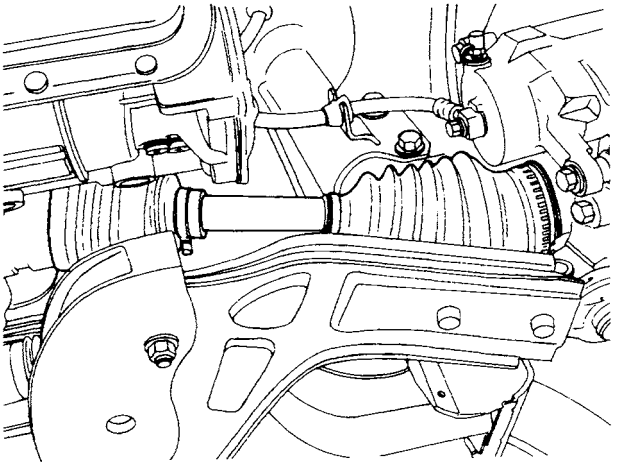

B104A003

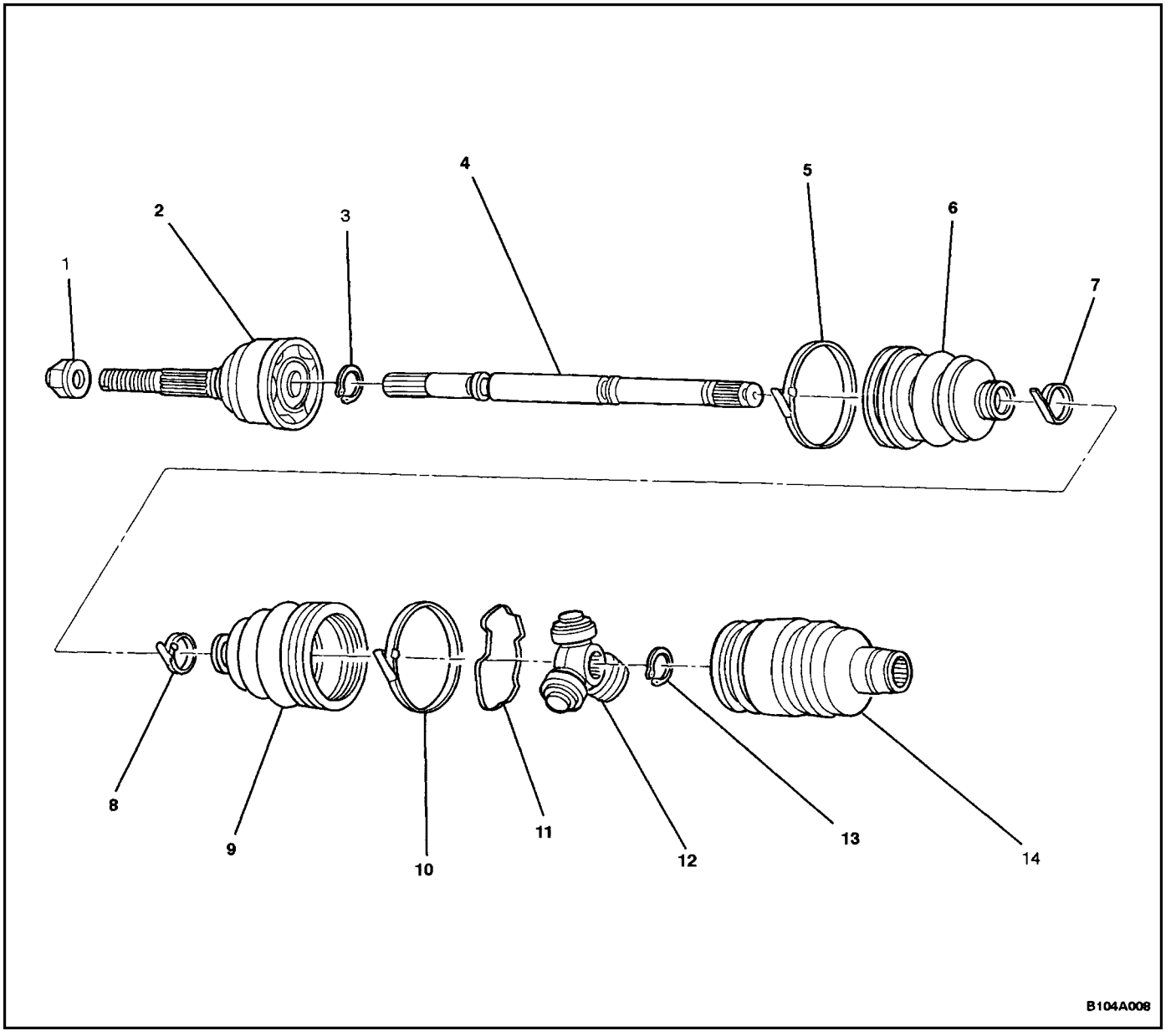

1. Caulking Nut
2. C/V Joint
3. Snap Ring
4. Axle Shaft (right–hand shown, left–hand similar)
5. Seal Retaining Clamp
6. Drive Axle Outboard Seal
7. Seal Retaining Clamp
8. Seal Retaining Clamp
9. Drive Axle Inboard Seal
10. Seal Retaining Clamp
11. Tripot Joint Retaining Ring
12. Tripot Joint
13. Shaft Retaining Ring
14. Tripot Housing

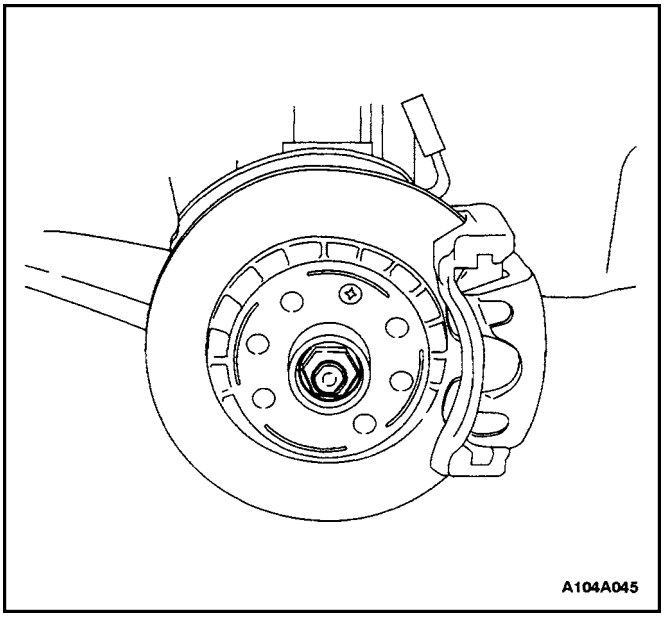

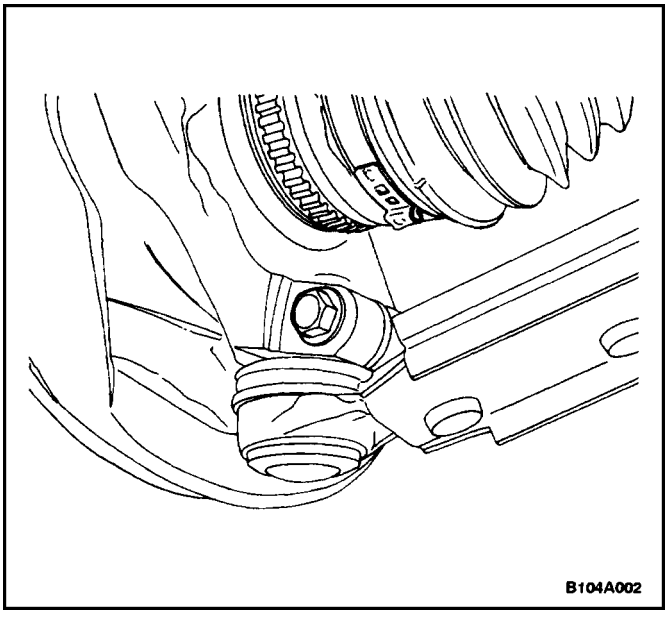

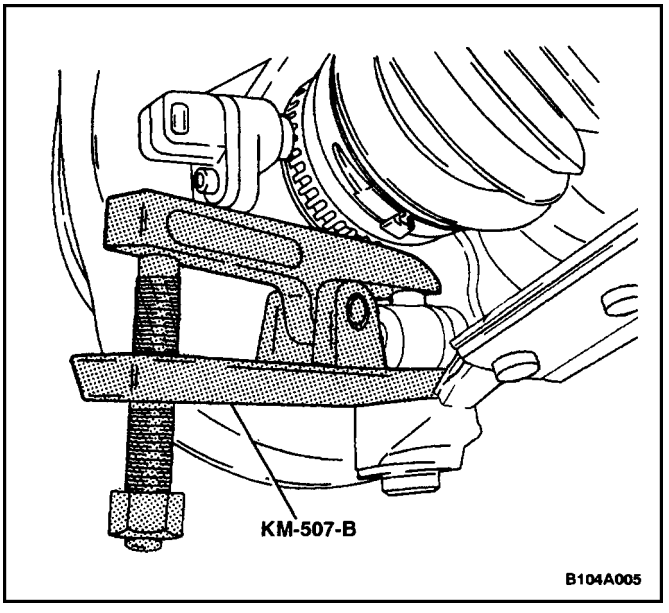

MAINTENANCE AND REPAIR

ON–VEHICLE SERVICE

DRIVE AXLE ASSEMBLY

Tools Required

KM–507–B Ball Joint Separator
KM–460–A Axle Shaft Remover

Removal Procedure

1. Raise and suitably support the vehicle.
2. Remove the wheels. Refer to*Section 2E, Tires and Wheels.*
3. Remove the engine under covers. Refer to*Section 9N, Frame and Underbody.*
4. Remove the axle shaft caulking nut. Discard the nut.
5. Remove the lower ball joint nut and bolt.

Notice : Use only the recommended tool for separating the lower ball joint. Failure to use the recommended tool may cause damage to the ball joint and the seal.

6. Separate the steering knuckle from the lower ball joint using the ball joint separator KM–507–B.

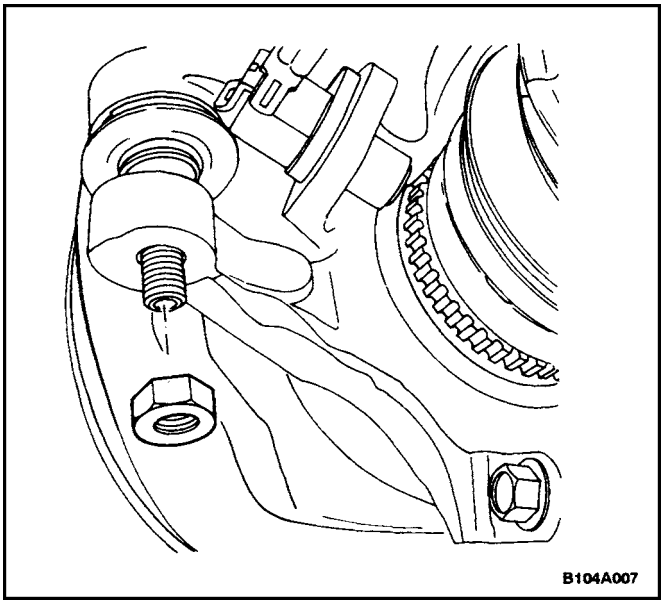

7. Remove the tie rod nut.

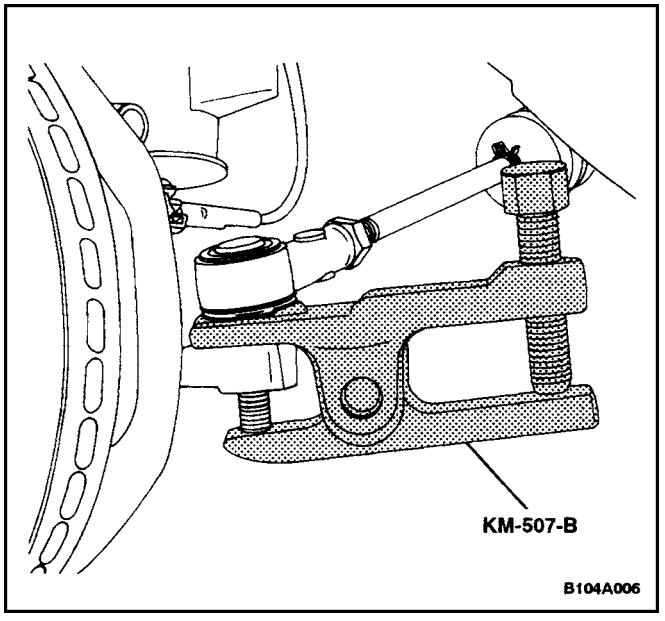

Notice : Use only the recommended tool for separating the tie rod from the knuckle/strut assembly. Failure to use the recommended tool may cause damage to the knuckle/strut assembly.

8. Separate the tie rod end using the ball joint separator KM–507–B.

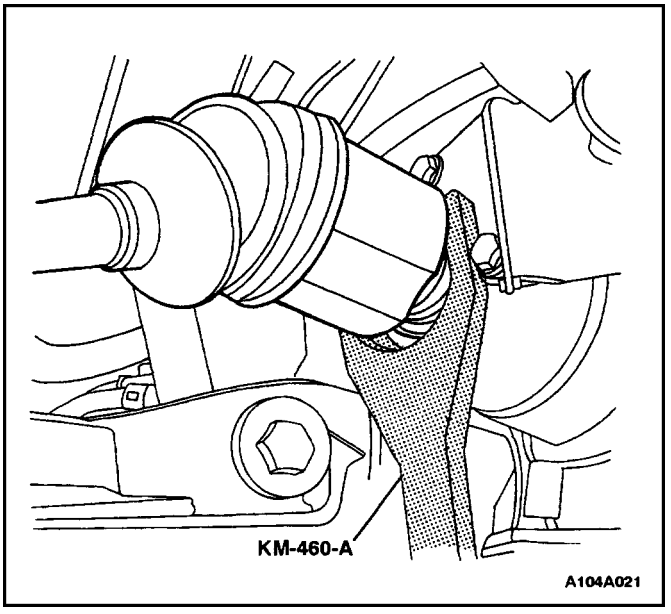

9. Push the drive axle shaft from the wheel hub.

Important : Support the unfastened end of the drive axle. Do not allow the drive axle to dangle freely from the transaxle for any length of time after it has been removed from the wheel hub.

Important : Place a drain pan below the transaxle to catch the escaping fluid. Cap the transaxle drive opening after the drive axle has been removed to keep the fluid in and any contamination out.

10. Remove the drive axle from the transaxle using the axle shaft remover KM–460–A.

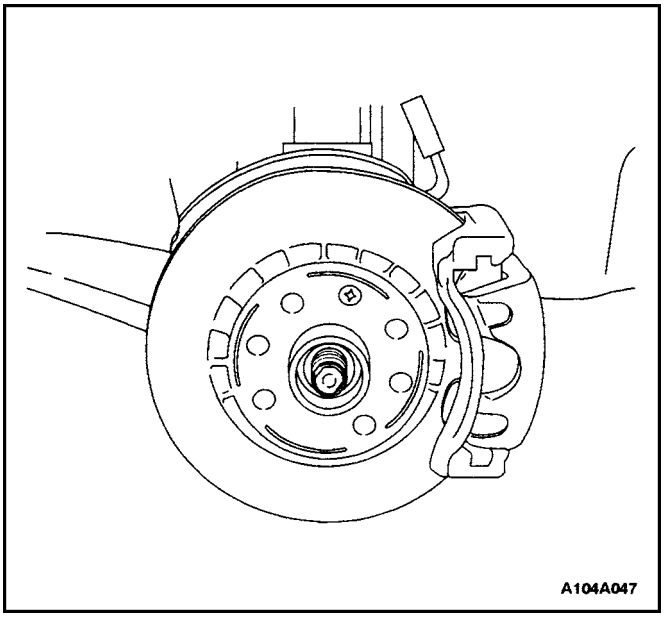

Installation Procedure

Notice : Do not damage the seals.

1. Clean the hub seal and the transaxle seal.
2. Install the drive axle into the transaxle.
3. Install the wheel hub onto the axle shaft.

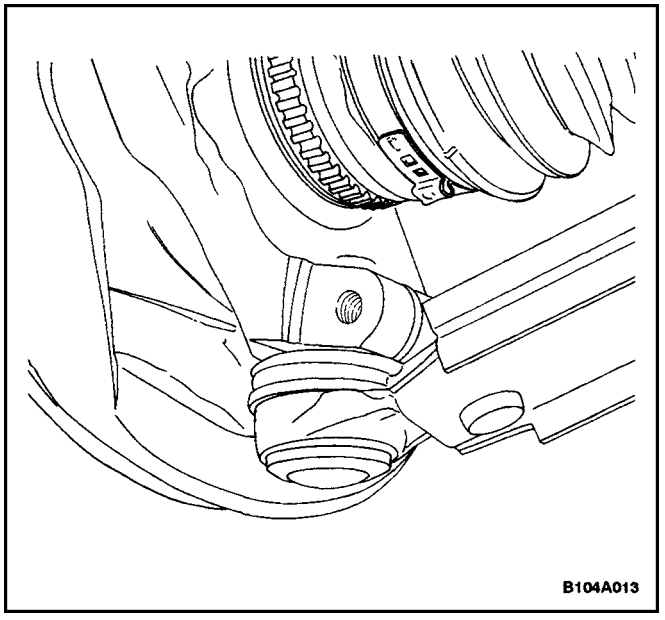

4. Mount the steering knuckle onto the lower ball joint.

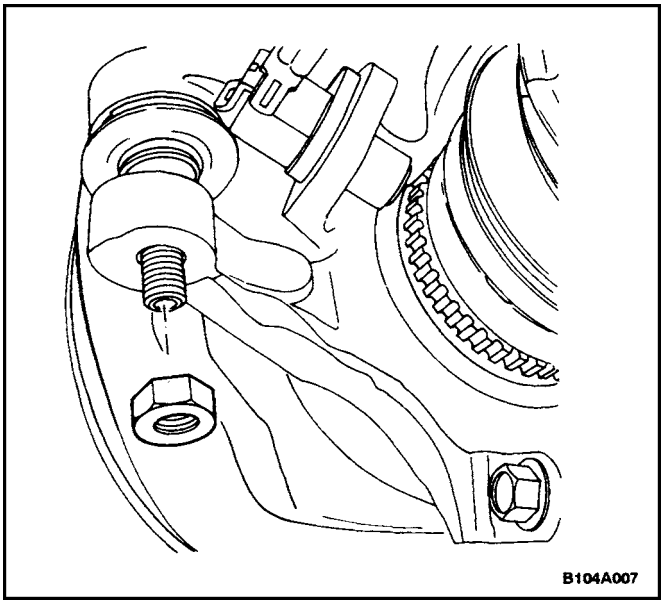

5. Install the tie rod into the knuckle/strut and install the tie rod nut.

   Tighten

   Tighten the tie rod nut to 60 N m (44 lb–ft).

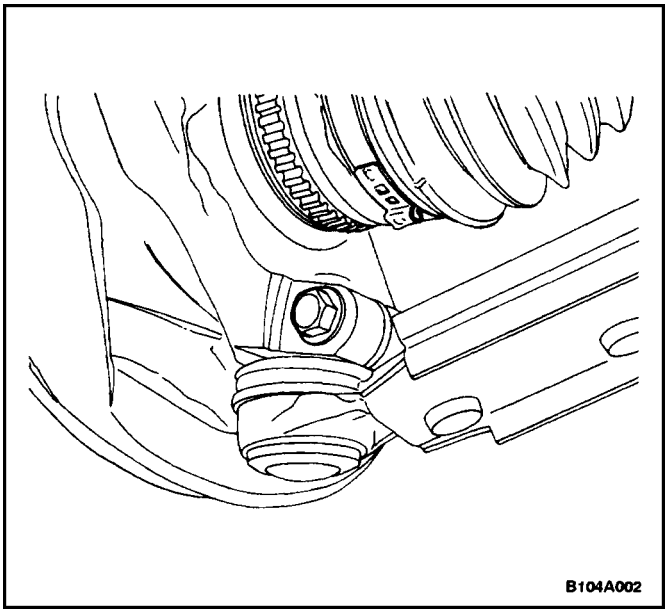

6. Install the lower ball joint bolt and nut.

   Tighten

   Tighten the lower ball joint bolt and nut to 60 N·m (44 lb–ft).

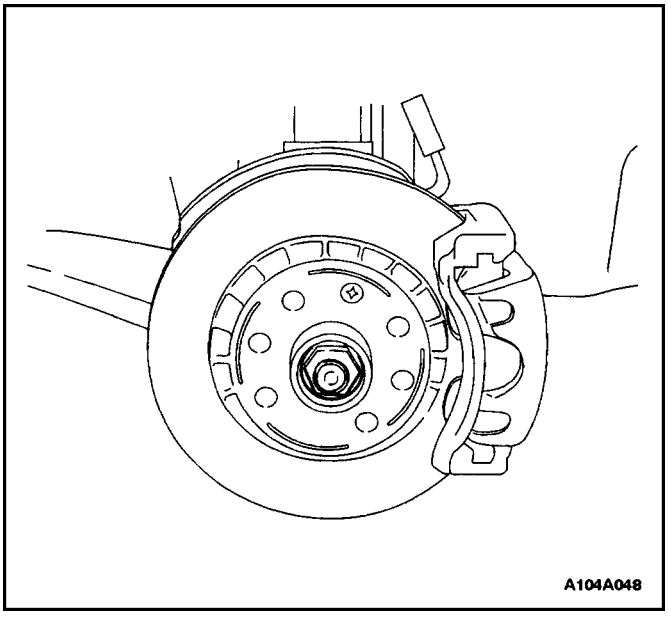

7. Loosely install a new axle shaft caulking nut. Always use a new nut.
8. Install the wheels. Loosely install the bolts. Refer to*Section 2E, Tires and Wheels.*
9. Lower the vehicle to the floor.

   Tighten

   Tighten the wheel bolts to 90 N·m (66 lb–ft).

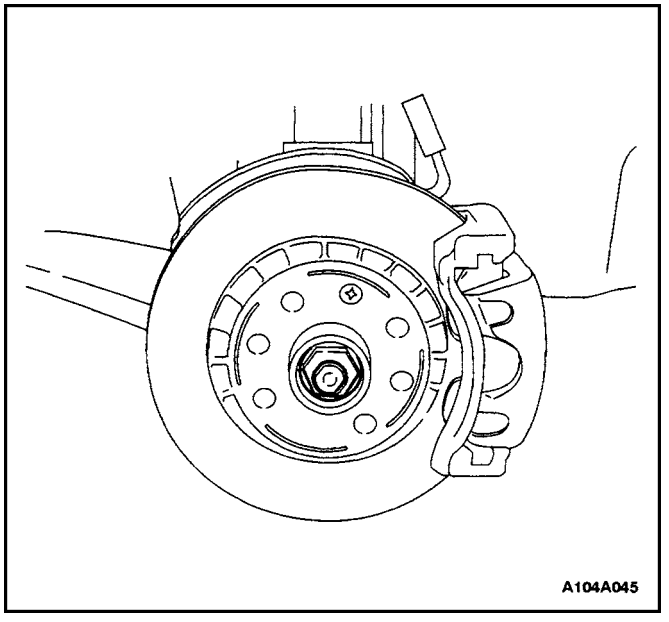

10. Tighten the axle shaft caulking nut to 180 N·m (134 lb–ft). Loosen the nut and re–tighten the nut to 50 N·m (37 lb–ft). Then tighten the nut further by 60 degrees.
11. Peen the caulking nut with a punch and a hammer until the nut is locked into place on the axle shaft hub.
12. Install the engine under covers. Refer to*Section 9N, Frame and Underbody.*
13. Refill the transaxle fluid to the proper level. Refer to*Section 5A, 4T40E Automatic Transaxle.*

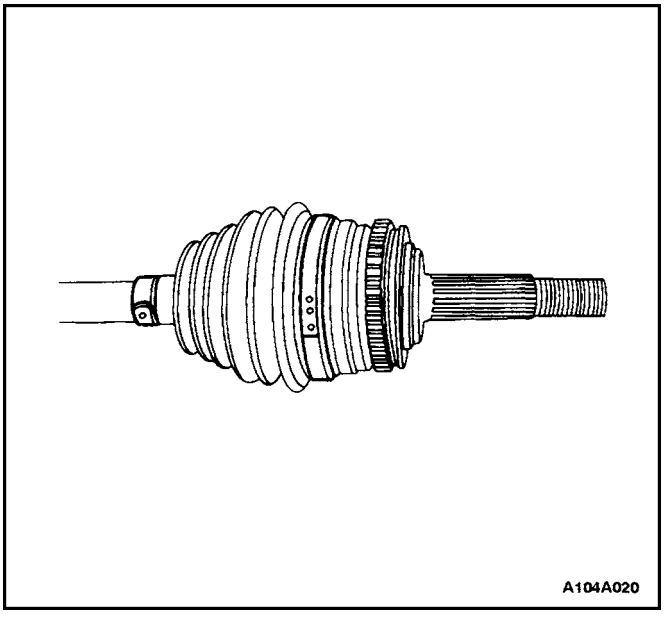

UNIT REPAIR

OUTER JOINT SEAL

Tools Required

J–8059 Snap Ring Pliers

Removal Procedure

1. Remove the drive axle from the vehicle. Refer to”Drive Axle Assembly” in this section.
2. Remove the large seal retaining clamp. Discard the clamp.
3. Remove the small seal retaining clamp. Discard the clamp.

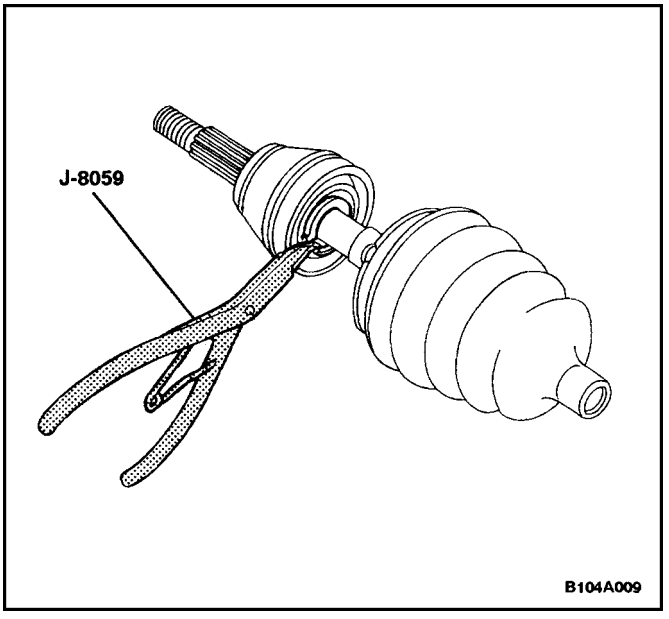

4. Degrease the joint.
5. Spread the snap ring using the snap ring pliers J–8059 and remove the outer joint from the axle shaft.

CAUTION : Do not disassemble the outer joint assembly. Parts are match fit and cannot be serviced separately. Improper reassembly will adversely affect both performance and safety.

6. Remove the seal from the joint assembly.

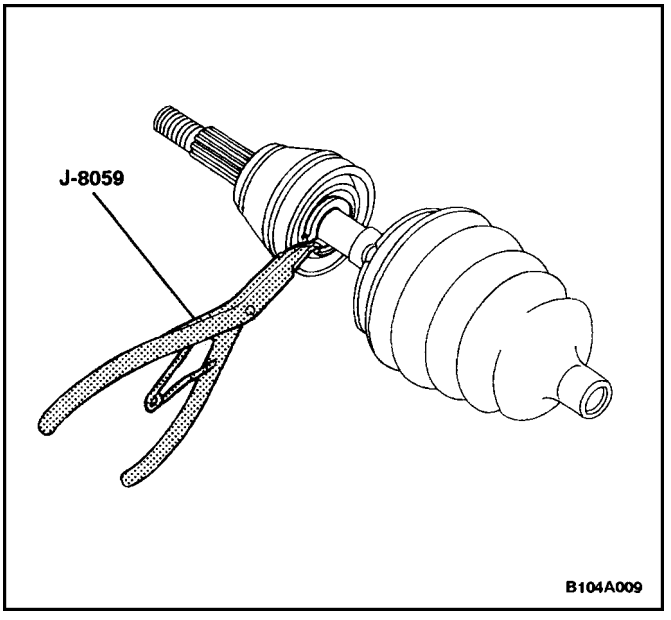

Installation Procedure

Tools Required

J–35566 Seal Clamp Pliers

1. Install the seal onto the axle shaft.
2. Spread the snap ring using the snap ring pliers J–8059 and install the outer joint onto the axle shaft.
3. Fill the joint seal with 175 to 195 g (6.2 to 6.9 ounces) of the recommended grease. Repack the joint with 175 to 195 g (6.2 to 6.9 ounces) of the recommended grease.

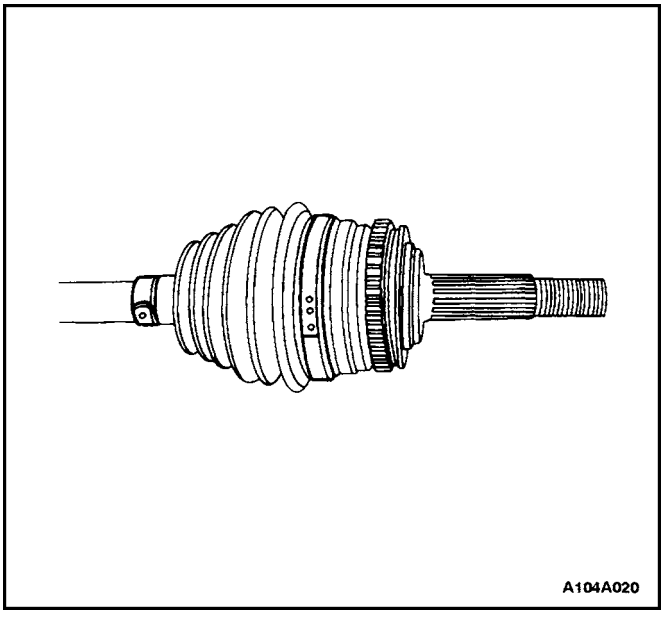
A104A020

4. Install a new large seal retaining clamp and a new small seal retaining clamp.

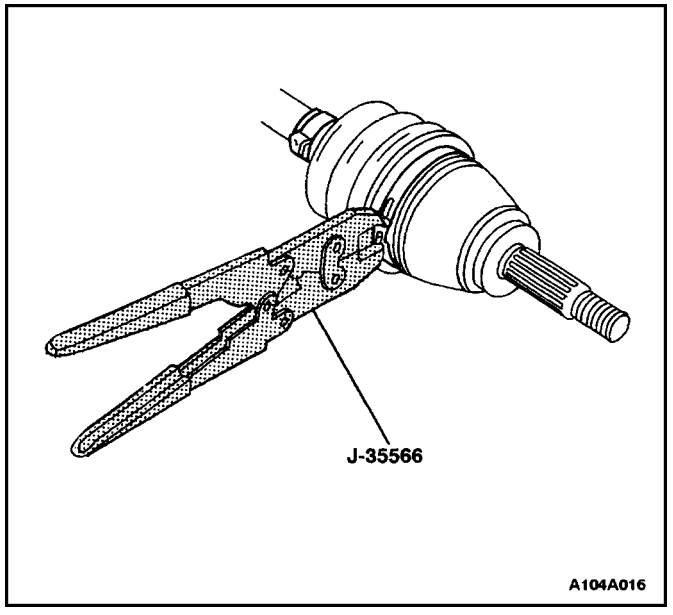

A104A016

5. Crimp the new small seal retaining clamp and the new large seal retaining clamp using the seal clamp pliers J–35566.
6. Install the drive axle shaft to the vehicle. Refer to"Drive Axle Assembly" in this section.

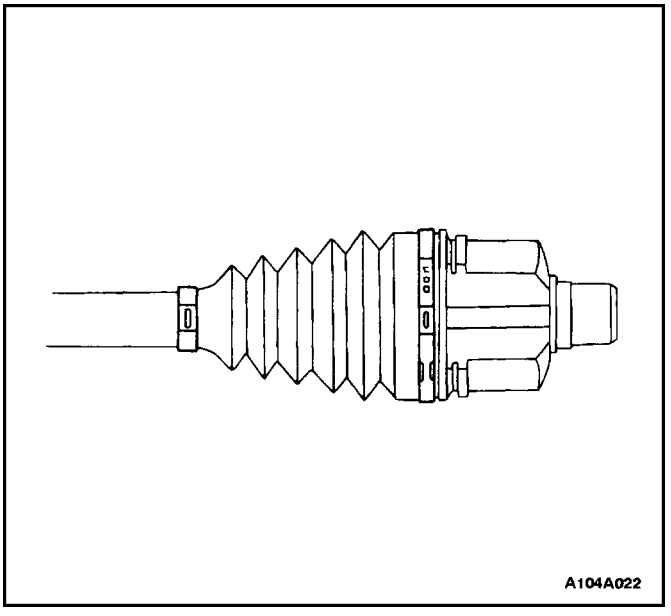
A104A022

INNER TRIPOT SEAL

Tools Required

J–8059 Snap Ring Pliers

Removal Procedure

1. Remove the drive axle from the vehicle. Refer to"Drive Axle Assembly" in this section.
2. Remove the large seal retaining clamp. Discard the clamp.
3. Remove the small seal retaining clamp. Discard the clamp.

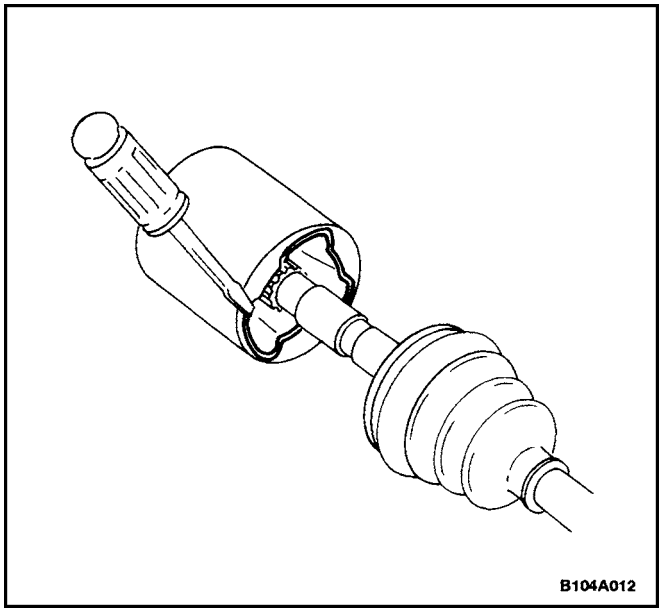

4. Pry the tripot joint retaining ring from the tripot housing.

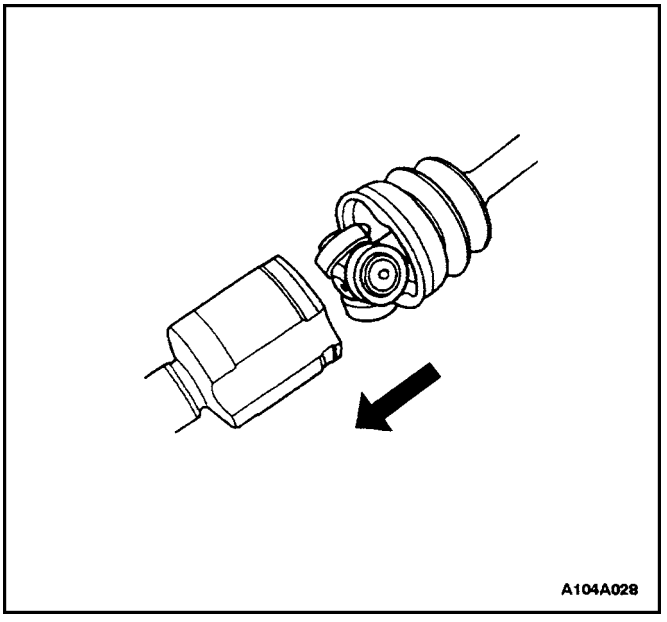

5. Remove the tripot housing from the seal.

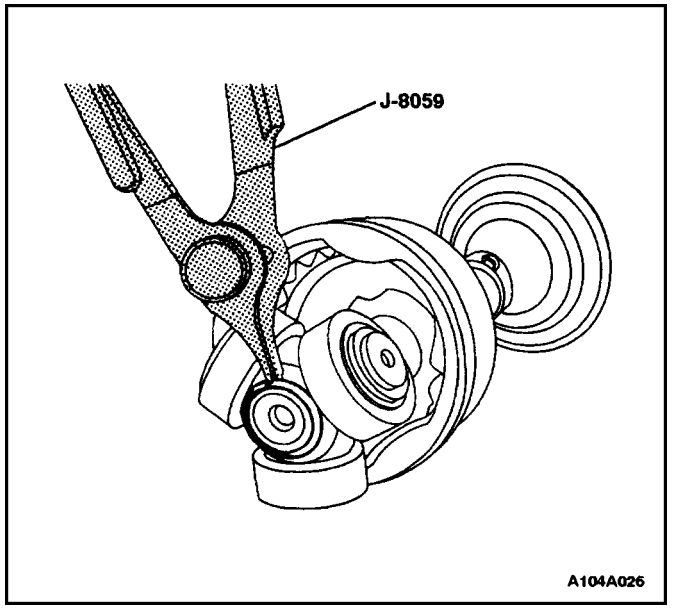

6. Degrease the tripot assembly.
7. Remove the shaft retaining ring using the snap ring pliers J–8059.

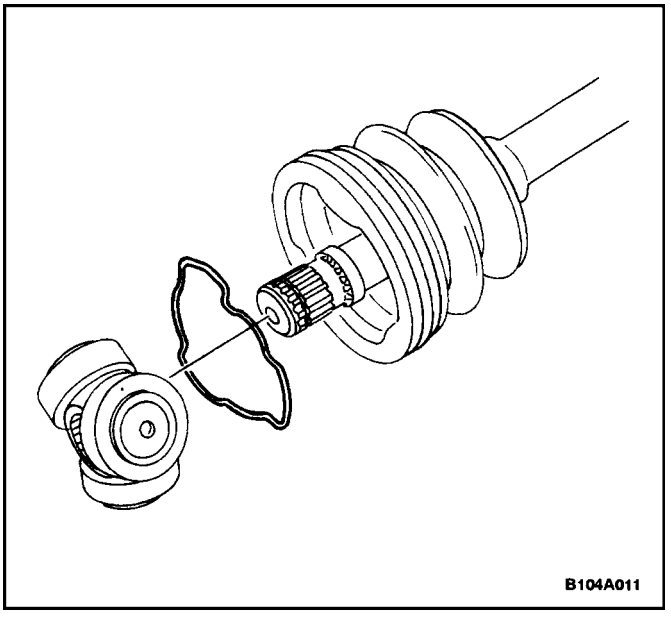

8. Remove the tripot and the tripot joint retaining ring from the axle shaft.
9. Remove the tripot joint seal from the axle shaft.

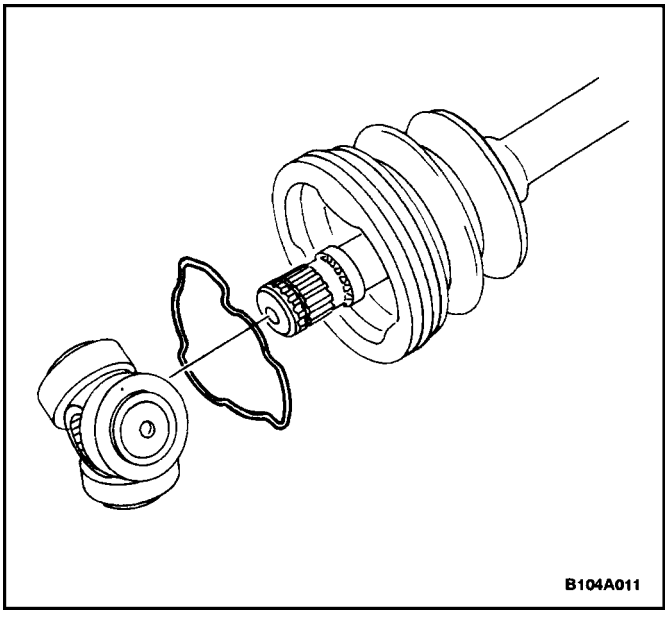

Installation Procedure

Tools Required

J–35566 Seal Clamp Pliers

1. Install a new small seal retaining clamp onto the seal. Do not crimp the seal retaining clamp.
2. Install the seal onto the axle shaft.
3. Install the tripot joint retaining ring and the tripot onto the axle shaft.

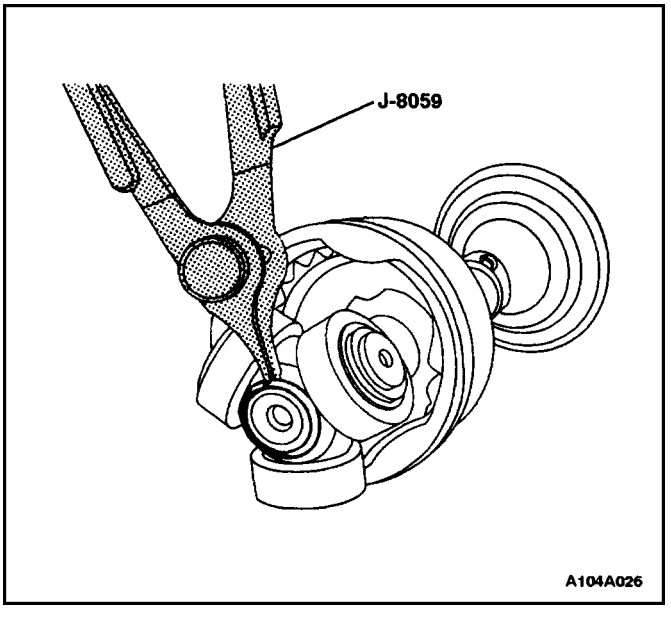

4. Install the shaft retaining ring onto the axle shaft using the snap ring pliers J–8059.

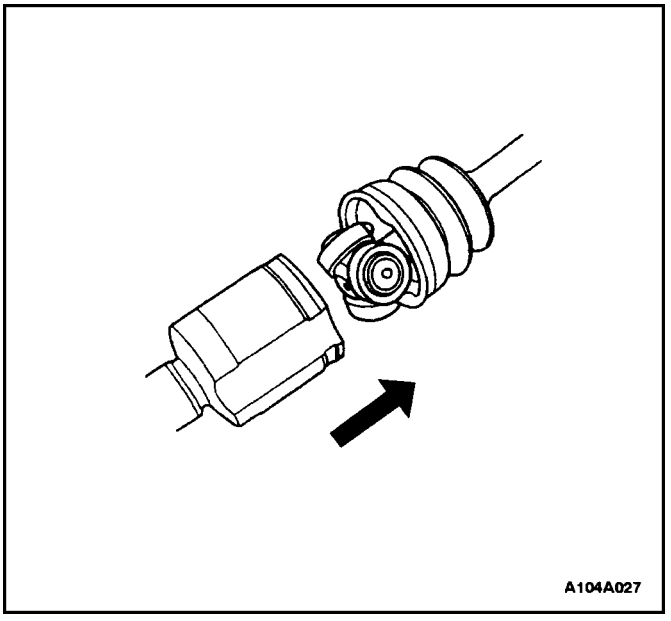

5. Fill the tripot housing with 195 to 215 g (6.9 to 7.6 ounces) of the recommended grease. Repack the tripot with 195 to 215 g (6.9 to 7.6 ounces) of the recommended grease.
6. Install the tripot housing onto the tripot assembly.

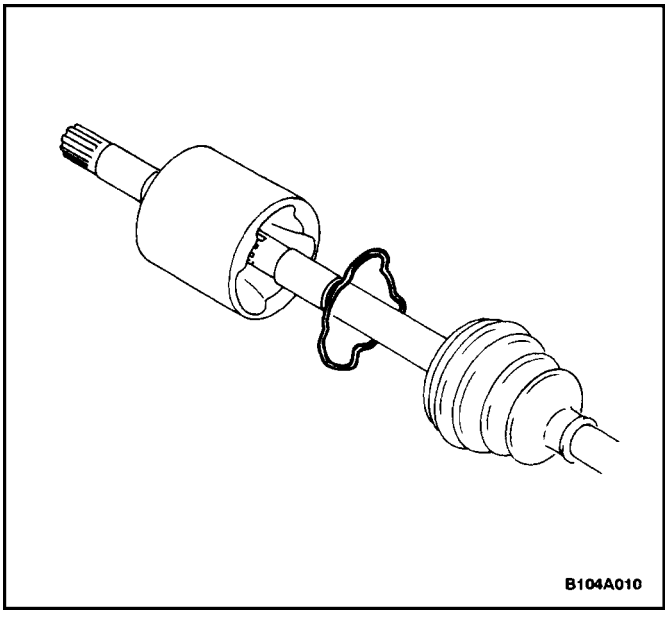

7. Install the tripot joint retaining ring into the tripot housing.

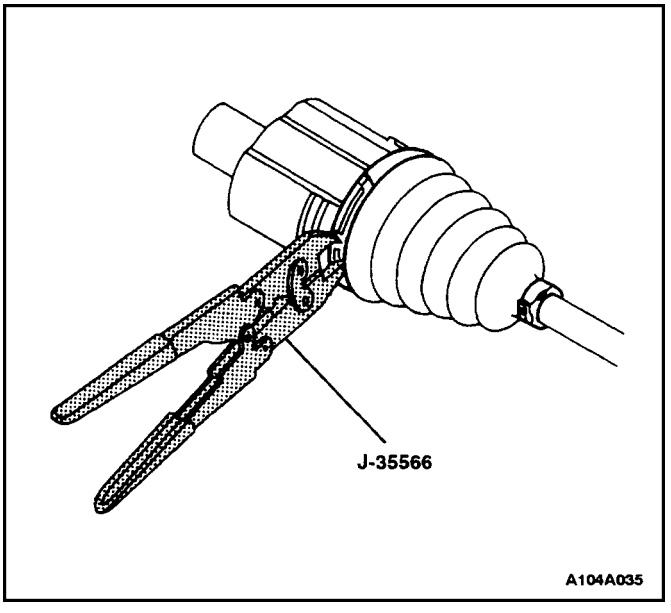

8. Install a new large seal retaining clamp. Crimp the large seal retaining clamp using the seal clamp pliers J–35566.
9. Crimp the new small seal retaining clamp using the seal clamp pliers J–35566.
10. Install the drive axle shaft to the vehicle. Refer to”Drive Axle Assembly” in this section.

GENERAL DESCRIPTION AND SYSTEM OPERATION

FRONT DRIVE AXLE

General Description

Drive axles are flexible shaft assemblies that transmit rotational force from the transaxle to the front–wheel assemblies. Each axle assembly consists of an inner and an outer constant–velocity joint connected to an axle shaft. The inner joint is completely flexible and has the ability to move in and out. The outer joint is also flexible, but it cannot move in and out.

The drive axles use one type of outboard joint and one type of inboard joint. The inboard ends of both drive axles incorporate a female spline that installs over a stub shaft protruding from the transaxle.

SECTION : 5A

4T40–E AUTOMATIC TRANSAXLE

CAUTION : Disconnect the negative battery cable before removing or installing any electrical unit or when a tool or equipment could easily come in contact with exposed electrical erminals. Disconnecting this cable will help prevent personal injury and damage to the vehicle. The ignition must also be in LOCK unless otherwise noted.

TABLE OF CONTENTS

SPECIFICATIONS 5A–6
- END PLAY SPECIFICATIONS 5A–6
- TRANSAXLE GENERAL SPECIFICATIONS 5A–6
- FLUID CAPACITY 5A–6
- RANGE REFERENCE 5A–7
- 4T40–E GEAR RATIOS 5A–8
- SHIFT SPEED 5A–8
- LINE PRESSURE 5A–8
- FASTENER TIGHTENING SPECIFICATIONS 5A–8

SPECIAL TOOLS 5A–10
- SPECIAL TOOLS TABLE 5A–10

SCHEMATIC AND ROUTING DIAGRAMS 5A–15
- POWERTRAIN CONTROL MODULE (1 OF 3) 5A–15
- POWERTRAIN CONTROL MODULE (2 OF 3) 5A–16
- POWERTRAIN CONTROL MODULE (3 OF 3) 5A–17

VISUAL IDENTIFICATION 5A–18
- TRANSAXLE IDENTIFICATION INFORMATION 5A–18

COMPONENT LOCATOR 5A–19
- OIL PUMP ASSEMBLY 5A–19
- CONTROL VALVE BODY ASSEMBLY 5A–20
- DRIVEN SPROCKET SUPPORT ASSEMBLY/2ND CLUTCH 5A–21
- REVERSE INPUT CLUTCH ASSEMBLY 5A–22
- DIRECT AND COAST CLUTCH ASSEMBLIES 5A–23
- REACTION CARRIER ASSEMBLY 5A–24
- INPUT CARRIER ASSEMBLY 5A–25
- INPUT INTERNAL GEAR AND FORWARD CLUTCH HUB 5A–26
- FORWARD CLUTCH ASSEMBLY 5A–27
- FORWARD CLUTCH SUPPORT ASSEMBLY 5A–28
- FINAL DRIVE AND DIFFERENTIAL ASSEMBLY 5A–29
- MANUAL SHAFT, PARKING PANEL AND ACTUATOR ASSEMBLY 5A–30
- CASE AND ASSOCIATED PARTS (1 OF 3) .. 5A–31
- CASE AND ASSOCIATED PARTS (2 OF 3) .. 5A–32
- CASE AND ASSOCIATED PARTS (3 OF 3) .. 5A–34
- VALVE BODY–TO–SPACER PLATE GASKET 5A–36
- CHANNEL PLATE PASSAGES – CASE SIDE 5A–37
- CASE PASSAGES – CHANNEL PLATE SIDE 5A–38
- CASE PASSAGES – BOTTOM 5A–39
- SPACER PLATE–TO–CHANNEL PLATE GASKET 5A–40
- CHANNEL PLATE–TO–CASE GASKET 5A–41
- SPACER PLATE 5A–42
- PUMP BODY OIL CHANNELS 5A–43
- 4T40–E LEAK INSPECTION POINTS 5A–44
- ELECTRONIC COMPONENT LOCATION VIEWS 5A–45
- CONTROL VALVE BODY CHANNELS – CHANNEL PLATE SIDE 5A–46
- CONTROL VALVE BODY CHANNELS – OIL PUMP SIDE 5A–47
- CHANNEL PLATE PASSAGES – CONTROL VALVE BODY SIDE 5A–48

DIAGNOSIS 5A–49
- BASIC KNOWLEDGE REQUIRED 5A–49
- FUNCTIONAL CHECK PROCEDURE 5A–49
- 4T40–E TRANSAXLE FUNCTIONAL CHECK PROCEDURE 5A–49
- LINE PRESSURE CHECK PROCEDURE 5A–50
- COMPONENT RESISTANCE CHECK PROCEDURE 5A–51

PRESSURE SWITCH ASSEMBLY RESISTANCE CHECK 5A–52
CLUTCH PLATE DIAGNOSIS 5A–53
ENGINE COOLANT IN TRANSAXLE 5A–53
COOLER FLUSHING AND FLOW TEST 5A–54
FLUID LEAK DIAGNOSIS AND REPAIR 5A–54
CASE POROSITY REPAIR 5A–54
4T40–E FLUID LEVEL SERVICE PROCEDURE 5A–55
ELECTRICAL/GARAGE SHIFT TESTS 5A–55
ROAD TEST PROCEDURE 5A–56
TORQUE CONVERTER CLUTCH (TCC) DIAGNOSIS 5A–57
TORQUE CONVERTER EVALUATION 5A–57
TCC SHUDDER DIAGNOSIS 5A–58
FLEXPLATE/TORQUE CONVERTER VIBRATION TEST PROCEDURE 5A–59
HYDRA–MATIC 4T40–E SHIFT SPEED CHART 5A–60
INTERNAL WIRING HARNESS CHECK 5A–60
WIRING DIAGRAM 5A–62
4T40–E COMPONENT RESISTANCE CHART 5A–63
AUTOMATIC TRANSMISSION FLUID PRESSURE MANUAL VALVE POSITION SWITCH RESISTANCE CHECK 5A–63

SYMPTOM DIAGNOSIS 5A–66

HIGH OR LOW LINE PRESSURE 5A–66
INACCURATE/INCONSISTENT SHIFT POINTS 5A–67
HARSH SHIFTS 5A–67
NO REVERSE, SLIPS IN REVERSE 5A–68
NO FIRST GEAR, SLIPS IN FIRST GEAR ... 5A–69
NO SECOND GEAR, SLIPS IN SECOND GEAR 5A–70
NO THIRD GEAR, SLIPS IN THIRD GEAR .. 5A–71
SECOND GEAR ONLY 5A–71
NO FOURTH GEAR, SLIPS IN FOURTH GEAR 5A–72
LOSS OF DRIVE 5A–73
LOSS OF POWER 5A–73
ENGINE STALL 5A–74
FIRST AND SECOND GEARS ONLY 5A–74
THIRD AND FOURTH GEARS ONLY 5A–74
FIRST AND FOURTH GEARS ONLY 5A–74
SECOND AND THIRD GEARS ONLY 5A–74
NO PARK 5A–75
RATCHETING NOISE 5A–75
NO ENGINE BRAKING; ALL MANUAL RANGES 5A–76
NO ENGINE BRAKING; MANUAL SECOND – SECOND GEAR 5A–76
NO ENGINE BRAKING; MANUAL FIRST – FIRST GEAR 5A–77
DRIVES IN NEUTRAL 5A–77
NO GEAR SELECTION 5A–77
SHIFT OCCURS WITHOUT ENGAGING BRAKE PEDAL 5A–77
SHIFT INDICATOR INDICATES WRONG GEAR SELECTION 5A–78
KEY CAN BE TURNED TO ”LOCK”IN ANY GEAR 5A–78
KEY CANNOT BE TURNED TO ”LOCK” WHILE IN PARK 5A–79
FLUID LEAKS 5A–79
FLUID FOAMING 5A–79
VIBRATION 5A–79
NOISE 5A–80
NO TCC/SLIPPING/SOFT APPLY 5A–81
NO TCC RELEASE 5A–82
TCC APPLY WITH COLD ENGINE 5A–82
TCC SHUDDER 5A–82

DIAGNOSTIC TROUBLE CODE DIAGNOSIS . 5A–83

DIAGNOSTIC TROUBLE CODE (DTC) IDENTIFICATION 5A–83
DTC TYPES 5A–85
DTC P0218 TRANSMISSION FLUID OVERTEMPERATURE 5A–86
DTC P0560 SYSTEM VOLTAGE MALFUNCTION 5A–88
DTC P0711 TRANSMISSION FLUID TEMPERATURE SENSOR CIRCUIT RANGE/PERFORMANCE 5A–90
DTC P0712 TRANSMISSION FLUID TEMPERATURE SENSOR CIRCUIT LOW INPUT 5A–93
DTC P0713 TRANSMISSION FLUID TEMPERATURE SENSOR CIRCUIT HIGH INPUT 5A–96
DTC P0716 AUTOMATIC TRANSMISSION INPUT SPEED SENSOR CIRCUIT RANGE/PERFORMANCE 5A–99
DTC P0717 AUTOMATIC TRANSMISSION INPUT SPEED SENSOR CIRCUIT NO SIGNAL 5A–102
DTC P0719 BRAKE SWITCH CIRCUIT LOW 5A–105
DTC P0722 AUTOMATIC TRANSMISSION VEHICLE SPEED SENSOR (A/T VSS) LOW INPUT 5A–107

DTC P0723 AUTOMATIC TRANSMISSION VEHICLE SPEED SENSOR (A/T VSS) INTERMITTENT 5A–110
DTC P0724 BRAKE SWITCH CIRCUIT HIGH 5A–112
DTC P0730 INCORRECT GEAR RATIO 5A–114
DTC P0741 TCC CIRCUIT STUCK OFF 5A–116
DTC P0742 TCC CIRCUIT STUCK ON 5A–119
DTC P0748 PC SOLENOID CIRCUIT ELECTRICAL 5A–123
DTC P0751 1–2 SHIFT SOLENOID PERFORMANCE 5A–126
DTC P0753 1–2 SHIFT SOLENOID ELECTRICAL 5A–130
DTC P0756 2–3 SHIFT SOLENOID PERFORMANCE 5A–133
DTC P0758 2–3 SHIFT SOLENOID ELECTRICAL 5A–137
DTC P1790 ROM CHECKSUM ERROR 5A–140
DTC P1792 EEPROM CHECKSUM ERROR 5A–141
DTC P1810 AUTOMATIC TRANSMISSION FLUID PRESSURE MANUAL VALVE POSITION SWITCH (TFP VAL. POSITION SW.) MALFUNCTION 5A–142
DTC P1811 MAXIMUM ADAPT AND LONG SHIFT 5A–147
DTC P1887 TCC RELEASE SWITCH CIRCUIT MALFUNCTION 5A–151
MAINTENANCE AND REPAIR 5A–154
ON–VEHICLE SERVICE 5A–154
TRANSAXLE FLUID LEVEL CHECKING PROCEDURE 5A–154
CHANGING THE FLUID 5A–155
REPAIRING FLUID LEAKS 5A–155
CASE POROSITY REPAIR 5A–156
FLUID LEVEL SET AFTER SERVICE 5A–157
OIL COOLER FLUSHING 5A–157
SHIFT CONTROL LEVER 5A–158
SHIFT CONTROL CABLE 5A–164
CONTROL CABLE ADJUSTMENT 5A–167
PARK/NEUTRAL POSITION SWITCH 5A–168
BRAKE TRANSAXLE SHIFT INTERLOCK .. 5A–169
KEY INTERLOCK 5A–170
AUTOMATIC TRANSMISSION VEHICLE SPEED SENSOR (A/T VSS) 5A–172
PAN, GASKET, AND FILTER 5A–173
REVERSE/LOW SERVO ASSEMBLY 5A–174
2ND/4TH SERVO ASSEMBLY 5A–175
CASE SIDE COVER PAN AND GASKETS .. 5A–176
1–2 SHIFT SOLENOID 5A–177
2–3 SHIFT SOLENOID 5A–178
PRESSURE CONTROL SOLENOID 5A–178
TCC SOLENOID 5A–179
DRIVE AXLE OIL SEAL 5A–180
OIL COOLER PIPES 5A–180
OIL COOLER HOSES AND PIPE 5A–181
TRANSAXLE MOUNT 5A–183
TRANSAXLE BRACKET 5A–185
TRANSAXLE ASSEMBLY 5A–187
TRANSAXLE BRACE 5A–193
UNIT REPAIR 5A–195
TORQUE CONVERTER REMOVAL 5A–195
TRANSAXLE HOLDING FIXTURE ASSEMBLY 5A–195
STUB SHAFT REMOVAL 5A–196
AUTOMATIC TRANSMISSION VEHICLE SPEED SENSOR REMOVAL 5A–196
OIL PAN AND GASKET REMOVAL 5A–197
OIL FILTER/SEAL, OIL LEVEL CONTROL VALVE REMOVAL 5A–197
OIL FEED PIPES REMOVAL 5A–197
INTER 4TH SERVO REMOVAL 5A–198
LOW/REVERSE SERVO REMOVAL 5A–198
CASE SIDE COVER REMOVAL 5A–198
OIL PUMP AND OIL PUMP SHAFT REMOVAL 5A–199
WIRE HARNESS DISCONNECT 5A–199
PRESSURE SWITCH ASSEMBLY REMOVAL 5A–199
CONTROL VALVE BODY ASSEMBLY AND GASKET REMOVAL 5A–200
SPACER PLATE AND GASKET REMOVAL . 5A–200
CHECKBALL REMOVAL 5A–200
MANUAL VALVE CLIP REMOVAL 5A–201
CHANNEL PLATE AND GASKET REMOVAL 5A–201
ACCUMULATOR SPRING REMOVAL 5A–201
OUTPUT SHAFT SLEEVE REMOVAL 5A–202
DRIVE, DRIVEN SPROCKETS, DRIVE LINK REMOVAL 5A–202
INPUT SPEED SENSOR REMOVAL 5A–202
WIRING HARNESS REMOVAL 5A–203
DRIVEN SPROCKET SUPPORT ASSEMBLY REMOVAL 5A–203
2ND CLUTCH PLATES REMOVAL 5A–203
REVERSE INPUT CLUTCH HOUSING REMOVAL 5A–204
INTERMEDIATE 4TH BAND REMOVAL 5A–204
DIRECT/COAST CLUTCH AND REACTION GEAR SET REMOVAL 5A–204

INPUT CARRIER AND REACTION GEAR ASSEMBLY REMOVAL 5A–205
INPUT INTERNAL GEAR, FORWARD CLUTCH HUB REMOVAL 5A–205
FORWARD CLUTCH AND LOW/REVERSE BAND REMOVAL 5A–205
FORWARD CLUTCH SUPPORT, LOW ROLLER CLUTCH REMOVAL 5A–206
OUTPUT SHAFT AND FINAL DRIVE ASSEMBLY REMOVAL 5A–207
FINAL DRIVE INTERNAL GEAR REMOVAL 5A–207
MANUAL SHAFT, DETENT LEVER, PARK LOCK REMOVAL 5A–207
TRANSAXLE COOLER LINE SEAL REMOVAL 5A–208
TORQUE CONVERTER SEAL REMOVAL . . 5A–208
DRIVE SPROCKET SUPPORT REMOVAL . 5A–208
RIGHT HAND AXLE SEAL REMOVAL 5A–209
CASE INSPECTION 5A–209
ACTUATOR GUIDE REPLACEMENT 5A–210
DRIVE SPROCKET SUPPORT INSTALLATION 5A–210
TORQUE CONVERTER SEAL INSTALLATION 5A–211
TRANSAXLE COOLER LINE SEALS INSTALLATION 5A–211
MANUAL SHAFT, DETENT LEVER, PARK LOCK INSTALLATION 5A–211
FINAL DRIVE ASSEMBLY DISASSEMBLE . 5A–212
FINAL DRIVE ASSEMBLY ASSEMBLE 5A–215
FINAL DRIVE PINION END PLAY CHECK . . 5A–216
FRETTING RING, FINAL DRIVE INTERNAL GEAR INSTALL 5A–217
FINAL DRIVE AND DIFFERENTIAL ASSEMBLY INSTALL 5A–217
FORWARD CLUTCH SUPPORT, ROLLER CLUTCH DISASSEMBLE 5A–217
FORWARD CLUTCH SUPPORT, LOW ROLLER CLUTCH ASSEMBLE 5A–219
FORWARD CLUTCH SUPPORT, LOW ROLLER CLUTCH INSTALL 5A–220
FORWARD CLUTCH DISASSEMBLE 5A–220
FORWARD CLUTCH ASSEMBLE 5A–222
FORWARD CLUTCH FUNCTIONAL AIR CHECK 5A–223
LOW/REVERSE BAND INSTALL 5A–224
FORWARD CLUTCH INSTALLATION 5A–224
INPUT INTERNAL GEAR, FORWARD CLUTCH HUB DISASSEMBLE 5A–225
INPUT INTERNAL GEAR, FORWARD CLUTCH HUB ASSEMBLE 5A–225
INPUT INTERNAL GEAR, FORWARD CLUTCH HUB INSTALL 5A–226
REACTION INTERNAL GEAR, INPUT CARRIER DISASSEMBLE 5A–226
INPUT CARRIER PINION GEAR CLEARANCE CHECK 5A–226
REACTION INTERNAL GEAR, INPUT CARRIER ASSEMBLE 5A–227
REACTION INTERNAL GEAR, INPUT CARRIER INSTALL 5A–227
DIRECT/COAST CLUTCH, REACTION CARRIER DISASSEMBLE . . . 5A–227
REACTION CARRIER PINION CLEARANCE CHECK 5A–232
DIRECT/COAST CLUTCH, REACTION CARRIER ASSEMBLE 5A–233
DIRECT AND COAST CLUTCH FUNCTIONAL AIR CHECKS 5A–237
DIRECT/COAST CLUTCH, REACTION CARRIER INSTALL 5A–238
SELECTIVE WASHER MEASUREMENT AND INSTALLATION 5A–239
REVERSE INPUT AND 2ND ROLLER CLUTCH DISASSEMBLE 5A–239
REVERSE INPUT AND 2ND ROLLER CLUTCH ASSEMBLE 5A–242
REVERSE CLUTCH FUNCTIONAL AIR CHECK 5A–243
REVERSE INPUT AND 2ND ROLLER CLUTCH INSTALL 5A–245
INTERMEDIATE 4TH BAND ASSEMBLY INSTALL 5A–245
2ND CLUTCH PLATE INSTALLATION 5A–246
DRIVEN SPROCKET ASSEMBLY DISASSEMBLE 5A–246
DRIVE SPROCKET SUPPORT ASSEMBLE 5A–249
2ND CLUTCH FUNCTIONAL AIR CHECK . . 5A–250
DRIVEN SPROCKET SUPPORT ASSEMBLY INSTALLATION 5A–250
WIRING HARNESS INSTALLATION 5A–251
INPUT SPEED SENSOR INSTALL 5A–251
DRIVE, DRIVEN SPROCKETS AND DRIVE LINK DISASSEMBLE 5A–251
DRIVE, DRIVEN SPROCKETS AND DRIVE LINK ASSEMBLE 5A–252
DRIVE, DRIVEN SPROCKETS AND DRIVE LINK INSTALL 5A–253
CHANNEL PLATE ASSEMBLY DISASSEMBLE 5A–254
CHANNEL PLATE ASSEMBLY ASSEMBLE 5A–254

ACCUMULATOR SPRINGS INSTALL 5A–255
CHANNEL PLATE ASSEMBLY INSTALLATION 5A–255
MANUAL VALVE INSTALL 5A–256
CHECKBALLS INSTALLATION 5A–256
SPACER PLATE AND GASKETS INSTALL . 5A–256
CONTROL VALVE BODY DISASSEMBLE .. 5A–258
CONTROL VALVE BODY ASSEMBLE 5A–262
CONTROL VALVE ASSEMBLY AND TFP SWITCH INSTALL 5A–266
WIRING HARNESS ASSEMBLY CONNECT 5A–267
OIL PUMP CLEAN AND INSPECT 5A–268
OIL PUMP ASSEMBLY INSTALLATION 5A–268
SIDE COVER/GASKETS, DISASSEMBLE, ASSEMBLE, INSTALL 5A–268
OUTPUT SHAFT SLEEVE ASSEMBLE 5A–270
OUTPUT SHAFT AND SLEEVE ASSEMBLY INSTALL 5A–271
SIDE COVER AXLE SEAL INSTALL 5A–270
STUB SHAFT SLEEVE ASSEMBLE AND INSTALL 5A–272
RIGHT HAND AXLE SEAL ASSEMBLE 5A–272
VEHICLE SPEED SENSOR INSTALLATION 5A–273
INTER 4TH SERVO DISASSEMBLE, ASSEMBLE, AND INSTALL 5A–273
LOW/REVERSE SERVO ASSEMBLY DISASSEMBLE 5A–275
LOW/REVERSE SERVO ASSEMBLY ASSEMBLE 5A–275
OIL FEED PIPES ASSEMBLE 5A–275
FILTER ASSEMBLY AND SEAL INSTALL .. 5A–276
OIL LEVEL CONTROL VALVE INSTALL 5A–277
OIL PAN AND GASKET INSTALL 5A–277
TORQUE CONVERTER INSTALLATION ... 5A–278

GENERAL DESCRIPTION AND SYSTEM OPERATION 5A–279

TRANSAXLE DEFINITIONS AND ABBREVIATIONS 5A–279
TRANSAXLE GENERAL DESCRIPTION ... 5A–280
TRANSAXLE COMPONENT AND SYSTEM DESCRIPTION 5A–280
RANGE REFERENCE CHART 5A–283
BTSI AND KEY INTERLOCK SYSTEM 5A–284
AUTOMATIC TRANSMISSION VEHICLE SPEED SENSOR (A/T VSS) 5A–284
AUTOMATIC TRANSMISSION INPUT (SHAFT) SPEED SENSOR (A/T ISS) 5A–284
SHIFT SOLENOIDS: 1–2 AND 2–3 ..... 5A–285
PRESSURE CONTROL SOLENOID VALVE (PC SOL. VALVE) 5A–285
TORQUE CONVERTER CLUTCH SOLENOID VALVE (TCC SOL. VALVE) ... 5A–286
AUTOMATIC TRANSMISSION FLUID PRESSURE MANUAL VALVE POSITION SWITCH (TFP VAL. POSITION SW.) 5A–287
TRANSMISSION FLUID TEMPERATURE (TFT) SENSOR 5A–288
TRANSMISSION ELECTRICAL CONNECTOR 5A–289
POWERTRAIN CONTROL MODULE (PCM) 5A–289
DATA LINK CONNECTOR (DLC) 5A–290
PCM INPUTS THAT AFFECT THE 4T40–E TRANSMISSION 5A–290
PARK (ENGINE RUNNING) 5A–291
REVERSE 5A–293
NEUTRAL (ENGINE RUNNING) 5A–295
OVERDRIVE RANGE – FIRST GEAR 5A–297
OVERDRIVE RANGE – SECOND GEAR ... 5A–299
OVERDRIVE RANGE – THIRD GEAR 5A–301
OVERDRIVE RANGE – FOURTH GEAR ... 5A–303
OVERDRIVE RANGE – 4–3 DOWNSHIFT .. 5A–305
MANUAL THIRD – THIRD GEAR 5A–307
MANUAL SECOND – SECOND GEAR 5A–309
MANUAL FIRST – FIRST GEAR 5A–311

SPECIFICATIONS

END PLAY SPECIFICATIONS

Dimension A (mm)	Washer Selection	Washer Dimension
100.40–100.70	Brown	1.50–1.60
100.70–100.99	Grey	1.80–1.90
100.99–101.29	Natural	2.09–2.19
101.29–101.59	Black	2.39–2.49
101.59–101.88	Orange	2.68–2.78
101.88–102.18	Violet	2.98–3.08
102.18–102.48	Yellow	3.28–3.38
102.48–102.77	Red	3.57–3.67
102.77–103.07	Green	3.87–3.97

TRANSAXLE GENERAL SPECIFICATIONS

Dimension A (mm)	Backing Plate Identification
8.970–9.433	A
9.434–10.007	B
10.008–10.470	C

FLUID CAPACITY

	Litres	Quarts
Bottom Pan Removal	6.5	6.9
Complete Overhaul	9.0	9.5
Dry	12.2	12.9
(Measurements are approximate)		

RANGE REFERENCE

Range	Park/ Neutral	Reverse	D				3			2			1	
Gear	**N**	**R**	**1st**	**2nd**	**3rd**	**4th**	**1st**	**2nd**	**3rd**	**1st**	**2nd**	**3rd****	**1st**	**2nd*****
1–2 Shift Solenoid	ON	ON	ON	OFF	OFF	ON	ON	OFF	OFF	ON	OFF	OFF	ON	OFF
1–2 Shift Solenoid	OFF	OFF	OFF	OFF	ON	ON	OFF	OFF	ON	OFF	OFF	ON	OFF	OFF
2nd Clutch	–	–	–	A	A*	A*	–	A	A*	–	A	A*	–	A
2nd Roller Clutch	–	–	–	H	O	–	–	H	O	–	H	O	–	H
Int./4th Band	–	–	–	–	–	A	–	–	–	–	A	–	–	A
Reverse Clutch	–	A	–	–	–	–	–	–	–	–	–	–	–	–
Coast Clutch	–	–	–	–	–	–	A	A	A	A	A	A	A	A
Input Sprag	–	–	H	H	H	O	H	H	H	H	H	H	H	H
Direct Clutch	–	–	–	–	A	A	–	–	A	–	–	A	–	–
Forward Clutch	–	–	A	A	A	A*	A	A	A	A	A	A	A	A
LO/Rev Band	A	A	–	–	–	–	–	–	–	–	–	–	A	–
LO Roller Clutch	–	–	H	O	O	O	H	O	O	H	O	O	H	O

A = Applied

H = Holding

O = Overrunnig

ON = The solenoid is energized.

OFF = The solenoid is de–energized.

* = Applied with no load.

** = Manual Second–Third gear is only available above approximately 100 km/h (62 mph).

*** = Manual First–Second gear is only available above approximately 60 km/h (37 mph).

NOTE: Manual First–Third gear is also possible at high vehicle speed as a safety feature.

4T40–E GEAR RATIOS

Gear	Ratio
First	2.96
Second	1.62
Third	1.00
Fourth	0.68
Reverse	2.14

SHIFT SPEED

% of TPS		1–2 Shift @ +/– 3 mph			2–3 Shift @ +/– 4 mph			3–4 Shift @ +/– 5 mph			Downshift @ +/– 4 mph			TCC Apply 4th Gear
Model	Series	10	25	50	10	25	50	10	25	50	4–3 Coast	3–2 Coast	2–1 Coast	
WKR	J	9	14.5	20	17	25	39.5	30	36	57	26	11.5	6	42
WBR	J	9	15	27	17	28	51	38	40	78	30	13	7	38

LINE PRESSURE

Pressure Control Solenoid Current (Amp)	Approximate Line Pressure (psi)
0.00	152–160
0.10	149–151
0.30	141–143
0.50	124–127
0.60	111–115
0.70	97–101
0.80	81–84
0.90	64–67
0.95	56–58
1.00	50–51
1.05	50
1.10	50

FASTENER TIGHTENING SPECIFICATIONS

Application	N•m	Lb–Ft	Lb–In
A/T VSS Stud	12	–	106
Bell Housing Bolts	75	55	–
Channel Plate–to–Case Bolt	12	9	–
Channel Plate–to–Case Valve Body Bolts	12	–	106
Channel Plate–to–Case Valve Body Pressure Switch Manual Bolts	12	–	106
Channel Plate–to–Case Valve Body Pump Bolts	12	–	106
Channel Plate–to–Support–Driven Sprocket Bolt	14	10.5	–
Channel Plate–to–Support–Driven Sprocket Spacer Bolts	14	10.5	–

Application	N•m	Lb–Ft	Lb–In
Channel Plate Valve Body Pressure Switch Manual Bolts	12	–	106
Detent–to–Channel Plate Spring & Roller Assembly	12	–	106
Drive Sprocket–to–Case Support Assembly Bolts	12	9	–
Engine Mounting Bolts	75	55	–
Flex Plate–to–Torque Converter Attachment Bolts	62	46	–
Floor Bracket Bolt	8	–	71
Fluid Level Plug	12	–	106
Flywheel Bolts	65	48	–
Frame Bolts	75	55	–
Input Speed Sensor Bolt	12	–	106
Key Interlock Solenoid Screws	2	–	18
Oil Cooler Pipe Bolt	22	16	–
Oil Cooler Pipe Bracket Bolt	25	18	–
Oil Pipe Bolts	12	9	–
Pivot Bolt	58	43	–
Relay Box Securing Nuts	8	–	71
Servo Cover Bolts	12	–	106
Shift Control Assembly Bolts		–	–
Shift Control Cable Adjuster Pinch Bolt Nut	8	–	71
Shift Control Cable Attachment Nut	6	–	53
Shift Control Cable Mounting Bracket Nuts	6	–	53
Shift Control Lever Bolt		–	–
Shift Interlock Solenoid Bolts	–	–	–
Side Cover Bolts	20	15	–
Side–to–Case (Stud) Cover	20	15	–
Speed Sensor Stud	12	9	–
Transaxle Brace Mounting Bolts	75	55	–
Transaxle Mount Bolts	81	60	–
Transaxle Mount Upper Attachment Nut	169	125	–
Transaxle Mounting Bracket Bolt	61	45	–
Transaxle Pan Bolts	12	–	106
Trans Oil–to–Cover LO/Reverse Servo Tube Assembly	12	–	106
Trans Oil–to–Support Forward Clutch Tube Assembly	12	–	106
Valve Body–to–Channel Plate Bolts	12	–	106
Valve Body–to–Channel Plate Pump Bolts	12	–	106
Wiring Harness Retainer Bolt	12	9	–

SPECIAL TOOLS

SPECIAL TOOLS TABLE

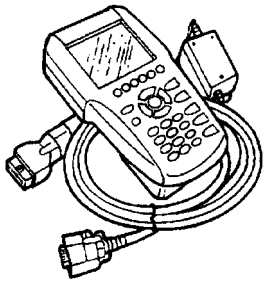 A410B026	Scan Tool	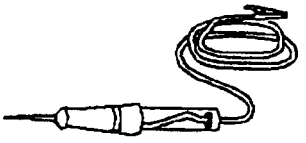 A103A266	J 34142–B Universal Test Lamp
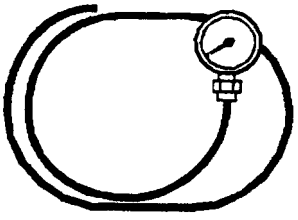 A103A263	J 21867 Universal Pressure Gauge Set	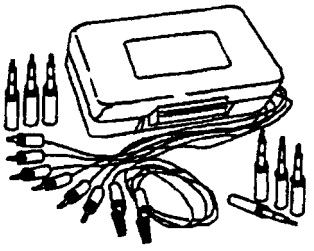 A103A267	J 35616 Connector Test Adapter Kit
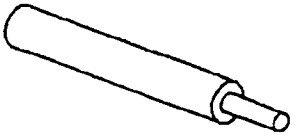 A103A264	J 28742–A Weather Pack Terminal Remover	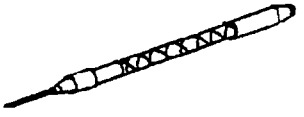 A103A268	J 35689–A Metri–pack Terminal Remover
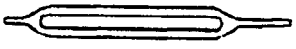 A103A265	J 33095 Control Module Connector Terminal Remover	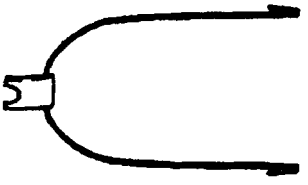 A103A269	J 36169–A Fused Jumper Wire

A103A270	J 38125–4 Terminal Repair Kit
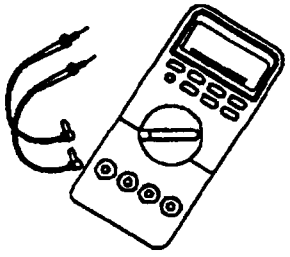 A103A271	J 39200 Digital Volt–Ohmmeter (DVOM)
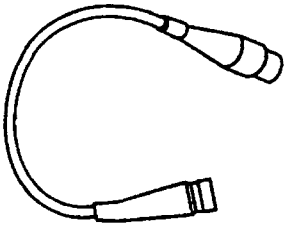 A103A272	J 39775 Jumper Harness
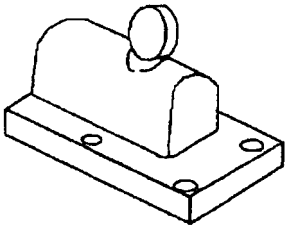 A103A273	J 3289–20 Transmission Holding Fixture Base
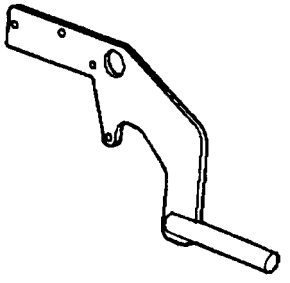 A103A274	J 41230 Transmission Holding Fixture

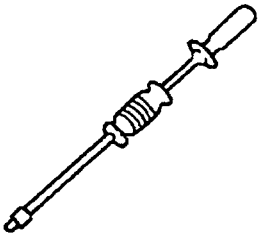 A103A275	J 6125–1B Slide Hammer
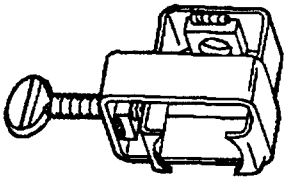 A103A276	J 38868 Stub Shaft Sleeve Remover
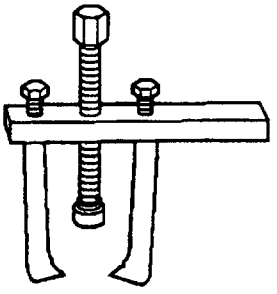 A103A277	J 41227 Output Shaft Sleeve Remover
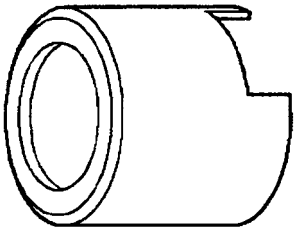 A103A278	J 41101 Pass Through Connector Remover
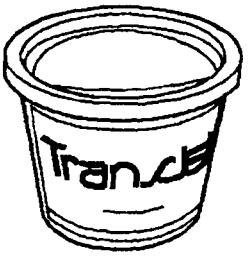 A103A279	J 36850 Assembly Lubricant

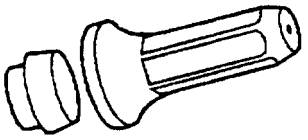 A103A280	J 41102 Axle Seal Installer
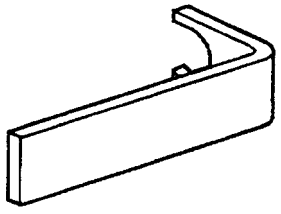 A103A281	J 41239–2 Cooler Line Seal Remover
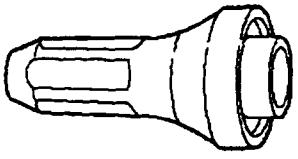 A103A282	J 28540–A Torque Converter Seal Installer
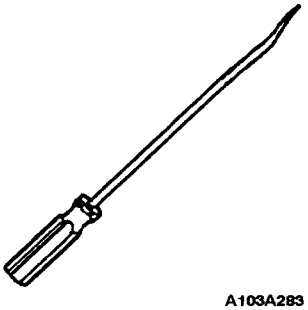 A103A283	J 28585 Snap Ring Screwdriver
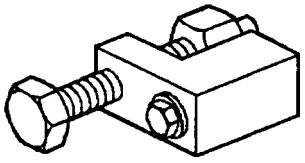 A103A284	J 41239–1 Cooler Line Seal Installer

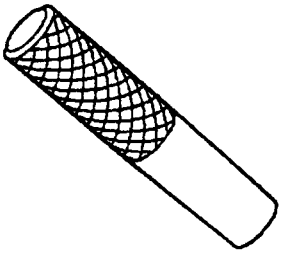 A103A285	J 41229 Manual Shaft to Case Pin
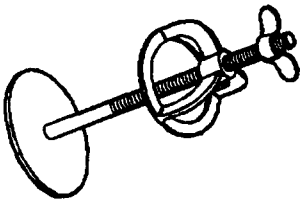 A103A286	J 23327 Clutch Spring Compressor
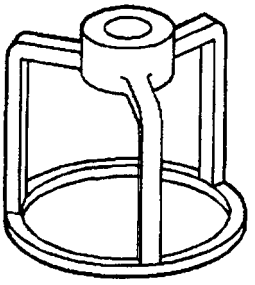 A103A287	J 41236 Coast Clutch Return Spring Compressor Adapter
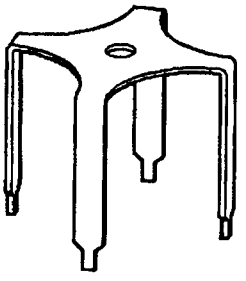 A103A288	J 41232 Direct Reverse, Second Clutch Return Spring Compressor Adapter
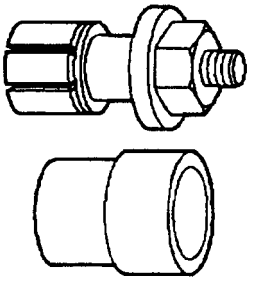 A103A289	J 41228 Stub Shaft Sleeve Installer

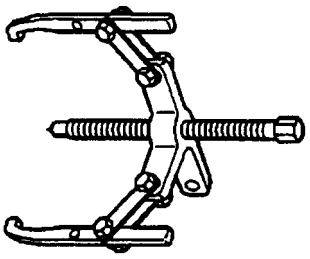 A103A290	J 25031–A Forward and Reverse Clutch Inner Seal Assembly Remover
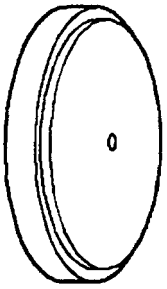 A103A291	J 41097–2 Inner Seal Assembly Remover – Disc
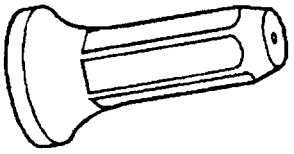 A103A292	J 41231 Forward Clutch Inner Seal Assembly Installer
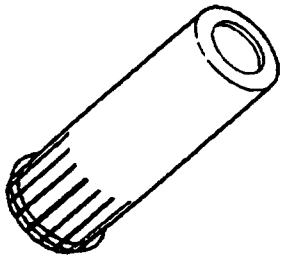 A103A293	J 41234–1 Input Shaft Seal Installer Pusher
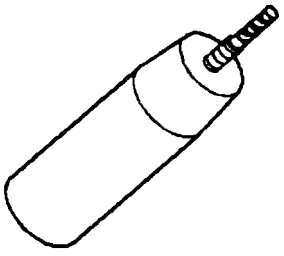 A103A294	J 41234–2 Input Shaft Seal Installer Protector

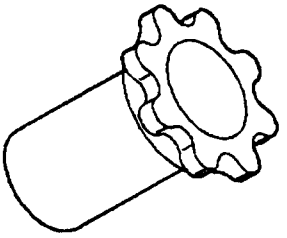 A103A295	J 41234–3 Input Shaft Seal Installer Sizer
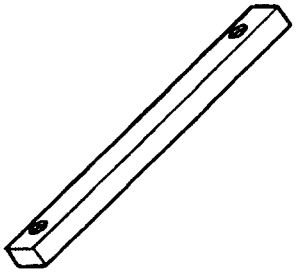 A103A296	J 34673 Input Shaft End Play Gauge Block
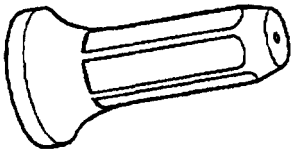 A103A297	J 41233 Reverse Clutch Inner Seal Installer
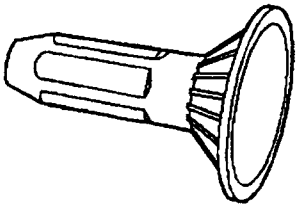 A103A298	J 41235 Second Roller Clutch Installer
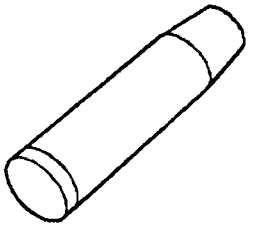 A103A299	J 29569–1/J 29829–1 Turbine Shaft Seal Installer

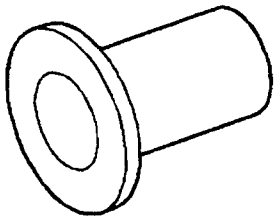 A103A300	J 29569–2/J 29829–2 Turbine Shaft Seal Sizer
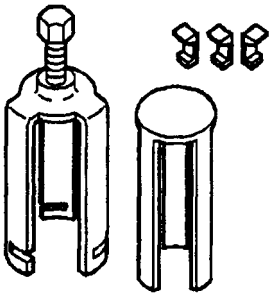 A103A302	J 41103 Torque Converter Seal Remover Set
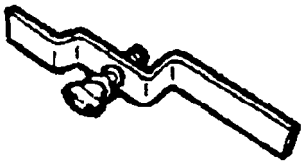 A103A301	J 21366 Torque Converter Holding Strap
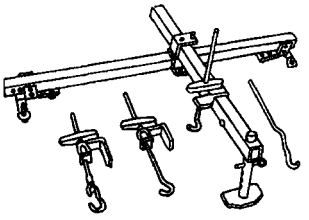 A102B152	J 28467–B Engine Support Fixture

SCHEMATIC AND ROUTING DIAGRAMS

POWERTRAIN CONTROL MODULE (1 OF 3)

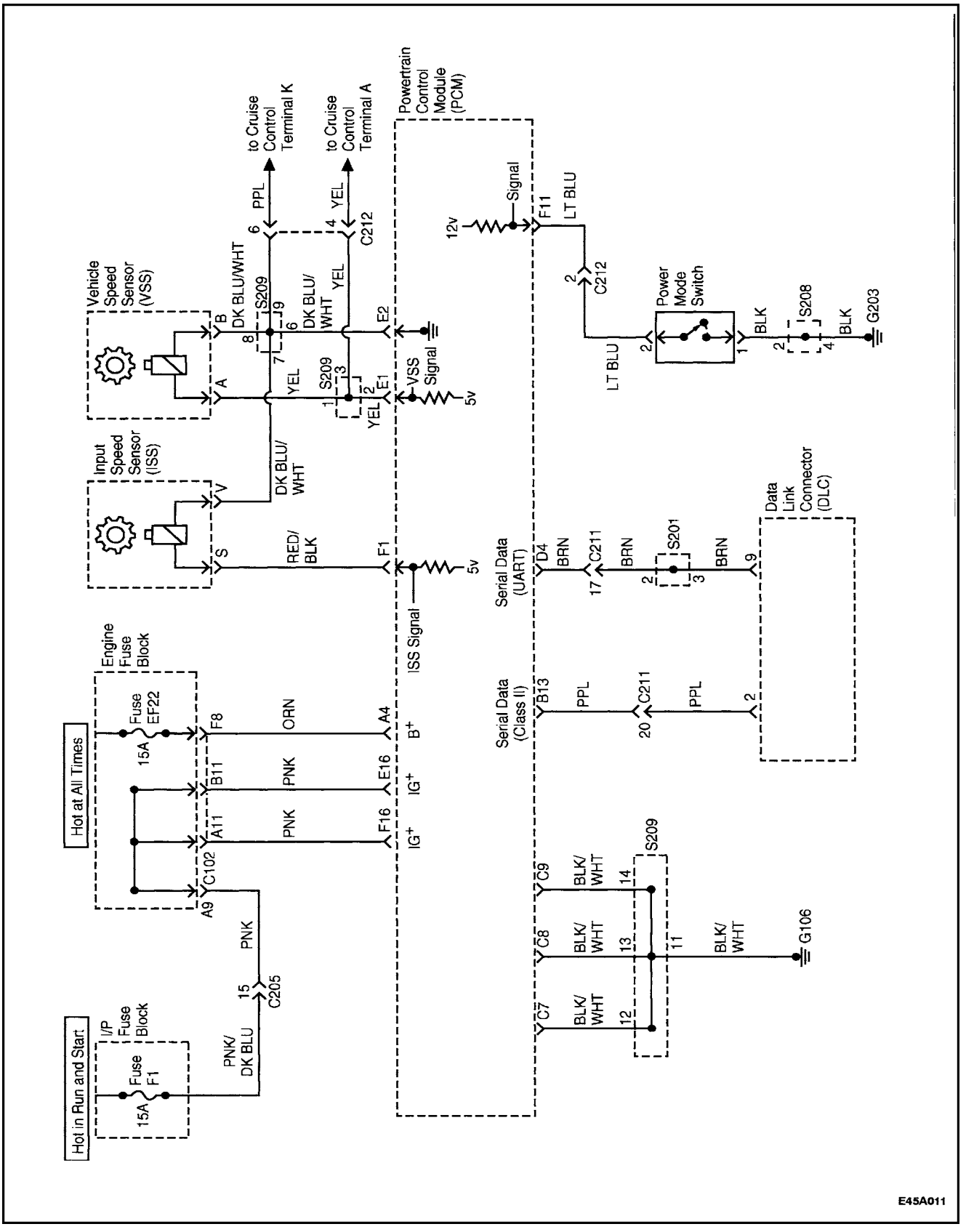

POWERTRAIN CONTROL MODULE (2 OF 3)

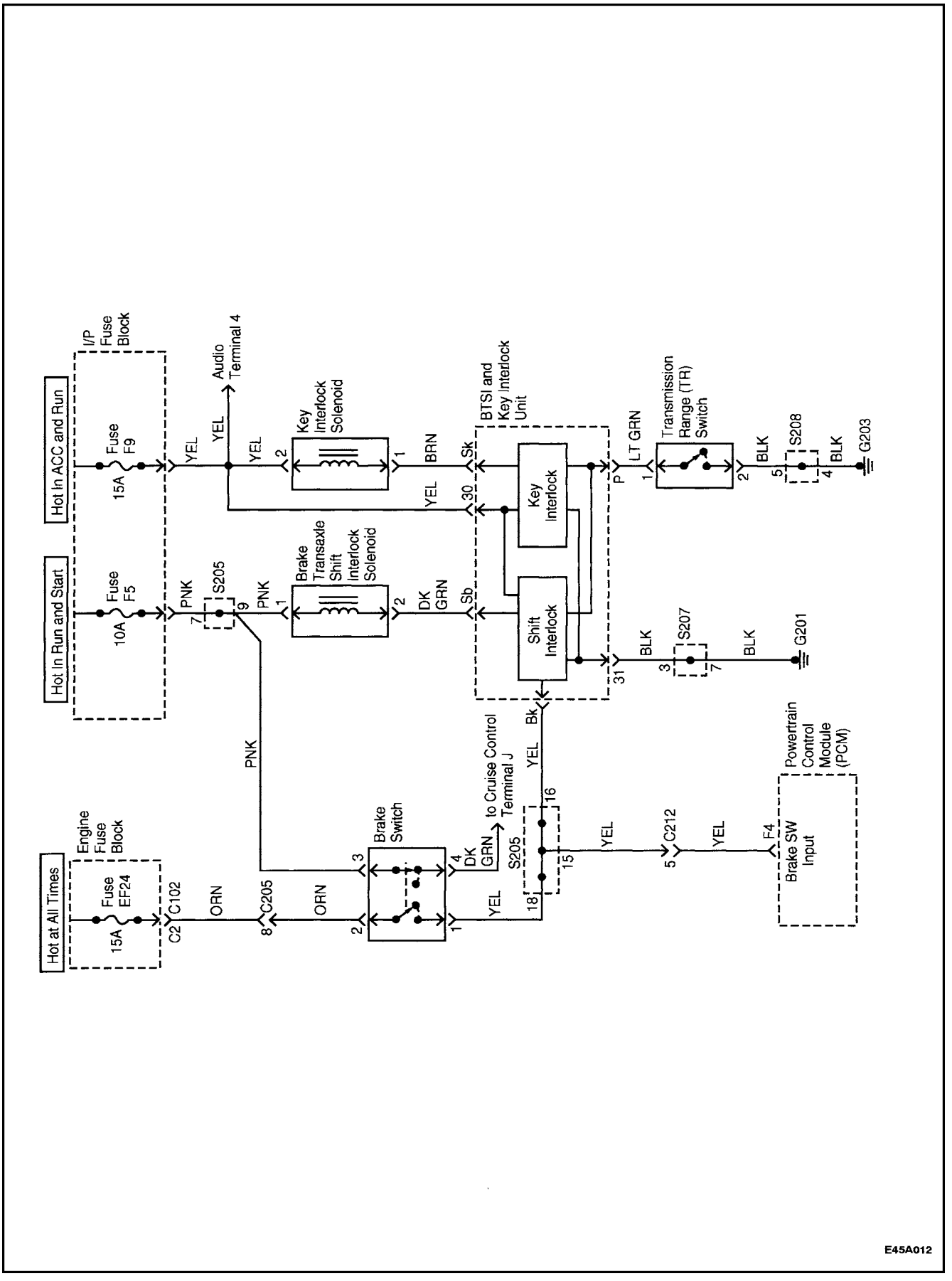

POWERTRAIN CONTROL MODULE (3 OF 3)

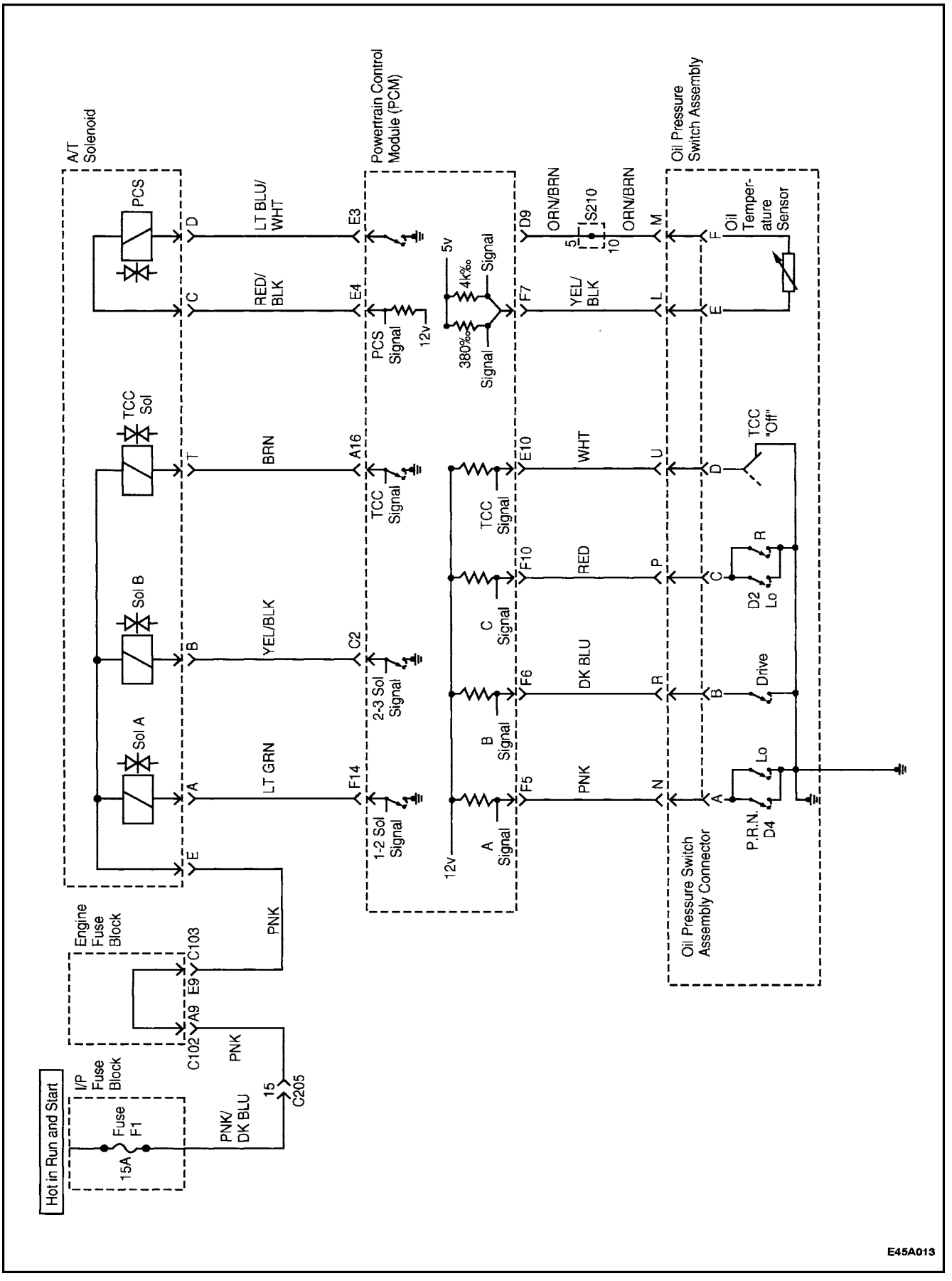

VISUAL IDENTIFICATION

TRANSAXLE IDENTIFICATION INFORMATION

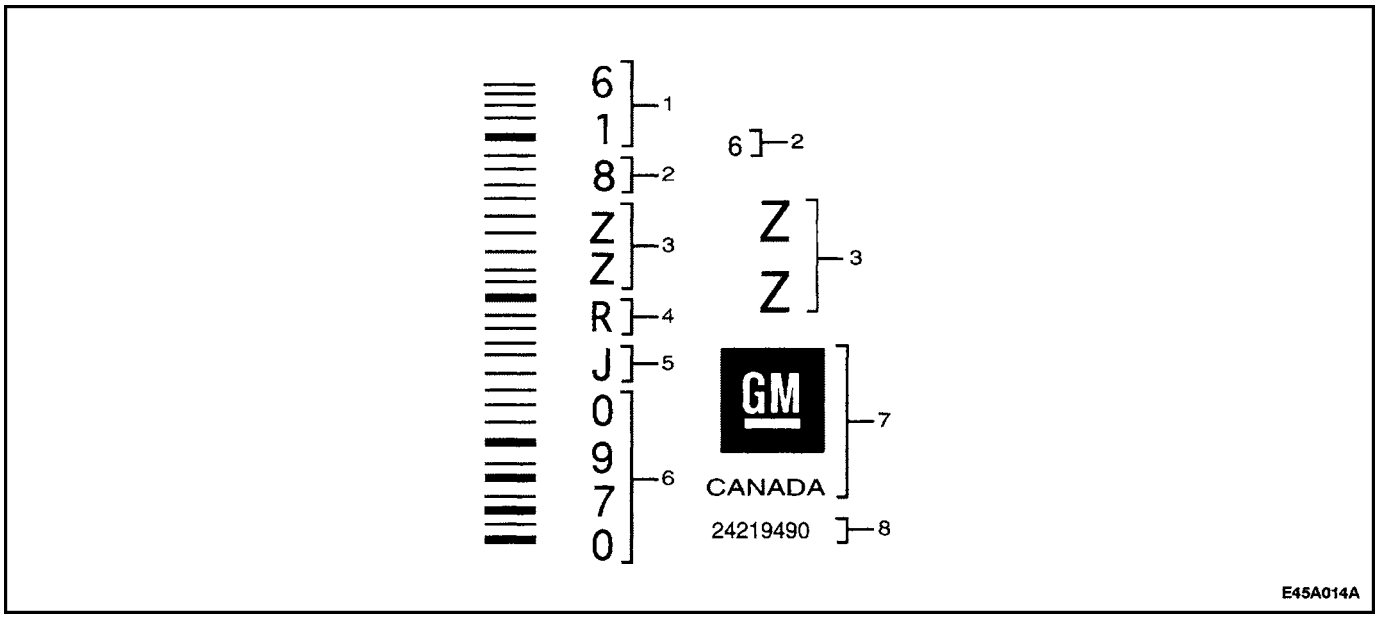

1. Assembly Plant (Windsor, Canada)
2. Model Year (1996)
3. Broadcast Code
4. Model Name (4T40E)
5. Update Level
6. Sequential Number
7. Manufacturer
8. Part Number

SECTION : 5B

FIVE–SPEED MANUAL TRANSAXLE

CAUTION : Disconnect the negative battery cable before removing or installing any electrical unit or when a tool or equipment could easily come in contact with exposed electrical terminals. Disconnecting this cable will help prevent personal injury and damage to the vehicle. The ignition must also be in LOCK unless otherwise noted.

TABLE OF CONTENTS

SPECIFICATIONS 5B–2
FASTENER TIGHTENING SPECIFICATIONS 5B–2
SPECIAL TOOLS 5B–3
SPECIAL TOOLS TABLE 5B–3
DIAGNOSIS 5B–5
ISOLATE NOISE 5B–5
SYMPTOM DIAGNOSIS 5B–6
COMPONENT LOCATORS 5B–9
GEARS AND CASE 5B–9
DIFFERENTIAL AND CASE 5B–11
SHIFT LINKAGE 5B–12
MAINTENANCE AND REPAIR 5B–15
ON–VEHICLE SERVICE 5B–15
CHECKING FLUID LEVEL 5B–15
SHIFT LINKAGE ADJUSTMENT 5B–15
GEARSHIFT LEVER 5B–17
GEARSHIFT TUBE, BOOT, BUSHING AND/OR BEARING RING 5B–18
CONTROL SHIFT ROD 5B–23
LINKAGE LEVER AND/OR BUSHINGS 5B–24
SPEEDOMETER DRIVEN GEAR 5B–30
SHIFT LEVER COVER 5B–32
DRIVE AXLE SEAL 5B–34
TRANSAXLE ASSEMBLY 5B–34
UNIT REPAIR 5B–42
MAJOR COMPONENT DISASSEMBLY 5B–42
INPUT SHAFT AND CLUSTER GEAR 5B–53
MAINSHAFT 5B–56
HOUSING CASE 5B–71
DIFFERENTIAL 5B–74
MAJOR COMPONENT ASSEMBLY 5B–82
GENERAL DESCRIPTION AND SYSTEM OPERATION 5B–91
FIVE–SPEED MANUAL TRANSAXLE 5B–91

SPECIFICATIONS

FASTENER TIGHTENING SPECIFICATIONS

Application	N•m	Lb–Ft	Lb–In
Backup Lamp Switch	18	13	
Bearing Plate Bolts	22	16	
Bearing Retainer Bolts, Right Side	25	18	
Bearing–Adjusting Ring–Retainer Plate Bolt	25	18	
Center Rear Transaxle Support Bracket Bolts	93	69	
Clutch–Release Cylinder Bracket Bolts	75	55	
Differential Cover Bolts	40	30	
Fifth–Gear Fork Bolts	22	16	
Fifth–Gearshift Connector Bolts	7		62
Gearshift Lever Cover Bolts	22	16	
Input Driveshaft Detent Screw	15	11	
Left Front Transaxle Support Bracket Bolts	47	35	
Left Rear Transaxle Support Bracket Bolts	47	35	
Lower Transaxle–to–Engine Bolts	75	55	
Ring–Gear Bolts	70	52	
Rod Clamp Bolt	14		124
Speedometer Housing Retaining Bolt	4		35
Speedometer–Driven Gear Bolt	5		44
Support Bracket Bolt	7		62
Transaxle Cover Bolts, Bigger	20	15	
Transaxle Cover Bolts, Smaller	15	11	
Upper Transaxle–to–Engine Bolts	75	55	

SPECIAL TOOLS

SPECIAL TOOLS TABLE

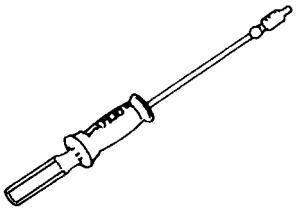 A103B110	J–6125–B Slide Hammer	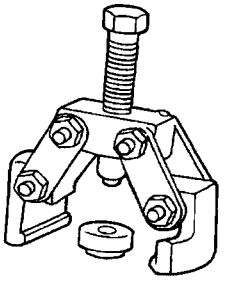 A103B163	KM–553–A Fifth–Gear Puller
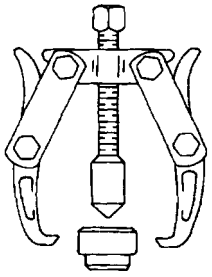 A103B003	J–22888–20–A Bearing Puller with J–22888–35 Puller Legs	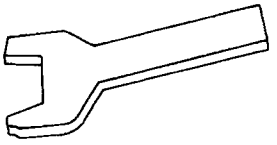 A103B028	J–36633 Snap Ring Retainer
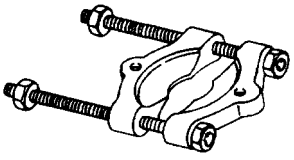 A103B112	J–22912–01 Universal Bearing Puller	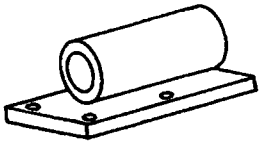 A103B002	KM–113–2 Base
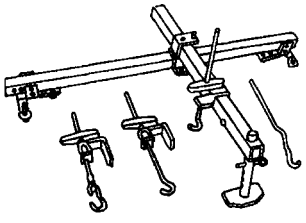 A102B152	J–28467–B Engine Support Fixture	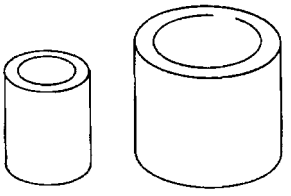 A103B025	KM–334 Installer Sleeve

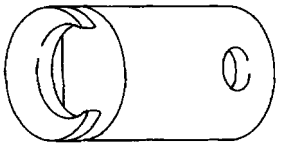 A103B013	J–42469 Shift Rod Remover
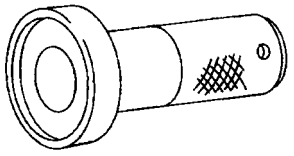 A103B007	KM–519 Ring Installer
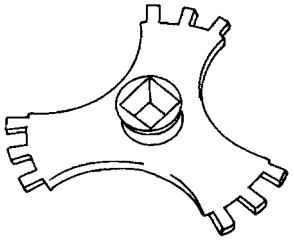 A103B008	KM–520 Remover/Installer
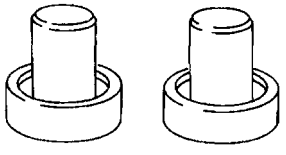 A103B009	KM–522 Installer

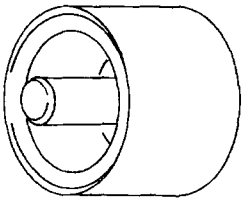 A103B017	KM–525 Installer
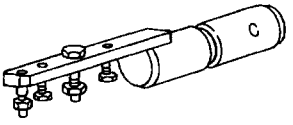 A103B019	KM–552 Fixture
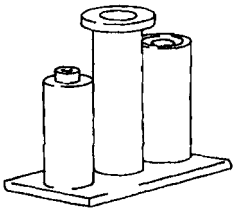 A103B021	KM–554 Installer

DIAGNOSIS

ISOLATE NOISE

Identify the cause of any noise before attempting to repair the clutch, the transaxle, or their related linkages.

Symptoms of trouble with the clutch or the manual transaxle include:

- A great effort required to shift gears.
- The sound of gears clashing and grinding.
- Gear blockout.

Any of these conditions requires a careful analysis. Make the following checks before disassembling the clutch or the transaxle for repairs.

Road Travel Noise

Many noises that appear to come from the transaxle may actually originate with other sources such as the:

- Tires.
- Road surfaces.
- Wheel bearings.
- Engine.
- Exhaust system.

These noises may vary according to the:

- Size of the vehicle.
- Type of the vehicle.
- Amount of insulation used in the body of the vehicle.

Transaxle Noise

Transaxle gears, like any mechanical device, are not absolutely quiet and will make some noise during normal operation.

To verify suspected transaxle noises:

1. Select a smooth, level asphalt road to reduce tire and resonant body noise.
2. Drive the vehicle far enough to warm up all the lubricants thoroughly.
3. Record the speed and the gear range of the transaxle when the noise occurs.
4. Check for noises with the vehicle stopped, but with the engine running.
5. Determine if the noise occurs while the vehicle operates in:

    - Drive – under a light acceleration or a heavy pull.
    - Float – maintaining a constant speed with a light throttle on a level road.
    - Coast – with the transaxle in gear and the throttle partly or fully closed.
    - All of the above.

Bearing Noise

Differential Side Bearing Noise

Differential side bearing noise and wheel bearing noise can be confused easily. Since side bearings are preloaded, a differential side bearing noise should not diminish much when the differential/transaxle is run with the wheels off the ground.

Wheel Bearing Noise

Wheel bearings produce a rough growl or grating sound that will continue when the vehicle is coasting and the transaxle is in NEUTRAL. Since wheel bearings are not pre–loaded, a wheel bearing noise should diminish considerably when the wheels are off the ground.

Other Noise

Brinelling

A brinelled bearing causes a ”knock” or ”click” approximately every second revolution of the wheel because the bearing rollers do not travel at the same speed as the wheel. In operation, the effect is characterized by a low–pitched noise.

A brinelled bearing is caused by excessive thrust which pushes the balls up on the pathway and creates a triangular– shaped spot in the bearing race. A brinelled bearing can also be caused from pressing one race into position by applying pressure on the other race.

A false indication of a brinelled bearing occurs as a result of vibration near the area where the bearing is mounted. Brinelling is identified by slight indentations, resulting in a washboard effect in the bearing race.

Lapping

Lapped bearing noise occurs when fine particles of abrasive materials such as scale, sand, or emery circulate through the oil in the vehicle, causing the surfaces of the roller and the race to wear away. Bearings that wear loose but remain smooth, without spalling or pitting, are the result of dirty oil.

Locking

Large particles of foreign material wedged between the roller and the race usually causes one of the races to turn, creating noise from a locked bearing. Pre–loading regular taper roller bearings to a value higher than that specified also can result in locked bearings

Pitting

Pitting on the rolling surface comes from normal wear and the introduction of foreign materials.

Spalling

Spalled bearings have flaked or pitted rollers or races caused by an overload or an incorrect assembly that results in a misalignment, a cocking of bearings, or adjustments that are too tight.

After completing these checks, refer to the ”Diagnosis Chart” in this section.

SYMPTOM DIAGNOSIS

Checks	Action
Check for a knock at low speeds.	• Replace any worn drive axle CV joints. • Replace any worn side gear hub.
Check for a noise most pronounced on turns.	• Correct any abnormalities in the differential gear.
Check for a clunk upon acceleration or deceleration.	• Tighten any loose engine mounts. • Replace any worn drive axle inboard joints. • Replace any worn differential pinion shaft in the case. • Replace any worn side gear hub in the case.
Check for a clunking noise in turns.	• Replace any worn outboard CV joint.
Check for a vibration.	• Replace any rough wheel bearing. • Replace any bent drive axle shaft. • Replace any out–of–round tires. • Balance any unbalanced tire. • Replace any worn CV joint in the drive axle shaft. • Correct an excessive drive axle angle by adjusting the trim height.
Check for a noise in the NEUTRAL gear with the engine running.	• Replace any worn cluster bearing shaft. • Replace any worn clutch–release bearing. • Replace any worn input shaft cluster gears. • Replace any worn first–gear/bearing. • Replace any worn second–gear/bearing. • Replace any worn third–gear/bearing. • Replace any worn fourth–gear/bearing. • Replace any worn fifth–gear/bearing. • Replace any worn mainshaft bearings.
Check for a noise in the first gear (1) only.	• Replace any chipped, scored, or worn first–gear constant mesh gears. • Replace any worn first–second gear synchronizer. • Replace any worn first–gear/bearing. • Replace any worn differential–gear/bearing. • Replace any worn–ring gear. • Adjust, repair, or replace the shift lever and the rods.
Check for a noise in the second gear (2) only.	• Replace any chipped, scored, or worn second–gear constant mesh gears. • Replace any worn first–second gear synchronizer. • Replace any worn second–gear/bearing. • Replace any worn differential–gear/bearing. • Replace any worn–ring gear. • Adjust, repair, or replace the shift lever and the rods.
Check for a noise in the third gear (3) only.	• Replace any chipped, scored, or worn third–gear constant mesh gears. • Replace any worn third–fourth gear synchronizer. • Replace any worn third–gear/bearing. • Replace any worn differential–gear/bearing. • Replace any worn–ring gear. • Adjust, repair, or replace the shift lever and the rods.

Checks	Action
Check for a noise in the fourth gear (4) only.	• Replace any chipped, scored, or worn fourth gear or output gear. • Replace any worn third–fourth gear synchronizer. • Replace any worn fourth–gear/bearing. • Replace any worn differential–gear/bearing. • Replace any worn–ring gear. • Adjust, repair, or replace the shift lever and the rods.
Check for a noise in the fifth gear (5) only.	• Replace any chipped, scored, or worn fifth gear or output gear. • Repair any worn fifth–gear synchronizer. • Replace any worn fifth–gear/bearing. • Replace any worn differential–gear/bearing. • Replace any worn–ring gear. • Adjust, repair, or replace the shift lever and the rods.
Check for a noise in the reverse (R) gear only.	• Replace any chipped, scored, or worn reverse idler gear, idler–gear bushing, input gear, or output gear. • Replace any worn first–second gear synchronizer. • Replace any worn output gear. • Replace any worn differential–gear/bearing. • Replace any worn–ring gear.
Check for a noise in all gears.	• Add sufficient lubricant. • Replace any worn bearings. • Replace any chipped, scored, or worn input–gear shaft or output–gear shaft.
Check for the transaxle slipping out of gear.	• Adjust or replace the linkage, as needed. • Adjust, repair, or replace any binding shift linkage. • Tighten or replace the input–gear bearing retainer, as needed. • Repair or replace any worn or bent shift fork.
Check for a leak in the area of the clutch.	• Repair the transaxle casing. • Replace any damaged release bearing guide.
Check for a leak at the center of the transaxle.	• Repair the transaxle casing. • Repair the shift mechanism. • Replace the damaged backup lamp switch.
Check for a leak at the differential.	• Adjust or replace the bearing retainers. • Tighten or replace the differential cover. • Adjust or replace the drive axle shaft seals.
Check for a hard shift.	• Replace any damaged release–bearing guide. • Adjust, repair, or replace the shift mechanism. • Adjust, repair, or replace the clutch–release system. • Replace any chipped, scored, or worn fifth–gear synchronizer. • Replace any chipped, scored, or worn first–second gear synchronizer. • Replace any worn third–fourth gear synchronizer. • Adjust, repair, or replace the shift lever and the rods.

Checks	Action
Check for a clashing of gears.	• Replace any damaged release–bearing guide. • Adjust, repair, or replace the clutch–release system. • Replace the chipped, scored, or worn input shaft/ gear–cluster gears. • Replace any worn fifth–gear synchronizer. • Replace any worn fifth–gear/bearing. • Replace any worn first–gear/bearing. • Replace any worn first–second gear synchronizer. • Replace any worn second–gear/bearing. • Replace any worn third–gear/bearing. • Replace any worn third–fourth synchronizer. • Replace any worn fourth–gear/bearing. • Replace any worn reverse–idler gear.

COMPONENT LOCATORS

GEARS AND CASE

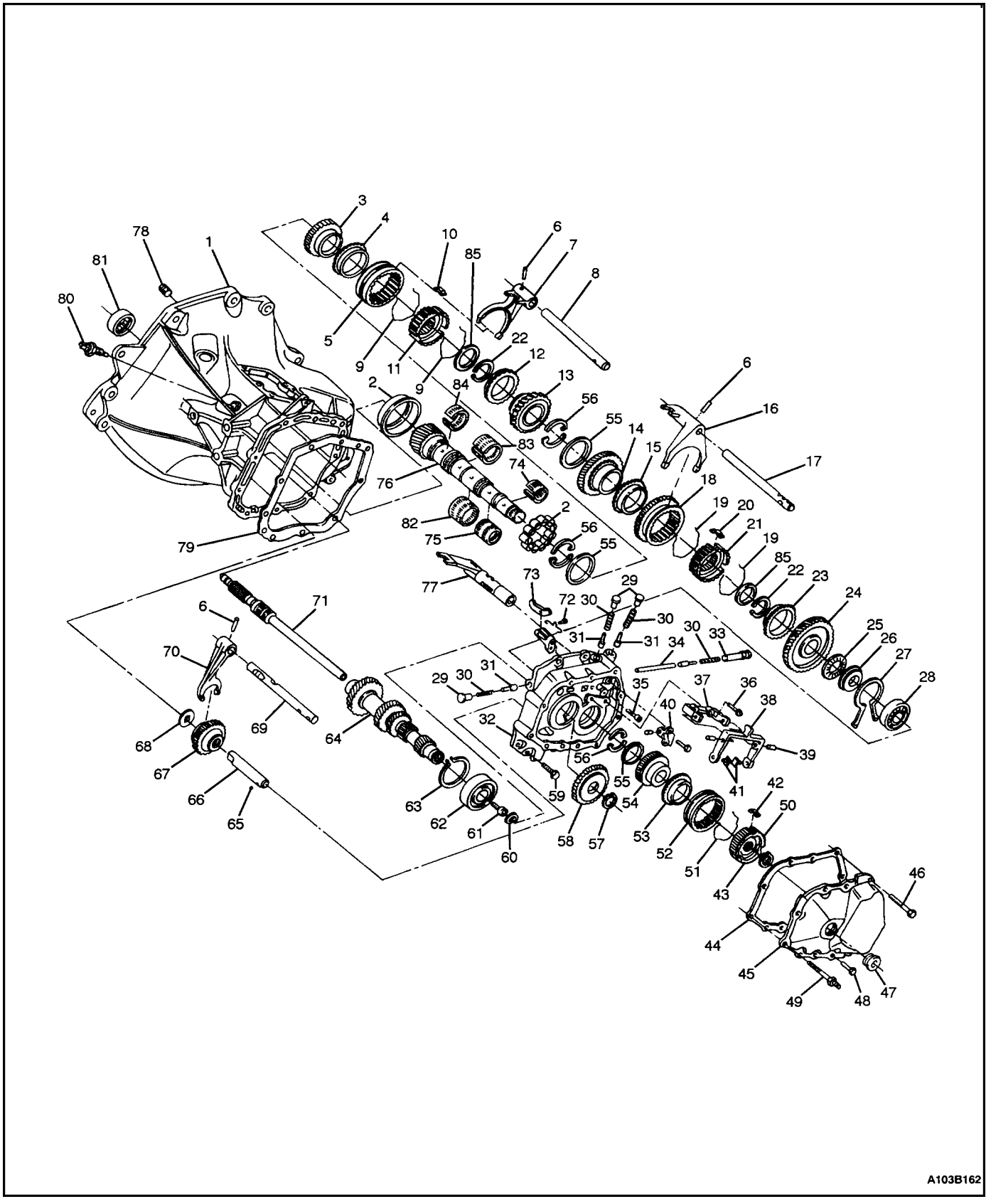

1. Case
2. Mainshaft Bearing
3. Fourth Gear
4. Synchronizer Blocking Ring
5. Synchronizer Sleeve
6. Pin
7. Third–Fourth Gearshift Fork
8. Third–Fourth Gearshift Shaft
9. Spring
10. Key
11. Third–Fourth Synchronizer Gear
12. Synchronizer Blocking Ring
13. Third Gear
14. Second Gear
15. First–Second Gear Blocking Ring
16. First–Second Gearshift Fork
17. First–Second Gearshift Shaft
18. Synchronizer Hub Sleeve
19. Synchronizer Spring
20. Key
21. First–Second Synchronizer Gear
22. Snap Ring
23. Outer Blocking Ring
24. First Gear
25. First Gear Needle Bearing
26. Mainshaft Wear Plate
27. Snap Ring
28. Mainshaft Bearing
29. Shift Rod Plug (21.5 mm)
30. Spring
31. Shift Rod Lock Pin
32. Bearing Plate
33. Shift Rod Plug (50.4 mm)
34. Detent Rod Bolt
35. Bolt
36. Bolt
37. Support
38. Fifth Gearshift Fork
39. Pin
40. Fifth Gear Connector
41. Shoe
42. Key
43. Snap Ring
44. Gasket
45. Cover
46. Bolt
47. Plug
48. Bolt
49. Screw
50. Synchronizer Gear
51. Spring
52. Synchronizer Sleeve
53. Synchronizer Blocking Ring
54. Mainshaft Driven Fifth Gear
55. Ring
56. Thrust Washer
57. Ring
58. Input Drive Fifth Gear
59. Bolt
60. Cluster Gear Snap Ring
61. Screw
62. Cluster Shaft Bearing
63. Ring
64. Input Shaft Cluster Gear
65. Ball
66. Reverse Idler Gear Shaft
67. Reverse Idler Gear
68. Washer
69. Reverse Gear Fork Shaft
70. Reverse Gearshift Fork
71. Input Drive Shaft
72. Bolt
73. Fifth–Gear Pawl
74. Fifth–Gear Needle Bearing
75. First–Gear Needle Bearing
76. Main Driven Shaft
77. Fifth Gearshift Lever
78. Hex Plug
79. Gasket
80. Reverse Lamp Switch
81. Input Shaft Bearing
82. Second–Gear Needle Bearing
83. Third–Gear Needle Bearing
84. Fourth–Gear Needle Bearing
85. Washer

DIFFERENTIAL AND CASE

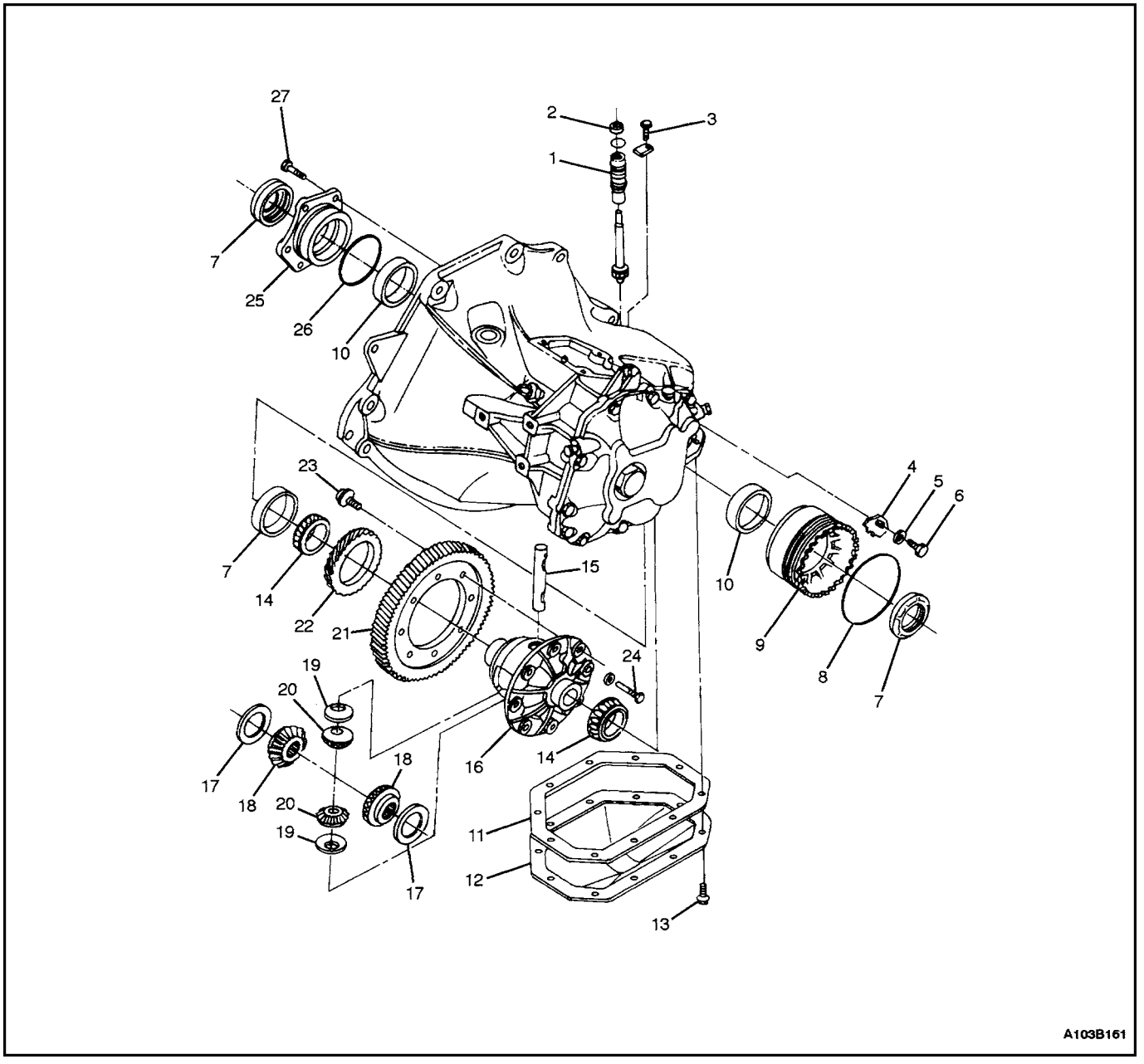

1. Speedometer–Driven Gear
2. Seal
3. Hex Bolt
4. Bearing Plate
5. Washer
6. Bolt
7. Seal
8. Seal
9. Bearing Adjusting Ring
10. Side Bearing Race
11. Housing Cover Gasket
12. Differential Cover
13. Bolt
14. Differential Bearing
15. Pinion Gear Shaft
16. Differential Housing
17. Thrust Washer
18. Side Gear
19. Washer
20. Pinion Gear
21. Ring Gear
22. Speedometer Drive Gear
23. Bolt
24. Pinion Shaft Lock Pin
25. Right Side Bearing Retainer
26. Seal
27. Retainer Bolt

SHIFT LINKAGE

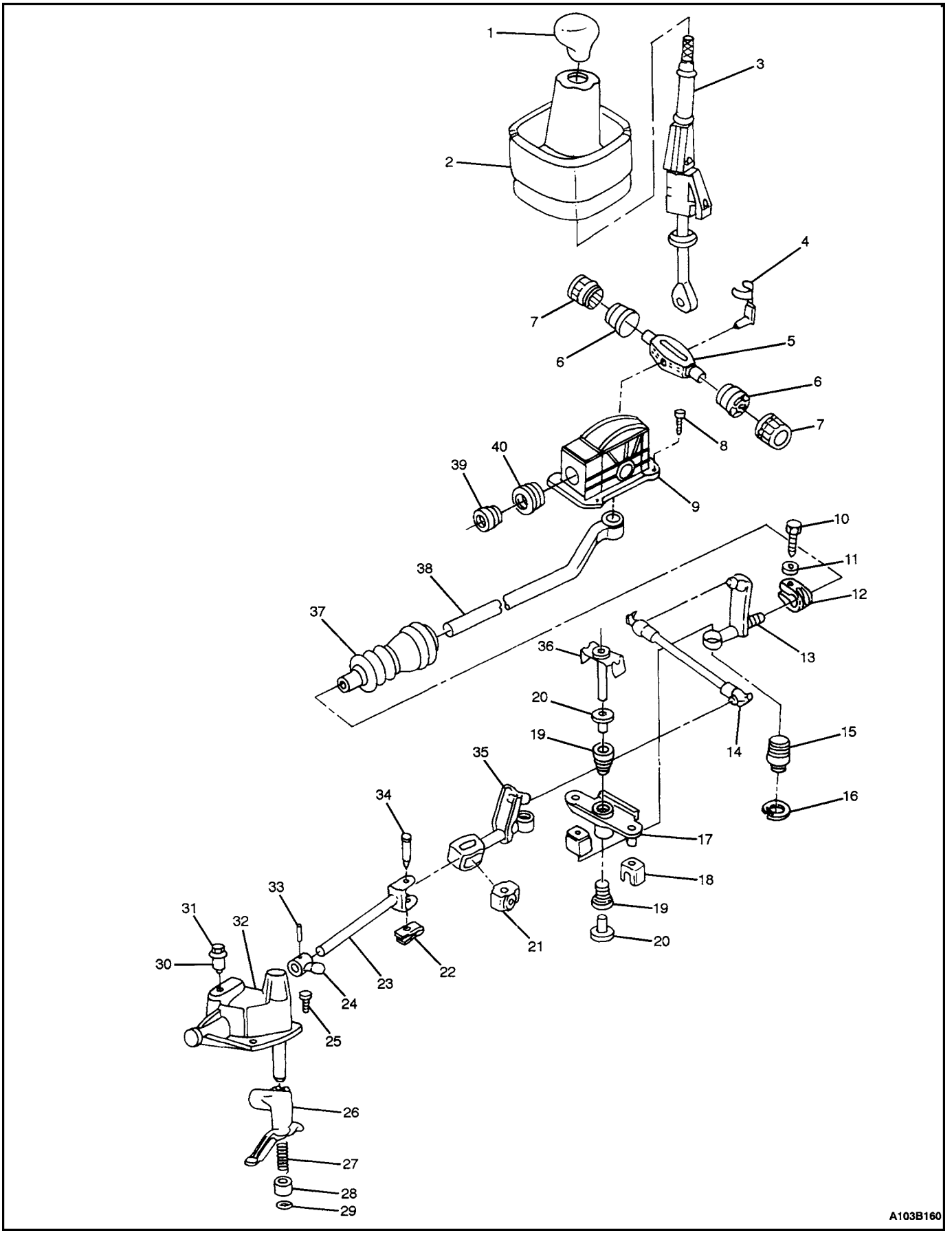

1. Gearshift Lever Knob
2. Gearshift Lever Boot
3. Gearshift Lever
4. Gearshift Lever Stop Clamp
5. Gearshift Lever Shaft
6. Gearshift Lever Stop Bushing
7. Gearshift Lever Stop Bushing
8. Bolt
9. Gearshift Housing
10. Shift Rod Clamp Bolt
11. Washer
12. Clamp
13. Linkage Adjuster Bolt
14. Gearshift Control Rod
15. Linkage Ball Socket
16. Circlip Ring
17. Linkage Reverse Lever
18. Gearshift Boot
19. Bushing
20. Bushing
21. Rod U–Joint Bushing
22. Clip
23. Gearshift Rod
24. Shift Finger Lever
25. Cover Bolt
26. Intermediate Lever
27. Shift Lever Thrust Spring
28. Bushing
29. Snap Ring
30. Oil Filler Plug
31. Oil Plug Cap
32. Gearshift Lever Cover
33. Pin
34. Bolt
35. Gearshift Adjuster Linkage
36. Shift Reverse Pivot Bolt
37. Boot
38. Gearshift Tube
39. Bushing
40. Gearshift Tube Bearing

SECTION : 9L

GLASS AND MIRRORS

CAUTION : Disconnect the negative battery cable before removing or installing any electrical unit or when a tool or equipment could easily come in contact with exposed electrical terminals. Disconnecting this cable will help prevent personal injury and damage to the vehicle. The ignition must also be in LOCK unless otherwise noted.

TABLE OF CONTENTS

SPECIFICATIONS 9L–2
FASTENER TIGHTENING SPECIFICATIONS 9L–2
SPECIAL TOOLS 9L–2
SPECIAL TOOLS TABLE 9L–2
SCHEMATIC AND ROUTING DIAGRAMS 9L–3
REAR WINDOW DEFOGGERDAER CIRCUIT 9L–3
ELECTRIC CONTROL OUTSIDE REARVIEW MIRRORS CIRCUIT 9L–4
DIAGNOSIS 9L–5
TESTING REAR WINDOW DEFOGGER GRID LINE . 9L–5
OUTSIDE REARVIEW MIRROR DEFOGGERS 9L–5
ELECTRIC CONTROL OUTSIDE REARVIEW MIRRORS 9L–6
MAINTENANCE AND REPAIR 9L–8
ON–VEHICLE SERVICE 9L–8
WINDSHIELD 9L–8
REAR WINDOW GLASS 9L–10
REAR WINDOW DEFOGGER GRID LINE REPAIR 9L–12
REAR WINDOW DEFOGGER BRAIDED LEAD WIRE REPAIR 9L–14
QUARTER WINDOW (WAGON) 9L–14
FRONT DOOR GLASS 9L–15
REAR DOOR GLASS 9L–16
INSIDE REARVIEW MIRROR 9L–17
ELECTRIC CONTROL HEATED OUTSIDE REARVIEW MIRRORS 9L–18
GENERAL DESCRIPTION AND SYSTEM OPERATION 9L–19
STATIONARY GLASS 9L–19
ELECTRIC CONTROL HEATED OUTSIDE REARVIEW MIRRORS 9L–19
INSIDE REARVIEW MIRROR 9L–19

SPECIFICATIONS

FASTENER TIGHTENING SPECIFICATIONS

Application	N•m	Lb–Ft	Lb–In
Glass Screws	4.5	–	40
Outside Rearview Mirror Assembly Screws	8	–	71
Rearview Mirror Mounting Screw	1.5	–	13

SPECIAL TOOLS

SPECIAL TOOLS TABLE

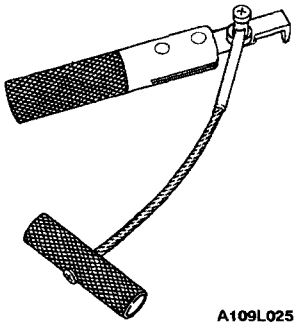	J–24402 Glass Sealant Remover

SCHEMATIC AND ROUTING DIAGRAMS

REAR WINDOW DEFOGGERDAER CIRCUIT

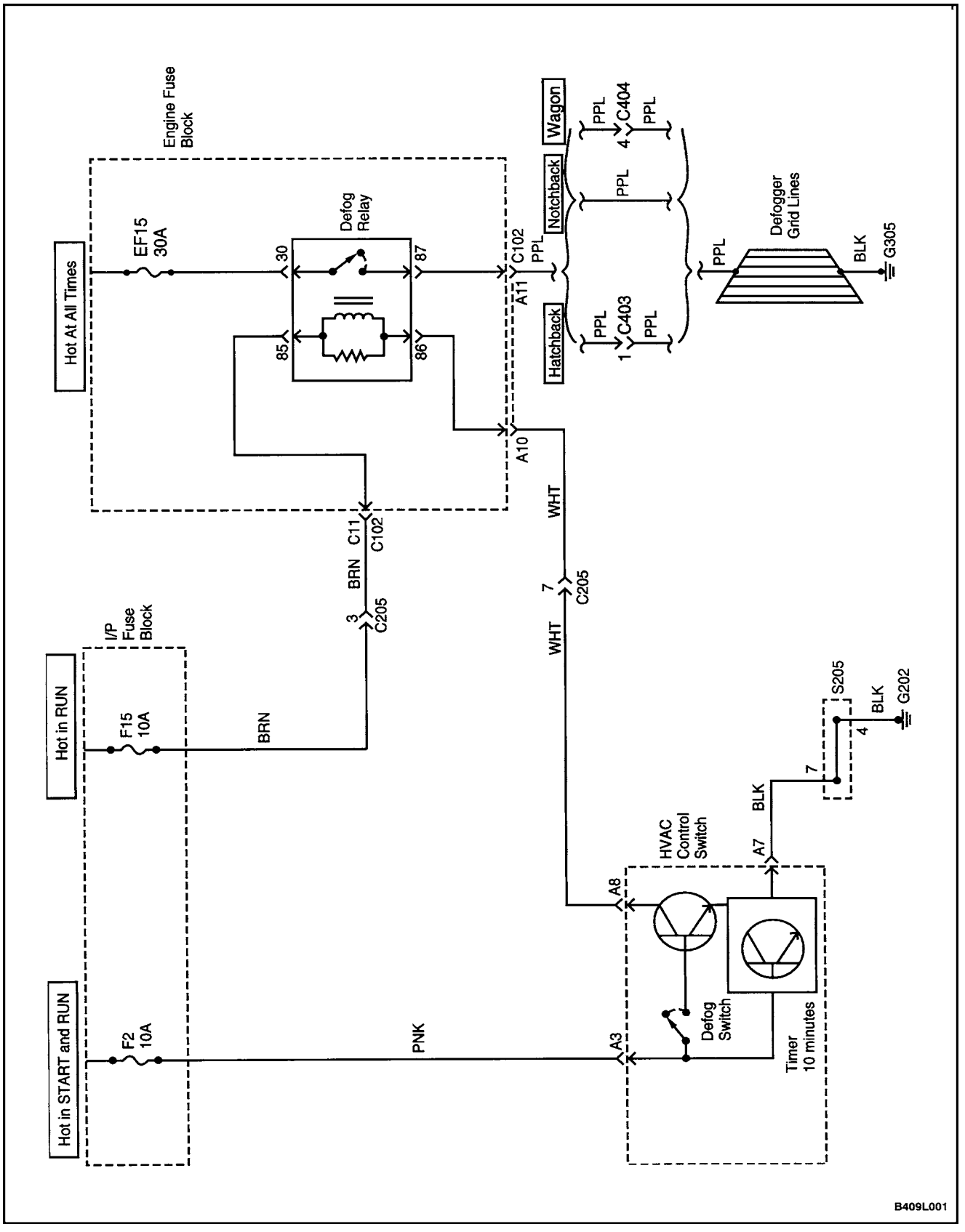

ELECTRIC CONTROL OUTSIDE REARVIEW MIRRORS CIRCUIT

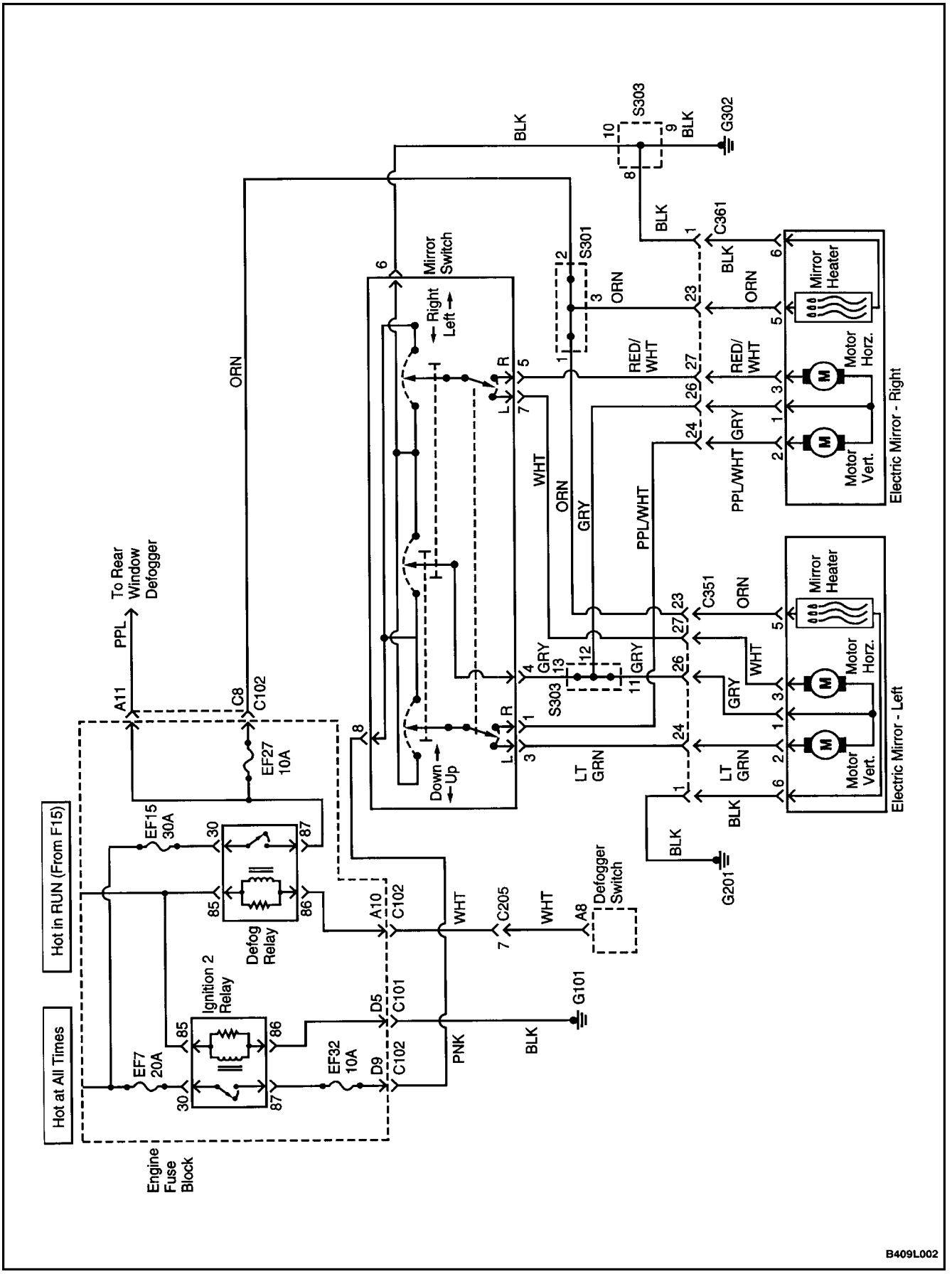

DIAGNOSIS

TESTING REAR WINDOW DEFOGGER GRID LINE

If it has been observed during use that a grid line is inoperative, the following procedure can be used to find the break. If none of the grid lines is operating, a full system diagnosis should be completed before attempting to repair the grid lines.

1. Start the engine.
2. While the engine is running, turn on the rear window defogger.
3. From the inside of the vehicle, connect a voltmeter to each end of a grid line. The voltmeter will indicate battery voltage if the grid line is open.

Notice : Use care when touching the voltmeter terminals a grid line. If the terminals are roughly applied, the grid line may be scratched, resulting in an open circuit.

4. If a grid line is found to be open, move a voltmeter terminal from one side of the grid line and re–test at a point nearer to the other side of the window. Continue to re–test, each time bringing one of the voltmeter terminals closer to the opposite side of the window from where it was originally connected. The break in the grid line is at the point where the voltmeter begins reading 0 volts instead of battery voltage.
5. Use a marking crayon to mark lightly the break point on the rear window. Mark the glass instead of marking directly on the grid line, and make the mark far enough from the grid line so that it can easily be removed without disturbing the repair.
6. Use a grid line repair kit to fix the break in the grid line. Refer to"Rear Window Defogger Grid Line Repair" in this section.

OUTSIDE REARVIEW MIRROR DEFOGGERS

Step	Action	Value(s)	Yes	No
1	Check the rear window defogger. Does the rear window defogger work?		Go to *Step 4*	Go to *Step 2*
2	Repair the rear window defogger before proceeding with the outside mirror diagnosis. Is the repair complete?		Go to *Step 3*	
3	Test the outside mirror defoggers. Does the repair of the rear window defogger system also fix the problem with the outside mirror defoggers?		System OK	Go to *Step 4*
4	Check fuse EF27. Is fuse EF27 blown?		Go to *Step 5*	Go to *Step 6*
5	1. Check for a short circuit and repair it, if necessary. 2. Replace the fuse. Is the repair complete?		System OK	
6	1. On the side of the vehicle which has the malfunctioning mirror defogger, remove the black plastic escutcheon from the trim panel side of the door. 2. Disconnect the outside mirror electrical connector. 3. Turn the ignition ON. 4. Turn on the defogger. 5. Use a voltmeter to backprobe terminal 5 (ORN) at the mirror electrical connector. Does the voltmeter indicate the specified value?	11–14 v	Go to *Step 8*	Go to *Step 7*
7	Repair the open circuit between fuse EF27 and the mirror connector. Is the repair complete?		System OK	

Step	Action	Value(s)	Yes	No
8	1. Turn the ignition OFF. 2. Disconnect the outside mirror electrical connector. 3. Use an ohmmeter to measure the resistance between terminal 6 (BLK) of the mirror connector and ground. Does the ohmmeter indicate the specified value?	≈ 0 Ω	Go to *Step 10*	Go to *Step 9*
9	Repair the open ground circuit for the outside rearview mirror. Is the repair complete?		System OK	
10	Replace the defective outside rearview mirror. Is the repair complete?		System OK	

ELECTRIC CONTROL OUTSIDE REARVIEW MIRRORS

Outside Rearview Mirrors Do Not Adjust

Step	Action	Value(s)	Yes	No
1	Check fuse EF32. Is fuseEF32 blown?		Go to *Step 2*	Go to *Step 3*
2	1. Check for a short circuit and repair it, if necessary. 2. Replace fuse EF32. Is the repair complete?		System OK	
3	Turn the ignitionON. Check the voltage at fuse EF32. Is the voltage at EF32 equal to the specified value?	11–14 v	Go to *Step 5*	Go to *Step 4*
4	Repair the open power supply circuit for fuse EF32. Is the repair complete?		System OK	
5	Check the power mirrors. Are both power mirrors inoperative?		Go to *Step 6*	Go to *Step 13*
6	1. Remove the retaining screw for the door power mirror and power window switch assembly. 2. Lift the switch assembly so the connectors on the underside are visible. Is the connector secured to the power mirror switch?		Go to *Step 8*	Go to *Step 7*
7	Connect the connector to the power mirror switch. Is the repair complete?		System OK	
8	Use an ohmmeter to check the continuity between terminal 6 (BLK) of the mirror switch connector and ground. Does the ohmmeter indicate the specified value?	≈ 0 Ω	Go to *Step 10*	Go to *Step 9*
9	Repair the open ground circuit for the mirror switch. Is the repair complete?		System OK	
10	1. Turn the ignitionON. 2. Check the voltage at terminal 8 (PNK) of the mirror switch connector. Is the voltage equal to the specified value?	11–14 v	Go to *Step 12*	Go to *Step 11*
11	Repair the open power supply circuit for the mirror switch. Is the repair complete?		System OK	

Step	Action	Value(s)	Yes	No
12	Replace the outside rearview mirror switch. Is the repair complete?		System OK	
13	1. On the side which has the inoperative mirror, remove the black plastic escutcheon from the trim panel side of the door. 2. Disconnect the outside mirror electrical connector. 3. Turn the ignitionON. 4. At the outsidemirrorconnector, connect a voltmeterbetween terminal 1 (GRY)and terminal 2 (LTGRN, if testing the left side; orPPL/WHT, if testing the right side). 5. Operate the in/out adjustment on the switch, and record the voltage indicated in each switch position. 6. Connect a voltmeterbetween terminal 1 (GRY) and terminal 3 (WHT, if testing the left side; or RED/WHT, if testing the right side). 7. Operate the up/down adjustment on the switch, and record the voltage indicated in each switch position. Does the voltmeter indicate the specified voltage for each test, with the polarity reversing when the switch is changed fromin to out, or up to down?	11–14 v	Go to *Step 14*	Go to *Step 15*
14	Replace the outside rearview mirror. Is the repair complete?		System OK	
15	1. Remove the retaining screw for the power door mirror and power window switch assembly. 2. Lift the switch assembly so the connectors on the underside are visible. 3. Leave the outside mirror disconnected, but do not disconnect the mirror switch connector. 4. Turn the ignitionON. 5. At themirrorswitch connector, backprobe to measure the voltage between terminal 1 (GRY) and terminal 2 (LTGRN, if testing the left side; or PPL/WHT, if testing the right side). 6. Operate the in/out adjustment on the switch, and record the voltage indicated in each switch position. 7. Connect a voltmeterbetween terminal 1 (GRY) and terminal 3 (WHT, if testing the left side; or RED/WHT; if testing the right side). 8. Operate the up/down adjustment on the switch, and record the voltage indicated in each switch position. Does the voltmeter indicate the specified voltage for each test, with the polarity reversing when the switch is changed fromin to out or up to down?	11–14 v	Go to *Step 16*	Go to *Step 12*
16	Repair the open circuit between the mirror switch and the outside rearview mirror connector. Is the repair complete?		System OK	

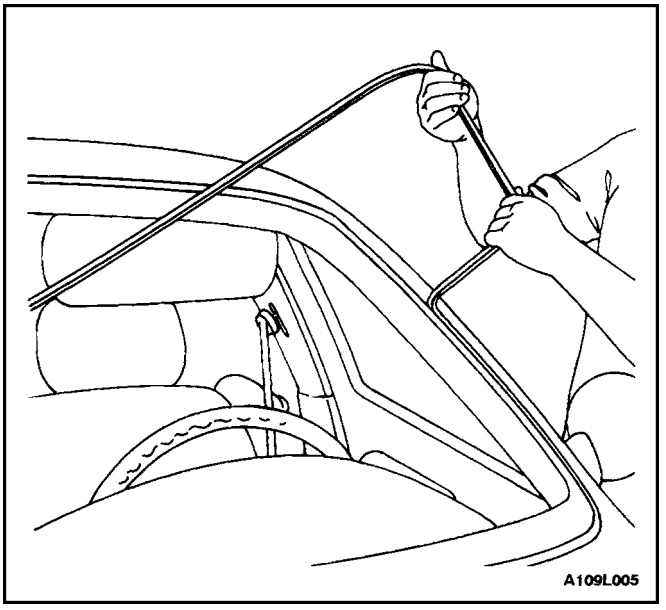

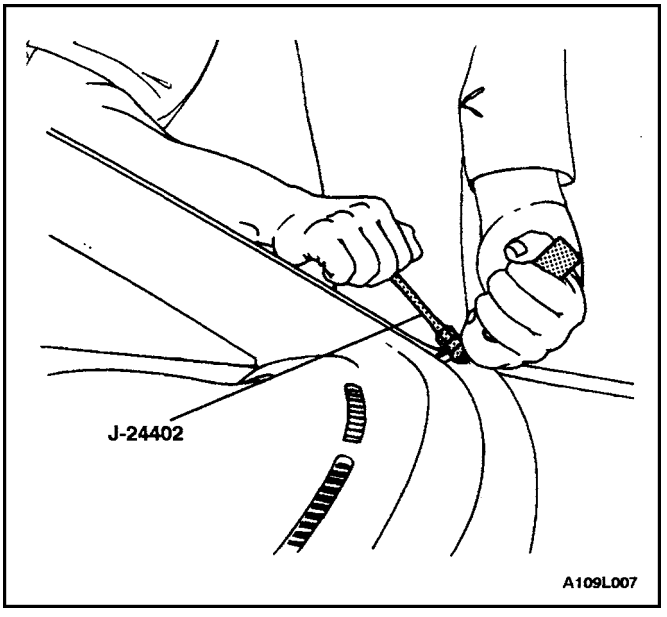

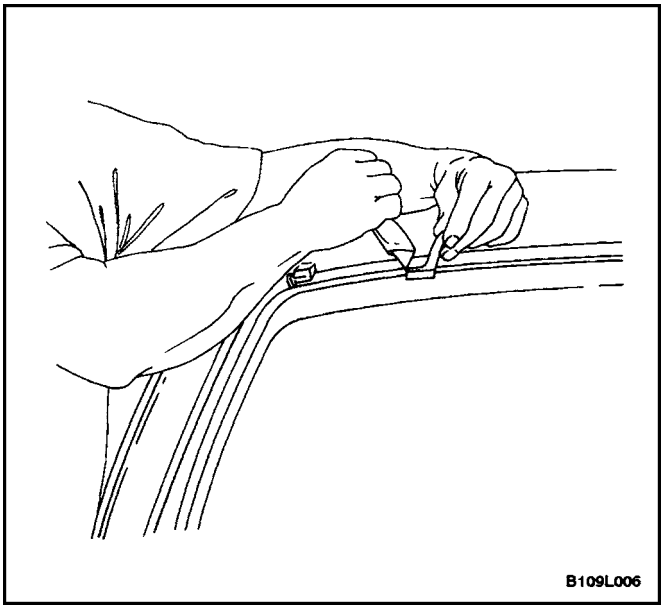

MAINTENANCE AND REPAIR

ON–VEHICLE SERVICE

WINDSHIELD

Tools Required

J–24402 Glass Sealant Remover

Removal Procedure

1. Remove the cowl vent grille. Refer to *Section 9R, Body Front End.*
2. Remove the inside rearview mirror. Refer to”Inside Rearview Mirror” in this section.
3. Remove the weatherstrip around the windshield.
4. Using the glass sealant remover J–24402, cut the adhesive around the windshield.
5. Remove the windshield from the vehicle..
6. Using a knife, remove the adhesive from the windshield.
7. Using a knife, remove the adhesive from the windshield frame.

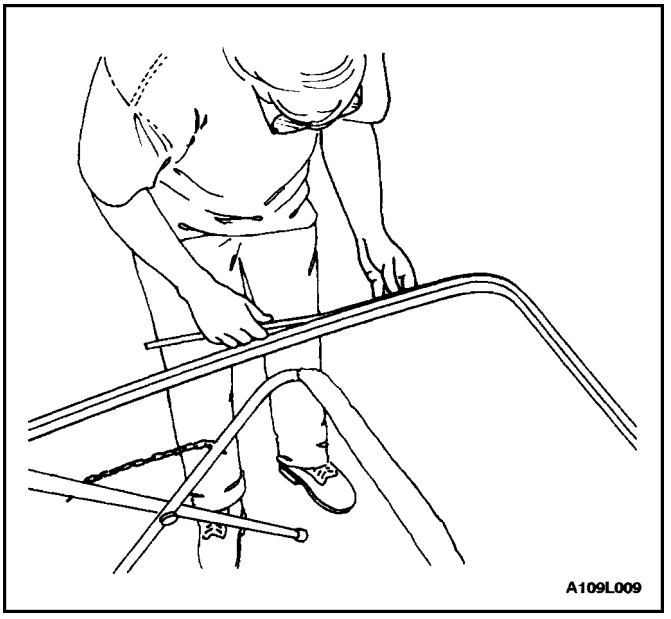

Installation Procedure

1. Install the new weatherstrip to the windshield.

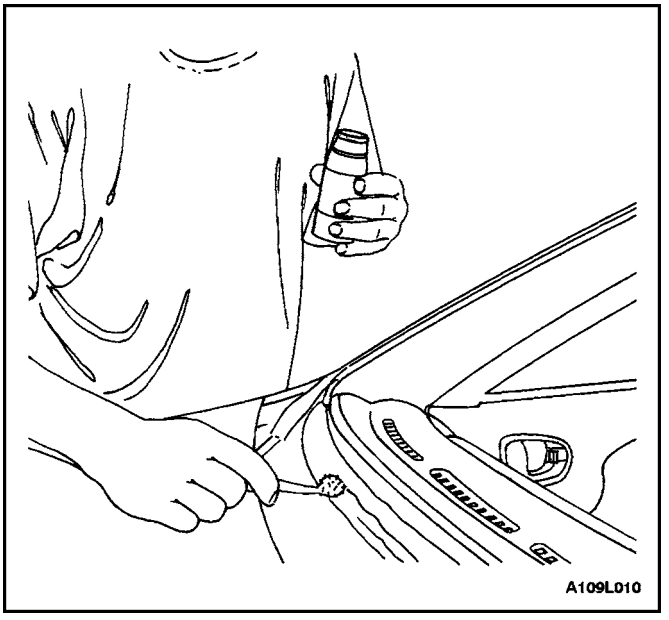

2. Apply tape to the new weatherstrip and the windshield to hold the weatherstrip in place.
3. Apply adhesive primer to the windshield frame and the perimeter of the windshield.

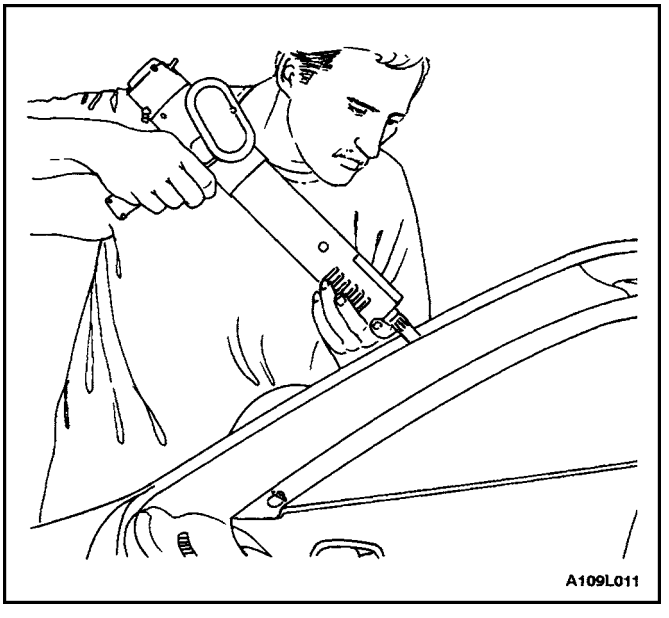

4. Apply glass adhesive to the windshield frame.
5. Install the windshield into the windshield frame.
6. Reposition the tape over the weatherstrip, the windshield, and the windshield frame to hold the windshield in place.
7. Let the adhesive dry for 24 hours.
8. Remove the tape.
9. Check for waterleaks by pouring water on the windshield. If a leak is found, dry the windshield and fill the area that leaks with adhesive. If the leak persists, remove the windshield and repeat the entire procedure.
10. Install the inside rearview mirror. Refer to”Inside Rearview Mirror” in this section.
11. Install the cowl vent grille. Refer to *Section 9R, Body Front End.*

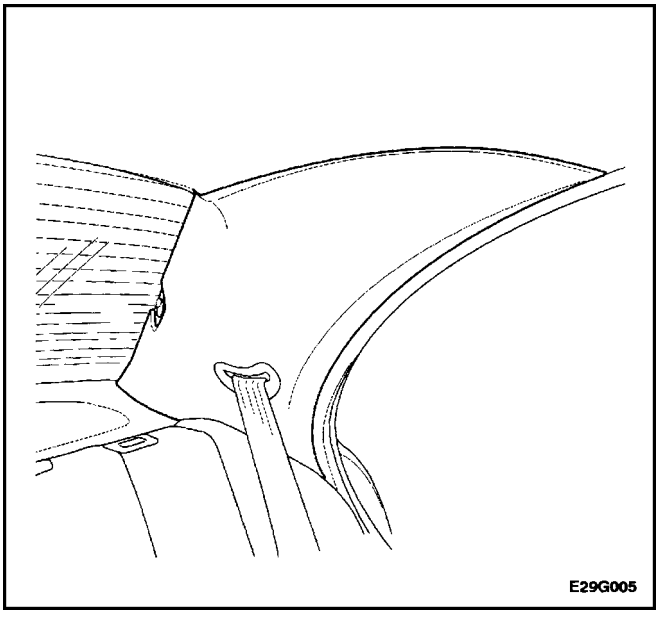

REAR WINDOW GLASS

(Notchback Shown, Hatchback and Wagon Similar)

Tools Required

J–24402 Glass Sealant Remover

Removal Procedure

1. Disconnect the negative battery cable.
2. Remove the rear window wiper (wagon only). Refer to *Section 9D, Wipers/Washer Systems.*
3. Disconnect the rear window defogger electrical connector.

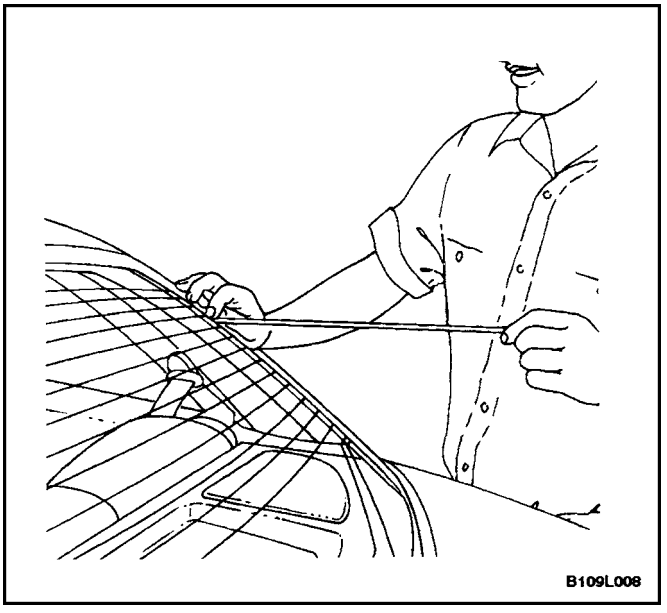

4. Remove the weatherstrip around the rear window.

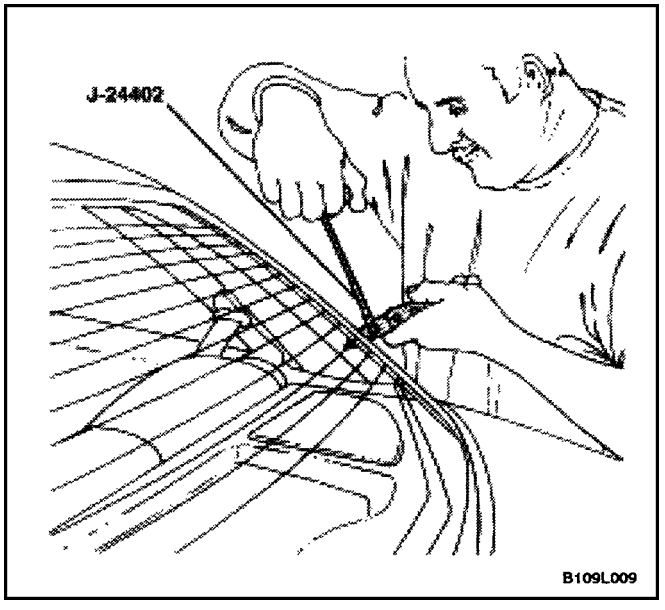

5. Using the glass sealant remover J–24402, cut the adhesive around the rear window.

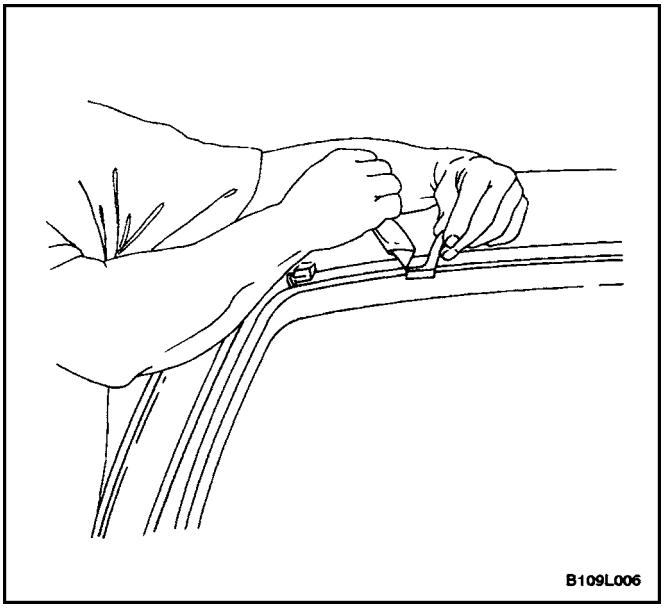

6. Remove the rear window from the vehicle.
7. Using a knife, remove the adhesive from the rear window.
8. Using a knife, remove the adhesive from the rear window frame.

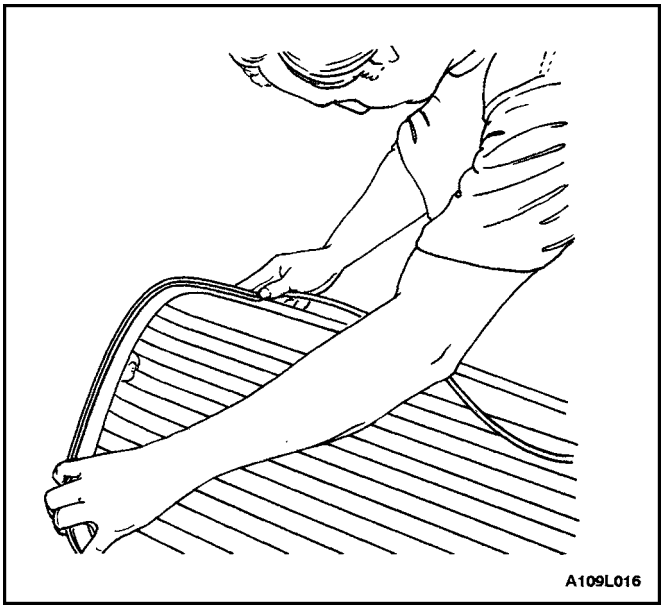

Installation Procedure

1. Install the new weatherstrip to the rear window.

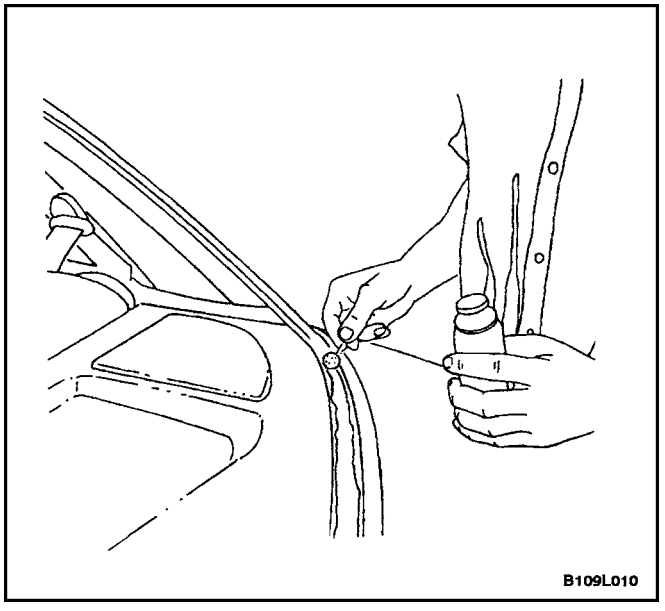

2. Apply tape to the new weatherstrip and the rear window to hold the weatherstrip in place.
3. Apply adhesive primer to the rear window frame and the perimeter of the rear window.

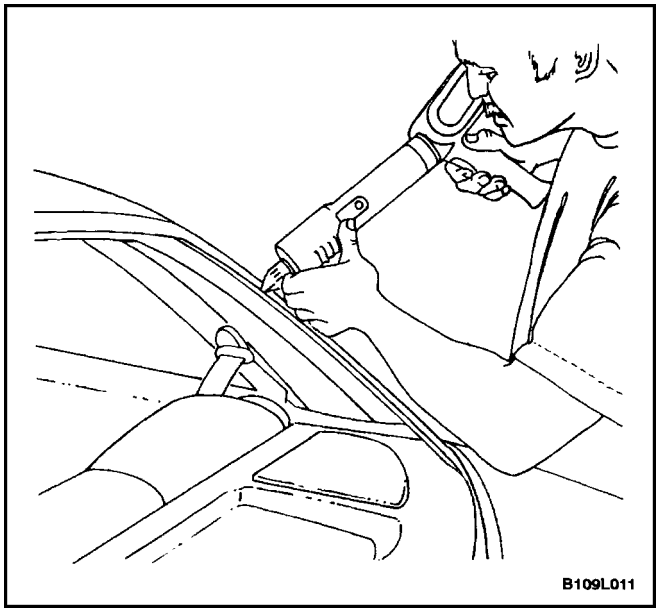

4. Apply glass adhesive to the rear window frame.

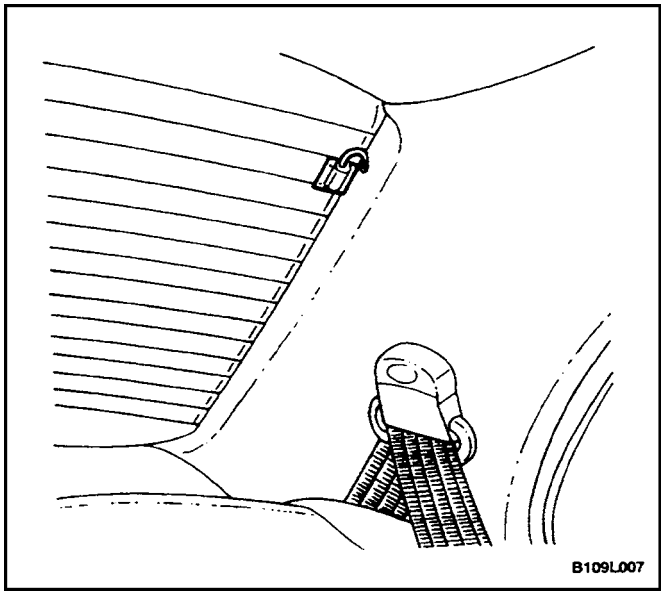

5. Install the rear window into the rear window frame.
6. Reposition the tape over the weatherstrip, the rear window, and the rear window frame to hold the rear window in place.
7. Let the adhesive dry for 24 hours.
8. Remove the tape.
9. Check for waterleaks by pouring water on the rear window. If a leak is found, dry the window and fill the area that leaks with adhesive. If the leak persists, remove the rear window and repeat the entire procedure.
10. Connect the rear window defogger electrical connector.
11. Install the rear window wiper (wagon only). Refer to *Section 9D, Wipers/Washer Systems.*
12. Connect the negative battery cable.

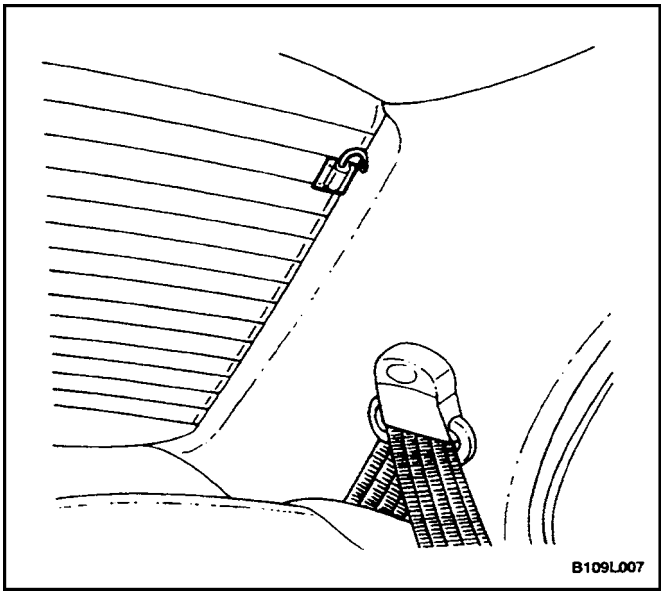

REAR WINDOW DEFOGGER GRID LINE REPAIR

(Notchback Shown, Hatchback and Wagon Similar)

1. Disconnect the negative battery cable.
2. Disconnect the rear window defogger electrical connectors.
3. Inspect the rear window defogger grid lines.
4. Mark the grid line break on the outside of the glass with a wax pencil or a crayon.
5. Buff the grid lines that are to be repaired with steel wool. Wipe the lines clean using a cloth dampened with alcohol. Buff and clean about 6 mm (0.25 inch) beyond each side of the break in the grid line.

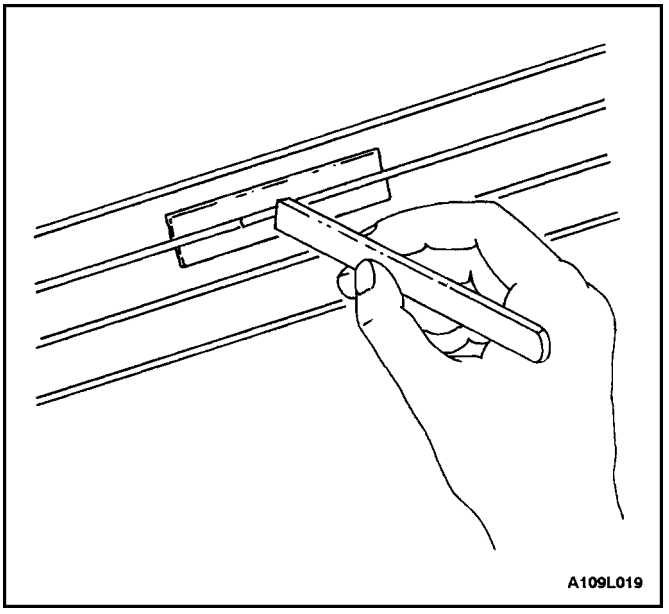

6. Attach a grid line repair decal or two strips of tape above and below the repair areas.
   - A repair decal or tape must be used in order to control the width of the repair areas.
   - If a decal is used, the die–cut metered slot must be the same width as the grid line.
7. Apply the grid repair material to the repair area using a small wooden stick or a spatula. The grid repair material should be at room temperature..
8. Carefully remove the decal or the tape..

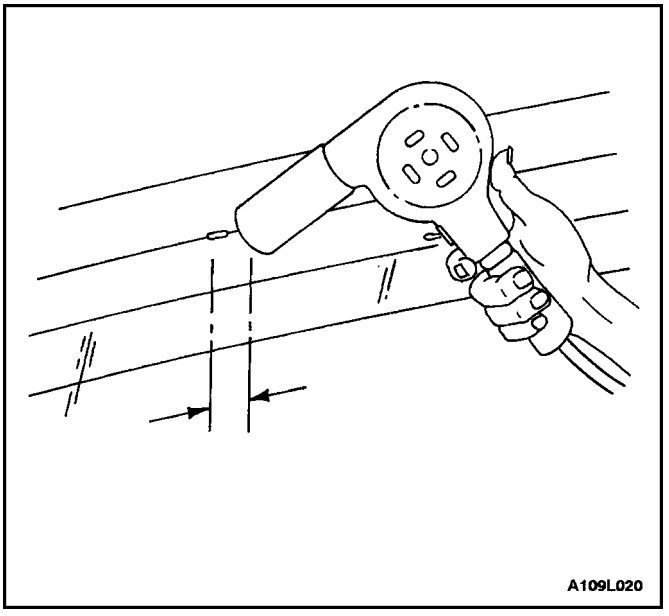

Notice : The grid line repair material must be cured with heat. In order to avoid heat damage to the interior trim, protect the trim near the repair area where heat will be applied.

9. Heat the repair area for 1 to 2 minutes.
10. Hold the heat gun nozzle 25 mm (1 inch) from the surface. A minimum temperature of 149˚C (300˚F) is required.
11. Inspect the grid line repair area. If the repair appears discolored, apply a coating of tincture of iodine to the area using a pipe cleaner or a line brush. Allow the iodine to dry for about 30 seconds. Carefully wipe off the excess iodine with a lint–free cloth.
12. Connect the rear window defogger electrical connectors.
13. Test the operation of the rear window defogger in order to verify that the repair was successful.

Important : At least 24 hours is required for complete curing of the repair materials. The repair area should not be physically disturbed until after that time.

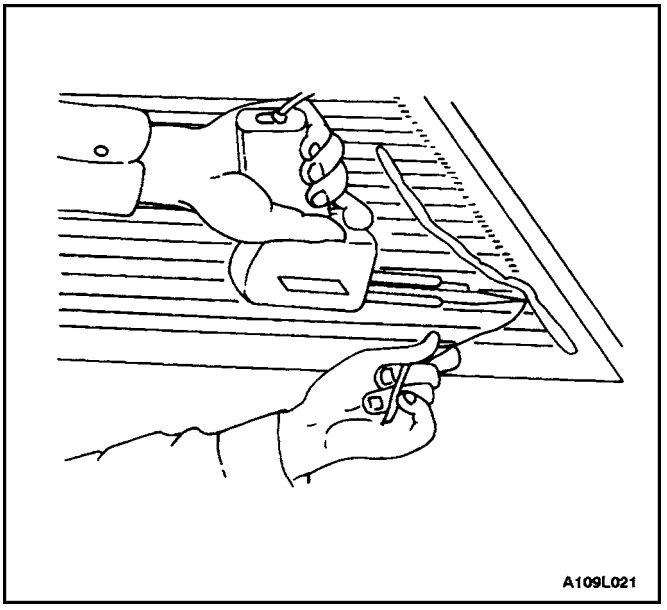

REAR WINDOW DEFOGGER BRAIDED LEAD WIRE REPAIR

The rear window defogger bus lead wire or the terminal can be reattached by resoldering. Use a solder containing 3 percent silver and a rosin flux paste.

1. The repair area should be buffed with fine steel wool before soldering the bus lead wire.
2. Apply the paste–type rosin flux in small quantities to the wire lead and the bus lead wire repair area using a brush.
3. Coat the soldering iron tip with solder. Use only enough solder to ensure a complete repair.
4. Use only enough heat to melt the solder. Do not overheat the wire when resoldering to the bus lead wire.

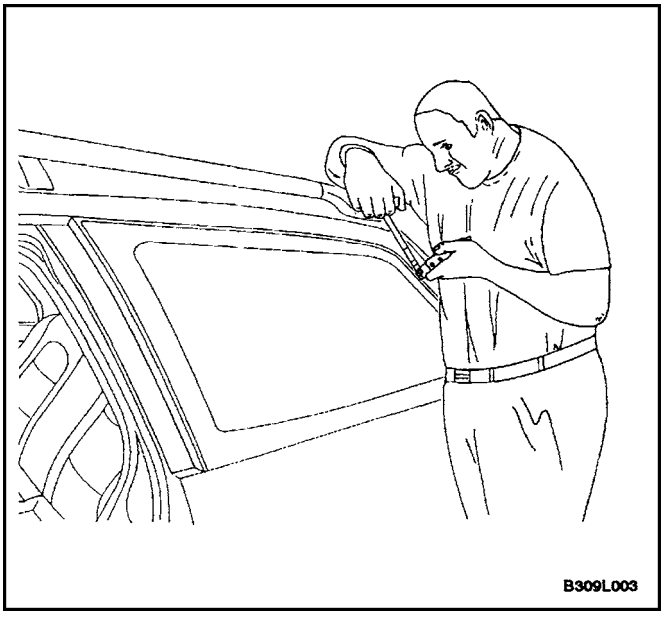

QUARTER WINDOW (WAGON)

Tools Required

J–24402 Glass Sealant Remover

Removal Procedure

1. Remove the quarter windowmolding. Refer to *Section 9M, Exterior Trim.*
2. Using the glass sealant remover J–24402, cut the adhesive around the quarter window.
3. Remove the quarter window from the vehicle.
4. Using a knife, remove the adhesive from the quarter window.
5. Using a knife, remove the adhesive from the quarter window frame.

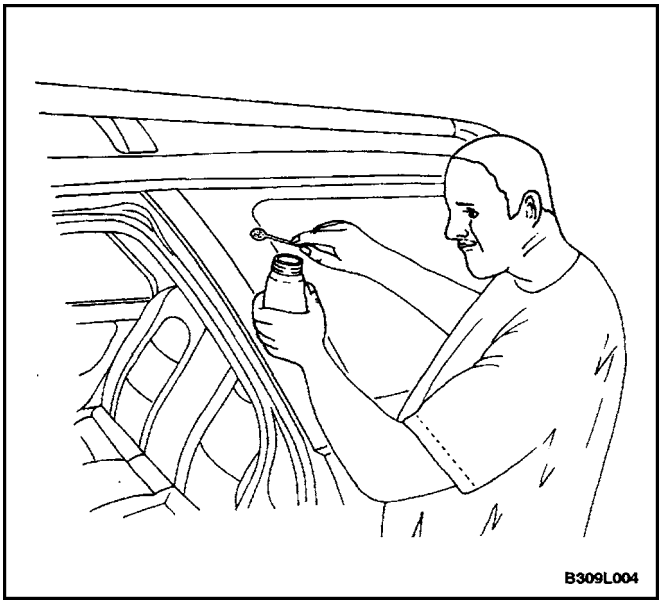

Installation Procedure

1. Apply adhesive primer to the quarter window frame and the perimeter of the quarter window.

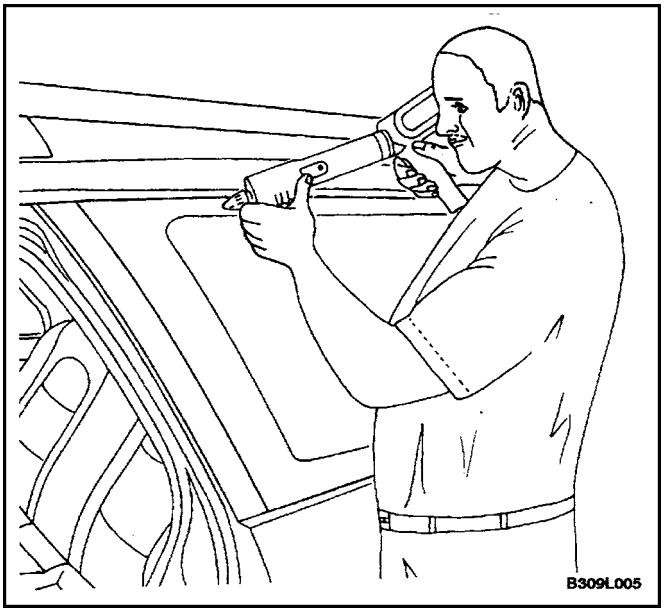

2. Apply glass adhesive to the quarter window frame.
3. Install the quarter window into the quarter window frame.
4. Reposition the tape over the quarter window and the quarter window frame to hold the quarter window in place.
5. Let the adhesive dry for 24 hours.
6. Remove the tape.
7. Check for waterleaks by pouring water on the quarter window. If a leak is found, dry the window and fill the area that leaks with adhesive. If the leak persists, remove the quarter window and repeat the entire procedure.

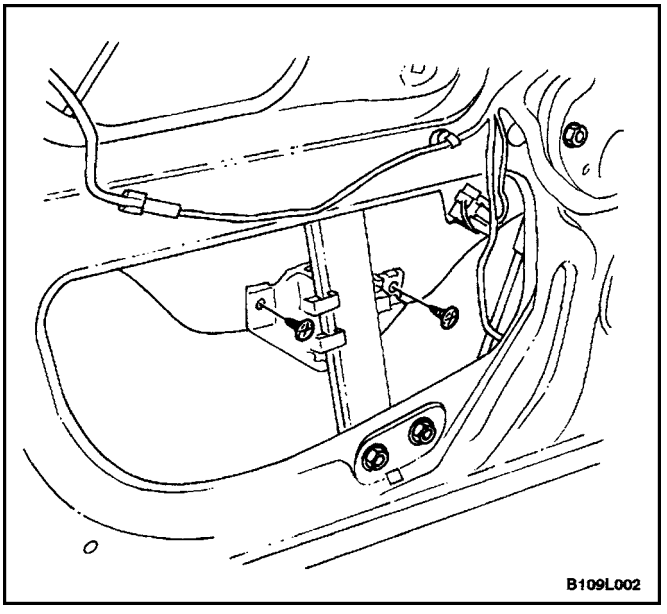

FRONT DOOR GLASS

Removal Procedure

1. Remove the door seal trim. Refer to *Section 9P, Doors.*
2. Remove the screws that secure the glass to the window regulator.
3. Remove the glass from the door.

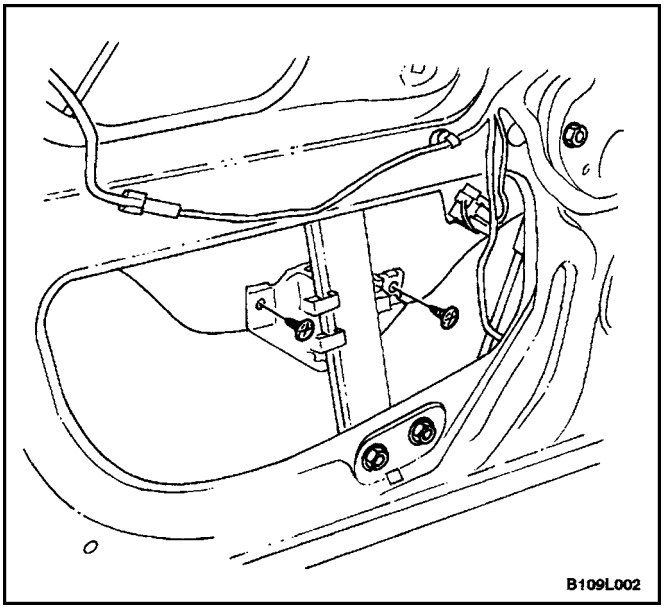

Installation Procedure

1. Install the glass in the door and position the glass within the window regulator.

Notice : Dissimilar metals in direct contact with each other may corrode rapidly. Make sure to use the correct fasteners to prevent premature corrosion.

2. Install the glass to the window regulator with the screws.

Tighten

Tighten the glass screws to 4.5 N•m (40 lb–in).

3. Install the door seal trim. Refer to *Section 9P, Doors.*

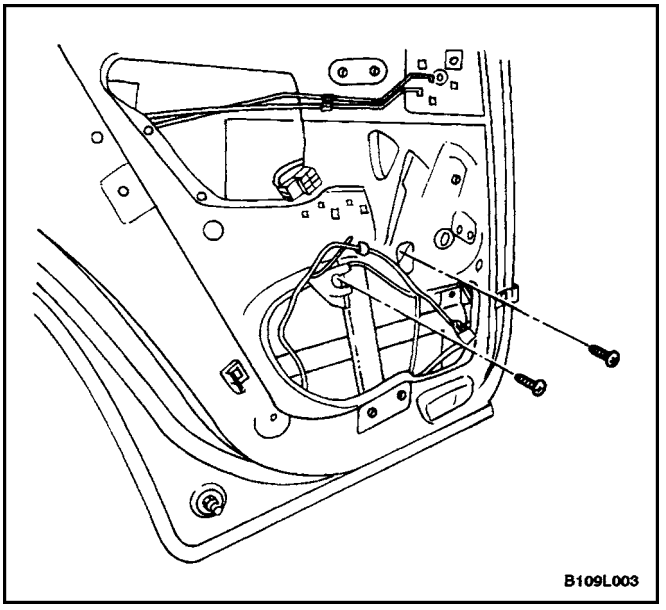

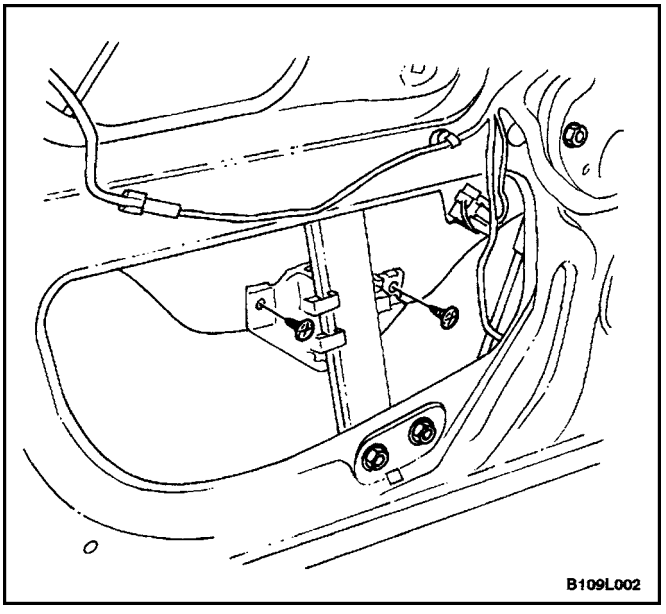

REAR DOOR GLASS

Removal Procedure

1. Remove the door seal trim. Refer to *Section 9P, Doors.*
2. Remove the exterior B–pillar molding. Refer to*Section 9M, Exterior Trim.*
3. Remove the screws that secure the glass to the window regulator.
4. Remove the glass from the door.

Installation Procedure

1. Install the glass in the door and position the glass within the window regulator.

Notice : Dissimilar metals in direct contact with each other may corrode rapidly. Make sure to use the correct fasteners to prevent premature corrosion.

2. Install the glass screws.

Tighten

Tighten the glass screws to 4.5 N•m (40 lb–in).

Install the exterior B–pillar molding. Refer to*Section 9M, Exterior Trim.*

Install the door seal trim. Refer to *Section 9P, Doors.*

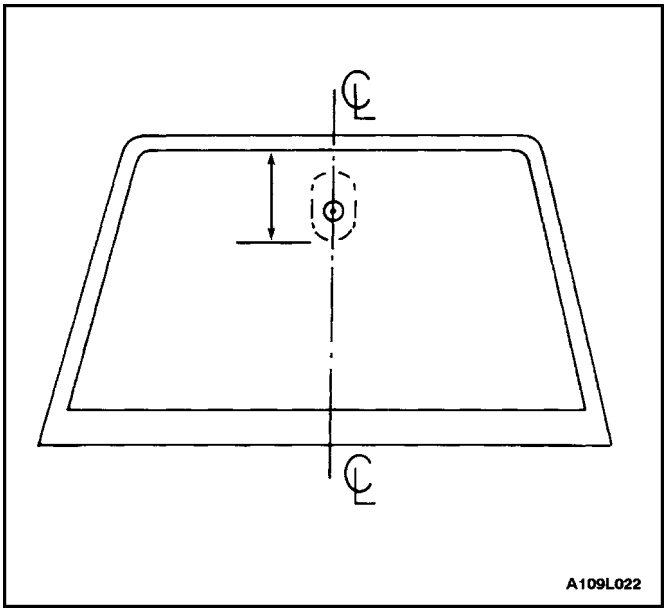

INSIDE REARVIEW MIRROR

The inside rearview mirror is attached to a support which is secured to the windshield glass. The support is installed by the glass supplier using a plastic–polyvinyl butyl adhesive.

Service replacement windshield glass has the mirror support bonded to the glass assembly. In order to install a detached mirror support or to install a new part, the following items will be needed:

- Loctite® Minute–Bond Adhesive.
- Original or replacement mirror support.
- Wax marking pencil or crayon.
- Rubbing alcohol.
- Clean paper towel.
- Fine grit sandpaper (grit #320 or #360).
- 2 mm allen wrench.

Installation Procedure

1. Measure the distance from the headliner to the bottom of the location where the mirror support will be mounted on the windshield.

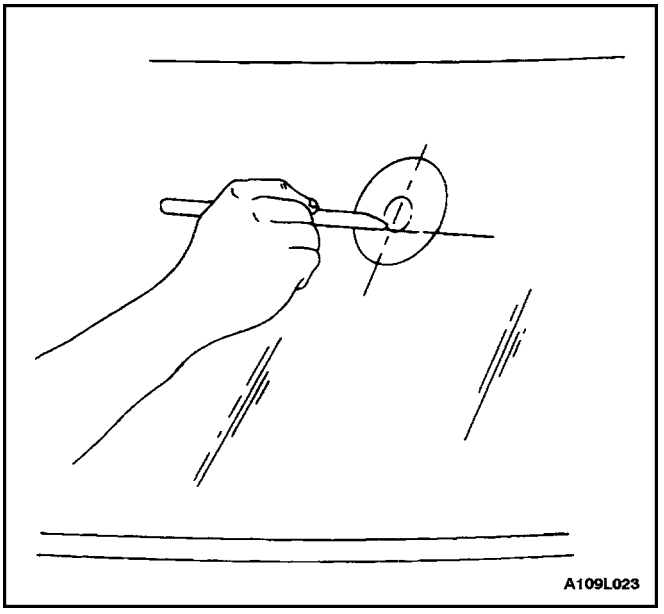

2. Mark this position on the outside of the glass with a wax pencil or crayon. Draw a large diameter circle around the mirror support location on the outside of the glass.
3. Clean the inside surface of the glass with a domestic scouring cleanser, a glass cleaning solution, or a polishing compound and paper towels. Rub the glass until the area is completely dry. When the area is dry, clean the area with an alcohol–saturated paper towel in order to remove any traces of the scouring powder or the glass cleaning solution.
4. If the mirror support is new, clean the bonding surface with fine grit sandpaper #320 or #360. If the original mirror support is being used, all traces of factoryinstalled adhesive must be removed prior to reinstallation.
5. Wipe the sanded mirror support with a clean paper towel saturated with rubbing alcohol. Allow the support to dry.

6. Follow the adhesive kit manufacturer's directions for adhesive application and mirror support preparation before installing the mirror support to the glass.
7. Position the mirror support to its premarked position. Use steady pressure and press the support against the glass for 30 to 60 seconds.
8. After 5 minutes, remove the excess adhesive with an alcohol–moistened towel or a glass–cleaning solution.
9. Install the inside rearview mirror to the mirror support with the mounting

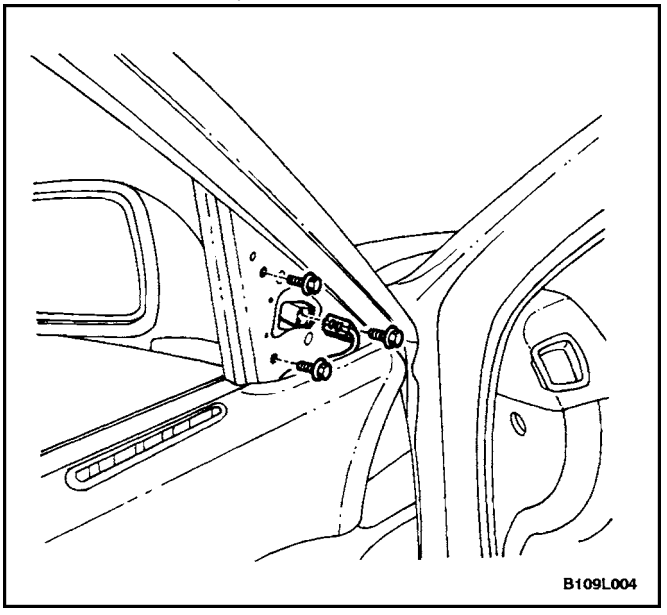

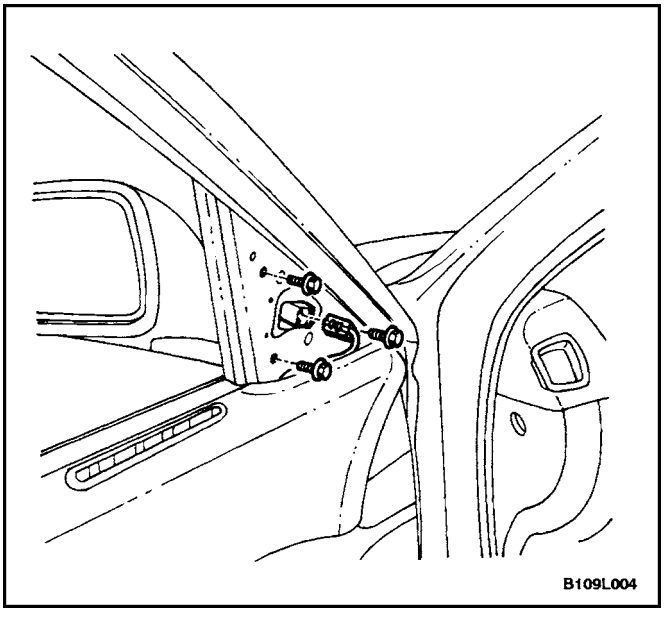

Tighten

Tighten the rearview mirror mounting screw to 1.5 N•m (13 lb–in).

ELECTRIC CONTROL HEATED OUTSIDE REARVIEW MIRRORS

Removal Procedure

1. Remove the front door tweeter speaker and the escutcheon.
2. Disconnect mirror electrical connector, if equipped.
3. Remove the screws and the outside rearview mirror assembly from the door.

Installation Procedure

Notice : Dissimilar metals in direct contact with each other may corrode rapidly. Make sure to use the correct fasteners to prevent premature corrosion.

1. Install the outside rearview mirror assembly to the door with the screws.

   ### Tighten

   Tighten the outside rearview mirror assembly screws to 8 N•m (71 lb–in).
2. Connect the mirror electrical connector.
3. Install the escutcheon and the front door tweeter speaker.

GENERAL DESCRIPTION AND SYSTEM OPERATION

STATIONARY GLASS

Stationary glass consists of all the glass on the vehicle which is immovable within its frame, such as the windshield glass, the back glass, and the inside rearview mirror.

ELECTRIC CONTROL HEATED OUTSIDE REARVIEW MIRRORS

Heated electric control outside rearview mirrors are standard. The outside rearview mirror defroster is activated whenever the rear window defroster is turned on.

INSIDE REARVIEW MIRROR

The rearview mirror pivots at the ball–and–socket mirror pivot and can be manually adjusted up/down and left/right.

SECTION : 7A

HEATING AND VENTILATION SYSTEM

CAUTION : Disconnect the negative battery cable before removing or installing any electrical unit or when a tool or equipment could easily come in contact with exposed electrical terminals. Disconnecting this cable will help prevent personal injury and damage to the vehicle. The ignition must also be in LOCK unless otherwise noted.

TABLE OF CONTENTS

SPECIFICATIONS 7A–1
- HEATER TEMPERATURE SPECIFICATIONS . 7A–1
- FASTENER TIGHTENING SPECIFICATIONS . 7A–2
- AIRFLOW THROUGH VENTS WITH REAR HEATING DUCT* 7A–3

DIAGNOSIS 7A–4

HEATER SYSTEM 7A–4
- INSUFFICIENT HEATING OR DEFROSTING . 7A–4
- BLOWER ELECTRICAL 7A–7
- IMPROPER AIR DELIVERY OR NO MODE SHIFT 7A–9
- TOO MUCH HEAT 7A–11
- CONTROLS 7A–13
- BLOWER NOISE 7A–14

MAINTENANCE AND REPAIR 7A–16

ON–VEHICLE SERVICE 7A–16
- TEMPERATURE CABLE ADJUSTMENT 7A–16
- TEMPERATURE CONTROL CABLE 7A–16
- CONTROL ASSEMBLY 7A–18
- CONTROL ASSEMBLY KNOB LIGHTING ... 7A–19
- HEATER/AIR DISTRIBUTOR CASE ASSEMBLY 7A–20
- BLOWER MOTOR 7A–23
- HIGH–BLOWER RELAY 7A–24
- BLOWER RESISTOR 7A–24
- HEATER HOSES 7A–25
- HEATER CORE 7A–26
- REAR HEATING DUCT 7A–27

GENERAL DESCRIPTION AND SYSTEM OPERATION 7A–28
- HEATING AND VENTILATION SYSTEMS ... 7A–28

SPECIFICATIONS

HEATER TEMPERATURE SPECIFICATIONS

Ambient Air Temperature	Heater Outlet Air Temperature
–18˚C (0˚F)	54˚C (129˚F)
– 4˚C (25˚F)	59˚C (138˚F)
10˚C (50˚F)	64˚C (147˚F)
24˚C (75˚F)	68˚C (154˚F)

FASTENER TIGHTENING SPECIFICATIONS

Application	N•m	Lb–Ft	Lb–In
Blower Motor Resistor Screws	6	–	53
Blower Resistor Retaining Screws	6	–	53
Heater Core Cover Screw		–	
Heater Core Retaining Bracket Screw		–	
Heater/Air Distributor Case Assembly Screws	8	–	71
HVAC Controller Retaining Screws	2	–	18

AIRFLOW THROUGH VENTS WITH REAR HEATING DUCT*

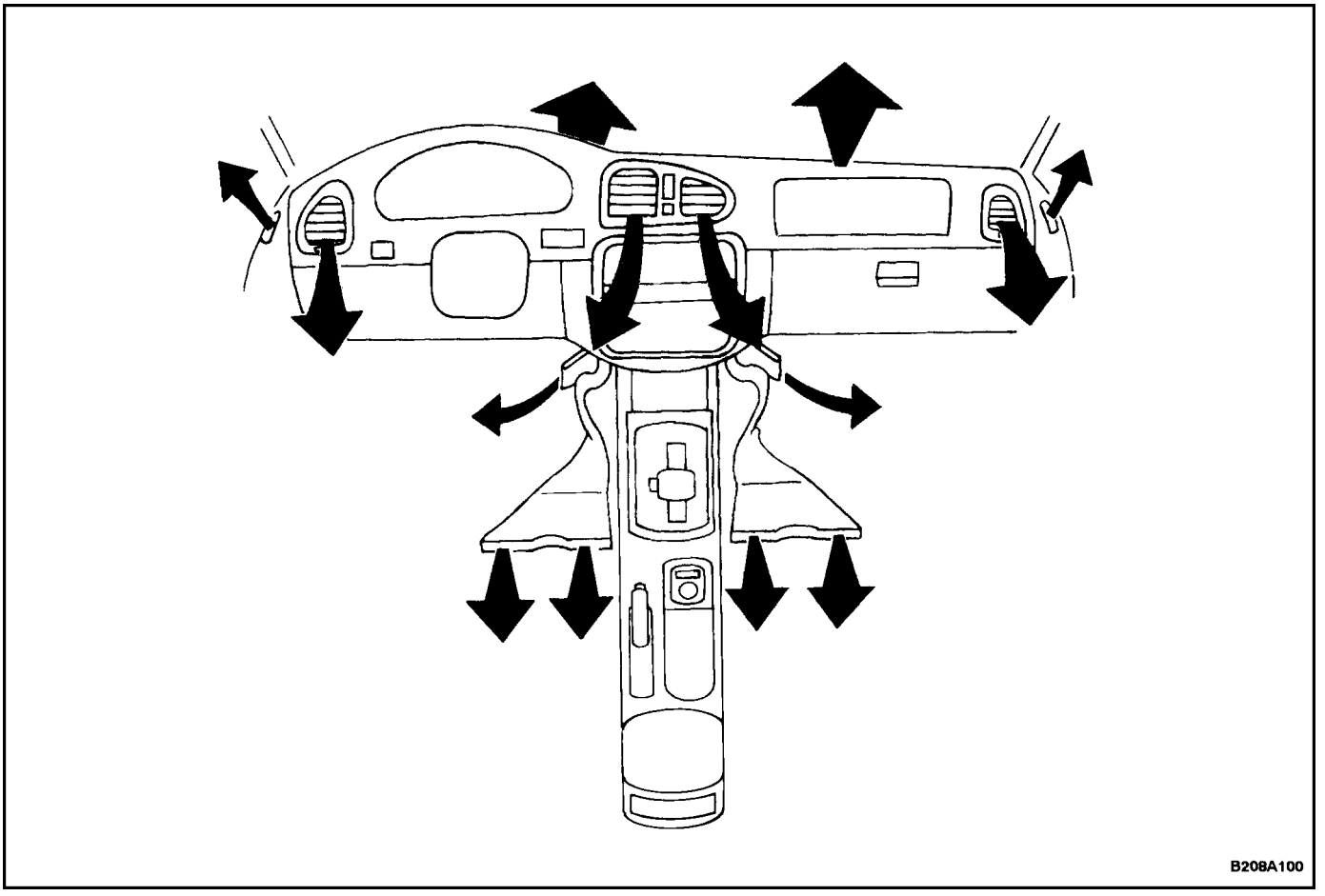

* Rear heating duct available on vehicles in cold climate countries.

DIAGNOSIS

HEATER SYSTEM

INSUFFICIENT HEATING OR DEFROSTING

CAUTION : The cooling system is pressurized when hot. Injury can result from removing the surge tank cap before the engine is sufficiently cool.

Step	Action	Value(s)	Yes	No
1	Verify the customer's complaint. Are the customer's concerns verified?		Go to *Step 2*	System OK
2	Check the coolant level. Is the coolant level correct?		Go to *Step 4*	Go to *Step 3*
3	Add coolant, as needed. Is the repair complete?		System OK	Go to *Step 4*
4	Check the drive belts for tension or damage. Are the drive belts OK?		Go to *Step 6*	Go to *Step 5*
5	Correct any problem with the drive belts. Is the repair complete?		System OK	Go to *Step 6*
6	Check the coolant hoses for leaks or kinks. Are the coolant hoses OK?		Go to *Step 8*	Go to *Step 7*
7	Repair any problem with the coolant hoses. Is the repair complete?		System OK	Go to *Step 8*
8	Check the surge tank cap. Refer to *Section 1D, Engine Cooling.* Is the surge tank cap OK?		Go to *Step 10*	Go to *Step 9*
9	Repair or replace the surge tank cap as needed. Is the repair complete?		System OK	Go to *Step 10*
10	1. Turn the A/C OFF on vehicles equipped with air conditioning. 2. Turn the blower motor switch to 4. 3. Turn the heater control to full hot. 4. Turn the ignition ON. 5. Check for airflow from the vent outlet. Is there heavy airflow from the vent outlet?		Go to *Step 11*	Go to *Step 26*
11	Check for a change in the airflow at various blower speeds. Does the blower speed increase as the switch is turned from 1 to 4?		Go to *Step 12*	Go to "Blower Electrical"
12	1. Turn the A/C OFF. 2. Turn the temperature control knob to full hot. 3. Turn the blower motor switch to 4. 4. With the engine sufficiently cool, remove the surge tank cap. 5. Start the vehicle and idle the engine. 6. Watch for the flow of the coolant. Is the coolant flow visible?		Go to *Step 14*	Go to *Step 13*

Step	Action	Value(s)	Yes	No
13	1. Check for the following problems: • Restriction in the cooling system. • Failed water pump impeller. • Faulty thermostat. 2. Make repairs to the cooling system, as needed. Are the repairs complete?		System OK	Go to *Step 14*
14	1. Install the surge tank cap. 2. With the ignition ON, allow the engine to warm up for approximately 20 minutes. Drive the vehicle at 48 km/h (30 mph). 3. Use a thermometer to measure the ambient air temperature and the discharge air temperature at the heater outlet. Does the heater output meet the minimum values specified?	Refer to ”Heater Temperature Specifications”	Go to *Step 15*	Go to *Step 16*
15	1. Check the vehicle for cold air leaks at the following locations: • Dash. • Heater cases. • Vents. 2. Check under the seat for obstructions. 3. Repair any leaks or obstructions. Are the repairs complete?		System OK	
16	1. Turn the ignition OFF. 2. Turn the temperature control knob from full cold to full hot. 3. Listen for the sound of the temperature door slam just before reaching the end of the travel range of the control knob. Does the door slam?		Go to *Step 18*	Go to *Step 17*
17	1. Check the following aspects of the temperature door: • Travel. • Cables. • Linkage. 2. Verify the accuracy of the temperature controls at full hot. 3. Verify the accuracy of the temperature controls at full cold. Is the repair complete?		System OK	
18	1. Turn the temperature control knob to full hot. 2. Start the vehicle. 3. Check the temperature of the heater inlet hose and the heater outlet hose by feel. The air temperature around the hoses should be at least 29˚C (84˚F). Is the heater inlet hose hot and the heater outlet hose warm?		Go to *Step 19*	Go to *Step 22*
19	Check the thermostat. Refer to *1D, Engine Cooling.* Is the thermostat installed and seated properly?		Go to *Step 20*	Go to *Step 21*

Step	Action	Value(s)	Yes	No
20	Replace the thermostat. Refer to *Section 1D, Engine Cooling.* Is the repair complete?		System OK	
21	Reinstall the thermostat. Is the repair complete?		System OK	
22	Inspect the heater hoses for proper installation. Are the heater hoses reversed?		Go to *Step 23*	Go to *Step 24*
23	Reinstall the heater hoses properly. Is the repair complete?		System OK	
24	1. Back flush the heater core. 2. Drain the cooling system. 3. Replace the coolant. 4. Warm the engine to an average operating temperature. 5. Feel the heater inlet hose and the heater outlet hose. Is the heater inlet hose hot and the heater outlet hose warm?		System OK	Go to *Step 25*
25	Replace the heater core. Is the repair complete?		System OK	
26	Recheck the system using the ”Control Settings/ Correct Results” tests. Refer to ”Improper Air Delivery or No Mode Shift” in this section. Is the repair complete?		System OK	Go to *Step 27*
27	Check for airflow from the defroster or the vent outlets. Is there high airflow from the defroster or vent outlets?		Go to *Step 28*	Go to *Step 29*
28	Check the heater door at the floor and the vent door to get the proper airflow, verify proper operation, and repair, as required. Is the repair complete?		System OK	
29	Turn the mode knob to defrost. Is the defroster airflow OK?		Go to *Step 30*	Go to *Step 31*
30	1. Remove the heater outlet and check for obstructions. 2. Remove any obstructions in the heater outlet. Is the repair complete?		System OK	
31	Check for airflow change at various blower speeds. Does the blower speed increase as the control is turned from 1 to 4?		Go to *Step 32*	Go to ”Blower Electrical”
32	Check for obstructions in the system at the blower inlet and at the air filter, if the vehicle is equipped with one. Are there any obstructions?		Go to *Step 33*	Go to *Step 34*
33	Remove the obstructions in the system at the blower inlet or replace a clogged filter. Are the repairs complete?		System OK	

Step	Action	Value(s)	Yes	No
34	1. Turn the blower motor switch to 4. 2. Turn the temperature control knob from full hot to full cold. 3. Listen for an airflow change. Does the airflow change?		Go to *Step 35*	Go to *Step 36*
35	1. Check the following aspects of the temperature door: • Travel. • Cables. • Linkage. • Control. 2. Verify the accuracy of the temperature control at full hot. Is the repair complete?		Go to *Step 1*	
36	1. Check the system for any obstruction between the blower and the system outlets. 2. Remove any obstruction. Is the repair complete?		Go to *Step 1*	

BLOWER ELECTRICAL

Step	Action	Value(s)	Yes	No
1	Verify the customer's complaint. Are the customer's concerns verified?		Go to *Step 2*	System OK
2	Does the blower run at any speed?		Go to *Step 14*	Go to *Step 3*
3	1. Disconnect the power connector from the blower motor under the dashboard on the passenger's side of the vehicle. 2. Turn the ignition ON. 3. Turn the blower ON. 4. Test the voltage on the connector. The terminal connected to the PPL wire is positive and the terminal connected to the BLK wire is negative. Is this voltage within the specified range?	11–14 v	Go to *Step 4*	Go to *Step 5*
4	Replace the blower motor. Is the repair complete?		System OK	
5	Check fuse EF2 in the engine fuse block. Is the fuse blown?		Go to *Step 6*	Go to *Step 7*
6	1. Turn the ignition ON. 2. Use a short detector to locate the following possible shorts: • From the fuse panel to the blower speed switch. • From the blower speed switch to the heater resistor block. • From the heater resistor block to the blower motor. • From the blower speed switch to the blower HI relay. 3. Repair any short. 4. Replace any blown fuse. Is the repair complete?		System OK	

Step	Action	Value(s)	Yes	No
7	1. Turn the ignition ON. 2. Turn the blower motor switch to 4. 3. Check the blower motor ground. Is ground OK?		Go to *Step 9*	Go to *Step 8*
8	Repair the blower motor ground. Is the repair complete?		System OK	
9	Check the motor connector with a 12–volt test light. Does the test light come on?		Go to *Step 10*	Go to *Step 11*
10	Repair the open in the feed wire from the resistor block to the blower motor. Is the repair complete?		System OK	
11	Use the 12–volt test light to check the power feed terminal on the blower speed switch. Does the light come on?		Go to *Step 12*	Go to *Step 13*
12	Replace the blower speed switch. Is the repair complete?		System OK	
13	Repair the open in the power wire from the blower speed switch to the fuse panel. Is the repair complete?		System OK	
14	Does the blower fail to operate at speed 4?		Go to *Step 15*	Go to *Step 21*
15	Check fuse EF2 in the engine fuse block. Is the fuse blown?		Go to *Step 16*	Go to *Step 17*
16	1. Turn the ignition ON. 2. Turn the blower motor switch to 4. 3. Use a short detector to locate the following possible shorts: • From the engine fuse panel to the blower HI relay. • From the blower HI relay to the blower motor. 4. Repair any short. 5. Replace the EF2. Is the repair complete?		System OK	
17	1. Turn the ignition ON. 2. Turn the blower motor switch to 4. 3. Check for 12 volts on the blower HI relay coil terminal from the blower speed switch terminal A2. Is this voltage present?		Go to *Step 18*	Go to *Step 19*
18	Replace the blower speed switch. Is the repair complete?		System OK	
19	1. Turn the ignition OFF. 2. Check for opens in the following locations: • Fuse EF2 to the blower HI relay. • Blower speed switch to the blower HI relay. • Blower HI relay to ground. • Blower HI relay to the blower motor. 3. Repair any opens. Is the repair complete?		System OK	Go to *Step 20*

Step	Action	Value(s)	Yes	No
20	Replace the blower HI relay. Is the repair complete?		System OK	
21	1. Disconnect the resistor block connector. 2. Connect one lead of a self–powered test light to any single lead on the resistor block. Use the other lead to probe each of the other two terminals. Does the test light illuminate on all terminals?		Go to *Step 23*	Go to *Step 22*
22	Replace the resistor block. Is the repair complete?		System OK	
23	1. Turn the ignition to LOCK. 2. Disconnect the connector from the resistor block. 3. Connect a jumper lead from the positive terminal on the battery to any wire terminal in the connector. 4. Use a 12–volt test light to check for voltage from the corresponding wire on the blower speed switch. 5. Repeat the same test on the other wires. Does the lamp light on all three wires?		Go to *Step 25*	Go to *Step 24*
24	Replace the blower speed switch. Is the repair complete?		System OK	
25	Repair the open in the affected wire. Is the repair complete?		System OK	

IMPROPER AIR DELIVERY OR NO MODE SHIFT

This procedure provides a test of all functions of the heater/defroster unit.

1. Warm up the vehicle.
2. Keep the engine running.
3. Perform the tests outlined in the table below and look for the results indicated.

CONTROL SETTINGS			CORRECT RESULTS				
MODE KNOB	**TEMP. CONTROL**	**BLOWER MOTOR SWITCH**	**BLOWER SPEED**	**POWER VENT OUTLET**	**FLOOR OUTLET**	**DEFROST OUTLET**	**SIDE WINDOW OUTLET**
Vent	Cold	Off	Off	No Airflow	No Airflow	No Airflow	No Airflow
Vent	Cold	4	High	Ambient Airflow	No Airflow	No Airflow	No Airflow
Floor	Cold to Hot	4	High	No Airflow	Cold to Hot Airflow	Minimum Cold to Hot Airflow	Minimum Cold to Hot Airflow
Defroster	Cold to Hot	4	High	No Airflow	Minimum Cold to Hot Airflow	Cold to Hot Airflow	Minimum Cold to Hot Airflow

If any of these settings does not produce the correct results, perform the following diagnostic procedure.

Step	Action	Value(s)	Yes	No
1	Verify the customer's complaint. Are the customer's concerns verified?		Go to *Step 2*	System OK
2	Examine the affected door in the unit for proper attachment to the vacuum actuator. • Check the actuator connection to the door. • Check that the vacuum hose is connected properly. Is everything connected properly?		Go to *Step 4*	Go to *Step 3*
3	Repair, as necessary. Is the repair complete?		System OK	
4	1. Disconnect the actuator at the door. 2. Check the range of the door travel and the effort required to move it. Does the door move freely through its entire range of travel so that it can close at both ends of the range?		Go to *Step 5*	Go to *Step 3*
5	Check the travel of the actuator by turning the control knob with the engine running. Is the actuator travel OK?		Go to *Step 6*	Go to *Step 7*
6	1. Reinstall the actuator. 2. Recheck the system using the "Control Settings/Correct Results" tests in this procedure. Does the system perform properly?		System OK	Go to *Step 9*
7	1. Check the vacuum hose at the control. 2. Check for a broken control. Is there a problem with the vacuum hose or the control?		Go to *Step 8*	Go to *Step 9*
8	Repair the vacuum hose or control, as necessary. Is the repair complete?		System OK	Go to *Step 9*
9	Recheck the system using the "Control Settings/Correct Results" tests in this procedure. Is the repair complete?		System OK	Go to *Step 10*
10	Check for airflow from the defroster or the vent outlets. Is there high airflow from the defroster or the vent outlets?		Go to *Step 11*	Go to *Step 12*
11	Adjust the heater door at the floor and the vent door to get the proper airflow. Is the repair complete?		System OK	
12	Turn the mode knob to defrost. Is the defroster airflow OK?		Go to *Step 13*	Go to *Step 14*
13	1. Remove the heater outlet. 2. Check the heater outlet for obstructions. 3. Remove any obstructions in the heater outlet. Is the repair complete?		System OK	
14	Check the blower speeds fora change in the airflow. Does the blower speed increase as the control is turned from 1 to 4?		Go to *Step 15*	Go to "Blower Electrical"

Step	Action	Value(s)	Yes	No
15	1. Check for obstructions in the system at the blower inlet and check the air filter, if equipped. 2. Remove any obstructions at the blower inlet and replace the filter if it is clogged. Is the repair complete?		System OK	Go to *Step 16*
16	1. Turn the blower motor switch to 4. 2. Turn the temperature control knob from full hot to full cold. 3. Listen for an airflow change. Does the airflow change?		Go to *Step 17*	Go to *Step 18*
17	1. Check the temperature door, the cable, the linkage, and the control. 2. Turn the temperature control knob to full hot. Is the repair complete?		System OK	
18	1. Check the system for any obstruction between the blower and the system outlets. 2. Remove any obstruction between the blower and the system outlets. Is the repair complete?		System OK	

TOO MUCH HEAT

Step	Action	Value(s)	Yes	No
1	Verify the customer's complaint. Are the customer's concerns verified?		Go to *Step 2*	System OK
2	Is there too much heat when the mode switch is in the floor position?		Go to *Step 3*	Go to *Step 9*
3	Is there objectionable defroster bleed?		Go to *Step 4*	Go to *Step 5*
4	1. Check the door travel, the cable, the vacuum actuators, and the linkage for the heater and the defroster. 2. Adjust or repair, as required. Is the repair complete?		System OK	
5	1. Turn the A/C OFF on vehicles equipped with A/C. 2. Turn the blower motor switch to 4. 3. Turn the temperature to full hot. 4. Turn the ignition ON. 5. Start the engine. 6. Check for airflow from the floor outlets. 7. Check the floor outlet attachment. Is the airflow high?		Go to *Step 6*	Go to *Step 8*
6	Check for a change in the airflow at different blower speeds. Does the airflow change as the setting for the blower motor speed switch is changed?		Go to *Step 7*	Go to "Blower Electrical"
7	1. Check the temperature door travel, the cable, and the linkage. 2. Turn the temperature control knob to full cold. 3. Check for full hot. Is the repair complete?		System OK	

Step	Action	Value(s)	Yes	No
8	Adjust or repair the floor/defroster and/or the vent/floor mode. Is the repair complete?		System OK	
9	Is there objectionable vent bleed?		Go to *Step 10*	Go to *Step 15*
10	1. Check the system case for leaks. 2. Check the floor outlet attachment. Are there problems?		Go to *Step 11*	Go to *Step 12*
11	Repair the system case or the floor outlet attachment, as required. Is the repair complete?		System OK	Go to *Step 12*
12	1. Turn the ignition OFF. 2. Turn the temperature control knob from full hot to full cold. 3. Listen for the sound of the temperature door slam just before reaching the end of the travel range at the control knob. Does the door slam?		Go to *Step 13*	Go to *Step 14*
13	Adjust the vent door to allow more ventilation. Is the repair complete?		System OK	
14	1. Check the temperature door travel, the cable, and the linkage. 2. Verify that the temperature door goes to full cold. 3. Check the temperature door for full hot. Is the temperature door travel correct?		System OK	
15	1. Turn the fresh air/recirculating air control to fresh air (indicator lamp OFF). 2. Turn the temperature control knob to full cold. 3. Start the vehicle and allow the engine to warm up. 4. Measure the air temperature at the blower inlet, or cowl, and at the vent air outlet inside the vehicle. Is the outlet air more than 5˚C (41˚F) warmer than the inlet air?		Go to *Step 16*	System OK
16	1. Check for hot air leaks from the engine compartment to the blower inlet. 2. Repair, as needed. Is the repair complete?		System OK	

CONTROLS

Step	Action	Value(s)	Yes	No
1	Verify the customer's complaint. Are the customer's concerns verified?		Go to *Step 2*	System OK
2	Move the controls other than the temperature adjustment. Is excessive effort required to move the controls?		Go to *Step 15*	Go to *Step 3*
3	Move the temperature control knob. Is excessive effort required to move the control knob?		Go to *Step 6*	Go to *Step 4*
4	Turn the blower motor control switch to 4. Does the temperature door move too easily?		Go to *Step 5*	System OK
5	Remove the cable from the controller. Does the control knob turn freely, without the click stops?		Go to *Step 15*	
6	Check the cables for improper routing, kinks, wiring interference, or other instrument panel interference. Is there a problem?		Go to *Step 7*	Go to *Step 8*
7	Repair, as needed. Is the repair complete?		System OK	
8	1. Remove the cable from the temperature door. 2. Cycle the door manually. 3. Check for door binding. Is there any door binding?		Go to *Step 9*	Go to *Step 12*
9	Check the door seal for proper installation. Is the door seal OK?		Go to *Step 10*	Go to *Step 11*
10	1. Check a binding door for shaft alignment, a bent shaft, a bent door, or a warped case. 2. Repair, as needed. Is the repair complete?		System OK	
11	Repair the door seal, as needed. Is the repair complete?		System OK	
12	Check for control binding. Does the control bind?		Go to *Step 14*	Go to *Step 13*
13	1. Reinstall the cable to the door. 2. Check the clearance for the cable–to–dash components. 3. Repair any interference. Is the repair complete?		System OK	
14	1. Remove the cable from the control. 2. Check the control for binding. Does the control bind?		Go to *Step 15*	Go to *Step 16*
15	Replace the control. Is the repair complete?		System OK	
16	Replace the cable. Is the repair complete?		System OK	

BLOWER NOISE

Step	Action	Value(s)	Yes	No
1	Verify the customer's complaint. Are the customer's concerns verified?		Go to *Step 2*	System OK
2	1. Sit inside the vehicle. 2. Close the doors and the windows. 3. Turn the ignition ON. 4. Start the engine. 5. Turn the temperature control knob to full cold. 6. Cycle through the blower speeds, the modes, and the temperature settings in order to find the noise. Is the blower noise constant at high blower speeds or certain modes, but absent at lower speeds or in other modes?		Go to *Step 11*	Go to *Step 3*
3	Check for vibrations from the blower motor and fan assembly at each blower speed by feeling the blower motor housing. Is there excessive vibration?		Go to *Step 6*	Go to *Step 4*
4	1. Remove the blower motor and the fan assembly. Refer to "Blower Motor" in this section. 2. Check for foreign material at the opening of the blower inlet. Is there any foreign material at the blower inlet?		Go to *Step 5*	Go to *Step 6*
5	Remove all foreign material. Is the repair complete?		System OK	Go to *Step 6*
6	1. Examine the blower fan for wear spots, cracked blades, a cracked hub, a loose fan retaining nut, or bad alignment. 2. Examine the blower case for wear spots. Are there any problems?		Go to *Step 7*	Go to *Step 9*
7	Repair, as required. Is the repair complete?		System OK	Go to *Step 8*
8	Replace the motor and the fan assembly. Is the repair complete?		System OK	Go to *Step 9*
9	If the noise is a click, tick or whine, replace the motor. Is the repair complete?		System OK	Go to *Step 10*
10	Reinstall the original motor. Is the problem still present?		Go to *Step 11*	System OK
11	1. Turn the blower motor switch to 4. 2. Check full hot to full cold temperature positions in the defrost, the floor, and the vent modes. Is the noise present in the defrost mode only?		Go to *Step 12*	Go to *Step 13*
12	1. Check the ducts for obstructions or foreign materials. 2. Remove any obstructions or foreign materials. 3. Check the floor/defroster door seals. 4. Repair or replace, as needed. Is the repair complete?		System OK	
13	Is the noise present in the floor mode only?		Go to *Step 12*	Go to *Step 14*
14	Is the noise present in the vent mode only?		Go to *Step 15*	Go to *Step 16*

Step	Action	Value(s)	Yes	No
15	1. Check the ducts for obstructions or foreign materials. 2. Remove any obstructions or foreign materials. 3. Check the vent door seals. 4. Repair or replace, as needed. Is the repair complete?		System OK	
16	Is the noise present in all modes, but not all temperature positions?		Go to *Step 17*	Go to *Step 18*
17	1. Check the temperature door seals. 2. Repair or replace, as needed. Is the repair complete?		System OK	
18	1. Check the system for obstructions or foreign materials between the fan and the temperature door. 2. Repair or replace, as needed. Is the repair complete?		System OK	Go to *Step 2*

MAINTENANCE AND REPAIR

ON–VEHICLE SERVICE

TEMPERATURE CABLE ADJUSTMENT

Because the cable and the cable housings have fixed lengths, it is impossible tomake a temperature cable adjustment.

In addition, the heater/air distributor case linkage cannot be adjusted.

If a malfunction is suspected, verify the proper operation of the controller and themechanical doors for the heater/air distributor case assembly.

TEMPERATURE CONTROL CABLE

Removal Procedure

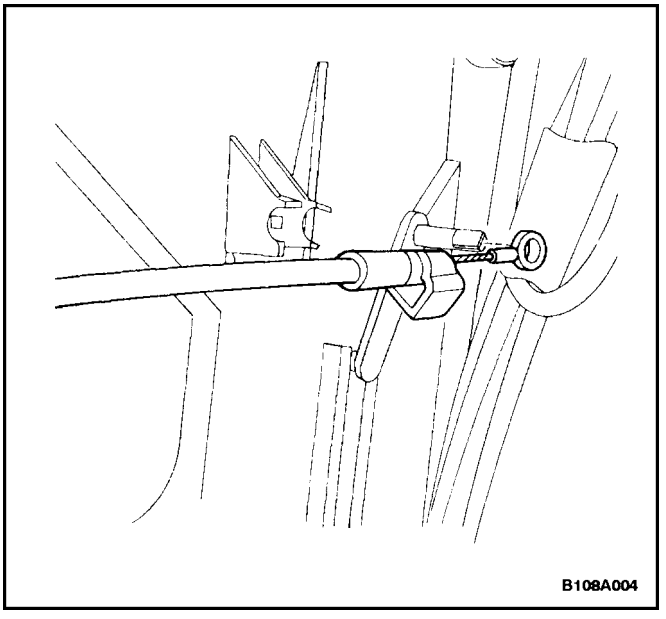

1. Disconnect the negative battery cable.
2. Remove the glove box. Refer to *Section 9E, Instrumentation/Driver Information.*
3. Slide the cable eyelet off the post on the temperature door lever.
4. Disconnect the cable retainer from the blower housing.

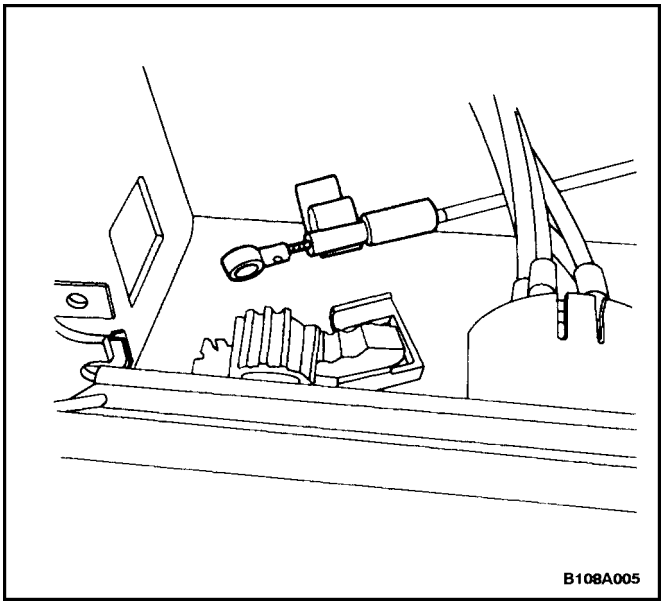

5. Remove the audio system trim plate. Refer to *Section 9F, Audio Systems.*
6. Remove the four controller retaining screws.
7. Pull out the controller to provide clearance for removal of the temperature control cable.
8. Disconnect the temperature control cable eyelet from the post on the controller.
9. Snap the cable housing connector out of the slide position on the controller.

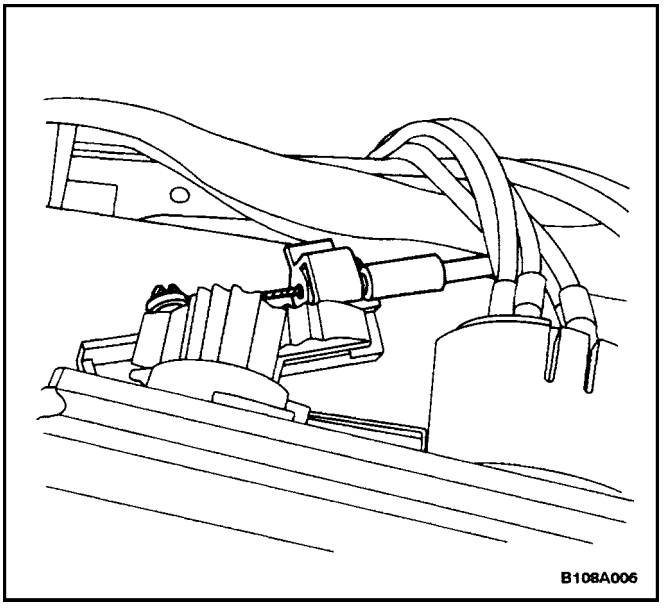

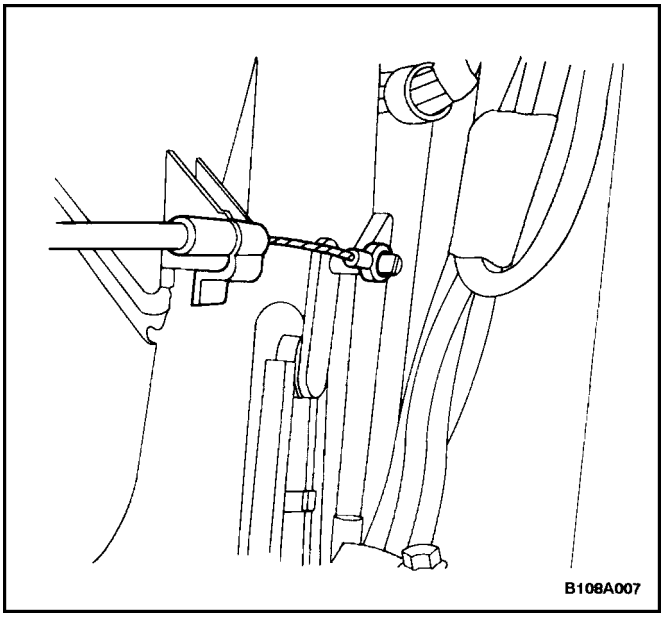

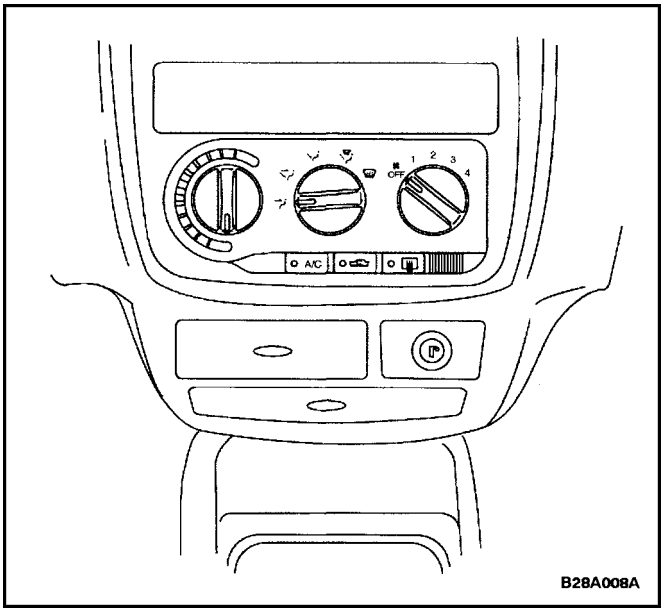

Installation Procedure

1. Install the temperature control cable eyelet to the post on the controller.
2. Snap the cable housing connector to the slide position on the controller.
3. Gently insert the controller into position on the center console.
4. Install the four controller retaining screws.

   Tighten

   Tighten the HVAC controller retaining screws to 2 N•m (18 lb–in).
5. Install the temperature control cable eyelet to the post on the temperature door lever.
6. Snap the cable retainer to the blower housing.
7. Move the temperature control to verify the smooth operation and function of the door and the cable.
8. Install the audio system trim plate. Refer to *Section 9F, Audio Systems.*
9. Connect the negative battery cable.
10. Operate the heating and cooling systems to verify proper function.
11. Install the glove box. Refer to *Section 9E, Instrumentation/Driver Information.*

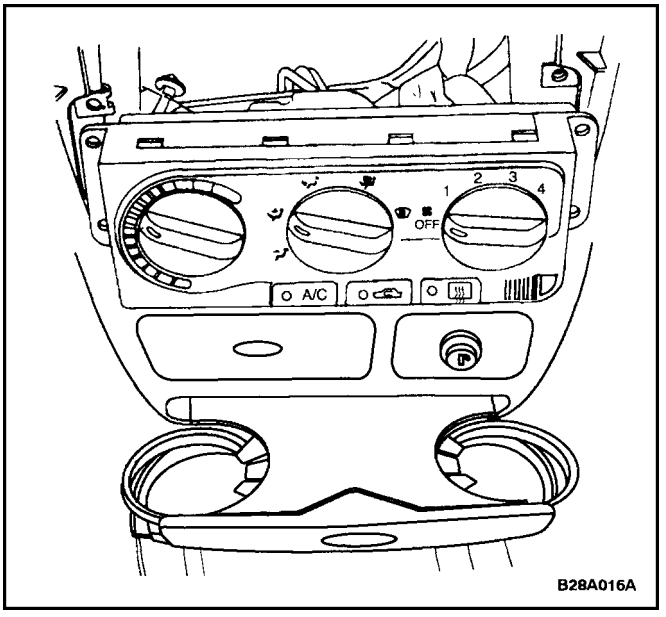

CONTROL ASSEMBLY

Removal Procedure

1. Disconnect the negative battery cable.
2. Remove the audio system trim plate. Refer to *Section 9F, Audio Systems.*
3. Remove the four controller retaining screws.
4. Pull out the controller to provide clearance for the removal of the temperature control cable.

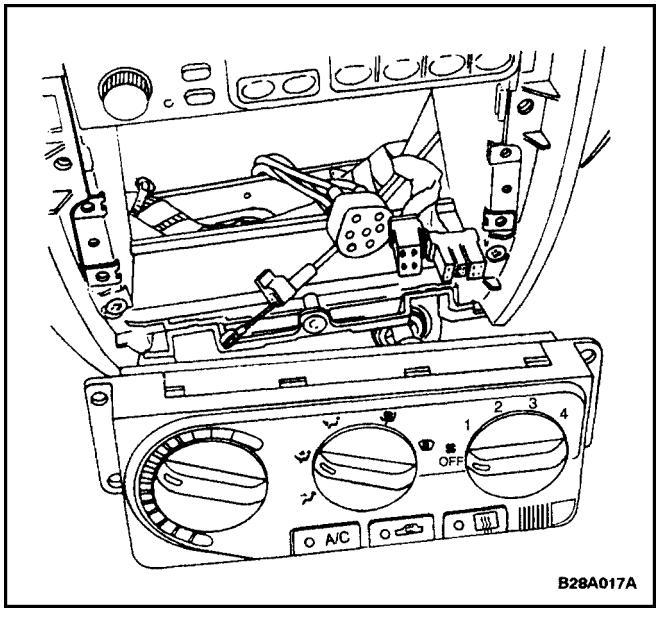

5. Disconnect the temperature control cable by gently prying the cable eyelet from the post on the controller. Unsnap the cable housing from the mechanical slide. Note the location of the cable and the housing for ease of installation.
6. Disconnect the electrical connectors.
7. Remove the vacuum hose connection block from the mode control switch.

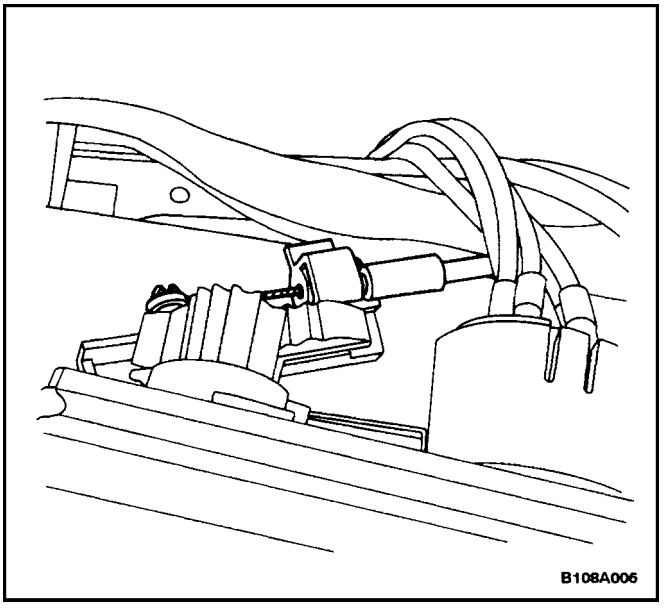

Installation Procedure

1. Connect the vacuum hose connection block to the mode control switch.
2. Press the cable end eyelet onto the post on the controller.
3. Attach the mechanical cable housing to its original control position.
4. Connect the electrical connectors to the sockets on the back of the controller.

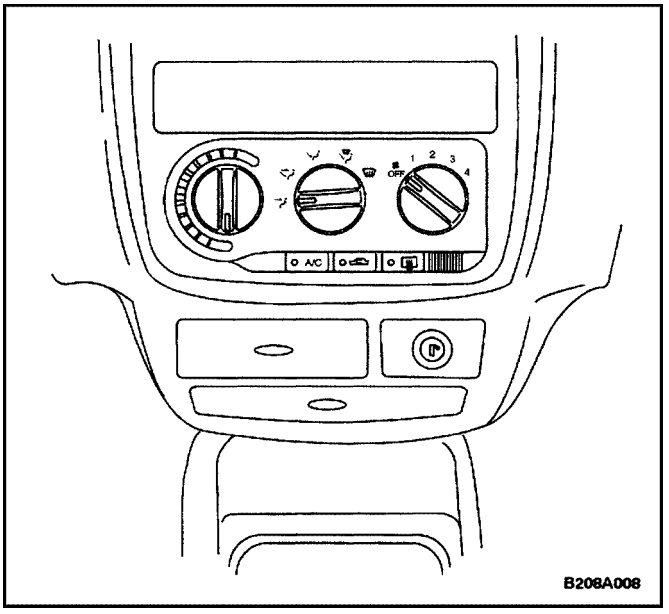

5. Gently insert the controller into position on the center console.
6. Install the retaining screws.

   Tighten

   Tighten the HVAC controller retaining screws to 2 N•m (18 lb–in).
7. Connect the negative battery cable.
8. Confirm the proper operation of the controller by moving it through all of the controller's possible functioning positions.
9. Install the audio system trim plate. Refer to *Section 9F, Audio Systems.*

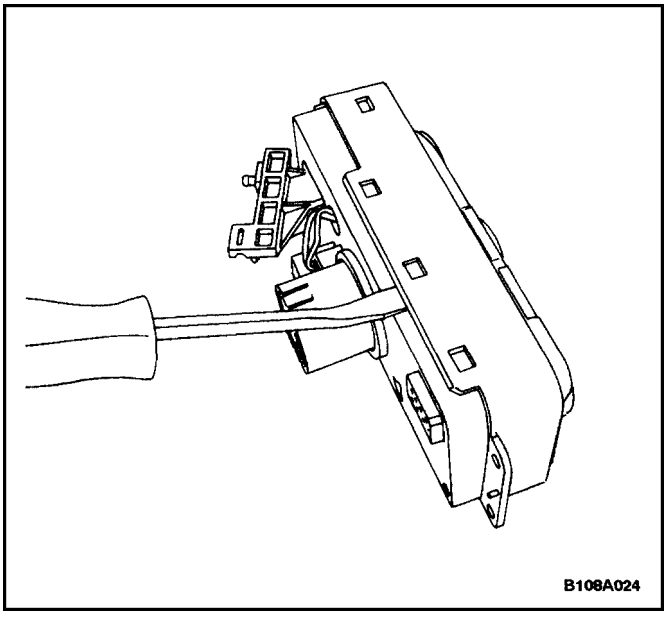

CONTROL ASSEMBLY KNOB LIGHTING

Removal Procedure

1. Disconnect the negative battery cable.
2. Remove the heating and ventilation system control assembly. Refer to "Control Assembly" in this section
3. Disconnect the small connector to the vacuum control switch on the rear of the assembly case.
4. Separate the control assembly case halves.

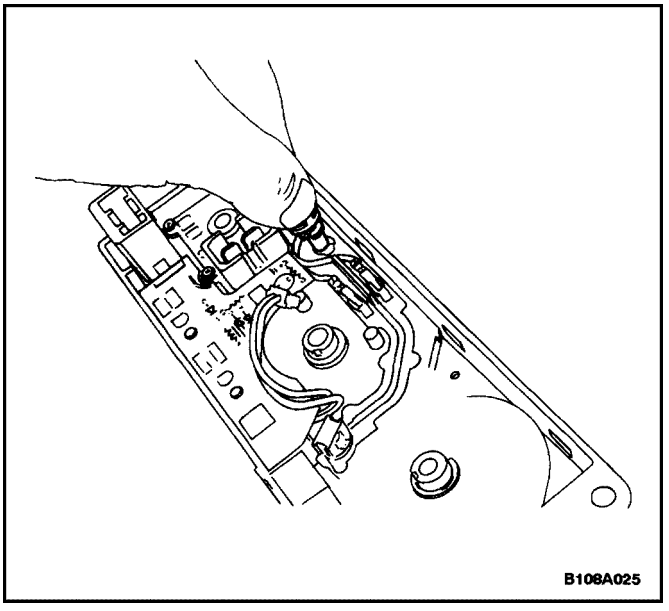

5. Turn the bulb holder to the left and pull out the bulb.

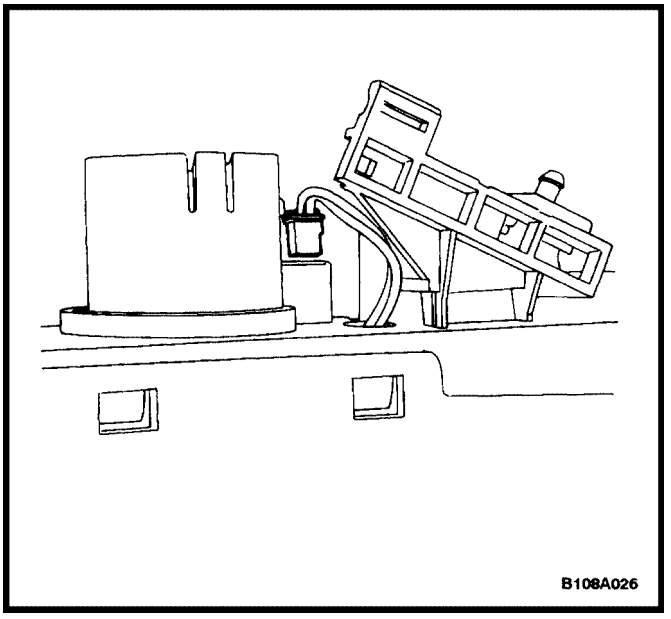

Installation Procedure

1. Install the bulb into the holder and turn the bulb to the right.
2. Install the control assembly case halves.
   - Pass the connector for the vacuum switch through the hole in the rear assembly case part.
   - Be sure to align the flats onmating control shafts of the two case halves.
3. Install the connector into the vacuum control switch.

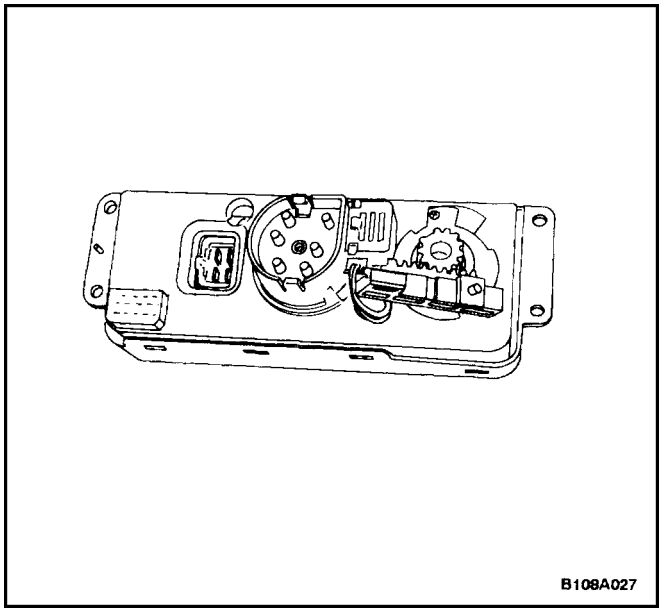

4. Install the control assembly. Refer to ”Control Assembly” in this section.
5. Connect the negative battery cable.
6. Check the knob light for proper operation.

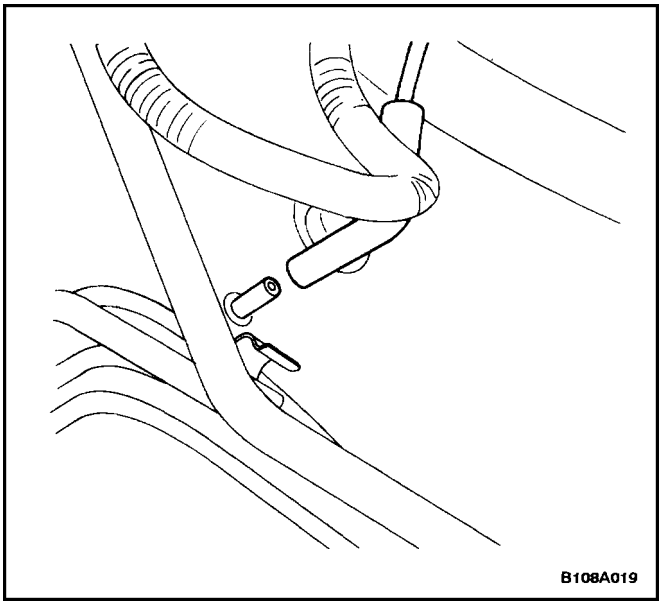

HEATER/AIR DISTRIBUTOR CASE ASSEMBLY

Removal Procedure

1. Disconnect the negative battery cable.
2. Remove the instrument panel carrier assembly. Refer to *Section 9E, Instrumentation/Driver Information.*
3. Drain the cooling system. Refer to *Section 1D, Engine Cooling.*
4. Turn the vacuum hose and pull the hose off.

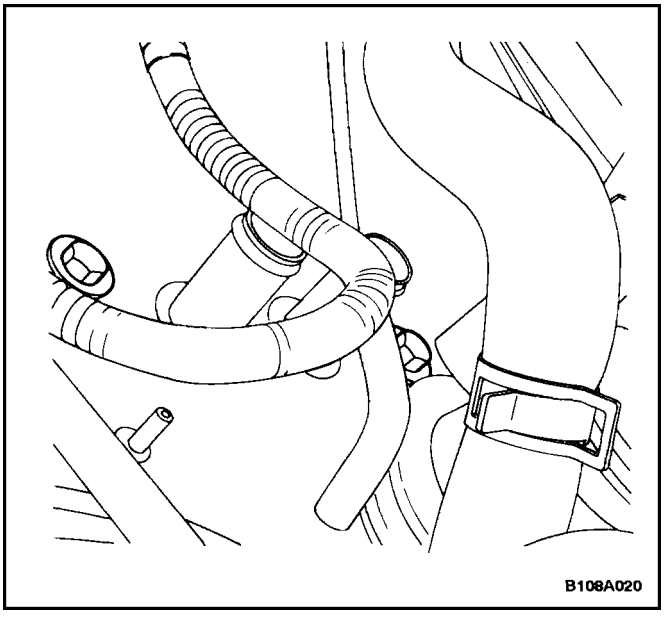

5. Compress the heater hose clamps at the bulkhead and slide the clamps toward the engine.
6. Remove the two heater hoses from the core lines at the bulkhead.
7. Remove the screws that secure the heater/air distributor case assembly to the bulkhead on either side of the heater core pipes.

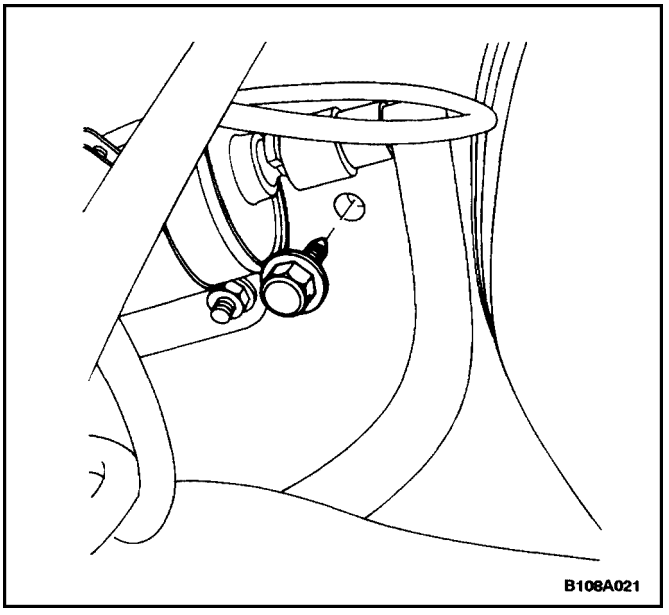

8. Remove the heater/air distributor case screw located above the fuel filter on the engine compartment side of the bulkhead.

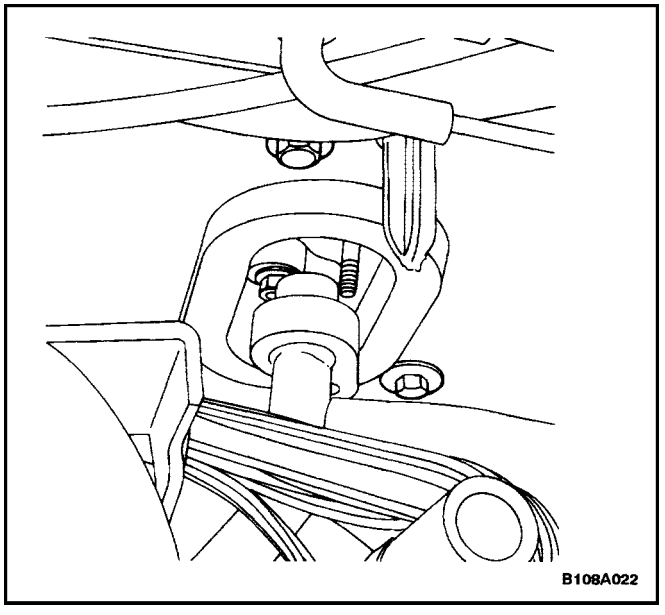

9. Have an assistant support the heater/air distributor case from inside the vehicle.

Notice : Handle the case carefully to avoid damage to the mechanical door operating linkage.

10. Remove the screws from the connecting block opening mount on the engine compartment side of the bulkhead on the right–hand side of the vehicle. The case assembly will start to drop.
11. Pull the heater/air distributor case straight away from the bulkhead to free the alignment pegs from their openings in the bulkhead.
12. Remove the heater/air distributor case assembly from the vehicle.

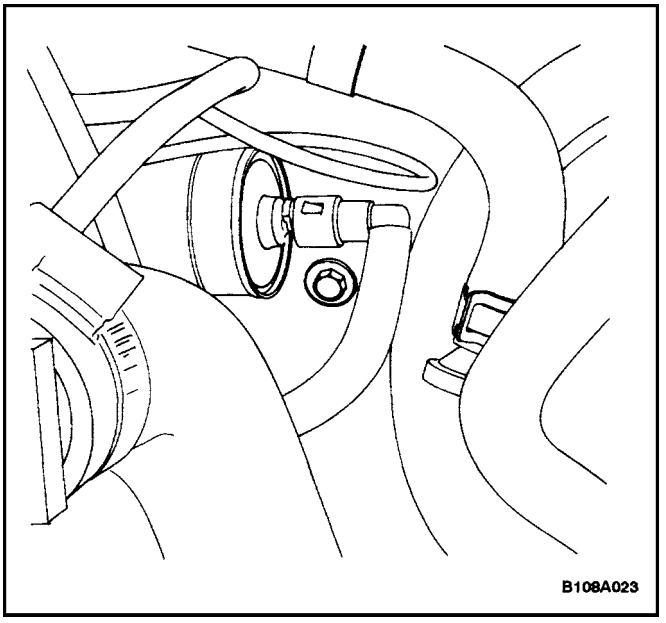

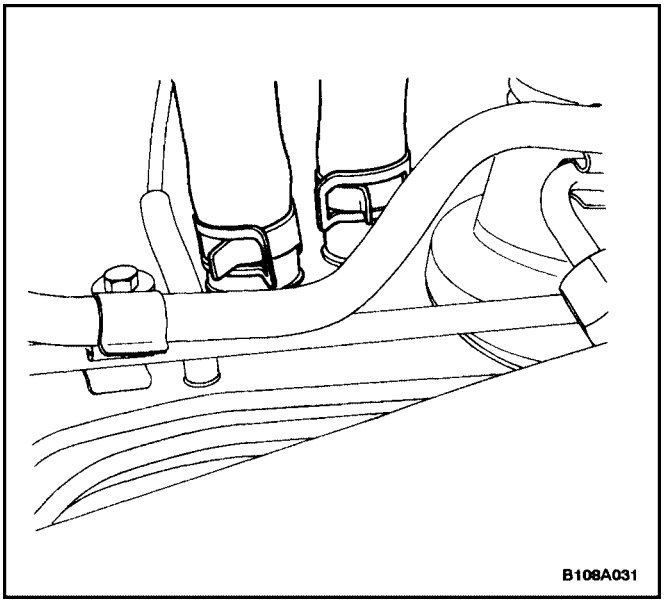

Installation Procedure

1. Position the heater/air distributor case in the vehicle.

Notice : Avoid damaging the heater core tubes by making sure they do not contact the bulkhead opening.

2. Slowly raise the heater/air distributor case into position.
   - Insert the guide pegs through their holes in the bulkhead.
   - Hold the case in position against the bulkhead while installing and tightening the screws on the engine side of the bulkhead.
3. Install the screws through the bulkhead from the engine compartment side.
   - Install the two screws at the connecting block mount.
   - Install the screw above the fuel filter.

Tighten

Tighten the heater/air distributor case assembly screws to 4 N•m (35 lb–in).

4. Install the two heater/air distributor case screws that flank the heater core pipes.

Tighten

Tighten the heater/air distributor case assembly screws to 4 N•m (35 lb–in).

5. Install the vacuum hose.
6. Install the two heater hoses.
7. Slide the heater hose clamps into position.

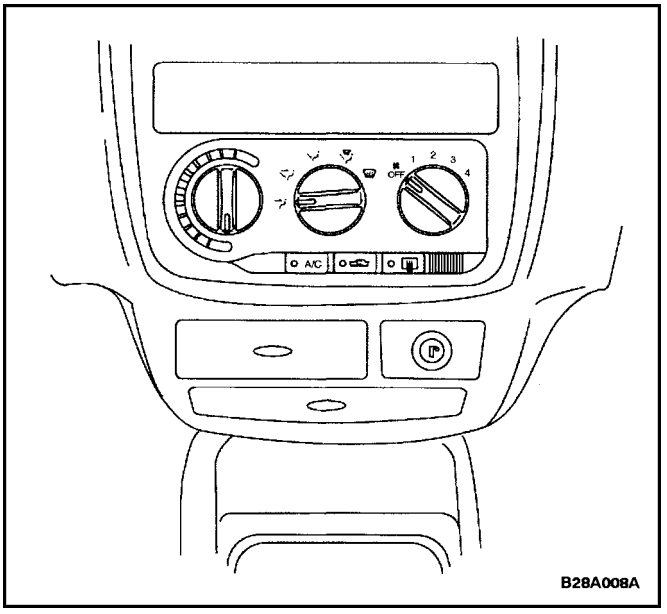

8. Install the instrument panel carrier assembly. Refer to *Section 9E, Instrumentation/Driver Information.*
9. Fill the cooling system. Refer to *Section 1D, Engine Cooling.*
10. Connect the negative battery cable.

Notice : If the vehicle is equipped with air conditioning, refer to *Section7B, Heater/Air Distributor Case Assembly.*

11. Operate the controls to verify the proper function of the heating and ventilating systems.

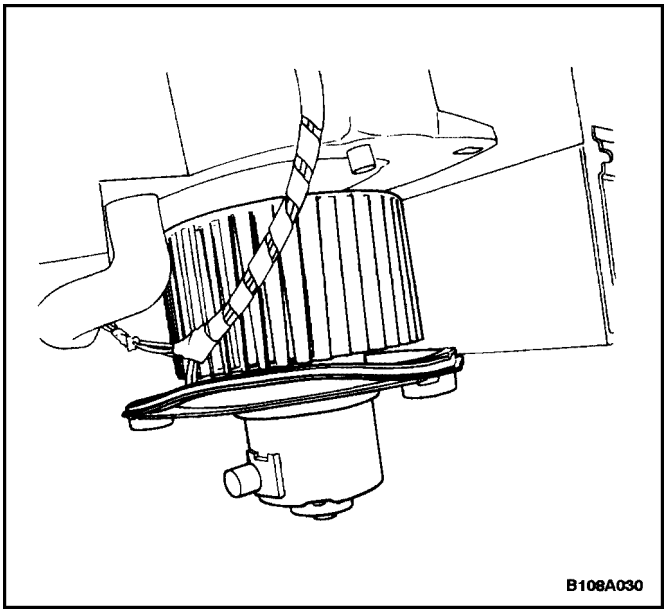

BLOWER MOTOR

Removal Procedure

1. Disconnect the negative battery cable.
2. Remove the glove box. Refer to *9E, Instrumentation/Driver Information.*
3. Remove the footwell upper cover. Refer to *Section 9E, Instrumentation/Driver Information.*
4. Disconnect the blower motor electrical connector.
5. Remove the blower motor cooling hose.
6. Remove the screws that secure the motor to the heater/air distributor case.
7. Remove the motor, the seal, and the shock mount pads from the heater/air distributor case by gently pulling the motor straight down and out.

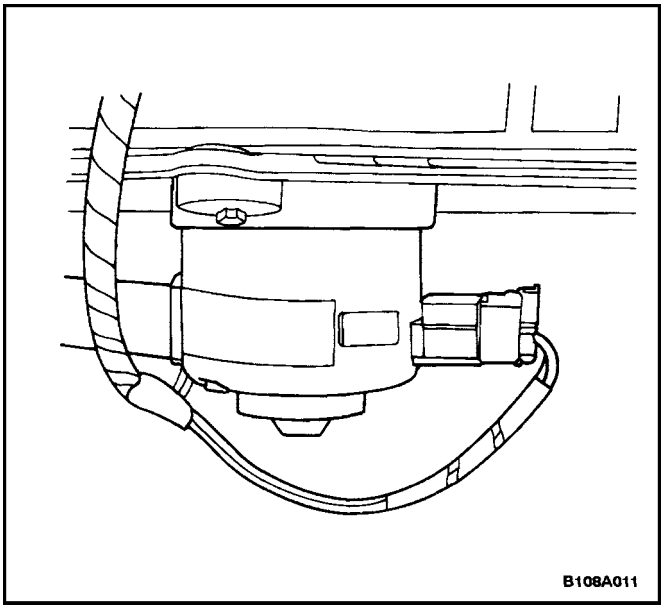

Installation Procedure

1. Install the blower motor and the seal with the shock mount pads in the heater/air distributor case. Hold the blower motor in position.
2. Install the screws to secure the blower motor to the heater/air distributor case.

Tighten

Tighten the blower motor retaining screws to 6 N•m (53 lb–in).

3. Install the blower motor cooling hose.
4. Connect the blower motor electrical connector.
5. Connect the negative battery cable.
6. Confirm that the blower motor operates properly.
7. Replace the footwell upper cover. Refer to *Section 9E, Instrumentation/Driver Information.*
8. Replace the glove box. Refer to *Section 9E, Instrumentation/Driver Information.*

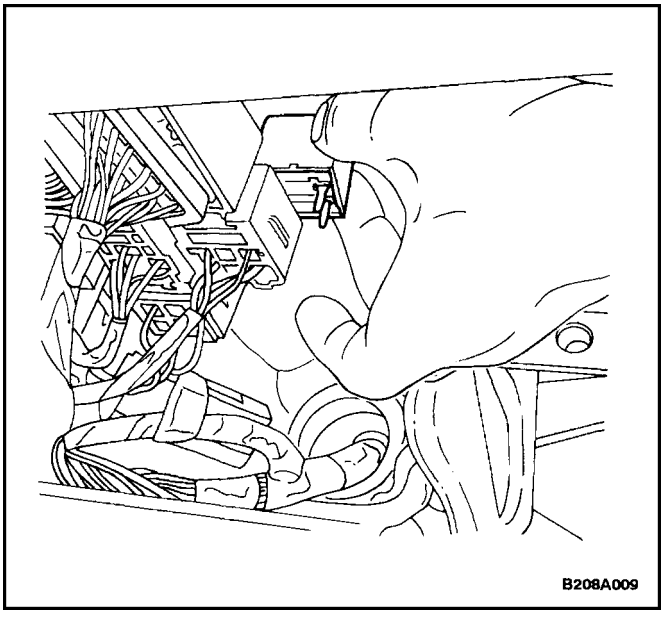

HIGH–BLOWER RELAY

Removal Procedure

1. Disconnect the negative battery cable.
2. Locate the high–blower relay in the connector box under the driver's side of the instrument panel. Note the colors of the wires entering the connector from underneath: RED, BLK, PPL, ORN.
3. Pull out the relay.

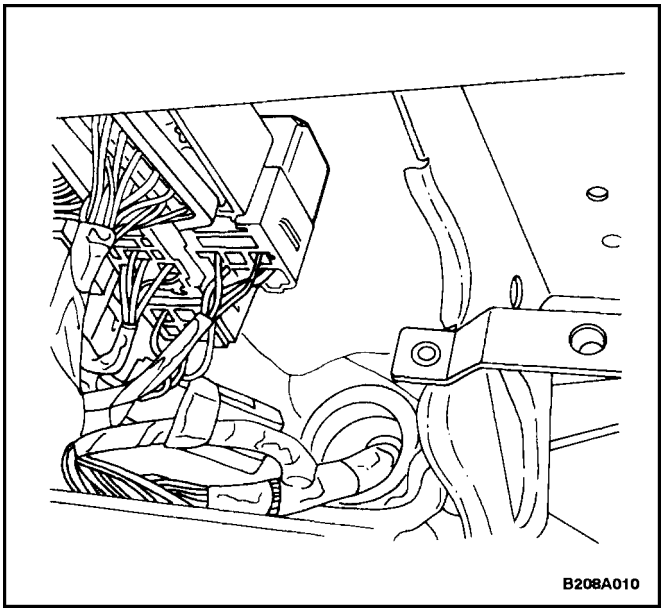

Installation Procedure

1. Align the relay contacts with the relay terminal slots.
2. Push the relay firmly into the base. The relay must be seated and flush with the base edge.
3. Connect the negative battery cable.

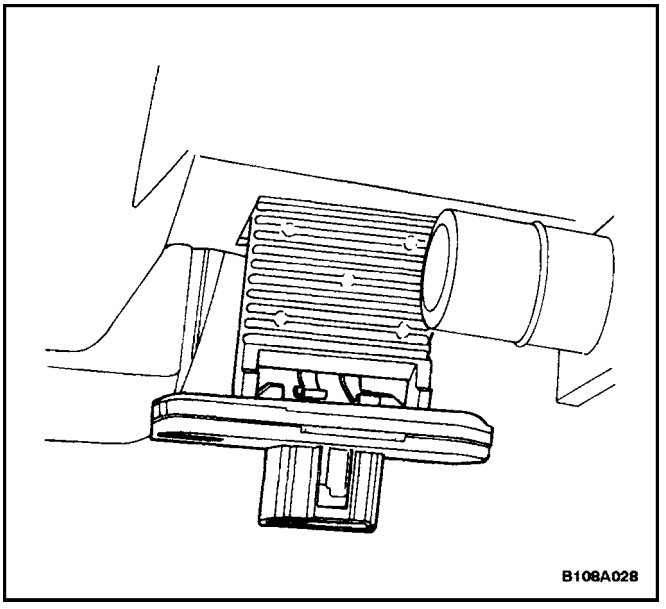

BLOWER RESISTOR

Removal Procedure

1. Disconnect the negative battery cable.
2. Remove the glove box. Refer to *Section 9E, Instrumentation/Driver Information.*
3. Remove the footwell upper cover. Refer to *Section 9E, Instrumentation/Driver Information.*
4. Disconnect the electrical connector at the resistor.
5. Remove the mount screws from the resistor.
6. Remove the resistor from the heater/air distributor case by gently pulling the resistor downward.

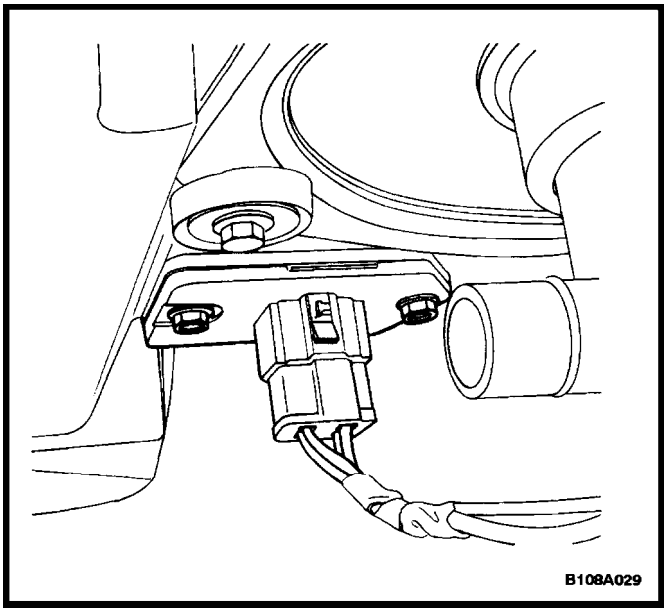

Installation Procedure

1. Install the new resistor into the heater/air distributor case with the screws.

   Tighten

   Tighten the blower resistor retaining screws to 6 N•m (53 lb–in).
2. Connect the electrical connector at the resistor.
3. Connect the negative battery cable.
4. Confirm the proper performance of the blower.
5. Replace the footwell upper cover. Refer to *Section 9E, Instrumentation/Driver Information.*
6. Replace the glove box. Refer to *Section 9E, Instrumentation/Driver Information.*

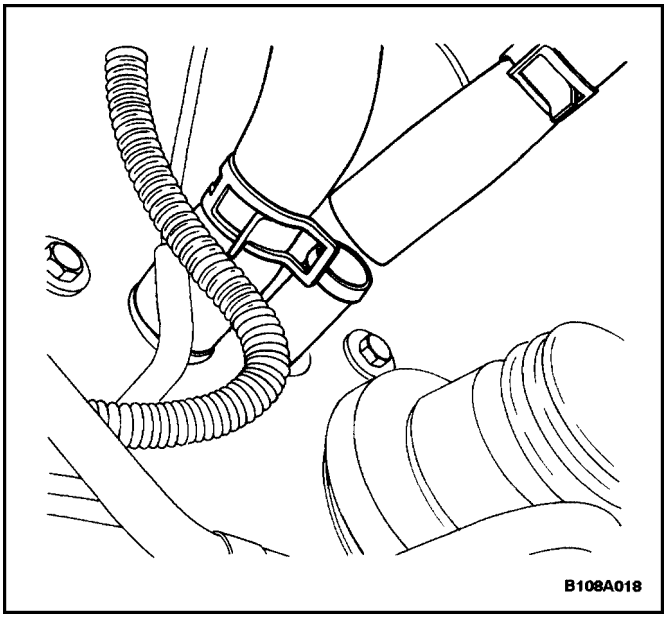

HEATER HOSES

Removal Procedure

1. Partially drain the cooling system. Refer to *Section 1D, Engine Cooling.*
2. Compress and slide the two heater hose spring clamps at the bulkhead rearward.
3. Gently twist the hose from the left to the right and back again to loosen the bond between the hose and the tube.
4. Remove the end of the hose from the tube.
5. Repeat Steps 3 and 4 with the other hose.
6. Compress the heater hose spring clamp on the inlet coolant line and slide the clamp rearward.
7. Remove the heater hose from the vehicle.
8. Compress the heater hose spring clamp at the connection below the intake manifold and slide the clamp rearward.
9. Remove the heater hose from the vehicle.

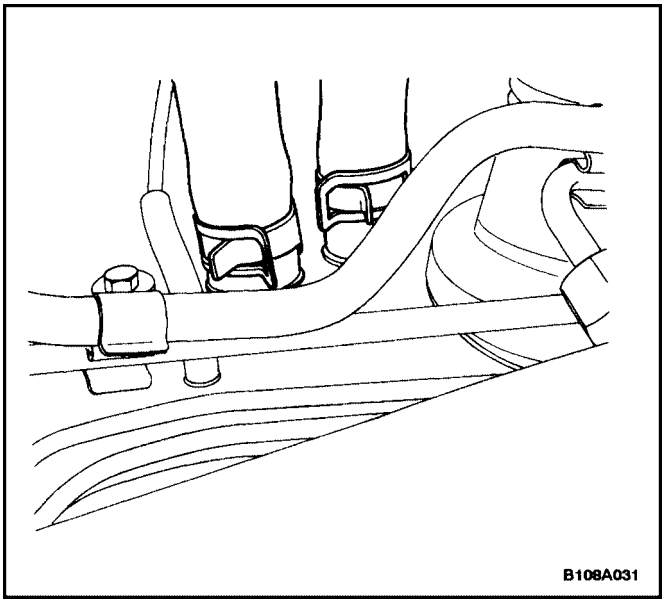

Installation Procedure

1. Install the left heater hose to the coolant inlet line fitting. Slide the end of the heater hose over the coolant fitting until the hose is seated.
2. Install the right heater hose to the fitting below the intake manifold. Slide the end of the heater hose over the fitting until it is seated.
3. Install and seat the other end of each heater hose.
4. Compress and slide the spring clamps into position on the heater hoses and release the tension.
5. Fill the cooling system. Refer to *Section 1D, Engine Cooling.*
6. Check the hoses for leaks.

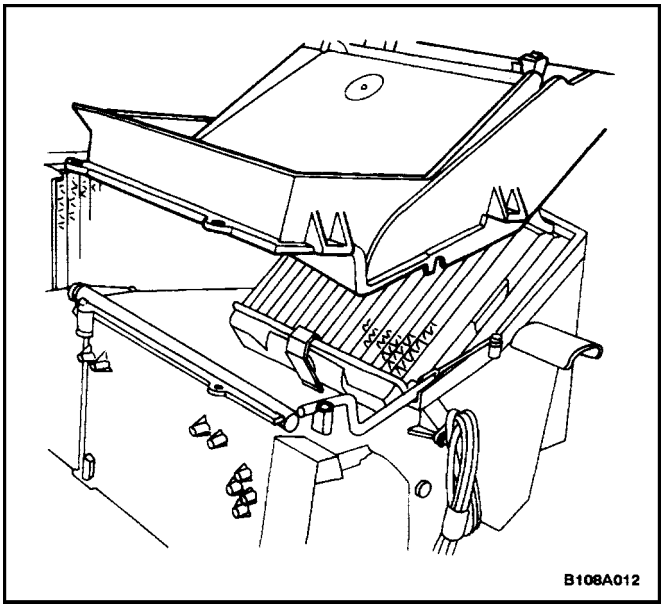

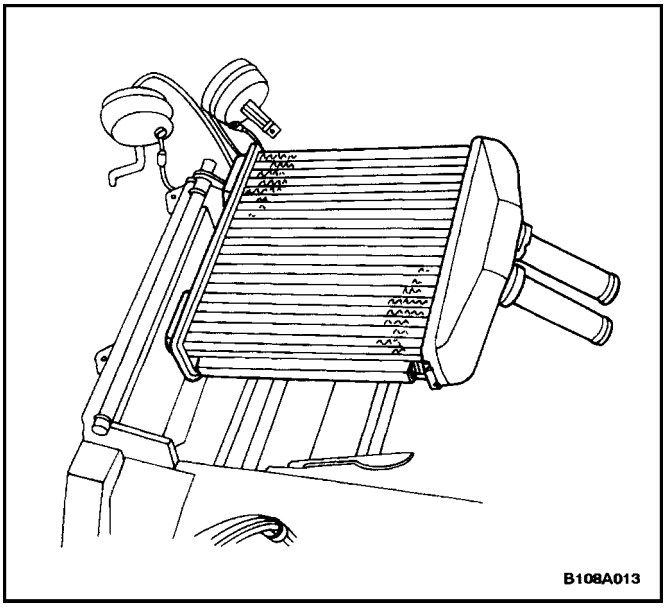

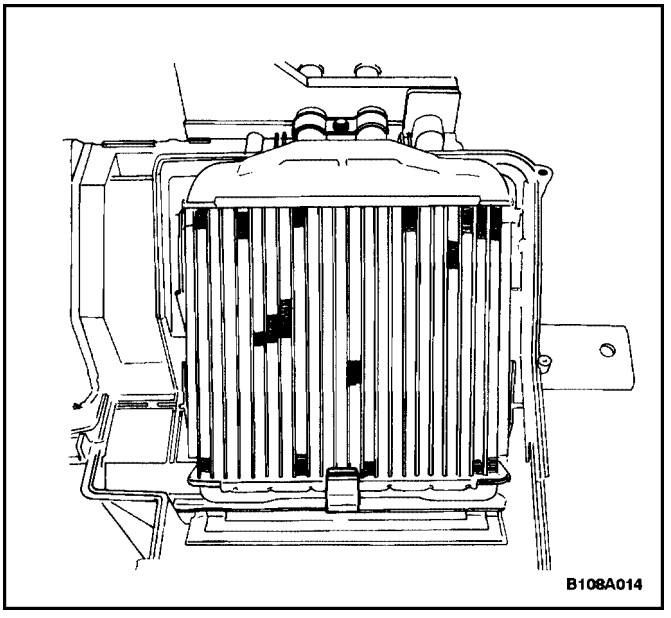

HEATER CORE

Removal Procedure

1. Disconnect the negative battery cable.
2. Remove the instrument panel from the vehicle. Refer to *Section 9E, Instrumentation/Driver Information.*
3. Remove the heater/air distributor case from the vehicle. Refer to "Heater/Air Distributor Case Assembly" in this section.
4. Disconnect the vacuum actuators from the vent/floor door and the defroster door.
5. Remove the vacuum actuators from the heater/air distributor case.
6. Remove the screws that secure the heater core cover to the heater/air distributor case assembly.
7. Slowly separate the lower heater core cover from the rest of the assembly.
8. Remove the screw and the bracket clamp that secure the heater core lines to the case.
9. Remove the spring clamp that secures the heater core body to the case.
10. Remove the heater core from the case.

Installation Procedure

1. Install the heater core into the case.
2. Secure the heater core lines to the case with the retaining bracket clamp and the screw.

   Tighten

   Tighten the heater core retaining bracket screw to N•m (lb–in).
3. Install the heater core body with the retaining spring clamp.

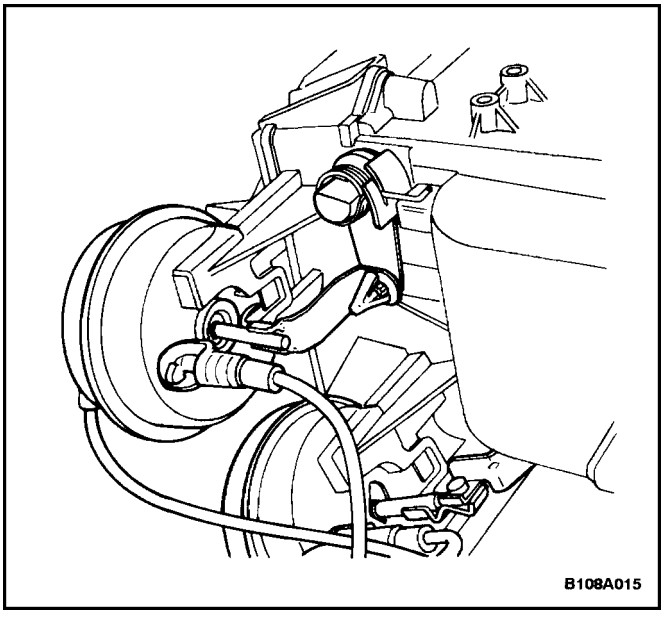

4. Install the heater core cover.
5. Install and tighten the screws that secure the heater core cover to the heater/air distributor case assembly.

   Tighten

   Tighten the heater core cover screws to N•m (lb–in).
6. Install the actuators for the vent/floor and the defroster doors.
7. Install the heater/air distributor case. Refer to ”Heater/Air Distributor Case Assembly” in this section.
8. Install the instrument panel. Refer to *Section 9E, Instrumentation/Driver Information.*
9. Fill the cooling system.
10. Connect the negative battery cable.

REAR HEATING DUCT

Some vehicles are equipped with rear seat heating ducts. Should there be no airflow to the rear, look for any obstructions, such as items on the floor under the front seats. Also, check for air leaks between the heater/air distributor assembly and the rear ducts.

GENERAL DESCRIPTION AND SYSTEM OPERATION

HEATING AND VENTILATION SYSTEMS

The base heater system is designed to provide heating, ventilation, windshield defrosting, and side window defogging. On some vehicles, it also provides heat directly to the rear seat area.

The heater and fan assembly blower regulates the airflow from the air inlet for further processing and distribution.

The heater core transfers the heat from the engine coolant to the inlet air.

The temperature door regulates the amount of air that passes through the heater core. The temperature door also controls the temperature of air by controlling the mix of heated air with ambient air.

The mode door regulates the flow and the distribution of processed air to the heater ducts and to the defroster ducts.

The console–mounted heating and ventilation control panel contains three rotary control knobs and two push control knobs which operate as follows:

Rotary Temperature Control Knob

- Actuates by cable.
- Raises the temperature of air entering the vehicle by rotation toward the right, or the red portion of the knob.

Rotary Mode Control Knob

- Actuates by vacuum.
- Regulates the air distribution between the windshield, the instrument panel, and the floor vents.

Rotary Blower Control Knob

- Turns ON to operate the blower motor at four speeds.
- Turns OFF to stop the blower.
- Operates completely independently from both the mode control knob and the temperature control knob.
- Changes the fan speed in any mode and at any temperature setting.

Rear Window Defogger Push Knob

- Controls the rear window defogger.
- Turns On the rear window defogger when the push knob is pressed and illuminates the indicator lamp.

Fresh Air Control Push Knob

- Operates by vacuum.
- Switches between recirculating the passenger compartment air and bringing outside air into the passenger compartment.
- Is normally in the fresh air mode.
- Illuminates the indicator lamp when in the recirculating mode.

SECTION : 7B

MANUAL CONTROL HEATING, VENTILATION, AND AIR CONDITIONING SYSTEM

CAUTION : Disconnect the negative battery cable before removing or installing any electrical unit or when a tool or equipment could easily come in contact with exposed electrical terminals. Disconnecting this cable will help prevent personal injury and damage to the vehicle. The ignition must also be in LOCK unless otherwise noted.

TABLE OF CONTENTS

SPECIFICATIONS 7B–2
A/C SYSTEM CHARGING CAPACITY 7B–2
FASTENER TIGHTENING SPECIFICATIONS 7B–2
SPECIAL TOOLS 7B–3
SPECIAL TOOLS TABLE 7B–3
SCHEMATIC AND ROUTING DIAGRAMS 7B–6
A/C SYSTEM – TYPICAL 7B–6
AIRFLOW – TYPICAL 7B–7
A/C SCHEMATIC 7B–8
DIAGNOSIS 7B–9
GENERAL DIAGNOSIS 7B–9
TESTING THE REFRIGERANT SYSTEM 7B–9
INSUFFICIENT COOLING ”QUICK CHECK” PROCEDURE 7B–9
A/C PERFORMANCE TEST 7B–10
PRESSURE–TEMPERATURE RELATIONSHIP OF R–134A 7B–11
LEAK TESTING THEREFRIGERANT SYSTEM 7B–12
V5 SYSTEM AIR CONDITIONING DIAGNOSIS 7B–13
INSUFFICIENT COOLING DIAGNOSIS 7B–13
SYMPTOM DIAGNOSIS 7B–17
PRESSURE TEST CHART (R–134a SYSTEM) 7B–17
LOW AND HIGH SIDE PRESSURE RELATIONSHIP CHART 7B–19
MAINTENANCE AND REPAIR 7B–20
ON–VEHICLE SERVICE 7B–20
GENERAL A/C SYSTEM SERVICE PROCEDURES 7B–20
O–RING REPLACEMENT 7B–20
HANDLING REFRIGERANT 7B–20
HANDLING OF REFRIGERANT LINES AND FITTINGS 7B–20
MAINTAINING CHEMICAL STABILITY IN THE REFRIGERATION SYSTEM 7B–20
DISCHARGING, ADDING OIL, EVACUATING, AND CHARGING PROCEDURES FOR A/C SYSTEM 7B–21
SERVICEABLE COMPONENTS 7B–23
TEMPERATURE CONTROL CABLE 7B–23
CONTROL ASSEMBLY 7B–23
CONTROL ASSEMBLY KNOB LIGHTING 7B–23
BLOWER MOTOR 7B–23
HIGH–BLOWER RELAY 7B–23
BLOWER RESISTOR 7B–23
CONTROL ASSEMBLY SWITCHES 7B–23
A/C PRESSURE TRANSDUCER 7B–24
A/C COMPRESSOR RELAY 7B–25
AIR FILTER 7B–26
A/C CONTROL VACUUM TANK 7B–27
A/C EXPANSION VALVE 7B–28
HEATER/AIR DISTRIBUTOR CASE ASSEMBLY 7B–29
A/C HIGH–PRESSURE PIPE LINE 7B–30
HEATER HOSES 7B–32
HEATER CORE 7B–32
EVAPORATOR CORE 7B–32
A/C SUCTION HOSE ASSEMBLY 7B–34
RECEIVER–DRYER 7B–35
COMPRESSOR 7B–36
CONDENSER 7B–38
UNIT REPAIR 7B–40
COMPONENT LOCATOR 7B–40
V5 COMPRESSOR 7B–40
V5 AIR CONDITIONING COMPRESSOR OVERHAUL 7B–42

CLUTCH PLATE AND HUB ASSEMBLY 7B–42
CLUTCH ROTOR AND BEARING 7B–44
CLUTCH COIL 7B–47
SHAFT SEAL REPLACEMENT 7B–49
PRESSURE RELIEF VALVE 7B–51
CONTROL VALVE ASSEMBLY 7B–52
REAR HEAD, GASKET, VALVE PLATE, REED PLATE, AND O–RING 7B–53
CYLINDER TO FRONT HEAD O–RING 7B–55
LEAK TESTING (EXTERNAL) 7B–57
GENERAL DESCRIPTION AND SYSTEM OPERATION 7B–58
GENERAL INFORMATION 7B–58
THE V5 A/C SYSTEM 7B–58
SYSTEM COMPONENTS – FUNCTIONAL .. 7B–58
SYSTEM COMPONENTS – CONTROL 7B–59
V5 COMPRESSOR – GENERAL DESCRIPTION 7B–59
V5 COMPRESSOR – DESCRIPTION OF OPERATION 7B–60

SPECIFICATIONS

A/C SYSTEM CHARGING CAPACITY

Application	Description
R–134a System	750 20 g
Refrigerant Oil in A/C System	Synthetic PAG 265 ml

FASTENER TIGHTENING SPECIFICATIONS

Application	N•m	Lb–Ft	Lb–In
A/C Suction Hose Clamp Bolt	10	–	89
Air Cleaner Housing Assembly Retaining Bolts	10	–	89
Band Clamp Bolt	5	–	44
Clamp Bolts	4	–	35
Clutch Plate and Hub Assembly Retaining Nut	17	13	–
Discharge Hose Connecting Block–to–Compressor Retaining Nut	33	24	–
Discharge Hose Mounting Block–to–Condenser Nut	16	12	–
Evaporator Flange Connecting Block Retaining Nut	10	–	89
Expansion Valve Bolts	10	–	89
Front Compressor–to–Bracket Bolts	35	26	–
High Pressure Pipe–to–Evaporator Flange Connecting Block Nut	10	–	89
High Pressure Pipe–to–Receiver–Dryer Connecting Block Nuts	10	–	69
Liquid Evaporator Pipe Clamp Bolt	4	–	35
Pressure Relief Valve	16	12	–
Pressure Transducer	10	–	89
Rear Compressor–to–Bracket Bolts	20	15	–
Suction Hose Connecting Block Retaining Nut	10	–	89
Suction Hose Support Clamp Retaining Bolt	5	–	44
Suction Hose Support Clamp Retaining Nut	5	–	44
Through–Bolts	10	–	89
Upper Condenser Mount Nuts	4	–	35
Vacuum Tank–to–Bulkhead Nuts	4	–	35

SPECIAL TOOLS

SPECIAL TOOLS TABLE

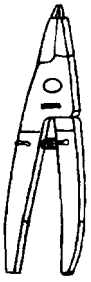 A108B078	J–5403 Snap Ring Pliers	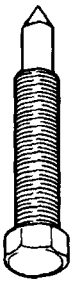 A108B082	J–8433–3 Forcing Screw
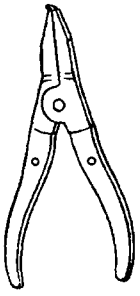 A108B079	J–6083 Snap Ring Pliers	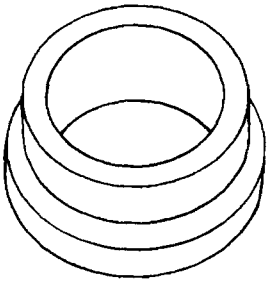 A108B084	J–9398–A Bearing Remover
A108B080	J–8092 Driver Handle	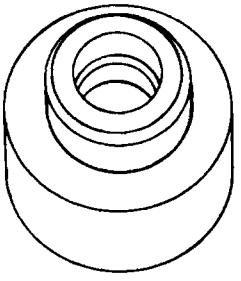 A108B085	J–9481 Bearing Installer
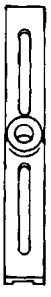 A108B081	J–8433–1 Puller Crossbar	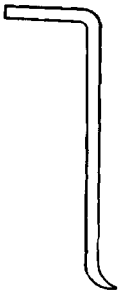 A108B086	J–9553–1 O–Ring Remover

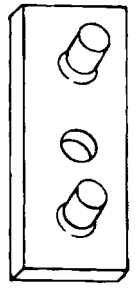 A108B087	J–9625–A Pressure Test Set Connector
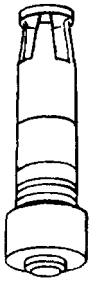 A108B088	J–23128–A Seal Seat Remover and Installer
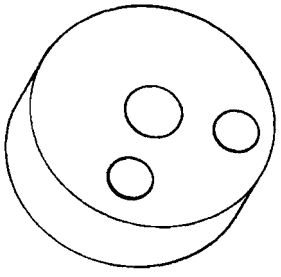 A108B089	J–35372 Support Block
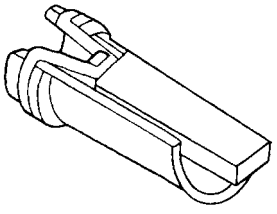 A108B090	J–33011 O–Ring Installer
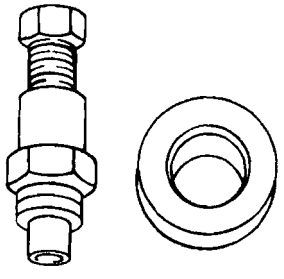 A108B091	J–33013–B Hub and Drive Plate Remover and Installer

A108B092	J–34993 Cylinder Alignment Rods
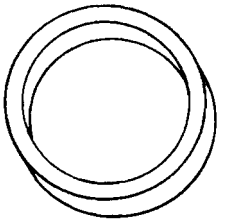 A108B093	J–33017 Pulley Rotor and Bearing Assembly Installer
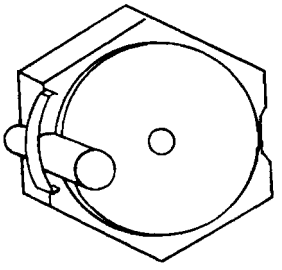 A108B094	J–33019 Bearing Staking Tool Set Includes: J–33019–1 Bearing Staking Guide J–33019–2 Bearing Staking Pin
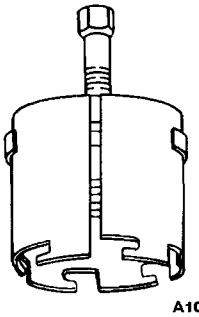 A108B095	J–33020 Pulley Puller
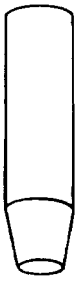 A108B096	J–34614 Shaft Seal Protector

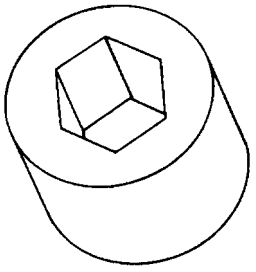 A108B097	J–33022 Shaft Nut Socket
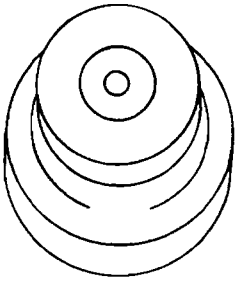 A108B098	J–33023–A Puller Pilot
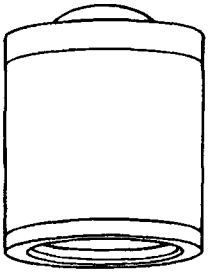 A108B099	J–33024 Clutch Coil Installer Adapter

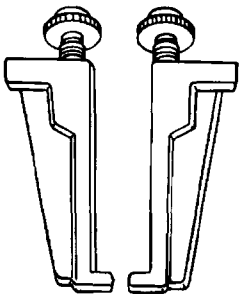 A108B100	J–33025 Clutch Coil Puller Legs
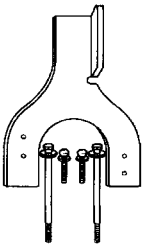 A108B101	J–34992 Compressor Holding Fixture
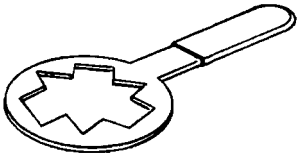 A108B102	J–33027 Clutch Hub Holding Tool

SCHEMATIC AND ROUTING DIAGRAMS

A/C SYSTEM – TYPICAL

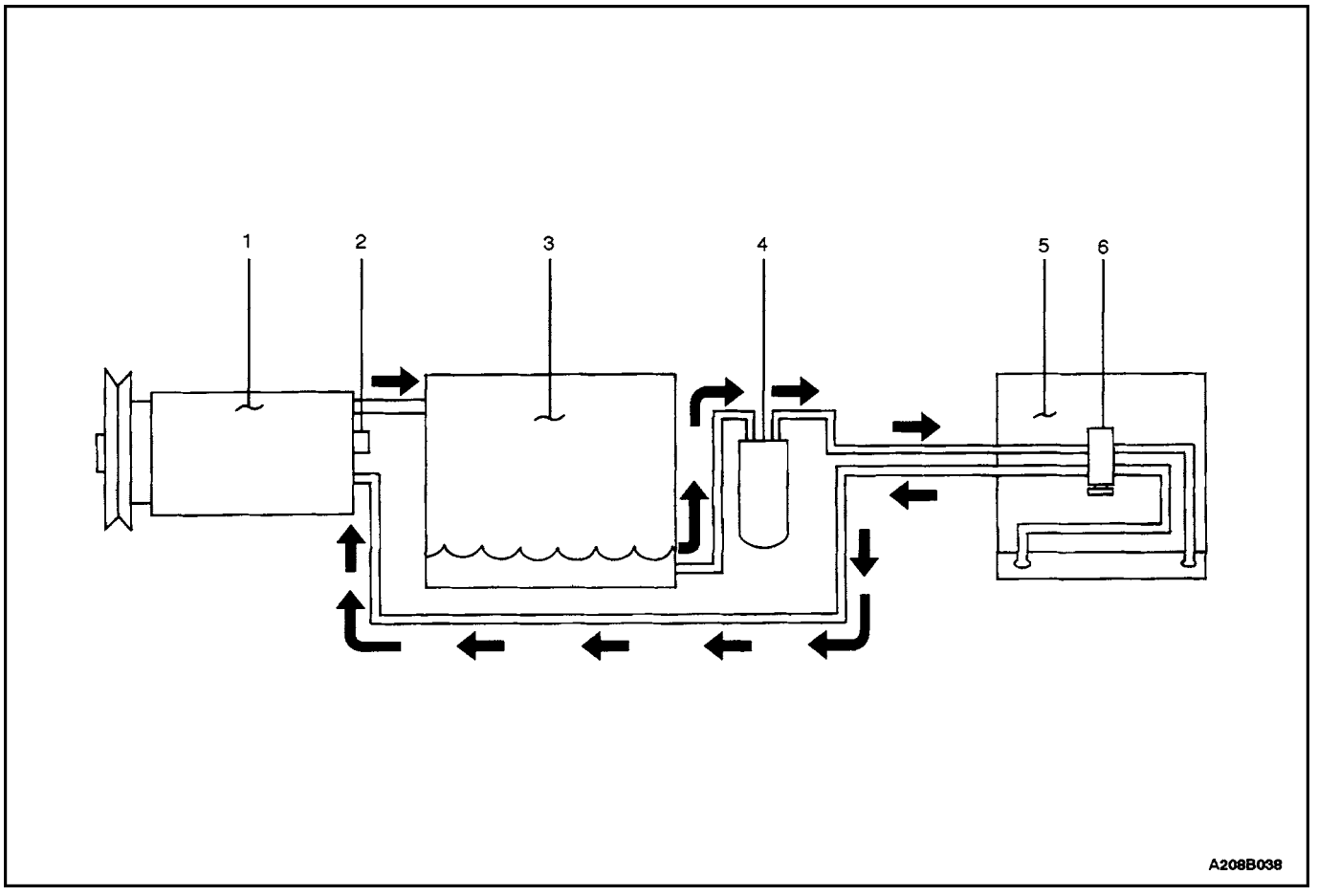

1. Compressor
2. Pressure Relief Valve
3. Condenser
4. Receiver–Dryer
5. Evaporator
6. Expansion Valve

AIRFLOW – TYPICAL

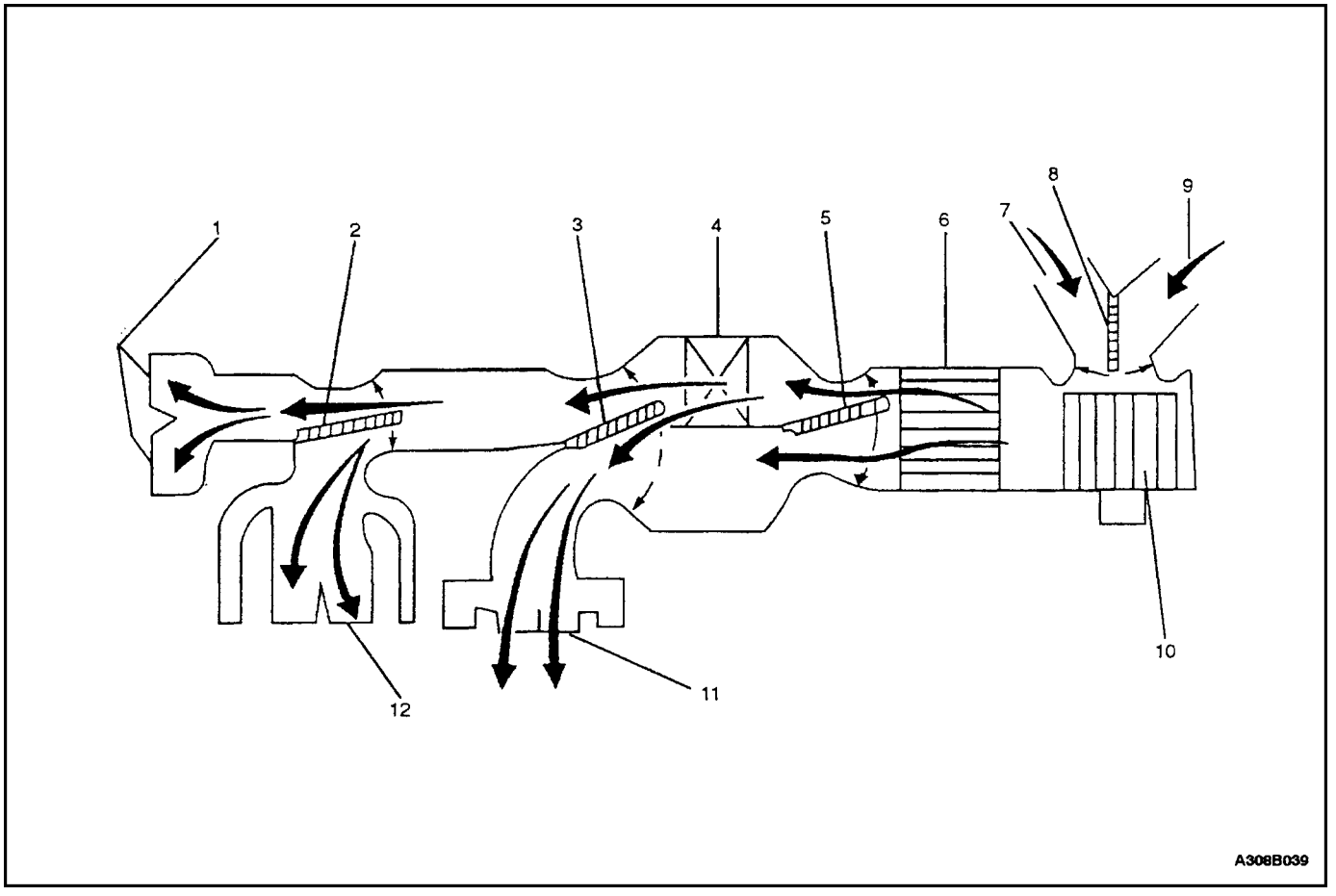

1. Heater Outlets
2. Heater/Defroster Door
3. Mode Door
4. Heater Core
5. Evaporator (A/C Only)
6. Expansion Valve
7. Outside Air Inlet
8. Fresh Air/Recirculating Air Door
9. Inside Air Inlet
10. Blower
11. Vent Outlets
12. Defroster Outlets

A/C SCHEMATIC

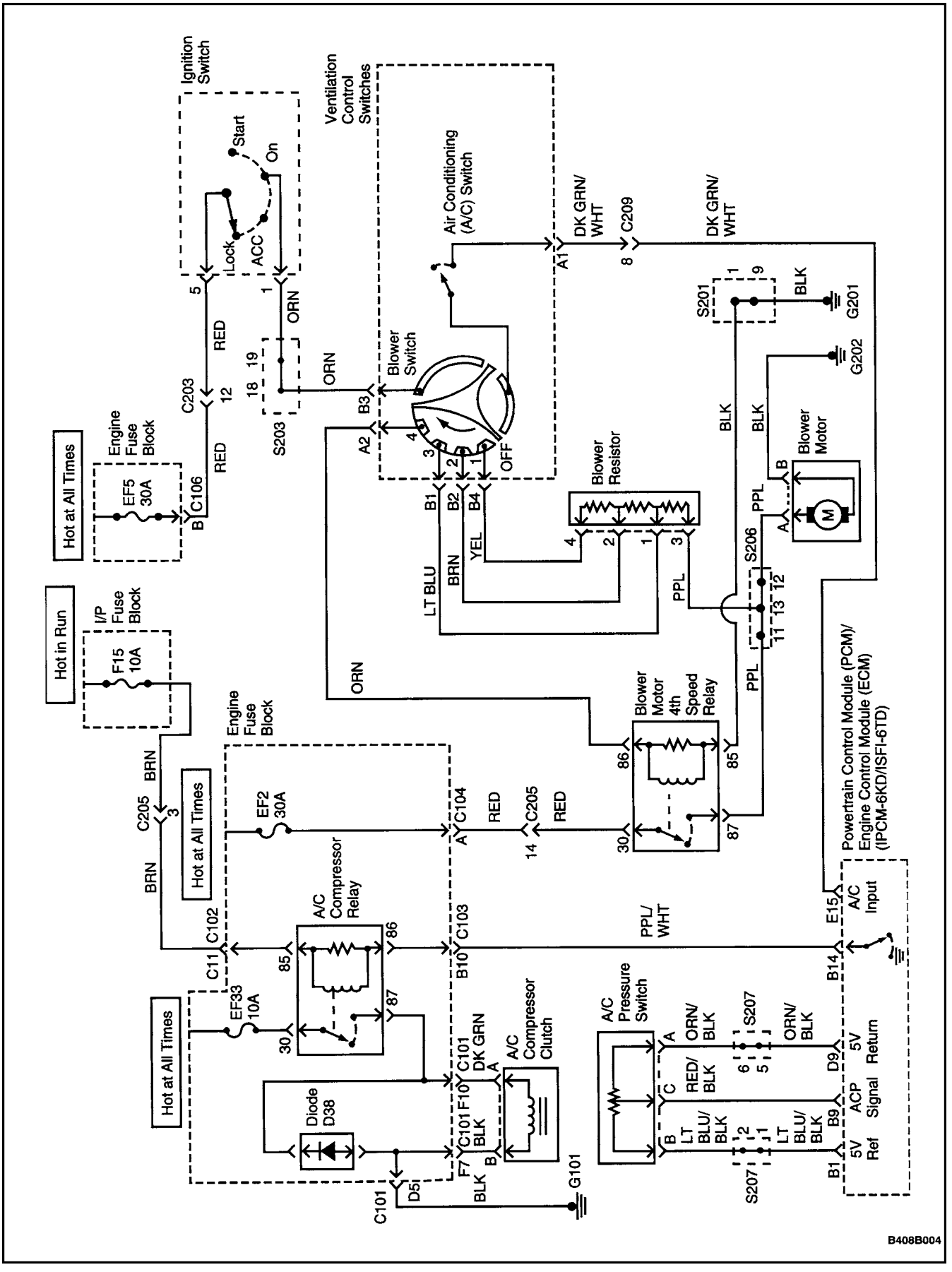

DIAGNOSIS

GENERAL DIAGNOSIS

TESTING THE REFRIGERANT SYSTEM

If you suspect a problem in the refrigerant system, check for the following conditions:

1. Check the outer surfaces of the radiator and the condenser cores to be sure that the airflow is not blocked by dirt, leaves, or other foreign material. Check between the condenser and the radiator, as well as all outer surfaces.
2. Check for restrictions or kinks in the condenser core, the hoses, and the tubes.
3. Check the operation of the blower fan.
4. Check all the air ducts for leaks or restrictions. Low airflow rate may indicate a restricted evaporator core.
5. Check for slippage of the compressor clutch.
6. Check the drive belt tension.

INSUFFICIENT COOLING ”QUICK CHECK” PROCEDURE

Perform the following ”hand–feel” procedure to get a quick idea of whether the A/C system has the proper charge of Refrigerant–134a. The air temperature must be above 21˚C (70˚F) for most models.

1. Warm up engine. Run the engine at idle.
2. Open the hood and all the doors.
3. Turn the A/C switch ON.
4. Turn the temperature control knob to full cold.
5. Turn the blower speed to setting 4.
6. ”Hand–feel” the temperature of the evaporator outlet pipe. The pipe should be cold.
7. Check for other problems. Refer to ”Testing the Refrigerant System” in this section.
8. Leak check the system. Refer to ”Leak Testing the Refrigerant System” in this section. If you find a leak, discharge the system and repair the leak, as required. After completing the repair, evacuate and charge the system.
9. If there is no leak, refer to ”Insufficient Cooling Diagnosis” in this section.

A/C PERFORMANCE TEST

RELATIVE HUMIDITY (%)	AMBIENT AIR TEMPERATURE ˚C ˚F	LOW SIDE PRESSURE kPa psig	ENGINE SPEED (RPM)	CENTER DUCT AIR TEMPERATURE ˚C ˚F	HIGH SIDE PRESSURE kPa psig
20	21 70 27 81 32 90 38 100	200 29 200 29 207 30 214 31	2000	4 39 7 45 9 48 14 57	1034 150 1310 190 1689 245 2103 305
30	21 70 27 81 32 90 38 100	200 29 207 30 214 31 221 32	2000	6 43 8 46 11 52 16 61	1034 150 1413 205 1827 265 2241 325
40	21 70 27 81 32 90 38 100	200 29 207 30 221 32 269 39	2000	7 45 9 48 13 55 18 64	1138 165 1482 215 1931 280 2379 345
50	21 70 27 81 32 90 38 100	207 30 221 32 234 34 276 40	2000	8 46 12 54 15 59 21 70	1241 180 1620 235 2034 295 2413 350
60	21 70 27 81 32 90 38 100	207 30 228 33 248 36 296 43	2000	9 48 13 56 17 63 23 73	1241 180 1655 240 2068 300 2482 360
70	21 70 27 81 32 90 38 100	207 30 234 34 262 38 303 44	2000	10 50 14 57 18 64 24 75	1276 185 1689 245 2103 305 2517 365
80	21 70 27 81 32 90	207 30 234 34 269 39	2000	10 50 15 59 19 66	1310 190 1724 250 2137 310
90	21 70 27 81 32 90	207 30 248 36 290 42	2000	10 50 17 63 22 72	1379 200 1827 265 2275 330

PRESSURE–TEMPERATURE RELATIONSHIP OF R–134A

TEMPERATURE ˚C (˚F)*	PRESSURE kPa (psig)*	TEMPERATURE ˚C (˚F)*	PRESSURE kPa (psig)*
–8.89 (16)	105.70 (15.33)	37.78 (100)	856.84 (124.27)
–7.78 (18)	114.87 (16.66)	38.89 (102)	886.56 (128.58)
–6.67 (20)	124.32 (18.03)	40.00 (104)	916.35 (132.98)
–5.56 (22)	134.11 (19.45)	41.11 (106)	947.92 (137.48)
–4.44 (24)	144.24 (20.92)	42.22 (108)	979.64 (142.08)
–3.33 (26)	154.65 (22.43)	43.33 (110)	1012.11 (146.79)
–2.22 (28)	165.48 (24.00)	44.44 (112)	1045.21 (151.59)
–1.11 (30)	176.65 (25.62)	45.56 (114)	1079.14 (156.51)
0.00 (32)	188.16 (27.29)	46.67 (116)	1113.75 (161.53)
1.11 (34)	200.02 (29.01)	47.78 (118)	1149.12 (166.66)
2.22 (36)	212.30 (30.79)	48.89 (120)	1185.18 (171.89)
3.33 (38)	224.98 (32.63)	50.00 (122)	1222.07 (177.24)
4.44 (40)	238.08 (34.53)	51.11 (124)	1259.72 (182.70)
7.22 (45)	272.49 (39.52)	52.22 (126)	1298.12 (188.27)
10.00 (50)	309.58 (44.90)	53.33 (128)	1337.35 (193.96)
12.77 (55)	349.51 (50.69)	54.44 (130)	1377.35 (199.76)
15.56 (60)	392.33 (56.90)	57.22 (135)	1480.91 (214.78)
18.33 (65)	438.18 (63.55)	60.00 (140)	1589.57 (230.54)
21.11 (70)	487.27 (70.67)	62.78 (145)	1703.62 (247.08)
23.89 (75)	539.67 (78.27)	65.56 (150)	1823.04 (264.40)
26.67 (80)	609.38 (88.38)	68.33 (155)	1948.04 (282.53)
29.44 (85)	655.09 (95.01)	71.11 (160)	2078.77 (301.49)
32.22 (90)	718.39 (104.19)	73.89 (165)	2215.29 (321.29)
35.00 (95)	785.61 (113.94)	76.67 (170)	2357.81 (341.96)

* All values rounded to two decimal places.

EVAPORATOR RANGE: From –6.67 to 7.22˚C (20 to 45˚F), the temperatures represent the gas temperatures inside the coil and not on the coil surfaces. Add 1.67 to 5.56˚C (3–10˚F) to the temperature for coil and air–off temperatures.

CONDENSER RANGE: From 110 to 160˚F, temperatures are not ambient. Add 19.4 to 22.2˚C (35 to 40˚F) for proper heat transfer, then refer to the pressure chart.

Example:

32˚C (90˚F) ambient temperature

+ 22˚C + (40˚F)

54˚C (130˚F)

Condenser temperature = 1379 kPa (200 psig)

Based on 48.3 km/h (30 mph) air flow.

LEAK TESTING THEREFRIGERANT SYSTEM

Test for leaks whenever a refrigerant leak in the system is suspected. Also, test for leaks whenever a service operation which results in disturbing the lines or the connections is performed. Leaks are commonly found at the refrigerant fittings or at the connections. Leaks are commonly caused by the following problems:

- Improper torque.
- Damaged O–ring seals.
- Dirt or lint on the O–ring seals.

Liquid Leak Detectors

Use a liquid leak detector solution on locations such as the fittings. Apply the solution to the area in question with the swab that is supplied with the solution. Look for bubbles to appear. This will indicate the existence and location of any leak.

For areas where this is not practical, such as sections of the evaporator and the condenser, an electronic leak detector is more useful.

Electronic Leak Detectors

Follow the manufacturer's instructions for calibration, operation, and maintenance of an electronic leak detector. Battery condition is especially important to the accuracy of a portable model. Set the detector to R–134a before beginning the test.

Important : Electronic leak detectors are sensitive to windshield washing solutions, solvents and cleaners, and certain vehicle adhesives.

Surfaces must be clean to prevent false readings. Make sure that all surfaces are dry to prevent damage to the detector.

General Testing Instructions

- Follow the entire path of the refrigerant system.
- Completely circle each joint at 25 to 50 mm (1 to 2 inches) per second.
- Hold the probe tip within 6 mm (1/4 inch) of the surface.
- Do not block the air intake.

The audible tone changes from 1 to 2 clicks per second into a solid alarm if there is a leak. Adjust the balance control to maintain 1 to 2 clicks per second.

Test all of the following areas, even after one leak has been confirmed:

- Evaporator inlet and outlet.
- Receiver–drier inlet and outlet.
- Condenser inlet and outlet.
- Brazed and welded areas.
- Damaged areas.
- Hose couplings.
- Compressor rear head.
- All fittings and joints.

Testing Service Ports/Access Valves

The sealing caps provide protection for the service ports. Make sure that these caps are not missing or loose. Always use the correct cap for each port.

Testing the Evaporator Core

Leaks in the evaporator core are difficult to find. Test the evaporator core using the following procedure:

1. Run the blower fan at speed setting 4 for at least 15 minutes.
2. Turn the blower OFF.
3. Wait for 10 minutes.
4. Remove the blower motor resistor. Refer to"Blower Resistor" in this section.
5. Insert the leak detector probe as close as possible to the evaporator core. The detector will indicate a leak with a solid alarm.
6. Use a flashlight to search for refrigerant oil in the core surface.

Testing the Compressor Shaft Seal

1. Blow shop air behind and in front of the compressor clutch/pulley for at least 15 seconds.
2. Wait 1 to 2 minutes.
3. Probe the area in front of the pulley. If the detector emits a solid alarm, there is a leak.

V5 SYSTEM AIR CONDITIONING DIAGNOSIS

INSUFFICIENT COOLING DIAGNOSIS

Test Description

The number(s) below refer to step(s) on the diagnostic table.

13. See the first Important below.
32. See the second Important below.

Important : Perform this test under garage conditions with the air temperature at 21–32˚C (70–90˚F), and no sun load. Follow this test carefully for accurate results.

Important : Perform this test exactly as described to obtain accurate results.

Insufficient Cooling Diagnosis

Step	Action	Value(s)	Yes	No
1	Record the customer's complaint. Can you verify the customer's complaint?		Go to *Step 2*	System OK
2	1. Check the A/C fuse. 2. Check the blower fan operation. 3. Check the engine cooling fan operation. 4. Check the A/C compressor belt. 5. Check the A/C condenser for restricted airflow. 6. Check the clutch coil connection. 7. Repair or replace any components as needed. 8. Check the discharge air temperature with the A/C ON. Is the discharge air temperature normal?	At least 7˚C (12˚F) below ambient air temperature	System OK	Go to *Step 3*
3	1. Turn the ignition to LOCK. 2. Connect the high– and the low–pressure gauges. Are both pressures within the specified value?	69–345 kPa (10–50 psi)	Go to *Step 4*	Go to *Step 5*
4	1. Check the A/C system for leaks. 2. Repair any refrigerant leaks, as needed. 3. Recover, evacuate, and recharge the A/C system. 4. Observe the two pressure gauges. Are both pressures above the specified value?	345 kPa (50 psi)	Go to *Step 7*	
5	Observe the two pressure gauges. Are both pressures below the specified value?	69 kPa (10 psi)	Go to *Step 6*	Go to *Step 7*
6	1. Add 0.45 kg (1 pound) of refrigerant R–134a. 2. Check the A/C system for leaks. 3. Repair any refrigerant leaks, as needed. 4. Recover, evacuate, and recharge the A/C system. 5. Observe the two pressure gauges. Are both pressures above the specified value?	345 kPa (50 psi)	Go to *Step 7*	
7	1. Start the engine and allow it to run at idle. 2. Set the A/C controls to the following positions: • The A/C to ON. • The fresh air control switch to fresh air (indicator lamp OFF). • The blower motor to 4. • The temperature control knob to full cold. Does the A/C compressor clutch engage?		Go to *Step 8*	Go to *Step 10*

Step	Action	Value(s)	Yes	No
8	1. Check for a knocking noise from the A/C compressor. 2. Cycle the A/C compressor ON and OFF in order to verify the source of the noise. Do you hear a loud knocking noise?		Go to *Step 9*	Go to *Step 13*
9	1. Recover the A/C system refrigerant. 2. Replace the A/C compressor. 3. Evacuate and recharge the A/C system. 4. Check the A/C system for leaks. Is the compressor running normally?		Go to *Step 13*	
10	1. Turn the ignition to LOCK. 2. Disconnect the A/C compressor clutch coil connector. 3. Connect a jumper wire from ground to one A/C compressor clutch coil terminal. 4. Connect a fused jumper wire from the positive battery terminal to the other A/C compressor clutch coil terminal. Does the A/C clutch engage?		Go to *Step 11*	Go to *Step 12*
11	Repair the electrical circuit to the A/C compressor clutch coil. Does the A/C clutch engage?		Go to *Step 8*	
12	Replace the A/C compressor clutch coil. Does the A/C clutch engage?		Go to *Step 8*	
13	1. Close all of the vehicle's windows and doors. 2. Set the A/C controls to the following positions: • The A/C to ON. • The fresh air control switch to fresh air. • The blower motor to 4. • The temperature control knob to full cold. 3. Start the engine and allow it to run at idle for 5 minutes. 4. Feel the evaporator inlet and outlet pipes. Is there a noticeable difference in the temperature of the evaporator inlet and outlet pipes?		Go to *Step 15*	Go to *Step 14*
14	1. Turn the ignition to LOCK. 2. Recover the A/C system refrigerant. 3. Examine the high–pressure pipe for an obstruction. 4. Examine the expansion valve for an obstruction or a malfunction. 5. Repair the obstruction or replace the expansion valve, as needed. 6. Evacuate and recharge the A/C system. 7. Check the A/C system for leaks. 8. Note the discharge air temperature with the A/C ON. Is the discharge temperature normal?	At least 7˚C (12˚F) below ambient air temperature	Go to *Step 15*	Go to *Step 13*

Step	Action	Value(s)	Yes	No
15	1. Record the high– and low–side pressures after the A/C system has been operating for 5 minutes or more with the engine cooling fan ON. 2. Locate the intersection of the high– and low–side pressures. Refer to ”Low– and High–Side Pressure Relationship Chart” in this section. Do the low– and high–side pressures intersect in the white area of the chart?		System OK	Go to *Step 16*
16	Check the high– and low–side pressures. Do the high– and low–side pressures intersect in the gray area of the chart?		Go to *Step 17*	Go to *Step 20*
17	Feel the liquid pipe between the condenser and the expansion valve. Is the pipe cold?		Go to *Step 18*	Go to*Step 19*
18	1. Examine the condenser for any restriction of the airflow. 2. Check the cooling fans for proper operation. 3. Remove the restriction or repair the fans, as required. Is the pipe temperature normal?	At least 7˚C (12˚F) below ambient air temperature	Go to *Step 13*	
19	1. Recover, evacuate, and recharge the A/C system. 2. Check the A/C system for leaks. Is the system free from leaks?		Go to *Step 13*	
20	Observe the readings on the pressure gauges. Are the A/C compressor high– and low–side pressures within the specified value of each other?	207 kPa (30 psi)	Go to *Step 21*	Go to *Step 26*
21	1. Run the engine at 3,000 rpm. 2. Set the A/C controls to the following positions: • The A/C to ON. • The fresh air control switch to fresh air. • The blower motor to 4. • The temperature control knob to full cold. 3. Close all of the vehicle’s windows and doors. 4. Turn the A/C ON and OFF every 20 seconds for 3 minutes. Are the A/C compressor high– and low–side pressures within the specified value of each other?	207 kPa (30 psi)	Go to *Step 22*	Go to *Step 13*
22	Observe the pressure rise on both gauges and the temperatures of both the compressor suction pipe and the discharge pipe. Is the pressure rise on both gauges slow and the suction pipe warm with the discharge pipe very hot?		Go to *Step 25*	Go to *Step 23*
23	1. Turn the ignition to LOCK. 2. Make sure the compressor clutch is disengaged. 3. Attempt to turn the clutch driver (not the pulley). Can you turn the clutch driver freely by hand?		Go to *Step 25*	Go to *Step 24*

Step	Action	Value(s)	Yes	No
24	1. Start the engine. 2. Observe the low–side pressure gauge while running the engine between 3,000 and 3,800 rpm. Does the low–side pressure rise rapidly?		Go to *Step 32*	Go to *Step 25*
25	1. Recover the A/C system refrigerant. 2. Replace the A/C compressor. 3. Evacuate and recharge the A/C system. Is the compressor functioning normally?		Go to *Step 13*	
26	Check the low–side pressure. Is the low–side pressure within the specified value?	172–241 kPa (27–38 psi)	Go to *Step 27*	Go to *Step 32*
27	Feel the high–side pipe leading up to the expansion valve connecting block. Is the pipe cold before the connecting block?		Go to *Step 28*	Go to *Step 29*
28	1. Check for a restriction in the high–side pipe before the expansion valve. 2. Repair or replace the high–side pipe. Is the repair complete?		Go to*Step 13*	
29	Add the specified amount of refrigerant to the A/C system. Does the cooling performance improve?	0.40 kg (14 oz)	Go to *Step 30*	Go to *Step 31*
30	1. Check the A/C system for leaks. 2. Repair any refrigerant leaks, as needed. 3. Evacuate and recharge the A/C system. 4. Check the A/C system for leaks. Is the system free from leaks?		Go to *Step 13*	
31	1. Recover the refrigerant. 2. Check the expansion valve for obstructions. 3. Repair or replace the expansion valve, as required. 4. Evacuate and recharge the system. 5. Check the A/C system for leaks. Is the system free from leaks?		Go to *Step 13*	
32	1. Run the engine for 5 minutes at 2,000 rpm. 2. Set the A/C controls to the following positions: • The A/C to ON. • The fresh air control switch to recirculate (indicator lamp ON). • The blower motor to 1. • The temperature control knob to full cold. 3. Close all of the vehicle's windows and doors. 4. Open the vehicle hood. Is the low–side pressure within the specified value?	172–241 kPa (25–35 psi)	Go to *Step 13*	Go to *Step 33*
33	1. Recover the A/C system refrigerant. 2. Replace the A/C compressor control valve. 3. Evacuate and recharge the A/C system. 4. Check the A/C system for leaks. Is the system free from leaks?		Go to *Step 13*	

SYMPTOM DIAGNOSIS

PRESSURE TEST CHART (R–134a SYSTEM)

TEST RESULTS	RELATED SYMPTOMS	PROBABLE CAUSE	REMEDY
Discharge pressure abnormally high	After stopping the compressor, the pressure drops about 299 kPa (28 psi) quickly, then falls gradually.	There is air in the system.	Recover, evacuate and recharge the system with the specified amount of refrigerant.
	The condenser is excessively hot.	There is excessive refrigerant in the system.	Recover, evacuate and recharge the system with the specified amount of refrigerant.
	There is reduced or no airflow through the condenser.	The condenser or the radiator fins are clogged.	Clean the condenser or the radiator fins.
	The condenser or the radiator fan is not working properly.	• Check the voltage and the fan rpm. • Check the fan direction.	
	The line to the condenser is excessively hot.	Restricted flow of refrigerant in the system	Locate and repair the restriction.
Discharge pressure abnormally low	The condenser is not hot.	Insufficient refrigerant in the system.	• Check the system for a leak. • Charge the system.
	The high and low pressures are balanced soon after stopping the compressor. Low side pressure is higher than normal.	Faulty compressor pressure relief valve.	Repair or replace the compressor.
	Faulty compressor seal.		
	The outlet of the expansion valve is not frosted, low pressure gauge indicates vacuum.	Faulty expansion valve.	Replace the expansion valve.
	Moisture in the system.	Recover, evacuate, and recharge the system.	
Suction pressure abnormally low	The condenser is not hot.	Insufficient refrigerant in the system.	Repair the leaks. Recover, evacuate, and recharge the system.
	The expansion valve is not frosted and the low pressure line is not cold. Low pressure gauge indicates a vacuum.	Frozen expansion valve.	Replace the expansion valve.
	Faulty expansion valve.		
	The discharge temperature is low and the airflow from the vents is restricted.	The evaporator is frozen.	Clear the restricted evaporator case drain.
	The expansion valve is frosted.	The expansion valve is clogged.	Clean or replace the expansion valve.
	The receiver/drier outlet is cool and the inlet is warm.	The receiver/drier is clogged.	Replace the receiver/drier.

TEST RESULTS	RELATED SYMPTOMS	PROBABLE CAUSE	REMEDY
Suction pressure abnormally high	The low pressure hose and check joint are cooler than the temperature around the evaporator.	The expansion valve is opened too long.	Replace the expansion valve.
	A capillary tube is loose.		
	The suction pressure is lowered when the condenser is cooled by water.	There is excessive refrigerant in the system.	Recover, evacuate, and recharge the system.
	The high and low pressures are equalized as soon as the compressor is stopped and both gauges fluctuate while the compressor is running.	A gasket is faulty.	Repair or replace the compressor.
	The high pressure valve is faulty.		
	Foreign particles are stuck in the high pressure valve.		
Suction and discharge pressure abnormally high charge	There is reduced airflow through the condenser.	The condenser or the radiator fins are clogged.	Clean the condenser and the radiator.
	The radiator cooling fans are not working properly.	• Check the voltage and the radiator cooling fan rpm. • Check the fan direction.	
	The condenser is excessively hot.	There is excessive refrigerant in the system.	Recover, evacuate, and recharge the system.
Suction and discharge pressure abnormally low	The low pressure hose and themetal end areas are cooler than the evaporator.	There is a clogged or kinked low pressure hose.	Repair or replace the low pressure hose.
	The temperature around the expansion valve is low compared to that around the receiver/drier.	The high pressure line is clogged.	Repair or replace the high pressure line.
Refrigerant leaks	The compressor clutch is dirty.	The compressor shaft seal is leaking.	Repair or replace the compressor.
	The compressor bolts are dirty.	There is leaking around a compressor housing bolt.	Tighten the bolt(s) or replace the compressor.
	The compressor gasket is wet with oil.	The compressor gasket is leaking.	Repair or replace the compressor.

LOW AND HIGH SIDE PRESSURE RELATIONSHIP CHART

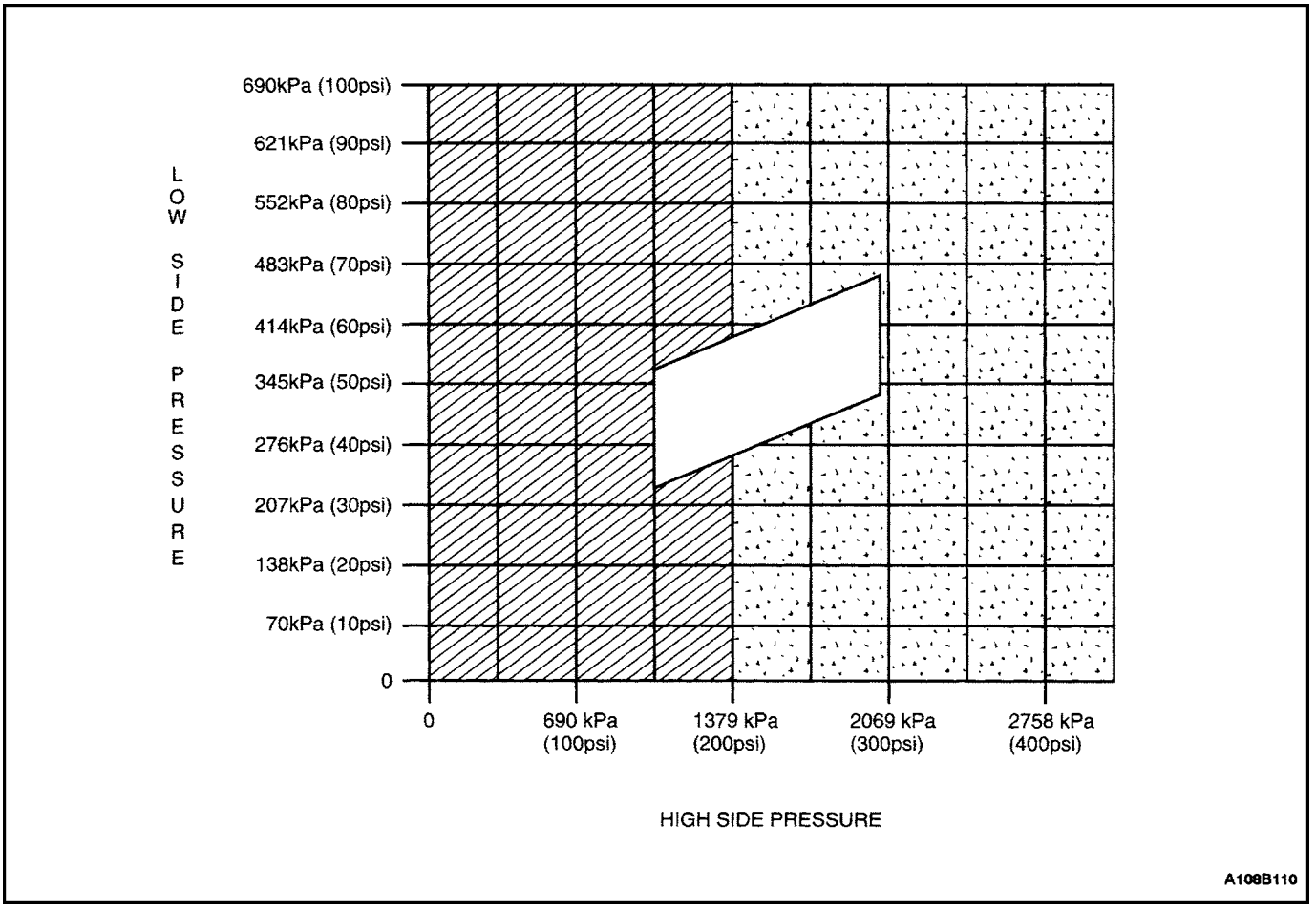

SECTION : 9M

EXTERIOR TRIM

TABLE OF CONTENTS

SPECIFICATIONS 9M–1
FASTENER TIGHTENING SPECIFICATIONS . 9M–1
MAINTENANCE AND REPAIR 9M–2
ON–VEHICLE SERVICE 9M–2
B–PILLAR MOLDING 9M–2
QUARTER WINDOW MOLDING (WAGON) ... 9M–2
ROOF MOLDING 9M–3
MUD GUARDS 9M–4
GENERAL DESCRIPTION AND SYSTEM OPERATION 9M–5
EMBLEMS AND LETTERING 9M–5
MUD GUARDS 9M–5

SPECIFICATIONS

FASTENER TIGHTENING SPECIFICATIONS

Application	N•m	Lb–Ft	Lb–In
B–Pillar Molding Screws	4	–	35
Mud Guard Bolts	1.5	–	13
Quarter Window Molding Screws	4	–	35

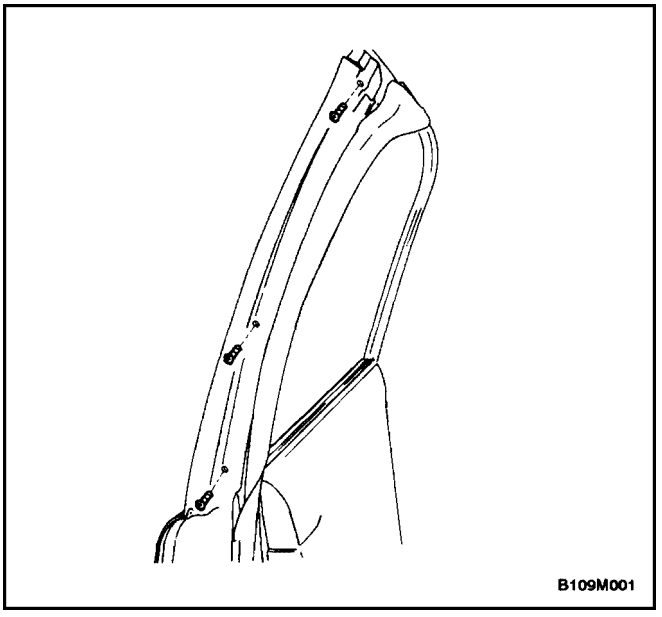

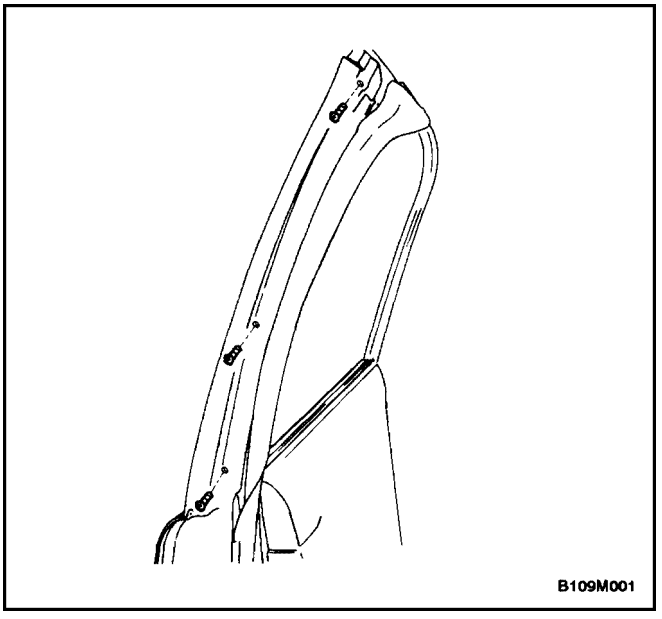

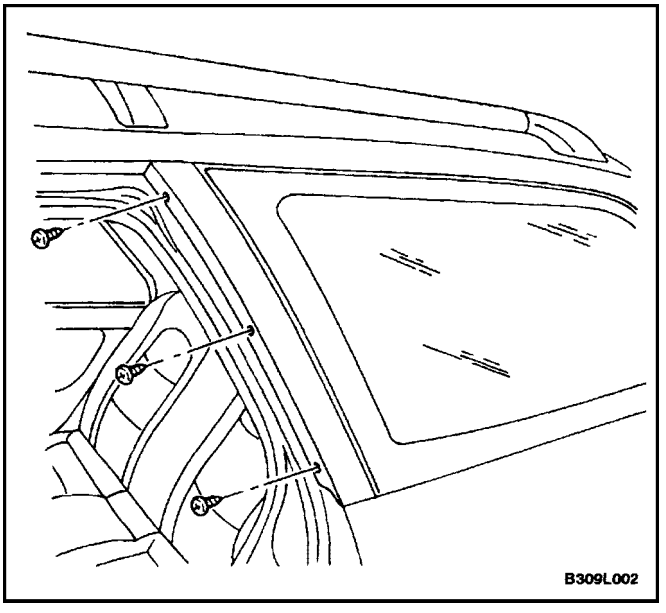

MAINTENANCE AND REPAIR

ON–VEHICLE SERVICE

B–PILLAR MOLDING

Removal Procedure

1. Reposition the weatherstrip in order to access the screws.
2. Remove the screws and the B–pillar molding.

Installation Procedure

Notice : Dissimilar metals in direct contact with each other may corrode rapidly. Make sure to use the correct fasteners to prevent premature corrosion.

1. Install the screws and the B–pillar molding.

   Tighten

   Tighten the B–pillar molding screws to 4 N•m (35 lbin).
2. Install the weatherstrip to its original position.

QUARTER WINDOW MOLDING (WAGON)

Removal Procedure

1. Open the rear passenger door.
2. Remove the screws and the quarter window molding.

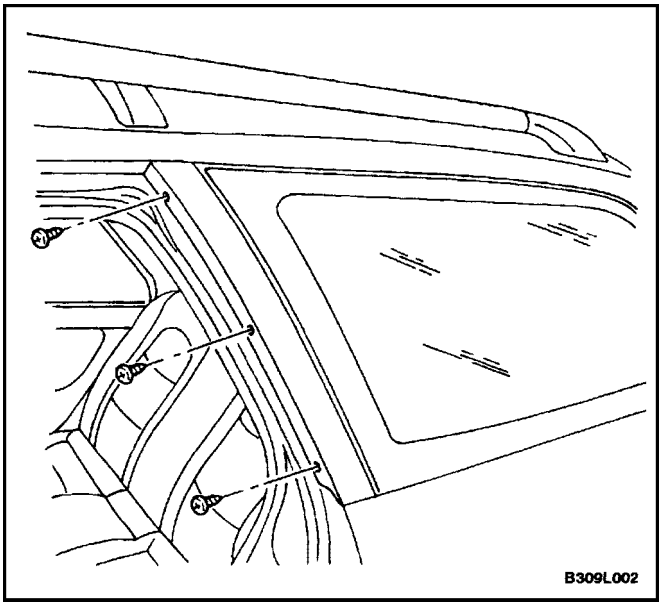

Installation Procedure

1. Install the quarter window molding with the screws.

   Tighten

   Tighten the quarter window molding screws to 4 N•m (35 lb–in).
2. Close the rear passenger door.

ROOF MOLDING

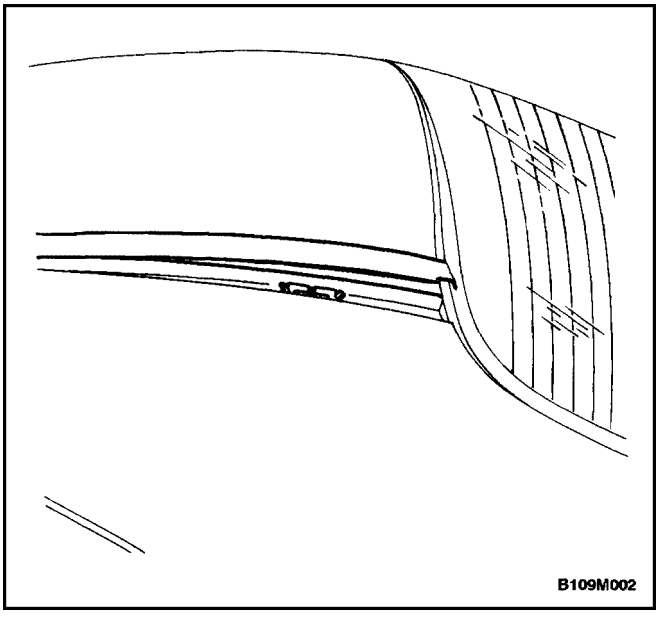

Removal Procedure

1. Remove the roof molding from the metal clips.

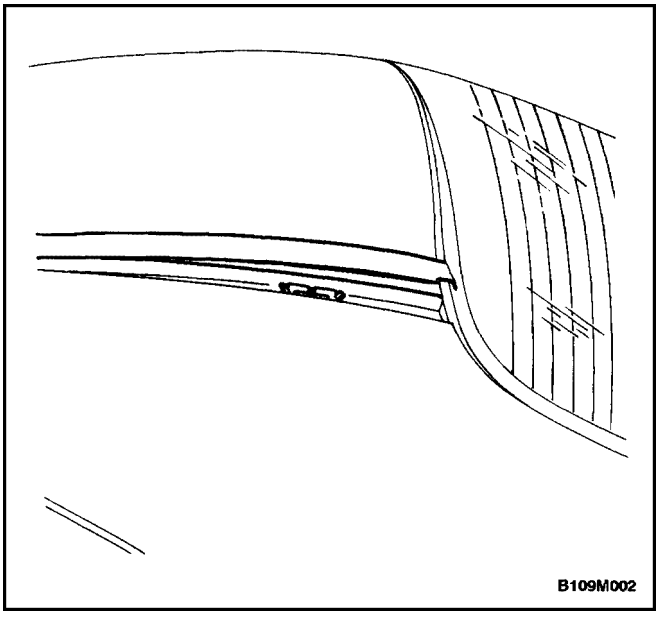

Installation Procedure

1. Press the roof molding onto the clips.

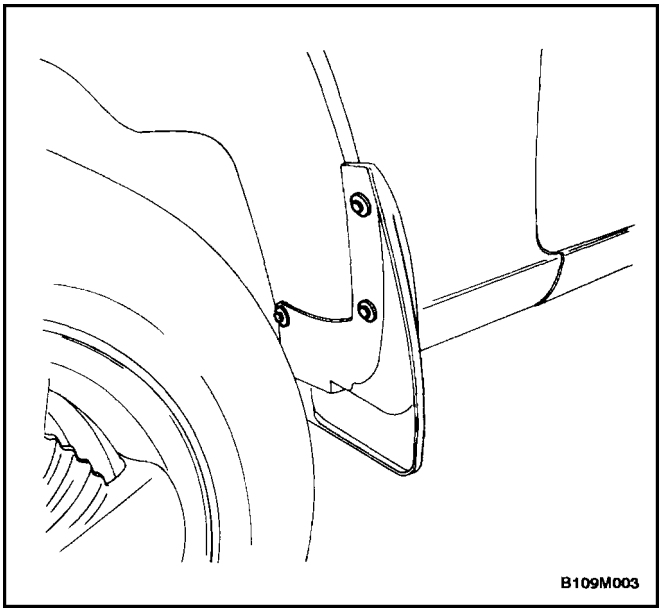

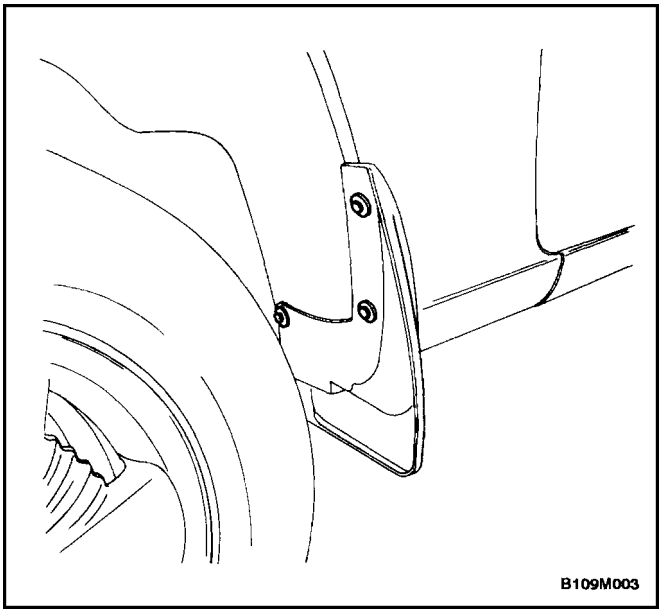

MUD GUARDS

Removal Procedure

1. Remove the bolts and the mud guard.

Installation Procedure

Notice : Dissimilar metals in direct contact with each other may corrode rapidly. Make sure to use the correct fasteners to prevent premature corrosion.

1. Install the mud guard with the bolts.

Tighten

Tighten the mud guard bolts to 1.5 N•m (13 lb–in).

GENERAL DESCRIPTION AND SYSTEM OPERATION

EMBLEMS AND LETTERING

The emblems and lettering on the vehicle are attached by adhesive. The company emblem appears on the hood. The lettering, which appears in several places on the body of the vehicle, features the model, the grade, and the company name.

MUD GUARDS

Front and rear mud guards are standard equipment on all models. Mud guards will help prevent an excessive build-up of mud on the body.

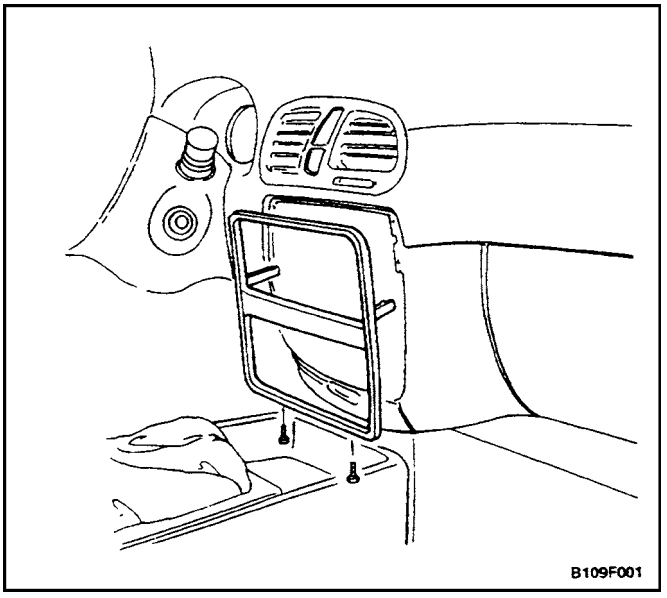

MAINTENANCE AND REPAIR

ON–VEHICLE SERVICE

CIGAR LIGHTER

Removal Procedure

1. Disconnect the negative battery cable.
2. Remove the floor console. Refer to ”Glove Box” in this section.

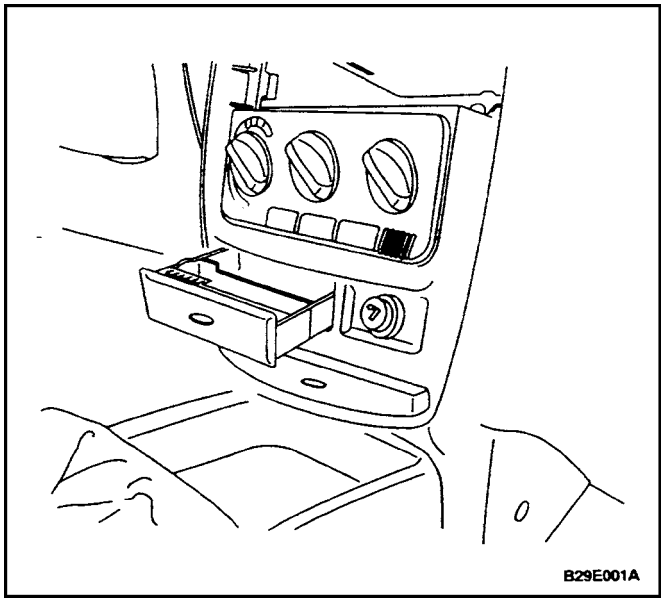

3. Remove the screw and driver/passenger knee bolster. Refer to ”Driver/passenger Knee Bolster”in this section 9G.
4. Remove the screws and the audio system trim plate.

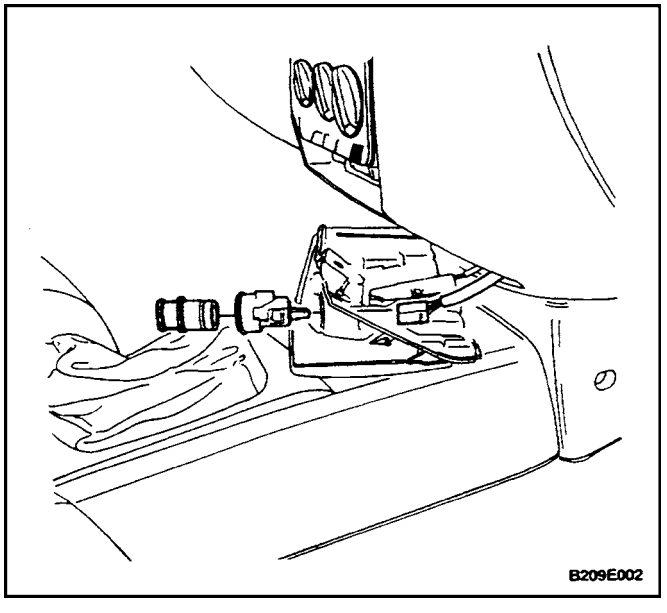

5. Disconnect the cigar lighter and ashtray lamp electrical connectors.
6. Remove the cigar lighter from the cigar lighter housing.
7. Remove the cigar lighter housing from the ashtray housing.

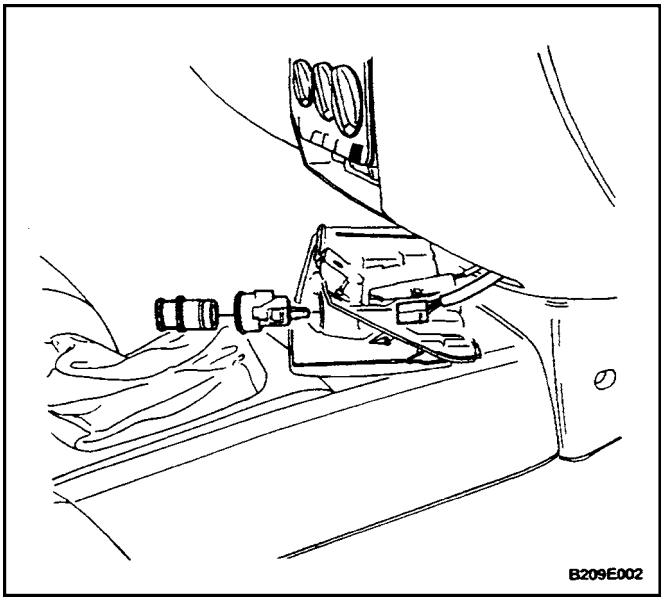

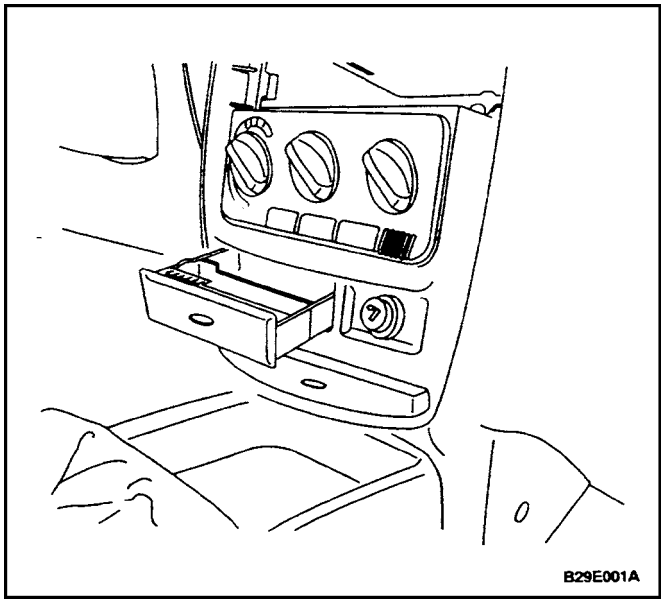

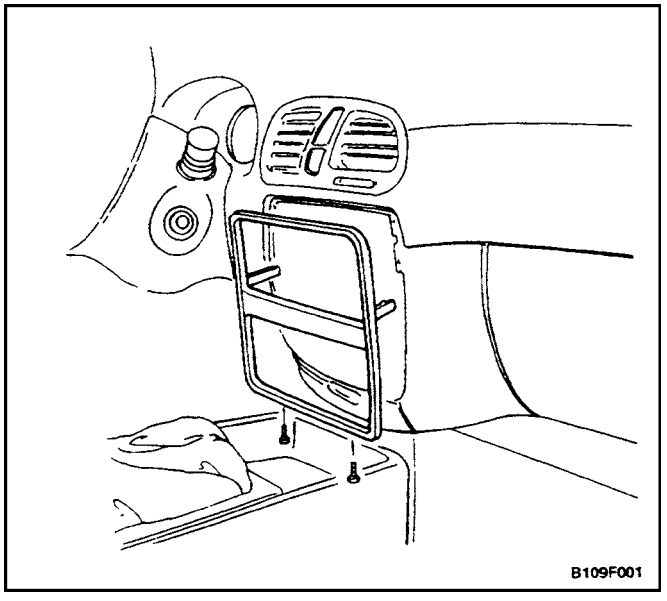

Installation Procedure

1. Install the cigar lighter housing in the ashtray housing.
2. Install the cigar lighter in the cigar lighter housing.
3. Connect the cigar lighter electrical connector.
4. Install the ashtray housing with the screw.

   Tighten

   Tighten the ashtray housing screw to 2.5 N•m (22 lbin).
5. Install the audio system trim plate with the screws.
6. Install glove box, driver/passenger knee bolster with the screws.
7. Connect the negative battery cable.

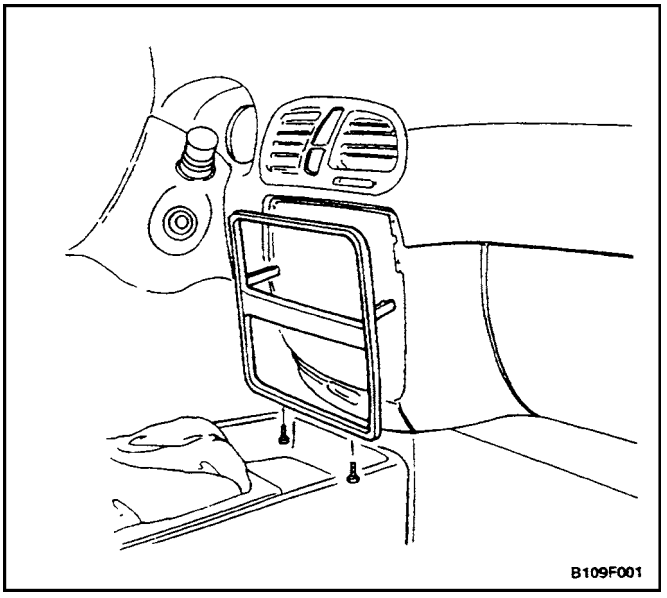

ASHTRAY

Removal Procedure

1. Disconnect the negative battery cable.
2. Remove the screws and the glove box.

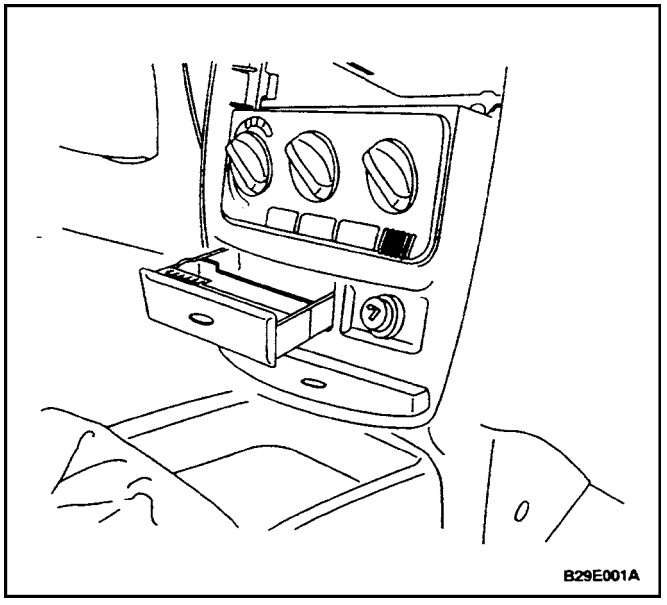

3. Remove the screw and driver/passenger knee bolster.
4. Remove the screws and the audio system trim plate.
5. Disconnect the ashtray electrical connector.

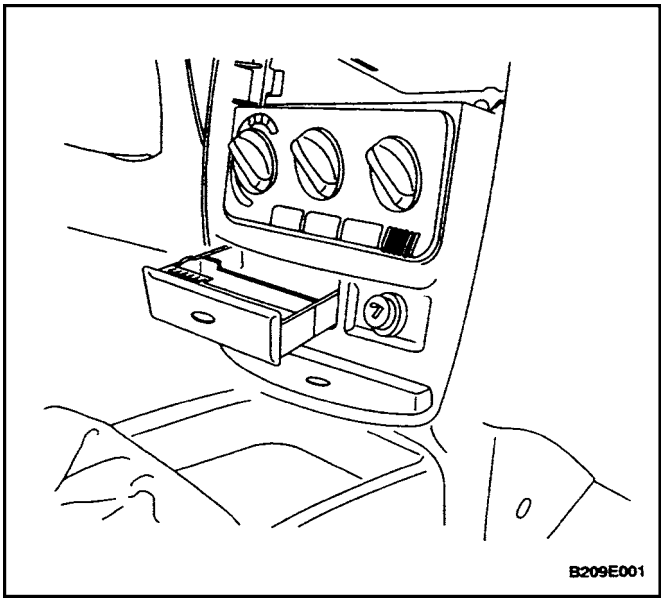

Installation Procedure

1. Connect the ashtray electrical connector.
2. Install the screw and the ashtray housing.

Tighten

Tighten the ashtray housing screw to 2.5 N•m (22 lbin).

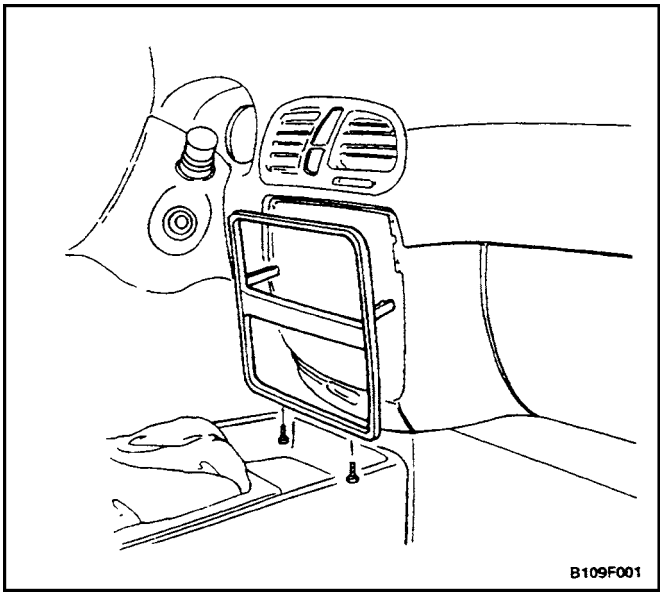

3. Install the audio system trim plate with the screws.
4. Install glove box, driver/passenger knee bolster with the screws.
5. Connect the negative battery cable.

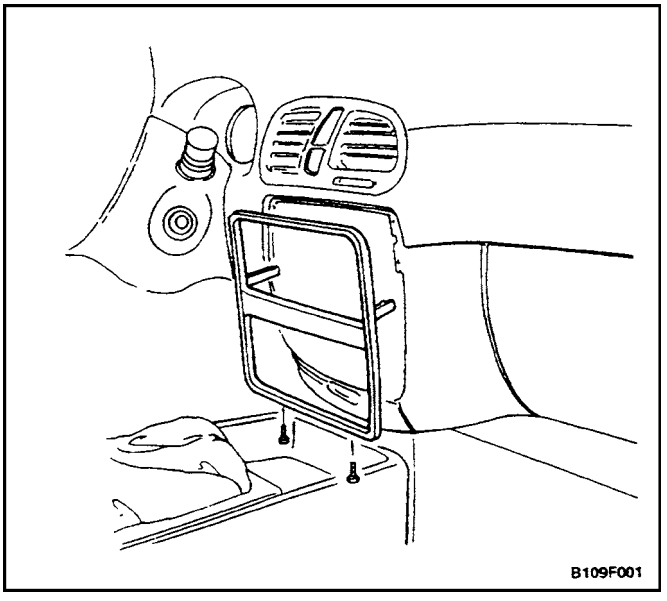

CUP HOLDER

Removal Procedure

1. Remove the screws and the glove box.
2. Remove the screw and driver/passenger knee bolster.

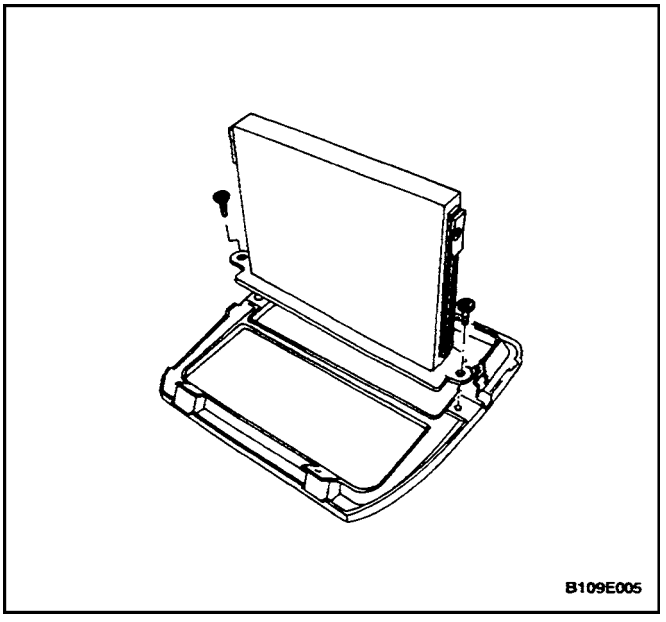

3. Remove the screws and the cup holder from the audio system trim plate.

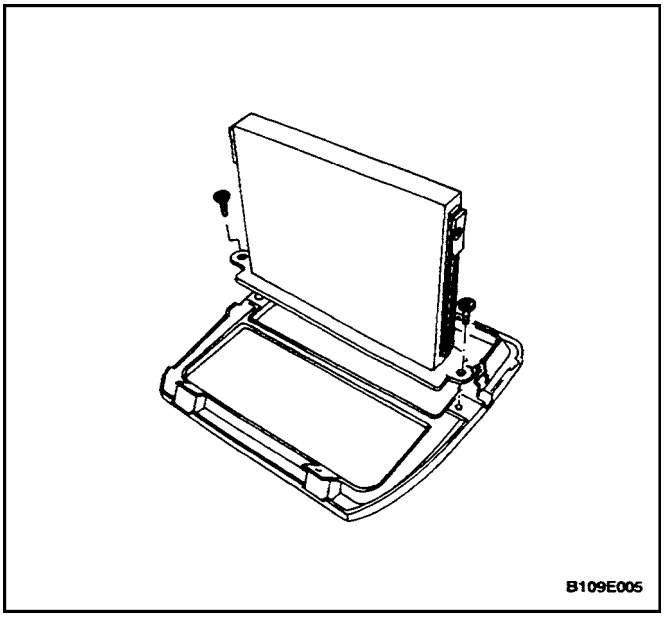

Installation Procedure

1. Install the cup holder to the audio system trim plate with the screws.

   Tighten

   Tighten the cup holder screws to 2.5 N•m (22 lb–in).

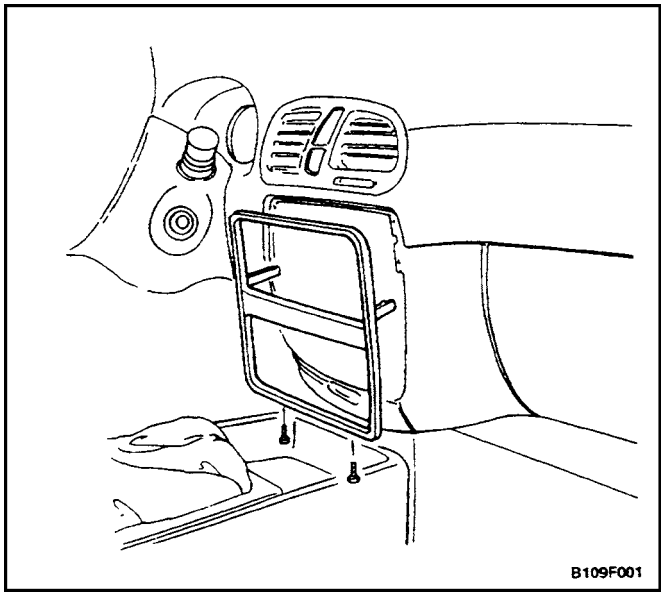

2. Install the audio system trim plate with the screws.
3. Install glove box, driver/passenger knee bolster with the screws.

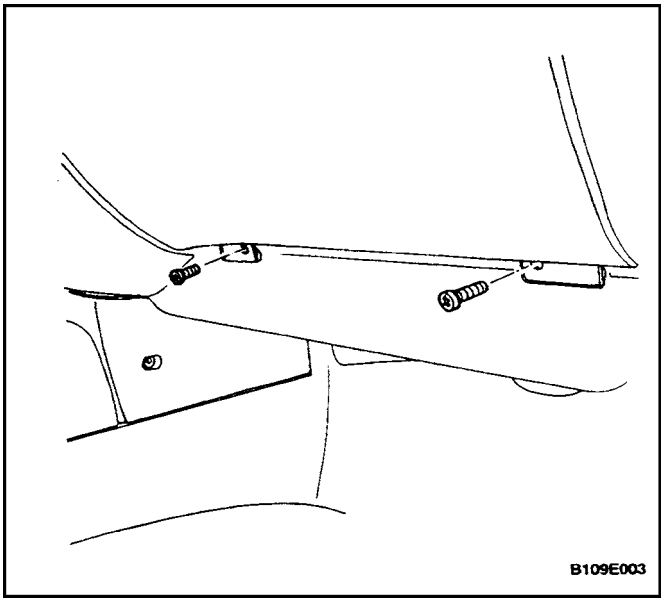

GLOVE BOX

Removal Procedure

1. Remove the screws at the base of the glove box.
2. Open and remove the glove box.

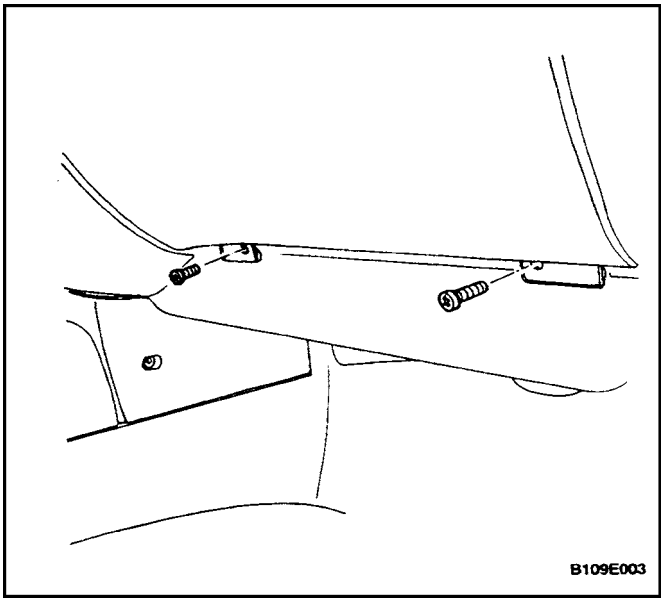

Installation Procedure

1. Position the glove box in the instrument panel.
2. Install the glove box with the screws.

Tighten

Tighten the glove box screws to 5.5 N•m (49 lb–in).

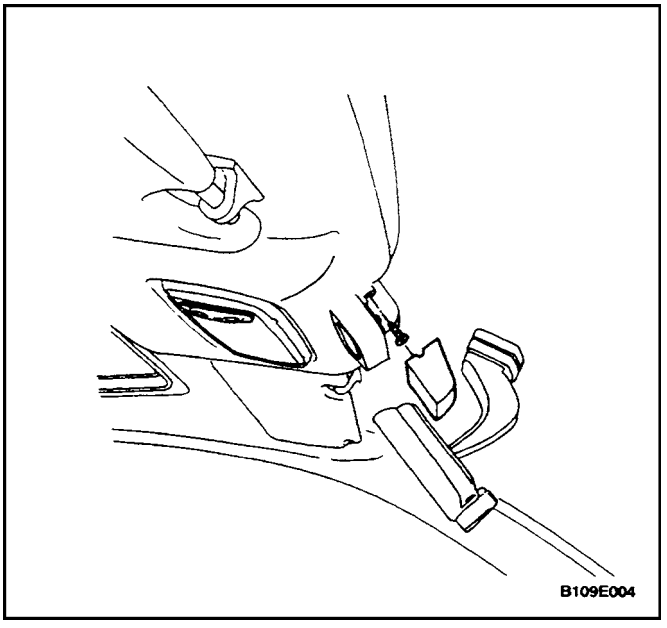

DIGITAL CLOCK

Removal Procedure

1. Disconnect the negative battery cable.
2. Remove the plastic cover to reveal the screws.
3. Remove the screws and the digital clock.
4. Disconnect the electrical connector.

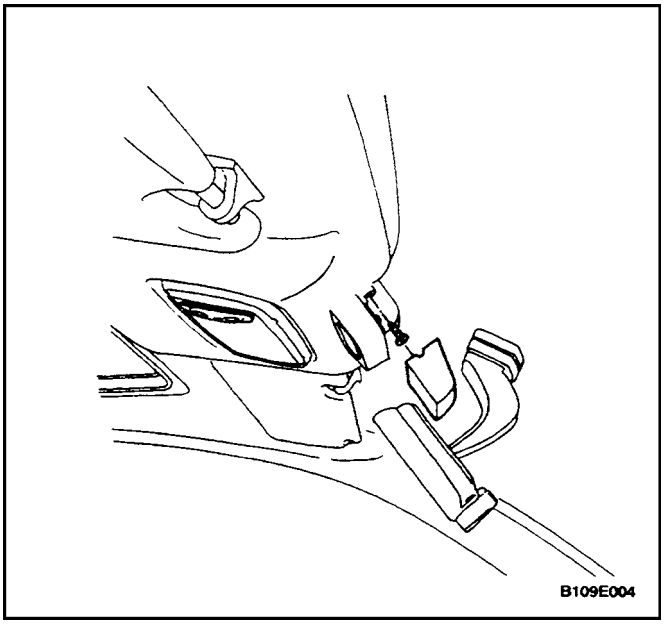

Installation Procedure

1. Connect the electrical connector.
2. Install the digital clock with the screws.

Tighten

Tighten the digital clock screws to 4 N•m (35 lb–in).

3. Install the cluster housing.
4. Connect the negative battery cable.

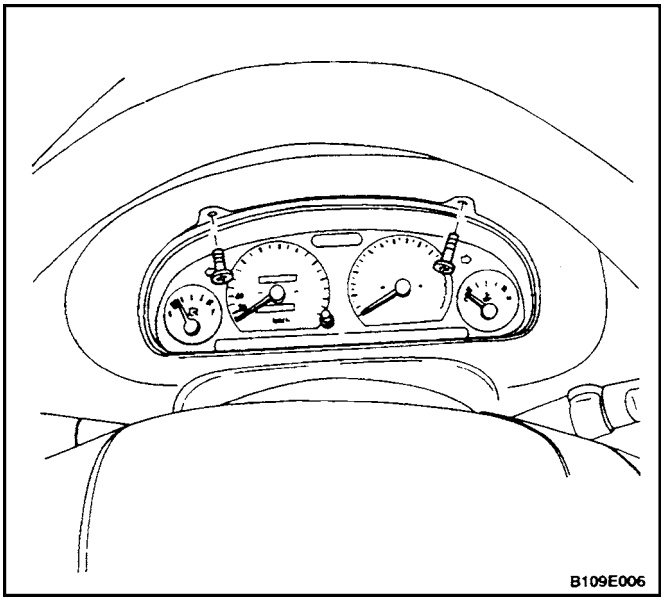

INSTRUMENT CLUSTER

Removal Procedure

1. Disconnect the negative battery cable.
2. Remove the screws and the instrument cluster.
3. Disconnect the electrical connectors.

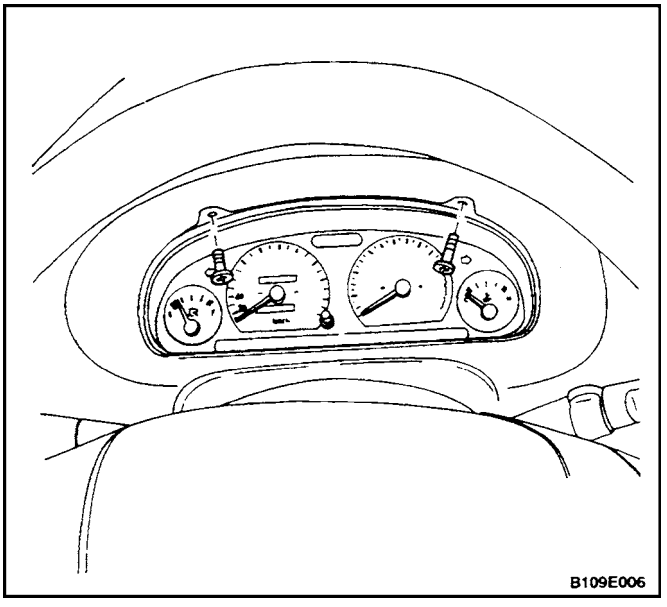

Installation Procedure

1. Connect the electrical connectors.
2. Install the instrument cluster with the screws.

   Tighten

   Tighten the instrument cluster screws to 4 N•m (35 lb–in).
3. Connect the negative battery cable.

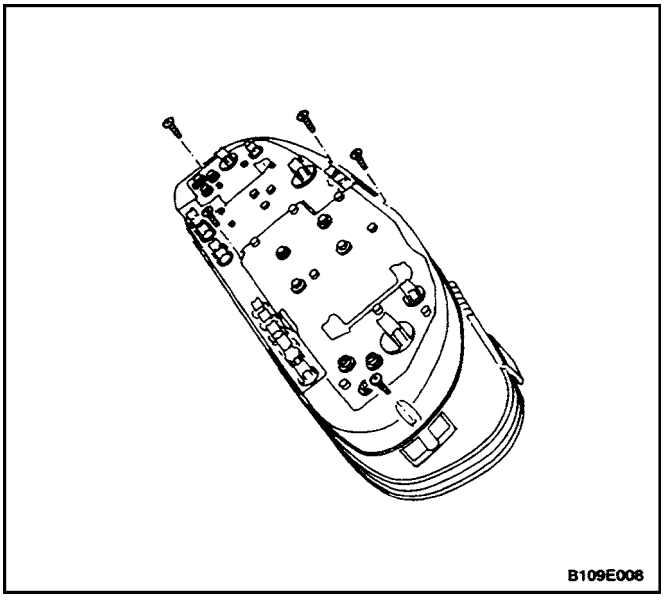

SPEEDOMETER/ODOMETER/TRIP ODOMETER

Removal Procedure

1. Disconnect the negative battery cable.
2. Remove the instrument cluster. Refer to ”Instrument Cluster” in this section.
3. Push the locking and remove the instrument cluster lens.

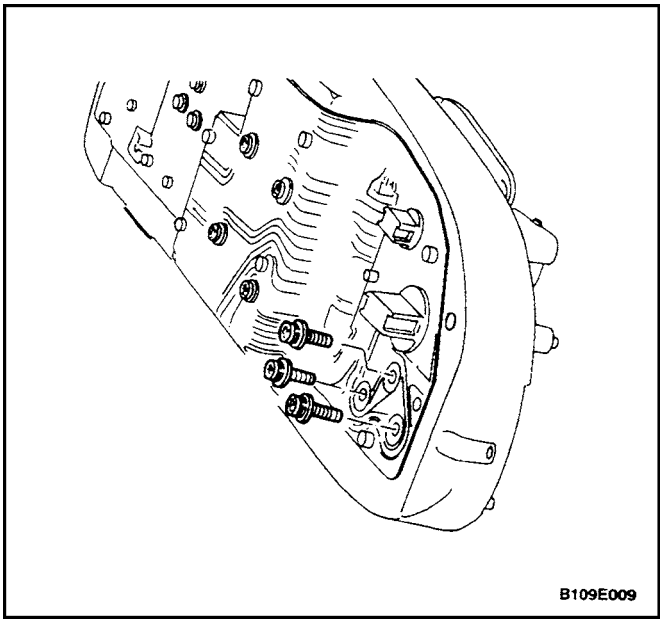

4. Remove the screws and the fuel gauge.

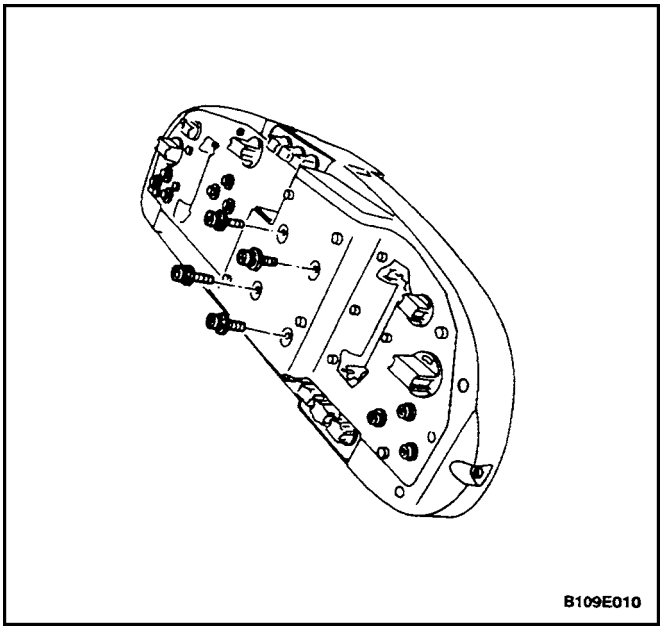

5. Remove the screws and the speedometer/odometer from the instrument cluster.

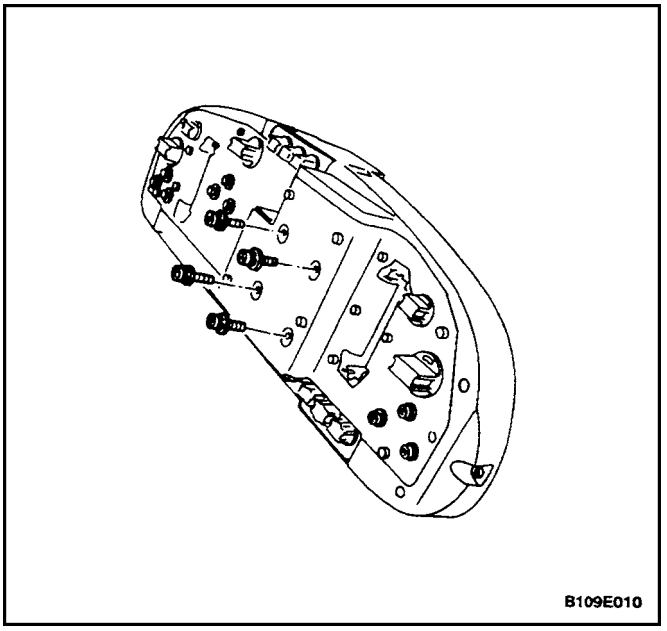

Installation Procedure

1. Install the speedometer/odometer in the instrument cluster with the screws.

   Tighten

   Tighten the speedometer/odometer screws to 2.5 N•m (22 lb–in).

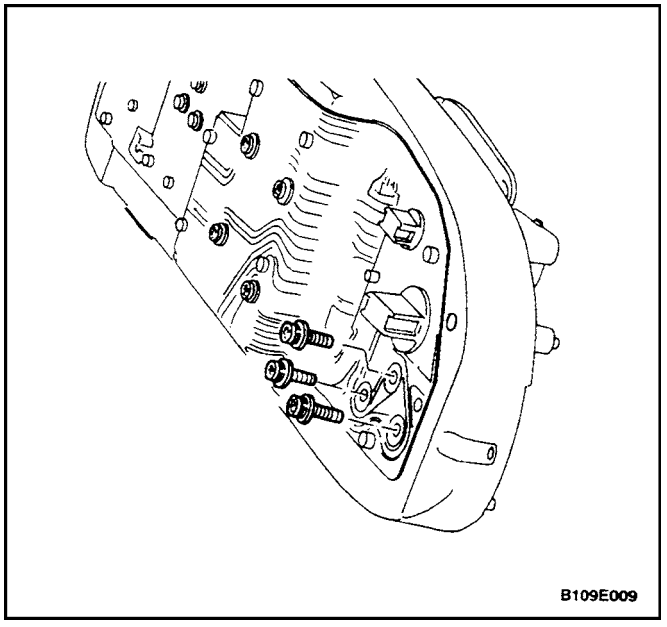

2. Install the fuel gauge with the screws.

   Tighten

   Tighten the fuel gauge screws to 2.5 N•m (22 lb–in).

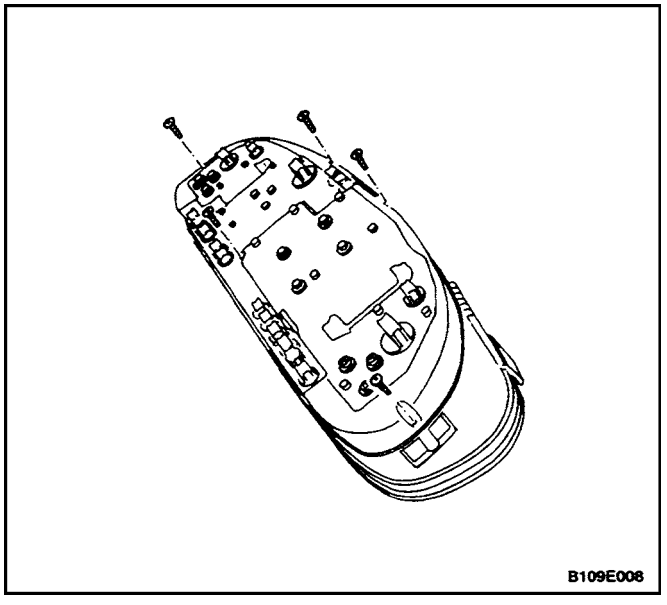

3. Install the instrument cluster lens with the screws.
4. Install the instrument cluster. Refer to ”Instrument Cluster” in this section.
5. Connect the negative battery cable.

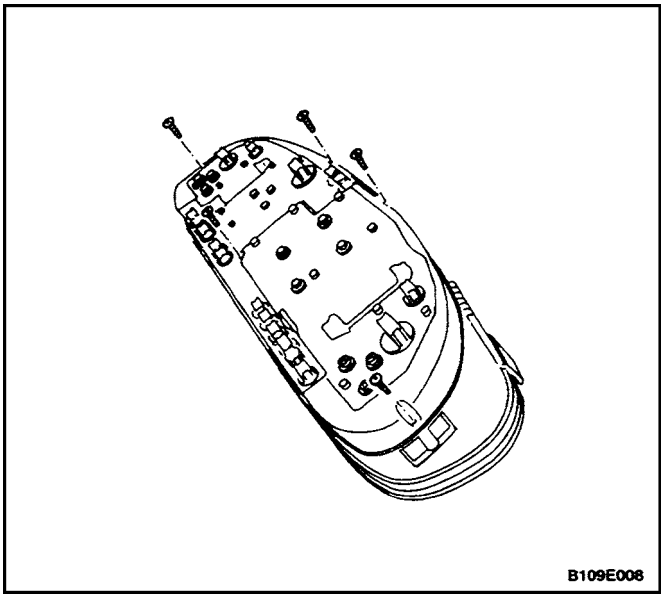
B109E008

TACHOMETER

Removal Procedure

1. Disconnect the negative battery cable.
2. Remove the instrument cluster. Refer to ”Instrument Cluster” in this section
3. Remove the screws and the instrument cluster lens.

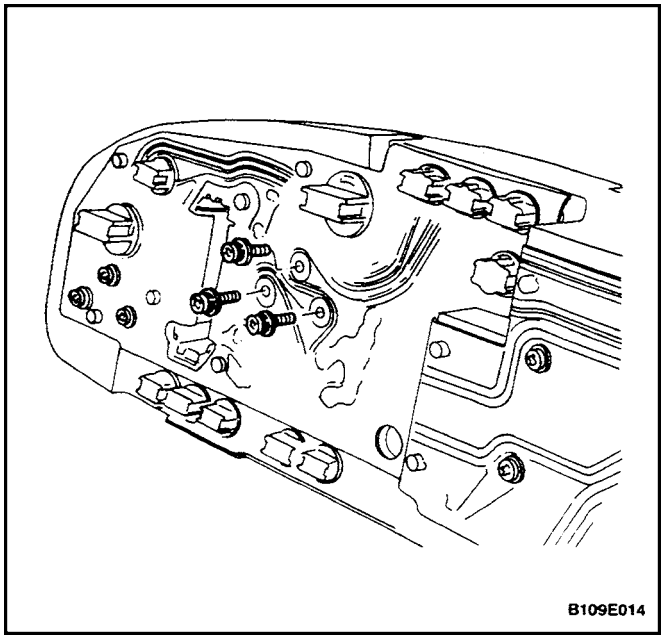
B109E014

4. Remove the screws and the tachometer from the instrument cluster.

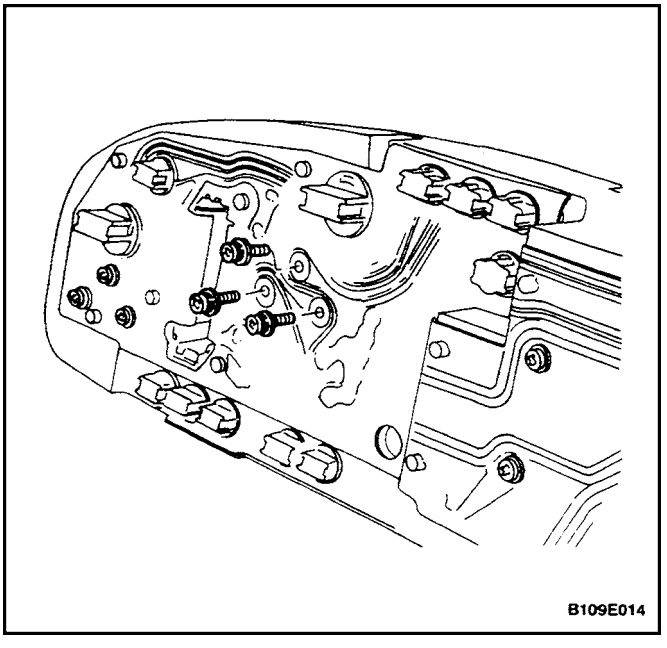
B109E014

Installation Procedure

1. Install the tachometer to the instrument cluster with the screws.

   Tighten

   Tighten the tachometer screws to 2.5 N•m (22 lb–in).

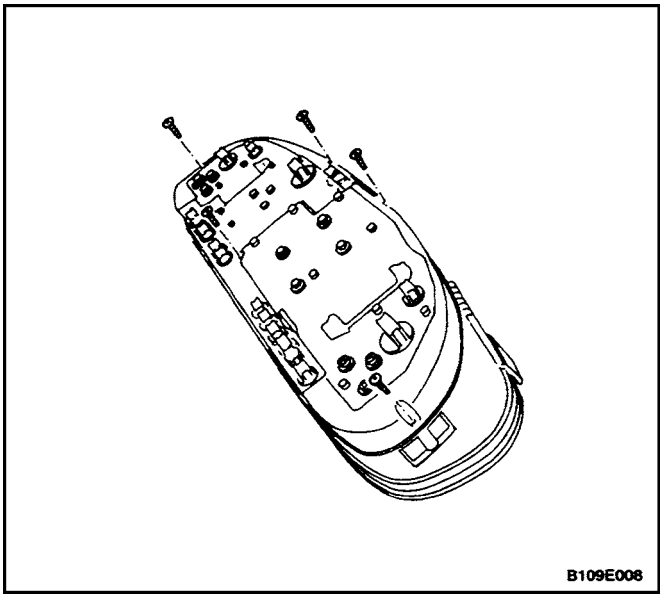

2. Install the instrument cluster lens.
3. Install the instrument cluster. Refer to ”Instrument Cluster” in this section.
4. Connect the negative battery cable.

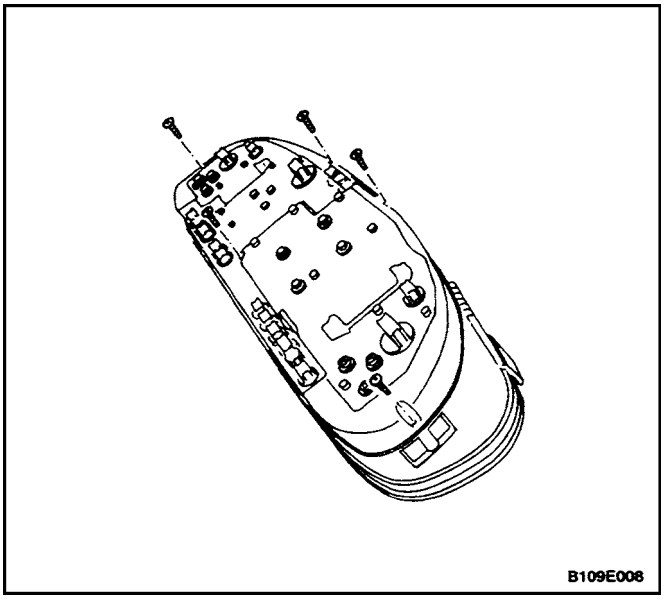

FUEL GAUGE

Removal Procedure

1. Disconnect the negative battery cable.
2. Remove the instrument cluster. Refer to”Instrument Cluster” in this section.
3. Remove the instrument cluster lens.

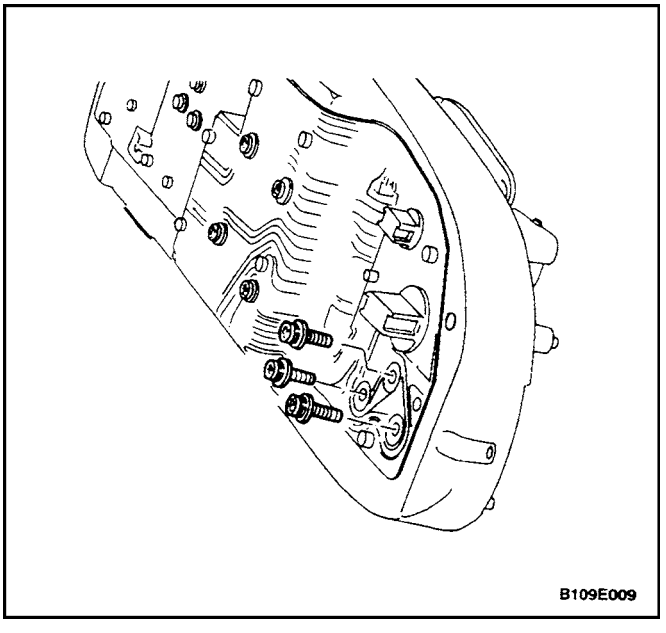

4. Remove the fuel gauge screws and the fuel gauge from the cluster assembly.

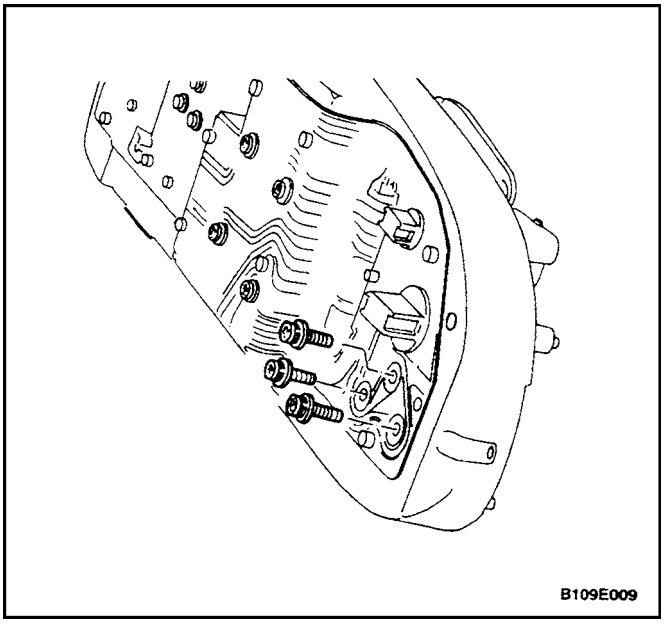

Installation Procedure

1. Install the fuel gauge to the cluster assembly with the fuel gauge screws.

   Tighten

   Tighten the fuel gauge screws to 2.5 N•m (22 lb–in).

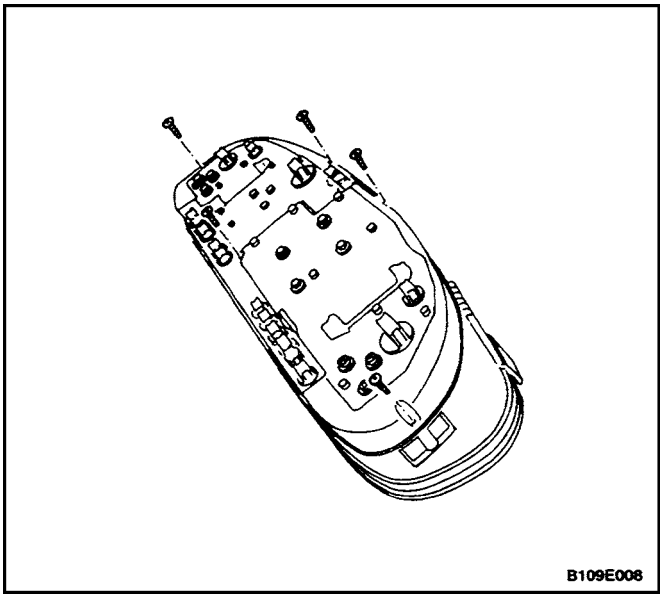

2. Install the instrument cluster lens.
3. Install the instrument cluster. Refer to ”Instrument Cluster” in this section.
4. Connect the negative battery cable.

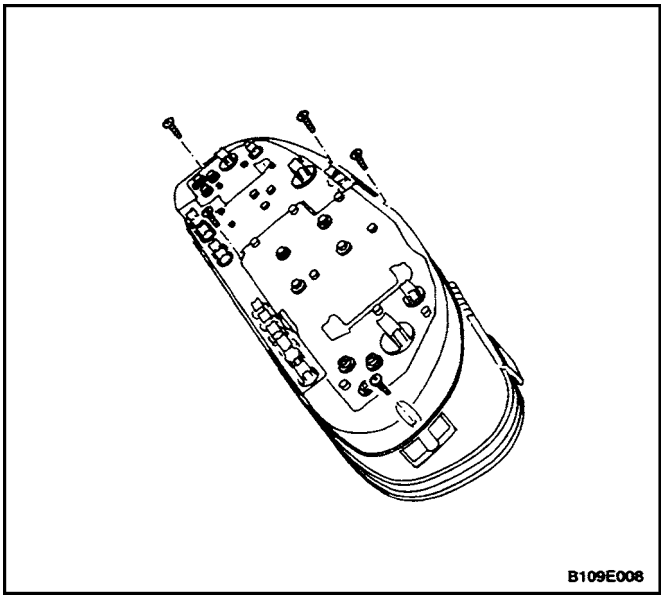

TEMPERATURE GAUGE

Removal Procedure

1. Disconnect the negative battery cable.
2. Remove the instrument cluster. Refer to ”Instrument Cluster” in this section.
3. Remove the instrument cluster lens screws and the instrument cluster lens.

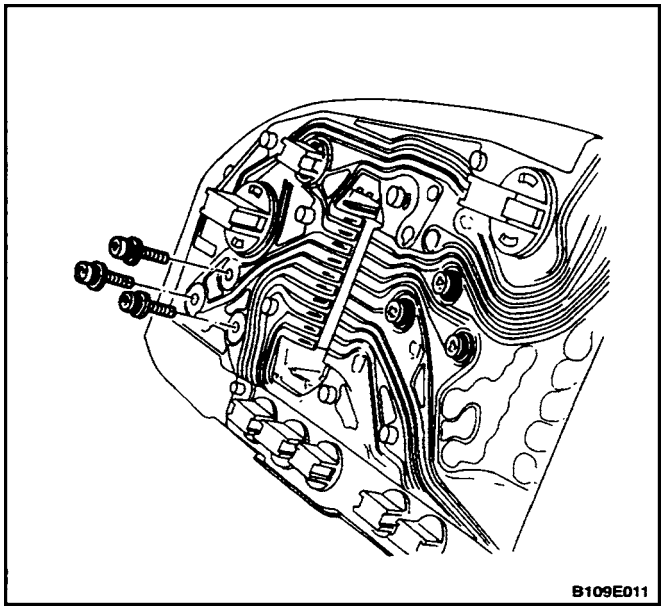

4. Remove the temperature gauge screws and the temperature gauge from the cluster assembly.

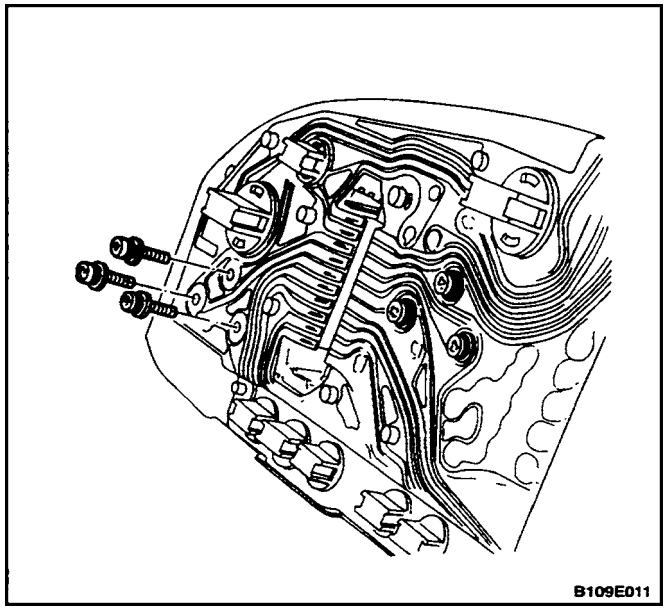

Installation Procedure

1. Install the temperature gauge to the cluster assembly with the temperature gauge screws.

   Tighten

   Tighten the temperature gauge screws to 2.5 N•m (22 lb–in).

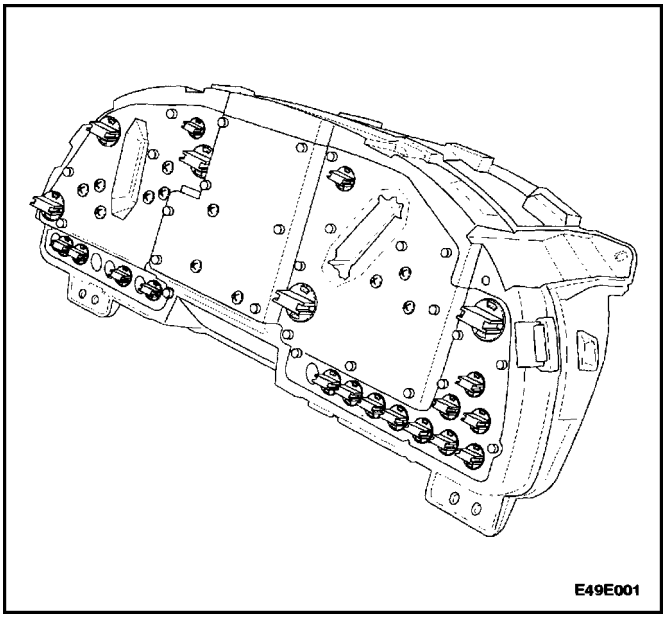

2. Install the instrument cluster lens.
3. Install the instrument cluster. Refer to ”Instrument Cluster” in this section.
4. Connect the negative battery cable.

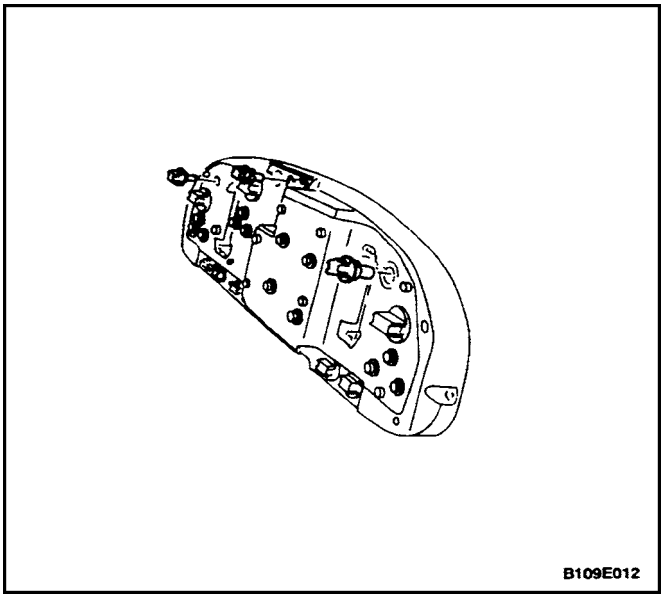

INSTRUMENT CLUSTER INDICATOR LAMPS

Removal Procedure

1. Disconnect the negative battery cable.
2. Remove the instrument cluster. Refer to ”Instrument Cluster” in this section.
3. Remove the bulb from the rear of the cluster.

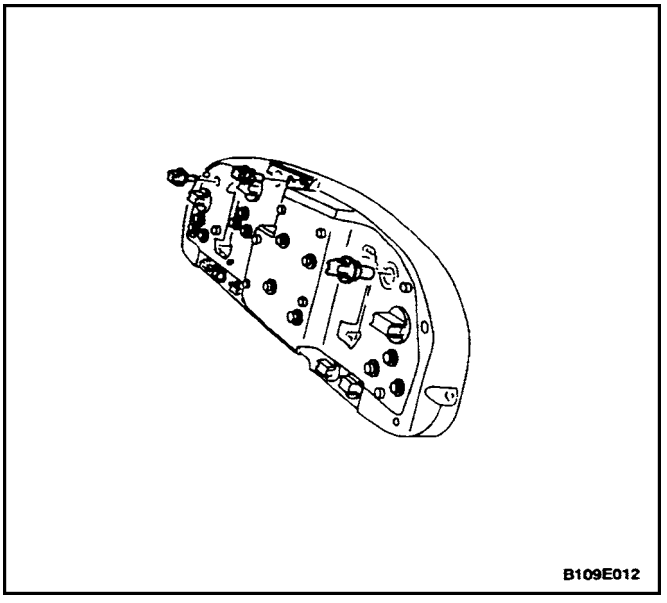

Installation Procedure

1. Install the new bulb.
2. Install the instrument cluster. Refer to ”Instrument Cluster” in this section
3. Connect the negative battery cable.

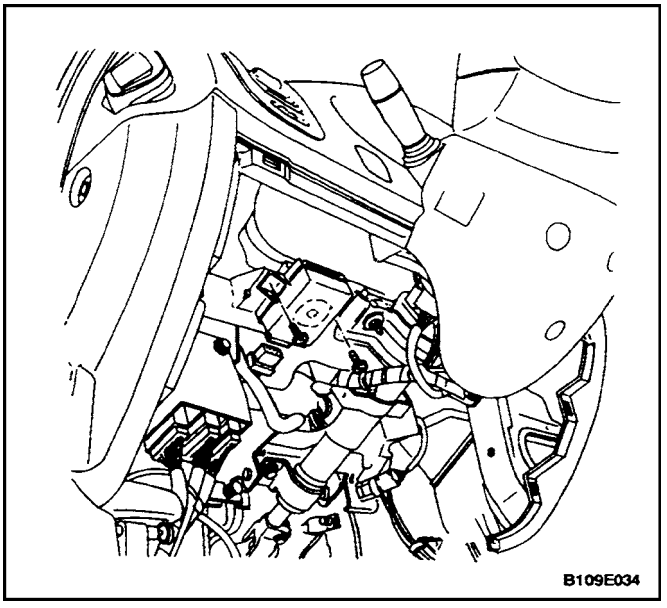

CHIME MODULE

Removal Procedure

1. Disconnect the negative battery cable.
2. Remove the knee bolster trim panel beneath the steering column.
3. Disconnect the electrical connector.
4. Remove the screws and the chime module.

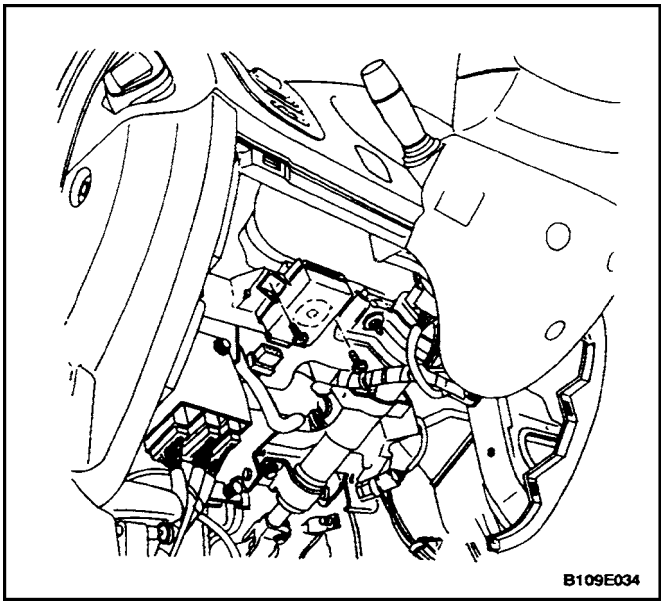

Installation Procedure

1. Install the chime module with the screws.
   Tighten
   Tighten the chime module screws to 4 N•m (35 lb–in).
2. Connect the electrical connector.
3. Install the knee bolster trim panel beneath the steering column.
4. Connect the negative battery cable.

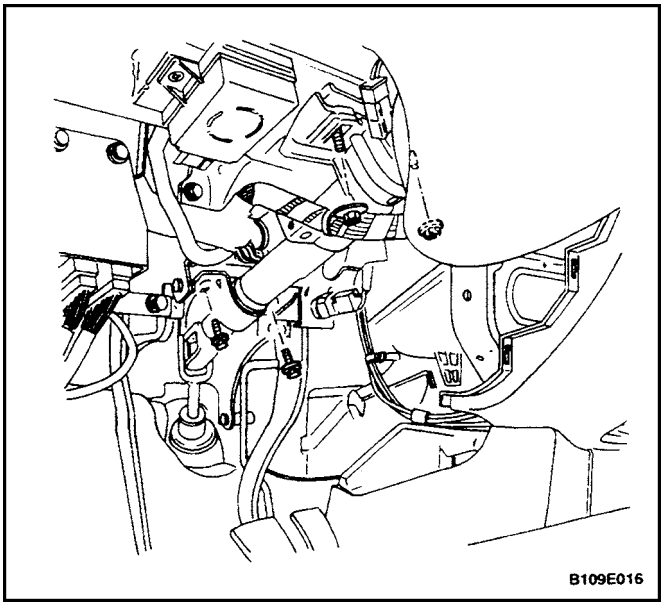

INSTRUMENT PANEL

Removal Procedure

1. Disconnect the negative battery cable.
2. Remove the floor console. Refer to *Section 9G, Interior Trim.*
3. Remove the audio system. Refer to *Section 9F, Audio Systems.*
4. Remove the HVAC controls. Refer to*Section 7A, Heating and Ventilation System.*
5. Remove the instrument cluster. Refer to ”Instrument Cluster” in this section.
6. Remove the A–pillar trim panels. Refer to*Section 9G, Interior Trim.*
7. Install the driver and passenger knee bolsters. Refer to*Section 9G, Interior Trim.*
8. Disconnect the sun sensor electrical connector.
9. Remove the nuts and the bolts that secure the steering column.
10. Lower the steering column.
11. Remove the screw that secures the instrument panel to the heater air distributor case.

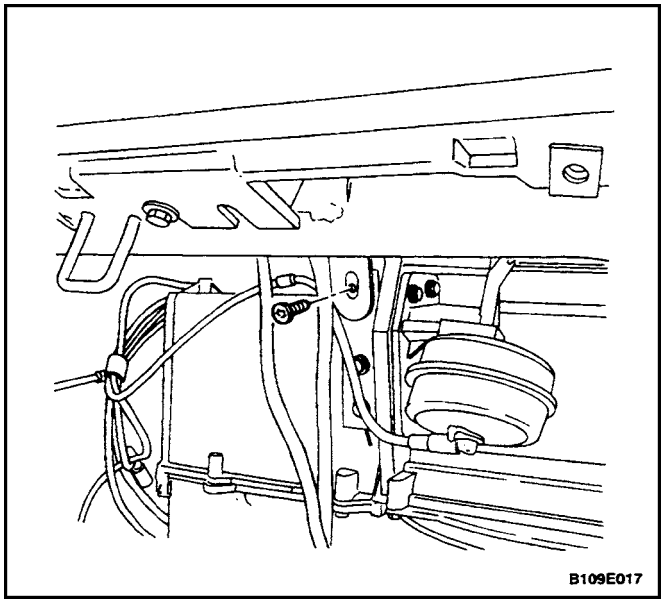

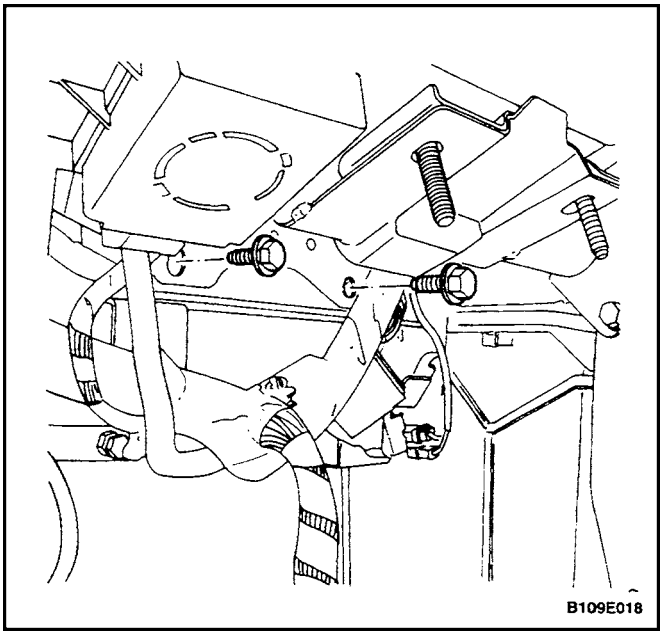

12. Remove the bolts that secure the instrument panel to the pedal assembly.

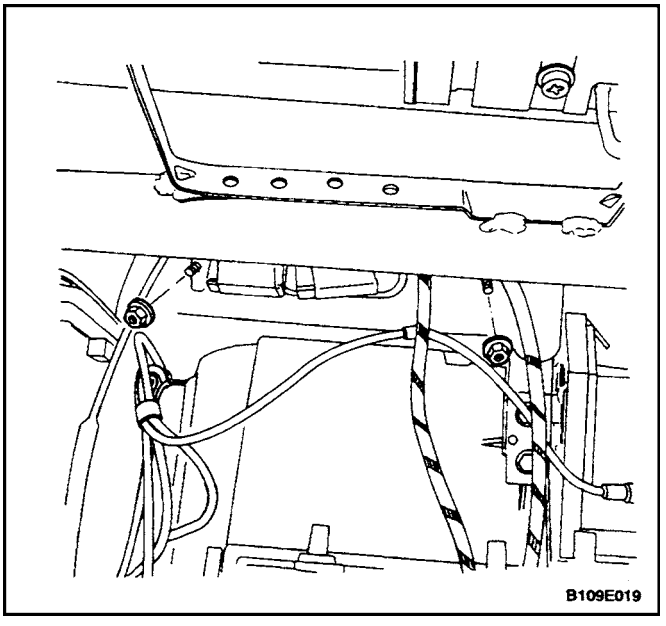

13. Remove the nuts that secure the back of the instrument panel to the bulkhead.

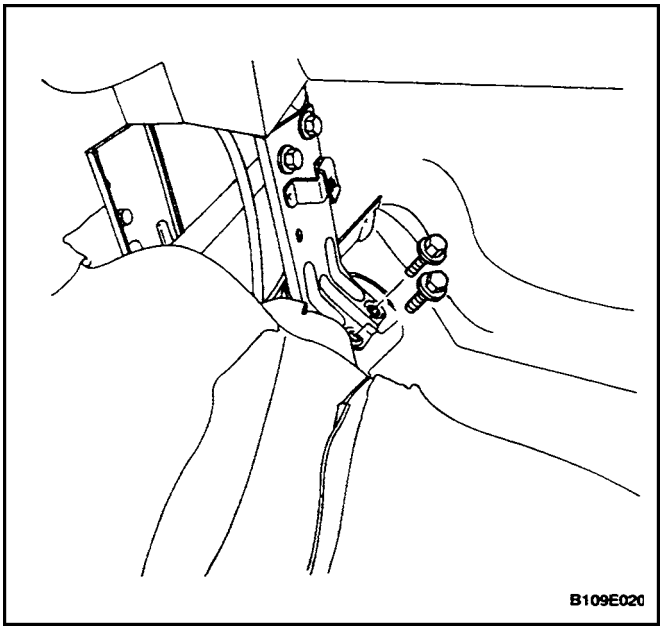

14. Remove the bolts that secure the bottom of the instrument panel to the floor.

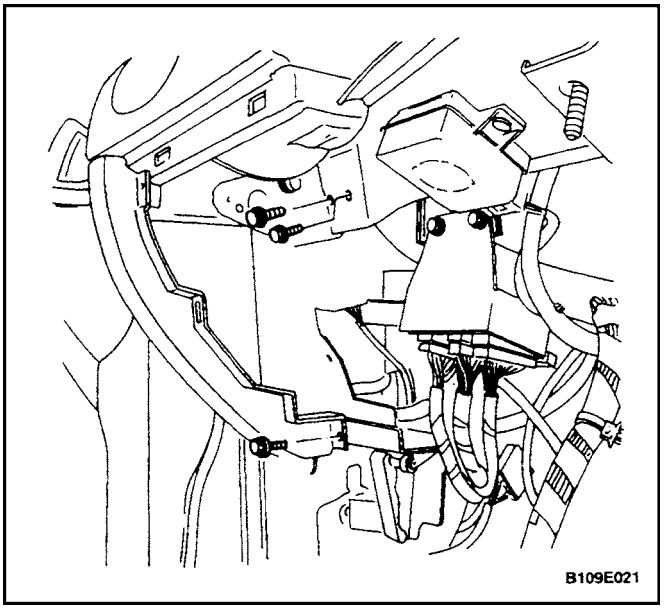

15. Remove the bolts that secure the sides of the instrument panel to the body.
16. Disconnect the instrument panel electrical connectors.
17. Remove the Instrument panel.

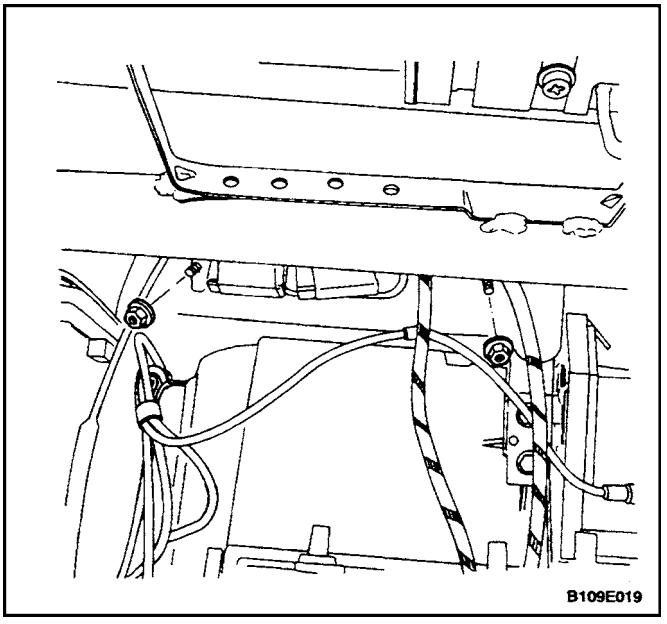

Installation Procedure

1. Position the instrument panel in the vehicle.
2. Connect the instrument panel electrical connectors.

Notice : Dissimilar metals in direct contact with each other may corrode rapidly. Make sure to use the correct fasteners to prevent premature corrosion.

3. Install the nuts securing the back of the instrument panel to the bulkhead.

Tighten

Tighten the instrument panel–to–bulkhead nuts to 10 N•m (89 lb–in).

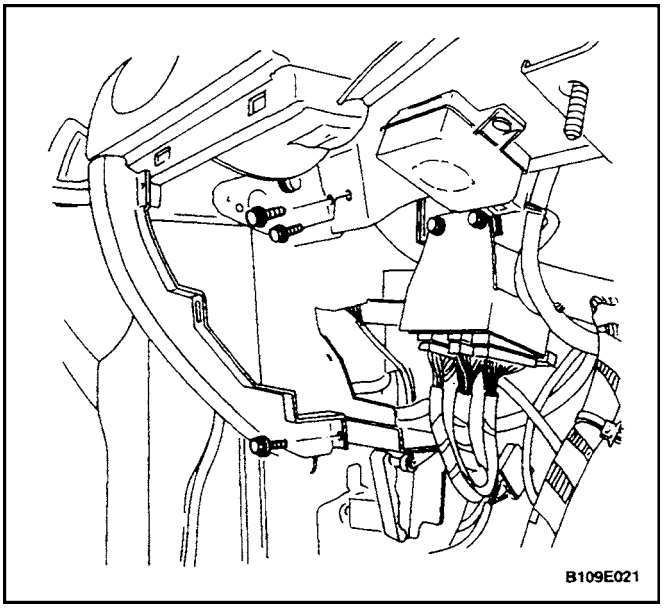

4. Install the bolts securing the sides of the instrument panel to the body.

Tighten

Tighten the instrument panel–to–body bolts to 22 N•m (16 lb–ft).

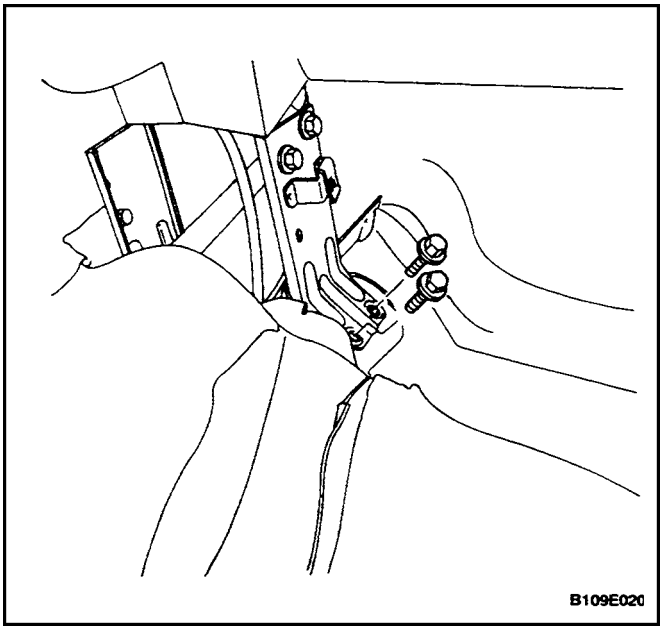

5. Install the bolts securing the bottom of the instrument panel to the floor.

Tighten

Tighten the instrument panel–to–floor bolts to 22 N•m (16 lb–ft).

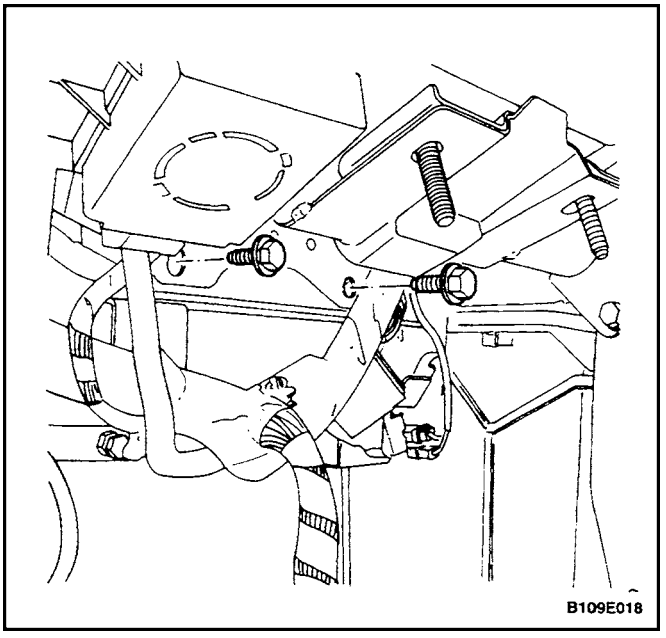

6. Install the bolts securing the instrument panel to the pedal assembly.

Tighten

Tighten the instrument panel–to–pedal assembly bolts to 22 N•m (16 lb–ft).

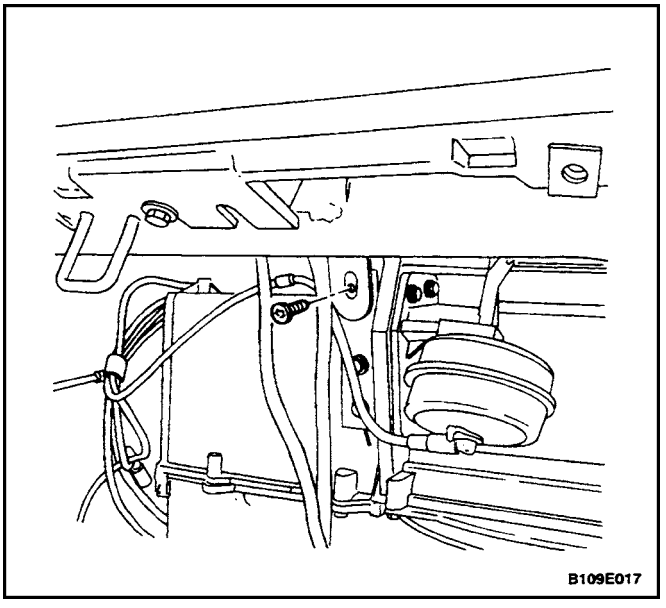

7. Install the screw securing the instrument panel to the heater air distribution case.

Tighten

Tighten the instrument panel–to–heater air distribution case screw to 2 N•m (18 lb–in).

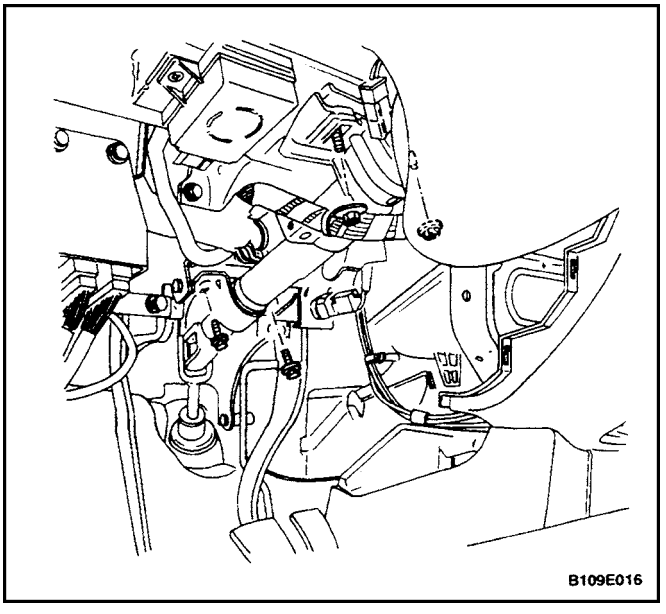

8. Raise the steering column.
9. Connect the steering column electrical connectors.
10. Install the nuts and the bolts securing the steering column.

Tighten

Tighten the steering column nuts to 22 N•m (16 lb–ft).

Tighten the steering column bolts to 22 N•m (16 lb–ft).

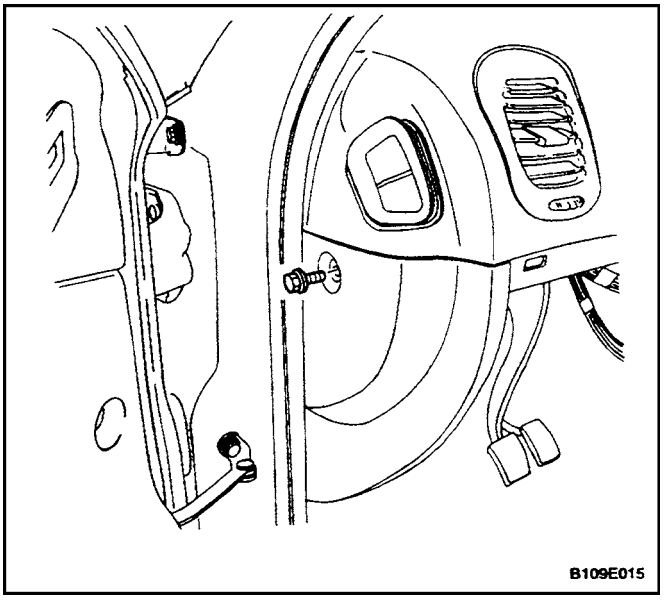

11. Install the driver and passenger knee bolsters. Refer to*Section 9G, Interior Trim.*
12. Install the A–pillar trim panels. Refer to*Section 9G, Interior Trim.*
13. Remove the instrument cluster. Refer to ”Instrument Cluster” in this section.
14. Remove the HVAC controls. Refer to*Section 7A, Heating and Ventilation System.*
15. Install the audio system. Refer to*Section 9F, Audio Systems.*
16. Install the floor console. Refer to*Section 9G, Interior Trim.*
17. Connect the negative battery cable.

GENERAL DESCRIPTION AND SYSTEM OPERATION

CIGAR LIGHTER

The cigar lighter is located the floor console. To use the lighter, push it in completely. When the lighter is hot, it will release itself from contact with the heating element. The lighter and the heating element can be damaged if the lighter is not allowed to fully release itself from the heating element.

ASHTRAY

The ashtray is located below the audio system. To access the ashtray, pull it out of the ashtray housing. The ashtray lamp will go on when the parking lamps or the headlamps are on.

INSTRUMENT PANEL VENTS

The center and the side vents in the instrument panel can be adjusted up and down and from side to side. The side vents can also be aimed toward the side windows in order to defog them.

GLOVE BOX

The glove box can be opened by pulling up on the latch handle. The glove box must be removed in order to gain access to the passenger–side airbag module (if equipped).

DIGITAL CLOCK

The digital clock is located cluster housing. The clock is capable of a 12–hour or a 24–hour display.

INSTRUMENT CLUSTER

The instrument cluster is located above the steering column and in the instrument cluster trim panel. The instrument cluster contains the instruments that provide the driver with vehicle performance information. The instrument cluster contains a speedometer, a tachometer, an odometer, a trip odometer, a temperature gauge, a fuel gauge and several indicator lamps. For replacement of the indicator lamp bulbs contained in the instrument cluster, refer to”Instrument Cluster Indicator Lamps Specifications” in this section.

SPEEDOMETER

The speedometer measures the speed of the vehicle. It consists of an instrument cluster gauge connected to the vehicle speed sensor on the transaxle output shaft.

TRIP ODOMETER

The trip odometer measures the distance the vehicle has traveled since it was last reset. It consists of an instrument cluster gauge connected to the sending unit on the transaxle output shaft. The trip odometer can be reset to zero at any time so that the driver can record the distance traveled from any starting point.

FUEL GAUGE

The fuel gauge consists of an instrument cluster gauge connected to a sending unit in the fuel tank.

The fuel gauge indicates the quantity of fuel in the tank only when the ignition switch is turned to ON or ACC. When the ignition is turned to LOCK or START, the pointer may come to rest at any position.

TEMPERATURE GAUGE

The temperature gauge consists of an instrument cluster gauge connected to a temperature sensor that is in contact with the circulating engine coolant.

The temperature gauge indicates the temperature of the coolant. Prolonged driving or idling in very hot weather may cause the pointer to move beyond the center of the gauge. The engine is overheating if the pointer moves into the red zone at the upper limit of the gauge.

INSTRUMENT CLUSTER INDICATOR LAMPS

The instrument cluster contains indicator lamps that indicate the functioning of certain systems or the exis–tence of potential problems with the operation of the vehicle. The indicator lamps are replaceable. For replacement of the indicator lamps contained in the instrument cluster, refer to”Instrument Cluster Indicator Lamps Specifications” in this section.

TACHOMETER

The tachometer measures the engine’s speed in terms of thousands of revolutions per minute. It consists of an instrument cluster gauge connected to a sending unit in the powertrain control module (PCM)/engine control module (ECM).

Notice : Do not operate the engine in the red zone; otherwise, engine damage may occur.

CHIME MODULE

The chime module will sound in order to bring attention to one or more of the following conditions:

- The lights are on and the ignition switch is not in ACC, ON, or START.
- The ignition key is in the ignition switch when the driver’s door is open.
- The seat belt is unbuckled when the ignition switch is in ON or START.
- The driver’s side door is open when the ignition is in ACC, ON, or START.

Voltage is supplied at all times through the fuse block to power the chime module.

SECTION : 9E

INSTRUMENTATION/DRIVER INFORMATION

CAUTION : Disconnect the negative battery cable before removing or installing any electrical unit or when a tool or equipment could easily come in contact with exposed electrical terminals. Disconnecting this cable will help prevent personal injury and damage to the vehicle. The ignition must also be in LOCK unless otherwise noted.

TABLE OF CONTENTS

SPECIFICATIONS 9E–2
- FASTENER TIGHTENING SPECIFICATIONS . 9E–2
- INSTRUMENT CLUSTER INDICATOR LAMPS SPECIFICATIONS 9E–2

SCHEMATIC AND ROUTING DIAGRAMS 9E–4
- INSTRUMENT PANEL WIRING HARNESS (1 OF 3) 9 E–4
- INSTRUMENT PANEL WIRING HARNESS (2 OF 3) 9 E–5
- INSTRUMENT PANEL WIRING HARNESS (3 OF 3) 9 E–6
- CIGAR LIGHTER 9E–7
- ASHTRAY LAMP 9E–7
- DIGITAL CLOCK 9E–8
- INSTRUMENT PANEL ILLUMINATION 9E–9
- CHIME MODULE 9E–10

DIAGNOSIS 9E–11
- CIGAR LIGHTER 9E–11
- ASHTRAY LAMP 9E–11
- DIGITAL CLOCK 9E–12
- INSTRUMENT PANEL ILLUMINATION 9E–13
- SPEEDOMETER (CABLELESS) 9E–14
- TACHOMETER 9E–14
- FUEL GAUGE 9E–16
- TEMPERATURE GAUGE 9E–17
- INSTRUMENT CLUSTER INDICATOR LAMPS 9E–18
- CHIME MODULE 9E–20

MAINTENANCE AND REPAIR 9E–23

ON–VEHICLE SERVICE 9E–23
- CIGAR LIGHTER 9E–23
- ASHTRAY 9E–25
- CUP HOLDER 9E–26
- GLOVE BOX 9E–27
- DIGITAL CLOCK 9E–28
- INSTRUMENT CLUSTER 9E–29
- SPEEDOMETER/ODOMETER/TRIP ODOMETER 9E –29
- TACHOMETER 9E–32
- FUEL GAUGE 9E–33
- TEMPERATURE GAUGE 9E–34
- INSTRUMENT CLUSTER INDICATOR LAMPS 9E–36
- CHIME MODULE 9E–36
- INSTRUMENT PANEL 9E–37

GENERAL DESCRIPTION AND SYSTEM OPERATION 9E–43
- CIGAR LIGHTER 9E–43
- ASHTRAY 9E–43
- INSTRUMENT PANEL VENTS 9E–43
- GLOVE BOX 9E–43
- DIGITAL CLOCK 9E–43
- INSTRUMENT CLUSTER 9E–43
- SPEEDOMETER 9E–43
- TRIP ODOMETER 9E–43
- FUEL GAUGE 9E–43
- TEMPERATURE GAUGE 9E–43
- INSTRUMENT CLUSTER INDICATOR LAMPS 9E–43
- TACHOMETER 9E–43
- CHIME MODULE 9E–43

SPECIFICATIONS

FASTENER TIGHTENING SPECIFICATIONS

Application	N•m	Lb–Ft	Lb–In
Ashtray Housing Screw	2.5	–	22
Chime Module Screws	4	–	35
Cup Holder Screws	2.5	–	22
Digital Clock Screws	4		35
Fuel Gauge Screws	2.5	–	22
Glove Box Screws	5.5	–	49
Instrument Cluster Screws	4	–	35
Instrument Panel–to–Body Bolts	22	16	–
Instrument Panel–to–Bulkhead Nuts	10	–	89
Instrument Panel–to–Floor Bolts	22	16	–
Instrument Panel–to–Heater Air Distribution Case Screw	2	–	18
Instrument Panel–to–Pedal Assembly Bolts	22	16	–
Speedometer/Odometer Screws	2.5	–	22
Steering Column Bolts	22	16	–
Steering Column Nuts	22	16	–
Tachometer Screws	2.5	–	22
Temperature Gauge Screws	2.5	–	22
Ticket Holder Screws	4		35

INSTRUMENT CLUSTER INDICATOR LAMPS SPECIFICATIONS

Indicator Lamp	Color	Bulb
ABS Warning	Amber	14V1.4W
Airbag Warning	Red	14V1.4W
Automatic Transmission Shift Position Indicator Park Reverse Neutral Drive 3 2 1	Green Red Green Green Green Green Green Green	14V1.4W 14V1.4W 14V1.4W 14V1.4W 14V1.4W 14V1.4W 14V1.4W 14V1.4W
Battery Charge Indicator	Red	14V1.4W
Door Opening Warning	Red	14V1.4W

Indicator Lamp	Color	Bulb
Fasten Seat Belt Warning	Red	14V1.4W
Front Fog Lamp Indicator	Green	14V1.4W
High Beam Indicator	Blue	14V1.4W
Low Fuel Level Warning	Amber	14V 3W
Oil Pressure Warning	Red	14V 1.4W
Parking Brake Indicator and Brake Fluid Warning	Red	14V 1.4W
Service Engine Soon Warning	Amber	14V 1.4W
Transaxle Power Mode Indicator	Amber	14V 1.4W
Trunk Open Warning	Amber	14V 1.4W
Turn Signal Indicators	Green	14V 1.4W

SCHEMATIC AND ROUTING DIAGRAMS

INSTRUMENT PANEL WIRING HARNESS (1 OF 3)

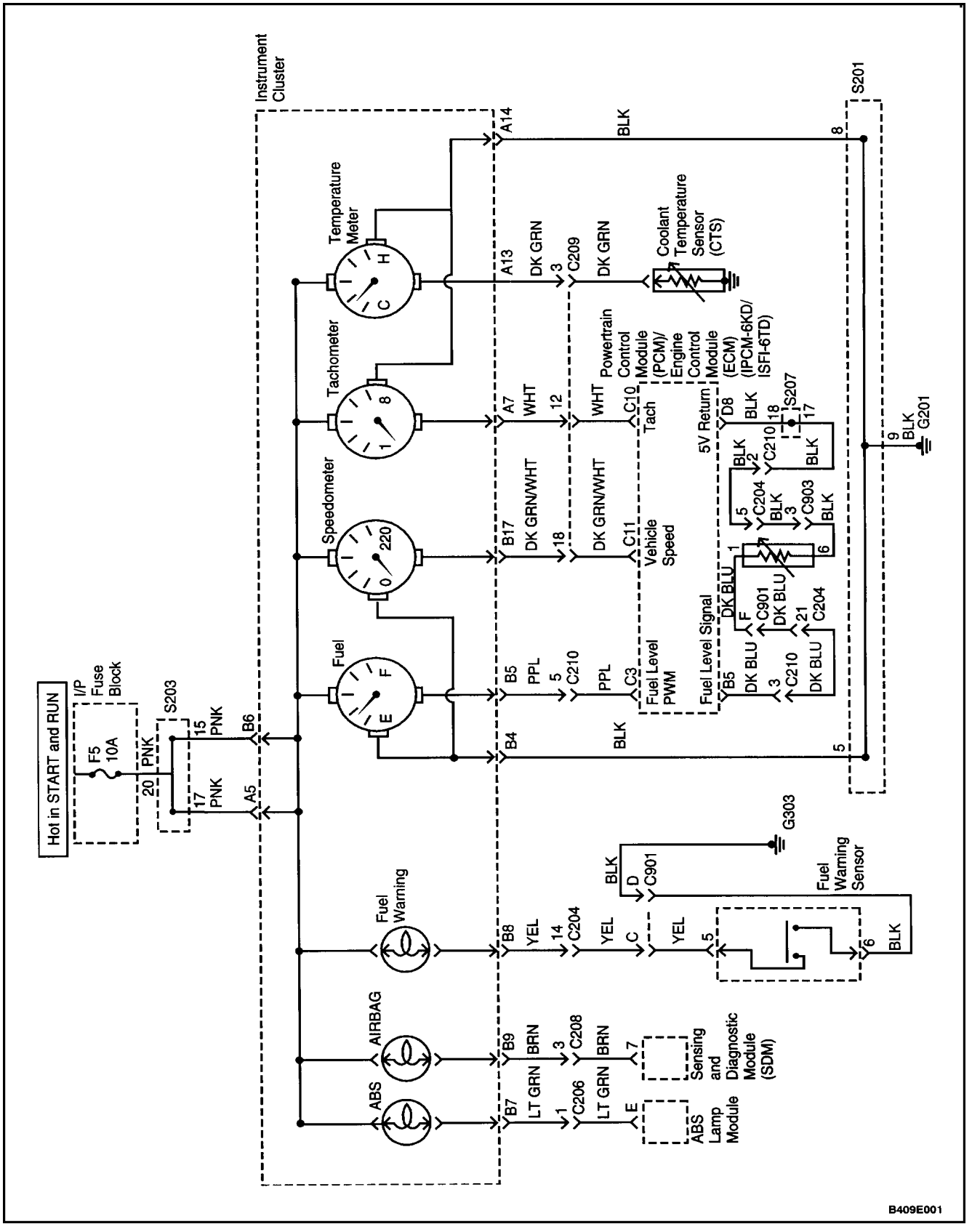

INSTRUMENT PANEL WIRING HARNESS (2 OF 3)

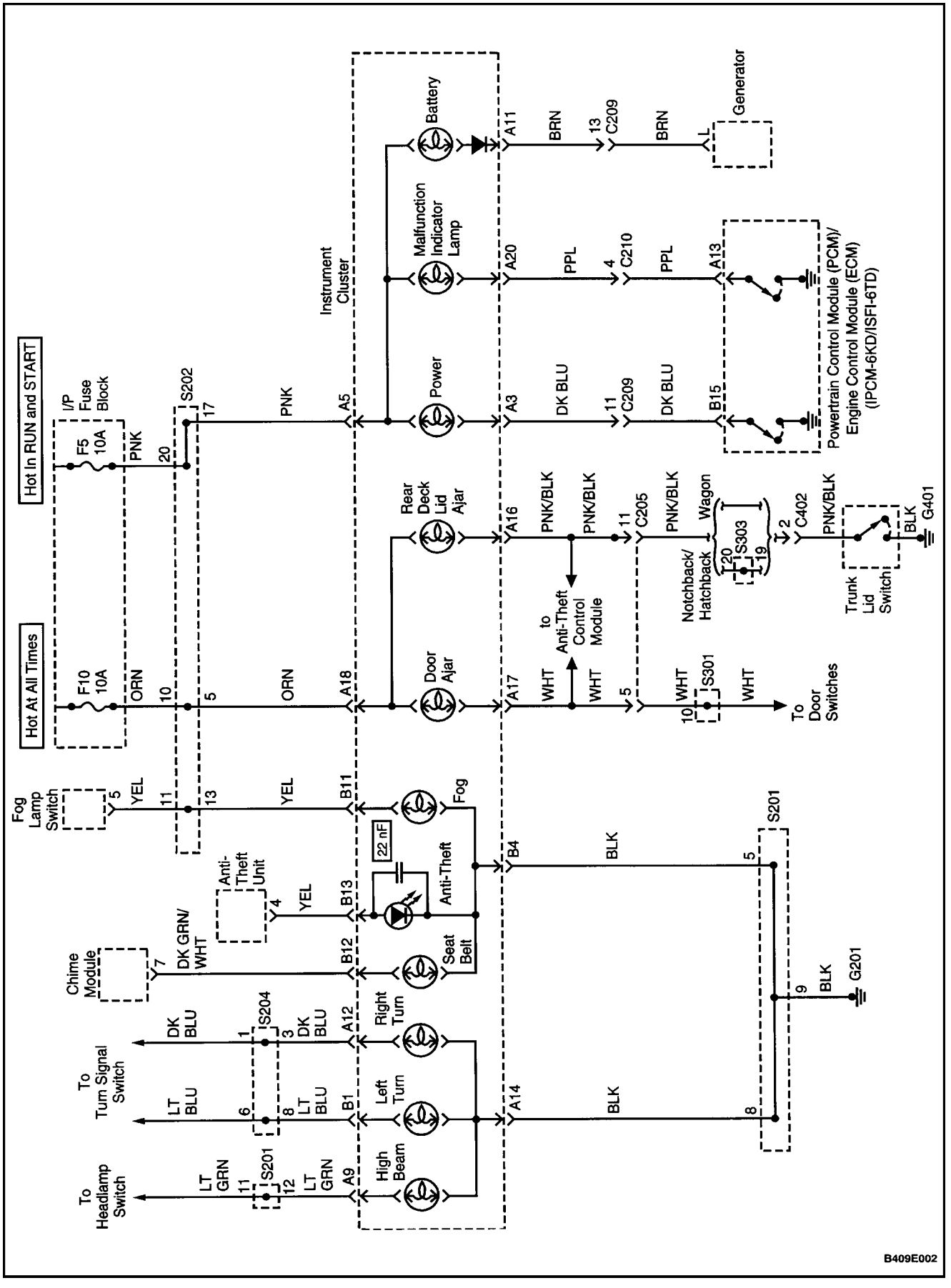

INSTRUMENT PANEL WIRING HARNESS (3 OF 3)

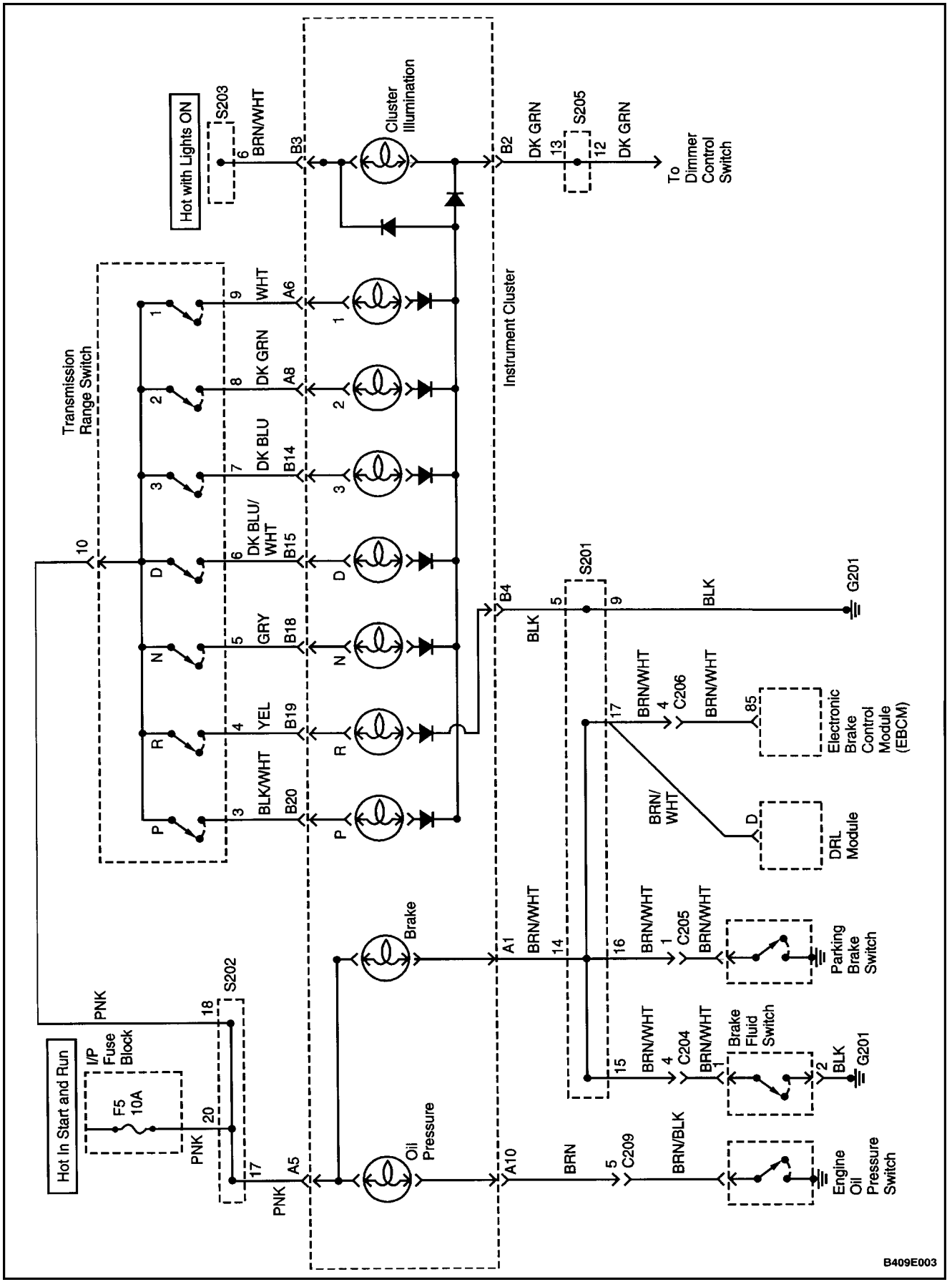

CIGAR LIGHTER

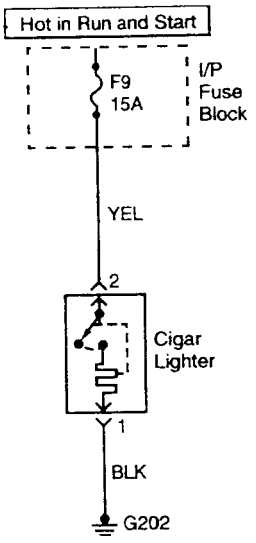

B409E004

ASHTRAY LAMP

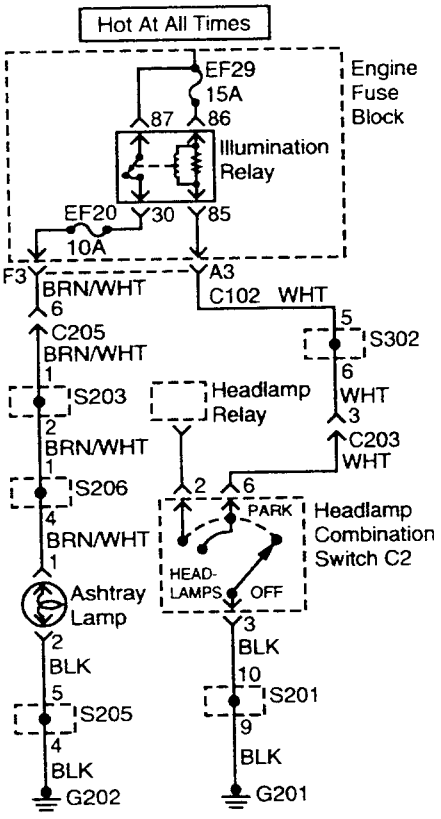

B409E005

DIGITAL CLOCK

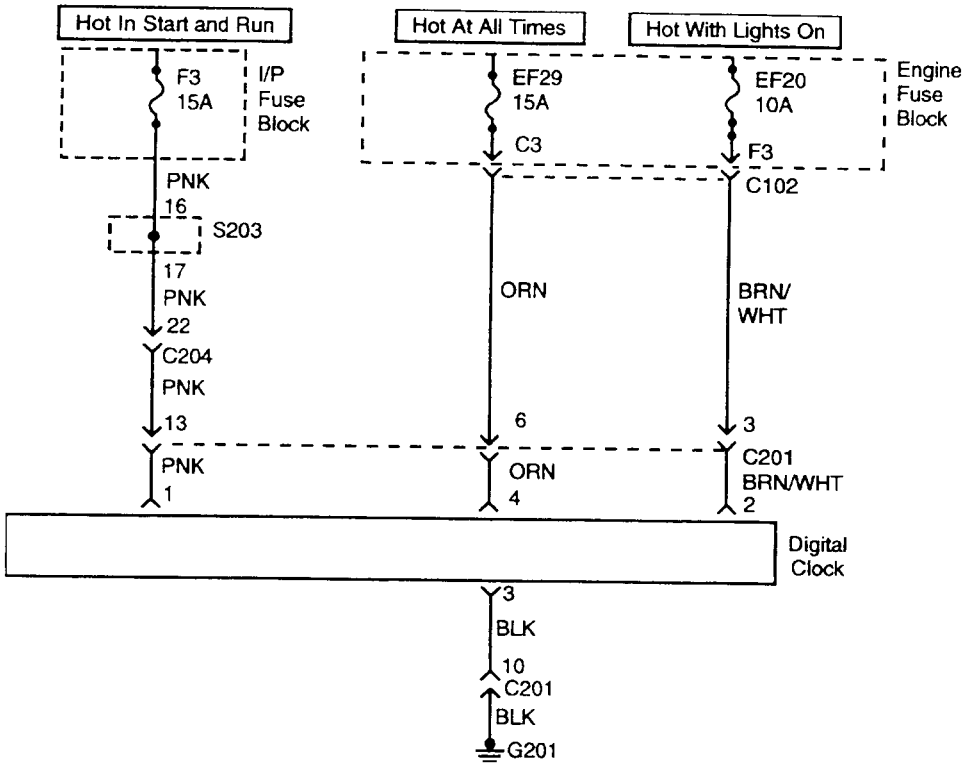

INSTRUMENT PANEL ILLUMINATION

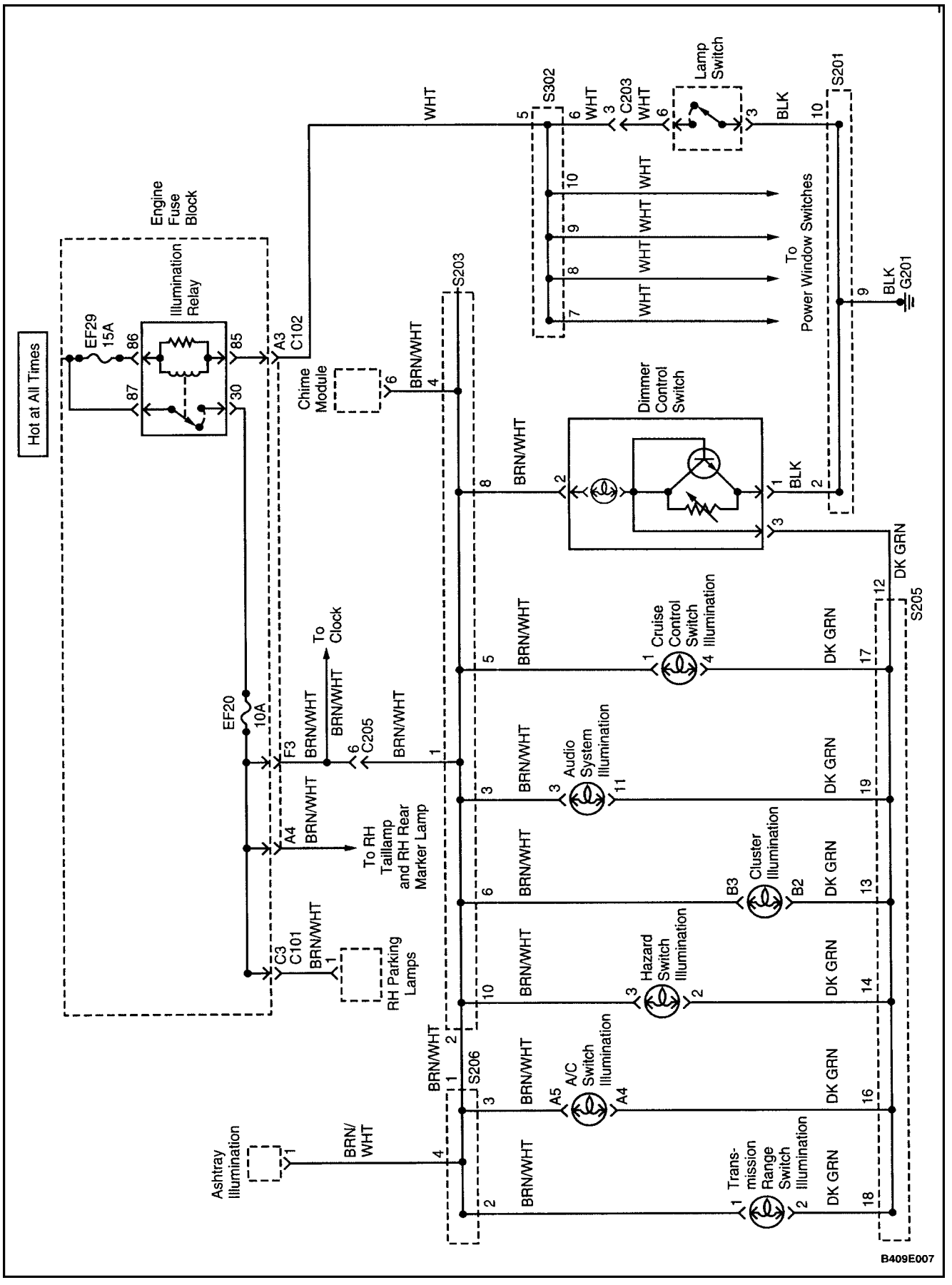

CHIME MODULE

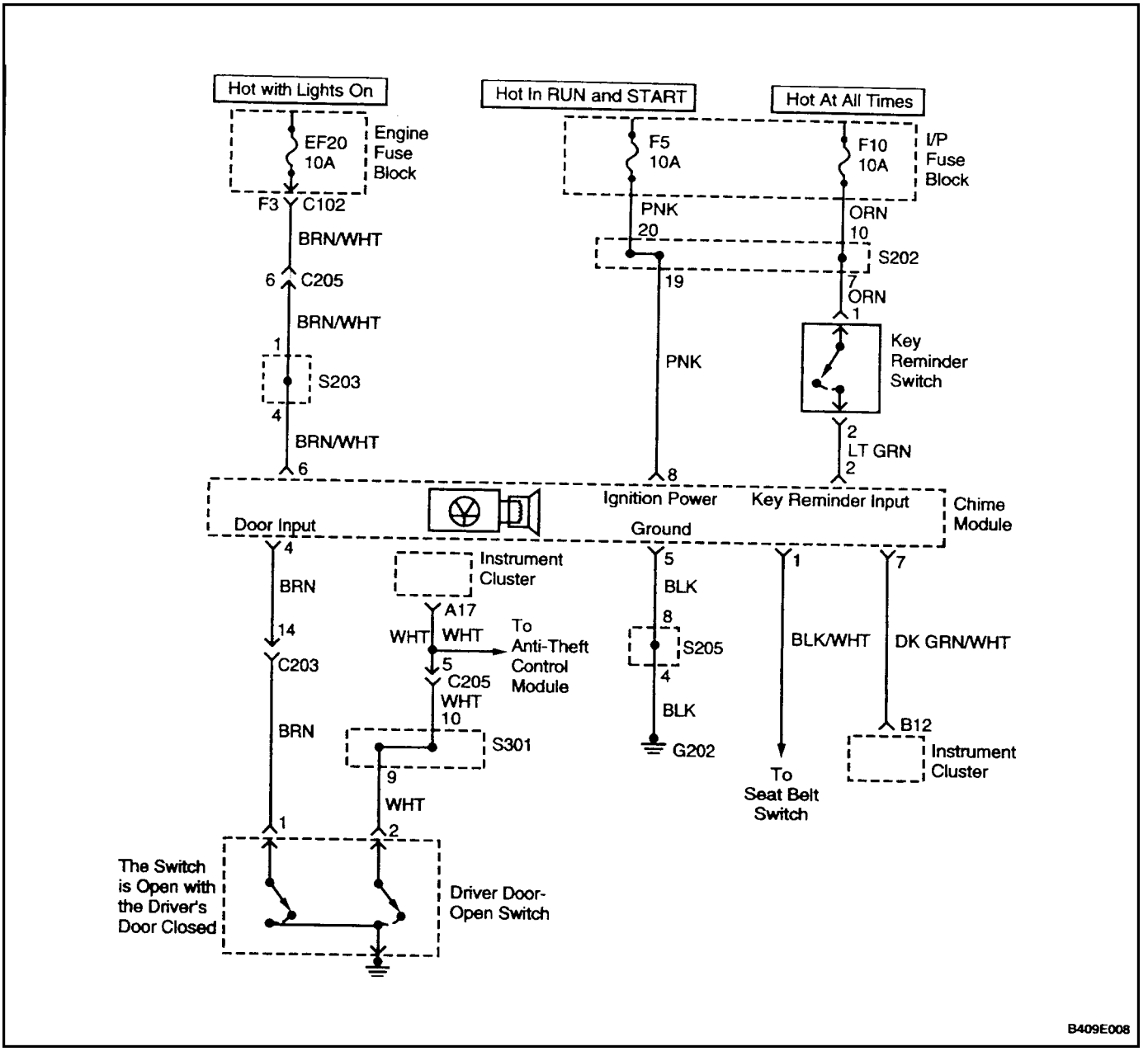

DIAGNOSIS

CIGAR LIGHTER

Cigar Lighter Inoperative

Step	Action	Value(s)	Yes	No
1	Check fuse EF23. Is the fuse blown?		Go to *Step 2*	Go to *Step 3*
2	1. Check for a short circuit and repair it, if necessary. 2. Replace the fuse. Is the repair complete?		System OK	
3	Use a voltmeter to check for voltage at fuse EF23. Does the battery voltage available at the fuse EF14 match the value specified?	11–14 v	Go to *Step 5*	Go to *Step 4*
4	Repair the open power supply circuit for fuse EF23. Is the repair complete?		System OK	
5	1. Remove the electrical connector from the back of the cigar lighter. 2. Use a voltmeter to check the voltage at the ORN wire. Does the battery voltage available at the ORN wire match the value specified?	11–14 v	Go to *Step 7*	Go to *Step 6*
6	Repair the open circuit between the fuse EF23 and the cigar lighter. Is the repair complete?		System OK	
7	Connect the voltmeter between the ORN and the BLK wires at the cigar lighter connector. Does the battery voltage match the value specified?	11–14 v	Go to *Step 9*	Go to *Step 8*
8	Repair the open ground circuit. Is the repair complete?		System OK	
9	Replace the cigar lighter. Is the repair complete?		System OK	

ASHTRAY LAMP

Ashtray Lamp Is Inoperative

Step	Action	Value(s)	Yes	No
1	1. Turn the headlamps ON. 2. Turn the dimmer control to the brightest position. 3. Check the instrument cluster lamps. Do the instrument cluster lamps work?		Go to *Step 3*	Go to *Step 2*
2	Repair the instrument cluster lamps. Is the repair complete?		Go to *Step 3*	System OK

Step	Action	Value(s)	Yes	No
3	1. Remove the ashtray lamp from its socket. 2. Turn the headlamps ON. 3. Turn the dimmer control to the brightest position. 4. Check the voltage at the ashtray lamp positive terminal (BRN/WHT wire). Is the voltage equal to the specified value?	11–14 v	Go to *Step 5*	Go to *Step 4*
4	Repair the open circuit between fuse EF20 and the ashtray lamp. Is the repair complete?		System OK	
5	Connect an ohmmeter between ground and the negative terminal at the ashtray lamp. Is the resistance equal to the specified value?	$\approx$ 0 Ω	Go to *Step 7*	Go to *Step 6*
6	Repair the open ground circuit for the ashtray lamp. Is the repair complete?		System OK	
7	Replace the ashtray lamp bulb. Is the repair complete?		System OK	

DIGITAL CLOCK

Digital Clock Inoperative

Step	Action	Value(s)	Yes	No
1	Is either of the fuses F3 or EF29 blown?		Go to *Step 2*	Go to *Step 3*
2	1. Check for a short circuit and repair it, if necessary. 2. Replace the blown fuses. Is the repair complete?		System OK	
3	1. Turn the ignition ON. 2. Use a voltmeter to check battery voltage available at fuses F3 and EF29. Does the voltmeter indicate the value specified?	11–14 v	Go to *Step 5*	Go to *Step 4*
4	Repair the open power supply circuit for the fuse. Is the repair complete?		System OK	
5	Use a voltmeter to check the battery voltage available at the clock connector terminal 4. Does the voltmeter indicate the value specified?	11–14 v	Go to *Step 7*	Go to *Step 6*
6	Repair the open circuit between the clock connector terminal 4 and the fuse EF29. Is the repair complete?		System OK	
7	Turn the ignition ON. Is battery voltage available at the clock connector terminal 1?		Go to *Step 9*	Go to *Step 8*
8	Repair the open circuit between the clock connector terminal 1 and the fuse F3. Is the repair complete?		System OK	
9	Check continuity between the clock connector terminal 3 and ground. Does the multimeter indicate the value specified?	$\approx$ 0 Ω	Go to *Step 10*	Go to *Step 11*

Step	Action	Value(s)	Yes	No
10	Replace the clock. Is the repair complete?		System OK	
11	Repair the open ground circuit between the clock connector terminal 3 and ground G201. Is the repair complete?		System OK	

INSTRUMENT PANEL ILLUMINATION

Instrument Panel Illumination Does Not Work

Step	Action	Value(s)	Yes	No
1	Test the parking lamps. Do the parking lamps work?		Go to *Step 3*	Go to *Step 2*
2	Repair the parking lamps. Is the repair complete? —		Go to *Step 3*	System OK
3	Check fuse EF20. Is fuse EF20 blown?		Go to *Step 4*	Go to *Step 5*
4	1. Check for a short circuit and repair it if necessary. 2. Replace fuse EF20. Is the repair complete?		System OK	
5	1. Turn the parking lamps ON. 2. Check the voltage at fuse EF20. Does the voltmeter indicate the specified value?	11–14 v	Go to *Step 7*	Go to *Step 6*
6	Repair the power supply for fuse EF20. Is the repair complete?		System OK	
7	1. Turn the parking lamps ON. 2. Temporarily disconnect any of the instrument panel illumination lamps. 3. Check the voltage at the positive terminal (BRN/WHT wire) of any of the illumination lamps. Does the voltmeter indicate the specified value?	11 – 14 v	Go to *Step 9*	Go to *Step 8*
8	Repair the open circuit between fuse EF20 and the instrument panel illumination lamps. Is the repair complete?		System OK	
9	1. Disconnect the dimmer control switch. 2. Turn the parking lamps ON. 3. Check the voltage at the DK GRN wire on the top row of the dimmer connector terminals. Does the voltmeter indicate the specified value?	11 – 14 v	Go to *Step 11*	Go to *Step 10*
10	Repair the open circuit between the dimmer control switch and the instrument panel illumination lamps. Is the repair complete?		System OK	
11	With the dimmer control switch disconnected, use an ohmmeter to check the resistance between ground and the BLK wire at the dimmer control switch connector. Does the ohmmeter indicate the specified value?	$\approx$ 0 Ω	Go to *Step 13*	Go to *Step 12*

Step	Action	Value(s)	Yes	No
12	Repair the open circuit between ground and the BLK wire at the dimmer control switch connector. Is the repair complete?		System OK	
13	Replace the dimmer control switch. Is the repair complete?		System OK	

SPEEDOMETER (CABLELESS)

Speedometer Inoperative, Other Gauges and Warning Lamps Are OK

Step	Action	Value(s)	Yes	No
1	1. Connect a scan tool. 2. Check for engine control Diagnostic Trouble Codes (DTCs). Is a vehicle speed sensor (VSS) DTC set?		Go to *Section 1F, Engine Controls*	Go to *Step 2*
2	1. Turn the ignition OFF. 2. Remove the instrument cluster. 3. Use an ohmmeter to check the continuity of the wire between instrument cluster connector terminal B17 and terminal C11 of the powertrain control module (PCM)/engine control module (ECM). Is an open circuit detected?		Go to *Step 3*	Go to *Step 4*
3	Repair the open circuit between instrument cluster connector terminal B17 and the PCM/ECM. Is the repair complete?		System OK	
4	Replace the speedometer. Is the repair complete?		System OK	

TACHOMETER

Tachometer Does Not Work

Test Description

The number below refers to a step number in the diag nostic table.

3. If the coolant temperature gauge works, skip Steps 3 to 10 and go directly to Step 11. The coolant tem perature gauge uses the same fuse and ground as the tachometer.

Step	Action	Value(s)	Yes	No
1	Check the engine Diagnostic Trouble Codes (DTCs). Are there any current vehicle speed sensor (VSS) DTCs?		Go to *Step 2*	Go to *Step 3*
2	Diagnose and repair any VSS DTCs. Are the VSS DTCs cleared?		Go to *Step 3*	
3	Check fuse F5. Is fuse F5 blown?		Go to *Step 5*	Go to *Step 4*
4	1. Check for a short circuit and repair it, if necessary. 2. Replace fuse F5. Is the repair complete?		System OK	

Step	Action	Value(s)	Yes	No
5	1. Turn the ignition ON. 2. Check the voltage at fuse F5. Is the voltage equal to the specified value?		Go to *Step 7*	Go to *Step 6*
6	Repair the power supply for fuse F5. Is the repair complete?		System OK	
7	1. Disconnect the instrument cluster connector. 2. Turn the ignition ON. 3. Check the voltage at instrument cluster connector terminal A5. Is the voltage equal to the specified value?		Go to *Step 9*	Go to *Step 8*
8	Repair the open circuit between fuse F5 and instrument cluster connector terminal A5. Is the repair complete?		System OK	
9	With the instrument cluster disconnected, use an ohmmeter to check the resistance between instrument cluster connector terminal A14 and ground. Is the resistance equal to the specified value?	$\approx$ 0 Ω	Go to *Step 11*	Go to *Step 10*
10	Repair the open circuit between ground and instrument cluster connector terminal A14. Is the repair complete?		System OK	
11	Check for a defect on the instrument cluster printed circuit. Is the printed circuit defective?		Go to *Step 12*	Go to *Step 13*
12	Replace the instrument cluster. Is the repair complete?		System OK	
13	With the instrument cluster disconnected, use an ohmmeter to check for an open circuit between terminal C10 of the powertrain control module (PCM)/engine control module (ECM) and instrument cluster connector terminal A7. Does the ohmmeter indicate the specified value?	$\approx$ 0 Ω	Go to *Step 15*	Go to *Step 14*
14	Repair the open circuit between the instrument cluster connector terminal A7 and the PCM/ECM. Is the repair complete?		System OK	
15	Replace the tachometer. Is the repair complete?		System OK	Go to *Step 16*
16	Replace the ECM. Is the repair complete?		System OK	

FUEL GAUGE

Fuel Gauge Always Shows Full or Always Shows Empty

Step	Action	Value(s)	Yes	No
1	1. Turn the ignition ON. 2. Observe the fuel gauge. Does the fuel gauge always indicate a full fuel tank even though it has been established that the tank is not full?	–	Go to *Step 2*	Go to *Step 7*
2	1. Turn the ignition OFF. 2. Disconnect the fuel level sensor. 3. Turn the ignition ON. Does the fuel gauge change to empty?		Go to *Step 3*	Go to *Step 4*
3	Replace the fuel level sensor. Is the repair complete?		System OK	
4	1. Turn the ignition OFF. 2. Disconnect the instrument cluster connector B. 3. Turn the ignition ON. Does the fuel gauge now indicate an empty fuel tank?		Go to *Step 5*	Go to *Step 6*
5	Repair the short to ground in the PPL wire between the instrument cluster connector and the fuel tank sending unit. Is the repair complete?		System OK	
6	Replace the fuel gauge. Is the repair complete?		System OK	
7	1. If the fuel tank shows empty even though it has been established that the tank is not empty, disconnect the fuel tank sending unit electrical connector. 2. Turn the ignition ON. 3. Check the voltage at the fuel tank sending unit connector terminal 1. Does the voltmeter indicate the specified value?	11 – 14 v	Go to *Step 8*	Go to *Step 11*
8	1. Disconnect the fuel level sensor electrical connector. 2. Use an ohmmeter to check the continuity of the fuel level sensor. Is there continuity between the fuel level sensor terminals?	–	Go to *Step 10*	Go to *Step 9*
9	Replace the fuel level sensor. Is the repair complete?	–	System OK	–
10	Repair the open circuit between terminal 6 of the fuel level sensor and terminal D8 of the powertrain control module (PCM)/engine control module (ECM) connector. Is the repair complete?		System OK	
11	With the ignition ON, use a voltmeter to back probe terminal B5 of the PCM/ECM connector. Is the voltage equal to the specified value?	11–14 v	Go to *Step 12*	Go to *Step 13*

Step	Action	Value(s)	Yes	No
12	Repair the open circuit between terminal B5 of the PCM/ECM and fuel level sensor connector 1. Is the repair complete?	–	System OK	–
13	With the ignition ON, use a voltmeter to back probe terminal C3 of the PCM/ECM connector. Is the voltage equal to the specified value?	11–14 v	Go to *Step 15*	Go to *Step 14*
14	Repair the open circuit between terminal C3 of the CM/ECM connector and terminal B5 of the instrument cluster. Is the repair complete?	–	System OK	–
15	Replace the PCM/ECM. Is the repair complete?	–	System OK	–

TEMPERATURE GAUGE

Diagnostic Aids

For full scale readings, the gauge may be indicating the correct coolant temperature. Problems not covered by this diagnostic table include the following:

- Low coolant level.
- Improper coolant mixture.
- Coolant leaks.
- Faulty coolant pump.
- Faulty thermostat.
- Gasket failure.
- Lack of lubrication.
- Lack of cooling fan operation.

This table covers problems with the gauge circuit, the gauge, and the sending unit, but not problems which cause actual overheating or underheating.

Test Description

The numbers below refer to steps on the diagnostic table.

2. The engine coolant temperature (ECT) sensor for the powertrain control module (PCM)/engine control module (ECM) and the coolant temperature sensor (CTS) are close together on the engine block. Refer to the schematic to determine the correct wire color to verify testing of the correct component.
3. The ECT for the PCM/ECM and the CTS unit are close together on the engine block. Refer to the schematic to determine the correct wire color to verify testing of the correct component.

Temperature Gauge Always Indicates Full Scale Hot Or Full Scale Cold, Other Gauges Are OK

Step	Action	Value(s)	Yes	No
1	1. Allow the engine to cool to room temperature. 2. Turn the ignition ON. Does the temperature gauge always read at the high end of the scale?		Go to *Step 2*	Go to *Step 7*
2	Disconnect the coolant temperature sensor (CTS) electrical connector. Does the temperature gauge indicator point to the low end of the scale?		Go to *Step 3*	Go to *Step 4*
3	Replace the CTS. Is the repair complete?		System OK	
4	1. Turn the ignition OFF. 2. Disconnect the instrument cluster connector A. 3. Turn the ignition ON. Does the temperature indicator now point to the low end of the scale?		Go to *Step 5*	Go to *Step 6*
5	Repair the short to ground in the DK GRN wire between instrument cluster connector A and the CTS. Is the repair complete?	–	System OK	–

Step	Action	Value(s)	Yes	No
6	Replace the temperature gauge. Is the repair complete?		System OK	
7	1. If the temperature gauge always reads at the low end of the scale, disconnect the coolant temperature sending unit. 2. Turn the ignition ON. 3. Check the voltage at the coolant temperature sending unit connector. Is the voltage equal to the specified value?	11 – 14 v	Go to *Step 10*	Go to *Step 8*
8	Use an ohmmeter to check for an open circuit between the CTS and the temperature gauge. Is there an open circuit?		Go to *Step 9*	Go to *Step 10*
9	Repair the open circuit between the temperature sending unit and temperature gauge. Is the repair complete?		System OK	
10	1. Disconnect the CTS. 2. Connect a jumper wire between the coolant temperature sending unit connector and ground. 3. Turn the ignition ON. Does the temperature gauge move to the high end of the scale?	–	Go to *Step 3*	Go to *Step 6*

INSTRUMENT CLUSTER INDICATOR LAMPS

Diagnostic Aids

This table covers lamps powered by fuses F5 and F10: door ajar, rear deck lid ajar, service engine soon, oil pressure, battery, power, ABS, AIR BAG, low fuel warning. The ground for each circuit is provided by the component being monitored by the indicator lamp.

Instrument Cluster Indicator Lamps Do Not Operate

Step	Action	Value(s)	Yes	No
1	Check fuses F5 and F10. Is either fuse blown?		Go to *Step 2*	Go to *Step 3*
2	1. Check for a short circuit and repair it if necessary. 2. Replace the blown fuse. Is the repair complete?		System OK	
3	1. Turn the ignition ON. 2. Check the voltage at fuses F5 and F10. Is the voltage equal to the specified value?	11 – 14 v	Go to *Step 5*	Go to *Step 4*
4	Repair the open power supply circuit for F5 and/or F10. Is the repair complete?		System OK	
5	Check the cluster indicators. Is the problem associated with all of the cluster indicators?		Go to *Step 8*	Go to *Step 6*

Step	Action	Value(s)	Yes	No
6	1. If the problem is associated with only a single cluster indicator rather than all of the cluster indicators, locate the component (switch, sending unit, etc.) which provides the ground for the cluster indicator. 2. At the component, disconnect the wire from the instrument cluster indicator. 3. Connect a jumper wire between ground and the disconnected wire at the component. 4. Turn the ignition ON. Does the cluster indicator turn ON?		Go to *Step 7*	Go to *Step 10*
7	Replace the faulty component (switch, sending unit, etc.). Is the repair complete?		System OK	
8	Check the connectors at the rear of the instrument cluster. Are the connectors correctly attached?		Go to *Step 10*	Go to *Step 9*
9	Attach the connectors correctly. Is the repair complete?		System OK	
10	1. Disconnect the instrument cluster connectors. 2. Turn the ignition ON. 3. 3. Check the voltage at instrument cluster connector terminals A5, A18, and B6. (Consult the schematic. It may not be necessary to check all three terminals, depending on which circuits are being checked.) Is the voltage equal to the specified value?	11 – 14 v	Go to *Step 12*	Go to *Step 11*
11	Repair the open circuit between the fuses and the instrument cluster. Is the repair complete?		System OK	
12	Check the warning lamp bulbs. Are the bulbs OK?		Go to *Step 14*	Go to *Step 13*
13	1. Replace any defective warning lamp bulbs. 2. If all bulbs are defective, check the charging system to make sure that the generator is not overcharging. Refer to *Section 1E, Electrical System.* 3. If a problem is found, repair the charging system. Is the repair complete?		System OK	
14	Use an ohmmeter to check for an open wire between the instrument cluster connector and the connector at the component which is monitored by the indicator lamp. Is an open circuit detected?		Go to *Step 15*	Go to *Step 16*
15	Repair the open circuit between the instrument cluster and the component monitored by the indicator lamp. Is the repair complete?		System OK	
16	Replace the instrument cluster. Is the repair complete?		System OK	

CHIME MODULE

Door–Open Chime Does Not Operate

Step	Action	Value(s)	Yes	No
1	Check the chime module connector to make sure it is connected properly. Is the connector disconnected or partially disconnected?		Go to *Step 2*	Go to *Step 3*
2	Connect the electrical connector for the chime module. Is the repair complete?		System OK	
3	Check fuse F5. Is fuse F5 blown?	–	Go to *Step 4*	Go to *Step 5*
4	1. Check for a short circuit and repair it, if necessary. 2. Replace the fuse. Is the repair complete?		System OK	
5	1. Turn the ignition ON. 2. Check the voltage at fuse F5. Is the voltage equal to the specified value?	11–14 v	Go to *Step 7*	Go to *Step 6*
6	Repair the power supply circuit for fuse F5. Is the repair complete?		System OK	
7	1. Disconnect the chime module. 2. Turn the ignition ON. 3. Check the voltage at terminal 8 of the chime module connector. Is the voltage equal to the specified value?	11–14 v	Go to *Step 9*	Go to *Step 8*
8	Repair the open ground circuit between ground and terminal 5 of the chime module connector. Is the repair complete?		System OK	
9	With the chime module disconnected, use an ohmmeter to check the continuity between terminal 5 of the chime module connector and ground. If the continuity equal to the specified value?	≈ 0 Ω	Go to *Step 11*	Go to *Step 10*
10	Repair the open circuit between terminal 5 of the chime module connector and ground. Is the repair complete?		System OK	
11	1. Disconnect the chime module connector. 2. Make sure that the driver's side door is open. 3. Use an ohmmeter to check continuity between ground and terminal 4 of the chime module. Is the continuity equal to the specified value?		System OK	
12	Replace the chime module. Is the repair complete?		System OK	
13	1. Disconnect the front door contact switch. 2. Use an ohmmeter to check the continuity between the door contact switch and terminal 4 of the chime module. Is the continuity equal to the specified value?	≈ 0 Ω	Go to *Step 15*	Go to *Step 14*

Step	Action	Value(s)	Yes	No
14	Repair the open circuit between the door contact switch and terminal 4 of the chime module.		System OK	
15	Replace the door contact switch. Is the repair complete?		System OK	

Key Reminder Chime Inoperative

Step	Action	Value(s)	Yes	No
1	Check the chime module connector to make sure it is connected properly. Is the connector disconnected or partially disconnected?		Go to *Step 2*	Go to *Step 3*
2	Connect the electrical connector for the chime module. Is the repair complete?		System OK	
3	Check fuse F10. Is fuse F10 blown?		Go to *Step 4*	Go to *Step 5*
4	1. Check for a short circuit and repair it, if necessary. 2. Replace the fuse. Is the repair complete?		System OK	
5	1. Turn the ignition ON. 2. Check the voltage at fuse F10. Is the voltage equal to the specified value?	11–14 v	Go to *Step 7*	Go to *Step 6*
6	Repair the power supply circuit for fuse F10. Is the repair complete?		System OK	
7	1. Disconnect the chime module. 2. Check the voltage at terminal 2 of the chime module connector. Is the voltage equal the to specified value?	11–14 v	Go to *Step 13*	Go to *Step 8*
8	1. Disconnect the key reminder switch. 2. Use an ohmmeter to check the continuity between the key reminder switch and fuse F10. Is the continuity equal to the specified value?	$\approx$ 0 Ω	Go to *Step 10*	Go to *Step 9*
9	Repair the open circuit between the key reminder switch and fuse F10.		Systam OK	
10	With the key reminder switch and the chime module disconnected, check the continuity between the key reminder switch and terminal 2 of the chime module connector. Is the voltage equal to the specified value?	$\approx$ 0 Ω	Go to *Step 12*	Go to *Step 11*
11	Repair the open circuit between the key reminder switch and terminal 2 of the chime module connector.		System OK	
12	Replace the key reminder switch. Is the repair complete?		System OK	
13	With the chime module disconnected, use an ohmmeter to check continuity between terminal 5 of the chime module connector and ground. Is the continuity equal to the specified value?	$\approx$ 0 Ω	Go to *Step 15*	Go to *Step 14*

Step	Action	Value(s)	Yes	No
14	Repair the open circuit between terminal 5 of the chime module connector and ground. Is the repair complete?		System OK	
15	Replace the chime module. Is the repair complete?		System OK	

SECTION : 9G

INTERIOR TRIM

CAUTION : Disconnect the negative battery cable before removing or installing any electrical unit or when a tool or equipment could easily come in contact with exposed electrical terminals. Disconnecting this cable will help prevent personal injury and damage to the vehicle. The ignition must also be in LOCK unless otherwise noted.

TABLE OF CONTENTS

SPECIFICATIONS 9G–2
FASTENER TIGHTENING SPECIFICATIONS 9G–2
SPECIAL TOOLS 9G–2
SPECIAL TOOLS TABLE 9G–2
MAINTENANCE AND REPAIR 9G–3
ON–VEHICLE SERVICE 9G–3
FRONT DOOR TRIM PANEL 9G–3
REAR DOOR TRIM PANEL 9G–4
UPPER B–PILLAR TRIM PANEL 9G–5
LOWER B–PILLAR TRIM PANEL 9G–7
DECK LID SILL PLATE COVER (NOTCHBACK) 9G–7
REAR DOOR INTERIOR GARNISH MOLDING 9G–8
HATCHBACK DOOR UPPER GARNISH MOLDING 9G–9
TAILGATE UPPER GARNISH MOLDING (WAGON) 9G–10
HATCHBACK DOOR LOWER GARNISH MOLDING 9G–10
KICK PANEL 9G–11
FOOTWELL UPPER COVER 9G–12
FRONT ROCKER TRIM PANEL 9G–14
REAR ROCKER TRIM PANEL 9G–14
FLOOR CARPET 9G–15
FLOOR CONSOLE 9G–16
A–PILLAR TRIM PANEL 9G–18
C–PILLAR TRIM PANEL (NOTCHBACK) 9G–19
C–PILLAR TRIM PANEL (HATCHBACK) 9G–20
D–PILLAR TRIM PANEL (WAGON) 9G–21
LUGGAGE COMPARTMENT WHEELHOUSE TRIM PANEL (NOTCHBACK) 9G–21
LUGGAGE COMPARTMENT WHEELHOUSE TRIM PANEL (WAGON) 9G–22
LUGGAGE COMPARTMENT REAR QUARTER TRIM PANEL 9G–23
LUGGAGE COMPARTMENT REAR TRIM PANEL 9G–23
DRIVER KNEE BOLSTER 9G–24
PASSENGER KNEE BOLSTER 9G–25
GENERAL DESCRIPTION AND SYSTEM OPERATION 9G–29
INTERIOR TRIM PANELS 9G–29
PRESSURE RELIEF VENT 9G–29
REAR COMPARTMENT SECURITY COVER 9G–29
FLOOR CONSOLE 9G–29
FLOOR CARPET 9G–29

SPECIFICATIONS

FASTENER TIGHTENING SPECIFICATIONS

Application	N•m	Lb–Ft	Lb–In
Door Pull Screw	3.5	–	31
Floor Console Bolts 4	4	–	35
Floor Console Forward Trim Panel Bolt	4	–	35
Glove Box Housing Screws	4	–	35
Instrument Panel Lower Trim Piece Bolts	10	–	89
Kick Panel Screws	2	–	18
Knee Bolster Bolts	22	16	–
Knee Bolster Nut	22	16	–
Trim Panel Screw(s)	2	–	18
Seat Belt Anchor Bolt(s)	35	26	–

SPECIAL TOOLS

SPECIAL TOOLS TABLE

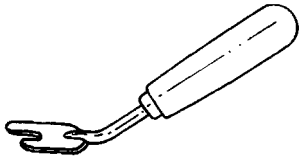 A109G029	KM–475–B Trim Remover

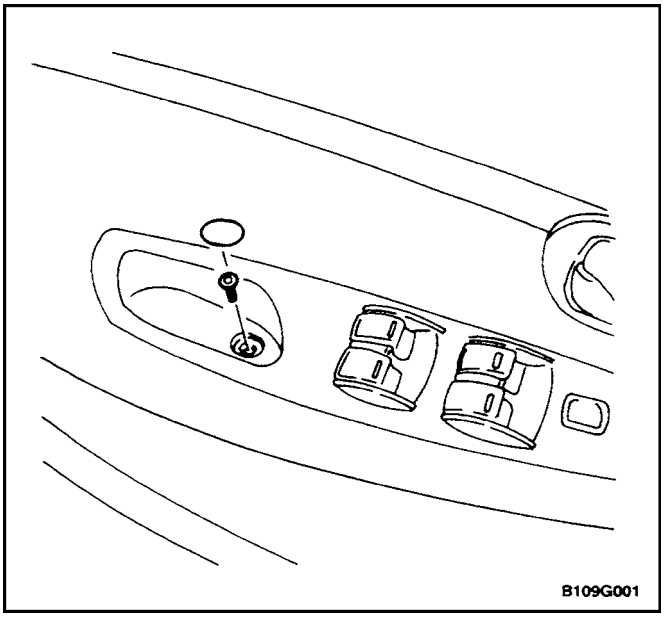

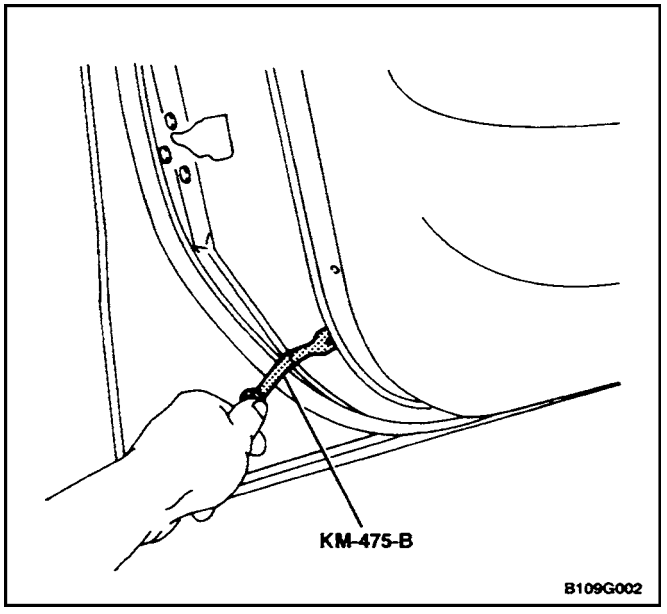

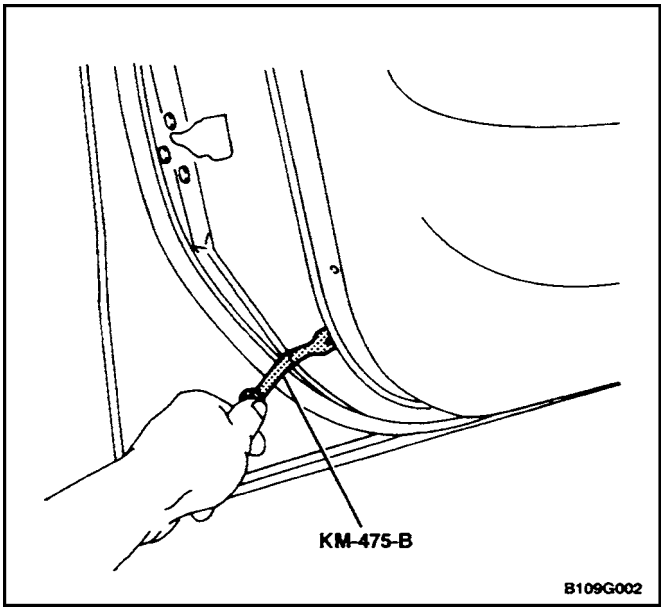

MAINTENANCE AND REPAIR

ON–VEHICLE SERVICE

FRONT DOOR TRIM PANEL

Tools Required

KM–475–B Trim Remover

Removal Procedure

1. Disconnect the negative battery cable.
2. Lower the front window.
3. Remove the door pull screw and the door pull.
4. Disconnect the power window control electrical connector.
5. Pry off the inside door handle trim bezel.
6. Remove the screws securing the trim panel.
7. Using the trim remover KM–475–B, pry off the trim panel.

Installation Procedure

1. Install the trim panel and secure it with the screws.

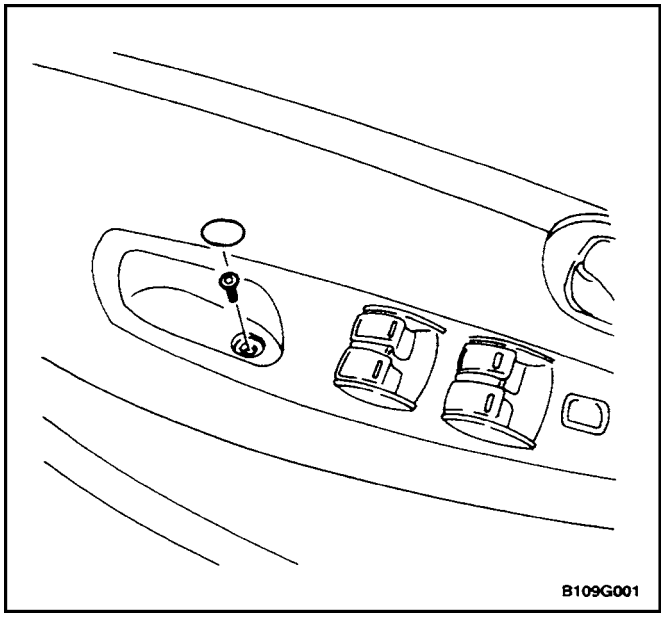

2. Install the inside door handle trim bezel.
3. Connect the power window control electrical connector.
4. Install the door pull with the screw.

Tighten

Tighten the door pull screw to 3.5 N•m (31 lb–in).

5. Raise the window.
6. Connect the negative battery cable.

REAR DOOR TRIM PANEL

Tools Required

KM–475–B Trim Remover

Removal Procedure

1. Disconnect the negative battery cable.
2. Lower the rear window.
3. Remove the door pull screw and the door pull.

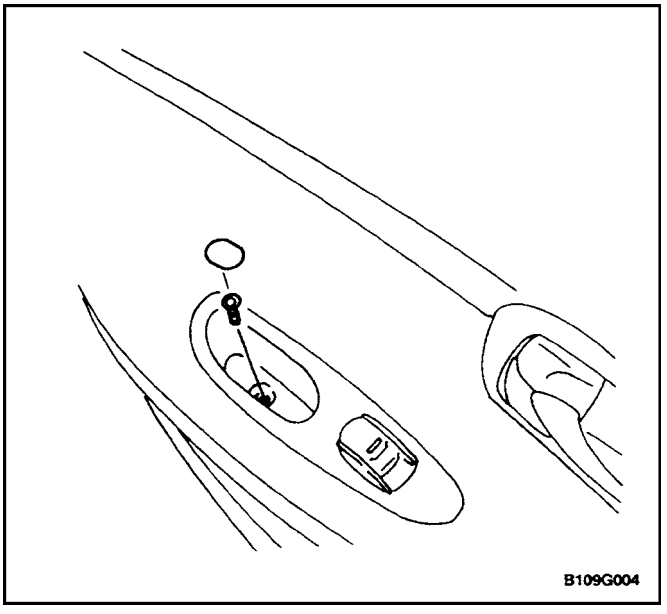

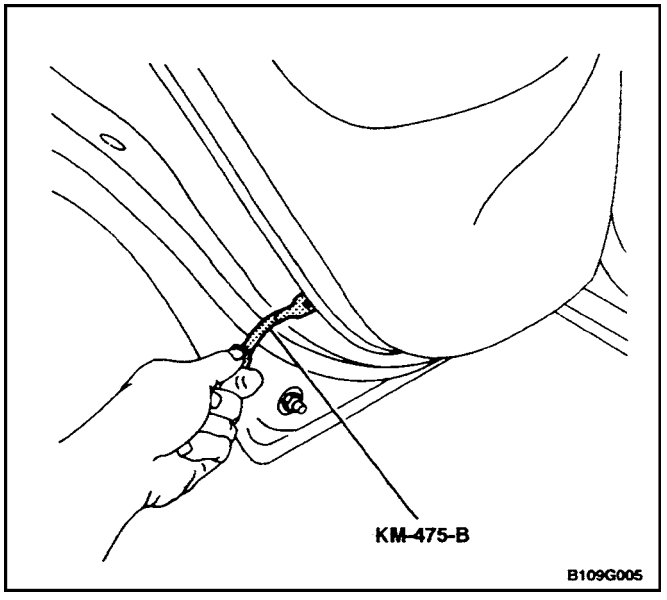

4. Disconnect the power window control electrical connector.
5. Remove the manual window regulator handle, if equipped. Refer to *Section 9P, Doors.*
6. Pry off the inside door handle trim bezel.
7. Remove the rear door interior garnish molding.
8. Remove the screws securing the trim panel.
9. Using the trim remover KM–475–B, pry off the trim panel.

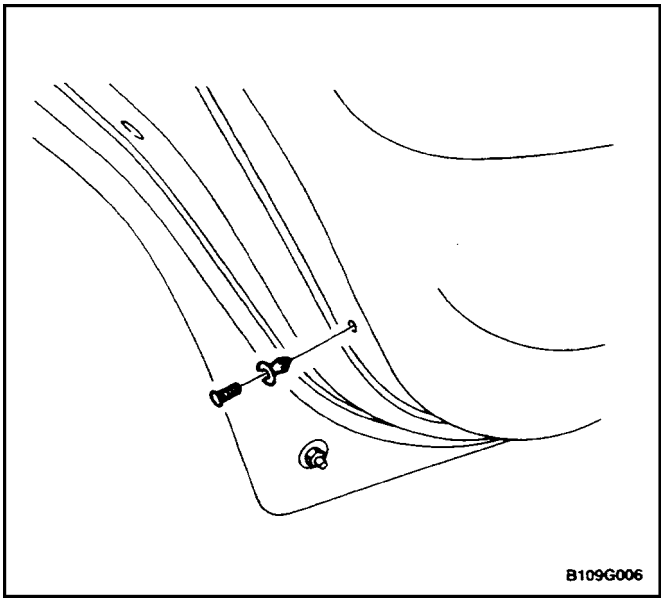

Installation Procedure

1. Install the trim panel and secure it with the screws.

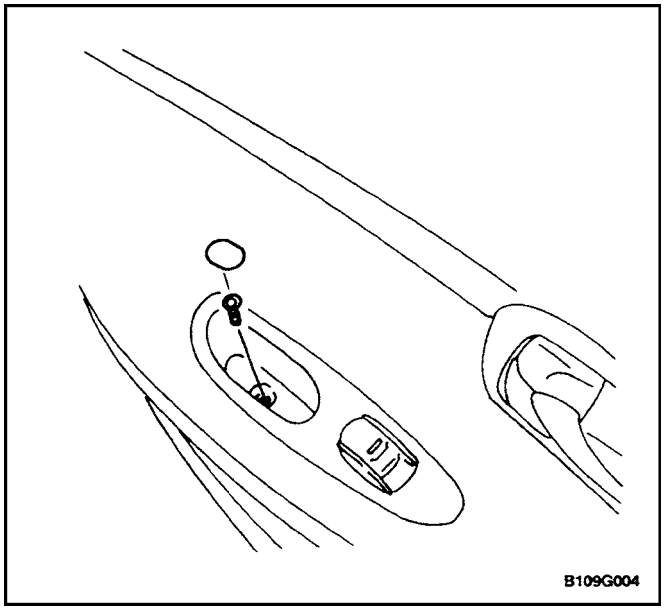

2. Install the rear door interior garnish molding.
3. Install the inside door handle trim bezel.
4. Connect the power window control electrical connector.
5. Install the manual window regulator, if equipped. Refer to *Section 9P, Doors.*
6. Install the door pull with the screw.

   Tighten

   Tighten the door pull screw to 3.5 N•m (31 lb–in).
7. Raise the window.
8. Connect the negative battery cable.

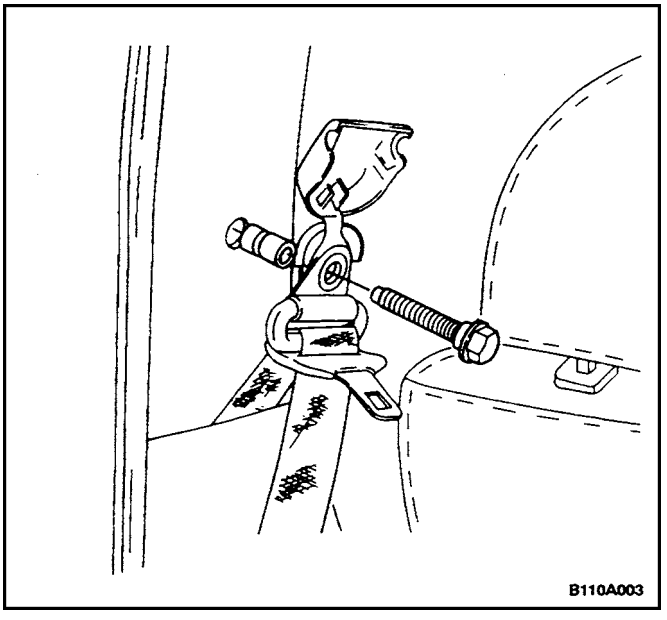

UPPER B–PILLAR TRIM PANEL

Removal Procedure

1. Remove the bolt and the upper B–pillar seat belt anchor.

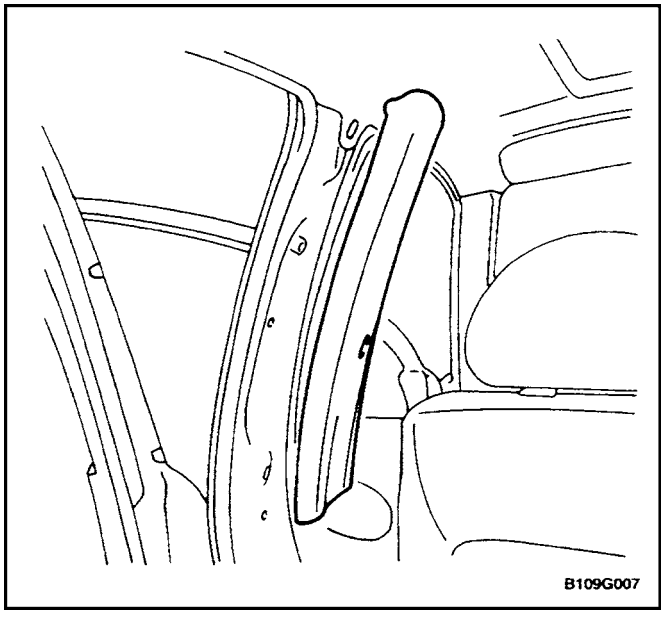

2. Remove the lower B–pillar trim panel. Refer to"Lower B–Pillar Trim Panel" in this section.
3. Pry off the upper B–pillar trim panel.

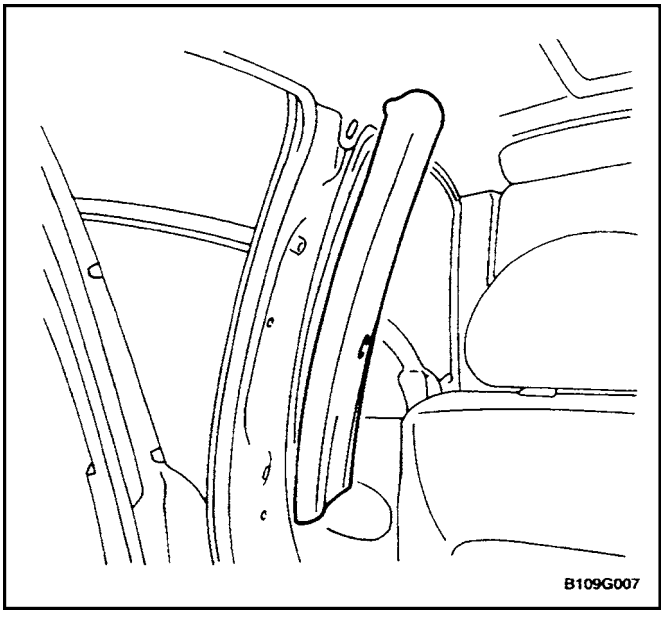

Installation Procedure

1. Install the upper B–pillar trim panel.

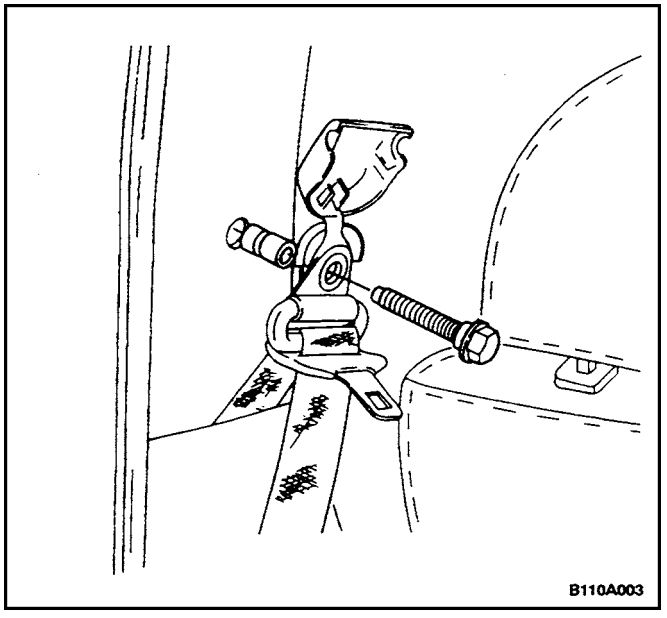

2. Install the lower B–pillar trim panel. Refer to"Lower B–Pillar Trim Panel" in this section.
3. Install the upper B–pillar seat belt anchor with the bolt.

Tighten

Tighten the seat belt anchor bolt to 35 N•m (26 lb–ft).

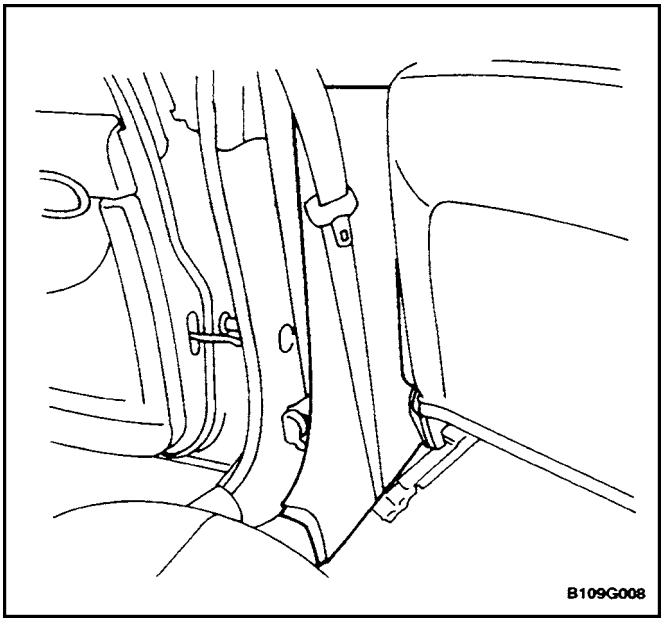

LOWER B–PILLAR TRIM PANEL

Removal Procedure

1. Reposition the rear portion of the front rocker trim panel and the front portion of the rear rocker trim panel.
2. Pry off the lower B–pillar trim panel.

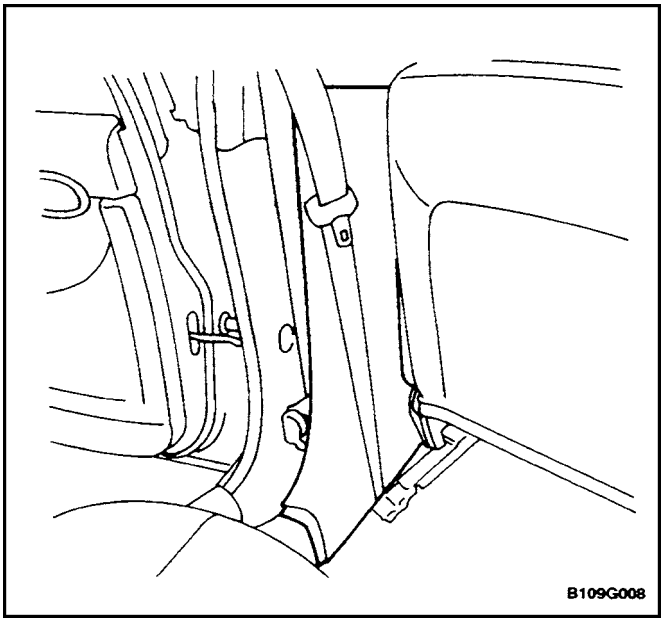

Installation Procedure

1. Install the lower B–pillar trim panel.
2. Install the rear portion of the front rocker trim panel and the front portion of the rear rocker trim panel.

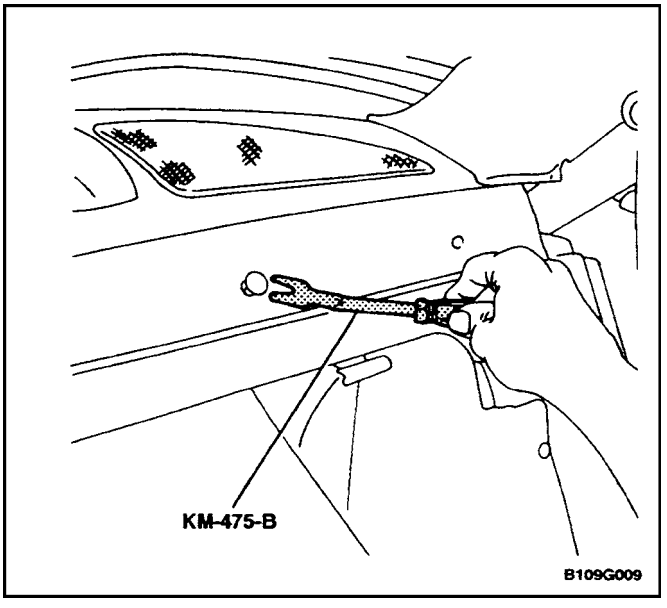

DECK LID SILL PLATE COVER (NOTCHBACK)

Tools Required

KM–475–B Trim Remover

Removal Procedure

1. Remove one C–pillar trim panel. Refer to”C–Pillar Trim Panel” in this section.
2. Remove the rear seat back. Refer to *Section 9H, Seats.*
3. Remove child seat tether anchor bolts or plugs, if equipped.
4. Using the trim remover KM–475–B, remove the plastic retaining clips and the deck lid sill plate cover.

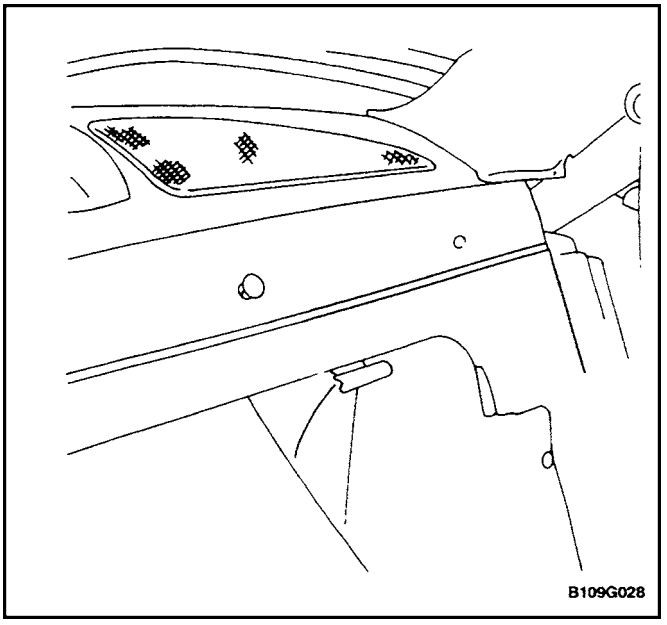

Installation Procedure

1. Install the rear deck lid sill plate cover with the plastic retaining clips.
2. Install the child seat tether anchor bolts or plugs, if equipped.
3. Install the rear seat back. Refer to *Section 9H, Seats.*
4. Install the C–pillar trim panel. Refer to”C–Pillar Trim Panel” in this section.

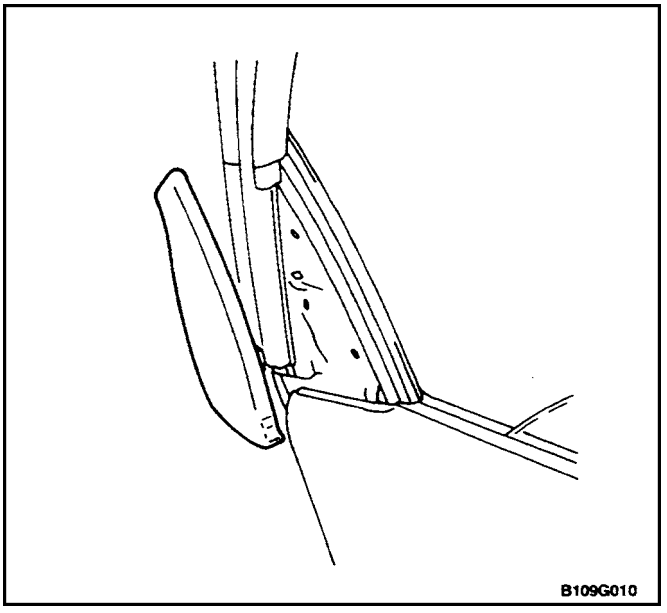

REAR DOOR INTERIOR GARNISH MOLDING

(Typical)

Removal Procedure

1. Pry off the rear door interior garnish molding.

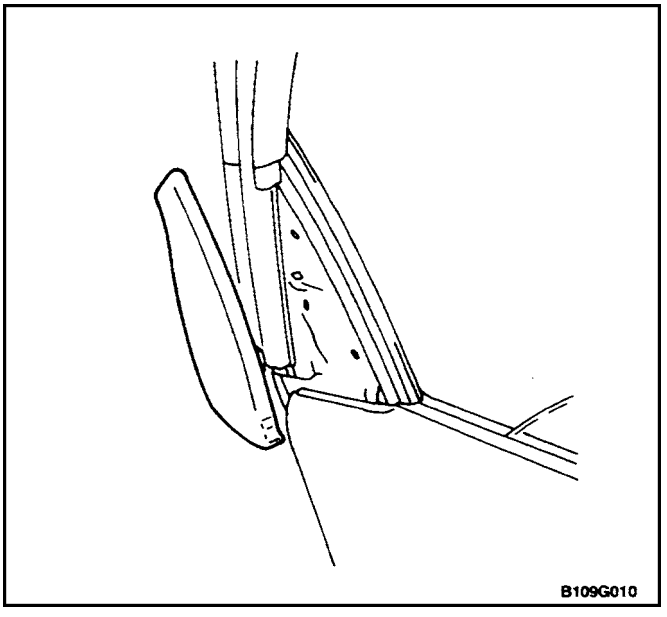

Installation Procedure

1. Install the rear door interior garnish molding.

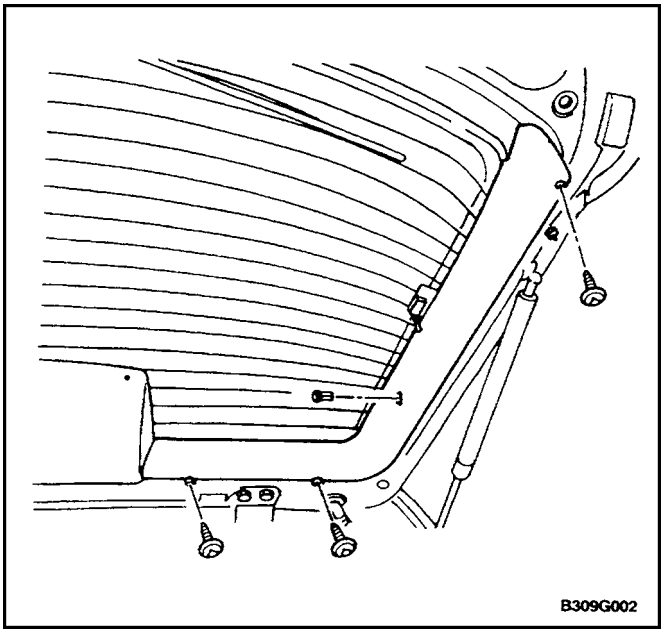

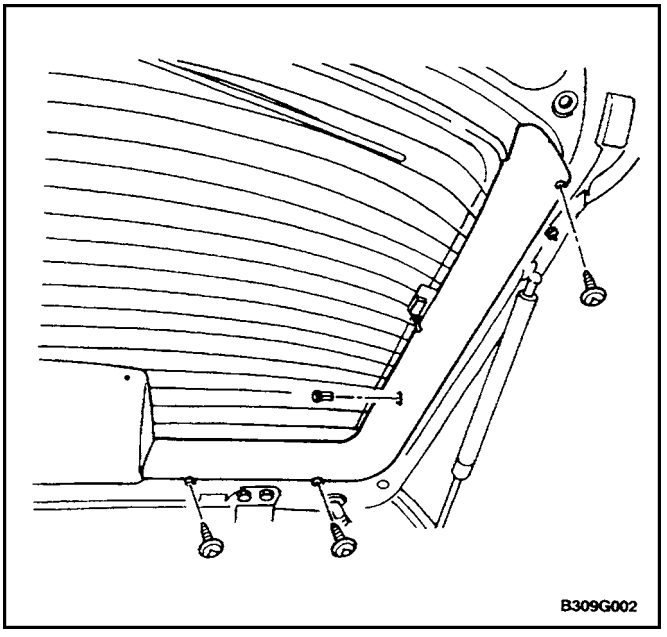

HATCHBACK DOOR UPPER GARNISH MOLDING

Removal Procedure

1. Remove the rear compartment security cover mount.
2. Remove the screws and the molding.

Installation Procedure

Notice : Dissimilar metals in direct contact with each other may corrode rapidly. Make sure to use the correct fasteners to prevent premature corrosion.

1. Install the molding with the screws.

   ### Tighten

   Tighten the trim panel screws to 2 N•m (18 lb–in).
2. Install the rear compartment security cover mount.

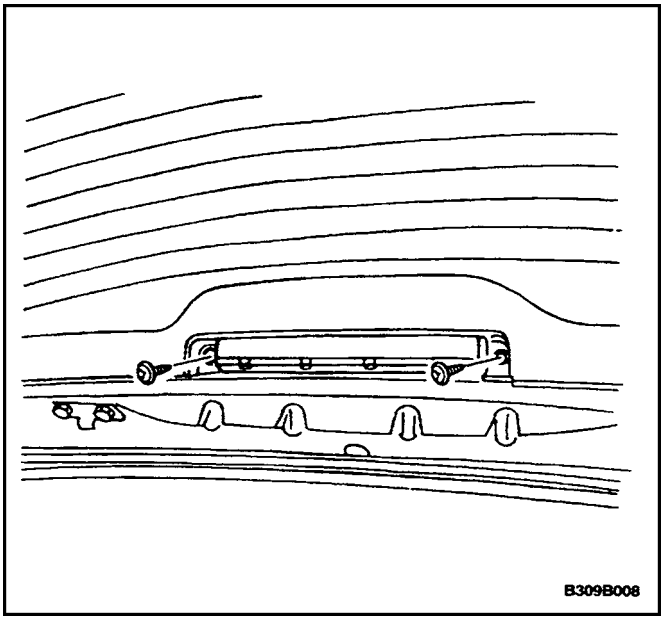

TAILGATE UPPER GARNISH MOLDING (WAGON)

Removal Procedure

1. Disconnect the negative battery cable.
2. Open the tailgate.
3. Remove the center high–mounted stop lamp access cover.
4. Remove the screws and the molding.
5. Disconnect the electrical connector.

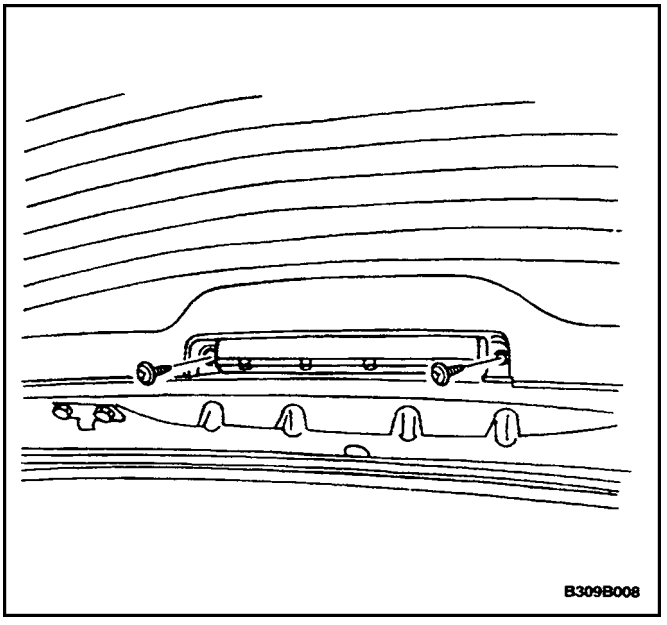

Installation Procedure

1. Connect the electrical connector.

Notice : Dissimilar metals in direct contact with each other may corrode rapidly. Make sure to use the correct fasteners to prevent premature corrosion.

2. Install the molding with the screws.

   Tighten

   Tighten the trim panel screws to 2 N•m (18 lb–in).
3. Install the center high–mounted stop lamp access cover.
4. Connect the negative battery cable.

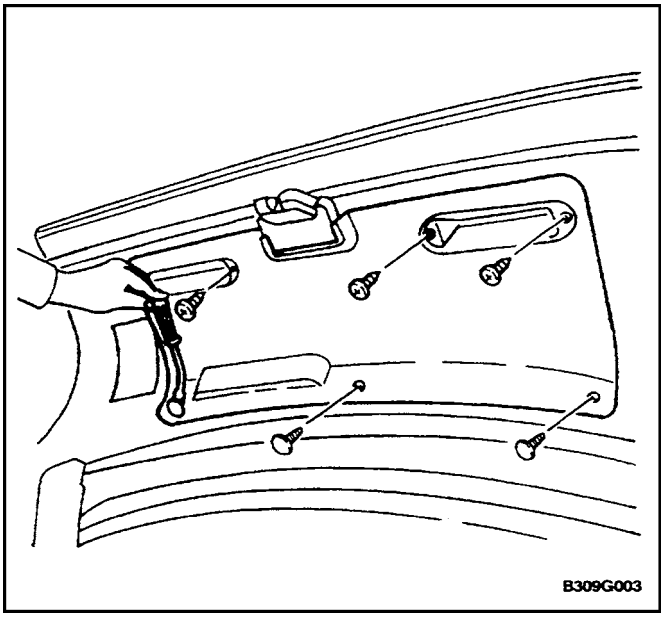

HATCHBACK DOOR LOWER GARNISH MOLDING

Removal Procedure

1. Open the hatchback door.
2. Remove the screws and the lower garnish molding clips using the trim remover KM–475–B.
3. Remove the lower garnish molding.

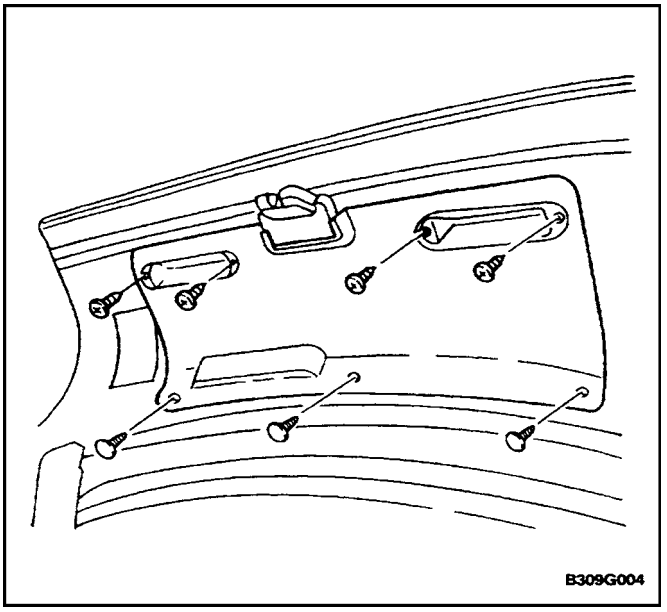

Installation Procedure

1. Install the lower garnish molding with the clips and the screws.

   Tighten

   Tighten the trim panel screws to 2 N•m (18 lb–in).
2. Close the hatchback door.

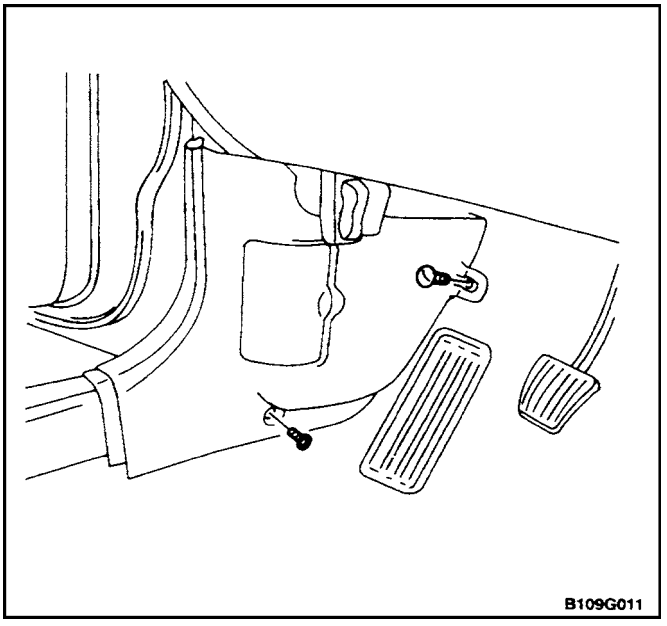

KICK PANEL

(Left–Hand Drive Shown, Right–Hand Drive Similar)

Removal Procedure

1. Reposition the front portion of the front rocker panel.
2. Remove the kick panel screws.
3. Pry off the kick panel.

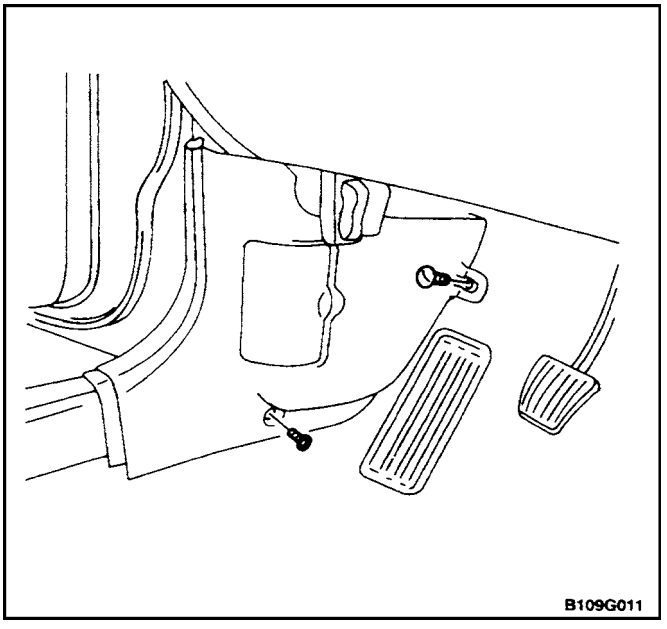

Installation Procedure

1. Install the kick panel.

Notice : Dissimilar metals in direct contact with each other may corrode rapidly. Make sure to use the correct fasteners to prevent premature corrosion.

2. Install the kick panel screws.

   Tighten

   Tighten the kick panel screws to 2 N•m (18 lb–in).
3. Install the front portion of the front rocker panel to its original position.

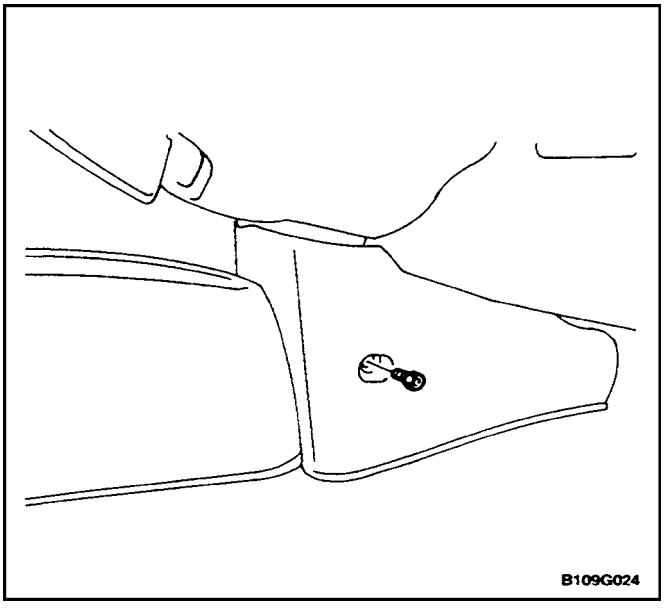

FOOTWELL UPPER COVER

Tools Required

KM–475–B Trim Remover

Removal Procedure

1. Remove the glove box. Refer to*Section 9E, Instrumentation/Driver Information.*
2. Remove the bolt and the floor console forward trim panel.

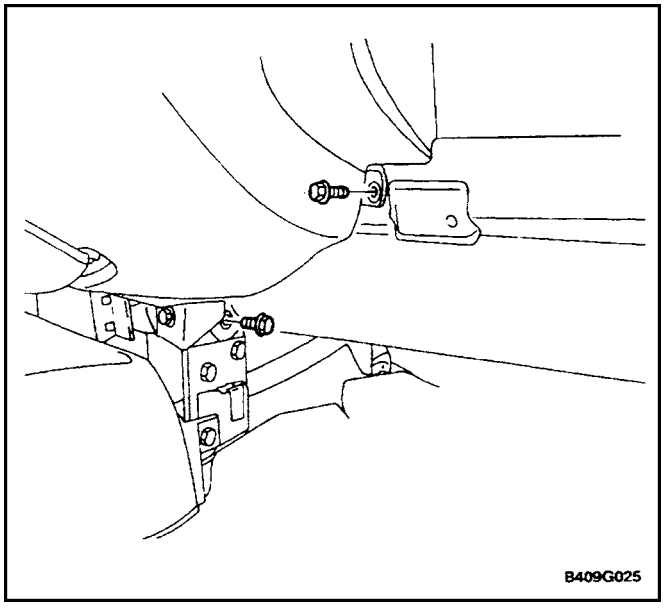

3. Remove the right side kick panel. Refer to*"Kick Panel"* in this section.
4. Remove the bolts from the footwell upper cover.

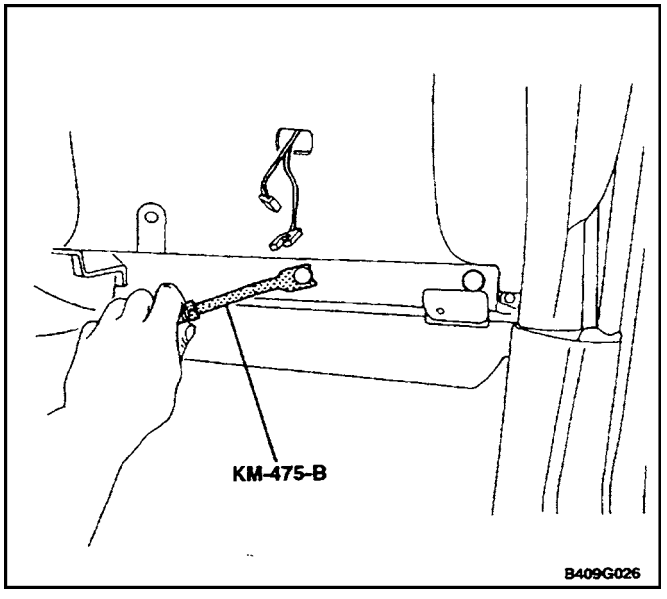

5. Using the trim remover KM–475–B, remove the plastic retaining clips and the footwell upper cover.

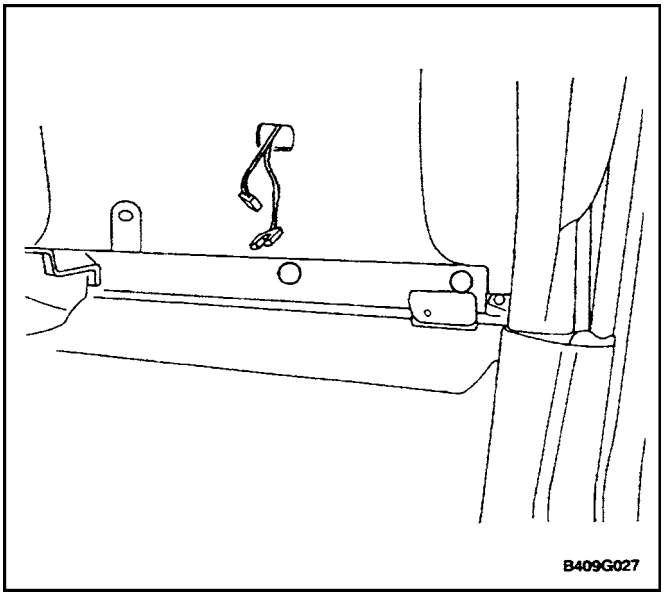

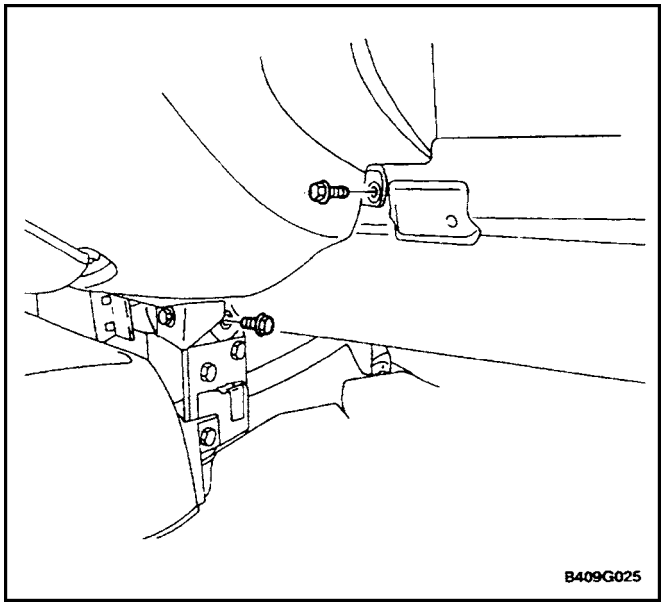

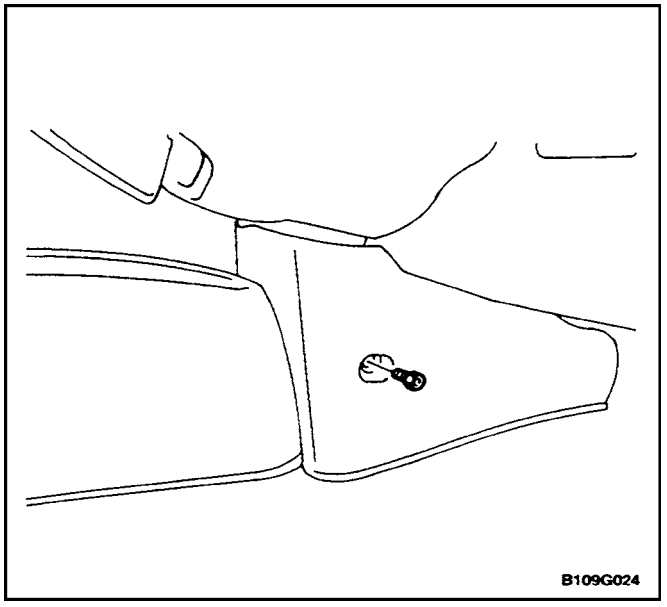

Installation Procedure

1. Install the footwell upper cover with the plastic retaining clips.
2. Install the bolts securing the footwell upper cover.
3. Install the right side kick panel. Refer to “Kick Panel” in this section.

Notice : Dissimilar metals in direct contact with each other may corrode rapidly. Make sure to use the correct fasteners to prevent premature corrosion.

4. Install the floor console forward trim panel with the bolt.

Tighten

Tighten the floor console forward trim panel bolt to 4 N•m (35 lb–in).

5. Install the glove box. Refer to*Section 9E, Instrumentation/Driver Information.*

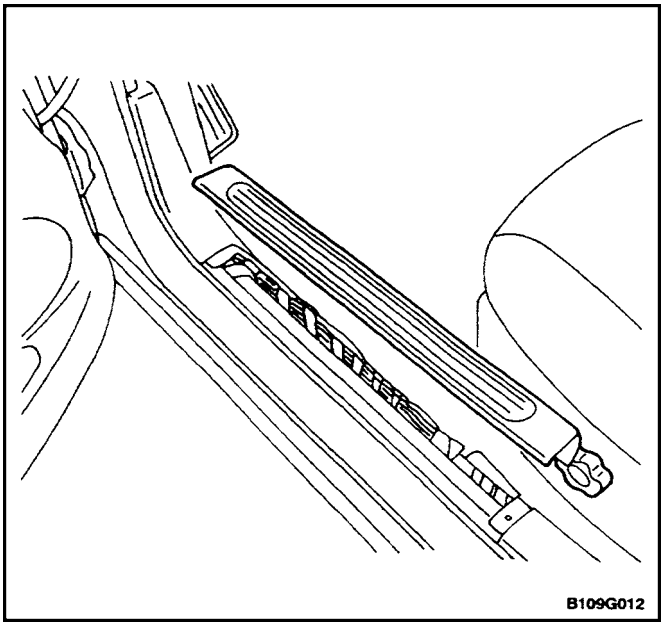

FRONT ROCKER TRIM PANEL

Removal Procedure

1. Remove the plastic screws and pry off the front rocker trim panel.

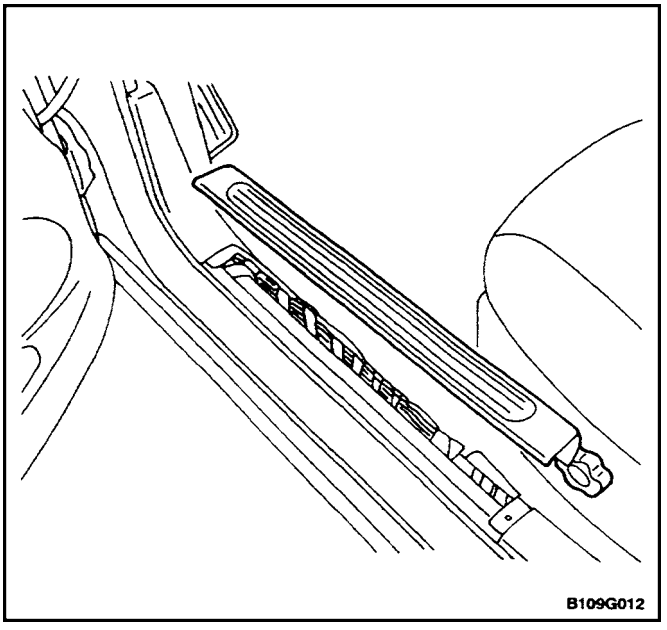

Installation Procedure

1. Install the front rocker trim panel with the plastic screws.

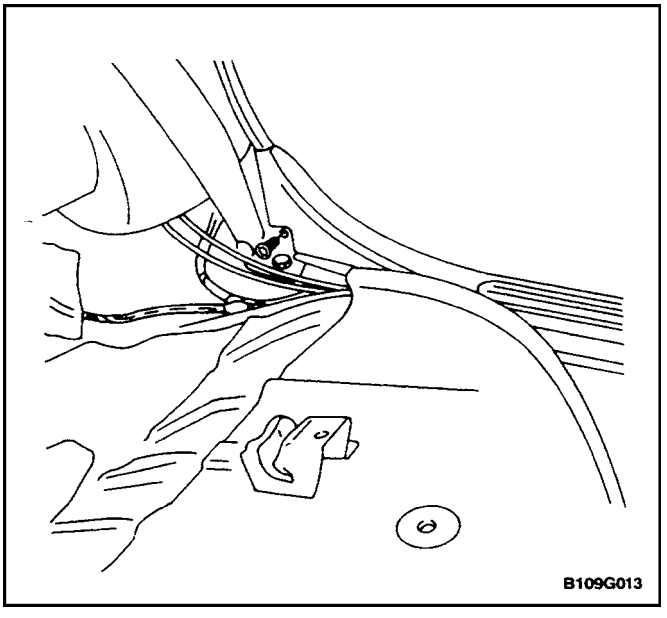

REAR ROCKER TRIM PANEL

Removal Procedure

1. Remove the rear seat cushion. Refer to *Section 9H, Seats.*
2. Remove the B–pillar trim panel. Refer to”B–pillar trim panel” in this section.
3. Pry off the rear rocker trim panel.

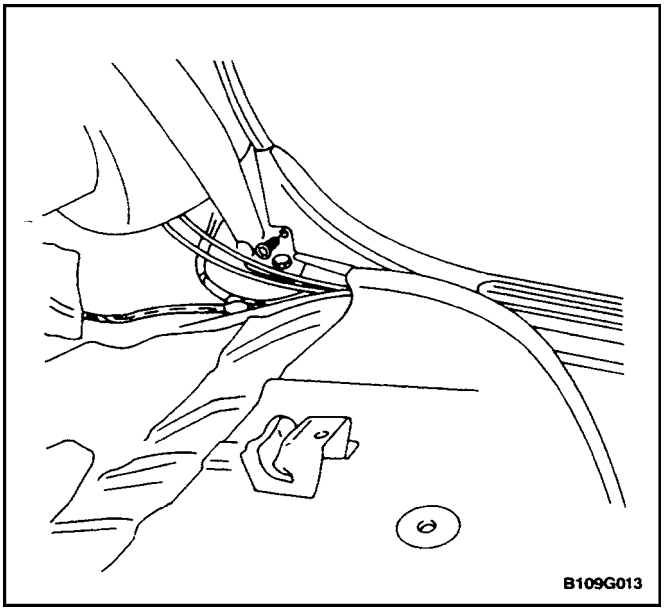

Installation Procedure

1. Install the rear rocker trim panel.
2. Install the rear rocker trim panel with the screw.

   Tighten

   Tighten the trim panel screw to 2 N•m (18 lb–in).
3. Install the rear seat cushion. Refer to *Section 9H, Seats.*

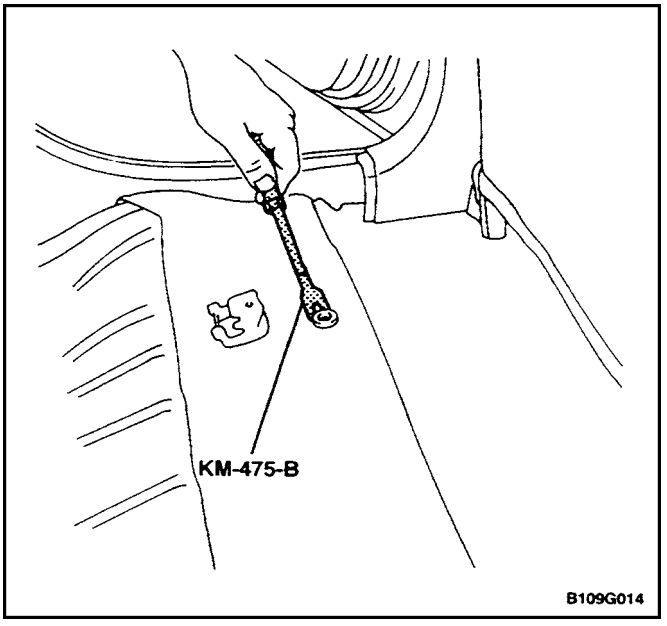

FLOOR CARPET

Tools Required

KM–475–B Trim Remover

Removal Procedure

1. Disconnect the negative battery cable.
2. Remove the left and the right rear rocker trim panels. Refer to”Rear Rocker Trim Panel” in this section.
3. Using the trim remover KM–475–B, remove the carpet retainer clips beneath the rear seat cushion.

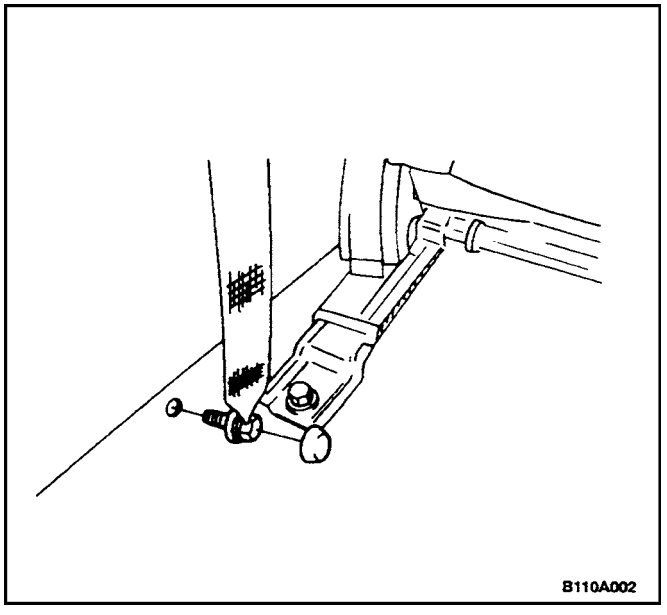

4. Remove the bolts and the left and the right lower Bpillar seat belt anchors.
5. Remove the left and the right front rocker trim panels. Refer to”Front Rocker Trim Panel” in this section.
6. Remove the left and the right lower B–pillar trim panels. Refer to”Lower B–Pillar Trim Panel” in this section.
7. Remove the left and the right kick panels. Refer to”Kick Panel” in this section.
8. Remove the front seats. Refer to*Section 9H, Seats.*
9. Remove the floor console. Refer to”Floor Console” in this section.
10. Remove the floor carpet.

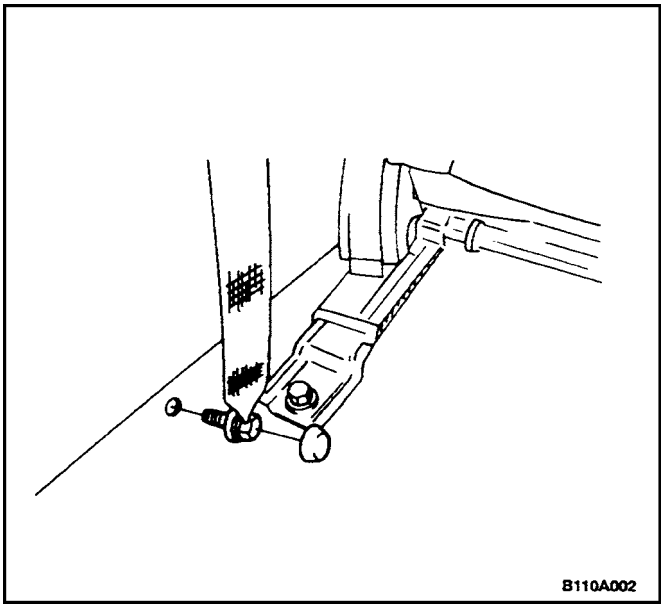

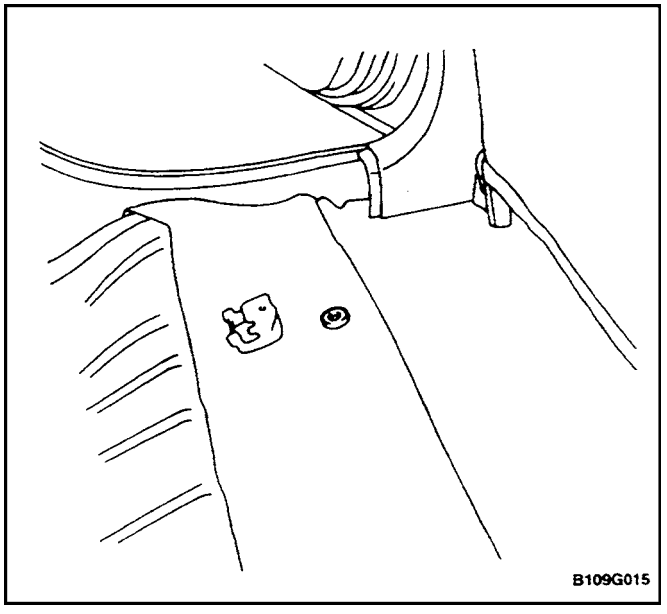

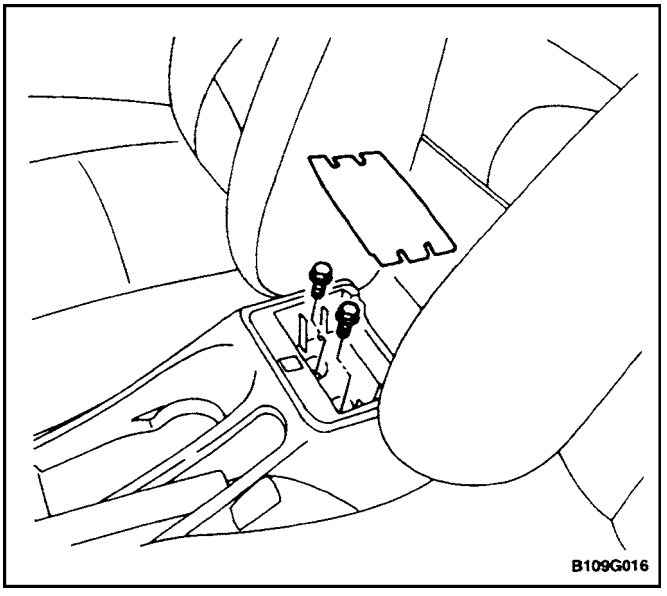

Installation Procedure

1. Install the floor carpet.
2. Install the floor console. Refer to”Floor Console” in this section.
3. Install the front seats. Refer to *Section 9H, Seats.*
4. Install the left and the right kick panels. Refer to”Kick Panel” in this section.
5. Install the left and the right lower B–pillar trim panels. Refer to”Lower B–Pillar Trim Panel” in this section.
6. Install the left and the right front rocker trim panels. Refer to”Front Rocker Trim Panel” in this section.
7. Install the left and the right lower B–pillar seat belt anchors to the B–pillar with the bolts.

Tighten

Tighten the seat belt anchor bolts to 35 N•m (26 lb–ft).

8. Install the carpet retainer clips beneath the rear seat cushion.
9. Install the left and the right rear rocker trim panels. Refer to”Rear Rocker Trim Panel” in this section.
10. Connect the negative battery cable.

FLOOR CONSOLE

Removal Procedure

1. Disconnect the negative battery cable.
2. Open the rear console storage compartment and remove the bolts securing the rear portion of the floor console.

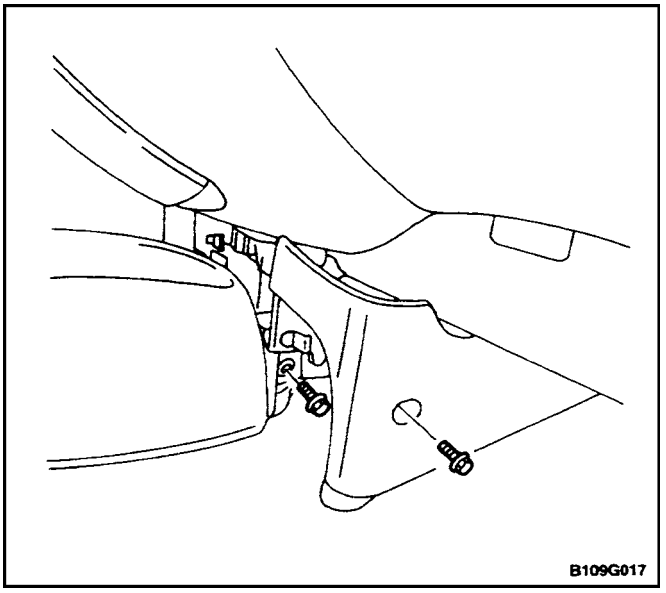

3. Remove the bolts and the floor console forward trim panels.
4. Remove the bolts securing the front portion of the floor console.

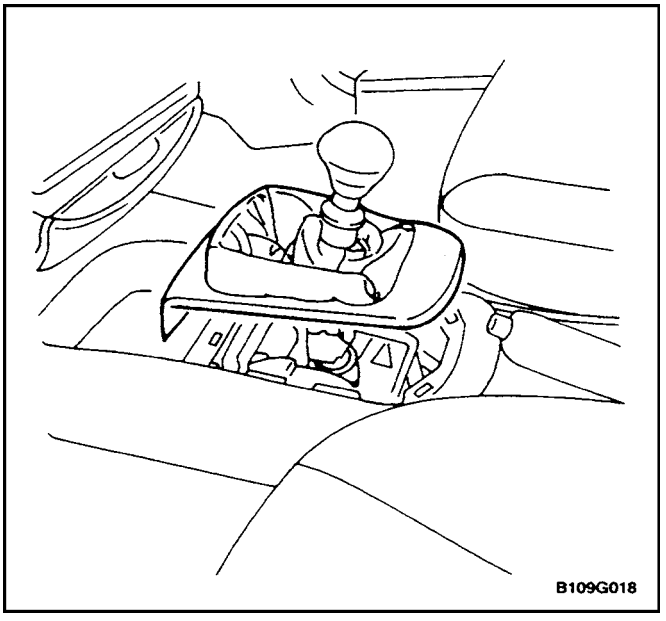

5. Remove the shift lever boot, (if equipped).
6. Disconnect the power mirror control electrical connector, if equipped.
7. Remove the the floor console.

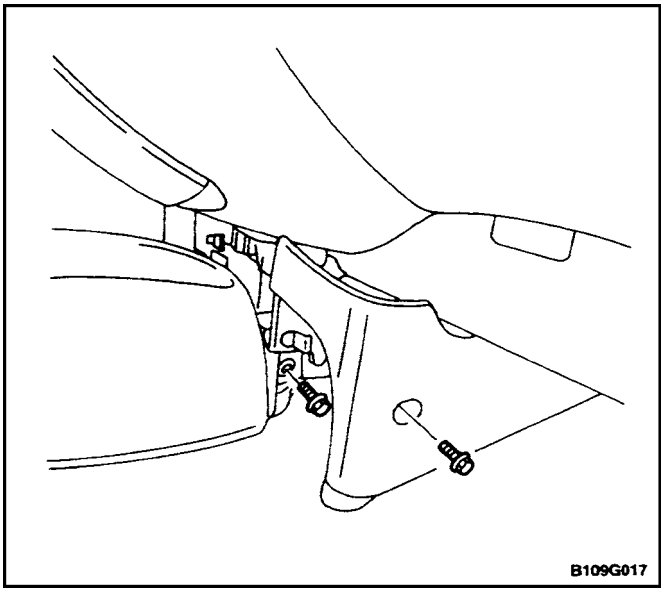

Installation Procedure

1. Install the floor console.
2. Connect the power mirror control electrical connector, if equipped.

Notice : Dissimilar metals in direct contact with each other may corrode rapidly. Make sure to use the correct fasteners to prevent premature corrosion.

3. Install the bolts to secure the front portion of the floor console.

Tighten

Tighten the floor console bolts to 4 N•m (35 lb–in).

4. Install the floor console forward trim panels with the bolts.

Tighten

Tighten the floor console forward trim panel bolts to 4 N•m (35 lb–in).

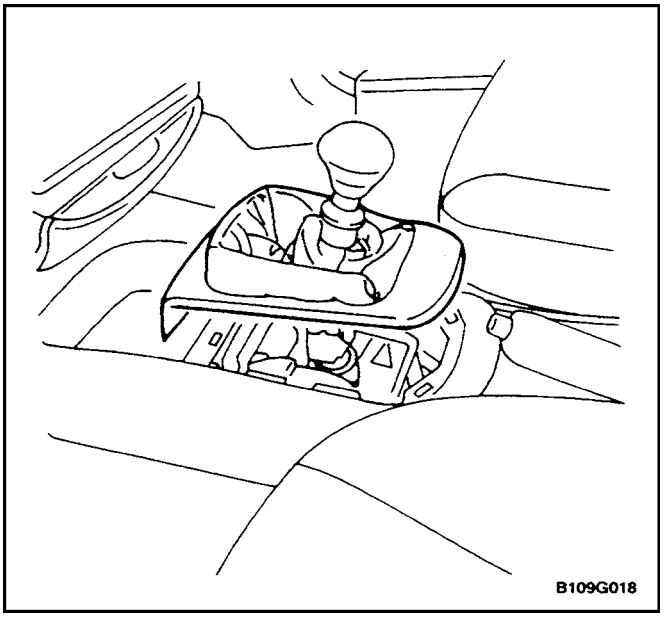

5. Install the gear shift lever boot, (if equipped).

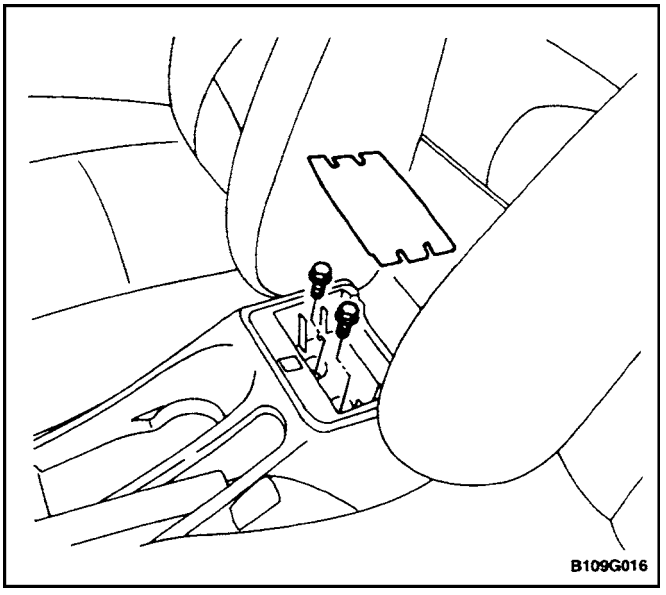

6. Install the bolts to secure the rear portion of the floor console.

   Tighten

   Tighten the floor console bolts to 4 N•m (35 lb–in).
7. Connect the negative battery cable.

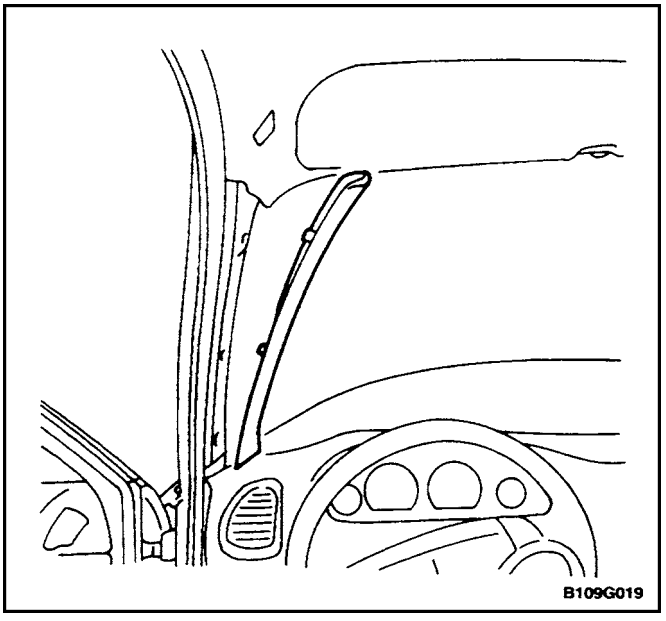

A–PILLAR TRIM PANEL

Removal Procedure

1. Pry off the A–pillar trim panel.

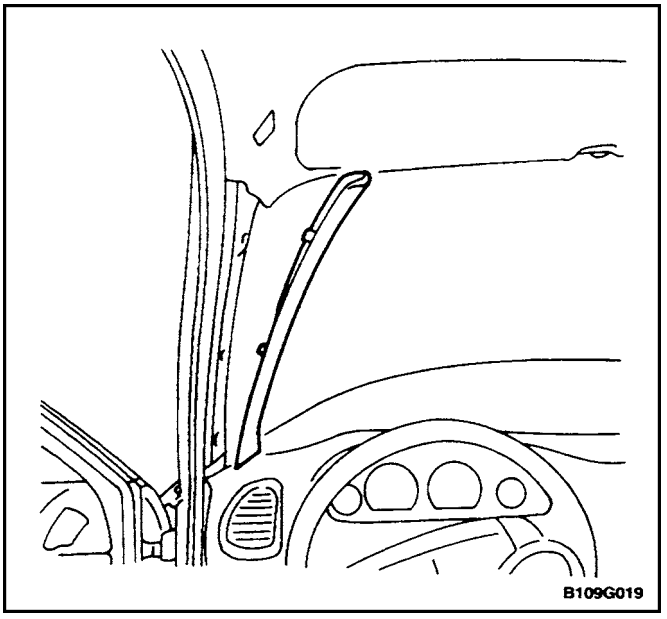

Installation Procedure

1. Install the A–pillar trim panel.

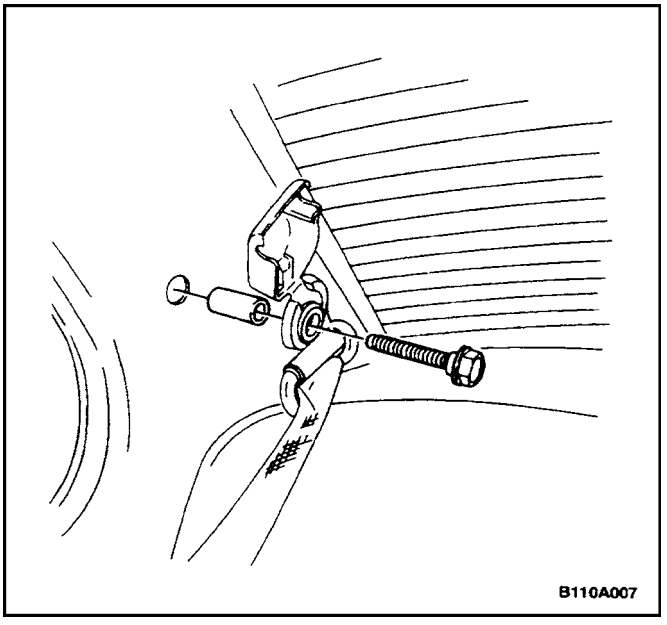

C–PILLAR TRIM PANEL (NOTCHBACK)

(Notchback Shown, Wagon Similar)

Removal Procedure

1. Reposition the plastic cap to reveal the C–pillar seat belt anchor bolt.
2. Remove the bolt and the C–pillar seat belt anchor.

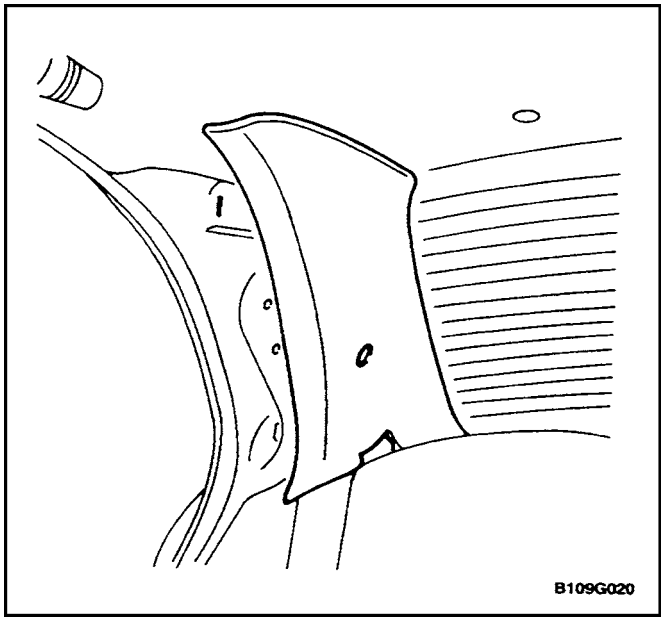

3. Remove the C–pillar trim panel from the body.

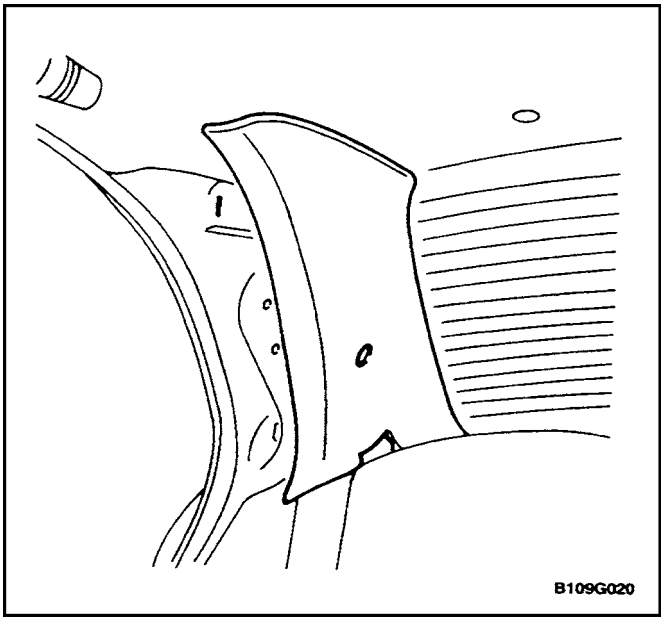

Installation Procedure

1. Install the C–pillar seat belt anchor with the bolt.

Notice : Dissimilar metals in direct contact with each other may corrode rapidly. Make sure to use the correct fasteners to prevent premature corrosion.

2. Install the C–pillar seat belt anchor with the bolt.

   Tighten

   Tighten the seat belt anchor bolt to 35 N•m (26 lb–ft).
3. Install the plastic cap to its original position.

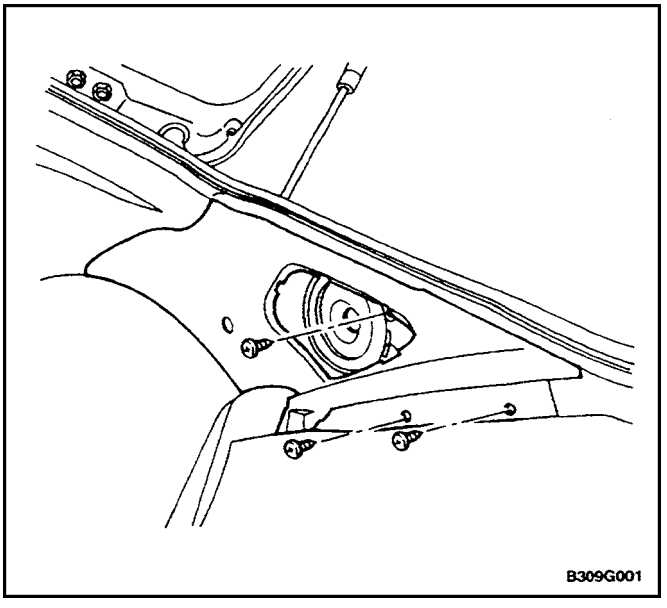

C–PILLAR TRIM PANEL (HATCHBACK)

Removal Procedure

1. Reposition the plastic cap to reveal the C–pillar seat belt anchor bolt.
2. Remove the bolt and the C–pillar seat belt anchor.
3. Remove the rear speaker access cover.
4. Remove the screws and the C–pillar trim panel.

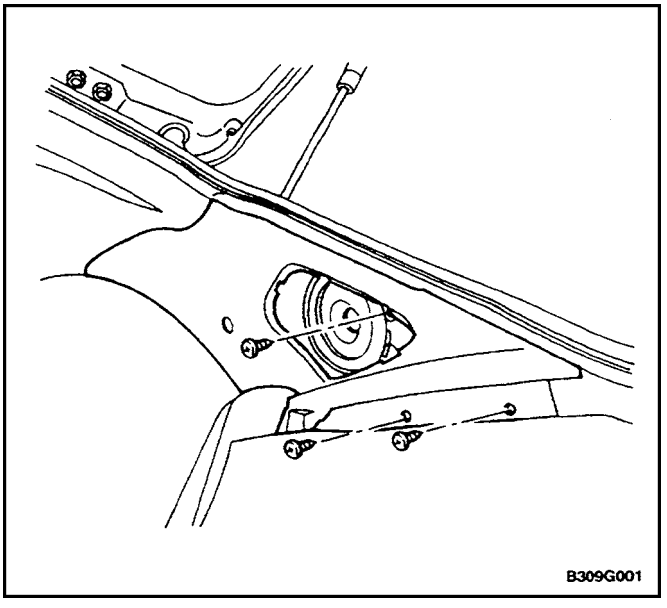

Installation Procedure

Notice : Dissimilar metals in direct contact with each other may corrode rapidly. Make sure to use the correct fasteners to prevent premature corrosion.

1. Install the C–pillar trim panel with the screws.

   Tighten

   Tighten the trim panel screws to 2 N•m (18 lb–in).
2. Install the rear speaker access cover.
3. Install the C–pillar seat belt anchor with the bolt.

   Tighten

   Tighten the seat belt anchor bolt to 35 N•m (26 lb–ft).
4. Install the plastic cap to its original position.

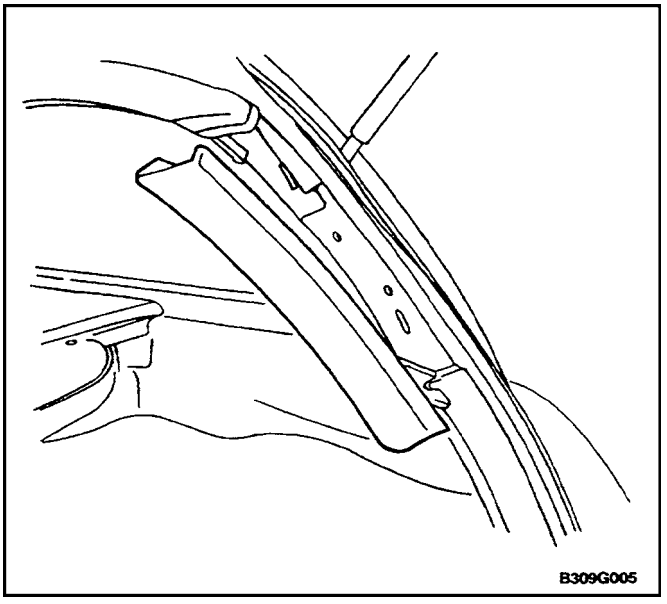

D–PILLAR TRIM PANEL (WAGON)

Removal Procedure

1. Open the tailgate.
2. Remove the D–pillar trim panel.

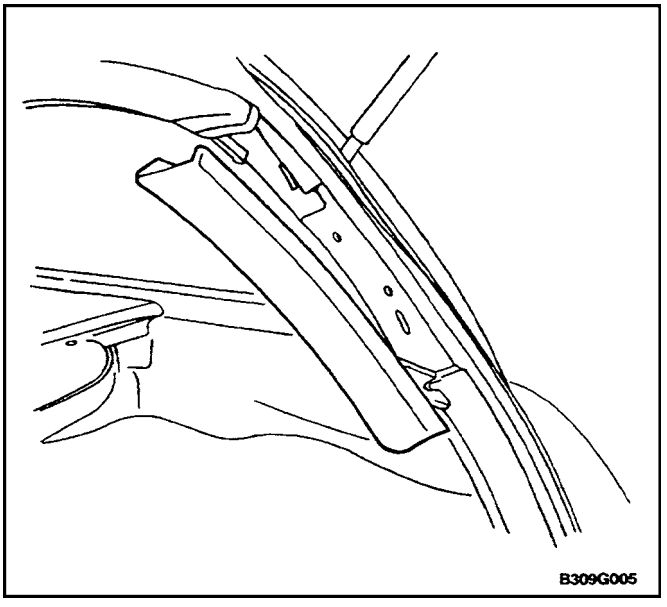

Installation Procedure

1. Install the D–pillar trim panel.
2. Close the tailgate.

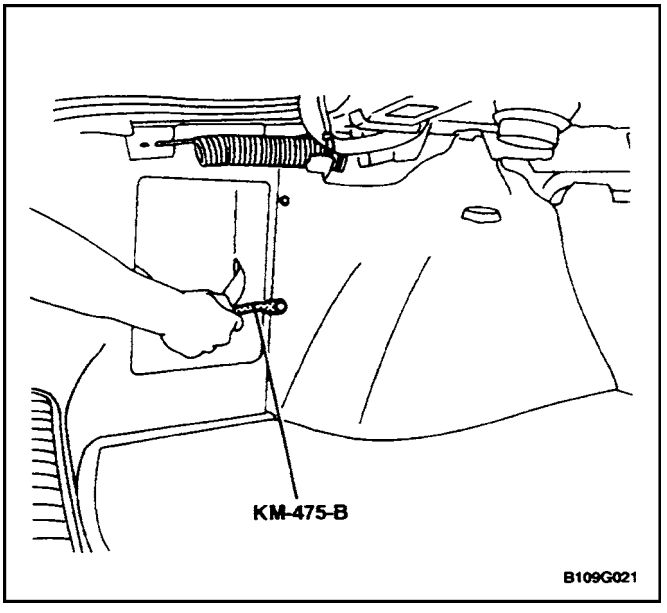

LUGGAGE COMPARTMENT WHEELHOUSE TRIM PANEL (NOTCHBACK)

Tools Required

KM–475–B Trim Remover

Removal Procedure

1. Remove the rear seatback. Refer to *Section 9H, Seats.*
2. Remove the luggage compartment rear quarter trim panel.
3. Using the trim remover KM–475–B, remove the plastic retaining clips and the wheelhouse trim panel.

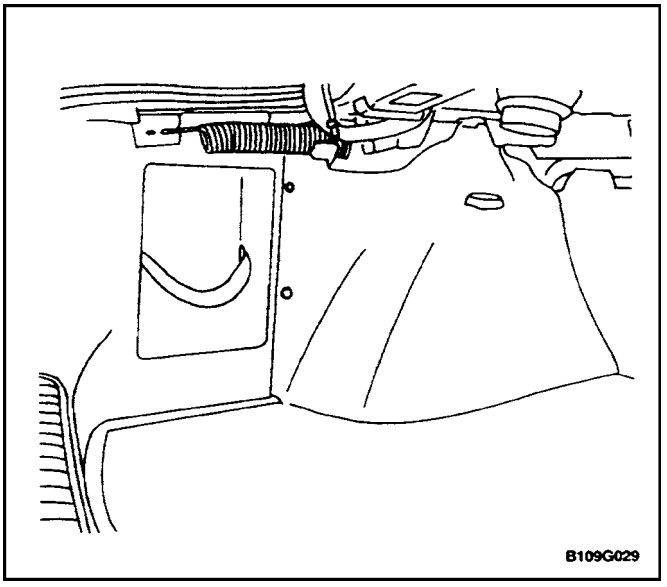

Installation Procedure

1. Install the wheelhouse trim panel with the plastic retaining clips.
2. Install the luggage compartment rear quarter trim panel.
3. Install the rear seatback. Refer to *Section 9H, Seats.*

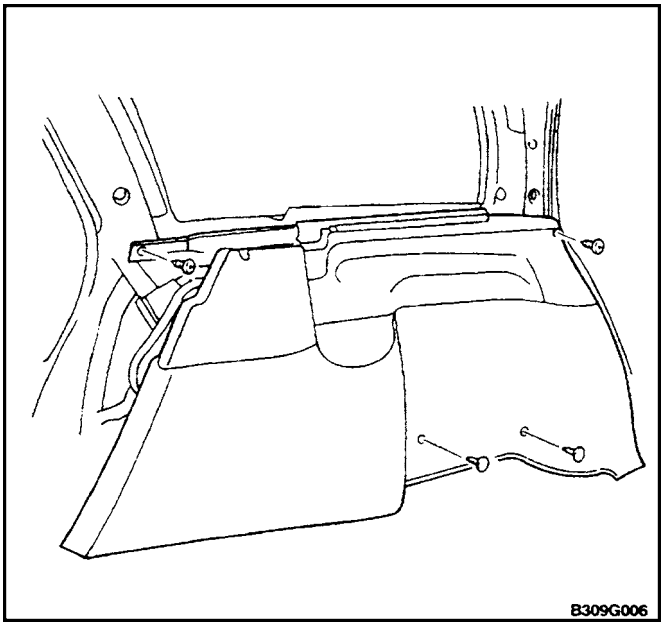

LUGGAGE COMPARTMENT WHEELHOUSE TRIM PANEL (WAGON)

Removal Procedure

1. Remove the C–pillar trim panel. Refer to"C–Pillar Trim Panel" in this section.
2. Remove the D–pillar trim panel. Refer to"D–Pillar Trim Panel" in this section.
3. Remove the screws, the clips, and the luggage compartment wheelhouse trim panel.
4. Disconnect the electrical connector.

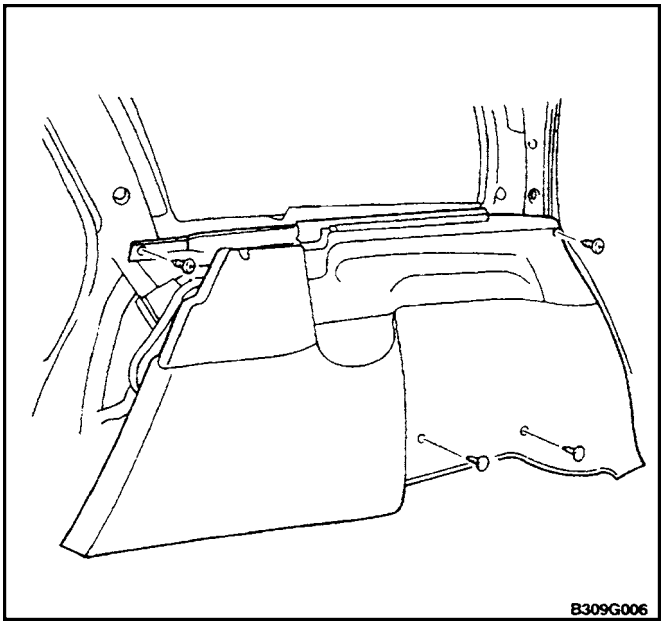

Installation Procedure

1. Connect the electrical connector.

Notice : Dissimilar metals in direct contact with each other may corrode rapidly. Make sure to use the correct fasteners to prevent premature corrosion.

2. Install the wheelhouse trim panel with the screws and the clips.

   Tighten

   Tighten the trim panel screws to 2 N•m (18 lb–in).
3. Install the D–pillar trim panel. Refer to"D–Pillar Trim Panel" in this section.
4. Install the C–pillar trim panel. Refer to"C–Pillar Trim Panel" in this section.

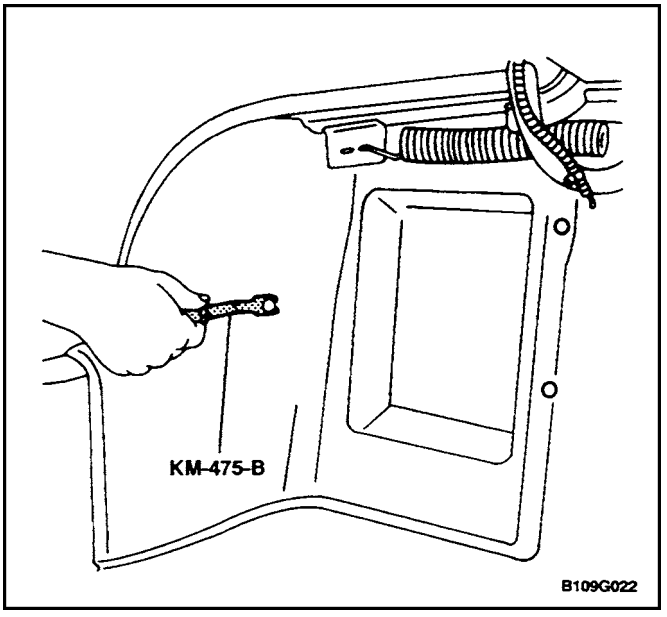

LUGGAGE COMPARTMENT REAR QUARTER TRIM PANEL

(Notchback Shown, Hatchback Similar)

Tools Required

KM–475–B Trim Remover

Removal Procedure

1. Using the trim remover KM–475–B, remove the plastic retaining clips and the rear quarter trim panel.

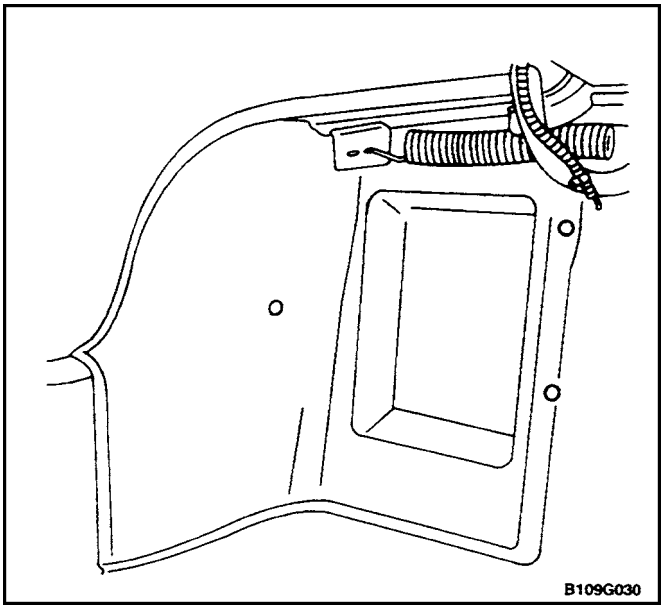

Installation Procedure

1. Install the rear quarter trim panel with the plastic retaining clips.

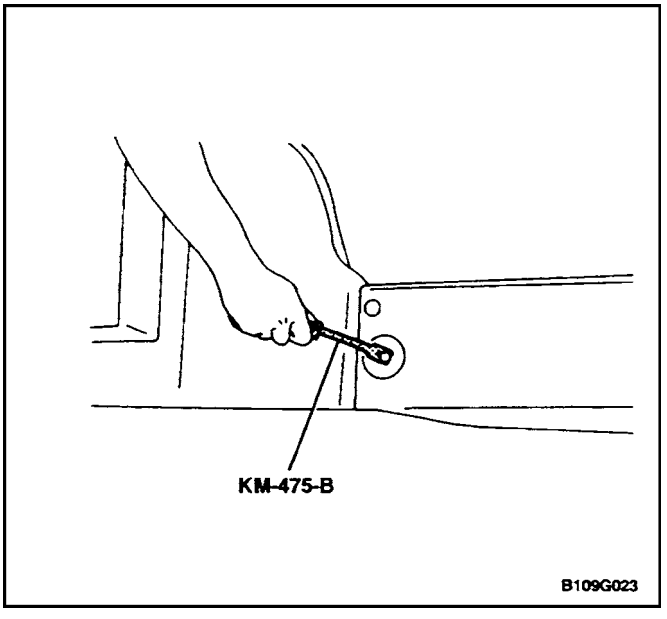

LUGGAGE COMPARTMENT REAR TRIM PANEL

Tools Required

KM–475–B Trim Remover

Removal Procedure

1. Using the trim remover KM–475–B, remove the plastic retaining clips and the luggage compartment rear trim panel.

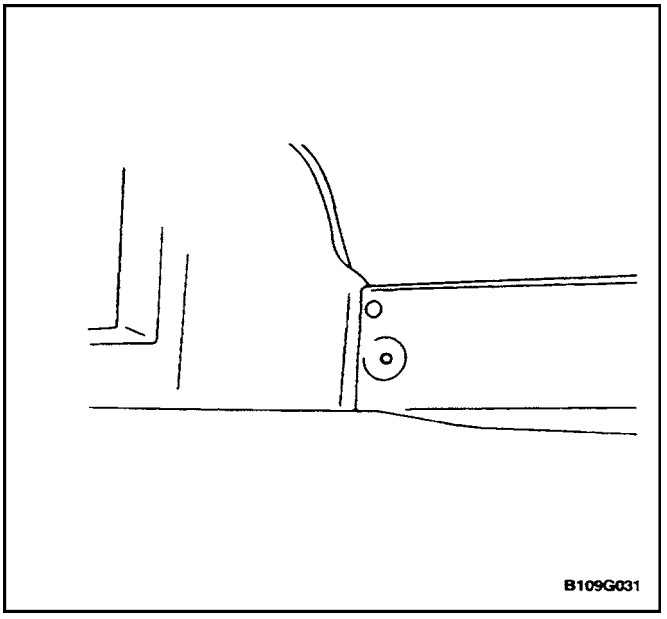

Installation Procedure

1. Install the luggage compartment rear trim panel with the plastic retaining clips.

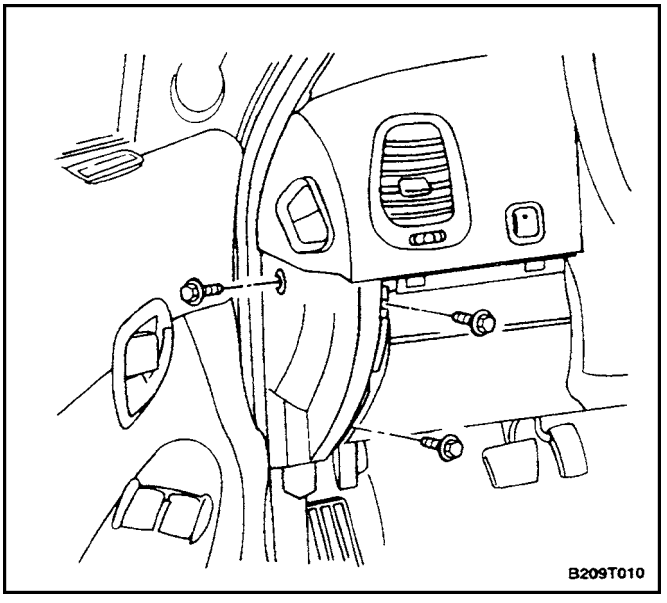

DRIVER KNEE BOLSTER

Removal Procedure

1. Remove the plastic knee bolster trim panel.
2. Remove the bolts and the left side instrument panel trim.

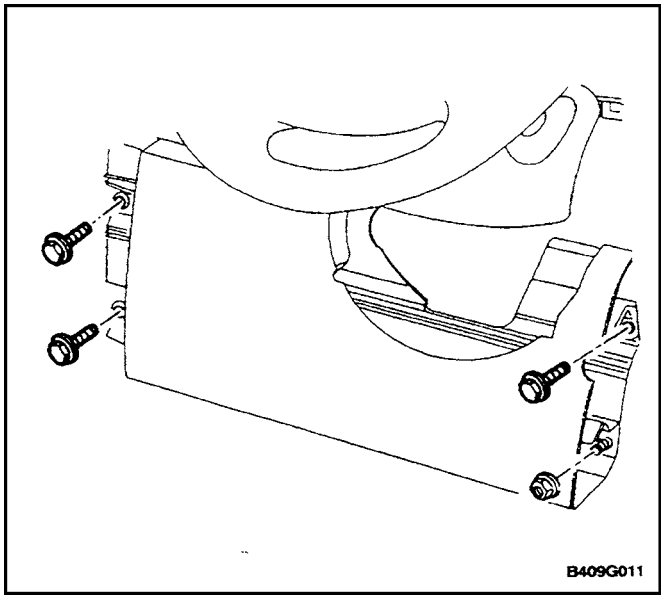

3. Remove the nut, the bolts, and the driver knee bolster.

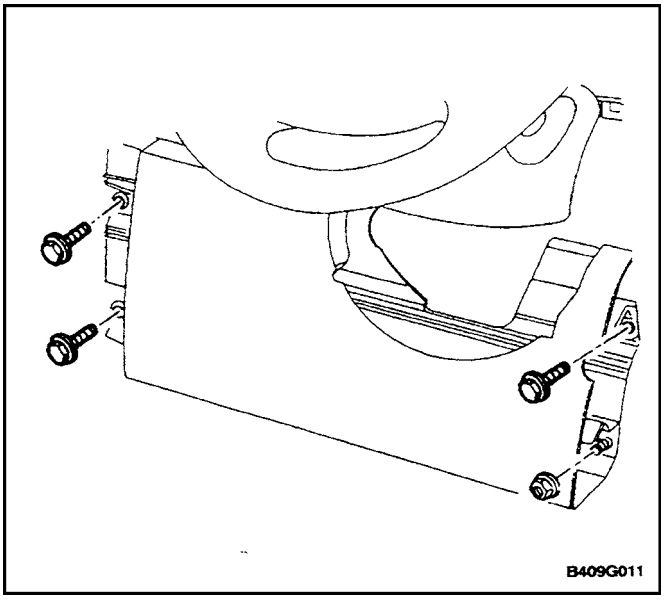

Installation Procedure

Notice : Dissimilar metals in direct contact with each other may corrode rapidly. Make sure to use the correct fasteners to prevent premature corrosion.

1. Install the driver knee bolster with the nut and the bolts.

   Tighten

   Tighten the knee bolster nut to 22 N•m (16 lb–ft).

   Tighten

   Tighten the knee bolster bolts to 22 N•m (16 lb–ft).

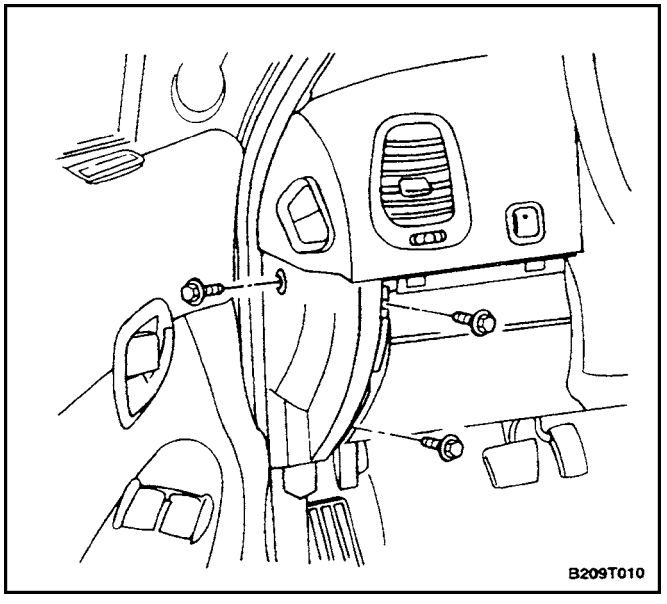

2. Install the left side instrument panel trim with the bolts.
3. Install the plastic knee bolster trim panel.

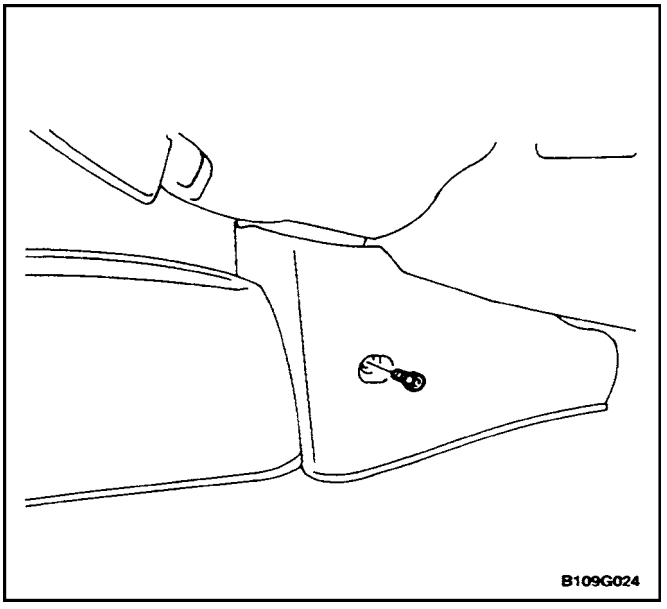

PASSENGER KNEE BOLSTER

Removal Procedure

1. Remove the plastic knee bolster trim panel under the steering column.
2. Remove the bolts and the floor console forward trim panels.

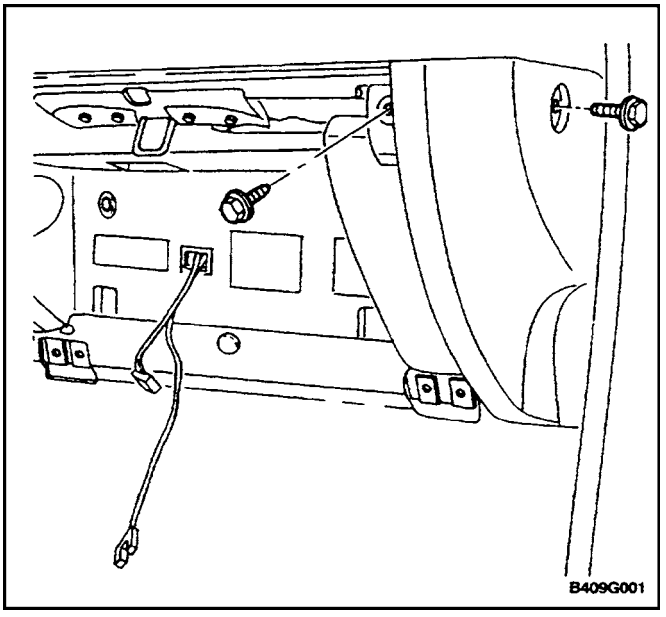

3. Remove the right side kick panel. Refer to”Kick Panel” in this section.
4. Remove the glove box. Refer toSection 9E, Instrumentation/Driver Information.
5. Remove the screws and the glove box housing.
6. Remove the bolts and the right–side instrument panel trim.

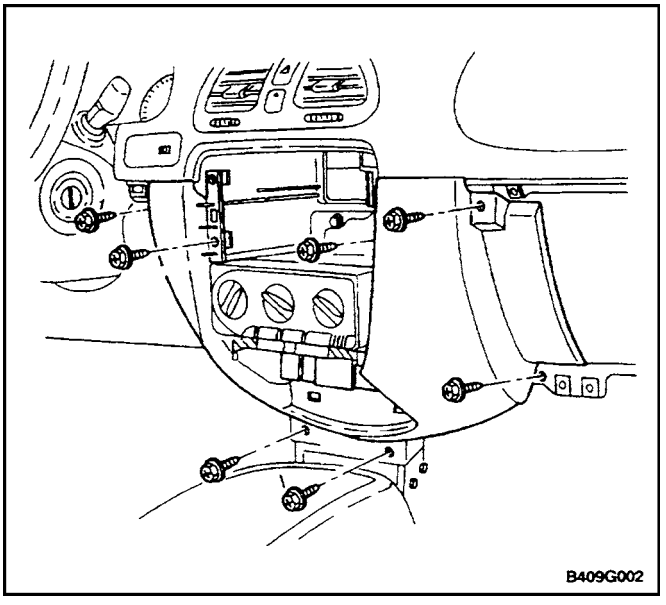

7. Remove the audio system. Refer to*Section 9F, Audio Systems.*
8. Remove the bolts and the instrument panel lower trim piece.

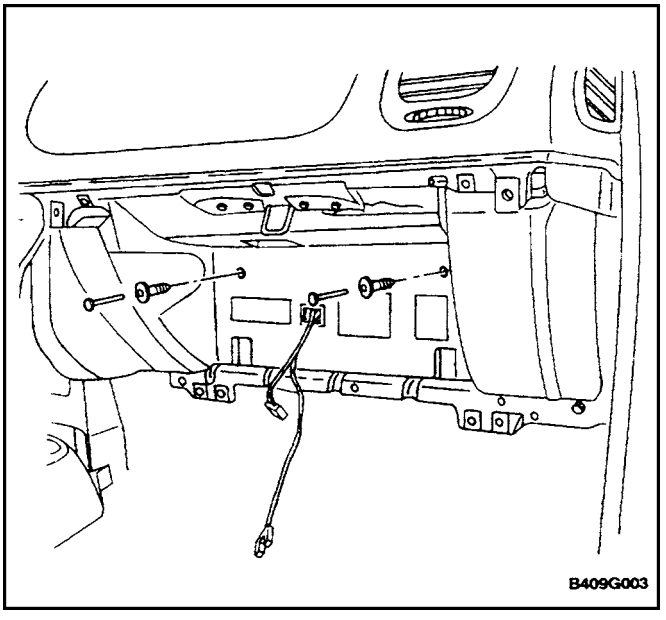

9. Remove the passenger footwell upper cover. Refer to”Footwell Upper Cover” in this section.
10. Pull out the retaining clips and remove the passenger knee bolster foam pad.

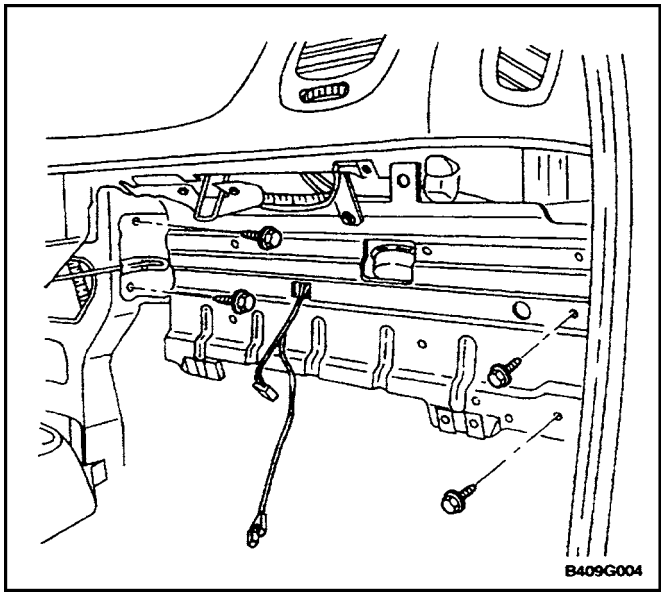

11. Remove the bolts and the passenger knee bolster.

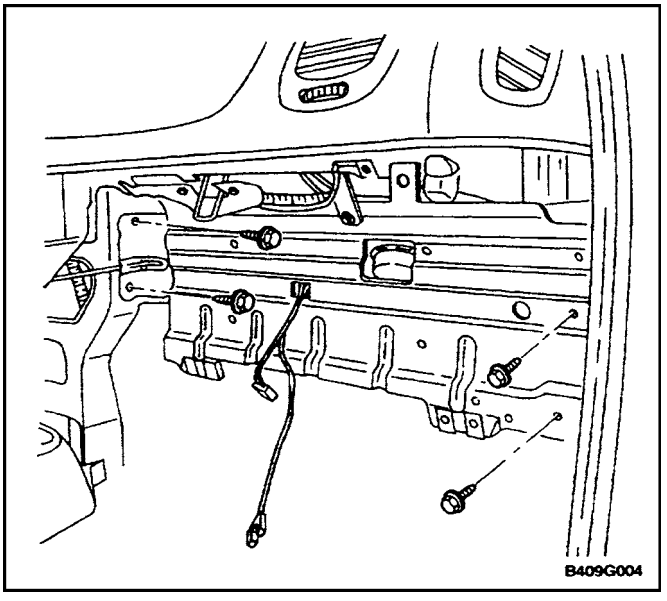

Installation Procedure

Notice : Dissimilar metals in direct contact with each other may corrode rapidly. Make sure to use the correct fasteners to prevent premature corrosion.

1. Install the passenger knee bolster with the bolts.

   Tighten

   Tighten the knee bolster bolts to 22 N•m (16 lb–ft).

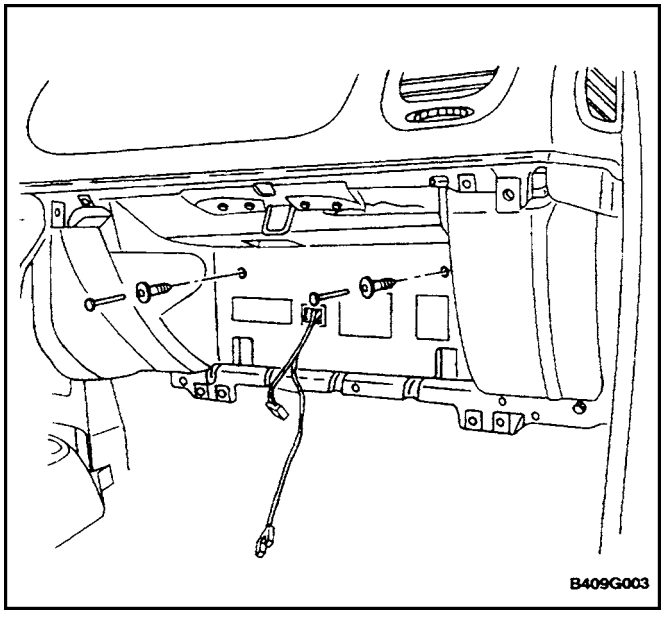

2. Install the passenger knee bolster foam pad with the retaining clips.

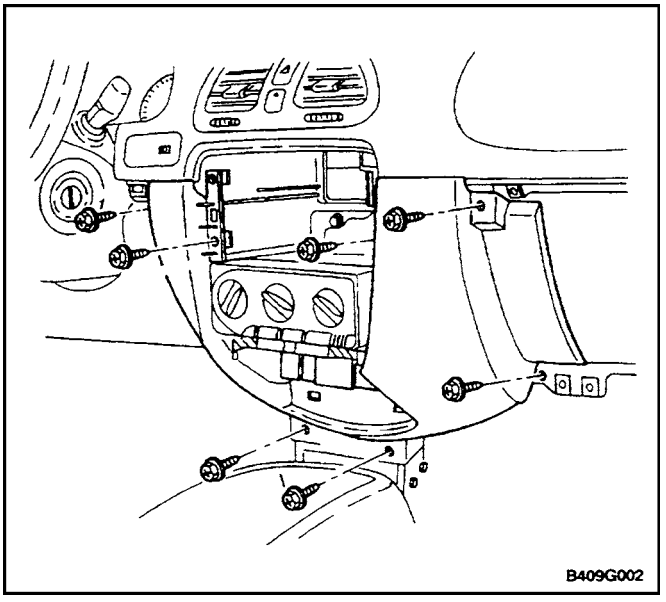

3. Install the passenger footwell upper cover. Refer to"Footwell Upper Cover" in this section.
4. Install the instrument panel lower trim piece with the bolts.

Tighten

Tighten the instrument panel lower trim piece bolts to 10 N•m (89 lb–in).

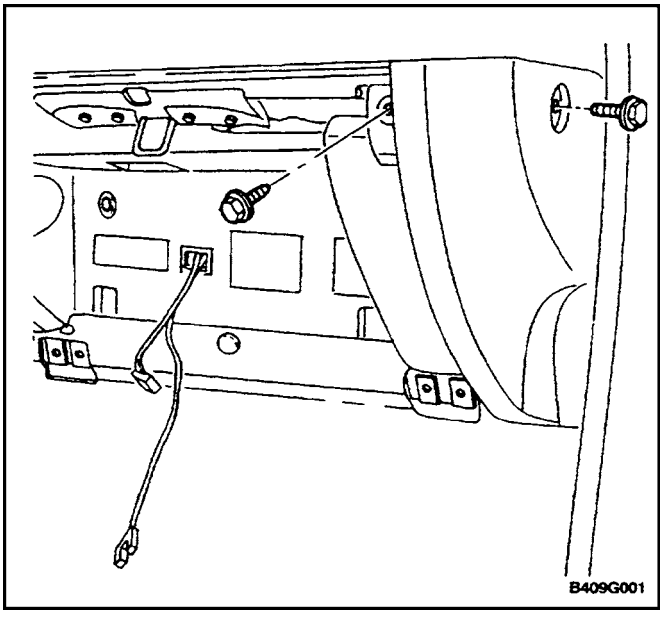

5. Install the audio system. Refer to*Section 9F, Audio Systems.*
6. Install the right–side instrument panel trim with the bolts.

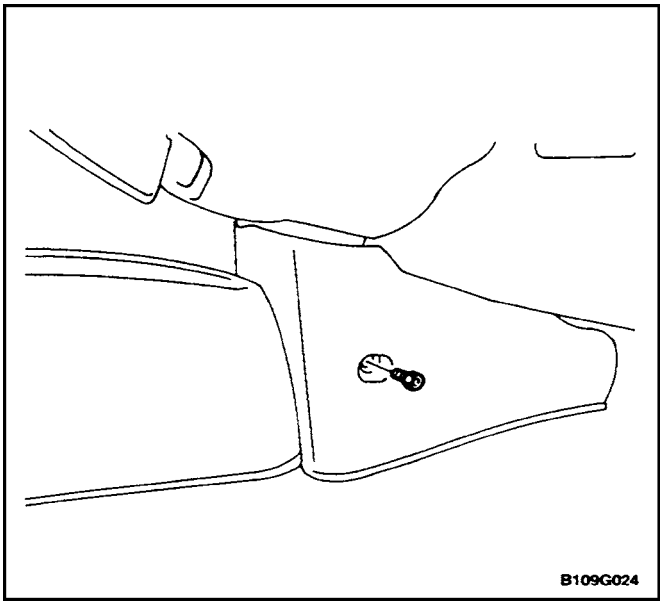

7. Install the glove box housing with the screws.

Tighten

Tighten the glove box housing screws to 4 N•m (35 lb–in).

8. Install the glove box. Refer to*Section 9E, Instrumentation/Driver Information.*
9. Install the right–side kick panel. Refer to"Kick Panel" in this section.
10. Install the floor console forward trim panels with the bolts.

Tighten

Tighten the floor console forward trim panel bolts to 4 N•m (35 lb–in).

11. Install the plastic knee bolster trim panel under the steering column.

GENERAL DESCRIPTION AND SYSTEM OPERATION

INTERIOR TRIM PANELS

The interior trim panels are molded plastic and fasten with screws, bolts or plastic clips.

PRESSURE RELIEF VENT

When all the windows are closed and the ventilation system is on, the addition of outside air to the interior of the vehicle causes a positive pressure within the vehicle. In order to relieve the pressure, air is released through two pressure relief vents. The pressure relief vents are located at the rear quarter of the vehicle, behind the bumper fascia.

REAR COMPARTMENT SECURITY COVER

A rear compartment security cover is provided on the hatchback and wagon. The rear compartment security cover can be easily removed if more cargo space is needed.

FLOOR CONSOLE

The floor console fits over the tunnel in the floor of the vehicle and extends from under the center of the instrument panel to the rear seat area. The floor console contains the transaxle shift lever, the parking brake lever, and an ashtray for the rear seat occupants.

The sensing and diagnostic module (SDM) for the air–bag system is located under the floor console.

FLOOR CARPET

The molded one–piece floor carpet goes over both the front and the rear floor pans.

SECTION : 8A

SEAT BELTS

CAUTION : Disconnect the negative battery cable before removing or installing any electrical unit or when a tool or equipment could easily come in contact with exposed electrical terminals. Disconnecting this cable will help prevent personal injury and damage to the vehicle. The ignition must also be in LOCK unless otherwise noted.

TABLE OF CONTENTS

SPECIFICATIONS 8A–1
FASTENER TIGHTENING SPECIFICATIONS . 8A–1
SCHEMATIC AND WIRING DIAGRAMS 8A–2
DRIVER SEAT BELT WARNING 8A–2
DIAGNOSIS 8A–3
DRIVER SEAT BELT WARNING 8A–3
MAINTENANCE AND REPAIR 8A–5
ON–VEHICLE SERVICE 8A–5
PRETENSIONER FRONT SEAT BELT 8A–5
FRONT SEAT BELT HEIGHT ADJUSTER 8A–7
THREE–POINT CLR REAR OUTBOARD SEAT BELT 8A–7
THREE–POINT CLR REAR CENTER SEAT BELT 8A–9
CHILD SEAT TETHER ANCHOR 8A–10
GENERAL DESCRIPTION AND SYSTEM OPERATION 8A–12
DRIVER SEAT BELT WARNING 8A–12
PRETENSIONER FRONT SEAT BELT 8A–12
THREE–POINT CLR REAR OUTBOARD SEAT BELT 8A–12
TWO–POINT LAP REAR CENTER SEAT BELT 8A–12
OPERATIONAL AND FUNCTIONAL CHECKS 8A–12
CHILD SEAT TETHER ANCHOR 8A–12

SPECIFICATIONS

FASTENER TIGHTENING SPECIFICATIONS

Application	N•m	Lb–Ft	Lb–In
Child Seat Tether Anchor Bolt	25	18	–
Seat Belt Anchor Bolt	35	26	–
Seat Belt Height Adjuster Bolts	19	14	–
Seat Belt Retractor Bolt	35	26	–
Seat Belt Retractor Screw	10	26	89

SCHEMATIC AND WIRING DIAGRAMS

DRIVER SEAT BELT WARNING

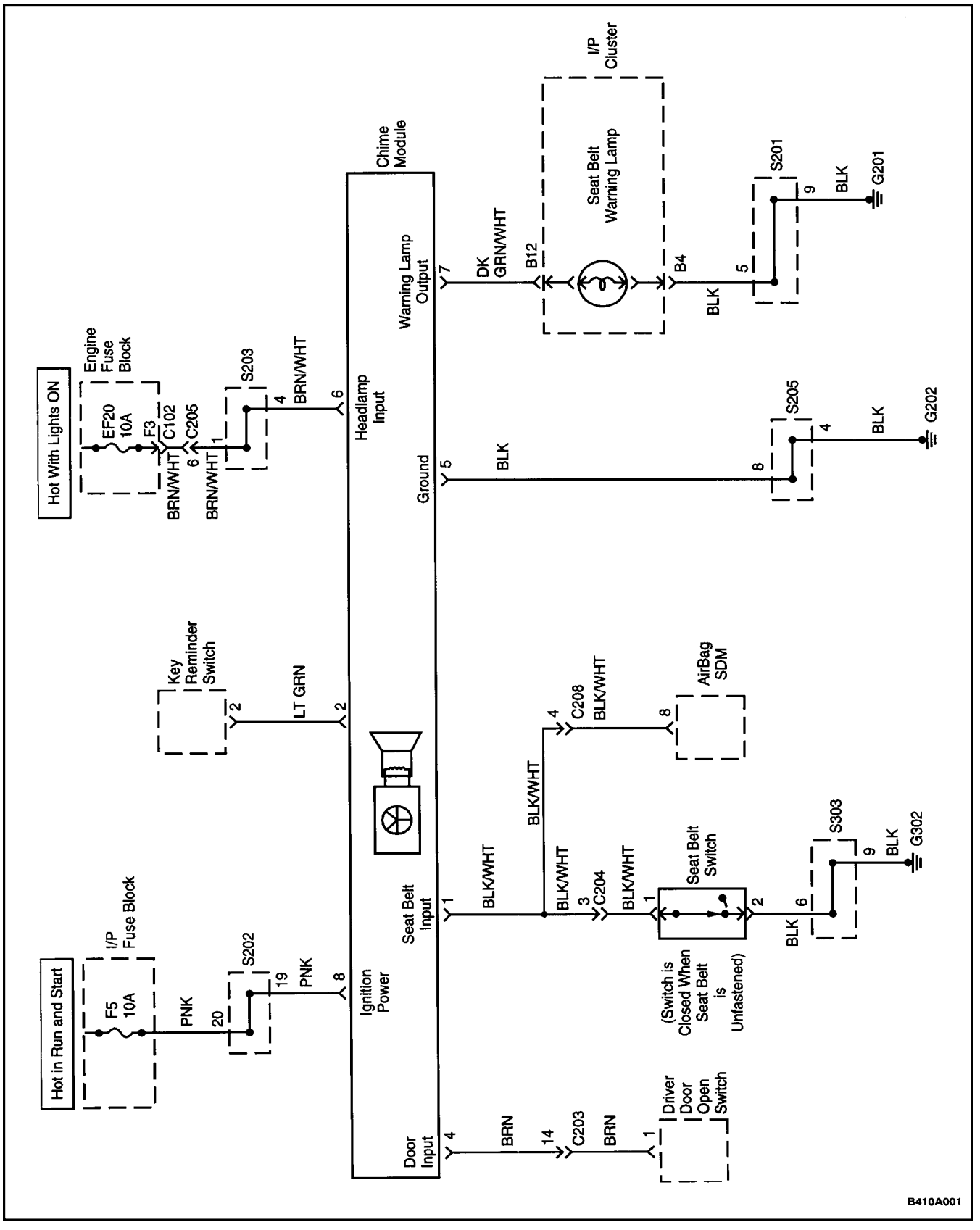

DIAGNOSIS

DRIVER SEAT BELT WARNING

Seat Belt Warning Lamp Does Not Turn On at Any Time

Step	Action	Value(s)	Yes	No
1	1. Unbuckle the seat belt. 2. Close the vehicle doors. 3. Turn the ignition ON. Is the seat belt warning chime OK?		Go to *Step 14*	Go to *Step 2*
2	Check the seat belt warning fuse F5. Is fuse F5 blown?		Go to *Step 3*	Go to *Step 4*
3	1. Check for a short circuit and repair if necessary. 2. Replace the fuse. Is the repair complete?		System OK	
4	1. Turn the ignition ON. 2. Check the voltage at fuse F5. Is the voltage equal to the specified value?	11–14 v	Go to *Step 6*	Go to *Step 5*
5	Repair the open power supply circuit for fuse F5. Is the repair complete?		System OK	
6	1. Disconnect the seat belt switch connector (located under the driver's seat). 2. Connect a jumper between the terminals on the harness side of the seat belt switch connector. 3. Turn the ignition ON. Does the seat belt warning lamp turn on?		Go to *Step 7*	Go to *Step 8*
7	Replace the seat belt switch. Is the repair complete?		System OK	
8	1. Disconnect the chime module electrical connector. 2. Turn the ignition ON. 3. Check the voltage at terminal 8 of the chime module connector. Is the voltage equal to the specified value?	11–14 v	Go to *Step 10*	Go to *Step 9*
9	Repair the open circuit between fuse F5 and the chime module. Is the repair complete?		System OK	
10	1. Leave the chime module connector disconnected. 2. Turn the ignition OFF. 3. Use an ohmmeter to measure resistance between ground and terminal 5 of the chime module. Is the resistance equal to the specified value?	$\approx$ 0 Ω	Go to *Step 12*	Go to *Step 11*
11	Repair the ground circuit for the chime module. Is the repair complete?		System OK	

Step	Action	Value(s)	Yes	No
12	1. Leave the chime module connector disconnected. 2. Turn the ignition OFF. 3. Make sure the driver's seat belt is buckled. 4. Use an ohmmeter to measure resistance between ground and terminal 1 of the chime module. Is the resistance equal to the specified value?	≈ 0 Ω	Go to *Step 14*	Go to *Step 13*
13	Repair the open circuit between ground and terminal 1 of the chime module connector. Is the repair complete?		System OK	
14	1. Remove the instrument cluster. 2. Check the seat belt warning lamp bulb. Is the bulb OK?		Go to *Step 16*	Go to *Step 15*
15	Replace the warning lamp bulb. Is the repair complete?		System OK	
16	1. If the seat belt switch and the chime module were disconnected in a previous step, make sure that they have been reconnected. 2. Leave the seat belt unbuckled. 3. Turn the ignition ON. 4. Check the voltage at terminal A2 of the instrument cluster. Is the voltage equal to the specified value?	11–14 v	Go to *Step 20*	Go to *Step 17*
17	1. Disconnect the chime module connector. 2. Use an ohmmeter to check for continuity between terminal 7 of the chime module connector and instrument cluster connector B12. Did the ohmmeter indicate the specified value?	≈ 0 Ω	Go to *Step 19*	Go to *Step 18*
18	Repair the open circuit between instrument cluster terminal A1 and ground. Is the repair complete?		System OK	
19	Replace the chime module. Is the repair complete?		System OK	Go to *Step 14*
20	Repair the open circuit between instrument cluster terminal B4 and ground. Is the repair complete?		System OK	Go to *Step 14*

Seat Belt Warning Chime Does Not Work

Step	Action	Value(s)	Yes	No
1	1. Leave the seat belt unbuckled. 2. Close the vehicle doors. 3. Turn the ignition ON. Is the seat belt warning lamp ON?		Go to *Step 2*	Go to "Seat Belt Warning Lamp Does Not Turn On at Any Time"
2	Replace the warning chime module. Is the repair complete?		System OK	

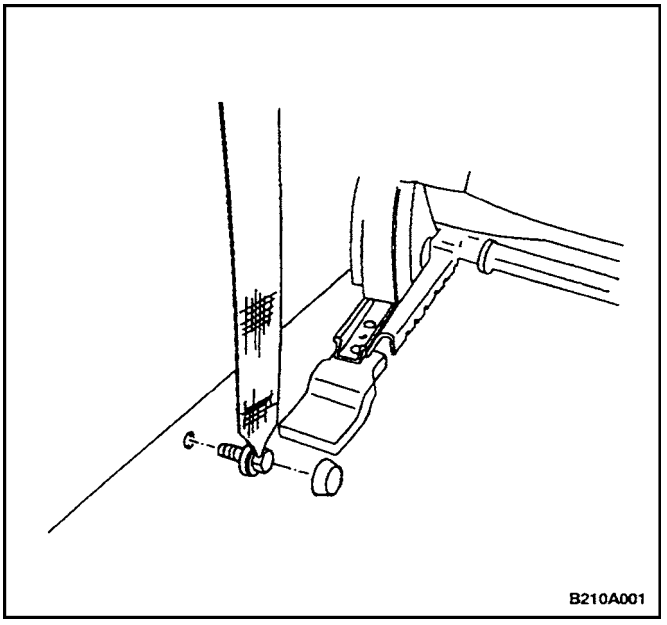

MAINTENANCE AND REPAIR

ON–VEHICLE SERVICE

PRETENSIONER FRONT SEAT BELT

Removal Procedure

1. Remove the plastic cap to reveal the lower B–pillar seat belt anchor.
2. Remove the bolt and the lower B–pillar seat belt anchor.

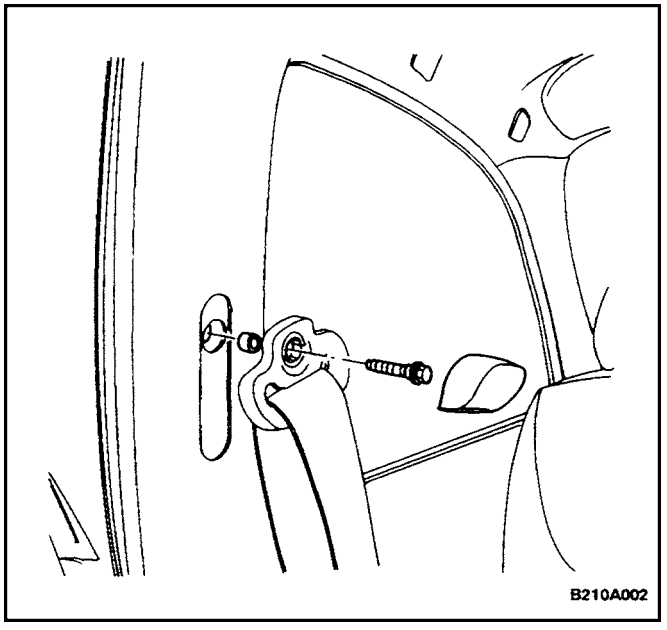

3. Remove the lower B–pillar trim panel. Refer to *Section 9G, InteriorTrim.*
4. Remove the plastic cap to reveal the upper B–pillar seat belt anchor.
5. Remove the bolt and the upper B–pillar seat belt anchor.

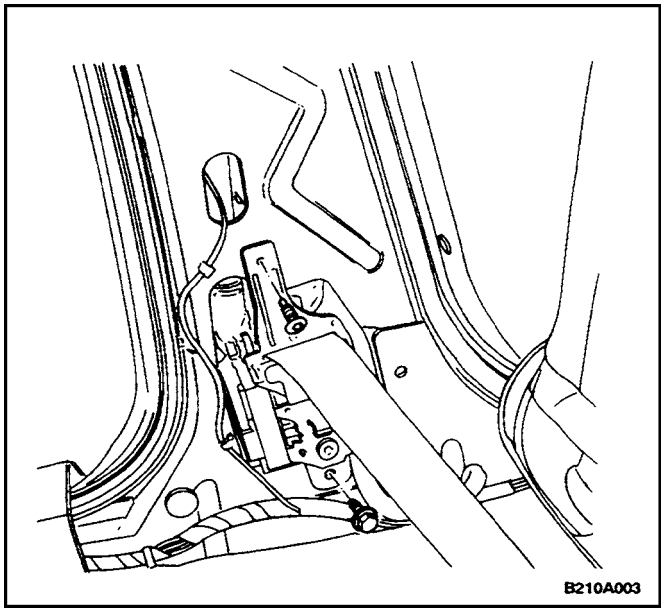

6. Remove the bolt, the screw, and the seat belt retractor.

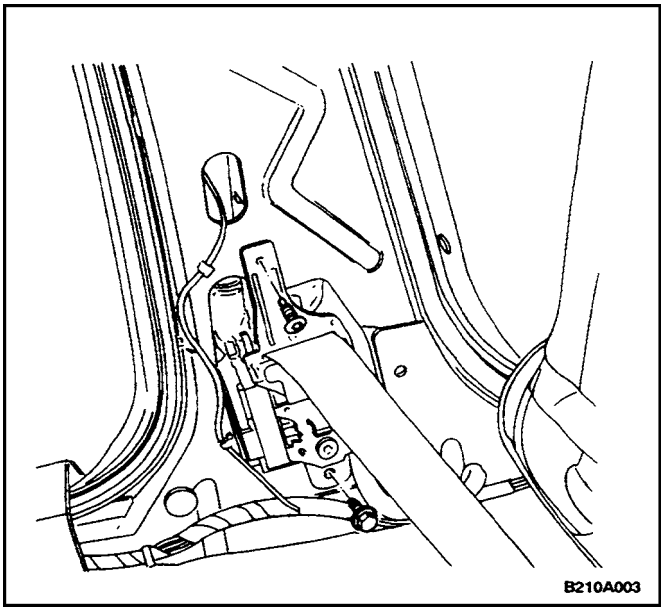

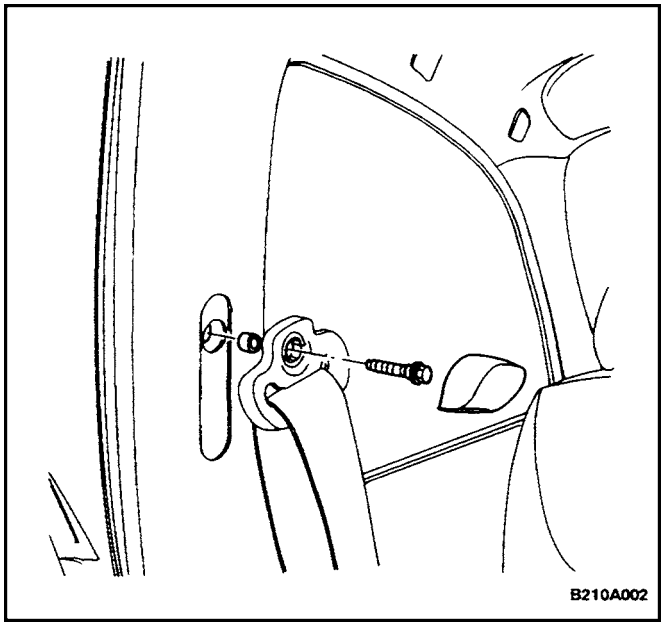

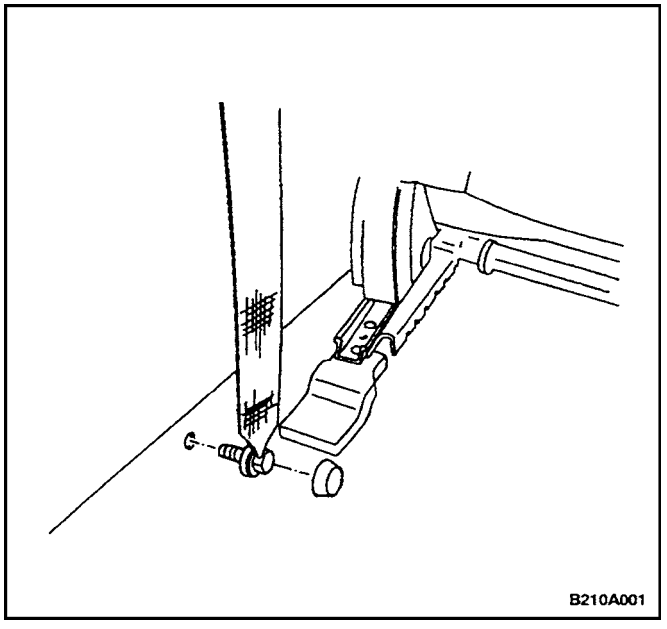

Installation Procedure

CAUTION : Failure to install the correct retractor screw may cause the pretensioner seat belt to malfunction, possibly resulting in personal injury.

Notice : Dissimilar metals in direct contact with each other may corrode rapidly. Make sure to use the correct fasteners to prevent premature corrosion.

1. Install the seat belt retractor with the bolt and the screw.

   Tighten

   Tighten the seat belt retractor bolt to 35 N•m (26 lb–ft).

   Tighten

   Tighten the seat belt retractor screw to 10 N•m (89 lb–ft).
2. Install the upper B–pillar seat belt anchor with the bolt.

   Tighten

   Tighten the seat belt anchor bolt to 35 N•m (26 lb–ft).
3. Install the seat belt anchor plastic cap.
4. Install the lower B–pillar trim panel. Refer to *Section 9G, Interior Trim.*
5. Install the lower B–pillar seat belt anchor with the bolt.

   Tighten

   Tighten the seat belt anchor bolt to 35 N•m (26 lb–ft).
6. Install the seat belt anchor plastic cap.

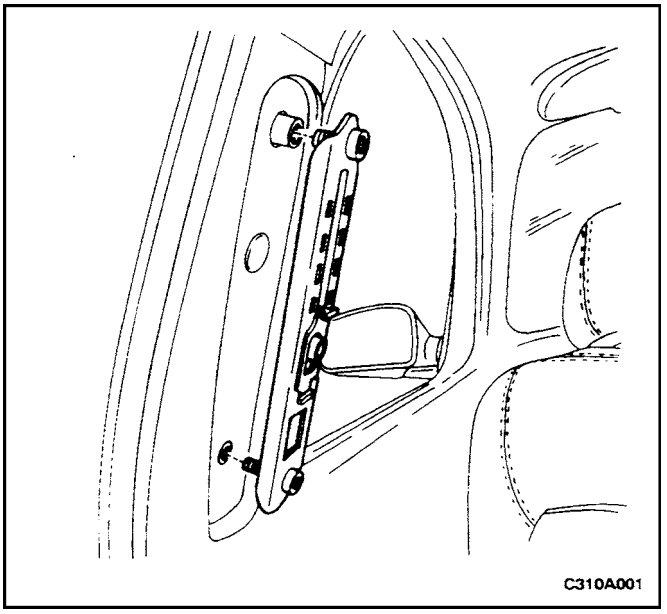

FRONT SEAT BELT HEIGHT ADJUSTER

Removal Procedure

1. Remove the upper B–pillar trimpanel. Refer to *Section 9G, Interior Trim.*
2. Remove the bolts and the seat belt height adjuster.

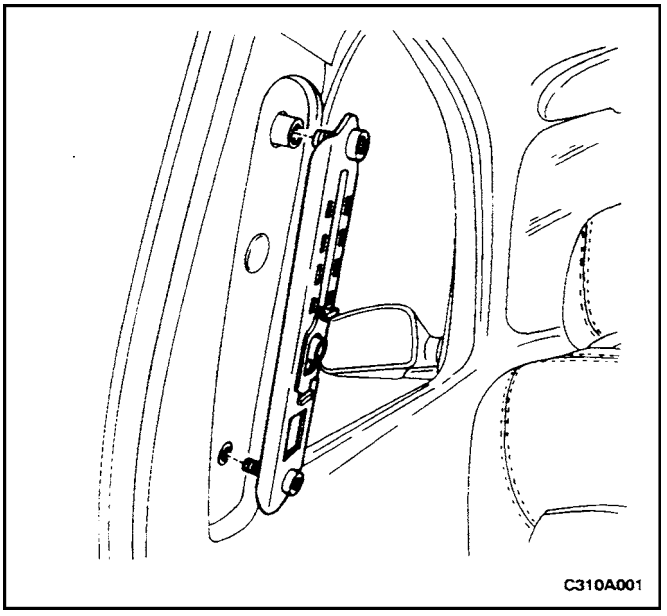

Installation Procedure

Notice : Dissimilar metals in direct contact with each other may corrode rapidly. Make sure to use the correct fasteners to prevent premature corrosion.

1. Install the seat belt height adjuster with the bolts.

   Tighten

   Tighten the seat belt height adjuster bolts to 23 N•m (17 lb–ft).
2. Install the upper B–pillar trim panel. Refer to *Section 9G, Interior Trim.*

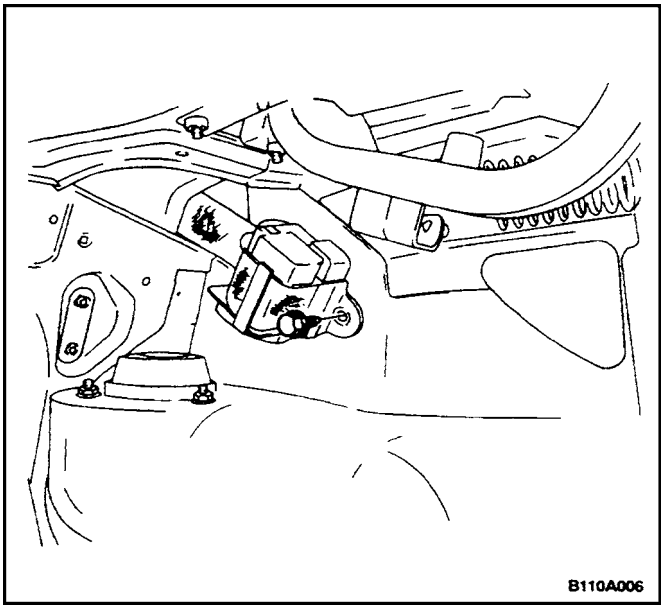

THREE–POINT CLR REAR OUTBOARD SEAT BELT

(Typical)

Removal Procedure

1. Open the luggage compartment.
2. Remove the luggage compartment wheelhouse trim panel. Refer to *Section 9G, Interior Trim.*
3. Remove the bolt and the luggage compartment seat belt retractor.

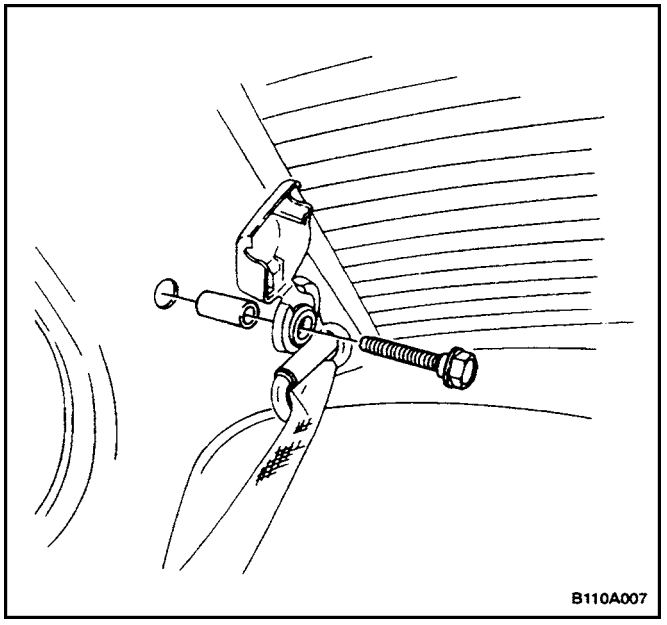

4. Reposition the plastic cap to reveal the C–pillar seat belt anchor bolt.
5. Remove the bolt and the C–pillar seat belt anchor.

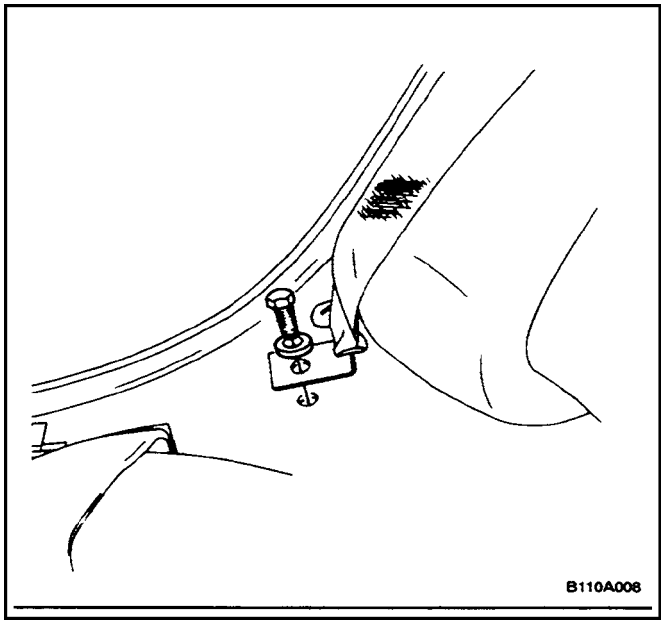

6. Remove the rear seat cushion. Refer to *Section 9H, Seats.*
7. Remove the bolt and the floor seat belt anchor.
8. Remove the seat belt.

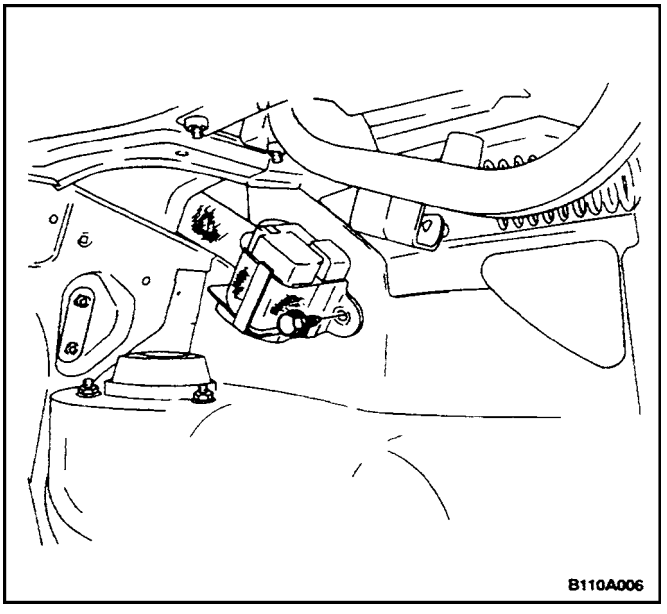

Installation Procedure

Notice : Dissimilar metals in direct contact with each other may corrode rapidly. Make sure to use the correct fasteners to prevent premature corrosion.

1. Install the luggage compartment seat belt retractor with the bolt.

   Tighten

   Tighten the seat belt retractor bolt to 35 N•m (26 lbft).

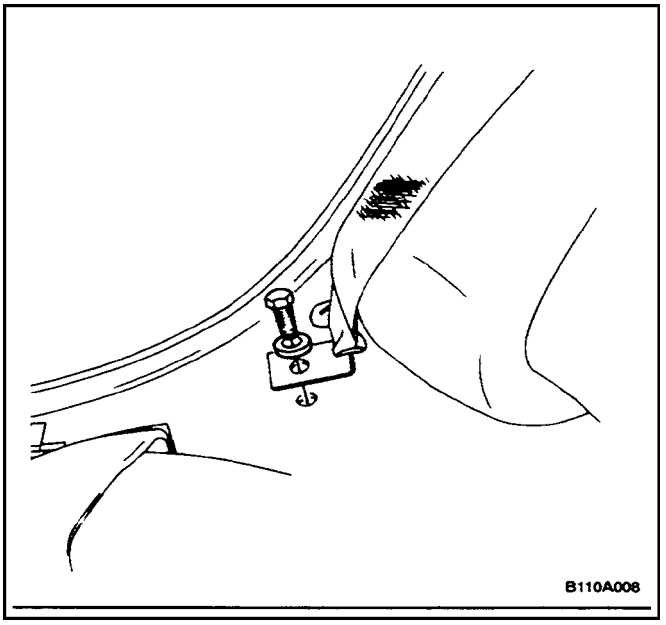

2. Feed the free end of the seat belt from the luggage compartment through the deck lid sill plate.
3. Install the floor seat belt anchor with the bolt.

Tighten

Tighten the seat belt anchor bolt to 35 N•m (26 lb–ft).

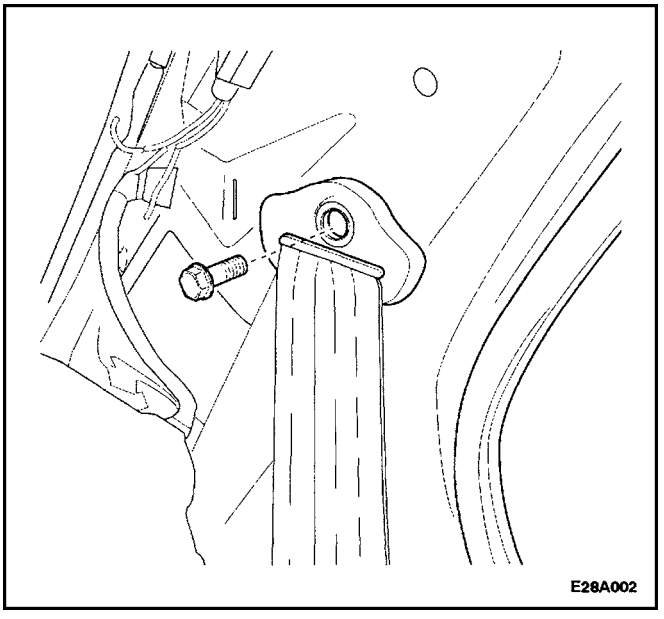

4. Remove the rear seat cushion. Refer to *Section 9H, Seats.*
5. Install the C–pillar seat belt anchor with the bolt.

Tighten

Tighten the seat belt anchor bolt to 35 N•m (26 lb–ft).

6. Install the seat belt anchor plastic cover to its original position.
7. Install the luggage compartment wheelhouse trim panel. Refer to *Section 9G, Interior Trim.*

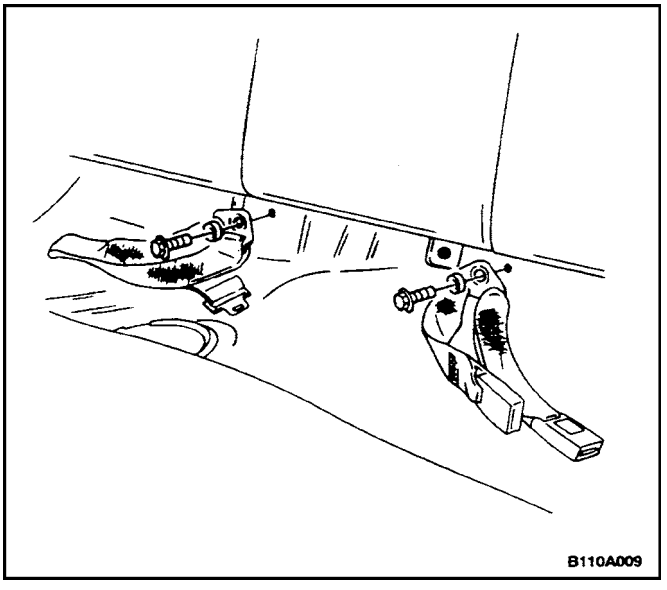

THREE–POINT CLR REAR CENTER SEAT BELT

Removal Procedure

1. Remove the rear seat cushion. Refer to *Section 9H, Seats.*
2. Remove the bolts and the seat belt anchors.

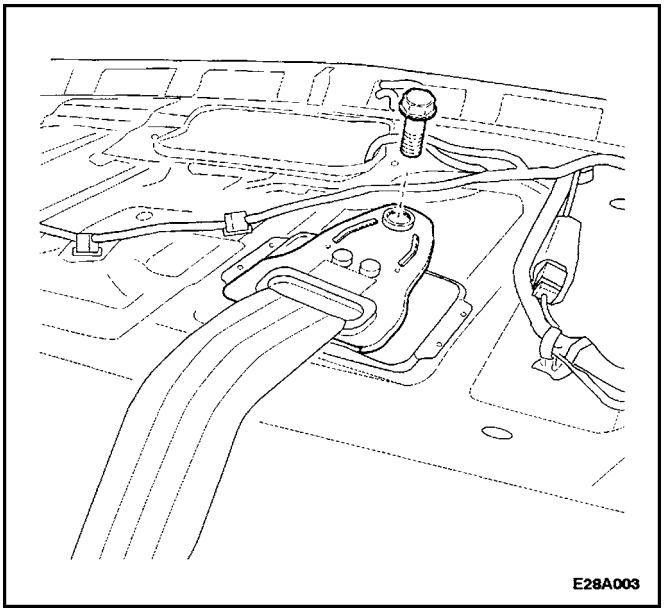

3. Remove the C–pillar trim. Refer to *Section 9G, Interior Trim.*
4. Remove the deck lid sill plate cover. Refer to *Section 9G, Interior Trim.*
5. Remove the center seat belt retractor with the bolt.

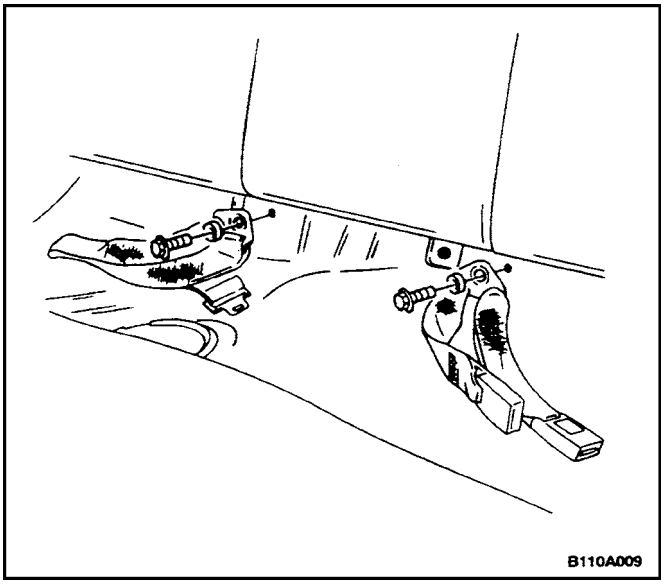

Installation Procedure

Notice : Dissimilar metals in direct contact with each other may corrode rapidly. Make sure to use the correct fasteners to prevent premature corrosion.

1. Install the center seat bolts retractor with the bolt.

   Tighten

   Tighten the center seat belt retractor bolts to 35 N•m (26 lb–ft).
2. Install the rear seat cushion. Refer to *Section 9H, Seats.*

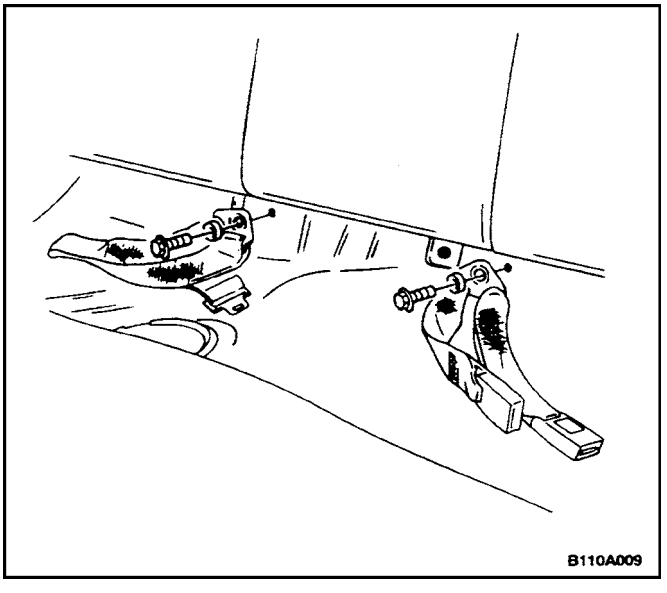

CHILD SEAT TETHER ANCHOR

Removal Procedure

1. Open the tether anchor access cap.
2. Remove the bolt and the tether anchor.

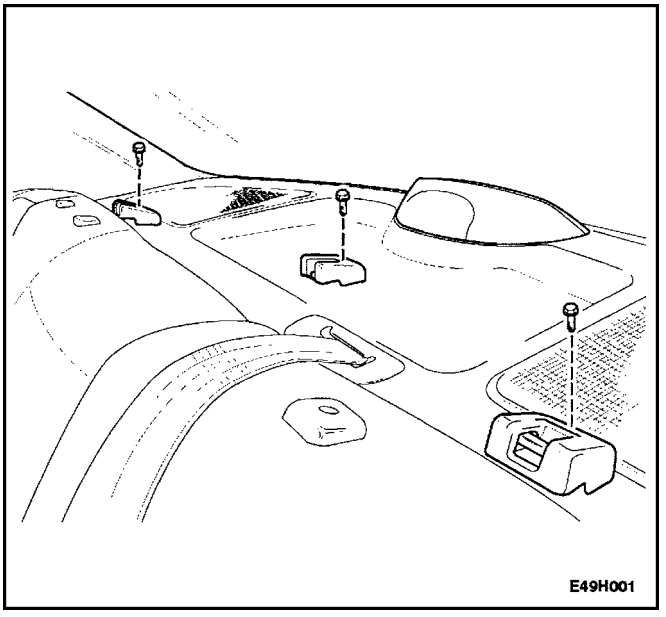

Installation Procedure

Notice : Dissimilar metals in direct contact with each other may corrode rapidly. Make sure to use the correct fasteners to prevent premature corrosion.

1. Install the tether anchor with the bolt.

   ### Tighten

   Tighten the child seat tether anchor bolt to 25 N•m (18 lb–ft).

2. Close the tether anchor access cap.

GENERAL DESCRIPTION AND SYSTEM OPERATION

DRIVER SEAT BELT WARNING

The driver's safety belt incorporates a safety belt reminder light in the instrument cluster to remind the driver if the safety belt is not fastened when the the ignition is turned ON.

PRETENSIONER FRONT SEAT BELT

The pretensioner front seat belt contains a mechanically controlled pyrotechnical retractor which reduces seat belt slack when it is activated in a head–on or angled front collision. The pretensioner front seat belt must be replaced after an accident that causes its activation.

THREE–POINT CLR REAR OUTBOARD SEAT BELT

Three–point CLR seat belts are standard for the rear seat outboard passenger positions. The CLR seat belt has two operation modes. Normally, the seat belt allows the passenger freedom of movement except in emergency situations. However, when the belt is fully extended and released, the seat belt does not allow movement and is designed to hold a child seat firmly to the rear seat.

TWO–POINT LAP REAR CENTER SEAT BELT

The two–point lap rear center seat belt is a single continuous length of webbing. The webbing is routed from the anchor through a latch plate and into a single retractor.

OPERATIONAL AND FUNCTIONAL CHECKS

- Keep sharp objects and potentially damaging objects away from the seat belts.
- Avoid bending or damaging any portion of the buckle or the latch plate.
- Do not bleach or dye the belt webbing. Use only mild soap and water in order to clean the belts.
- When installing the seat belt anchor bolts and the screws, start the bolts and the screws by hand in order to prevent cross–threading.
- Do not attempt any repairs on the retractor mechanisms or the covers. Replace any defective assemblies with new assemblies.
- Replace any belts that are cut or damaged in any way.

1. Inspect all seat belt anchor bolts and the screws in order to verify that they are secure.
2. Inspect the seat belt buckle. The buckle must lock and unlock easily.
3. After inserting the latch into the buckle, tug sharply on the belt. The buckle must remain locked.
4. Fully extend the shoulder belt portion to make sure that there is no twisting or tears in the belt.
5. Let the shoulder belt retract fully. The belt should retract easily.

CHILD SEAT TETHER ANCHOR

There are three child seat tether anchors located on the read deck lid sill plate. There is one anchor for each rear seat position.

SECTION : 9H

SEATS

CAUTION : Disconnect the negative battery cable before removing or installing any electrical unit or when a tool or equipment could easily come in contact with exposed electrical terminals. Disconnecting this cable will help prevent personal injury and damage to the vehicle. The ignition must also be in LOCK unless otherwise noted.

TABLE OF CONTENTS

SPECIFICATIONS 9H–1
FASTENER TIGHTENING SPECIFICATIONS . 9H–1
MAINTENANCE AND REPAIR 9H–2
ON–VEHICLE SERVICE 9H–2
FRONT BUCKET SEATS 9H–2
HEAD RESTRAINT 9H–3
FRONT SEATBACK 9H–4
FRONT SEAT CUSHION 9H–5
FRONT SEAT ADJUSTERS 9H–7
FRONT SEAT TRIM 9H–8
REAR SEAT CUSHION 9H–9
REAR SEATBACK (NOTCHBACK) 9H–10
60/40 SPLIT REAR SEATBACK HINGE 9H–11
60/40 SPLIT REAR SEATBACK LOCK STRIKER 9H–12
SEAT COVERS 9H–13
GENERAL DESCRIPTION AND SYSTEM OPERATION 9H–14
SEATS 9H–14
60/40 SPLIT REAR SEATBACK 9H–14

SPECIFICATIONS

FASTENER TIGHTENING SPECIFICATIONS

Application	N•m	Lb–Ft	Lb–In
Center Seat Hinge Bolts	25	18	–
Front Seatback Bolts	45	33	–
Front Seat Trim Screws	12	–	106
Lower Seat Cushion Bolts	24	18	–
Outer Seat Hinge Bolts	35	26	–
Rear Seatback Bolts	25	18	–
Rear Seatback Lock Striker Bolts	10	–	89
Recliner Adjustment Knob Screw	12	–	106
Seat Cushion Height Adjuster Knob Screws	10	–	89
Seat–to–Floor Bolts (Front)	25	18	–
Seat–to–Floor Bolts (Rear)	25	18	–
Side Seat Cushion Bolts	24	18	–

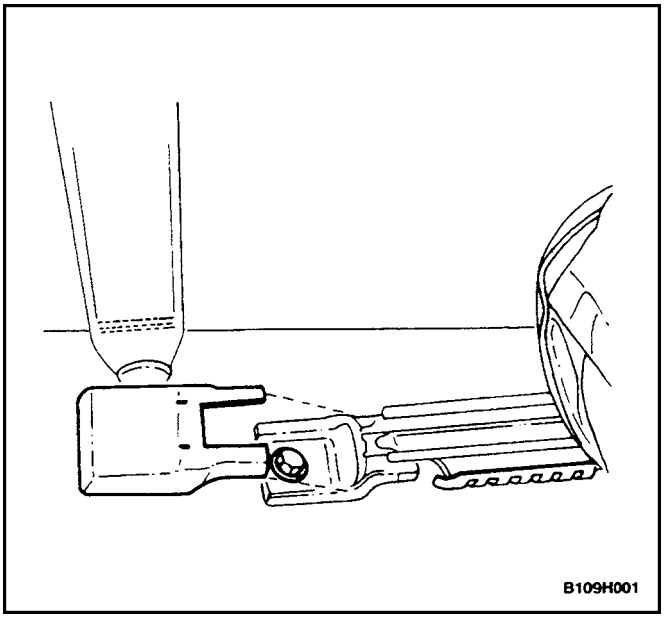

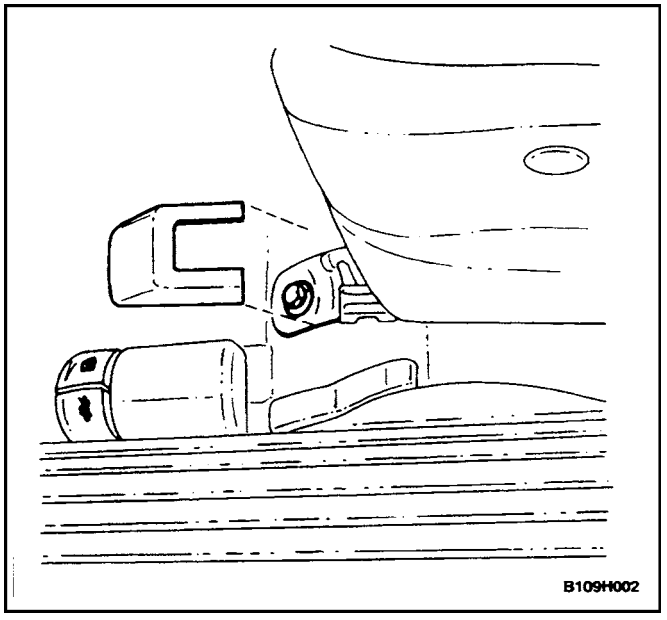

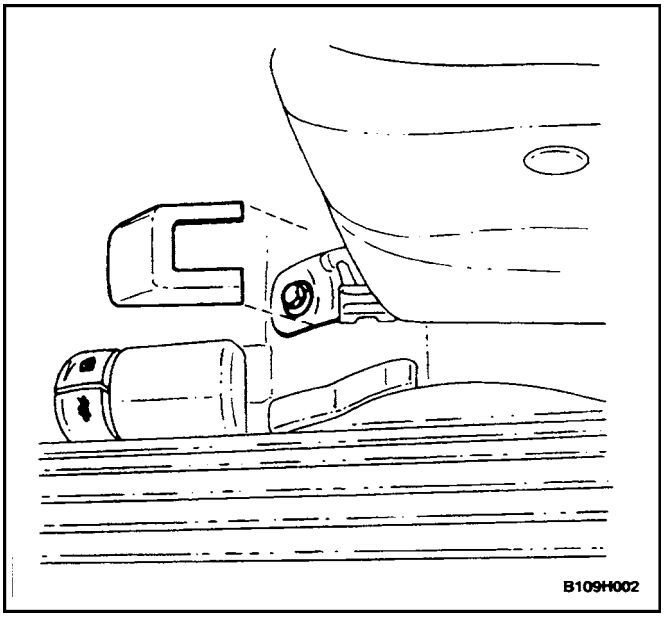

MAINTENANCE AND REPAIR

ON–VEHICLE SERVICE

FRONT BUCKET SEATS

Removal Procedure

1. Disconnect the negative battery cable.
2. Remove the plastic caps to reveal the bolts securing the rear portion of the front seat to the floor.
3. Remove the bolts securing the rear portion of the seat to the floor.
4. Remove the plastic caps to reveal the bolts securing the front portion of the front seat to the floor.
5. Remove the bolts securing the front portion of the front seat to the floor.
6. Disconnect the electrical connector from the driver's seat.
7. Remove the seat.

Installation Procedure

1. Install the seat.
2. Connect the electrical connector to the driver's seat.

Notice : Dissimilar metals in direct contact with each other may corrode rapidly. Make sure to use the correct fasteners to prevent premature corrosion.

3. Install the bolts into the front portion of the front seat.

   Tighten

   Tighten the seat–to–floor bolts (front) to 25 N•m (18 lb–ft).

4. Install the plastic caps.

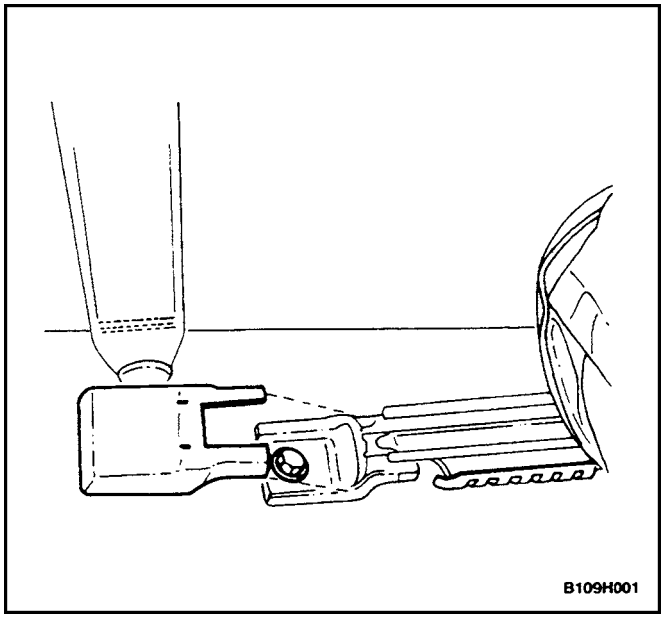

5. Install the bolts into the rear portion of the front seat.

Tighten

Tighten the seat–to–floor bolts (rear) to 25 N•m (18 lbft).

6. Install the plastic caps.
7. Connect the negative battery cable.

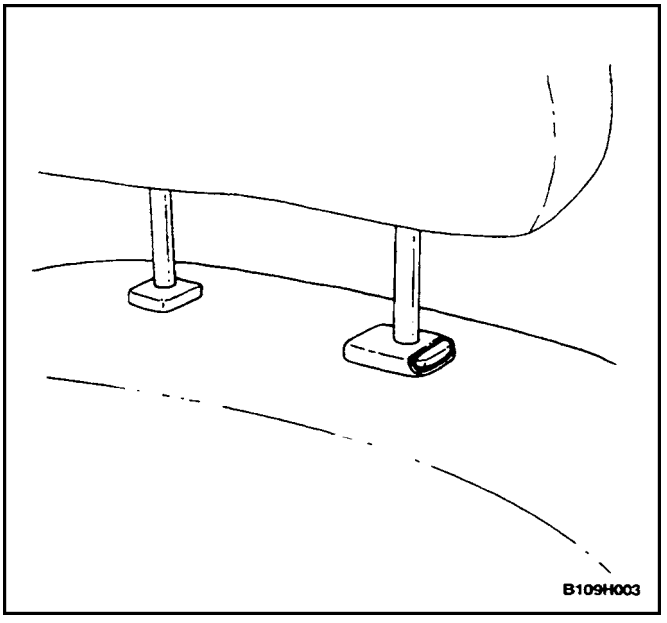

HEAD RESTRAINT

Removal Procedure

1. Press in the head restraint adjust button and remove the head restraint from the seatback.

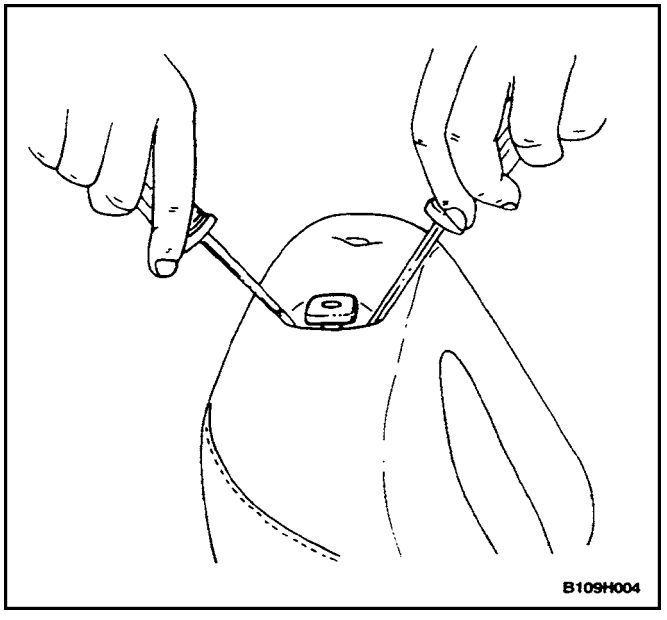

2. Insert two flat head screwdrivers down the front and back side of the guide sleeves.
3. With the screwdrivers, press in the retaining latches and remove the guide sleeves.

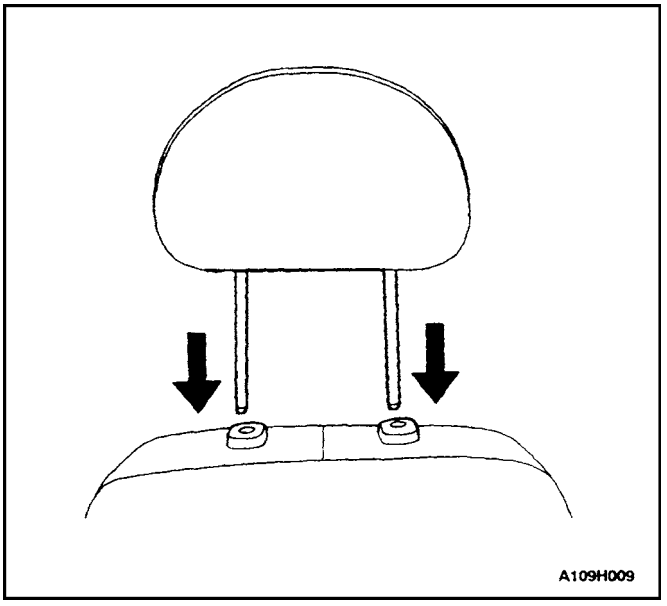

Installation Procedure

1. Install the guide sleeves into the seatback and press them down in order to engage the guide sleeve retaining latches.
2. Install the head restraint into the guide sleeves.

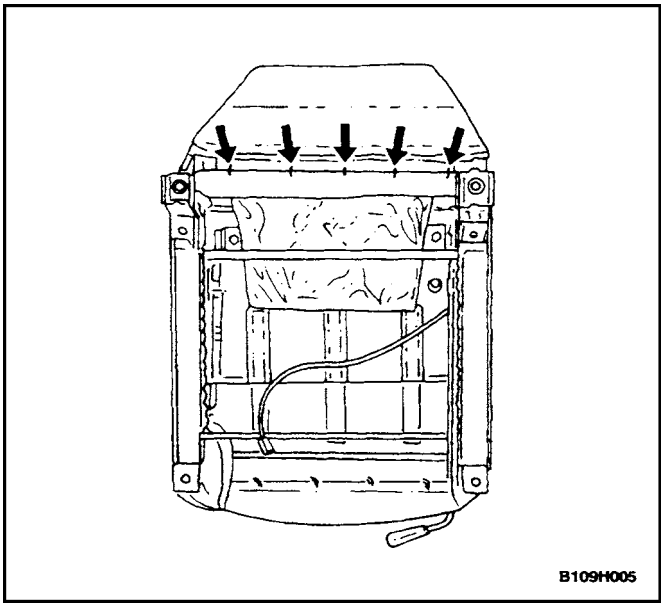

FRONT SEATBACK

Removal Procedure

1. Remove the front bucket seat from the vehicle. Refer to"Front Bucket Seats" in this section.
2. Remove the hog rings at the base of the seatback.

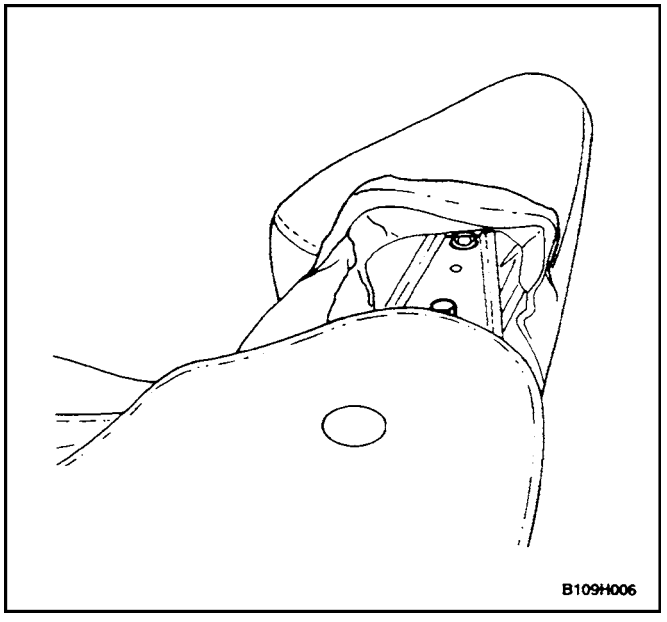

3. Reposition the seatback cover.
4. Remove the bolts and the seatback.

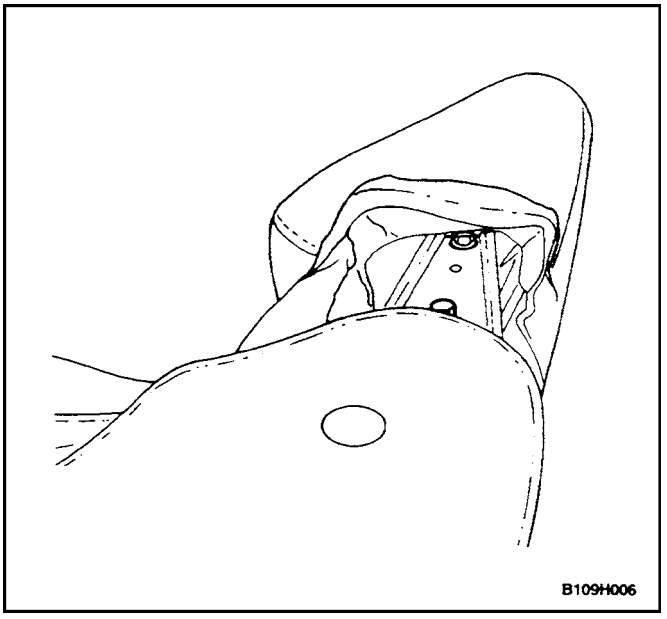

Installation Procedure

1. Install the seatback onto the seat cushion.

Notice : Dissimilar metals in direct contact with each other may corrode rapidly. Make sure to use the correct fasteners to prevent premature corrosion.

2. Install the front seatback bolts.

   Tighten

   Tighten the front seatback bolts to 45 N•m (33 lb–ft).

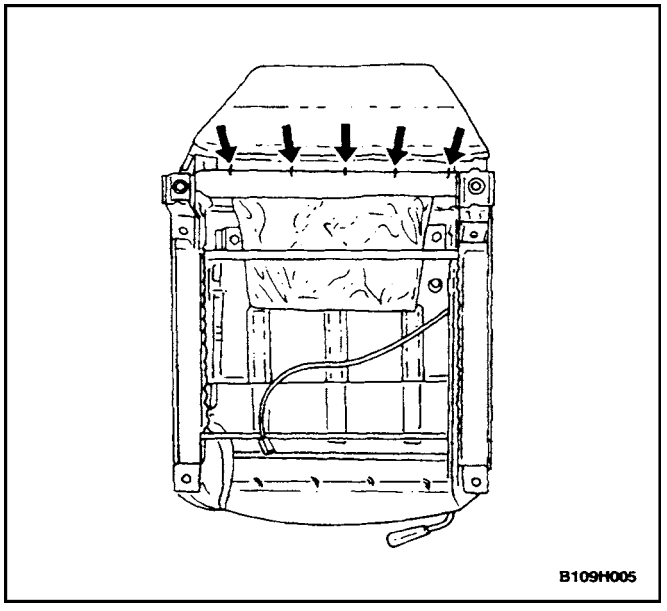

3. Install the seat cover to its original position.
4. Install new hog rings onto the base of the seat cover.
5. Install the front bucket seat in the vehicle. Refer to”Front Bucket Seats” in this section.

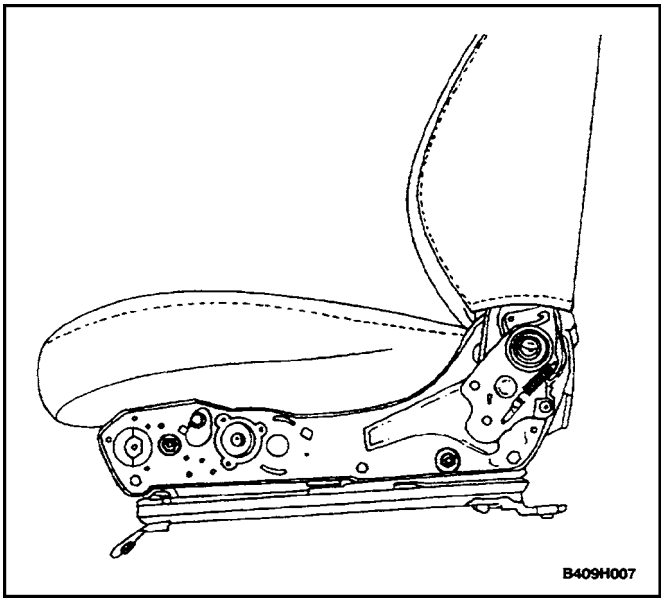

FRONT SEAT CUSHION

Removal Procedure

1. Remove the front seat from the vehicle. Refer to”Front Bucket Seats” in this section.
2. Remove the seat trim. Refer to”Front Seat Trim”
3. Remove the side seat cushion bolts.

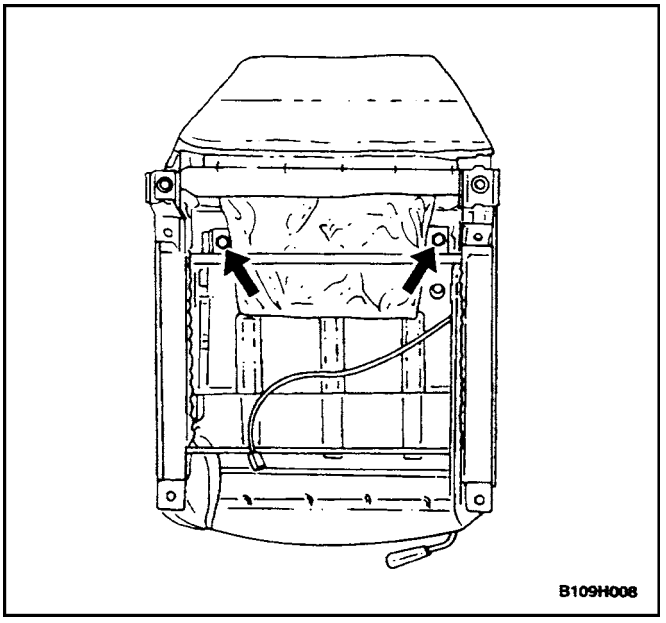

4. Remove the seat cushion bolts underneath the cushion.
5. Remove the cushion from the seat track.

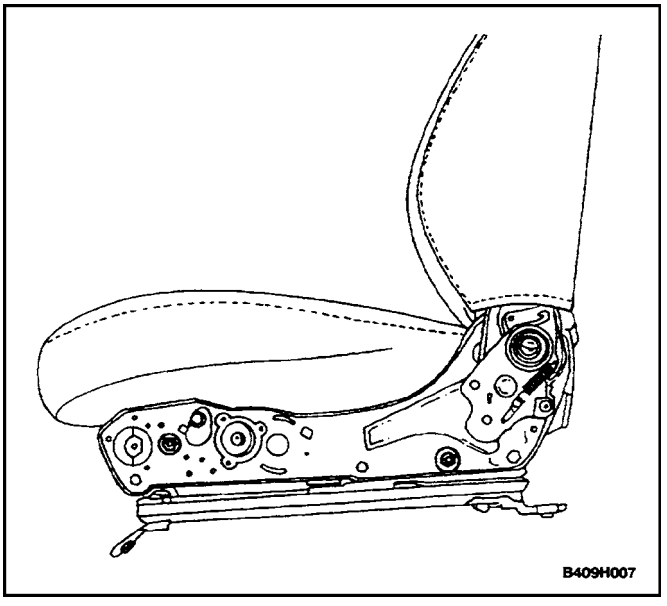

Installation Procedure

1. Install the cushion onto the seat track.

Notice : Dissimilar metals in direct contact with each other may corrode rapidly. Make sure to use the correct fasteners to prevent premature corrosion.

2. Install the seat track to the seat cushion with the bolts on the side of the cushion.

Tighten

Tighten the side seat cushion bolts to 24 N•m (18 lbft).

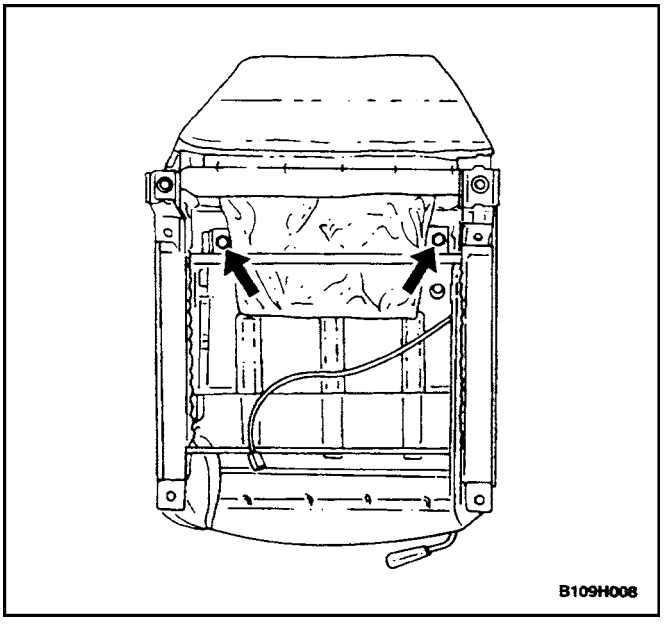

3. Install the seat cushion bolts underneath the cushion.

Tighten

Tighten the lower seat cushion bolts to 24 N•m (18 lbft).

4. Install the seat trim. Refer to”Front Seat Trim” in this section.
5. Install the front seat in the vehicle. Refer to”Front Bucket Seats” in this section.

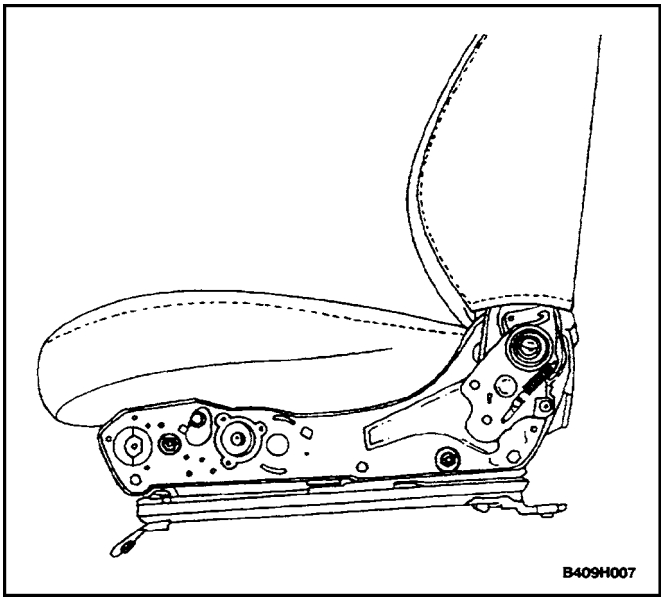

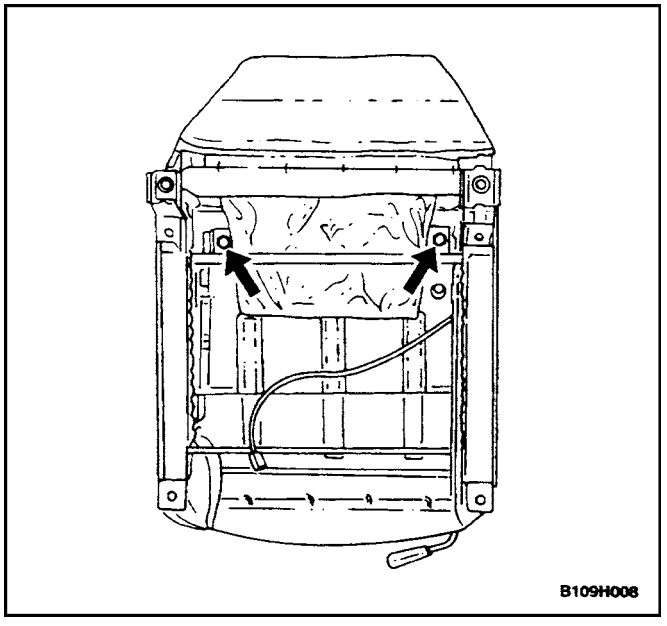

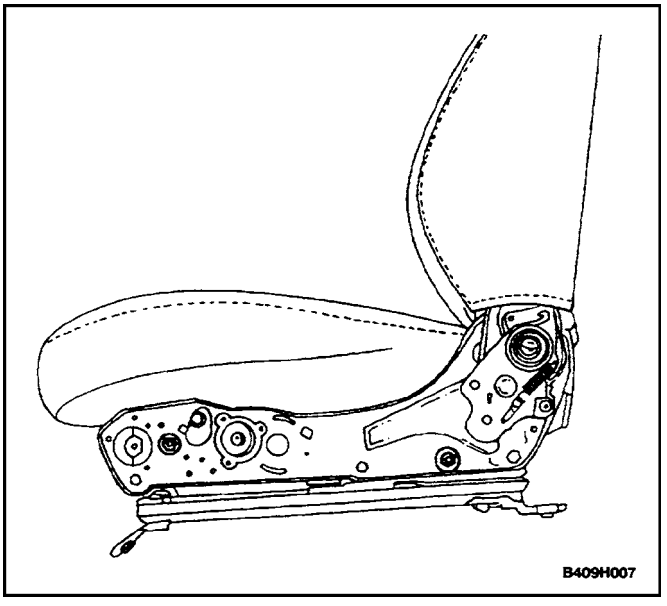

FRONT SEAT ADJUSTERS

Removal Procedure

1. Remove the seatback. Refer to"Front Seatback" in this section.
2. Remove the seat trim. Refer to"Front Seat Trim" in this section.
3. Remove the side seat cushion bolts.
4. Remove the seat cushion bolts underneath the cushion.
5. Remove the seat track from the seat cushion.

Installation Procedure

1. Install the cushion onto the seat track.

Notice : Dissimilar metals in direct contact with each other may corrode rapidly. Make sure to use the correct fasteners to prevent premature corrosion.

2. Install the seat track to the seat cushion with the side seat cushion bolts.

Tighten

Tighten the side seat cushion bolts to 24 N•m (18 lbft).

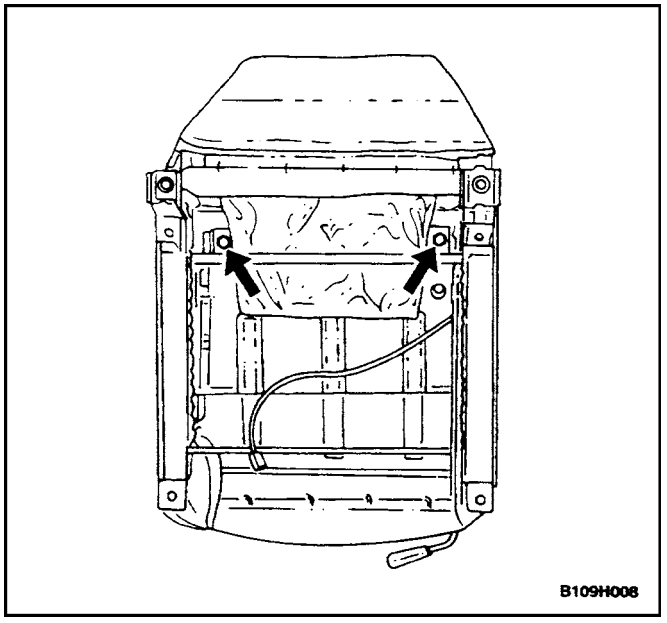

3. Install the seat track to the seat cushion with the bolts underneath the cushion.

   Tighten

   Tighten the lower seat cushion bolts to 24 N•m (18 lbft).
4. Install the seat trim. Refer to"Front Seat Trim" in this section.
5. Install the seatback. Refer to"Front Seatback" in this section.

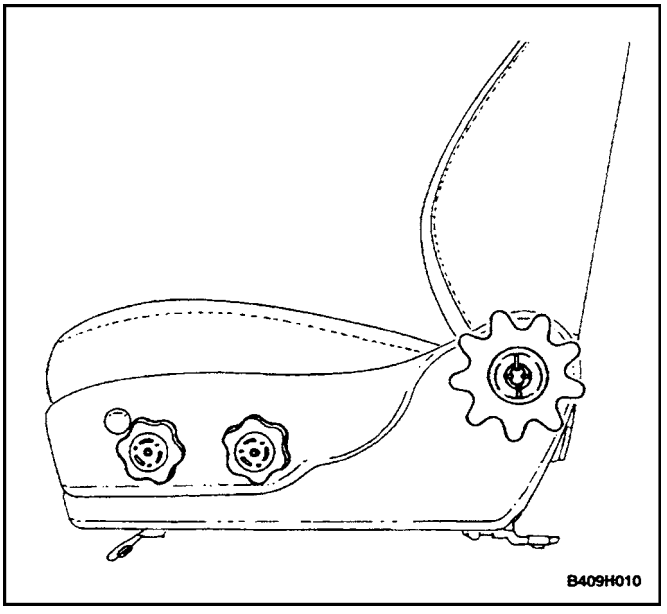

FRONT SEAT TRIM

Removal Procedure

1. Remove the front bucket seat from the vehicle. Refer to"Front Bucket Seats" in this section.
2. Remove the recliner adjustment knob cap to reveal the screw.
3. Remove the screw and the recliner adjustment handle.
4. Remove the seat cushion height adjuster knob caps to reveal the screws.
5. Remove the screws and the seat cushion height adjuster knobs.

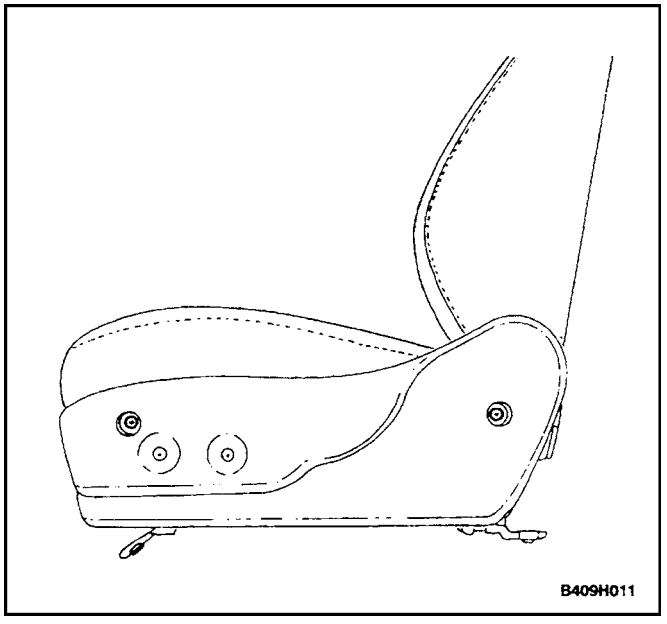

6. Remove the plastic caps to reveal the front seat trim screws.
7. Remove the screws and the front seat trim.

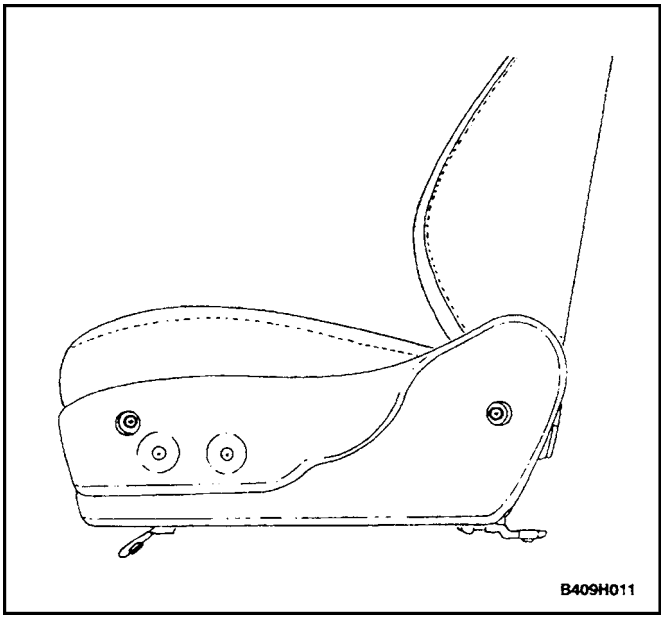

Installation Procedure

Notice : Dissimilar metals in direct contact with each other may corrode rapidly. Make sure to use the correct fasteners to prevent premature corrosion.

1. Install the front seat trim with the screws.

   Tighten

   Tighten the front seat trim screws to 12 N•m (106 lbin).

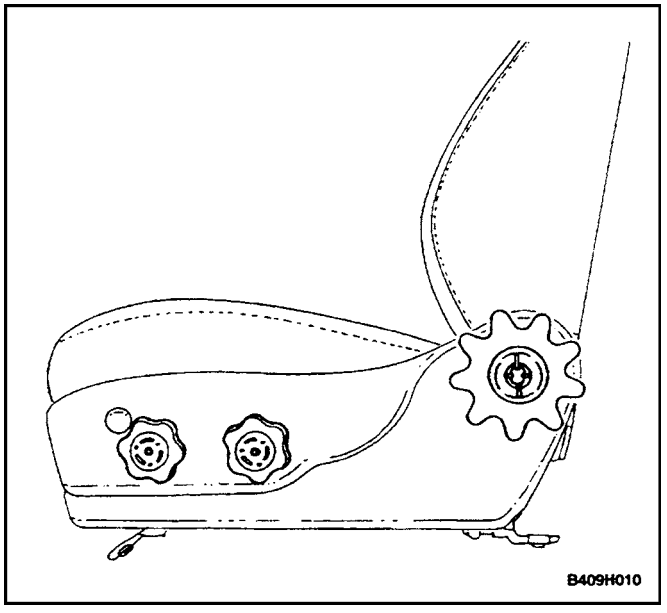

2. Install the plastic caps.
3. Install the seat cushion height adjuster knobs with the screws.

   Tighten

   Tighten the seat cushion height adjuster knob screws to 10 N•m (89 lb–in).
4. Install the seat cushion height adjustment knob caps.
5. Install the recliner adjustment knob with the screw.

   Tighten

   Tighten the recliner adjustment knob screw to 12 N•m (106 lb–in).
6. Install the recliner adjustment knob cap.
7. Install the front bucket seat in the vehicle. Refer to"Front Bucket Seats" in this section.

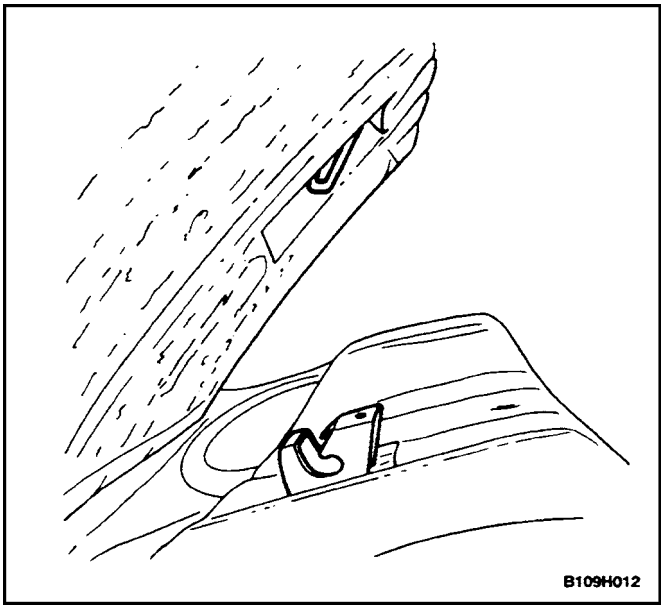

REAR SEAT CUSHION

Removal Procedure

1. Remove the rear seat cushion from the floor by sliding it rearward and lifting it off the retaining brackets.

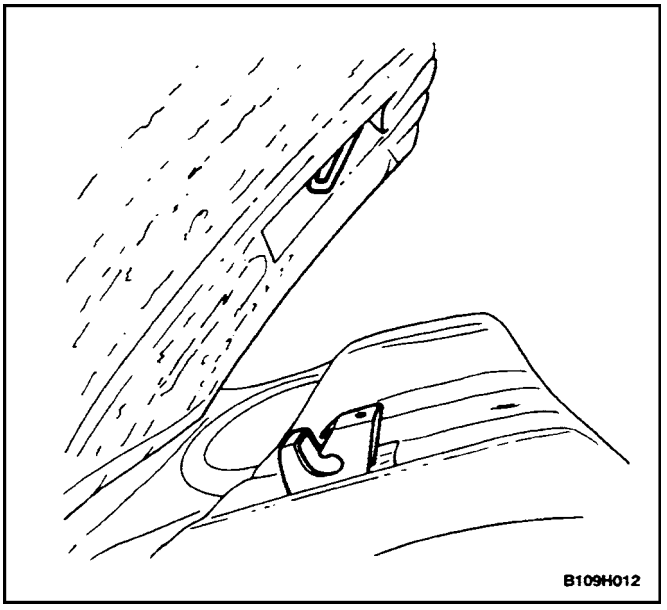

Installation Procedure

1. Install the rear seat cushion by inserting the metal loops into the retaining brackets and sliding the cushion forward.

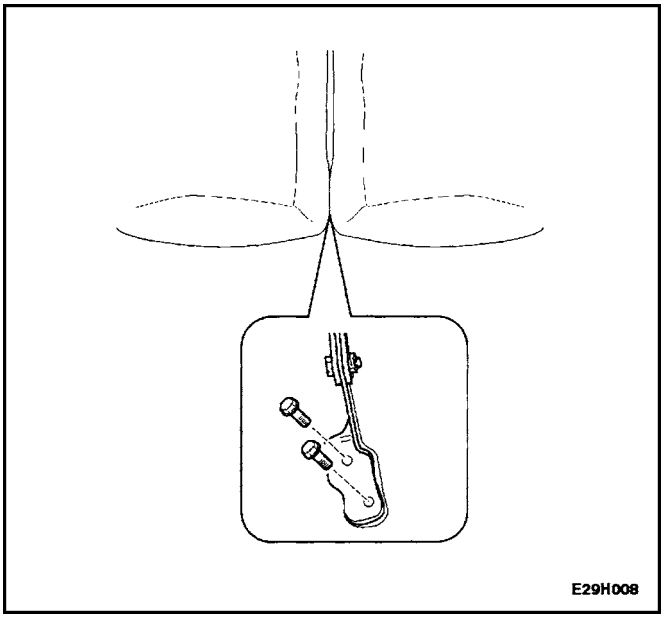

REAR SEATBACK (NOTCHBACK)

Removal Procedure

1. Remove the rear seat cushion. Refer to ”Rear Seat Cushion” in this section.
2. Remove the center hinge and rear seat back.

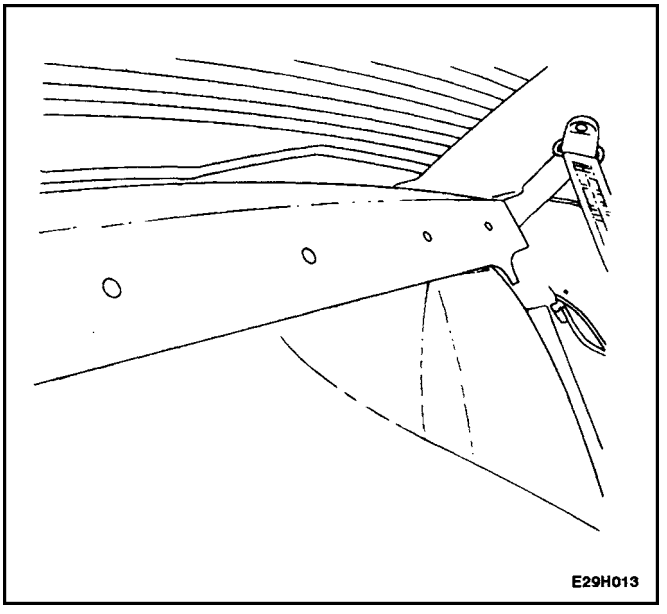

Installation Procedure

1. Install the center hinge and rear seat back.

   #### Tighten

   Tighten the center seat hinge bolts to 25 N•m (18 lb–ft).

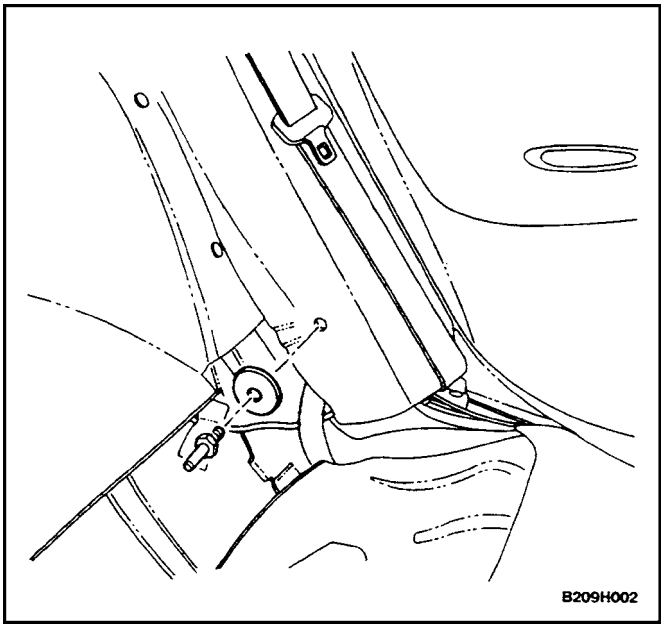

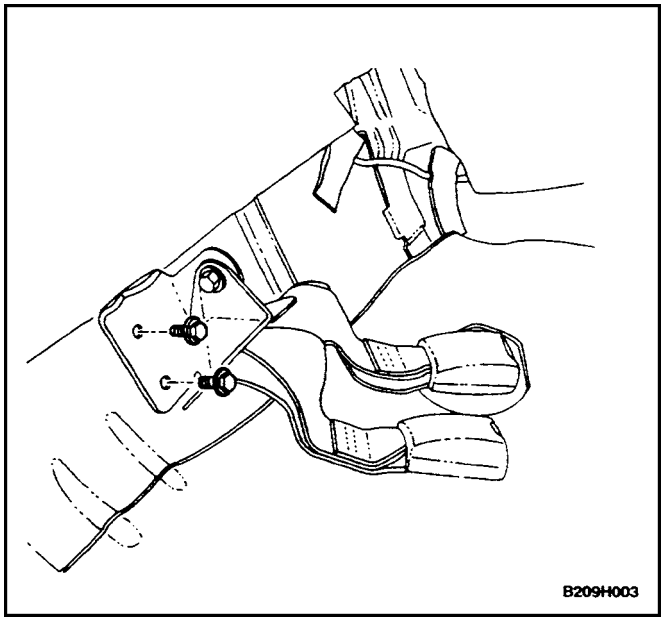

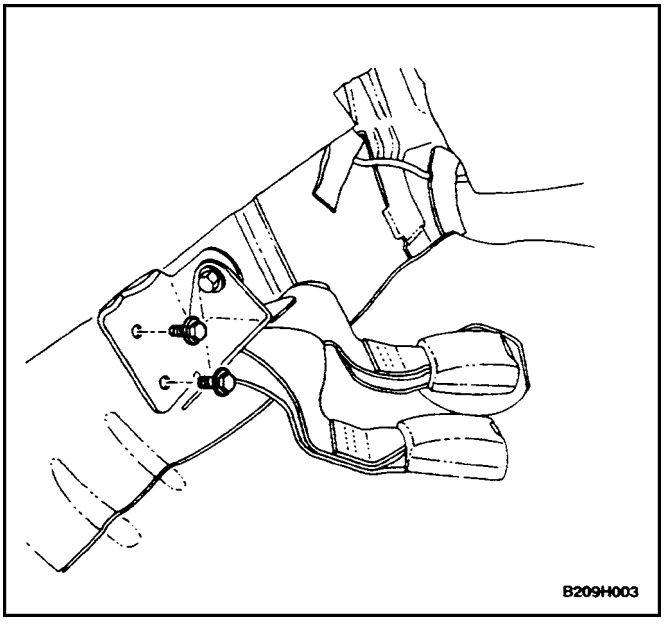

60/40 SPLIT REAR SEATBACK HINGE

Removal Procedure

1. Remove the rear seatbacks and the cushion. Refer to ”60/40 Split Rear Seatback” and”Rear Seatback” in this section.
2. Remove the seatback lock strikers. Refer to”60/40 Split Rear Seatback Lock Striker” in this section.
3. Remove the outer hinge bolts.
4. Remove the bolts and the center hinge.

Installation Procedure

1. Install the outer hinge bolts.

   Tighten

   Tighten the center seat hinge bolts to 25 N•m (18 lbft).

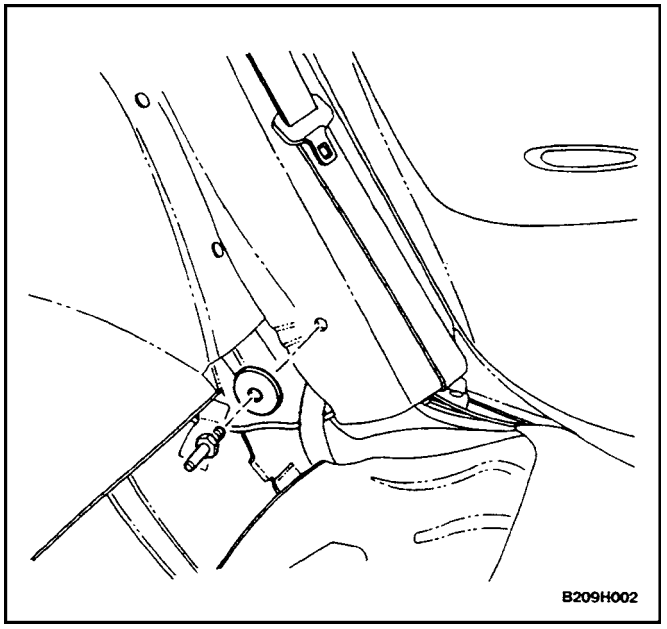

2. Install the outer hinge bolts.

   Tighten

   Tighten the outer seat hinge bolts to 35 N•m (26 lbft).
3. Install the seatback lock strikers. Refer to”60/40 Split Rear Seatback Lock Striker” in this section.
4. Install the rear seatbacks and the cushion. Refer to ”60/40 Split Rear Seatback” and”Rear Seat Cushion” in this section.

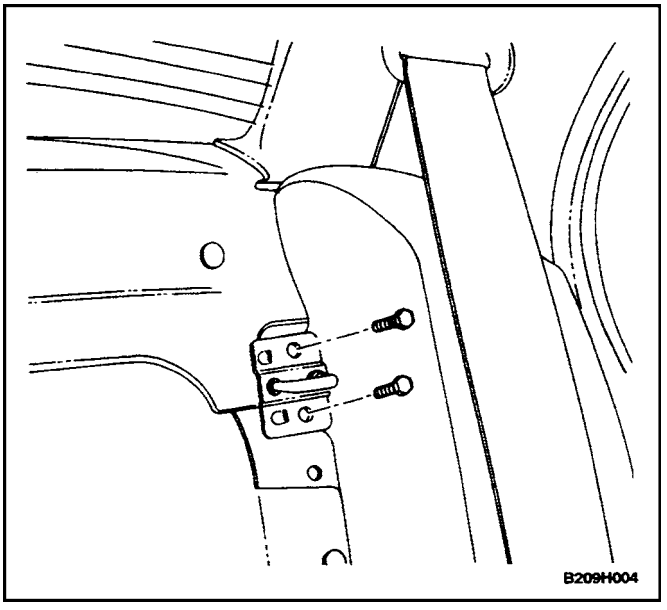

60/40 SPLIT REAR SEATBACK LOCK STRIKER

Removal Procedure

1. Lower the rear seatbacks.
2. Remove bolts and the seatback lock strikers.

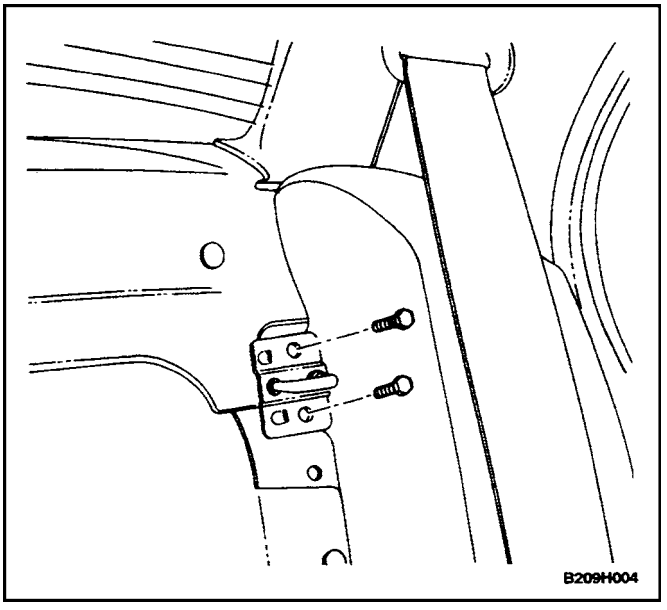

Installation Procedure

1. Install the seatback lock strikers with the bolts.

   Tighten

   Tighten the rear seatback lock striker bolts to 10 N•m (89 lb–in).
2. Raise and secure the rear seatbacks in the upright position.

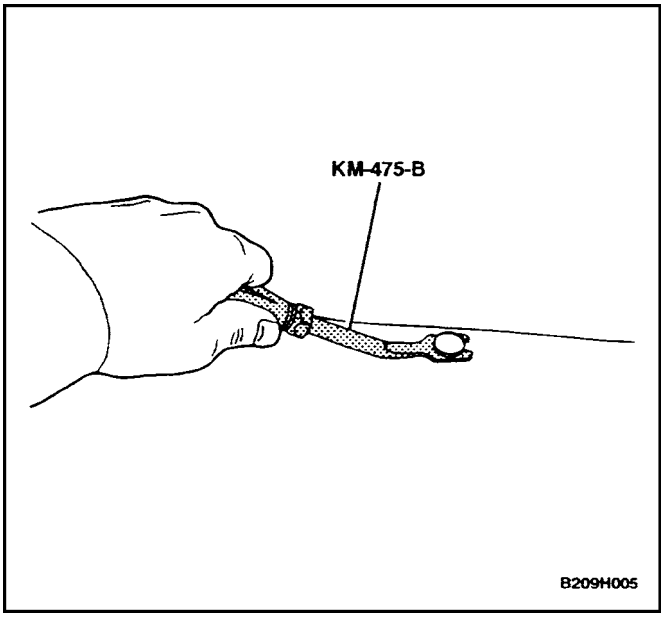

SEAT COVERS

(Front Bucket Seat Cover Shown, Other Seat Covers Similar)

Removal Procedure

1. Remove the seatback and/or the cushion. Refer to ”Front Seatback,””Front Seat Cushion,””60/40 Split Rear Seatback,” and/or”Rear Seat Cushion” in this section.

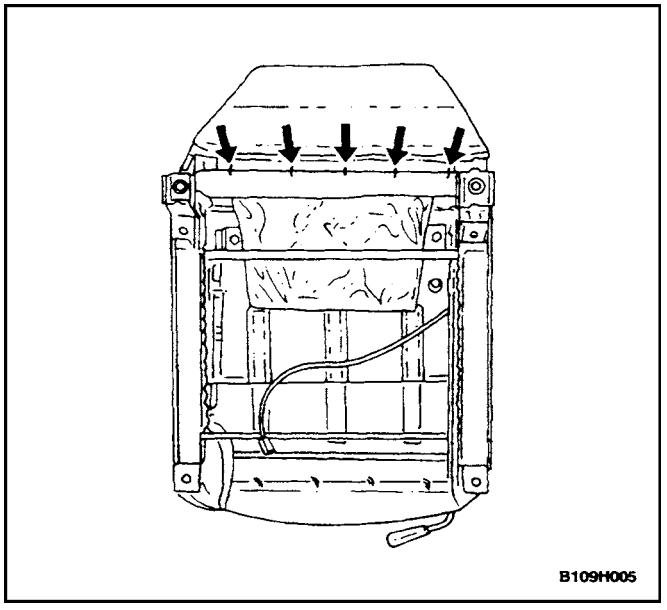

2. Remove the hog rings from the seatback and/or the cushion.
3. Remove the seat cover from the seatback and/or the cushion.

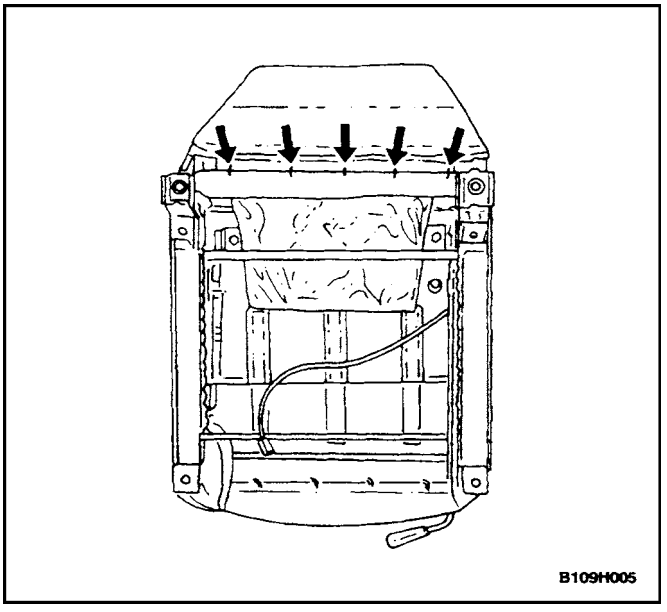

Installation Procedure

1. Install the seat cover onto the seatback and/or the cushion with new hog rings.
2. Install the seatback and/or the seat cushion. Refer to ”Front Seatback,””Front Seat Cushion,””60/40 Split Rear Seatback,” and/or”Rear Seat Cushion” in this section.

GENERAL DESCRIPTION AND SYSTEM OPERATION

SEATS

Important : Do not attempt to change the designed seat position by altering the designed seat adjuster–to–floor pan anchor provisions or the seat adjuster–to–seat frame anchor provisions. Changing seat position could affect the performance of the seat system.

This vehicle is equipped with bucket front seats with separate, adjustable head restraints and a three–passenger folding rear seat. Seat cushions and seatbacks have formed foam pads, which fit the contours of the split seatback frame assembly and also the designed contour of the seat cushion frame. The front bucket seats have a recline adjustment. The driver's side seat has a dual height adjustment.

60/40 SPLIT REAR SEATBACK

The 60/40 split folding rear seatback is available notchback and standard on the hatchback and wagon. Pressing the button located on the top of the rear seatback will unlock the seatback and allow one or sides to be lowered.

SECTION : 8B

SUPPLEMENTAL INFLATABLE RESTRAINTS (SIR)

CAUTION : Disconnect the negative battery cable before removing or installing any electrical unit or when a tool or equipment could easily come in contact with exposed electrical terminals. Disconnecting this cable will help prevent personal injury and damage to the vehicle. The ignition must also be in LOCK unless otherwise noted.

TABLE OF CONTENTS

SPECIFICATIONS 8B–3
FASTENER TIGHTENING SPECIFICATIONS 8B–3
SPECIAL TOOLS 8B–3
SPECIAL TOOLS TABLE 8B–3
SCHEMATIC AND ROUTING DIAGRAMS 8B–4
SUPPLEMENTAL INFLATABLE RESTRAINT SYSTEM 8B–4
CONNECTOR END VIEWS 8B–5
COMPONENT LOCATOR 8B–6
SIR COMPONENT AND WIRING LOCATION VIEW 8B–6
DIAGNOSIS 8B–7
DIAGNOSTIC TROUBLE CODES (DTC) 8B–7
SCAN TOOL DIAGNOSTICS 8B–7
USE OF SPECIAL TOOLS 8B–7
SIR DIAGNOSTIC SYSTEM CHECK 8B–7
SENSING AND DIAGNOSTIC MODULE (SDM) INTEGRITY CHECK 8B–9
AIRBAG WARNING LAMP STAYS ON WITH IGNITION SWITCH ON 8B–11
DTC 15 PASSENGER DEPLOYMENT LOOP RESISTANCE HIGH 8B–13
DTC 16 PASSENGER DEPLOYMENT LOOP RESISTANCE LOW 8B–16
DTC 17 PASSENGER DEPLOYMENT LOOP OPEN 8B–19
DTC 18 PASSENGER DEPLOYMENT LOOP SHORT TO GROUND 8B–22
DTC 19 PASSENGER DEPLOYMENT LOOP SHORT TO VOLTAGE 8B–25
DTC 21 DRIVER DEPLOYMENT LOOP RESISTANCE HIGH 8B–28
DTC 22 DRIVER DEPLOYMENT LOOP RESISTANCE LOW 8B–31
DTC 24 DRIVER DEPLOYMENT LOOP SHORT TO GROUND 8B–34
DTC 25 DRIVER DEPLOYMENT LOOP SHORT TO VOLTAGE 8B–37
DTC 26 DRIVER DEPLOYMENT LOOP OPEN 8B–40
DTC 51 DEPLOYMENT COMMANDED 8B–43
DTC 53 DEPLOYMENT COMMANDED WITH LOOP FAULTS PRESENT 8B–45
DTC 61 AIRBAG WARNING LAMP CIRCUIT OPEN 8B–47
DTC 71 INTERNAL SENSING AND DIAGNOSTIC MODULE (SDM) FAILURE .. 8B–50
DIAGNOSTIC ILLUSTRATION 1 ..... 8B–52
DIAGNOSTIC ILLUSTRATION 2 ..... 8B–52
DIAGNOSTIC ILLUSTRATION 3 ..... 8B–52
DIAGNOSTIC ILLUSTRATION 4 ..... 8B–53
DIAGNOSTIC ILLUSTRATION 5 ..... 8B–53
DIAGNOSTIC ILLUSTRATION 6 ..... 8B–53
DIAGNOSTIC ILLUSTRATION 7 ..... 8B–54
DIAGNOSTIC ILLUSTRATION 8 ..... 8B–54
DIAGNOSTIC ILLUSTRATION 9 ..... 8B–54
DIAGNOSTIC ILLUSTRATION 10 ..... 8B–55
DIAGNOSTIC ILLUSTRATION 11 ..... 8B–55
DIAGNOSTIC ILLUSTRATION 12 ..... 8B–55
DIAGNOSTIC ILLUSTRATION 13 ..... 8B–56
DIAGNOSTIC ILLUSTRATION 14 ..... 8B–56
DIAGNOSTIC ILLUSTRATION 15 ..... 8B–56
MAINTENANCE AND REPAIR 8B–57
ON–VEHICLE SERVICE 8B–57
SERVICE PRECAUTIONS 8B–57
DISABLING THE SIR SYSTEM 8B–57
ENABLING THE SIR SYSTEM 8B–57
HANDLING, INSTALLATION, AND DIAGNOSIS 8B–58
REPAIRS AND INSPECTIONS REQUIRED AFTER AN ACCIDENT 8B–58
ACCIDENT WITH DEPLOYMENT – COMPONENT REPLACEMENT AND INSPECTIONS 8B–58

ACCIDENT WITH OR WITHOUT DEPLOYMENT – COMPONENT INSPECTIONS 8B–58
SENSING AND DIAGNOSTIC MODULE (SDM) 8B–58
DRIVER AIRBAG MODULE 8B–60
CLOCK SPRING 8B–61
PASSENGER AIRBAG MODULE 8B–65
AIRBAG MODULE DEPLOYMENT (IN VEHICLE) 8B–67
AIRBAG MODULE DEPLOYMENT (OUTSIDE OF VEHICLE) 8B–70
DEPLOYED AIRBAG MODULE DISPOSAL PROCEDURE 8B–70
SIR WIRING REPAIR 8B–70

GENERAL DESCRIPTION AND SYSTEM OPERATION 8B–72
SIR SYSTEM 8B–72
AIRBAG MODULES 8B–72
SENSING AND DIAGNOSTIC MODULE (SDM) 8B–72
AIRBAG WARNING LAMP 8B–73
CLOCK SPRING 8B–73

SPECIFICATIONS

FASTENER TIGHTENING SPECIFICATIONS

Application	N•m	Lb–Ft	Lb–In
Clock Spring Mounting Screws	4	–	35
Driver Airbag Module Mounting Bolts	8	–	71
Knee Bolster Mounting Bolts	22	16	–
Passenger Airbag Bracket Lower Bolts/Nuts	16	12	–
Passenger Airbag Bracket Upper Nuts	8	–	71
Sensing and Diagnostic Module (SDM) Mounting Bolts	12	–	106

SPECIAL TOOLS

SPECIAL TOOLS TABLE

00000000	Deployment Tool	B410B012	J–38715 SIR Driver/Passenger Load Tool
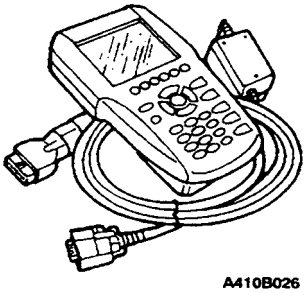 A410B026	Scanner 100	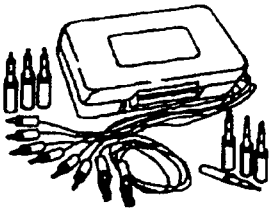 A410B027	Connector Test Adapter Kit
00000000	Wiring Harness Checker		

SCHEMATIC AND ROUTING DIAGRAMS

SUPPLEMENTAL INFLATABLE RESTRAINT SYSTEM

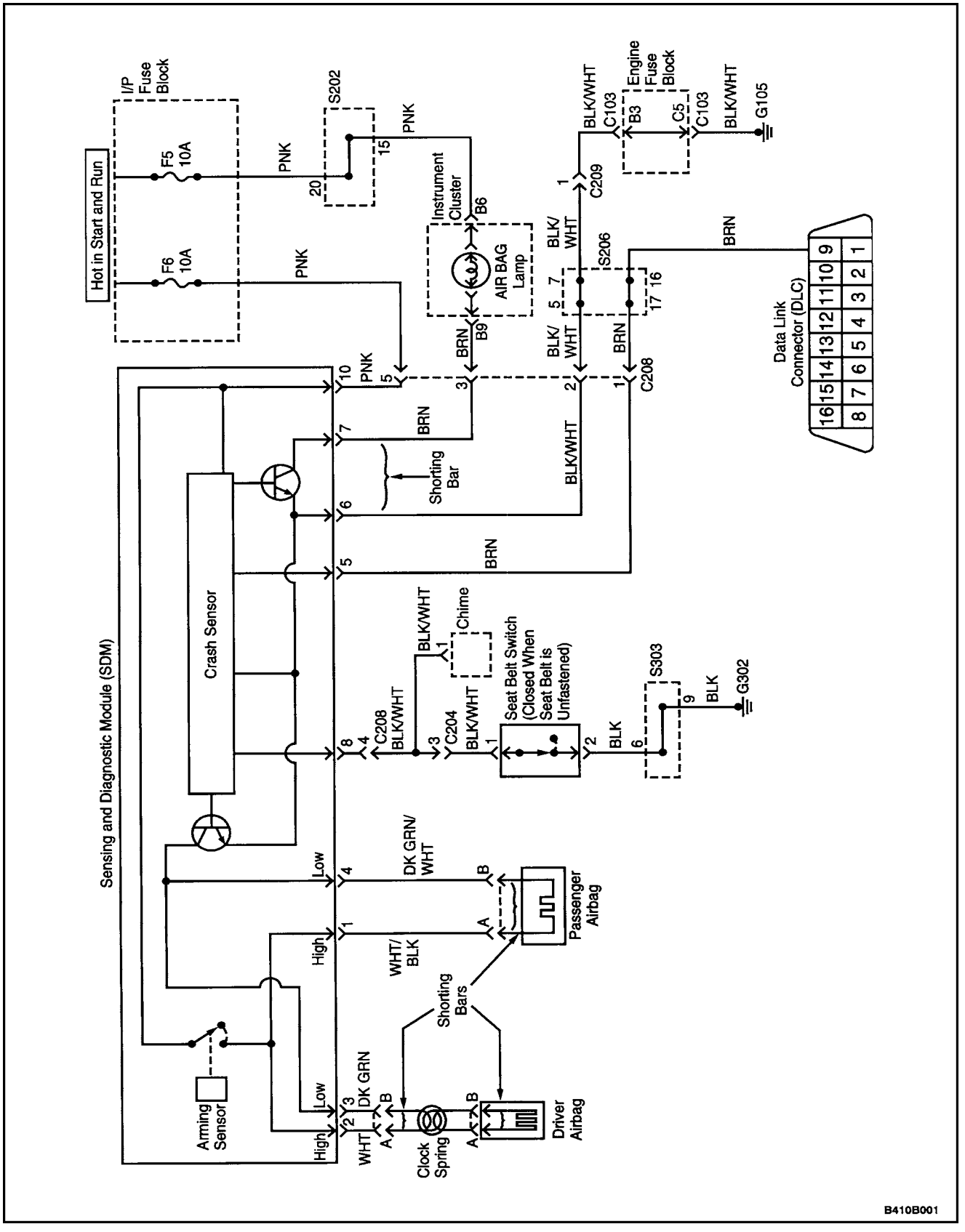

CONNECTOR END VIEWS

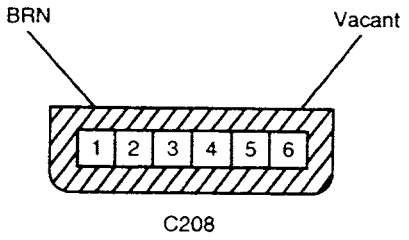

C208

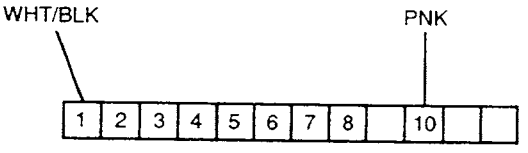

Sensing and
Diagnostic
Module (SDM) Connector

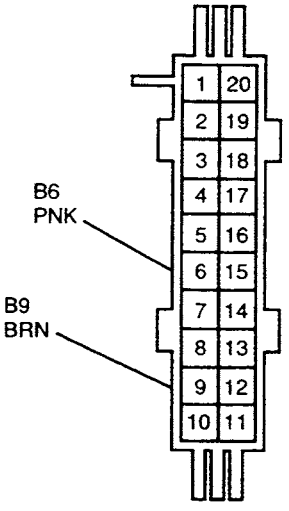

Instrument Cluster
Connector B
(Grey)

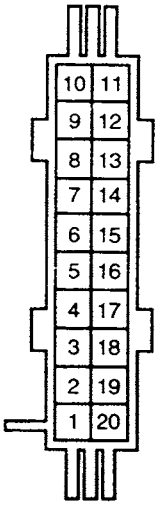

Instrument Cluster
Connector A
(White)

B410B002

COMPONENT LOCATOR

SIR COMPONENT AND WIRING LOCATION VIEW

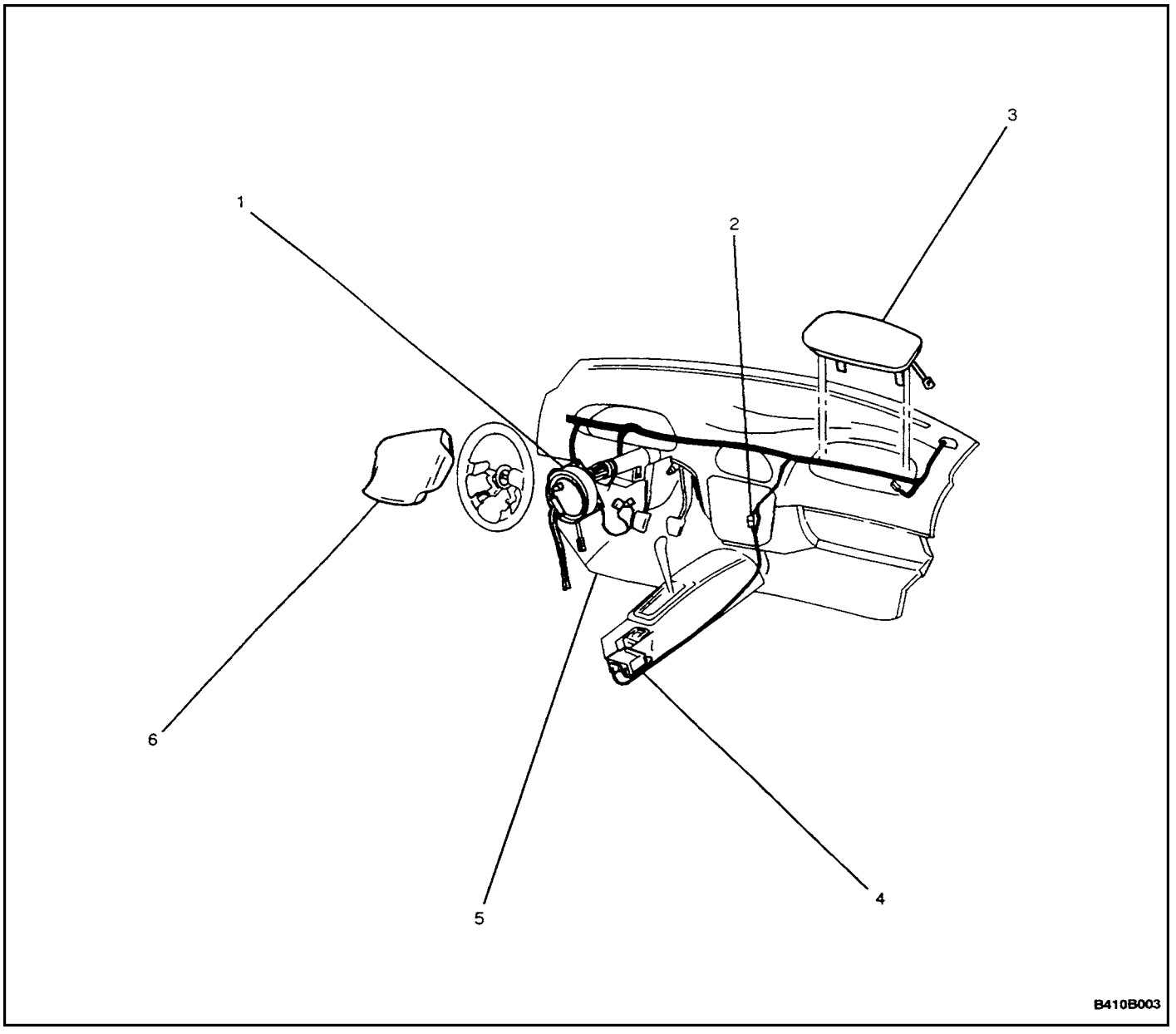

1. Clock Spring
2. Connector C208
3. Passenger Airbag
4. Sensing and Diagnostic Module (SDM)
5. Data Link Connector (DLC)
6. Driver Airbag

DIAGNOSIS

DIAGNOSTIC TROUBLE CODES (DTC)

The supplemental inflatable restraint (SIR) Diagnostic System Check must always be the starting point for any SIR system diagnosis. The Diagnostic System Check reveals diagnostic trouble codes (DTCs) through the use of a scan tool, and checks for proper AIRBAG warning indicator operation.

Two types of diagnostic trouble codes may be recorded:

1. Current diagnostic trouble codes represent malfunctions that are presently being detected. Current DTCs are stored in random access memory.
2. History DTC represent all malfunctions that were detected since the last time that history memory was cleared. History DTCs are stored in the electronically erasable programmable read only memory (EEPROM).

SCAN TOOL DIAGNOSTICS

A scan tool can read serial data from terminal 9 of the data link connector (DLC). A specific replaceable cartridge must be attached to the scan tool before the scan tool can communicate with the sensing and diagnostic module (SDM) for the purpose of diagnostics. The scan tool is used to read diagnostic trouble codes (DTCs), and to clear some DTCs after a repair is completed. By design, certain codes cannot be cleared. To use the scan tool, turn the ignition OFF, connect the scan tool to the DLC, and turn the ignition ON. Follow the instructions in the scan tool manual. The SDM sends serial data from terminal 5 of the SDM to terminal 9 of the DLC.

USE OF SPECIAL TOOLS

A scan tool is used to read and clear diagnostic trouble codes (DTCs). A connector adapter kit provides jumper wires and terminal adapters to make it easier to test small terminals. In diagnostic testing, a load tool is used as a substitute for the airbag modules. A wiring harness checker and a deployment tool are under development, and service bulletins will be issued if these tools become operational.

SIR DIAGNOSTIC SYSTEM CHECK

Notice : If the vehicle interior has been exposed to extensive water intrusion such as water leaks, driving through high water, flooding, or other causes, the sensing and diagnostic module (SDM) and the SDM connector may need to be replaced. With the ignition OFF, inspect the area around the SDM, including the carpet. If any significant soaking or evidence of previous soaking is detected, the water must be removed, the water damage repaired, and the SDM and SDM connector must be replaced. Before attempting any of these repairs, the supplemental inflatable restraint (SIR) system must be disabled. Refer to "Disabling the SIR System" and"Sensing and Diagnostic Module (SDM)" in this section for instructions on how to disable the SIR system and replace the SDM.

The diagnostic procedures used in this section are designed to find and repair SIR system conditions. To get the best results, it is important to use the diagnostic charts and follow the sequence listed below.

1. Perform the SIR Diagnostic System Check. The SIR Diagnostic System Check must be the starting point of any SIR diagnostics. The SIR Diagnostic System Check reveals diagnostic trouble codes (DTCs) through the use of a scan tool, and checks for proper AIRBAG indicator operation.
2. Refer to the proper diagnostic chart as directed by the SIR Diagnostic System Check. The SIR Diagnostic System Check will lead to the correct chart to diagnose any SIR system malfunctions. Bypassing these procedures may result in extended diagnostic time, incorrect diagnosis, and incorrect parts replacement.
3. Repeat the SIR Diagnostic System Check after any repair or diagnostic procedures have been performed. Performing the SIR Diagnostic System Check after all repair or diagnostic procedures will ensure that the repair has been made correctly and that no other malfunctions exist.

Circuit Description

When the ignition is first turned ON, Ignition 1 voltage is applied from the airbag fuse to the SDM at input terminal 10. The SDM responds by flashing the AIRBAG indicator seven times and then turning it off while the SDM performs tests on the SIR system.

Diagnostic Aids

The order in which DTCs are diagnosed is very important. Failure to diagnose the DTCs in the order specified may result in extended diagnostic time, incorrect diagnosis and incorrect parts replacement.

Test Description

The number(s) below refer to step(s) on the diagnostic table.

3. This test will identify the stored DTCs and whether they are current or history. A history DTC indicates that the malfunction has been repaired or is intermittent.
6. This test differentiates between an indicator that will not come on and an indicator that stays on when it should be off.
7. See the first caution below.
9. See the cautions below.
10. This test will determine whether history DTCs are stored and will identify them.
11. A history DTC indicates that the malfunction has been repaired or is intermittent.

SIR Diagnostic System Check

CAUTION : The SDM can maintain sufficient voltage to deploy the airbags for 10 minutes after the ignition is OFF and the fuse has been removed. If the airbags are not disconnected, service cannot begin until 10 minutes have passed after disconnecting power to the SDM.

CAUTION : During service procedures, be very careful when handling the SDM. Never strike or jar the SDM. Never power the SIR system when the SDM is not rigidly attached to the vehicle. All SDM mounting bolts must be carefully tightened, and the SDM arrow must be pointing toward the front of the vehicle to ensure proper operation of the SIR system. The SDM could be activated if it is powered when it is not rigidly attached to the vehicle, resulting in unexpected deployment and possible injury.

Step	Action	Value(s)	Yes	No
1	1. Turn the ignition switch to ON. 2. Observe the AIRBAG indicator as the ignition is being turned ON. Does the indicator flash seven times?		Go to *Step 2*	Go to *Step 6*
2	Observe the AIRBAG indicator after it flashed seven times. Does the indicator turn OFF?		Go to *Step 10*	Go to *Step 3*
3	1. Turn the ignition to LOCK and remove the key. 2. Connect the scan tool to the Data Link Connector (DLC). Follow the directions given in the scan tool manual. 3. Turn the ignition ON. 4. Request the supplemental inflatable restraint SIR) diagnostic trouble code (DTC) display on the scan tool. 5. Record all DTCs, indicating each as either a current or a history DTC. Are only history DTCs shown?		Refer to the DTC chart for any DTC that was set, and refer to the Diagnostic Aids for that specific DTC	Go to *Step 4*
4	Check the recorded DTCs. Are current DTCs 18, 24, or 51 set?		Go to the DTC chart indicated by any of these three codes	Go to *Step 5*
5	Check the recorded DTCs. Are there any other current DTCs shown?		Diagnose the remaining current DTCs from lowest number to highest	Refer to the DTC chart for any history DTC that was set, and refer to ”Diagnostic Aids” for that specific DTC
6	Observe the AIRBAG indicator after the ignition has been turned ON. Does the AIRBAG indicator stay on?		Go to ”AIRBAG Warning Lamp Stays on with Ignition Switch ON”	Go to *Step 7*
7	1. Turn the ignition to LOCK and remove the key. 2. Temporarily disconnect the passenger airbag and the yellow clock spring connector on the steering column. 3. Check the AIRBAG indicator bulb and circuit. Are the bulb and the bulb circuit in good condition?		Go to *Step 9*	Go to *Step 8*

Step	Action	Value(s)	Yes	No
8	1. Replace the bulb or repair the bulb circuit. 2. Connect all SIR system components, and ensure that all components are properly mounted. Is the repair complete?		Go to *Step 1*	
9	1. Turn the ignition to LOCK and remove the key. 2. Disconnect the passenger airbag and the yellow clock spring connector on the steering column. 3. Replace the SDM. The arrow must be pointing toward the front of the vehicle. 4. Reconnect all SIR system components, and ensure that all components are properly mounted. Is the repair complete?		Go to *Step 1*	
10	1. Turn the ignition to LOCK and remove the key. 2. Connect the scan tool to the data link connector (DLC). Follow the directions given in the scan tool manual. 3. Turn the ignition to ON. 4. Request the SIR DTC display on the scan tool. 5. Record all history DTCs. Are any SIR DTCs displayed?		Go to *Step 11*	System OK
11	Turn the ignition to OFF. Is DTC 71 set?		Go to ”DTC 71 Internal SDM Failure”	Refer to the DTC chart for any history DTC that was set, and refer to ”Diagnostic Aids” for that specific DTC

SENSING AND DIAGNOSTIC MODULE (SDM) INTEGRITY CHECK

The following diagnostic chart must be followed when all circuitry outside the sensing and diagnostic module SDM) has been found to operate properly, as indicated by following the appropriate diagnostic trouble code DTC) chart or symptom chart. This chart verifies the need for SDM replacement.

Circuit Description

When the SDM recognizes Ignition 1 voltage greater than 8.2 volts at terminal 10 of the SDM, the AIRBAG indicator is flashed seven times to verify operation. At this time the SDM performs turn–on tests followed by resistance measurement tests and continuous monitoring tests. When a malfunction is detected, the SDM sets a current DTC and illuminates the AIRBAG indicator. When the malfunction is no longer detected and/or the ignition switch is cycled, the SDM will clear current DTCs and move them to a history file, except for DTCs 18, 24, 51, 53, and sometimes 71. DTCs 18, 24, 51, and 53 will not clear using a scan tool because these codes require replacement of the SDM. The SDM must be replaced only after the malfunction that set the DTC has been repaired.

Test Description

The number(s) below refer to step(s) on the diagnostic table.

1. This test confirms a current malfunction. If no current malfunction is occurring, (history DTC set), refer to ”Diagnostic Aids” for the appropriate DTC. The SDM should not be replaced for a history DTC except when directed.
2. This test checks for a malfunction introduced into the supplemental inflatable restraint (SIR) system during the diagnostic process. It is extremely unlikely that a malfunctioning SDM would cause a new malfunction to occur during the diagnostic process.
4. See the cautions below.

Sensing and Diagnostic Module (SDM) Integrity Check

CAUTION : The SDM can maintain sufficient voltage to deploy the airbags for 10 minutes after the ignition is OFF and the fuse has been removed. If the airbags are not disconnected, service cannot begin until 10 minutes have passed after disconnecting power to the SDM.

CAUTION : During service procedures, be very careful when handling the SDM. Never strike or jar the SDM. Never power the SIR system when the SDM is not rigidly attached to the vehicle. All SDM mounting bolts must be carefully tightened, and the SDM arrow must be pointing toward the front of the vehicle to ensure proper operation of the SIR system. The SDM could be activated if it is powered when it is not rigidly attached to the vehicle, resulting in unexpected deployment and possible injury.

Step	Action	Value(s)	Yes	No
1	1. Turn the ignition to LOCK and remove the key. 2. Connect all supplemental inflatable restraint (SIR) system components, and ensure that all components are properly mounted. 3. Ensure that the ignition switch has been OFF for at least 30 seconds. 4. Observe the AIRBAG indicator as the ignition is turned ON. Does the indicator lamp flash seven times and then turn off?		Clear the SIR system DTCs and go to ”Diagnostic System Check”	Go to *Step 2*
2	Using a scan tool, request the DTC display. Is the same DTC displayed that was previously occurring when the SIR Diagnostic System Check was previously performed?		Go to *Step 3*	Go to the table for the DTC indicated
3	1. Clear the SIR DTCs. 2. Turn the ignition OFF for at least 30 seconds. 3. Observe the AIRBAG indicator as the ignition is turned ON. Does the AIRBAG indicator flash seven times and then turn off?		System OK	Go to *Step 4*
4	1. Turn the ignition to LOCK and remove the key. 2. Disconnect the passenger airbag and the yellow clock spring connector on the steering column. 3. Replace the SDM. The arrow must be pointing toward the front of the vehicle. 4. Connect all SIR system components, and ensure that all components are properly mounted. Is the repair complete?		Clear the SIR system DTCs and go to ”Diagnostic System Check”	

SECTION : 6C

POWER STEERING GEAR

CAUTION : Disconnect the negative battery cable before removing or installing any electrical unit or when a tool or equipment could easily come in contact with exposed electrical terminals. Disconnecting this cable will help prevent personal injury and damage to the vehicle. The ignition must also be in LOCK unless otherwise noted.

TABLE OF CONTENTS

SPECIFICATIONS 6C–1
GENERAL SPECIFICATIONS 6C–1
FASTENER TIGHTENING SPECIFICATIONS 6C–2
SPECIAL TOOLS 6C–2
SPECIAL TOOLS TABLE 6C–2
DIAGNOSIS 6C–3
POWER RACK AND PINION STEERING GEAR 6C–3
POWER RACK AND PINION STEERING GEAR BENCH TESTING 6C–5
MAINTENANCE AND REPAIR 6C–6
ON–VEHICLE SERVICE 6C–6
RACK AND PINION ASSEMBLY 6C–6
OUTER TIE ROD 6C–9
INNER TIE ROD 6C–11
DUST BOOT 6C–12
STRAIGHT–AHEAD CHECK 6C–14
INTERMEDIATE SHAFT AND DASH SEAL 6C–16
HYDRAULIC CYLINDER LINES 6C–19
UNIT REPAIR 6C–21
RACK AND PINION 6C–21
STUB SHAFT SEALS AND UPPER AND LOWER BEARING 6C–26
RACK BEARING 6C–30
RACK BEARING PRELOAD ADJUSTMENT 6C–31
VALVE AND PINION 6C–31
GENERAL DESCRIPTION AND SYSTEM OPERATION 6C–35
POWER RACK AND PINION 6C–35

SPECIFICATIONS

GENERAL SPECIFICATIONS

Application	Description
Capacity	1.0 Liter (1.06 qt)
Lubricant	Power Steering Fluid DEXRON®–III

FASTENER TIGHTENING SPECIFICATIONS

Application	N•m	Lb–Ft	Lb–In
Adjuster Plug	5	–	44
Adjuster Plug Locknut	70	52	–
Dash Seal Retaining Ring Nuts	9	–	80
Hydraulic Cylinder Line Fittings – Cylinder End	27	20	–
Hydraulic Cylinder Line Fittings – Valve End	18	13	–
Inner Tie Rods	100	74	–
Intermediate Shaft Pinch Bolts	25	18	–
Outer Tie Rod Adjusting Nut	22	16	–
Outer Tie Rod Nut	60	44	–
Pinion Locknut	30	22	–
Pinion Preload	1	–	9
Steering Gear Inlet and Outlet Pipe Fittings	27	20	–
Steering Gear Mounting Bracket Nuts and Bolts	57	42	–

SPECIAL TOOLS

SPECIAL TOOLS TABLE

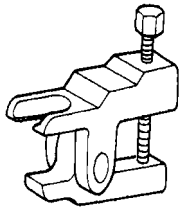 A106C034	KM–507–B Ball Joint Remover
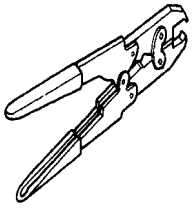 A104A008	KM–J–22610 Installer

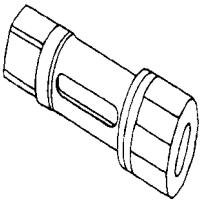 B105C059	J–35423 Rack Guide Spring Cap Wrench

DIAGNOSIS

POWER RACK AND PINION STEERING GEAR

Hissing Noise

Checks	Action
Check the intermediate shaft joints for looseness.	Tighten the intermediate shaft joints.
Check the power steering hose for contact with other components.	Be sure the power steering hose is correctly fitted into the hose clips.

Rattling Noise in Steering Gear

Checks	Action
Check the power steering hose for contact with the body.	Be sure the power steering hose is correctly fitted into the hose clips.
Check the steering gear mounting for improper installation.	Lubricate the steering gear.
Check the steering gear mounting for improper installation.	Tighten the steering gear mounting bracket nuts.
Check the outer tie rods for improper installation.	Tighten the outer tie rod joints. Replace the outer tie rods.

Poor Return of Steering Wheel to Center

Checks	Action
Check the steering wheel for contact with the turn signal housing.	Adjust the turn signal housing.
Check the intermediate shaft joints for binding or looseness.	Replace the intermediate shaft.
Check the power steering pump flow control valve for sticking and improper alignment.	Replace the power steering pump.
Check the wheel alignment.	Align the wheels.
Check the wheel bearings for wear or damage.	Replace the wheel bearings.
Check the intermediate shaft joints for improper installation.	Adjust the intermediate shaft between the steering gear and the steering column. Replace the intermediate shaft.
Check the outer tie rods and the ball joints for binding or looseness.	Tighten the tie rods and the ball joints. Replace the tie rods and the ball joints.
Check the steering gear adjustments.	Perform a straight–ahead check.
Check the steering column shaft seal for rubbing on the shaft.	Replace the dash seal.
Check the steering shaft bearings for binding.	Replace the stub shaft bearings.

Momentary Increase in EffortWhen Turning the Wheel Quickly

Checks	Action
Check the power steering pump for internal leaks.	Replace the power steering pump.
Check the hoses for damage or restricted flow.	Replace the power steering hoses and/or pipes.
Check the power steering fluid level.	Fill the power steering fluid reservoir.
Check the power steering pump flow control valve for sticking and improper operation.	Replace the power steering pump.

Steering Surges or Jerks When Turning with Engine Running

Checks	Action
Check the power steering pump for insufficient pressure.	Replace the power steering pump.
Check the power steering pump flow control valve for sticking and improper operation.	Replace the power steering pump.
Check the power steering pump serpentine belt for slippage.	Tighten the power steering serpentine belt.
Check for air contamination in the power steering system.	Bleed the power steering system.

Steering Vibrates During Low Speed or Static Steering

Checks	Action
Check for air contamination in the power steering system.	Bleed the power steering system.
Check the power steering pump serpentine belt for looseness.	Tighten the power steering serpentine belt.

Excessive Wheel Kickback or Loose Steering

Checks	Action
Check for air contamination in the power steering system.	Bleed the power steering system.
Check the wheel bearings for wear or damage.	Replace the wheel bearings.
Check the steering gear mounting for improper installation.	Tighten the steering gear mounting bracket nuts.
Check the intermediate shaft joints for improper installation.	Adjust the intermediate shaft between the steering gear and the steering column. Replace the intermediate shaft.
Check the outer tie rods and the ball joints for looseness.	Tighten the tie rods and the ball joints. Replace the tie rods and the ball joints.

Hard Steering or Lack of Assist (Especially During Parking)

Checks	Action
Check the intermediate shaft joints for improper installation.	Adjust the intermediate shaft between the steering gear and the steering column. Replace the coupling flange.
Check the power steering pump flow control valve for sticking and improper installation.	Replace the power steering pump.
Check the power steering pump for insufficient pressure.	Replace the power steering pump.
Check the power steering pump for internal leaks.	Replace the power steering pump.
Check for a loose or a worn intermediate shaft.	Tighten the intermediate shaft. Replace the intermediate shaft, as needed.
Check the power steering pump serpentine belt tension.	Tighten the power steering serpentine belt.

POWER RACK AND PINION STEERING GEAR BENCH TESTING

Removal, Setup and Testing Procedure

Important : Pressure checks or pressure and flow checks may also be conducted using this setup.

1. Disconnect and remove the power steering gear. Refer to”Rack and Pinion Assembly” in this section.
2. Place the power steering gear on a bench next to the vehicle.
3. Disconnect the pressure line at the point where the hose connects to the pipe. Extend this line to reach the power steering gear on the bench.
4. Disconnect the return line from the the power steering fluid reservoir. Extend this line to reach the power steering gear on the bench.
5. Connect the power steering pipes to the power steering gear.
6. Start the engine and allow it to idle for 10 seconds.
7. Check the power steering fluid level. Refer to*Section 6A, Power Steering System.*
8. Start the engine and turn the rack and pinion stub shaft a full turn in each direction. Hold the shaft against each stop for 5 seconds.
9. Inspect for possible leak points. Refer to*Section 6A, Power Steering System.*

Installation Procedure

1. Stop the engine.
2. Disconnect the power steering pipes from the power steering gear.
3. Remove the extensions and reconnect the pressure and return lines.
4. Install and connect the power steering gear. Refer to”Rack and Pinion Assembly” in this section.
5. Start the engine and allow it to idle for 10 seconds.
6. Check the power steering fluid level. Refer to*Section 6A, Power Steering System.*

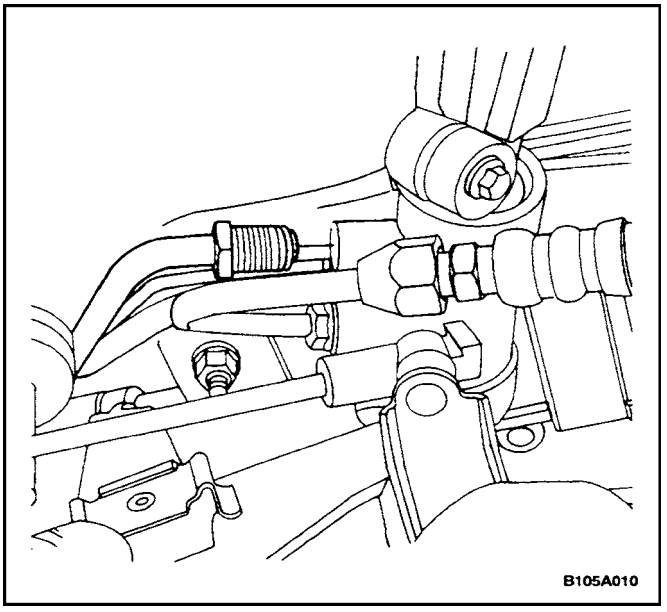

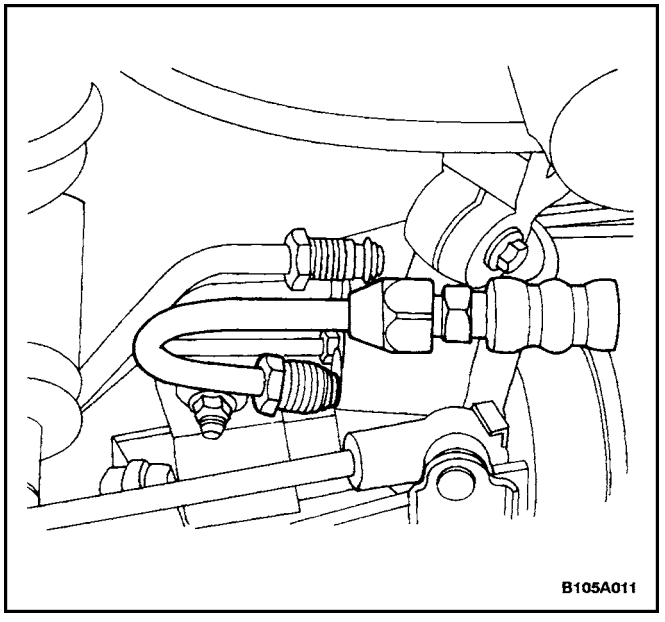

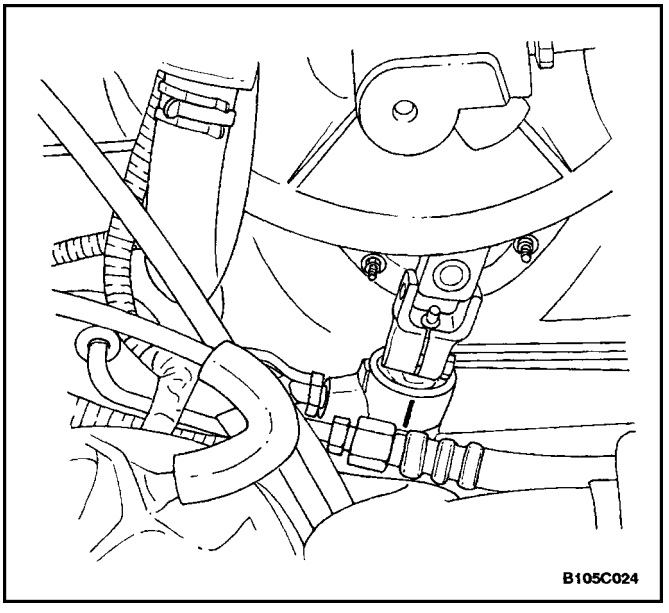

MAINTENANCE AND REPAIR

ON–VEHICLE SERVICE

RACK AND PINION ASSEMBLY

Tools Required

KM–507–B Ball Joint Remover

Removal Procedure

1. Disconnect the negative battery cable.
2. Raise and suitably support the vehicle.
3. Remove the wheels. Refer to*Section 2E, Tires and Wheels.*
4. Disconnect the power steering gear fluid outlet pipe. Place a drain pan under the steering gear to catch the power steering fluid.
5. Disconnect the power steering gear fluid inlet pipe.
6. Position the steering gear straight ahead by turning the steering wheel until the steering wheel spokes are vertical and pointed to the left.
7. Scribe amark on the stub shaft housing that lines up with a mark on the intermediate shaft lower coupling.

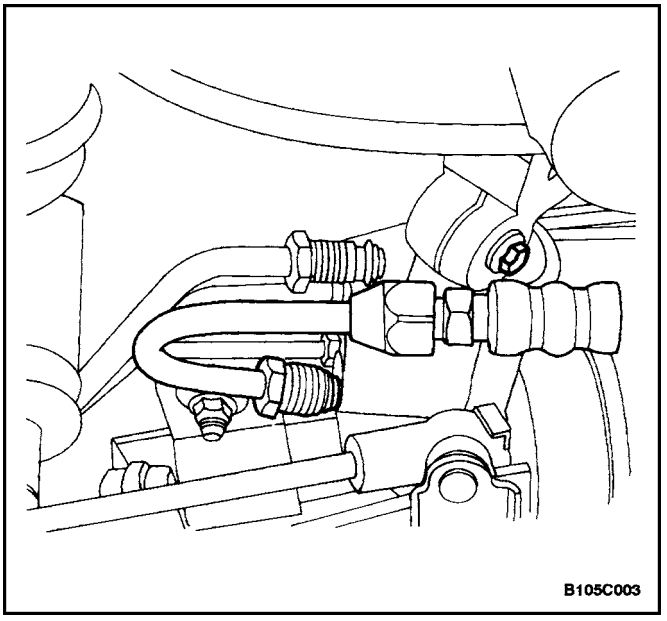

8. Loosen the intermediate shaft pinch bolt.

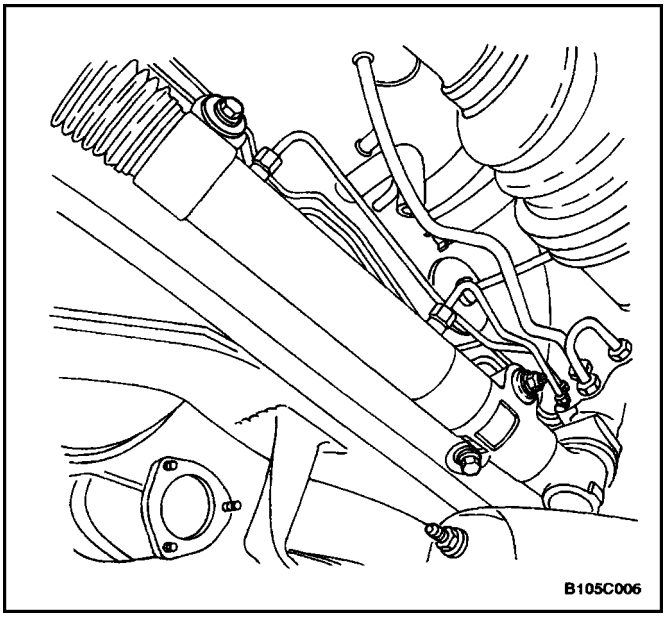

9. Remove the crossmember assembly. Refer to*Section 2C, Front Suspension.*
10. Remove the bolt from the lower steering gear mounting bracket and the bolt (right side) and the nut (left side) from the upper steering gear mounting brackets.
11. Remove the rack and pinion assembly from below.

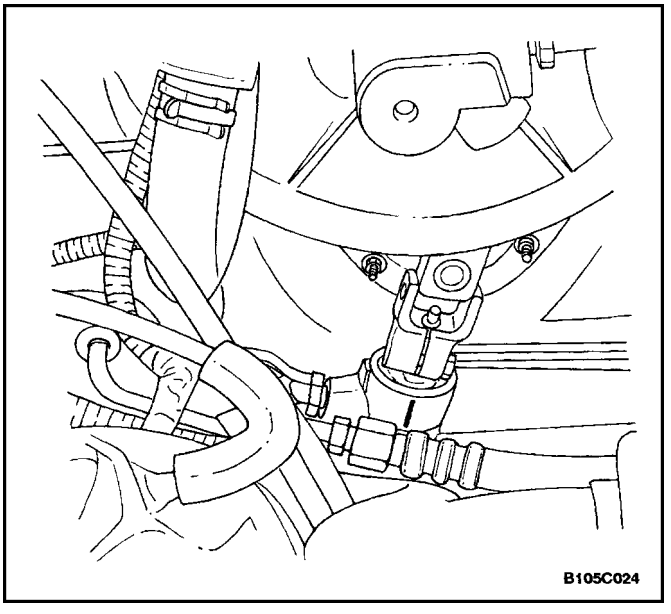

Installation Procedure

1. Install the rack and pinion assembly from below. The steering gear must be in a straight–ahead position, and the steering wheel spokes must be vertical and pointing to the left. Align the marks on the shafts to ensure proper positioning.

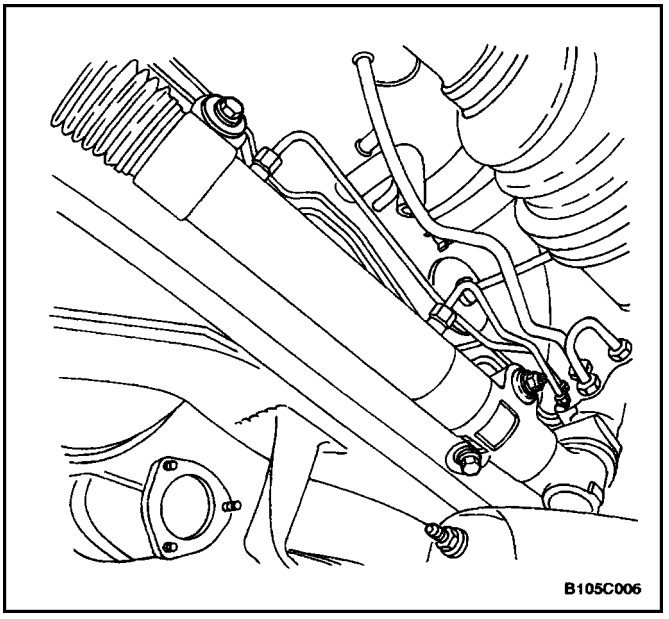

2. Install the bolt (right side) and the nut (left side) on the upper steering gear mounting brackets and install the bolt on the lower steering gear mounting bracket.

Tighten

Tighten the steering gear mounting bracket bolts and the nut to 57 N•m (42 lb–ft).

3. Install the crossmember assembly. Refer to*Section 2C, Front Suspension.*

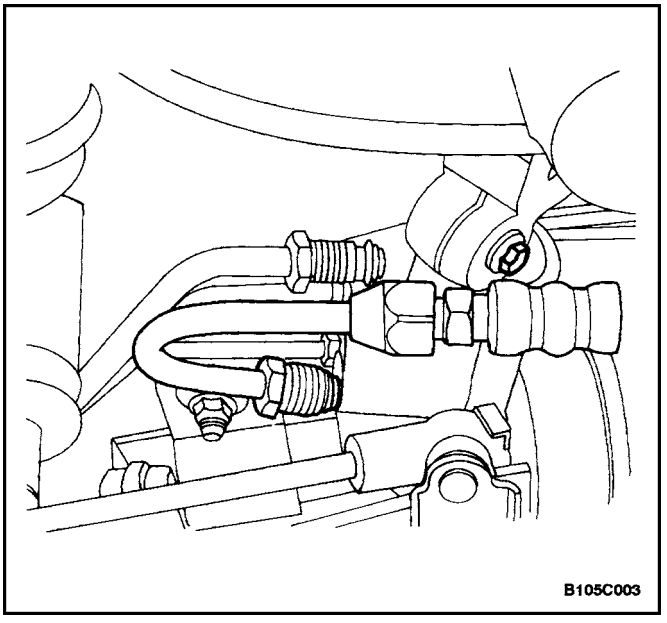

4. Tighten the lower intermediate shaft pinch bolt.

Tighten

Tighten the lower intermediate shaft pinch bolt to 25 N•m (18 lb–ft).

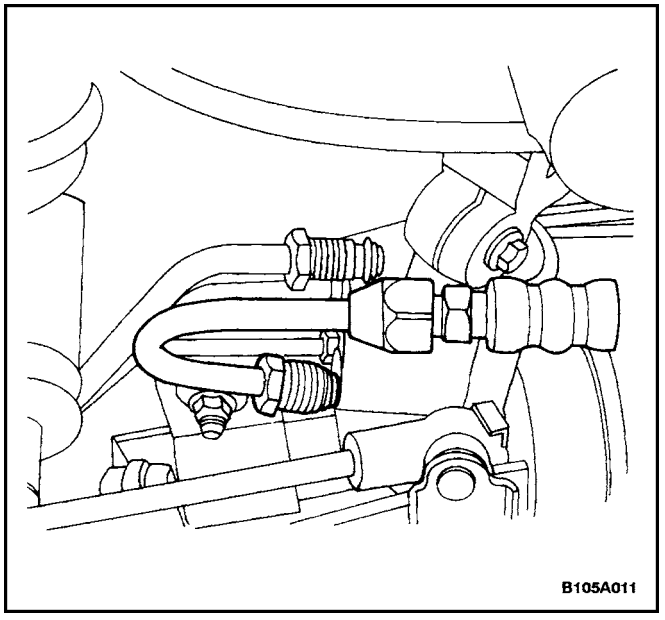

5. Connect the power steering gear fluid inlet pipe.

Tighten

Tighten the steering gear inlet pipe fitting to 27 N•m (20 lb–ft).

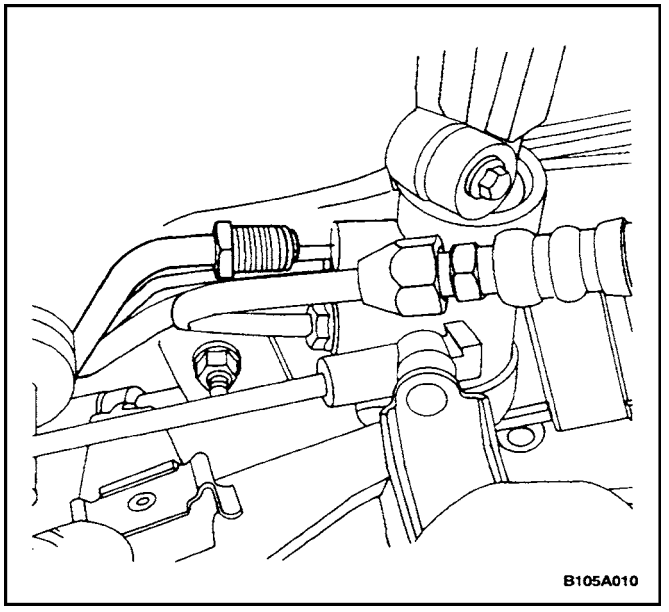

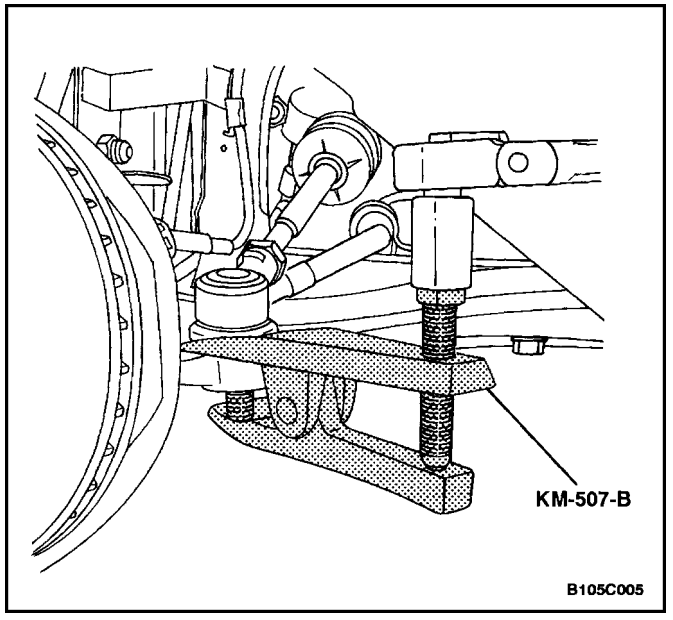

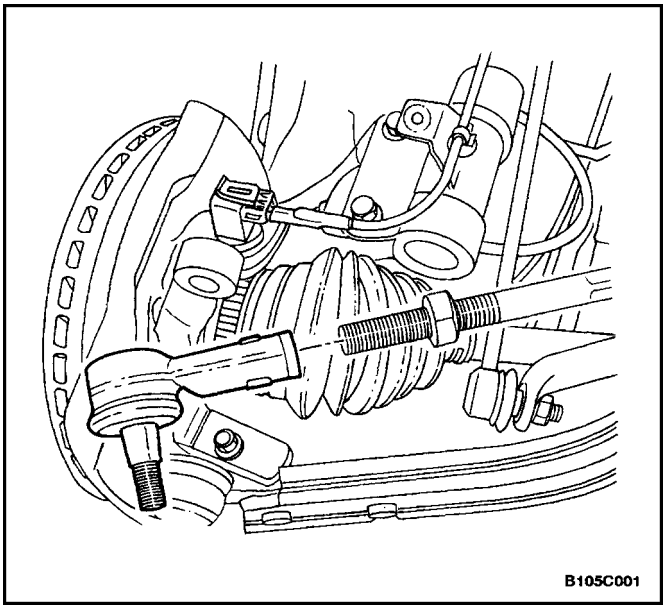

6. Connect the power steering gear fluid outlet pipe.

Tighten

Tighten the steering gear outlet pipe fitting to 27 N•m (20 lb–ft).

7. Install the wheels. Refer to*Section 2E, Tires and Wheels.*
8. Lower the vehicle.
9. Do a straight–ahead check. Refer to"Straight–Ahead Check"in this section.

Notice : When adding fluid or making a complete fluid change, always use power steering fluid DEXRON®–III or equivalent. Failure to use the proper fluid will cause hose and seal damage and fluid leaks.

10. Refill the power steering system and check for leaks. If leaks are found, correct the cause of the leak and bleed the system. Refer to*Section 6A, Power Steering System.*
11. Connect the negative battery cable.

OUTER TIE ROD

Tools Required

KM–507–B Ball Joint Remover

Removal Procedure

1. Remove the wheel. Refer to*Section 2E, Tires and Wheels.*
2. Mark the threads on the inner tie rod to aid in re-positioning the adjusting nut.
3. Remove the outer tie rod nut and disconnect the outer tie rod from the steering knuckle using the ball joint remover KM–507–B.

4. Loosen the outer tie rod adjusting nut and remove the outer tie rod by twisting it off the inner tie rod.

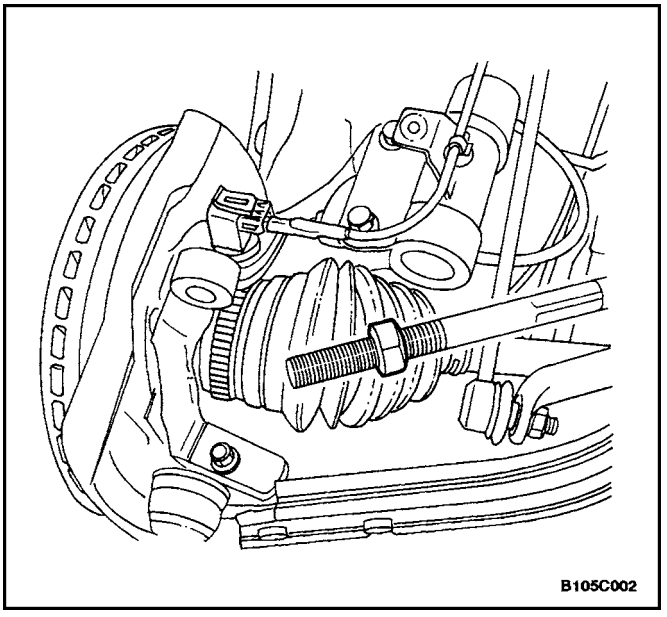

Installation Procedure

1. Reposition the adjusting nut to the marks on the inner tie rod.

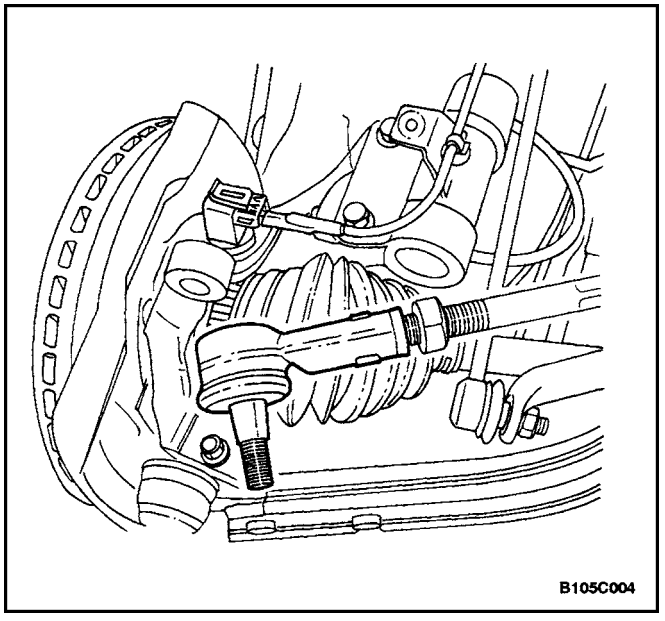

2. Install the outer tie rod by twisting it onto the inner tie rod.

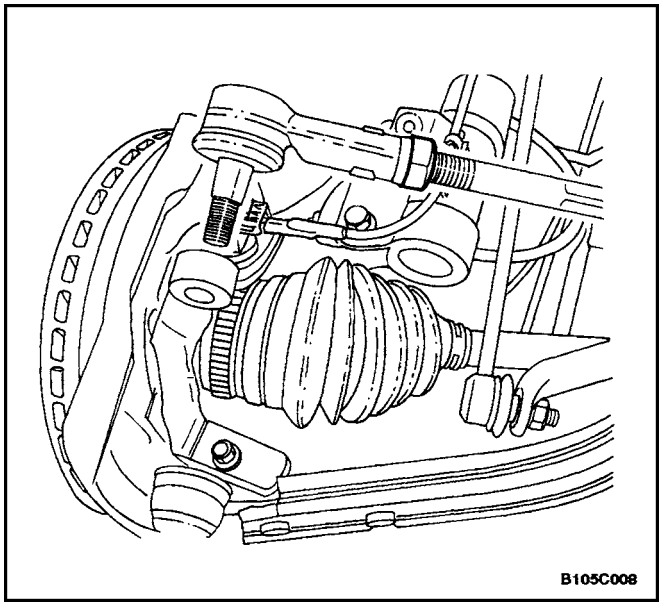

3. Connect the outer tie rod to the steering knuckle.
4. Perform a front toe adjustment. Refer to*Section 2B, Wheel Alignment.*
5. Tighten the adjusting nut.

Tighten

Tighten the outer tie rod adjusting nut to 22 N•m (16 lb–ft).

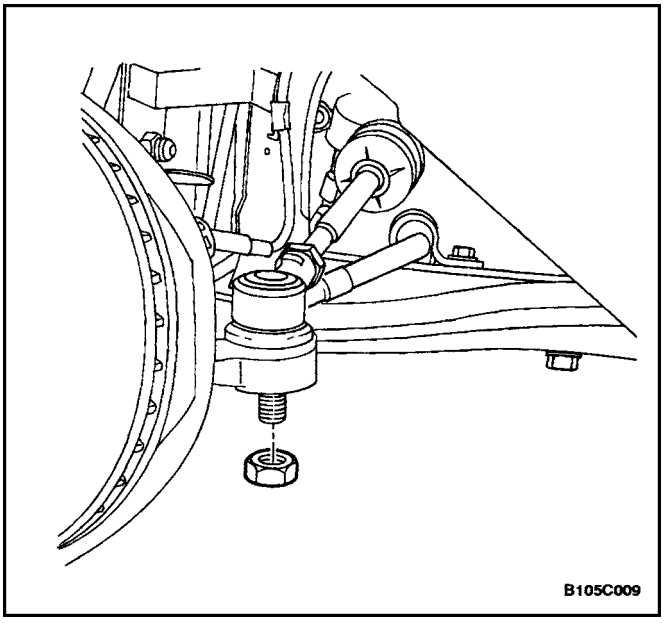

6. Install the outer tie rod nut.

   Tighten

   Tighten the outer tie rod nut to 60 N•m (44 lb–ft).
7. Install the wheel. Refer to*Section 2E, Tires and Wheels.*

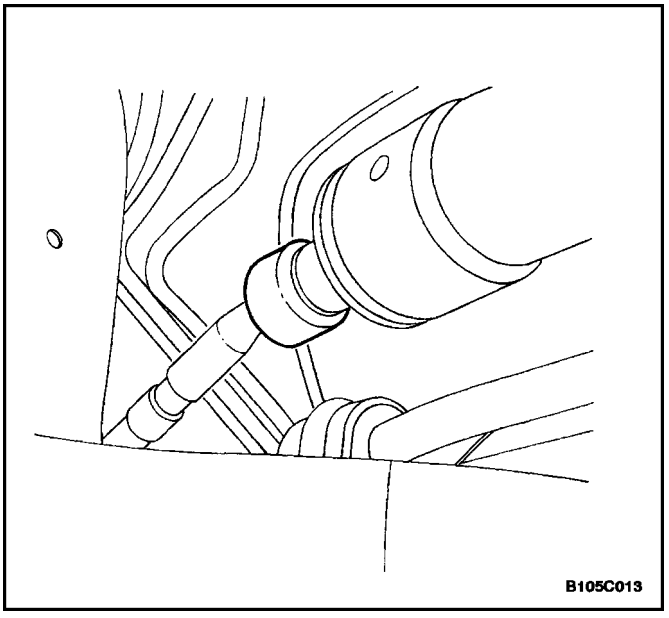

INNER TIE ROD

Removal Procedure

1. Raise and suitably support the vehicle.
2. Remove the wheel. Refer to*Section 2E, Tires and Wheels.*
3. Remove the outer tie rod. Refer to”Outer Tie Rod” in this section.
4. Remove the dust boot. Refer to”Dust Boot”in this section.
5. Push back the plastic retainer that protects the connection between the inner tie rod and the power steering gear rack.

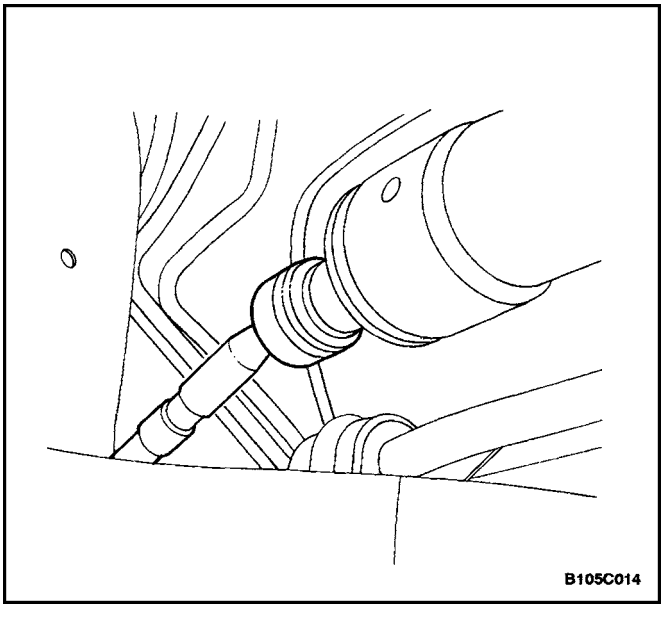

6. Remove the inner tie rod.

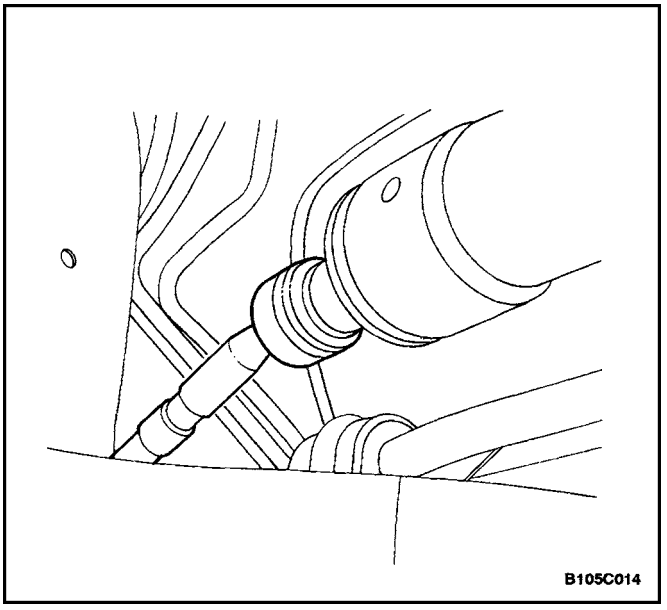

Installation Procedure

Important : The right and left inner tie rods are unequal in length. Be sure to install the correct inner tie rod on the proper side of the power steering gear.

1. Install the inner tie rod.

   Tighten

   Tighten the inner tie rod to 100 N•m (74 lb–ft).

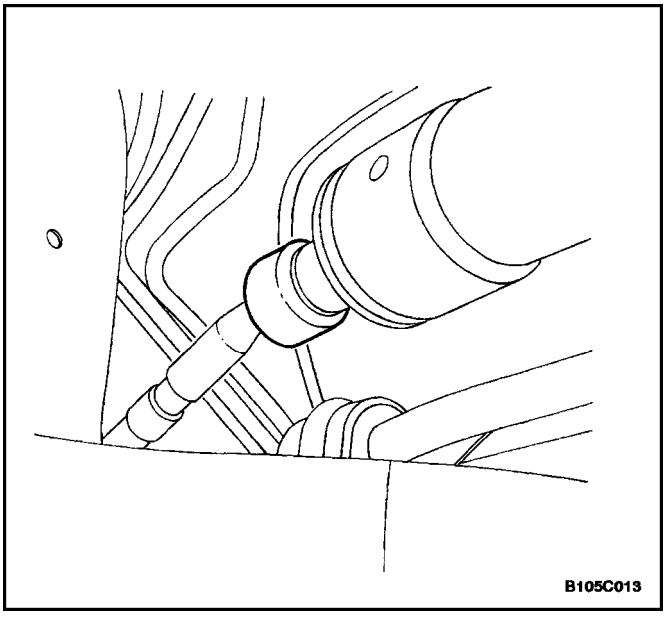

2. Push the plastic retainer over the tie rod.
3. Install the dust boot. Refer to”Dust Boot” in this section.
4. Install the outer tie rod. Refer to”Outer Tie Rod”in this section.
5. Install the wheel. Refer to*Section 2E, Tires and Wheels.*
6. Lower the vehicle.

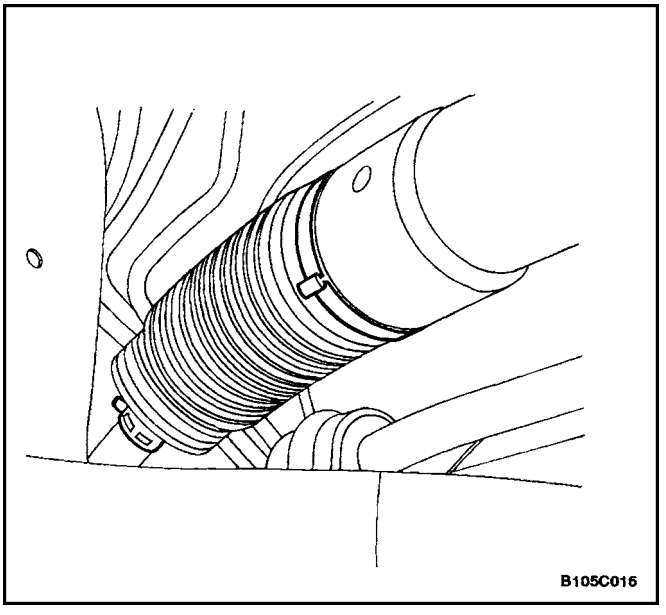

DUST BOOT

Tools Required

KM–J–22610 Installer

Removal Procedure

1. Raise and suitably support the vehicle
2. Remove the wheel. Refer to*Section 2E, Tires and Wheels.*
3. Remove the outer tie rod. Refer to”Outer Tie Rod”in this section.
4. Remove the dust boot retaining clamps.

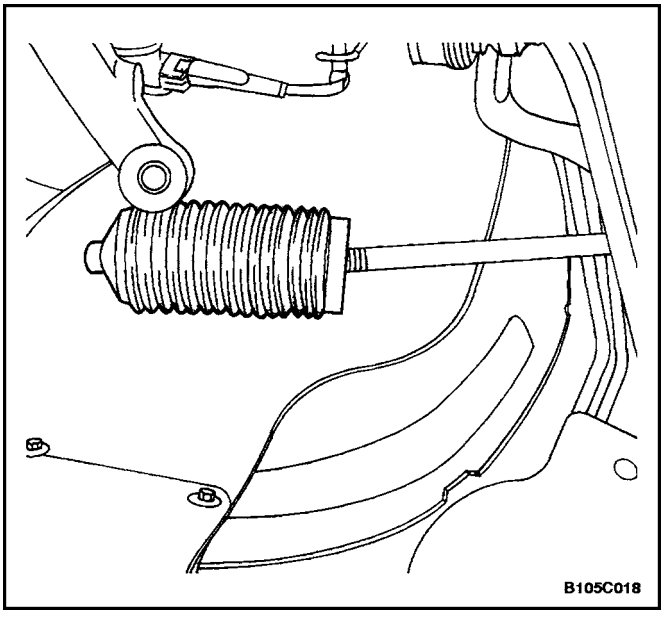

5. Remove the dust boot.

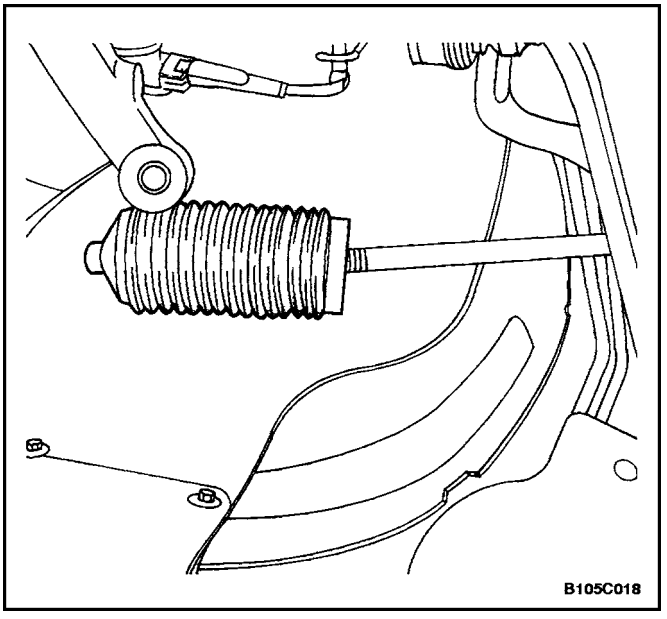

Installation Procedure

1. Install the dust boot.

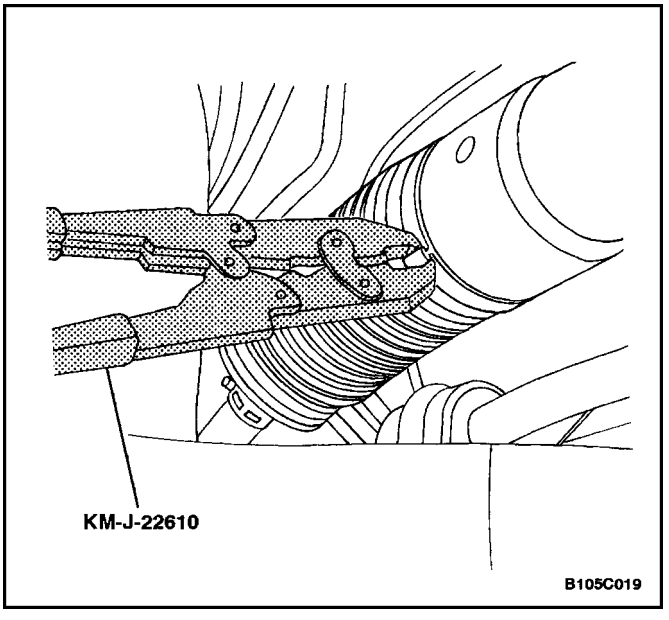

2. Install the tie rod end dust boot retaining clamp. Install the cylinder end dust boot retaining clamp with the installer KM–J–22610.
3. Install the outer tie rod. Refer to”Outer Tie Rod”in this section.
4. Install the wheel. Refer to*Section 2E, Tires and Wheels.*
5. Lower the vehicle.

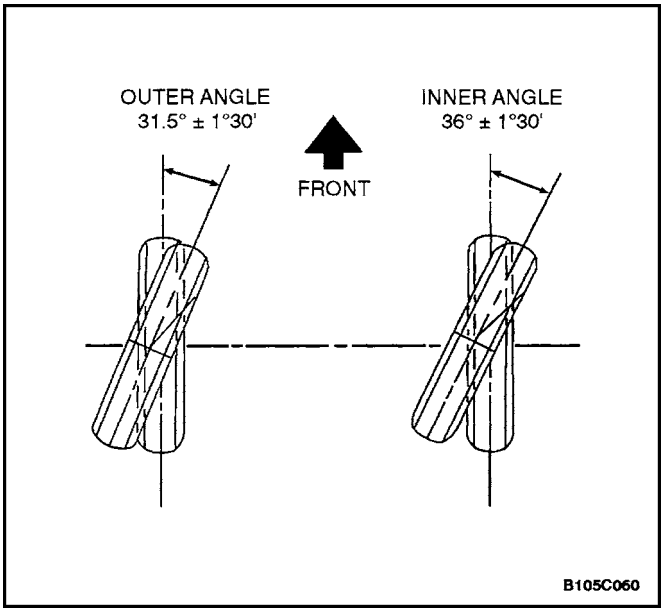

STRAIGHT–AHEAD CHECK

After all the necessary operations on the steering gear are completed (removing and installing, disassembling and assembling), check the exact straight–ahead position of the steering in each case.

With the vehicle on the floor, place the steering wheel in the straight–ahead position. Mark the centerline of both tires on the floor. Turn the steering wheel all the way to the right and mark the new centerline of both tires on the floor.

Straight–Ahead Check Table

Step	Action	Value(s)	Yes	No
1	Place the steering wheel in the straight–ahead position. Is the wheel in the correct position?		Go to*Step 2*	
2	Is the lower intermediate shaft pinch bolt lying parallel to the steering gear?		Go to*Step 3*	Go to*Step 4*
3	Is the steering wheel off center by more than 5 degrees?		Go to*Step 5*	Go to*Step 6*
4	The pinion is displaced on the rack. The steering pinion position must be corrected. Is the repair complete?		Go to*Step 2*	
5	Remove steering wheel and center it on the spindle splines. Is the repair complete?		Go to*Step 3*	
6	Turn the steering wheel all the way to the right. Measure the inner and the outer angles of the tire centerline compared to the straight–ahead centerline. Are the angles within specifications?	Inner angle: 36˚ Outer angle: 31.5˚	System OK	Go to*Step 7*
7	The rack assembly was not assembled correctly. Repair, as needed. Is the repair complete?		Go to*Step 6*	

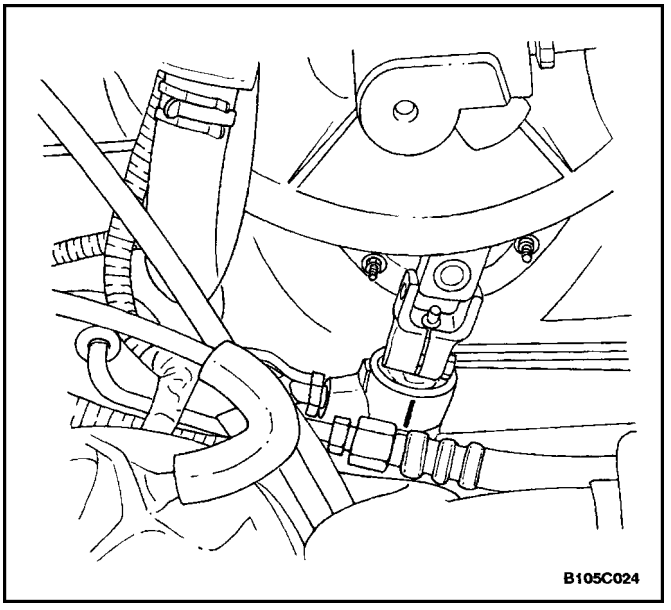

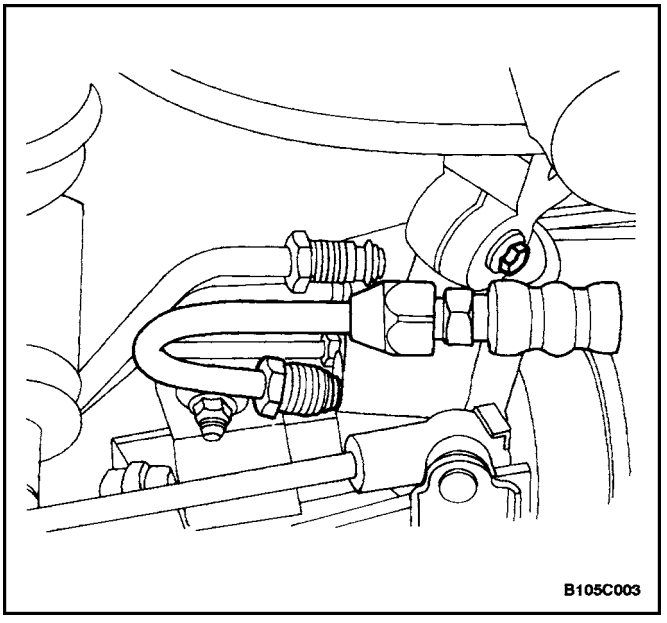

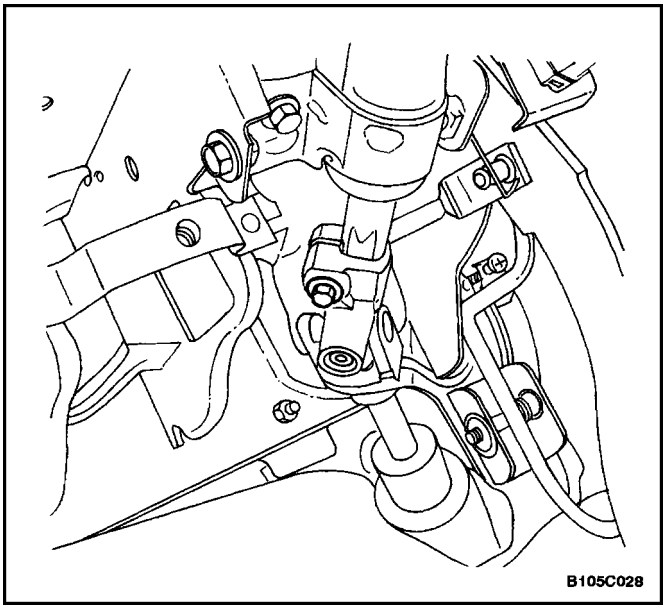

INTERMEDIATE SHAFT AND DASH SEAL

Removal Procedure

1. Turn the steering wheel until it is horizontal, with the spokes pointing down. This is the straight–ahead position. Make a mark on the stub shaft housing that lines up with a mark on the intermediate shaft lower universal joint. This mark will be used for proper alignment during installation.

2. Remove the lower pinch bolt from the universal joint on the intermediate shaft.

3. Turn the steering wheel so that the upper pinch bolt is accessible. Remove the upper pinch bolt from the universal joint on the intermediate shaft.

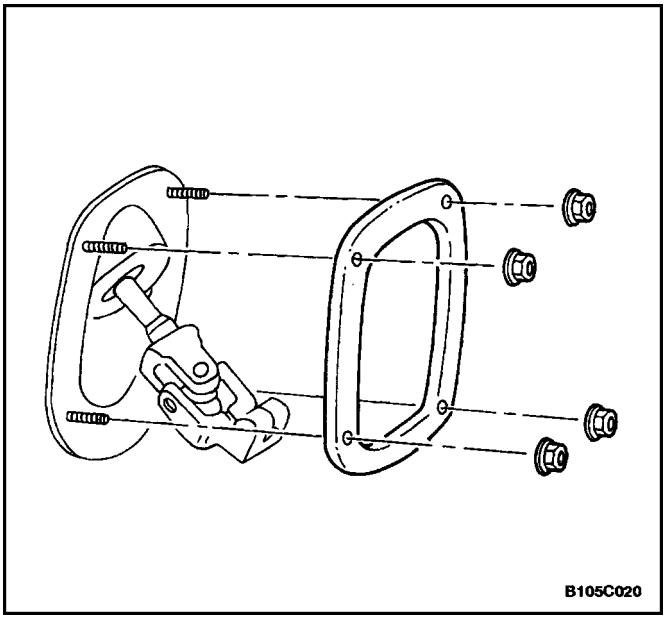

4. Remove the nuts from the dash seal retaining ring and remove the dash seal retaining ring.

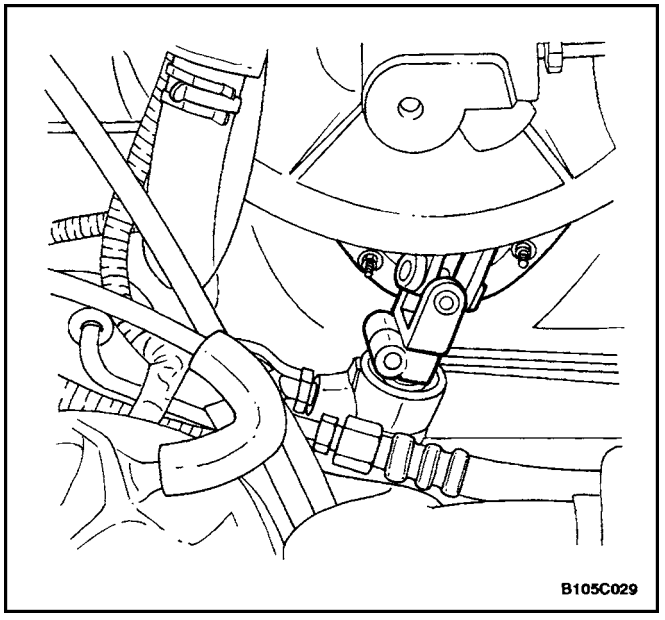

5. Remove the coupling from the power steering gear and pull the intermediate shaft out of the engine compartment.

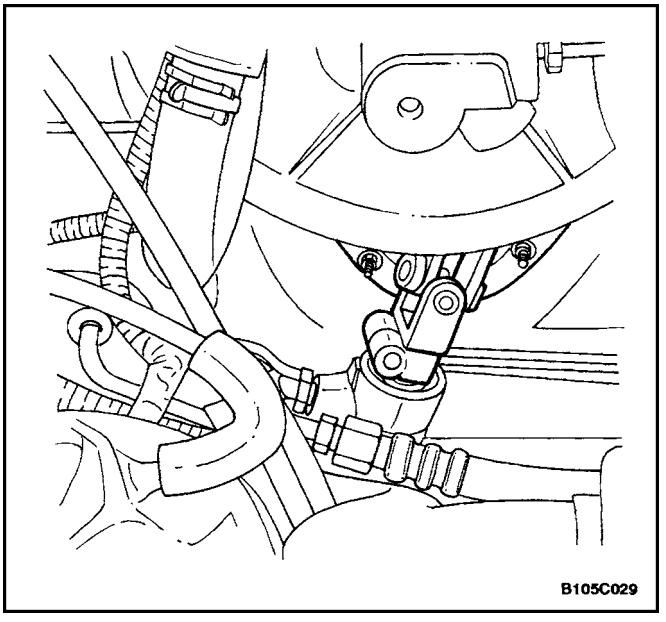

Installation Procedure

1. Install the intermediate shaft into the vehicle.

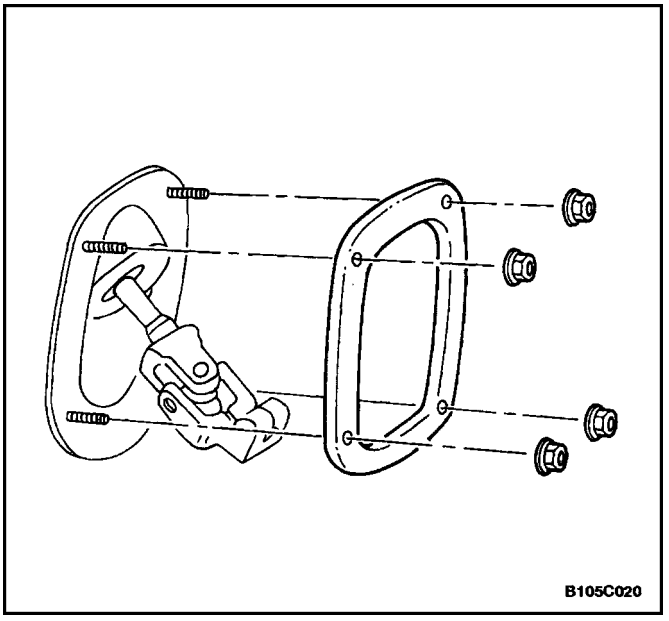

2. Install the dash seal retaining ring with the nuts.

Tighten

Tighten the dash seal retaining ring nuts to 9 N•m (80 lb–in).

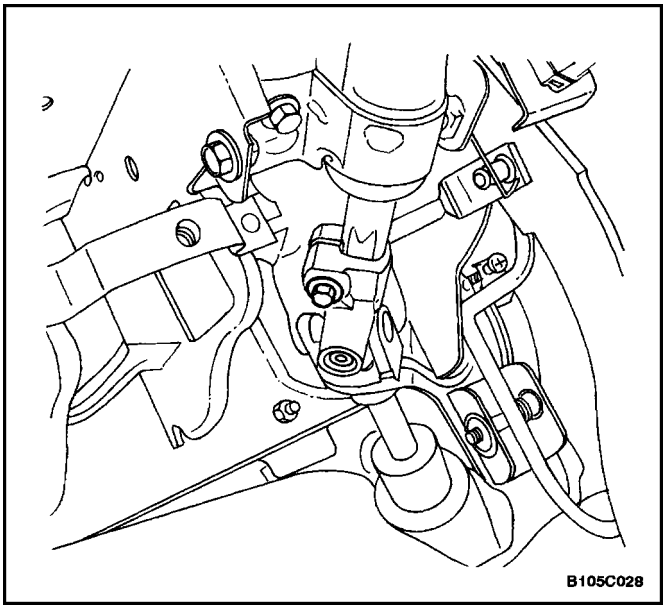

Important : When attaching the upper universal joint, the steering wheel must be placed in the straight–ahead position with the spokes pointing down.

3. Attach the upper universal joint of the intermediate shaft onto the steering column.
4. Install the pinch bolt into the upper universal joint on the intermediate shaft and tighten the bolt.

Tighten

Tighten the upper intermediate shaft pinch bolt to 25 N•m (18 lb–ft).

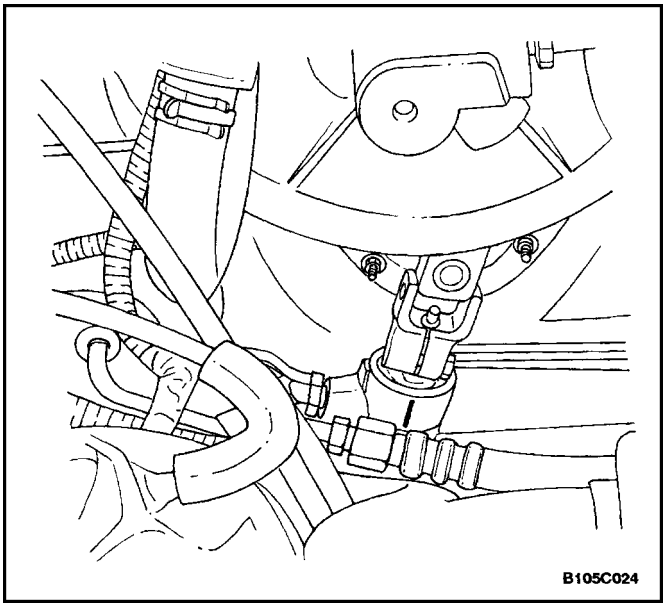

Important : When attaching the lower universal joint, the marks on the intermediate shaft and on the stub shaft should line up.

5. Attach the lower universal joint of the intermediate shaft onto the steering gear stub shaft.

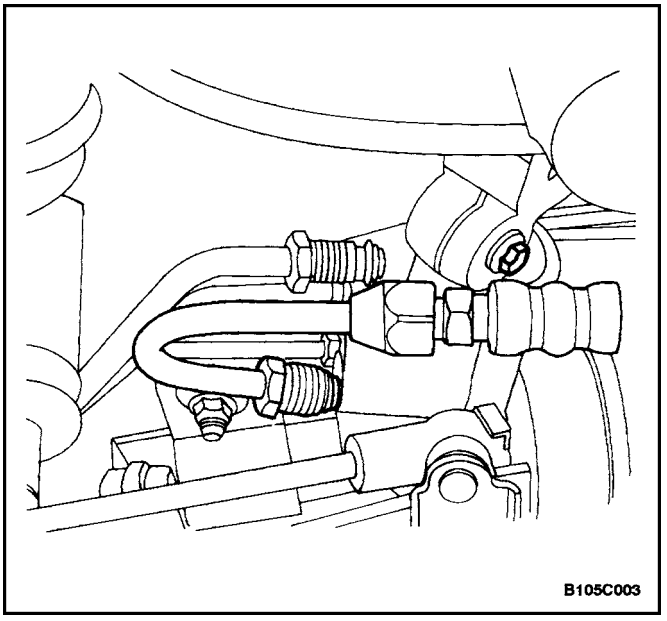

Important : When installing the lower intermediate shaft pinch bolt, make sure the bolt goes through the universal joint on the side of the stub shaft with the notch. If you have trouble seating the universal joint completely down onto the stub shaft, rotate the steering wheel slightly while pushing down on the universal joint.

6. Install the bolt into the lower universal joint on the intermediate shaft and tighten the bolt.

Tighten

Tighten the intermediate shaft pinch bolt to 25 N•m (18 lb–ft).

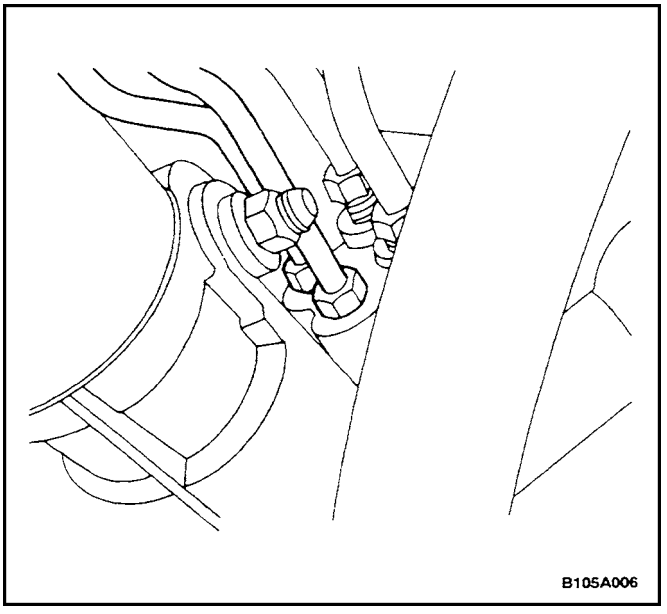

HYDRAULIC CYLINDER LINES

Removal Procedure

1. Siphon the power steering fluid from the fluid reservoir.
2. Raise and suitably support the vehicle.
3. Disconnect the power steering gear hydraulic cylinder pipes from the power steering gear at the valve end. Replace the O–ring seals, as needed.

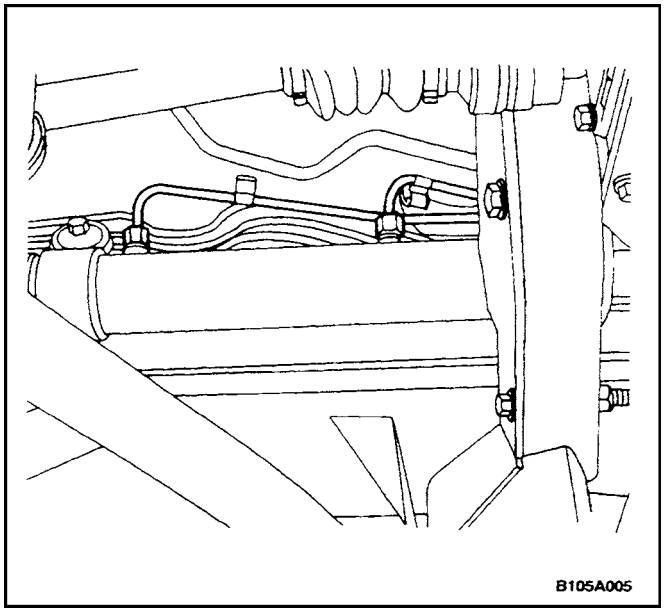

4. Disconnect the power steering gear hydraulic cylinder pipes from the power steering gear at the cylinder end.
5. Unclip the steering gear hydraulic cylinder pipes from the power steering fluid reservoir return line and remove them from the vehicle.

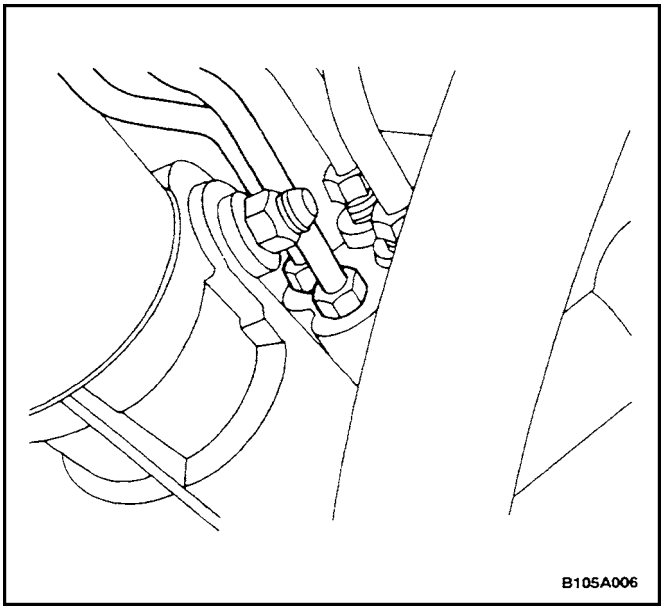

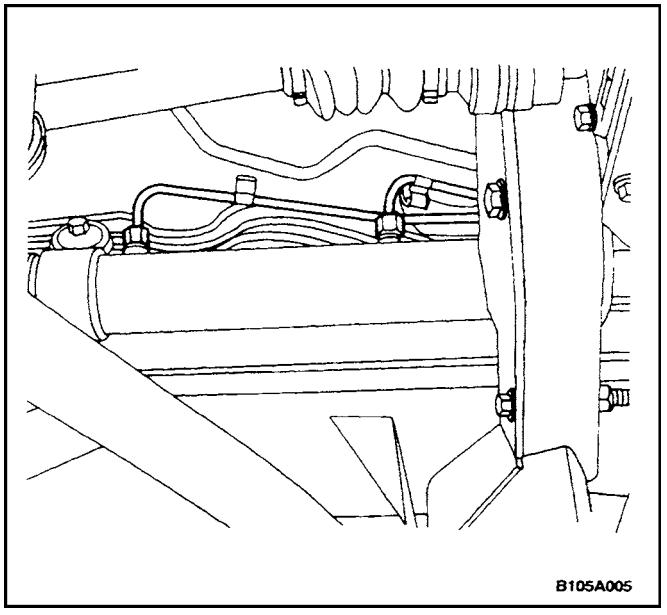

Installation Procedure

1. Lubricate any new O–ring seals with power steering fluid.
2. Place the O–ring seals into the housing and install the steering gear hydraulic cylinder pipes.
3. Connect the power steering gear hydraulic cylinder pipes to the power steering gear at the valve end.

   Tighten

   Tighten the hydraulic cylinder line fittings at the valve end to 18 N•m (13 lb–ft).

4. Connect the power steering gear hydraulic cylinder pipes to the power steering gear at the cylinder end and clip them to the power steering fluid reservoir return line.

   Tighten

   Tighten the hydraulic cylinder line fittings at the cylinder end to 27 N•m (20 lb–ft).

5. Lower the vehicle.

Notice : When adding fluid or making a complete change, always use DEXRON®–III power steering fluid. Failure to use the proper fluid will cause hose and seal damage and fluid leaks.

6. Fill the fluid reservoir with power steering fluid.
7. Inspect for leaks. If there are leaks, correct the cause of the leaks and bleed the system. Refer to”Bleeding the Power Steering System”in this section.

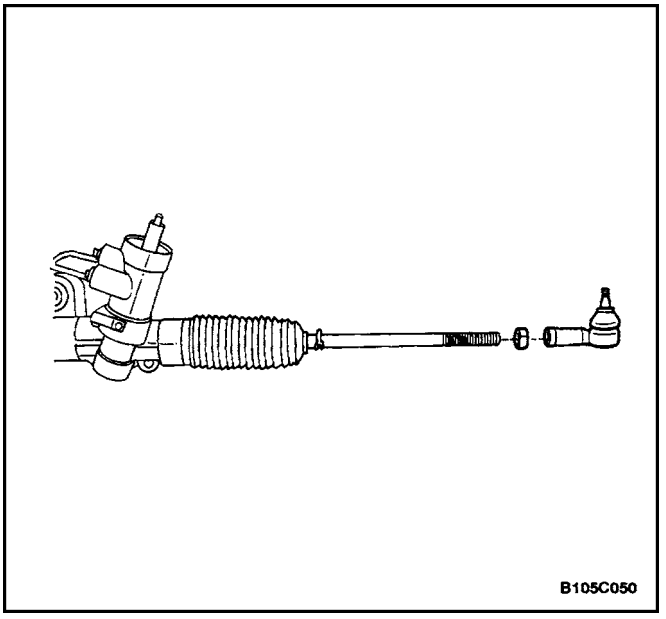

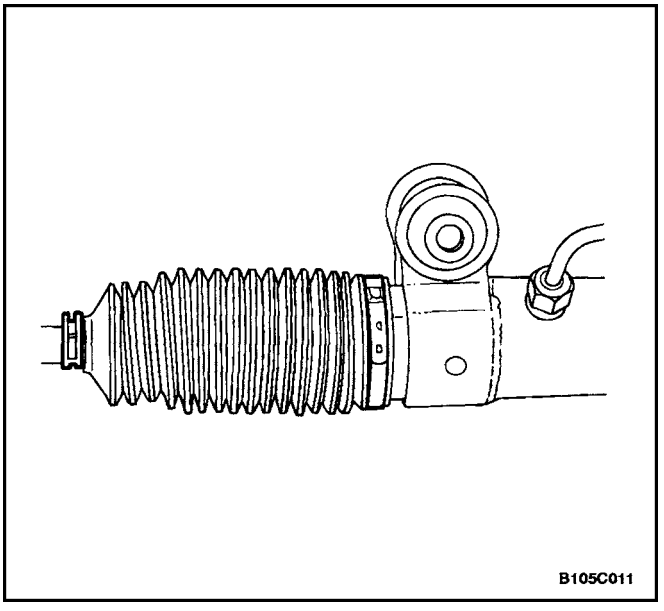

UNIT REPAIR

RACK AND PINION

Tools Required

KM–J–22610 Installer

Disassembly Procedure

1. Remove the rack and pinion steering assembly from the vehicle. Refer to”Rack and Pinion Assembly”in this section.
2. Remove the valve and pinion assembly from the rack and pinion steering assembly. Refer to”Valve and Pinion”in this section.
3. Remove the rack bearing assembly from the rack and pinion steering assembly. Refer to”Rack Bearing”in this section.
4. Mark the threads on the inner tie rod to aid in repositioning the adjusting nut.
5. Loosen the adjusting nut and remove the outer tie rod nut and the adjusting nut.
6. Remove the dust boot retaining clamps.

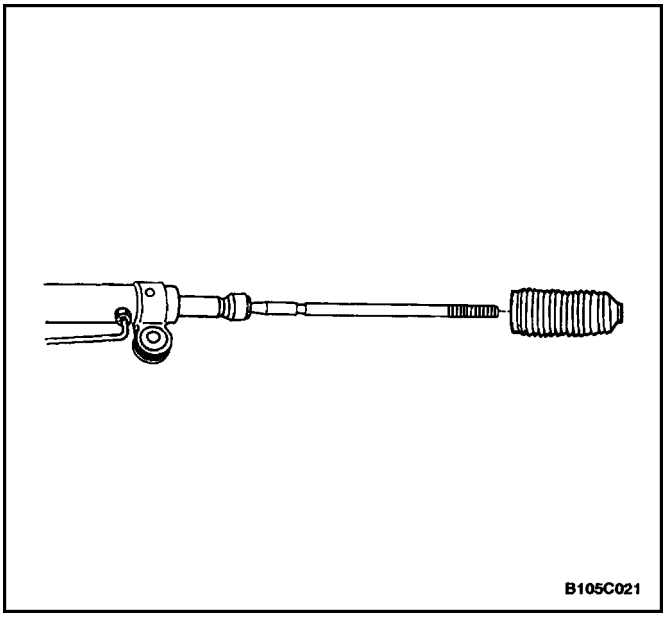

7. Remove the dust boot.

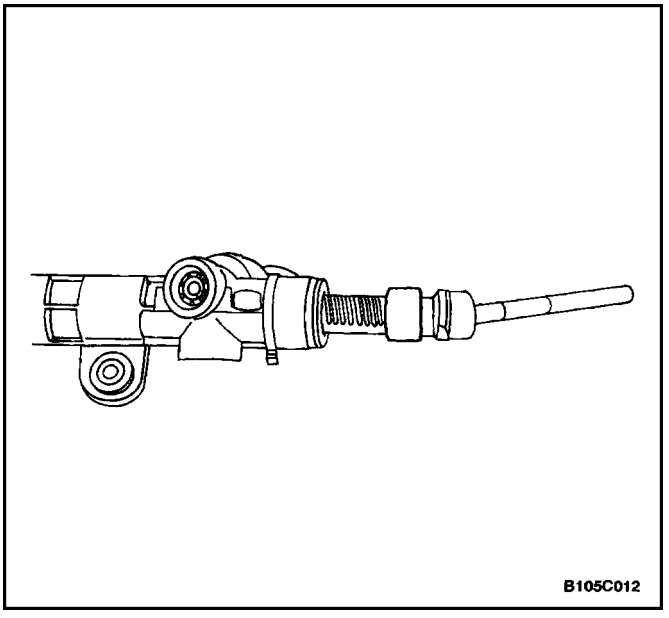

8. Push back the plastic retainer that protects the connection between the inner tie rod and the power steering gear rack.

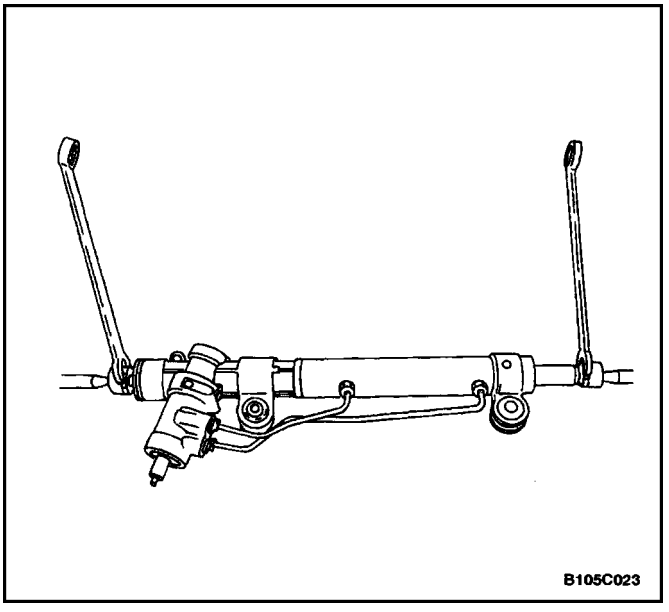

9. Counterhold the pinion–side inner tie rod and remove the cylinder–side inner tie rod.

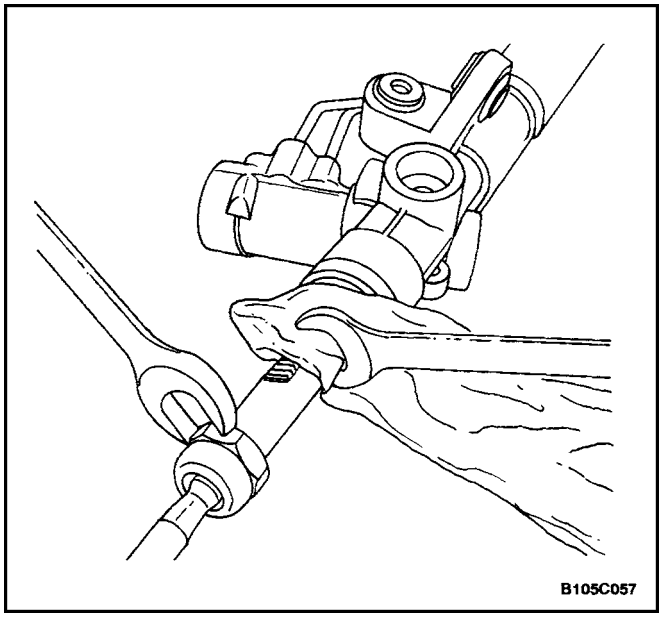

10. Place a rag over the rack, counterhold the rack assembly on the teeth with a wrench, and remove the pinion–side inner tie rod.

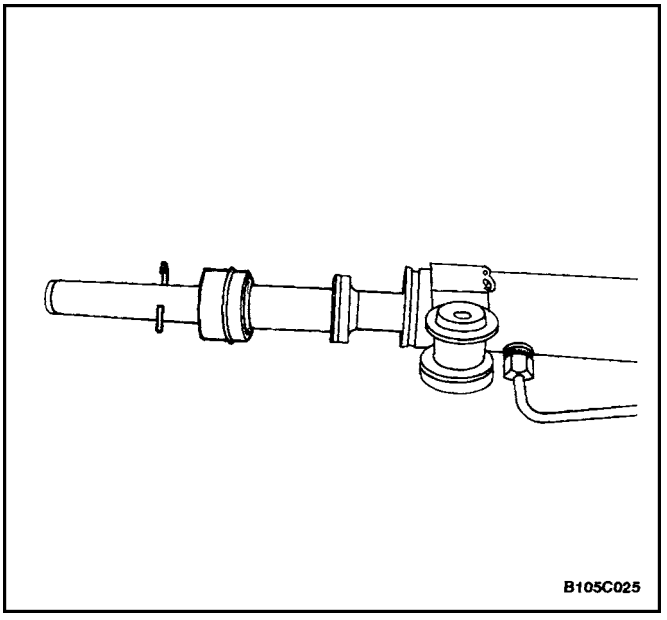

Important : The retaining ring can be released by inserting a small screwdriver through the hole in the side of the housing.

11. Remove the bulkhead inner cylinder retaining ring the bulkhead inner cylinder and the rack.

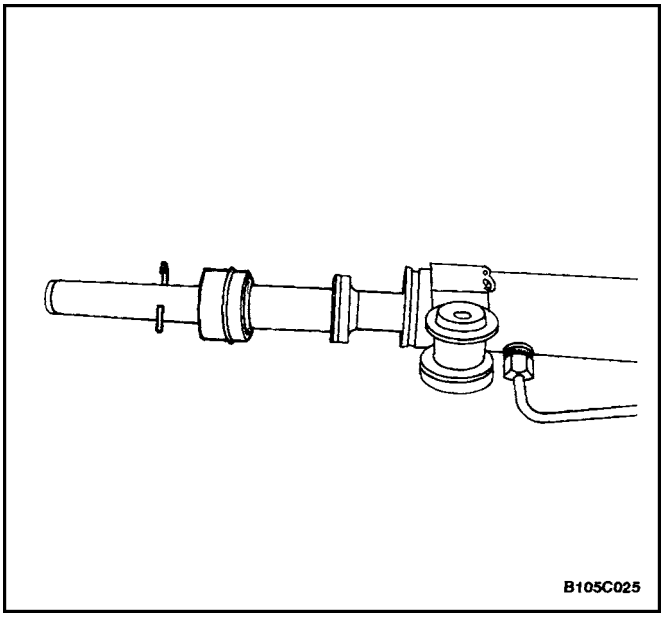

Assembly Procedure

Notice : Coat all the seals with power steering fluid to ensure proper sealing.

1. Install the rack, the bulkhead inner cylinder, and the bulkhead inner cylinder retaining ring.

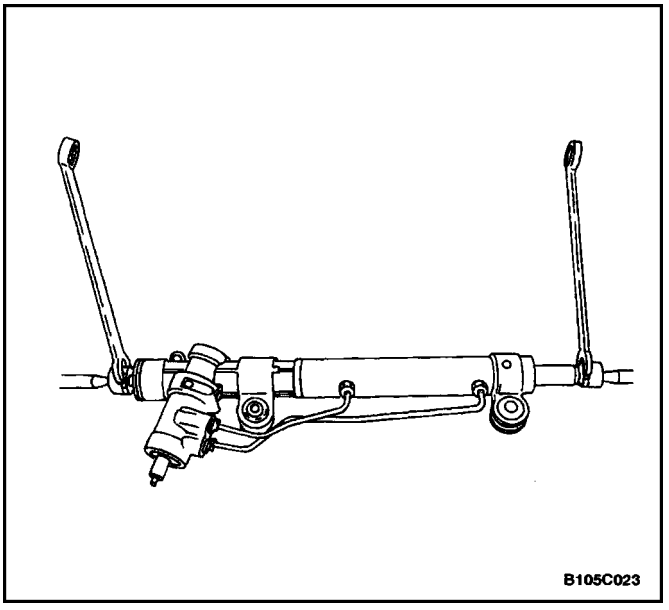
B105C023

Notice : To prevent the inner tie rods from loosening, use Loctite® 242 (or equivalent) on both inner tie rod connections to secure them to the rack shaft.

Important : The right and the left inner tie rods are unequal in length. Be sure to install the correct inner tie rod on the proper side of the power steering gear.

2. Firmly seat the inner tie rods against the rack and tighten both ends simultaneously.

   Tighten

   Tighten the inner tie rods to 100 N•m (74 lb–ft).

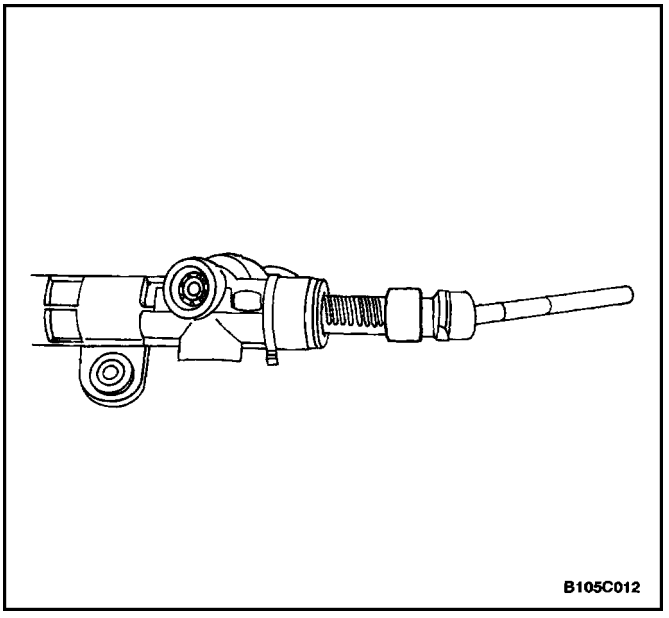
B105C012

3. Push the plastic retainer back onto the connection between the inner tie rod and the power steering gear rack.

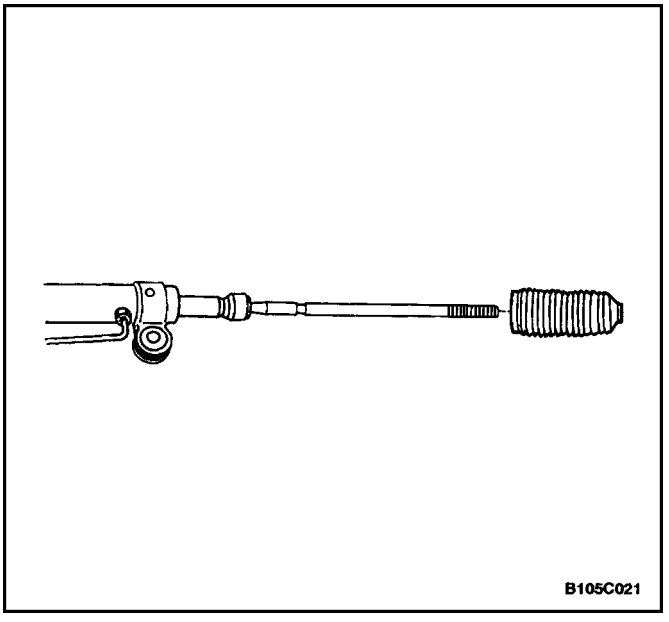
B105C021

4. Install the dust boot.

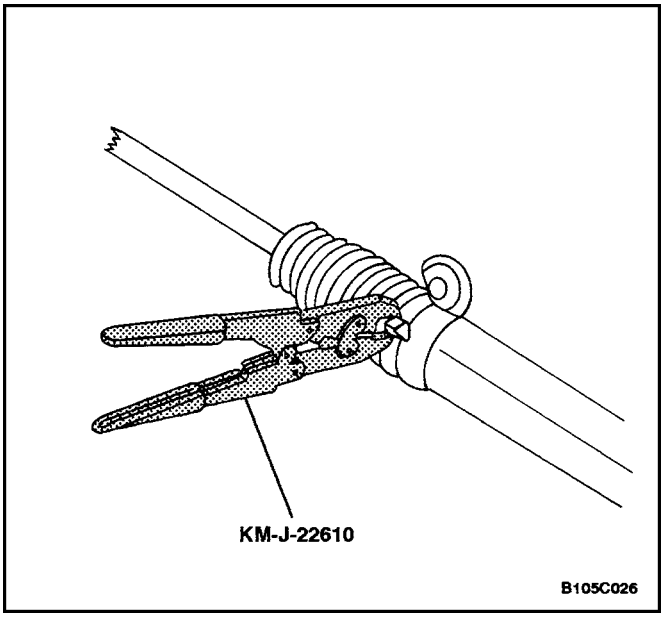

5. Install the cylinder end dust boot retaining clamps with the installer KM–J–22610.

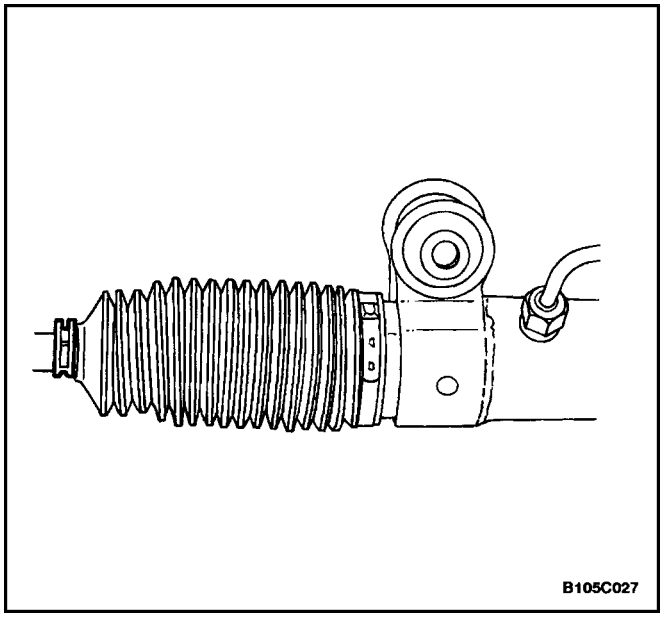

6. Install the tie rod end boot retaining clamps.

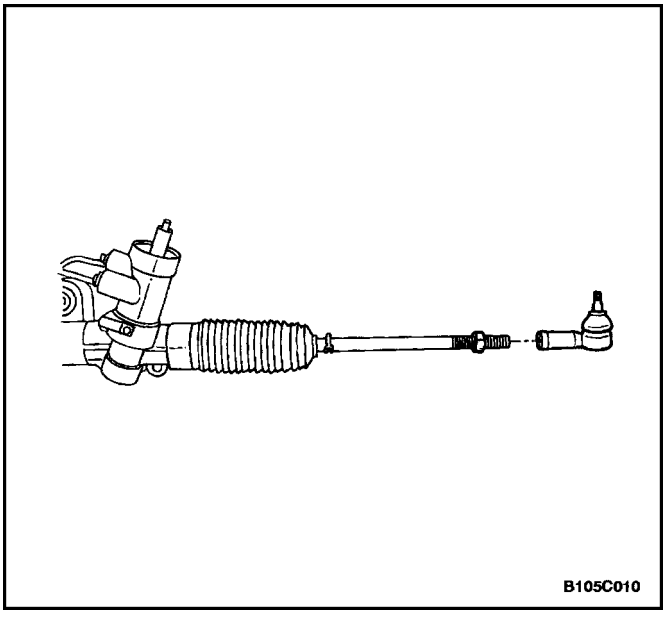

7. Reposition the adjusting nut to the marks on the inner tie rod and install the outer tie rod by twisting it onto the inner tie rod.
8. Perform a front toe adjustment. Refer to*Section 2B, Wheel Alignment.*
9. Tighten the adjusting nut.

   Tighten

   Tighten the outer tie rod adjusting nut to 22 N•m (16 lb–ft).
10. Install the rack bearing assembly into the rack and pinion steering assembly. Refer to”Rack Bearing”in this section.
11. Install the valve and pinion assembly into the rack and pinion steering assembly. Refer to”Valve and Pinion”in this section.
12. Install the rack and pinion steering assembly into the vehicle. Refer to”Rack and Pinion Assembly”in this section.

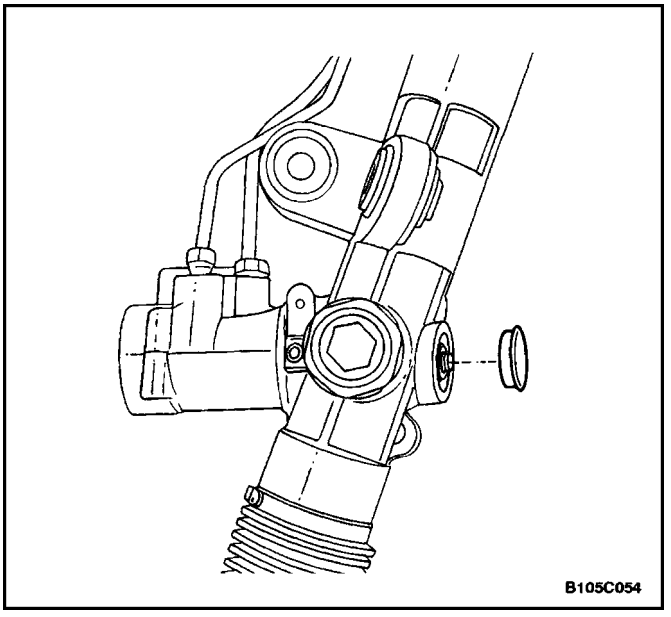

STUB SHAFT SEALS AND UPPER AND LOWER BEARING

Disassembly Procedure

1. Remove the rack and pinion steering assembly from the vehicle. Refer to"Rack and Pinion Assembly"in this section.
2. Remove the dust cover from the lower end of the housing.

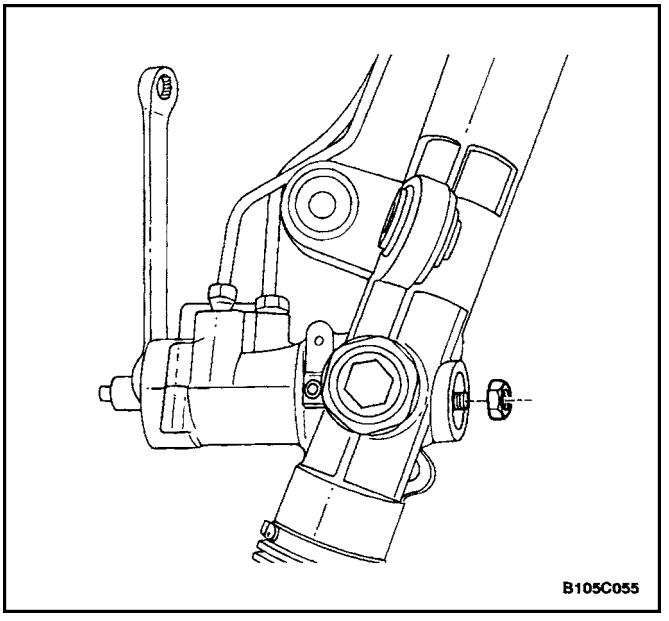

Notice : If the stub shaft is not held, damage to the pinion teeth will occur.

3. While holding the stub shaft with a wrench, remove the locknut from the pinion.

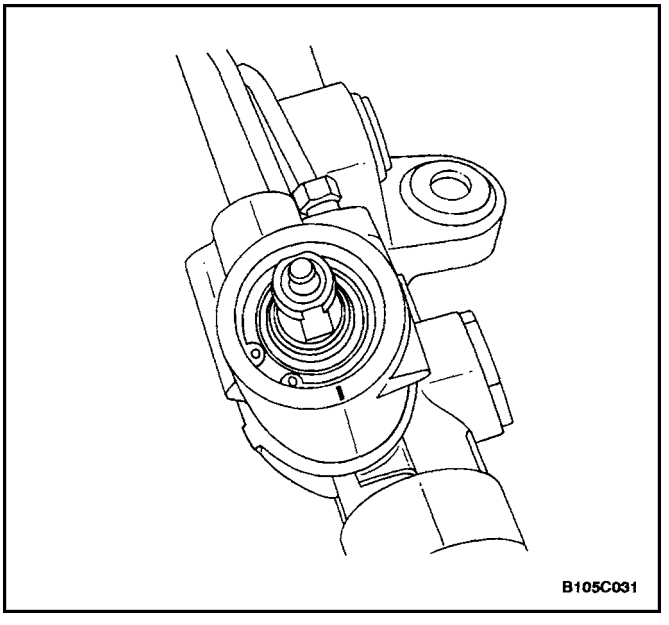

4. With the gear centered, mark the location of the stub shaft notch on the housing to aid in properly installing the valve and pinion assembly.

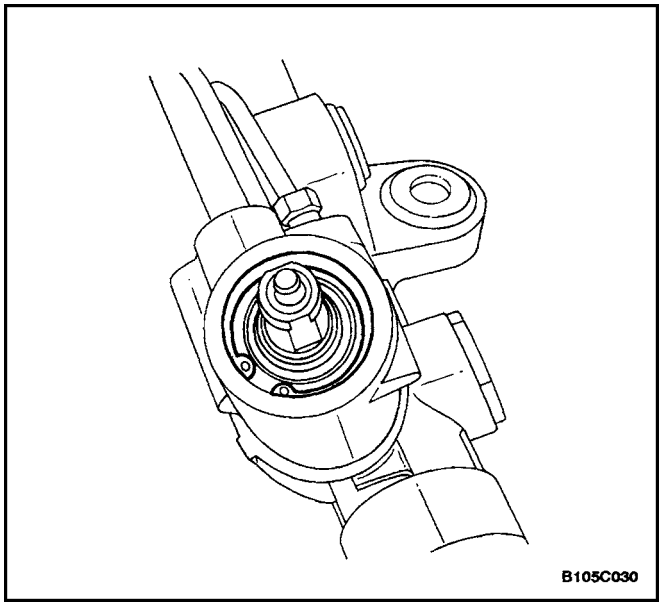

5. Remove the stub shaft retaining ring and, using an arbor press, press on the threaded end of the pinion until it is possible to remove the pinion and valve assembly from the housing.

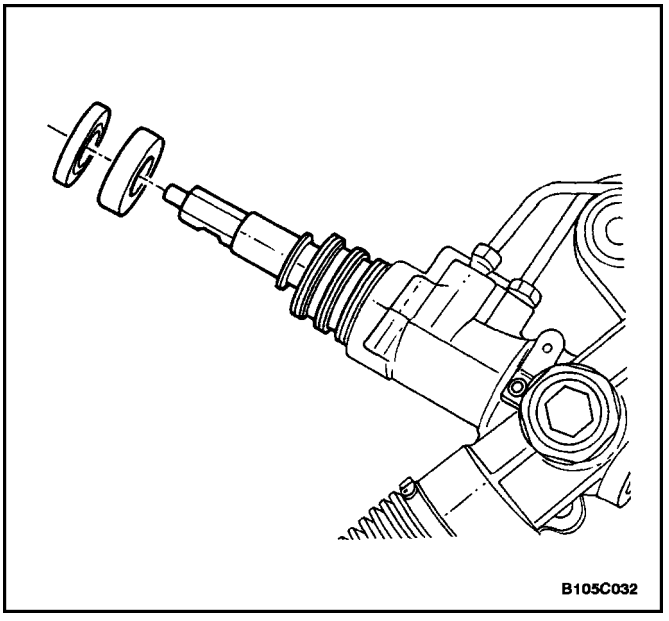

6. Remove the stub shaft dust seal the stub shaft bearing annulus assembly and the valve assembly from the housing. Discard the stub shaft dust seal.

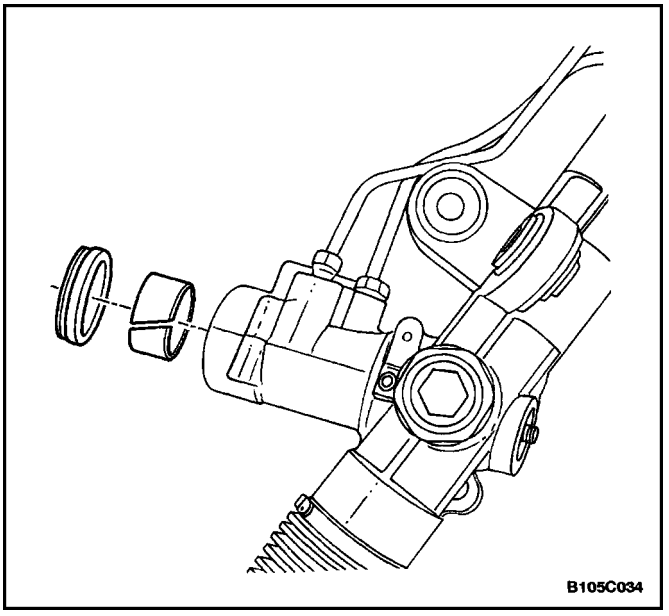

7. Remove the lower valve assembly bearing and the bushing.

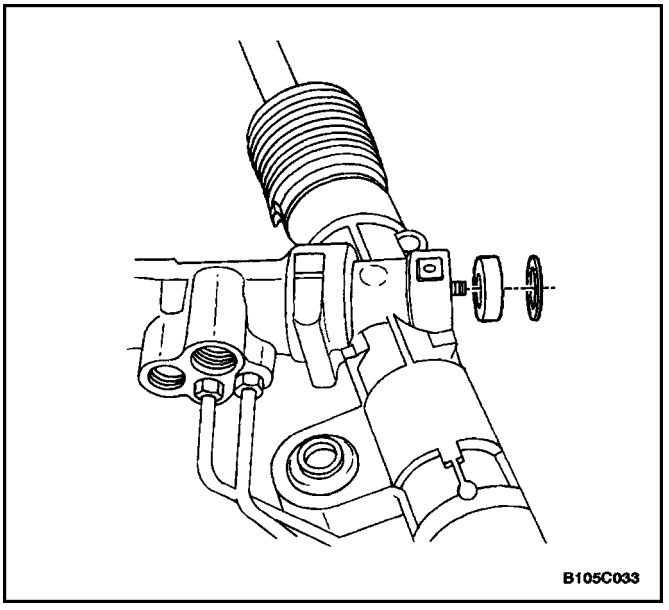

8. Remove the lower bearing assembly retaining ring and press the lower bearing assembly from the lower end of the housing..

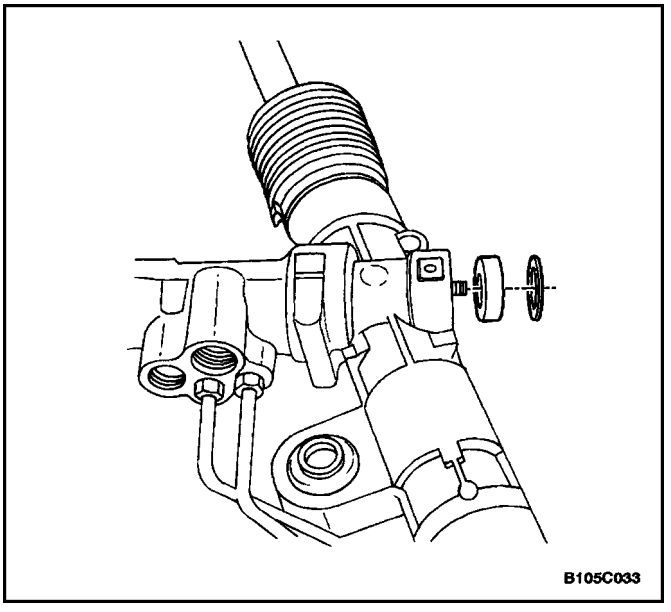

Assembly Procedure

Notice : Coat all the seals with power steering fluid to ensure proper sealing and prevent vehicle damage.

1. Install the lower bearing assembly and the lower bearing assembly retaining ring into the lower end of the housing.

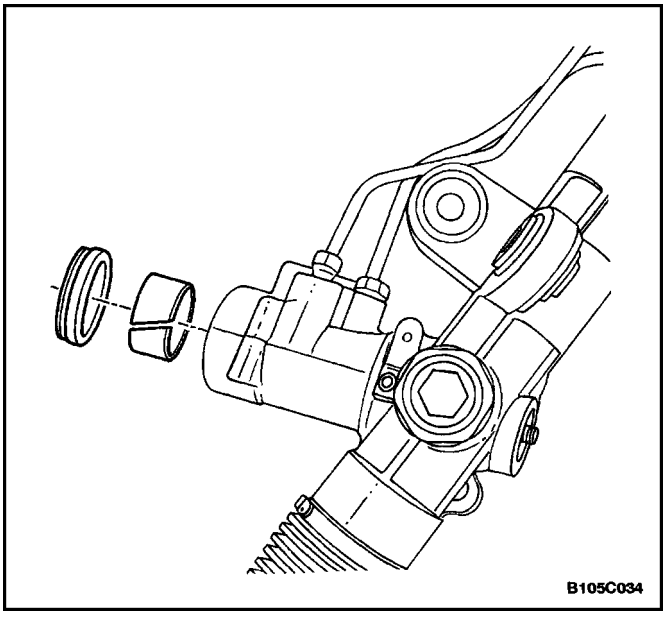

2. Install the lower valve assembly bearing and the bushing.

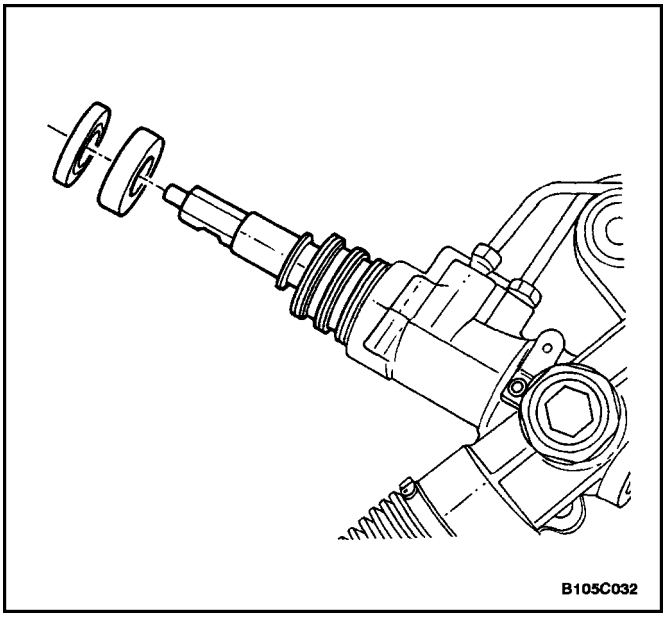

3. Center the rack in the housing.
4. Install the the valve assembly, the stub shaft bearing annulus assembly, and a new stub shaft dust seal into the housing.

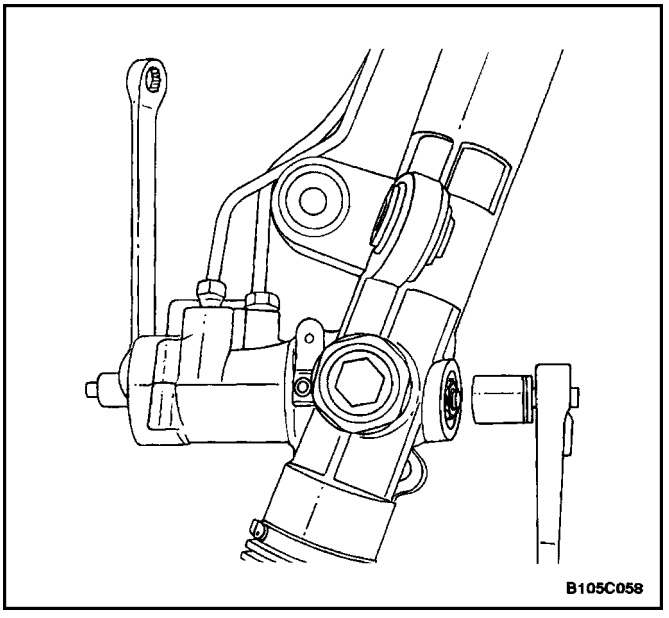

Important : When the valve and pinion assembly is fully seated in the housing, be sure that the notch in the stub shaft and the mark on the housing line up.

Notice : If the stub shaft is not held, damage to the pinion teeth will occur.

5. While holding the stub shaft, install the locknut onto the pinion shaft.

   Tighten

   Tighten the pinion locknut to 30 N•m (22 lb–ft).

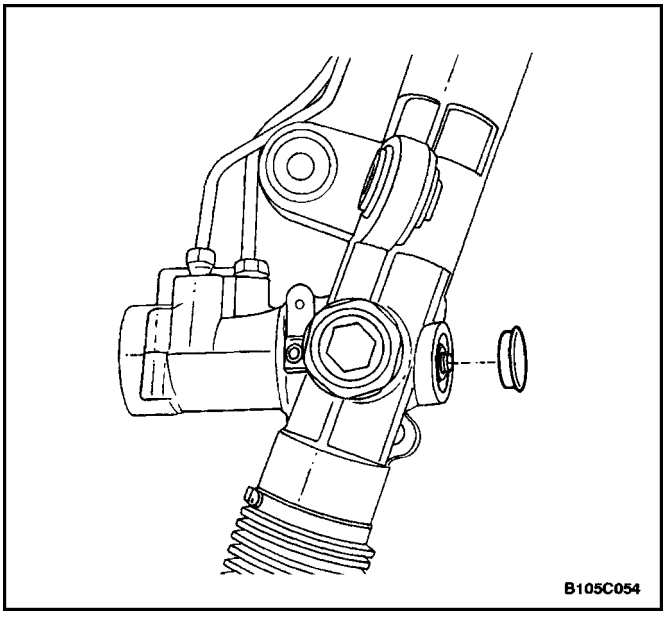

6. Replace the dust cover onto the housing.
7. Install the rack and pinion steering assembly. Refer to”Rack and Pinion Assembly”in this section.

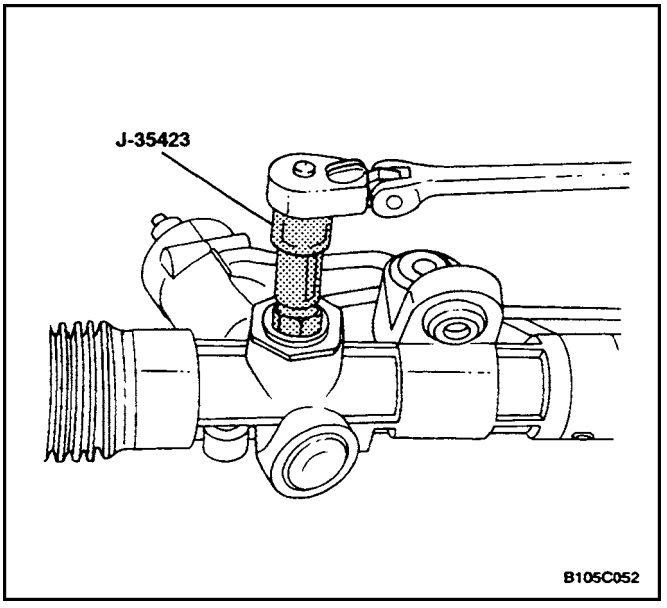

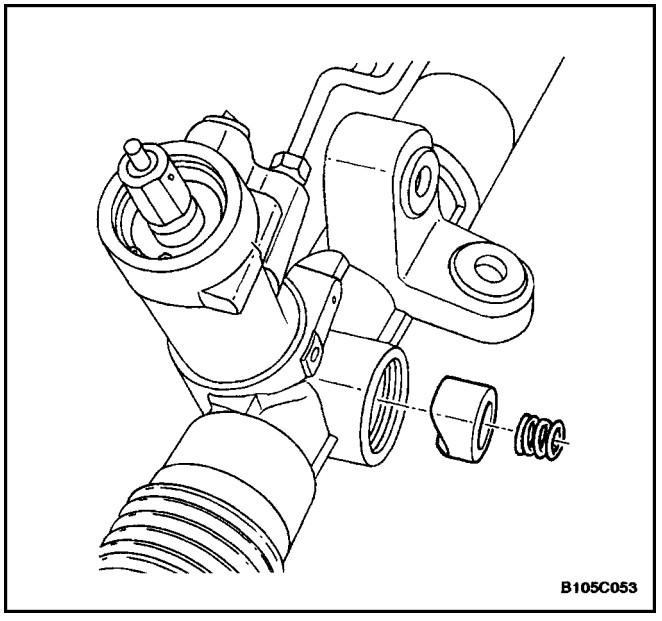

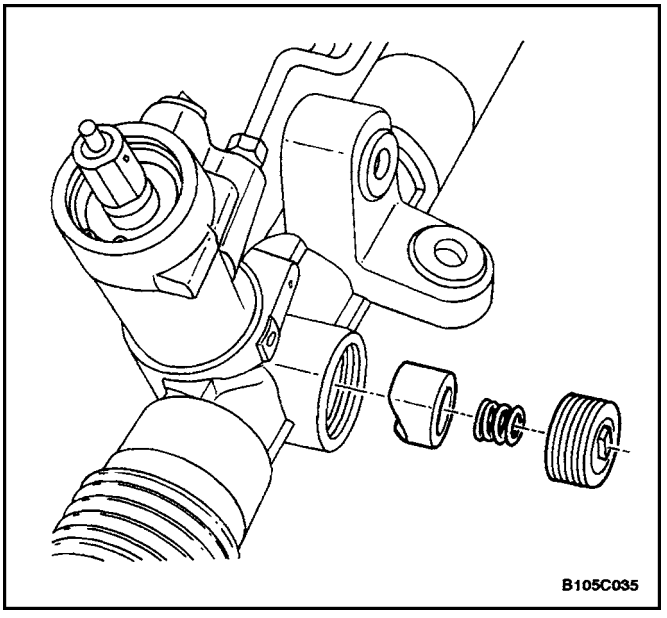

RACK BEARING

Tools Required

J–35423 Rack Guide Spring Cap Wrench

Disassembly Procedure

1. Remove the rack and pinion steering assembly from the vehicle. Refer to"Rack and Pinion Assembly"in this section.
2. Remove the adjuster plug locknut from the adjuster plug, and remove the adjuster plug from the housing with the rack guide spring cap wrench J–35423, or with a 19 mm allen wrench.
3. Remove the adjuster spring and the rack bearing.

Assembly Procedure

1. Coat the rack bearing, the adjuster spring, and the adjuster plug with lithiumbased grease and install them into the housing.

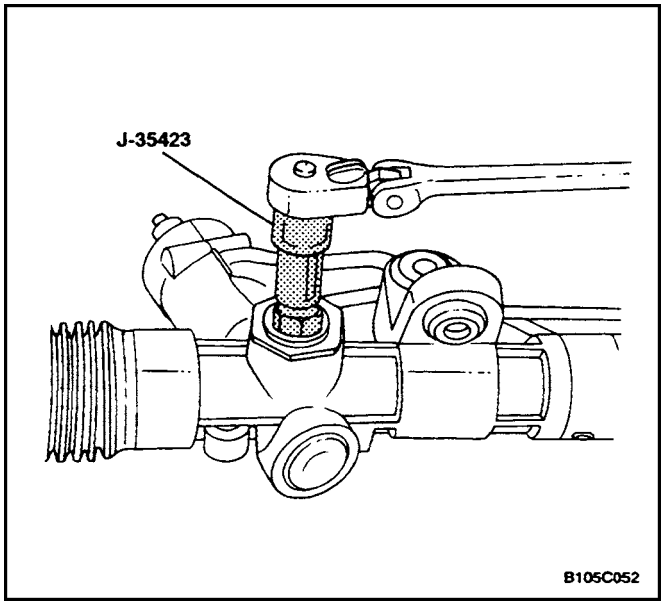

2. With the rack centered, turn the adjuster plug clockwise until a torque of 7 N•m (62 lb–in) is obtained, then back it off by 30 to 40 degrees. Check the pinion torque. Maximum pinion preloaded torque is 1 N•m (9 lb–in).
3. Thread the locknut on the adjuster plug and tighten it.

   Tighten

   Tighten the adjuster plug locknut to 70 N•m (52 lb–ft). while holding the adjuster plug stationary with the rack guide spring cap wrench J–35423 or with a 19 mm allen wrench.
4. Install the rack and pinion assembly. Refer to"Rack and Pinion Assembly"in this section.

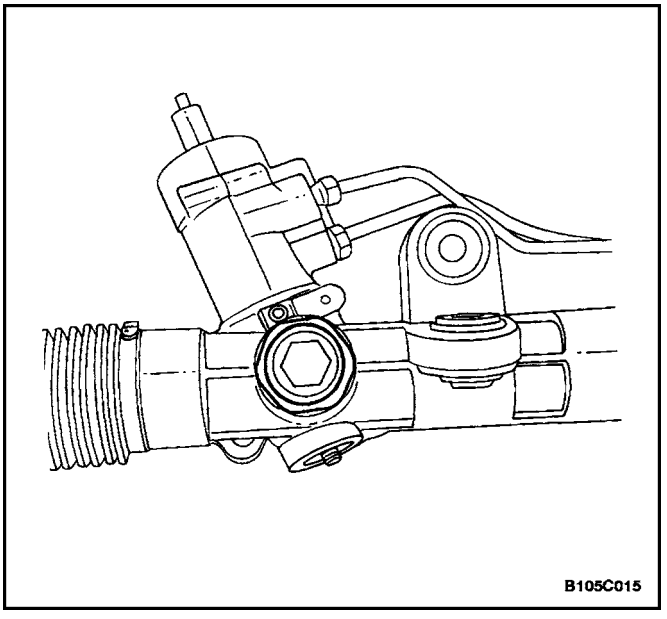

RACK BEARING PRELOAD ADJUSTMENT

Adjustment Procedure

1. Raise and suitably support the vehicle.
2. Center the steering wheel.
3. Remove the power steering gear. Refer to"Rack and Pinion Assembly"in this section.
4. Loosen the locknut and turn the adjuster plug clockwise until a torque of 5 N•m (44 lb–in) is obtained, then loosen it by 30 to 40 degrees.
5. Tighten the locknut on the adjuster plug while holding the adjuster plug stationary.

   Tighten

   Tighten the adjuster plug locknut to 70 N•m (52 lb–ft).
6. Install the power steering gear. Refer to"Rack and Pinion Assembly"in this section.
7. Be sure to check the returnability of the steering wheel to center position after adjustment.

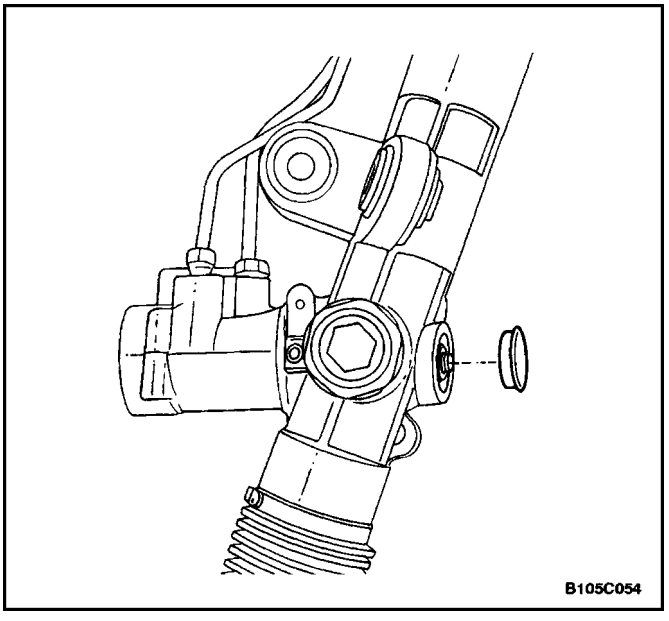

VALVE AND PINION

Disassembly Procedure

1. Remove the rack and pinion steering assembly from the vehicle. Refer to"Rack and Pinion Assembly"in this section.
2. Remove the dust cover from the lower end of the housing.

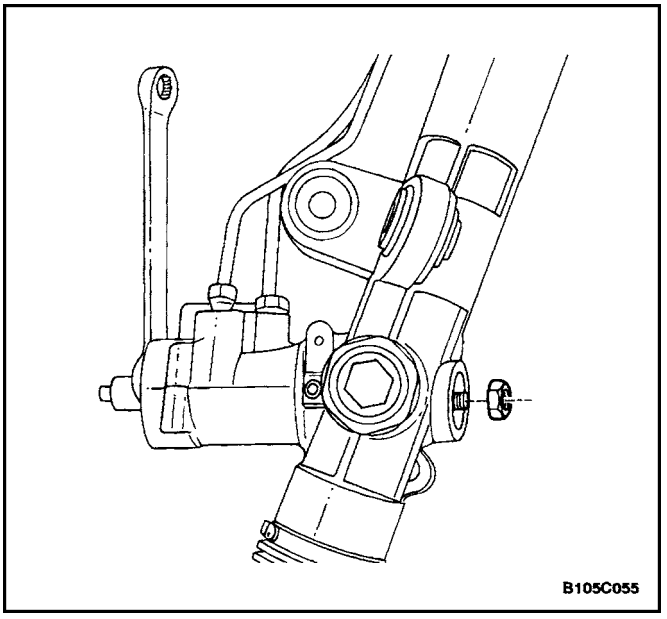

Notice : If the stub shaft is not held, damage to the pinion teeth will occur.

3. While holding the stub shaft, remove the locknut from the pinion.

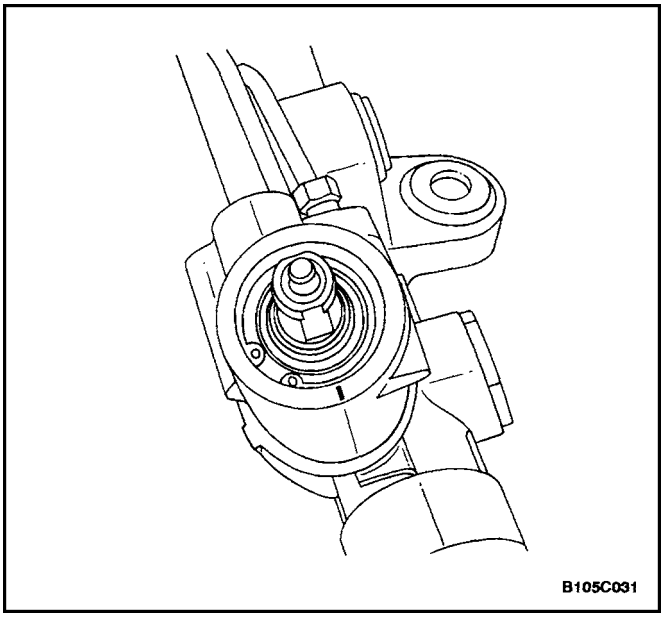

4. With the gear centered, mark the location of the stub shaft notch on the housing to aid in properly installing the pinion and valve assembly.

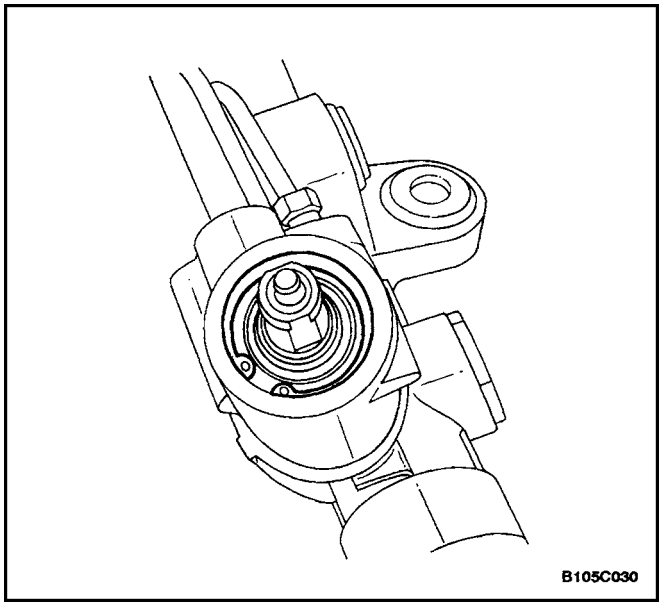

5. Remove the upper housing retaining ring and, using an arbor press, press on the threaded end of the pinion until it is possible to remove the valve and pinion assembly from the housing.

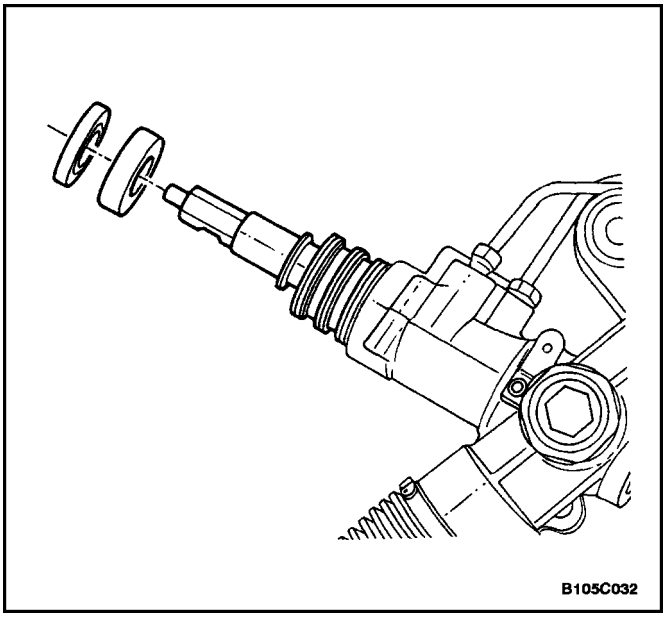

6. Remove the stub shaft dust seal, the stub shaft bearing annulus assembly, and the valve and pinion assembly from the housing.

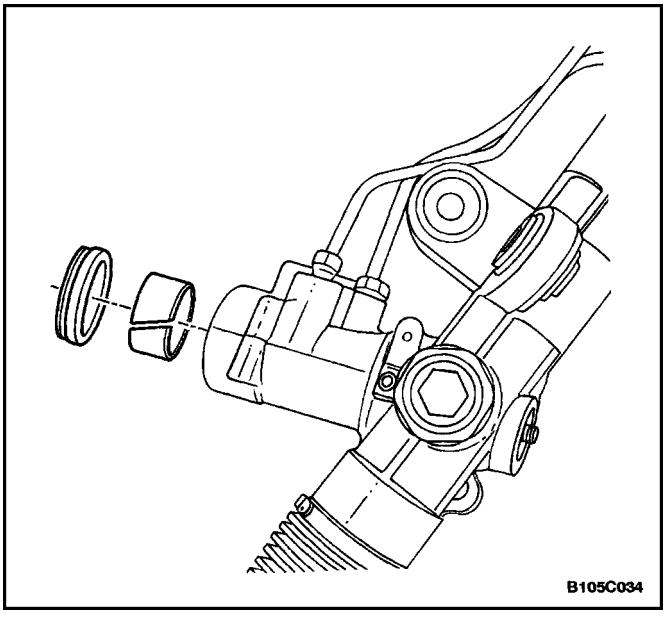

7. Inspect the valve body rings for wear or damage. Replace the valve body rings, as needed. Coat the rings with power steering fluid before installation.
8. Remove the lower pinion valve seal and bushing. Discard the seal.

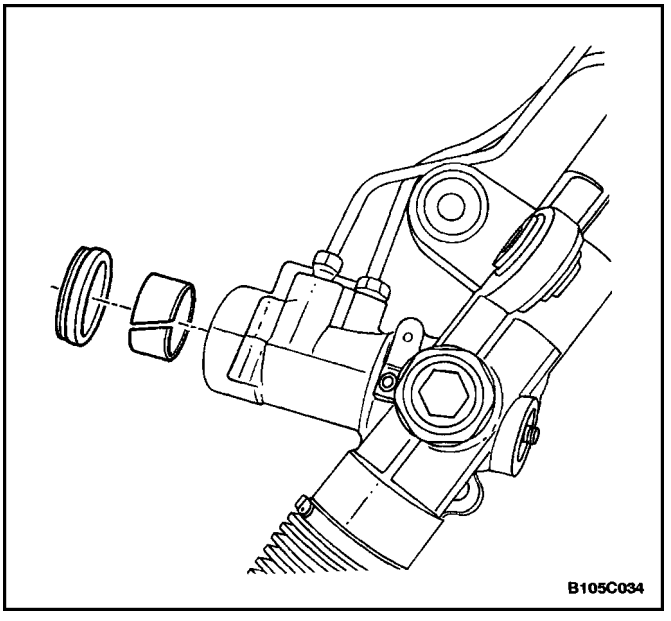

Assembly Procedure

Notice : Coat all of the seals and bushings with power steering fluid to ensure proper sealing and prevent vehicle damage.

1. Install the bushing and a new lower pinion valve seal.

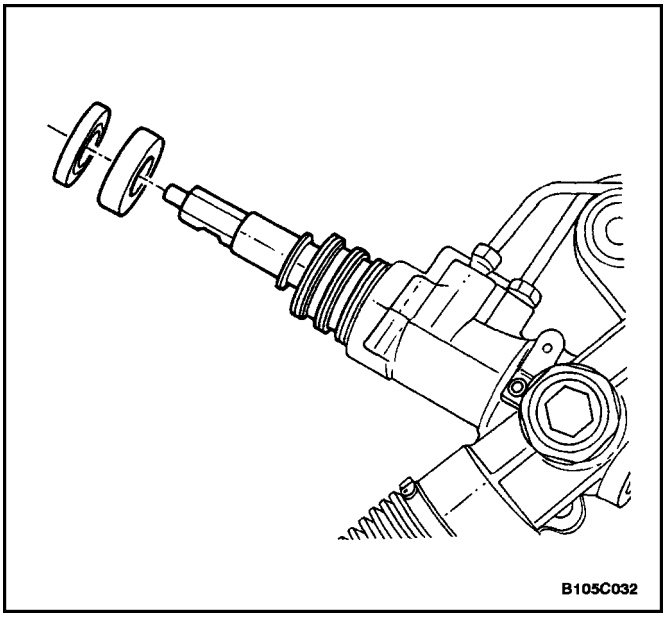
B105C032

Important : When the valve and pinion assembly is fully seated in the housing, be sure the notch in the stub shaft and the mark on the housing line up. If this is not done, the vehicle will not pass the straight–ahead check and will have poor steering performance.

2. Install the valve and pinion assembly, the stub shaft bearing annulus assembly, and the stub shaft dust seal.

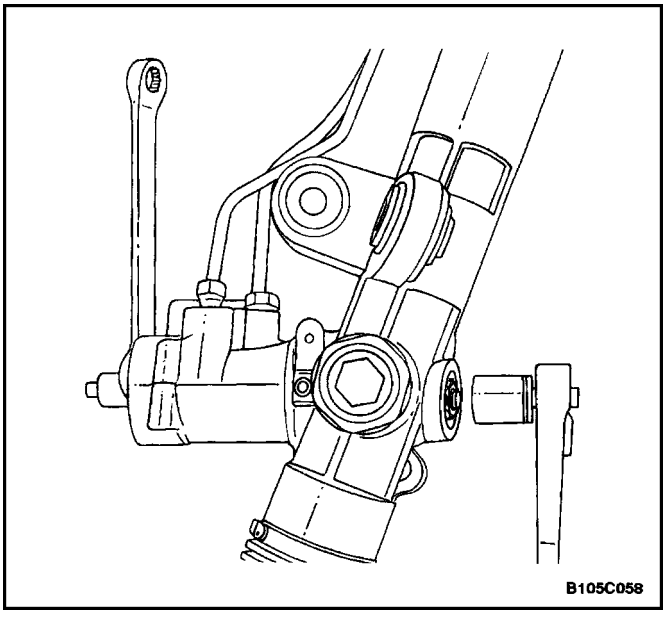
B105C058

Notice : If the stub shaft is not held, damage to the pinion teeth will occur.

3. While holding the stub shaft, tighten the locknut onto the pinion shaft.

   Tighten

   Tighten the pinion locknut to 30 N•m (22 lb–ft).

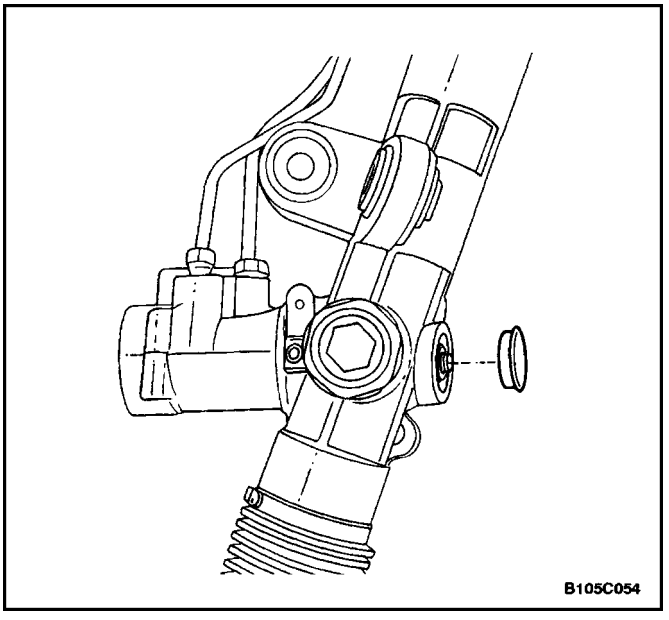
B105C054

4. Replace the dust cover onto the housing.
5. Install the rack and pinion steering assembly. Refer to”Rack and Pinion Assembly”in this section.
6. Perform the straight–ahead check. Refer to”Straight–Ahead Check”in this section.

GENERAL DESCRIPTION AND SYSTEM OPERATION

POWER RACK AND PINION

The power rack and pinion steering system has a rotary control valve that directs hydraulic fluid coming from the hydraulic pump to one side or the other side of the rack piston. The integral rack piston is attached to the rack. The rack piston converts hydraulic pressure to a linear force that moves the rack left or right. That force is then transmitted through the tie rods to the steering knuckles, which turn the wheels.

If power rack and pinion steering is not available, manual rack and pinion control is used; however, with this system, more steering effort is required. The movement of the steering wheel is transferred to the pinion. The rotary movement of the pinion is then transferred through the pinion threads, which mesh with teeth on the rack, thereby causing the rack to move in a linear direction.

A vane–type of hydraulic pump provides hydraulic pressure for both steering systems.

SECTION : 6B

POWER STEERING PUMP

TABLE OF CONTENTS

SPECIFICATIONS 6B–1
GENERAL SPECIFICATIONS 6B–1
FASTENER TIGHTENING SPECIFICATIONS 6B–1
SPECIAL TOOLS 6B–2
SPECIAL TOOLS TABLE 6B–2
DIAGNOSIS 6B–2
POWER STEERING PUMP DIAGNOSIS 6B–2
MAINTENANCE AND REPAIR 6B–3
ON–VEHICLE SERVICE 6B–3
SERPENTINE ACCESSORY DRIVEBELT 6B–3
PUMP ASSEMBLY 6B–4
UNIT REPAIR 6B–10
PUMP 6B–10
GENERAL DESCRIPTION AND SYSTEM OPERATION 6B–11
POWER STEERING PUMP 6B–11

SPECIFICATIONS

GENERAL SPECIFICATIONS

Application	Description
Lubricant	Power Steering Fluid DEXRON®–III
Pressure	7 500 kPa (1088 psi)

FASTENER TIGHTENING SPECIFICATIONS

Application	N•m	Lb–Ft	Lb–In
Accessory Mounting Bracket Bolt 35 26			–
Air Conditioning Compressor Bolts 35		26	–
Air Conditioning Compressor Rear Bracket Bolts	20	15	–
Air Conditioning Refrigerant Line Clamp Bolts	4	–	35
Air Filter Enclosure Bolts	4	–	35
High–Pressure Hose Fitting	28	21	–
Power Steering Pump Nuts	20	15	–
Power Steering Pump Bolts (Upper and Lower) 20		15	–
Power Steering Upper Bracket Link Bolts (Front and Rear)	25	18	–
Serpentine Accessory Drive Belt Tensioner Pulley Bolt	20	15	–

SPECIAL TOOLS

SPECIAL TOOLS TABLE

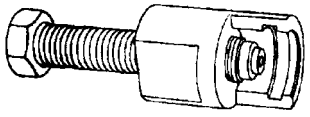 B105B001	J–25034–B Power Steering Pump Pulley Remover

DIAGNOSIS

POWER STEERING PUMP DIAGNOSIS

Foaming or Milky Power Steering Fluid (Air in Fluid)

Checks	Action
Check for internal leakage in the power steering pump,causing an overflow.	Repair the internal pump leakage. Bleed the system.
Check for a low fluid level.	Repair the internal pump leakage. Bleed the system. Cold temperatures will cause the air bubbles in the system if the fluid level is low.

Low Pressure Due to Power Steering Pump

Checks	Action
Check for an external leakage of the power steering pump at the seals.	Replace the seals. Repair the leak. Bleed the system.
Check for a worn serpentine accessory drive belt.	Replace the serpentine accessory drive belt.

Low Pressure Due to Power Steering Gear

Checks	Action
Check for a scored housing bore.	Replace the housing bore.
Check for leakage at the valve rings or the seals.	Repair the leak. Bleed the system.

Groaning Noise in the Power Steering Pump

Checks	Action
Check for air in the power steering fluid.	Perform the checks listed in ”Foaming or Milky Power Steering Fluid (Air in Fluid)” above.
Check for a low level of power steering fluid.	Repair any internal or external leaks. Bleed the system.
Check for a loose mounting of the power steering pump.	Tighten the pump mounting to specifications.

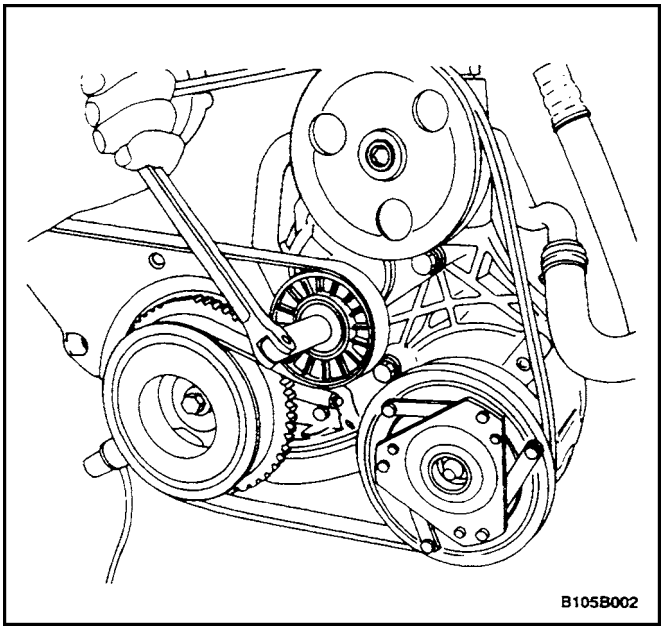

MAINTENANCE AND REPAIR

ON–VEHICLE SERVICE

SERPENTINE ACCESSORY DRIVEBELT

Removal Procedure

1. Remove the splash shield from the right front wheel well to gain access to the tensioner.
2. Use a wrench to turn the tensioner bolt clockwise, compressing the tensioner, and releasing the tension on the serpentine accessory drive belt.
3. Remove the serpentine accessory drive belt.

Installation Procedure

1. Use a wrench to turn the tensioner bolt clockwise, compressing the tensioner, and releasing the tension on the serpentine accessory drive belt.
2. With the wrench in place on the tensioner bolt, have an assistant loop the serpentine accessory drive belt loosely over the pulleys.

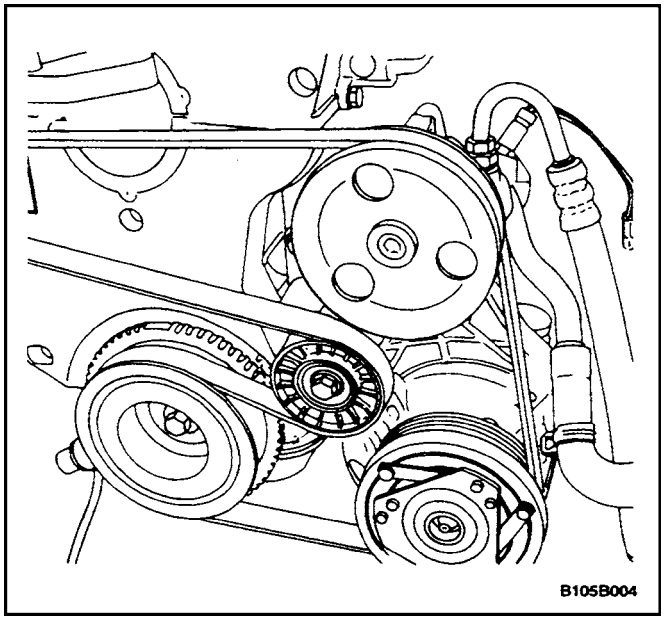

3. Slip the serpentine accessory drive belt over the tensioner.
4. Remove the wrench from the tensioner bolt and the belt will tighten itself.

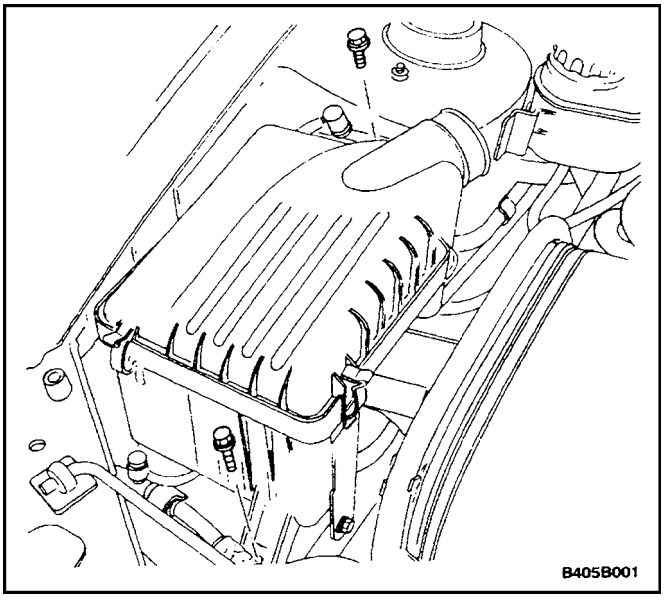

PUMP ASSEMBLY

Removal Procedure

1. Remove the air filter enclosure.

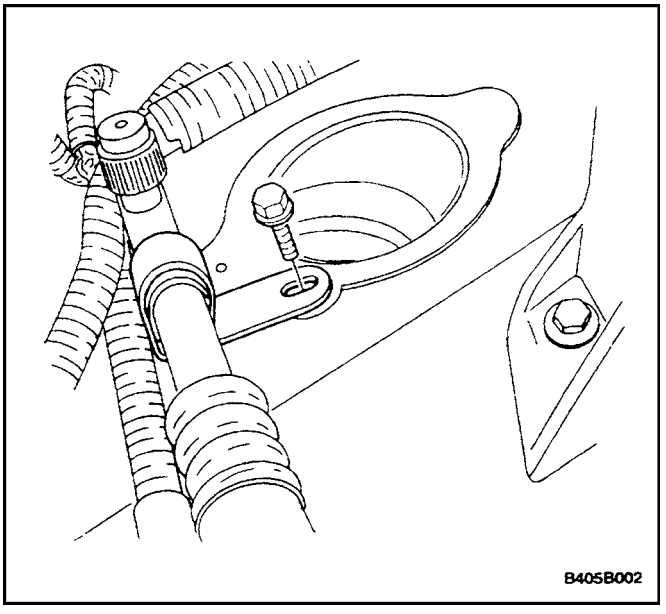

2. Remove the bolt from the A/C refrigerant line clamp.

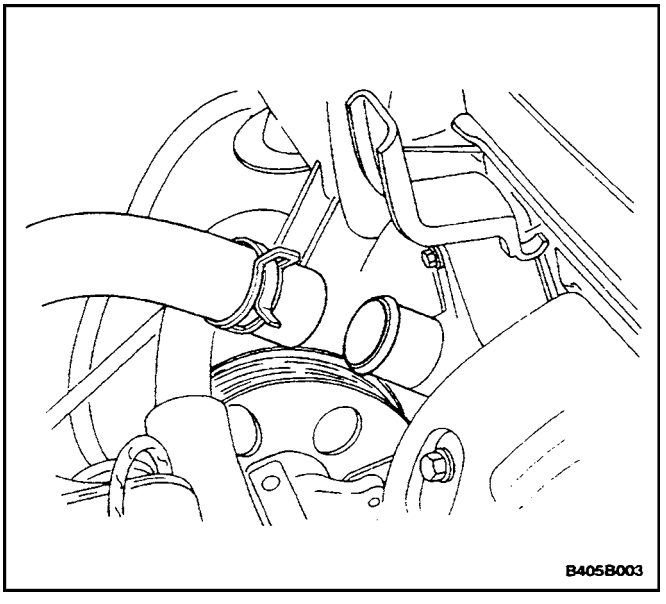

3. Position a drain pan to catch coolant that will drain from the radiator drain cock.
4. partially open the coolant reservoir cap to vent the system. Open the radiator drain cock and drain the coolant until it is below the level of the thermostat opening. Refer to*Section 1D, Engine Cooling.*
5. Place shop rags in position to absorb spills from the coolant hose and the thermostat housing.
6. Remove the coolant hose from the thermostat housing.

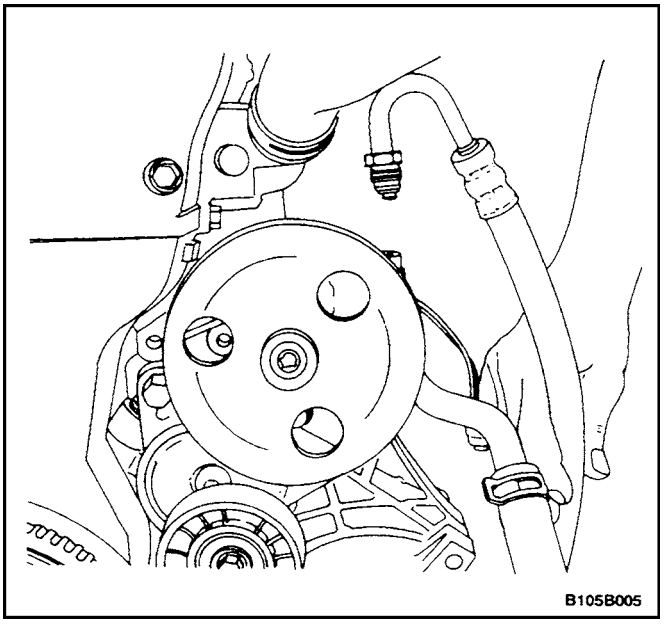

7. Remove the thermostat housing. Refer to*Section 1D, Engine Cooling.*
8. Position a drain pan to catch the fluid that will drain from the power steering pump hoses.
9. Disconnect the high–pressure hose from the power steering pump.

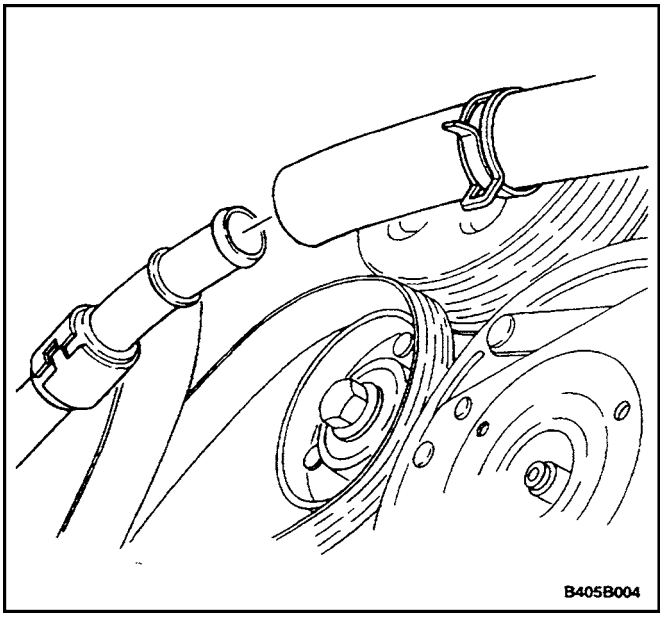

10. Remove the serpentine accessory drive belt. Refer to”Serpentine Accessory Drive Belt” in this section.
11. Raise and suitably support the vehicle.
12. Remove the engine under cover. Refer to*Section 9N, Frame and Underbody.*
13. Remove the rubber supply hose from the metal supply pipe.

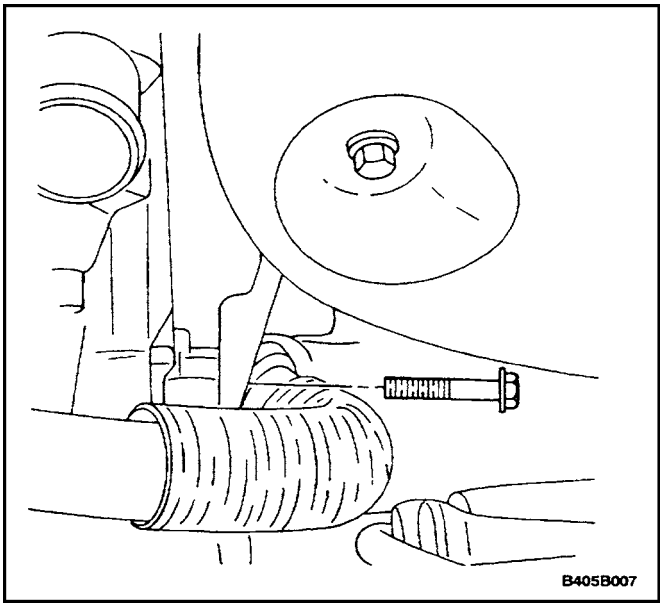

14. Remove the lower bolt from the pump bracket.

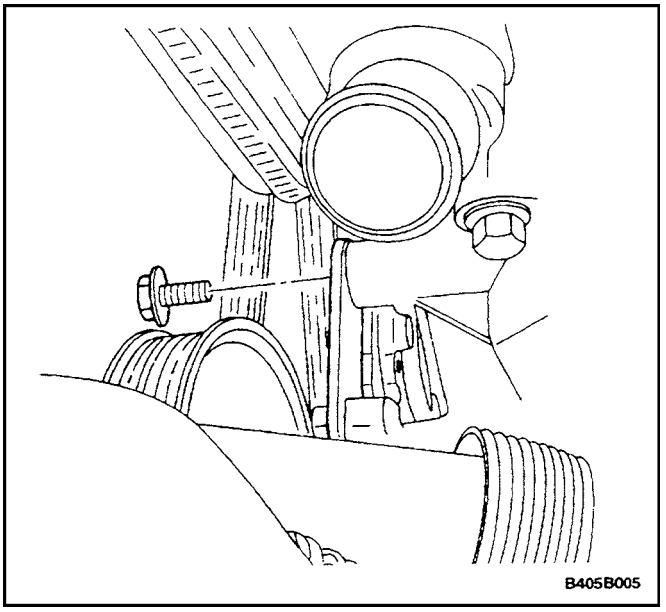

15. Lower the vehicle.
16. Remove the bolt from the rear hole of the upper bracket link.

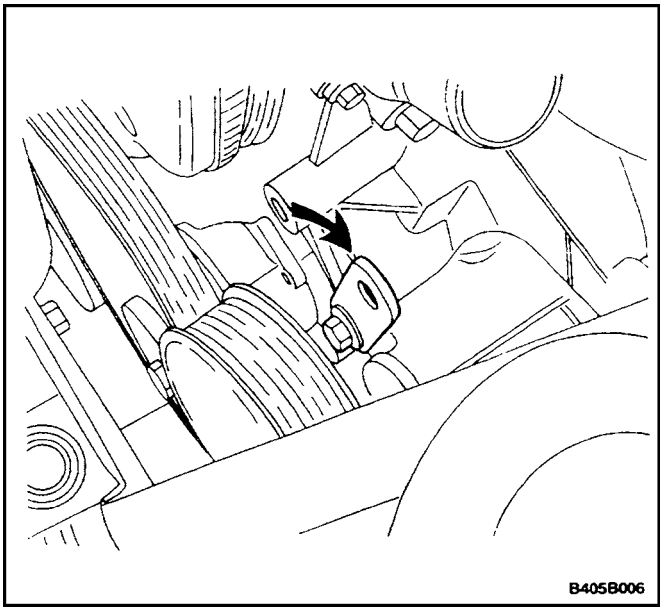

17. Loosen, but do not remove, the bolt at the front of the upper bracket link.
18. Swing the upper bracket link to a vertical position to remove the pump easier.

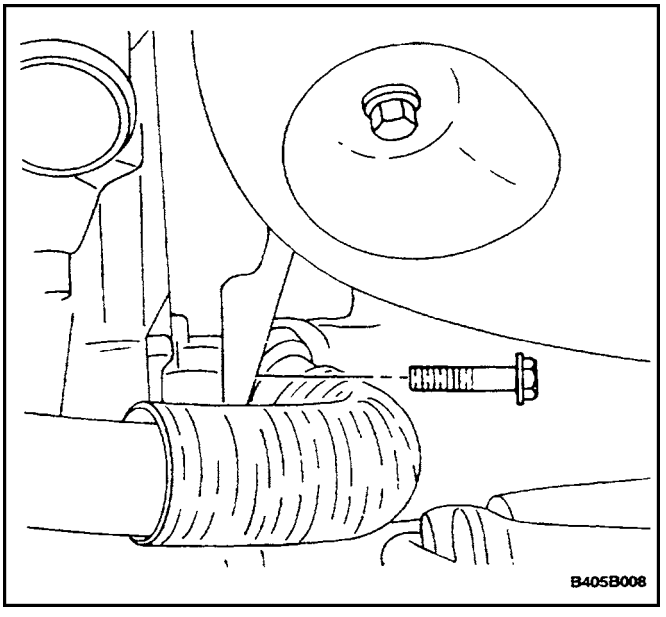

19. Remove the upper bolt from the pump bracket.
20. Remove the pump.

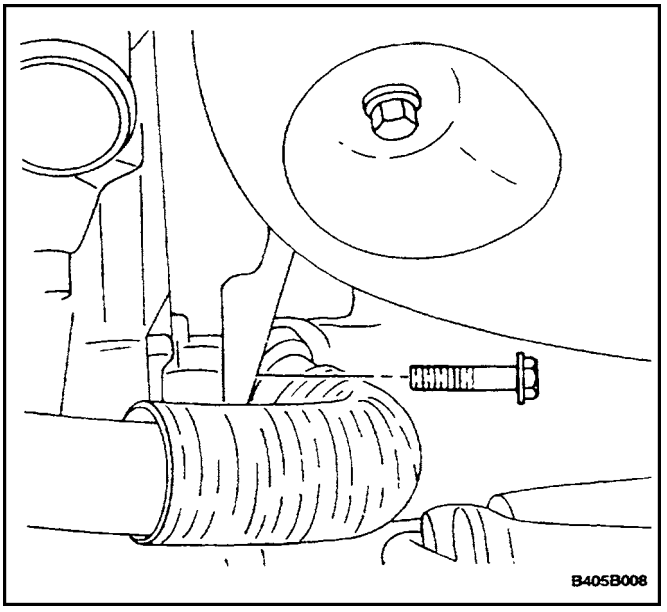

Installation Procedure

1. Lower the pump into the vehicle, to a point just below its final mounting position.
2. Install the thermostat housing. Refer to*Section 1D, Engine Cooling.*
3. Install the pump to the pump bracket.
4. Install the upper bolt to the pump bracket.

Tighten

Tighten the power steering pump upper bolt to 20 N•m (15 lb–ft).

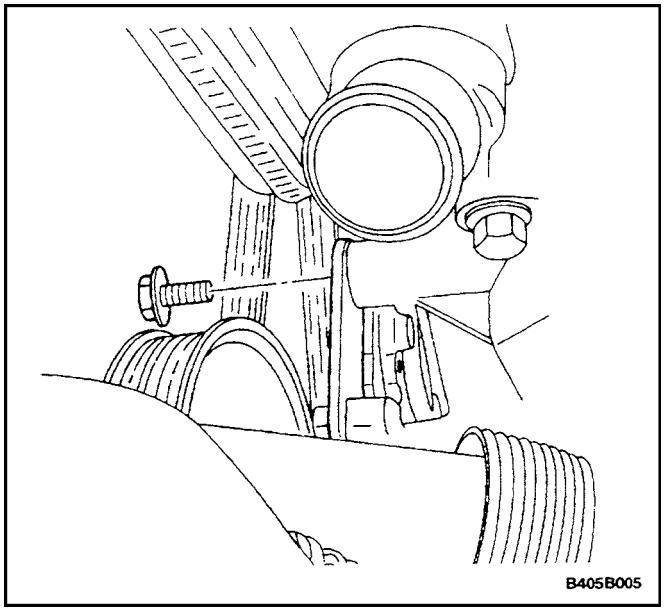

5. Swing the upper bracket link to its original position.
6. Install the bolt to the rear hole of the upper bracket link.

Tighten

Tighten the rear power steering upper bracket link bolt to 25 N•m (18 lb–ft).

Tighten

Tighten the front power steering upper bracket link bolt (not removed) to 25 N•m (18 lb–ft).

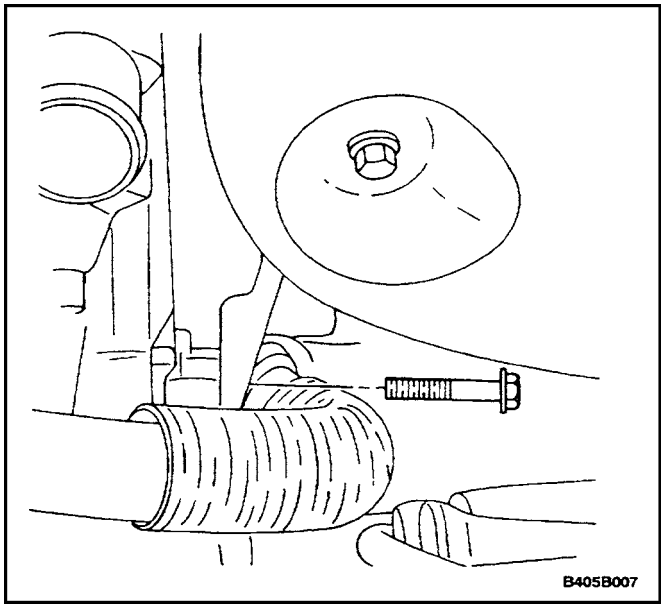

7. Raise and suitably support the vehicle.
8. Install the lower bolt to the pump bracket.

Tighten

Tighten the power steering pump lower bolts to 20 N•m (15 lb–ft).

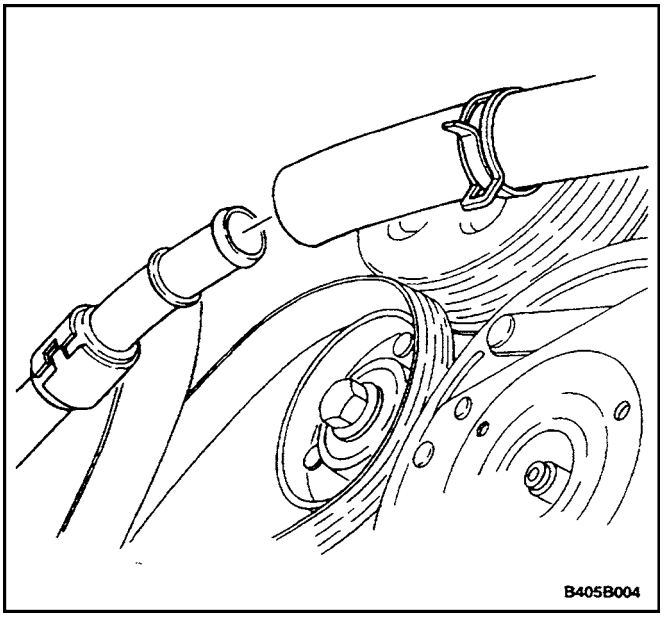

9. Install the rubber supply hose to the metal supply pipe.

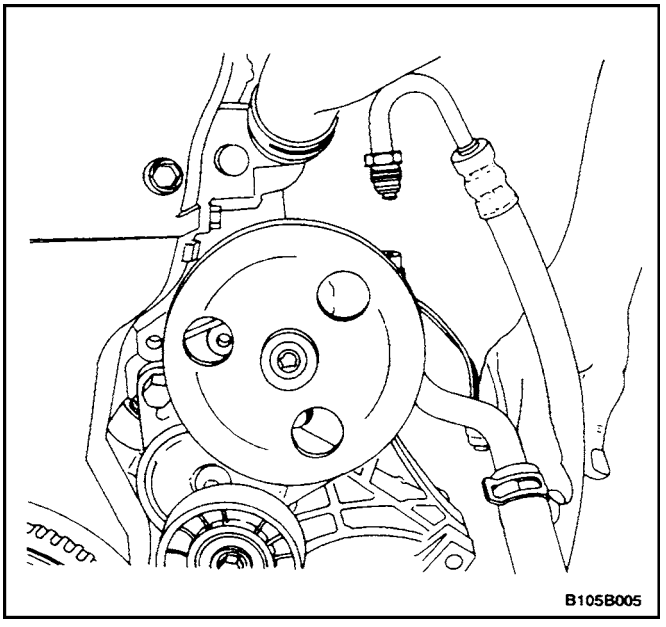

10. Install the engine under cover. Refer to*Section 9N, Frame and Underbody.*
11. Lower the vehicle.
12. Install the serpentine accessory drive belt. Refer to*"Serpentine Accessory Drive Belt"*
13. Connect the high–pressure hose to the power steering pump.

    Tighten

    Tighten the high–pressure hose fitting to 28 N•m (21 lb–ft).

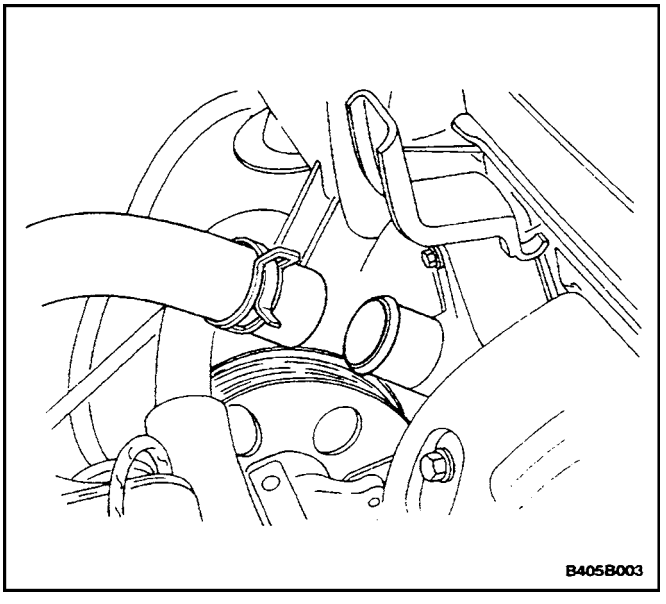

14. Install the coolant hose to the thermostat housing.

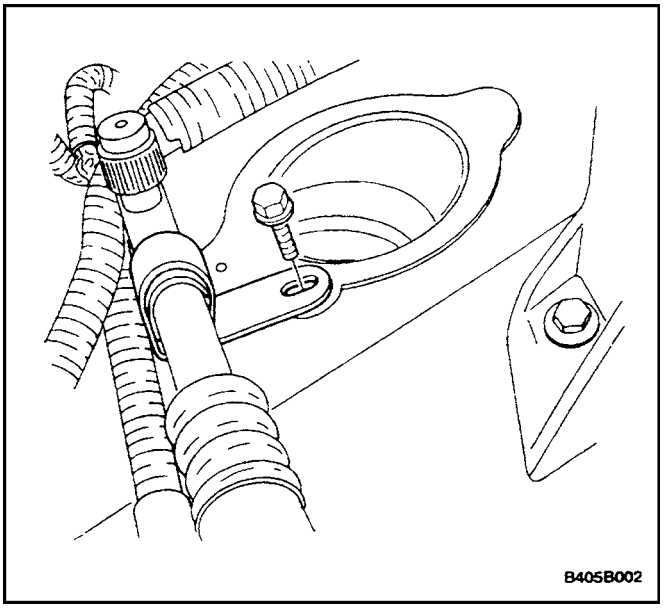

15. Install the bolt tho the A/C refrigerant line clamp.

Tighten

Tighten the A/C refrigerant line clamp bolt to 4 N•m (35 lb–ft).

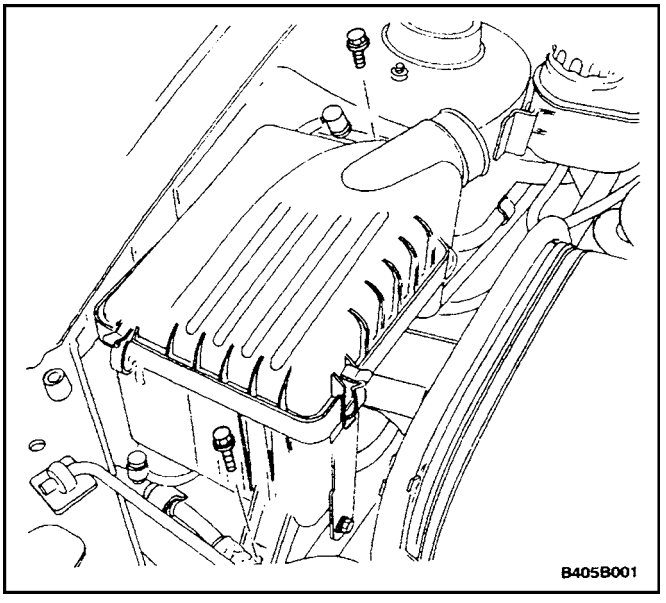

16. Install the air filter enclosure.

Tighten

Tighten the air filter enclosure bolts to 4 N•m (35 lb–in).

17. Refill the engine coolant and tighten the coolant reservoir cap.
18. Refill the power steering fluid. Refer to*Section 6A, Power Steering System.*
19. Bleed the power steering system. Refer to*Section 6A, Power Steering System.*

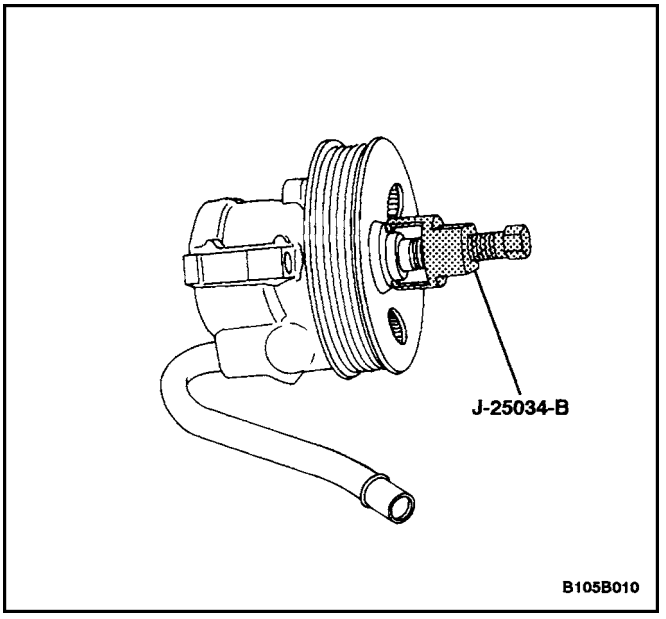

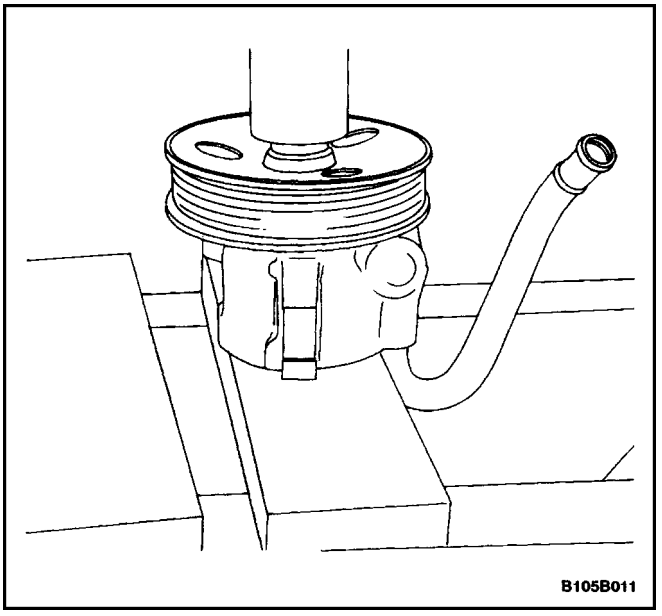

UNIT REPAIR

PUMP

Tools Required

J 25034–B Power Steering Pump Pulley Remover

Disassembly Procedure

Important : The power steering pump in this vehicle is not serviceable. Replace, do not repair, a faulty power steering pump. Refer to”Power Steering Pump Diagnosis”in this section.

1. For vehicles equipped with the EVO only, remove the power steering pump from the vehicle. Refer to”Pump Assembly”in this section.
2. Using the power steering pump pulley remover J 25034–B, press the power steering pump from the pulley.

Assembly Procedure

1. Press the power steering pump pulley onto the power steering pump using a hydraulic press.
2. Install the power steering pump onto the vehicle. Refer to”Pump Assembly”in this section.

GENERAL DESCRIPTION AND SYSTEM OPERATION

POWER STEERING PUMP

The power steering pump is a multivaned hydraulic pump.

The serpentine accessory drive belt on the engine drives the power steering pump.

The power steering pump provides the hydraulic pressure to the power steering gear.

The power steering gear uses the hydraulic pressure to assist in steering the vehicle.

The power steering system uses a remote reservoir in order to make available more space in the engine compartment.

SECTION : 6A

POWER STEERING SYSTEM

TABLE OF CONTENTS

SPECIFICATIONS 6A–1
FASTENER TIGHTENING SPECIFICATIONS . 6A–1
SPECIAL TOOLS 6A–1
SPECIAL TOOLS TABLE 6A–1
DIAGNOSIS 6A–2
POWER STEERING SYSTEM PRESSURE TEST 6A–2
POWER STEERING SYSTEM LEAK TEST ... 6A–2
MAINTENANCE AND REPAIR 6A–3
ON–VEHICLE SERVICE 6A–3
BLEEDING THE POWER STEERING SYSTEM 6A–3
CHECKING AND ADDING FLUID 6A–3
FLUID RESERVOIR 6A–4
HOSES AND PIPES 6A–6
GENERAL DESCRIPTION AND SYSTEM OPERATION 6A–13
POWER STEERING SYSTEM 6A–13

SPECIFICATIONS

FASTENER TIGHTENING SPECIFICATIONS

Application	N•m	Lb–Ft	Lb–In
Air Cleaner Housing Bolts	12	–	106
Power Steering Line Fittings–Cylinder End	27	20	–
Power Steering Line Fittings–Valve End	18	13	–
Power Steering Pump Pressure Line Union Nut	27	20	–
Steering Gear Inlet and Outlet Pipe Fittings	27	20	–

SPECIAL TOOLS

SPECIAL TOOLS TABLE

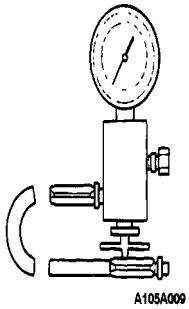 A105A009	KM–354–B Pressure Test Gauge Kit

DIAGNOSIS

POWER STEERING SYSTEM PRESSURE TEST

Tools Required
KM–354–B Pressure Test Gauge Kit
Check the fluid pressure as follows to determine whether the trouble is in the pump or the gear unit.

Test Procedure

1. Check the power steering fluid level and the power steering pump belt tension. Refer to"Checking and Adding Fluid" in this section and*Section 6B, Power Steering Pump.*
2. Disconnect the high pressure line at the pump. Use a small container to catch any fluid.
3. Connect the hose of the pressure test gauge kit KM–354–B to the power steering pressure hose from the power steering pump.
4. Place the gear selector lever in PARK (automatic transaxle–equipped vehicles) or NEUTRAL (manual transaxle–equipped vehicles). Set the parking brake.
5. Open the gauge valve fully.
6. Start the engine and let it idle.
7. Turn the steering wheel from lock to lock several times to warm the fluid to operating temperature.
8. Increase the engine speed to 1,500 rpm.

Notice : The power steering pump could be damaged if the valve is fully closed for more than 5 seconds.

9. Close the gauge valve fully, and read the pressure. The pump pressure with the valve closed should be between 7 088 kPa to 8 619 kPa (1,028 psi to 1,250 psi).
10. Immediately open the gauge valve fully.
11. Turn the steering wheel all the way to the left and the right. If the pressure is within the specified limits, the problem is not in the pump. Check the power steering gear for leaks.

POWER STEERING SYSTEM LEAK TEST

General Procedure

Inspect the following:

- The fluid reservoir for overfill.
- Fluid for aeration and overflow.
- The hoses for loose connections.
- The torsion bar, stub shaft and adjuster seals for leaks.
- The component sealing surfaces for damage.

Important : Verify the exact point of the leak. The point from which the fluid is dripping is not necessarily the point at which the system is leaking. When service is required, clean the leak area upon disassembly, replace the leaking seal, check the component sealing surfaces for damage and reset the torque bolt to specifications, where required.

External Leak Check

The purpose of this procedure is to pinpoint the location of the leak. In some cases, the leak can be easily located, but seepage–type leaks may be harder to find. To locate seepage leaks, use the following method:

1. With the engine off, wipe dry the complete power steering system.
2. Check the power steering fluid level in the pump's reservoir. Adjust the fluid level as necessary. Refer to"Checking and Adding Fluid"in this section.

Notice : Do not hold the steering wheel at a stop for any length of time as this can damage the power steering pump.

3. Start the engine. Turn the steering wheel counterclockwise and clockwise from stop to stop several times.
4. Find the exact area of the leak and repair it.

MAINTENANCE AND REPAIR

ON–VEHICLE SERVICE

BLEEDING THE POWER STEERING SYSTEM

If the power steering hydraulic system has been serviced, an accurate fluid level reading cannot be obtained until the air is bled from the system. Follow these steps to bleed the air from the system.

1. Turn the wheels all the way to the left and add the power steering fluid to the MIN mark on the fluid level indicator.

Notice : When adding fluid or making a complete fluid change, always use DEXRON®–III power steering fluid. Failure to use the proper fluid will cause hose and seal damage and fluid leaks.

2. Start the engine. With the engine running at fast idle, recheck the fluid level. If necessary, add fluid to bring the level up to the MIN mark.
3. Bleed the system by turning the wheels from side to side without reaching the stop at either end. Keep the fluid level at the MIN mark. The airmust be eliminated from the fluid before normal steering action can be obtained.
4. Return the wheels to the center position. Continue running the engine for 2 to 3 minutes.
5. Road test the car to be sure the steering functions normally and is free from noise.
6. Recheck the fluid level as described in steps 1 and 2. Make sure the fluid level is at the MAX mark after the system has stabilized at its normal operating temperature. Add fluid as needed.

CHECKING AND ADDING FLUID

Notice : When adding fluid or making a complete fluid change, always use DEXRONR®–III power steering fluid. Failure to use the proper fluid will cause hose and seal damage and fluid leaks.

1. The power steering fluid level is indicated either by marks on a see–through fluid reservoir or by marks on a fluid level indicator on the fluid reservoir cap.
2. If the fluid is warmed up to 66˚C (150˚F), the fluid level should be between the MAX and MIN marks. Add fluid as needed.
3. If the fluid is cool, 21˚C (70˚F), the fluid level should be at the MIN mark. Add fluid as needed.

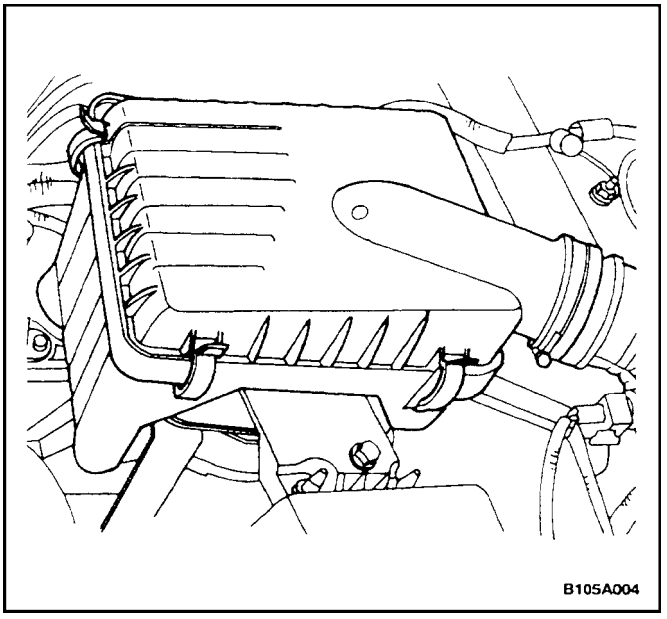

FLUID RESERVOIR

Removal Procedure

1. Siphon the power steering fluid from the fluid reservoir.
2. Remove the air cleaner housing and the hose.

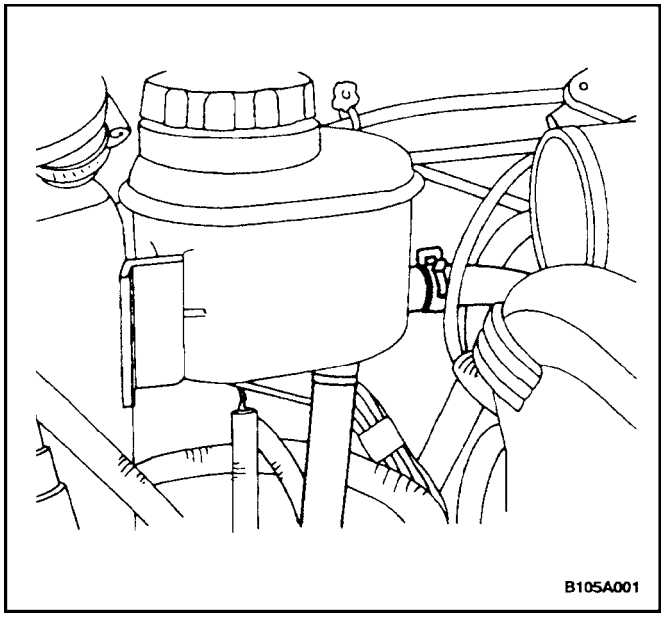

3. Loosen the hose clamps and remove both hoses from the fluid reservoir.

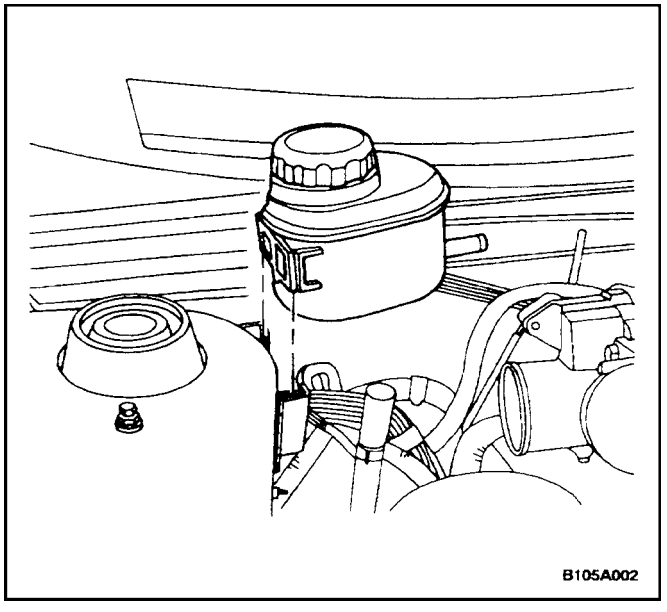

4. Remove the fluid reservoir by sliding it off the fluid reservoir bracket.

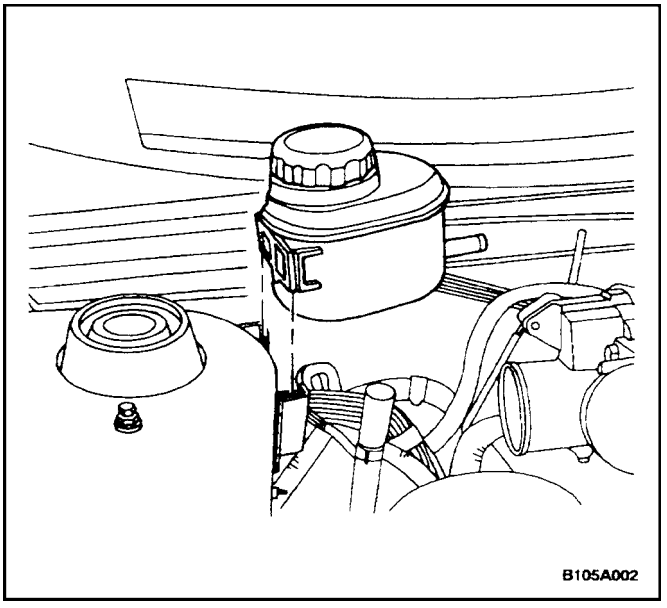

Installation Procedure

1. Attach the fluid reservoir to the fluid reservoir bracket.

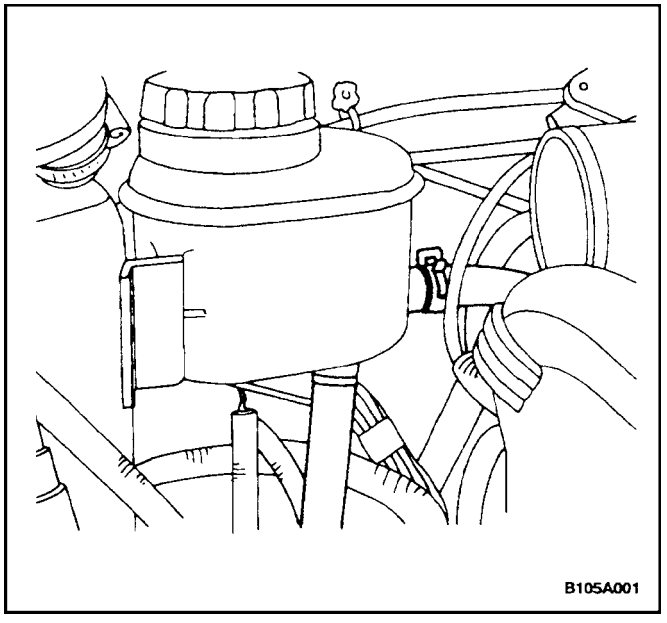

2. Connect both hoses to the fluid reservoir and secure the hose clamps.

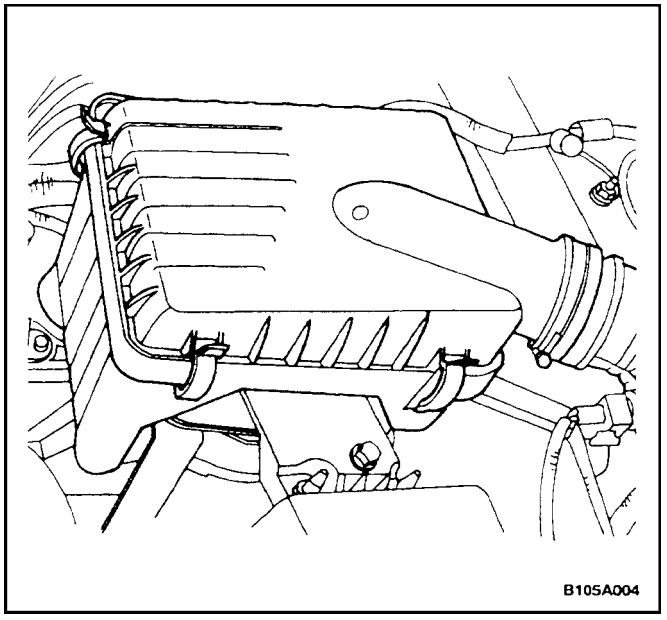

3. Install the air cleaner housing and the hose.

Notice : Notice: When adding fluid or making a complete change, always use DEXRONR®–III power steering fluid. Failure to use the proper fluid will cause hose and seal damage and fluid leaks.

4. Fill the fluid reservoir with power steering fluid.
5. Inspect for leaks. If there are leaks, correct the cause of the leaks and bleed the system. Refer to”Bleeding the Power Steering System”in this section.

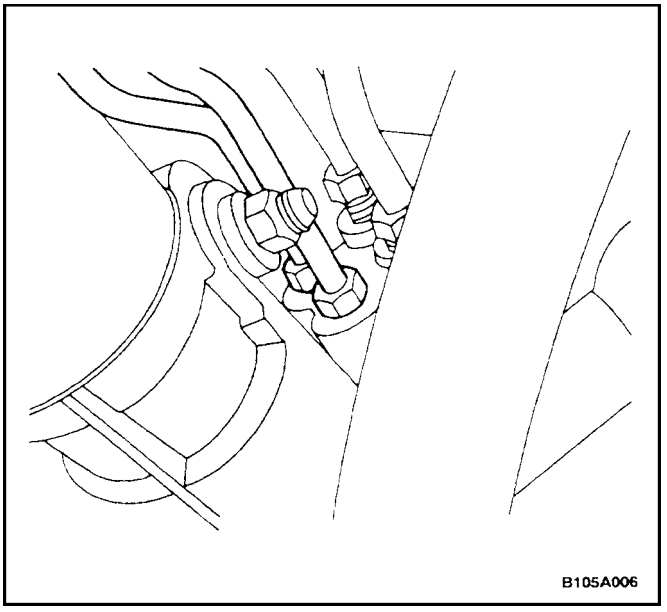

HOSES AND PIPES

Steering Gear Cylinder Pipes

Removal Procedure

1. Siphon the power steering fluid from the fluid reservoir.
2. Raise and suitably support the vehicle.
3. Disconnect the power steering gear cylinder pipes from the power steering gear at the valve end.
4. Replace the O–rings as needed.

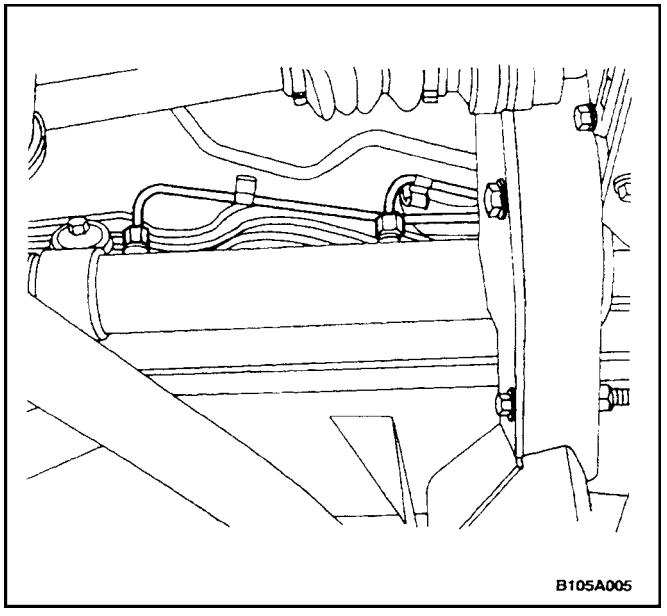

5. Disconnect the power steering gear cylinder pipes from the power steering gear at the cylinder end.
6. Unclip the steering gear cylinder pipes from the power steering fluid reservoir return line.
7. Remove the power steering gear cylinder pipes from the vehicle.

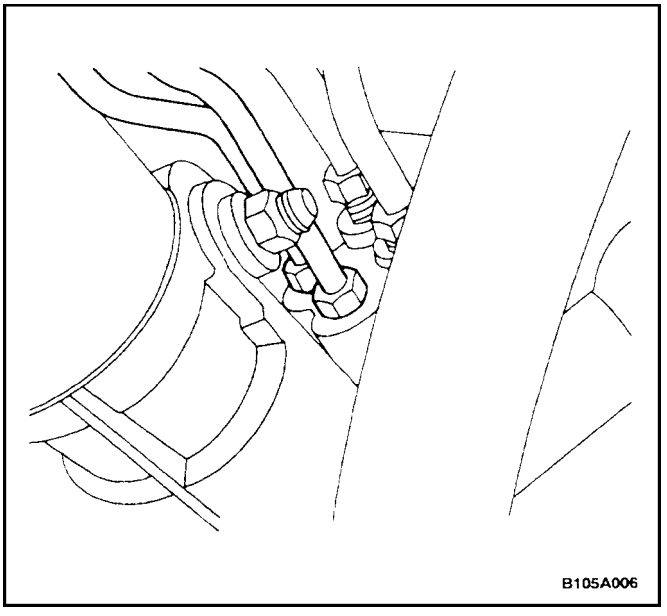

Installation Procedure

1. Install the power steering gear cylinder pipes onto the power steering gear.
2. Clip the power steering gear cylinder pipes to the power steering fluid reservoir return line.
3. Tighten the power steering gear cylinder pipes at the valve end of the power steering gear.

Tighten

Tighten the power steering line fittings at the valve end to 18 N•m (13 lb–ft).

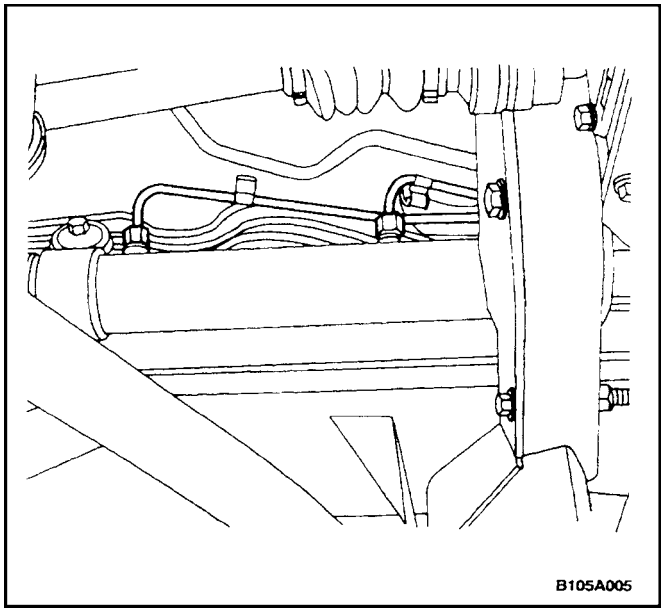

4. Tighten the power steering gear cylinder pipes at the cylinder end of the power steering gear.

   Tighten

   Tighten the power steering line fittings at the cylinder end to 27 N•m (20 lb–ft).
5. Lower the vehicle.

Notice : When adding fluid or making a complete change, always use DEXRON®–III power steering fluid. Failure to use the proper fluid will cause hose and seal damage and fluid leaks.

6. Fill the fluid reservoir with power steering fluid.
7. Inspect for leaks. If there are leaks, correct the cause of the leaks and bleed the system. Refer to”Bleeding the Power Steering System”in this section.

Power Steering Pump Hoses and Pipes

Removal Procedure

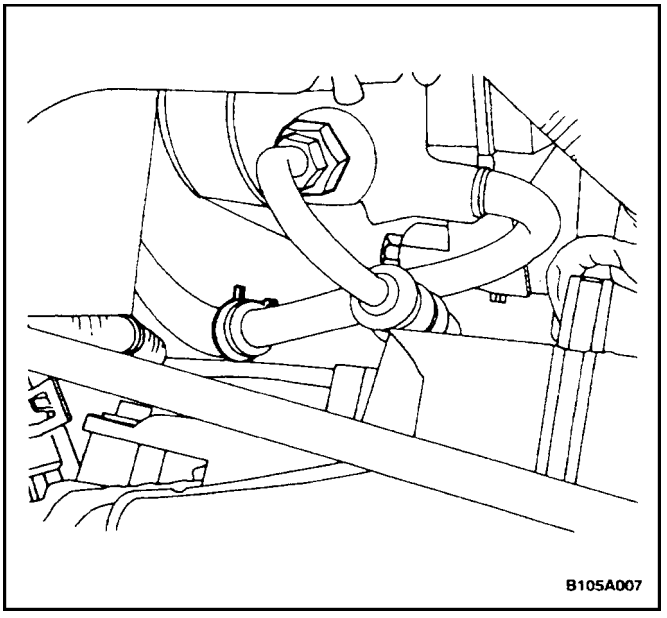

1. Siphon the power steering fluid from the fluid reservoir.
2. Disconnect the pressure line pipe and the supply line hose from the inlet and the outlet connections on the power steering pump.

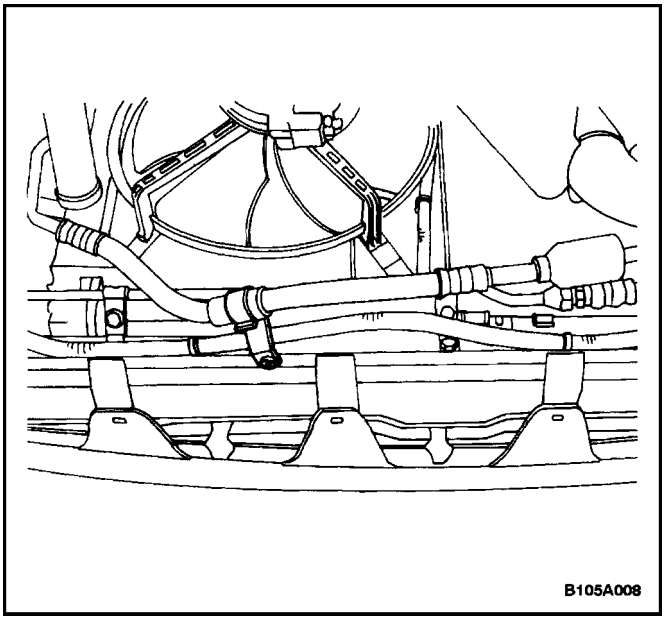

3. Raise and suitably support the vehicle.
4. Disconnect the pressure line from the retaining clip at the bottom of the radiator.

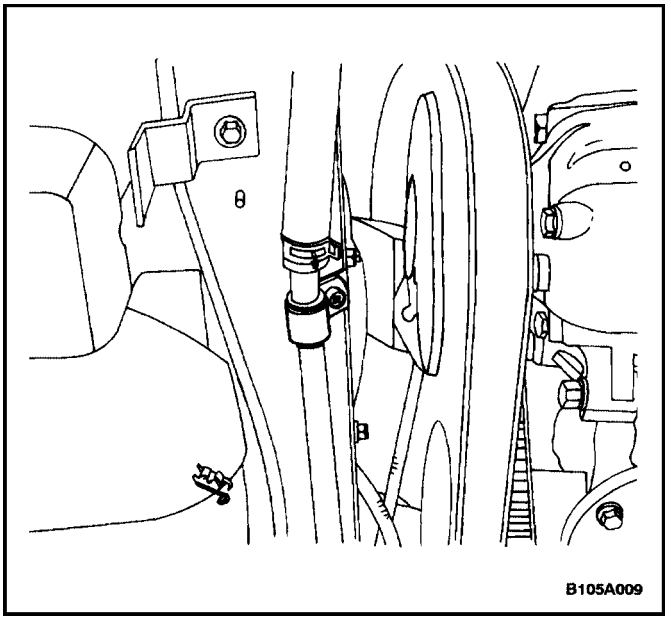

5. Disconnect the supply line from the retaining clip on the engine compartment right sidewall.

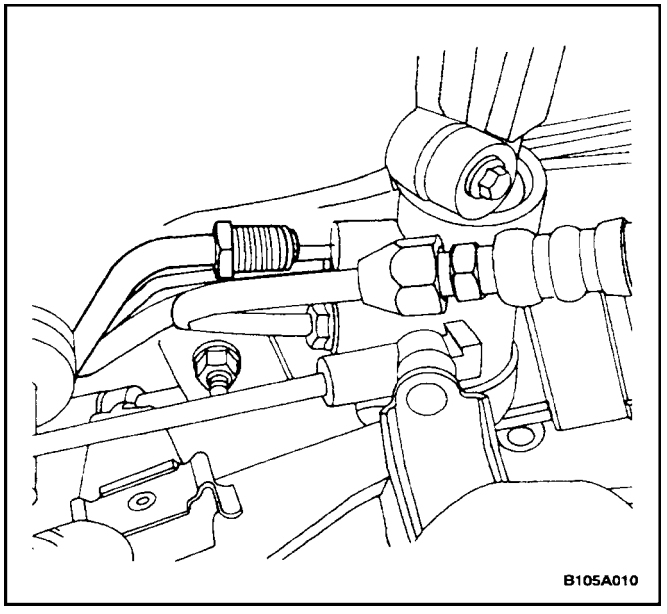

6. Lower the vehicle.

Important : The pressure line inlet pipe nut will be easier to disconnect if the supply line outlet pipe nut is disconnected first.

7. Disconnect the supply line outlet pipe from the power steering gear.

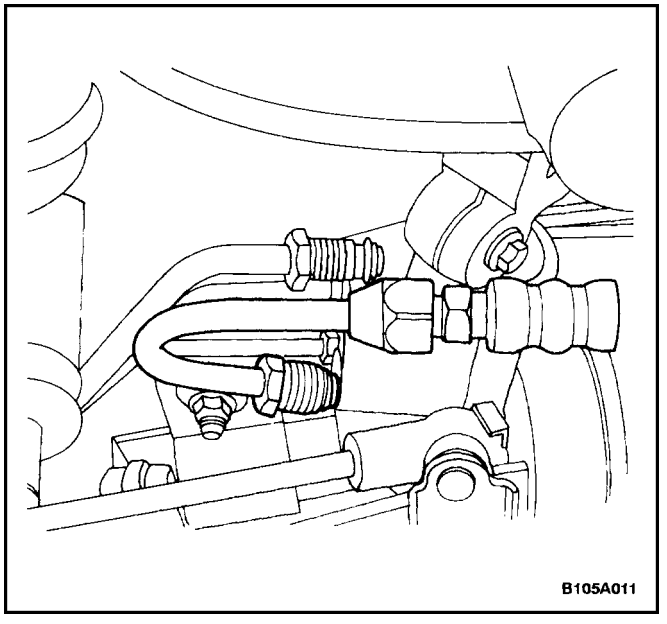

8. Disconnect the pressure line inlet pipe from the power steering gear.

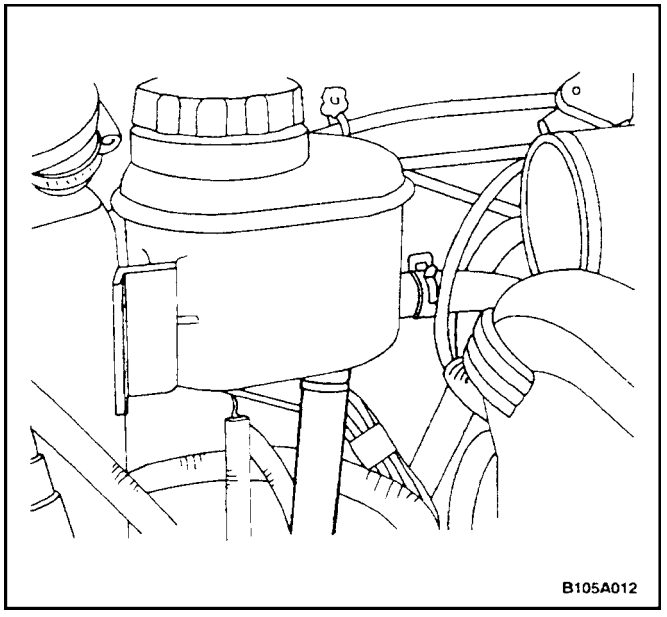

9. Disconnect the supply line hose from the power steering fluid reservoir.
10. Remove the power steering pump pressure line and the supply line.

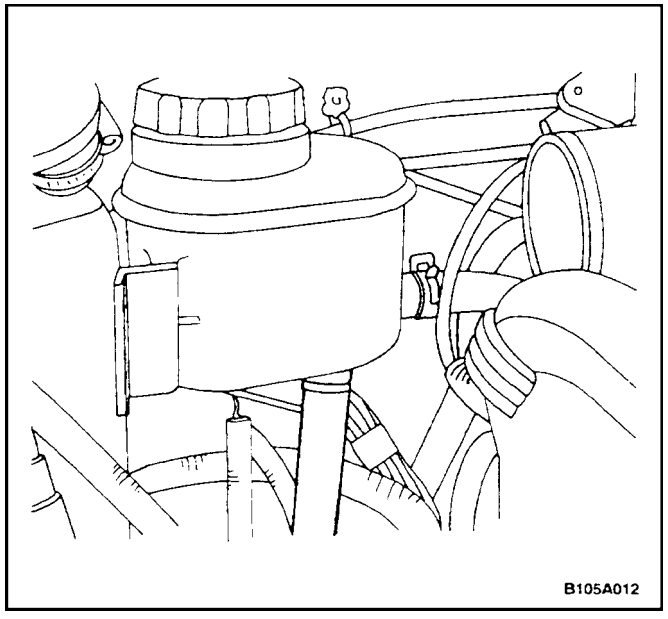

Installation Procedure

1. Install the power steering pump pressure line and the supply line.
2. Connect the supply line hose to the power steering fluid reservoir.

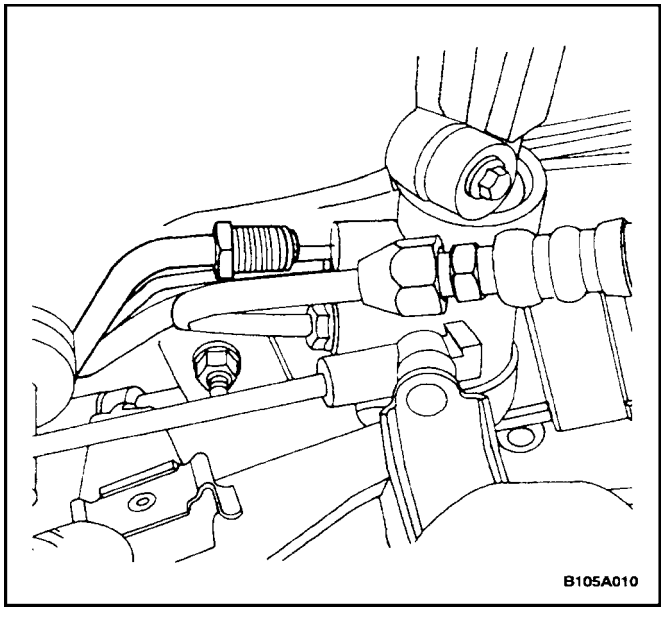

3. Connect the pressure line inlet pipe to the power steering gear.

   Tighten

   Tighten the steering gear inlet pipe fitting to 27 N•m (20 lb–ft).

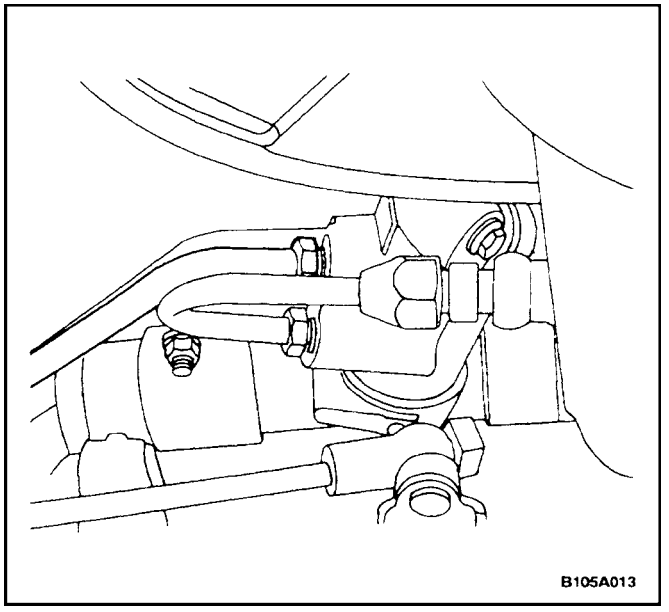

4. Connect the supply line outlet pipe to the power steering gear.

   Tighten

   Tighten the steering gear outlet pipe fitting to 27 N•m (20 lb–ft).

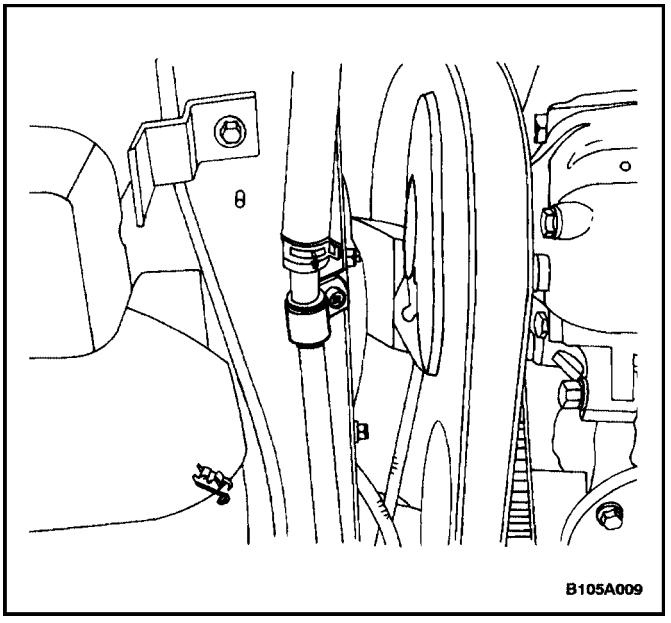

5. Connect the supply line to the retaining clip on the engine compartment right sidewall.

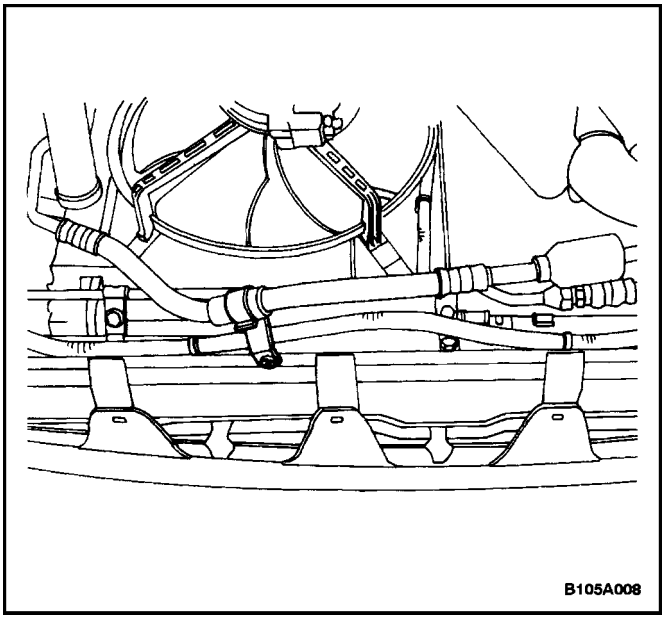

6. Connect the pressure line to the retaining clip at the bottom of the radiator.

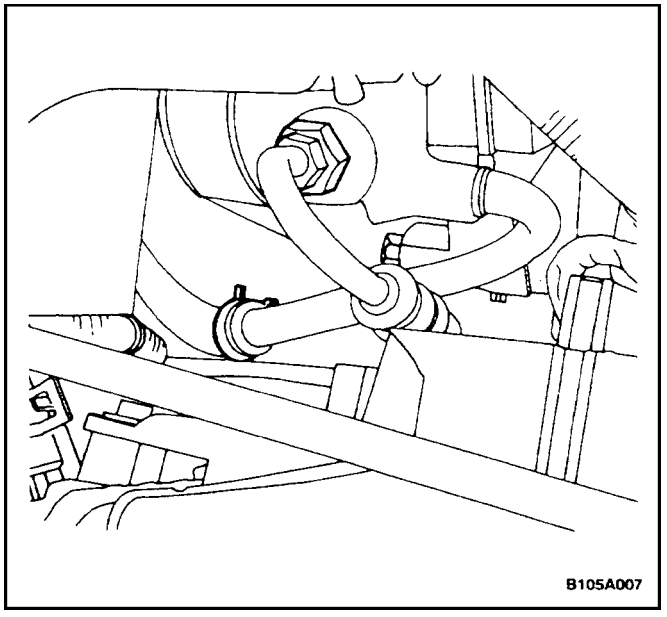

7. Connect the pressure line pipe and the supply line hose to the inlet and the outlet connections on the power steering pump.

   Tighten

   Tighten the power steering pump pressure line union nut to 27 N•m (20 lb–ft).

Notice : When adding fluid or making a complete change, always use DEXRON®–III power steering fluid. Failure to use the proper fluid will cause hose and seal damage and fluid leaks.

8. Fill the fluid reservoir with power steering fluid.
9. Inspect for leaks. If there are leaks, correct the cause of the leaks and bleed the system. Refer to ”Bleeding the Power Steering System”in this section.

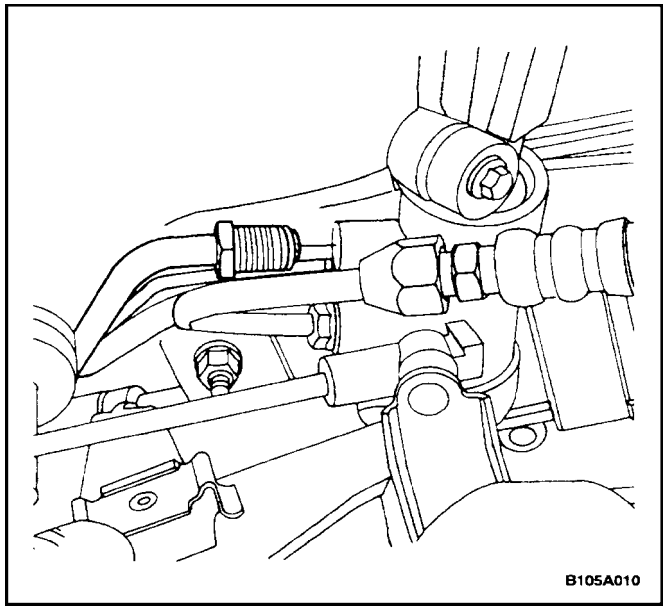

Power Steering Fluid Reservoir Hose

Removal Procedure

1. Siphon the power steering fluid from the fluid reservoir.
2. Disconnect the supply line outlet pipe from the outlet connection at the steering gear.

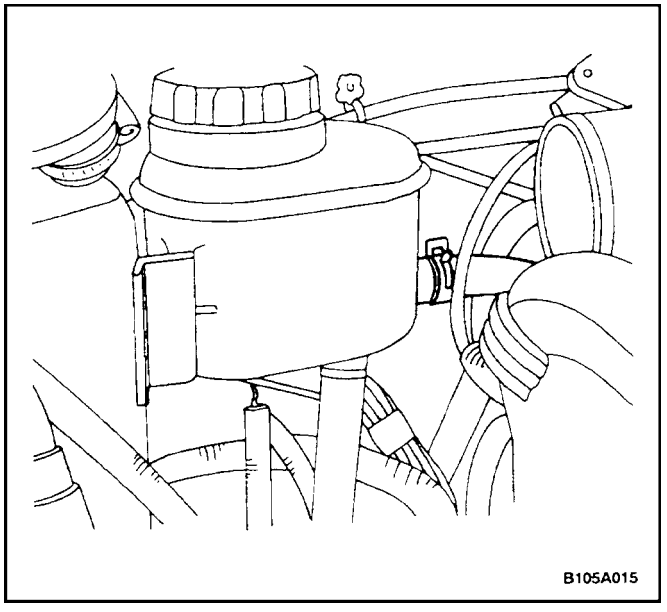

3. Disconnect the fluid reservoir hose from the fluid reservoir.
4. Remove the power steering fluid reservoir hose.

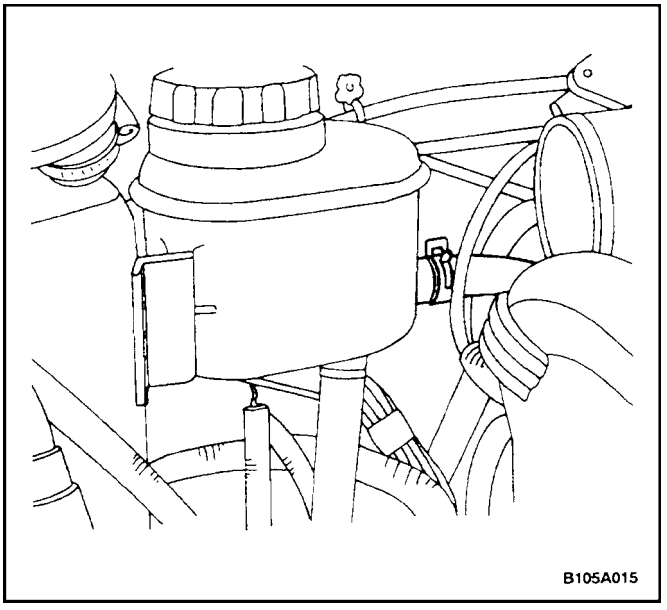

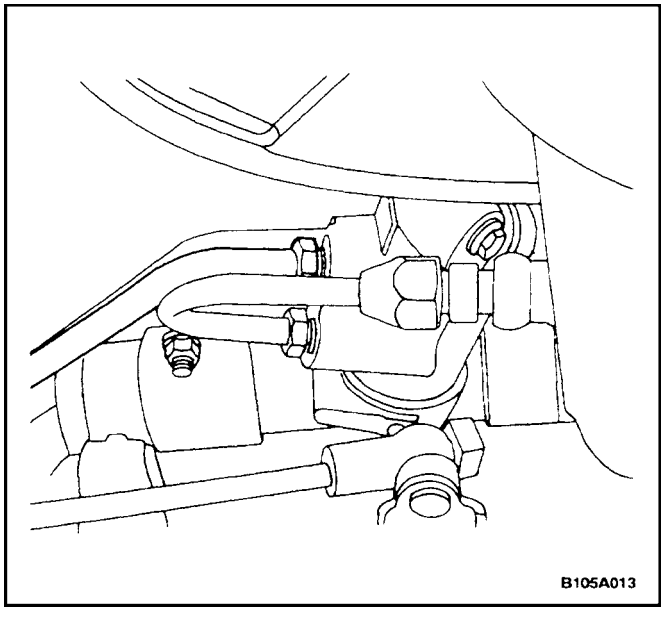

Installation Procedure

1. Install the power steering fluid reservoir hose.
2. Connect the fluid reservoir hose to the fluid reservoir.
3. Connect the supply line outlet pipe to the outlet connection at the steering gear.

   Tighten

   Tighten the steering gear outlet pipe fitting to 27 N•m (20 lb–ft).

Notice : When adding fluid or making a complete change, always use DEXRON®–III power steering fluid. Failure to use the proper fluid will cause hose and seal damage and fluid leaks.

4. Fill the fluid reservoir with power steering fluid.
5. Inspect for leaks. If there are leaks, correct the cause of the leaks and bleed the system. Refer to”Bleeding the Power Steering System”in this section.

GENERAL DESCRIPTION AND SYSTEM OPERATION

POWER STEERING SYSTEM

General Description

The power steering system consists of three components: the power steering pump, the power steering fluid reservoir and the the power steering rack and pinion gear. The power steering pump is a vane–type pump providing hydraulic pressure for the system and is powered by the engine. It draws on the power steering fluid reservoir, which in turn is connected to the power steering gear. A pressure–relief valve inside the flow control valve limits the pump pressure. The power steering rack and pinion gear has a rotary control valve which directs hydraulic fluid coming from the power steering pump to one side or the other side of the rack piston. The integral rack piston is attached to the rack. The rack piston converts hydraulic pressure to a linear force which moves the rack to the left or the right. The force is then transmitted through the inner and the outer tie rods to the steering knuckles, which turn the wheels.

SECTION : 2C

FRONT SUSPENSION

CAUTION : Disconnect the negative battery cable before removing or installing any electrical unit or when a tool or equipment could easily come in contact with exposed electrical terminals. Disconnecting this cable will help prevent personal injury and damage to the vehicle. The ignition must also be in LOCK unless otherwise noted.

TABLE OF CONTENTS

SPECIFICATIONS 2C–2
GENERAL SPECIFICATIONS 2C–2
FASTENER TIGHTENING SPECIFICATIONS 2C–2
SPECIAL TOOLS 2C–2
SPECIAL TOOLS TABLE 2C–2
DIAGNOSIS 2C–3
STRUT DAMPENER 2C–3
BALL JOINT AND KNUCKLE 2C–4
EXCESSIVE FRICTION CHECK 2C–4
COMPONENT LOCATOR 2C–5
FRONT SUSPENSION 2C–5
MAINTENANCE AND REPAIR 2C–7
ON–VEHICLE SERVICE 2C–7
STABILIZER SHAFT AND INSULATORS 2C–7
STABILIZER LINK 2C–9
KNUCKLE ASSEMBLY 2C–11
HUB AND BEARING 2C–15
CONTROL ARM 2C–17
STRUT ASSEMBLY 2C–20
CROSSMEMBER ASSEMBLY 2C–24
UNIT REPAIR 2C–26
BALL JOINT 2C–26
CONTROL ARM BUSHINGS 2C–26
FRONT STRUT ASSEMBLY 2C–28
KNUCKLE 2C–32
CROSSMEMBER 2C–32
GENERAL DESCRIPTION AND SYSTEM OPERATION 2C–35
FRONT SUSPENSION (FOR ENGINE FAMILY I) 2C–35
FRONT SUSPENSION (FOR ENGINE FAMILY II) 2C–35

SPECIFICATIONS

GENERAL SPECIFICATIONS

Application	Trim Height
Rocker Panel, Front to Ground	195 mm (7.7 in.)
Rocker Panel, Rear to Ground	191 mm (7.5 in.)

FASTENER TIGHTENING SPECIFICATIONS

Application	N•m	Lb–Ft	Lb–In
Ball Joint Pinch Bolt Nuts	60	44	–
Ball Joint–to–Control Arm Nuts	100	74	–
Control Arm–to–Crossmember Nuts/Bolts	110	81	–
Crossmember Link–to–Crossmember Bolt	125	92	–
Crossmember Link–to–Transaxle Bracket Nut	67	49	–
Crossmember Support Plate–to–Body Bolts			–
Drive Axle–to–Hub Caulking Nut (First Torque)	150	111	–
Drive Axle–to–Hub Caulking Nut (Last Torque)	50+60°	37+60°	–
Front Crossmember–to–Body Bolts	47	35	–
Piston Rod Nuts	75	55	–
Rear Crossmember–to–Body Bolts	196	145	–
Stabilizer Link–to–Strut Assembly Nut	47	35	–
Stabilizer Shaft–to–Crossmember Clamp Bolts	22	18	–
Stabilizer Shaft–to–Stabilizer Link Nut	47	35	–
Steering Knuckle–to–Strut Assembly Nuts/Bolts	100	74	–
Strut Assembly–to–Body Nuts	30	22	–

SPECIAL TOOLS

SPECIAL TOOLS TABLE

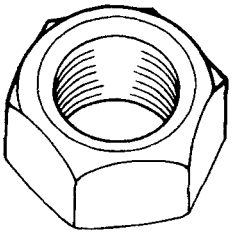 A106C056	500–20 Hex Nut	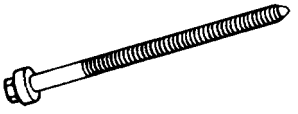 A106C053	J–36661–2 Forcing Screw

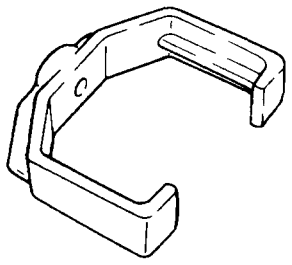 A106C052	J–37105–40 Support Bridge
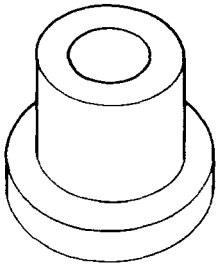 A106C055	J–37105–B–3 Hub Adapter
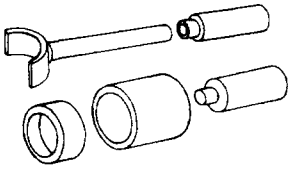 A106C029	KM–158 Remover/Installer

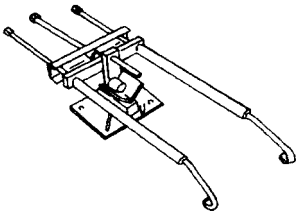 A106C031	KM–329–A Spring Compressor
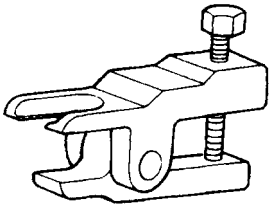 A106C034	KM–307–B Ball Joint Remover
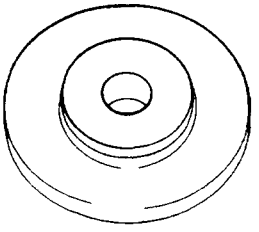 A106C054	J–37105–B–2 Bearing Adapter

DIAGNOSIS

STRUT DAMPENER

A strut dampener is basically a shock absorber. However, strut dampeners are easier to extend and retract by hand than are shock absorbers.

Struts Seem Weak

Checks	Action
Check the tire pressures.	Adjust the tire pressures to the specifications on the tire placard.
Check the load conditions under which the vehicle is normally driven.	Consult with the owner to confirm the owner's understanding of normal load conditions.
Check the compression and rebound effectiveness of the strut dampener.	Quickly push down and then lift up on the corner of the bumper nearest the strut dampener being tested. Compare the compression and rebound with those of a similar vehicle that has an acceptable ride quality. Replace the strut dampener, if needed.

Struts Are Noisy

Checks	Action
Check the mountings for looseness or damage.	Tighten the strut dampener mounting nuts. Replace the strut dampener, if needed.
Check the compression and rebound effectiveness of the strut dampener.	Quickly push down and then lift up on the corner of the bumper nearest the strut dampener being tested. Compare the compression and rebound with those of a similar vehicle that has an acceptable ride quality. Replace the strut dampener, if needed.

Leaks

Checks	Action
Check for a slight trace of fluid.	The strut dampener is OK.
Check the seal cover on the fully extended strut.	Replace the strut dampener.
Check for an excessive amount of fluid on the strut dampener.	Replace the strut dampener.

BALL JOINT AND KNUCKLE

Ball Joint Inspection

1. Raise the front of the vehicle to allow the front suspension to hang free.
2. Grasp the tire at the top and the bottom.
3. Move the top of the tire in an in–and–out motion.
4. Look for any horizontal movement of the knuckle relative to the control arm.
5. Ball joints must be replaced under the following conditions:

    - The joint is loose.
    - The ball seal is cut.
    - The ball stud is disconnected from the knuckle.
    - The ball stud is loose at the knuckle.
    - The ball stud can be twisted in its socket with finger pressure.

Ball Stud Inspection

Make sure to check the tightness of the ball stud in the knuckle boss during each inspection of the ball joint. One way to inspect the ball stud for wear is to shake the wheel and feel for movement of the stud end at the knuckle boss.

Another way to inspect the ball stud for wear is to check the fastener torque at the pinch nut. A loose nut can indicate a stressed stud or a hole in the knuckle boss.

Worn or damaged ball joints and knuckles must be replaced.

EXCESSIVE FRICTION CHECK

Use the following procedure to check for excessive friction in the front suspension:

1. Enlist the help of another technician to lift up on the front bumper, raising the vehicle as high as possible.
2. Slowly release the bumper, allowing the vehicle to assume its normal trim height. See ”General Specifications” in this section.
3. Measure the distance from the street level to the center of the bumper.
4. Push down on the bumper, release slowly, and allow the vehicle to assume its normal trim height.
5. Measure the distance from the street level to the center of the bumper.
6. The difference between the two measurements should be less than 12.7 mm (0.5 inch). If the difference exceeds this limit, inspect the control arms, the struts, and the ball joints fordamage or wear.

COMPONENT LOCATOR

FRONT SUSPENSION

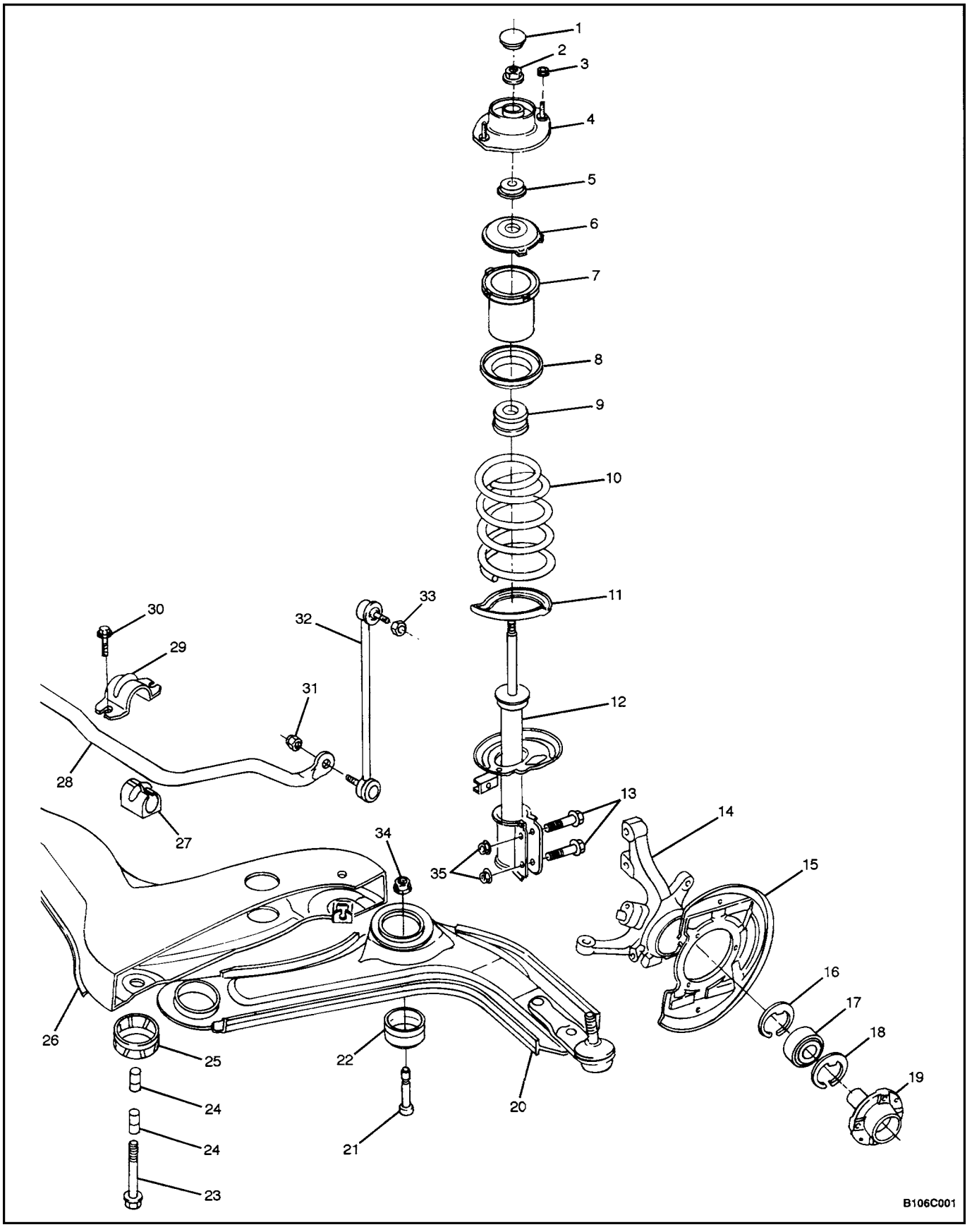

1. Strut Mount Cap
2. Piston Rod Nut
3. Strut Assembly–to–Body Nut
4. Strut Mount
5. Strut Mount Bearing
6. Upper Spring Seat
7. Front Spring Locator
8. Upper Spring Ring Insulator
9. Hollow Bumper
10. Front Spring
11. Lower Spring Ring Insulator
12. Strut Dampener
13. Steering Knuckle–to–Strut Assembly Bolt
14. Steering Knuckle
15. Brake Shield
16. Inner Snap Ring
17. Front Hub Bearing
18. Outer Snap Ring
19. Front Hub
20. Control Arm
21. Control Arm Front Mounting Bolt
22. Control Arm Front Damping Bushing
23. Rear Crossmember–to–Body Bolt
24. Split Sleeve
25. Control Arm Rear Damping Bushing
26. Front Suspension Crossmember
27. Stabilizer Shaft Insulator
28. Stabilizer Shaft
29. Stabilizer Shaft Insulator Clamp
30. Stabilizer Shaft–to–Crossmember Clamp Bolt
31. Stabilizer Shaft–to–Stabilizer Link Nut
32. Stabilizer Link
33. Stabilizer Link–to–Strut Assembly Nut
34. Control Arm–to–Crossmember Nut
35. Steering Knuckle–to–Strut Assembly Nut

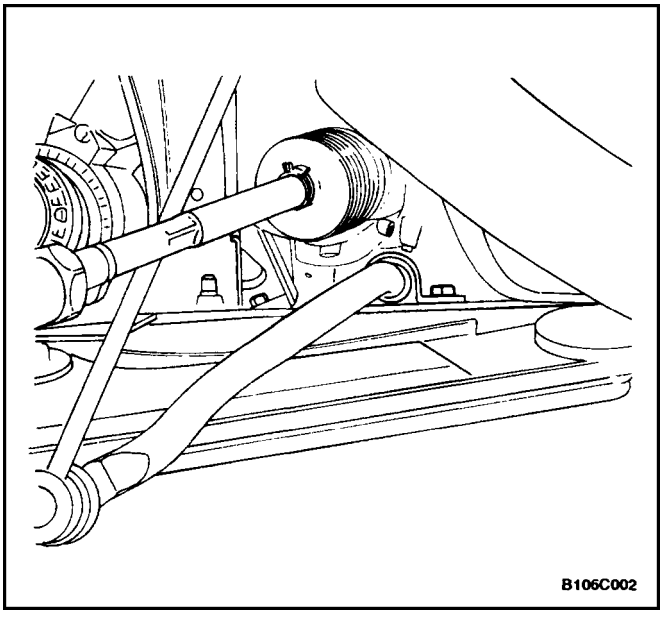

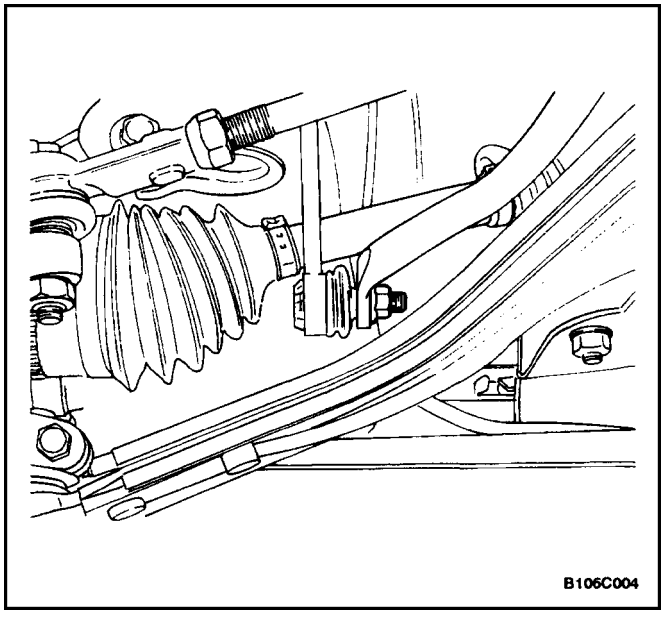

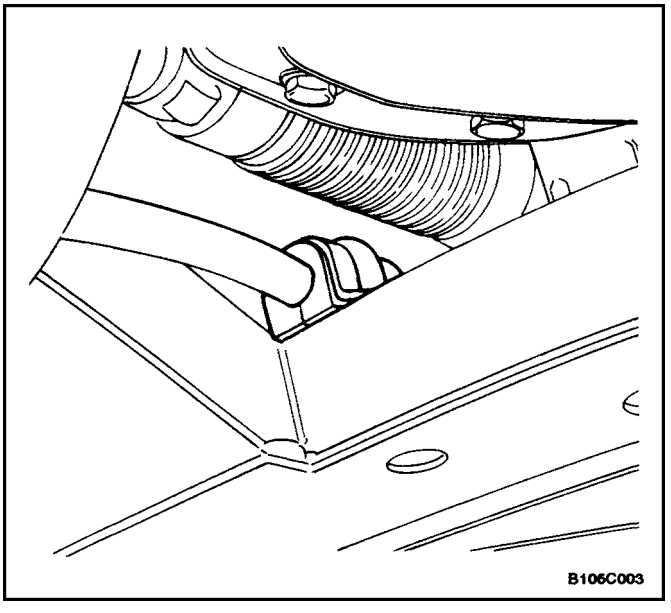

MAINTENANCE AND REPAIR

ON–VEHICLE SERVICE

STABILIZER SHAFT AND INSULATORS

Removal Procedure

1. Raise and suitably support the vehicle, allowing the control arms to hang free.
2. Remove the front wheels. Refer to *Section 2E, Tires and Wheels.*
3. Remove the stabilizer shaft–to–crossmember clamp bolt.
4. Remove the stabilizer shaft–to–stabilizer link nut.
5. Remove the stabilizer shaft, the stabilizer shaft insulator clamp, and the insulators from the vehicle.

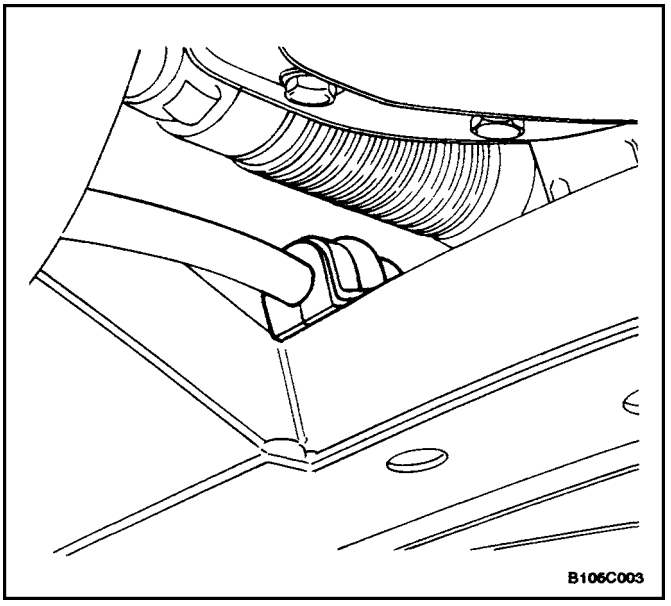

Installation Procedure

1. Install the stabilizer shaft.
2. Install the stabilizer shaft insulator clamps, the stabilizer shaft clamp bolt, and the insulators. Do not tighten the bolt.

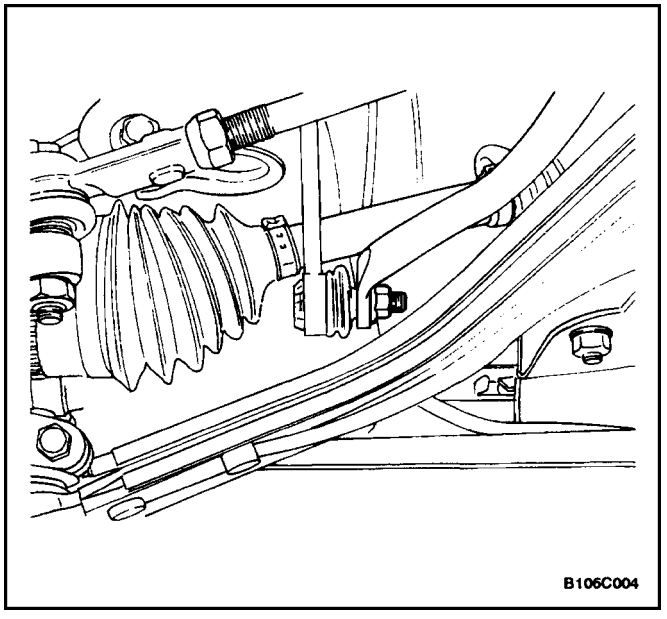

3. Install the stabilizer link onto the stabilizer shaft and connect them with the stabilizer shaft–to–stabilizer link nut.

Tighten

Tighten the stabilizer shaft–to–stabilizer link nut to 47 N•m (35 lb–ft).

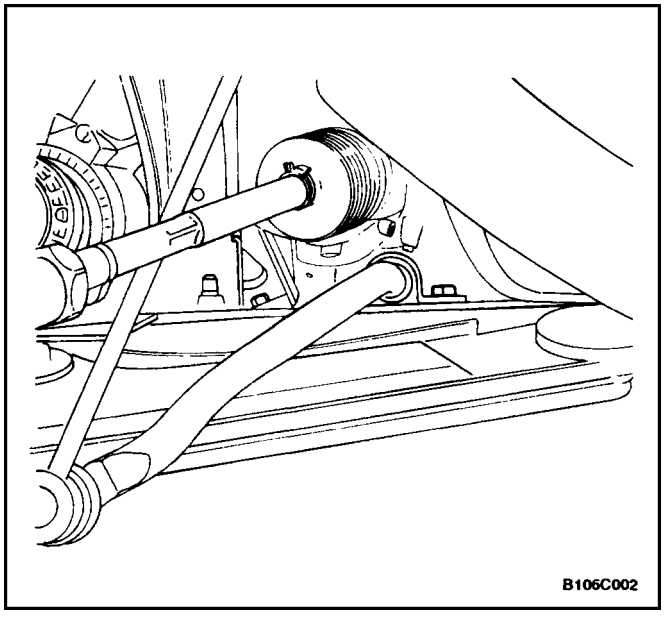

Tighten

Tighten the stabilizer shaft–to–crossmember clamp bolt to 25 N•m (18 lb–ft).

4. Install the front wheels. Refer to *Section 2E, Tires and Wheels.*

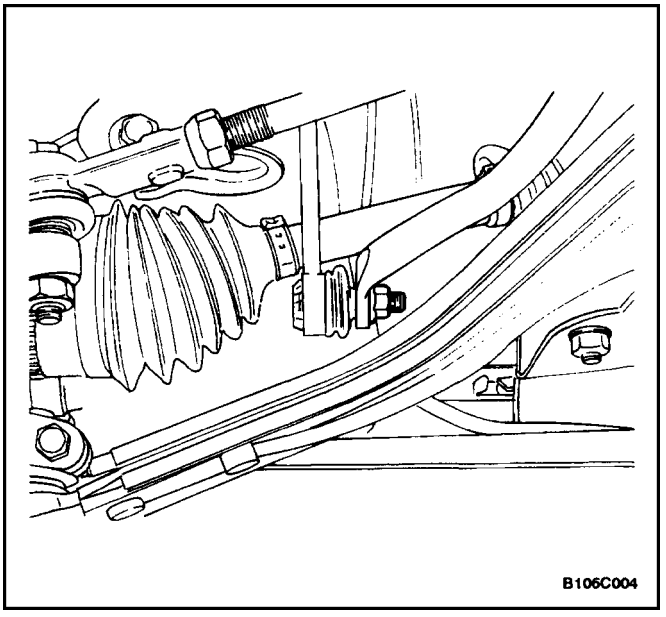

STABILIZER LINK

Removal Procedure

1. Remove the stabilizer shaft–to–stabilizer link nut.

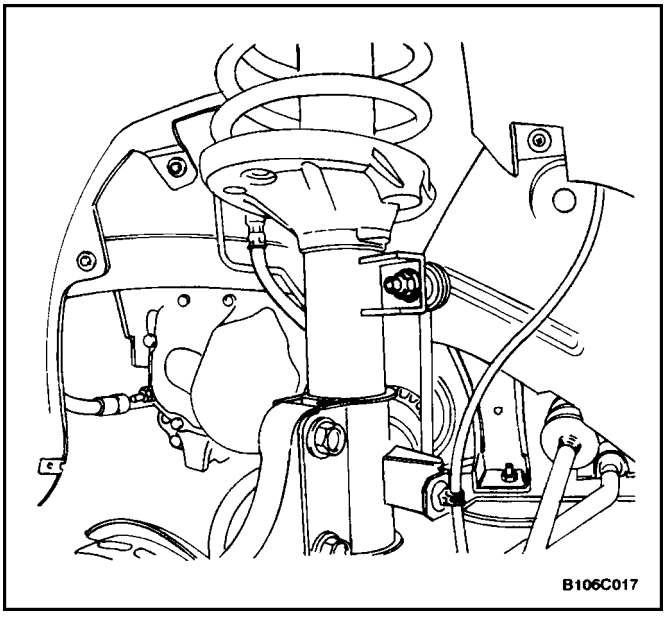

2. Remove the stabilizer link–to–strut assembly nut.

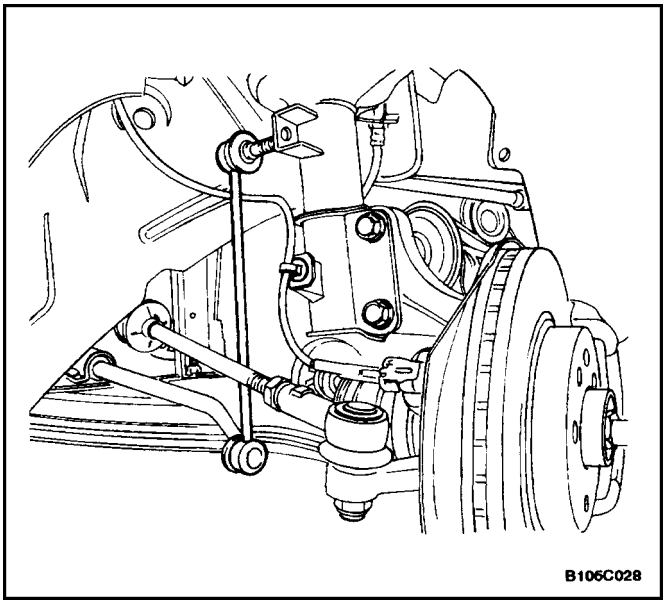

3. Remove the stabilizer link.

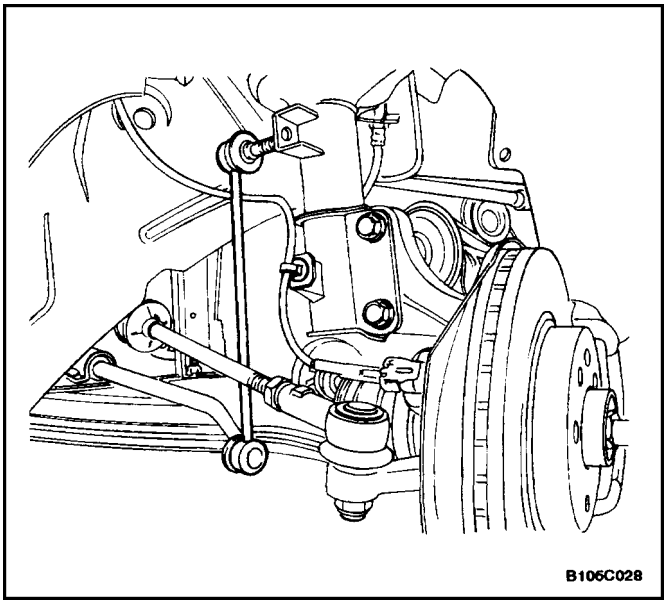

Installation Procedure

1. Install the stabilizer link.

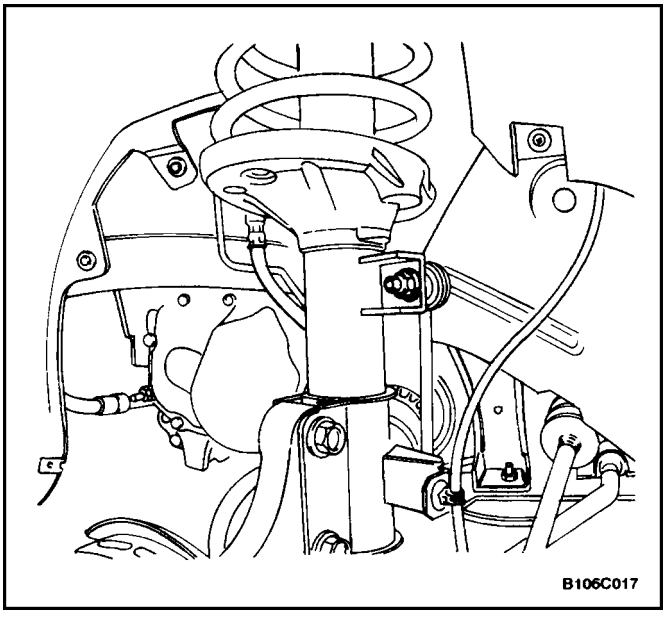

2. Install the stabilizer link–to–strut assembly nut.

   Tighten

   Tighten the stabilizer link–to–strut assembly nut to 47 N•m (35 lb–ft).

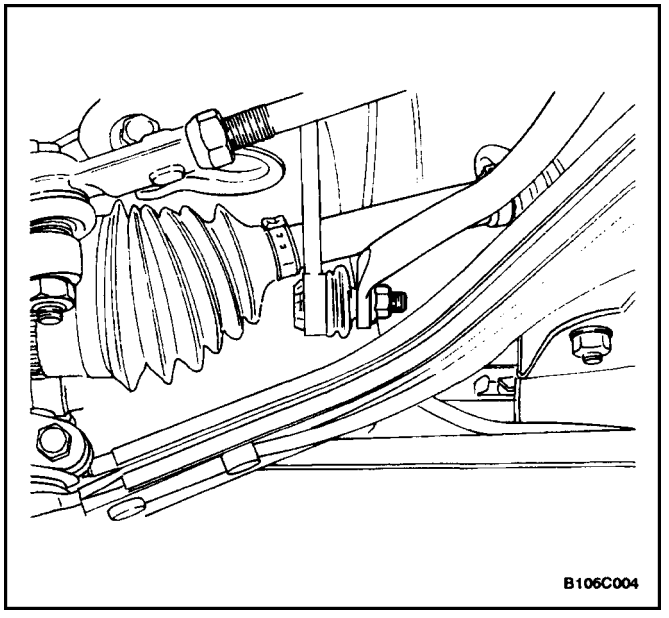

3. Install the stabilizer shaft–to–stabilizer link nut.

   Tighten

   Tighten the stabilizer shaft–to–stabilizer link nut to 47 N•m (35 lb–ft).

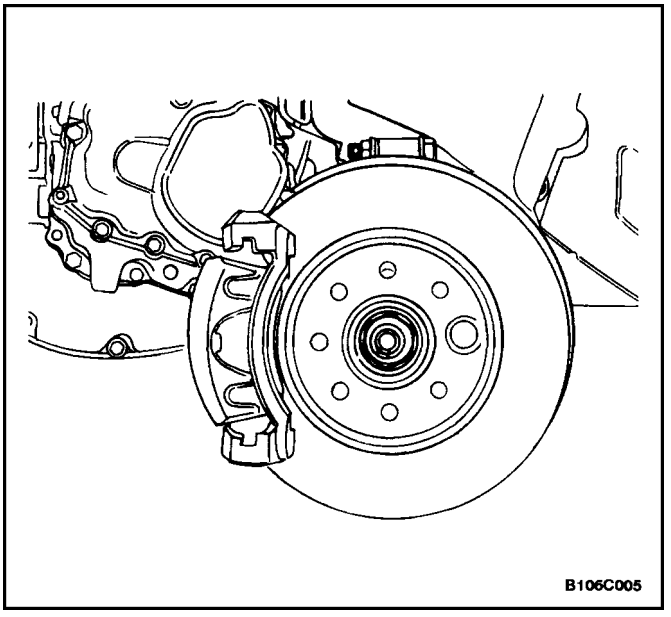

KNUCKLE ASSEMBLY

Tools Required

KM–507–B Ball Joint Remover

Removal Procedure

1. Raise and suitably support the vehicle.
2. Remove the wheel. Refer to *Section 2E, Tires and Wheels.*
3. Remove the caulking nut from the axle shaft.

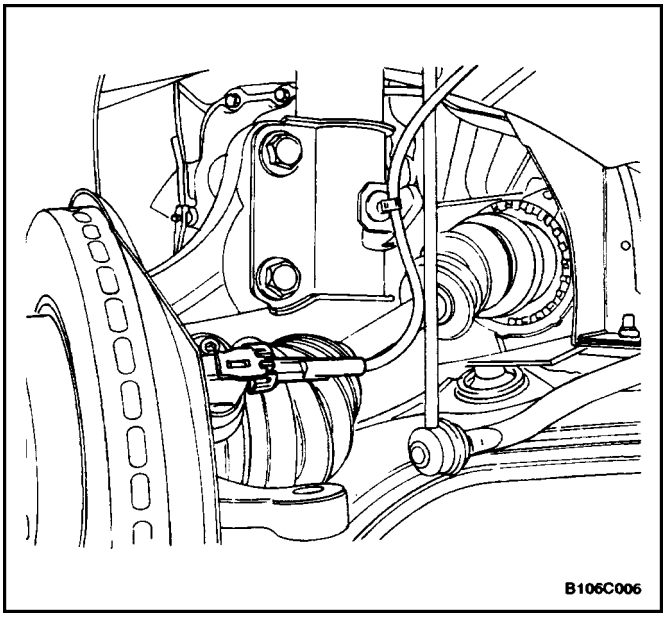

4. Remove the brake caliper from the rotor. Support the caliper so it does not hang from the hydraulic brake hose. Refer to *Section 4D, Front Disc Brakes.*
5. Remove the brake line from the knuckle.
6. Remove the outer tie rod from the knuckle assembly. Refer to *Section 6C, Power Steering Gear.*
7. On vehicles equipped with the antilock braking system (ABS), disconnect the ABS speed sensor electrical connection from the knuckle.

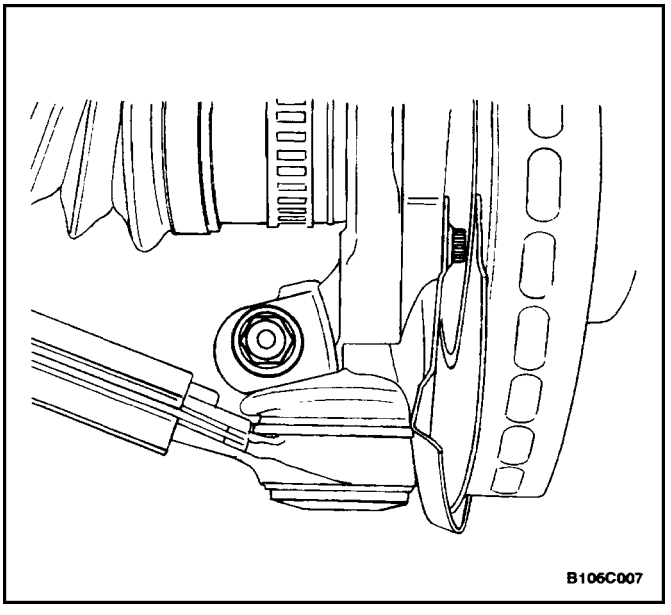

8. Remove the ball joint pinch bolt and the nut.

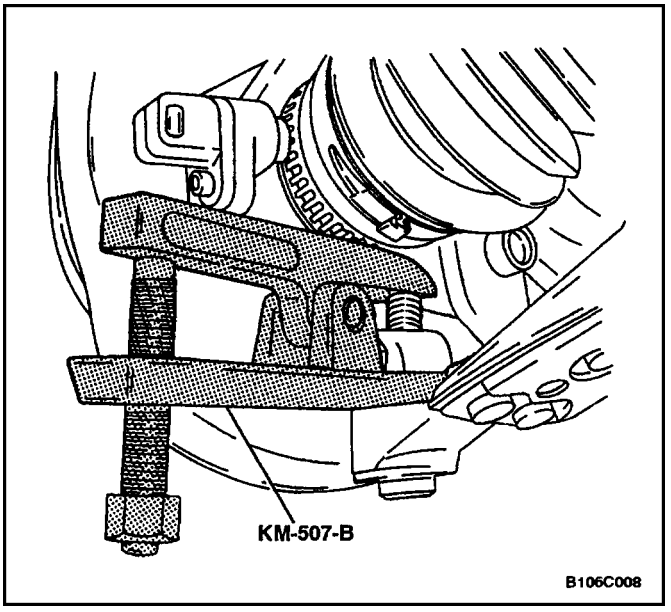

9. Separate the knuckle from the ball joint using the ball joint remover KM–507–B.

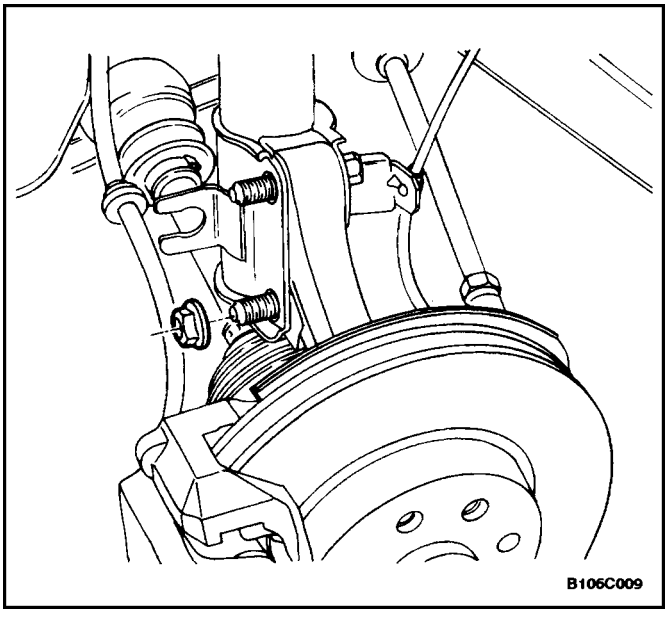

10. Remove the nuts from the bolts that connect the knuckle assembly to the strut assembly.

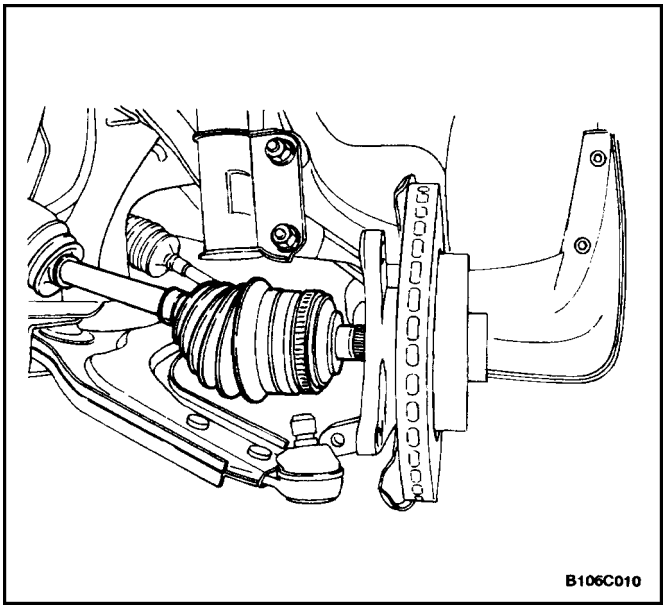

Notice : Do not over extend the axle joints. When either end of the shaft is disconnected, overextension of the joint can result in separation of internal components and possible joint failure. Use drive axle joint seal protectors whenever performing service on or near the drive axles. Failure to do so can cause internal joint or seal damage and result in possible joint failure.

11. Separate the drive axle shaft from the wheel hub.

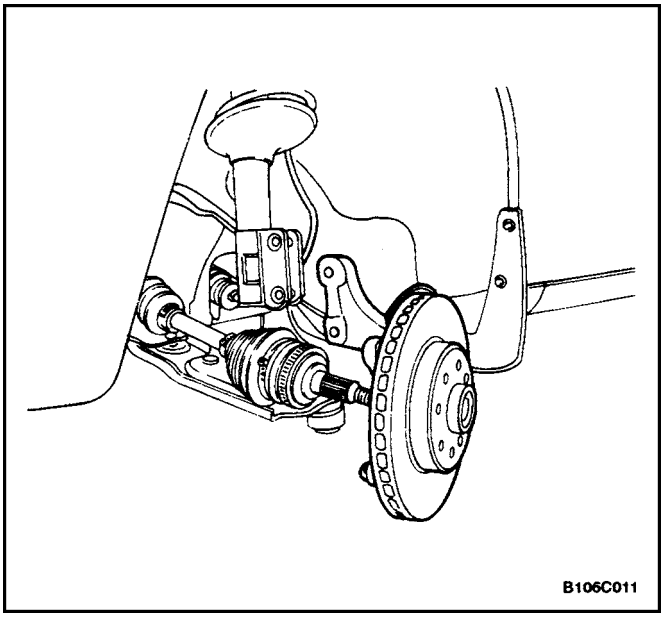

12. Support the drive axle.
13. Remove the bolts that connect the knuckle assembly to the strut assembly.
14. Remove the knuckle assembly from the vehicle.

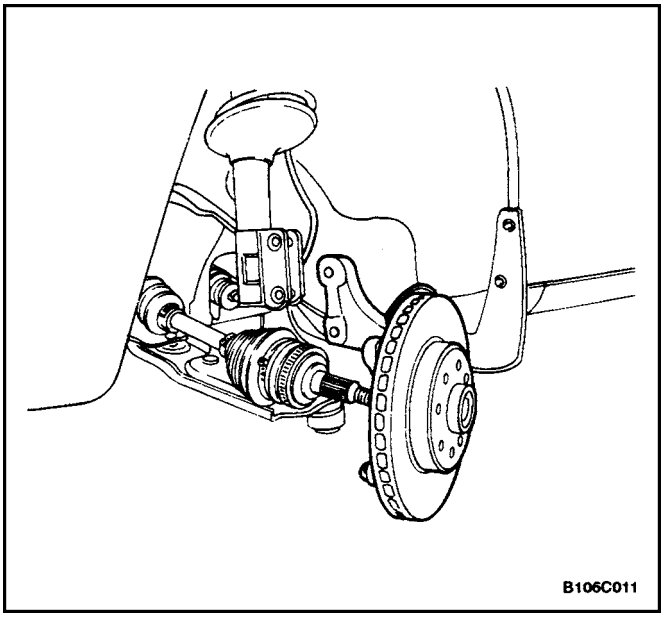

Installation Procedure

1. Install the knuckle assembly onto the vehicle.

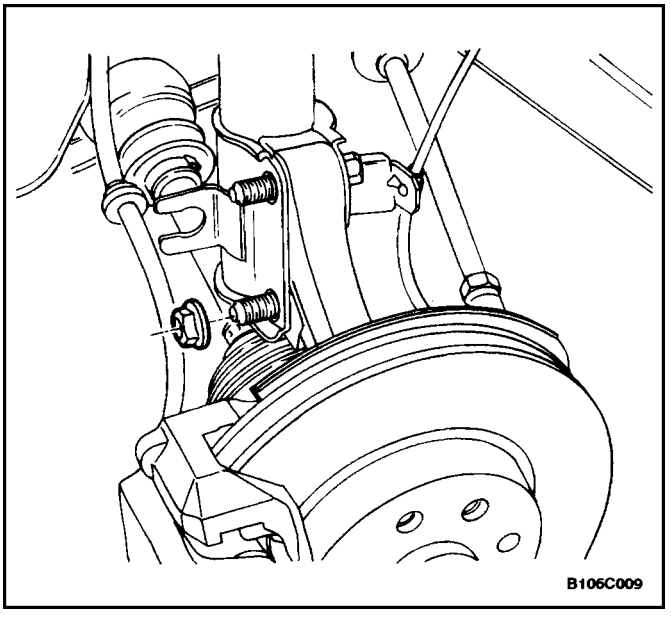

2. Install the steering knuckle–to–strut assembly nuts.

   Tighten

   Tighten the steering knuckle–to–strut assembly nuts to 100 N•m (74 lb–ft).

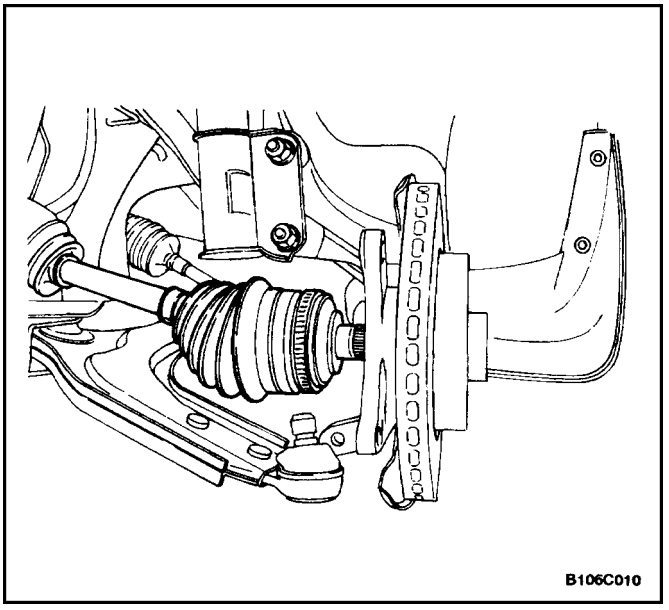

3. Connect the drive axle to the front wheel hub.

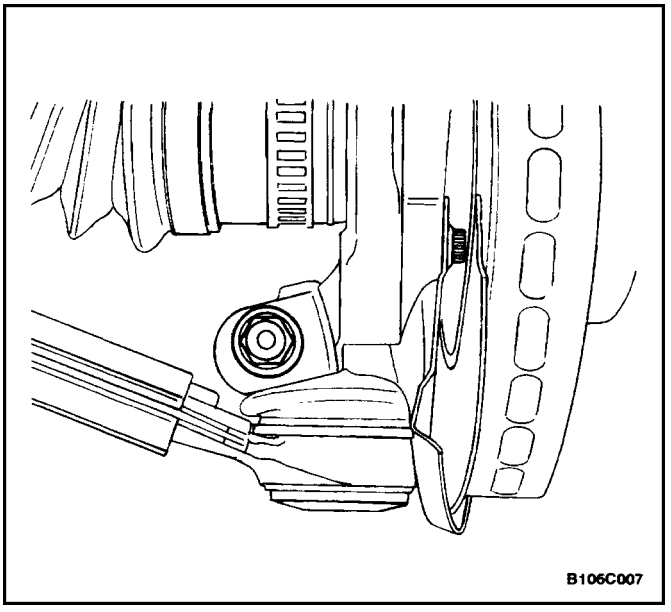

4. Connect the ball joint to the knuckle assembly.
5. Install the ball joint pinch bolt and the nut.

Tighten

Tighten the ball joint pinch bolt nut to 60 N•m (44 lb–ft).

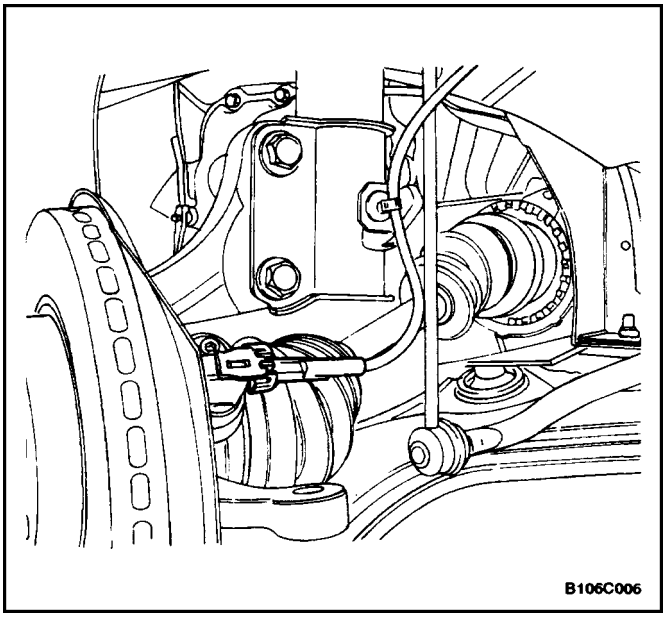

6. Connect the ABS speed sensor electrical connection. Refer to

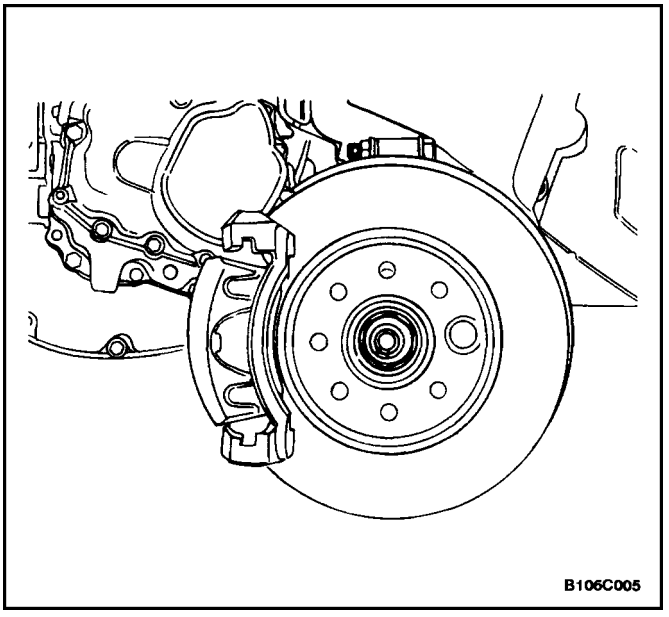

7. Connect the outer tie rod to the knuckle assembly. Refer to *Section 6C, Power Steering Gear.*
8. Install the brake caliper onto the rotor. Refer to *Section 4D, Front Disc Brakes.*
9. Install the caulking nut onto the axle shaft.

   Tighten

   Tighten the drive axle–to–hub caulking nut to 150 N•m (111 lb–ft). Loosen the nut, then retighten it to 275 N•m (126 lb–ft).
10. Install the wheel. Refer to *Section 2E, Tires and Wheels.*
11. Lower the vehicle.

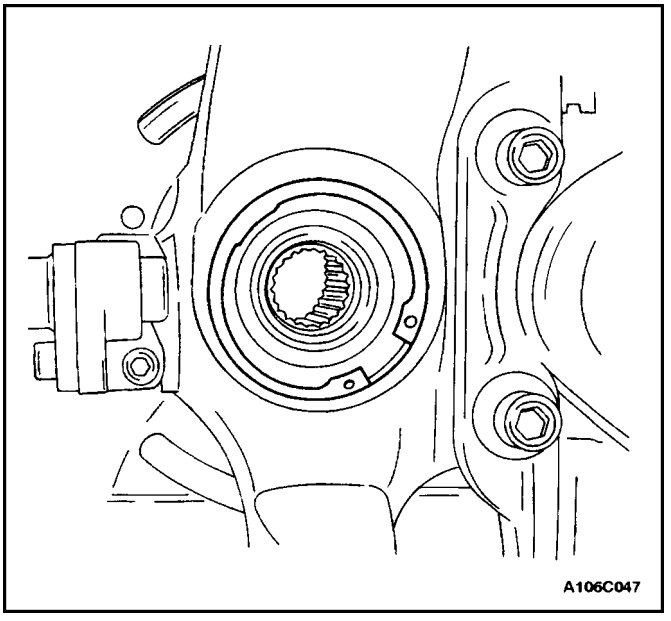

HUB AND BEARING

Tools Required

500–20 Hex Nut
J–36661–2 Forcing Screw
J–37105–B–1 Support Bridge
J–37105–B–2 Bearing Adapter
J–37105–B–3 Hub Adapter

Removal Procedure

1. Remove the drive axle from the front wheel hub. Refer to ”Knuckle Assembly” in this section.
2. Remove the inner snap ring.

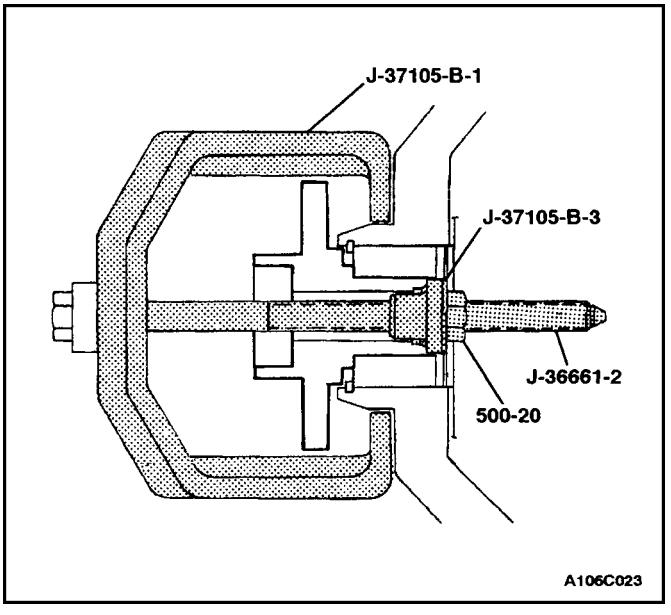

3. Remove the wheel hub with the support bridge J–37105–B–1, the hub adapter J–377105–B–3, the hex nut 500–20, and the forcing screw J–36661–2.

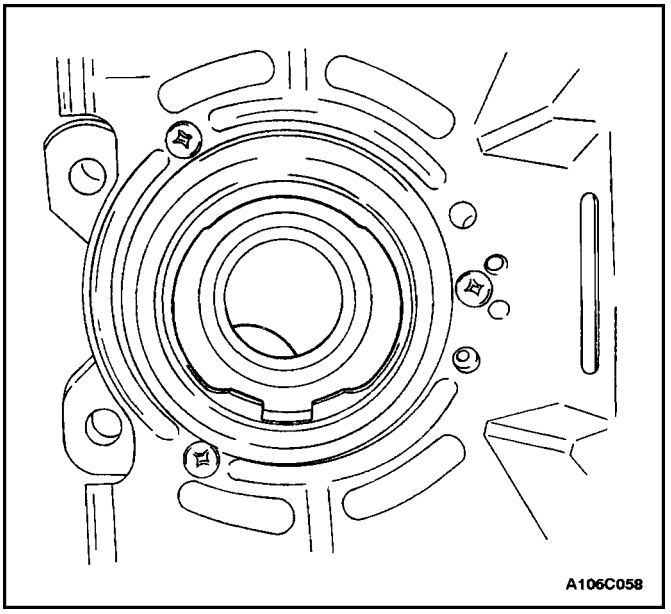

4. Remove the brake shield. Refer to *Section 4D, Front Disc Brakes.*
5. Remove the outer snap ring.

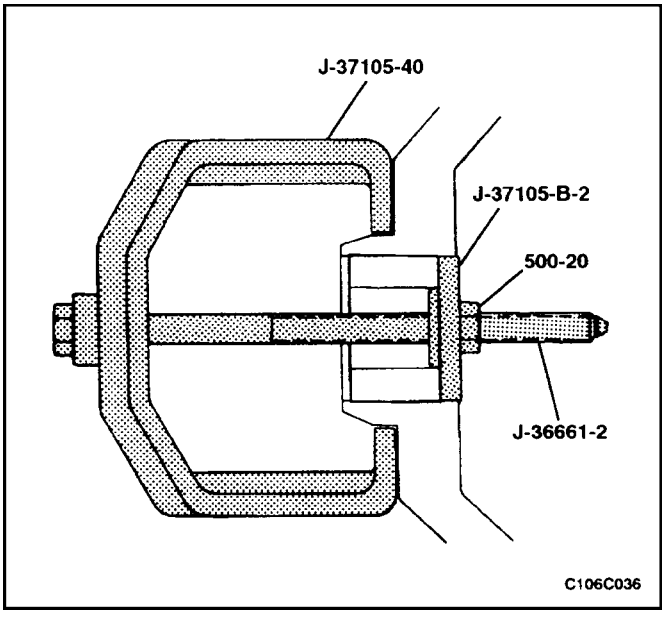

6. Remove the wheel bearing with the support bridge J–37105–B–1, the bearing adapter J–37105–B–2, the hex nut 500–20, and the forcing screw J–36661–2.
7. Clean the bore of the knuckle.

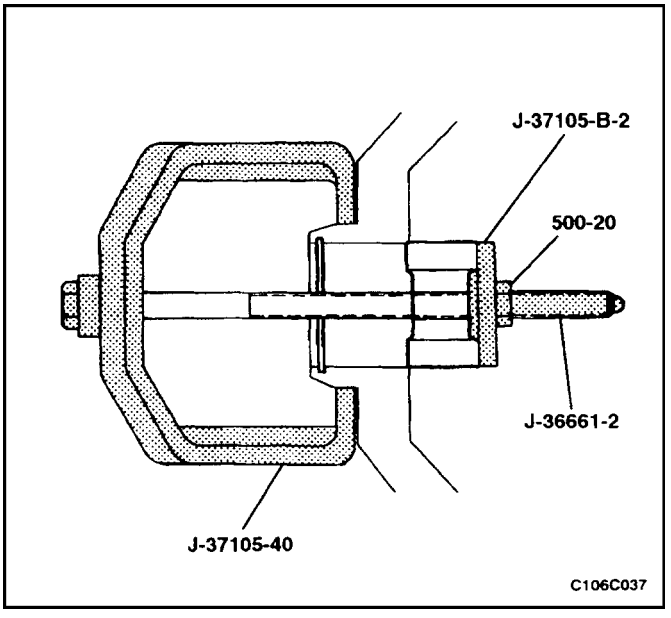

Installation Procedure

1. Install the outer snap ring and push the wheel bearing into place with the support bridge J–37105–B–1, the bearing adapter J–37105–B–2, the hex nut 500–20, and the forcing screw J–36661–2.

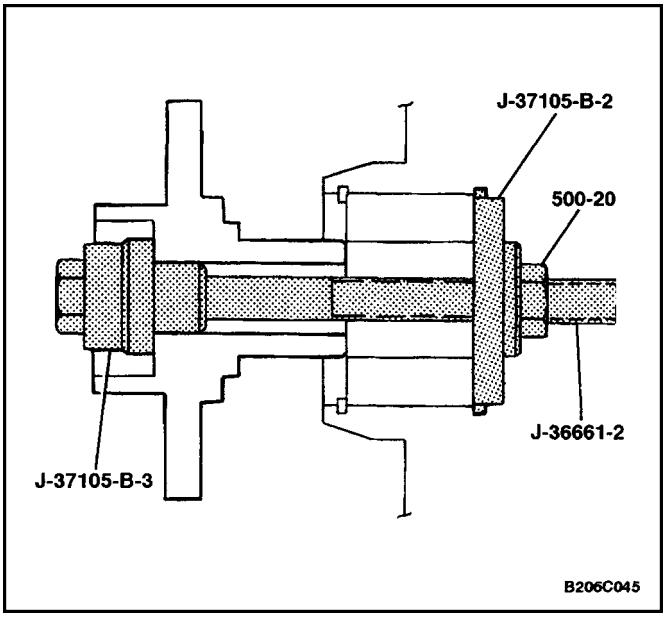

2. Install the brake shield. Refer to *Section 4D, Front Disc Brakes.*
3. Install the inner snap ring.
4. Push the wheel hub into place with the hub adapter J–37105–B–3, the bearing adapter J–37105–B–2, the hex nut 500–20, and the forcing screw J–36661–2.
5. Install the drive axle into the front wheel hub. Refer to ”Knuckle Assembly” in this section.

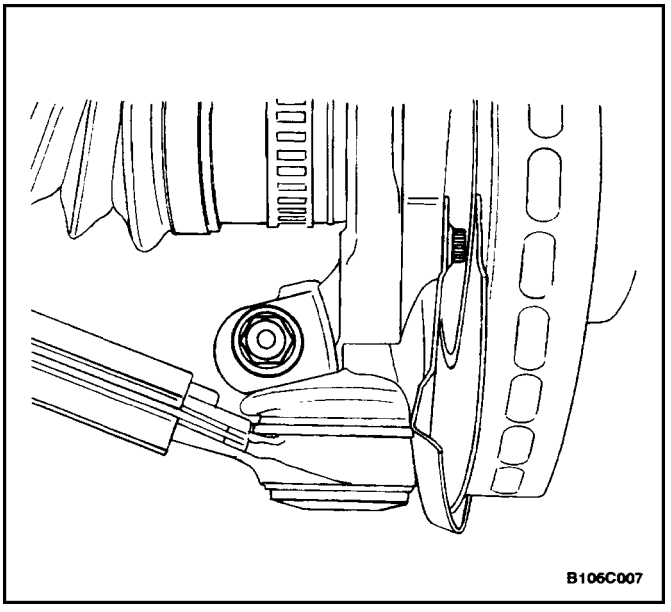

CONTROL ARM

Tools Required

KM–507–B Ball Joint Remover

Removal Procedure

1. Raise and suitably support the vehicle. Let the control arms hang free.
2. Remove the wheel. Refer to *Section 2E, Tires and Wheels.*
3. Remove the pinch bolt and the nut from the ball joint.

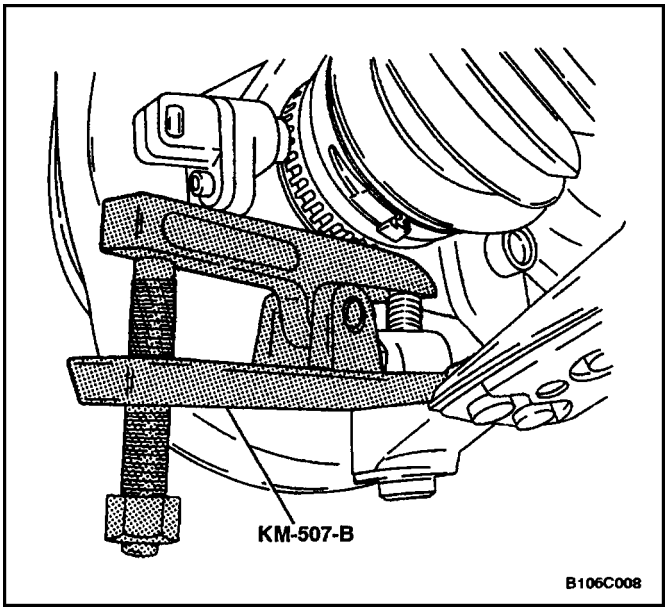

4. Disconnect the ball joint from the knuckle assembly using the ball joint remover KM–507–B.

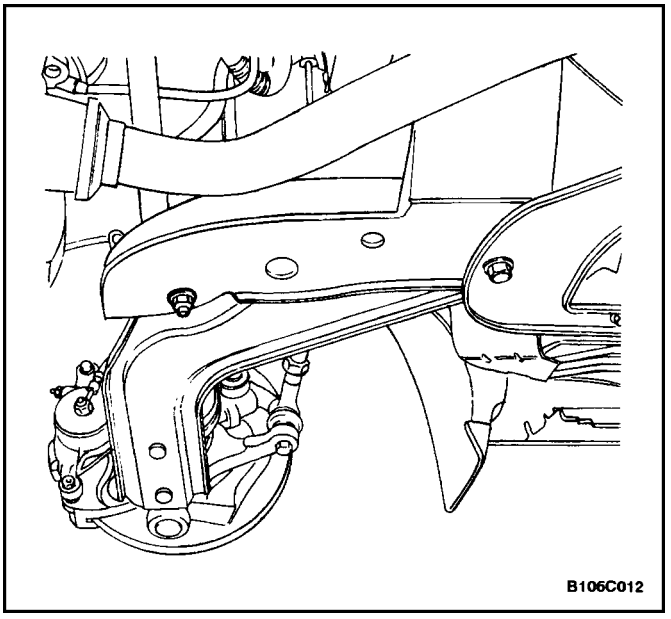

5. Remove the control arm–to–crossmember nut and the bolt.

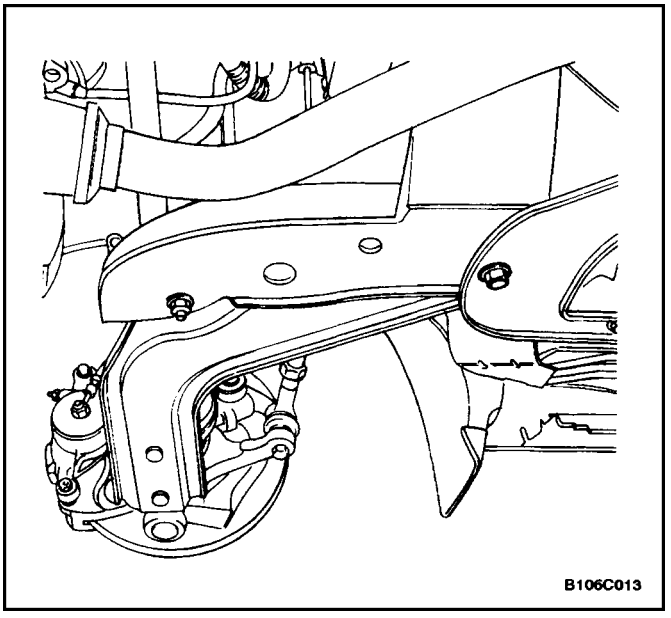

6. Remove the rear crossmember–to–body bolt.
7. Remove the control arm from the vehicle.

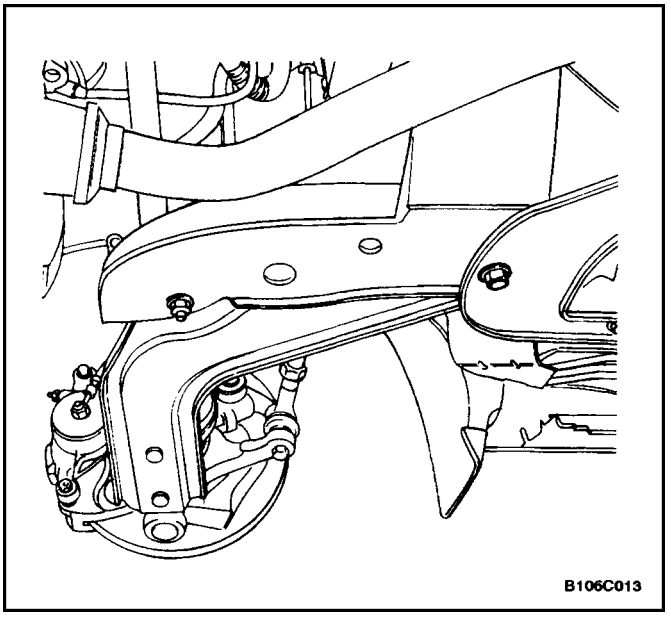

Installation Procedure

1. Install the control arm.
2. Install the rear crossmember–to–body bolt. Do not tighten the bolt.

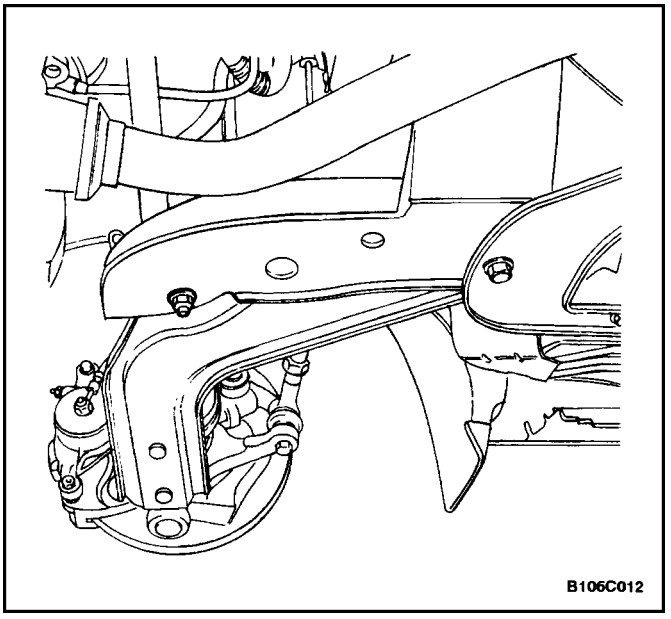

3. Install the control arm–to–crossmember bolt and the nut.

Tighten

Tighten the control arm–to–crossmember nut to 110 N•m (81 lb–ft).

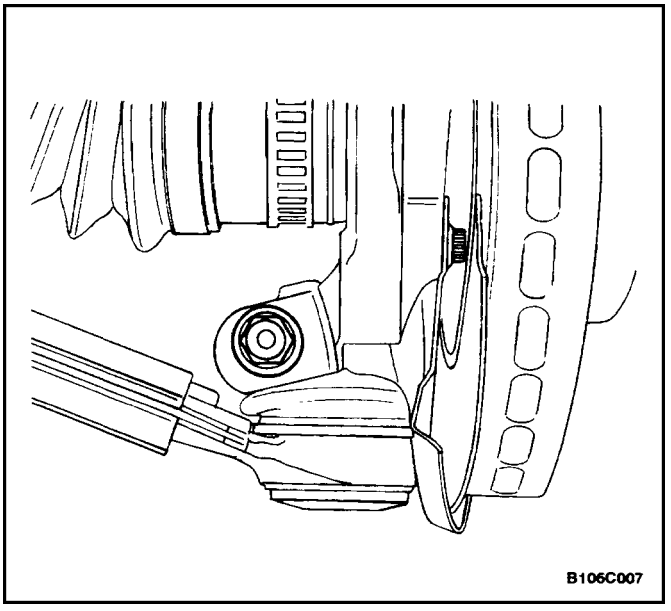

4. Connect the ball joint to the steering knuckle.
5. Install the ball joint pinch bolt and the nut.

Tighten

Tighten the ball joint pinch bolt nut to 60 N•m (44 lbft).

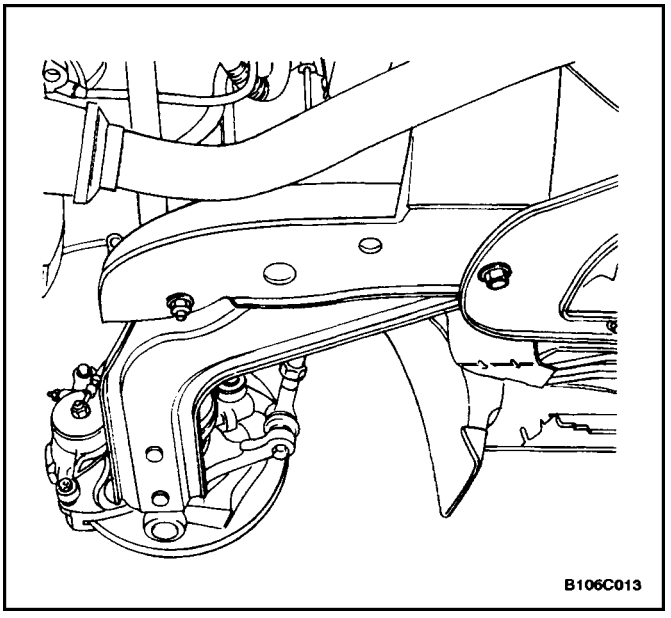

Tighten

Tighten the rear crossmember–to–body bolt to 196 N•m (145 lb–ft).

6. Install the wheel. Refer to *Section 2E, Tires and Wheels..*
7. Lower the vehicle.

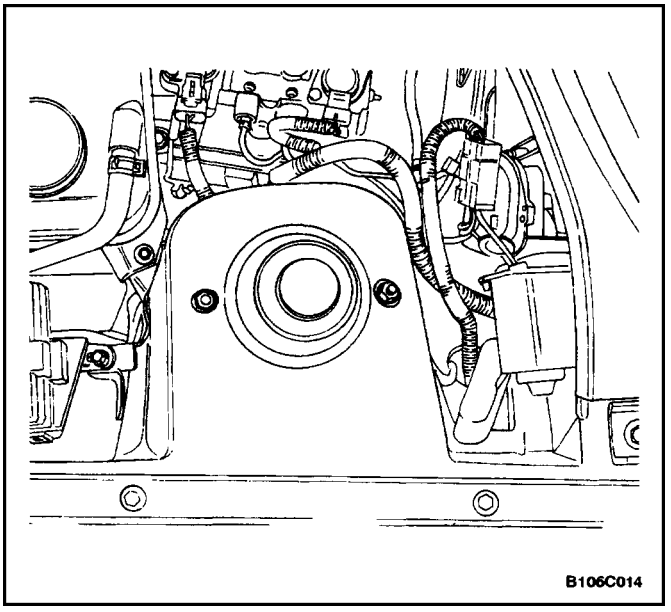
B106C014

STRUT ASSEMBLY

Removal Procedure

1. Remove the nuts that secure the strut assembly to the body of the vehicle.

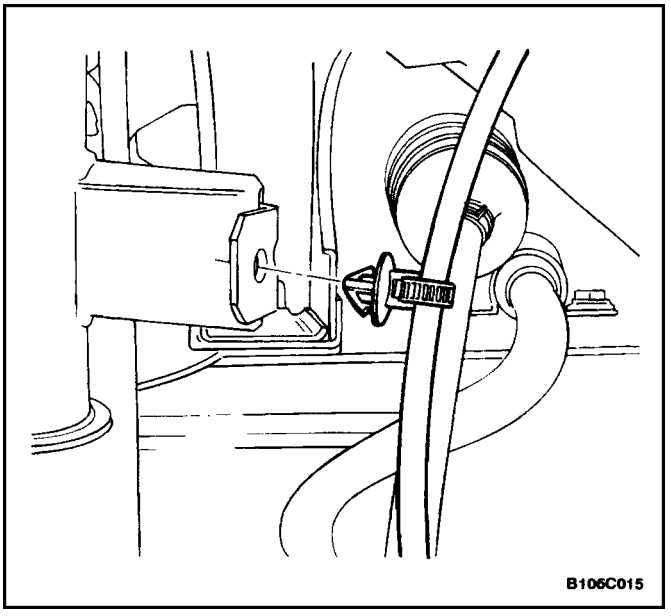
B106C015

2. Raise and suitably support the vehicle.
3. Remove the wheel. Refer to *Section 2E, Tires and Wheels.*
4. On vehicles equipped with an antilock braking system (ABS), disconnect the ABS sensor line from the strut assembly.

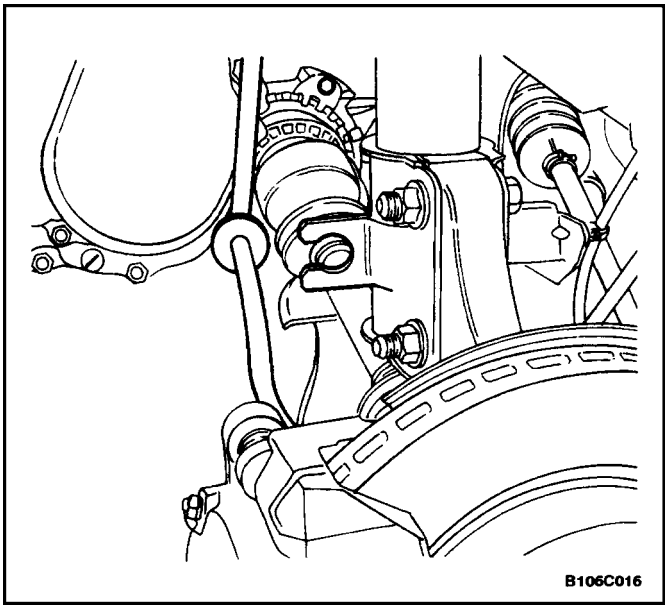
B106C016

5. Remove the brake line from the securing bracket on the strut assembly.

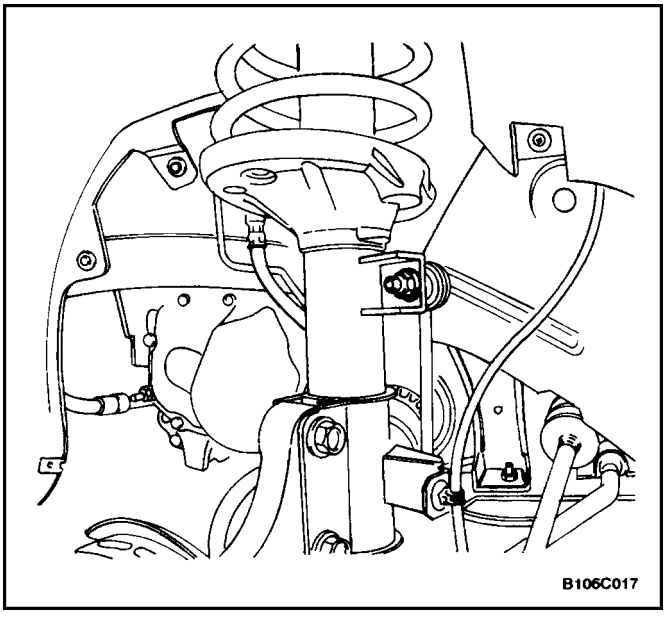

6. Disconnect the stabilizer shaft link by removing the stabilizer link–to–strut assembly nut.

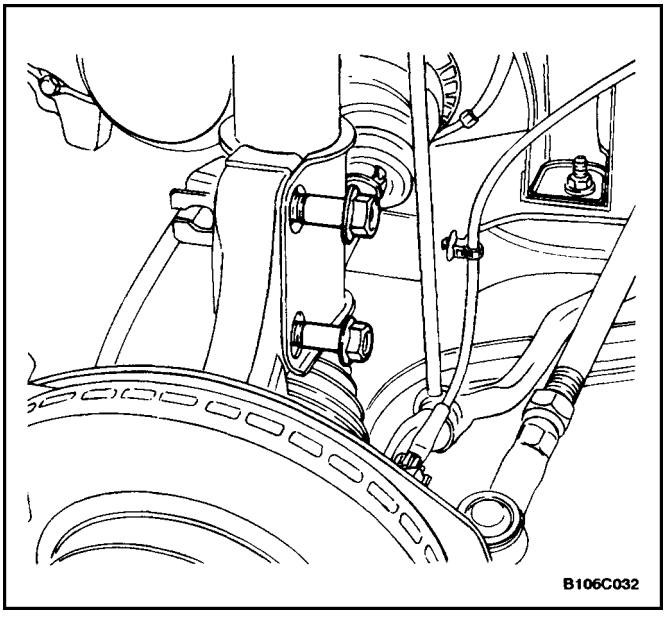

7. Disconnect the steering knuckle by removing the steering knuckle–to–strut assembly nuts and the bolts.

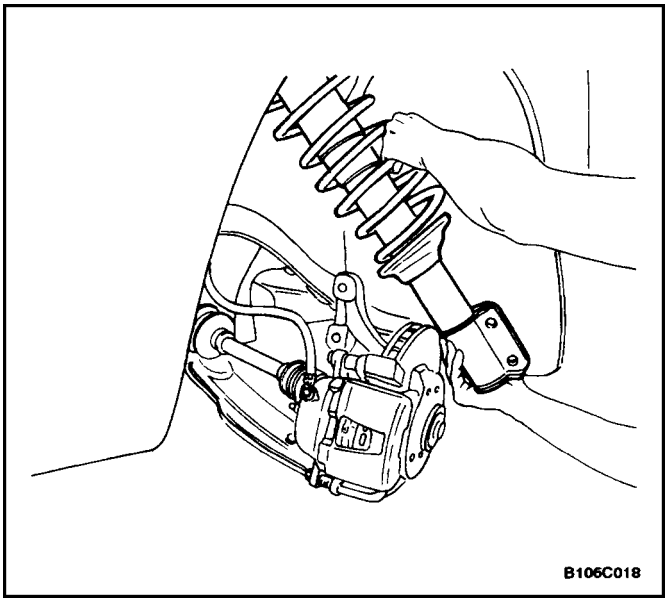

8. Remove the strut assembly.

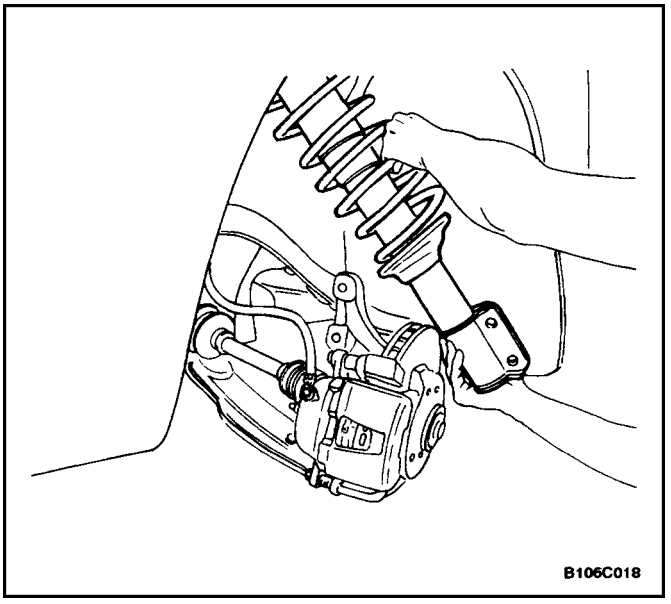

Installation Procedure

1. Install the strut assembly.

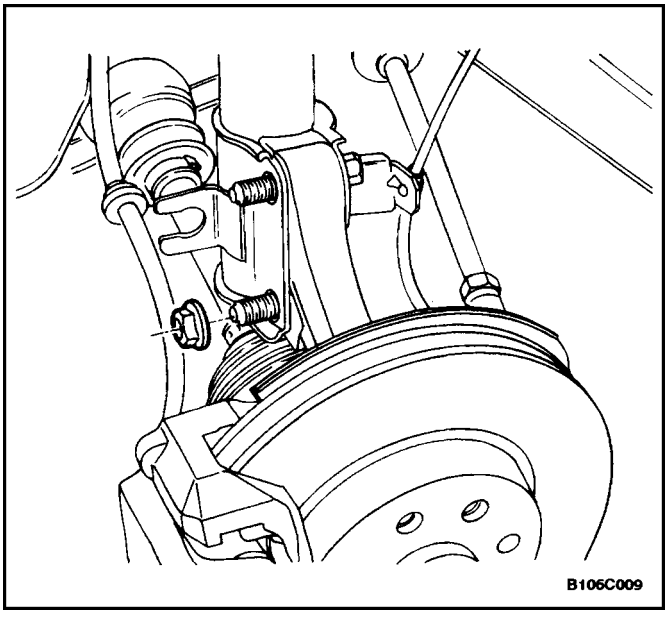

2. Connect the strut assembly to the steering knuckle by installing the steering knuckle–to–strut assembly nuts and the bolts.

   Tighten
   Tighten the steering knuckle–to–strut assembly nuts and the bolts to 100 N•m (74 lb–ft).

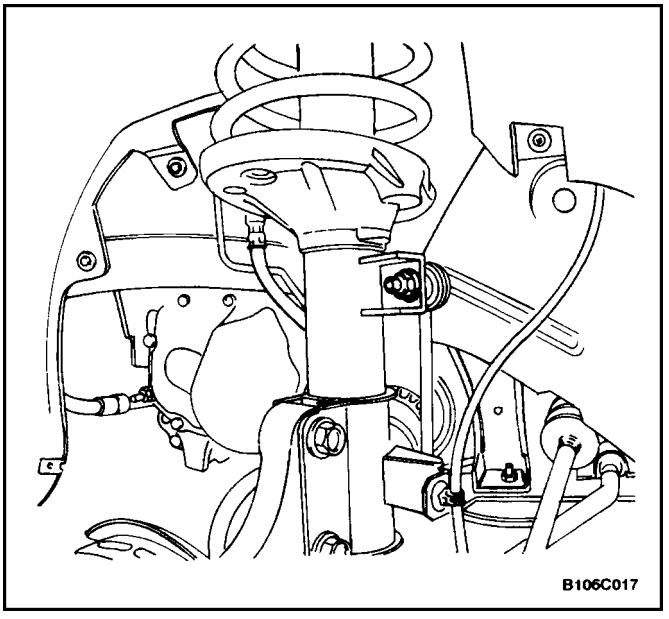

3. Connect the stabilizer shaft link to the strut assembly by attaching the stabilizer link–to–strut assembly nut.

   Tighten
   Tighten the stabilizer link–to–strut assembly nut to 47 N•m (35 lb–ft).

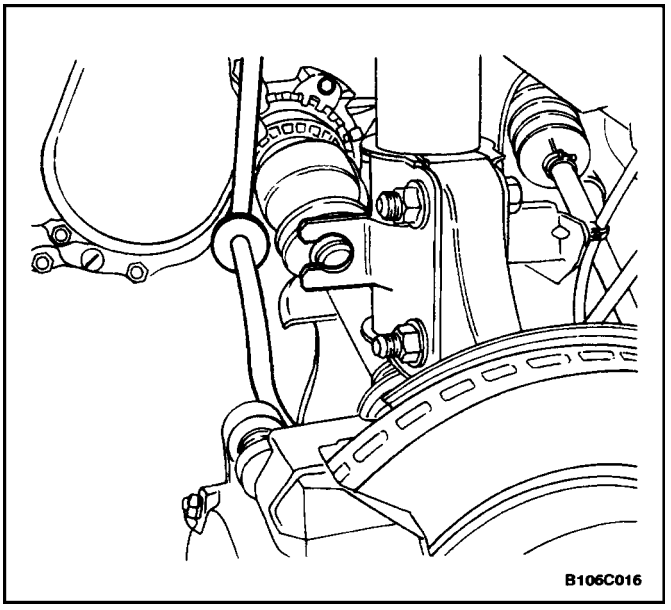

4. On vehicles equipped with the ABS, connect the ABS sensor line to the strut assembly.

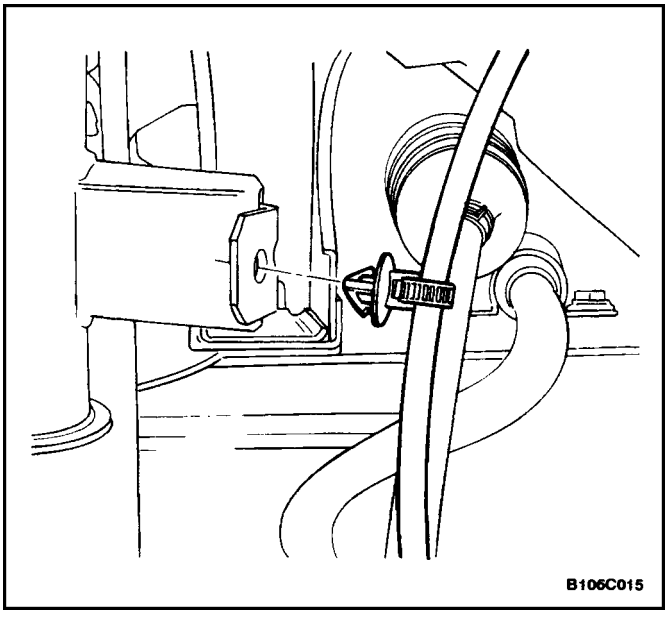

5. On vehicles equipped with the ABS, connect the ABS sensor line to the strut assembly.

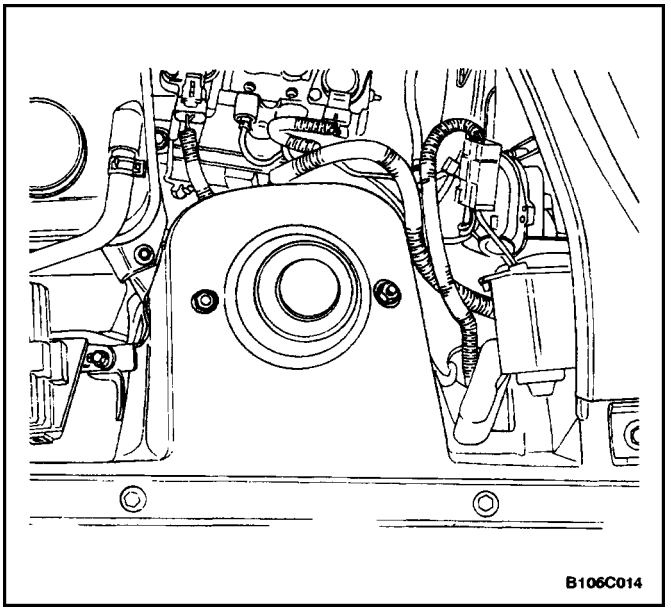

6. Install the wheel. Refer to *Section 2E, Tires and Wheels.*
7. Lower the vehicle.
8. Install the nuts securing the strut assembly to the body of the vehicle.

Tighten

Tighten the strut assembly–to–body nuts to 30 N•m (22 lb–ft).

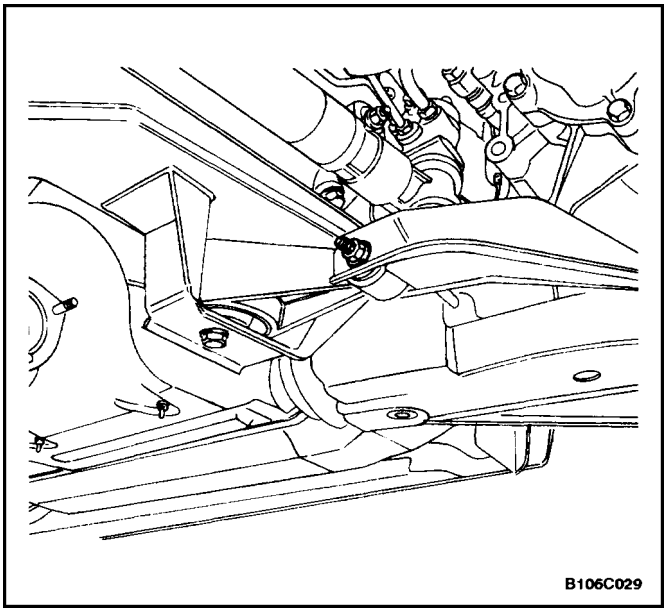
B106C029

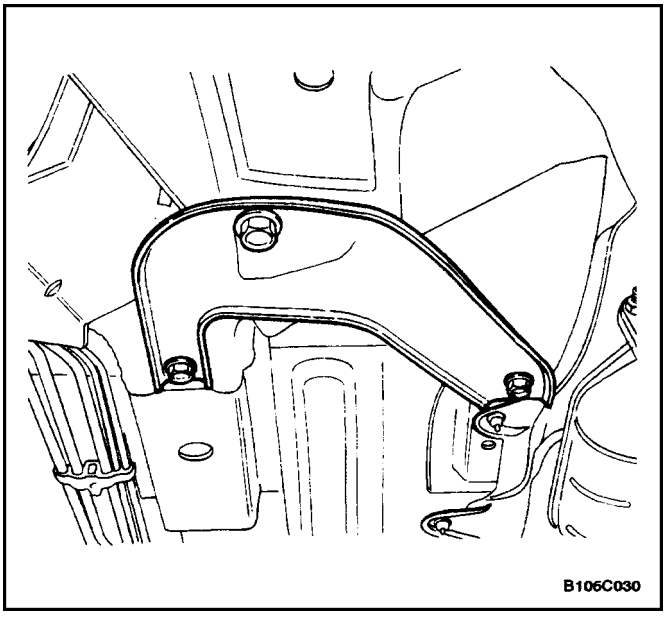
B106C030

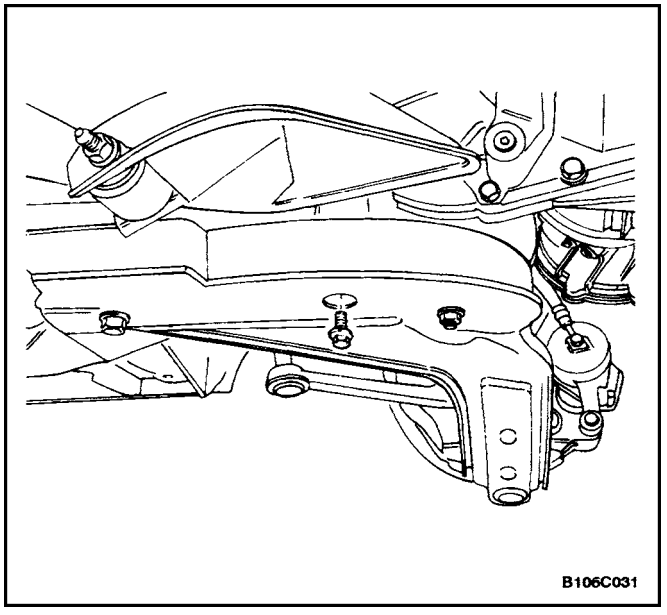
B106C031

CROSSMEMBER ASSEMBLY

Removal Procedure

1. Raise and suitably support the vehicle.
2. Remove the wheels. Refer to *Section 2E, Tires and Wheels.*
3. Remove the exhaust pipe forward of the catalytic converter. Refer to *Section 1G, Engine Exhaust.*
4. Disconnect the tie rod from the knuckle assembly. Refer to *Section 6C, Power Steering Gear.*
5. Disconnect the ball joint from the knuckle assembly. Refer to ”Knuckle Assembly” in this section.
6. Disconnect the stabilizer link from the strut assembly. Refer to ”Stabilizer Link” in this section.
7. Remove the crossmember link–to–transaxle bracket nut.
8. Remove the rear crossmember–to–body bolts.
9. Remove the crossmember support plate–to–body bolts.
10. Remove the crossmember support plates.

CAUTION : Two technicians must hold the front crossmember assembly during removal of the front attachment bolts. Failure to support the front crossmember properly can result in personal injury.

11. Remove the front crossmember–to–body bolts.
12. Remove the crossmember assembly from the vehicle.

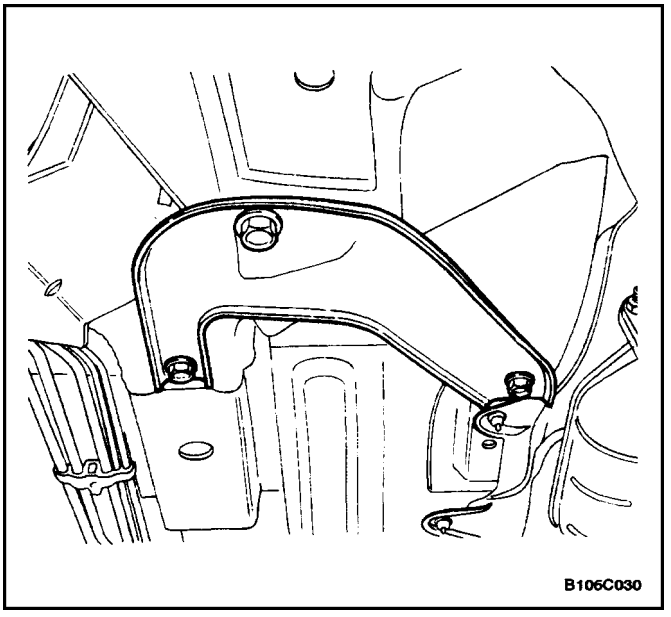

Installation Procedure

1. Install the crossmember assembly.
2. Install the crossmember support plates.
3. Install the rear crossmember–to–body bolts.

Tighten

Tighten the rear crossmember–to–body bolts to 196 N•m (145 lb–ft).

Tighten

Tighten the crossmember support plate–to–body bolts to 47 N•m (35 lb–ft).

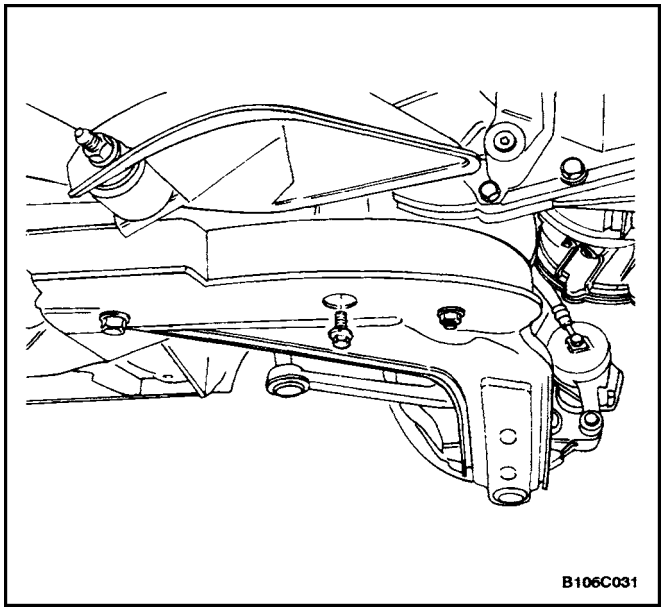

4. Install the front crossmember–to–body bolts.

Tighten

Tighten the front crossmember–to–body bolts to 47 N•m (35 lb–ft).

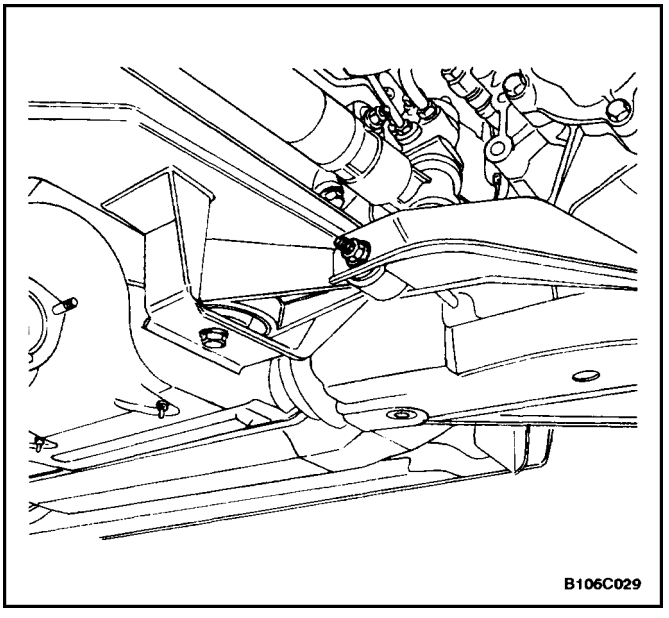

5. Install the crossmember link–to–transaxle bracket nut.

Tighten

Tighten the crossmember link–to–transaxle bracket nut to 67 N•m (49 lb–ft).

6. Connect the stabilizer link to the strut assembly. Refer to ”Stabilizer Link” in this section.
7. Connect the ball joint to the knuckle assembly. Refer to ”Knuckle Assembly” in this section.
8. Connect the tie rod from the knuckle assembly. Refer to *Section 6C, Power Steering Gear.*
9. Install the exhaust pipe into the vehicle. Refer to *Section 1G, Engine Exhaust.*
10. Install the wheels. Refer to *Section 2E, Tires and Wheels.*
11. Lower the vehicle.

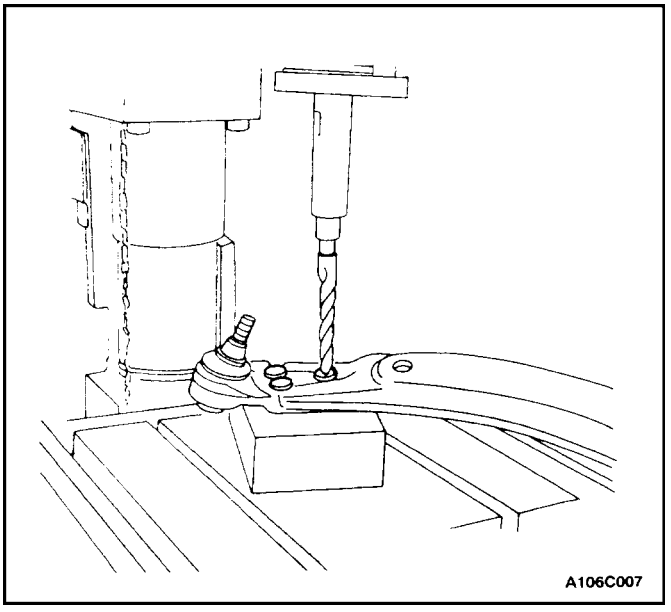

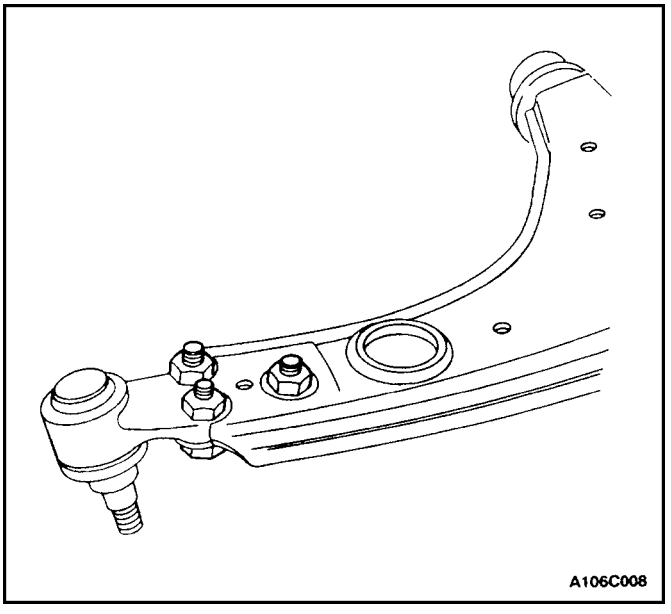

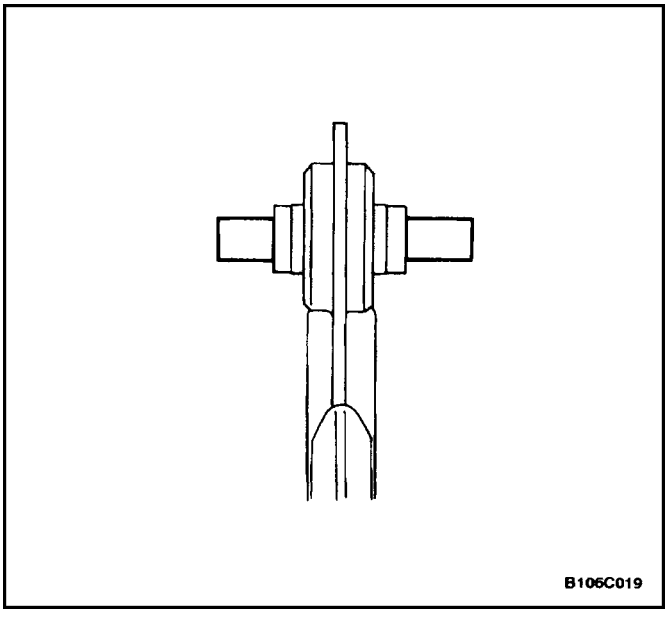

UNIT REPAIR

BALL JOINT

Disassembly Procedure

1. Remove the control arm. Refer to"Control Arm" in this section.
2. Drill off the heads of the two rivets with a 12 mm 0.47 inch) drill bit.
3. Punch out the rivets with a drift.

Assembly Procedure

1. Connect the ball joint to the control arm by inserting two ball joint bolts from below the control arm.

   Tighten

   Tighten the ball joint–to–control arm nuts to 100 N•m (74 lb–ft).
2. Install the control arm. Refer to ."Control Arm" in this section.

CONTROL ARM BUSHINGS

Tools Required

KM–158 Remover/Installer

Disassembly Procedure

1. Remove the control arm. Refer to"Control Arm" in this section.
2. Remove the split sleeves from the rear control arm bushing.

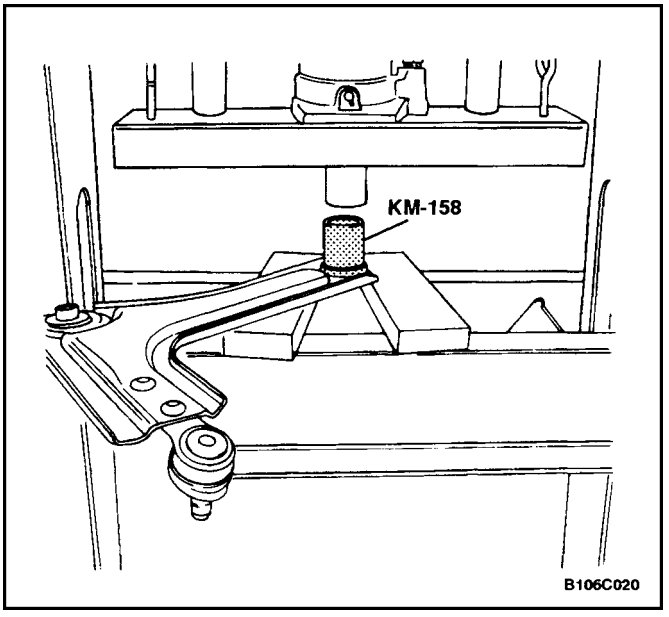

3. Press off the control arm rear damping bushing using a press and the remover/installer KM–158.

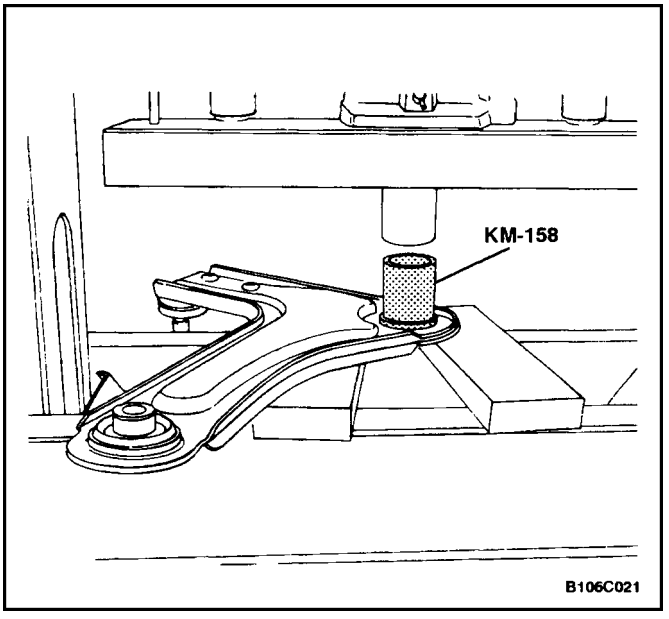

4. Press out the control arm front damping bushing using a press and the remover/installer KM–158.

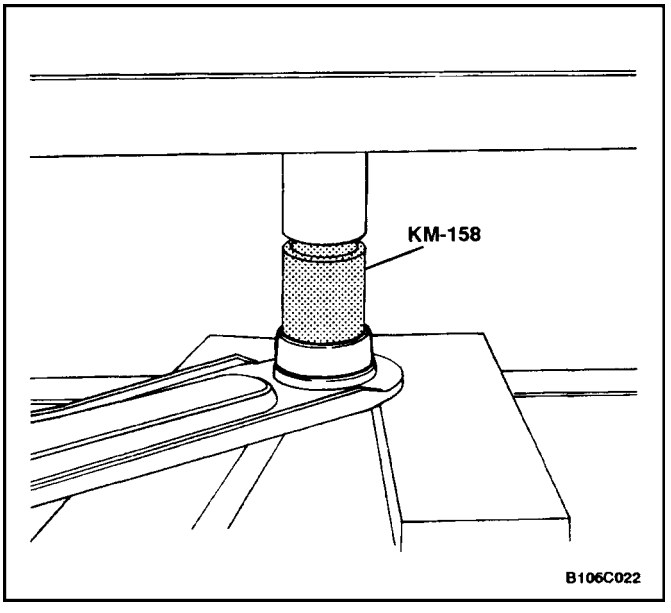

Assembly Procedure

1. Press the control arm rear damping bushing into the control arm using a press and the remover/installer KM–158.

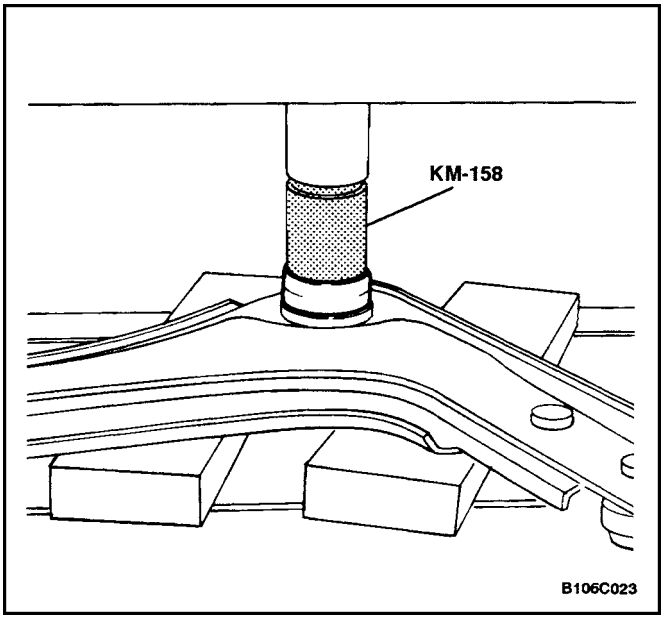

2. Press the control arm front damping bushing into the control arm using a press and the remover/installer KM–158.

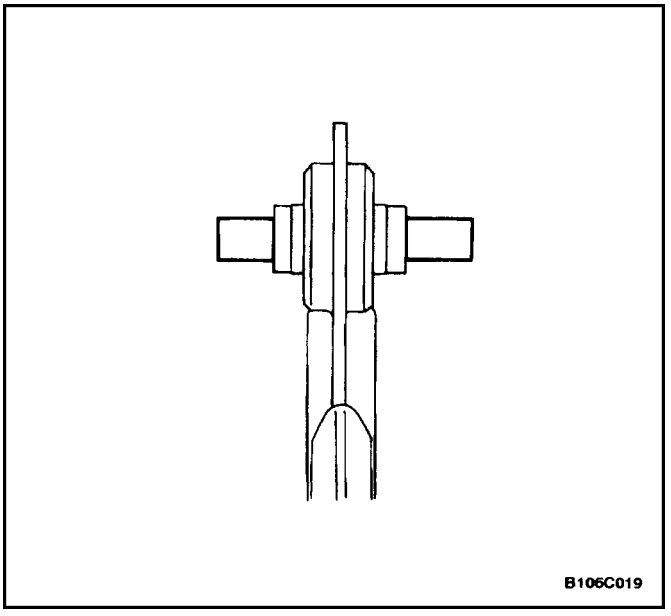

3. Install the split sleeves into the rear control arm bushing.
4. Install the control arm. Refer to ”Control Arm” in this section.

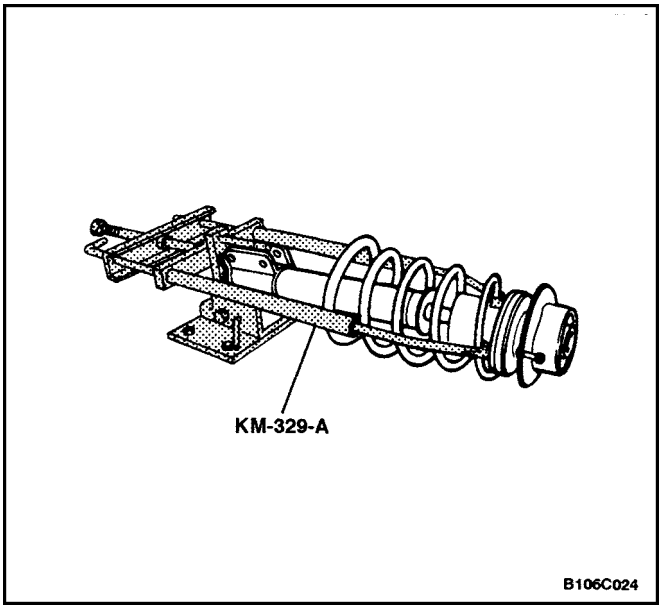

FRONT STRUT ASSEMBLY

Tools Required

KM–329–A Spring Compressor

Disassembly Procedure

1. Remove the strut assembly. Refer to ”Strut Assembly” in this section.
2. Fasten the strut assembly to the spring compressor KM–329–A. Make sure the hooks are seated on the strut spring properly.

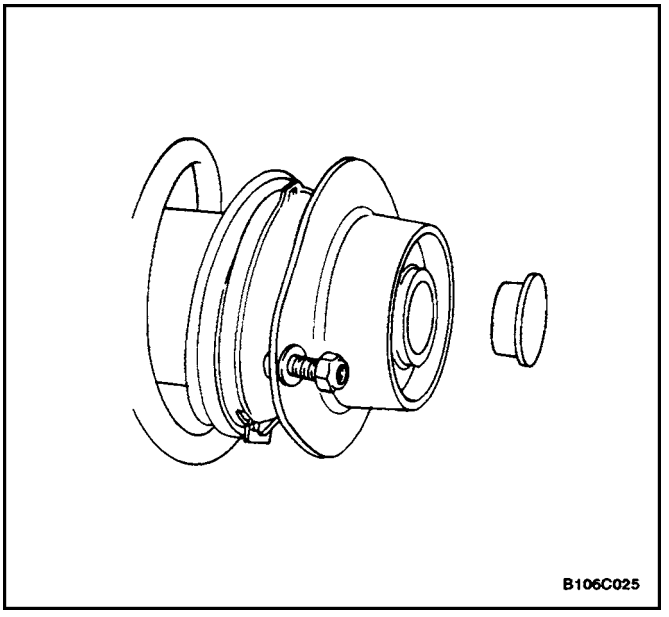

3. Compress the front spring with the spring compressor KM–329–A.
4. Remove the dust cover from the bearing assembly.

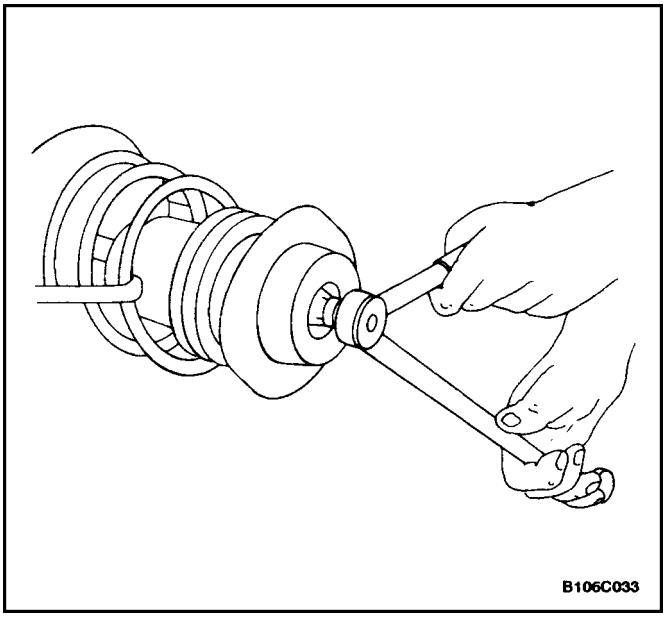

5. Use an open end wrench to hold the threaded piston rod while removing the piston rod nut and the washer with a commercially available double ring spanner, sharply offset.

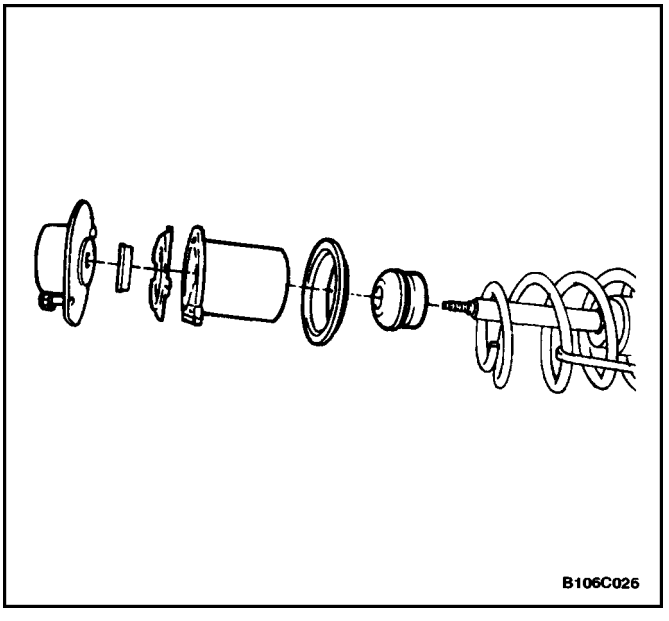

Important : Record the position of the front spring locator relative to the strut assembly–to–knuckle bracket. Place the front spring locator back in the same position during assembly.

6. Remove the upper strut mount, the mount bearing, the upper spring seat, the front spring locator, the upper ring insulator, and the hollow bumper.

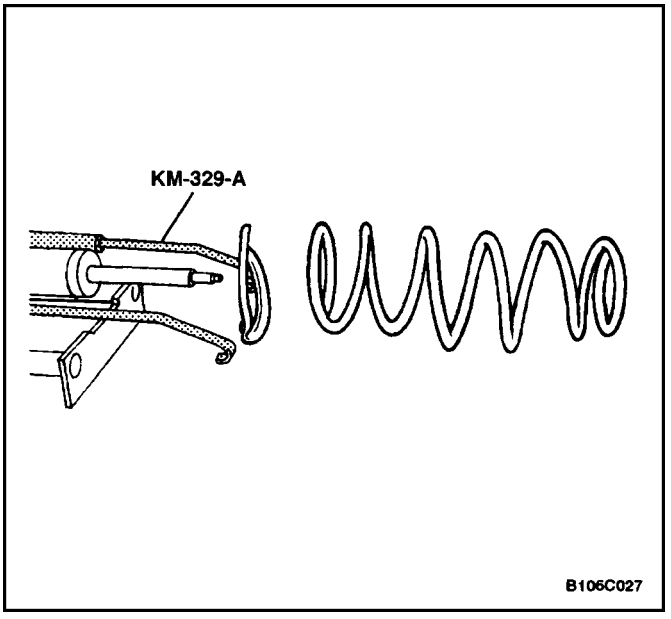

7. Release the spring.
8. Remove the spring and the lower ring insulator.

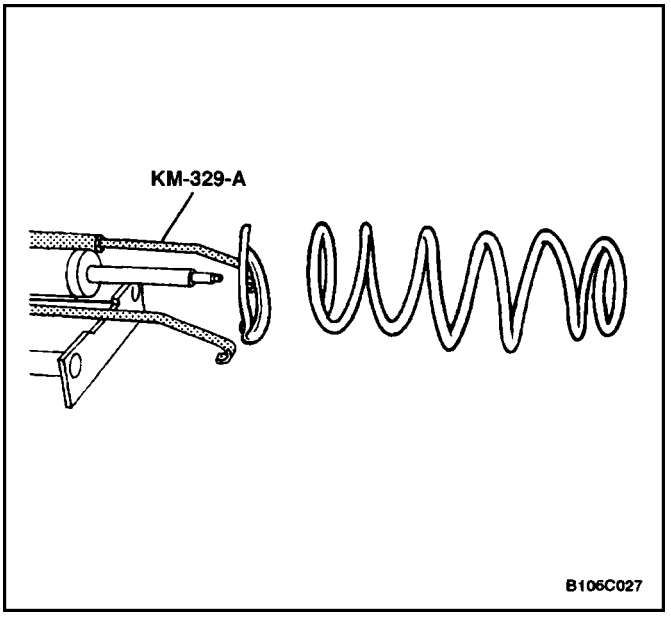

Assembly Procedure

1. Install the lower ring insulator and the spring.
2. Compress the spring using the spring compressor KM–329–A.

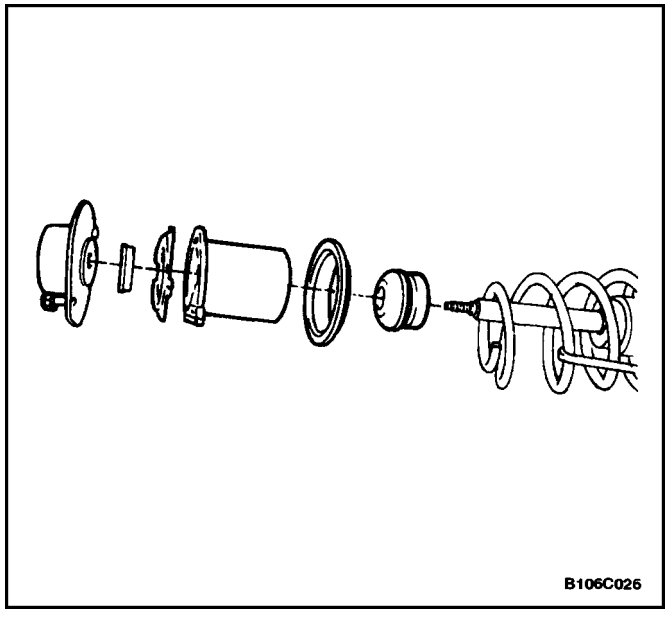

3. Install the hollow bumper, the upper ring insulator, the front spring locator, the upper spring seat, the upper strut mount, and the mount bearing. Be sure the upper spring seat is clipped to the front spring locator.

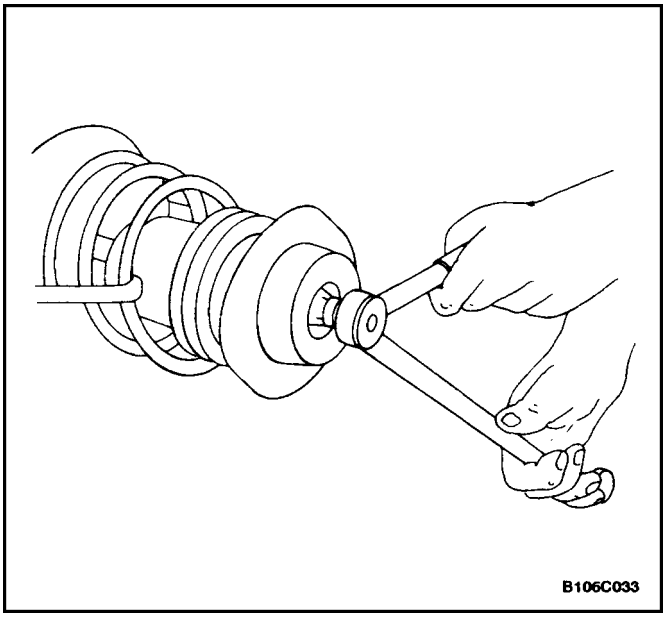

4. Install the piston rod nut.

Tighten

Tighten the piston rod nut to 75 N•m (55 lb–ft).

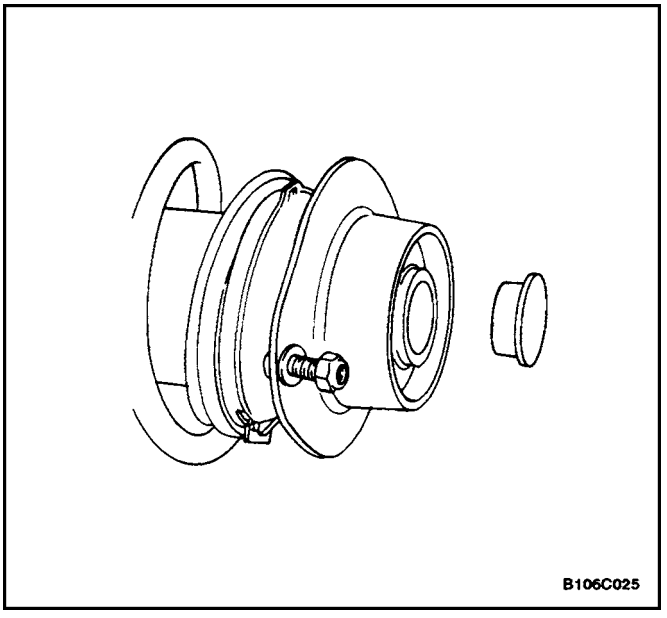

5. Remove the dust cover from the bearing assembly.
6. Release the spring compressor KM–329–A.
7. Remove the strut assembly from the spring compressor KM–329–A.
8. Install the strut assembly onto the vehicle. Refer to ”Strut Assembly” in this section.

KNUCKLE

Disassembly Procedure

1. Remove the knuckle assembly from the vehicle. Refer to”Knuckle Assembly” in this section.
2. Remove the rotor. Refer to *Section 4D, Front Disc Brakes.*
3. Remove the hub and bearing assembly. Refer to ”Hub and Bearing” in this section.
4. Remove the brake splash shield. Refer to *Section 4D, Front Disc Brakes.*

Assembly Procedure

1. Install the brake splash shield. Refer to *Section 4D, Front Disc Brakes.*
2. Install the hub and bearing assembly. Refer to ”Hub and Bearing” in this section.
3. Install the rotor. Refer to *Section 4D, Front Disc Brakes.*
4. Install the knuckle assembly onto the vehicle. Refer to ”Knuckle Assembly” in this section.

CROSSMEMBER

Disassembly Procedure

1. Remove the crossmember assembly from the vehicle. Refer to ”Crossmember Assembly” in this section.
2. Remove the stabilizer clamp bolts. Remove the stabilizer clamps, the stabilizer bar, and the insulators.

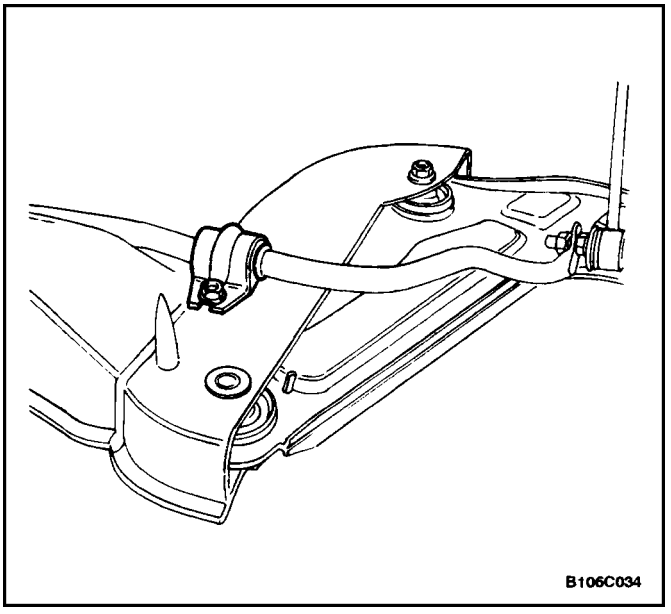

3. Remove the control arm front nuts and the bolts.

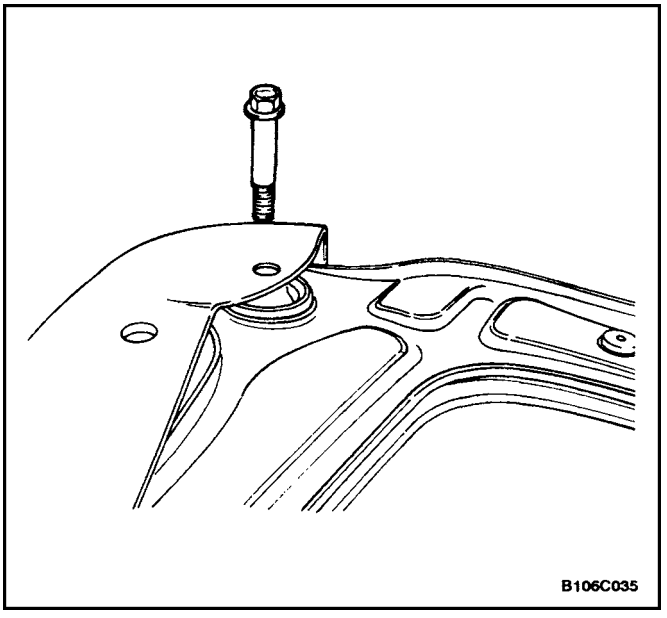

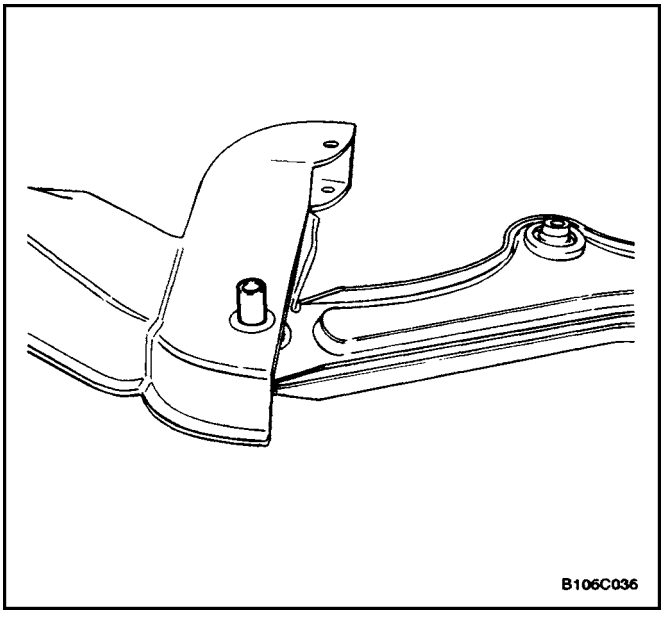

4. Remove the split sleeves from the control arm rear connections.
5. Remove the control arms.

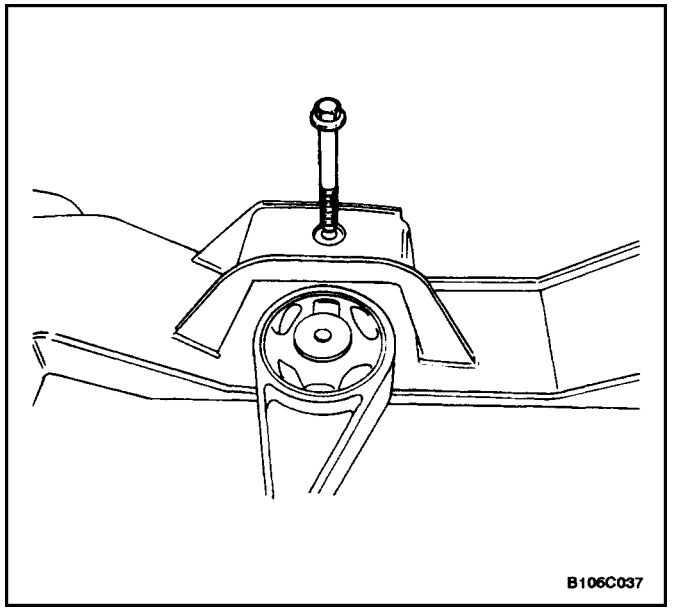

6. Remove the crossmember link–to–crossmember bolt.
7. Remove the crossmember link.

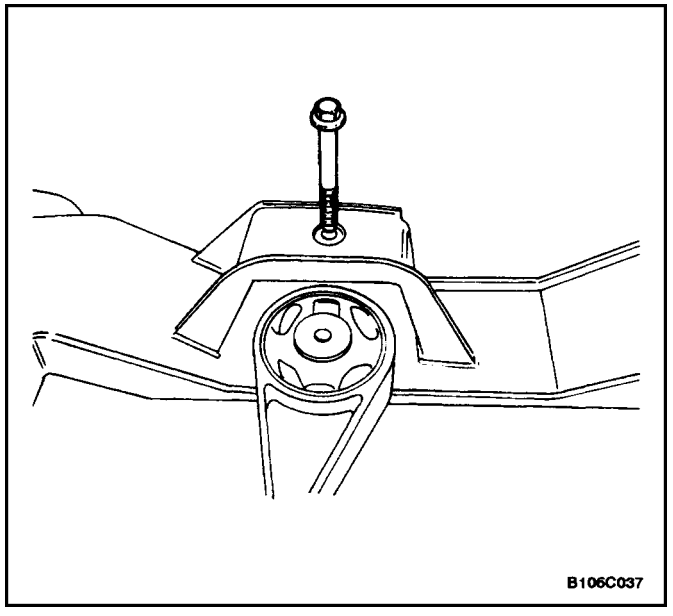

Assembly Procedure

1. Install the crossmember link.
2. Install the crossmember link–to–crossmember bolt.

   Tighten

   Tighten the crossmember link–to–crossmember bolt to 125 N•m (92 lb–ft).

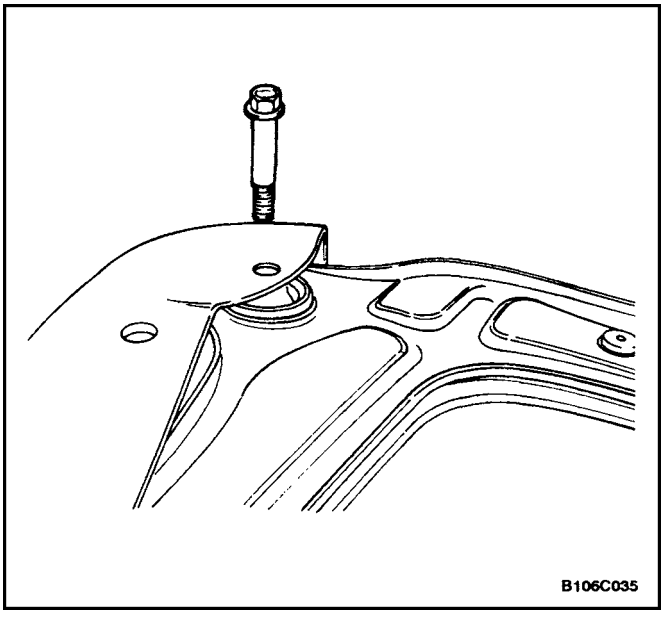

3. Install the control arms.
4. Install the split sleeves into the control arm rear connections.
5. Install the control arm–to–crossmember nuts and the bolts.

Tighten

Tighten the control arm–to–crossmember nuts and the bolts to 110 N•m (81 lb–ft).

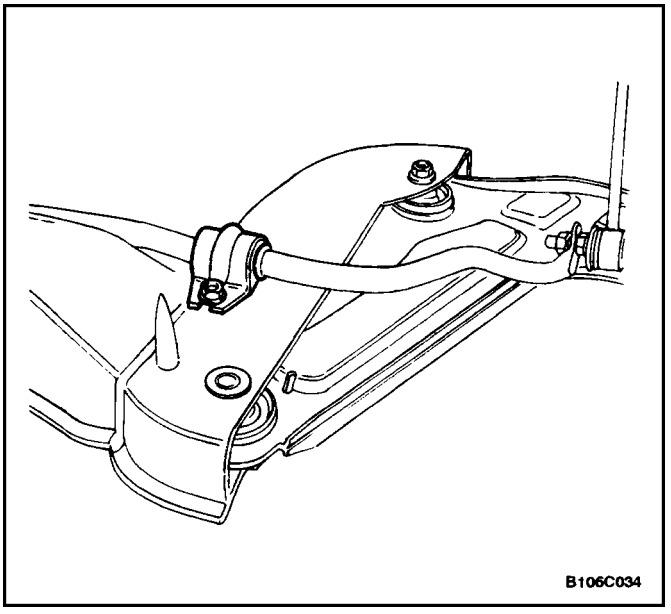

6. Install the stabilizer clamps, the stabilizer bar, and the insulators.
7. Install the stabilizer shaft–to–crossmember clamp bolts.

Tighten

Tighten the stabilizer shaft–to–crossmember clamp bolts to 22 N•m (16 lb–ft).

8. Install the crossmember assembly from the vehicle. Refer to ”Crossmember Assembly” in this section.

GENERAL DESCRIPTION AND SYSTEM OPERATION

FRONT SUSPENSION (FOR ENGINE FAMILY I)

The front suspension for this vehicle is a combination of a strut assembly and a knuckle assembly. The strut assembly combines a strut dampener and spring mounted to the body of the vehicle. The upper end of the strut is isolated by a rubber mount and contains a bearing to allow the strut to turn. The knuckle is attached to the strut assembly and pivots on a ball joint bolted to the control arm. The control arms pivot from the body using rubber bushings.

The ball joint is fastened to the steering knuckle with a pinch bolt and nut, and to the lower control arm with rivets. The stabilizer bar interconnects both strut assemblies of the vehicle through the stabilizer link and is attached to the front suspension crossmember. Jounce and rebound-movements affecting one wheel are partially transmitted to the opposite wheel of the vehicle to stabilize body roll.

When servicing the control arm–to–body attachment and the stabilizer shaft–to–body insulators, make sure the attaching bolts are loose until the control arms are moved to the trim height, which is curb height. Trim height is the normal position to which the control arms move when the vehicle is sitting on the ground. Refer to ”General Specifications” in this section.

FRONT SUSPENSION (FOR ENGINE FAMILY II)

The front suspension for this vehicle is a combination of a strut assembly and a knuckle assembly. The strut assembly combines a strut dampener and spring mounted to the body of the vehicle. The upper end of the strut is isolated by a rubber mount and contains a bearing to allow the strut to turn. The knuckle is attached to the strut assembly and pivots on a ball joint bolted to the control arm. The control arms pivot from the body using rubber bushings.

The ball joint is fastened to the steering knuckle with a pinch bolt and nut, and to the lower control arm with rivets. The stabilizer bar interconnects both strut assemblies of the vehicle through the stabilizer link and is attached to the front suspension crossmember. Jounce and rebound-movements affecting one wheel are partially transmitted to the opposite wheel of the vehicle to stabilize body roll.

When servicing the control arm–to–body attachment and the stabilizer shaft–to–body insulators, make sure the attaching bolts are loose until the control arms are moved to the trim height, which is curb height. Trim height is the normal position to which the control arms move when the vehicle is sitting on the ground. Refer to ”General Specifications” in this section.

The springs in the front suspension of engine family II are stronger and the strut dampeners heavier than are the springs and strut dampeners found in the front suspension of engine family I.

SECTION : 2D

REAR SUSPENSION

CAUTION : Disconnect the negative battery cable before removing or installing any electrical unit or when a tool or equipment could easily come in contact with exposed electrical terminals. Disconnecting this cable will help prevent personal injury and damage to the vehicle. The ignition must also be in LOCK unless otherwise noted.

TABLE OF CONTENTS

SPECIFICATIONS 2D–2
GENERAL SPECIFICATIONS 2D–2
FASTENER TIGHTENING SPECIFICATIONS 2D–2
SPECIAL TOOLS 2D–2
SPECIAL TOOLS TABLE 2D–2
DIAGNOSIS 2D–3
EXCESSIVE FRICTION CHECK 2D–3
STRUT DAMPENER 2D–3
COMPONENT LOCATOR 2D–4
REAR SUSPENSION 2D–4
MAINTENANCE AND REPAIR 2D–6
ON–VEHICLE SERVICE 2D–6
WHEEL BEARING ADJUSTMENT 2D–6
STRUT ASSEMBLY 2D–6
KNUCKLE ASSEMBLY 2D–11
TRAILING LINK 2D–13
TRAILING LINK BRACKET 2D–15
FRONT PARALLEL LINK 2D–17
REAR PARALLEL LINK 2D–19
STABILIZER SHAFT 2D–21
STABILIZER LINK 2D–22
CROSSMEMBER 2D–23
HUB AND BEARING ASSEMBLY 2D–25
UNIT REPAIR 2D–27
SPRINGS AND INSULATORS 2D–27
KNUCKLE 2D–30
HUB AND BEARING 2D–30
GENERAL DESCRIPTION AND SYSTEM OPERATION 2D–33
REAR SUSPENSION 2D–33

SPECIFICATIONS

GENERAL SPECIFICATIONS

Application	Description
Lubrication	Wheel Bearing Lubricant GM P/N 1051344

FASTENER TIGHTENING SPECIFICATIONS

Application	N•m	Lb–Ft	Lb–In
Crossmember–to–Body Bolts	93	69	
Strut Dampener–to–Strut Mount Nut	75	55	
Front Parallel Link–to–Crossmember Bolt	75	55	
Front Parallel Link–to–Knuckle Bolt	75	55	
Fuel Filler Hose Shield Bolt	20	15	
Knuckle–to–Strut Assembly Nuts	100	74	
Rear Parallel Link–to–Knuckle Bolt	90	66	
Rear Trailing Link–to–Trailing Link Bracket Nut	100	74	
Rear Trailing Link–to–Knuckle Bolt	85	63	
Stabilizer Link–to–Strut Assembly Nut	47	35	
Stabilizer Shaft Clamp Bolts	25	18	
Stabilizer Shaft–to–Stabilizer Link Nut	47	35	
Strut Mount–to–Body Nuts	30	22	
Trailing Link Bracket–to–Body Bolts	93	69	
Trailing Link–to–Trailing Link Bracket Nut	100	74	
Wheel Bearing Spindle Nut	25–180˚+1	18–180˚+0.75	

SPECIAL TOOLS

SPECIAL TOOLS TABLE

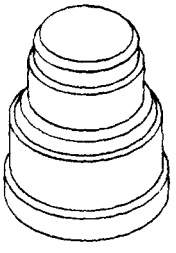 B106D035	KM–266–A Installer	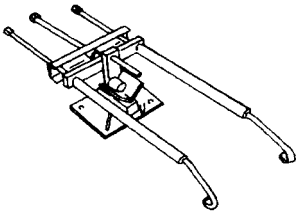 A106C031	KM–329–A Spring Compressor

DIAGNOSIS

EXCESSIVE FRICTION CHECK

Check excessive friction in the rear suspension as follows:

1. With the aid of a helper, lift up on the rear bumper and raise the vehicle as high as possible. Slowly release the bumper and allow the car to assume normal trim height.
2. Measure the distance from the floor to the center of the bumper.
3. Push down on the bumper, release slowly, and allow the car to assume normal trim height.
4. Measure the distance from the floor to the center of the bumper.

The difference between the two measurements should be less than 12.7 mm (0.50 inch). If the difference exceeds this limit, inspect the control arms for damage or wear.

STRUT DAMPENER

A strut dampener is basically a shock absorber. However, strut dampeners are easier to extend and retract by hand than are shock absorbers.

Struts Seem Weak

Checks	Action
Check the tire pressures.	Adjust the tire pressures to the specifications on the tire placard.
Check the load conditions under which the vehicle is normally driven.	Consult with the owner to confirm the owner's understanding of normal load conditions.
Check the compression and rebound effectiveness of the strut dampener.	Quickly push down and then lift up on the corner of the bumper nearest the strut dampener being tested. Compare the compression and rebound with those of a similar vehicle that has an acceptable ride quality. Replace the strut dampener, if needed.

Struts Are Noisy

Checks	Action
Check the mountings for looseness or damage.	Tighten the strut dampener. Replace the strut dampener, if needed.
Check the compression and rebound effectiveness of the strut dampener.	Quickly push down and then lift up on the corner of the bumper nearest the strut dampener being tested. Compare the compression and rebound with those of a similar vehicle that has an acceptable ride quality. Replace the strut dampener, if needed.

Leaks

Checks	Action
Check for a slight trace of fluid.	The strut dampener is OK.
Check the seal cover on the fully extended strut.	Replace the strut dampener.
Check for an excessive amount of fluid on the strut dampener.	Replace the strut dampener.

COMPONENT LOCATOR

REAR SUSPENSION

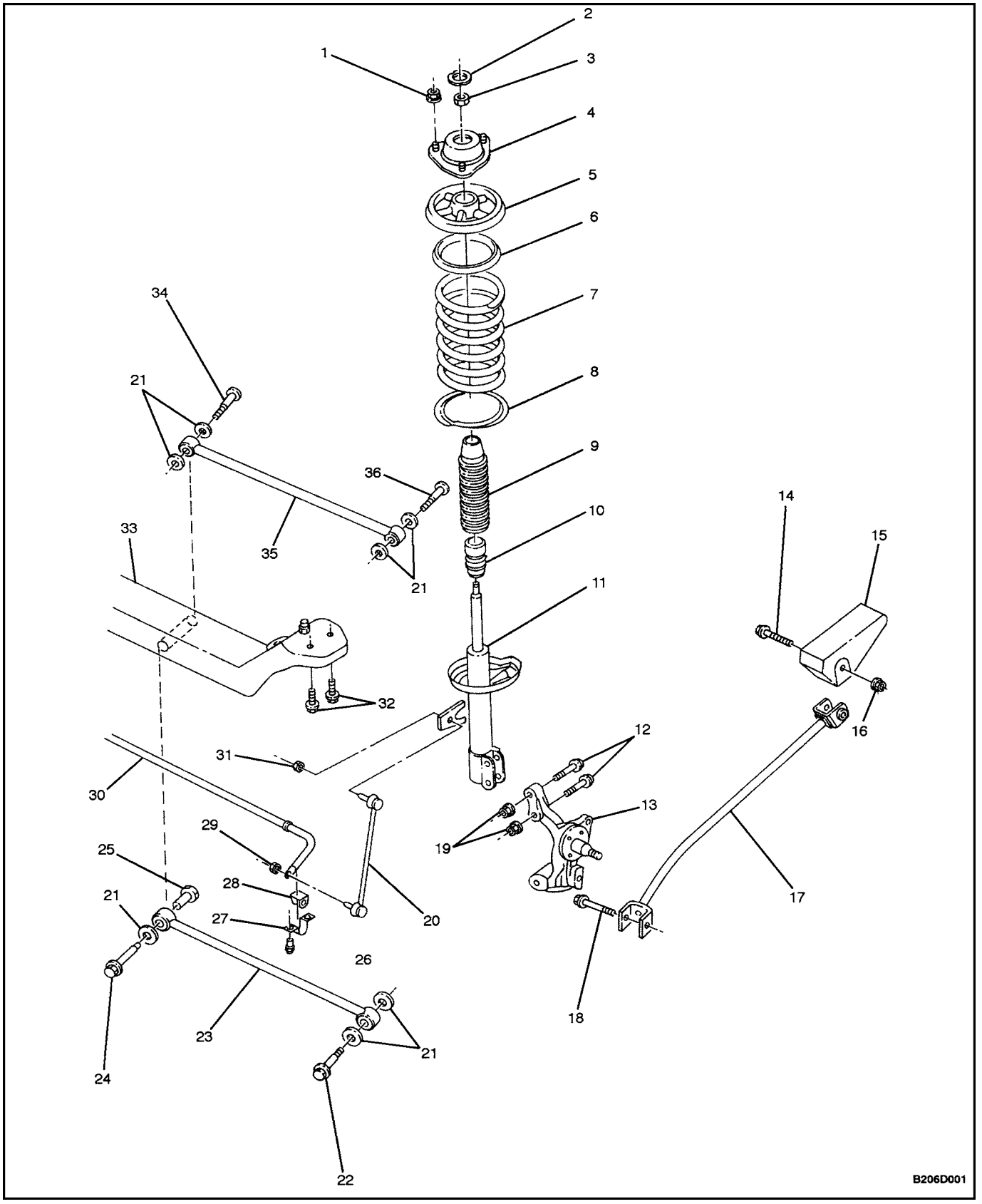

1. Strut Assembly–to–Body Nut
2. Strut Mount Dust Cap

3. Strut Mount Lock Nut
4. Strut Mount
5. Upper Spring Seat
6. Upper Spring Insulation Ring
7. Rear Spring
8. Lower Spring Insulation Ring
9. Strut Dampener Dust Cover
10. Hollow Bumper
11. Strut Dampener
12. Strut Assembly–to–Knuckle Bolt
13. Rear Knuckle
14. Trailing Link–to–Trailing Link Bracket Bolt
15. Trailing Link Bracket
16. Trailing Link–to–Trailing Link Bracket Nut
17. Trailing Link
18. Trailing Link–to–Knuckle Bolt
19. Strut Assembly–to–Knuckle Nut
20. Stabilizer Link
21. Washer
22. Rear Parallel Link–to–Knuckle Bolt
23. Rear Parallel Link
24. Rear Parallel Link–to–Crossmember Bolt
25. Rear Toe Adjusting Cam
26. Stabilizer Shaft Clamp Bolt
27. Stabilizer Shaft Clamp
28. Stabilizer Shaft Insulator
29. Stabilizer Shaft–to–Stabilizer Link Nut
30. Stabilizer Shaft
31. Stabilizer Link–to–Strut Assembly Nut
32. Rear Crossmember–to–Body Bolts
33. Rear Crossmember
34. Front Parallel Link–to–Crossmember Bolt
35. Front Parallel Link
36. Front Parallel Link–to–Knuckle Bolt

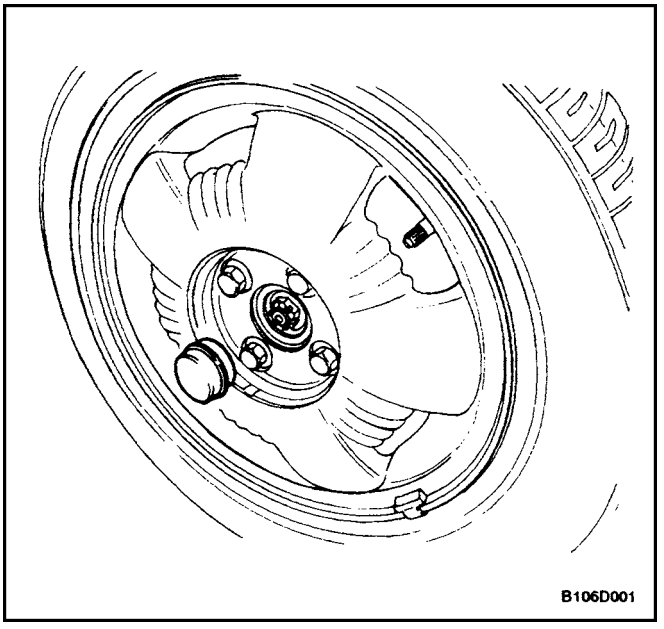

MAINTENANCE AND REPAIR

ON–VEHICLE SERVICE

WHEEL BEARING ADJUSTMENT

Adjustment Procedure

1. Remove the dust cap from the hub and the cotter pin from the spindle.

   Tighten

   Tighten the wheel bearing spindle nut to 25 N•m (18 lb–ft) while turning the wheel assembly forward by hand to fully seat the bearings. This will remove any grease or burrs which could cause excessive wheel bearing play.
2. Loosen the wheel bearing spindle nut 180 degrees.
3. Tighten the wheel bearing spindle nut to 1 N•m (9 lb–in).
4. Install the new cotter pin and bend the ends.
5. Measure the end play. There will be from 0.03 to 0.13 mm (0.001 to 0.005 inch) end play when the wheel bearing is properly adjusted.
6. Install the dust cap on the hub.

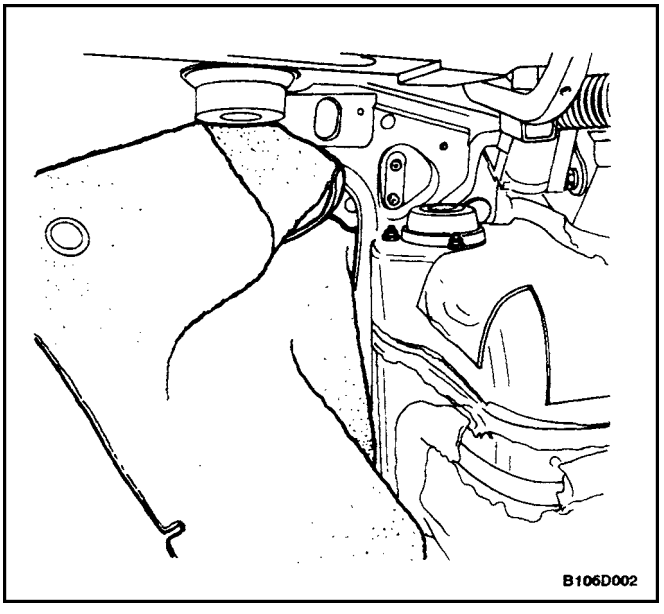

STRUT ASSEMBLY

Removal Procedure

1. Remove the trunk carpeting that covers the rear strut mounting nuts. For station wagons, remove the panels that cover the luggage compartment wheelhouse trim panel (wagon). Refer to *Refer to Section 9G, Interior Trim.*

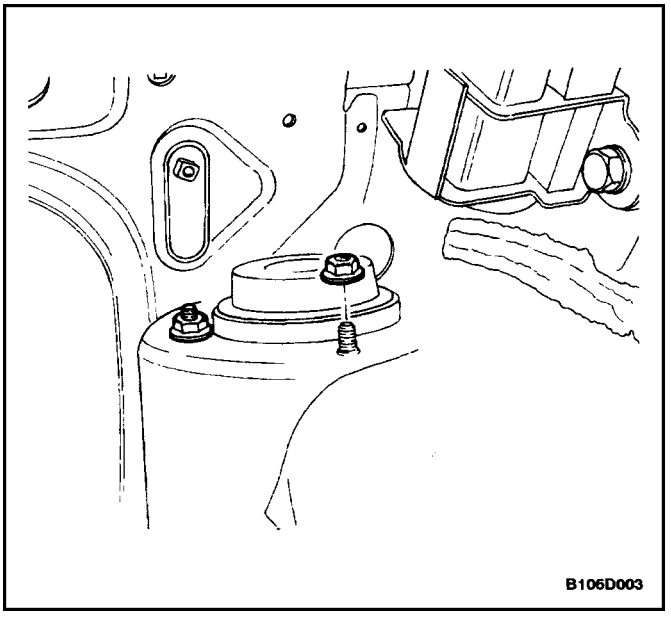

2. Remove the rear strut mounting nuts.

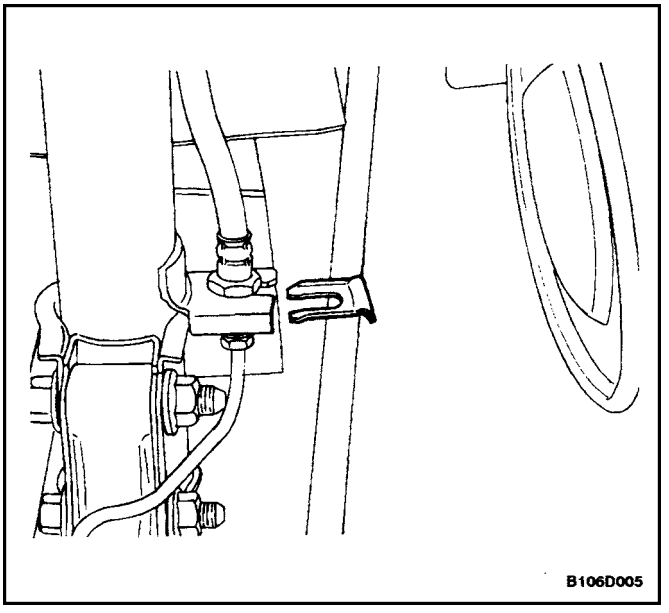

3. Raise and suitably support the vehicle.
4. Remove the wheel. Refer to Section 2E, Tires and Wheels.
5. Disconnect the parking brake. Refer to Section 4G, Parking Brake.

Important : On vehicles equipped with rear drum brakes, the brake hose will easily disconnect from the strut assembly as the assembly is being removed from the vehicle. On vehicles equipped with rear disc brakes, the brake hose can be disconnected from the strut assembly at any time.

6. Remove the clip that holds the brake hose to the strut assembly.

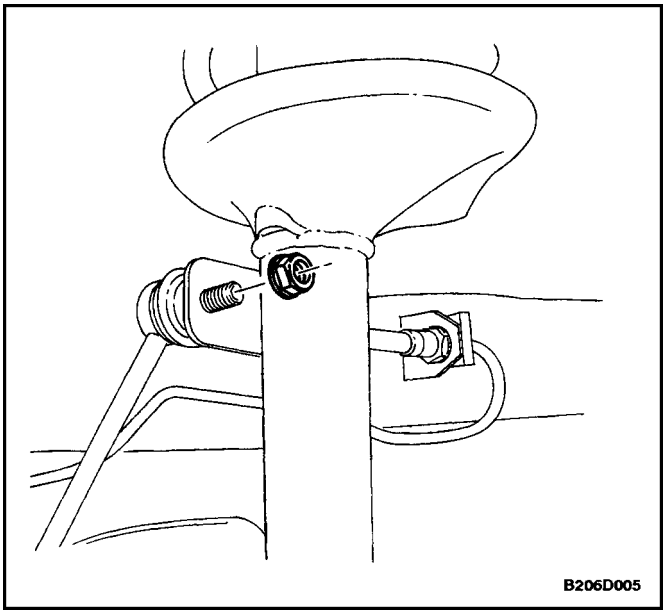

7. Remove the stabilizer link–to–strut assembly nut and disconnect the stabilizer link from the strut assembly.

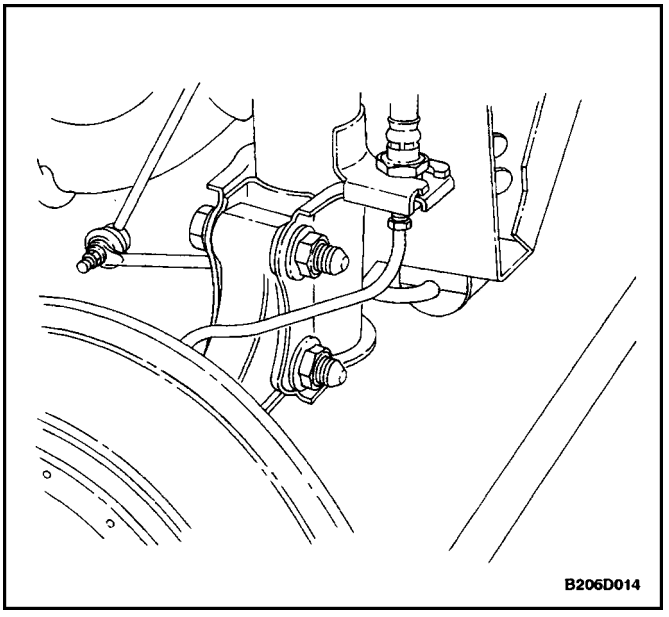

8. Remove the knuckle–to–strut assembly nuts and the bolts.

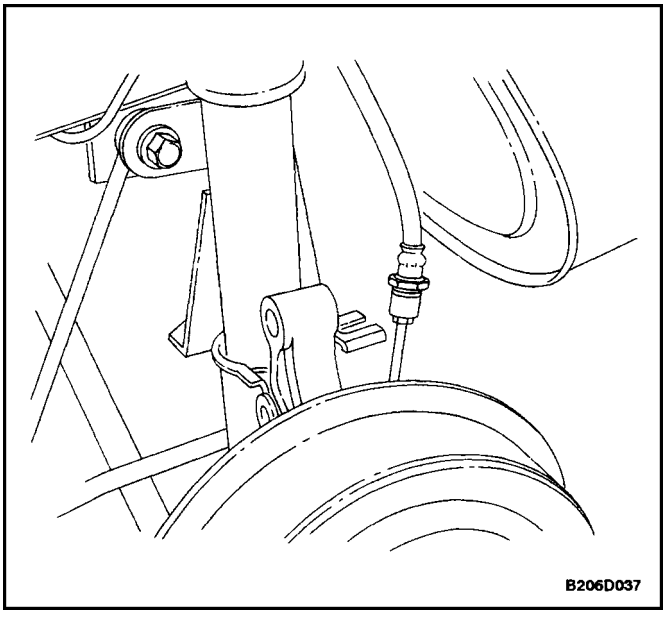

9. On vehicles equipped with rear drum brakes, lower the strut assembly and separate the brake line from the strut assembly.

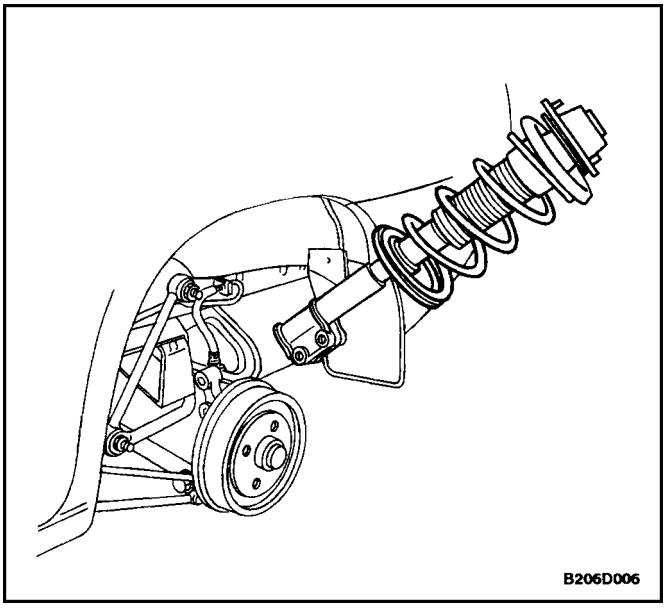

10. Remove the rear strut assembly from the vehicle.

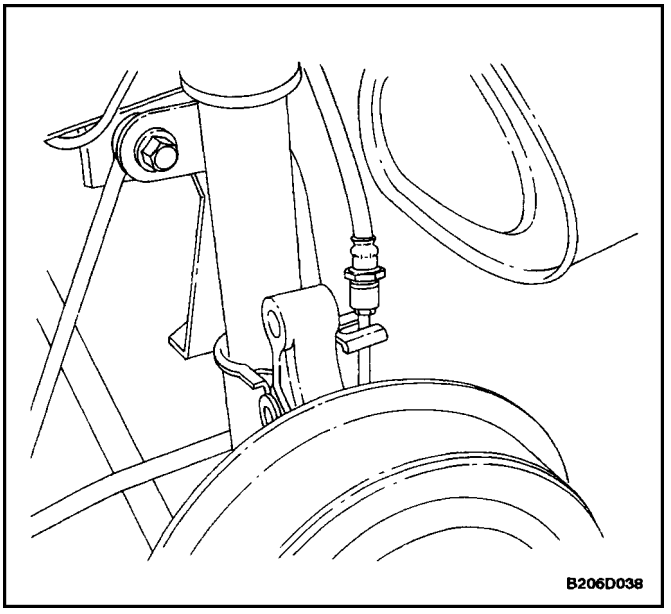

Installation Procedure

Important : On vehicles equipped with rear drum brakes, the brake hose will easily connect to the strut assembly as the assembly is being installed into the vehicle. On vehicles equipped with rear disc brakes, the brake hose can be connected to the strut assembly at any time after the strut assembly has been installed into the vehicle.

1. Install the rear strut assembly into the vehicle. On vehicles equipped with rear drum brakes, secure the brake line into the holder as the assembly goes into place.

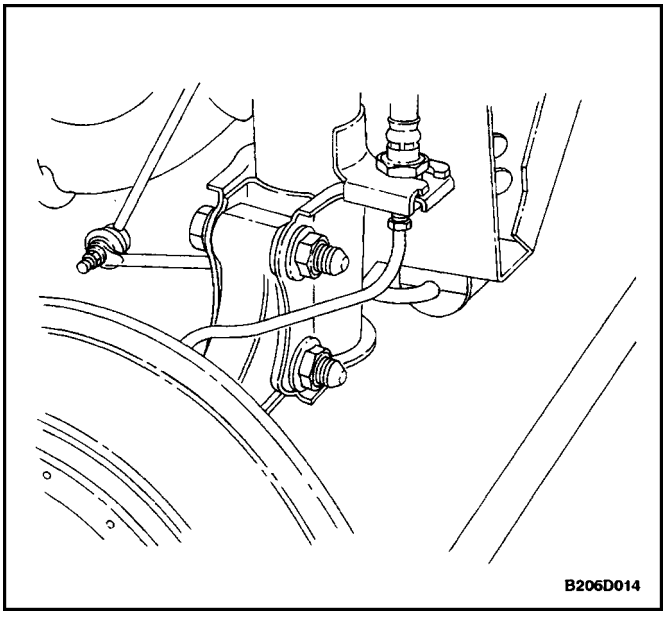

2. Secure the strut assembly by loosely attaching the strut mount–to–body nuts.
3. Install the knuckle–to–strut assembly nuts and bolts. Do not tighten.

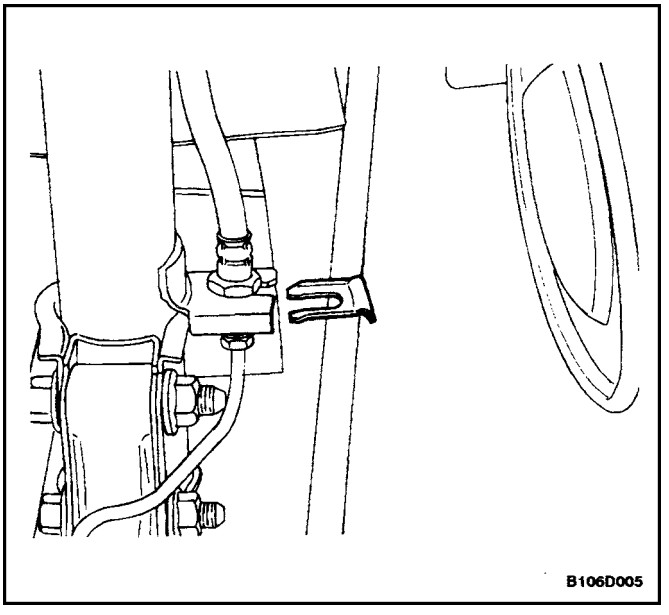

4. Install the clip holding the brake hose to the strut assembly.

Tighten

Tighten the knuckle–to–strut assembly nuts to 100 N•m (74 lb–ft).

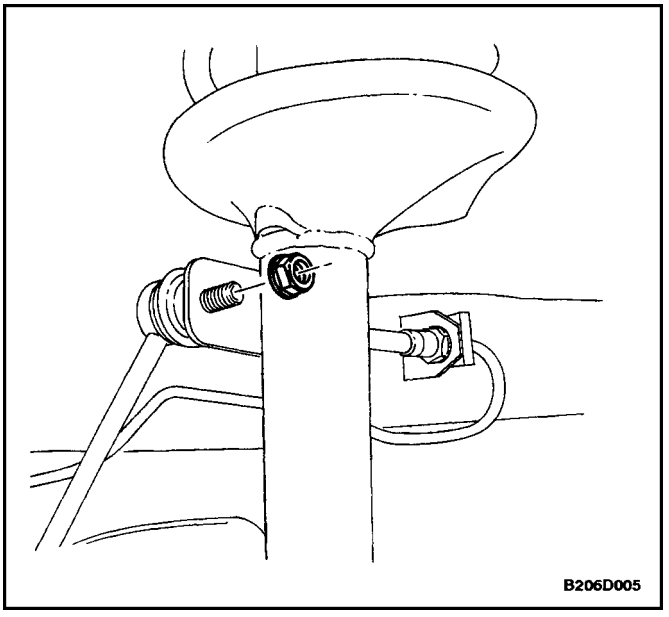

5. Connect the stabilizer link to the strut assembly and install the stabilizer link–to–strut assembly nut.

   Tighten

   Tighten the stabilizer link–to–strut assembly nut to 47 N•m (35 lb–ft).

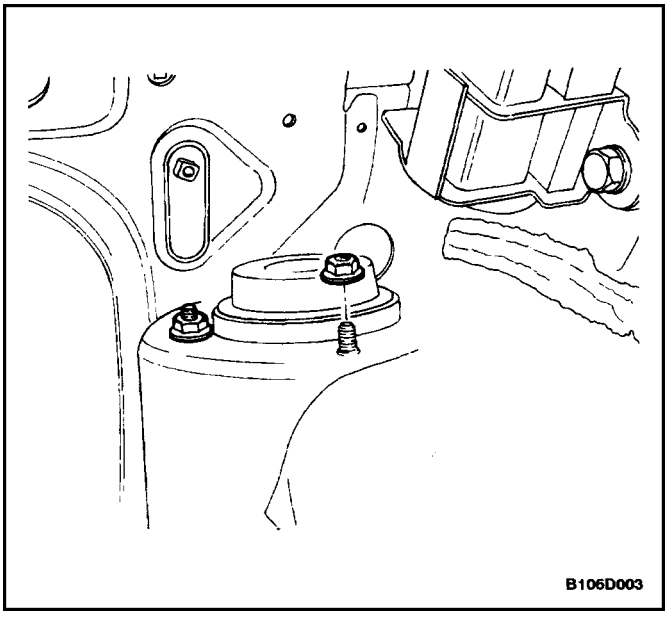

6. Connect the parking brake. Refer to *Section 4G, Parking Brake.*
7. Install the wheel. Refer to *Section 2E, Tires and Wheels.*
8. Lower the vehicle.

   Tighten

   Tighten the strut mount–to–body nuts to 30 N•m (22 lb–ft).

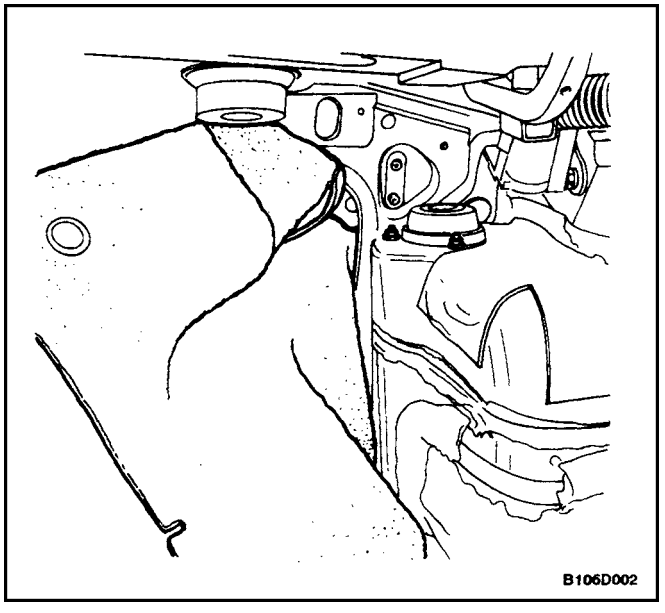

9. Install the trunk carpeting over the rear strut mounting nuts. For station wagons, remove the panels that cover the luggage compartment wheelhouse trim panel (wagon). Refer to *Section 9G, Interior Trim.*

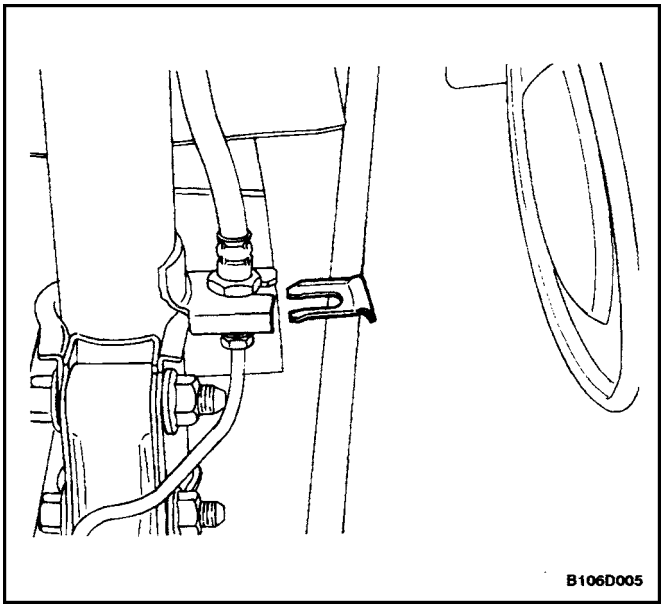

KNUCKLE ASSEMBLY

Removal Procedure

1. Raise and suitably support the vehicle.
2. Remove the wheel. Refer to *Section 2E, Tires and Wheels.*
3. On vehicles equipped with the antilock braking system, remove the ABS speed sensor. Refer to *Section 4F, Antilock Brake System.*
4. On vehicles equipped with rear disc brakes, remove the rear brake caliper from the knuckle assembly. Refer to*Section 4E, Rear Brakes.*
5. Disconnect the parking brake from the knuckle assembly. Refer to*Section 4G, ParkingBrake.*
6. Disconnect the front and the rear parallel links from the knuckle. Refer to ”Front Parallel Link” in this section.
7. Disconnect the rear parallel link from the knuckle. Refer to ”Rear Parallel Link” in this section.
8. Disconnect the rear trailing link from the rear knuckle. Refer to”Rear Trailing Link” in this section.
9. On vehicles equipped with rear drum brakes, remove the clip that secures the brake line to the strut assembly.

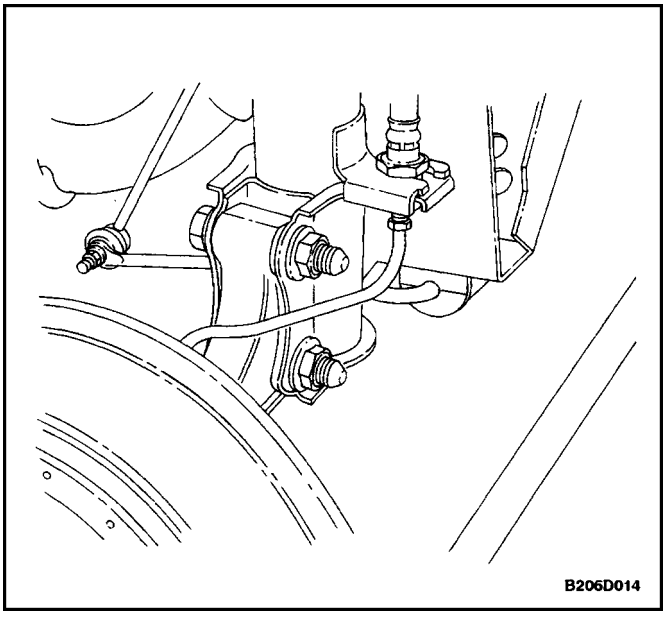

10. On vehicles equipped with rear drum brakes, disconnect the brake line from the knuckle assembly. Refer to *Section 4E, Rear Brakes.*
11. Remove the rear knuckle–to–strut assembly nuts and the bolts.

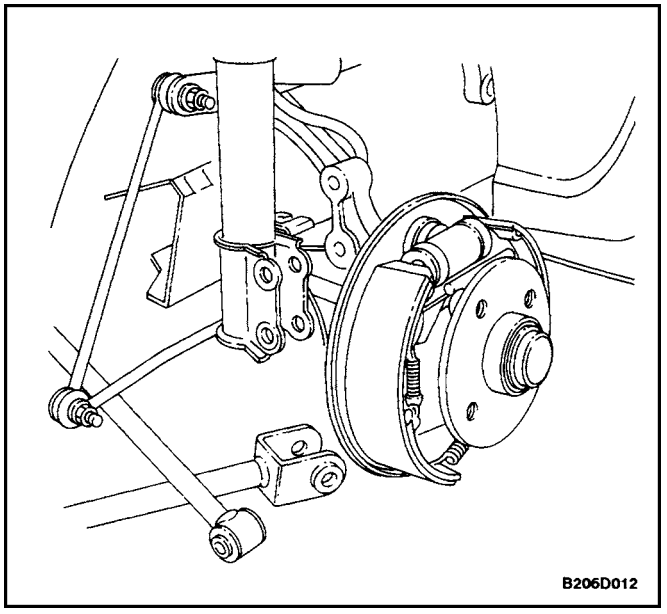

12. Disconnect the brake line from the strut assembly and remove the rear knuckle from the strut assembly.

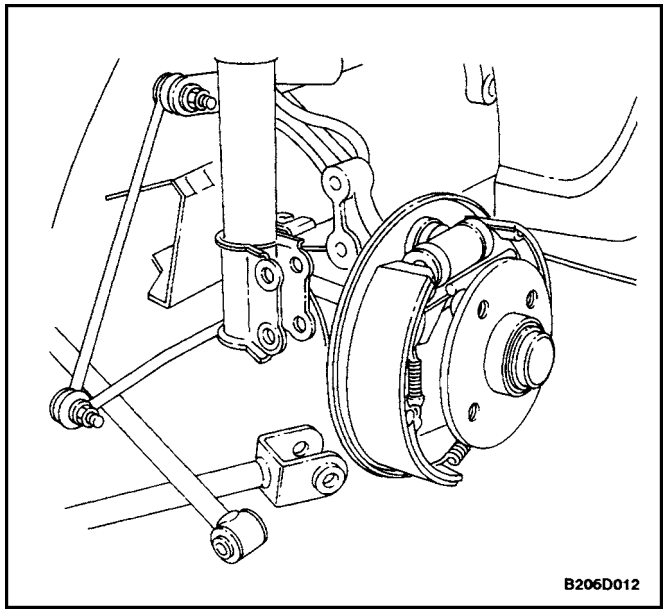

Installation Procedure

1. Install the rear knuckle into the vehicle and install the brake line into the strut assembly bracket.

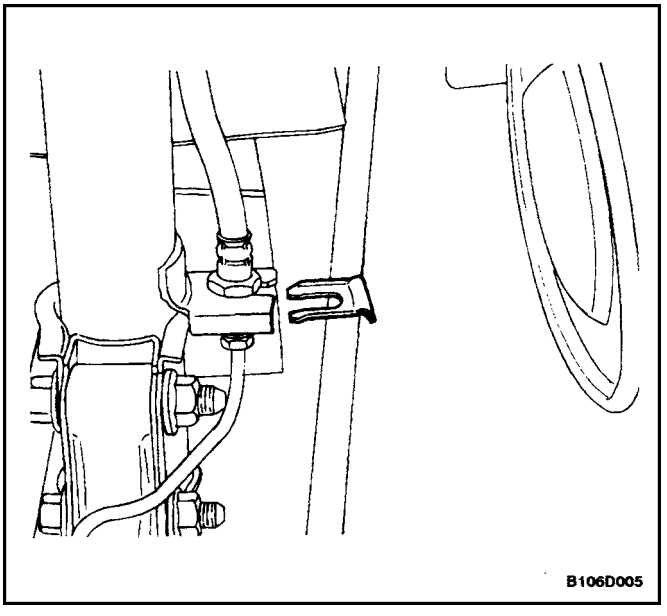

2. Install the knuckle–to–strut assembly bolts and nuts. Do not tighten.
3. Install the clip securing the brake line to the strut assembly.

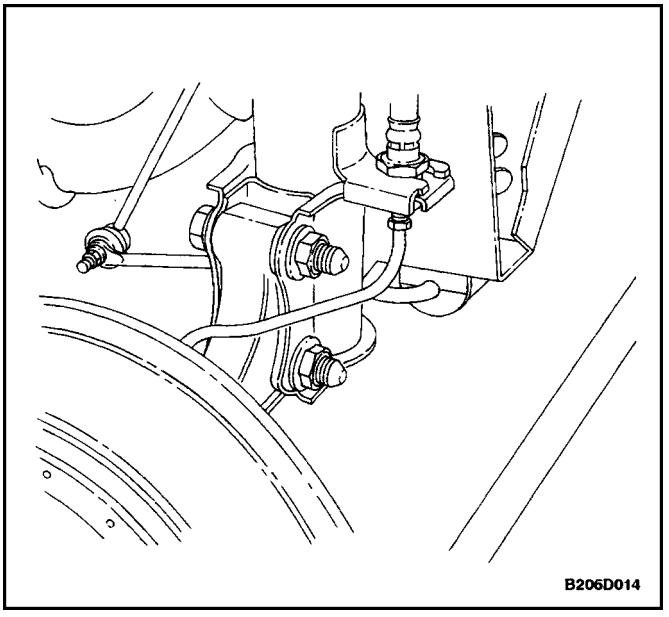

4. Install the rear knuckle into the vehicle and install the brake line into the strut assembly bracket.

   Tighten

   Tighten the knuckle–to–strut assembly nuts to 100 N•m (74 lb–ft).
5. Connect the rear trailing link to the rear knuckle. Refer to ”Rear Trailing Link” in this section.
6. Connect the rear parallel link to the knuckle. Refer to ”Rear Parallel Link” in this section.
7. Connect the front parallel link to the knuckle. Refer to”Front Parallel Link” in this section.
8. Connect the parking brake to the knuckle assembly. Refer to*Section 4G, Parking Brake.*
9. On vehicles equipped with rear drum brakes, connect the brake line to the knuckle assembly. On vehicles equipped with rear disc brakes, install the rear brake caliper onto the knuckle assembly. Refer to *Section 4E, Rear Brakes.*
10. On vehicles equipped with the antilock braking system, install the ABS speed sensor. Refer to*Section 4F, Antilock Brake System.*
11. Install the wheel. Refer to *Section 2E, Tires and Wheels.*
12. Lower the vehicle.

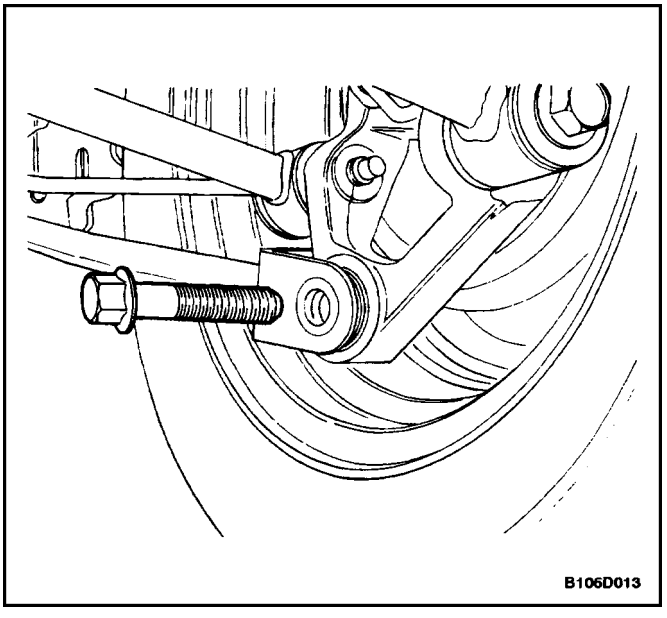

TRAILING LINK

Removal Procedure

1. Raise and suitably support the vehicle.
2. Remove the rear trailing link–to–rear knuckle bolt.

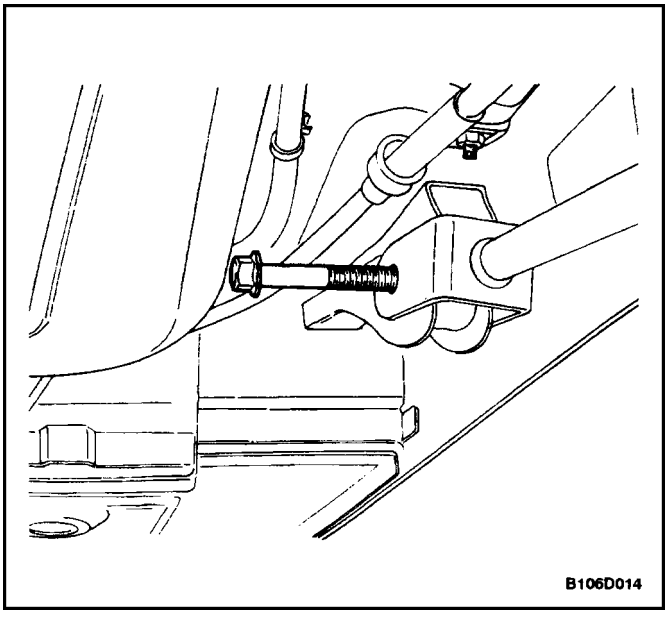

3. Remove the rear trailing link–to–trailing link bracket nut and the rear trailing link–to–knuckle bolt.

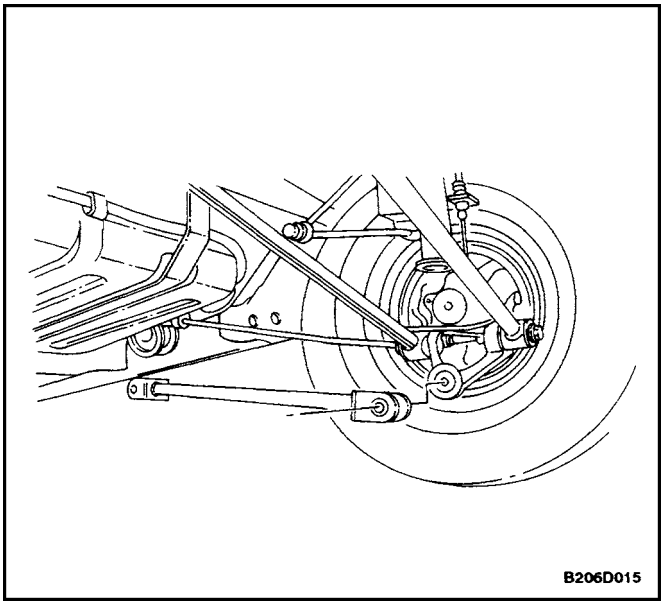

4. Remove the rear trailing link.

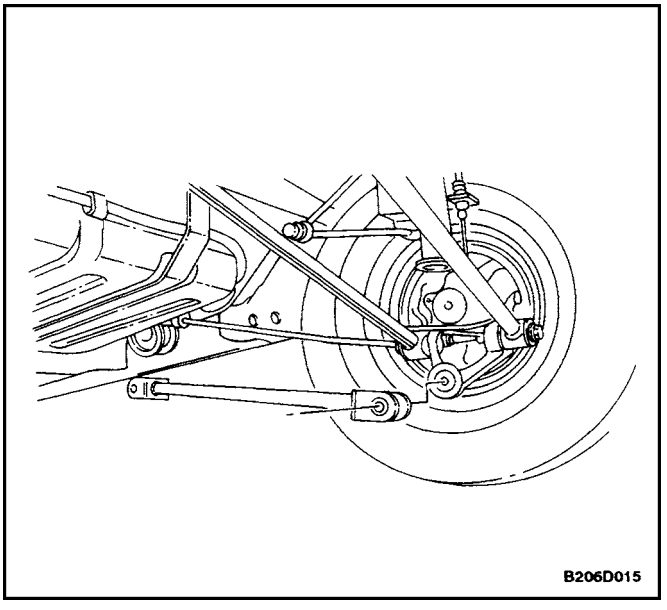

Installation Procedure

1. Install the rear trailing link.

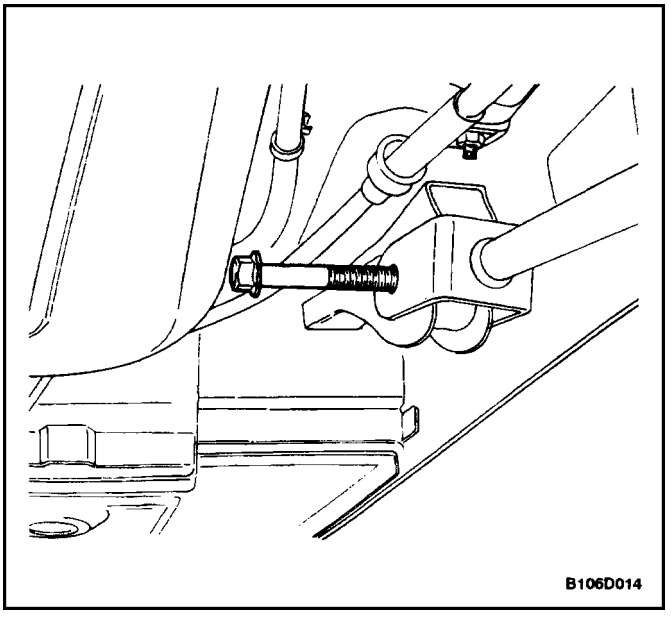

2. Install the rear trailing link bracket nut and the bolt.

Tighten

Tighten the rear trailing link–to–trailing link bracket nut to 100 N•m (74 lb–ft).

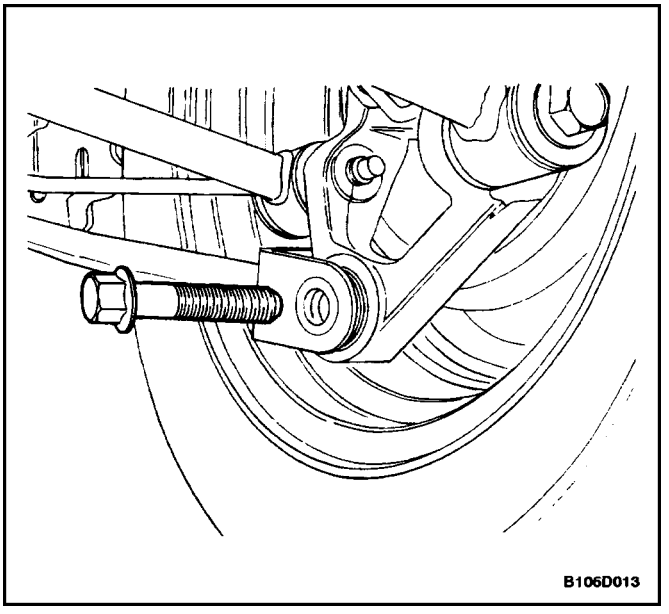

3. Install the trailing link–to–knuckle bolt.

Tighten

Tighten the rear trailing link–to–knuckle bolt to 85 N•m (63 lb–ft).

4. Lower the vehicle.

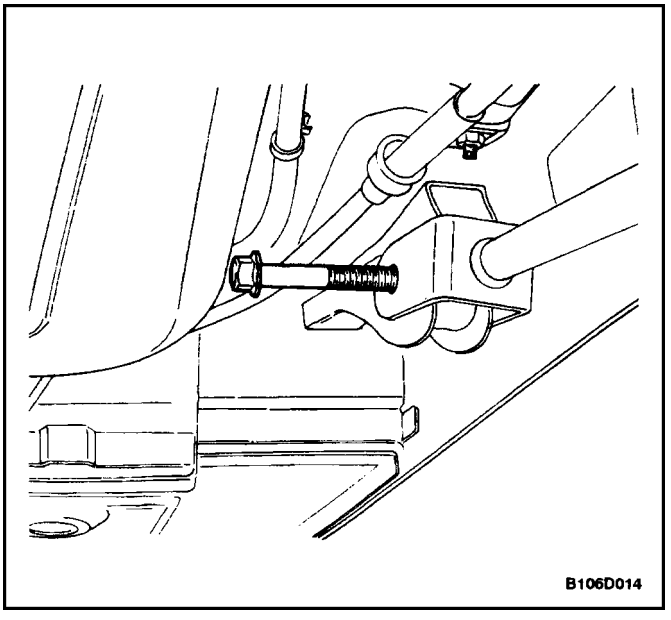

TRAILING LINK BRACKET

Removal Procedure

1. Raise and suitably support the vehicle.
2. Remove the trailing link–to–trailing link bracket nut and the bolt.

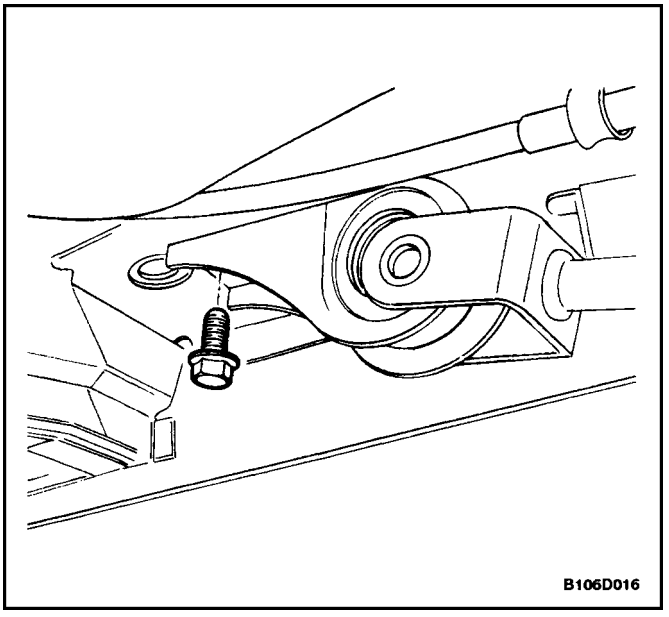

3. Remove the trailing link bracket–to–body bolts.

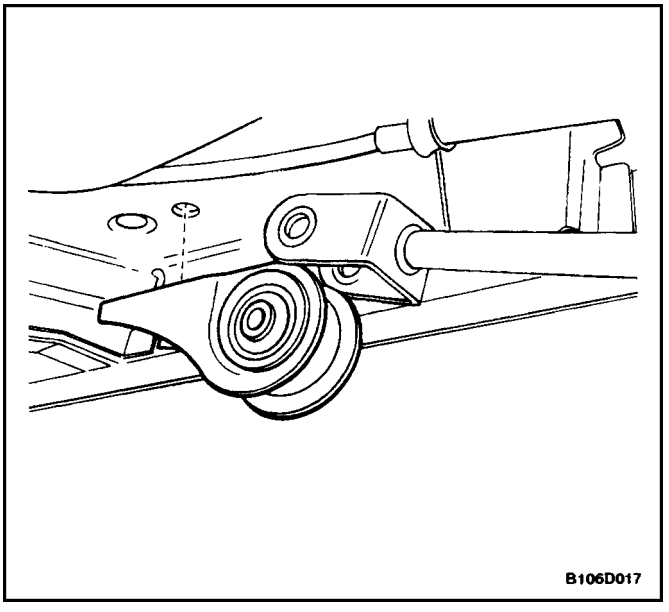

4. Remove the trailing link bracket.

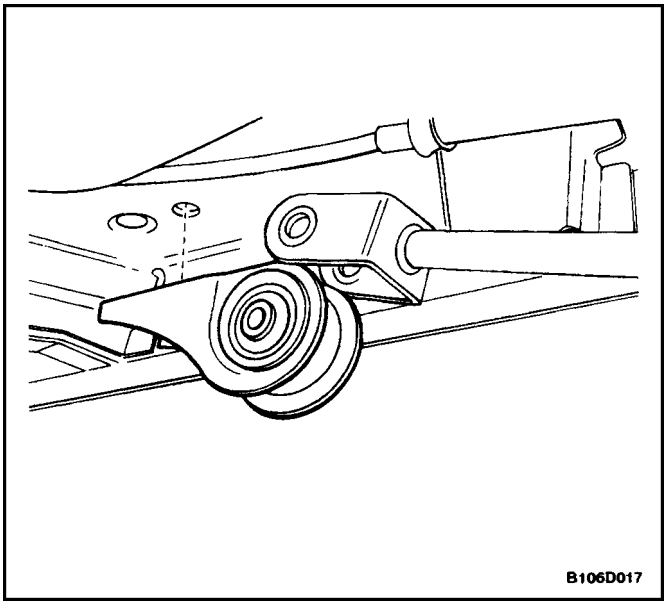

Installation Procedure

1. Install the trailing link bracket.

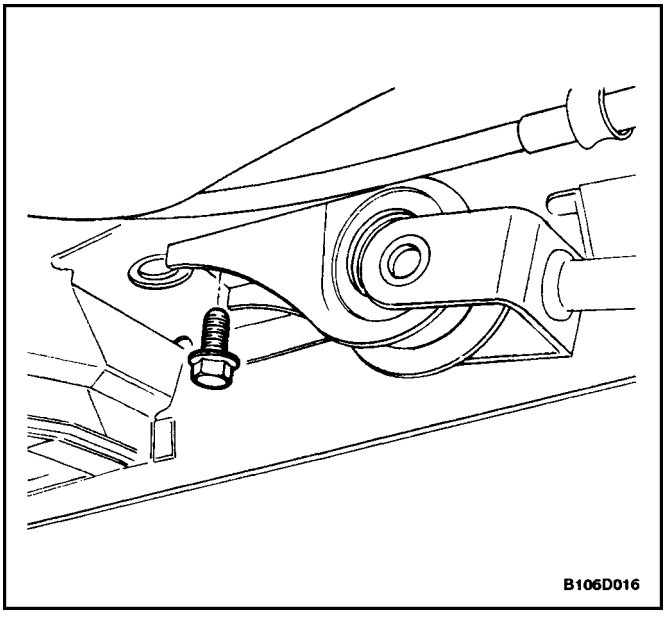

2. Install the trailing link bracket–to–body bolts.

Tighten

Tighten the trailing link bracket–to–body bolts to 93 N•m (69 lb–ft).

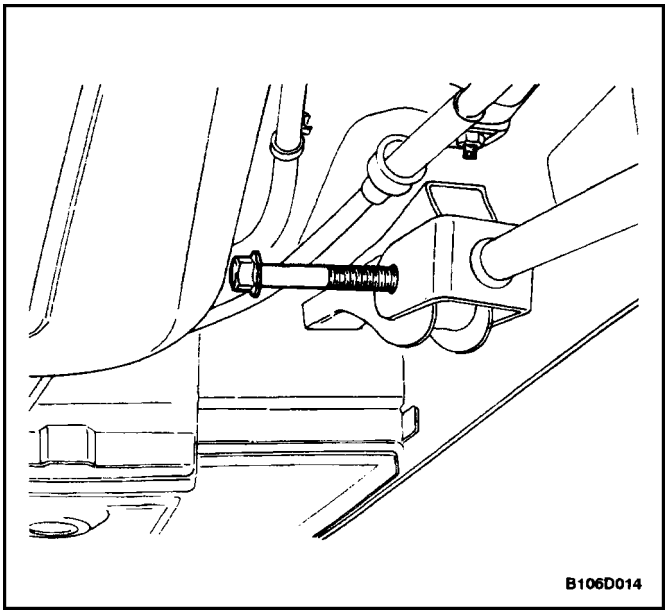

3. Connect the trailing link to the trailing link bracket by installing the trailing link–to–trailing link bracket nut and bolt.

Tighten

Tighten the trailing link–to–trailing link bracket nut to 100 N•m (74 lb–ft).

4. Lower the vehicle.

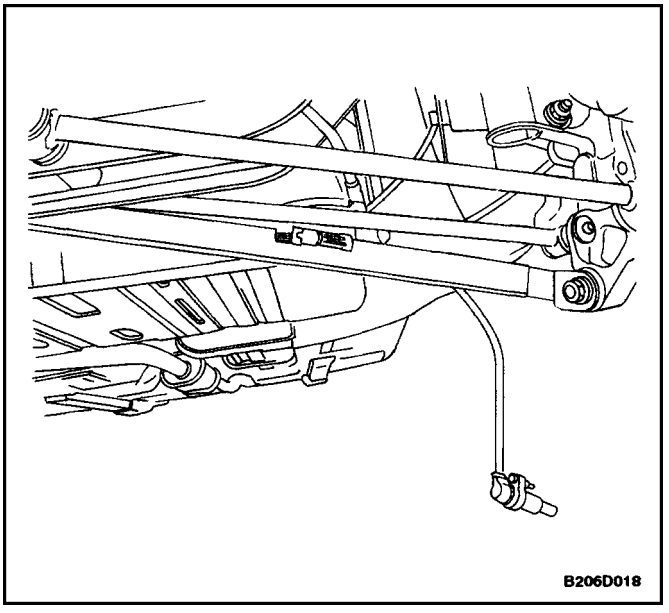

FRONT PARALLEL LINK

Removal Procedure

1. Raise and suitably support the vehicle.
2. Remove the wheel. Refer to*Section 2E, Tires and Wheels.*
3. For vehicles equipped with the antilock braking system, remove the ABS sensor from the knuckle and the ABS housing assembly from the front parallel link.

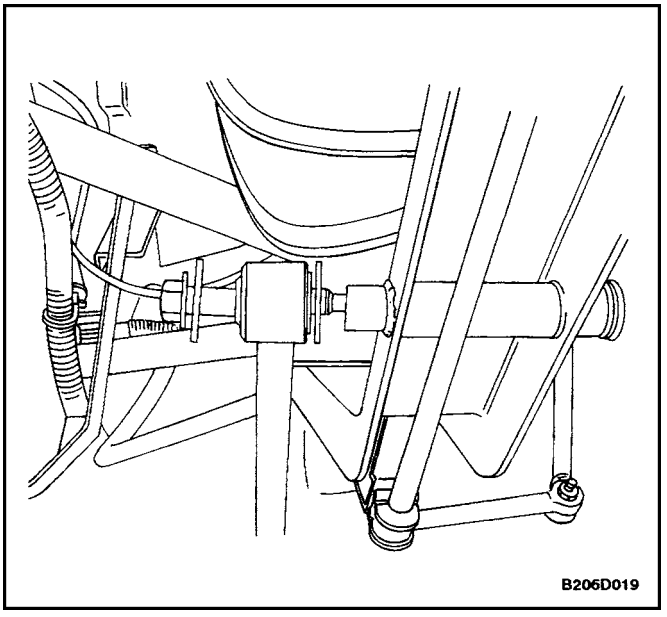

4. Remove the front parallel link bolt from the rear rossmember.

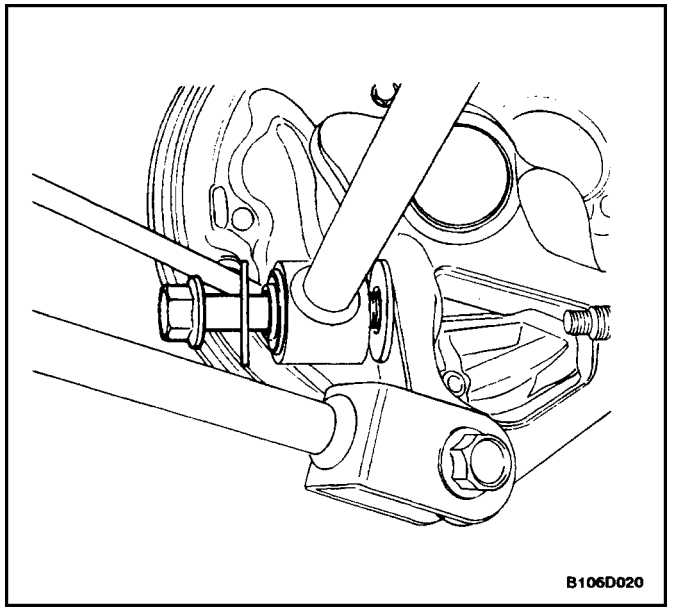

5. Remove the front parallel link bolt from the rear knuckle.
6. Remove the front parallel link.

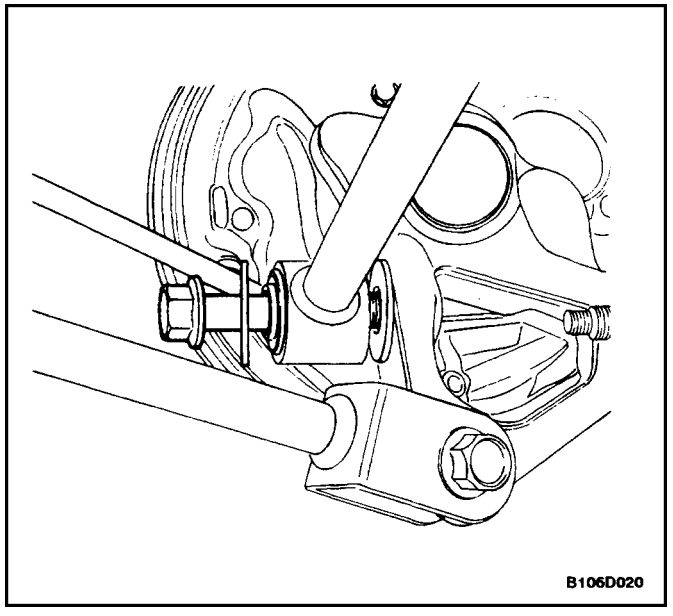

Installation Procedure

1. Install the front parallel link.
2. Install the front parallel link onto the rear knuckle with the bolt.

Tighten

Tighten the front parallel link–to–knuckle bolt to 90 N•m (66 lb–ft).

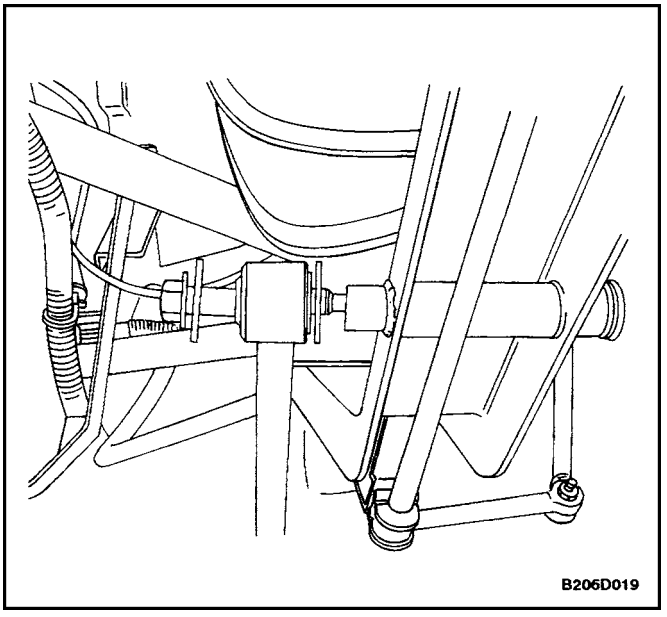

3. Install the front parallel link onto the rear crossmember with the bolt.

Tighten

Tighten the front parallel link–to–crossmember bolt to 90 N•m (66 lb–ft).

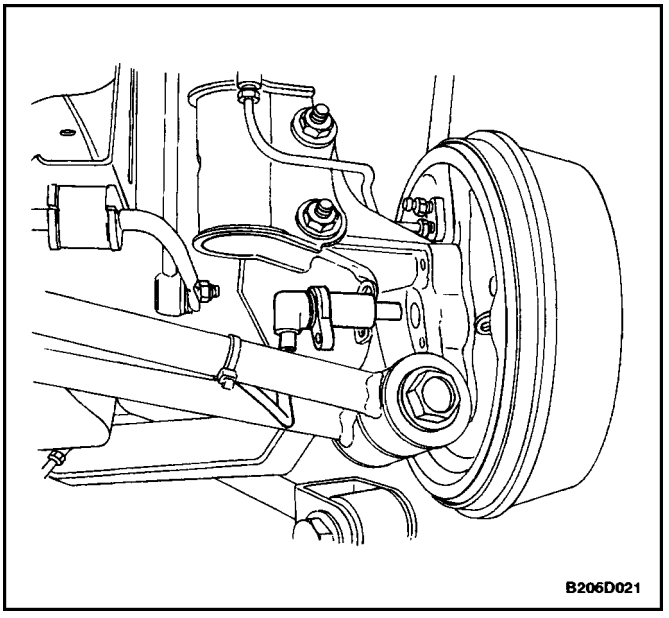

4. For vehicles equipped with the antilock braking system, install the ABS housing assembly onto the front parallel link and the ABS sensor line into the knuckle.
5. Install the wheel. Refer to *Section 2E, Tires and Wheels.*
6. Lower the vehicle.

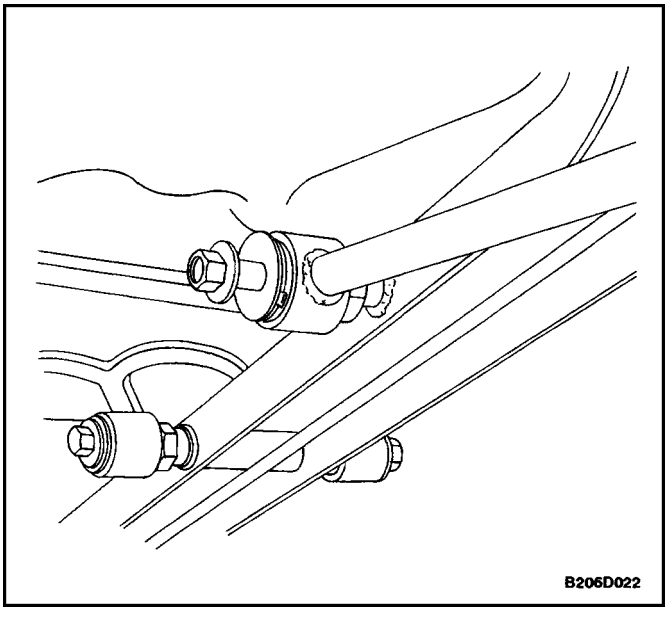

REAR PARALLEL LINK

Removal Procedure

1. Raise and suitably support the vehicle.
2. Remove the wheel. Refer to *Section 2E, Tires and Wheels.*

Important : Before removing the parallel link–to–crossmember bolt, mark the position of the adjuster cam in relation to the parallel link and the crossmember. This adjuster cam must be placed in the same position when the parallel link is installed on the vehicle to maintain the proper rear toe.

3. Remove the rear parallel link bolt from the rear crossmember.

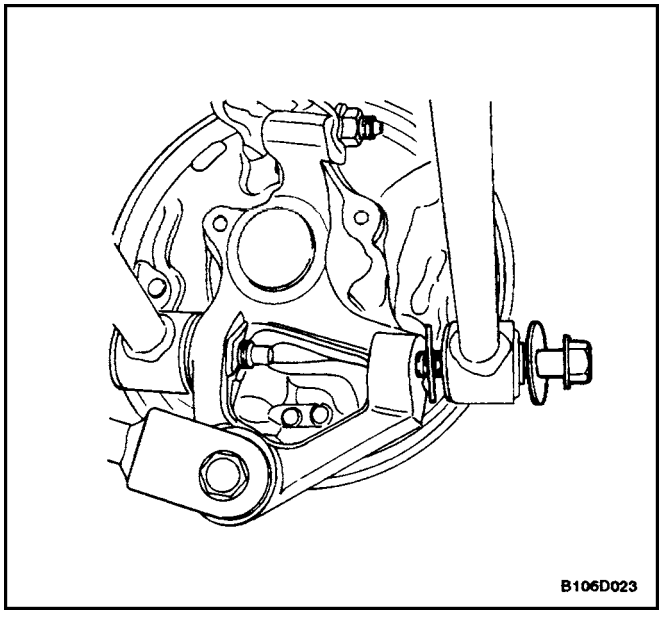

4. Remove the rear parallel link bolt from the rear knuckle.
5. Remove the rear parallel link.

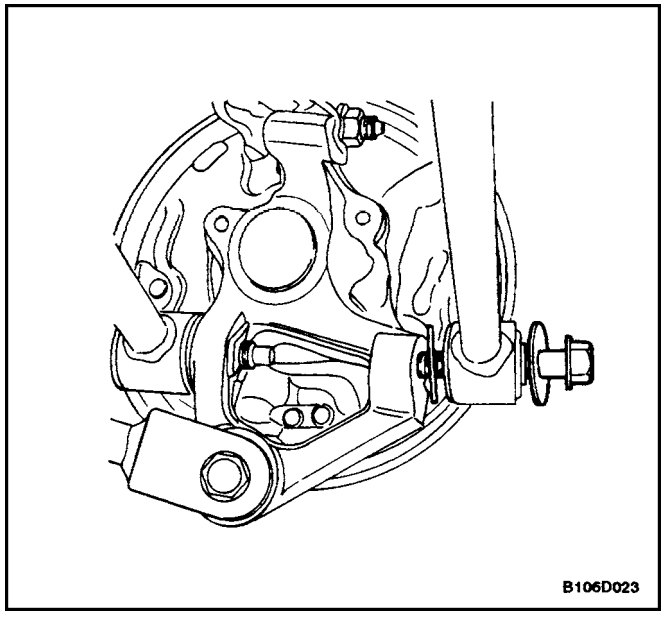

Installation Procedure

1. Install the rear parallel link.
2. Install the rear parallel link–to–knuckle bolt.

   Tighten

   Tighten the rear parallel link–to–knuckle bolt to 90 N•m (66 lb–ft).

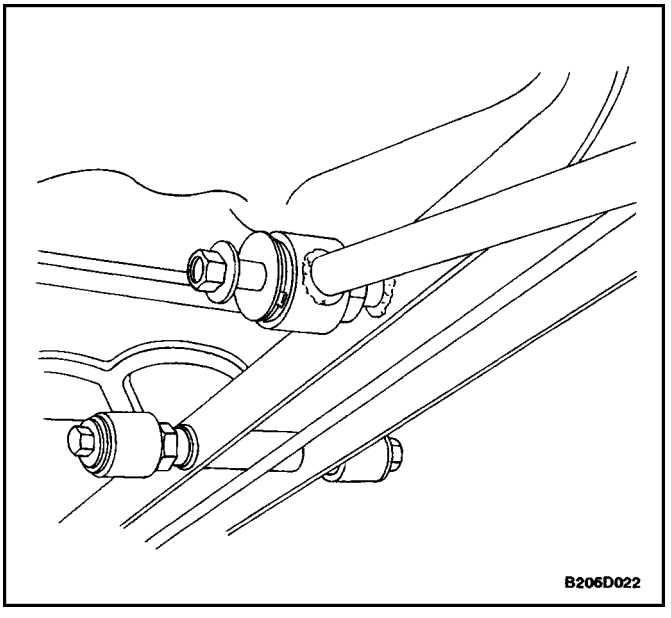

3. Install the rear parallel link onto the rear crossmember. Install the rear parallel link–to–crossmember bolts. Do not tighten.
4. Install the wheel. Refer to *Section 2E, Tires and Wheels.*
5. Perform a rear toe adjustment. Refer to *Section 2B, Wheel Alignment.*

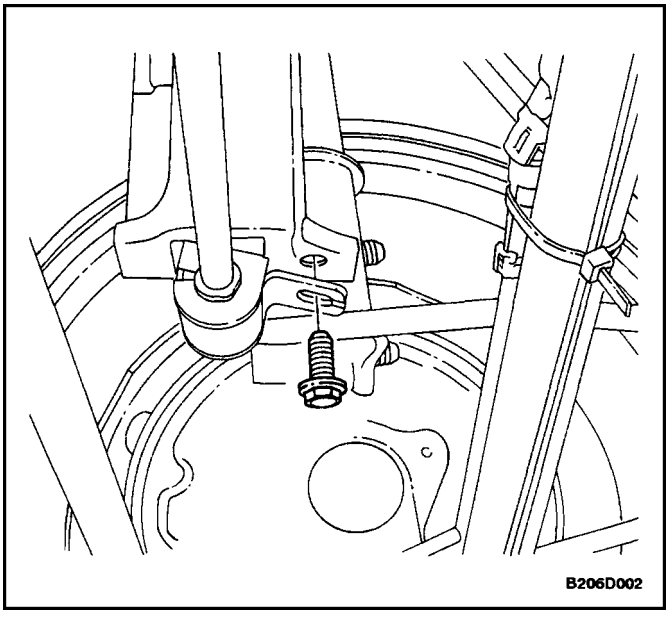

STABILIZER SHAFT

Removal Procedure

1. Raise and suitably support the vehicle.
2. Remove the stabilizer shaft clamp bolts.

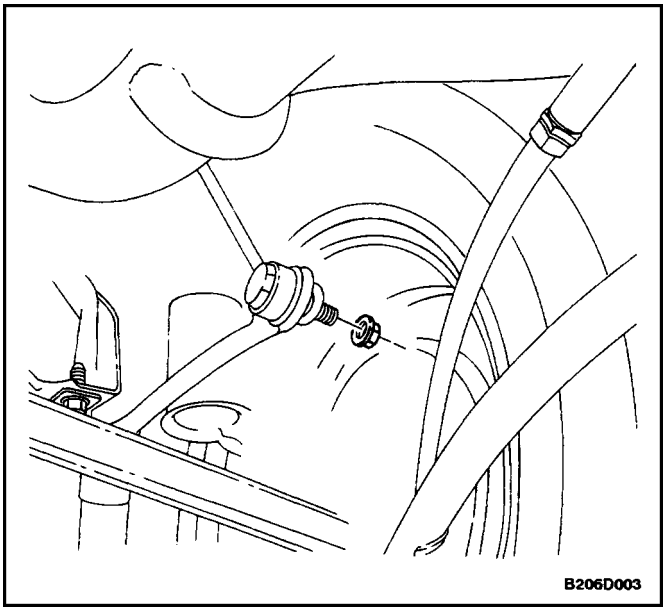

3. Remove the stabilizer shaft–to–stabilizer link nut.
4. Remove the stabilizer shaft clamps, the insulators, and the stabilizer shaft from the vehicle.

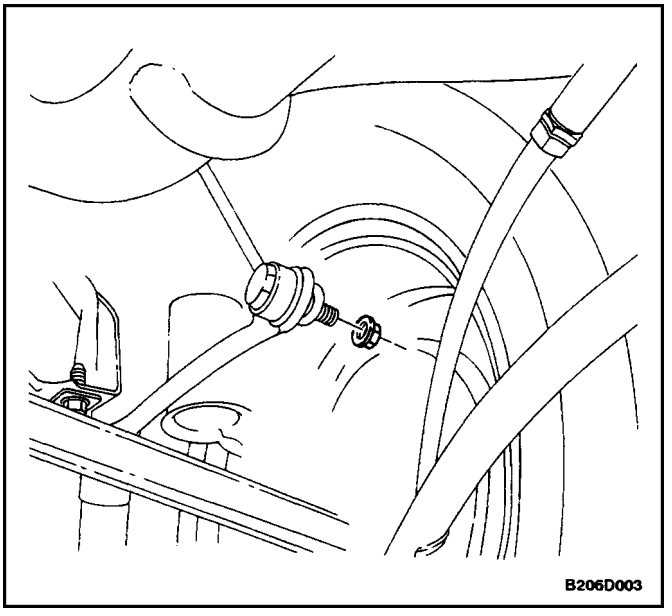

Installation Procedure

1. Install the stabilizer shaft, the insulators, and the stabilizer shaft clamps.
2. Install the stabilizer shaft–to–stabilizer link nut.

   Tighten

   Tighten the stabilizer shaft–to–stabilizer link nut to 47 N•m (35 lb–ft).

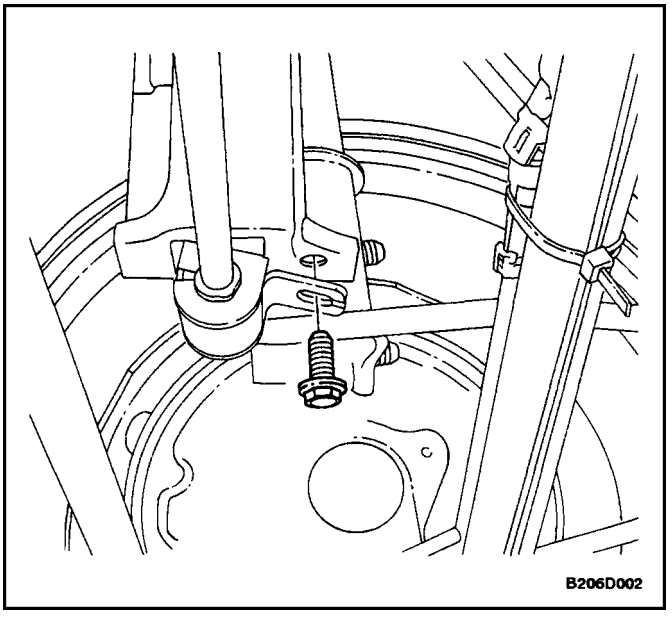

3. Install the stabilizer shaft clamp bolts.

   Tighten

   Tighten the stabilizer shaft clamp bolts to 25 N•m (18 lb–ft).
4. Lower the vehicle.

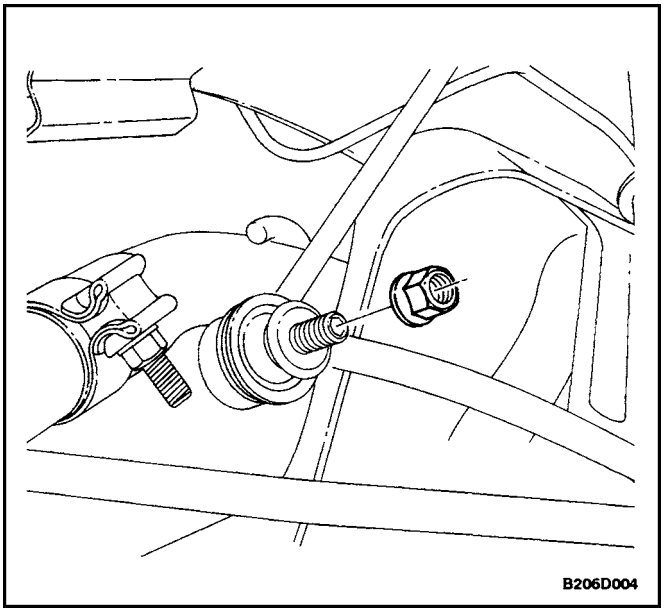

STABILIZER LINK

Removal Procedure

1. Raise and suitably support the vehicle.
2. Remove the wheel. Refer to *Section 2E, Tires and Wheels.*
3. Remove the stabilizer shaft–to–stabilizer link nut.

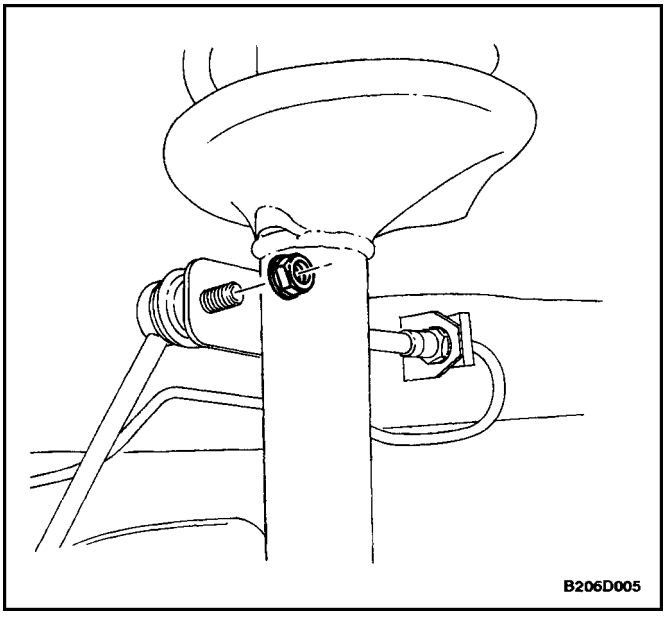

4. Remove the stabilizer link–to–strut assembly nut.
5. Remove the stabilizer link.

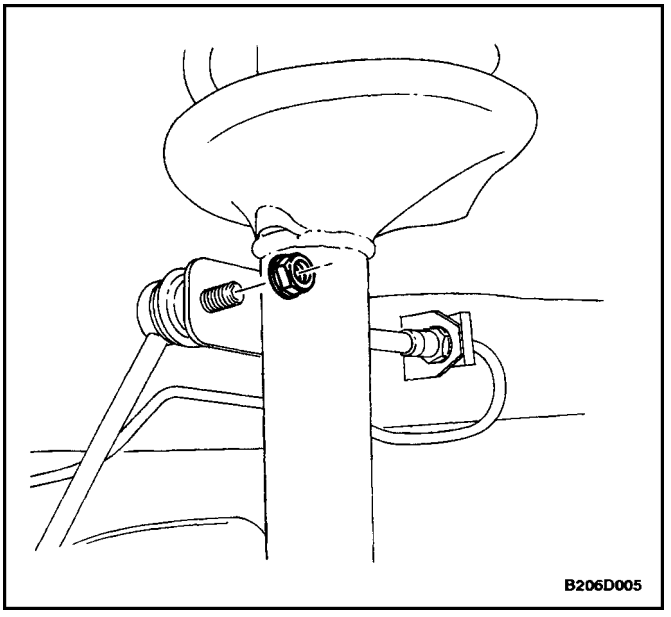

Installation Procedure

1. Install the stabilizer link.
2. Install the stabilizer link–to–strut assembly nut.

   Tighten

   Tighten the stabilizer link–to–strut assembly nut to 47 N•m (35 lb–ft).

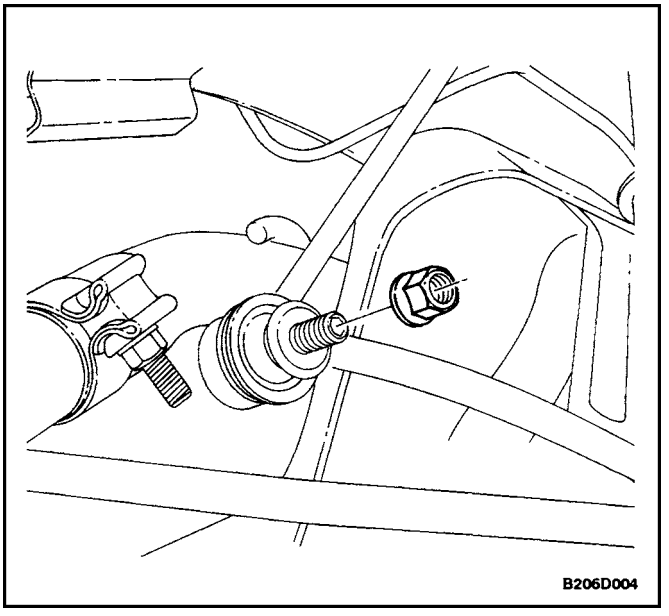

3. Install the stabilizer shaft–to–stabilizer link nut.

   Tighten

   Tighten the stabilizer shaft–to–stabilizer link nut to 47 N•m (35 lb–ft).
4. Install the wheel. Refer to*Section 2E, Tires and Wheels.*
5. Lower the vehicle.

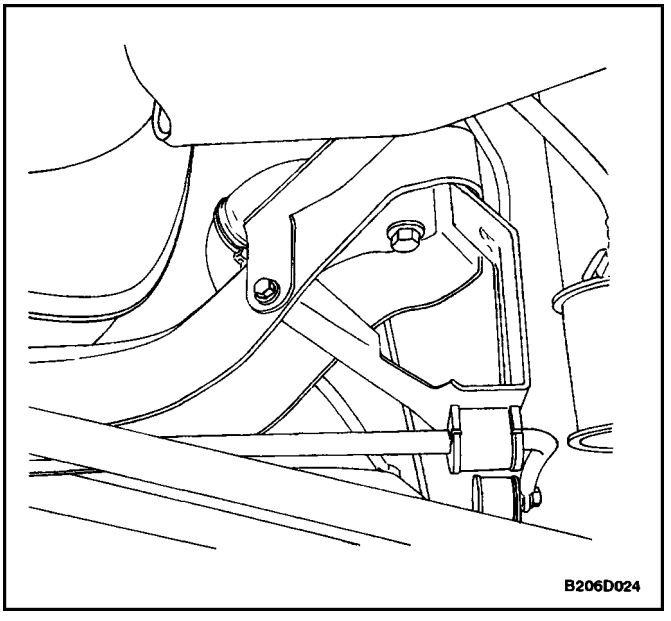

CROSSMEMBER

Removal Procedure

1. Raise and suitably support the vehicle.
2. Remove the front parallel link bolt from the crossmember. Refer to ”Front Parallel Link” in this section.
3. Remove the rear parallel link bolt from the crossmember. Refer to”Rear Parallel Link” in this section.
4. Disconnect the fuel filler hose shield by removing the bolt.

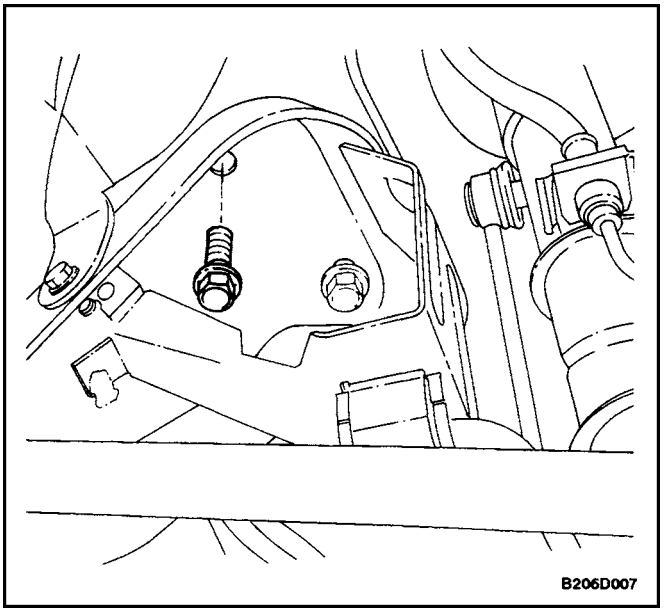

5. Remove the crossmember–to–body bolts.

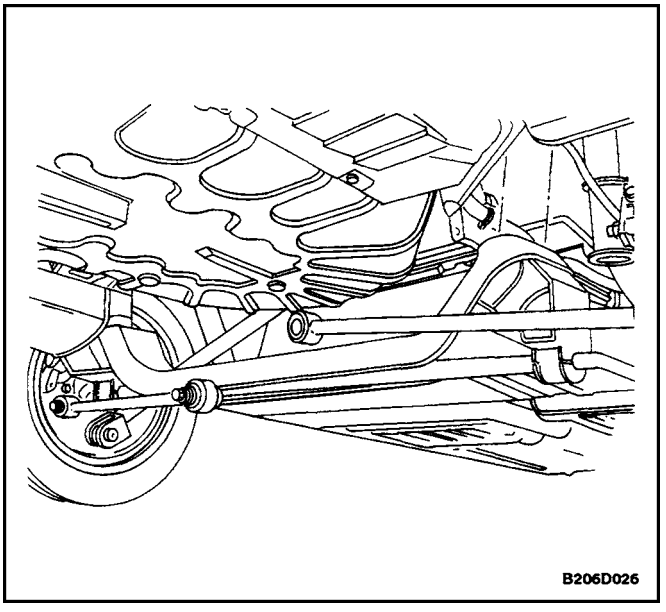

6. Remove the crossmember.

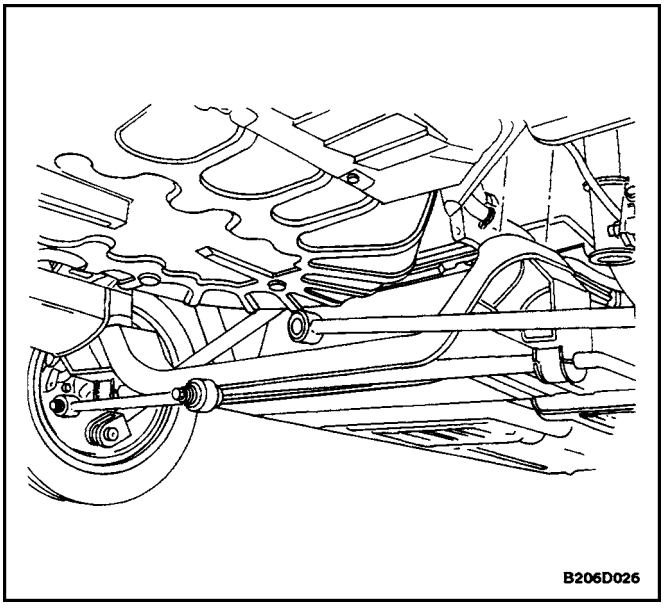

Installation Procedure

1. Install the crossmember.

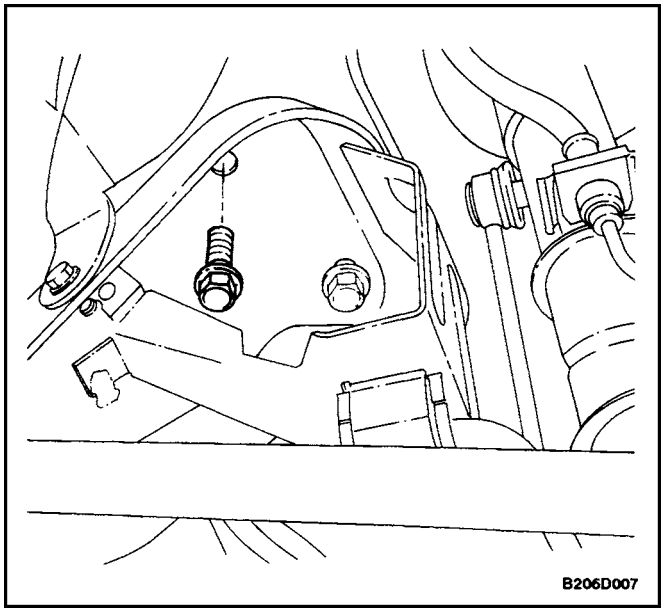

2. Install the crossmember–to–body bolts.

Tighten

Tighten the crossmember–to–body bolts to 93 N•m (69 lb–ft).

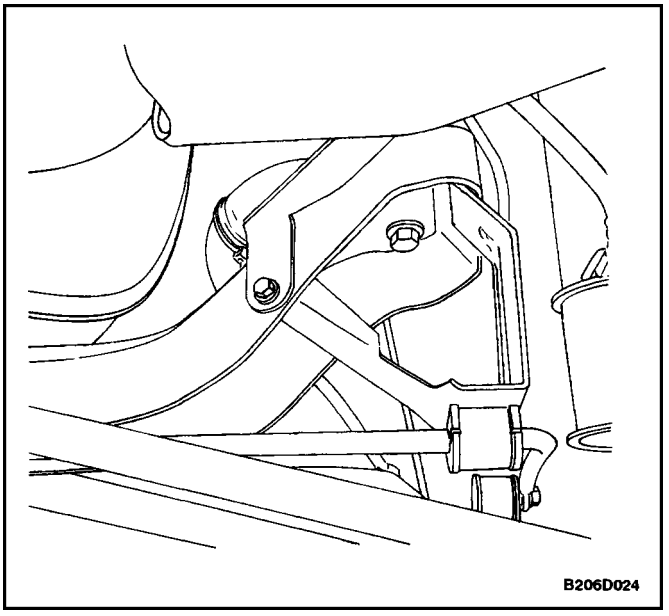

3. Connect the fuel filler hose shield by installing the bolt.

Tighten

Tighten the fuel filler hose shield bolt to 20 N•m (15 lb–ft).

4. Install the rear parallel link bolt onto the crossmember. Refer to"Rear Parallel Link" in this section.
5. Install the front parallel link bolt onto the crossmember. Refer to"Front Parallel Link" in this section.
6. Lower the vehicle.

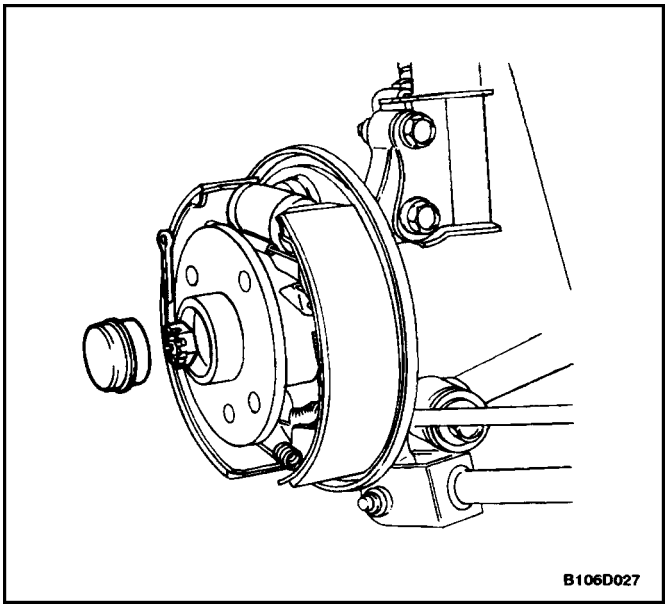

HUB AND BEARING ASSEMBLY

Removal Procedure

1. Raise and suitably support the vehicle
2. Remove the wheel. Refer to *Section 2E, Tires and Wheels.*
3. On vehicles equipped with rear drum brakes, removethe rear brake drum detent screw and brake drum. Refer to *Section 4E, Rear Brakes.*
4. On vehicles equipped with rear disc brakes, remove the rear brake caliper and rear brake rotor. Refer to *Section 4E, Rear Brakes.*
5. Remove the dust cap, the cotter pin and the spindle nut.

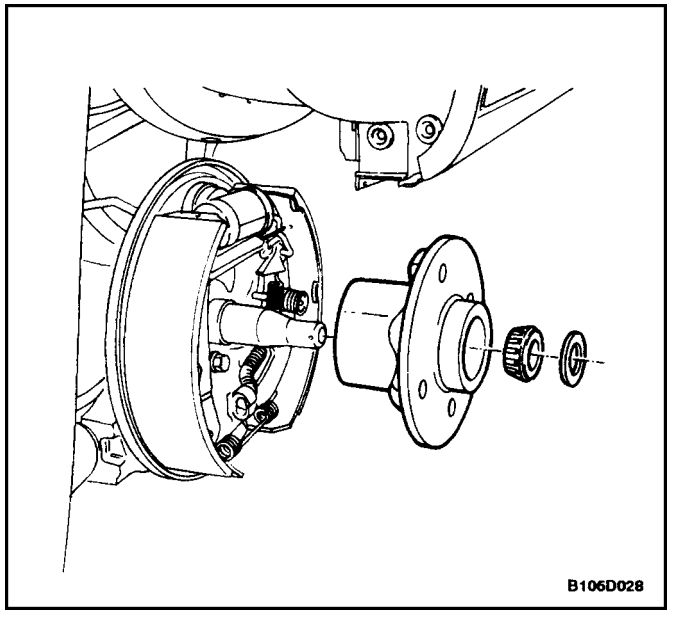

6. Remove the lock washer, the outer tapered bearing, and the hub assembly.

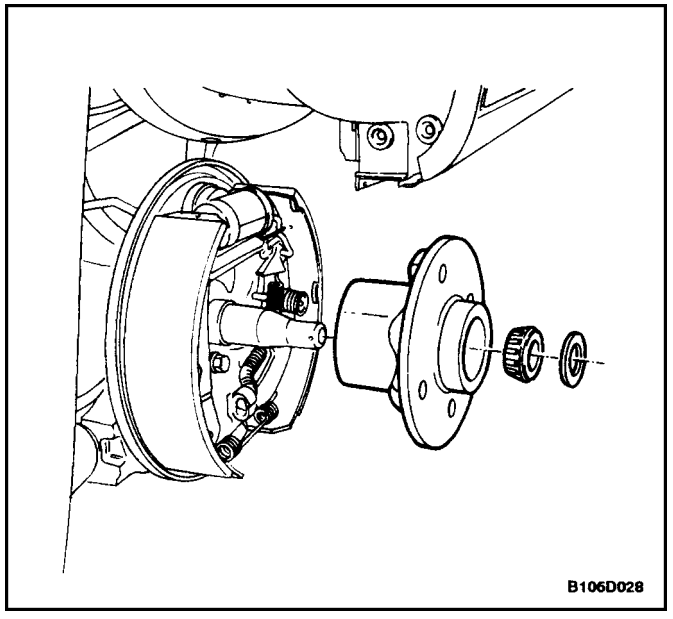

Installation Procedure

1. Install the hub assembly, the outer tapered bearing, and the lock washer.
2. Install the spindle nut. Refer to ”Wheel Bearing Adjustment” in this section to adjust the wheel bearing.
3. On vehicles equipped with rear disc brakes, install the rear brake rotor and rear brake caliper. Refer to *Section 4E, Rear Brakes.*
4. On vehicles equipped with rear drum brakes, install the rear brake drum and the brake drum detent screw. Refer to *Section 4E, Rear Brakes.*
5. Install the wheel. Refer to *Section 2E, Tires and Wheels.*
6. Lower the vehicle.

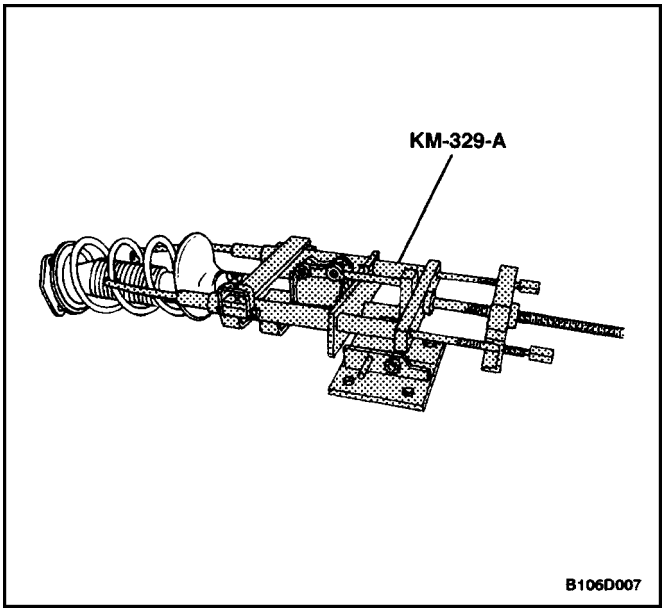

UNIT REPAIR

SPRINGS AND INSULATORS

Tools Required

KM–329–A Spring Compressor

Disassembly Procedure

1. Remove the rear strut assembly from the vehicle. Refer to ”Strut Assembly” in this section.
2. Mount the rear strut assembly into the spring compressor KM–329–A. Ensure that the hooks are properly seated.

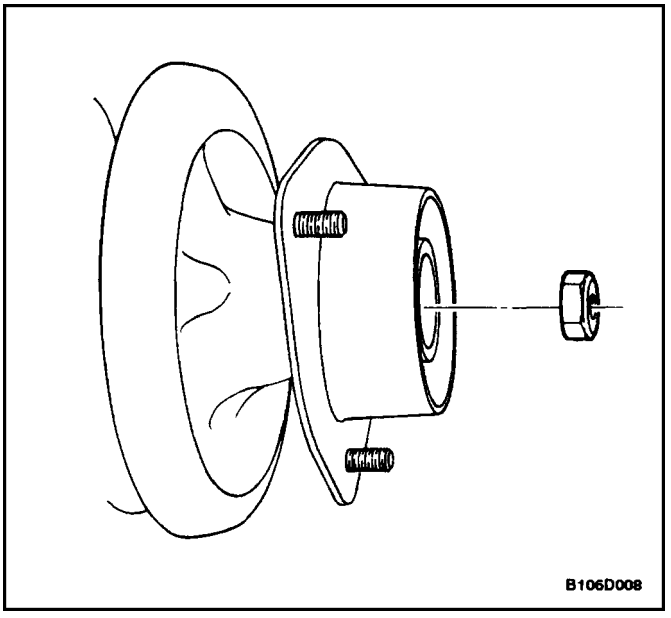

3. Compress the spring.
4. Remove the lock nut from the strut dampener rod.

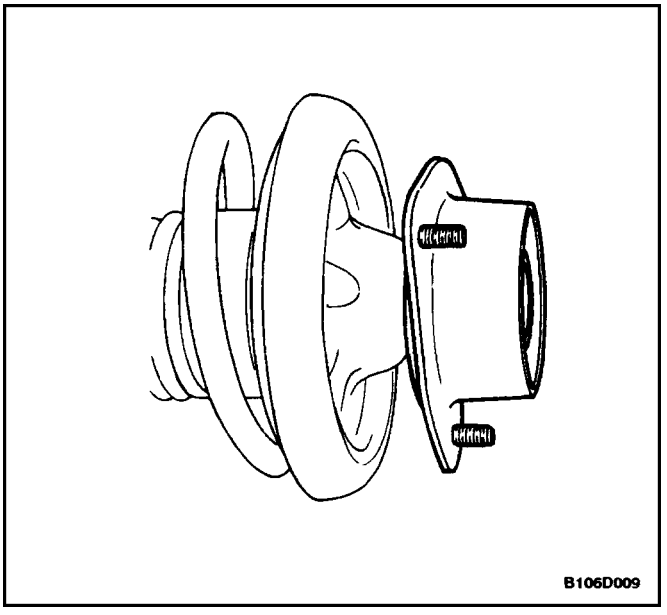

5. Remove the rear strut mount.

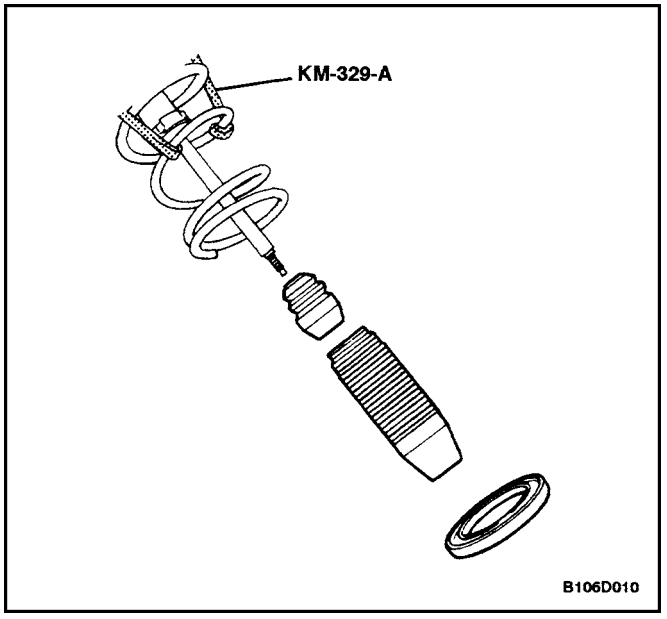

6. Remove the rear spring upper seat, the dust cover, and the hollow bumper.

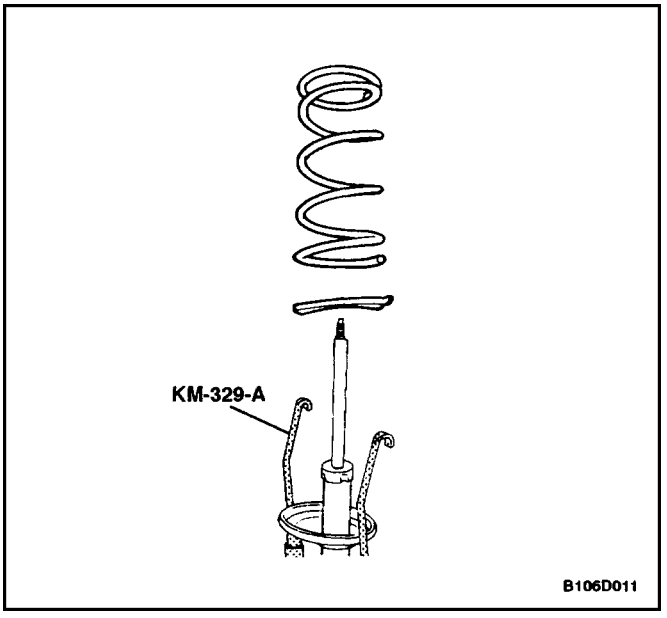

7. Release the spring.
8. Remove the rear spring and the rear spring lower seat.

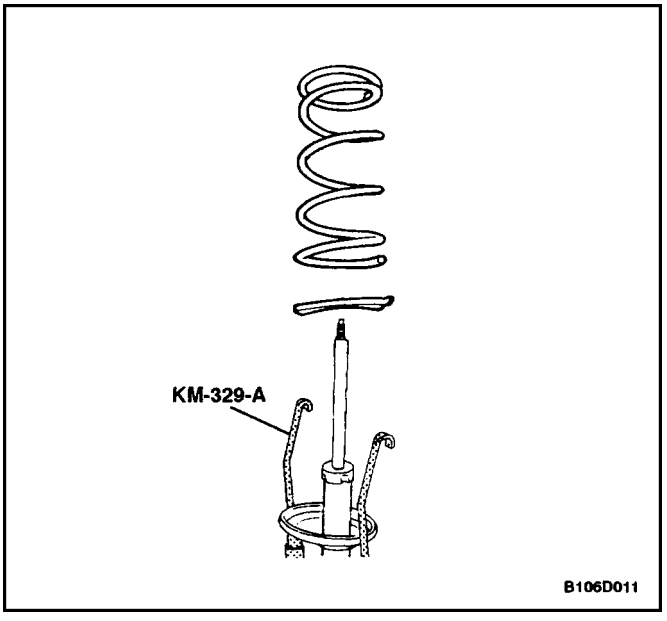

Assembly Procedure

1. Install the rear spring lower seat and the rear spring.

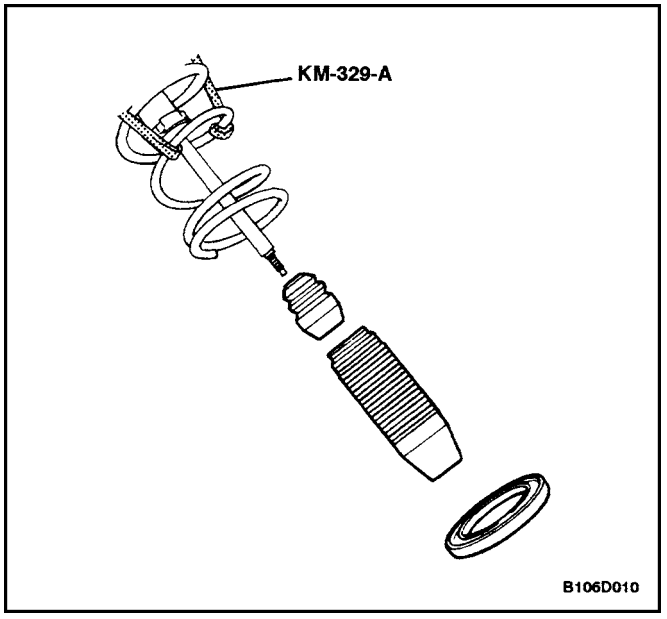

2. Compress the spring.
3. Install the hollow bumper, the dust cover, and the rear spring upper seat.

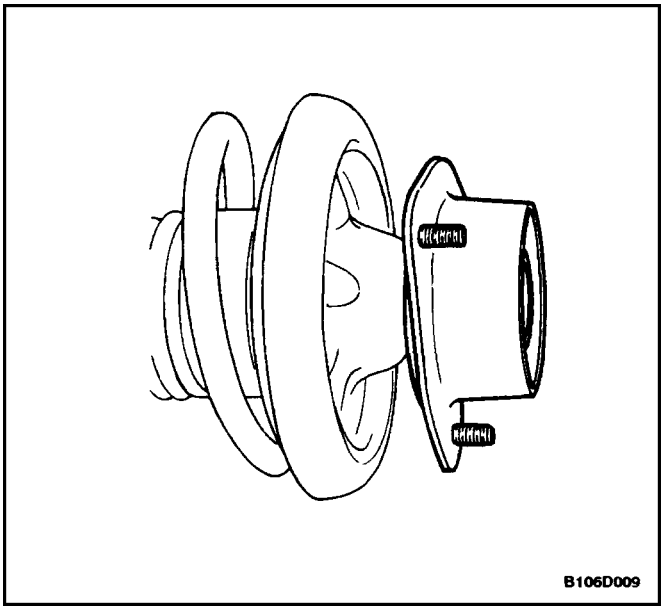

4. Install the rear strut mount.

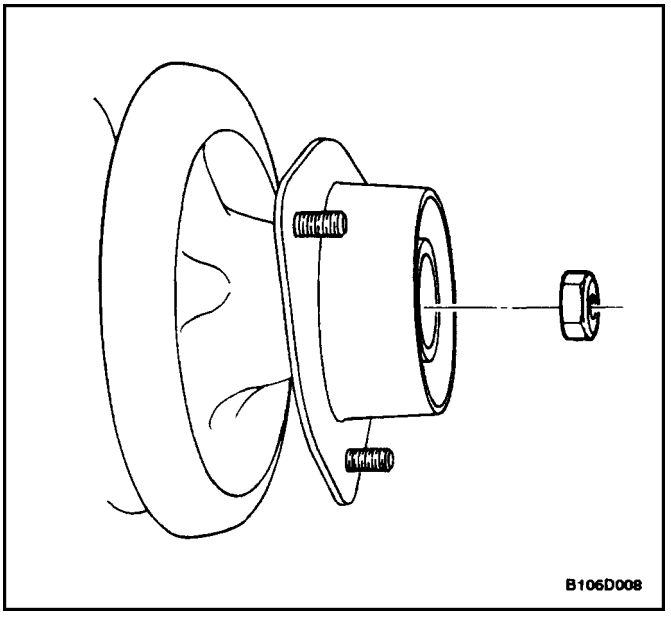

5. Install the lock nut onto the strut dampener rod.

   Tighten

   Tighten the strut dampener–to–strut mount nut to 75 N•m (55 lb–ft).
6. Release the spring.
7. Remove the strut assembly from the spring compressor and install the strut assembly into the vehicle. Refer to”Strut Assembly” in this section.

KNUCKLE

Disassembly Procedure

1. Remove the knuckle from the vehicle. Refer to ”Knuckle Assembly” in this section.
2. Remove the brake caliper and the brake rotor or the brake drum. Refer to *Section 4E, Rear Brakes.*
3. Remove the dust cap, the caulking nut, and the hub and bearing assembly. Refer to *”Hub and Bearing Assembly”* in this section.
4. On vehicles equipped with rear drum brakes, remove the rear drum brake assembly. On vehicles equipped with rear disc brakes, remove the rear disc brake assembly. Refer to *Section 4E, Rear Brakes.*
5. Remove the brake splash shield. Refer to *Section 4E, Rear Brakes.*

Assembly Procedure

1. Install the brake splash shield. Refer to *Section 4E, Rear Brakes.*
2. On vehicles equipped with rear drum brakes, install the rear drum brake assembly. On vehicles equipped with rear disc brakes, install the rear disc brake assembly. Refer to *Section 4E, Rear Brakes.*
3. Install the wheel hub, the lock washer, the castellated nut, the cotter pin, and the dust cap. Refer to ”Hub and Bearing Assembly” in this section.
4. Install the brake caliper and brake rotor or the brake drum. Refer to*Section 4E, Rear Brakes.*
5. Install the knuckle into the vehicle. Refer to ”Knuckle Assembly” in this section.

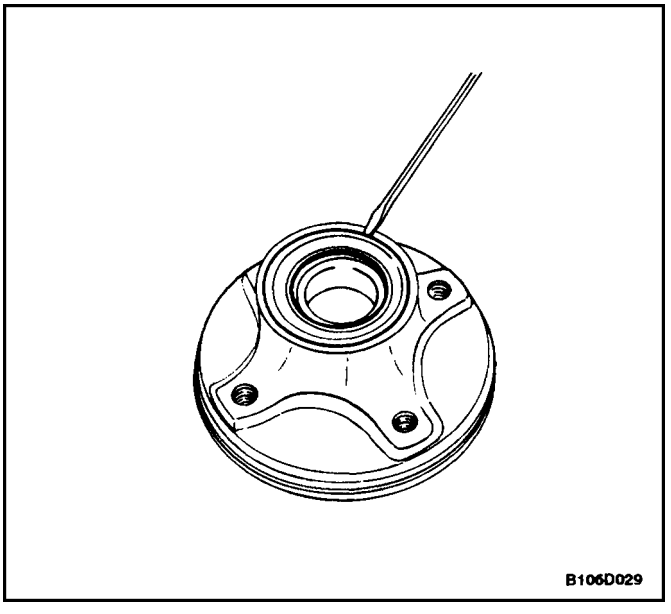

HUB AND BEARING

Tools Required

KM–266–A Installer

Disassembly Procedure

1. Raise and suitably support the vehicle.
2. Remove the hub and bearing assembly from the vehicle. Refer to”Hub and Bearing Assembly’” in this section.
3. Pry off the oil seal from the hub and bearing assembly with a screwdriver.

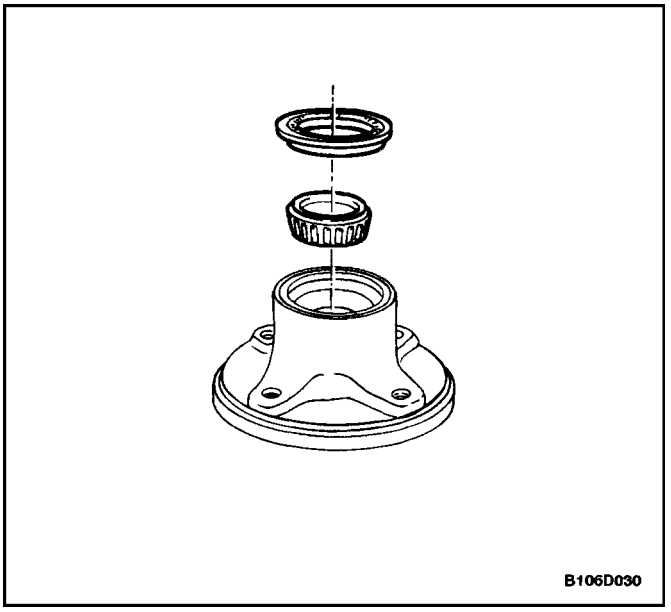

4. Remove the oil seal and the inner tapered roller bearing.

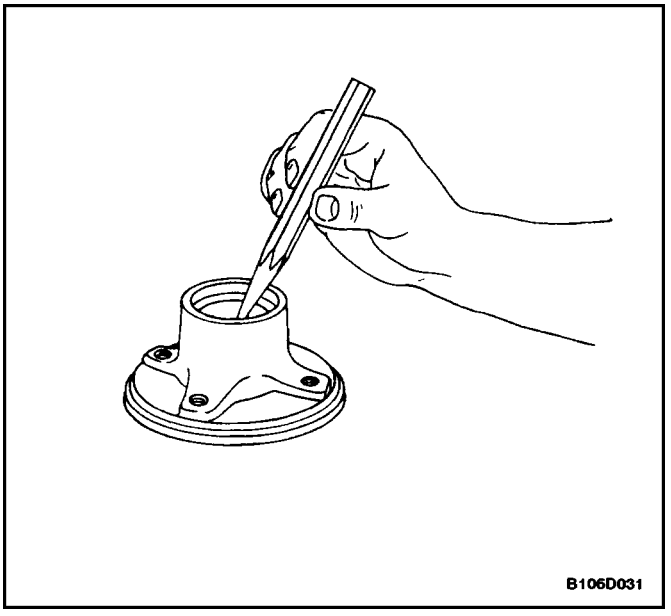

5. Remove the inner race of the outer tapered roller bearing.

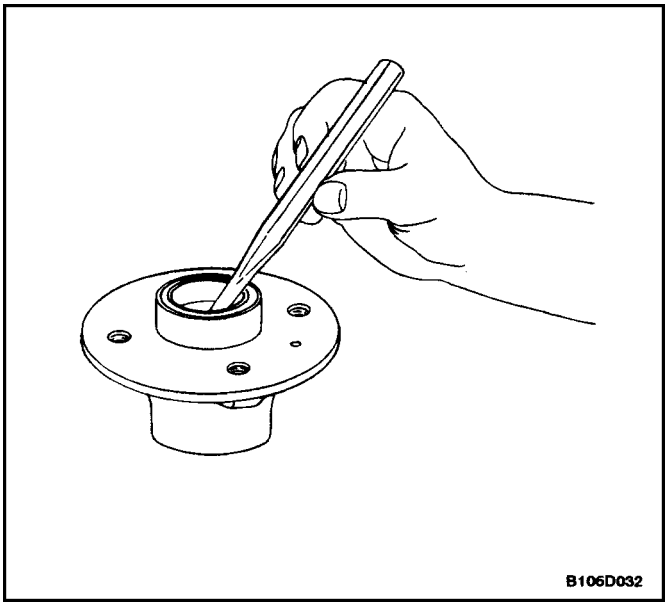

6. Remove the outer race of the inner tapered roller bearing.

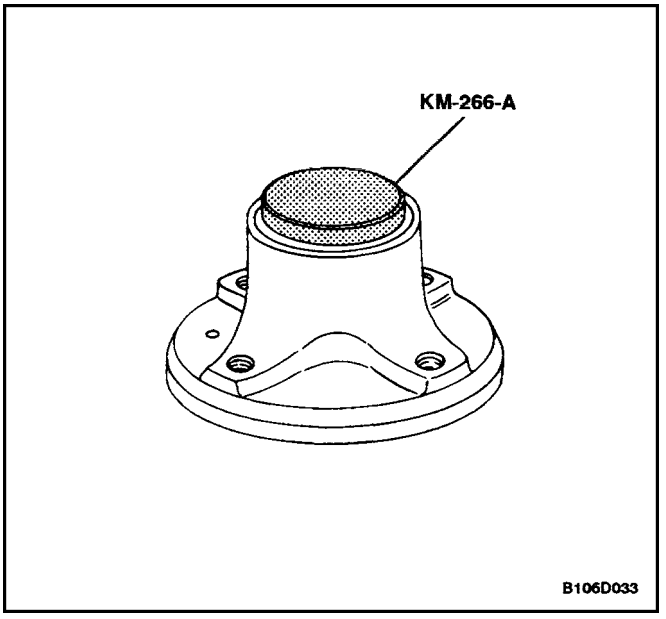

Assembly Procedure

1. Install the outer race of the inner tapered roller bearing with the installer KM–266–A.

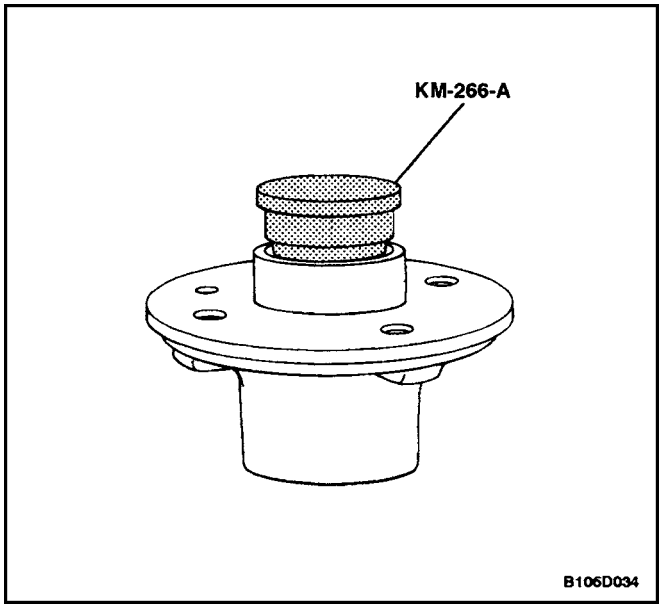

2. Press the inner race of the outer tapered roller bearing with the installer KM–266–A.

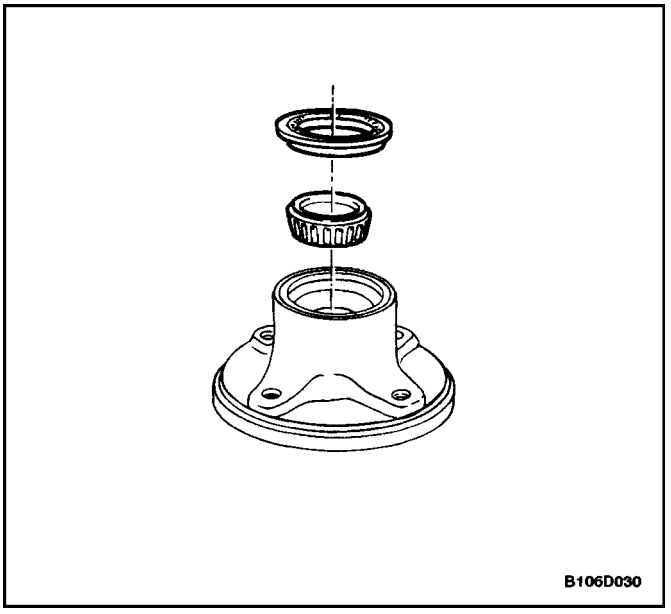

3. Install the inner tapered roller bearing and the oil seal.
4. Install the hub and bearing assembly onto the vehicle. Refer to”Hub and Bearing Assembly” in this section.
5. Lower the vehicle.

GENERAL DESCRIPTION AND SYSTEM OPERATION

REAR SUSPENSION

The rear suspension is fully independent and consists of a crossmember with four parallel links, two trailing links, two strut assemblies with coil springs and insulators, and two knuckles containing the hub and bearing assemblies. The strut assemblies support the weight of the vehicle using coil springs positioned around the strut dampeners. The coil springs are seated on insulators attached to the upper mount and the lower spring seat of the strut assembly. The parallel links and the trailing link bracket have rubber isolator bushings at each end and are attached to the crossmember and the knuckle. The rear parallel link is attached to the crossmember through adjustment cams that are used to adjust rear toe. The trailing links are attached to the body, through the trailing link bracket, and the bottom of the knuckle. A forged knuckle bolts to each strut assembly. Lateral movement of the knuckle is controlled by the parallel links. Fore and aft movement of the knuckle is controlled by the trailing link.

SECTION : 2A

SUSPENSION DIAGNOSIS

TABLE OF CONTENTS

DIAGNOSIS 2A–1
GENERAL DIAGNOSIS 2A–1
TORQUE STEER 2A–5
TAPERED ROLLER BEARING 2A–6
TAPERED ROLLER BEARING (OPTIONAL) .. 2A–6

DIAGNOSIS

GENERAL DIAGNOSIS

Problems in the steering, the suspension, the tires, and the wheels involve several systems. Consider all systems when diagnosing a complaint. Some problems, such as abnormal or excessive tire wear and scuffed tires, may be the result of hard driving. Always road test the vehicle first.

If possible, do this road test with the customer.

Proceed with the following preliminary checks. Correct any substandard conditions.

Preliminary Checks

Checks	Action
Inspect the tires for improper pressure and uneven wear.	Inflate the tires to the proper pressure.
Inspect the joint from the steering column to the steering gear for loose connections or wear.	Tighten the intermediate shaft pinch bolts. Replace the intermediate shaft as needed.
Inspect the front and the rear suspension, the steering gear, and the linkage for loose or damaged parts.	Tighten the front and the rear suspension. Tighten the steering gear mounting bracket bolts. Tighten the coupling flange pinch bolts. Replace the front and the rear suspension as needed. Replace the steering gear as needed. Replace the intermediate shaft as needed.
Inspect forout–of–round tires.	Perform a free runout test. Match–mount the tires.
Inspect for out–of–balance tires, bent wheels, and worn or loose wheel bearings.	Balance the wheels. Replace the wheels. Replace the wheel bearings.
Check the power steering pump serpentine belt tension.	Tighten the power steering pump serpentine belt.
Inspect the power steering system for leaks. Check the power steering fluid level.	Repair any leaks. Perform a power steering gear test. Add power steering fluid.

Car Lead/Pull

Checks	Action
Inspect for mismatched or uneven tires.	Replace the tires.
Inspect for a broken or a sagging spring.	Replace the spring.
Inspect for a radial tire lateral force.	Check the wheel alignment. Switch the tire and the wheel assemblies. Replace the tires, as needed.
Check the front–wheel alignment.	Align the front wheels.

Checks	Action
Inspect foran off–centersteering gear.	Reseat the pinion valve assembly. Replace the pinion valve assembly, as needed.
Inspect for front–brake dragging.	Adjust the front brakes.

Abnormal or Excessive Tire Wear

Checks	Action
Check the front–wheel and the rear–wheel alignment.	Align the front and the rear wheels.
Inspect for excessive toe on the front and the rear wheels.	Adjust the toe on the front and the rear wheels.
Inspect for a broken or a sagging spring.	Replace the spring.
Inspect for out–of–balance tires.	Balance the tires.
Inspect for worn strut dampeners.	Replace the strut dampeners.
Check for a failure to rotate tires.	Rotate the tires. Replace the tires, as needed.
Check for an overloaded vehicle.	Maintain the proper load weight.
Inspect for low tire inflation.	Inflate the tires to the proper pressure.

Scuffed Tires

Checks	Action
Inspect for incorrect toe on the front and the rearwheels.	Adjust the toe on the front and the rear wheels.
Inspect fora twisted ora bent suspension arm.	Replace the suspension arm.

Wheel Tramp

Checks	Action
Inspect for an out–of–balance tire or wheel.	Balance the tire or the wheel.
Inspect for improper strut dampener action.	Replace the strut dampeners.

Shimmy, Shake, or Vibration

Checks	Action
Inspect for an out–of–balance tire or wheel.	Balance the tire or the wheel.
Inspect for excessive wheel hub runout.	Measure the hub flange runout. Replace the hub, as needed.
Inspect for excessive brake drum or brake rotor imbalance.	Adjust the brakes. Replace the brake rotoror the brake drum, as needed.
Inspect for worn tie rod ends.	Replace the outer tie rods.
Inspect for wheel trim imbalance.	Balance thewheel.
Inspect for a worn lower ball joint.	Replace the lowerball joint.
Inspect for excessive wheel runout.	Measure thewheel runout. Replace thewheel, as needed.
Inspect for excessive loaded radial runout on the tire and the wheel assembly.	Match–mount the tire and thewheel assembly.

Hard Steering

Checks	Action
Check the steering gear preload adjustment.	Perform a rack bearing preload adjustment.
Check the hydraulic system. Test the power steering system pressure with a gauge.	Replace the seals and the hoses, as needed.

Checks	Action
Inspect for binding or catching in the steering gear.	Lubricate the steering gear. Repair or replace the steering gear, as needed.
Inspect for a loose steering gear mounting.	Tighten the steering gear mounting bracket nuts.

Too Much Play in Steering

Checks	Action
Inspect for worn or loose front wheel bearings.	Tighten the drive axle nut. Replace the wheel bearings as needed.
Inspect for a loose steering gear mounting.	Tighten the steering gear mounting bracket nuts.
Inspect the joint from the column to the steering gear for loose connections or wear.	Tighten the intermediate shaft pinch bolts. Replace the intermediate shaft, as needed.
Check the steering gear preload adjustment.	Perform a rack bearing preload adjustment.

Poor Returnability

Checks	Action
Inspect for lack of lubrication of the ball joints and the tie rod ends.	Replace the ball joints and the outer tie rods.
Inspect for binding in the ball joints.	Replace the ball joint.
Inspect for binding in the steering column.	Lubricate the steering column. Replace the steering column as needed.
Check the front–wheel alignment.	Align the front wheels.
Check the steering gear preload adjustment.	Perform a rack bearing preload adjustment.
Inspect for a sticking valve.	Lubricate the pinion valve assembly. Replace the pinion valve assembly, as needed.
Inspect for binding in the intermediate shaft on the steering gear.	Replace the intermediate shaft.

Abnormal Noise, Front Suspension

Checks	Action
Inspect for a lack of lubrication of the ball joints and the tie rod ends.	Replace the ball joints and the outer tie rods.
Inspect for damaged suspension components.	Replace the damaged suspension components.
Inspect for worn control arm bushings or tie rod ends.	Replace the control arm bushings or the tie rods.
Inspect for a loose stabilizer shaft link.	Tighten the stabilizer shaft link.
Inspect for loose wheel bolts.	Tighten the wheel bolts.
Inspect for loose suspension bolts or nuts.	Tighten the suspension bolts or the nuts.
Tighten the wheel covers.	Tighten the wheel covers.
Inspect for worn strut dampeners or strut mountings.	Replace the strut dampeners. Tighten the strut mounting bolts.
Inspect for an improperly positioned strut spring.	Adjust the strut spring to the proper position.

Wander or Poor Steering Ability

Checks	Action
Inspect for mismatched or uneven tires.	Replace the tires.
Inspect for lack of lubrication of the ball joints and the tie rod ends.	Replace the ball joints and the outer tie rods.

Checks	Action
Inspect for worn strut dampeners.	Replace the strut dampeners.
Inspect for a loose stabilizer shaft link.	Tighten the stabilizer shaft link.
Inspect for a broken or a sagging spring.	Replace the spring.
Check the steering gear preload adjustment.	Perform a rack bearing preload adjustment.
Check the front–wheel and the rear–wheel alignment.	Align the front and the rear wheels.

Erratic Steering when Braking

Checks	Action
Inspect for worn or loose front wheel bearings.	Replace the front wheel bearings.
Inspect for a broken or a sagging spring.	Replace the spring.
Inspect for a leaking wheel cylinder or caliper.	Replace the wheel cylinder or the caliper.
Inspect for warped rotors.	Replace the rotors.
Inspect for an incorrect or an uneven caster.	If the caster is beyond specifications, check the frame and repair it, as needed.

Low or Uneven Trim Height

Checks	Action
Inspect for a broken or a sagging spring.	Replace the spring.
Check for an overloaded vehicle.	Maintain the proper load weight.
Inspect for an incorrect or weak spring.	Replace the spring.

Ride Too Soft

Checks	Action
Inspect for worn strut dampeners.	Replace the strut dampeners.
Inspect for a broken or a sagging spring.	Replace the spring.

Ride Too Harsh

Checks	Action
Inspect for incorrect strut dampeners.	Replace the strut dampeners.
Inspect for an incorrect spring.	Replace the spring.

Body Leans or Sways in Corners

Checks	Action
Inspect for a loose stabilizer shaft link.	Tighten the stabilizer shaft link.
Inspect for worn strut dampeners or strut mountings.	Replace the strut dampeners. Tighten the strut assembly mounting bolts.
Check for an overloaded vehicle.	Maintain the proper load weight.
Inspect for a broken or a sagging spring.	Replace the spring.

Suspension Bottoms

Checks	Action
Inspect for worn strut dampeners.	Replace the strut dampeners.
Check for an overloaded vehicle.	Maintain the proper load weight.
Inspect for a broken or a sagging spring.	Replace the spring.

Steering Wheel Kickback

Checks	Action
Inspect for air in the power steering system.	Purge the power steering system of air.
Inspect for a loose steering gear mounting.	Tighten the steering gearmounting bracket nuts and the bolts.
Inspect the joint from the column to the steering gear for loose connections or wear.	Tighten the intermediate shaft pinch bolts. Replace the intermediate shaft, as needed.
Inspect for loose tie rod ends.	Tighten the tie rod ends. Replace the outer tie rods, as needed.
Inspect for loose or worn front wheel bearings.	Tighten the drive axle nut. Replace the wheel bearings as needed.

Steering Wheel Surges or Jerks

Checks	Action
Check the hydraulic system. Test the powersteering systempressure with a gauge.	Replace the seals and the hoses, as needed.
Inspect fora sluggish steering gear valve.	Clean the pinion valve assembly. Replace the pinion valve assembly, as needed.
Inspect fora loose powersteering pump serpentine belt.	Adjust the power steering pump serpentine belt.

Cupped Tires

Checks	Action
Check the front–wheel and the rear–wheel alignment.	Align the front and the rear wheels.
Inspect for worn strut dampeners.	Replace the strut dampeners.
Inspect for worn or loose wheel bearings.	Tighten the drive axle nut. Replace the wheel bearings as needed.
Inspect for excessive tire or wheel runout.	Match–mount the tires. Replace the tires, as needed. Replace the wheels, as needed.
Inspect for a worn ball joint.	Replace the ball joint.
Check the steering gear preload adjustment.	Perform a rack bearing preload adjustment.

TORQUE STEER

A degree of torque steer to the right may be experienced during the use of heavy throttle on some front–wheel drive cars with drive axles of unequal length. This torque steer to the right results from the right drive axle being longer than the left drive axle, which creates a difference in the drive axle angle. Cars with intermediate shaft assemblies have axles of almost equal length.

A difference in the drive axle lengths results in more torque toe–in in the left front wheel. You will notice the torque toe–in when the vehicle accelerates from a standing start or at lower speeds.

Inspection Procedure

1. Place a small piece of tape at the top center of the steering wheel.
2. Note the inches of steering wheel deflection required to keep the vehicle straight during heavy acceleration.
3. Compare this finding with similar cars.

Factors that may cause torque steer to be more apparent on a particular vehicle include:

- Variations in the tire and wheel assemblies. This has the most significant effect on torque steer. A slightly smaller diameter on the right front tire will increase a right torque lead.
- Large differences in the right and the left front tire pressure.
- Looseness in the control arm bushings, the tie rod assemblies, or the steering gear mounting. This looseness permits a front wheel to pull forward and toe–in under a torque greater than the wheel on the opposite side. A loose suspension component may result in an opposite lead upon deceleration.

- A high front trim height. This height would increase the drive axle angle and could cause wobble at speeds between 24 to 48 km/h (15 to 30 mph).
- Binding or a tight drive axle joint. A tight drive axle joint or a high front trim height may also cause a wobble at speeds between 24 to 48 km/h (15 to 30 mph).
- Incorrect, worn, or loose engine mounts causing adverse drive angles.

Refer to ”General Diagnosis” in this section for actions to remedy these problems.

Conditions that may produce an effect similar to torque steer include:

- Incorrect front or rear alignment.
- Frame misalignment or defect.
- Front suspension damage.
- Incorrectly mounted rear crossmember.

TAPERED ROLLER BEARING

Perform the following test to check for looseness in the hub and bearing assembly on vehicles equipped with rear brake drums:

1. Raise and suitably support the vehicle.
2. Remove the rear wheel. Refer to *Section 2E, Tires and Wheels.*
3. Remove the brake drum detent screw and the brake drum. Refer to *Section 4E, Rear Drum Brakes.*
4. Mount a dial indicator set with a magnetic base to a control arm or any other stationary part of the vehicle.
5. Install the brake disc caliper and the brake rotor. Refer to Section 4E, Rear Disc Brakes. *Section 2D, Rear Suspension.*
6. Install the rear brake drum. Refer to *Section 4E, Rear Drum Brakes.*
7. Install the rear wheel. Refer to *Section 2E, Tires and Wheels.*
8. Lower the vehicle.

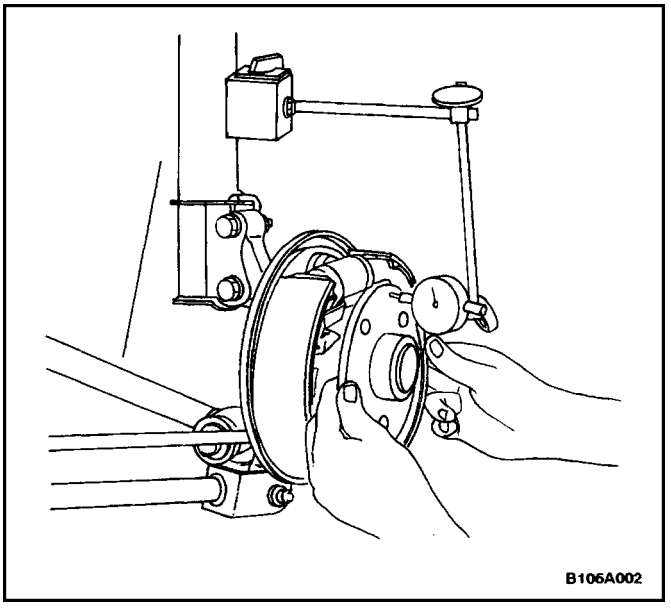

TAPERED ROLLER BEARING (OPTIONAL)

Perform the following test to check for looseness in the hub and bearing assembly on vehicles equipped with rear disc brakes:

1. Raise and suitably support the vehicle.
2. Remove the rear wheel. Refer to *Section 2E, Tires and Wheels.*
3. Remove the brake disc caliper and the brake rotor. Refer to *Section 4E, Rear Brakes.*
4. Mount a dial indicator set with a magnetic base to a control arm or any other stationary part of the vehicle.
5. Push and pull the wheel hub by hand. If the wheel hub movement exceeds 0.05 mm (0.002 inch), replace the wheel bearing. Refer to *Section 2D, Rear Suspension.*
6. Install the brake disc caliper and the brake rotor. Refer to *Section 4F, Rear Disc Brakes.*
7. Install the rear wheel. Refer to*Section 2E, Tires and Wheels.*
8. Lower the vehicle.

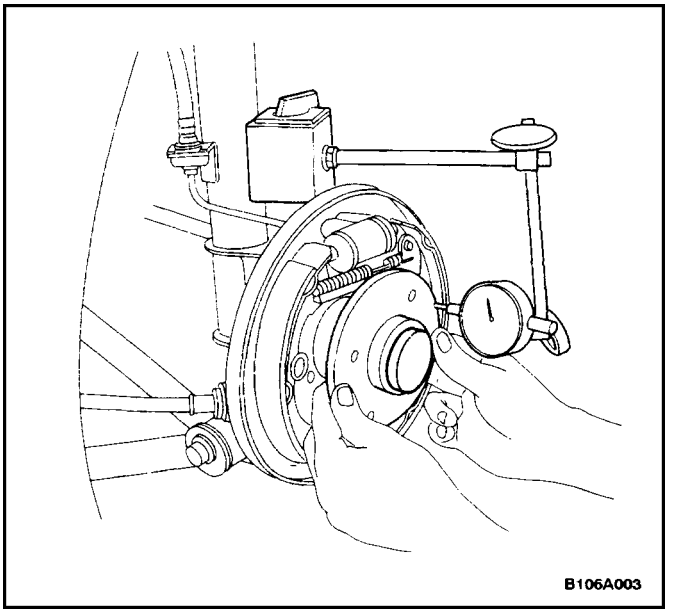

SECTION : 9K

SQUEAKS AND RATTLES

TABLE OF CONTENTS

DIAGNOSIS 9K–1
SQUEAK AND RATTLE DIAGNOSIS 9K–1
MAINTENANCE AND REPAIR 9K–3
ON–VEHICLE SERVICE 9K–3
SQUEAK AND RATTLE REPAIR 9K–3

DIAGNOSIS

SQUEAK AND RATTLE DIAGNOSIS

Rattle Coming From the Side Rail

Checks	Action
Check the brake lines.	• Tap lightly on the brake lines and listen for a rattle. • Install plastic tie straps to secure the brake lines tightly together.

Rattle Under Vehicle at Higher RPM

Checks	Action
Check for heat shield contact with the underbody.	• Raise the vehicle and perform a visual inspection. • Bend the heat shield slightly to gain clearance from the underbody.

Squeak From the Front of the Vehicle in Cold Weather

Checks	Action
Check the front stabilizer shaft insulators.	• While the vehicle is cold, perform a test drive and achieve full front suspension travel by driving through a dip in the road. • Remove the insulators and wrap teflon tape around the stabilizer shaft. Reinstall the insulators over the tape.

Thump From Rear of Vehicle on Bumps

Checks	Action
Check for a properly secured spare tire in the rear compartment.	• Open the rear compartment and perform a visual inspection of the spare tire and the tools. • Tightly secure the spare tire and all tools. • Perform a road test to verify that the noise is eliminated.

Glass Knock Coming From the Rear of the Vehicle When Driving Over Bumps

Checks	Action
Check for an out–of–adjustment hatchback latch.	• Test drive the vehicle in order to verify this condition. • Loosen the latch nuts and adjust the latch downward.

Rattle Coming From Door

Checks	Action
Check the door lock solenoid.	• Remove the door trim panel and check if the solenoid is loose. • Tighten the solenoid bolts.
Check for rattling electrical connectors inside the door trim panel.	• Tap on the trim panel and listen for a rattle. • Remove the trim panel and wrap foam padding around the connectors as required.

Squeak When Operating Doors

Checks	Action
Check for a lack of lubrication of the door hinge pins.	• Operate the doors and listen for squeaks. • Lubricate the door hinge pins with light oil and coat with lithium grease.

Squeak Coming From Console When Shifting Manual Transaxle

(Condition Occurs In Cold Weather with a Cold Engine)

Checks	Action
Check the manual transaxle control lever lower boot.	• Move the control lever between gears and listen for squeaks. • Remove the floor console and replace the lower shift boot or apply talcum powder to the lower shift boot.

Buzz From the Left Side of Instrument Panel

Checks	Action
Check for vibration of the fuse box cover against the instrument panel side trim.	• Tap on the cover with a finger and listen for a buzz. • Apply 6.35 mm (0.250 inch) by 25.4 mm (1.00 inch) felt pads to the side trim where the cover makes contact.

Squeak Coming From Instrument Cluster Trim Plate

Checks	Action
Check for rubbing of the cluster trim plate on the instrument panel.	• Test drive the vehicle in order to verify this condition. • Remove the instrument cluster trim plate and install felt tape to the edges.

MAINTENANCE AND REPAIR

ON–VEHICLE SERVICE

SQUEAK AND RATTLE REPAIR

Squeaks and rattles are caused by the unwanted movement between parts of a vehicle. There are threemeans to prevent squeaks or rattles.

- Attach the parts securely so that there is no relative motion during the operation of the vehicle.
- Separate the parts so that there is no contact during operation.
- Insulate the parts so that no squeaks or rattles occur with the movement of the parts. Low uniform friction surfaces can be used to eliminate ”stick–slip” motion.

SECTION : 9I

WATERLEAKS

TABLE OF CONTENTS

SPECIFICATIONS 9I–1
RECOMMENDED MATERIALS FOR WATERLEAK REPAIRS 9I–1
WATERTEST STAND SPECIFICATIONS 9I–1
DIAGNOSIS 9I–2
WATERLEAK DIAGNOSIS 9I–2
MAINTENANCE AND REPAIR 9I–5
ON–VEHICLE SERVICE 9I–5
WATERLEAK REPAIR 9I–5

SPECIFICATIONS

RECOMMENDED MATERIALS FOR WATERLEAK REPAIRS

Leak Areas	Repair Materials
Windshield, back window	Urethane adhesive, caulking kit, or the equivalent
Metal joints	Brushable seam sealer which can be painted
Ventilation ducts	3M™ Auto Bedding and Glazing Compound or the equivalent
Small cracks and pin holes	3M™ Drip–Check Sealer or the equivalent
Large holes	3M™ Automotive Joint and Seam Sealert
Weatherstrips	3M™ 08011 Weatherstrip Adhesive or the equivalent
Bolts, studs, and screws	Strip caulk

WATERTEST STAND SPECIFICATIONS

Application	Description
Nozzle Type	Full jet spray nozzle #1/2 GG–25 or equivalent with a 60˚ included angle
Nozzle Height	Approximately 1,600 mm (63.0 in.) from the floor
Volume of Flow	14L (3.7 gal) per minute
Pressure	155 kPa (22.5 psi) measured at the nozzle
Windshield and A–Pillar Test Stand Position	Approximately 30? down, 45? toward the rear, and aimed at the corner of the windshield
B–Pillar Test Stand Position	Approximately 30? down, 45? toward the rear, and aimed at the center of the rear door
Back Window and Rear Deck Lid Test Stand Position	Approximately 30? down, 30? toward the front and aimed approximately 610 mm (24.0 in.) from the corner of the back window

DIAGNOSIS

WATERLEAK DIAGNOSIS

The repair of waterleaks in the body requires proper testing and diagnosis. Repair waterleaks by adjusting the misaligned parts and using the proper repair materials. First, determine what conditions cause the leak. For example, the leak may occur only when the vehicle is parked on an incline, or water may appear only in the spare tire compartment. Second, test the area for the source of the leak using the following testing methods. If the general leak area is found, determine the exact entry point of the leak by using a water hose or an air hose. If the general leak area is not obvious, use the watertest stands to determine the area of the leak. It may be necessary to remove some interior trim panels or some parts in order to locate the leaks.

Important : It is necessary to find the origin of all the leaks before making any repairs. Random repairs may stop the leak only temporarily and may make future repairs more difficult. Continue localized testing in the general area in order to ensure that all leaks are found.

Generalized Testing

1. Set up the watertest stands.

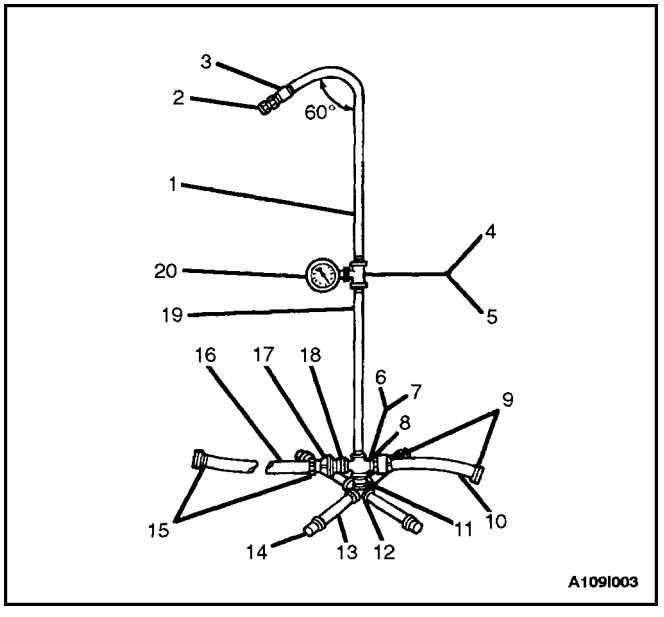

1) 1/2–inch by 36–inch Pipe
2) Full–jet Spray Nozzle #1/2 GG–25 or Equivalent Nozzle Height at 1,600 mm to the Floor
3) 1/2–inch Coupling
4) 1/2–inch by 1/2–inch by 1/4–inch Reducing T (Right Only)
5) 1/2–inch Coupling (Left Only)
6) 1/2–inch Cross (Right Only)
7) 1/2–inch Tee (Left Only)
8) 5/8–inch Input Hose (2 Feet Long, Right Only)
9) 1/2–inch Pipe–to–Hose Nipple (Right Only)
10) 1/2–inch Close Nipple
11) 1/2–inch Cross with Weld–on 1/2–inch Cap
12) 1/2–inch by 12–inch Nipple
13) 1/2–inch Cap
14) 5/8–inch Female Hose Coupling
15) 5/8–inch Cross Hose (12 Feet Long)
16) 5/8–inch Hose Quick Connect
17) 1/2–inch Pipe–to–Hose Nipple
18) 1/2–inch by 30–inch Pipe (Straight)
19) 1/4–inch Water Pressure Gauge (Right Only)

2. Set up the watertest stand leak test.

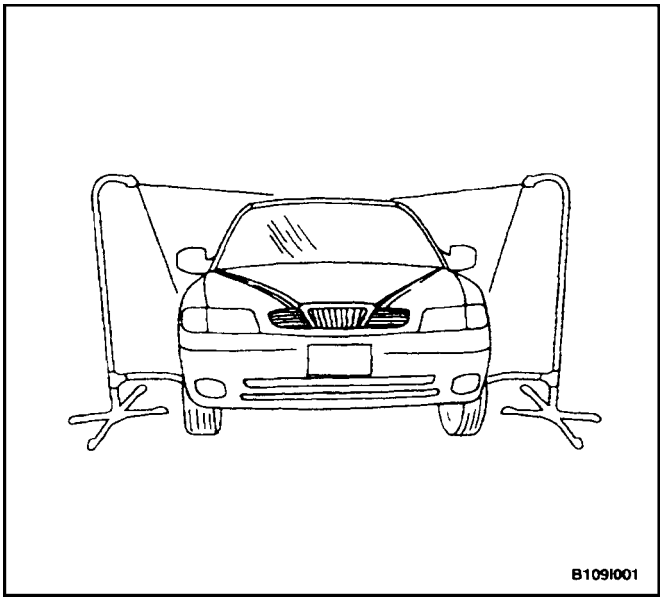

3. Perform the watertest stand leak test. Refer to"Watertest Stand Specifications" in this section.
4. If the local water pressure does not allow the required water pressure of 155 kPa (22.5 psi), move both stands closer to the vehicle so that the water spray overlaps.

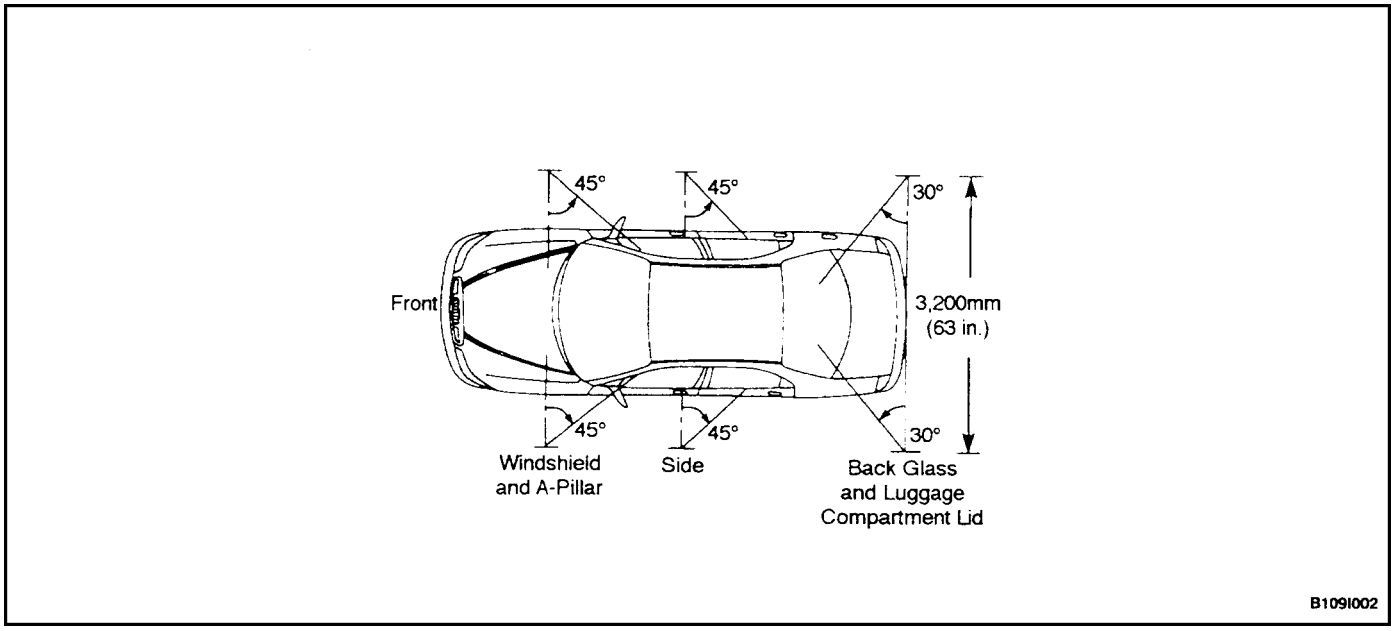

Localized Testing (Spot Test)

1. Do localized testing with a water hose or an air hose.
2. Begin testing by spraying the air or the water at the base of the suspected leak area. Continue spraying the air or the water upward until the leak is found.

Water Hose Test

1. Place another person inside the vehicle in order to detect the location of the leak.
2. Use a water hose without a nozzle.

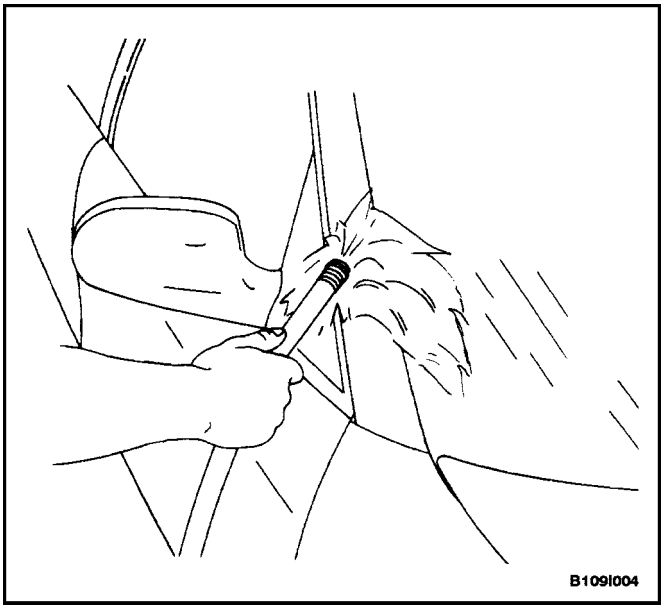

3. Begin spraying the water at the base of the suspected leak area. Continue spraying the water upward until the leak is found.

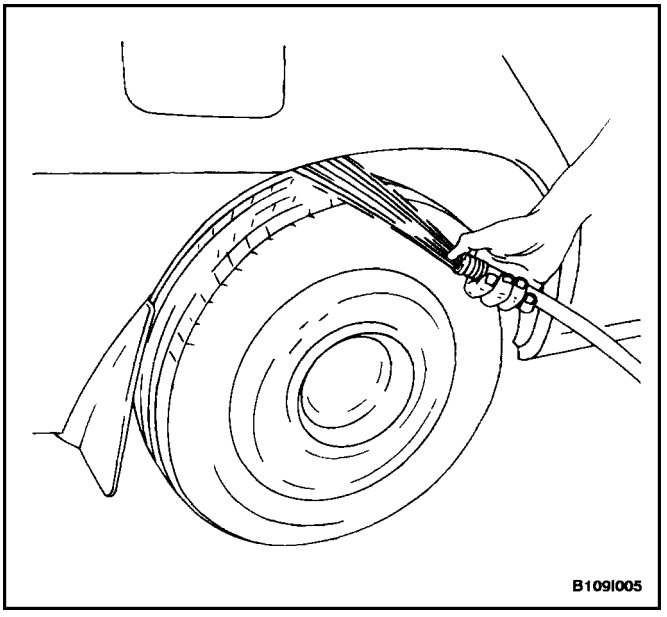

Air Hose Test

1. Apply soapy water to the outside of the vehicle in the suspected leak area.
2. Blow air from inside the vehicle. The air pressure should not exceed 205 kPa (29.7 psi).
3. Determine the location of the leaks from the bubbles formed in the soapy water.

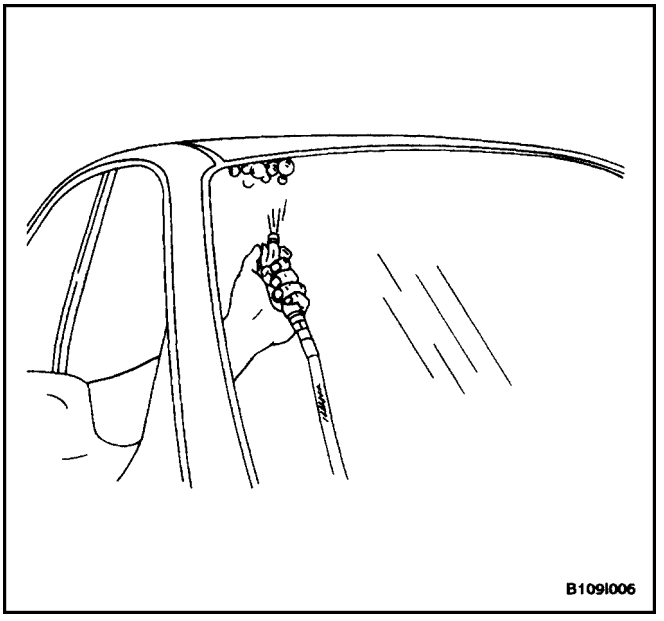

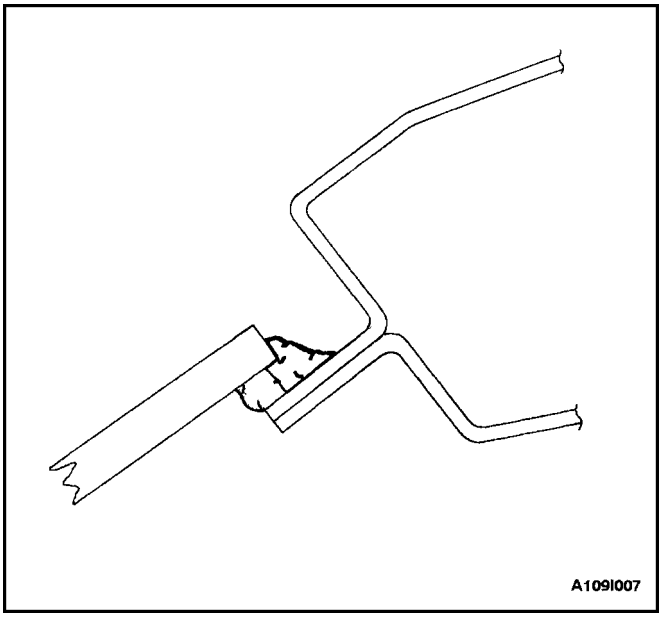

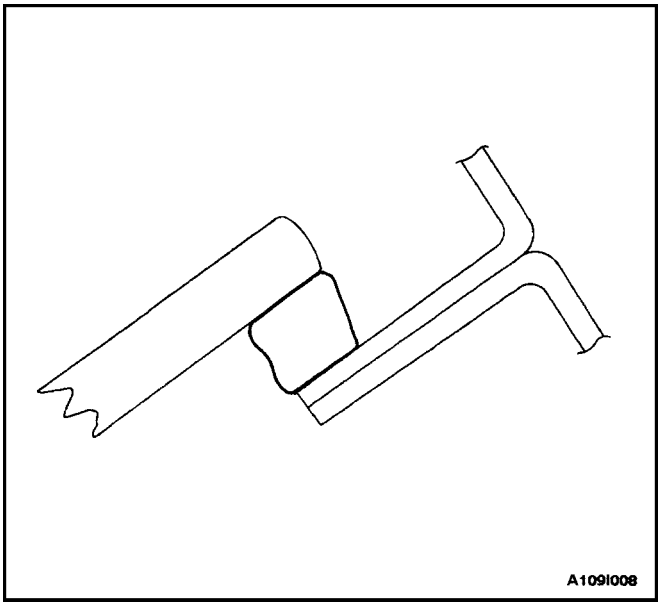

MAINTENANCE AND REPAIR

ON–VEHICLE SERVICE

WATERLEAK REPAIR

Some waterleaks around the glass can be repaired without removing the glass.

Important : This type of repair may be used only for urethane–installed glass.

1. Remove the reveal molding in the area of the leak. It may be necessary to remove the garnish molding or the trim strip lace in order to locate the leak.
2. While spraying water over the leak area, carefully push the glass outward in order to determine the size of the leak.
3. Mark the location of the leak.
4. Use water to clean any dirt from the area. Dry the area with an air hose.
5. Using a sharp knife, trim off the uneven edges of the adhesive caulking material around the leak for a distance of 75 to 100 mm (3 to 4 inches) on both sides of the leak.
6. Using a sharp knife, trim off the uneven edges of the adhesive material around the leak 75 to 100 mm (3 to 4 inches) on both sides of the leak.

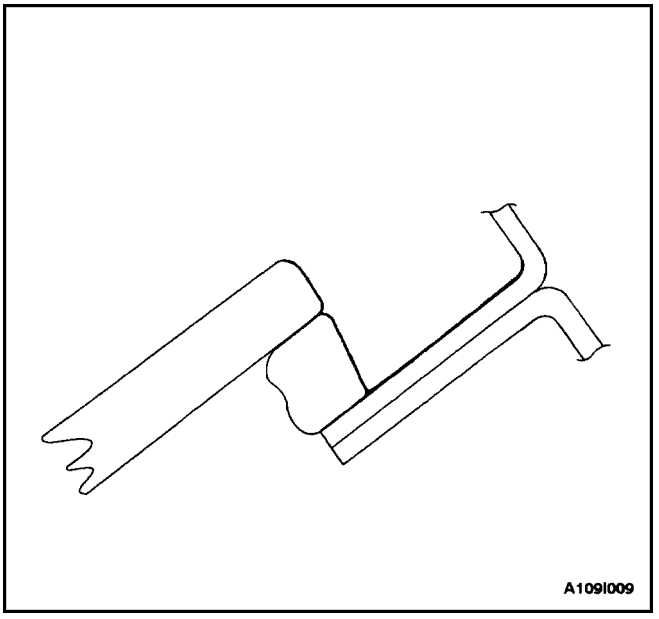

7. Prime the trimmed area with the primer.

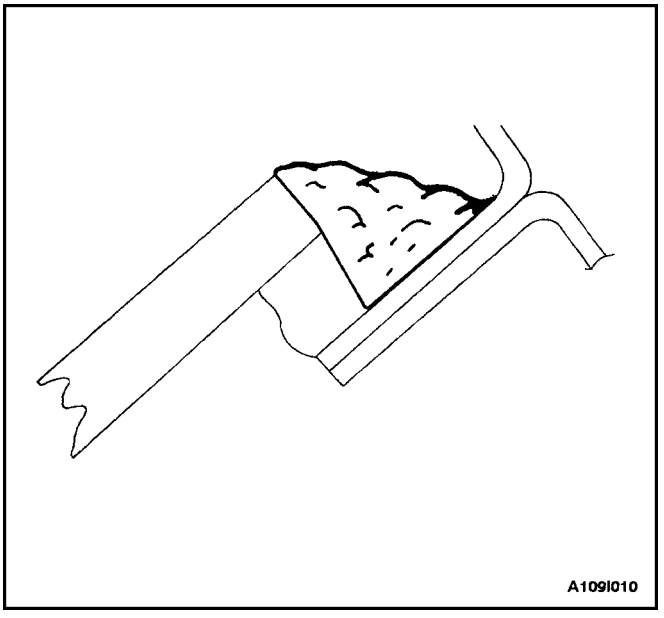

8. Allow the primer to dry for 5 minutes.
9. Apply the adhesive over the leak and for a distance of 75 to 100 mm (3 to 4 inches) on both sides of the leak.

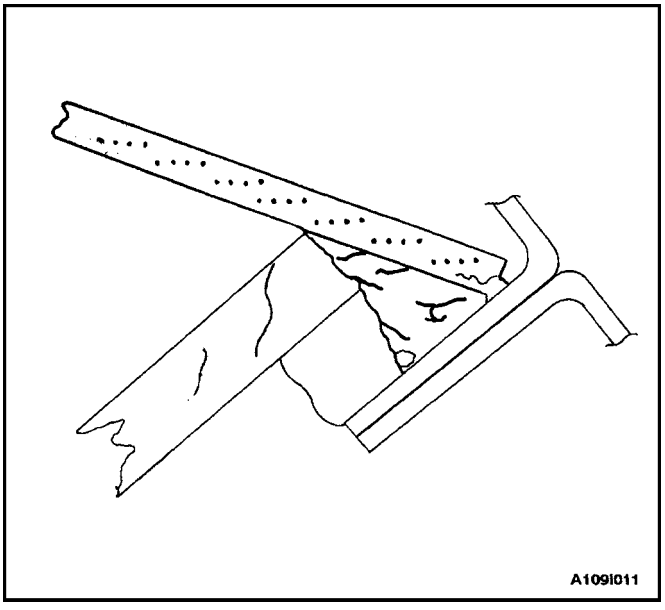

10. Immediately after applying the adhesive, use a flat stick or a similar tool to work the adhesive into the leak area and into the joint between the original material and the vehicle body in order to ensure a watertight seal.
11. Spray warm or hot water over the repaired area in order to determine if the leak was repaired. Do not run a heavy stream of water directly on the freshly-applied adhesive.
12. Install the trim strip lace if it was removed.
13. Install the garnish molding if it was removed.
14. Install the reveal molding.

Important : After the completion of any waterleak repair, re–test the area using the watertest stands. Do not use localized testing procedures on the newly–repaired areas, as the repair material may dislodge under abnormal pressure.

SECTION : 9J

WINDNOISE

TABLE OF CONTENTS

DIAGNOSIS 9J–1
WINDNOISE DIAGNOSIS 9J–1
MAINTENANCE AND REPAIR 9J–2
ON–VEHICLE SERVICE 9J–2
WINDNOISE REPAIR 9J–2

DIAGNOSIS

WINDNOISE DIAGNOSIS

CAUTION : An assistant should drive the vehicle while the technician checks for the location of the windnoise, in order to prevent personal injury or vehicle damage.

A test drive in the vehicle is necessary to accurately determine the location of the windnoise. Often there is a primary leak and secondary leaks. Failure to repair all leaks will only reduce the windnoise, not eliminate it.

During the test drive the technician should bring the following items to aid in determining the location of the windnoise.

- A mechanics stethoscope or vacuum hose
- Masking tape
- Strip caulk
- A china marking pencil
- A screwdriver

Perform the following steps in order to conduct the road test:

1. Choose a route that includes smooth straight streets that run in all four directions (north, south, east, and west).
2. Choose streets with little traffic or noise that would interfere with the test.
3. Drive the vehicle at the speeds at which the noise was noticed by the customer or until the noise is produced. Do not exceed legal speed limits.
4. The windnoise is external if any of the following conditions occur:
   - The windnoise is caused by the wind.
   - The windnoise can be heard with the door glass lowered and while the vehicle is being driven.
   - The windnoise is eliminated when tape is placed over various moldings and gaps.
5. Internal windnoise is air leaving the vehicle and should be repaired in the following manner.
   - In order to locate the leak, tape off the body lock pillar pressure relief valves. This will cause air pressure to build up inside the vehicle and enhance the windnoise.
   - Use a stethoscope or a vacuum hose to locate the leak.
   - Temporarily repair the leak with masking tape.

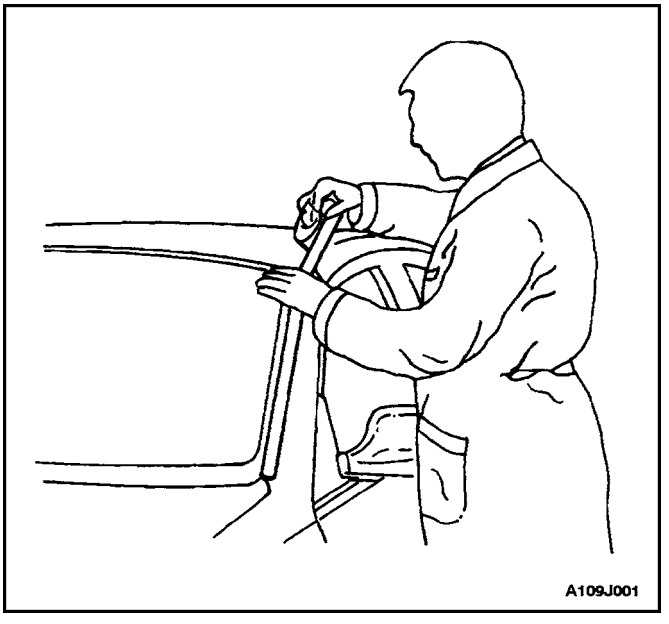

   - Continue testing in order to determine if the noise has been eliminated or if other leaks exist.
   - When all leaks have been found, return to the shop and make permanent repairs with the proper alignment techniques and sealing materials.

MAINTENANCE AND REPAIR

ON–VEHICLE SERVICE

WINDNOISE REPAIR

Windnoise leak repairs are very similar to waterleak repairs. Refer to *Section 9I, Waterleaks.* The actual procedure depends on the type of seal being repaired.

Leaks around the door opening weatherstrips do not always indicate a faulty weatherstrip. A door or window adjustment may resolve the condition. Refer to *Section 9P, Doors* or *Section 9L, Glass and Mirrors.*

SECTION : 2E

TIRES AND WHEELS

TABLE OF CONTENTS

SPECIFICATIONS 2E–1
TIRE SIZE AND PRESSURE SPECIFICATIONS 2E–1
INFLATION PRESSURE CONVERSION SPECIFICATIONS 2E–2
FASTENER TIGHTENING SPECIFICATIONS . 2E–2
DIAGNOSIS 2E–2
WHEEL RUNOUT 2E–2
MAINTENANCE AND REPAIR 2E–3
ON–VEHICLE SERVICE 2E–3
WHEEL 2E–3
ON–VEHICLE BALANCING 2E–5
UNIT REPAIR 2E–6
ALLOY WHEEL POROSITY 2E–6
ALLOY WHEEL REFINISHING 2E–6
OFF–VEHICLE BALANCING 2E–7
CORRECTING NON–UNIFORM TIRES 2E–7
TIRE AND WHEEL MATCH–MOUNTING 2E–7
TIRE MOUNTING AND DISMOUNTING 2E–7
GENERAL DESCRIPTION AND SYSTEM OPERATION 2E–8
TIRE AND WHEEL BALANCING 2E–8
TIRE CHAIN USAGE 2E–9
REPLACEMENT TIRES 2E–9
ALL SEASON TIRES 2E–9
PASSENGER METRIC SIZED TIRES 2E–10
TIRE LABEL 2E–10
SPARE TIRE 2E–10
WHEELS 2E–10
INFLATION OF TIRES 2E–10

SPECIFICATIONS

TIRE SIZE AND PRESSURE SPECIFICATIONS

Inflation Pressure at Full Load

Engine	Tires	Wheel	Front		Rear	
	kPa		psi	kPa	psi	
2.0 DOHC	185/65R14	5.5Jx14 (Steel)	205	30	190	28
	185/65R14	5.5Jx14 (Alloy)	205	30	205	30
	T125/70D15	4Tx15	415	60	415	60

INFLATION PRESSURE CONVERSION SPECIFICATIONS

kPa	psi	kPa	psi	kPa	psi
140	20	185	27	235	34
145	21	190	28	240	35
155	22	200	29	250	36
160	23	205	30	275	40
165	24	215	31	310	45
170	25	220	32	345	50
180	26	230	33	380	55

FASTENER TIGHTENING SPECIFICATIONS

Application	N•m	Lb–Ft	Lb–In
Wheel Bolt (Alloy and Steel Wheels)	90	66	–

DIAGNOSIS

WHEEL RUNOUT

Measure wheel runout with an accurate dial indicator. Measurements may be taken with the wheels either on or off the vehicle, using an accurate mounting surface such as a wheel balancer. Measurements may be taken with or without the tire mounted on the wheel.

Measure radial runout and lateral runout on both the inboard and the outboard rim flanges. With the dial indicator firmly seated next to the wheel and tire assembly, slowly rotate the wheel one revolution and record the indicator reading. If any measurement exceeds the following specifications and there is a vibration that wheel balancing will not correct, replace the wheel. Disregard any indicator readings due to welds, paint runs, or scratches.

Steel Wheels

- Radial runout: 0.8 mm (0.03 inch).
- Lateral runout: 1.0 mm (0.04 inch).

Alloy Wheels

- Radial runout: 0.8 mm (0.03 inch).
- Lateral runout: 0.8 mm (0.03 inch)

Measure free radial runout on the center of the tire tread. The tread can be taped to present a smooth surface. Measure free lateral runout on the outboard side of the tire nearest to the tread.

Steel and Alloy Wheels

- Free radial runout: 1.5 mm (0.06 inch).
- Free lateral runout: 1.5 mm (0.06 inch).

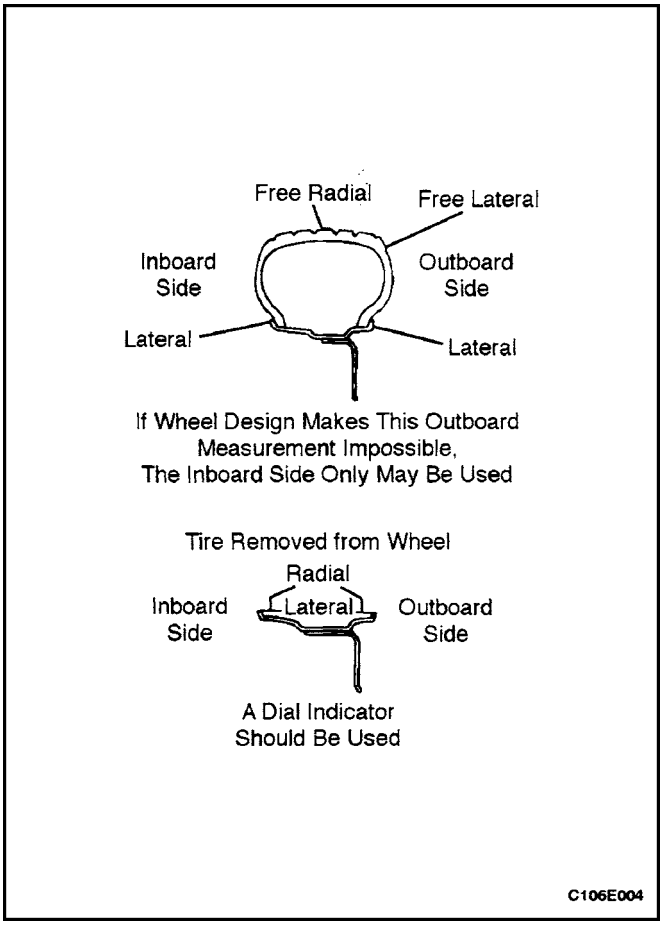

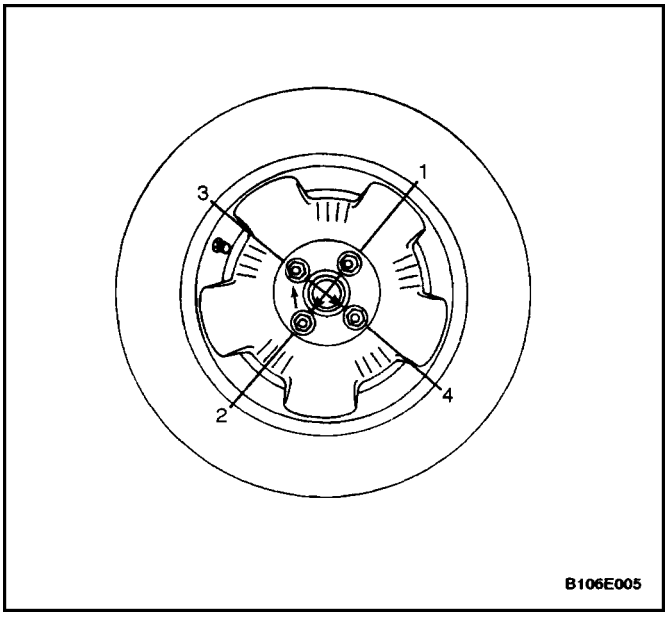

MAINTENANCE AND REPAIR

ON–VEHICLE SERVICE

WHEEL

Removal Procedure

1. Loosen the wheel bolts.
2. Raise and suitably support the vehicle.
3. Remove the wheel bolts.

Notice : Never use heat to loosen a tight wheel. It can shorten the life of the wheel, the wheel nuts and the wheel bearings. Excessive force, such as hammering the wheel or tire, can also cause damage and is not recommended. Slight tapping of the wheel sidewall with one's hand or with a rubber mallet is acceptable.

Remove the wheel. Difficulty in removing the wheels from the vehicle can be due to foreign material or to a tight fit between the wheel centerhole and the hub or the rotor. These wheels can be removed by

4. Remove the wheel. Difficulty in removing the wheels from the vehicle can be due to foreign material or to a tight fit between the wheel centerhole and the hub or the rotor. The wheels can be removed using the following procedure:
   1) Retightening the wheel blots on the affected wheel and then loosening the wheel nuts by two turns.
   2) Lowering the vehicle and rocking it from side to side as hard as possible, using one or more person's body weight to loosen the wheel.
   3) Raising the vehicle and removing the wheel.

CAUTION : Do not allow the penetrating oil to get on the vertical surfaces between the wheel and the drum (or rotor) Penetrating oil in this area could cause the wheel to loosen as the vehicle is driven, resulting in loss of control and an accident.

Penetrating oil is not effective in removing tight wheels. If it is used, however, apply it sparingly and only to the wheel's centerhole area.

Installation Procedure

Notice : Before installing the wheels, remove any buildup of corrosion on the wheel mounting surface and the brake drum or the rotor mounting surface by scraping and brushing them with a wire brush. Installing the wheels without good metal–to–metal contact at the mounting surfaces can cause the wheel nuts to loosen, which can later allow a wheel to come off while the vehicle is moving. Wheel bolts must be tightened in sequence and to the proper torque to avoid bending the wheel, the brake drum or the rotor.

1. Mount the wheel.
2. Install the wheel bolts in the sequence shown. Do not tighten the wheel bolts.
3. Lower the vehicle.

Tighten

Tighten the wheel nuts to 90 N•m (66 lb–ft) [Steel Wheel], 122 N•m (90 lb–ft) [Alloy Wheel].

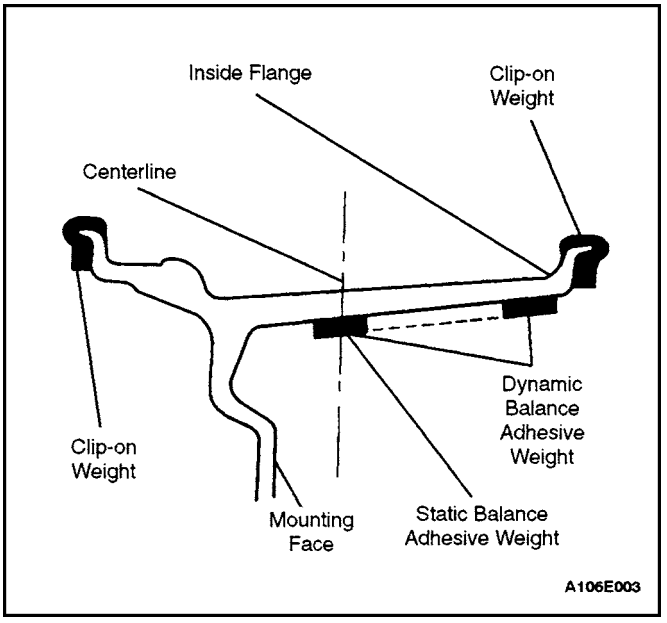

ON–VEHICLE BALANCING

On–vehicle balancing will help correct vibrations due to brake drum, rotor, and wheel cover imbalances.

Notice : Do not allow the front suspension to hang free. When the drive axle is run at an extreme angle, extra vibrations can occur, as well as damage to seals and joints.

1. During on–vehicle balancing, do not remove the balance weights from the off–vehicle dynamic balance.
2. If more than 1 ounce of additional weight is required, split the weight between the inner and the outer rim flanges.

CAUTION : Do not spin the drive wheels faster than 55km/h (35 mph) as indicated by the speedometer. This limit is necessary because the speedometer indicates only one–half of the actual wheel speed when one drive wheel is spinning and the other drive wheel is stopped. Personal injury and damage may result from high–speed spinning.

3. Spin the driven tire and wheel assemblies using the engine.

UNIT REPAIR

ALLOY WHEEL POROSITY

Wheel repairs that use welding, heating or peening are not approved.

1. Raise and suitably support the vehicle.
2. Remove the wheel. Refer to ”Wheel”in this section.

CAUTION : To avoid serious injury, do not stand over the tire when inflating, because the bead may break when it snaps over the safety hump. Do not exceed 275 kPa (40 psi) of air pressure in any tire if the beads are not seated. If 275 kPa (40 psi) of air pressure will not seat the beads, deflate the tire. Relubricate the beads. Reinflate the tire. Overinflation may cause the bead to break and cause serious injury.

3. Locate leaking areas by inflating the tire to 345 kPa (50 psi) and dipping the tire and wheel assembly into a water bath.
4. Mark the leak areas and remove the tire from the wheel.
5. Scuff the inside wheel surface at the leak area with 80–grit sandpaper. Clean the leak area with a general– purpose cleaner.
6. Apply a 3.3 mm (0.13 inch) thick layer of adhesive/ sealant to the leak area. Allow it to dry for 12 hours.
7. Install the tire on the wheel. Inflate the tire to 345 kPa (50 psi) and check for leaks as in step 3.
8. Adjust the tire pressure to meet specifications. Refer to”Tire Size and Pressure Specifications”in this section.
9. Balance the wheel. Refer to ”Tire and Wheel Balancing”in this section.
10. Install the wheel. Refer to ”Wheel”in this section.
11. Lower the vehicle.

ALLOY WHEEL REFINISHING

A protective clear or color coating is applied to the surface of the original equipment cast alloy wheels. Surface degradation can develop if this clear coating is damaged or removed. This can happen at some automatic car wash facilities that use silicon carbide–tipped tire brushes to clean white walls and tires. Once the protective coating is damaged, exposure to caustic cleaners or road salt causes further surface degradation. The following procedure details how to strip, clean and recoat alloy wheels.

CAUTION : To avoid serious personal injury, follow the manufacturer’s recommendations and cautions when using these materials.

Required materials:

- Amchem Alumi Prep No. 33. Stock No. DX533 or equivalent cleaning and conditioning chemical for alloys.
- Amchem Alodine No. 1001. Stock No. DX50T or equivalent coating chemical for alloys.
- Ditzler Delclear Acrylic Urethane Clear, Stock No. DAU–75 or equivalent.
- Ditzler Delthane Ultra–Urethane Additive, Stock No. DXR–80 or equivalent.

Before repairing the alloy damage or the clear coat damage, prepare the wheels and the tires.

5. Remove the wheel from the vehicle.
6. Mark the location of the outboard weights and remove them.
7. Wash the wheel inside and out with a water–based, all–purpose cleaner. Remove the grease and oil with a solvent cleaner.
8. Mask the tire prior to painting.
9. Using a 400–grit wet or dry sandpaper, sand over the painted areas that will not require recoloring. Sanding will promote the adhesion of the clear coat.

Alloy Damage on Wheel Surface

1. Mount the wheel on a brake lathe and spin the assembly slowly.
2. Sand the wheel with a backing block or pad. Hold the backing block or pad flat to the surface of the wheel and sand slowly back and forth from the center to the outer edge of the tire to remove the damage. Use the following sandpaper grits in the order listed:
   1) 80 grit.
   2) 150 grit.
   3) 240 grit.

Clear Coat Damage on Unpainted Wheels

1. Apply the chemical stripper Amchem Alumi Prep No. 33. Use a small 1/4–inch detail brush to apply the stripper around the perimeter and spoke–like areas.
2. Remove the stripper according to the manufacturer’s recommendations.

CAUTION : To avoid serious personal injury, do not use engine power to rotate the wheel while sanding.

3. Sand the wheel with 240–grit sandpaper by rotating the wheel on a slow–spinning brake lathe or by mounting the wheel on the car and spinning it by hand. Sanding restores the machined appearance and promotes adhesion.

After repairing the alloy or clear coat damage, the wheels must be recoated.

Recoating Procedure

CAUTION : To avoid serious personal injury when applying any two–part component paint system, follow the specific precautions provided by the paint manufacturer. Failure to follow these precautions may cause lung irritation and an allergic respiratory reaction.

1. Clean the surface.
2. Soak the wheel with Amchem Alumi Prep No. 33 or equivalent for 1 to 3 minutes. Rinse the wheel with water and blow it dry.
3. Soak the wheel with Amchem Alodine No. 1001 or equivalent for 1 to 3 minutes. Rinse the wheel with water and blow it dry.

4. Finish with Ditzler Delclear Urethane and Ditzler Ultra– Urethane Additive or equivalent, using three coats.

   1st coat – spray on a light mist coat; let dry.
   2nd coat – spray or paint on a light coat; let dry.
   3rd coat – spray or paint on a heavy double wet coat; let dry.

5. Let the urethane dry for 24 hours or flash for 30 minutes and force dry at 60˚C (140˚F) for 30 minutes. Allow the urethane to cool for 5 minutes before mounting the wheel on the vehicle.

OFF–VEHICLE BALANCING

Perform wheel balancing with an electronic off–vehicle balancer. The balancer is easy to use and gives both a static and a dynamic balance. Unlike on–vehicle balancing, the off–vehicle balancer does not correct for drum or rotor imbalance. This drawback is overcome by its accuracy (usually to within 1/8 ounce). Secure the wheel on the balancer with a cone through the back side of the centerhole, not through the wheel bolt holes.

CORRECTING NON–UNIFORM TIRES

There are two ways to correct properly balanced tires which still vibrate. One method uses an automatic machine which loads the tire and buffs small amounts of rubber from high spots on the outer two tread rows. Correction by this method is usually permanent and, if it is done properly, does not significantly affect the appearance or the tread life of the tire. Tire truing with a blade–type machine is not recommended because it substantially reduces the tread life and often does not correct the problem permanently.

Another method is to dismount the tire and rotate it 180 degrees on the rim. Do this only on the tire and wheel assemblies which are known to be causing a vibration because this method is just as likely to cause good assemblies to vibrate.

TIRE AND WHEEL MATCH–MOUNTING

The tires and wheels are match–mounted at the assembly plant. Match–mounting aligns the radially stiffest part of the tire, or high spot, to the smallest radius, or low spot, of the wheel.

The high spot of the tire is originally marked by a red paint mark or an adhesive label on the outboard sidewall.

The low spot of the wheel will be at the location of the valve stem.

Before dismounting a tire from its wheel, scribe a line on the tire at the valve stem to assure that it is remounted in the same position.

Replacement tires that are of original equipment quality will have their high and low spot marked in the same manner.

TIRE MOUNTING AND DISMOUNTING

Notice : Use a tire–changing machine to mount or dismount the tires. Follow the equipment manufacturer's instructions. Do not use hand tools or tire irons to change tires. These tools may damage the beads or the wheel rim.

1. Clean the rim bead seats with a wire brush or coarse steel wool to remove lubricants, old rubber, and light rust. Before mounting or dismounting a tire, lubricate the bead area well with an approved tire lubricant.

CAUTION : To avoid serious injury, do not stand over the tire when inflating it, because the bead may break when it snaps over the safety hump. Do not exceed 275 kPa (40 psi) of air pressure in any tire if the beads are not seated. If 275 kPa (40 psi) of air pressure will not seat the beads, deflate the tire. Relubricate the bead and reinflate the tire. Overinflation may cause the bead to break and cause serious injury.

2. After mounting the tire, inflate it until the beads are seated. Never exceed 275 kPa (40 psi) to seat the beads.
3. Install the valve core and inflate the tire to the proper pressure. Make sure the locating ring outside of the bead of the tire shows around the rim flanges of the wheel on both sides. This positioning of the tire will insure that the bead of the tire is seated.

GENERAL DESCRIPTION AND SYSTEM OPERATION

TIRE AND WHEEL BALANCING

There are two types of tire and wheel balancing: static and dynamic.

Static balance is the equal distribution of weight around the wheel. Assemblies that are statically unbalanced cause a bouncing action called wheel tramp. This condition may eventually cause uneven tire wear.

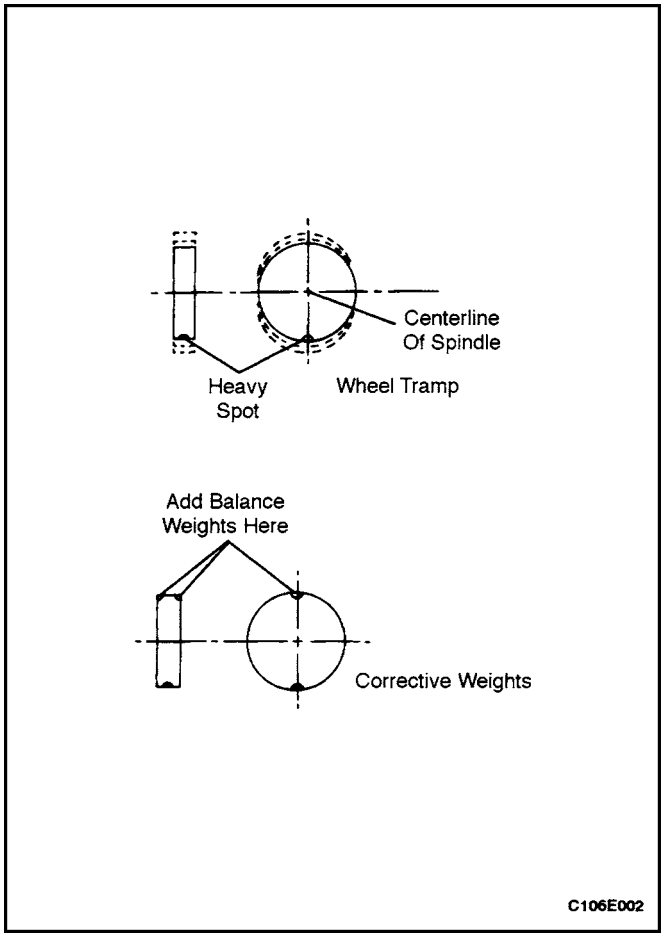

Dynamic balance is the equal distribution of weight on each side of the centerline so that when the assembly spins there is no tendency for it to move from side to side. Assemblies that are dynamically unbalanced may cause wheel shimmy.

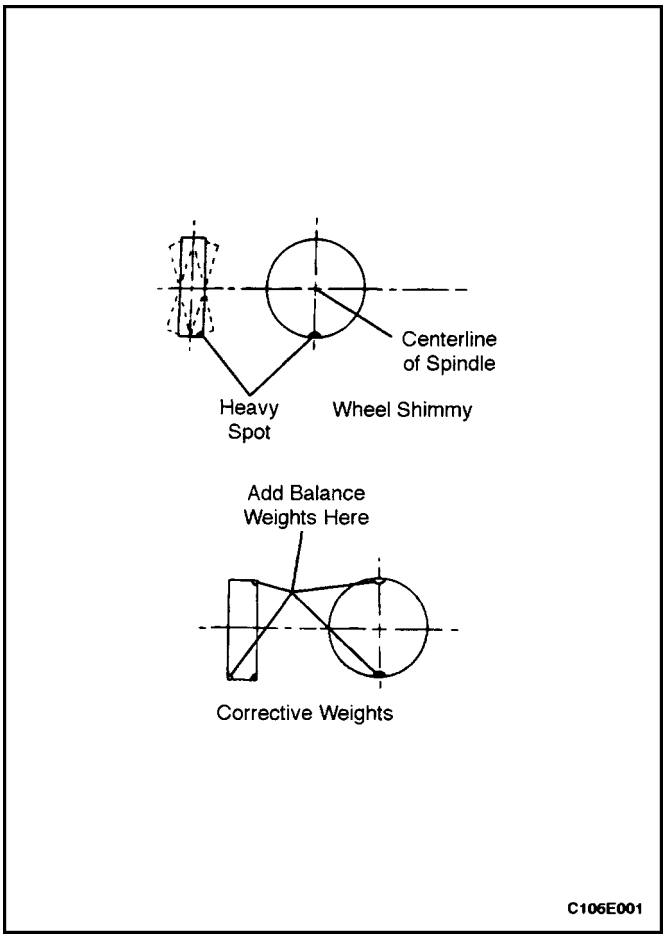

General Balance Precautions

Remove all deposits of foreign material from the inside of the wheel.

CAUTION : Remove stones from the tread in order to avoid operator injury during spin balancing.

Inspect the tire for any damage. Balance the tire according to the equipment manufacturer's recommendations.

WheelWeights

If more than 85 grams (3.0 ounces) are needed to static balance the wheel, split the wheel weights as equally as possible between the inboard and the outboard flanges.

Balancing the assemblies with factory alloy wheels requires the use of special nylon–coated, clip–on wheel weights. These weights are designed to fit over the thicker rim flange of the alloy wheel. Install these weights with a plastic–tipped hammer.

Adhesive wheel weights are also available. Use the following procedure to install adhesive wheel weights.

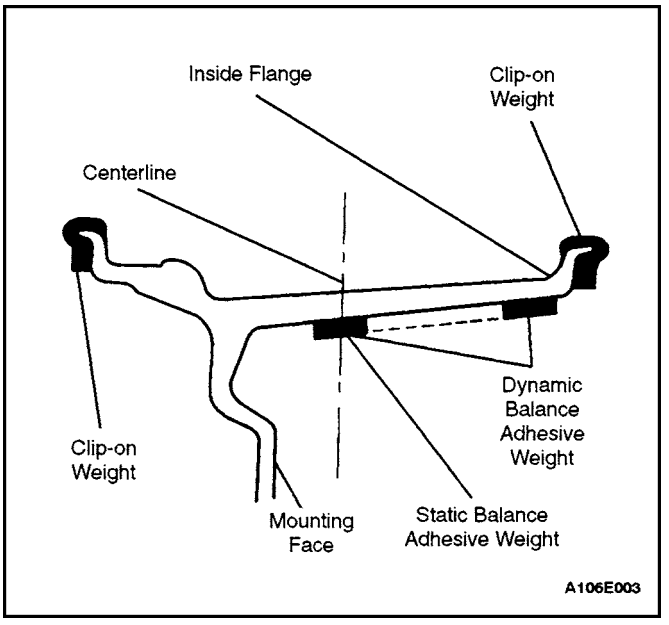

Adhesive WheelWeight Installation

1. Clean the wheel by sanding it to bare alloy where the wheel weight will be installed.
2. Use a clean cloth or paper towel saturated with amixture of half isopropyl alcohol and half water to wipe the place where the wheel weight will be installed.
3. Dry the area with hot air. The surface of the wheel should be warm to the touch.
4. Warm the adhesive backing on the wheel weights to room temperature.
5. Remove the tape from the back of the weights. Do not touch the adhesive surface.
6. Apply the the wheel weight and press it on with hand pressure.
7. Secure the wheel weight with a 70–110 N (16–25 lb) force applied with a roller.

TIRE CHAIN USAGE

Due to limited tire–to–body clearance on certain vehicles, recommendations for tire chain use are published in the Owner's Manual. When tire chains need to be used, most current Daewoo vehicles require SAE Class"S" tire chains. These may also be designated as 1100 Series, type PL tire chains. These chains are specifically designed to limit the"fly off"effect which occurs when the wheel rotates.

Be sure that only fine–link chains are used which do not addmore than 15 mm (0.590 inch), including the lock, to the tread surface and the inner sides of the tires. Manufacturers of tire chains have a specific chain size for each tire size to ensure a proper fit when the chain is installed. Be sure to purchase the correct chains for the tires on which they are to be used. Use rubber adjusters to take up any slack or clearance in loose chains.

Use of chains may adversely affect vehicle handling.

When tire chains are installed, follow these precautions:

- Adjust speed to road conditions.
- Avoid sharp turns.
- Avoid locked–wheel braking.

To prevent chain damage to the vehicle, install the chains on the front tires as tightly as possible. Tighten them again after driving 0.4 to 0.8 kilometer (0.3 to 0.5 mile). The use of chains on the rear tires is not recommended because they may contact the vehicle and possibly damage it. If chains must be used on the rear tires, be sure there is sufficient clearance between the chains and the body. Do not exceed 70 km/h (45 mph) or the chain manufacturer's speed limit, if lower. Avoid large bumps, potholes, severe turns and any other maneuvers which could cause the tires to bounce. Follow any other instructions of the chain manufacturer which do not disagree with the above instructions.

REPLACEMENT TIRES

A tire performance criteria (TPC) specification number is molded in the sidewall near the tire size of all original equipment tires. This specification number assures that the tire meets performance standards for traction, endurance, dimensions, noise, handling and rolling resistance. Usually a specific TPC number is assigned to each tire size.

CAUTION : Do not mix different types of tires on the same vehicle such as radial, bias and bias–belted tires except in emergencies, because vehicle handling may be seriously affected and may result in loss of control.

Use only replacement tires with the same size, load range, and construction as the original. The use of any other tire size or construction type may seriously affect ride, handling, speedometer/odometer calibration, vehicle ground clearance, and tire clearance to the body and the chassis. This does not apply to the spare tire furnished with the vehicle.

It is recommended that new tires be installed in pairs on the same axle.

If it is necessary to replace only one tire, pair it with the tire having the most tread to equalize the braking action.

Although they may appear different in tread design, tires built by different manufacturers with identical TPC specifications may be used on the same vehicle.

ALL SEASON TIRES

Most vehicles are now equipped with steel–belted all season radial tires as standard equipment. These tires qualify as snow tires, with a 37 percent higher average rating for snow traction than the non–all season radial tires previously used. Other performance areas, such as wet traction, rolling resistance, tread life, and air retention, have also been improved. This was done by improvements in both tread design and tread compounds. These tires are

identified by an 'M + S"molded in the tire sidewall following the size number. The suffix "MS"is also molded in the sidewall after the TPC specification number.

The optional handling tires used on some vehicles are not all season tires. These will not have the"MS"marking after the tire size or the TPC specification number.

PASSENGER METRIC SIZED TIRES

All Daewoo vehicles now use Passenger (P) metric sized tires. P–metric tires are available in two load ranges: standard load (35 psi maximum) and extra load (41 psi maximum). Most passenger vehicle tires are standard load.

Most P–metric tire sizes do not have exact corresponding alphanumeric tire sizes. For example, a P175/70R13 is not exactly equal in size and load–carrying capacity to an FR70–13. For this reason, replacement tires should be of the same TPC specification number as the originals. If P–metric tires must be replaced with other sizes, consult a tire dealer. Tire companies can best recommend the closest match of alphanumeric to P–metric sizes within their own tire lines.

The metric term for measuring tire inflation pressure is the kilopascal (kPa). Tire pressure may be printed in both kPa and psi. One psi equals 6.895 kPa.

See the tire label or refer to "Tire Size and Pressure Specifications"in this section for tire inflation pressures

TIRE LABEL

The tire label is permanently located on the rear face of the driver's door and should be referred to for tire information. It lists the maximum vehicle load, the tire size (including the spare tire), and the cold inflation pressure (including the spare tire).

SPARE TIRE

This vehicle comes equipped with a reduced–sized temporary tire on a steel wheel

WHEELS

Wheels must be replaced if they are bent, dented, have excessive lateral or radial runout, leak air through welds, have elongated bolt holes, or if the wheel bolts won't stay tight or are heavily rusted. Wheels with excessive runoutmay cause vehicle vibration. Replacement wheels must be equivalent to the original equipment wheels in load capacity, diameter, rim width, offset, and mounting configuration. Awheel of improper size or typemay affect wheel and bearing life, brake cooling, speedometer/ odometer calibration, vehicle ground clearance, and tire clearance to the body and the chassis. The wheel offset is 49 + 1 mm (1.93 + 0.04 inches). Steel wheels may be identified by a two– or three–letter code stamped into the rim near the valve stem. Alloy wheels should have the code, the part number, and themanufacturer ID cast into the back side.

INFLATION OF TIRES

The pressure recommended for any vehicle line is carefully calculated to give a satisfactory ride, handling, tread life, and load–carrying capacity.

Tire pressure should be checked monthly or before any extended trip. Check the tires when they are cold, after the vehicle has sat for 3 hours or more, or has been driven less than 1 mile. Set the tire pressure to the specifications on the tire label located on the rear face of the driver's door. Tire inflation pressure is also given under "Tire Size and Pressure Specifications" in this section.

Valve caps or extensions should be on the valves to keep dust and water out.

For sustained driving at speeds up to 140 km/h (85 mph), inflate the tires to the pressure recommended on the tire. Sustained driving at speeds faster than 140 km/h (85 mph), even if permitted by law, is not advised unless the vehicle has special high–speed tires available from many tire dealers. Tire pressures may increase as much as 41 kPa (6 psi) when the tires are hot.

Higher than recommended tire pressure can cause

- Hard ride.
- Tire bruising or damage.
- Rapid tread wear at the center of the tire.

Lower than recommended pressure can cause

- Tire squeal on turns.
- Hard steering.
- Rapid and uneven wear on the edges of the tread.
- Tire rim bruises and rupture.
- Tire cord breakage.
- High tire temperatures.

Unequal tire pressures on same axle can cause

- Uneven braking.
- Steering lead.
- Reduced handling.
- Swerve on acceleration.
- Torque steer.

SECTION : 2B

WHEEL ALIGNMENT

TABLE OF CONTENTS

SPECIFICATIONS 2B–1
WHEEL ALIGNMENT SPECIFICATIONS 2B–1
DIFFERENCE BETWEEN LEFT AND RIGHT . 2B–1
FASTENER TIGHTENING SPECIFICATIONS . 2B–1
DIAGNOSIS 2B–2
TIRE DIAGNOSIS 2B–2
RADIAL TIRE LEAD/PULL 2B–3
VIBRATION DIAGNOSIS 2B–5
PRELIMINARY INSPECTION 2B–9
FRONT TOE ADJUSTMENT 2B–9
FRONT CAMBER AND CASTER CHECK 2B–9
REAR CAMBER CHECK 2B–10
REAR TOE ADJUSTMENT 2B–10
GENERAL DESCRIPTION AND SYSTEM OPERATION 2B–11
FOUR WHEEL ALIGNMENT 2B–11
TOE 2B–11
CASTER 2B–11
CAMBER 2B–11
STEERING AXIS INCLINATION 2B–11
INCLUDED ANGLE 2B–11
SCRUB RADIUS 2B–11
SETBACK 2B–11
TURNING ANGLE 2B–11

SPECIFICATIONS

WHEEL ALIGNMENT SPECIFICATIONS

Application	Front	Rear
Camber	–24’ ± 45˚	–50’ ± 45˚
Caster	3˚ ± 45˚	–
Toe–in (2–person load)	–0˚ ± 10’	3’ ± 45’

Note : The above alignment specifications are with the vehicle in a normally loaded condition. Prior to inspection or alignment, place a weight of approximately 150 lbs. (68 kg) on each front seat cushion.

DIFFERENCE BETWEEN LEFT AND RIGHT

Application	Front	Rear
Camber	1˚max	30’ max
Caster	1˚max	–
Toe–in	–	15’ max

FASTENER TIGHTENING SPECIFICATIONS

Application	N•m	Lb–Ft	Lb–In
Rear Parallel Link–to–Crossmember Bolt	75	55	–

DIAGNOSIS

TIRE DIAGNOSIS

Irregular and Premature Wear

Irregular and premature tire wear has many causes. Some of them are incorrect inflation pressures, lack of regular rotation, poor driving habits, or improper wheel alignment. If the wheel alignment is reset because of tire wear, always reset the toe as close to zero degrees as the specification allows. Refer to ”Rear Toe Adjustment” in this section.

Rotate the tires if

- The front tire wear is different from the rear.
- The left and right front tire wear is unequal.
- The left and right rear tire wear is unequal.

Check wheel alignment if:

- The left and right front tire wear is unequal.
- The wear is uneven across the tread of either front tire.
- The front tire treads are scuffed with ”eather”edges on the side of the tread ribs or blocks.

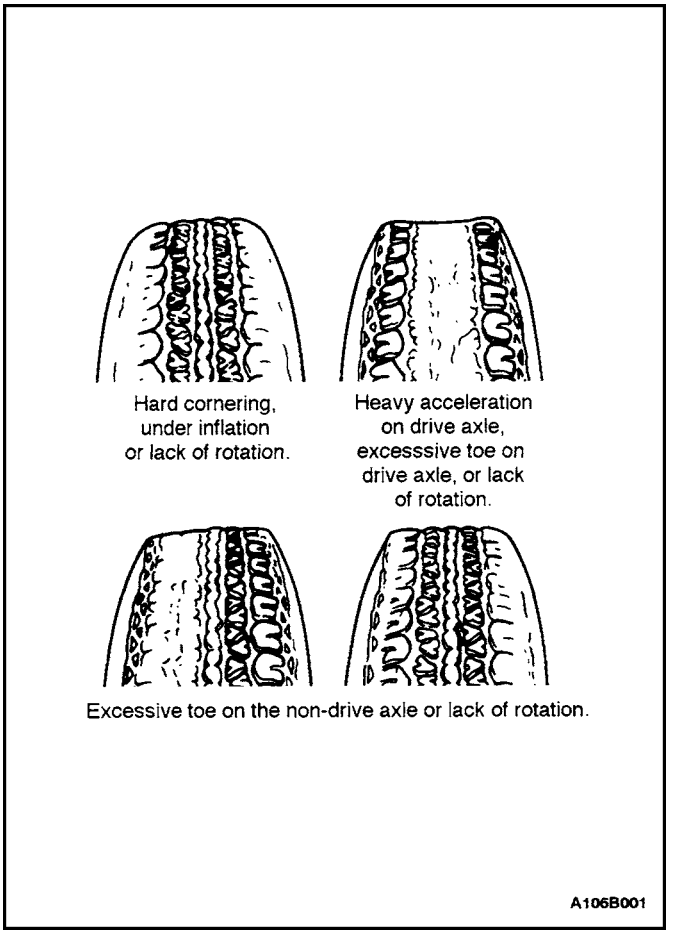

Tread Wear Indicators

The original equipment tires have built–in tread wear indicators to show when the tires need replacement. These indicators appear as bands when the tire tread depth becomes shallow. Tire replacement is recommended when the indicators appear in three or more grooves at six locations.

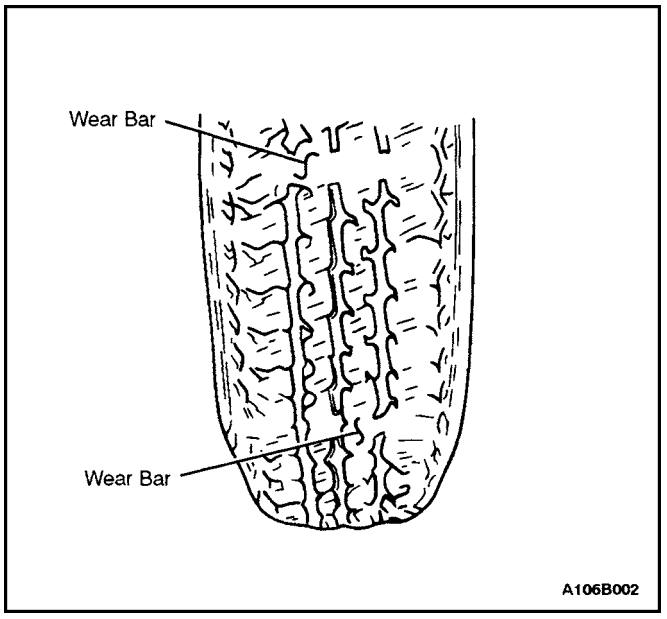

Radial Tire Waddle

Waddle is side–to–side movement at the front or rear of the vehicle. It is caused by the steel belt not being straight within the tire, or by excessive lateral runout of the tire or wheel. It is most noticeable at low speeds, 8 to 48 km/h (5 to 30 mph), but may appear as ride roughness at 80 to 113 km/h (50 to 70 mph).

The vehicle must be road tested to determine which end of the vehicle has the faulty tire. The rear end of the vehicle will shake from side to side or ”waddle” if the waddle tire is on the rear of the vehicle. From the driver’s seat, it feels as though someone is pushing on the side of the vehicle. If the faulty tire is on the front of the vehicle, the waddle is more visual. The front sheet metal appears to be moving back and forth, and the driver’s seat feels like the pivot point in the vehicle.

Waddle can be diagnosed using the method of substituting known good tire and wheel assemblies on the problem vehicle.

1. Road test the vehicle to determine if the waddle is coming from the front or the rear of the vehicle.
2. Install good tires and wheels from a similar vehicle in place of those on the offending end of the problem vehicle. If the source of the waddle is not obvious, change the rear tires.
3. Road test the vehicle. If there is improvement, install the original tires to find the offending tire. If there is no improvement, install good tires in place of all four offending tires.
4. Install original tires one at a time to find the offending tire.

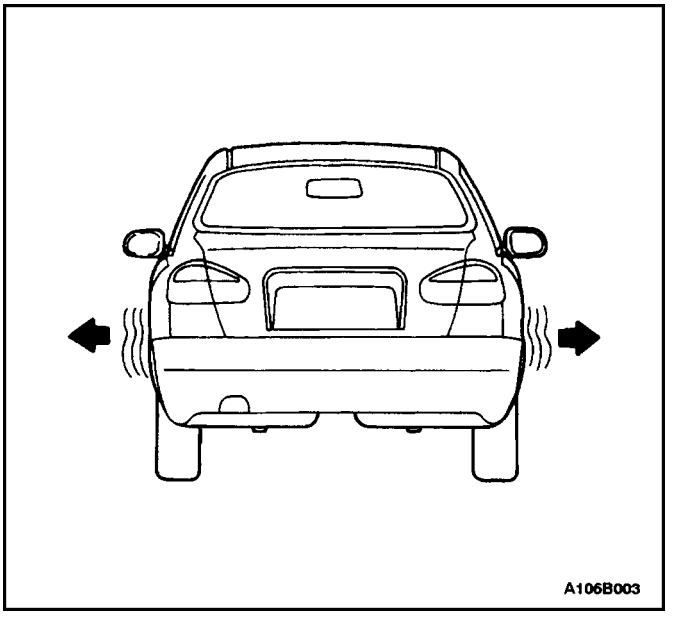

RADIAL TIRE LEAD/PULL

Lead/pull is the deviation of the vehicle from a straight path on a level road with no pressure on the steering wheel. Lead is usually caused by:

- Incorrect alignment.
- Uneven brake adjustment.
- Tire construction.

The way in which a tire is built can produce lead/pull in the vehicle. Off–center belts on radial tires can cause the tire to develop a side force while the vehicle rolls straight down the road. If one side of the tire has even a little larger diameter than the diameter of the other side, the tire will tend to roll to one side. Unequal diameters will cause the tire to develop a side force which can produce vehicle lead/pull.

The radial lead/pull diagnosis chart should be used to determine whether the problem originates from an alignment problem or from the tires. Part of the lead diagnosis procedure calls for tire rotation that is different from the proper tire rotation pattern. If a medium– to highmileage tire is moved to the other side of the vehicle, be sure to check for ride roughness. Rear tires will not cause lead/pull.

Radial Tire Lead/Pull Diagnosis Chart

Step	Action	Value(s)	Yes	No
1	1. Perform wheel alignment preliminary inspection. 2. Check the brakes for dragging. 3. Road test the vehicle. Does the vehicle lead/pull?		Go to *Step 2*	System OK
2	1. Cross switch the front tire and wheel assemblies. 2. Road test the vehicle. Does the vehicle lead/pull?		Go to *Step 3*	System OK
3	Check the front wheel alignment. Is the alignment within specifications?		Go to *Step 4*	Adjust alignment
4	Compare the front camber and front caster to specifications. Are they within specifications?		Go to *Step 7*	Go to *Step 5*
5	Check the vehicle frame. Is the frame bent?		Go to *Step 6*	Go to *Step 1*
6	Straighten the frame. Is the repair complete?		Go to *Step 3*	
7	1. The probable cause is the tires. 2. Switch the left front tire and wheel assembly with the left rear tire and wheel assembly. 3. Road test the vehicle. Does the vehicle still lead/pull?		Go to *Step 9*	Go to *Step 8*
8	Switch the left front tire and wheel assembly with the left rear tire and wheel assembly and replace the left front tire. Is the repair complete?		System OK	Go to*Step 1*
9	1. Switch the right front tire and wheel assembly with the right rear tire and wheel assembly. 2. Road test the vehicle. Does the vehicle still lead/pull?		Go to *Step 1*	Go to *Step 10*
10	Switch the right front tire and wheel assembly with the right rear tire and wheel assembly and replace the right front tire. Is the repair complete?		System OK	Go to *Step 1*

VIBRATION DIAGNOSIS

Wheel imbalance causes most highway speed vibration problems. A vibration can remain after dynamic balancing because:

- A tire is out of round.
- A rim is out of round.
- A tire stiffness variation exists.

Measuring tire and wheel free runout will uncover only part of the problem. All three causes, known as loaded radial runout, must be checked using method of substituting known good tire and wheel assemblies on the problem vehicle.

Low–speed vibrations, which occur below 64 km/h (40 mph), are usually caused by runout. High–speed vibrations, which occur above 64 km/h (40 mph), can be caused by either imbalance or runout.

Preliminary Checks

Prior to performing any work, always road test the car and perform a careful visual inspection for:

- Obvious tire and wheel runout.
- Obvious drive axle runout.
- Improper tire inflation.
- Incorrect trim height.
- Bent or damaged wheels.
- Debris build–up on the tire or the wheel.
- Irregular or excessive tire wear.
- Improper tire bead seating on the rim.
- Imperfections in the tires, including tread deformations, separations, or bulges from impact damage. Slight sidewall indentations are normal and will not affect ride quality.

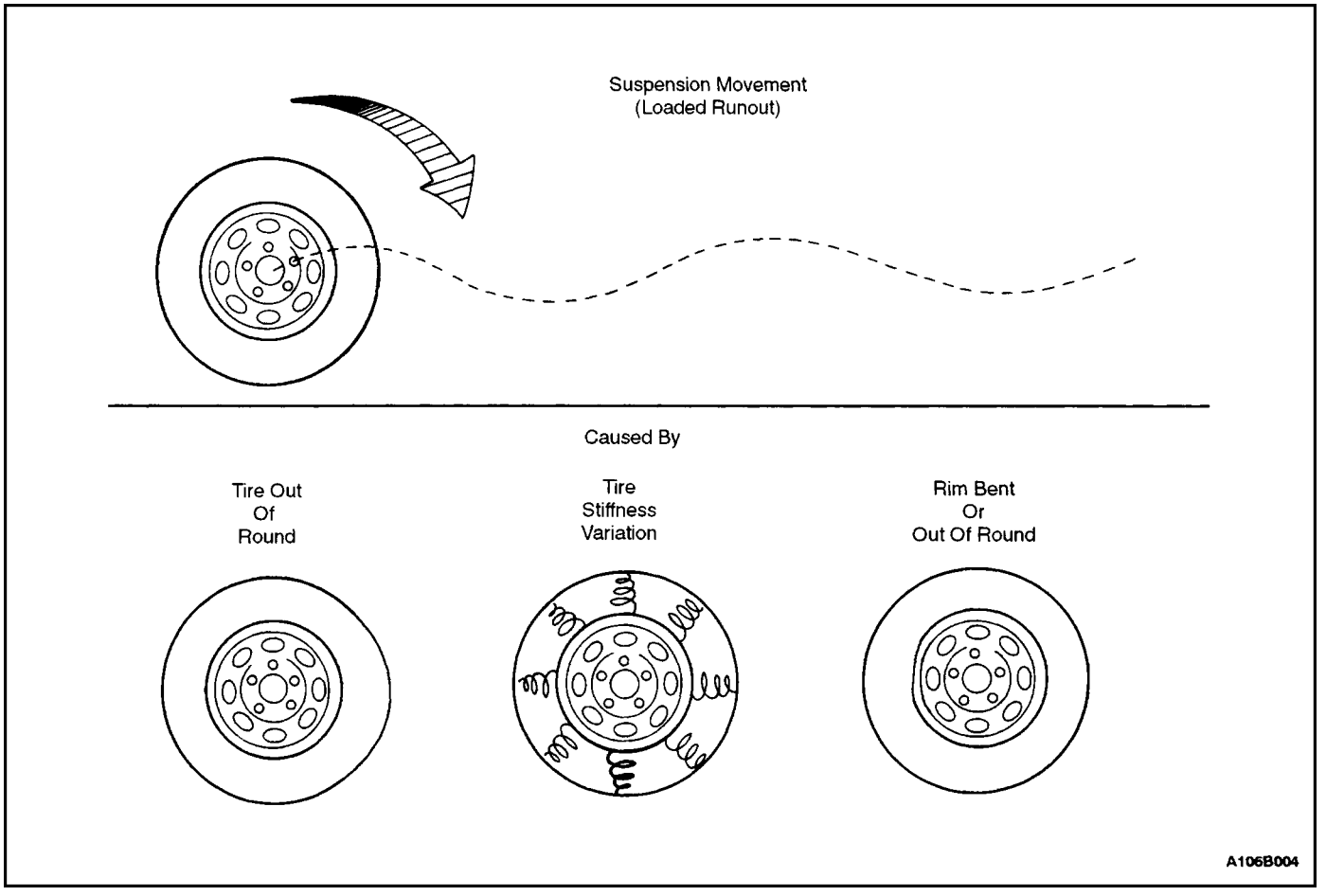

Tire Balancing

Balance is the easiest procedure to perform and should be done first if the vibration occurs at high speeds. Do an off–vehicle, two–plane dynamic balance first to correct any imbalance in the tire and wheel assembly.

An on–vehicle finish balance will correct any brake drum, rotor, or wheel cover imbalance. If balancing does not correct the high–speed vibration, or if the vibration occurs at low speeds, runout is the probable cause.

Runout

Runout can be caused by the tire, the wheel, or the way the wheel is attached to the vehicle. To investigate the possibility of wheel runout, refer to the following procedures as well as the wheel runout diagnosis chart in this section:

1. If runout is suspected, measure the on–vehicle free lateral and free radial runout of the tire and wheel assembly. Refer to *Section 2E, Tires and Wheels.* Both the free lateral and the free radial runout

should be less than 1.5 mm (0.06 inch). If either measurement xceeds this number, proceed to step 2.

2. Mount the tire and the wheel on a dynamic balancing machine and remeasure the free lateral and the free radial runout. Record the amount of the free lateral and the free radial runout and the location of the highest measurement. Refer to *Section 2E, Tires and Wheels.* If the free radial or the free lateral runout exceeds 1.3 mm (0.05 inch) at the tire tread, proceed to Step 4.
3. Measure the wheel runout. Refer to *Section 2E, Tires and Wheels.* If the wheel exceeds specifications, replace it.
4. Deflate the tire and match–mount the high radial runout point of the tire to the low radial runout point of the wheel. Reinflate the tire and mount it on the dynamic balancing machine. Measure and record the free radial and the free lateral runout and their locations. In many cases, match mounting the tire on the wheel will bring the tire and wheel assembly's free runout into an acceptable range of 1.3 mm (0.05 inch) or less.
5. If the free runout of the tire and wheel assembly is 1.3 mm (0.05 inch) or less when it was measured off the vehicle, yet exceeds 1.3 mm (0.05 inch) when measured on the vehicle, the attachment of the tire and wheel assembly to the hub is the probable cause of the vibration. Rotate the assembly's two wheel studs and recheck the runout. Refer to *Section 2E, Tires and Wheels.* Several positions may have to be tried to find the best location for the studs.
6. If the tire and wheel assembly free runout cannot be reduced to 1.3 mm (0.05 inch) or less, remove the assembly.

    1) Measure the wheel stud runout using a dial indicator set with a magnetic base.
    2) Zero the dial indicator set button on one stud.
    3) Gently lift the set button off the stud. Rotate the flange to position the next stud against the dial indicator set.
    4) Record the runout of all the studs. The dial indicator should read zero when it is repositioned on the first stud that was checked.
    5) If the runout exceeds 0.76 mm (0.03 inch), the hub stud or the hub and bearing assembly should be replaced.

Whenever a tire is rotated on the wheel, or whenever a tire or wheel is replaced, rebalance the assembly.

Wheel Runout Diagnosis Chart

Step	Action	Value(s)	Yes	No
1	Road test the vehicle to verify the vibration complaint. Are the customer's concerns verified?		Go to *Step 2*	System OK
2	1. Perform a vibration diagnosis preliminary check. 2. Repair any of the problems found. Is the vibration still present? Is the vibration still present?		Go to *Step 3*	System OK
3	Determine at what speed the vibration is present. Is the vibration over 64 km/h (40 mph)?		Go to *Step 4*	Go to *Step 6*
4	Perform an off–vehicle dynamic wheel balance. Is the vibration still present?		Go to *Step 5*	System OK
5	Perform an on–vehicle finish balance. Is the vibration still present?		Go to *Step 6*	System OK
6	Perform a free lateral and a radial on–vehicle runout check. Does the runout match the value specified?	1.5 mm (0.06 in.)	Go to *Step 4*	Go to *Step 7*
7	Perform a free lateral and a free radial off–vehicle runout check. Does the runout match the value specified?	1.3 mm (0.05 in.)	Go to *Step 8*	Go to *Step 12*
8	1. Index the tire and wheel assembly on the hub studs. 2. Obtain the least amount of runout possible. Does the runout match the value specified?	0.76 mm (0.03 in.)	Go to *Step 9*	Go to *Step 14*
9	Perform an off–vehicle dynamic wheel balance. Is the vibration still present?		Go to *Step 10*	System OK
10	Perform an on–vehicle finish balance. Is the vibration still present?		Go to *Step 11*	System OK
11	1. Check for any engine driveline imbalance. 2. Thoroughly inspect the drive axles and the constant velocity joints. 3. Repair any problems found. Are the repairs complete?		Go to *Step 1*	
12	1. Match–mount the tire on the wheel. 2. Perform a free lateral and a free radial off–vehicle runout check. Does the runout match the value specified?	1.5mm (0.06 in.)	Go to *Step 9*	Go to *Step 13*
13	1. Dismount the tire from the wheel of the suspected assembly. 2. Measure the runout of the wheel. Does the runout match the value specified?	0.8 mm (0.03 in.)	Go to *Step 15*	Go to *Step 16*
14	Measure the hub flange runout. Does the runout match the value specified?	0.76 mm (0.03 in.)	Go to *Step 9*	Go to *Step 17*
15	Replace the tire. Is the repair complete?		Go to *Step 1*	

Step	Action	Value(s)	Yes	No
16	Replace the wheel. Is the repair complete?		Go to *Step 1*	
17	Replace the hub. Is the repair complete?		Go to *Step 1*	

PRELIMINARY INSPECTION

Checks	Action
Check the tires for proper inflation pressures and normal tread wear.	Inflate the tires to the proper tire pressure. Replace the tires as needed.
Check the wheel bearings for looseness.	Tighten the axle nut to the proper specification. Replace the strut wheel bearing as needed.
Check for loose ball joints and tie rod ends.	Tighten the ball joints and the tie rods.
Check the runout of the wheels and the tires.	Measure and correct the tire runout.
Check the vehicle trim heights.	Correct the trim heights. Make the correction before adjusting the toe.
Check for loose rack and pinion mounting.	Tighten the mounting brackets for the rack and pinion assembly.
Check for improperly operating struts.	Replace the strut assembly.
Check for loose control arms.	Tighten the control arm attachment bolts. Replace the control arm bushings as needed.

FRONT TOE ADJUSTMENT

Adjustment Procedure

1. Disconnect the outer tie rods from the knuckle assemblies. Refer to*Section 6C, Power Steering Gear.*
2. Turn the right and the left outer tie rods and the adjuster nuts to align the toe to 0 degrees –10 to +10 minutes.
3. Reconnect the outer tie rods to the knuckle assemblies. Refer to *Section 6C, Power Steering Gear.*

Notice : In this adjustment, the right and the left tie rods must be equal in length, or the tires will wear unevenly.

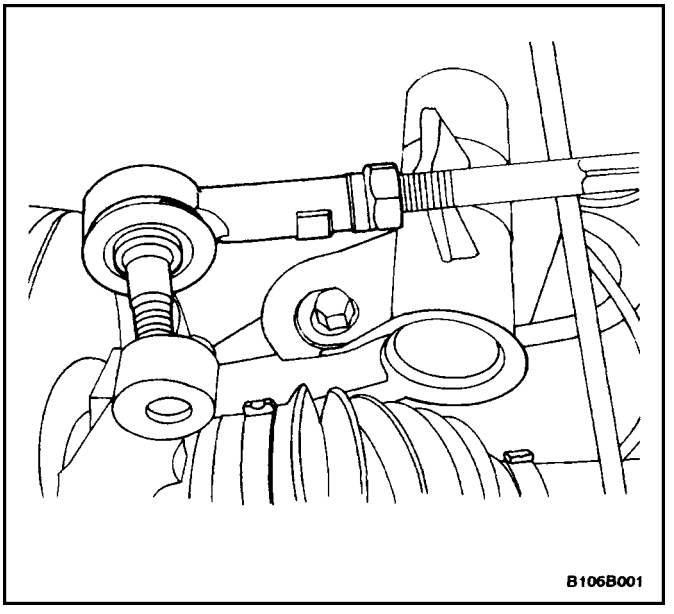

FRONT CAMBER AND CASTER CHECK

The front camber and caster are not adjustable. Refer to ”Wheel Alignment Specifications” in this section. Jounce the bumper three times before measuring the camber or the caster in order to prevent an incorrect reading. If the front camber or caster measurements deviate from the specifications, locate and replace or repair any damaged, loose, bent, dented, or worn suspension part. If the problem is body related, repair the body.

REAR CAMBER CHECK

The rear camber is not adjustable. Refer to ”Wheel Alignment Specifications” in this section. If the rear camber deviates from the specification, locate the cause and correct it. If damaged, loose, bent, dented, or worn suspension parts are found, they should be repaired or replaced. If the problem is body related, repair the body.

REAR TOE ADJUSTMENT

Adjustment Procedure

1. Perform a preliminary inspection before any attempt is made to change or correct the wheel alignment factors. Refer to ”Preliminary Inspection” in this section.
2. Loosen the nuts on the parallel link–to–crossmember bolts.

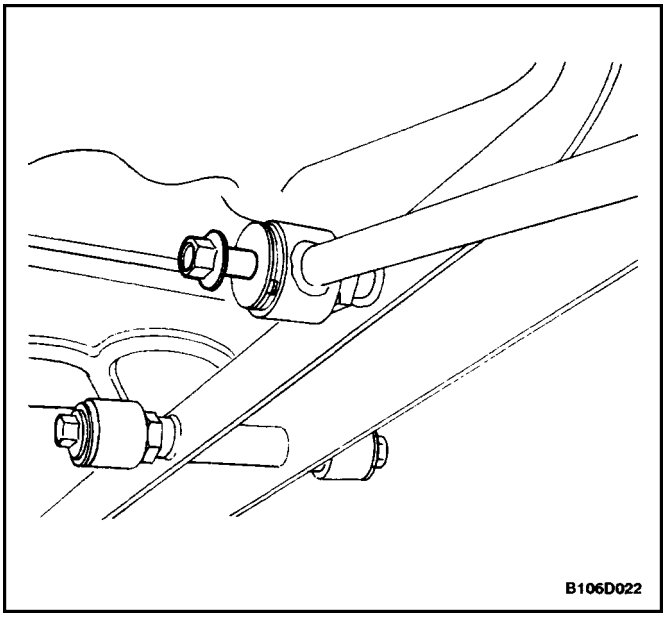

3. Rotate the parallel link adjustment cams until the preferred rear toe specification is obtained. Refer to ”Wheel Alignment Specifications” in this section for preferred specifications.

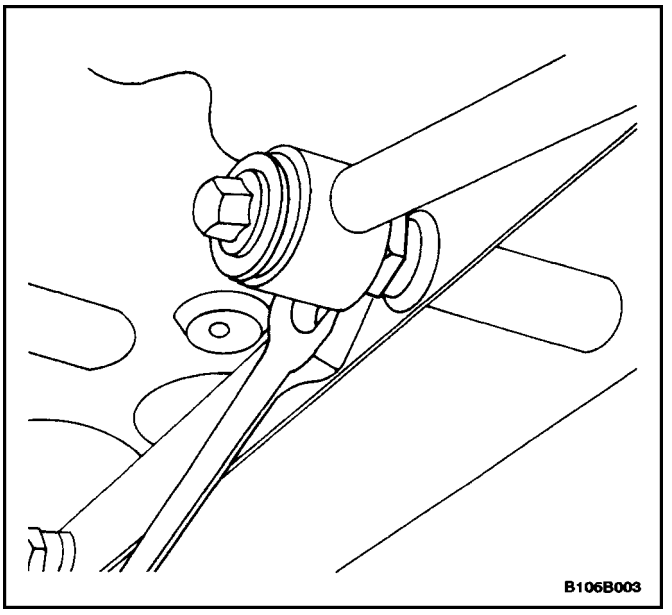

4. Hold the parallel link adjustment cams and tighten the parallel link–to–crossmember nuts.

   Tighten

   Tighten the parallel link–to–crossmember bolts to 75 N•m (55 lb–ft).

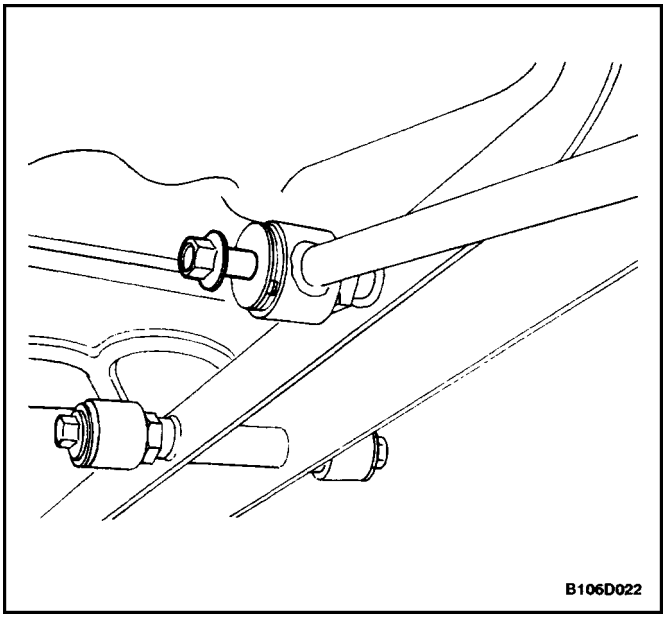

GENERAL DESCRIPTION AND SYSTEM OPERATION

FOUR WHEEL ALIGNMENT

The first responsibility of engineering is to design safe steering and suspension systems. Each component must be strong enough to withstand and absorb extreme punishment. Both the steering system and the front and the rear suspensionmust function geometrically with the body mass.

The steering and the suspension systems require that the front wheels self–return and that the tire rolling effort and the road friction be held to a negligible force in order to allow the customer to direct the vehicle with the least effort and the most comfort.

A complete wheel alignment check should include measurements of the rear toe and camber.

Four–wheel alignment assures that all four wheels will be running in precisely the same direction.

When the vehicle is geometrically aligned, fuel economy and tire life are at their peak, and steering and performance are maximized.

TOE

Toe–in is the turning in of the tires, while toe–out is the turning out of the tires from the geometric centerline or thrust line. The toe ensures parallel rolling of the wheels.

The toe serves to offset the small deflections of the wheel support system which occur when the vehicle is rolling forward. The specified toe angle is the setting which achieves 0 degrees of toe when the vehicle is moving.

Incorrect toe–in or toe–out will cause tire wear and reduced fuel economy. As the individual steering and suspension components wear from vehicle mileage, additional toe will be needed to compensate for the wear.

Always correct the toe dimension last.

CASTER

Caster is the tilting of the uppermost point of the steering axis either forward or backward from the vertical when viewed from the side of the vehicle. A backward tilt is positive, and a forward tilt is negative. Caster influences directional control of the steering but does not affect tire wear. Weak springs or overloading a vehicle will affect caster. One wheel with more positive caster will pull toward the center of the car. This condition will cause the car to move or lean toward the side with the least amount of positive caster. Caster is measured in degrees and is not adjustable.

CAMBER

Camber is the tilting of the top of the tire from the vertical when viewed from the front of the vehicle. When the tires tilt outward, the camber is positive. When the tires tilt inward, the camber is negative. The camber angle is measured in degrees from the vertical. Camber influences both directional control and tire wear.

If the vehicle has too much positive camber, the outside shoulder of the tire will wear. If the vehicle has too much negative camber, the inside shoulder of the tire will wear.

Camber is not adjustable.

STEERING AXIS INCLINATION

Steering Axis Inclination (SAI) is the tilt at the top of the steering knuckle from the vertical. Measure the SAI angle from the true vertical to a line through the center of the strut and the lower ball joint as viewed from the front of the vehicle.

SAI helps the vehicle track straight down the road and assists the wheel back into the straight ahead position. SAI on front wheel drive vehicles should be negative

INCLUDED ANGLE

The included angle is the angle measured from the camber angle to the line through the center of the strut and the lower ball joint as viewed from the front of the vehicle.

The included angle is calculated in degrees. Most alignment racks will not measure the included angle directly. To determine the included angle, subtract the negative or add the positive camber readings to the Steering Axis Inclination (SAI).

SCRUB RADIUS

The scrub radius is the distance between true vertical and the line through the center of the strut and lower ball joint to the road surface. Scrub radius is built into the design of the vehicle. Scrub radius is not adjustable.

SETBACK

The setback is the distance in which one front hub and bearing assembly may be rearward of the other front hub and bearing assembly. Setback is primarily caused by a road hazard or vehicle collision.

TURNING ANGLE

The turning angle is the angle of each front wheel to the vertical when the vehicle is making a turn.

TECHNICAL SERVICE BULLETIN

Bulletin No.:	TSB-004-00	Description:	Wheel Nut/Bolt Torque
Model(s):	All	Group:	Publication Revisions
Date:	March 31, 2000	Reference:	1999 Service Manuals
VIN Range:	All	Prod. Dates:	All

Daewoo Motor America has revised the Lanos, Nubira and Leganza Wheel Nut/Bolt Torque Specification for both steel and alloy wheels.

- The Wheel Nut/Bolt Torque Specification for all Lanos and Nubira models has been increased from 66 lb. ft. (90 N•m) to 88 lb. ft. (120 N•m).
- The Wheel Nut/Bolt Torque Specification for all Leganza models has been increased from 72 lb. ft. (100 N•m) to 81 lb. ft. (110 N•m).

All vehicles returning to the Store/Independent Dealer for normal service or repair should have the wheels tightened to the new torque specification before returning the vehicle to the customer. Because tire rotation is included in every 6,000 mile service interval, no additional labor time is required.

Service Manual Revision

To ensure that the revised Wheel Nut/Bolt Torque Specifications are available for future reference in your 1999 Service Manuals, line out the existing printed specifications and write in the revised Wheel Nut/Bolt Torque Specifications on the following Service Manual pages:

1999 Lanos Service Manual:

Pages 2E-2, 2E-3, 3A-7, 3B-7

Change from 66 lb. ft. (90 N•m) to **88 lb. ft. (120 N•m)**

1999 Nubira Service Manual:

Pages 2E-2, 2E-3, 3A-7, 3B-8

Change from 66 lb. ft. (90 N•m) to **88 lb. ft. (120 N•m)**

1999 Leganza Service Manual:

Pages 2E-2, 2E-4, 3A-7, 3B-7

Change from 72 lb. ft. (100 N•m) to **81 lb. ft. (110 N•m)**

Questions regarding these specification changes should be referred to the Daewoo Technical Assistance Center, which can be contacted toll-free at (877) 362-1234, selection 1.

Circulate To:				
	☑ General Manager	☑ Technician(s)	☑ Body Shop Manager	☐
	☑ Service Manager	☑ Service Advisor	☑ Parts Manager	☐