REPAIR MANUAL MAN 058531

CUSTOMER SERVICES
AFTER-SALES TECHNICAL DEPARTMENT

SEPTEMBER 1988

CX VEHICLES

Additive No. 1 : . . . . . .
No. 2 : . . . . . .
No. 3 : . . . . . .

MECHANICAL COMPONENTS 1

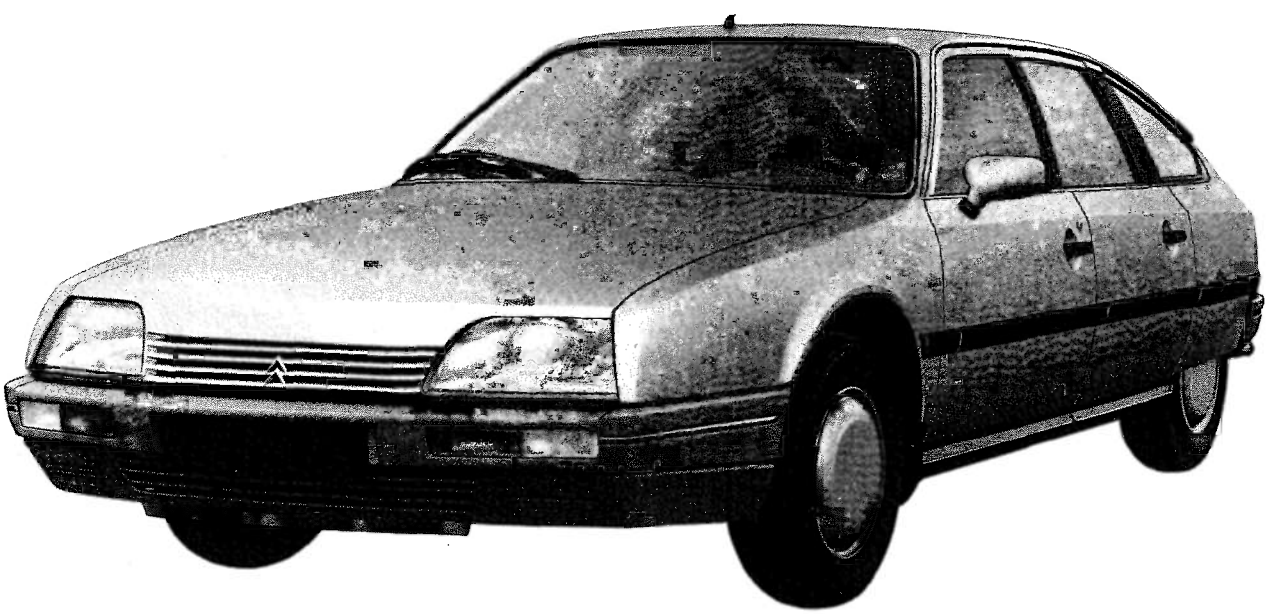

Automobiles Citroën. S.A. au capital de 800.000.000 F
R.C.S. NANTERRE B 642 050 199. SIRET 642 050 199 00644 APE 3111. Télégramme et Télex : CITR 614830 F
ADRESSE POSTALE : 92208 NEUILLY-SUR- SEINE CEDEX FRANCE

USE OF THE MANUAL

PRESENTATION

The **Repair Manual** comes in a binder with a ''Multo'' type mechanism to facilitate the filing of additive sheets or the removal of a part for operation in the workshop.

The **MECHANICAL COMPONENTS, PART 1 VOLUME (8531)** covers operations on the MECHANICAL COMPONENTS and the BODYWORK which may be carried out by a general workshop.

It is divided into **15 chapters** separated by vinyl tab **inserts** numbered ⓪ to ⑮.

⓪ : General
① : Engine
② : Fuel system-Carburettor
③ : Ignition system
④ : Clutch
⑤ : Gearbox-Drive shafts
⑥ : Source and reserve of pressure
⑦ : Front axle
⑧ : Rear axle
⑨ : Suspension - wheels - tyres
⑩ : Steering
⑪ : Braking system
⑫ : Electrical equipment and radio
⑬ : Heater, ventilation and air-conditioning
⑭ ⑮ : Bodywork

COMPOSITION OF A CHAPTER

Each chapter includes:

— the list of operations in it,
— the operations in numerical order.

OPERATIONS

The operation references are made up as follow: **MA** **100** - **00** / **1** **a**
a) b) c) d) e)

a) vehicle code letters: **MA**
b) three figure number identifying the assembly or the assembly part.
c) figure indicating the type of operation:

— the figures **000** indicate the vehicle specification
— the figures **00** indicate the assembly specification
— the figures **0** indicate checks and adjustments
— the figures **1** indicate removals and refittings
— the figures **2** indicate dismantling and re-assembly
— the figures **3** indicate reconditioning

d) figure **/1,.../2.../...** standing for a variant,

e) letter: **a, b,** standing for an evolution.

The various operations are presented:

1° either through photos, drawings and **texts**,
2° or through photos, drawings and **symbols**.

A **GLOSSARY** has been placed at the beginning of each volume for this purpose.

In the glossary (the one in the Mechanical Components volume is different from the one in the Bodywork volume), the meaning for each symbol has been translated into **nine languages**.

It consists in a **removable set of ''plastic'' sheets** bound with one manœuvrable metal ring to facilitate the extraction of one or several pages (and obtain photocopies from them, for instance).

TOOLS

For each chapter, the photos of the special tools required for proper completion of the work, are given at the end of the list of operations.

The special tool numbers and photos appear in the operation description as the work progresses.

The tools referenced **OUT** followed by **6 figures** and ending in the letter **"T"** are **sold** by the **Replacement Parts Department** to FRANCE and EXPORT networks.

The tools referenced with **4 figures** followed by the letter **"T"** are sold to FRANCE by the Société FENWICK, Département AMA :
24, boulevard Biron, 93404 SAINT-OUEN. Tél. : 42.52.67.00, and to the EXPORT network by CITROËN.

The tools referenced **MR** must be made up by the repairer himself.

TIGHTENING TORQUES:

The **tightening torques** are expressed in metre Decanewton **(mdaN)**, the official torque measuring unit:

0.981 mdaN = 1 mkg (former measuring unit).
In practice, **1 mdaN = 1 mkg.**

UPDATING THE MANUAL WITH ADDITIVES:

Additives should be ordered immediately on receipt of the DOCUMENTATION BULLETIN announcing that they are issued.
The updated sheets must be added to the existing pages in the manual or replace the corresponding ones. They are identified by spots located to the left of the *shortened* volume *number* placed at the bottom right hand side of the recto page:

Example : 1 spot • 8531 additive no. 1 ; 2 spots •• 8531 additive no. 2, etc.

IMPORTANT NOTE:

For all technical information, please apply to:

CENTRE TECHNIQUE CITROËN
Division Après-Vente
Service Technique
Chemin Vicinal n° 2 - 78140 VELIZY
Tél. : 45.37.30.30.

LIST OF OPERATIONS APPEARING IN THE CHAPTER : GENERAL INFORMATION

OPERATION NUMBER	DESCRIPTION	OPERATION △ TEXTS	OPERATION ○ SYMBOLS	VEHICLE CONCERNED ENGINE TYPE: 20 Petrol 829 A 5	22 Petrol J6T A 500	25 Petrol Injection 25/659	25 Prestige 25/659	25 Petrol Turbo 25/662	25 Prestige Petrol Turbo 25/662	25 Diesel 25/660	25 Diesel Turbo 25/648	25 Limousine Diesel Turbo 25/648	20 Safari Petrol + Familiale 829 A 5	25 Safari Petrol Injection 25/659	25 Safari Diesel + Familiale 25/660	25 Safari Diesel Turbo 25/648	Ambulance 829 A 5 or 25/660		
MA 000/1	General specification - vehicle identification		○	X	X	X	X	X	X	X	X	X	X	X	X	X	X		
MA 00/1	Jacking and towing points		○	X	X	X	X	X	X	X	X	X	X	X	X	X	X		
MA 00/2	Protection of the electrical units	△		X	X	X	X	X	X	X	X	X	X	X	X	X	X		
MA 00/3	Recommended products	△		X	X	X	X	X	X	X	X	X	X	X	X	X	X		
MA 00/4	Products to be used on the bodywork	△		X	X	X	X	X	X	X	X	X	X	X	X	X	X		

	CX20	CX22	CX25				
	20 20RE 20 TRE	22TRS	RI GTI (AM84)	Pallas IE RI GTI (AM85)	GTI Turbo	Prestige	Prestige Turbo
	MP	NR	NG	NG	NK	NH	NP
	829 A 5	J6T A 500	M25/659	M25/659	M25/662	M25/659	M25/662
	4	5	5	5	5	5	5
	5			Automatic		Automatic	

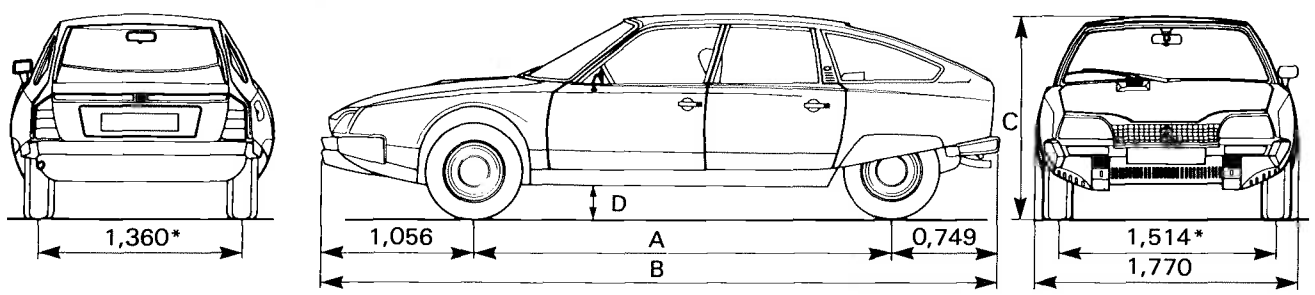

A	2,845 m	3,095 m
B	4,650 m	4,900 m
C	1,360 m	1,375 m
D	0,160 m	

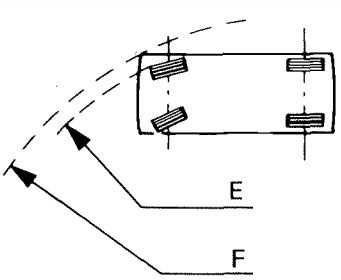

E	11,70 m	12,50 m
F	12,50 m	13,40 m

* + 8 mm 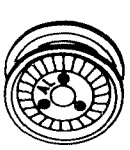 TRX

	CX 25			
	Pallas D (AM84) — TRD	Pallas D (AM85) — D — RD	RD Turbo TRD Turbo	Limousine Turbo
	MM	MM	NB	ND
	M25/660	M25/660	M2/648	M25/648
	5	4 5	5	5

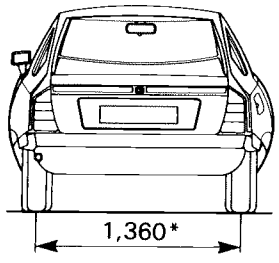

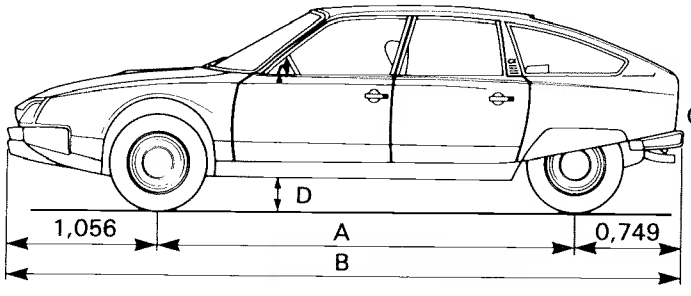

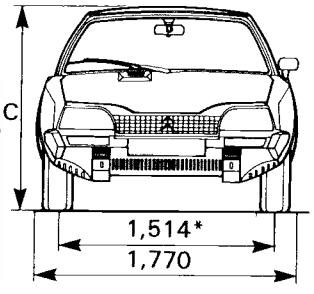

A	2,845 m	3,095 m
B	4,650	4,900 m
C	1,360	1,375 m
D	0,160 m	

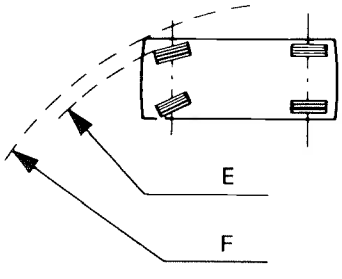

E	11,70 m	12,50 m
F	12,50 m	13,40 m

* + 8 mm 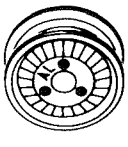 TRX

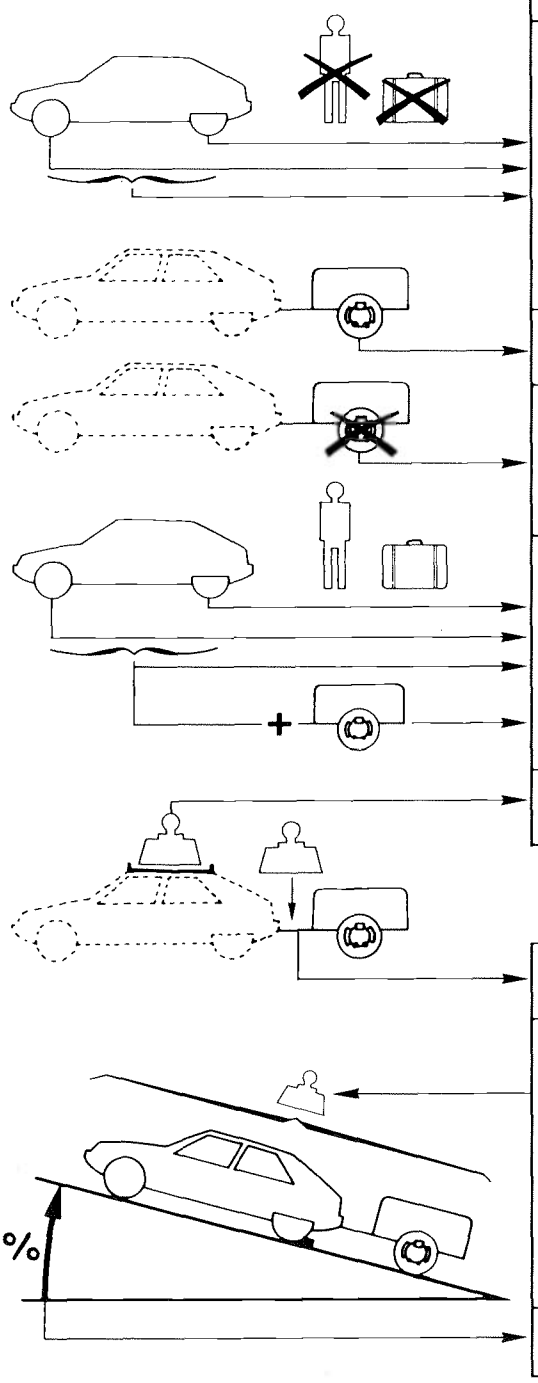

CX25		
D Pallas D RD TRD	RD Turbo TRD Turbo	Limousine Turbo
420 kg 950 kg 1370 kg	435 kg 970 kg 1405 kg	460 kg 990 kg 1450 kg
1300 kg		
685 kg	700 kg	725 kg
755 kg 1140 kg 1890 kg 3190 kg	755 kg 1155 kg 1905 kg 3205 kg	790 kg 1160 kg 1920 kg 3220 kg
80 kg		
100 kg		
3190 kg	3205 kg	3220 kg
12 %		

	CX 20 CX 20 RE		CX 25 TRI	CX 25 D CX 25 RD		CX 25 TRD Turbo
	MR		NJ	MN		NC
	5	8	5	5	8	5
	829 A5		M 25/659	M 25/660		M 25/648
	4	5	5	4	5	5
	5		Automatic	5		

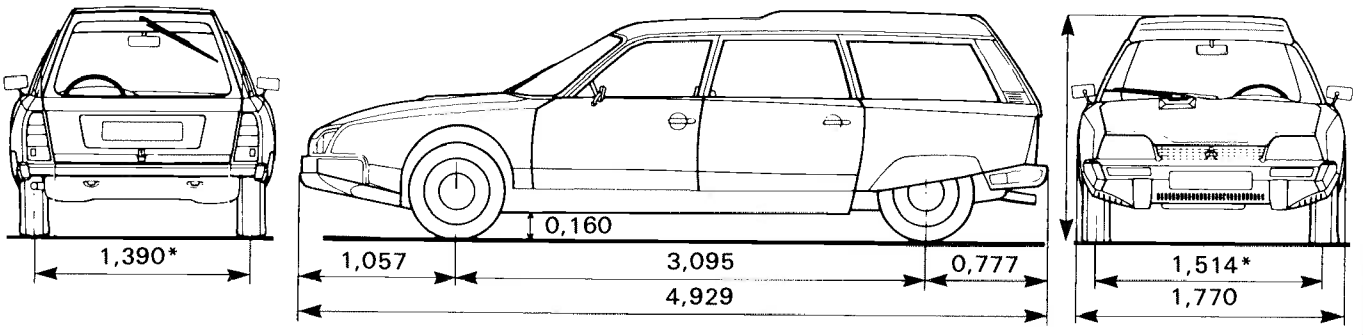

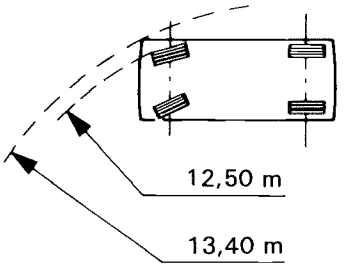

* + 8 mm 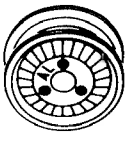 TRX

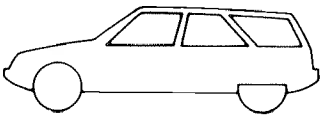

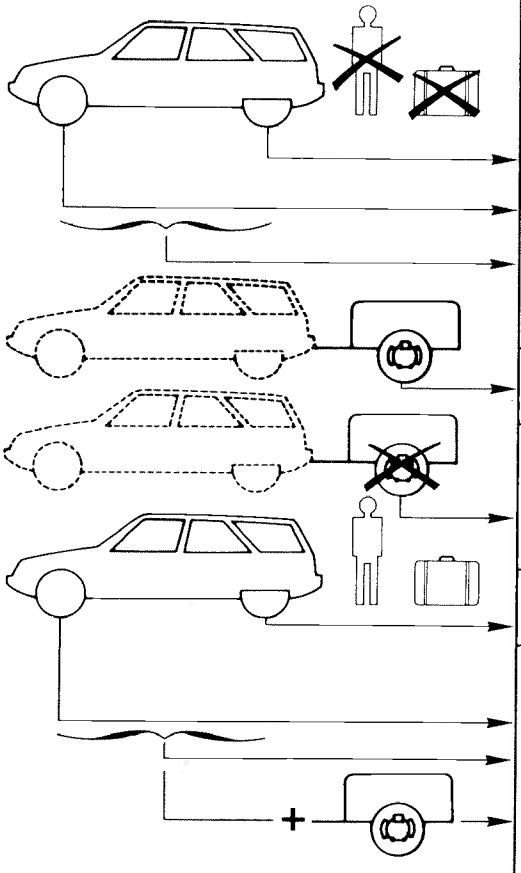

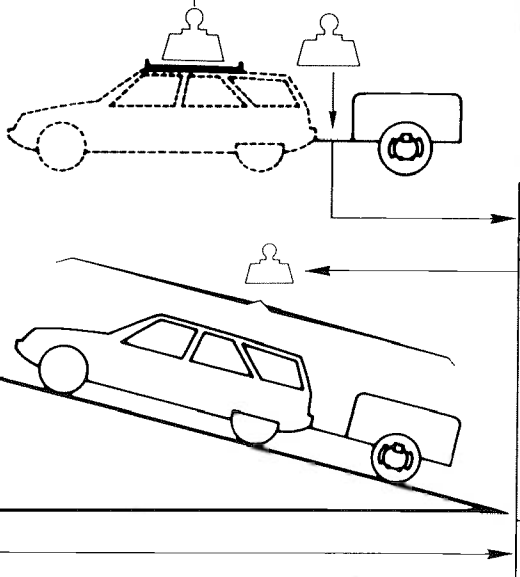

CX20	CX25		
20 20 RE	25 TRI	25 D 25 RD	25 TRD Turbo
530 kg 860 kg 1390 kg	520 kg 945 kg 1495 kg	510 kg 965 kg 1475 kg	530 kg 990 kg 1520 kg
1300 kg			
695 kg	730 kg	750 kg	750 kg
1030 kg			
1065 kg 2080 kg 3980 kg	1160 kg 2165 kg 3465 kg	1175 kg 2190 kg 3490 kg	1175 kg 2200 kg 3500 kg
80 kg			
100kg			
3380 kg	3465 kg	3490 kg	3500 kg
11 %			

	CX 20	CX 25 D
	MA-MR	MA-MN
	4 +	4 +
	829-A5	M25/660
	4	4
	5	5

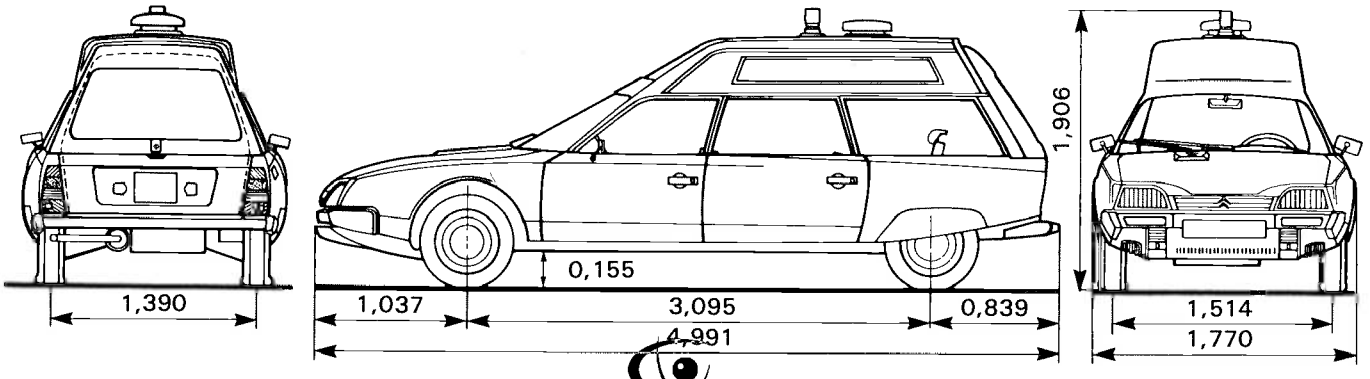

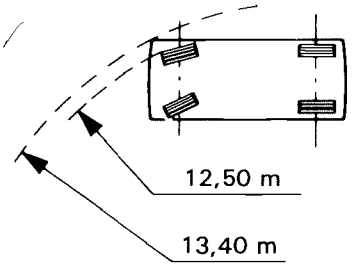

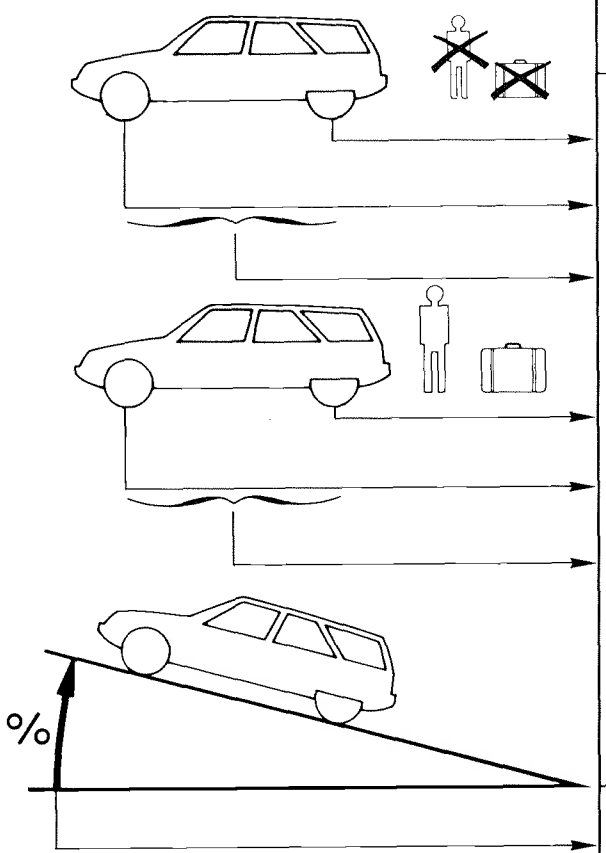

	CX20	CX 25D
	590 kg	585 kg
	880 kg	990 kg
	1470 kg	1575 kg
	1065 kg	1175 kg
	1030 kg	1030 kg
	2080 kg	2190 kg
	11 %	

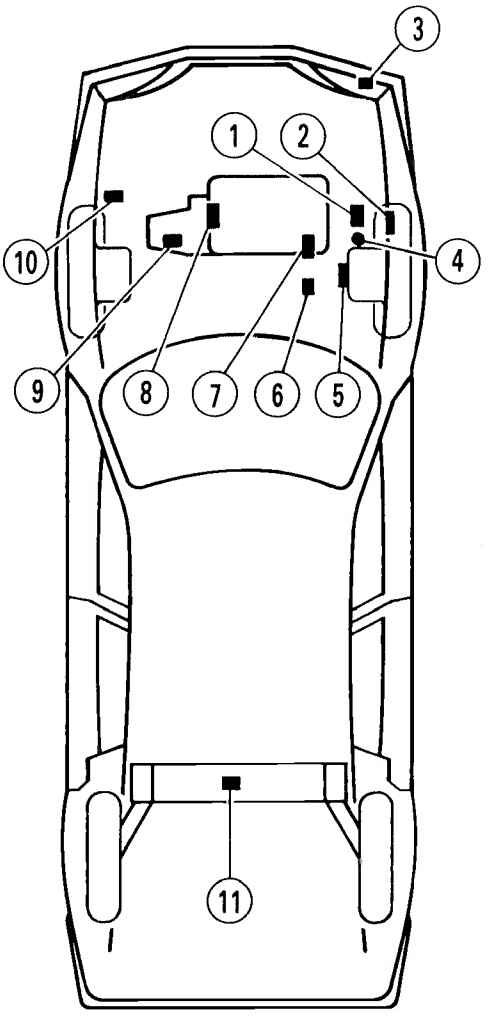

1

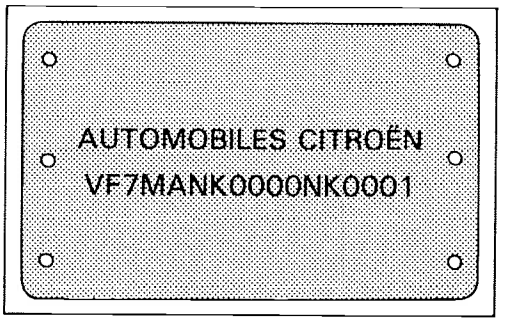

2 VF7MANK0000NK0001

3

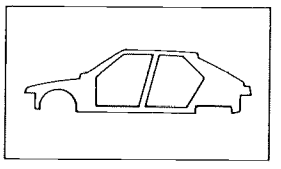

4

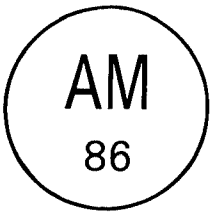

5

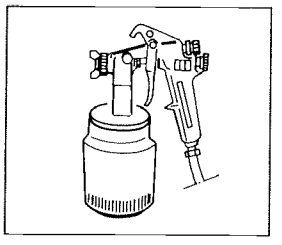

6

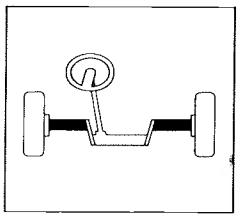

9

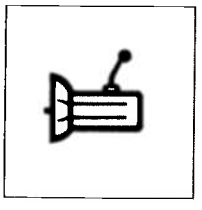

10 0001

7

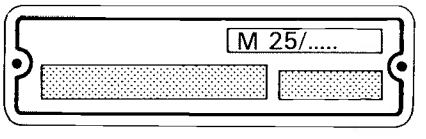

8

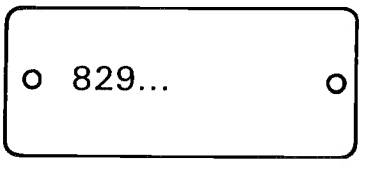

11

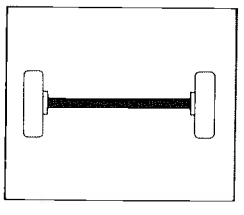

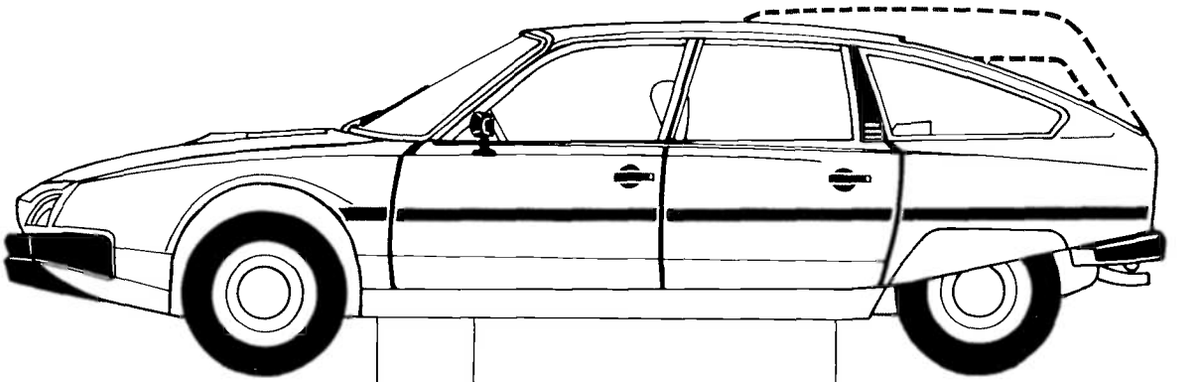

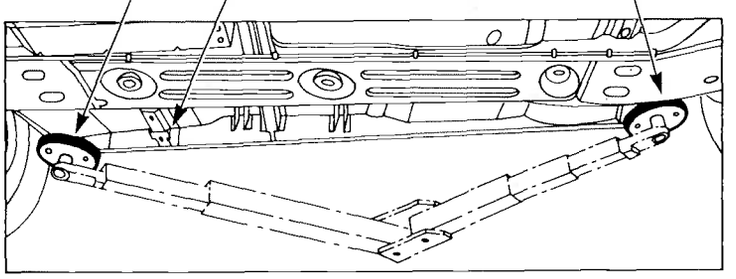

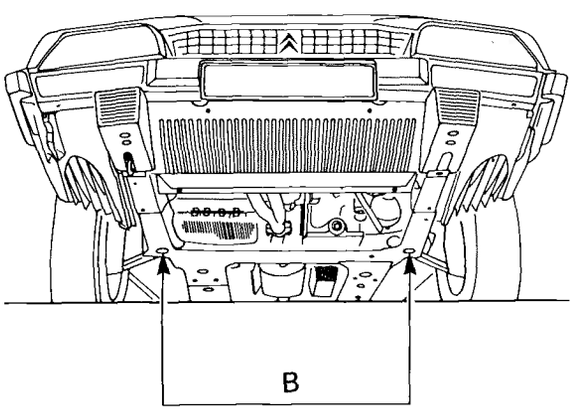

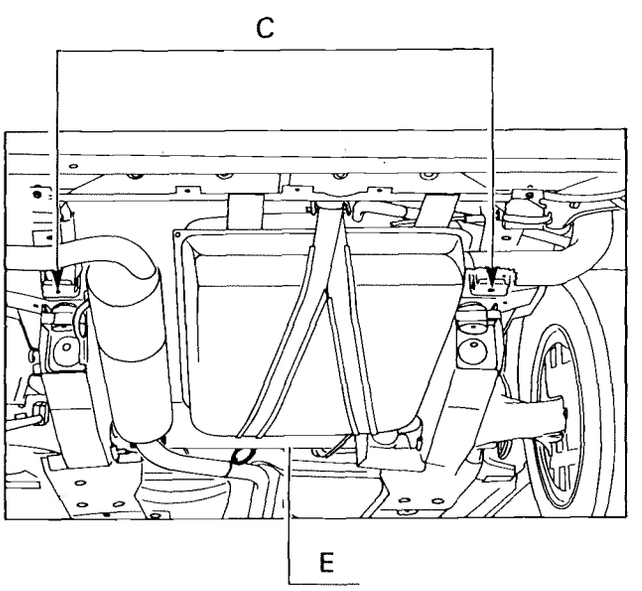

A + A1 :

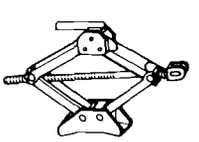

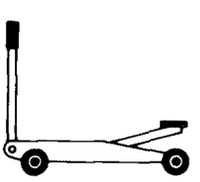

B + C :

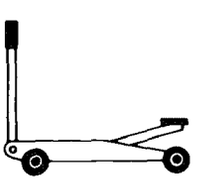

E :

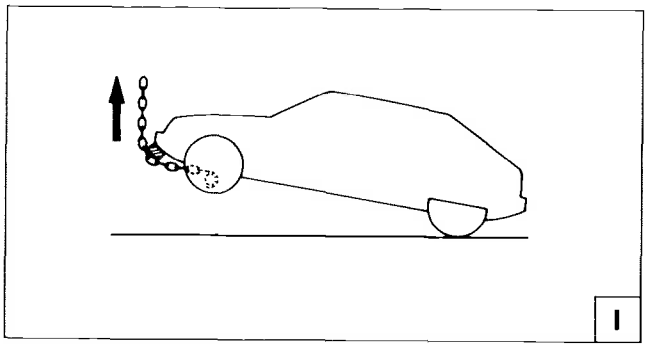

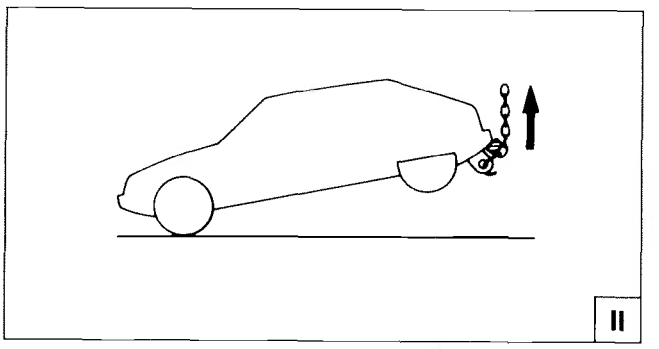

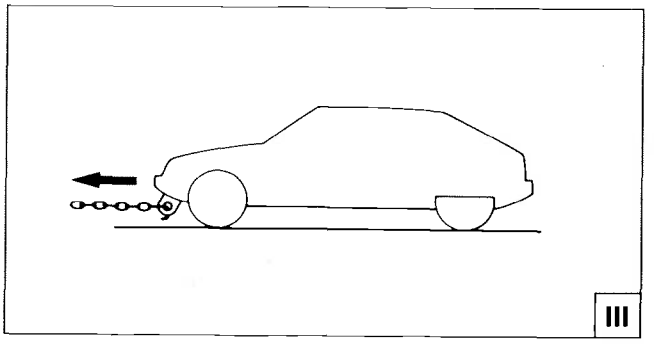

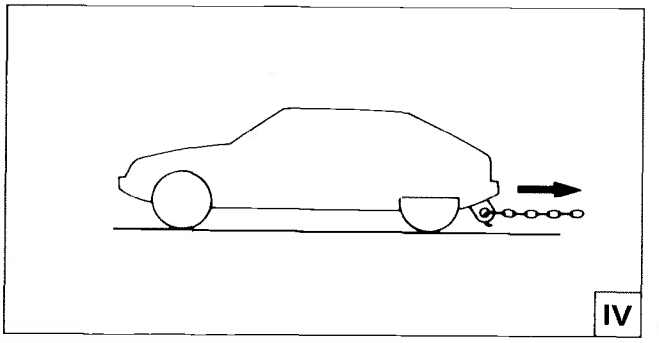

ZF 3HP22 → ~~II~~ ~~IV~~

→ III : — 50 Km/h, — 50 Km

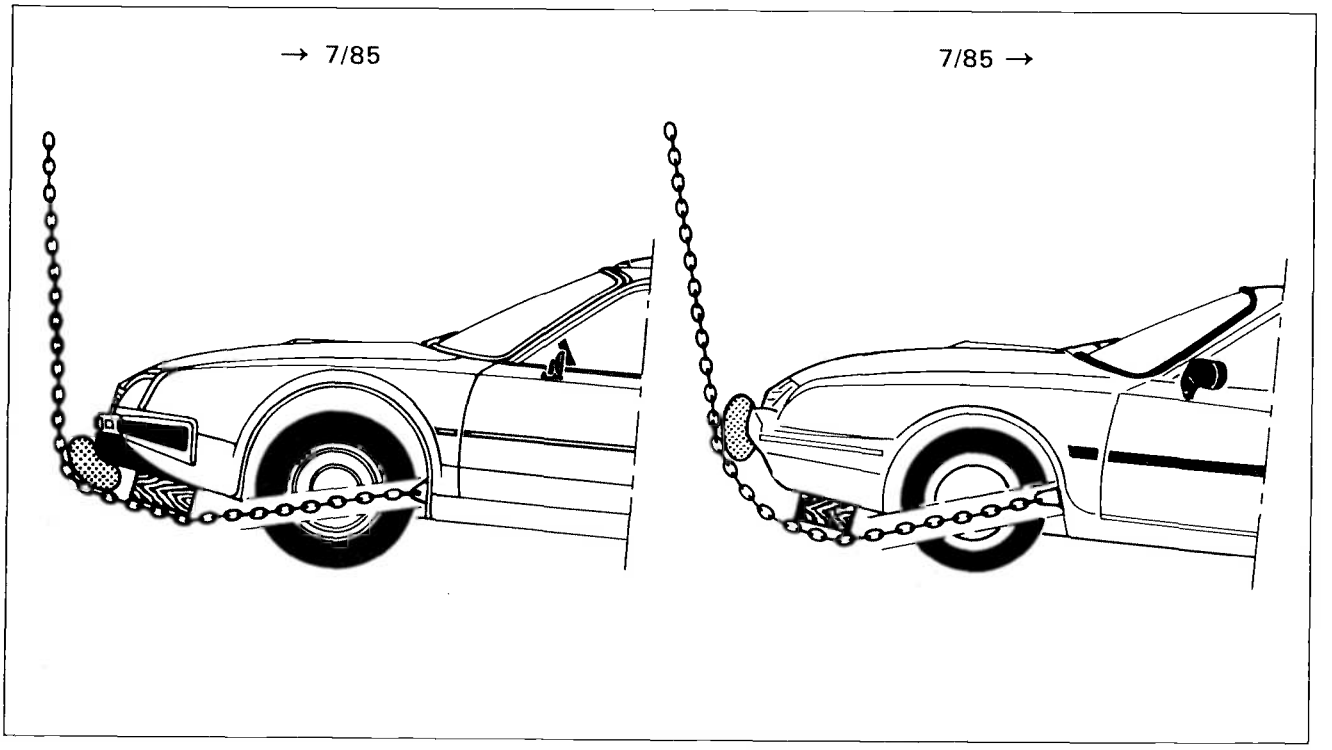

PROTECTION OF THE ELECTRICAL UNITS

PRECAUTIONS TO BE TAKEN WHEN CARRYING OUT AN OPERATION ON THE VEHICLE

It is essential to avoid actions which may damage the electrical or the electronic equipment or create a short circuit (with subsequent risk of fire or accident).

Battery:

a) First disconnect cable clamp from the battery negative terminal, earthed, then from the positive post.
b) Before tightening the negative clamp to the battery (the negative lead should be connected last), ensure that there is no short circuit (bright sparks or arcs).
Small sparks may occur due to the interior lamp (door open), door locking device, clock or components having remained in operation.
c) Make sure that the terminals are properly connected. Clamps and terminals should be clean and correctly tightened.
d) When recharging the battery, disconnect the two clamps first.
e) Do not reverse the negative and positive clamps on the battery. (This could destroy the alternator diodes).

Fuses:

a) Fit the correct type of fuses: use the fuses specified for the protected devices.
b) Take the added accessories and the functions into consideration.

Charging circuit:

a) Do not run the alternator unless it is connected to the battery. Do not disconnect the battery when the alternator is rotating.
b) Ensure that the regulator is correctly earthed.
c) Do not interchange the leads connected to the regulator, (charge detection warning lamp and excitation are specific).
d) Do not connect a suppressor capacitor to the regulator without taking precautions or following proper instructions.
e) Do not use an electric welding equipment on the vehicle without having first disconnected the alternator, the regulator and the battery (insulate the two terminals).
f) Do not « *check* » the operation of an alternator by short circuiting the positive and ground terminals, which may destroy the diodes.

Starting the engine:

Do not use a booster or a 24-volt battery. Only use a correctly charged 12-volt battery (a higher capacity battery may be utilised). Otherwise, risk of deterioration of the ignition module or any other electronic control units. If the starter is needed for starting the engine, without running it, it is necessary to disconnect datum and flywheel sensors on the All Electronic Ignition, or the primary lead of the coil on any other type of ignition.

Ignition:

a) Do not connect a suppressor capacitor to the negative terminal of the coil.
b) Do not operate the module if its radiator is not connected to the earth.
c) Fit the radio suppressor capacitors recommended by the factory.
d) Never operate the ignition system while the HT circuit is open. Connect the HT leads to earth.
e) Only use rev. counter having a HT sensor, (never puncture HT leads).

Q.I. bulb:

a) Never replace a Q.I. bulb with the headlamp switched on. If the headlamps have been in use, allow them to cool down.
b) Do not touch a Q.I. bulb with bare fingers. Any fingerprints must be cleaned with soapy water and the bulb dried with a dry lint-free cloth.

Checks :

a) Preferably use a high resistance (> 10 k Ω V) voltmeter or a battery-operated ohm-meter...
b) Take care not to use instruments taking their power from the mains.

Electronic components:

a) Avoid overvoltages due to a badly insulated charger, electric arcing or connections to the coil.
The units such as regulator, ignition module, tachometer, windscreen wiper timer, flasher unit, clock, radio, oil gauge unit, door lock control unit, etc. comprising electronic components may be deteriorated.
b) The electronic components should not be placed or operated under a temperature exceeding 80°C.
c) Always switch off instruments or electronic control units before connecting or disconnecting them.

I - CLEANING PRODUCTS

USE AND SPECIAL FEATURES	PRODUCT AND R.P. No.	SYMBOL	MARK	SUPPLIER
– Cold degreasing agent for mechanical units specially designed to be used into cleaning tanks	SOLVANT P.L. ZC 9865832 U		D 1	R.P.D.
– Gelified liquid designed for stripping sealing surfaces and non metal gaskets	DECAPLOC ZC 9865104 U		D 2	R.P.D.
– Aerosol can intended for unsticking and stripping non metal gaskets and sealing surfaces	DECAPJOINT ZC 9875077 U			R.P.D.
– Carburettor cleaning product. To be used pure.	Carburettor cleaner ZC 9862011 U		D 3	R.P.D

II - SEALING COMPOUNDS

USE AND SPECIAL FEATURES	PRODUCT AND R.P. No.	SYMBOL	MARK	SUPPLIER
– Sealant for joint contact surfaces, screws and nuts. Clean with alcohol.	CURTYLON		E 1	CURTY
– Hydrocarbon resistant product	LOWAC		E 2	S.E.B.I.S.

USE AND SPECIAL FEATURES	PRODUCT AND R.P. No.	SYMBOL	MARK	SUPPLIER
– Locking and sealing agent for removable threaded assemblies.	FRENETANCH ZC 9865034 U		E 3	R.P.D.
– Sealant for joint contact surfaces, locking of screws, fixing studs and nuts. – Sealant for joint contact faces and unions.	FORMETANCH ZC 9865036 U		E4	
– Bearings, rings, bushes, liners, inserts, pulleys locking products. Strengthening agent for splined and pinned connections.	SCELBLOC ZC 9865035 U		E 5	
– Product for locking and sealing studs, screws and nuts with maximum effectiveness.	FRENBLOC ZC 9865033 U		E 6	
– Sealant for joint contact faces in replacement of traditional gaskets.	FORMAJOINT ZC 9865037 U		E 7	
– Sealer for housings: Aluminium based	POXY. MATIC ALU ZC 9865565 U		E 8	
Metal based	POXY. MATIC ACIER ZC 9865559 U		E 9	
– Paste for bonding door linings, windscreen, etc. Sealant for joint contact surfaces. Remains flexible after drying.	AUTO JOINT NOIR *(black)* ZC 9865038 U		E 10	
– Sealant for joint contact surfaces. – Remains flexible after drying.	AUTO JOINT BLEU *(blue)* ZC9865103 U		E 10	
– Air intake casing heater tubes sealing compound	Fire-proof mastic paste Réf. 1500 (COLLAFEU)		E 11	Ets BARTHELEMY
– Strengthener of fixed assemblies	SCELMETAL		E 12	FRAMET

III - PENETRATING OILS

USE AND SPECIAL FEATURES	PRODUCT AND R.P. No.	SYMBOL	MARK	SUPPLIER
– Aerosol can for rusted parts and seized assemblies	DEGRIPPANT ZC9865303 U		F 1	R.P.D.

IV - GREASES AND LUBRICANTS

USE AND SPECIAL FEATURES	PRODUCT AND R.P. No.	SYMBOL	MARK	SUPPLIER
High adhesive grease: - Intended mainly for drive-shaft lubrication. - Can be used for mechanisms working under difficult conditions (high pressures, splashed water).	95 615 129		G 1	R.P.D.
	GRAISSE 1495			MOLYDAL
	MOLYKOTE LONGTERM 2			DOW-CORNING
Grease resisting high temperatures: - For exhaust manifold ball-joints.	GRIPCOTT AF		G 2	MOLYDAL
Lubricant for parts working under difficult conditions: - Splashed water, high pressure and temperature.	HI LUB-HTC		G 3	FRAMET
Grease resisting high temperatures: - To lubricate the threaded spark plugs fitted to the cylinder head.	NO-BIND		G 4	CURTY
Multifunctional lubricant: - Molybdenum disulfide-base product.	M.O.		G 5	TEROSON
Multifunctional grease: - For routine works.	TOTAL MULTIS		G 6	TOTAL C.F.R.
Special grease: - Designed for anti-roll bar bearings.	PROBA. 270 ALTEMP 79.01973.067		G 7	R.P.D.
Animal grease: - Tallow.			G 8	
Special grease: - To be used for fitting the road wheel sensors of the anti-locking brake system.	ESSO NORVA 275		G 9	R.P.D.

LIST OF SUPPLIERS

SUPPLIER	ADDRESS	TELEPHONE
BARTHELEMY	61, rue Defrance, 94300 VINCENNES	(1) 43.28.42.87
CURTY	25, rue Aristide-Briand, 69800 SAINT-PRIEST	78.20.81.24
C.F.R. (TOTAL)	11, rue du Docteur-Lancereaux, 75381 PARIS CEDEX 08	(1) 42.67.15.00
FRAMET	10, avenue Eugène-Gazeau, Z.I., 60304 SENLIS CEDEX	44.53.38.88
DOW CORNING S.A.R.L.	36-38, rue de la Princesse, 78430 LOUVECIENNES	(1) 39.18.92.50
MOLYDAL	60, rue des Orteaux, 75020 PARIS	(1) 43.70.75.50
S.E.B.I.S.	3 à 5, rue de Metz, 75010 PARIS	(1) 47.70.13.08
TEROSON	Tour OBJECTIF, 2, rue Louis-Armand, 92607 ASNIERES	(1) 47.99.66.66

I - EXTRUDABLE SEALING COMPOUNDS

USE AND SPECIAL FEATURES	PRODUCT AND R.P. No.	SYMBOL	MARK	SUPPLIER (if any)
– Body seam sealer. Air drying products. Can be coated with paint.	6051 8645 42		A 1	BOSTIK 3 M FRANCE TEROSON
– Sealant for spot welded panel junctions. – Sealant for windows having a rubber sealing strip. Does not dry.	1605 94		A 2	BOSTIK TEROSON
– Polyurethane sealing compound For bonding and sealing: "GURRIT" Kit complete / Cartridge "BOSTIK" Kit complete / Cartridge	ZC 9867511 U ZC 9867447 U or ZCP.830.002 ZCP.830.003		A 3	R.P.D.
– Tightness of the crimpings.	ZC 9867264 U		A 4	R.P.D

II - PREFORMED SEALING COMPOUNDS

USE AND SPECIAL FEATURES	PRODUCT AND R.P. No.	SYMBOL	MARK	SUPPLIER (if any)
– Filler ensuring a seal between the bolted panels (wings...)				
- Round section	TEROSTAT 7 Prestik S.S. 8568		dia =	TEROSON BOSTIK 3 M FRANCE
- Round section	1053		dia = 20 mm	CEPAC
- Box section	TEROSTAT 7 8573 Prestik S.S.		Dimension EX: 2 x 18	TEROSON 3 M FRANCE BOSTIK

III - ADHESIVES

USE AND SPECIAL FEATURES	PRODUCT AND R.P. No.	SYMBOL	MARK	SUPPLIER (if any)
– Metal/glass bonding (rear-view mirror, lower part of the door windows).	ZC 9865561 U or ZC 9856689 U		B 1	R.P.D.
– Bonding of trim elements.	1410 SC 1236 N 66		B 2	BOSTIK 3 M FRANCE TEROSON
– Sticking two panels together. Door clinching.	ZC 9867263 U ZCP 830 009		B 3	R.P.D.
– Bonding composite material, SMC and BMC - to metal - together or to metal	ZCP 830 009 (CIBA) ZC 9867448 U (TEROSON)		B 4	R.P.D.
– Bonding of plastic (rear view mirror trim).	ZC 9865105 U		B 5	R.P.D.
– Bonding of monogram, décorative strip... – Dual adhesive surface tape.	DF 0985 SINGS 4205		B 6	CEPAC 3M FRANCE
– Heat melting paste.	Réf. C130		B 7	CEPAC

IV - GREASES

USE AND SPECIAL FEATURES	PRODUCT AND R.P. No.	SYMBOL	MARK	SUPPLIER (if any)
– Multifunctional lubricant with a molybdenum bisulfide base.	M.O.		G 5	TEROSON
– Multifunctional grease.	TOTAL MULTIS		G 6	TOTAL C.F.R.

V - PROTECTIVE PRODUCTS

USE AND SPECIAL FEATURES	PRODUCT AND R.P. No.	SYMBOL	MARK	SUPPLIER (if any)
– Inner protection of the spot-welding seams: Conductive primer applied to the inner face of the metal panels to be welded.				Refer to Equipment Catalogue
– Protection of underbodies, corrosion inhibitive. Coating (to be applied over metal panels already coated).			C 1	Refer to Equipment Catalogue
– Protection of door crimpings and tailgate surrounds. Apply over precoated panels.	ZC 9867264 U		C 2	R.P.D.
– Protection for hollow sections: Product to be sprayed through the orifices designed for this purpose.				Refer to Equipment Catalogue
– Anti-gravel projection primer.			C 3	See Equipment Bulletin (on paint)
– Protection against road chippings.	CT Beige		C 4	TEROSON

⚠	(D) Achtung ! Wichtiger Punkt oder Fehlerquelle (DK) Pas på ! Vigtigt punkt eller fejlmulighed (E) Atención ! Punto importante o posible dificultad (GB) Caution ! Important detail or possible trap (I) Attenzione ! Punto importante o possibilita di errore (NL) Let op ! Belangrijk punt, kan gemakkelijk fout gaan ! (P) Atenção ! Ponto importante ou possibilidade de errar (S) Varning ! Viktigt arbetsmoment eller möjlighet till misstag (F) Attention ! Point important ou piège possible
⚠	(D) Darauf achten, dass keine Teile herunterfallen oder abspringen (DK) Risiko for at delene falder ud eller forskübber sig (E) Riesgo de caida o de proyección de piezas (GB) Parts may drop or spring out (I) Rischio di caduta o di proiezione di pezzi (NL) Kans op naar beneden vallen of wegspringen van onderdelen (P) Risco de queda ou de projecção de peças (S) Risk för att delar faller ned eller spritter ut (F) Risque de chute ou de projection de pièces
⚠	(D) Unbedingt Spezialschrauben verwenden (DK) Special - skruer skal anvendes (E) Empleo imperativo de tornillos especiales (GB) Use of special fixing - hardware essential (I) Uso obbligatorio di bulloneria speciale (NL) Uitluitend speciale bouten gebruiken (P) Utilização imperativa de parafusos ou porcas especiais (S) Specialskruv måste ovillkorligen användas (F) Emploi imperatif de visserie spéciale
⚠	(D) Arbeitsvorgang, falls erforderlich durchführen (DK) Arbejdsoperation der udføres hvis det er nødvendigt (E) Operación a efectuar si es necesario (GB) Operation to be carried out if necessary (I) Operazione da effettuare se necessario (NL) Indien noodzakelijk handeling uitvoeren (P) Operação a efectuar se necessário (S) Arbetsmoment/arbete att utföra vid behov (F) Opération à effectuer si nécessaire

	D Rechts DK Højre E Derecho GB Right	I Destro NL Rechts P Direita	S Höger F Droite
	D Links DK Venstre E Izquierdo GB Left	I Sinistro NL Links P Esquerda	S Vänster F Gauche
	D Oben DK Opad E Alto GB Up	I Alto NL Boven P Alto	S Uppåt F Haut
	D Unten DK Nedad E Bajo GB Down	I Basso NL Onder P Baixo	S Nedåt F Bas
	D Hinten DK Bag E Trasero GB Rear	I Dietro (Posteriore) NL Achter P Traseira	S Bak (åt). bakre F Arrière
	D Vorn DK For E Delantero GB Front	I Avanti (Anteriore) NL Voor P Dianteira	S Fram (åt). främre F Avant
	D Ausbau. Ausbauen DK Fjernelse. Fjerne E Quitado. Quitar GB Removal. Remove	I Stacço. Staccare NL Verwijder. Uitbouwen P Desmontagem. Desmontar.	S Demontering. Demontera F Dépose - Déposer
	D Einbau. Einbauen DK Anbringelse. Anbringe E Colocacion. Poner GB Fitting. Fit	I Riattacco. Riattaccare NL Monteer. Inbouwen P Montagem. Montar	S Återmontering. Återmontera F Pose - Poser

	(D) Losschrauben. 1 = Anzahl der Umdrehungen. 180° = Einstellwinkel (DK) Skrue løs. 1 = Antal omdrejninger. 180° = Drejningsvinkel (E) Desenroscar. 1 = Número de vueltas. 180° = Angulo que se debe efectuar (GB) Unscrew. 1 = Number of turns. 180° = Angular value (I) Svitare. 1 = Numero di giri. 180° = Rotazione da effettuare (NL) Losdraaien. 1 = Aantal slagen. 180° = In te stellen hoek (P) Desaparafusar. 1 = Número de voltas. 180° = Ângulo a efectuar (S) Skruva ut. 1 = Antal varv. 180° = Antal grader (F) Dévisser - 1 = Nombre de tours. 180° = Angle à effectuer
	(D) Verbot. Nicht verwenden oder wiederverwenden (DK) Forbud. Må ikke anvendes eller genbruges (E) Prohibido. No utilizar o volver a utilizar (GB) Prohibited. Do not use or reuse (I) Proibizione. Non usare o riutilizzare (NL) Verboden Niet gebruiken of niet opnieuw gebruiken (P) Proibido Não utilizar ou reutilizar (S) Förbud Använd eller återanvänd ej (F) Interdiction - Ne pas utiliser ou réutiliser
	(D) Federring (I) Rondella Grower (S) Grower - Bricka (DK) Fjederskive (NL) Veerring (E) Arandela Grower (P) Anilha Grower (F) Rondelle Grower (GB) Spring washer
	(D) Unterlegscheibe (I) Rondella a Contatto (S) Kontaktbricka (DK) Kontakt Skive (NL) Contactring (E) Arandela de Contacto (P) Anilha de Contacto (F) Rondelle Contact (GB) Contact washer
	(D) Zahnscheibe (I) Rondella a Ventaglio (S) Solfjäderbricka (DK) Stjerneskive (NL) Kartelring (E) Arandela Estrellada (P) Anilha Recartilhada (F) Rondelle Eventail (GB) Serrated washer
	(D) Flachscheibe (I) Rondella Piatta (S) Planbricka (DK) Flad Skive (NL) Platte Ring (E) Arandela Plana (P) Anilha Plana (F) Rondelle Plate (GB) Flat washer

	(D) Losschrauben. 1 = Anzahl der Umdrehungen. 180° = Einstellwinkel (DK) Skrue løs. 1 = Antal omdrejninger. 180° = Drejningsvinkel (E) Desenroscar. 1 = Número de vueltas. 180° = Angulo que se debe efectuar (GB) Unscrew. 1 = Number of turns. 180° = Angular value (I) Svitare. 1 = Numero di giri. 180° = Rotazione da effettuare (NL) Losdraaien. 1 = Aantal slagen. 180° = In te stellen hoek (P) Desaparafusar. 1 = Número de voltas. 180° = Ângulo a efectuar (S) Skruva ut. 1 = Antal varv. 180° = Antal grader (F) Dévisser - 1 = Nombre de tours. 180° = Angle à effectuer
	(D) Verbot. Nicht verwenden oder wiederverwenden (DK) Forbud. Må ikke anvendes eller genbruges (E) Prohibido. No utilizar o volver a utilizar (GB) Prohibited. Do not use or reuse (I) Proibizione. Non usare o riutilizzare (NL) Verboden Niet gebruiken of niet opnieuw gebruiken (P) Proibido Não utilizar ou reutilizar (S) Förbud Använd eller återanvänd ej (F) Interdiction - Ne pas utiliser ou réutiliser
	(D) Federring (I) Rondella Grower (S) Grower - Bricka (DK) Fjederskive (NL) Veerring (E) Arandela Grower (P) Anilha Grower (F) Rondelle Grower (GB) Spring washer
	(D) Unterlegscheibe (I) Rondella a Contatto (S) Kontaktbricka (DK) Kontakt Skive (NL) Contactring (E) Arandela de Contacto (P) Anilha de Contacto (F) Rondelle Contact (GB) Contact washer
	(D) Zahnscheibe (I) Rondella a Ventaglio (S) Solfjäderbricka (DK) Stjerneskive (NL) Kartelring (E) Arandela Estrellada (P) Anilha Recartilhada (F) Rondelle Eventail (GB) Serrated washer
	(D) Flachscheibe (I) Rondella Piatta (S) Planbricka (DK) Flad Skive (NL) Platte Ring (E) Arandela Plana (P) Anilha Plana (F) Rondelle Plate (GB) Flat washer

(D) Anzahl der Schraubelemente : Schrauben, Muttern, Stiftschrauben usw
(DK) Antal dele I skruesamlingen
(E) Cantidad de elementos de tornilleria : tornillos, tuerca, esparrago, etc.
(GB) Number of threaded components : screw, nut, stud, etc.
(I) Numero di elementi di bulloneria, viti, dadi, prigionieri, ecc.
(NL) Aantal : bouten, moeren, tapeinden enz. . . .
(P) Número de elementos de parafusos ou porcas, porca, perno, etc.
(S) Antal förskruvningspunkter : skruv, mutter, pinnbult, etc.

(F) Nombre d'éléments de visserie : vis, écrous, goujons, etc.

(D) Sichern bzw. Entsichern
(DK) Låse eller frigøre
(E) Frenar o quitar el freno, según el caso
(GB) Lock or unlock as appropriate
(I) Bloccare o sbloccare, secondo i casi
(NL) Borgen of borg verwijderen
(P) Travar ou destravar conforme o caso
(S) Lås eller avlägsna låsningen
(F) Freiner ou défreiner suivant le cas

(D) Unbedingt Neuteile verwenden
(DK) Ny del skal anvendes
(E) Empleo imperativo de una pieza nueva
(GB) Use of new part essential
(I) Uso obbligatorio di un pezzo nuovo
(NL) Noodzakelijk een nieuw onderdeel te gebruiken
(P) Utilização imperativa duma peça nova
(S) Ny del måste ovillkorligen användas
(F) Emploi impératif d'une pièce neuve

(D) Schmieren
(DK) Smøre
(E) Aceitar
(GB) Oil
(I) Oliare
(NL) Oliën
(P) Olear
(S) Anolja
(F) Huiler

(D) Reinigen ...(je nach eventueller Markierung, siehe Tabelle der Klebe-,Schmier-und Dichtmittel)
(DK) Rengøre med ... (afhængig af evt. mærkning af produkt)
(E) Limpiar ... (siguiendo lo señalado eventualmente, ver cuadro de productos)
(GB) Clean ... (according to symbol, if present, see table of recommendations)
(I) Pulire ... (secondo eventuale riferimento, vedere tabella ingredienti)
(NL) Reinigen ... (zoals aangegeven, zie lijts met benodigdheden)
(P) Limpar ... (conforme marca eventual, ver quadro ingredientes)
(S) Rengör ... (enligt eventuell märkning, se listan över olika produkter)

(F) Nettoyer ... (suivant repère éventuel, voir tableau ingrédients)

	(D) Mit ... schmieren (gemäss Markierung, siehe Tabelle der Klebe-, Schmier- und Dichtmittel) (DK) Overstryge med ... (afængig af referance produkt) (E) Untar con ... (siguiendo lo señalado, ver cuadro de productos) (GB) Smear with ... (according to symbol, see table of recommendations) (I) Spalmare di ... (secondo riferimento, vedere tabella ingredienti) (NL) Insmeren met ... (zoals aangegeven, zie lijst met benodigdheden) (P) Untar com ... (conforme marca, ver quadro ingredientes) (S) Bestryk med ... (enligt mäkning, se listan över olika produkter) (F) Enduire de ... (suivant repère, voir tableau ingrédients)
OK	(D) Gut (DK) God (E) Bueno (GB) Serviceable (I) Buono (NL) Goed (P) Bom (S) Korrekt (F) Bon
	(D) Siehe (DK) Se ... henvisning til ... (E) Ver ... dirigirse a ... (GB) See ... refer to ... (I) Vedere ... riportarsi a ... (NL) Zie ... verwijzen naar ... (P) Ver ... reportar- se a ... (S) Se ... gå tillbaka till ... (F) Voir ... se reporter à ...
	(D) Sichtprüfung oder Prüfung mit der Hand (DK) Kontrollere visuelt eller manuelt (E) Controlar visualmente o manualmente (GB) Check visually or physically (I) Controllare visivamente o manualmente (NL) Visuele of handmatige controle (P) Controlar visual ou manualmente (S) Gör en manuell kontroll eller en okulärkontroll (F) Contrôler visuellement ou manuellement
	(D) Mit einem Messgerät prüfen (DK) Kontrollere med måleinstrument (E) Controlar con un instrumento (GB) Check with a measuring instrument (I) Controllare con uno strumento (NL) Controleren met een instrument (P) Controlar com um instrumento (S) Kontrollera med instrument (F) Contrôler avec un instrument

(D) Mehrere Einbaumöglichkeiten (1 - 2 - 3)
(DK) Flere monteringsmuligheder (1; 2; 3...)
(E) Varios montajes posibles (1. 2. 3)
(GB) Several assembly possibilities (1, 2, 3)
(I) Diversi montaggi possibili (1; 2; 3)
(NL) Verschillende mogelijkheden voor montage (1 ; 2 ; 3...)
(P) Várias montagens possíveis (1. 2. 3)
(S) Flera monteringsutföranden förekommer (1; 2; 3)
(F) Plusieurs montages possibles (1 - 2 - 3)

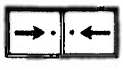

(D) Markieren, Biem Wiedereinbau auf Zugehörigkeit der Teile achten
(DK) Afmœrke. Ved genmontering skal delenes rette sammenpasning respekteres
(E) Señalar. Respetar el apareado de las piezas para el nuevo montaje
(GB) Mark. The parts must be kept paired for re-assembly
(I) Segnare. Rispettare l'accoppiamento dei pezzi per il rimontaggio
(NL) Merken. Zorg bij montage dat de onderdelen bij elkaar komen
(P) Marcar. Respeitar o acasalamento das peças para armá-las
(S) Märk ut. Respektera a delarnas märkning vid återmonteringen
(F) Repérer - Respecter l'appariement des pièces pour le remontage

(D) Einstellen
(DK) Justere
(E) Regular
(GB) Adjust
(I) Regolare
(NL) Afstellen
(P) Afinar
(S) Ställ in
(F) Régler

(D) Abstand, Spiel
(DK) Spil
(E) Juego
(GB) Clearance
(I) Gioco
(NL) Speling
(P) Folga
(S) Spel
(F) Jeu

(D) Einbau durch Pressen, Vorspannen oder genaues Einpassen
(DK) Montering med forspænding, prespasning eller itrykning
(E) Montaje con esfuerzo, precarga o apriete ajustado
(GB) Assembly force fit, with preload or interference fit
(I) Montaggio forzato, precarico o accoppiamento serrato
(NL) Montage onder spanning, voorspanning of klemspanning
(P) Armar em esforço, précarga ou encaixe apertado
(S) Montering med förspanning, presspassning eller ihoptryckt
(F) Montage sous contrainte, précharge ou emmanchement serré

(D) Leicht anziehen
(DK) Skrue sammen uden fastspaending
(E) Aproximar sin apretar
(GB) Screw up without tightening
(I) Avvicinare senza serrare
(NL) Aandraaien zonder vast te zetten
(P) Aconchegar sem apertar
(S) Skruva i utan att dra åt
(F) Approcher sans serrer

(D) Vorgeschriebenes Anziehdrehmoment
(DK) Tilspændingsmoment skal overholdes
(E) Par de apriete que se debe respetar imperativamente
(GB) Observation of tightening torque essential
(I) Coppia di serraggio da rispettare obbligatoriamente
(NL) Voorgeschreven aanhaalspanning aanhouden
(P) Aperto a respeitar imperativamente
(S) Åtdragningsmoment som ovillkorligen måste respekteras
(F) Couple de serrage à respecter impérativement

(D) Hartlöten
(DK) Lodde
(E) Soldar con metal
(GB) Braze
(I) Brasare
(NL) Soideren
(P) Soldar a metal
(S) Löd
(F) Braser

(D) Schweissnaht
(DK) Svejsesøm
(E) Cordón de soldadura
(GB) Fillet of weld
(I) Cordone di saldatura
(NL) Lasrups
(P) Cordão de soldadura
(S) Svetsträng
(F) Cordon de soudure

(D) Lochpunktschweissen
(DK) Stubsvejsning
(E) Soldadura por puntos de "tapón"
(GB) Plug weld
(I) Saldatura con punti "a tappo"
(NL) Proplassen
(P) Soldadura por pontos "tampão"
(S) Pluggsvetsning
(F) Soudage par points "bouchon"

D	Einen Gang einlegen (z.B. 3. Gang)
DK	Sæt i gear (f. eks. : 3. gear)
E	Poner una relación de velocidades (ejemplo : 3°)
GB	Engage a gear (for example : 3rd)
I	Inserire una marcia (esempio : 3°)
NL	Schakel een versnelling in (bijv : de 3 de)
P	Engatar uma velocidade (por exemplo : 3°)
S	Lagg i en växel (till exempel : 3 : an)
F	Engager un rapport de vitesse (ex. : 3e)

D	Ein- oder Auffüllen	NL	Vullen of niveau op hoogte brengen of bijvullen
DK	Fylde eller efterfylde	P	Encher ou pôr a nivel
E	Llenar o poner a nivel	S	Fyll eller korrigera nivån
GB	Fill or top up to level		
I	Riempire o effecttuare il rabbocco	F	Remplir ou effectuer la mise à niveau

D	Gelenkwelle	NL	Aandrijving
DK	Transmission	P	Transmissão
E	Transmisión	S	Drivaxel
GB	Drive Shaft		
I	Trasmissióne	F	Transmission

D	Lenkung	NL	Stuurinrichting
DK	Styrtøj	P	Direcção
E	Dirección	S	Styrsystem
GB	Steering		
I	Sterzo	F	Direction

D	Motor	NL	Motor
DK	Motor	P	Motor
E	Motor	S	Motor
GB	Engine		
I	Motore	F	Moteur

D	Zylinderkopf	NL	Cilinderkop
DK	Topstykke	P	Cabeça
E	Culata	S	Topplock
GB	Cylinder Head		
I	Testata	F	Culasse

D	Getriebe	NL	Versnellingsbak
DK	Gearkasse	P	Caixa de velocidades
E	Caja de velocidades	S	Växellåda
GB	Gearbox		
I	Scatola cambio	F	Boîte de vitesses

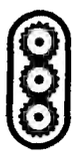

D	Zwischengetriebe	NL	Overbrengingstandwielen
DK	Overføsels - gearhjul	P	Carretos de transferencia
E	Piñones de transferencia	S	Överföringsdrev
GB	Transfer gear assembly		
I	Pignoneria di movimento	F	Pignons de transfert

D	Federung und Radaufhängung	NL	Vering
DK	Ophængning eller affjedring	P	Suspensão
E	Suspensión	S	Fjädring
GB	Suspension		
I	Sospensione	F	Suspension

D	Bremsen	NL	Remmen
DK	Bremser	P	Travões
E	Frenos	S	Bromssystem
GB	Brakes		
I	Freni	F	Freins

D	Hinterachse : Längslenker	NL	Achterbrug : Draagarm
DK	Bagbro : Bærearm	P	Eixo traseiro : Braço
E	Eje trasero : Brazo	S	Bakvagn : Bärarm
GB	Rear axle : Arm		
I	Assale posteriore : Braccio	F	Essieu arrière : Bras

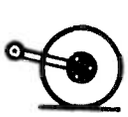

D	Hinterachse : Radnabe	NL	Achterbrung : Naaf
DK	Bagbro : Nav	P	Eixo traseiro : Cubo
E	Eje trasero : Buje	S	Bakvagn : Nav
GB	Rear axle : Hub		
I	Assale posteriore : Mozzo	F	Essieu arrière : Moyeu

	D Vorderachse : Unterer Querlenker DK Forbro : Nederste bærearm E Eje delantero : Brazo inférior GB Front axle : Lower arm I Assale anteriore : Braccio inferiore	NL Voorbrug : Onderdraagarm P Eixo dianteiro : Braço inferior S Framvagn : Undre länkarm F Essieu avant : Bras inférieur
	D Vorderachse : Achsschenkel DK Forbo : Styrebolt E Eje delantero : Pivote GB Front axle : Swivel assembly I Assale anteriore : Pivot	NL Voorbrug : Fusee P Eixo dianteiro : Pivot S Framvagn : Pivot F Essieu avant : Pivot
	D Klasse DK Klasse E Clase GB Class I Classe	NL Klasse P Classe S Klass F Classe
	D Ablassen DK Tømme E Vaciar GB Drain I Svuotare	NL Aftappen P Esvaziar S Töm ur F Vidanger
	D Entlüften DK Udlufte E Purgar GB Bleed I Spurgare	NL Ontluchten P Purgar S Lufta F Purger
	D Bearbeiten DK Bearbejde E Mecanizar GB Machine I Lavorare	NL Bewerken P Trabalhar a maquina S Bearbeta, slipa, etc. F Usiner

1

LIST OF OPERATIONS APPEARING IN THE CHAPTER: ENGINE

OPERATION No.	DESCRIPTION	OPERATIONS △ TEXTS	OPERATIONS ○ SYMBOLS	20 Petrol 829 A 5	22 Petrol J6T A 500	25 Petrol Injection 25/659	25 Prestige 25/659	25 Petrol Turbo 25/662	25 Prestige Petrol Turbo 25/662	25 Diesel 25/660	25 Diesel Turbo 25/648	25 Limousine Diesel Turbo 25/648	20 Safari Petrol + Familiale 829 A 5	25 Safari Petrol Injection 25/659	25 Safari Diesel + Familiale 25/660	25 Safari Diesel Turbo 25/648	Ambulance 829 A 5 or 25/660		
MA 100/1	Tools		○	X	X	X	X	X	X	X	X	X	X	X	X	X	X		
MA 100.00/1	2 litre petrol engine, type 829 A5: specification and particular features		○	X									X				X		
MA 100.00/2	2.2 litre petrol engine, type J6T A 500: specification and particular features		○		X														
MA 100.00/3	2.5 litre engine with petrol injection, type 25/659: specification and particular features		○			X	X							X					
MA 100.00/4	2.5 litre petrol turbo engine with injection, type 25/662 specification and particular features		○					X	X										
MA 100.00/5	2.5 litre normally aspirated Diesel engine, type 25/660 specification and particular features		○							X					X		X		
MA 100.00/6	2.5 litre Diesel turbo engine, type 25/648 specification and particular features		○								X	X				X			
MA 100.1/1	Removing and refitting the engine/gearbox assembly	△				X	X	X	X					X					
MA 100.3	Overhauling a Diesel engine (see BRE 0985.14)		○							X	X	X			X	X	X		
MA 112.3	Overhauling the cylinderhead (see BRE 0985.14)		○							X	X	X			X	X	X		
MA 122.0/1	Checking the valve timing	△		X	X								X				X		
MA 122.0/2	Checking the valve timing	△				X	X	X	X					X					
MA 122.0/3	Checking the valve timing	△								X	X	X			X	X	X		
MA 122.1/1	Removing/refitting the timing belt (on the vehicle)	△		X	X								X				X		
MA 122.1/2	Removing/refitting a timing chain, chain tensioner and timing gear (on the vehicle)	△				X	X	X	X					X					
MA 122.1/3	Removing/refitting the timing belt (in situ)	△								X	X	X			X	X	X		

LIST OF OPERATIONS APPEARING IN THE CHAPTER: ENGINE

OPERATION No.	DESCRIPTION	OPERATIONS △ TEXTS	OPERATIONS ○ SYMBOLS	VEHICLE CONCERNED ENGINE TYPE: 20 Petrol 829 A 5	22 Petrol J6T A 500	25 Petrol Injection 25/659	25 Prestige 25/659	25 Petrol Turbo 25/662	25 Prestige Petrol Turbo 25/662	25 Diesel 25/660	25 Diesel Turbo 25/648	25 Limousine Diesel Turbo 25/648	20 Safari Petrol + Familiale 829A5	25 Safari Petrol Injection 25/659	25 Safari Diesel + Familiale 25/660	25 Safari Diesel Turbo 25/648	Ambulance 829 A 5 or 25/660		
MA 124.0/1	Adjusting the valve clearances	△		X	X	X	X	X	X	X	X	X	X	X	X	X	X		
MA 133.00/1	Specification and particular features of the engine mounting brackets		○	X	X	X	X	X	X	X	X	X	X	X	X	X	X		
MA 133.0/1	Checking and adjusting the engine support brackets	△		X	X	X	X	X	X	X	X	X	X	X	X	X	X		
MA 180.00/1	Specification and particular features of the exhaust system		○	X	X								X				X		
MA 180.00/2	Specification and particular features of the exhaust system		○			X	X			X				X	X		X		
MA 180.00/3	Specification and particular features of the exhaust system		○								X	X				X			
MA 180.00/4	Specification and particular features of the exhaust system		○					X	X										
MA 180.1/1	Carrying out work on the exhaust system	△						X	X										
MA 220.0/1	Checking the engine oil pressure		○			X	X	X	X					X					
MA 220.0/2	Checking the engine oil pressure		○	X	X								X				X		
MA 220.0/3	Checking the engine oil pressure		○							X	X	X			X	X	X		
MA 230.00/1	Specification and particular features of the cooling circuit		○	X									X				X		
MA 230.00/2	Specification and particular features of the cooling circuit		○		X														
MA 230.00/3	Specification and particular features of the cooling circuit		○			X	X							X					
MA 230.00/4	Specification and particular features of the cooling circuit		○					X	X										

LIST OF OPERATIONS APPEARING IN THE CHAPTER; ENGINE

OPERATION No.	DESCRIPTION	OPERATIONS △ TEXTS	OPERATIONS ○ SYMBOLS	VEHICLE CONCERNED ENGINE TYPE: 20 Petrol 829 A 5	22 Petrol J6T A 500	25 Petrol Injection 25/659	25 Prestige 25/659	25 Petrol Turbo 25/662	25 Prestige Petrol Turbo 25/662	25 Diesel 25/660	25 Diesel Turbo 25/648	25 Limousine Diesel Turbo 25/648	20 Safari Petrol + Familiale 829 A 5	25 Safari Petrol Injection 25/659	25 Safari Diesel + Familiale 25/660	25 Safari Diesel Turbo 25/648	Ambulance 829 A 5 or 25/660		
MA 230.00/5	Specification and particular features of the cooling circuit		○								X	X				X			
MA 230.00/6	Specification and particular features of the cooling circuit		○							X					X		X		
MA 230.0/1	Filling and bleeding the cooling circuit	△		X	X	X	X	X	X	X	X	X	X	X	X	X	X		

OUT 50 6602 T

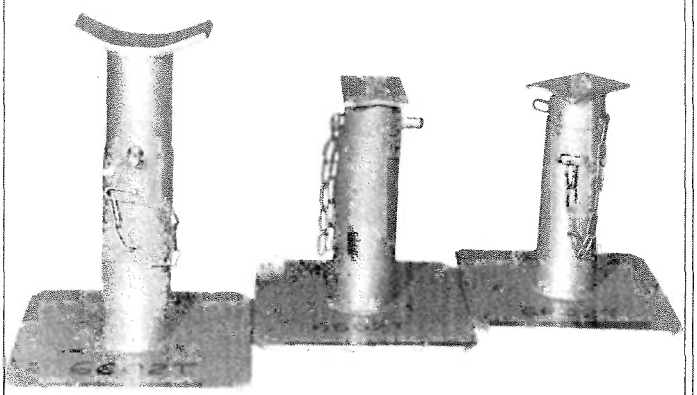

13-815

OUT 30 6012 T

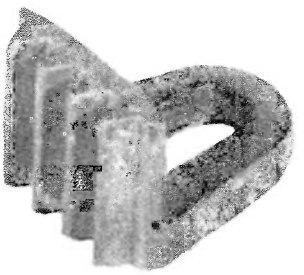

79-252

2517 T bis

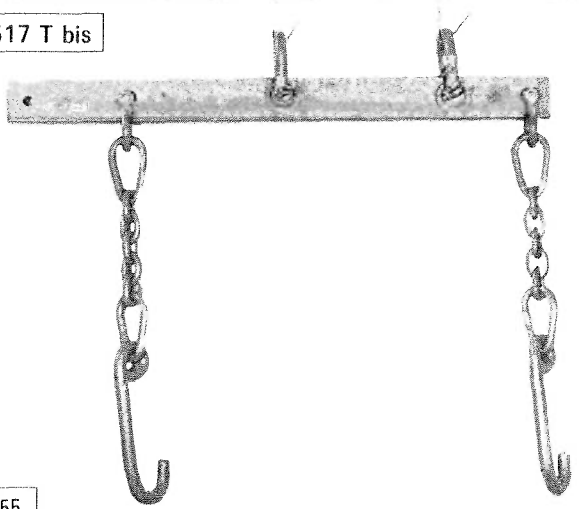

13-555

OUT 20 6323 T

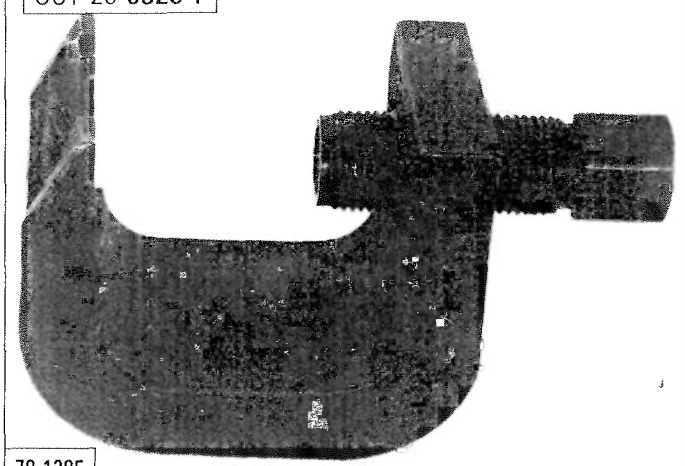

78-1285

2279 T bis a

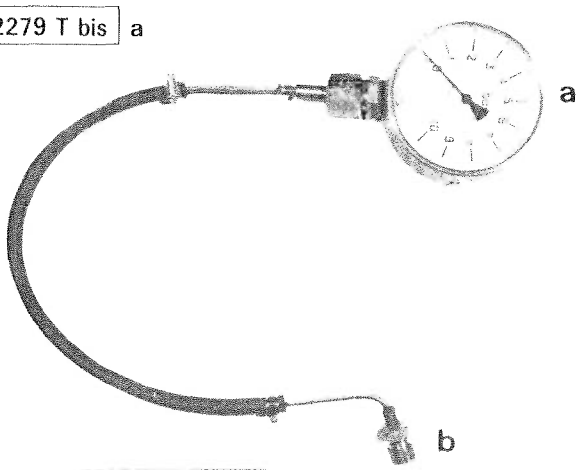

13-462

OUT 10 6004 T b

5602 T

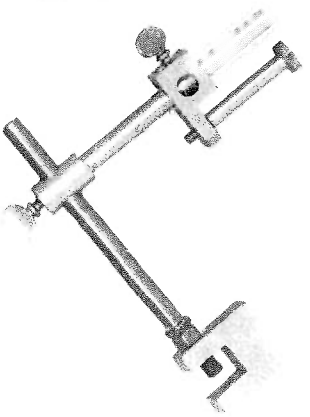

13-440

2437 T

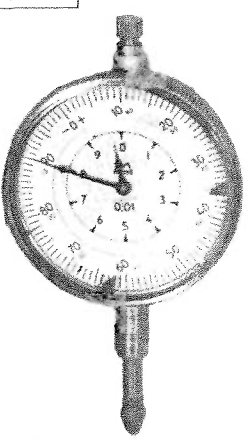

12-827

3312 T

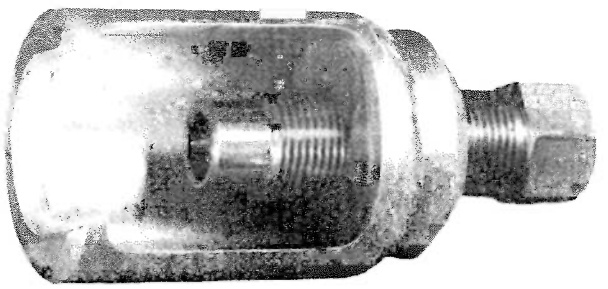

79-959

OUT 30 4061 T

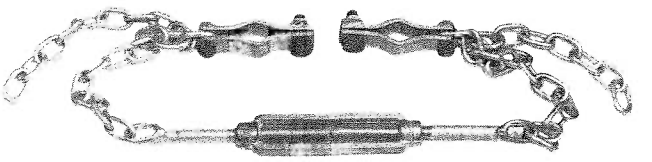

82-94

OUT 20 6310 T

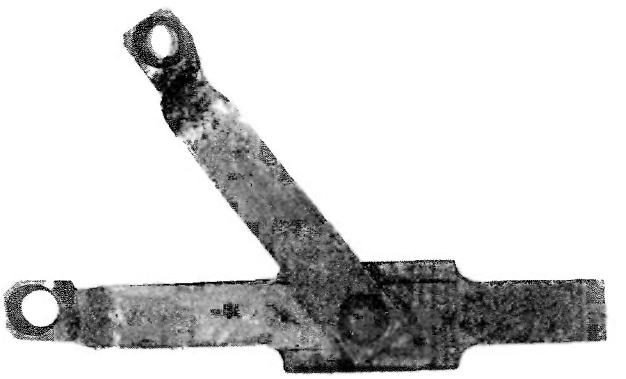

13-723

OUT 20 6031 T

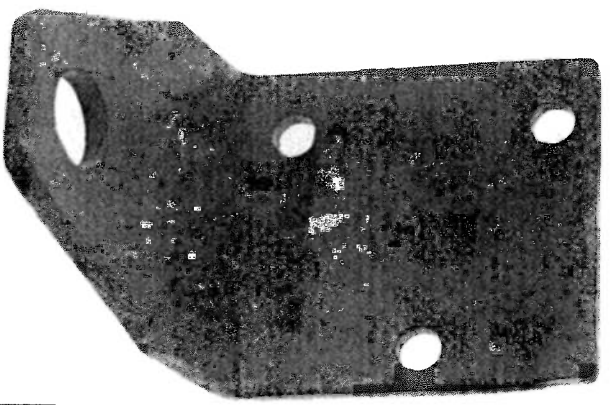

85-498

1682 T

9469

OUT 20 6320 T

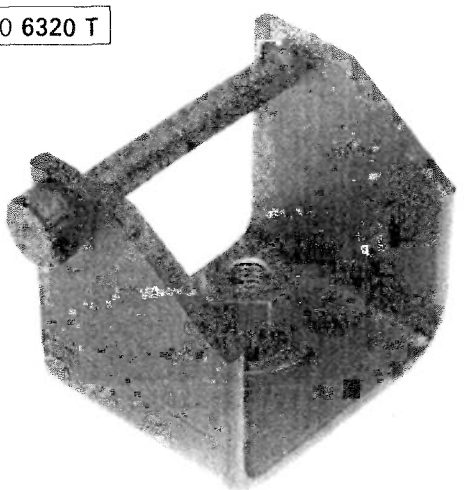

85-333

OUT 20 6028 TK

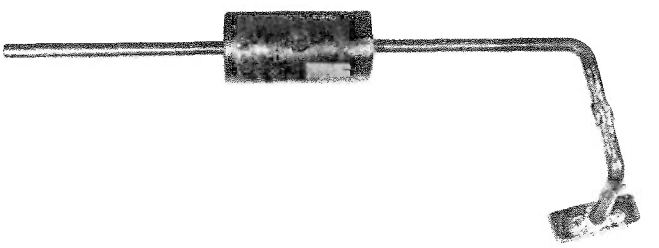

83-301

	829.A5 J6 RA 500 (AM 87 →)	
x 4	1995 cm³	
C Ø	Ø	88 mm
	C	82 mm
V : v $\frac{V + v}{v}$	9,2/1 (829.A5) 9,5/1 (J6 RA 500)	
	SUPER 98 RON mini	

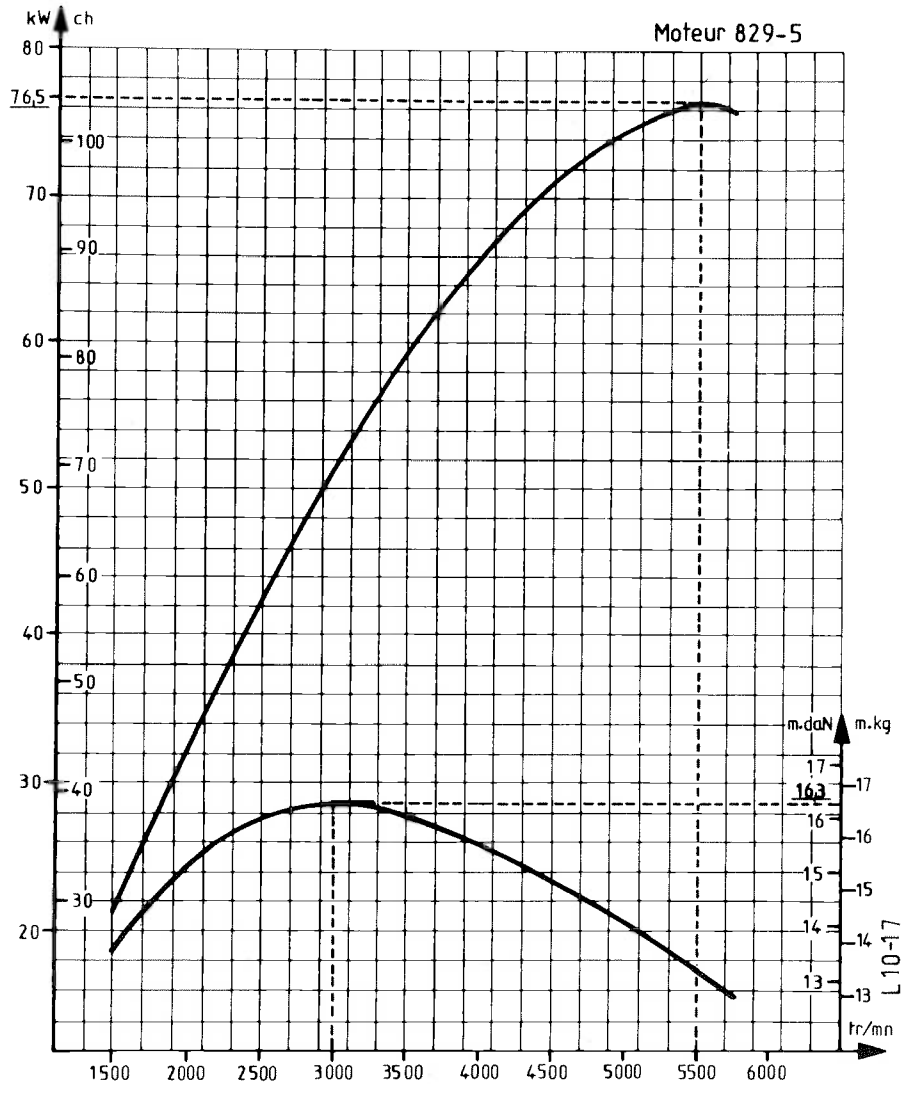

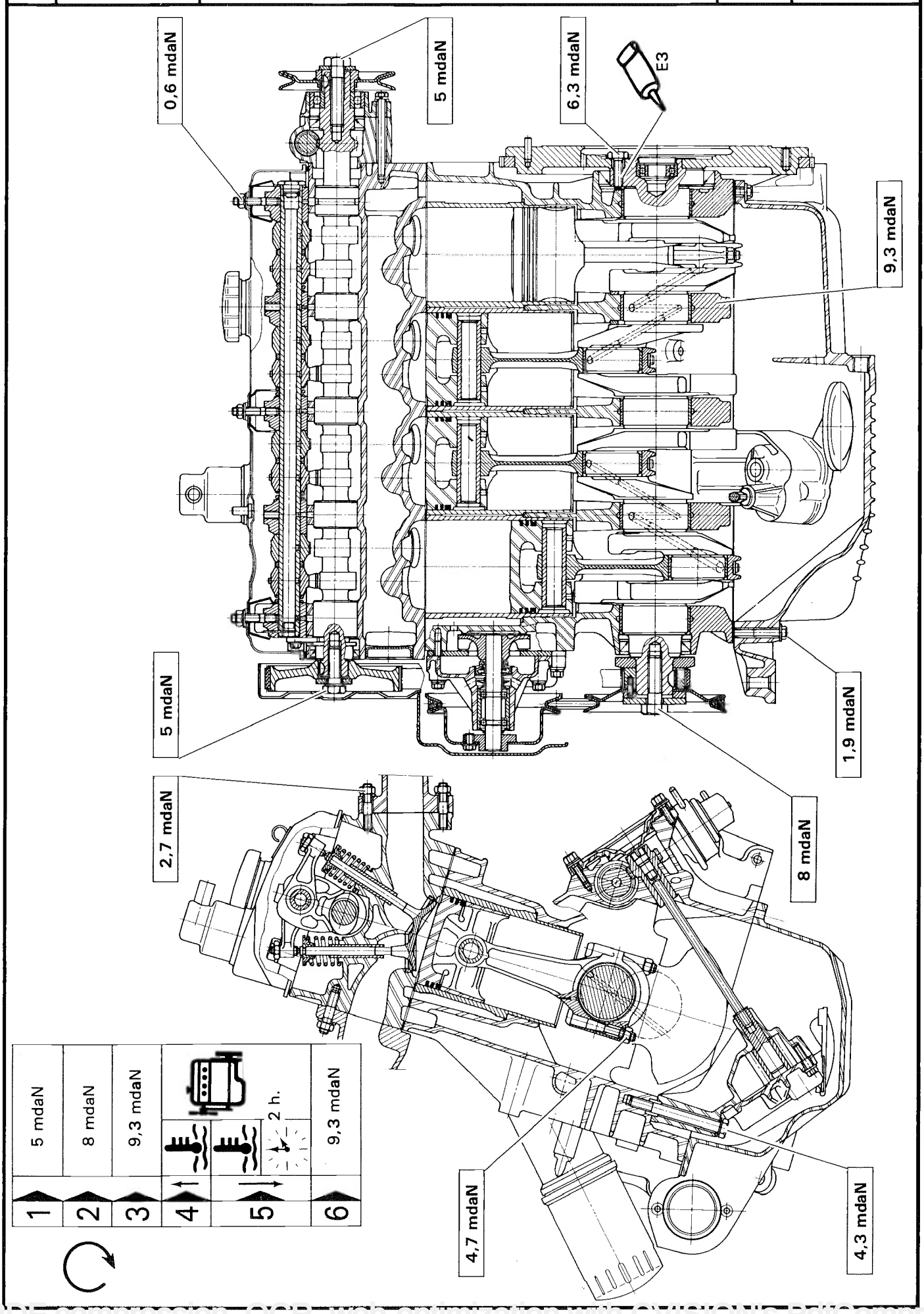

∅	∅ (mm) = 66,668 → 66,687

		∅ 1 (mm)	∅ 2 (mm)
∅ 1 / ∅ 2		52,267 → 52,286	62,873 → 62,892
a / b	a - b	maxi 0,005	maxi 0,005
		1,846 → 1,852	1,878 → 1,884

		0,067 → 0,252
		I : 2,80 → 2,85 II : 2,85 → 2,90 III : 2,90 → 2,95 IV : 2,95 → 3,00

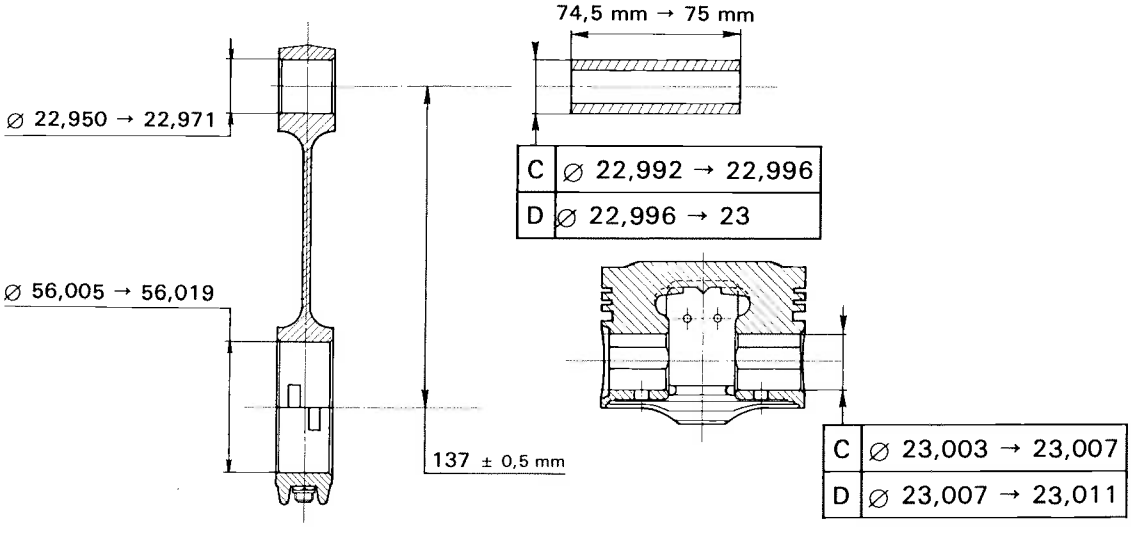

	A	⌀ 88 → 88,010	D	⌀ 87,930 → 87,940
	A	⌀ 88,010 → 88,020	D	⌀ 87,940 → 87,950
	A	⌀ 88,020 → 88,030	D	⌀ 87,950 → 87,960

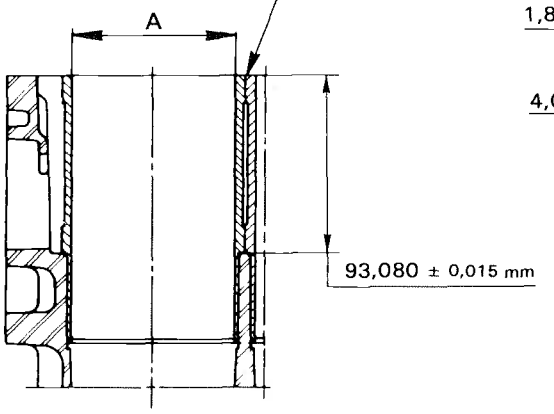

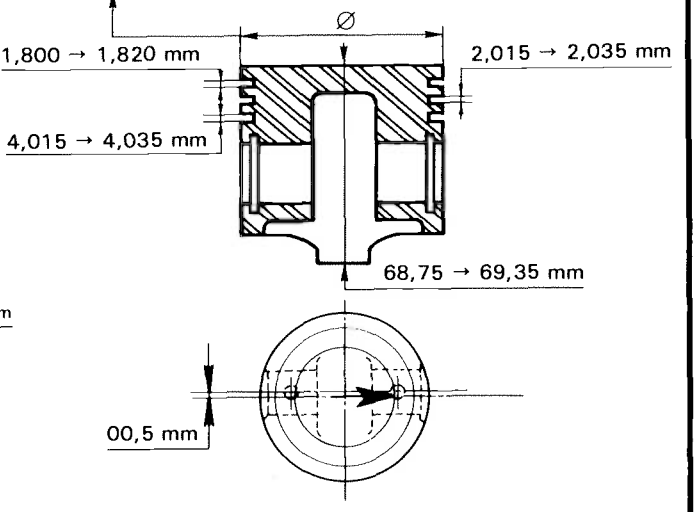

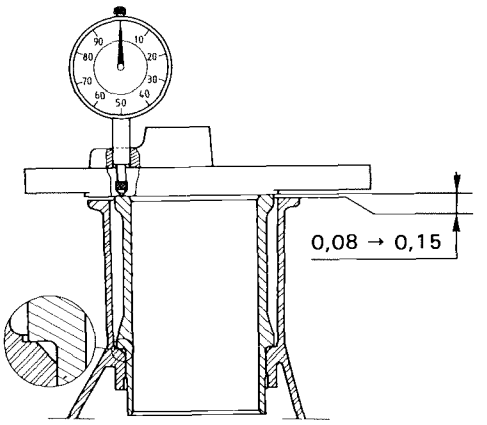

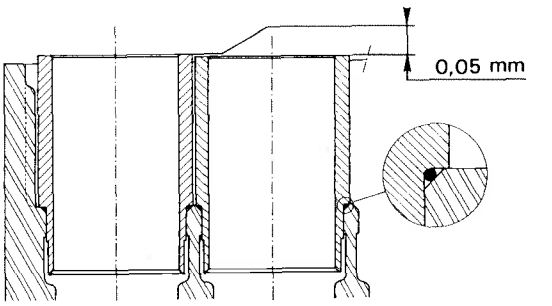

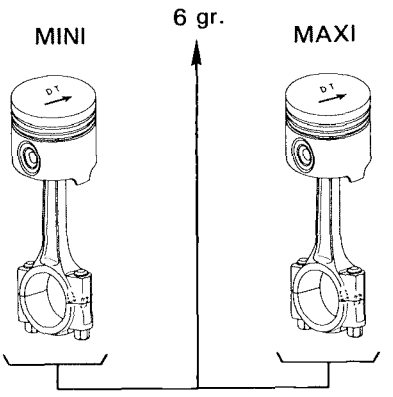

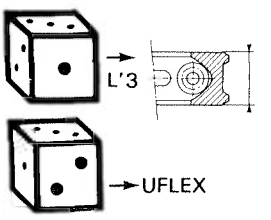

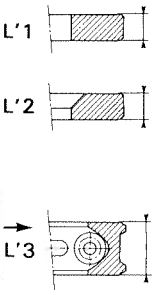

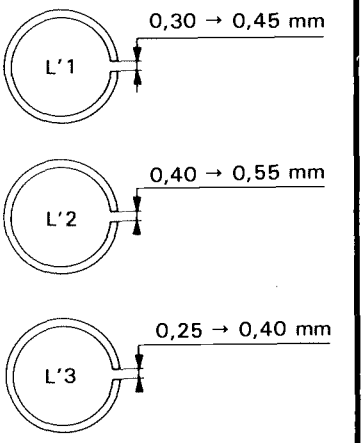

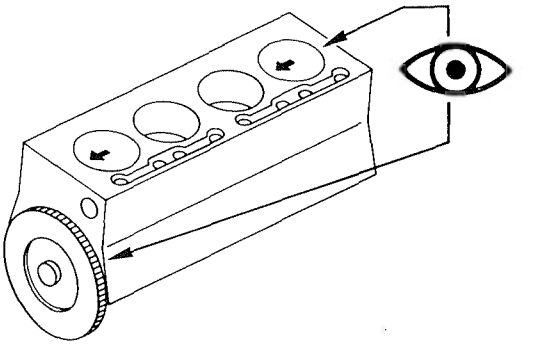

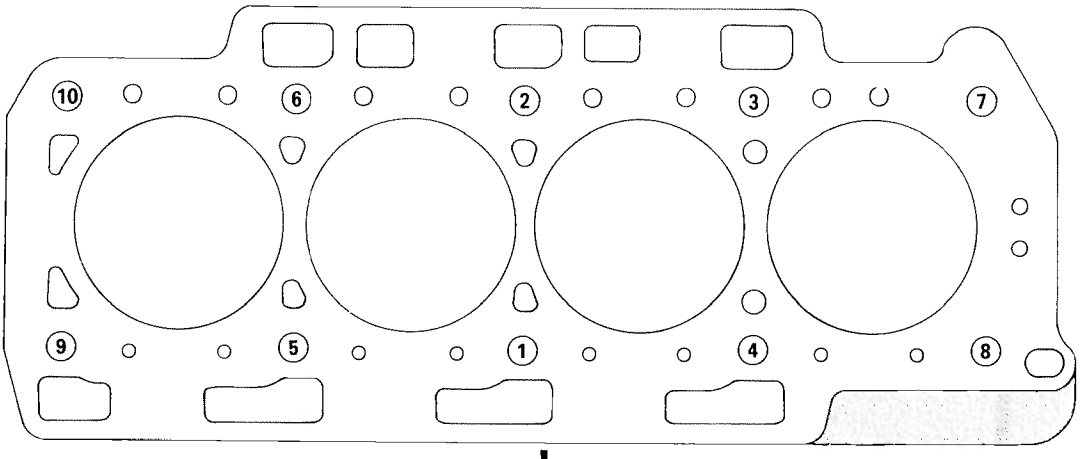

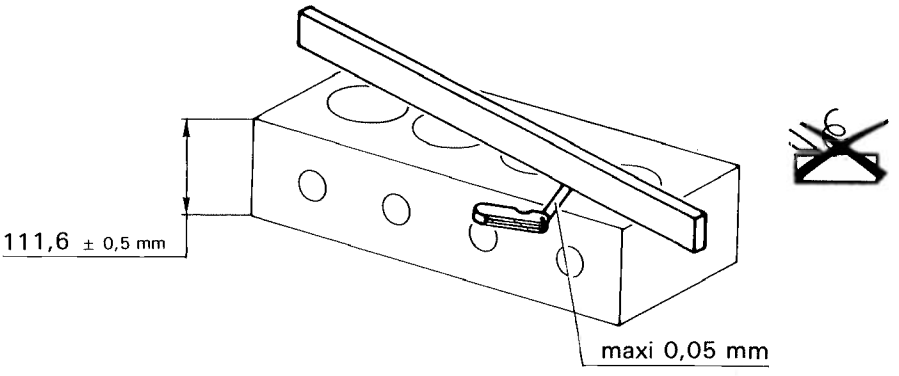

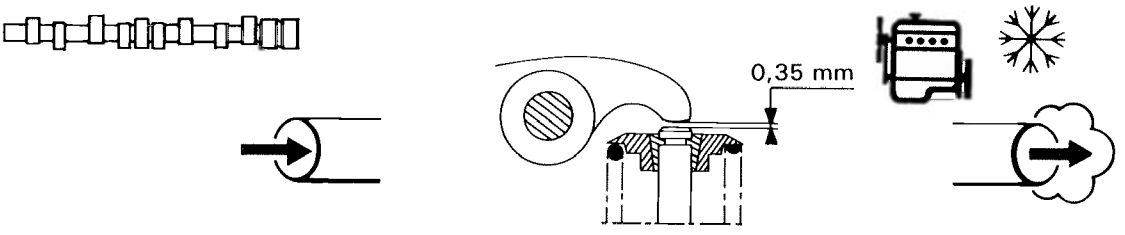

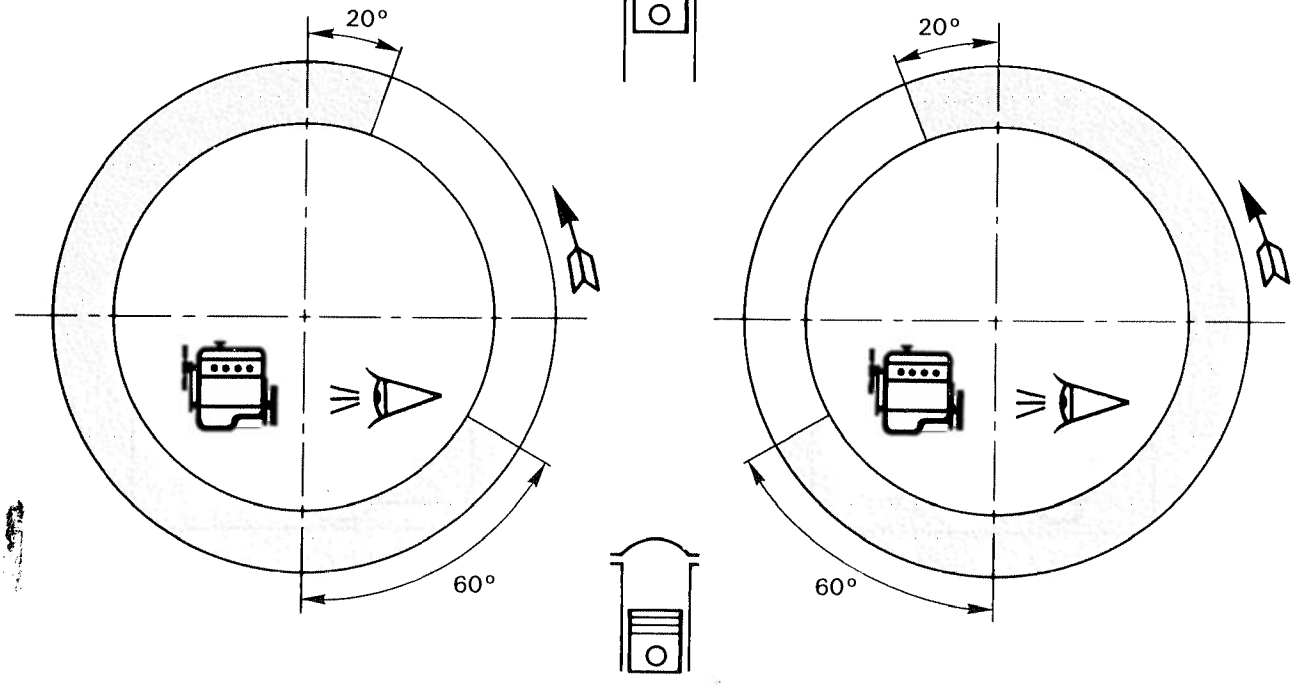

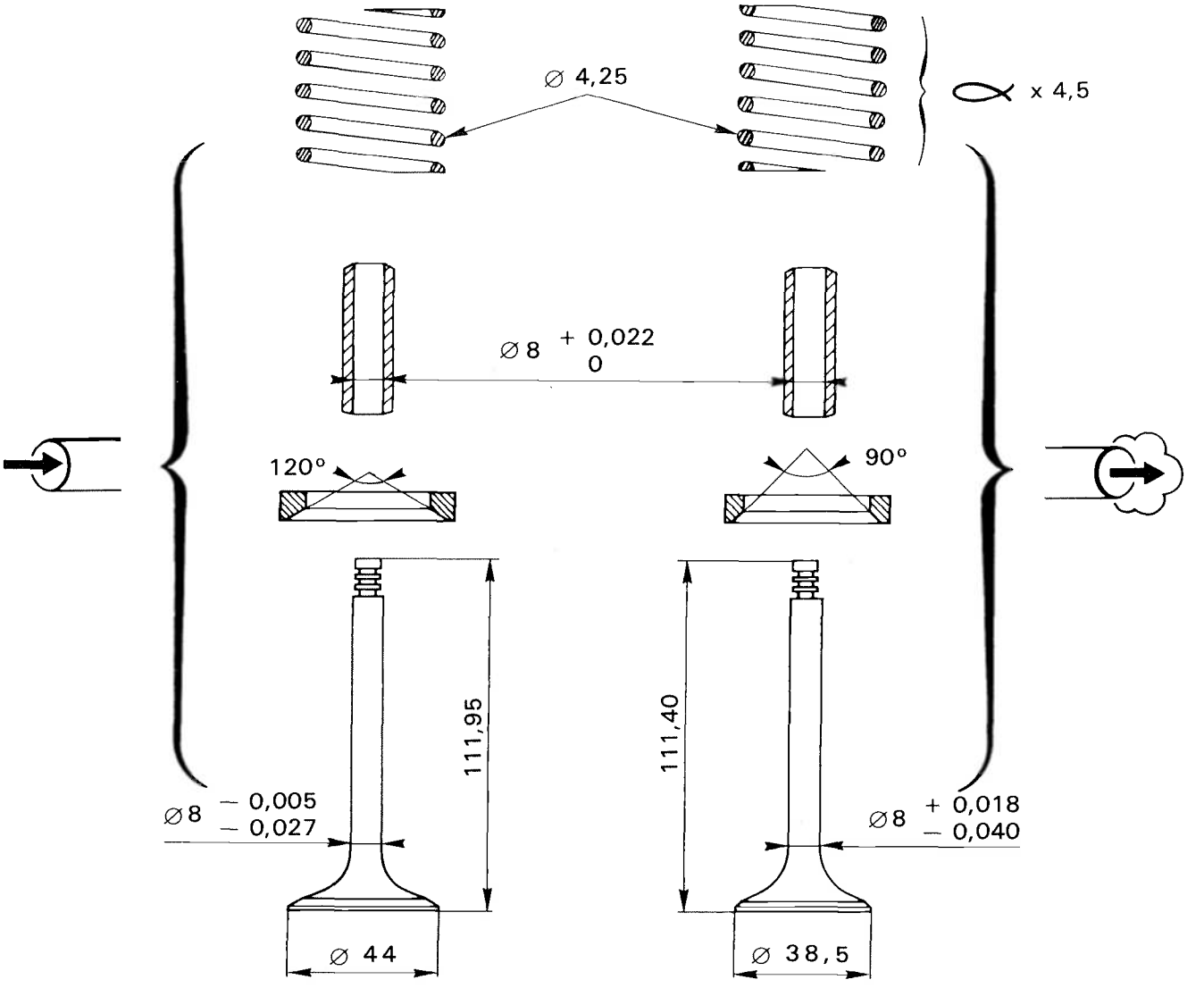

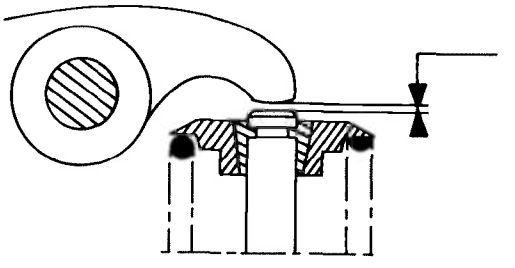

	0,10	0,25

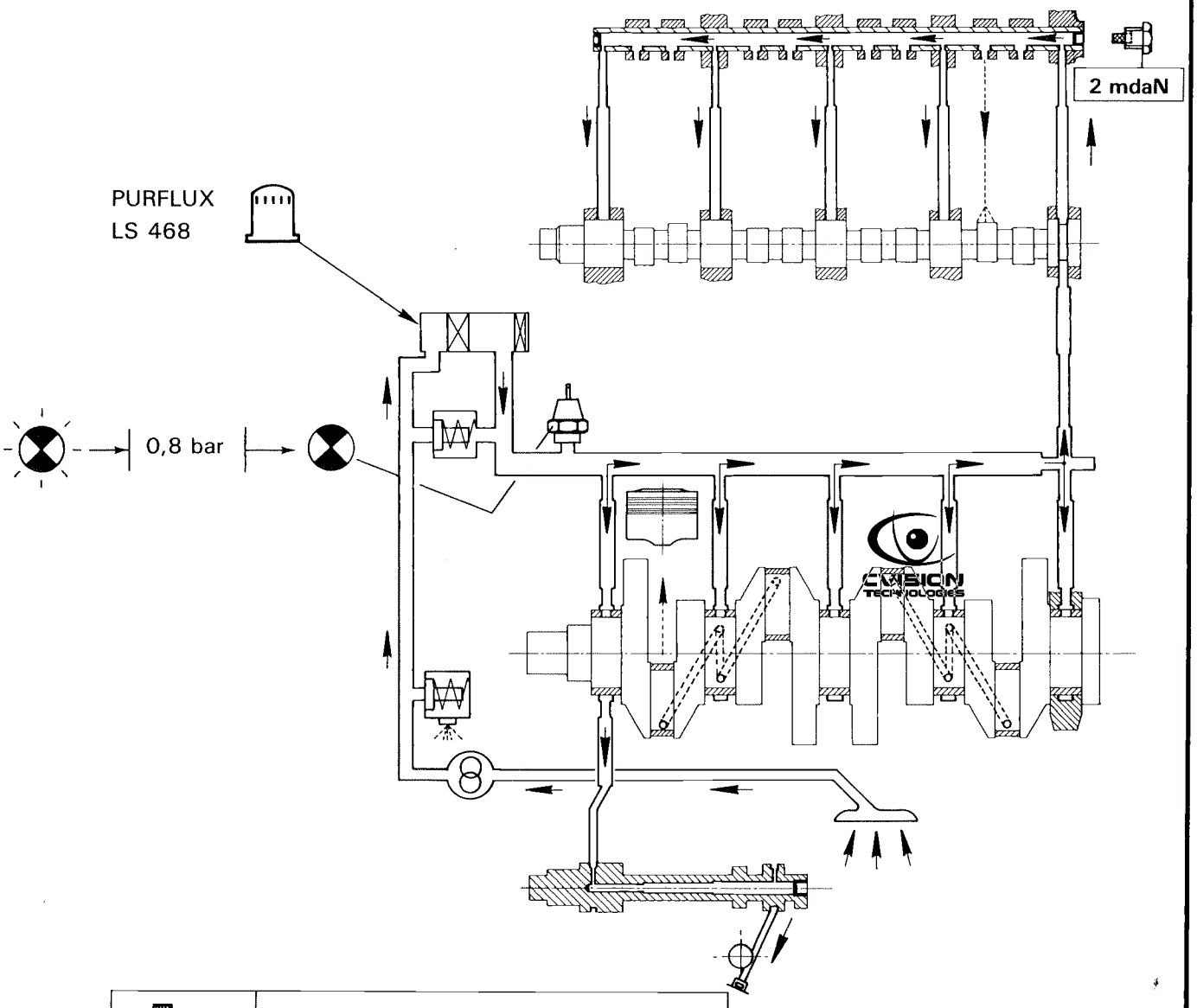

	TOTAL GTS Plus 10 W 40 + GTI Plus 10 W 30

	5 L
	5,25 L

90°C

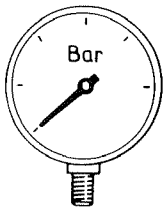

800/min — 1,4 bar

3000/min — 4,45 bars

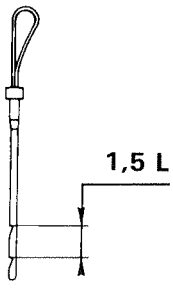

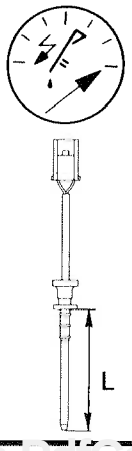

L = 101 mm

	J6T.A500	
x 4	2165 cm³	
C, Ø	Ø	88 mm
	C	89 mm
V : v, $\frac{V + v}{V}$	9,8/1 mm	
	SUPER 98 RON mini	

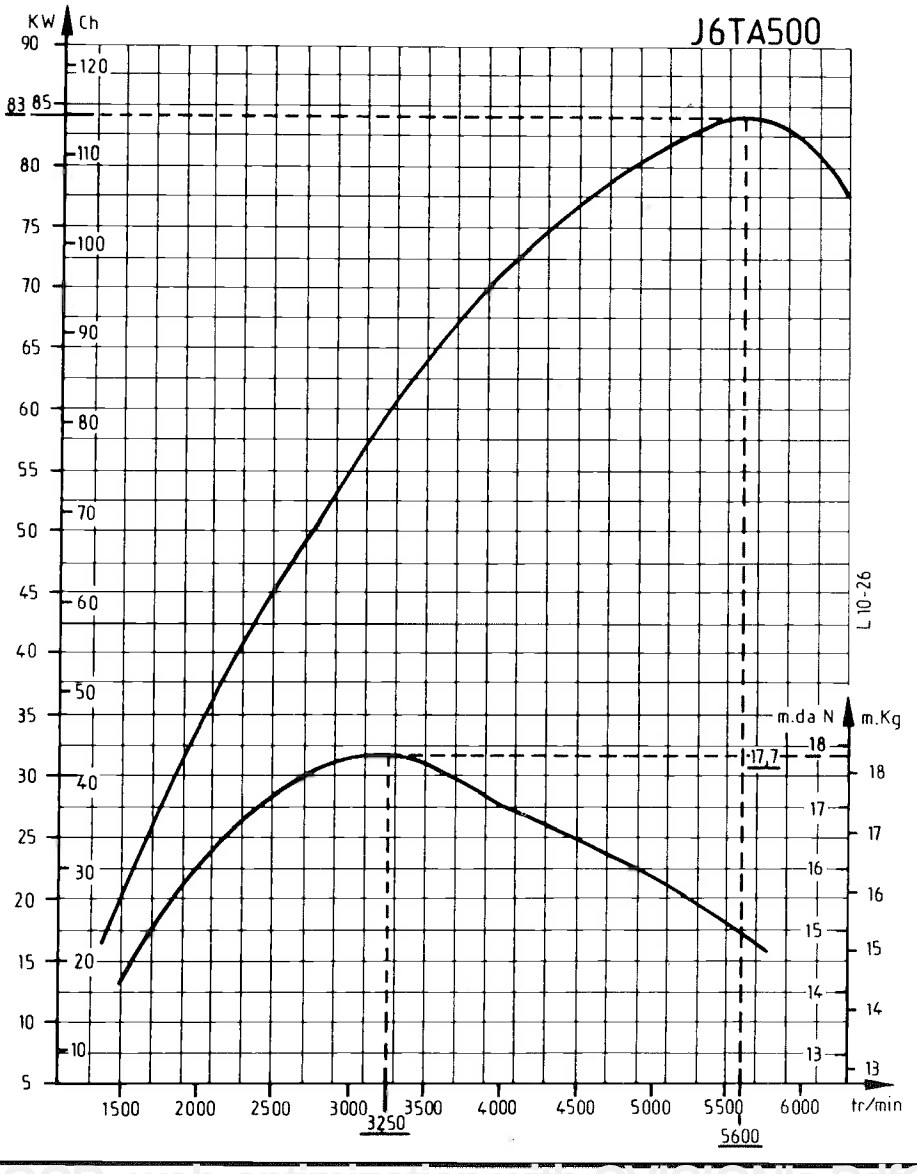

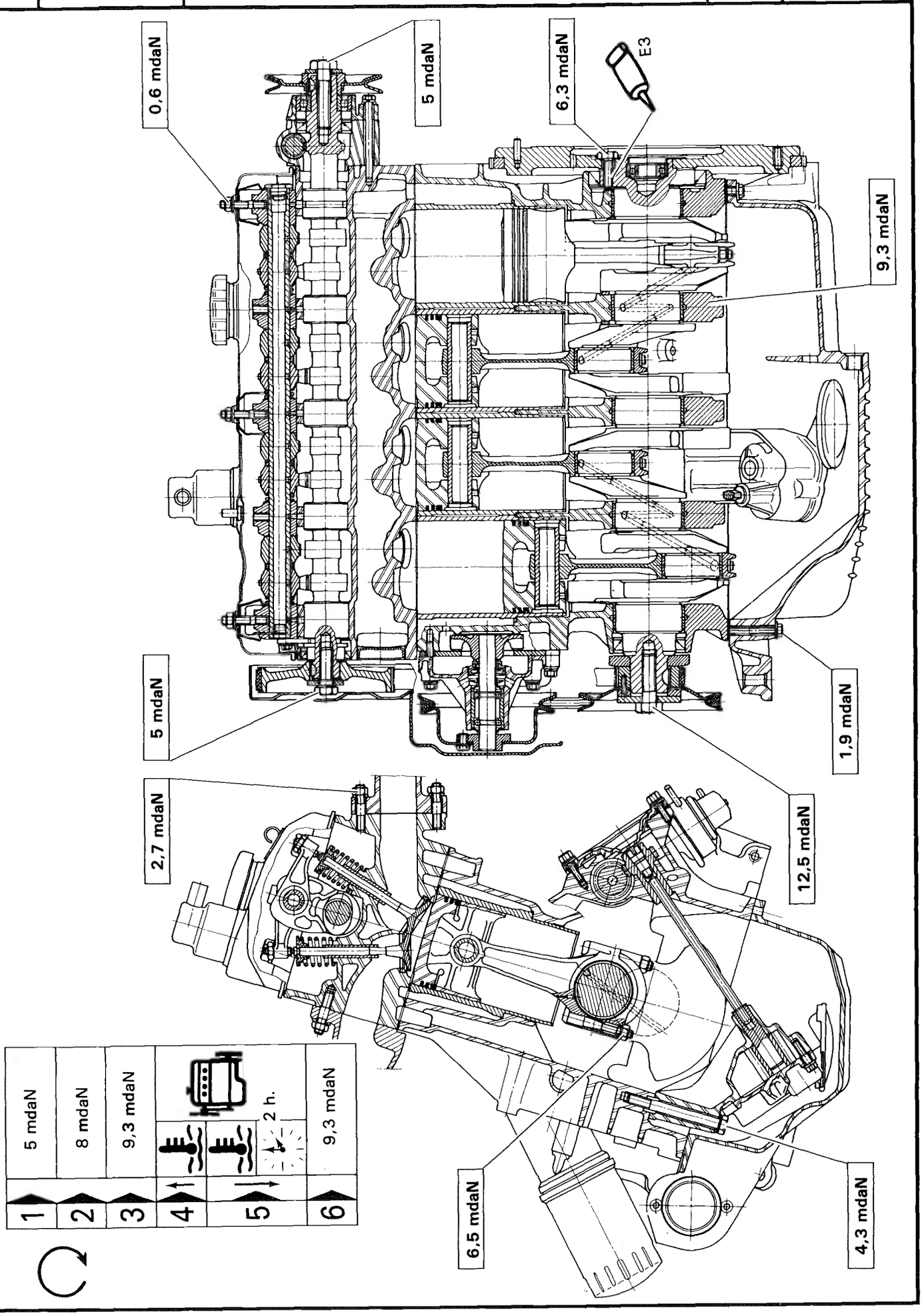

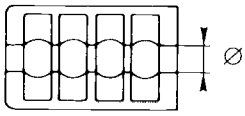	∅ (mm) = 66,668 → 66,687

		∅ 1 (mm)	∅ 2 (mm)
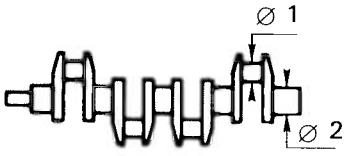		56,267 → 56,286	62,871 → 62,880
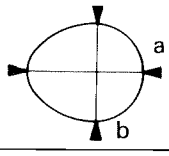	a-b	maxi 0,005	maxi 0,005
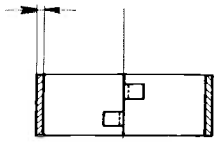		1,836 → 1,841	1,876 → 1,864

		0,10 → 0,30
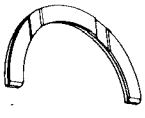		I : 2,80 → 2,85 II : 2,85 → 2,90 III : 2,90 → 2,95 IV : 2,95 → 3,00

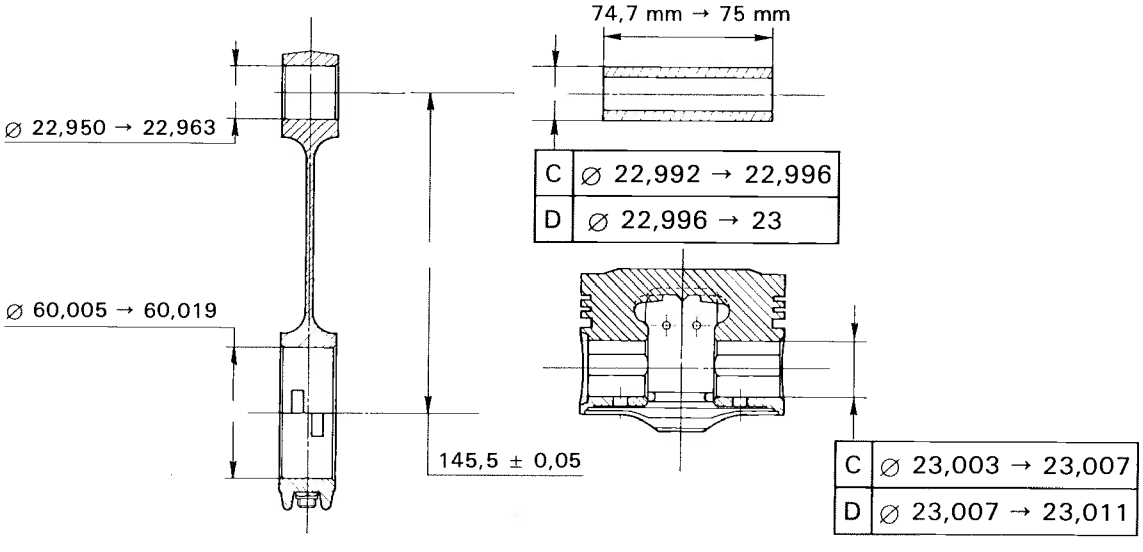

	A	⌀ 88 → 88,010	D	⌀ 87,930 → 87,940
	A	⌀ 88,010 → 88,020	D	⌀ 87,940 → 87,950
	A	⌀ 88,020 → 88,030	D	⌀ 87,950 → 87,960

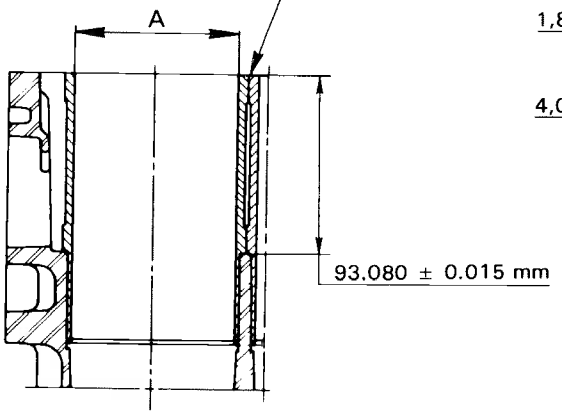

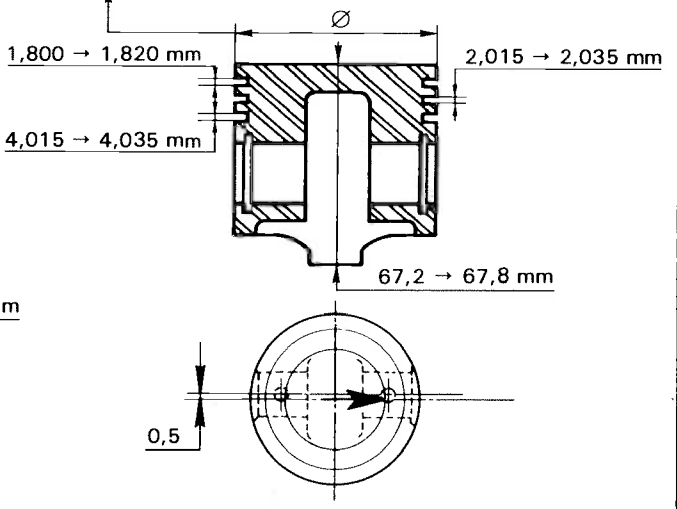

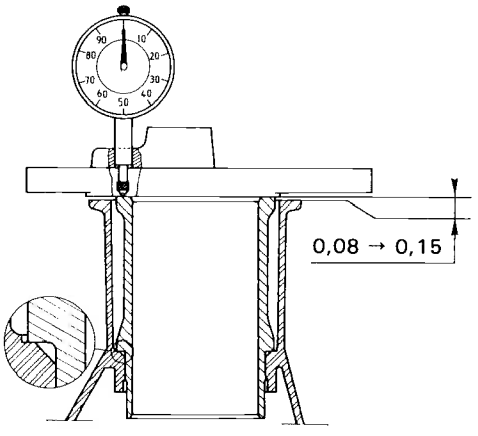

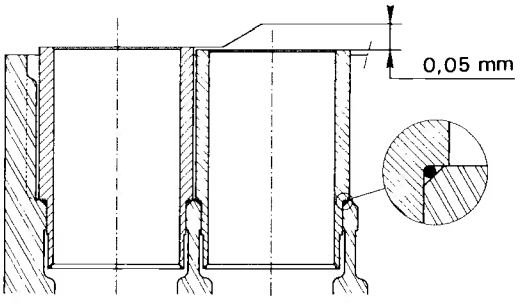

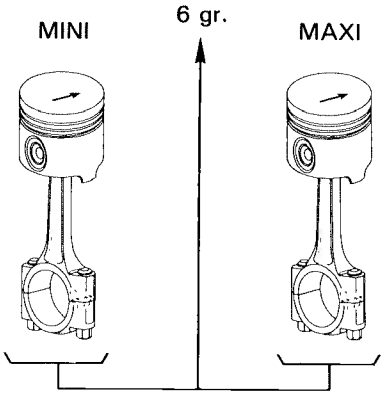

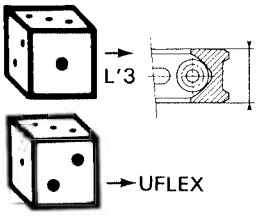

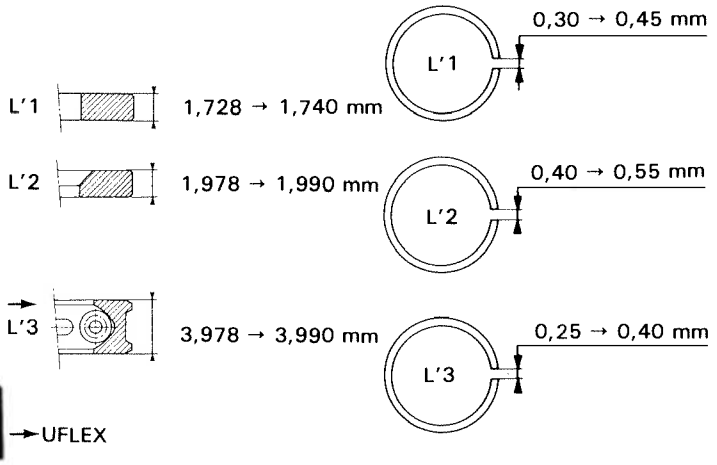

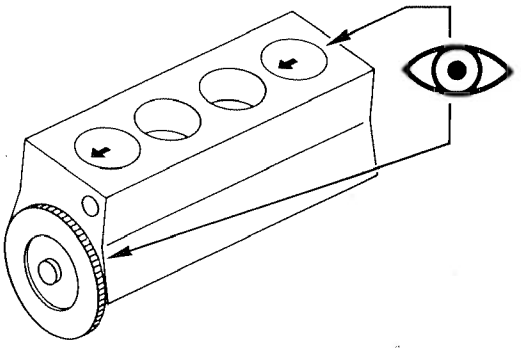

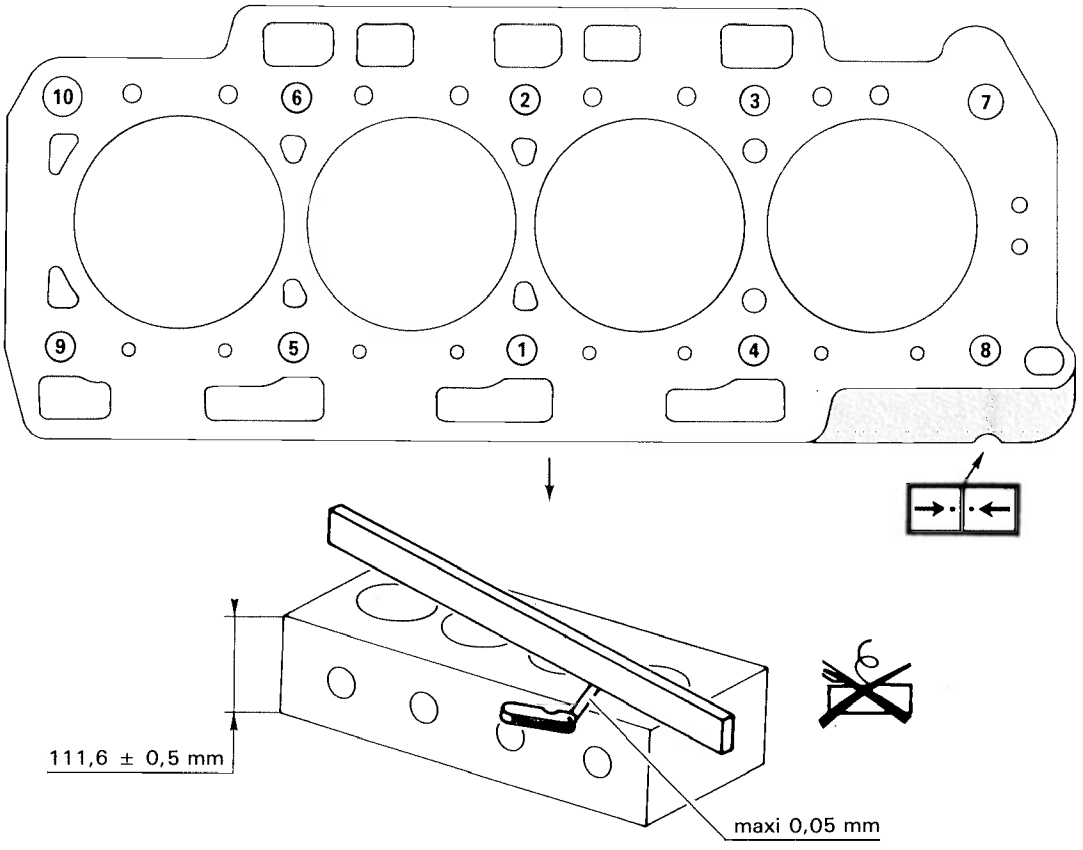

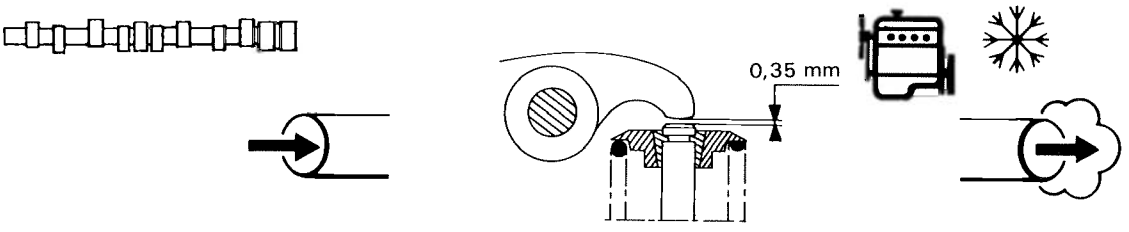

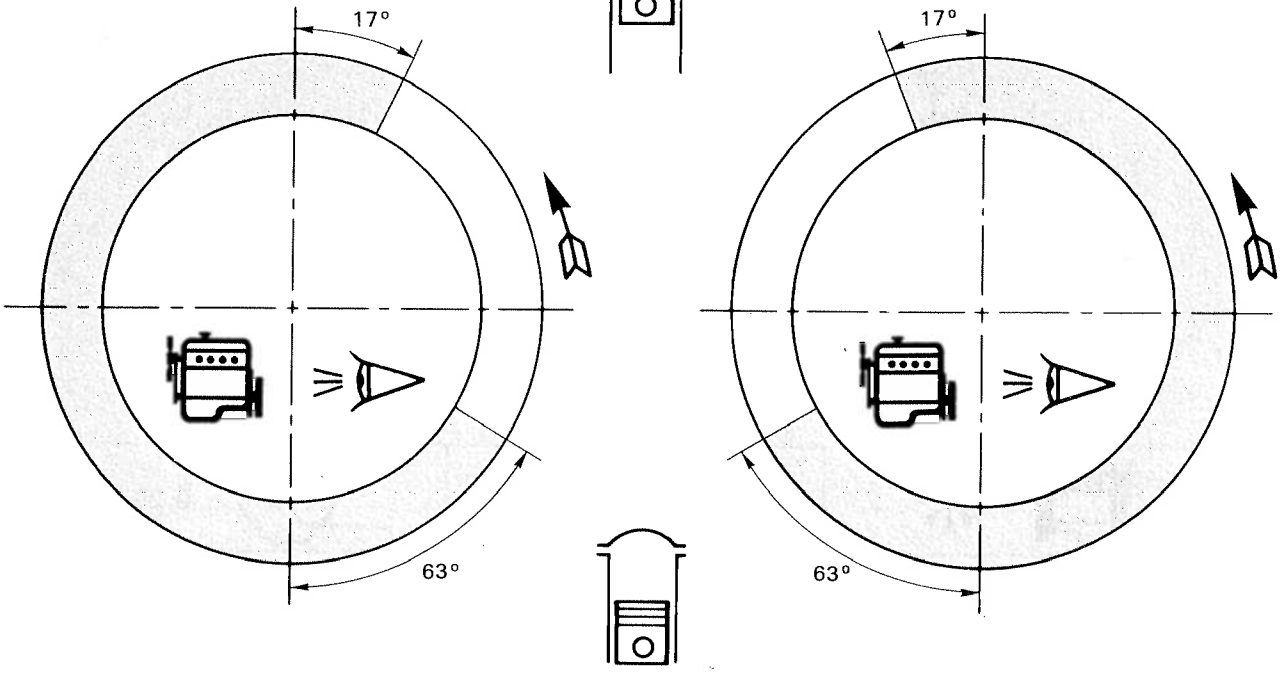

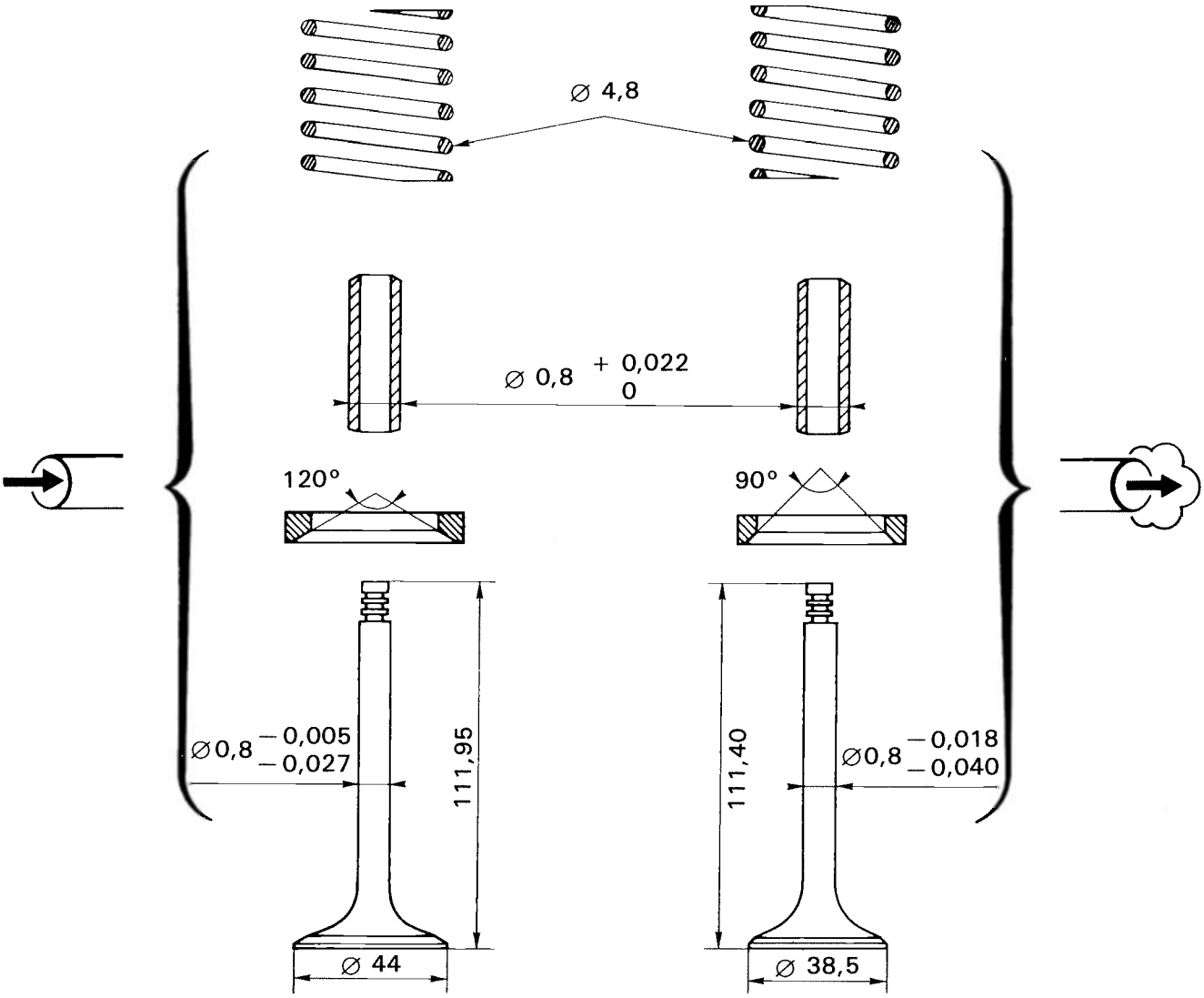

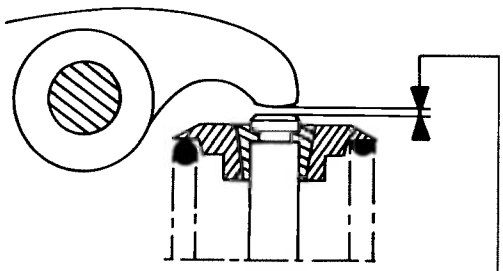

	0,10	0,25

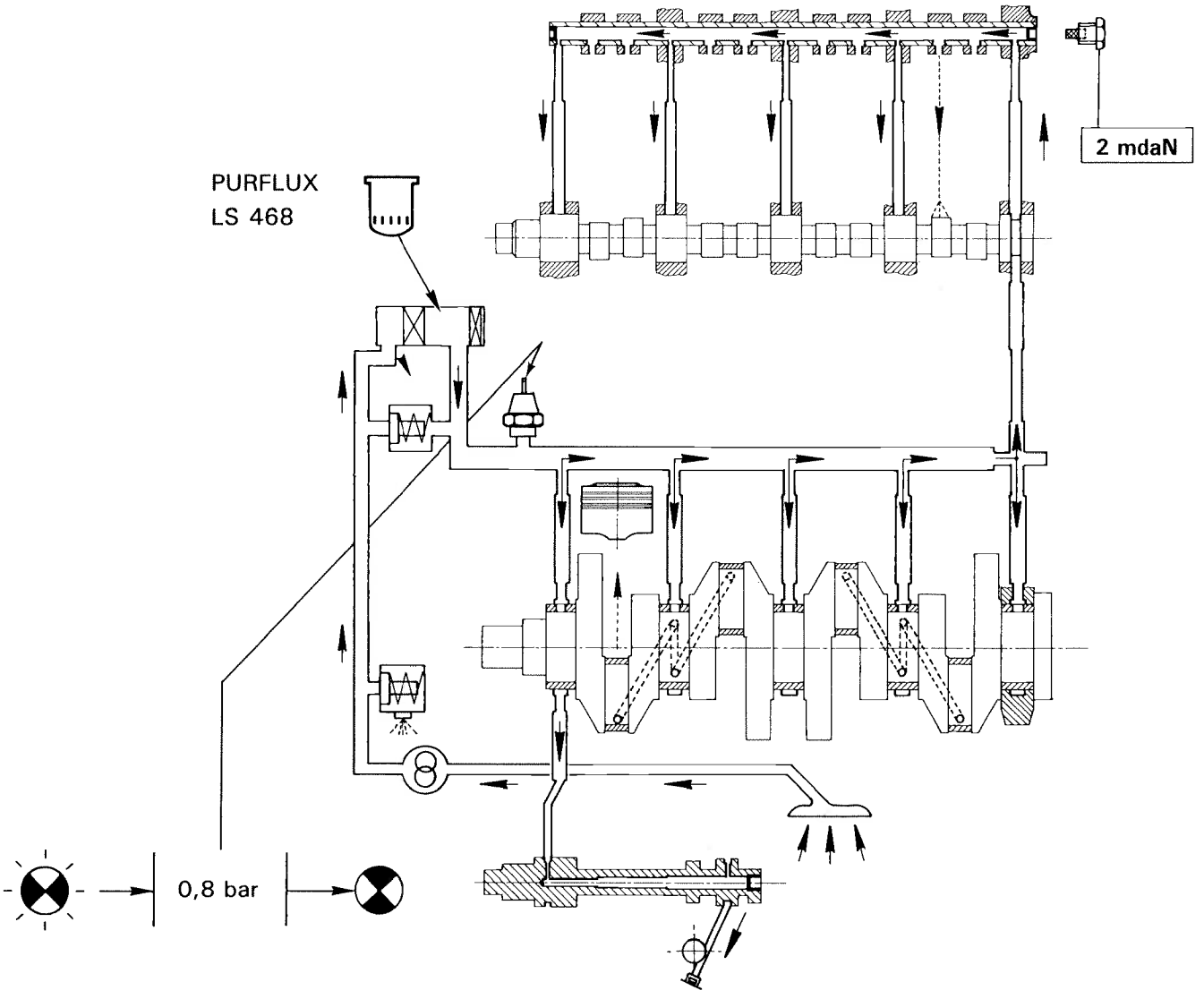

		TOTAL GTS Plus 10 W 40 + GTI Plus 10 W 30

	5 L		5,25 L

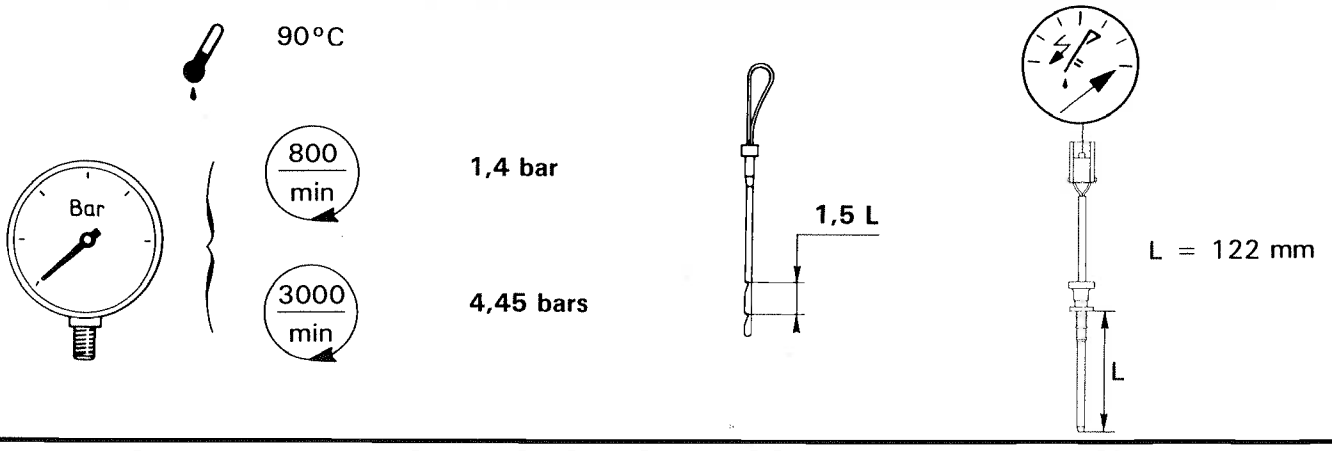

	M25/659	
x 4	2500 cm³	
c, Ø	Ø	93 mm
	c	92 mm
V, v : v	$\frac{V + v}{v}$	8,75 /1
	SUPER 98 RON mini	

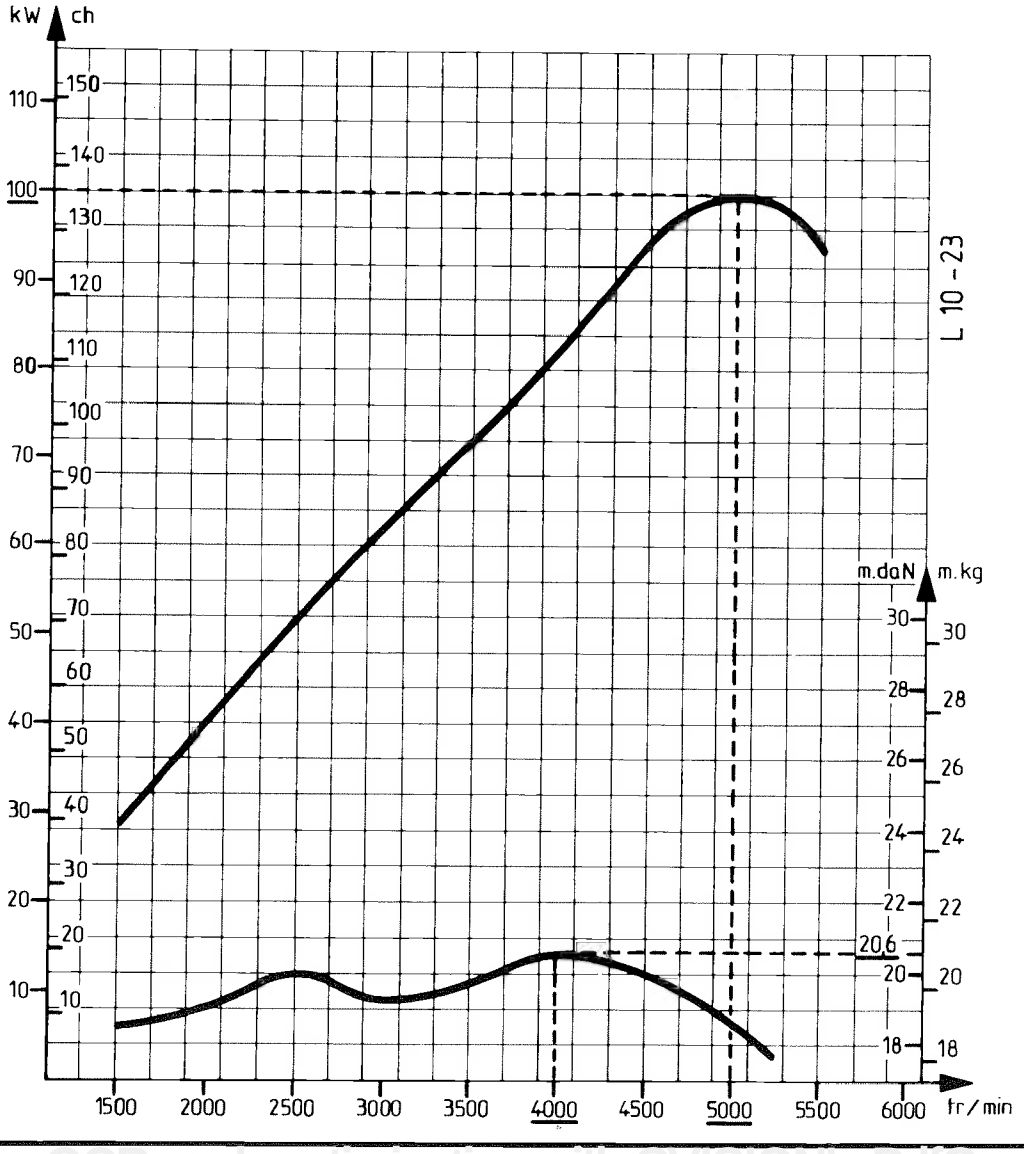

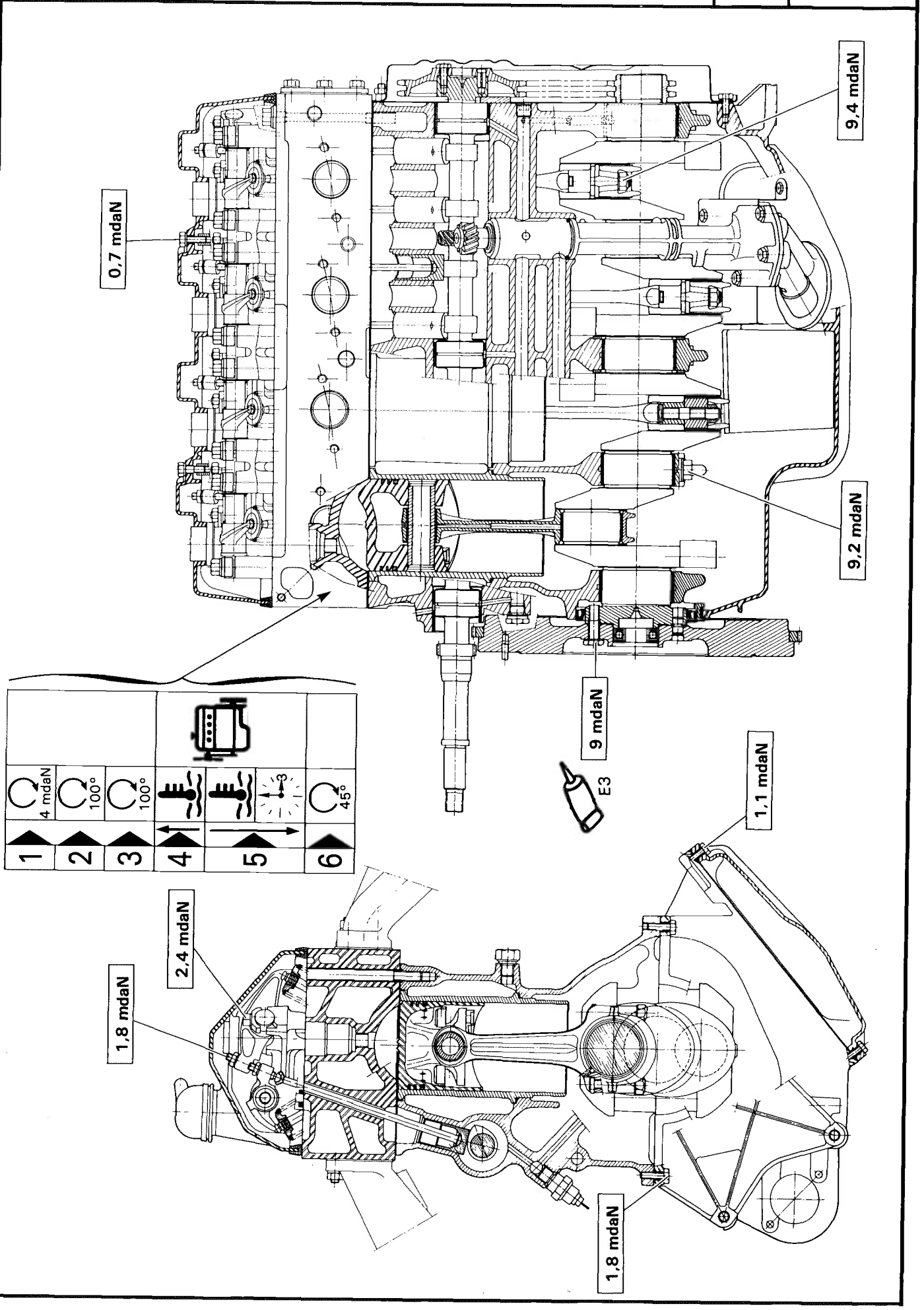

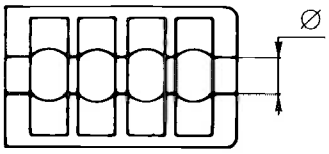	∅ mm : 71,695 → 71,705

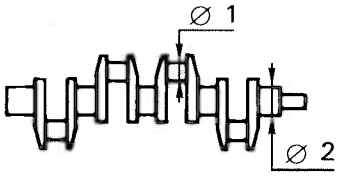

	∅ 1 (mm)	∅ 2 (mm)
A	54,005 → 53,990	67,050 → 67,035
B	53,755 → 53,740	66,800 → 66,785

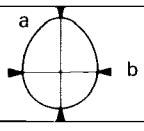 a – b	0,0025 mm

	∅ I (mm)	∅ II (mm)
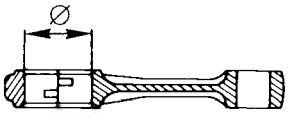	57,675 → 57,685	57,685 → 57,695 mm

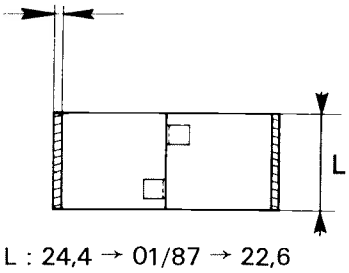 L : 24,4 → 01/87 → 22,6	A	I	1,819 mm → 1,828 m	2,306 mm → 2,312 mm
		II	1,824 mm → 1,832 mm	
	B	I	1,944 mm → 1,952 mm	2,431 mm → 2,437 mm
		II	1,949 mm → 1,957 mm	

		0,045 mm → 0,160 mm
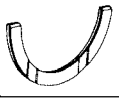		3,10 - 3,14 - 3,18 - 3,22 - 3,26

I	93,00 → 93,01 mm	92,950 → 92,960 mm
II	93,01 → 93,02 mm	92,960 → 92,970 mm
III	93,02 → 93,03 mm	92,970 → 92,980 mm

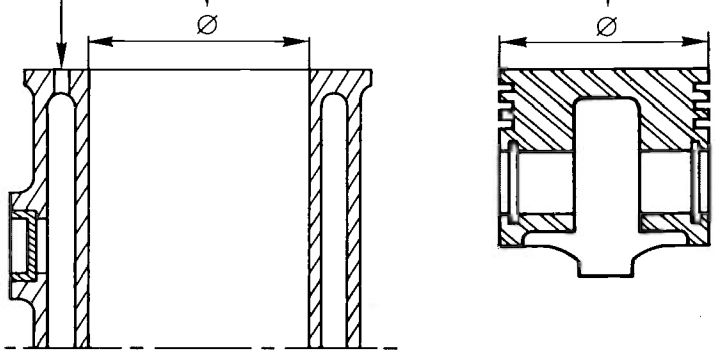

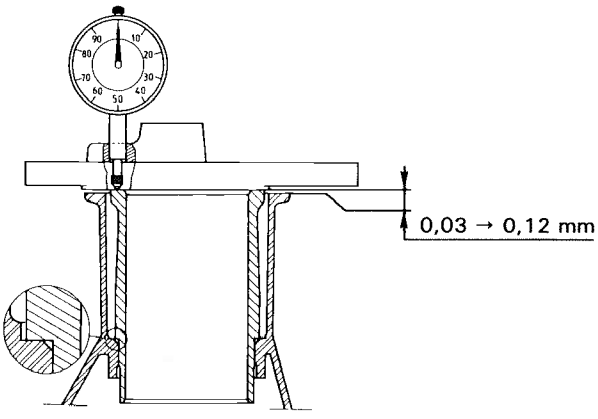

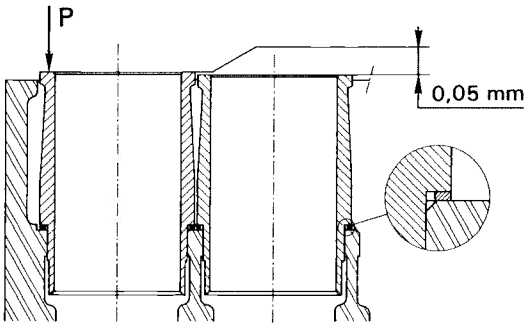

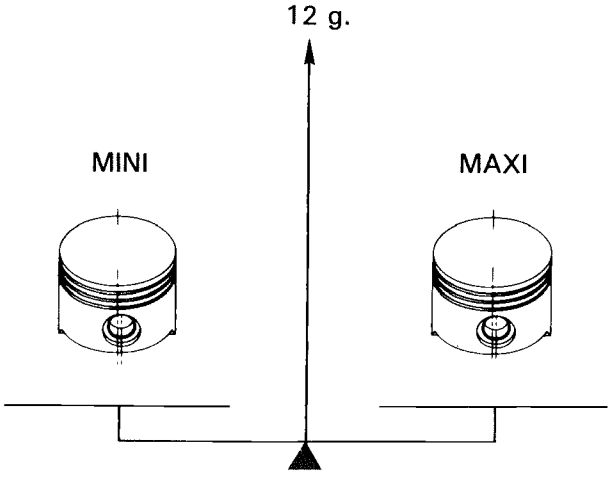

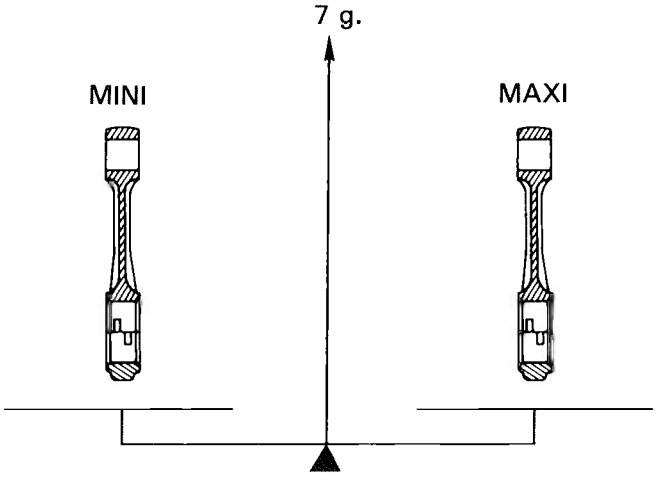

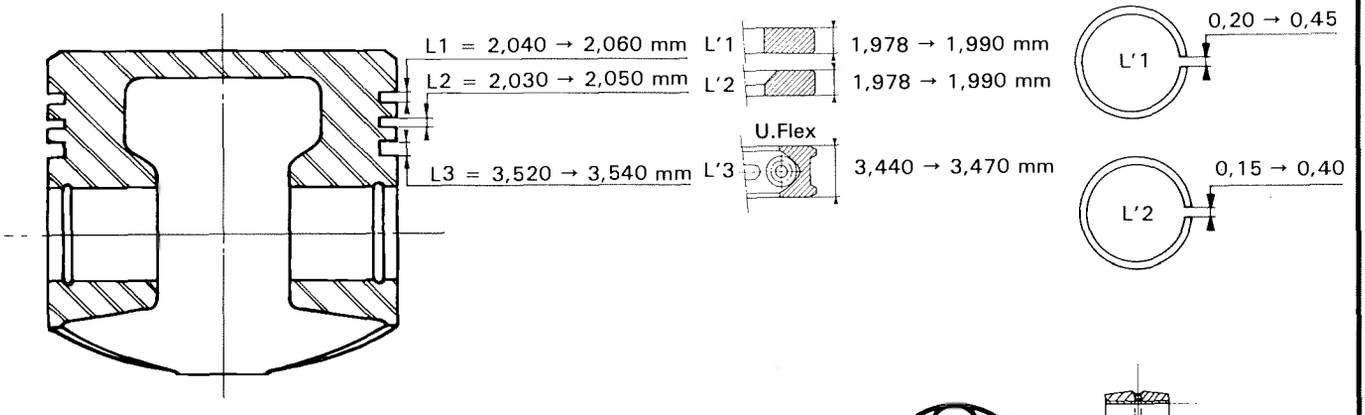

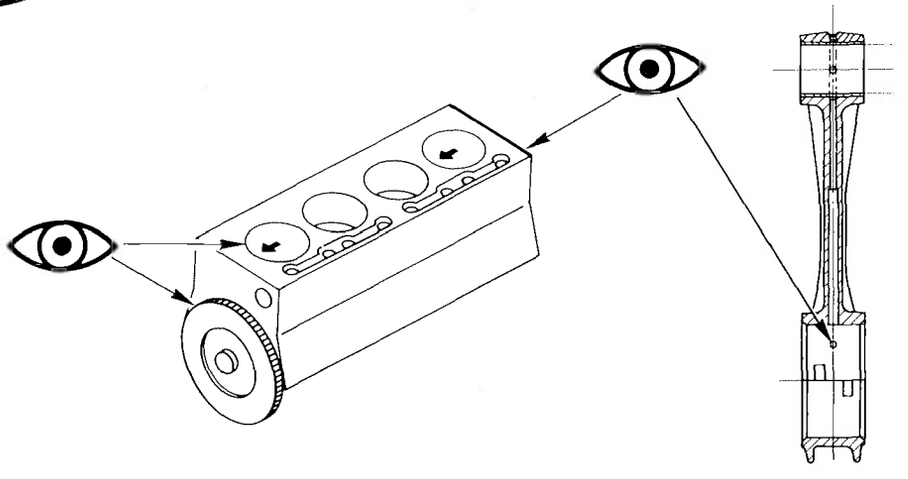

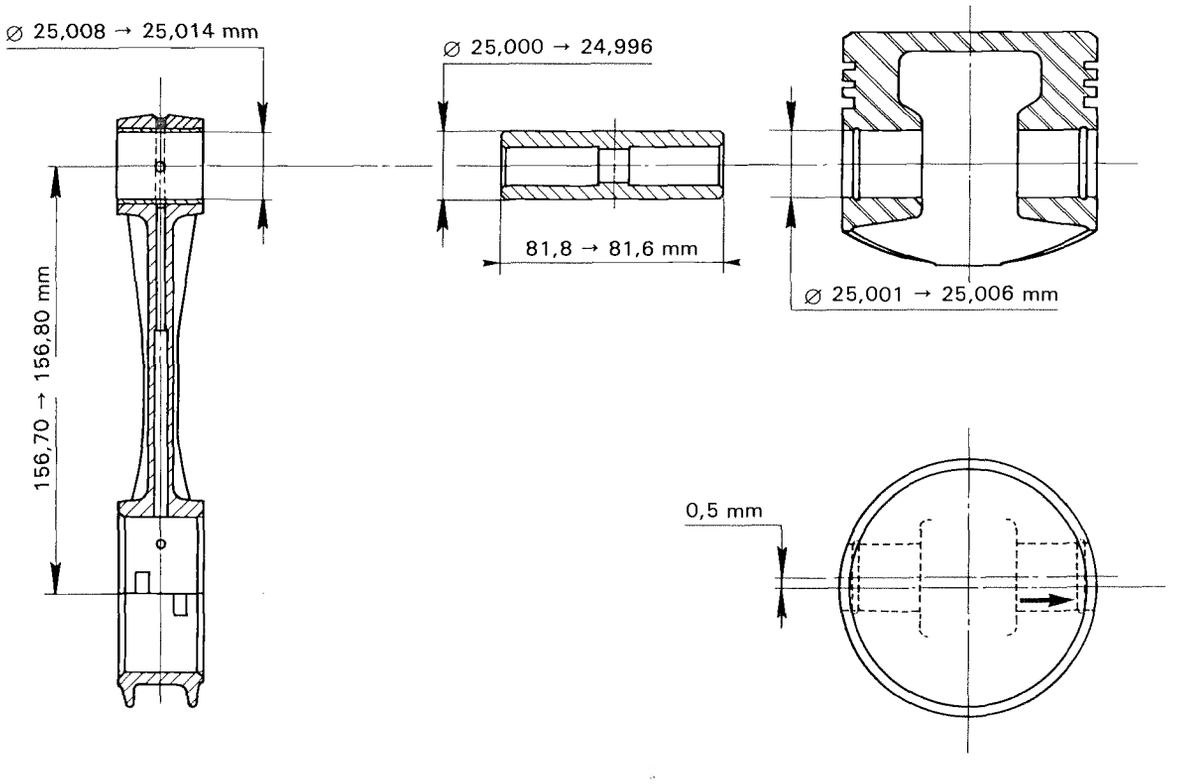

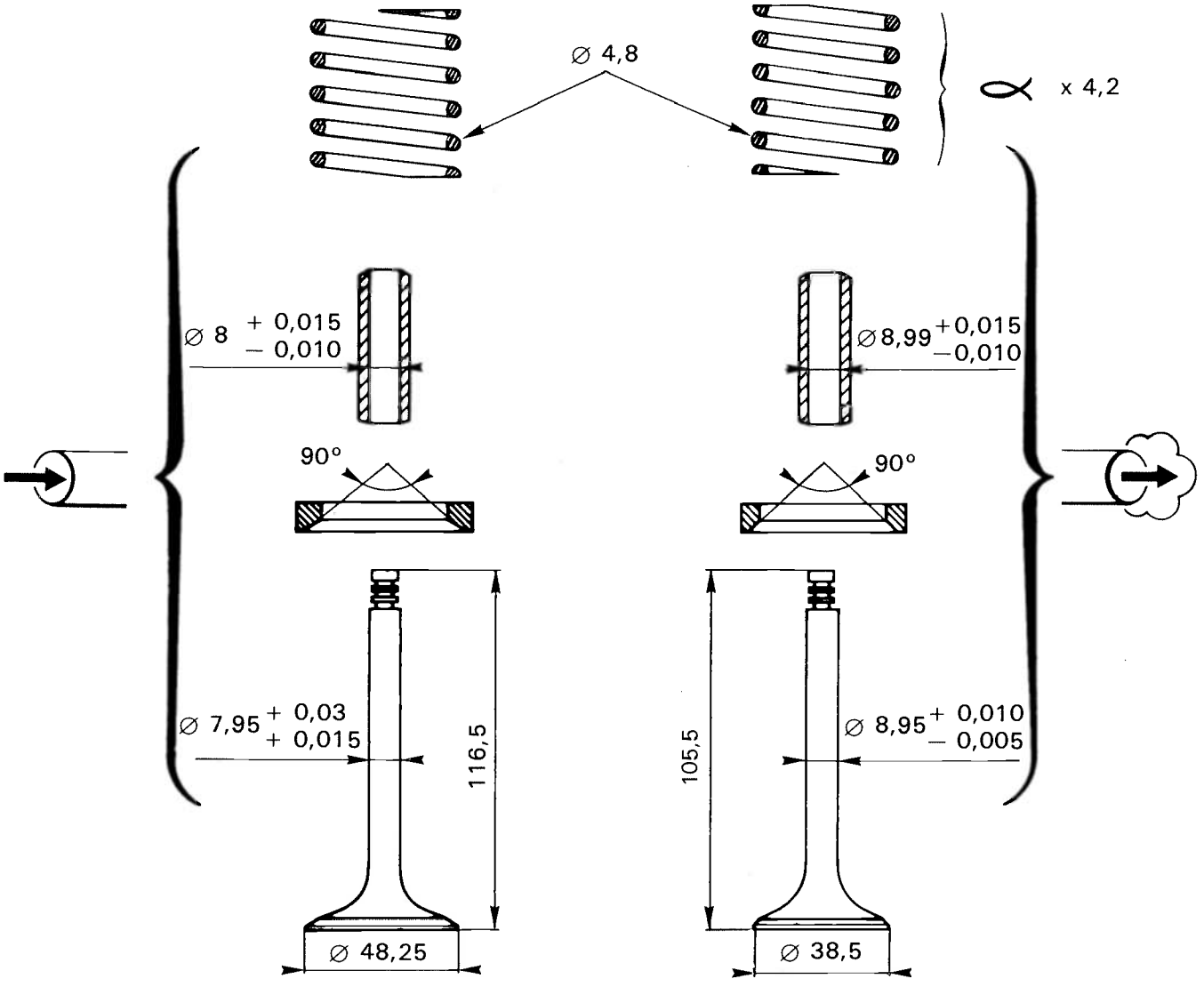

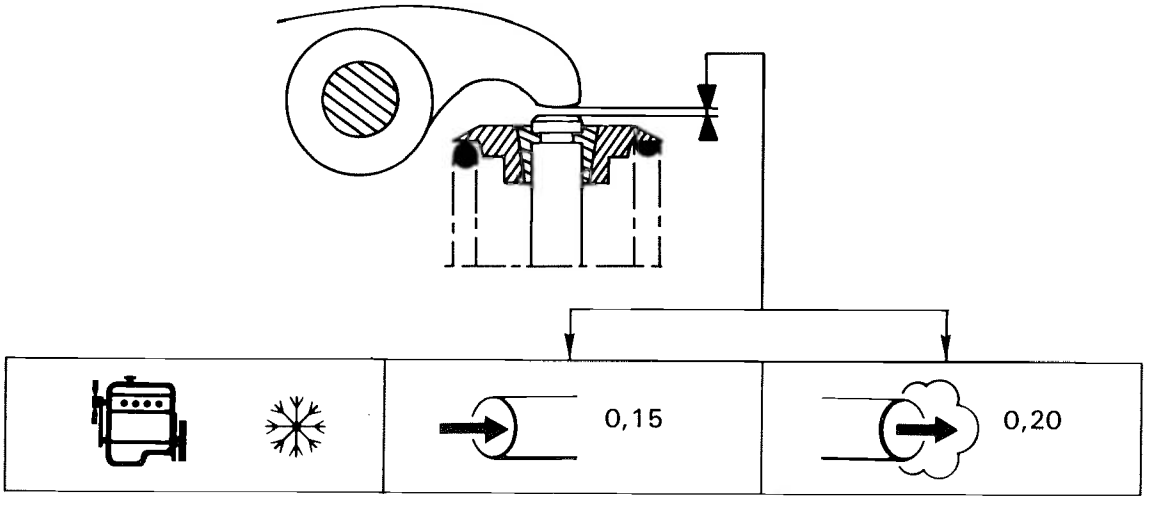

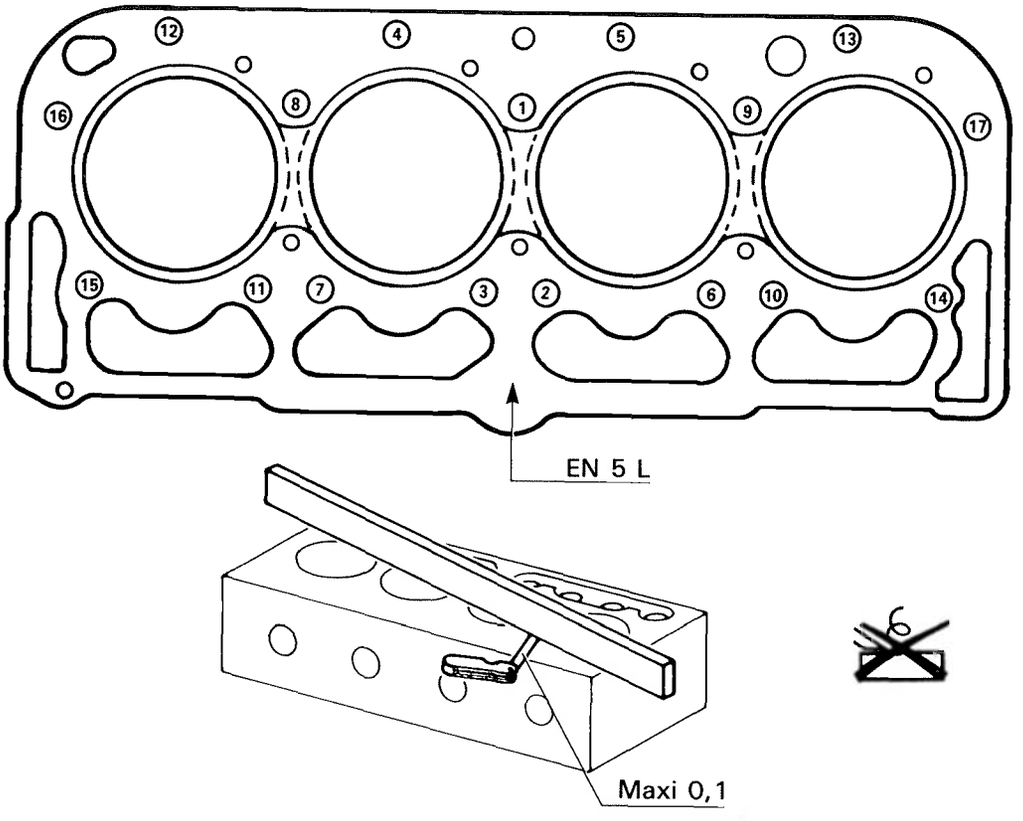

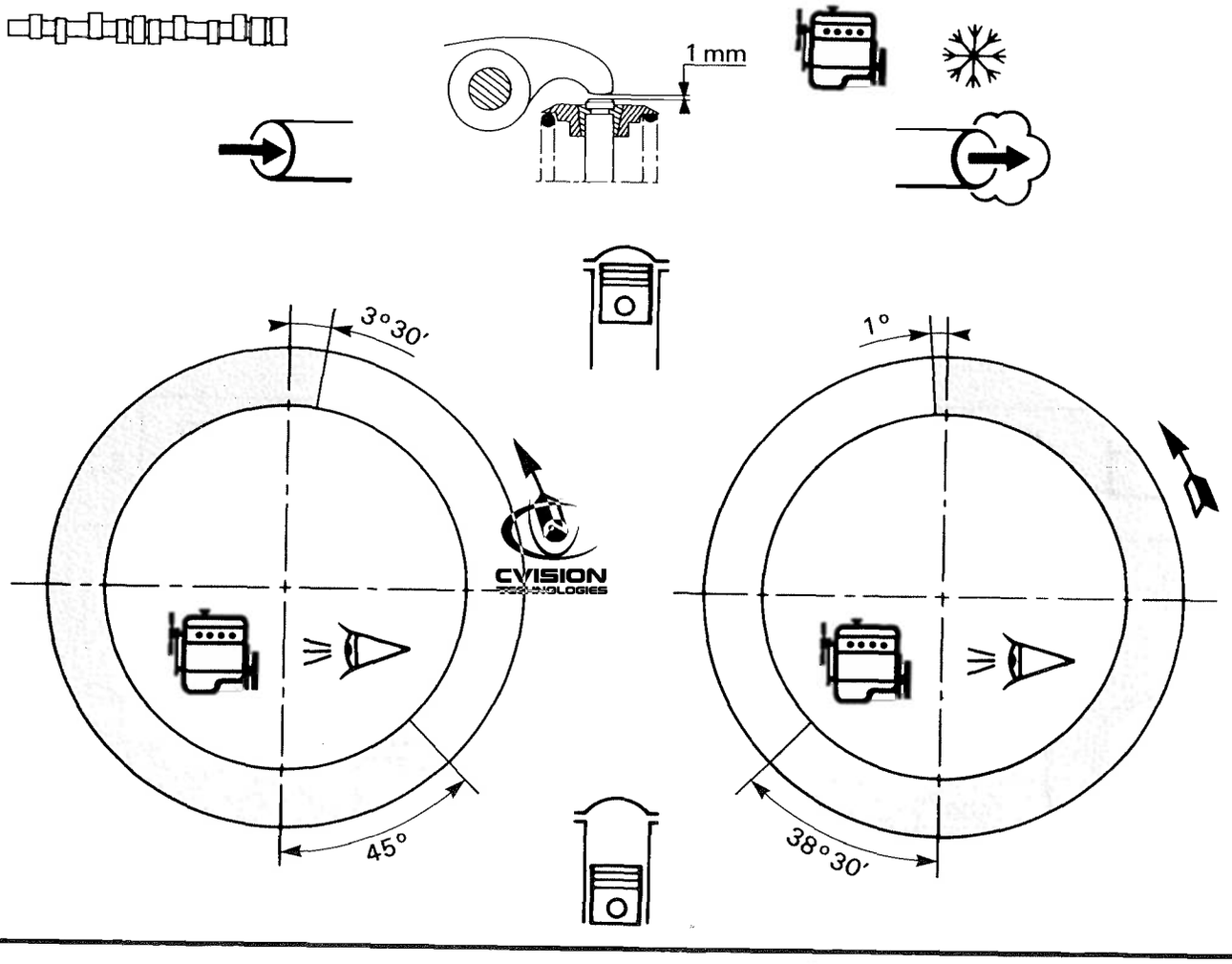

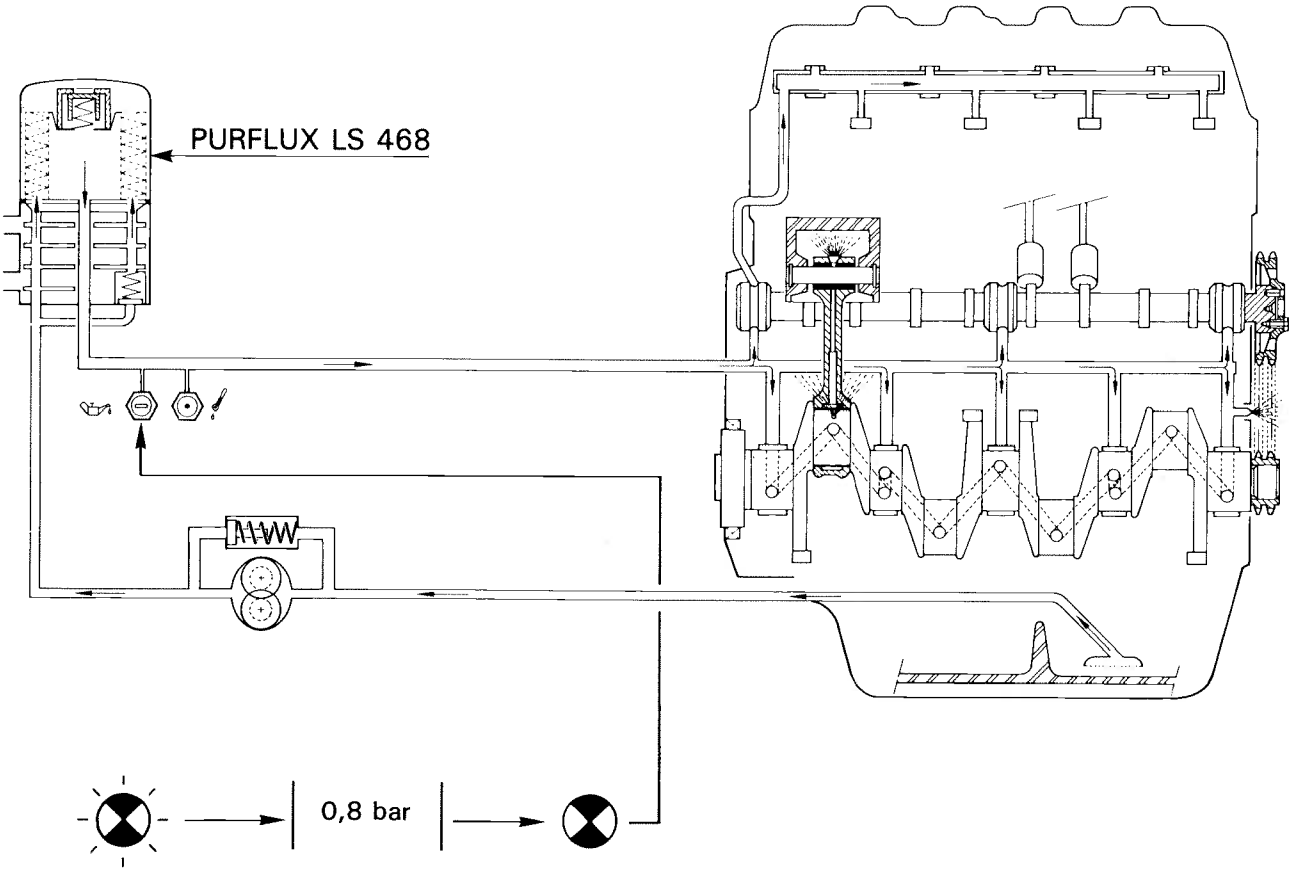

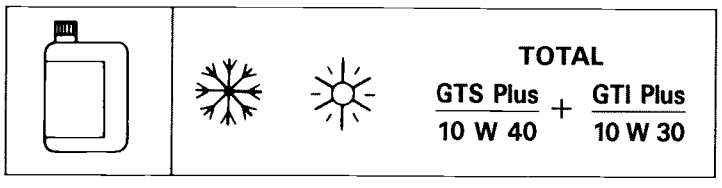

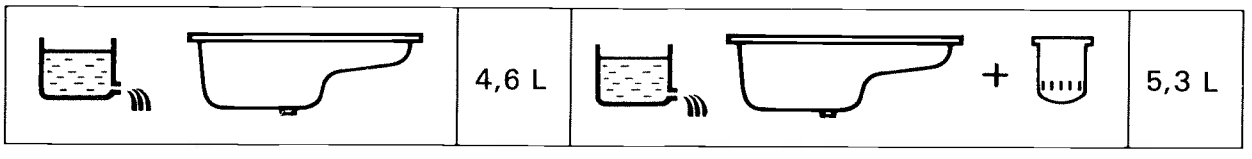

90°C

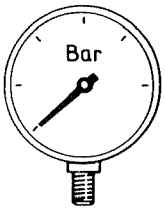

2000/min — 3 bar mini

4000/min — 4 → 5 bars

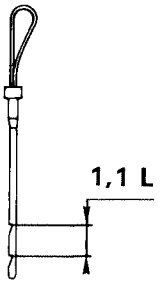

	M25/662 M25/666 (AM 87 →)	
x 4	2500 cm³	
c, ∅	∅	93 mm
	c	92 mm
V : v, $\frac{V + v}{V}$	7,75/1 (M25/662) 8,5/1 (M25/666)	
	SUPER : 98 RON	

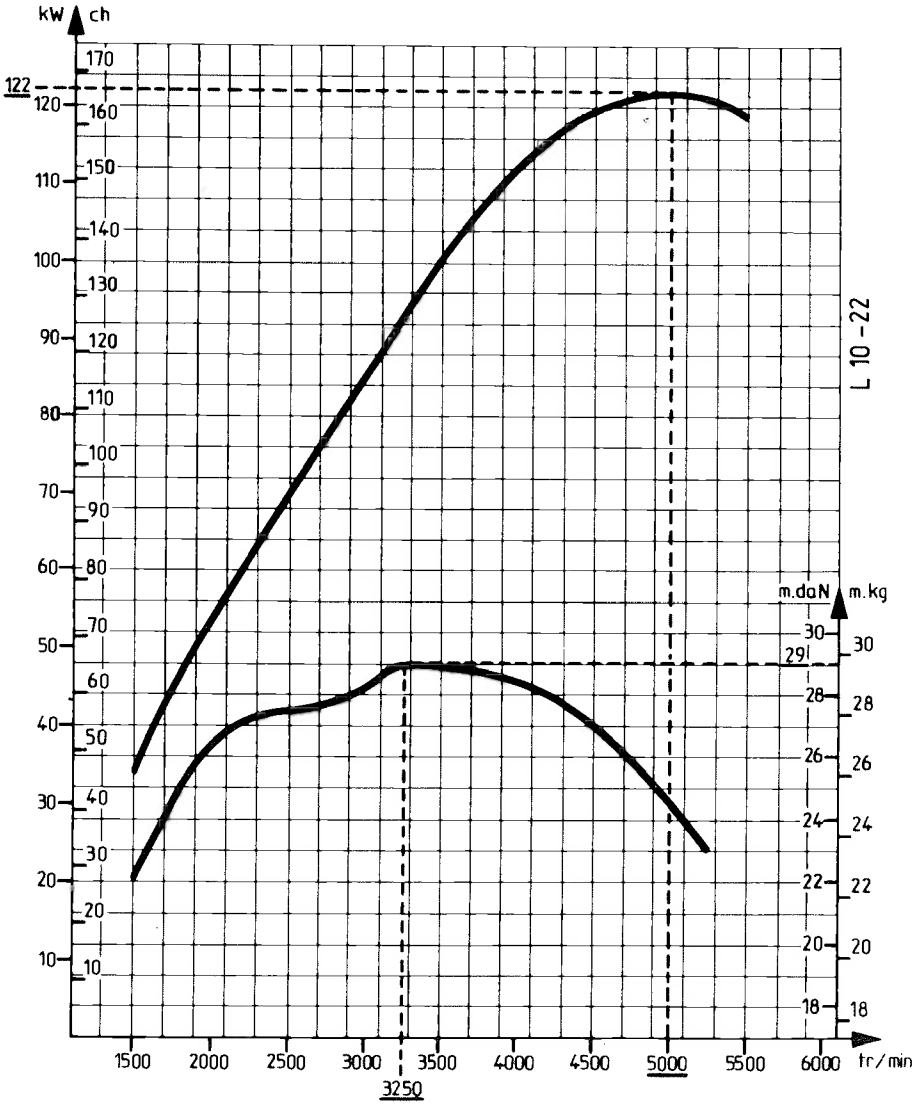

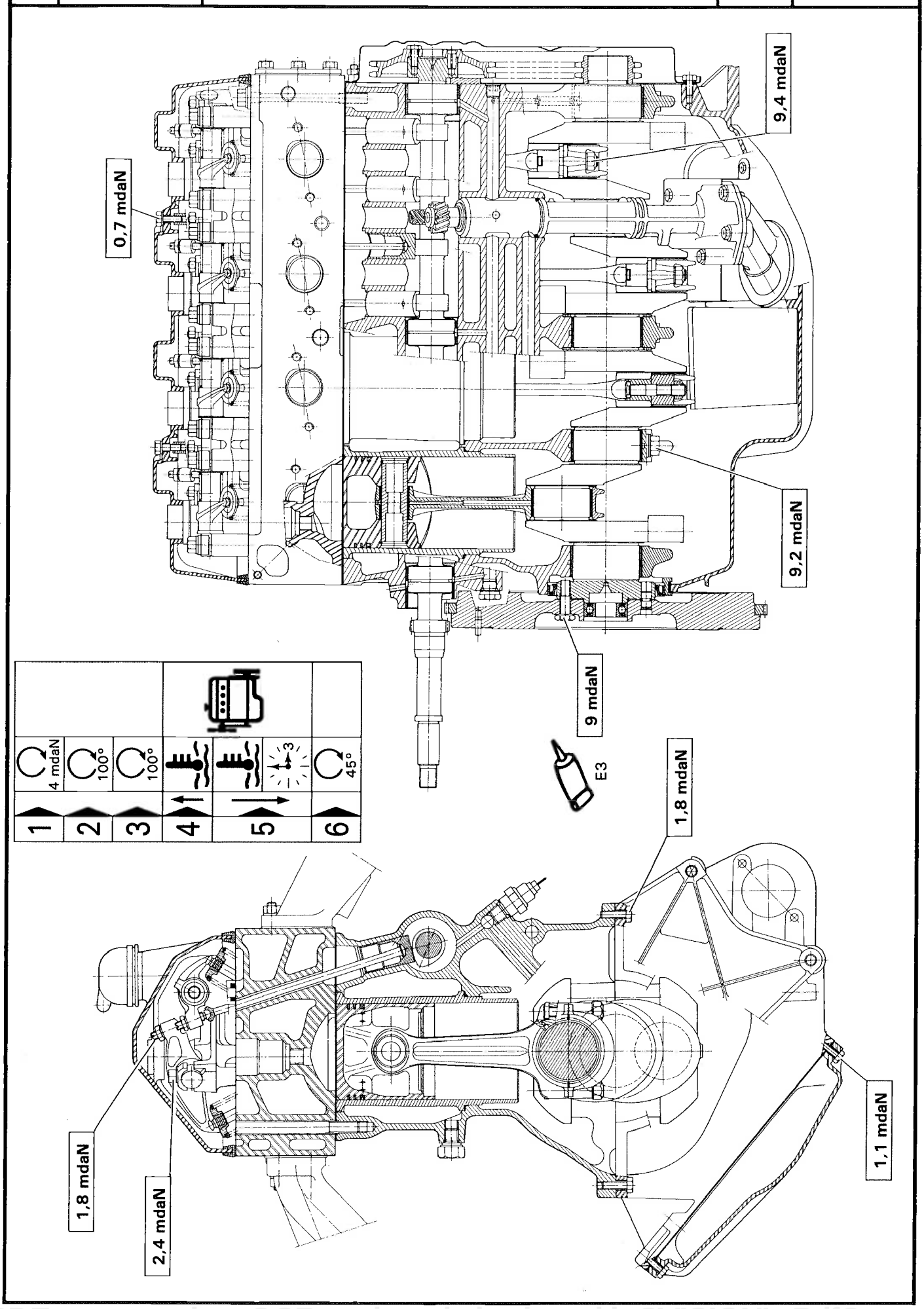

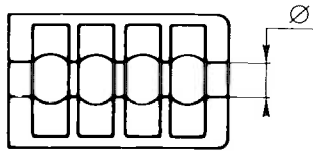

Ø mm : 71,695 → 71,705

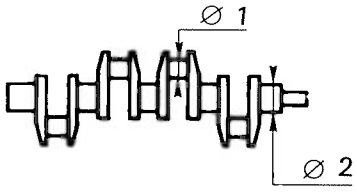

	Ø 1	Ø 2
A	54,005 mm → 53,990 mm	67,050 mm → 67,035 mm
B	53,755 mm → 53,740 mm	66,800 mm → 66,785 mm

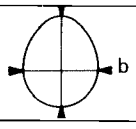

a – b

0,0025 mm

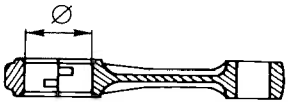

Ø I	Ø II
57,675 mm → 57,685 mm	57,685 mm → 57,695 mm

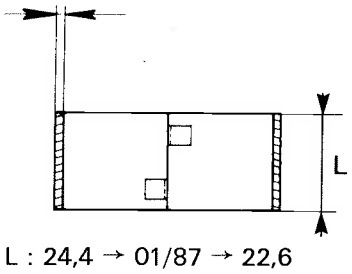

L : 24,4 → 01/87 → 22,6

A	I	1,819 mm → 1,827 m	2,305 mm → 2,313 mm
	II	1,824 mm → 1,832 mm	
B	I	1,944 mm → 1,952 mm	2,430 mm → 2,437 mm
	II	1,949 mm → 1,957 mm	

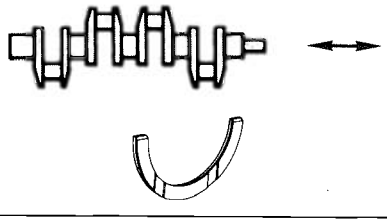

0,045 mm → 0,160 mm

3,10 - 3,14 - 3,18 - 3,22 - 3,26 mm

I	93,00 → 93,01 mm	92,945 → 92,955 mm
II	93,01 → 93,02 mm	92,955 → 92,965 mm
III	93,02 → 93,03 mm	92,965 → 92,975 mm

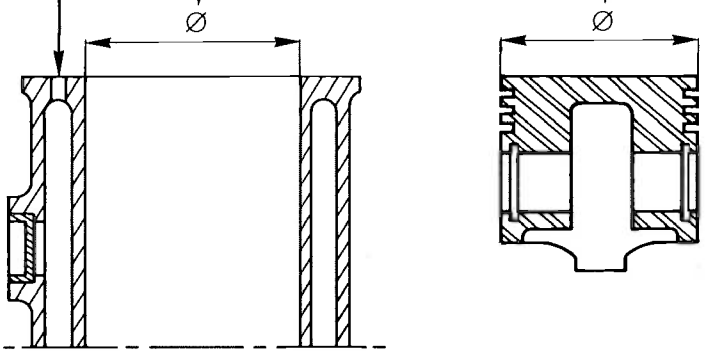

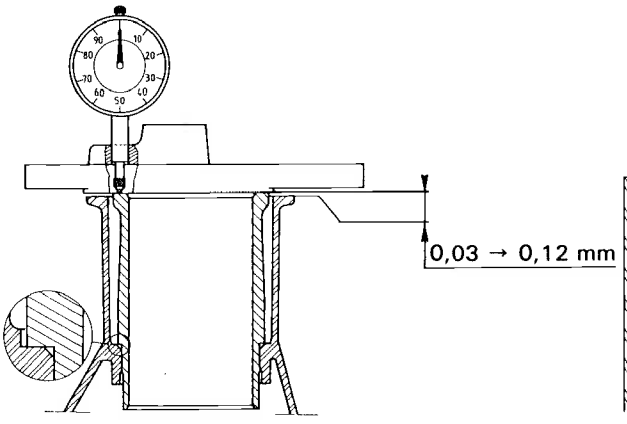

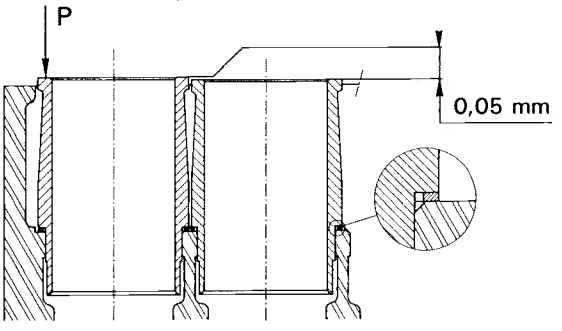

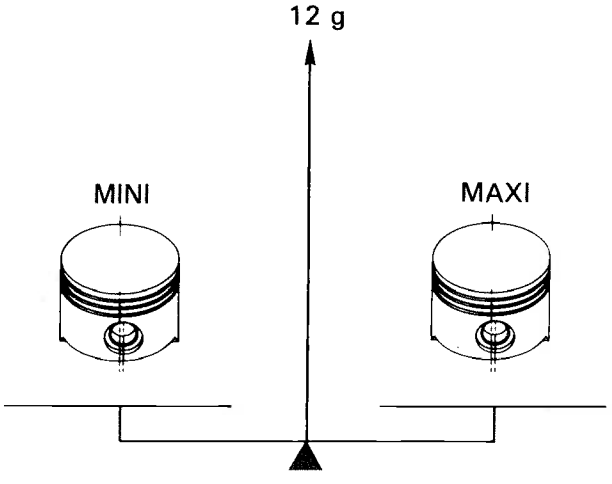

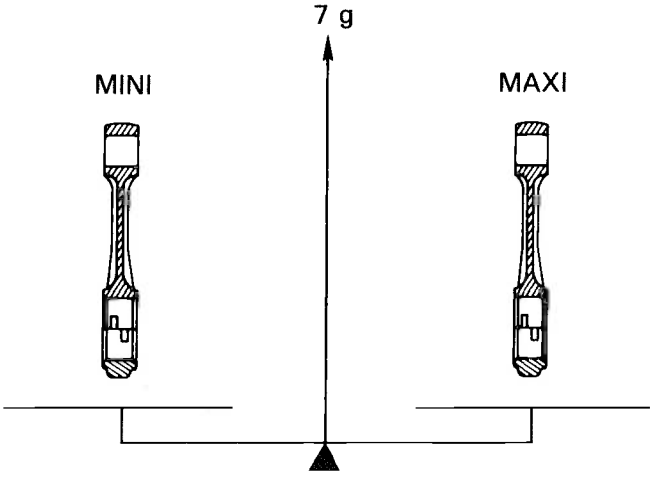

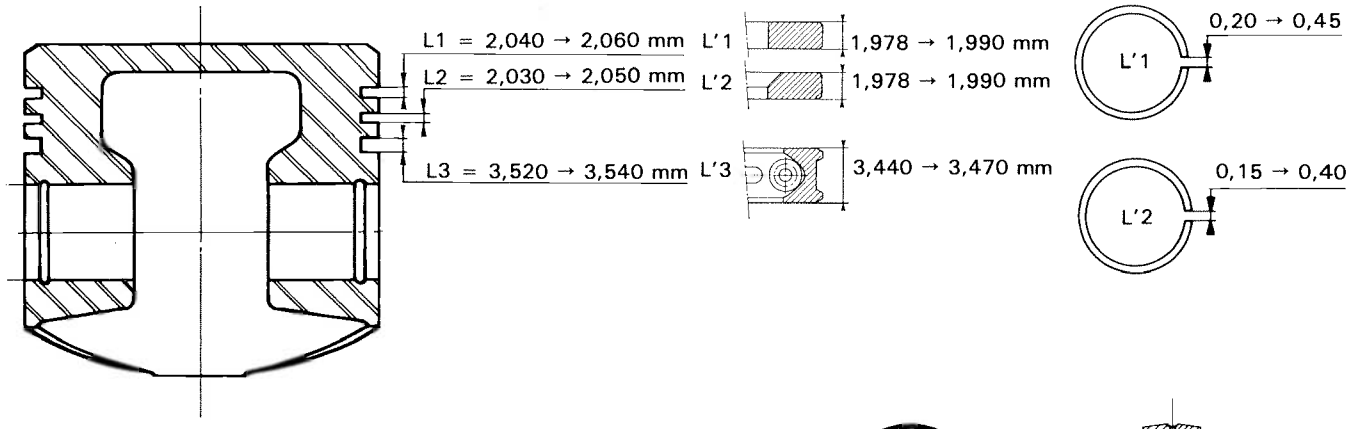

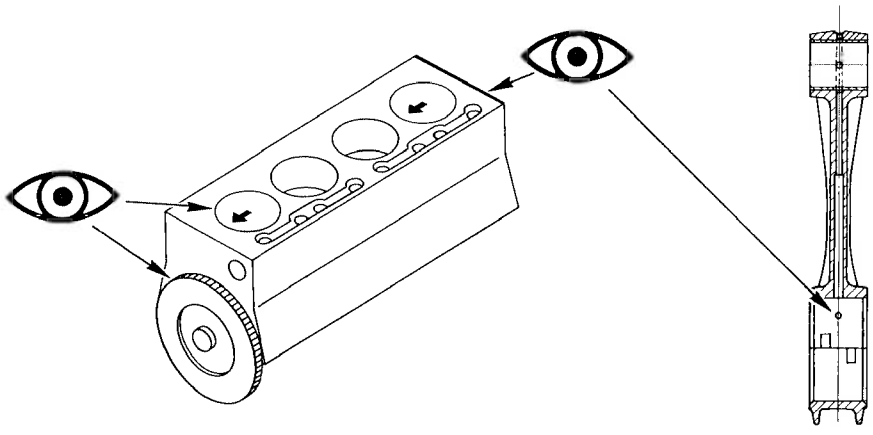

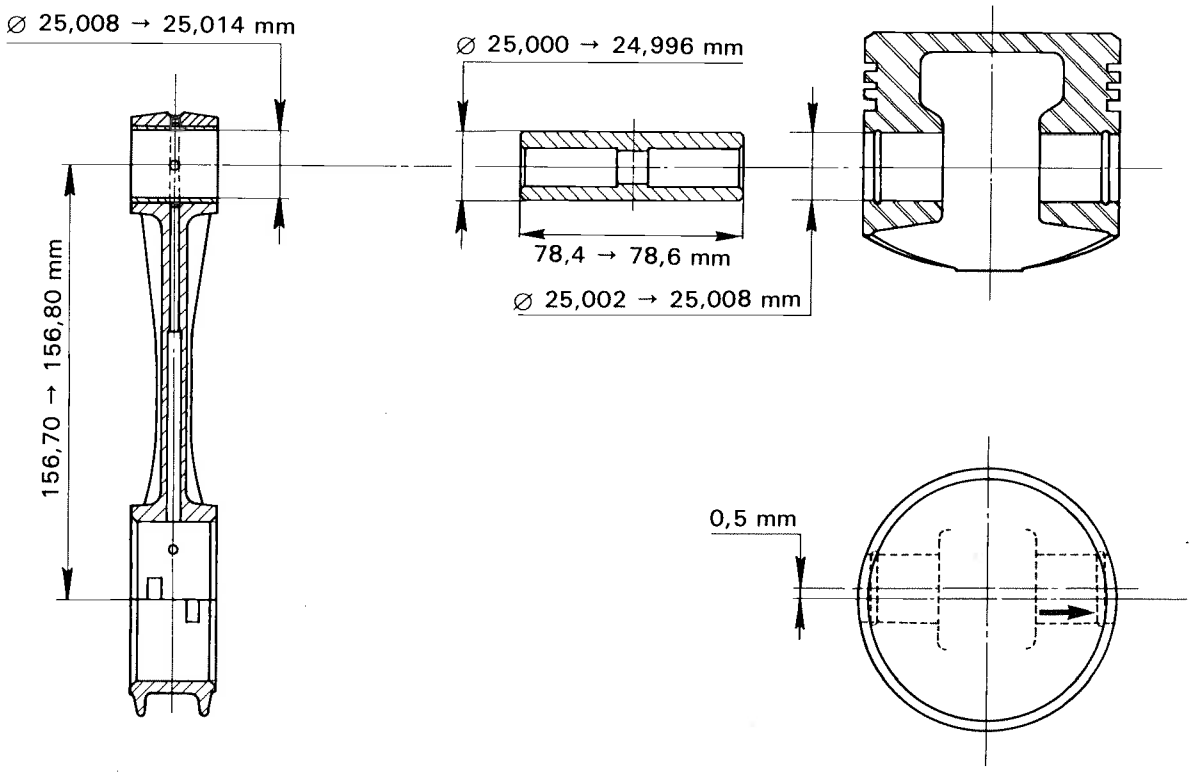

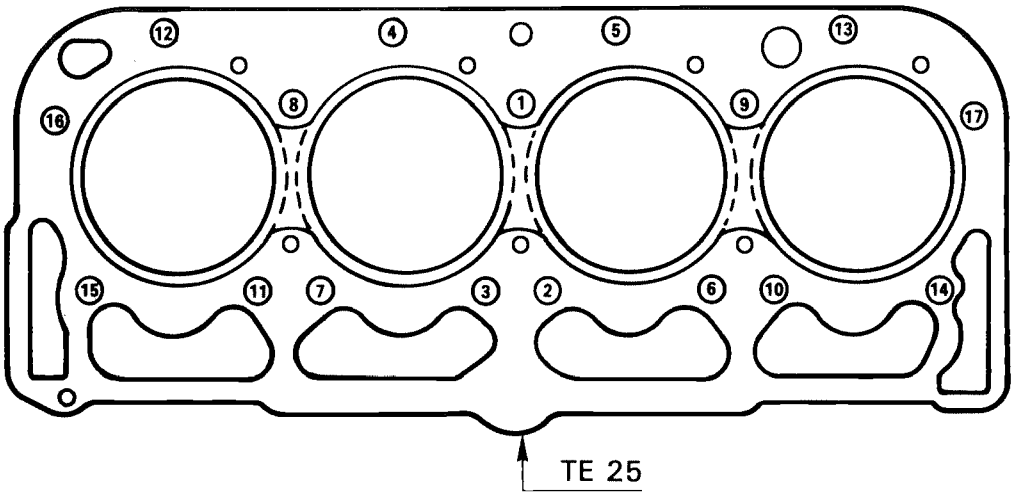

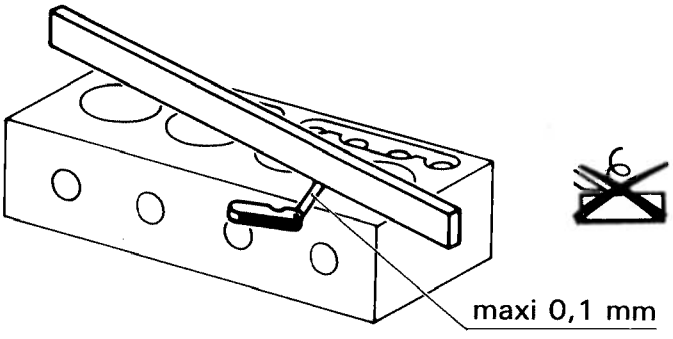

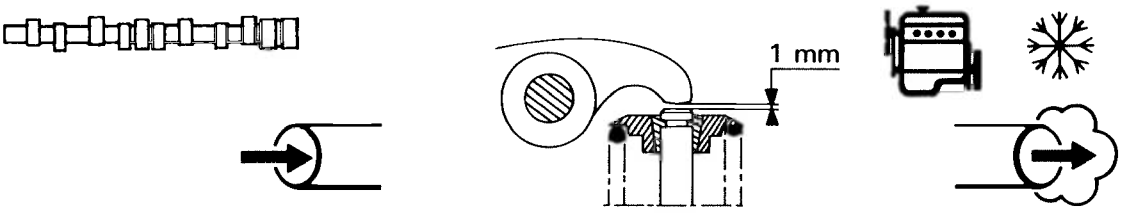

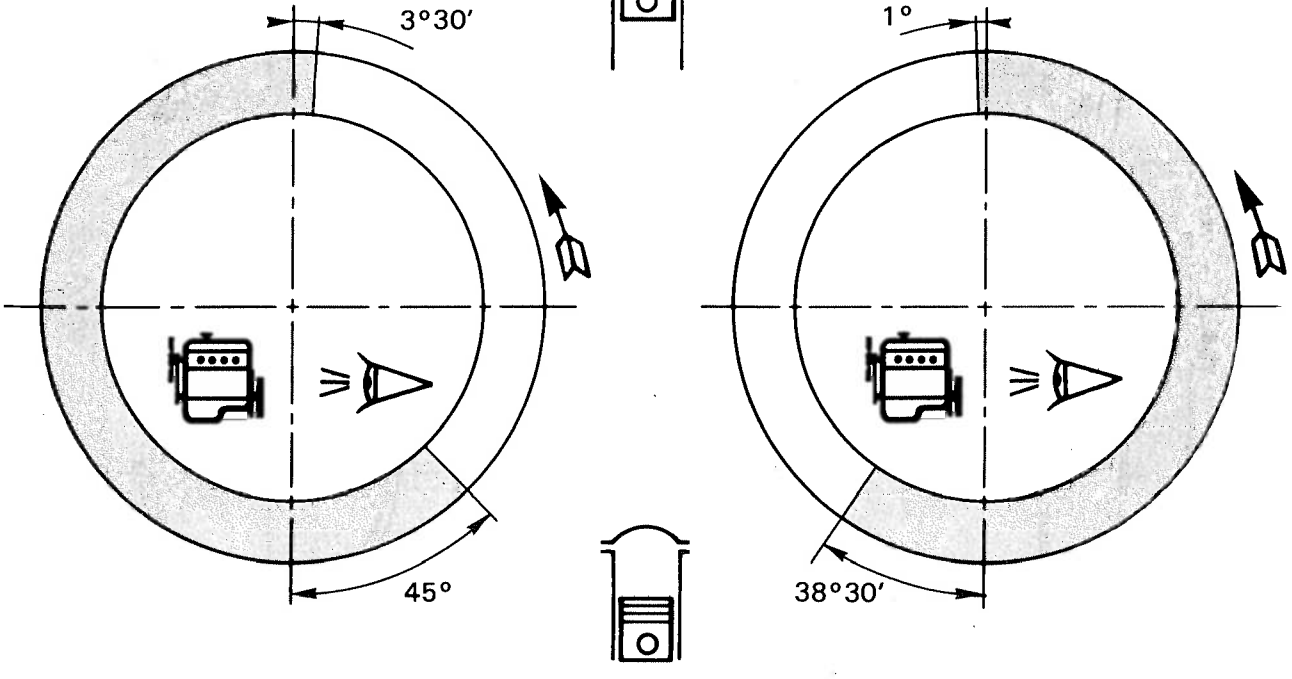

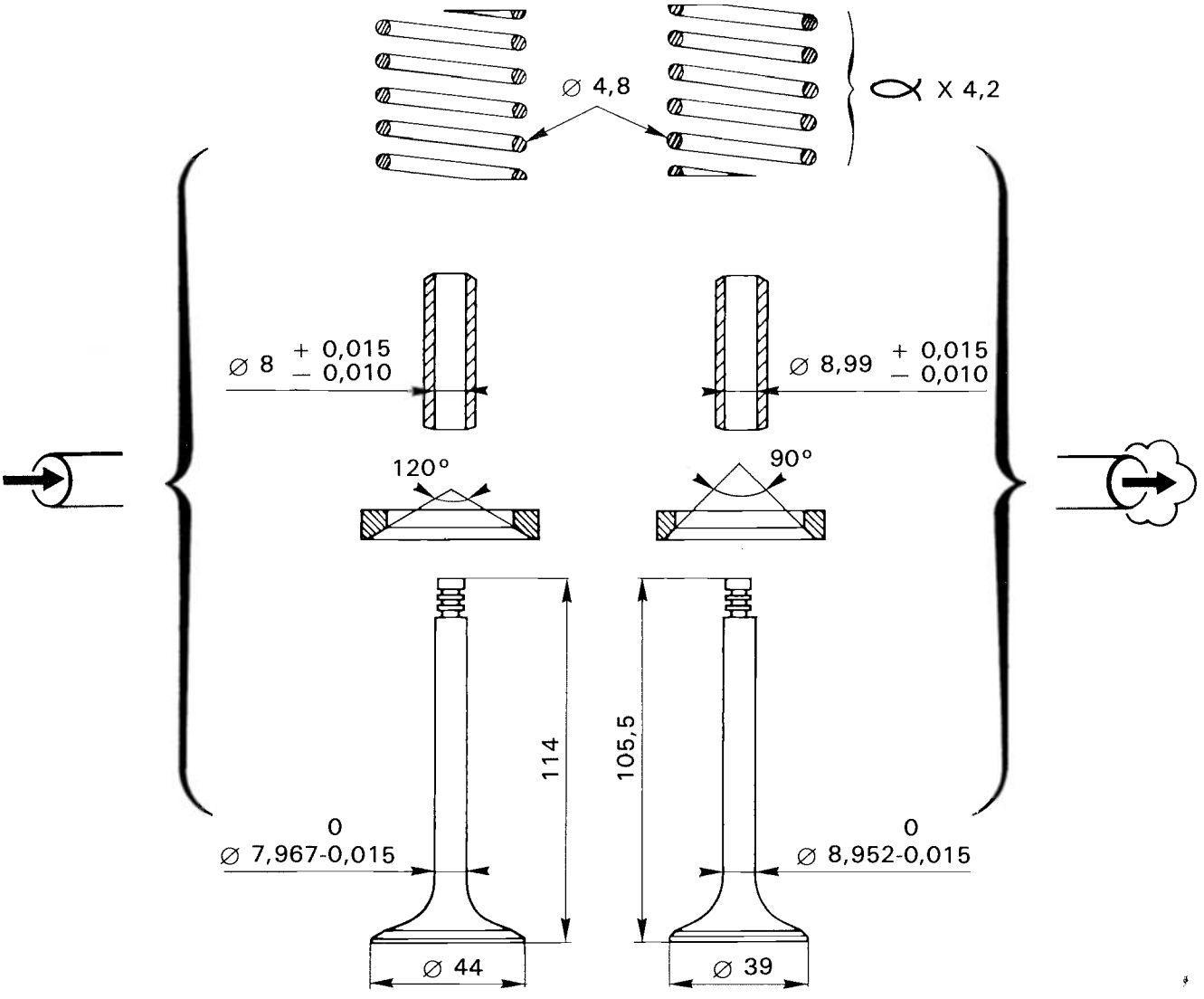

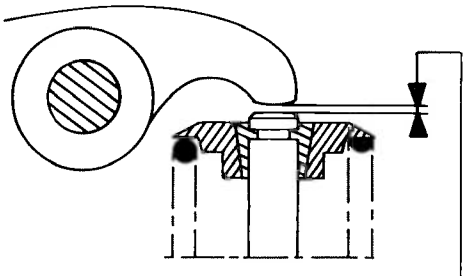

	0,15	0,20

PURFLUX
LS 468

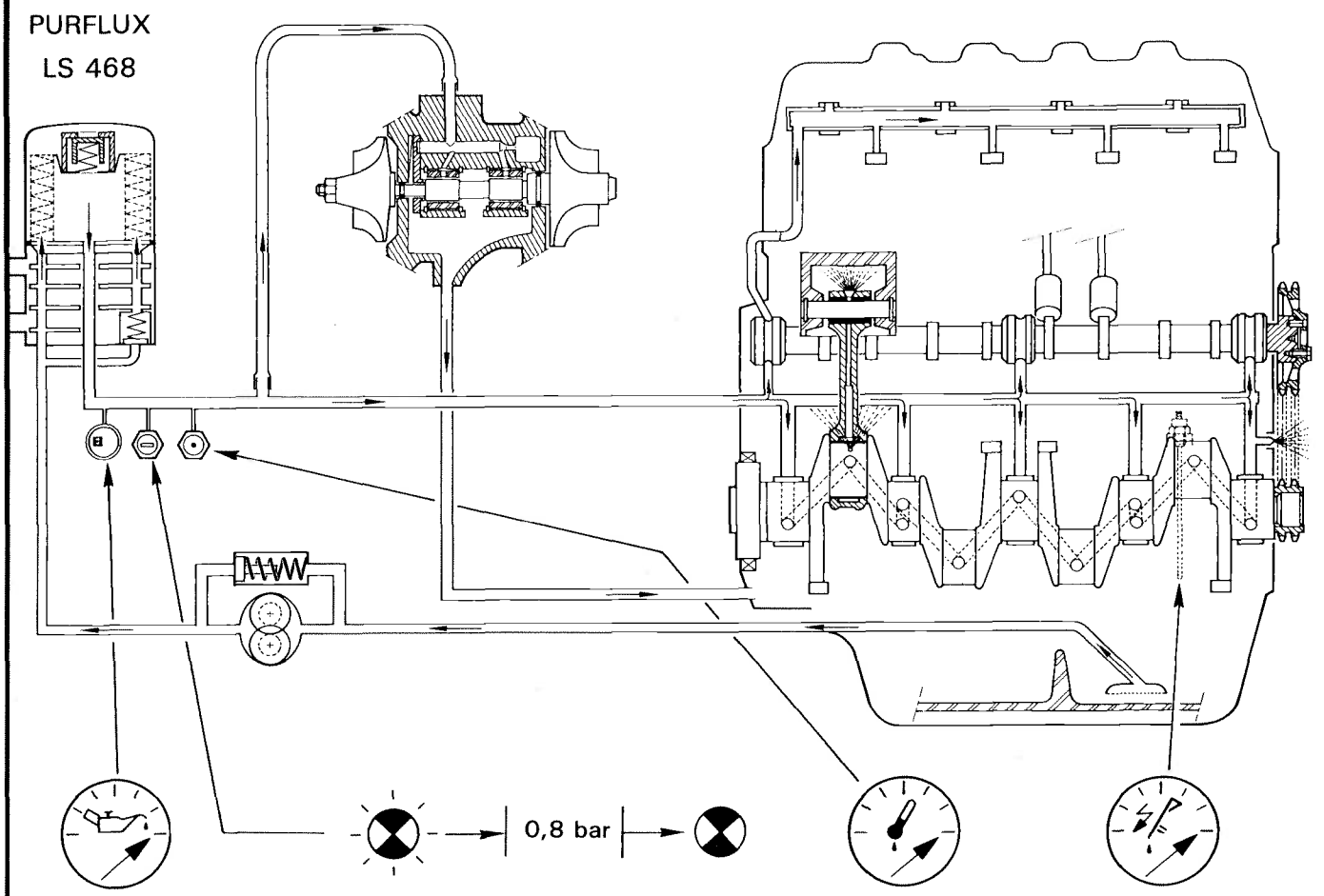

	TOTAL		
	GTS Plus 10 W 40	GTI Plus 10 W 30 → 11/85	GTV 15 W 50 11/85 →

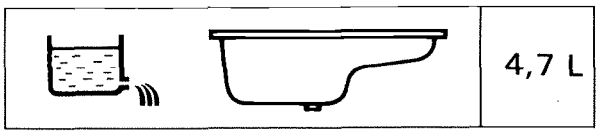

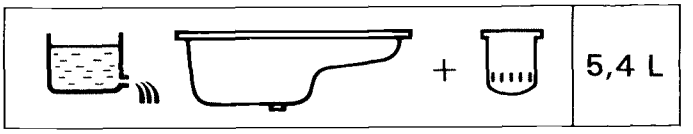

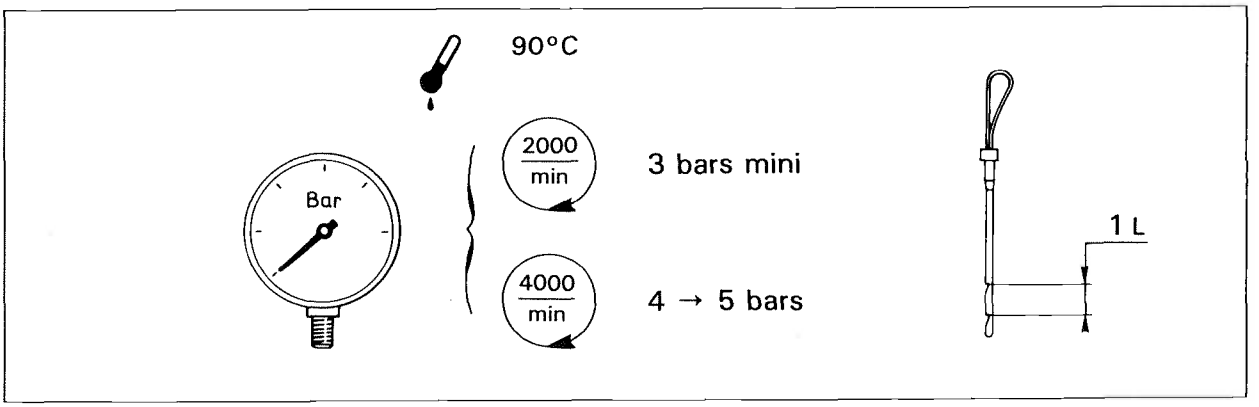

	M25/660	
x 4	2500 cm³	
c, Ø	Ø	93 mm
	c	92 mm
V : v, $\frac{V + v}{v}$	22,25/1	
	Diesel	

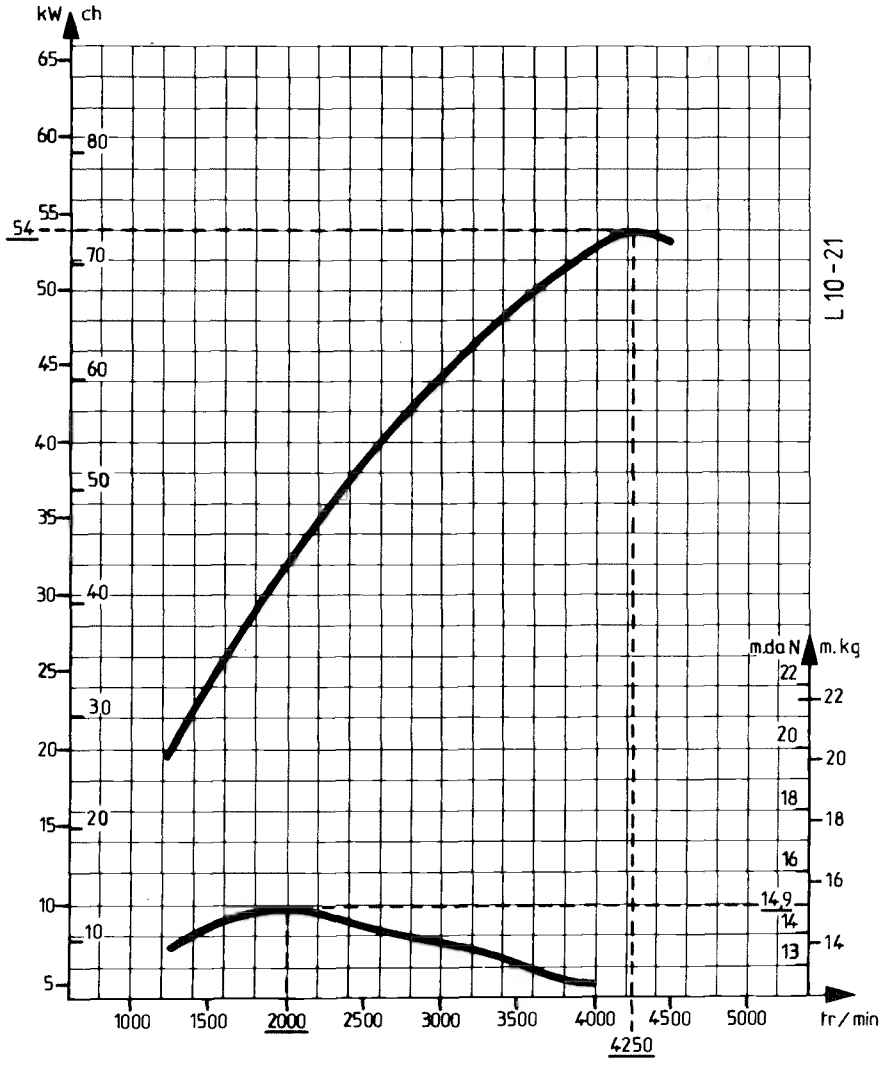

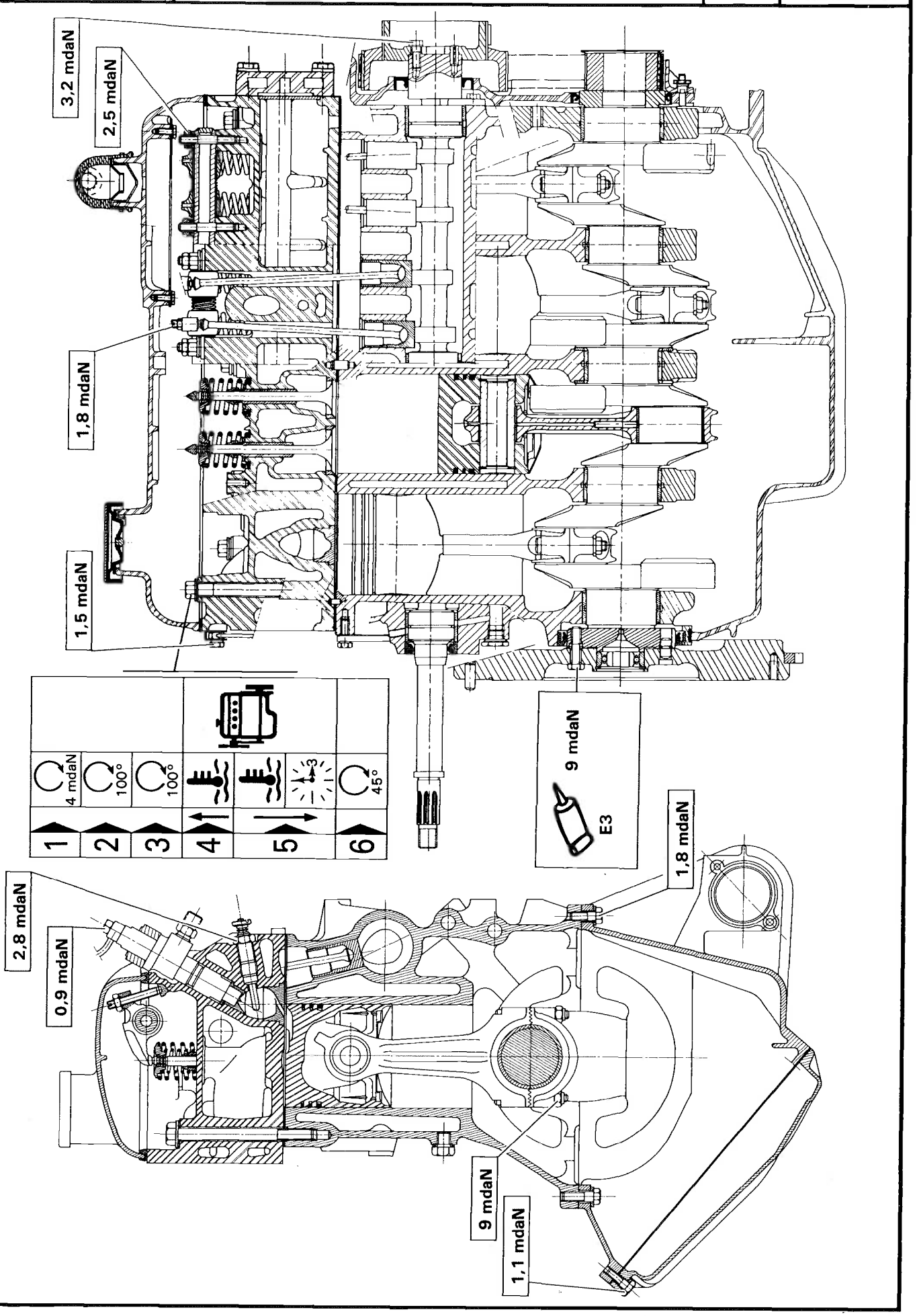

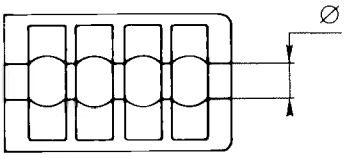	⌀ mm : 71,695 → 71,705

		⌀ 1	⌀ 2
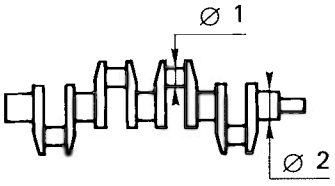	A	54,005 mm → 53,990 mm	67,05 mm → 67,035 mm
	B	53,755 mm → 53,740 mm	66,80 mm → 66,785 mm
	C	53,505 mm → 53,490 mm	

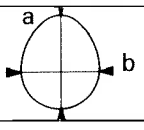	a – b	0,004 mm

	⌀ I	⌀ II
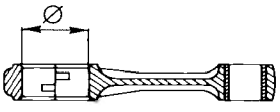	57,675 mm → 57,685 mm	57,685 mm → 57,695 mm

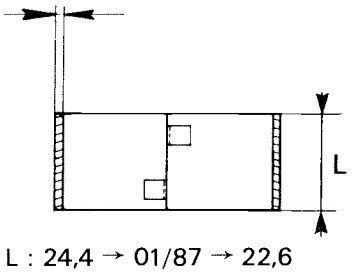 L : 24,4 → 01/87 → 22,6	A	I	1,820 mm → 1,826 mm	2,306 mm → 2,312 mm
		II	1,825 mm → 1,831 mm	
	B	I	1,945 mm → 1,951 mm	2,431 mm → 2,437 mm
		II	1,950 mm → 1,956 mm	
	C	I	2,070 mm → 2,076 mm	
		II	2,075 mm → 2,081 mm	

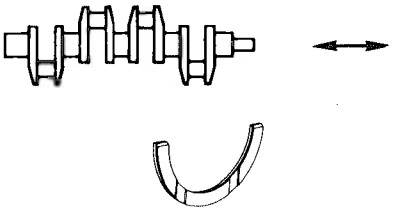		0,045 mm → 0,16 mm
		3,10 - 3,14 - 3,18 - 3,22 - 3,26

			AEF	PdC	
93	A	93,01 → 93,02	92,900 → 92,910	92,897 → 92,912	0,50 → 0,55
93,25	B1	93,25 → 93,26	93,150 → 93,160	93,137 → 93,152	0,47 → 0,52
	B2	93,26 → 93,27	93,160 → 93,170	93,147 → 93,162	
93,50	C1	93,50 → 93,51	93,400 → 93,410	93,387 → 93,402	0,44 → 0,49
	C2	93,51 → 93,52	93,410 → 93,420	93,397 → 93,412	
93,75	D1	93,75 → 93,76	93,650 → 93,660	93,637 → 93,652	0,41 → 0,46
	D2	93,76 → 93,77	93,660 → 93,670	93,647 → 93,662	

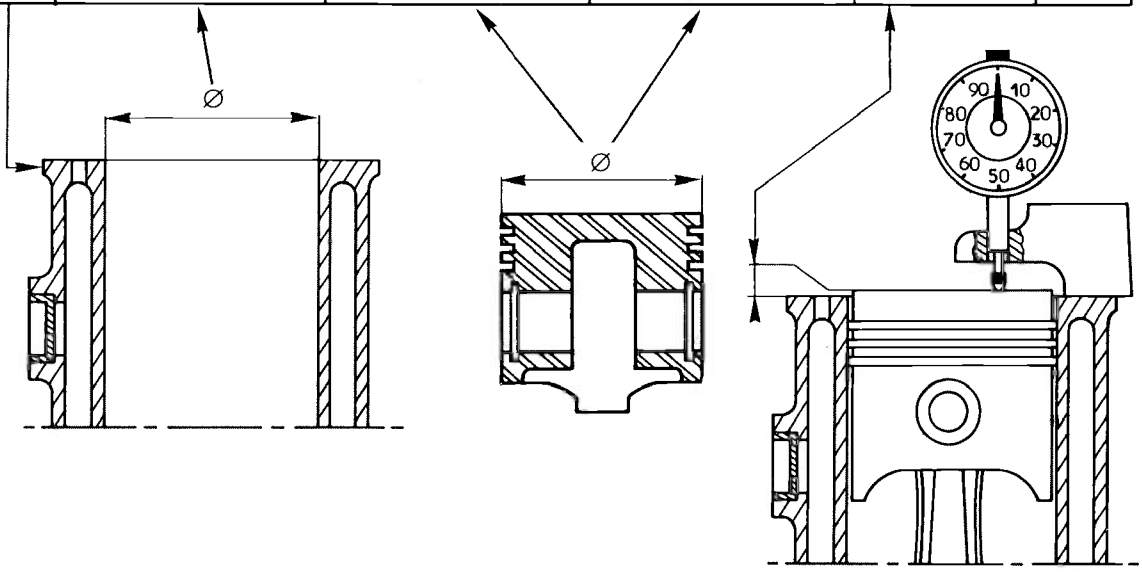

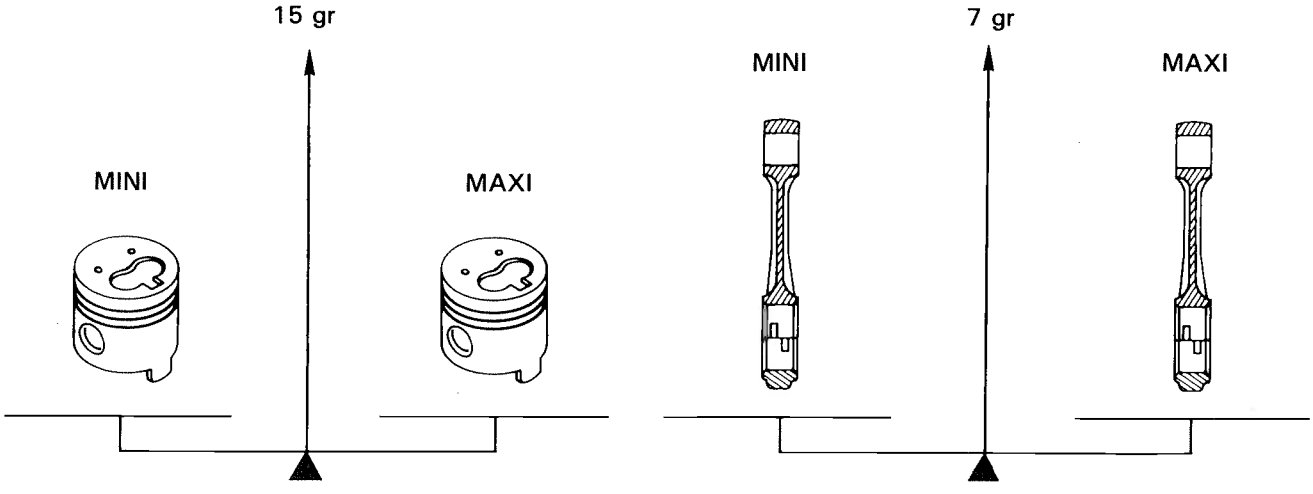

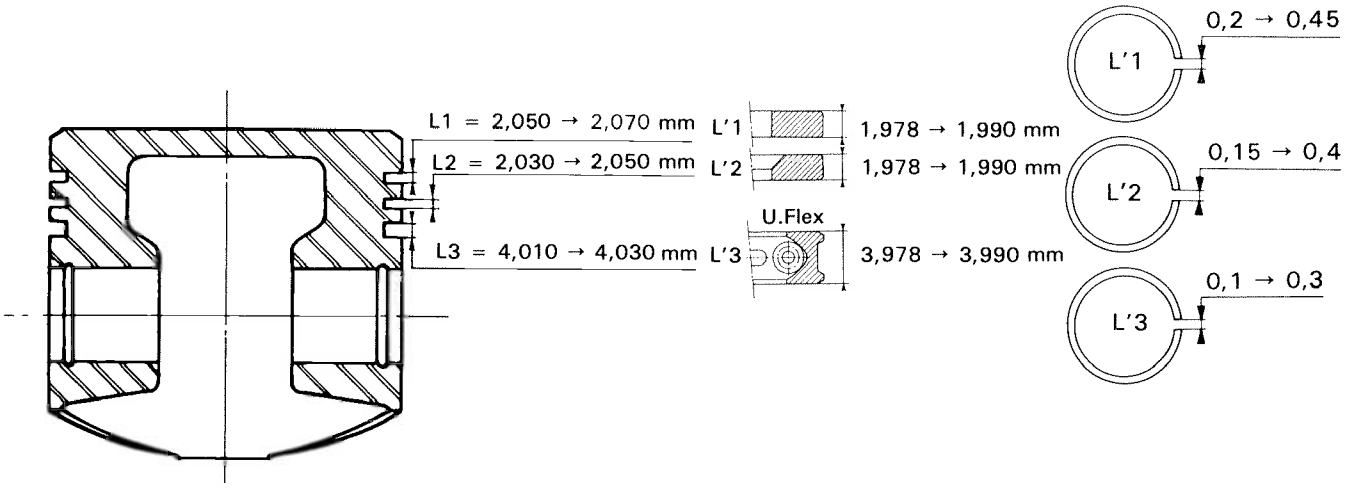

4/85 →: L1 = 2,550 → 2,570 mm		L'1	2,478 → 2,490 mm

	93,25	93,50	93,75
	V	B	Mv

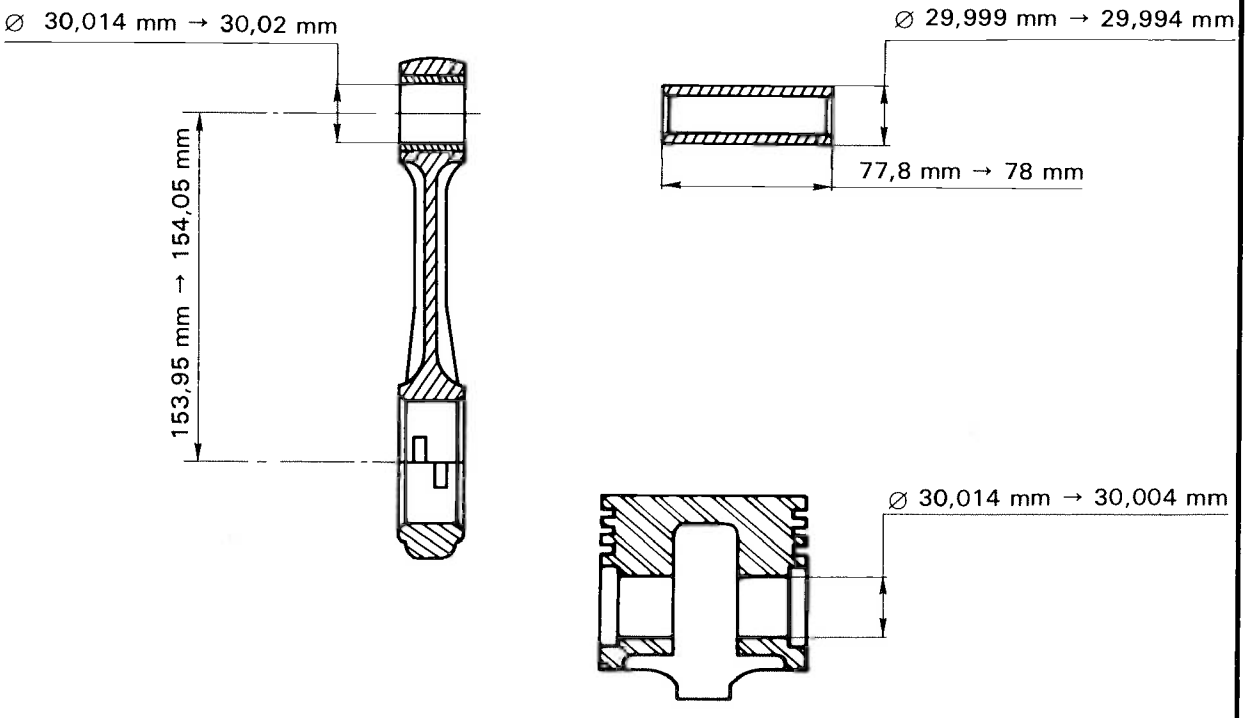

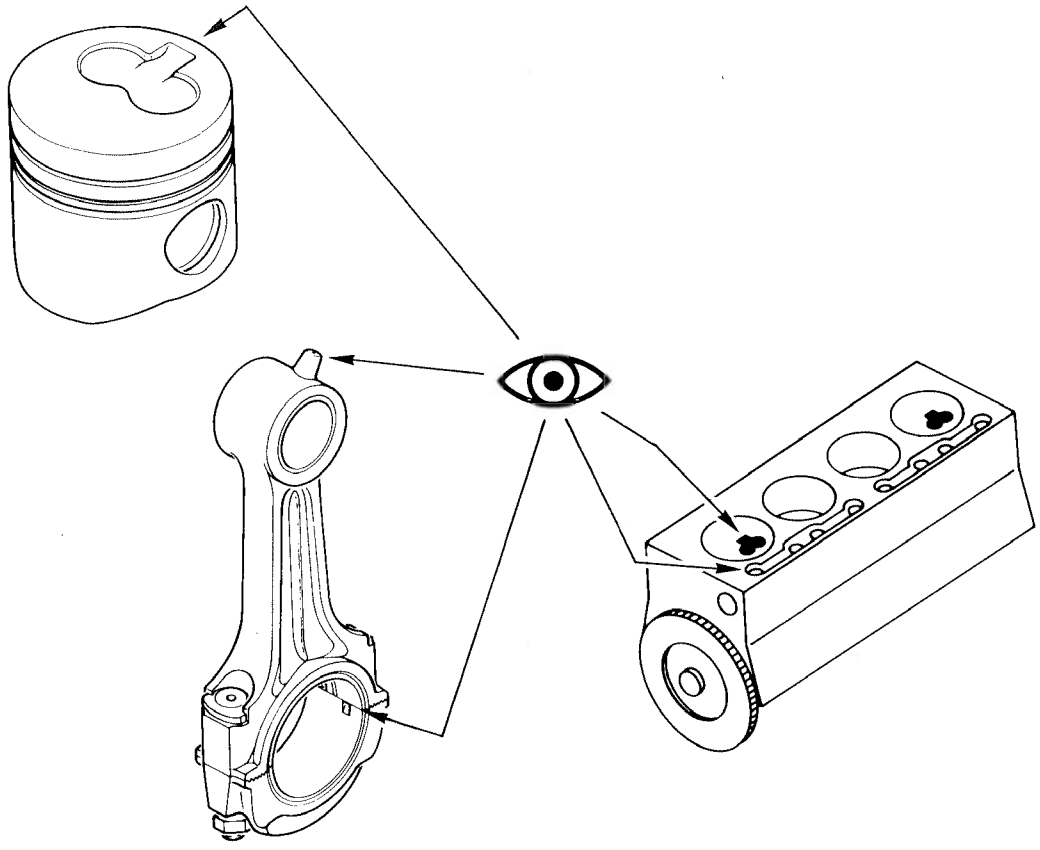

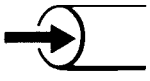

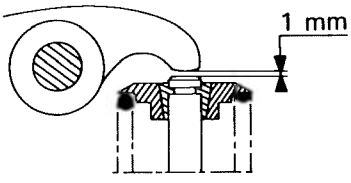

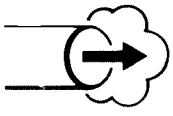

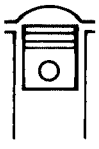

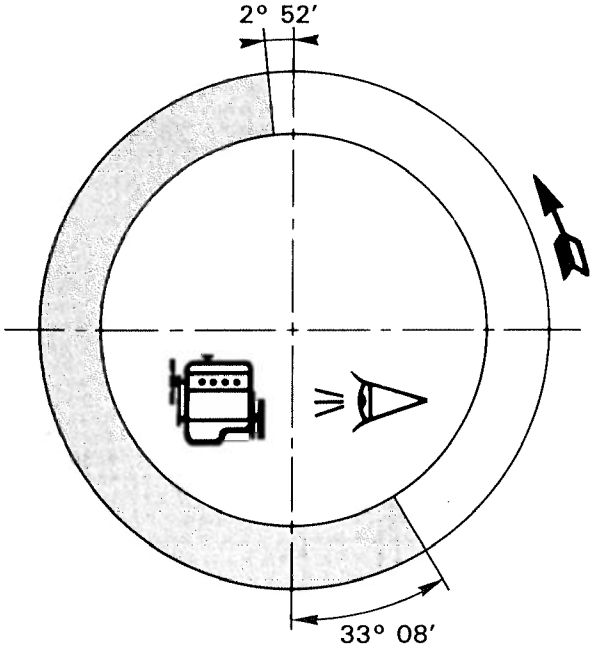

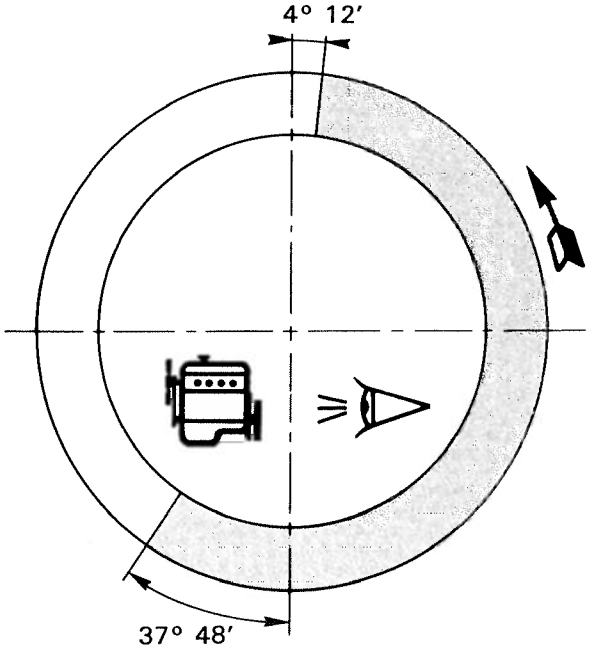

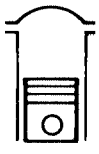

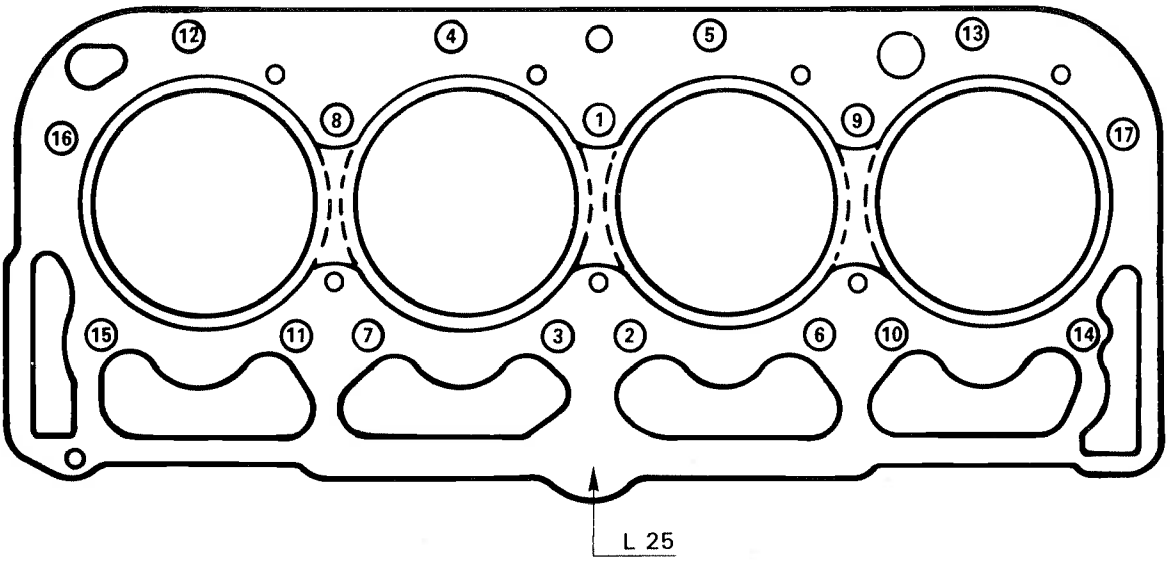

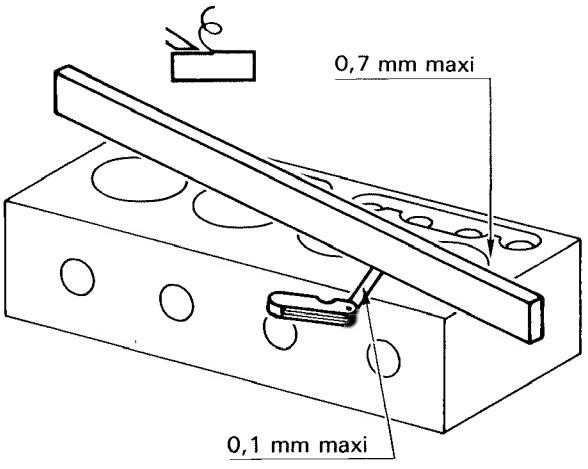

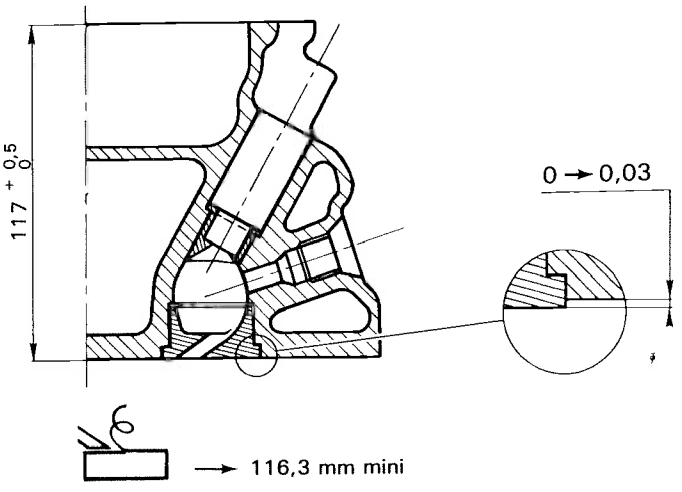

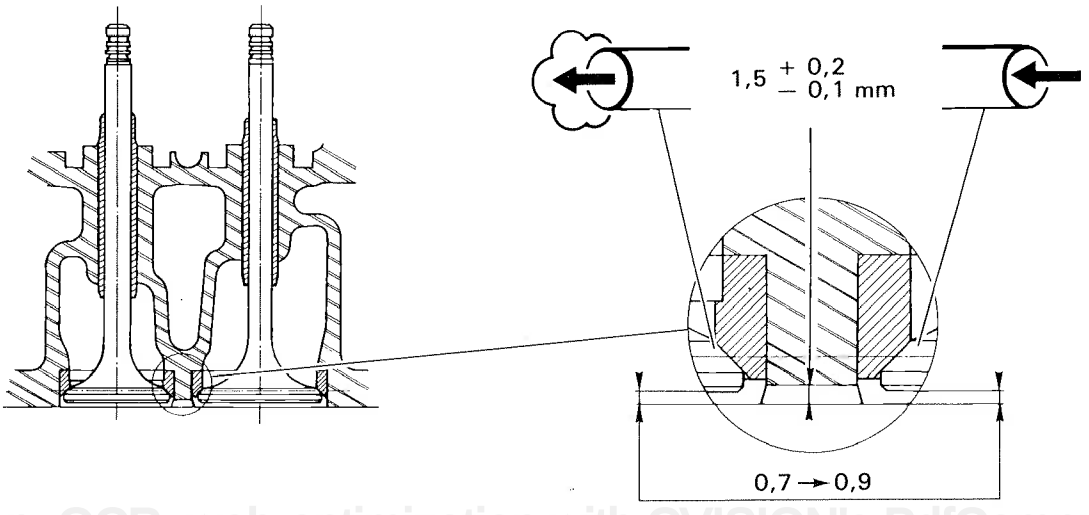

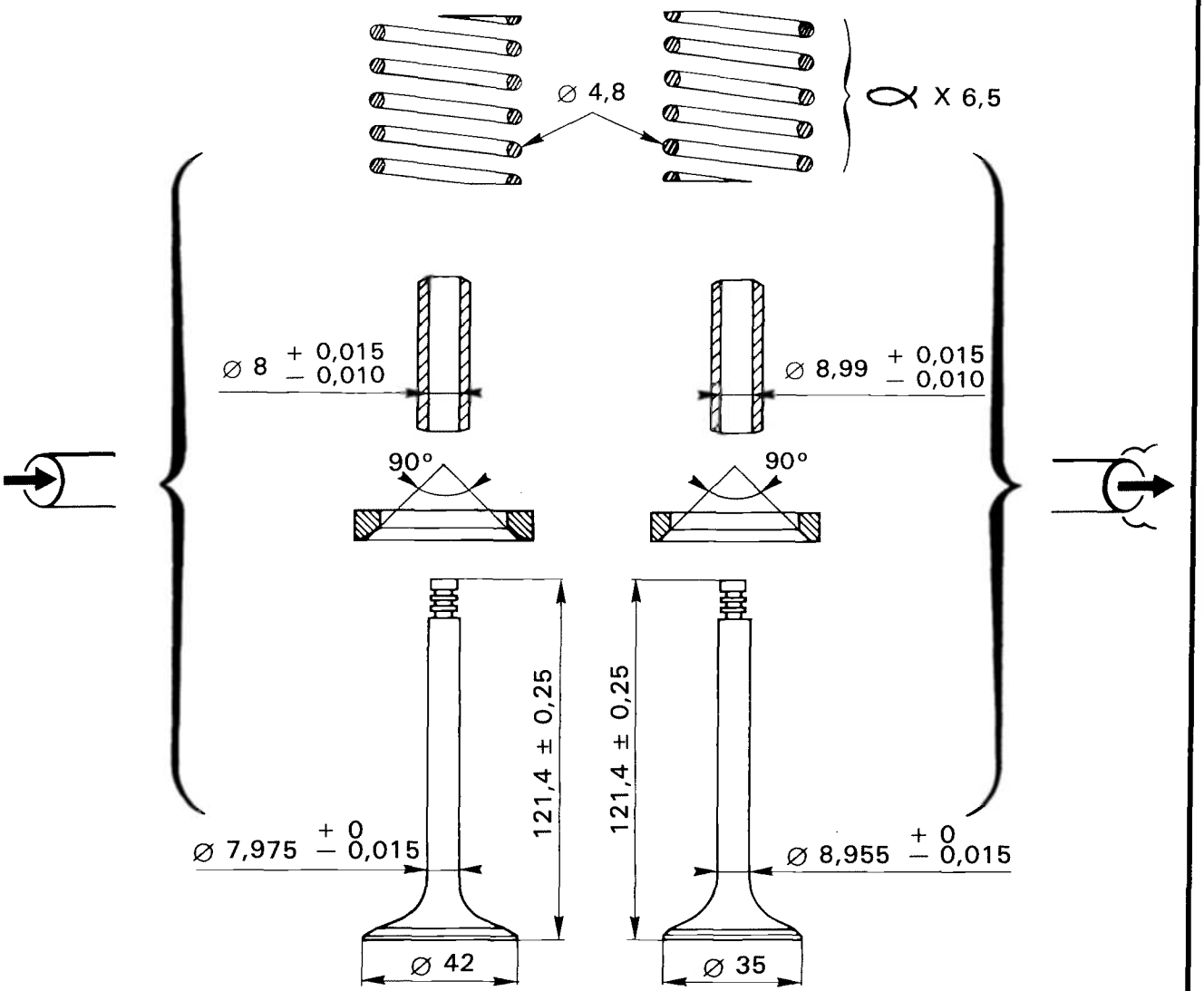

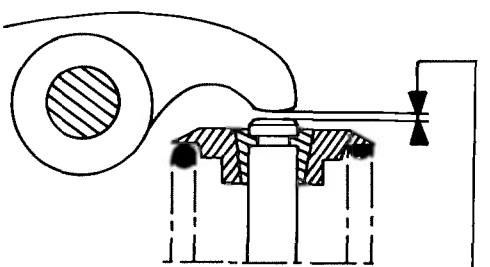

	0,30	0,20

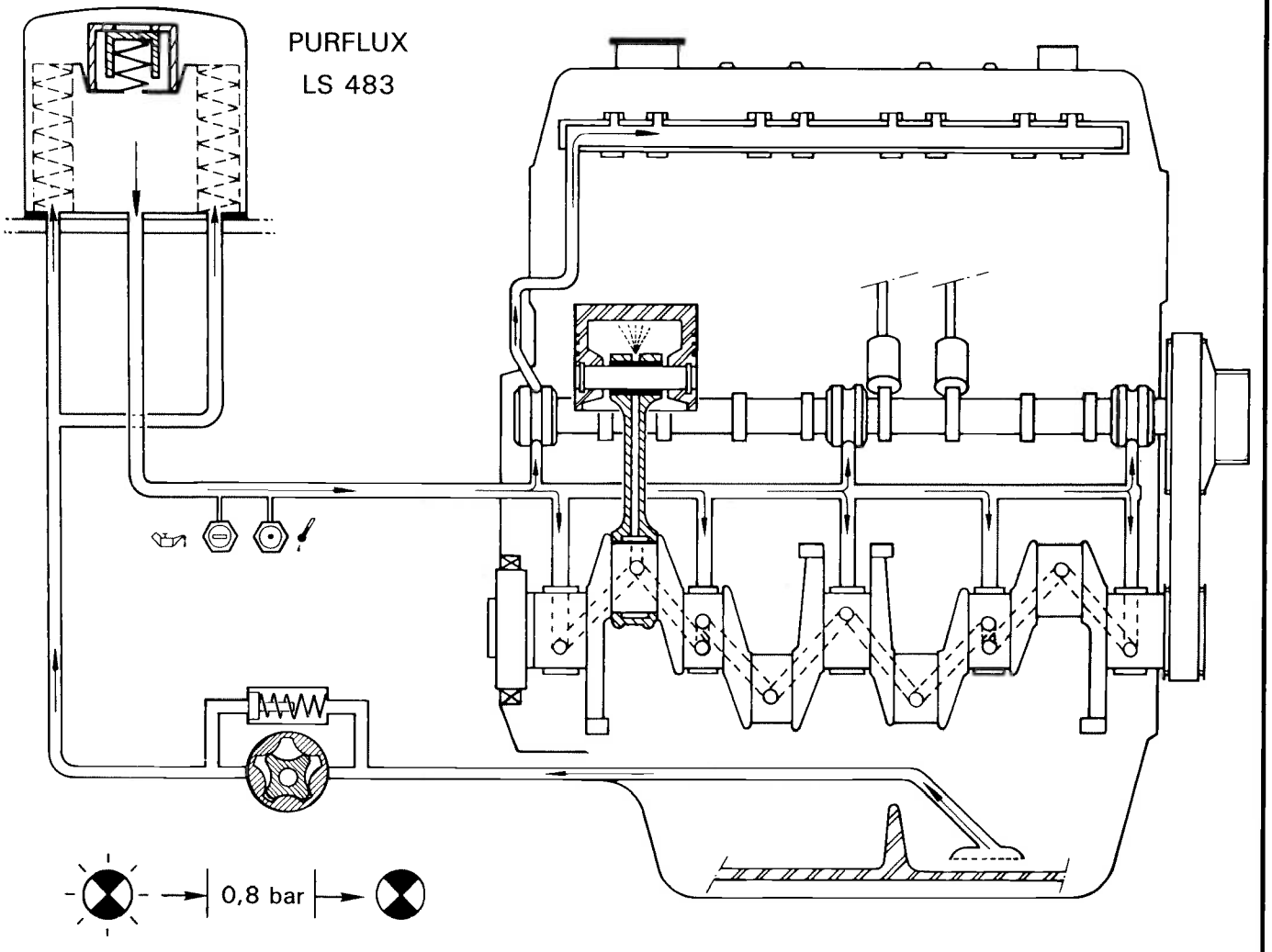

	→ 15°C	TOTAL SUPER DIESEL 15 W 40	– 12°C → TOTAL RUBIA - S - 10 W

	5 L	+	5,6 L

95°

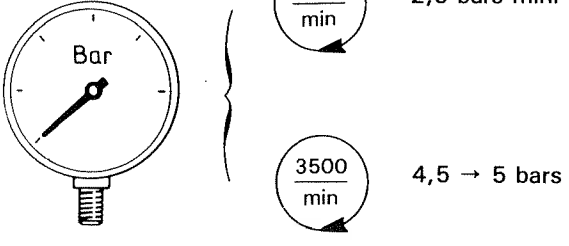

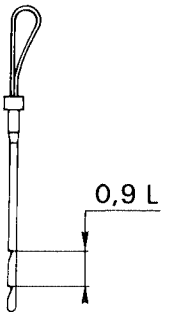

	M25/648	
x 4	2500 cm³	
∅	93 mm	
c	92 mm	
$\frac{V + v}{v}$	21/1	
	Diesel	

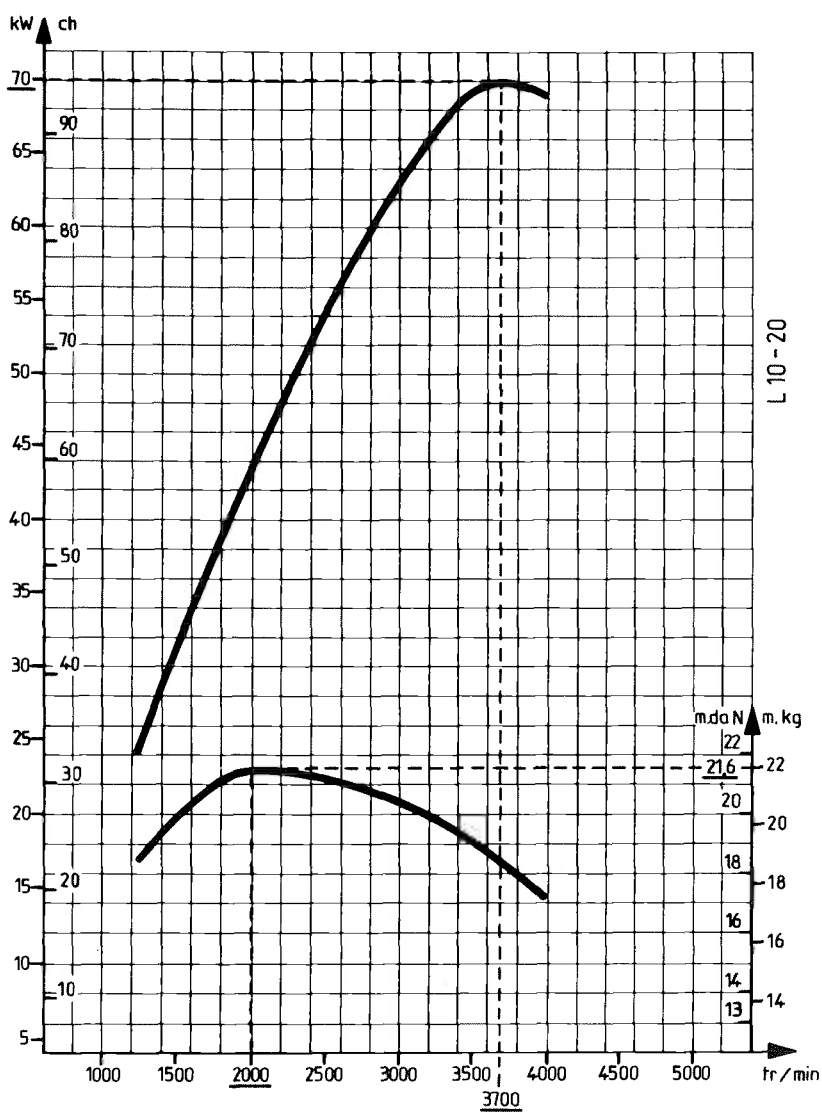

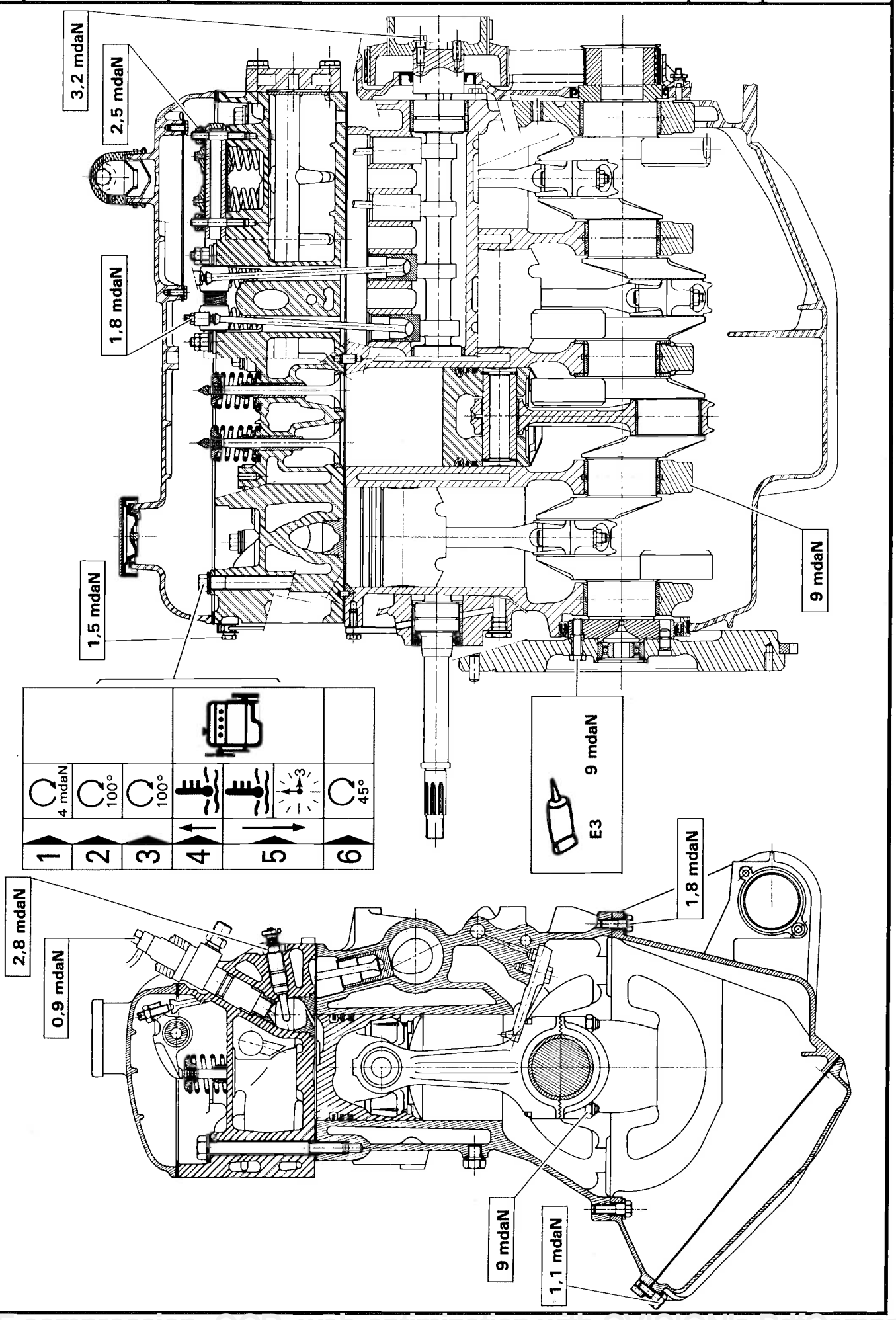

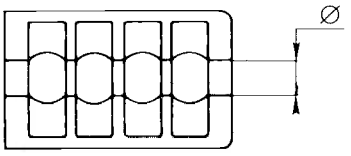	∅ mm : 71,695 → 71,705

		∅ 1	∅ 2
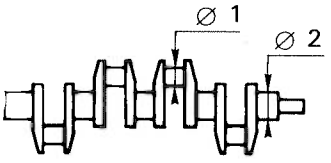	A	54,005 mm → 53,99 mm	67,05 mm → 67,035 mm
	B	53,755 mm → 53,74 mm	66,80 mm → 66,785 mm
	C	53,505 mm → 53,49 mm	

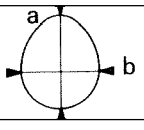	a — b	0,004 mm

	∅ I	∅ II
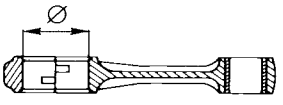	57,675 mm → 57,685 mm	57,685 mm → 57,695 mm

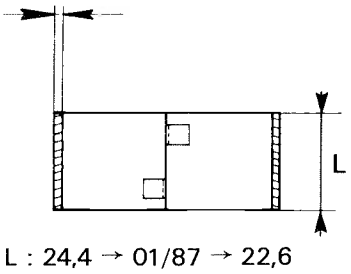 L : 24,4 → 01/87 → 22,6	A	I	1,816 mm → 1,826 mm	2,306 mm → 2,312 mm
		II	1,821 mm → 1,831 mm	
	B	I	1,941 mm → 1,951 mm	2,431 mm → 2,437 mm
		II	1,946 mm → 1,956 mm	
	C	I	2,066 mm → 2,076 mm	
		II	2,071 mm → 2,081 mm	

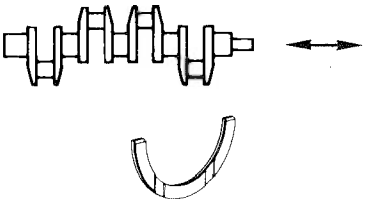		0,045 mm → 0,16 m
		3,10 - 3,14 - 3,18 - 3,22 - 3,26

			AEF	PdC	
93	A	93,01 → 93,02	92,885 → 92,903	92,859 → 92,877	0,65 → 0,75

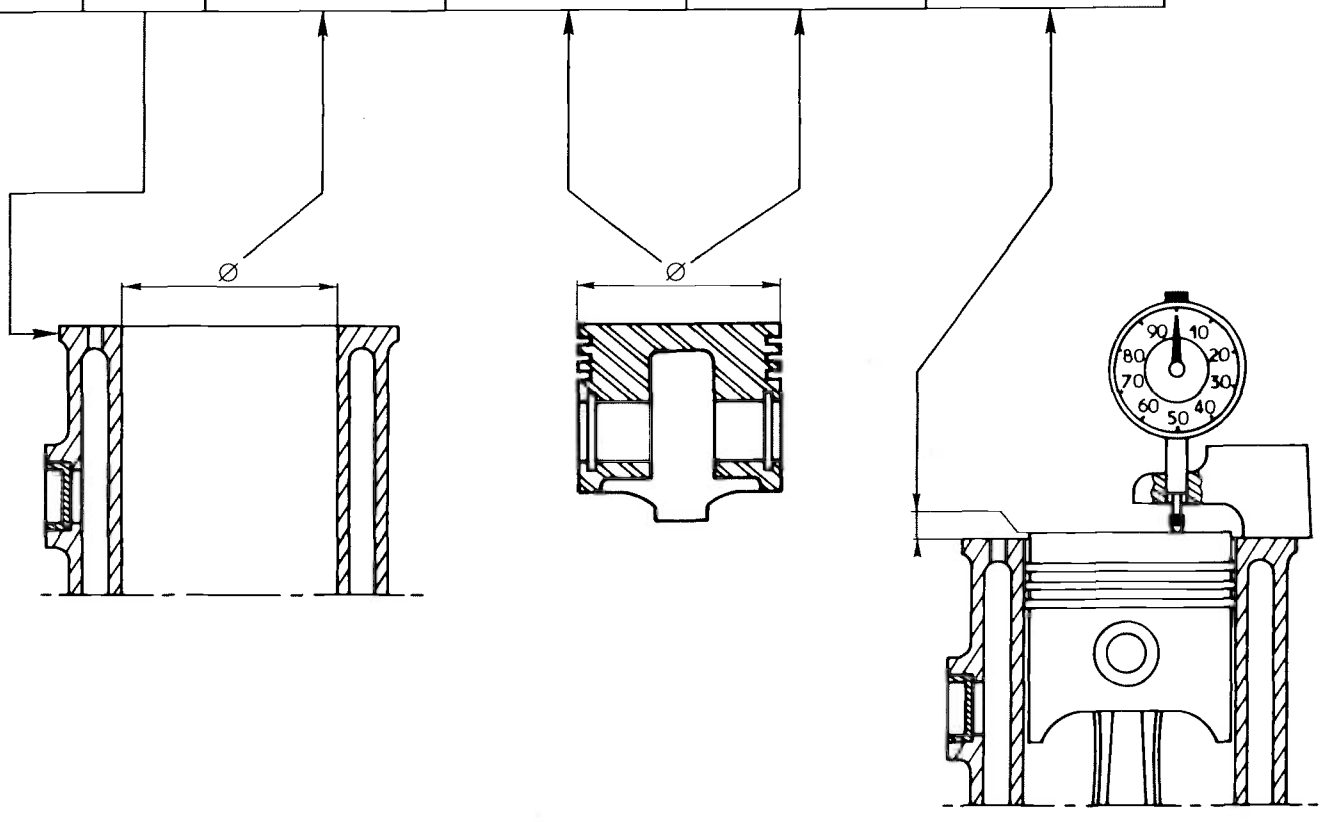

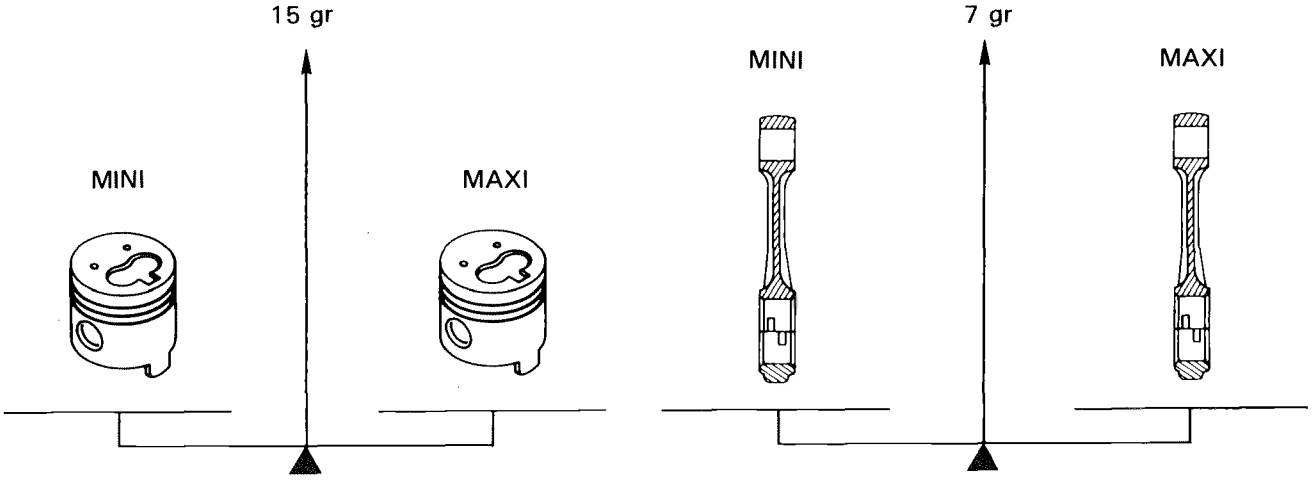

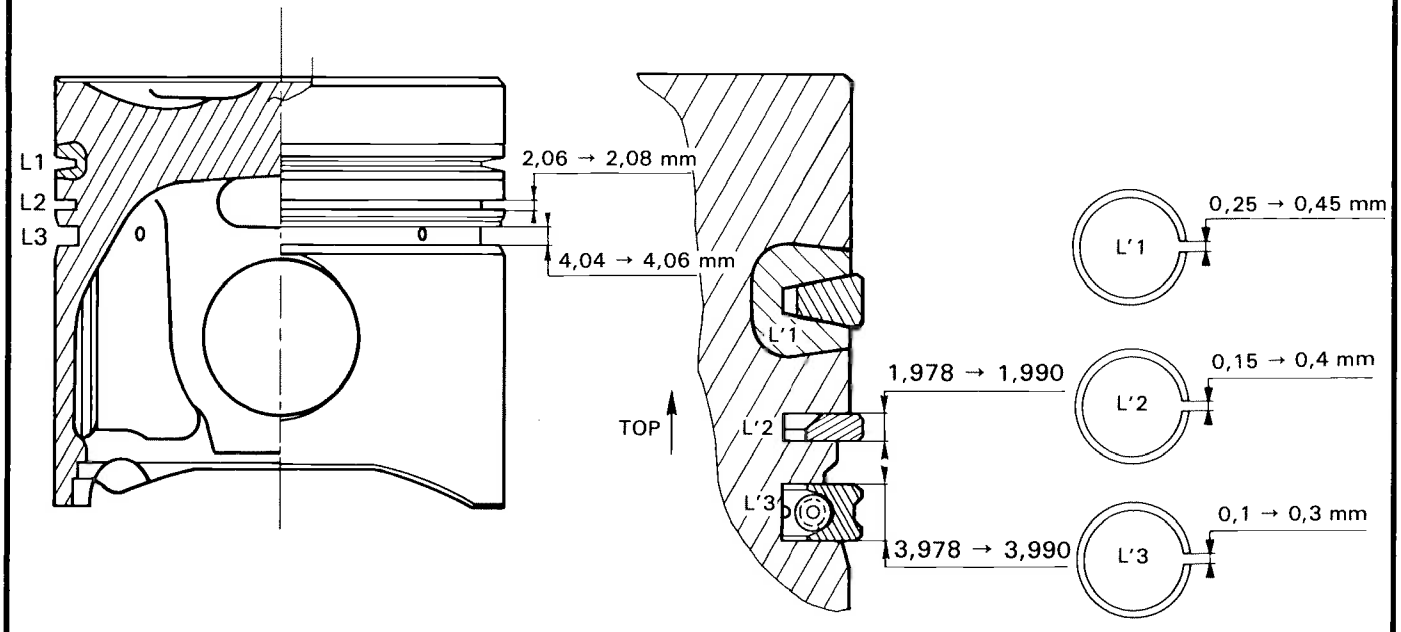

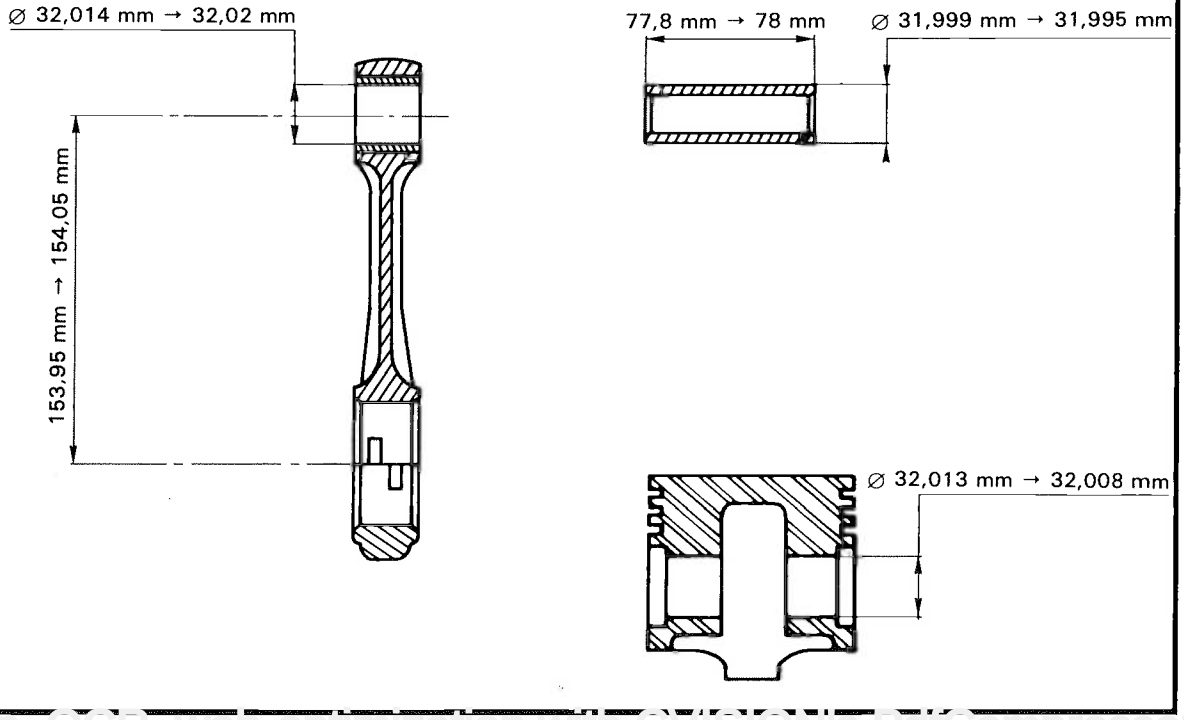

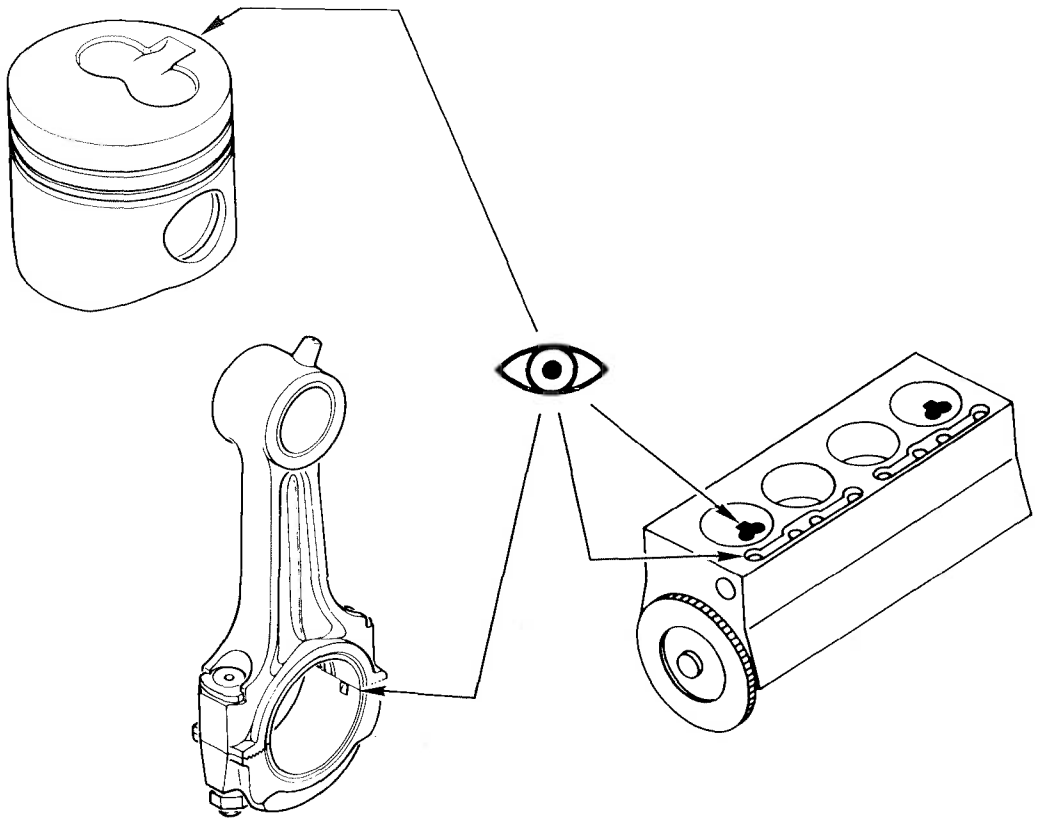

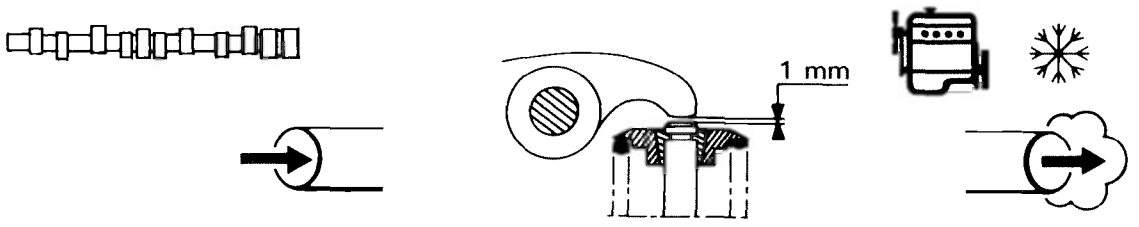

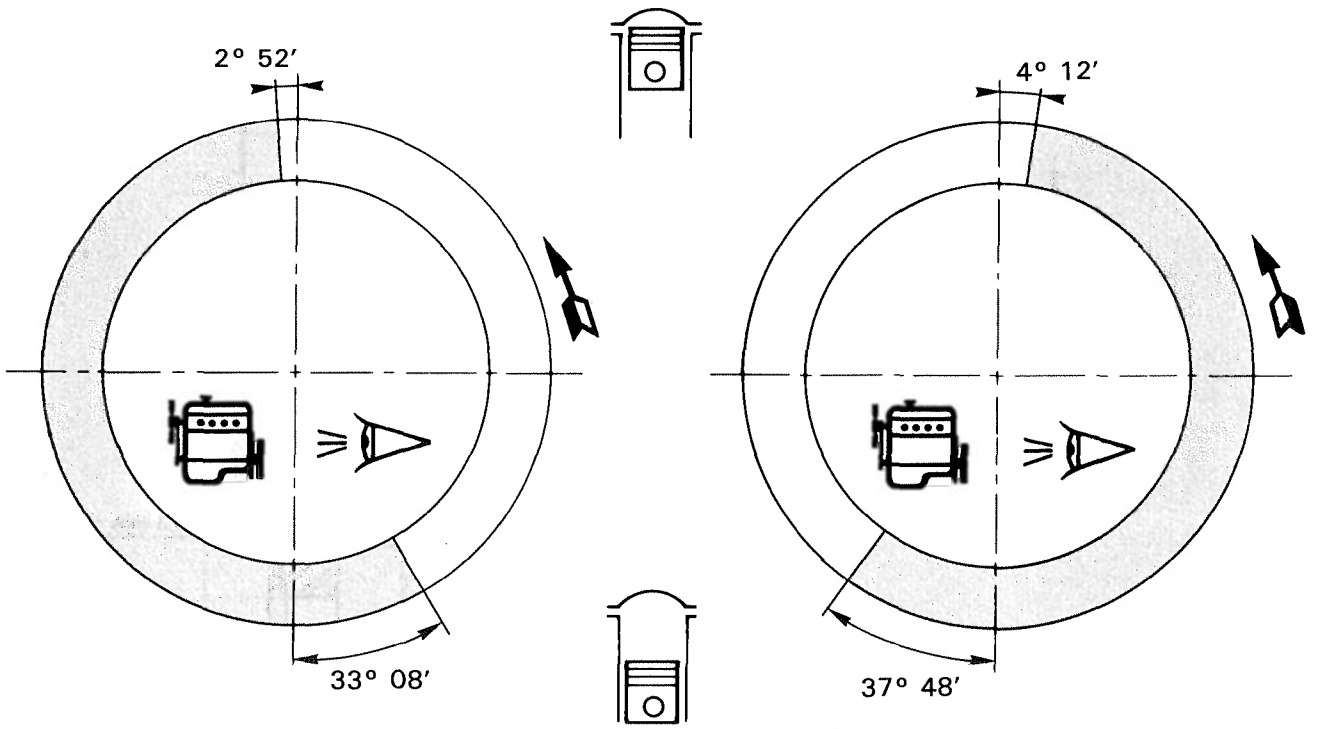

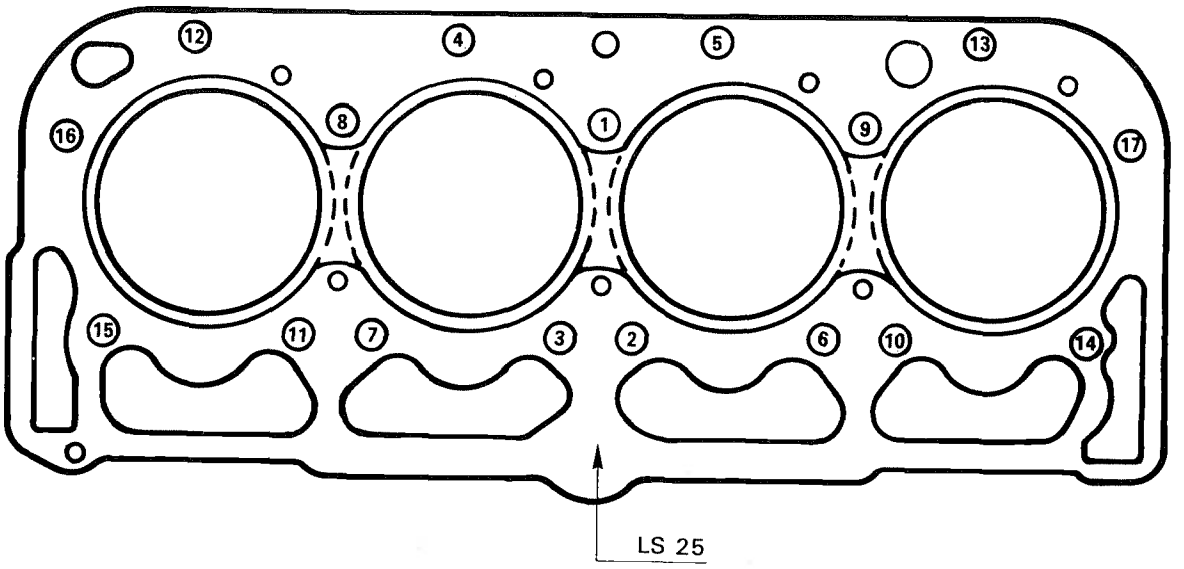

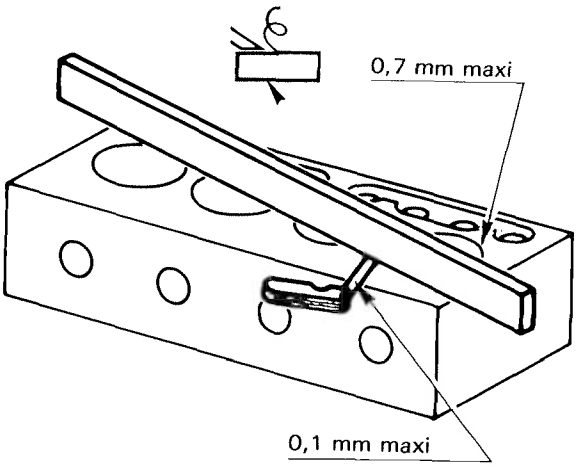

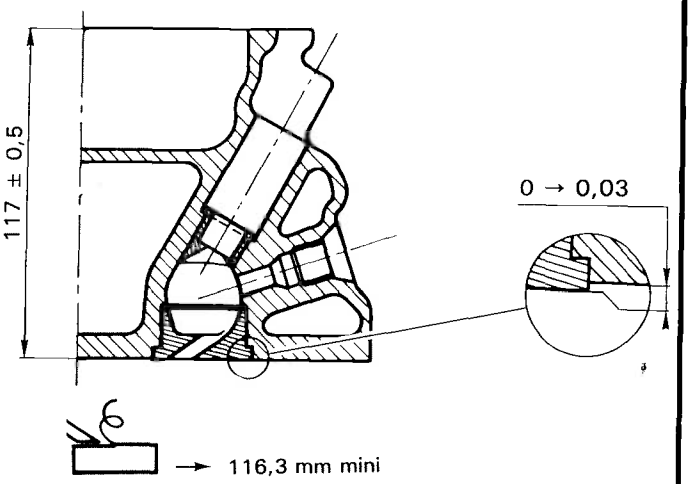

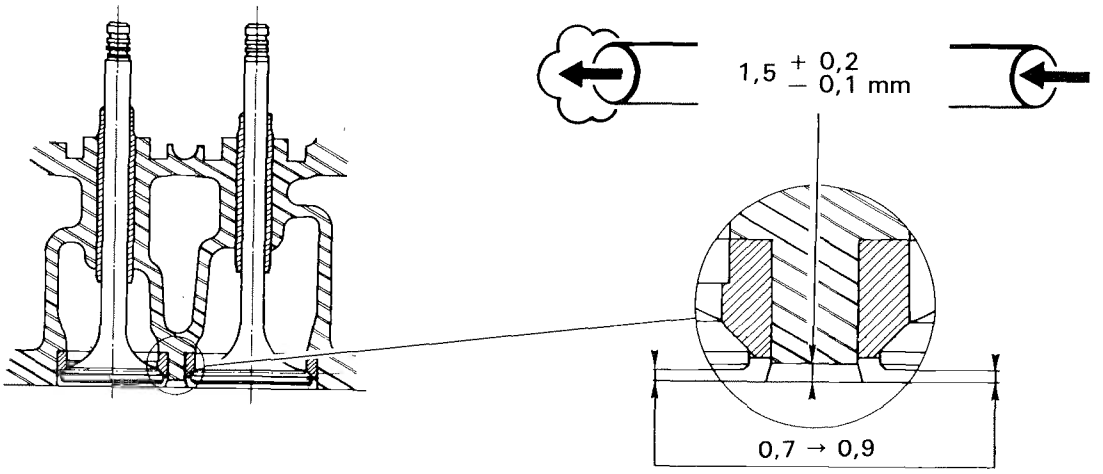

*

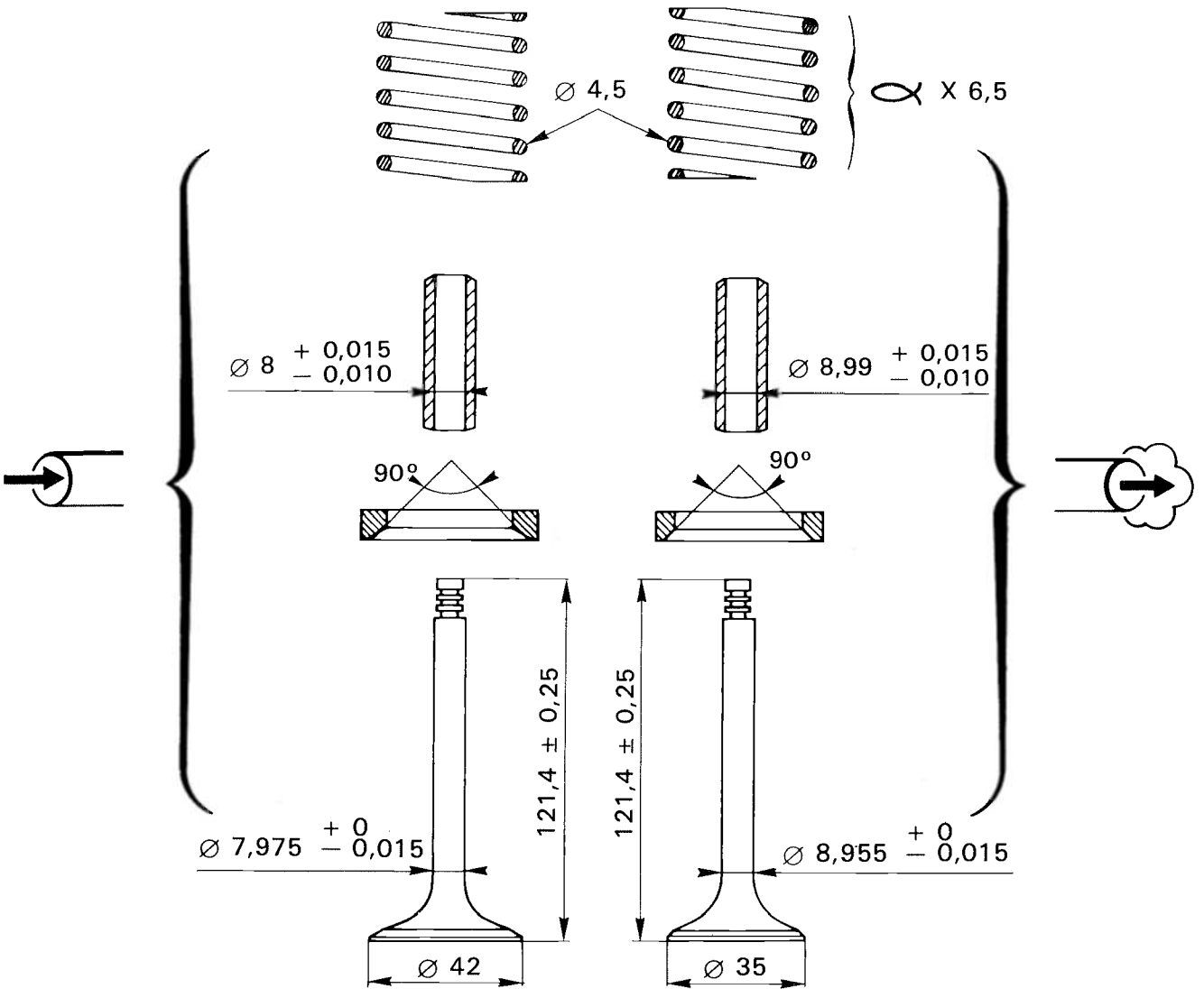

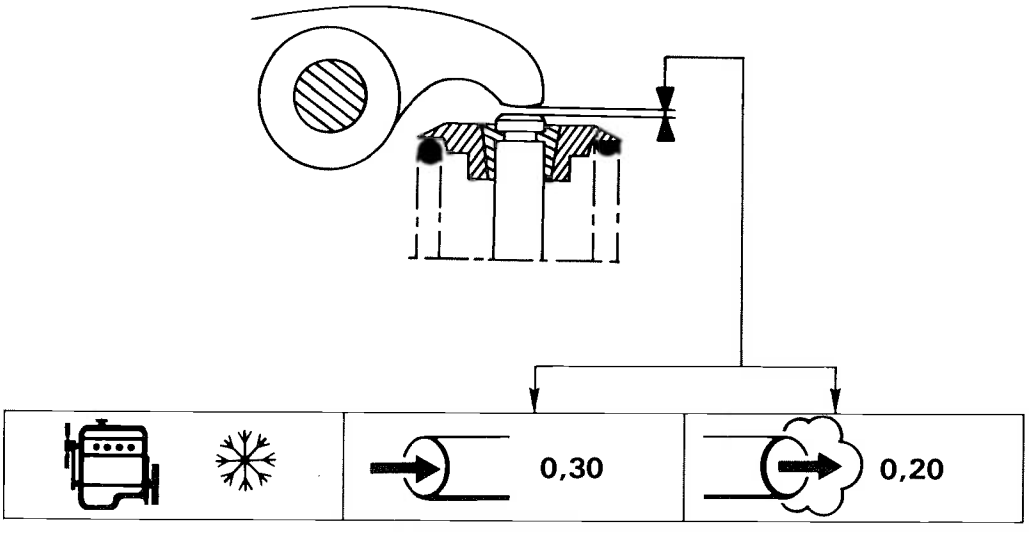

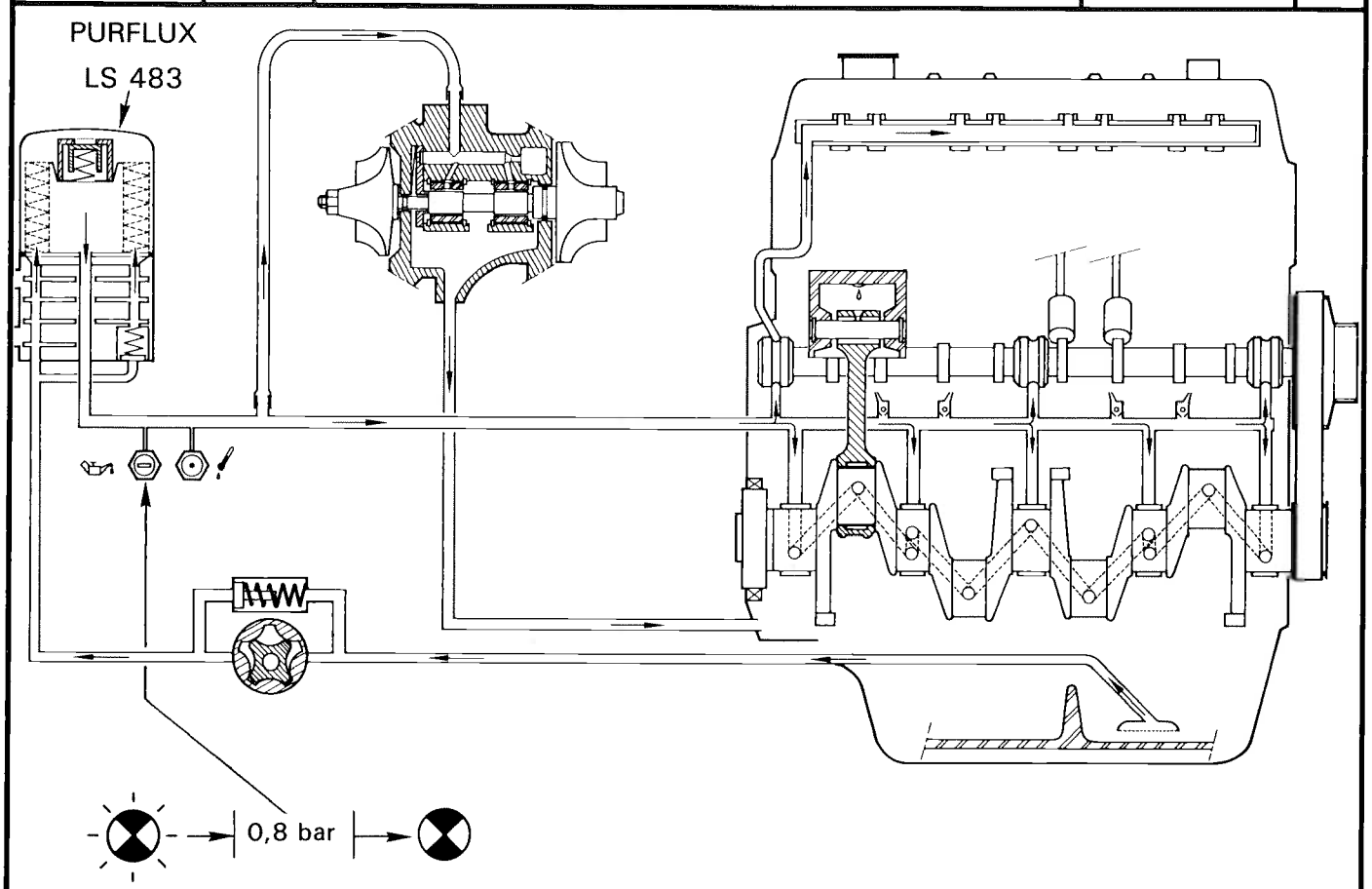

	→ 15°C	TOTAL SUPER DIESEL 15 W 40	– 12°C → TOTAL RUBIA - S - 10 W

	5 L	+	5,6 L

95°

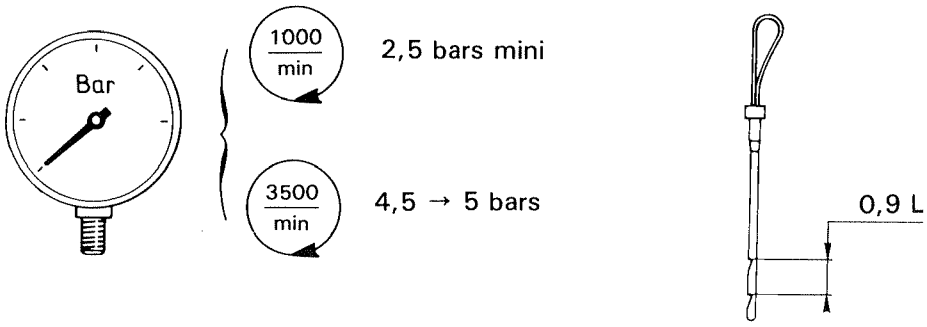

RECOMMENDED TOOLS

Removing and refitting the power unit assembly

6602-T	Set of three stands
2517-T.bis	Lifting sling.
4061-T	VISA anti-roll bar tensioning device
6031-T	Attaching bracket (for the petrol turbo engine)

Removing and refitting the drive-shafts

3312-T	Lower arm ball-joint extractor with bosses
or	
6323-T	Lower arm ball-joint extractor, with or without bosses
6310-T	Wheel hub locking tool
6320-T	Anti-roll bar link rod puller

— Torque wrench (40 m.daN)

— Bush 35 mm accross flats

REMOVING AND REFITTING THE ENGINE/GEARBOX ASSEMBLY

– 2.5 LITRE CX WITH PETROL INJECTION –

REMOVAL

Support the car on stands horizontally, **Fig. I** using the three stands **6602-T,** in order to facilitate the removal of the power unit assembly and to reposition it more easily on the stands.

Depressurize the hydraulic system.

Drain the brake accumulator.

Set the height control to the "low" position.

Remove:
- the battery,
- the bonnet,
- the front wheel,
- the spare wheel
- the protection plate located under the spare wheel,

Drain the cooling circuit via the drain hose of the radiator.
Take off the crankcase drain plug (1), **Fig. II**.

Remove the drive-shafts:

(Refer to Op ⑤ MA.372.1/1).

Uncouple: hoses (6) and (7), **Fig. IV** ***(protecting the alternator from water entry at "a").***

Disconnect the engine cooling fan thermal switch.

Remove the engine heat sink.

Extract, Fig. III:
- the screws that secure horn (2) support, passing through the wheelarch,
- the wheelarch lining.

Disconnect:
- wiring harnesses (3) from the battery positive lead, **Fig. III**,
- the ground cable from the gearbox,
- the wiring harness from the reversing lamp switch.

Remove, Fig. III:
- the pressure regulator accumulator,
- pipe (4) between pressure regulator and brake accumulator.

Vehicle with air conditioning option:
- the belt protective cover,
- the air conditioning compressor drive belt.

Uncouple:
- the air intake casing position accelerator cable,
- the high pressure pump rubber suction pipe,
- the high pressure pump outlet pipe (5) and its attachment, **Fig. III.**

Disconnect: Fig. V
- the throttle spindle switch (10),
- knock sensor (14).

Uncouple: Fig. V
- pressure sensor pipe(9),
- supplementary air pipe (11),
- cylinderhead cover pipe (12),
- breather pipe (8).

Remove suction pipe (13) situated between the flowmeter and the turbocharger or between the flowmeter and the inlet manifold.

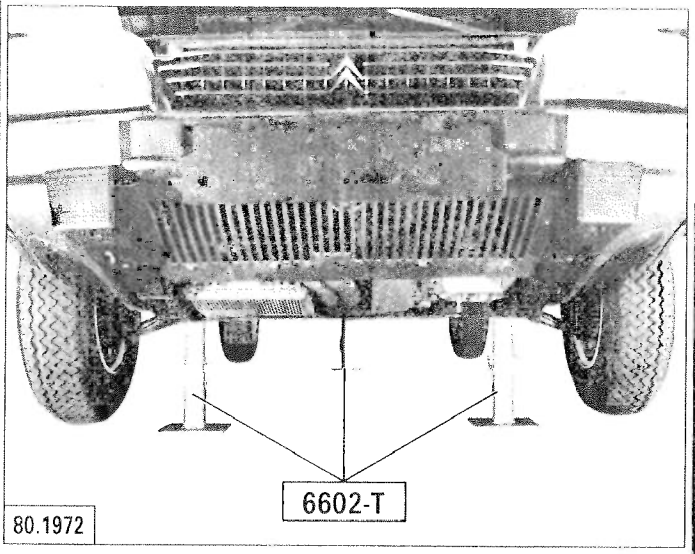

I

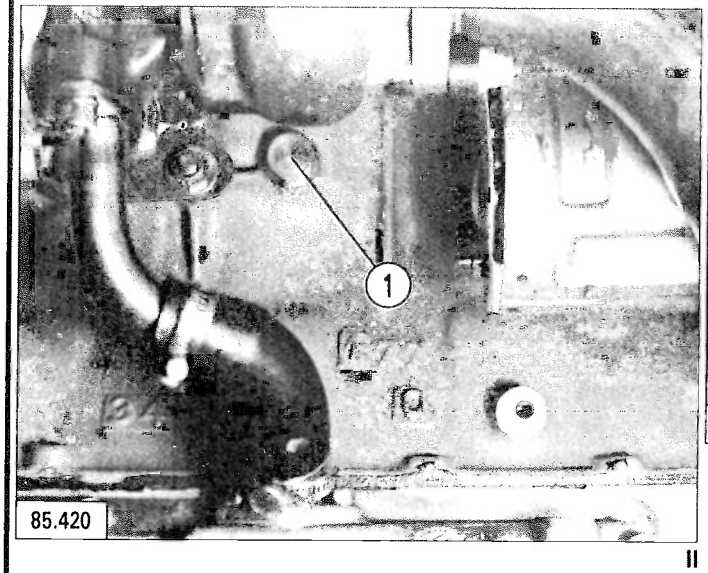

II

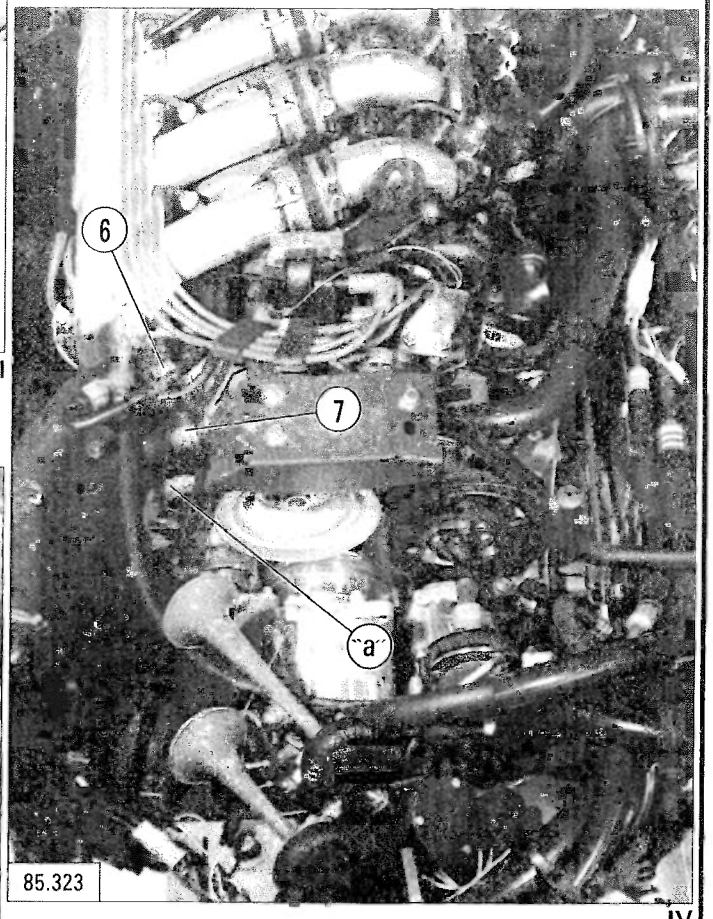

IV

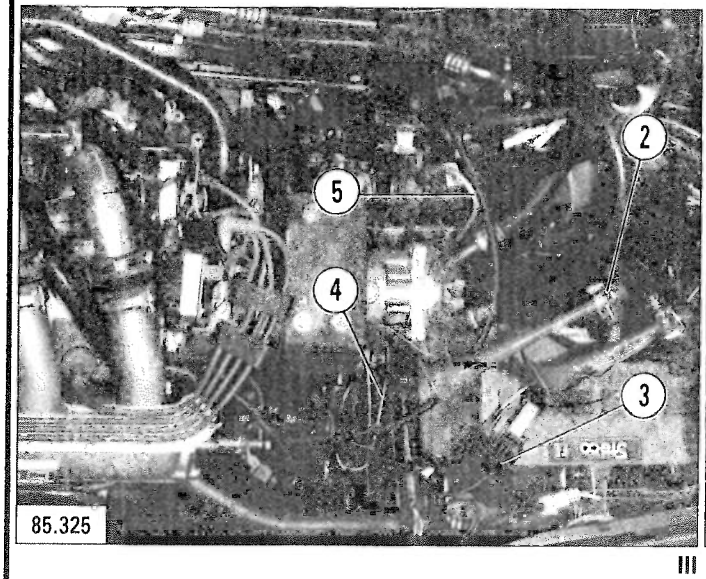

III

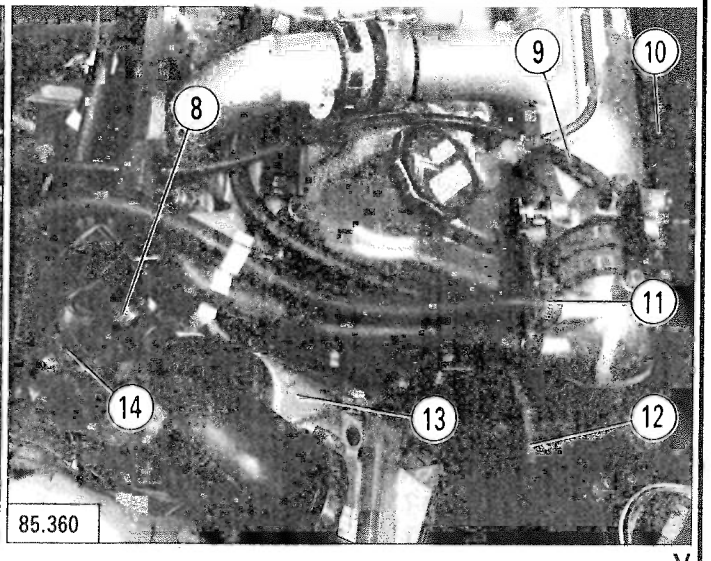

V

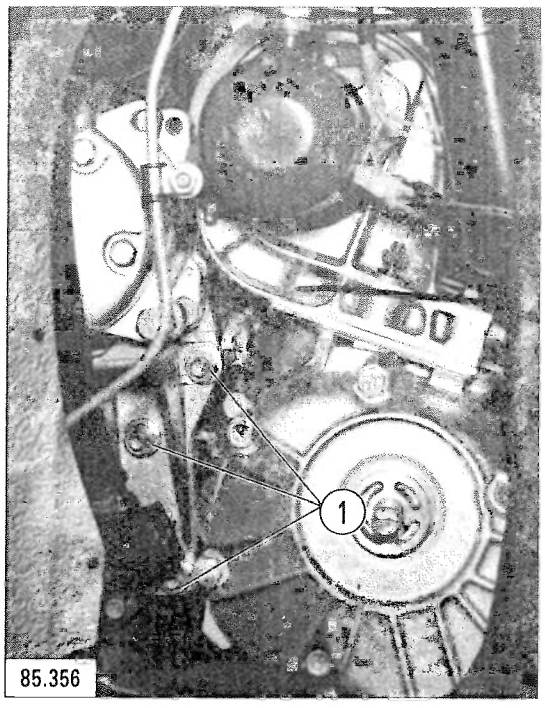

I

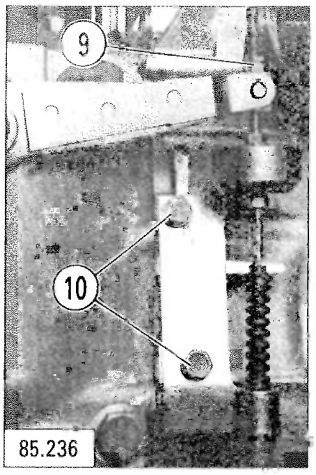

IV

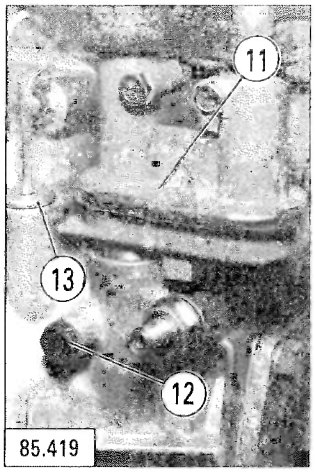

V

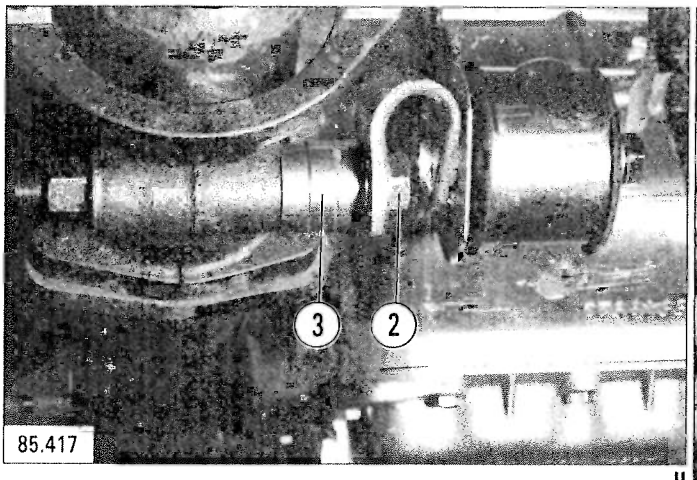

II

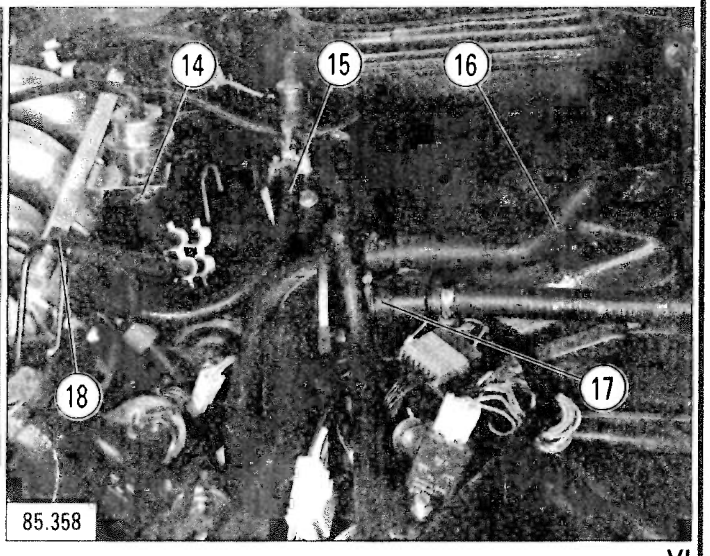

VI

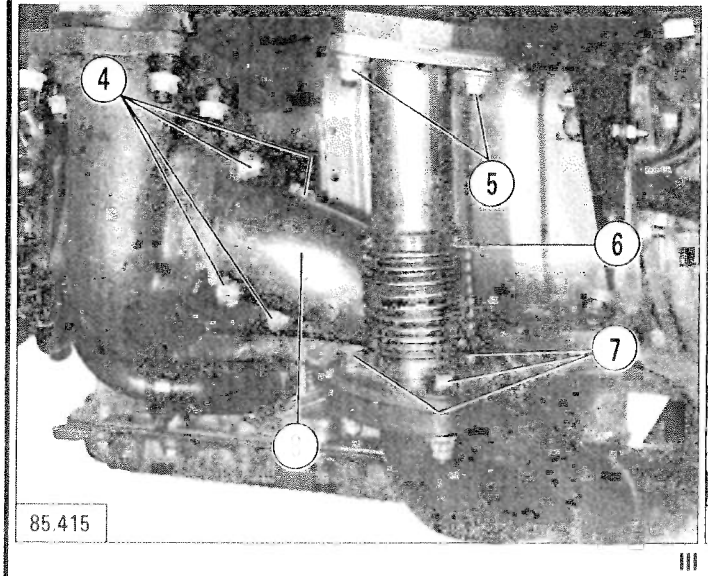

III

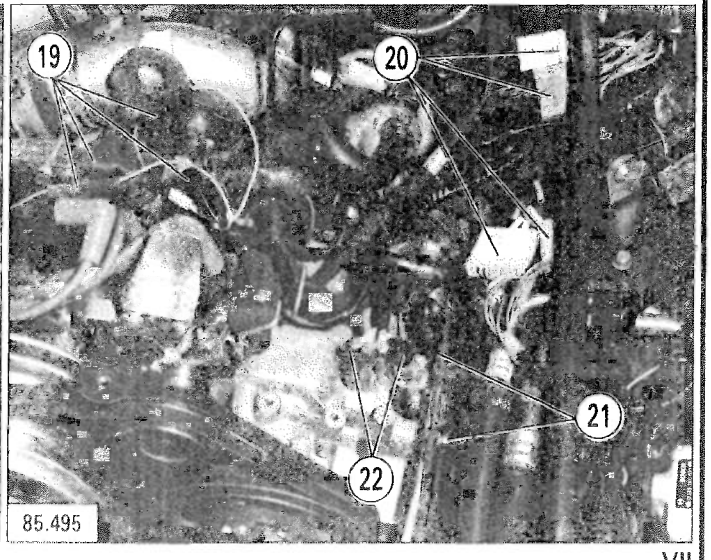

VII

Remove:

- pressure regulator and compressor holder nuts (1) (*air conditioning option*).
- all the shims, and put them in place of the battery.

Uncouple the exhaust system.

Normally aspirated engine with E.F.I.:

Remove the 4 exhaust pipe nuts.

Turbo with E.F.I., **Fig. II and III**

Remove:

- screw (2) and shims (3),
- flexible pipe screws (7),
- nuts and spacers (4).

Release exhaust pipe (8) downwards.

Remove nuts (5) and flexible pipe (6).

Uncouple the clutch control, **Fig. IV**.

Remove:

- adjusting nuts (9),
- clutch control support screws (10).

Uncouple the power take off with double outlet, **Fig. V.**

Fully loosen screw (12), then retighten it by two turns to prevent the speedometer drive guide from being pushed out.

Disengage the twin outlet power take off (11).

Remove oil gauge (13).

Uncouple, Fig. V:

- heater hoses (16) and (17),
- fast idle air duct (15),
- petrol supply pipe (18),
- petrol return pipe (14).

Disconnect, Fig. VII:

- connectors (20),
- sensors (22),
- coils and suppressors (19),
- gear shift link rods (21).

Position on the engine, **Fig. I:**

- sling **2517-T.bis** *(as shown on illustration)*,
- attaching bracket **6031-T**.

  naturally aspirated engine with EFI: bracket to be fitted on the exhaust pipe, with one screw,

  turbo with EFI: fit the bracket to the pressure relief valve outlet,
- tensioner **4061-T** *(slack)*.

Place sling **2517-T.bis.** under tension, tensioner **4061-T** being loosened, **Fig. II**.

Remove:

- screw (1) from the engine bearer, **Fig. III**.
- nut (3) and screws (4) from the gearbox mounting, **Fig. V (*retrieve the shims*),**
- screw (2) from the torque rod; slacken the other screw, **Fig. IV**.

Slightly raise the power unit assembly.

Screw tensioner **4061-T** fully, **Fig. VI** and remove the engine/gearbox assembly:

Before refitting the power unit assembly:

Check the condition of the engine mounting brackets. Replace them if needed.

Adjustment to be tested,

(as per Op.① MA 133.0/1).

REFITTING

Fit the engine crankcase water drain plug, fitted with a ***new seal:*** **Tightening torque: 3 mdaN.**

Place sling **2517-T.bis,** attaching bracket **6031-T** and tensioner **4061-T;** screw the tensioner fully in, **Fig. I and VI.**

Engage the engine/gearbox assembly into its compartment, **Fig. VI.**

Loosen tensioner **4061-T, Fig. II**.

Refit: (*without tightening*)

- engine support bracket screw (1),
- torque rod screw (2)
- gearbox support plate *(together with its shims)*.

Tighten:

- the engine bearer to **10 mdaN, Fig. III**
- the torque rod to **9 mdaN, Fig. IV**
- the gearbox support plate fixings, **Fig. V**:

  screws (4): to **3 mdaN**

  nut (3): to **16.5 mdaN.**

Insert the clutch cable into its ball-joint. Tighten clutch control support (5). Adjust the clutch , **Fig. VII.**

Locate, Fig. VIII:

- the dual outlet power take off (6).
- the oil gauge.

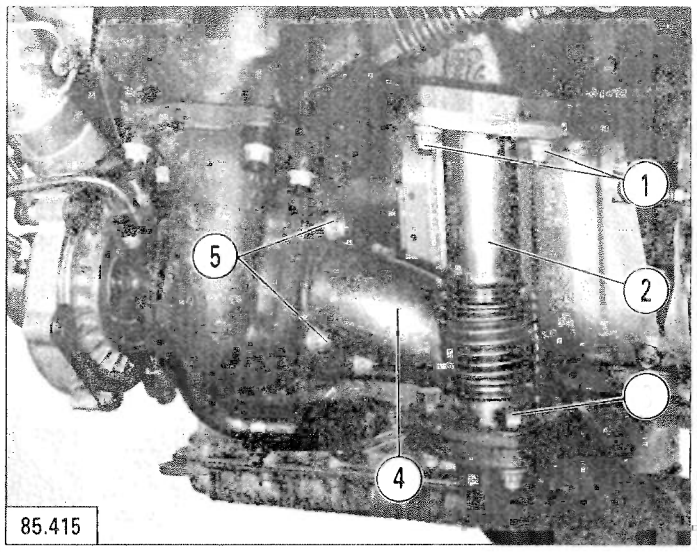

85.415

I

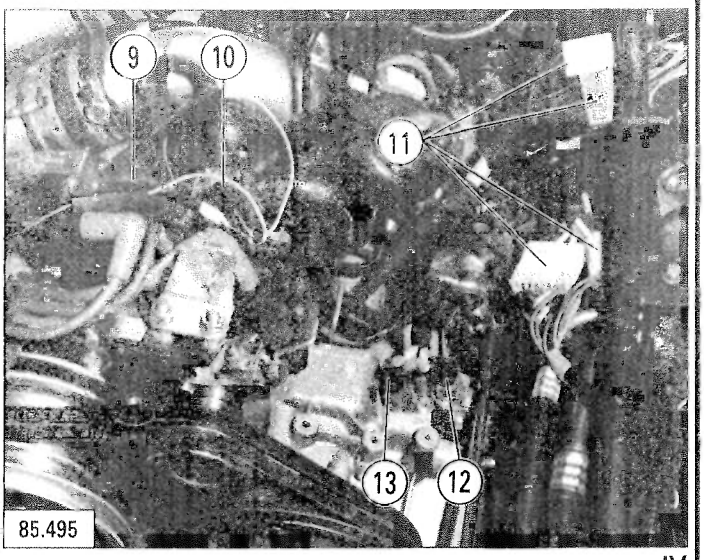

85.495

IV

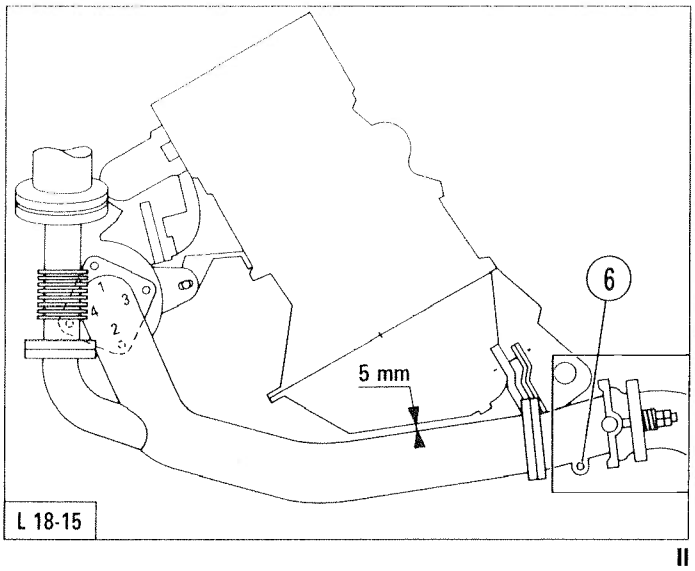

L 18-15

II

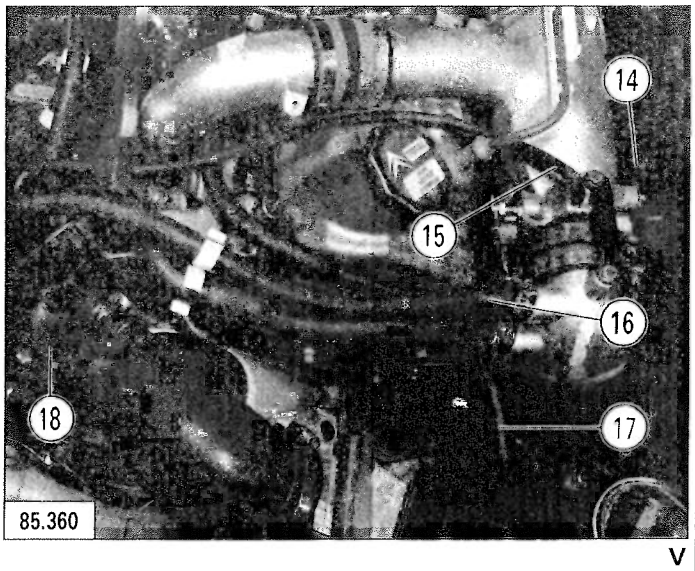

85.360

V

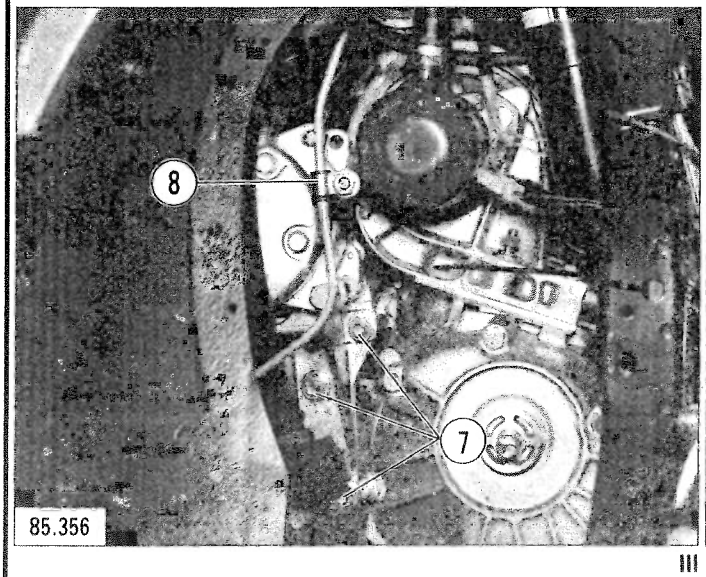

85.356

III

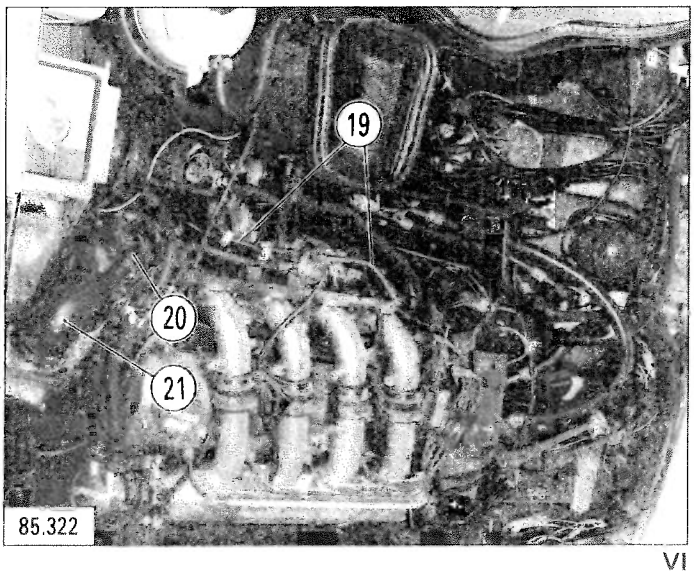

85.322

VI

Couple up the exhaust system.

On naturally aspirated engines with EFI, fitted with ***NEW seals:***

Tighten the flange to **1.6 mdaN**

On the turbocharged engines with EFI, fitted with ***NEW nuts and seals:***

Refit: **Fig. I** and **II,**

- flexible pipe (2) to the pressure release valve outlet,
- exhaust pipe (4) to the turbo, screws (3), distance pieces (5),
- screw (6) and adjusting shims.

There should be a **5 mm clearance at least** between the exhaust pipe and the engine crankcase.

Tighten, Fig. I and **II:**

- turbocharger nuts (***in the correct sequence***), **Fig. II,**
- flexible hose (2) screws (3) and nuts (1) to **2.5 mdaN,**
- screw (6) to **5 mdaN.**

Refit: Fig. III

- the pressure regulator and compressor holder (*air conditioning option*) together with its shims; tighten nuts (7) to **5 mdaN.**

Vehicles with air-conditioning:

- the compressor belt and protection cover,
- the pressure regulator accumulator, fitted with a ***NEW seal,***
- the HP pump outlet pipe, fitted with a ***NEW seal*** and its fastenings (8),
- the pipe situated between the pressure regulator and the brake accumulator, fitted with ***NEW seals,***
- the HP pump rubber suction pipe,
- the horn.

Reconnect, Fig. IV and V:

- connectors (11),
- sensor (12) (*with blue ident. mark*),
- sensor (13) (*with no ident. mark*),
- HT coil (9) cyls 1 and 4 (*with yellow ident. mark*),
- HT coil (10) cyls 2 and 3 (*with no mark*),
- the suppressors,
- the reversing lamp switch wiring harness,
- the throttle spindle switch (14),
- knock sensor (18).

Recouple, Fig. V and VI:

- the water hoses,
- air circuit pipes (15), (16), (17), (20) and (21),
- petrol circuit pipes (19),
- gear shift link rods,
- the accelerator cable.

Fit:

- the driveshafts,
  (See Op. ⑤ MA 372-1/1)
- the radiator,
- the bonnet,
- the battery,
- the protection plate located under the spare wheel.

Check the oil levels. Top up if necessary.

Fill up the cooling circuit (with the heater open) and carry out the bleeding operation.
(As per Op ① MA 230.0/1).

Bleed the front brakes.
(Refer to Op. MA 453.0/1).

Check the gear change.

Lower the vehicle to the ground.

RECOMMENDED TOOLS

5602-T	Support for dial-gauge
2437-T	Dial-indicator

CHECKING THE VALVE TIMING

Rotating the crankshaft:

two methods:

- 1°) engage the highest gear; rotate the crankshaft by means of the road wheel,
- 2°) use the screw securing the crankshaft pulley and turn the crankshaft in the normal direction of rotation.

Remove, Fig. I:

- the control cable from the cold start flap (1),
- hose (2),
- the accelerator control rod and cable,
- cylinderhead cover (3).

Bring:

- the piston of cylinder **No. 4** to TDC
  (with the valves in the "rocking" position)

Make sure:

that mark **"a"** on the flywheel is facing the **zero** on the clutch bell housing, **Fig III.**

Set:

the clearance of cylinder **No. 1** inlet valve (4) to **1.50 mm, Fig II.**

Turn:

the crankshaft through a complete turn in the normal direction of engine rotation.

Check:

cylinder **No. 1** valve clearance

The clearance should be of **0.30 to 0.75 mm.**

Adjust:

the valve clearance:

INLET = 0.10 mm
EXHAUST = 0.25 mm

NOTE:

This check can be carried out with a dial gauge, as shown on **Fig. IV.**

Fit:

the cylinderhead cover and its gasket,
(tighten to **0.6 mdaN**).

Recouple:

- the accelerator control rod and cable,
- the hoses,
- the control cable to the cold start flap.

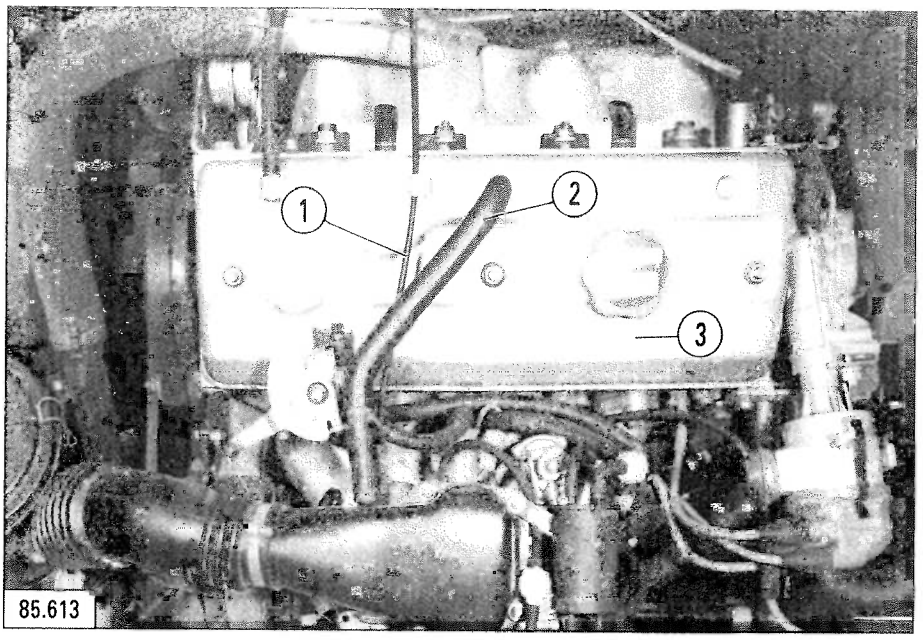

85.613

I

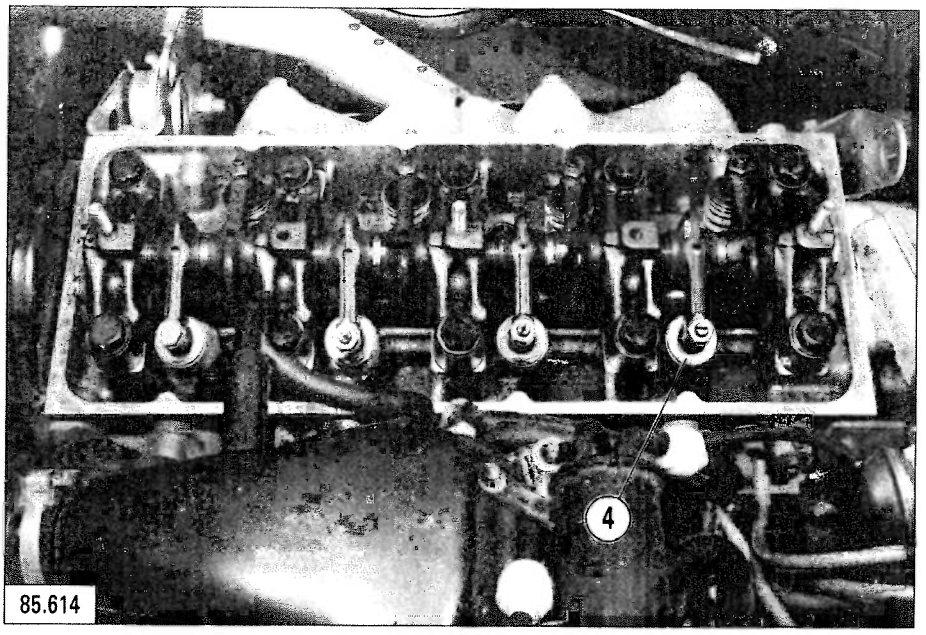

85.614

II

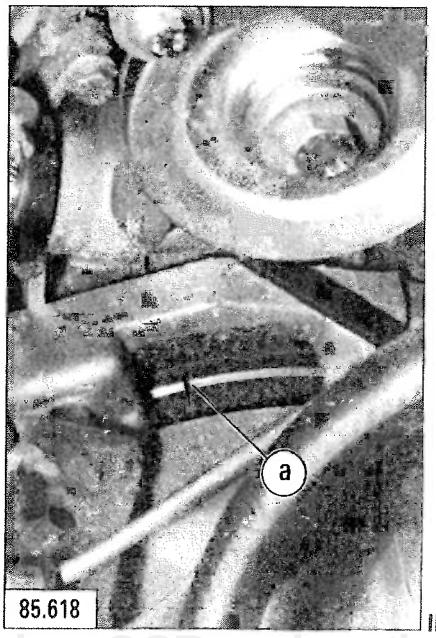

85.618

III

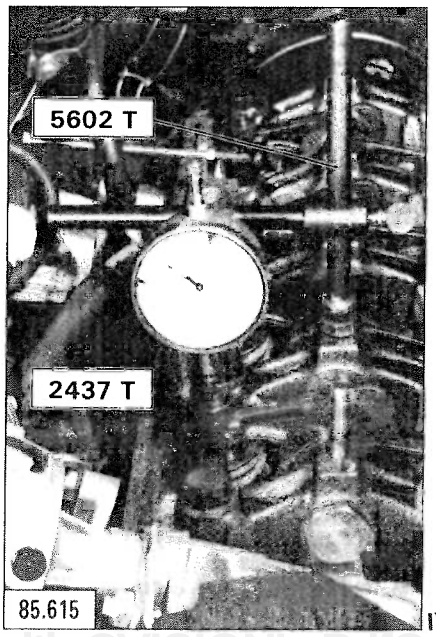

85.615

IV

RECOMMENDED TOOLS

1682-T	Support for the dial-gauge used to check the TDC
2437-T	Dial-indicator

CHECKING THE VALVE TIMING

NOTE:

Never attempt to rotate the crankshaft by means of the camshaft pulley clamping nut.

Raise the vehicle front end.

Shift in the highest gear. Move the crankshaft using the R.H. road wheel.

Remove, Fig. I:

- inlet pipes (1),
- the cylinderhead cover,
- the sparking plugs.

Bring cylinder **No. 4** piston to TDC ***(with the valves in the "rocking" position)***.

Place tool **1682-T** fitted with a dial indicator in cylinder **No. 1, Fig. II.**
Find the TDC.

Adjust cylinder **No. 1** inlet valve (2) clearance to **1.10 mm, Fig. II.**

Rotate the crankshaft through a complete turn in the normal direction of engine rotation.

Record the clearance of cylinder **No. 1** inlet valve: the figure should be comprised between :

0.05 and 0.25 mm

Remove tool **1682-T.**

Check and adjust the valve rocker clearances:

Inlet = 0.15 mm
Exhaust = 0.20 mm

Refit:

- the cylinderhead cover,
- the inlet pipes,
- the spark plugs **(tightening torque: 2.5 mdaN)**,

Lower the vehicle to the ground.

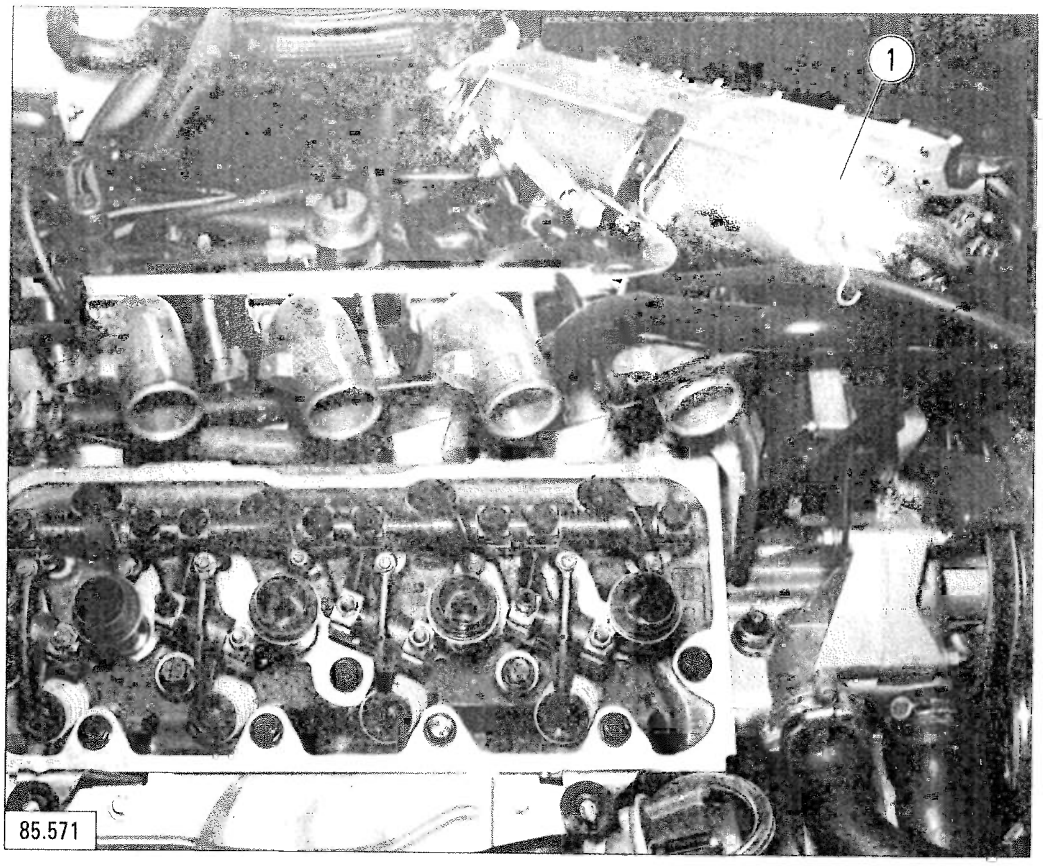

I

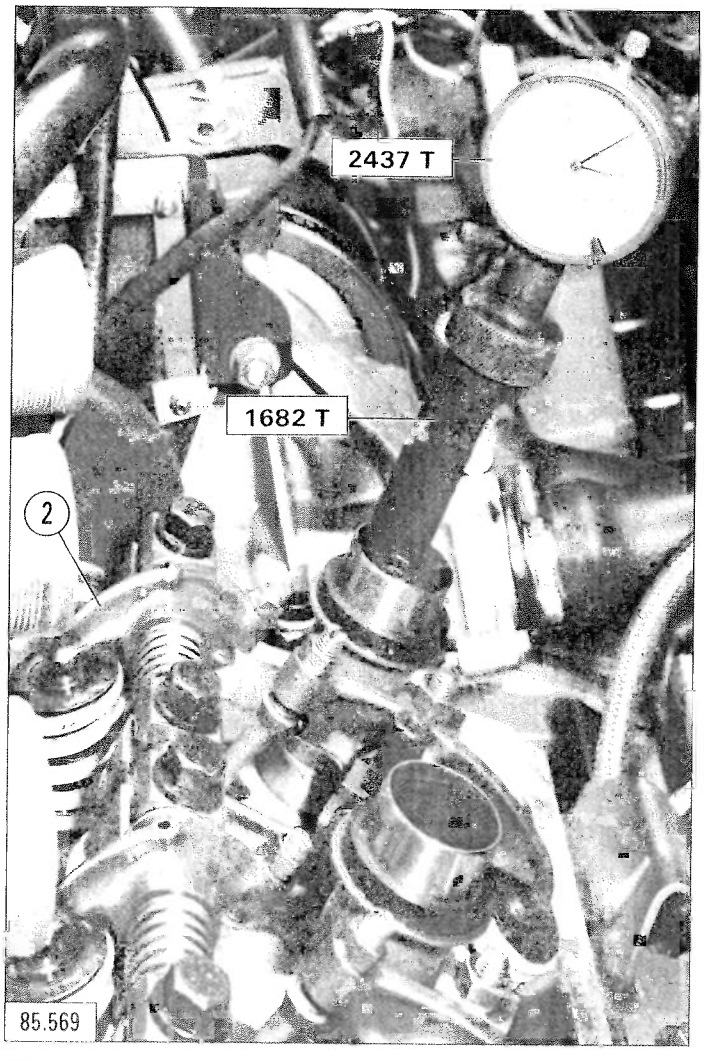

II

CHECKING THE VALVE TIMING

Place the vehicle RH side on stands.

Disconnect the battery negative cable.

Select the highest gear.

Remove:

- the road wheel,
- the wheelarch lining,
- the belt protection covers,
- the engine oil filler plug.

Position:

- the valves of cylinder No. 1 in the "rocking" position (look into the oil filler neck),
- the flywheel, with marks → ← aligned, **Fig. I.**

Check, Fig. II and **Fig. III,**

- that mark **A** is opposite screw (2),
- that there are **35 pitches** between marks **A** and **B** passing around tensioner roller (1).

Refit:

- the filler plug,
- the timing belt covers,
- the wheelarch lining,
- the wheel.

Reconnect the battery negative cable.

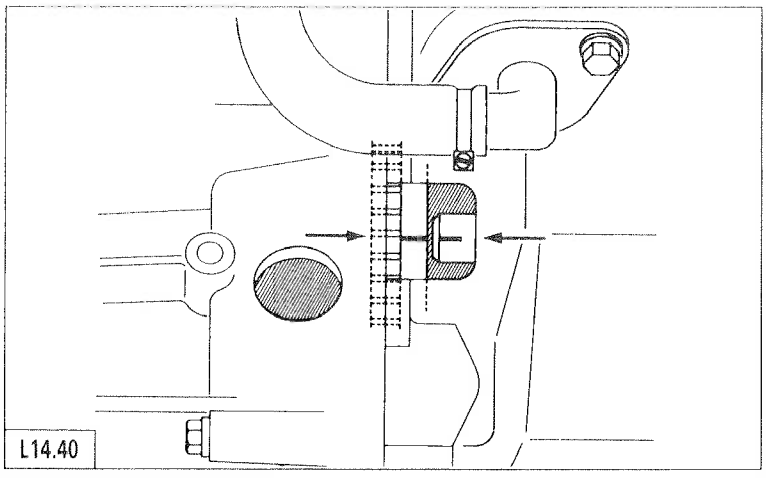

I

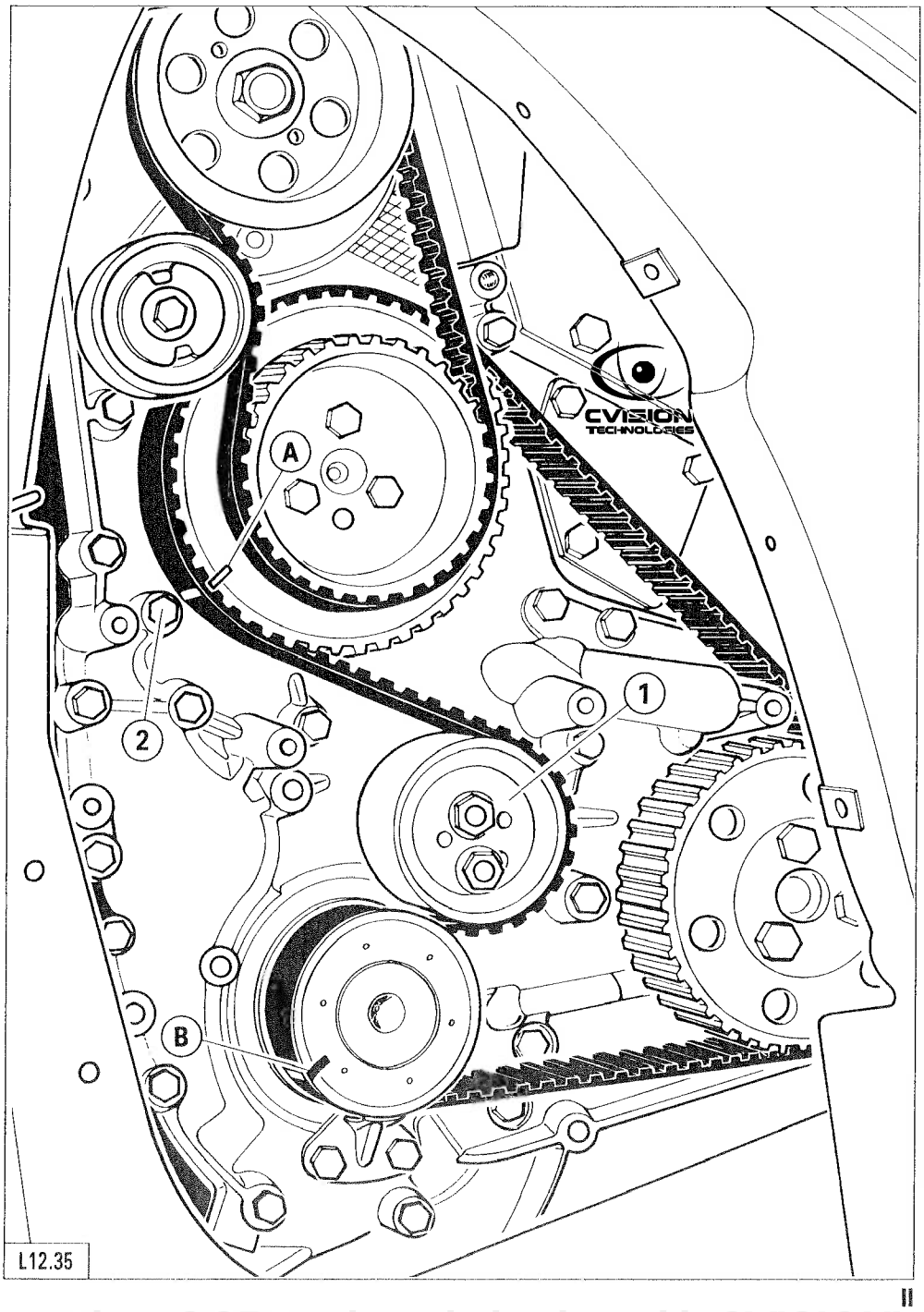

II

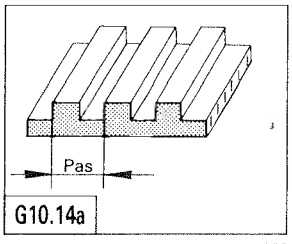

III

RECOMMENDED TOOLS

6012-T	Toothed sector for locking the engine flywheel

REMOVING/REFITTING THE TIMING BELT, ON THE VEHICLE

REMOVAL

Jack up the front R.H. side of the vehicle.

Take off the road wheel.

Remove, Fig. I:

- the control cable from the cold start flap (1),
- flexible hose (2),
- accelerator control rod and cable,
- cylinderhead cover (3).

Loosen, Fig II,

- valve rocker adjustment screws (4) so as to reduce the stresses in the camshaft.

Fit: Fig. III,

- tool **6012-T,** once the engine flywheel protective plate has been removed.

Remove, Fig. IV:

- the RH wheelarch rubber sealing strip,
- the alternator belt and housing,
- crankshaft pulley (5),
- timing belt casing (6),
- tool **6012-T,** Fig. III.

Slacken, Fig. IV,

- the two screws (7) and (8) securing the automatic tensioner by a half turn,

Compress the tensioner spring and retighten screws (7) and (8).

Remove:

- the timing belt.

REFITTING

NOTE:

- Crankshaft rotation, two possible methods:
  - a) Engage the highest gear and turn the crankshaft by means of the road wheel or the wheel hub.
  - b) Rotate the crankshaft in the normal direction of engine rotation using the crankshaft pulley fixing screw fitted with a distance piece.

Position:

- the pistons at mid-point of their stroke ***(with the crankshaft key placed horizontally).***

Adjust the valve clearance.

Inlet = 0.10 mm
Exhaust = 0.25 mm

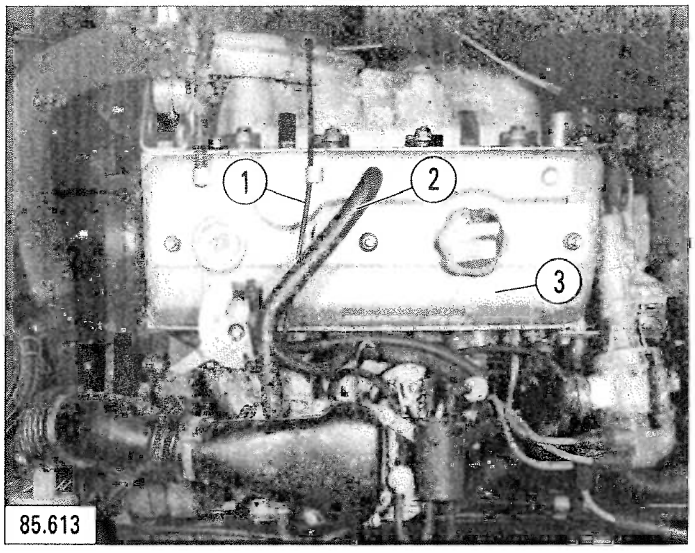

85.613 I

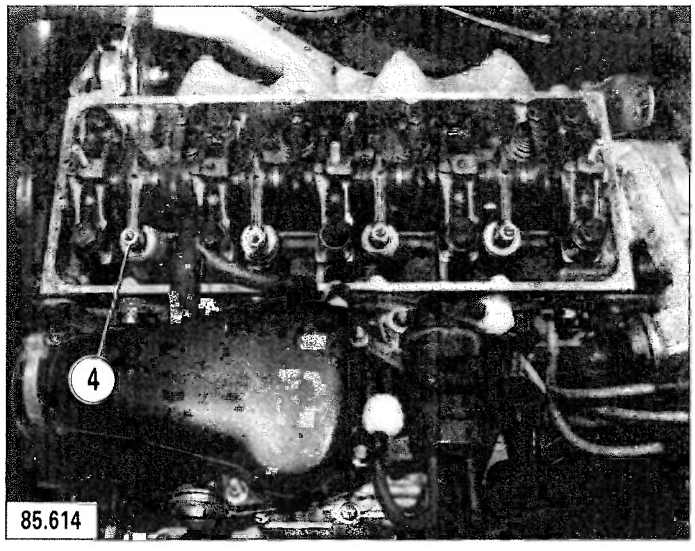

85.614 II

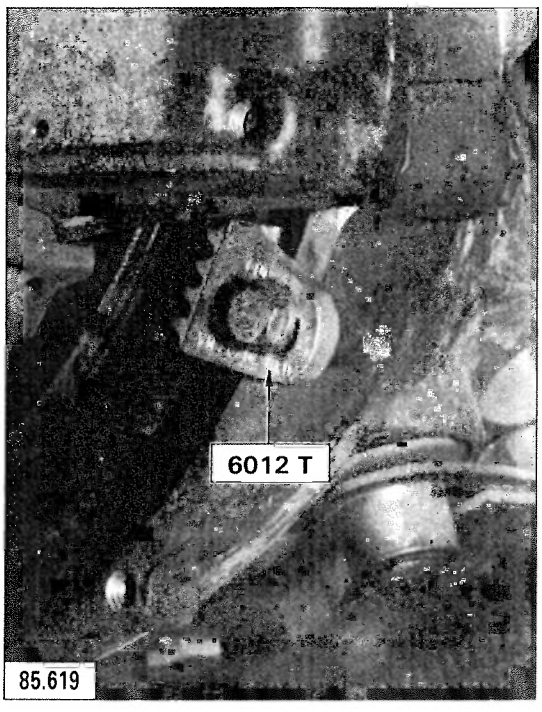

85.619 III

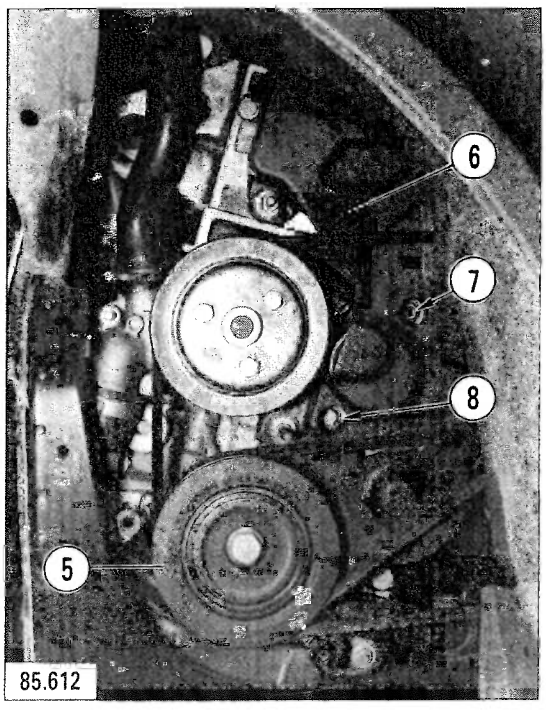

85.612 IV

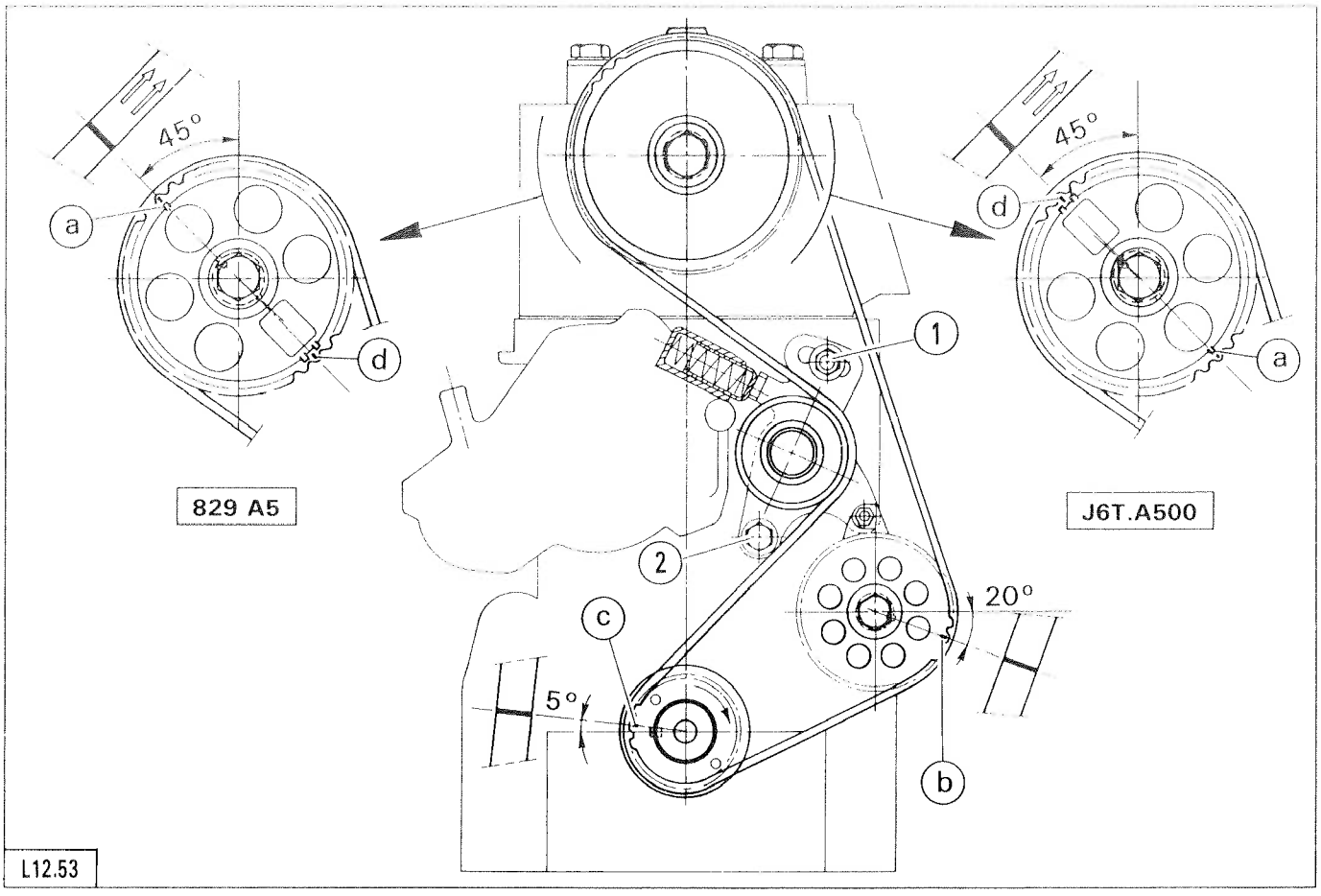

I

II

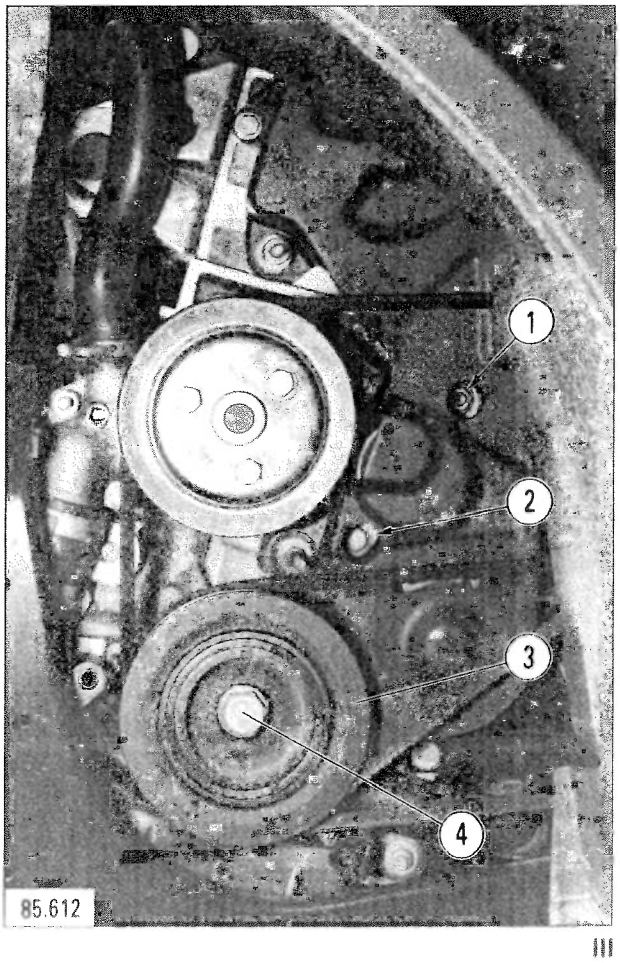

III

Position, Fig. I:

- crankshaft key horizontally (with mark **"c"** staggered by **5°** upwards),
- mark **"a"** or **"d"** on camshaft,
- mark **"b"** on the intermediate shaft.
- Each timing mark on the belt must line up with the tooth wheel marks.

Fit the belt (avoid contact with oil or grease).

Release, Fig. I and III,

- tensioner roller screws (1) and (2) (let the spring act) then tighten the screws.

Turn:

- the crankshaft 180° clockwise.

Do not turn backwards

Release:

- the tensioner roller fixing screws then retighten starting with the upper screw (1), **Fig. I and III.**

Turn:

- the crankshaft a further two turns clockwise.

Slacken, Fig. I and III:

- tensioner roller screws (1) and (2), (let the spring react),
- then retighten starting with screw (1).

Fit:

- tool **6012-T., Fig. II.**

Install, Fig. III:

- the timing belt casing,
- crankshaft pulley (3),

  tighten screw (4)
  to **8 mdaN** on engine → **829.A5**
  to **12.5 mdaN** on engine → **J6T.A500**

- the alternator belt and cover,
- the wheelarch rubber sealing strip.

Remove, Fig. II,

- tool **6012-T.**

Fit:

- the cylinder head cover and gasket (tightening torque: **0.6 mdaN).**

Recouple:

- the accelerator control rod,
- the flexible hose,
- the cold start flap control cable.

Refit:

- the wheel,

Lower the vehicle to the ground.

NOTE:

- Camshaft toothed pulleys of engines **829.A5 and J6T.A500** are identical but the fitment is different, **Fig. I.**
- **If, after carrying out the belt tensioning operation, the timing belt is noisy when the engine is hot, retension the belt with the engine hot.**

REMOVING AND REFITTING
A TIMING CHAIN, A CHAIN TENSIONER
AND THE TIMING GEAR, ON THE VEHICLE

REMOVAL

Jack up the front R.H. side of the vehicle; remove the road wheel.

> **NOTE:**
>
> Never use the camshaft pulley clamping nut to rotate the crankshaft

Remove, Fig. I and II

- inlet pipes (1),
- the cylinderhead cover,
- the sparking plugs,
- gaiter (2) connecting the turbocharger to the flowmeter.

Loosen the 8 valve rockers setting screws as much as possible so as to reduce the stresses on camshafts.

Remove, Fig. II:

- the wheelarch rubber sealing strip,
- timing cover (3).

Engage the highest speed. Run the crankshaft by means of the wheel hub.

Line up:

marks **"a"** and **"b"** up over the centre line **x x'** passing through the centres of the timing gears, **Fig. IV.**

Remove the chain tensioner (6), **Fig. IV.**

NOTE:

BRAMPTON type tensioner, Fig. III:
When dismantling, hold the body (4) and pad (5) together to prevent the parts from being scattered.

SEDIS type tensioner, Fig. V:

With a screwdriver placed at **"c"**, turn to the left to lock the pad before dismantling.

Remove:

- the camshaft drive gear wheel,
- the timing chain.

REFITTING

Position the camshaft drive gear wheel fitted with the timing chain so that the driving side being tensioned, marks **"a"** and **"b"** are situated along the centre line **x x', Fig. IV.**

Fit the tensioner of the timing chain.

NOTE:

BRAMPTON type tensioner, Fig. III

Before putting it into place, push the piston provided with its spring fully home and turn clockwise. Depress pad (5) to release it.

SEDIS type tensioner, Fig. V

To unlock the pad, turn the screwdriver placed at **"c"** to the right.

Check, Fig. IV, that

the play between limiter pad (7) and the timing chain is:

0.1 to 0.5 mm

Refit:

- the timing case **(tightened to 1.7 mdaN),**
- the wheelarch rubber sealing strip,
- the RH front wheel.

Adjust the valve clearance:

Inlet : 0.15 mm
Exhaust : 0.20 mm

Fit:

- the cylinderhead cover, **(tighten the screws to 0.7 mdaN),**
- the inlet manifold,
- the sparking plugs,
- the flowmeter to turbocharger gaiter.

Lower the vehicle to the ground.

Set the gear shift in neutral.

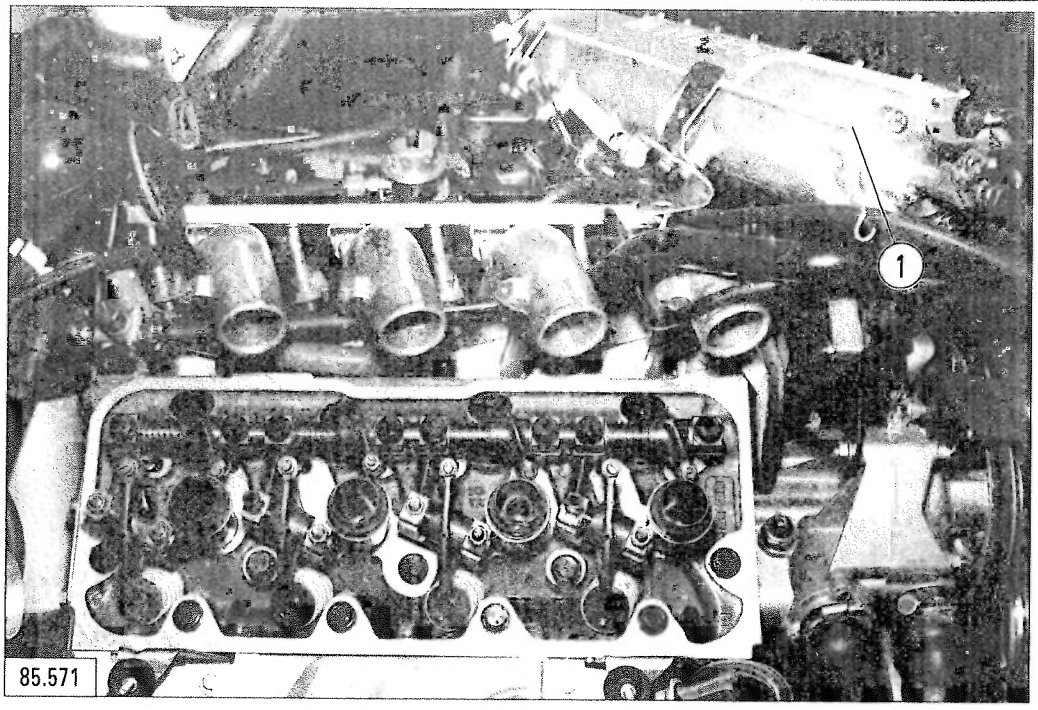

I

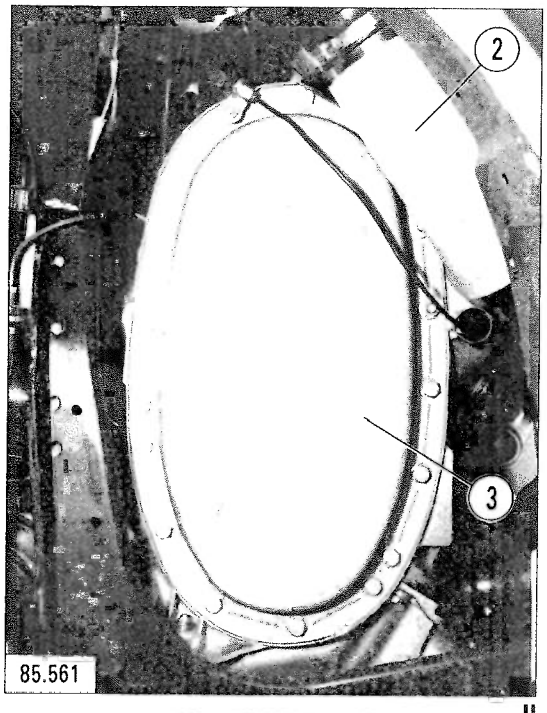

II

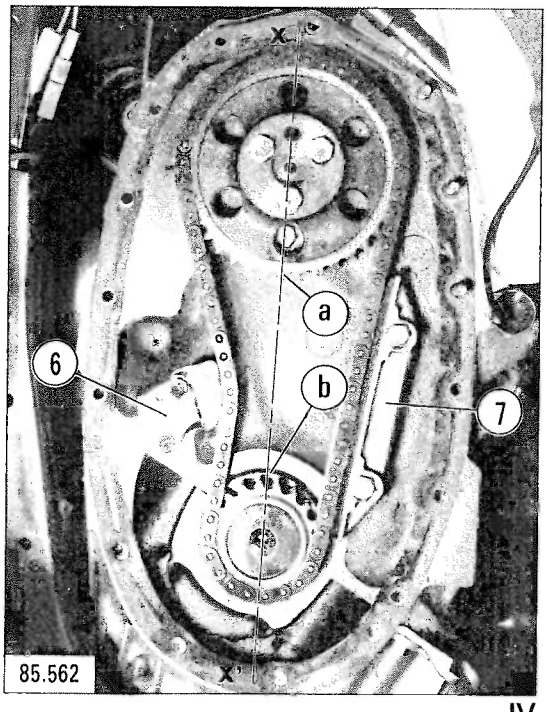

IV

III

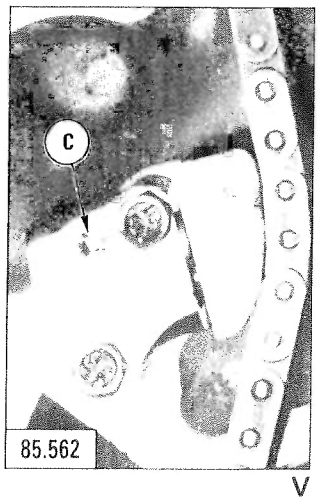

V

RECOMMENDED TOOL

6028-T.K	Timing belt tensioner

REMOVING/REFITTING THE TIMING BELT, ON THE VEHICLE

REMOVAL

- jack up the RH front side of the vehicle,
- disconnect the battery negative cable,
- engage the highest gear to enable the engine rotation.

Remove:
- the road wheel,
- the wheelarch lining,
- the belt protection covers.

Position: Fig. I and II
- the valves of cylinder No. 1 in the "rocking" position (look into the engine oil filler),
- the flywheel with marks → ← aligned,
- camshaft gear wheel mark **A** opposite screw (2).

Loosen:
the nuts of the tensioners and compress the spring of each tensioner. Retighten the nuts.

Remove:
- injection pump belt,
- the timing belt

REFITTING

Fit, Fig. II:
- the timing belt: marks (→) and (→) on the belt should face the marks **A** and **B** on pinions (there are **35** pitches between **A** and **B**, passing around the tensioner roller (1)).

Loosen the nuts of the tensioner roller.

Install, Fig. III:
- tool **6028-T.K.** on the roller
- the tool weight over the mark **2** of the rod, **Fig IV**.

Tighten roller nuts ∅ 8 to **2 mdaN**
∅10 to **3.2 mdaN**

Remove tool **6028-T.K.**

Fitting the injection pump belt:

Run the engine by 1 turn in the direction of rotation until marks → ← line up, **Fig. I**.
(with cylinder No. 1 at the initial timing point).

Setting the pump to the injection point:

refer to Op ② MA.146-0/1.

Fit the injection pump driving belt with the side opposite the roller, tight.

Slacken the roller nut. Let the roller spring react.

Tighten the nut to **2 mdaN.**

Rotate the engine by 2 turns in the direction of normal rotation and check the pump timing.

Remove the tools

Start the engine. Warm it up until the electric cooling fans operate.

Retension the belt while the engine is hot, Fig. IV.

Refit:

- the protection covers,
- the wheelarch lining,
- the road wheel.

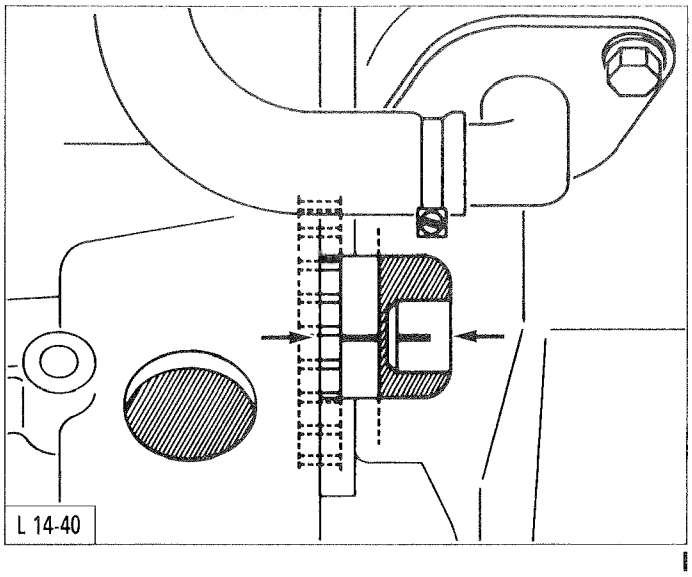

I

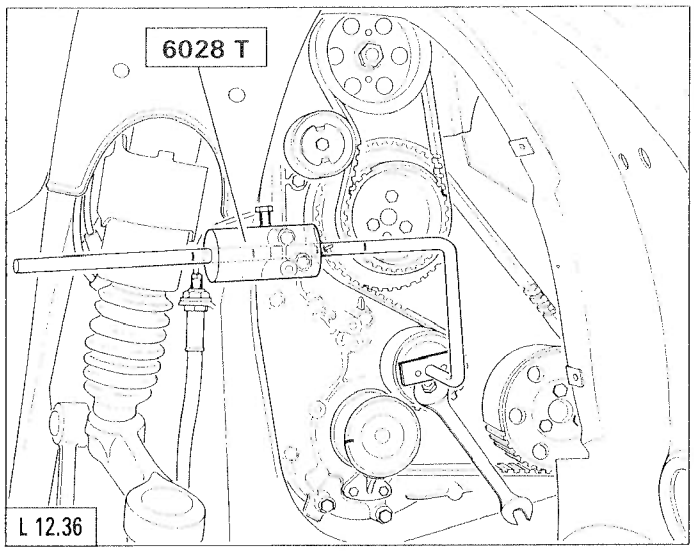

III

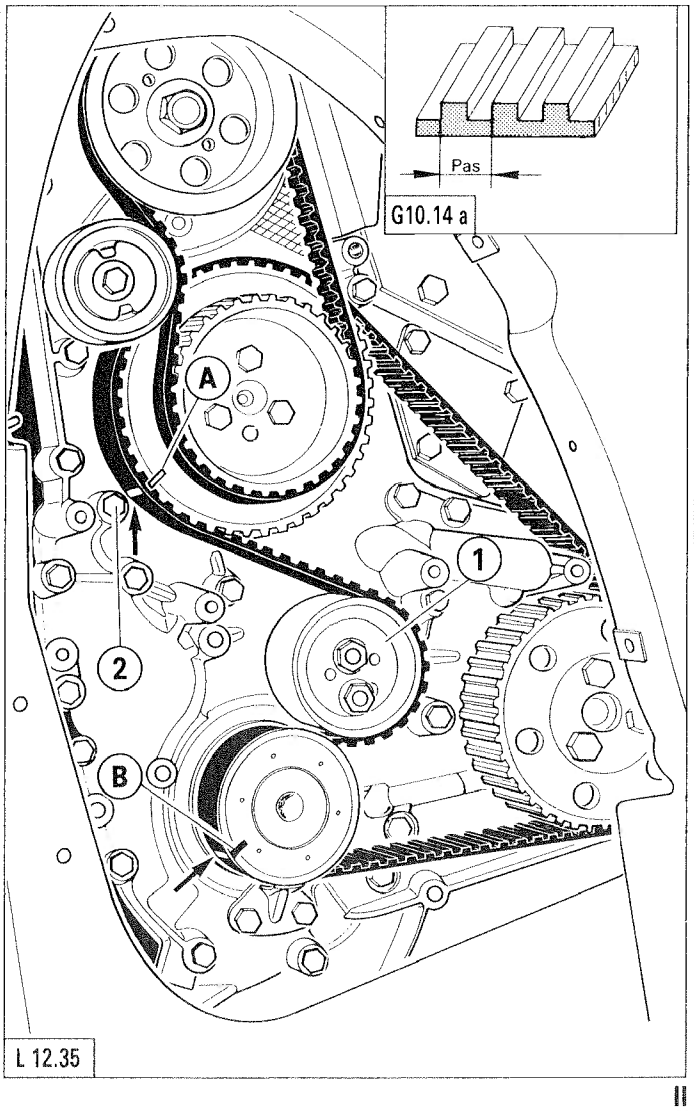

II

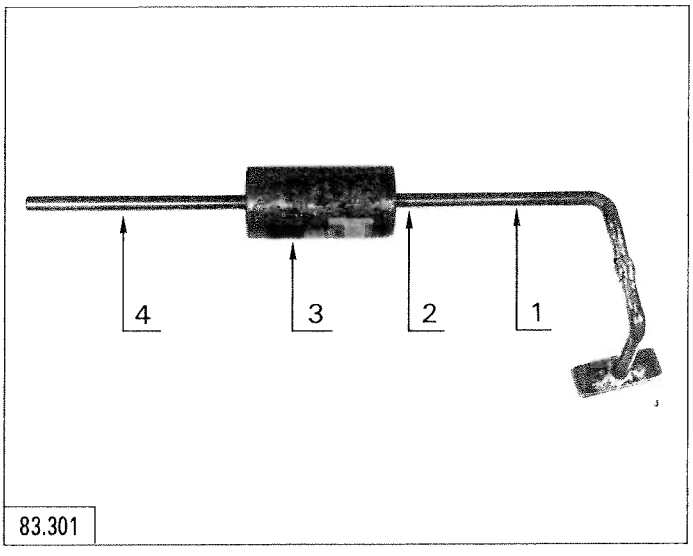

IV

CHECKING AND ADJUSTING
THE VALVE CLEARANCES

Never attempt to rotate the crankshaft utilising the camshaft pulley clamping nut

Remove:

From the petrol injection engine:
- the inlet manifold

From engine all models:
- the cylinderhead cover and its gasket

Adjust the valve clearances *(with engine cold)*

Engine	Inlet ●	Exhaust ⊗
2 L and 2.2 L Petr. **Fig. I**	0.10 mm	0.25 mm
2.5 L Petr. **Fig. II**	0.15 mm	0.20 mm
2.5 L Di. **Fig. III**	0.30 mm	0.20 mm

Possible methods

1°/

Valves fully open	Adjust
⊗ 1	3 ● ⊗ 4
⊗ 3	4 ● ⊗ 2
⊗ 4	2 ● ⊗ 1
⊗ 2	1 ● ⊗ 3

2°/

Valves in the rocking position	Adjust
1 ● ⊗ 1	4 ● ⊗ 4
3 ● ⊗ 3	2 ● ⊗ 2
4 ● ⊗ 4	1 ● ⊗ 1
2 ● ⊗ 2	3 ● ⊗ 3

Fit:

- the cylinderhead and its gasket,
- the inlet manifold *(if necessary)*

2.5 L ENGINE

If the valve rockers are still noisy after adjustment, proceed as follows:

Loosen the camshaft pulley belt.

Screw out the three camshaft bearing housing attachment screws *(located behind the camshaft pulley)*

Rotate the crankshaft so as to fully open the exhaust valve of the 4th cylinder.

Retighten the bearing housing screws.

Tension the belt.

Adjust the valve clearances.

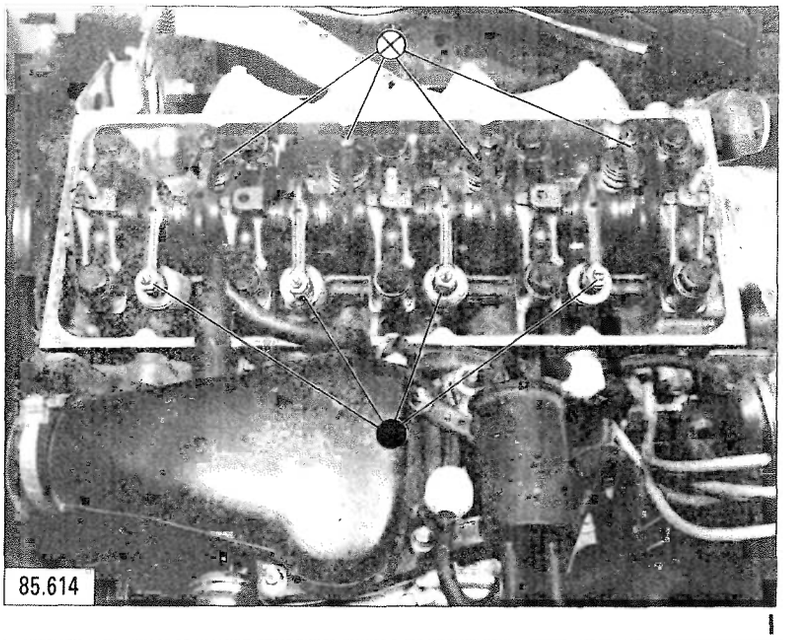

I

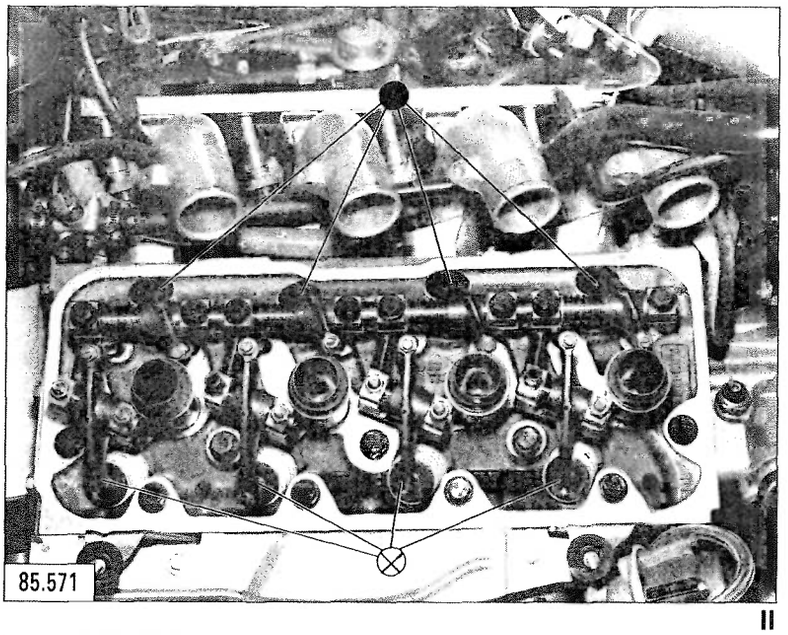

II

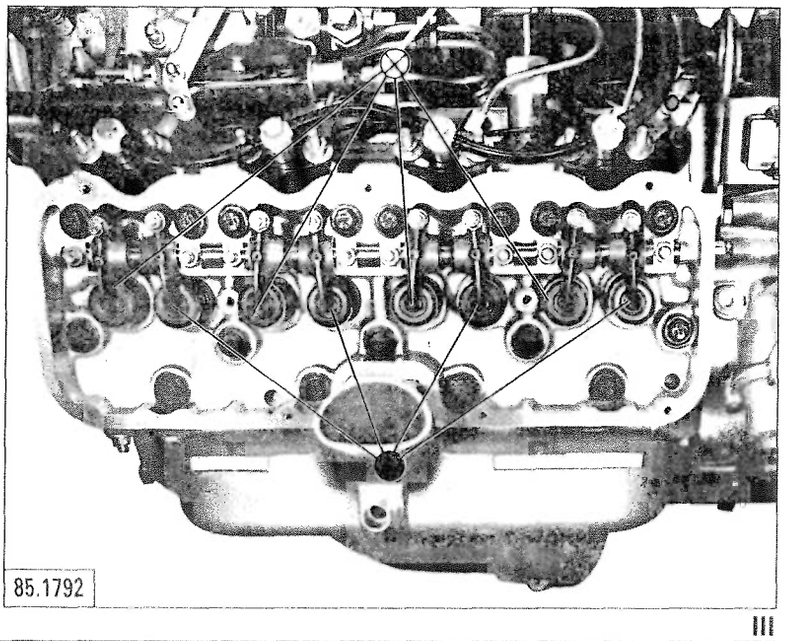

III

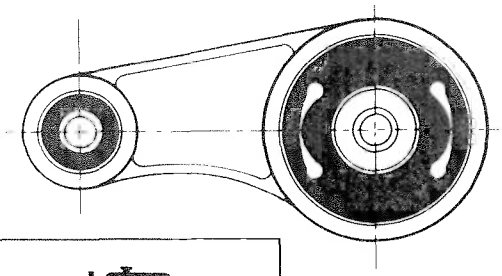

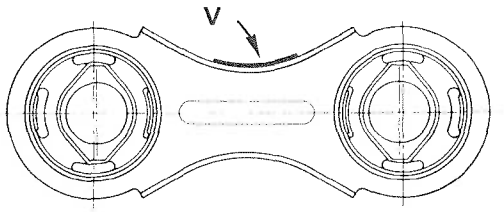

M25/629
M25/648
M25/660
M25/662
M25/659

OK

829-A5
J6T A500

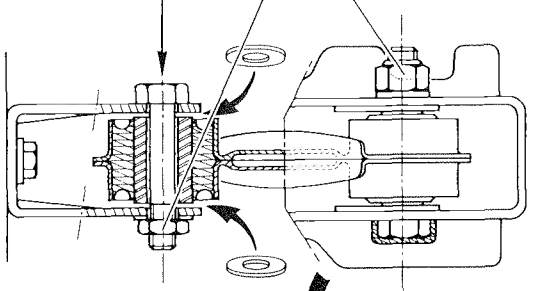

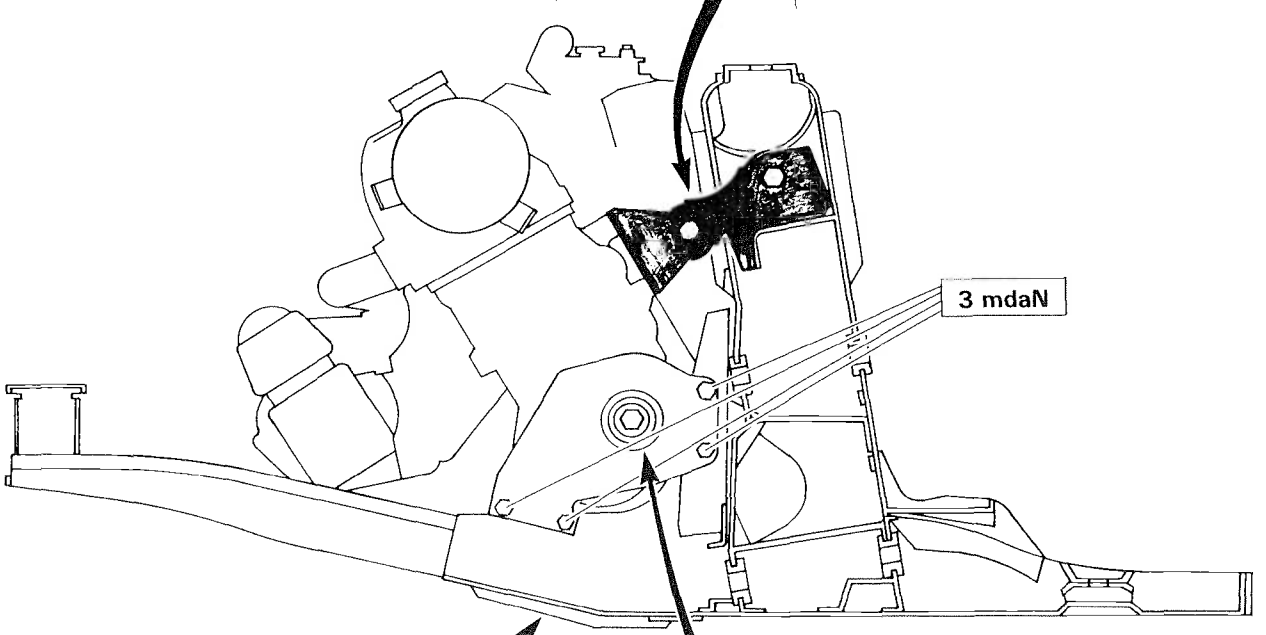

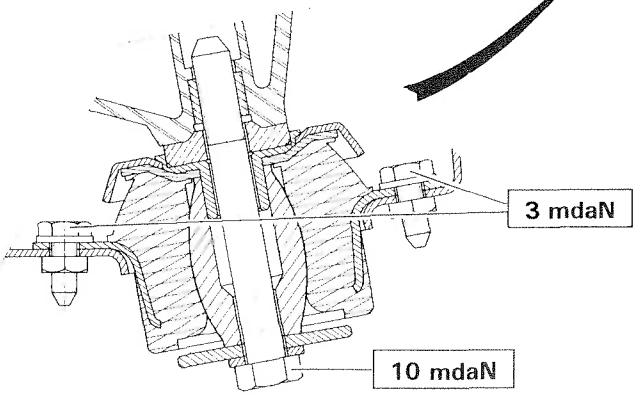

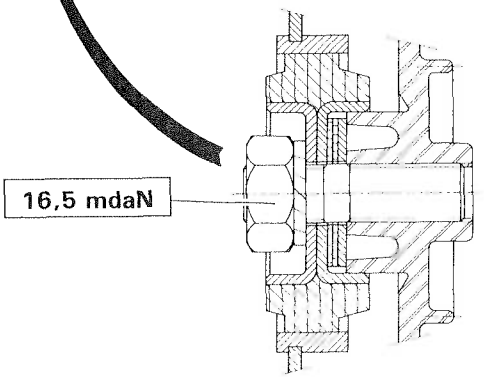

CHECKING AND ADJUSTING
THE ENGINE SUPPORT BRACKETS

Engine bearers
- cracked or,
- unbonded,

must be replaced.

RH engine mounting bracket, Fig. I and II:

Lay a straight edge on the outer contact side of the axle at **"a" Fig. II and III.**

Position the engine bearer centre screw (3) center line:

940 ± 1 mm

from the axle contact surface.

Tighten screws (1) and (2) to:

3 mdaN

Tighten screw (3) to:

10 mdaN

Note : the crankcase lower half incorporates a standard HELICOÏL thread.

LH engine mounting bracket, Fig. III and IV:

The power unit assembly being in situ on the RH engine bearer, hold the gearbox side in position.

- Insert shims (6) in excess between the bearer and the gearbox.
- Measure the clearance existing between the engine support bracket plate and the axle contact face at **"a"** and **"b"**.
- Reduce the shim (6) thickness by the clearance value **± 1 mm.**
- Tighten screws (5) to **3 mdaN.**
- Nut (4) to **16.5 mdaN.**

Engine torque stay, Fig. V.

The engine/gearbox unit being positioned on the RH and LH bearers:

- Fit the torque stay to the engine.
- Slide spacers on both side of the torque stay to remove any stress in the installation.

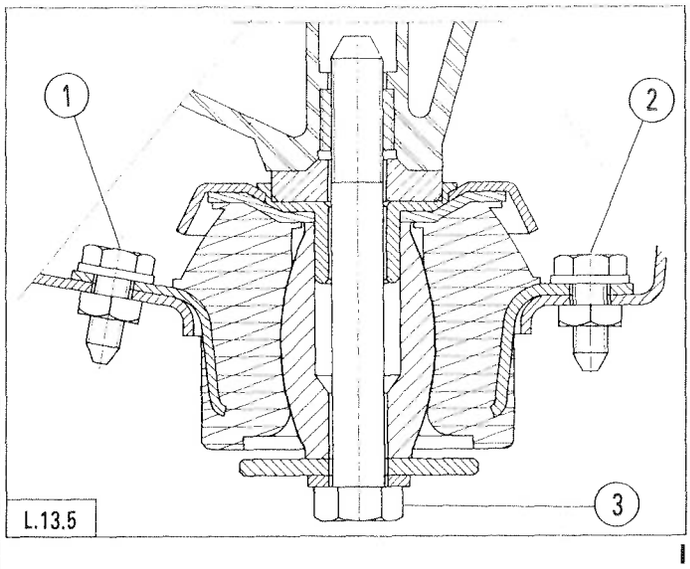

I

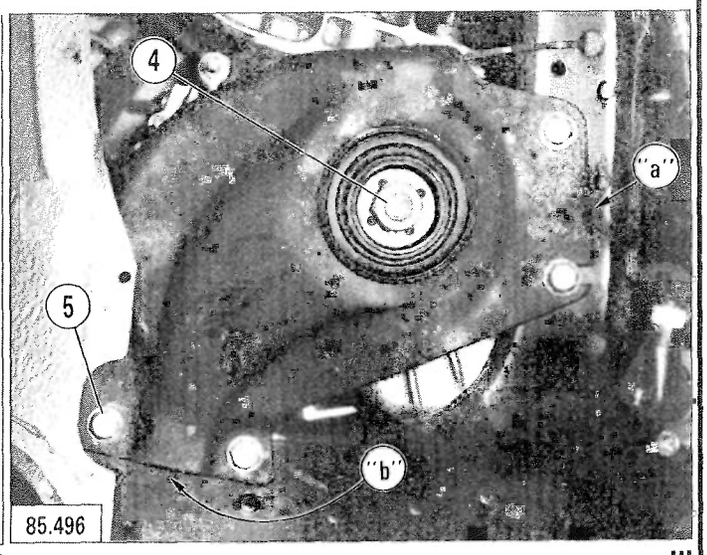

III

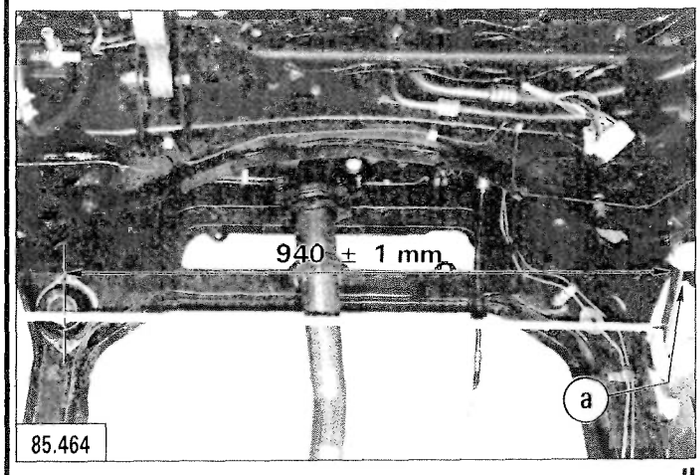

II

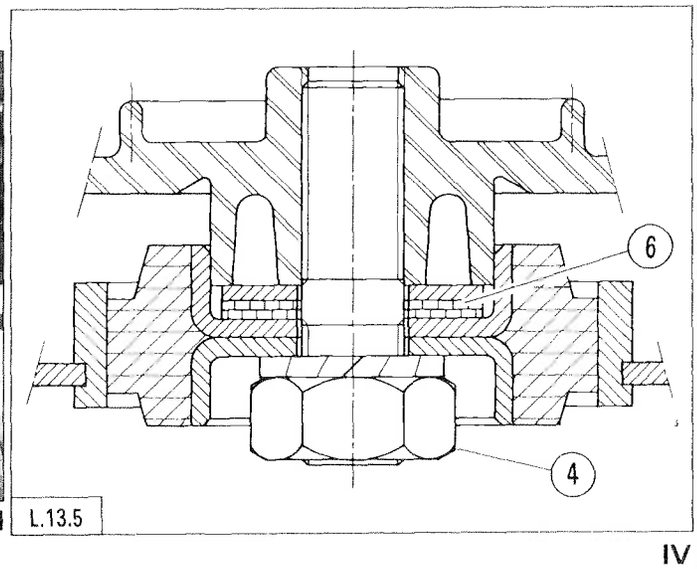

IV

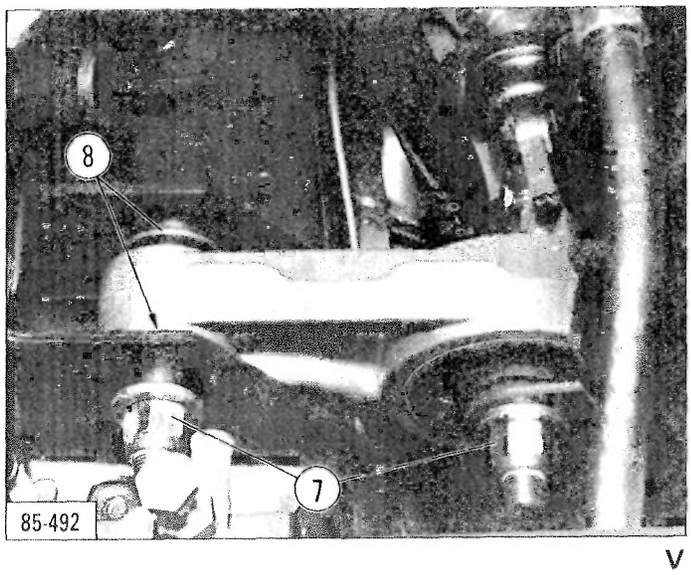

V

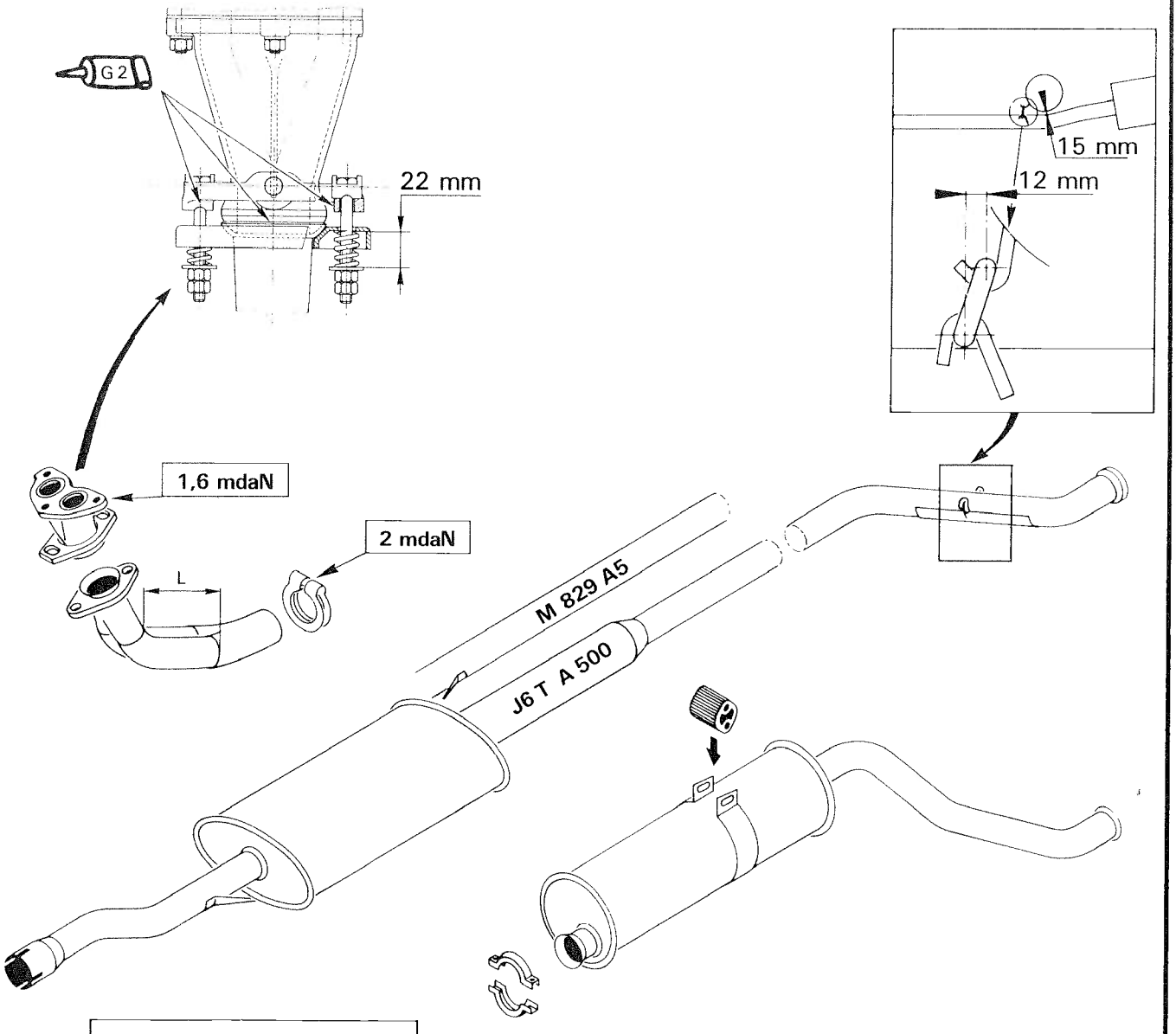

L	→ M829 A5
L + 12 mm	→ J 6 T A 500

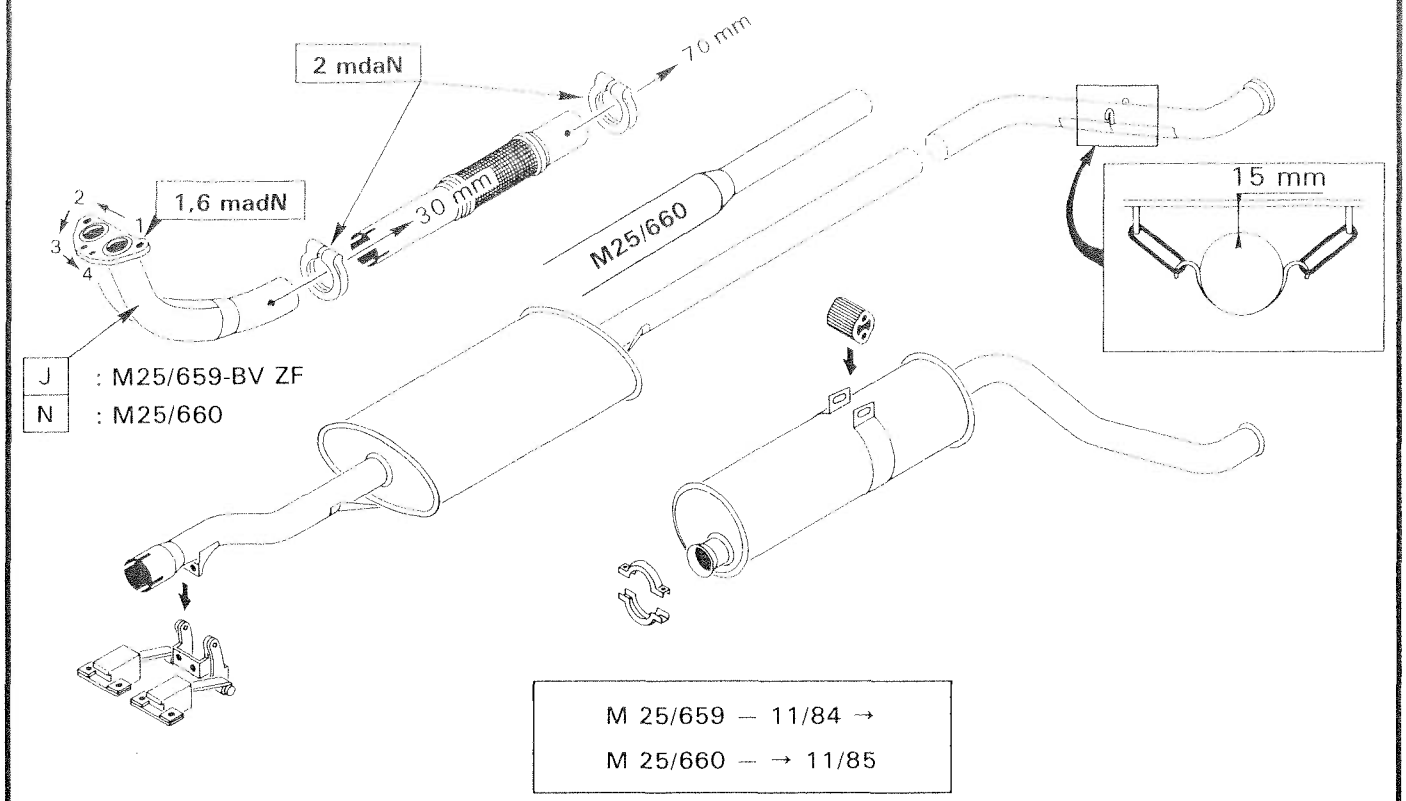

M 25/659 — 11/84 →
M 25/660 — → 11/85

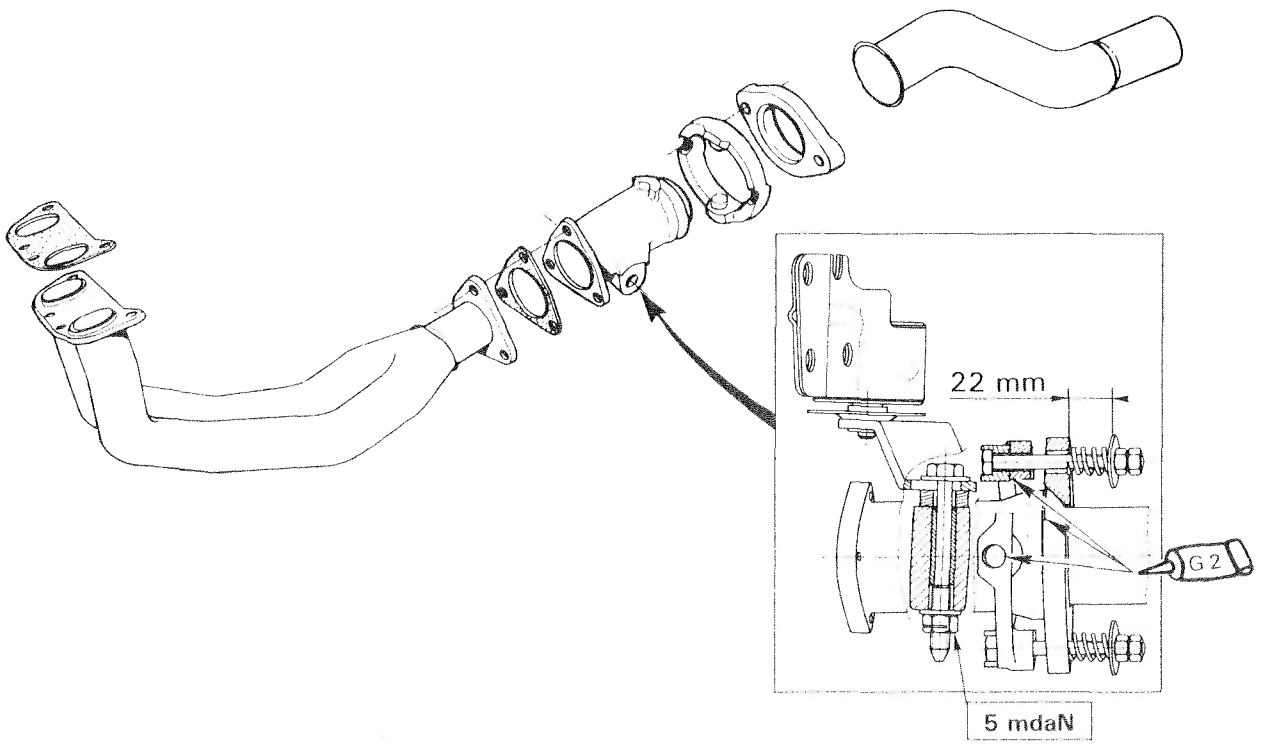

M 25/659 → 11/84

M 25/659 1/86 →
M 25/660 12/85 →

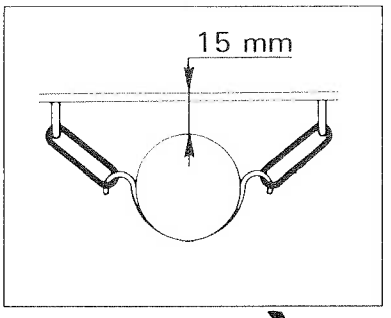

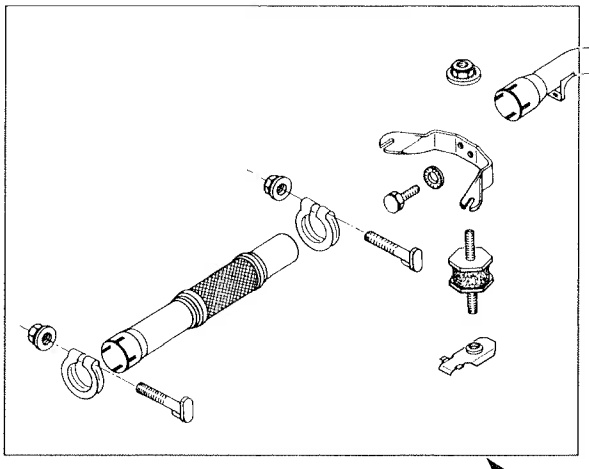

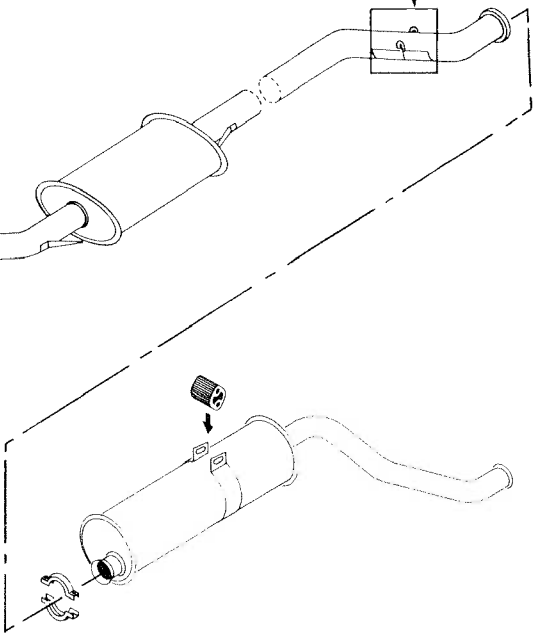

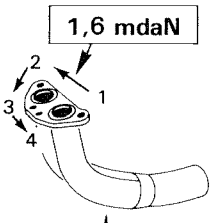

J	M 25/659-BV ZF
N	M 25/660

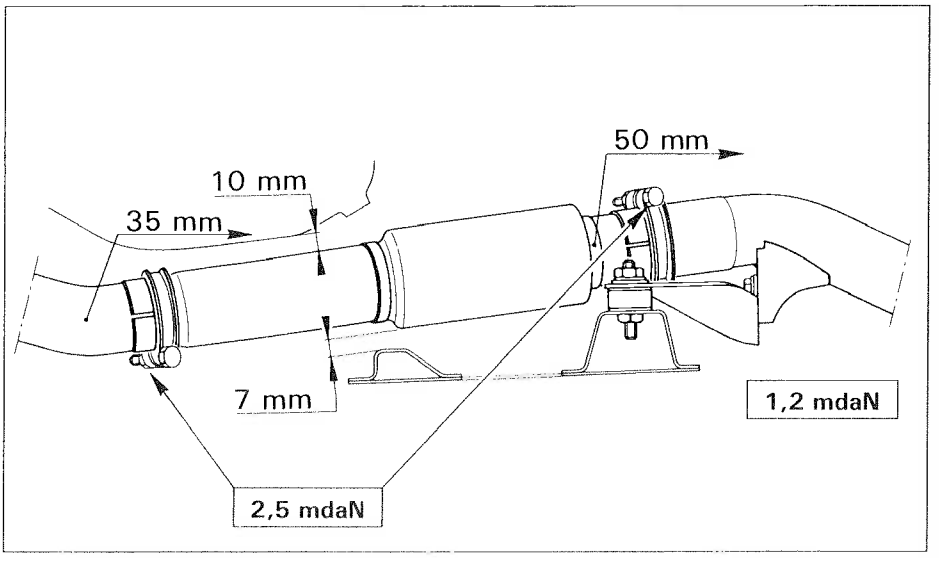

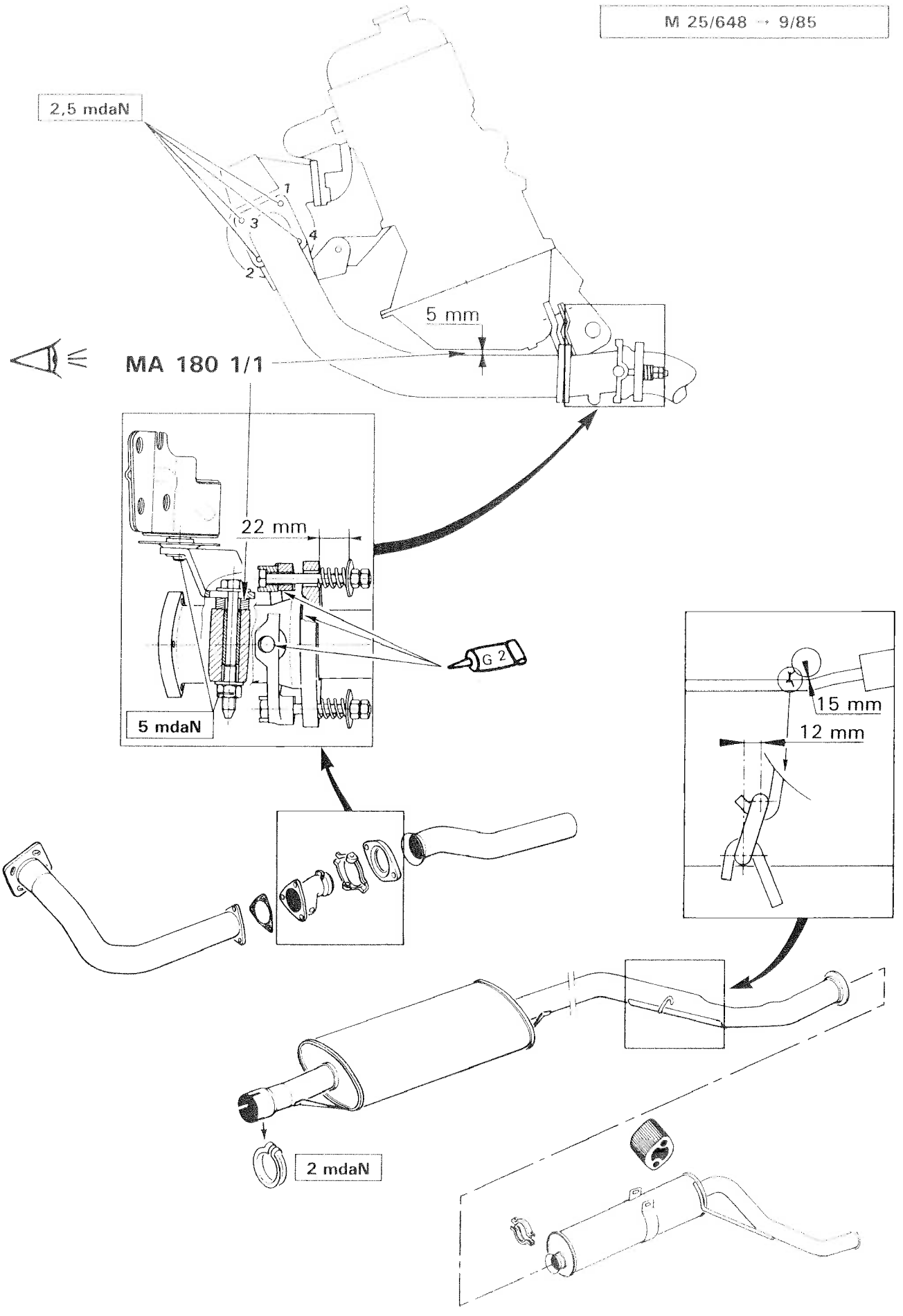

M 25/648 - 10/85 →
M 25/669 - 3/87 →

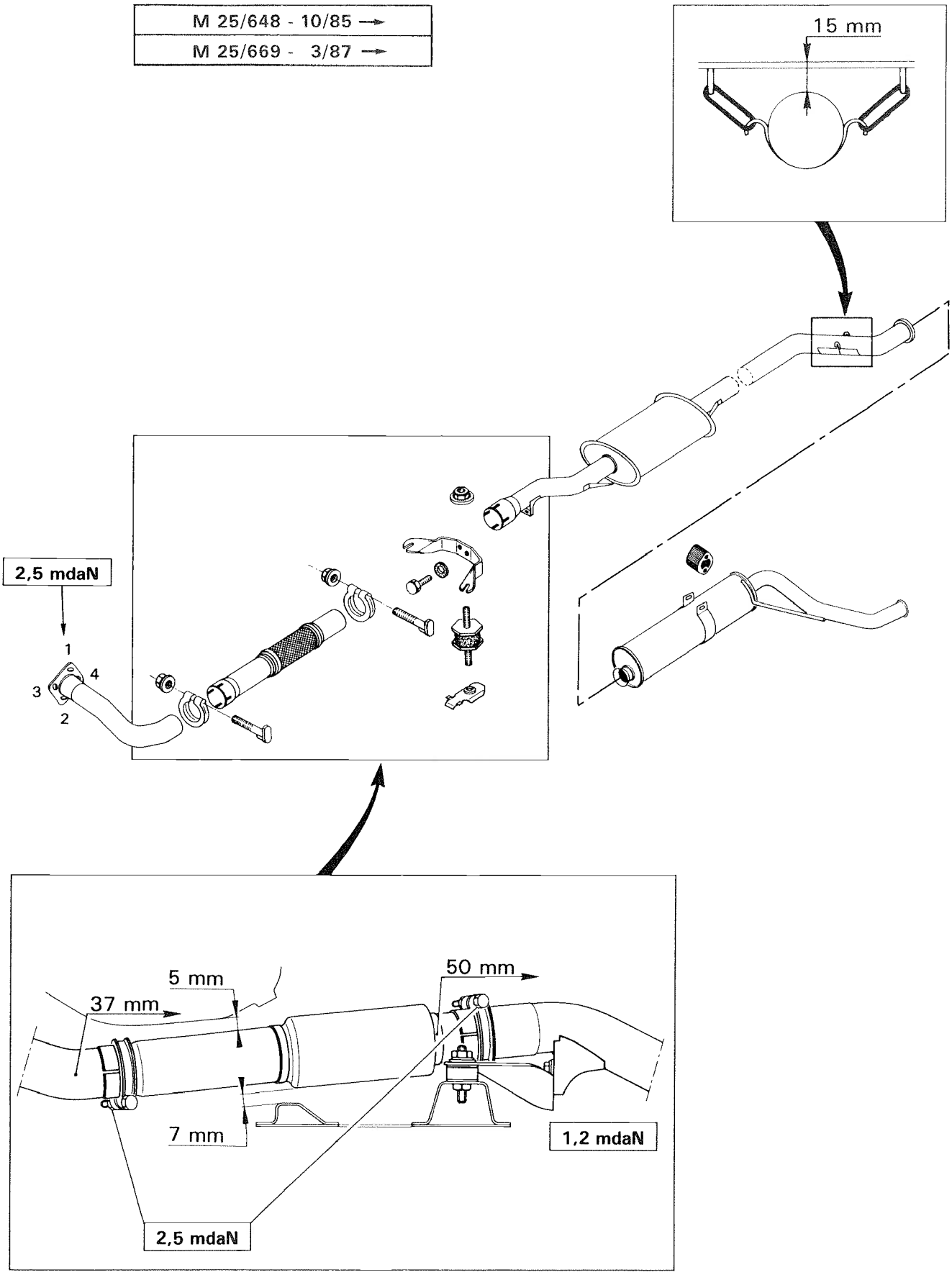

M 25/662 → 7/86 → M 25/666

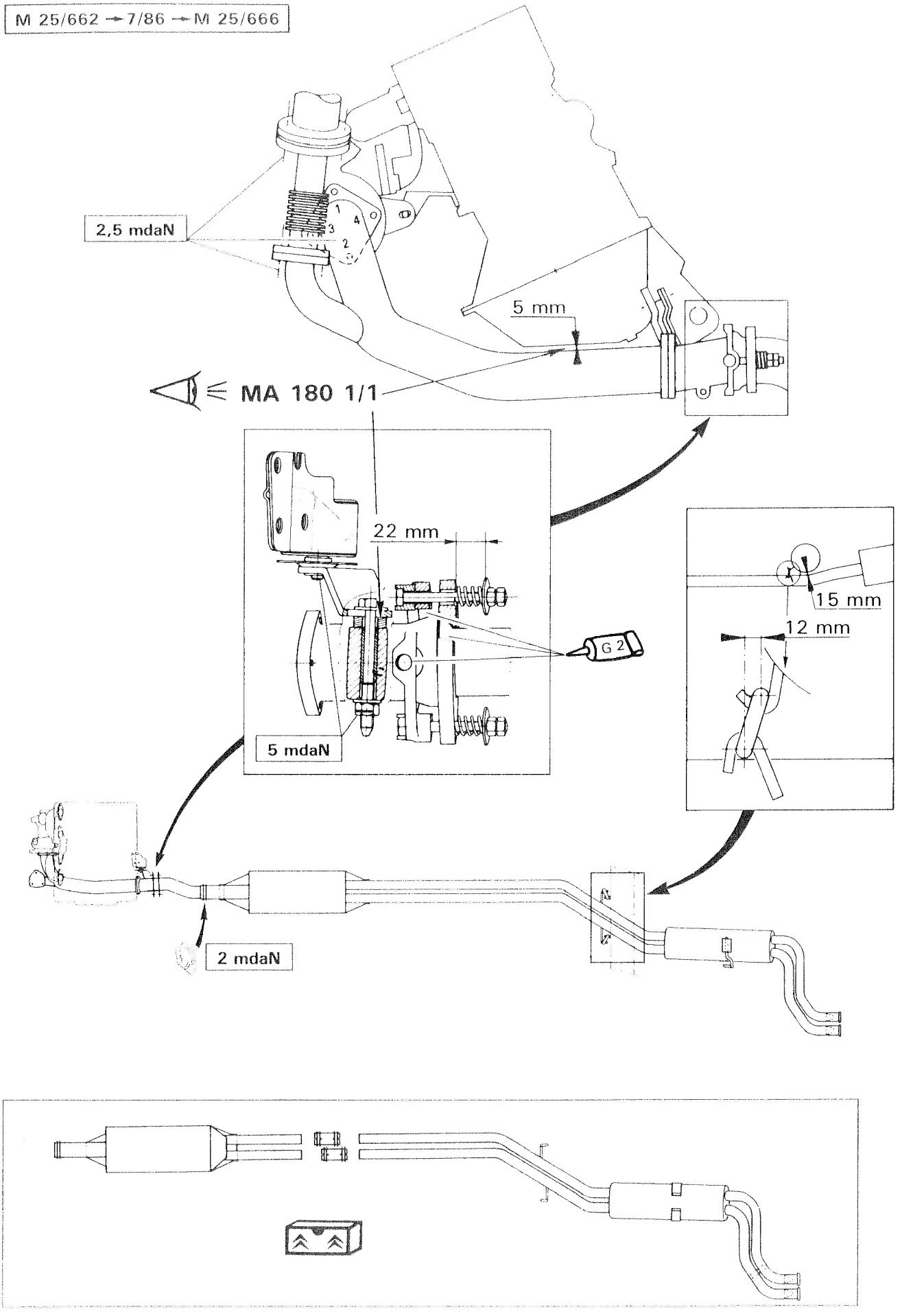

CARRYING OUT WORK ON THE EXHAUST SYSTEM

INSTRUCTIONS FOR FITTING THE FRONT EXHAUST PIPE TO M25/662 and M25/648 TYPE ENGINES

Fit into front exhaust pipe (1) the ball-joint (6) plus joint.
Tighten to **2.5 mdaN.**

Fit the turbine housing (5) with a seal.

Engage clamp (4) on the turbine 4 studs (3).

Slide a 5 mm thick shim between the sump and pipe (1) to allow for a clearance.

M25/662, type engine: insert a seal between waste-pipe (2) and the turbocharger.

Fit the 4 spacers and nuts to the turbine fixing studs (3).
Tighten to **2.5 mdaN** in the order 1 - 2 - 3 - 4.

M25/648, type engine: position the clamp and the seal of waste-pipe (2). Locate the 3 screws and nuts.
Tighten to **2.5 mdaN.**

Adjust ball-joint support plate (7) fitted with flexible lug (8) position, and hold it in an intermediate position by means of 2 screws.

Pile up RP distance pieces of various thicknesses between the ball-joint and its flexible lug , (refer to (9)).

Insert the ball-joint bolt (10).

Slacken the 2 ball-joint support plate screws (7) and fit the other 2 attachment points without tightening.

Screw in ball-joint holding down bolt (10) to **5 mdaN.**

Do up ball joint support plate (7) 4 attachment points.

Remove the 5 mm thick shim.

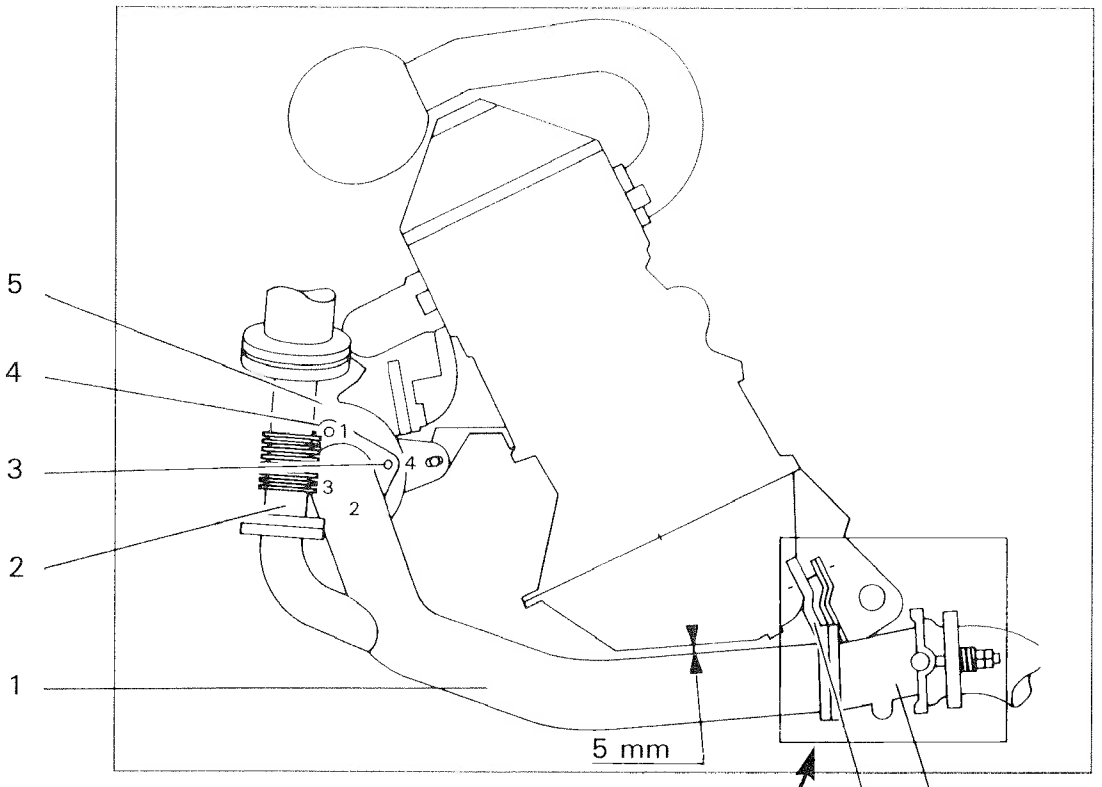

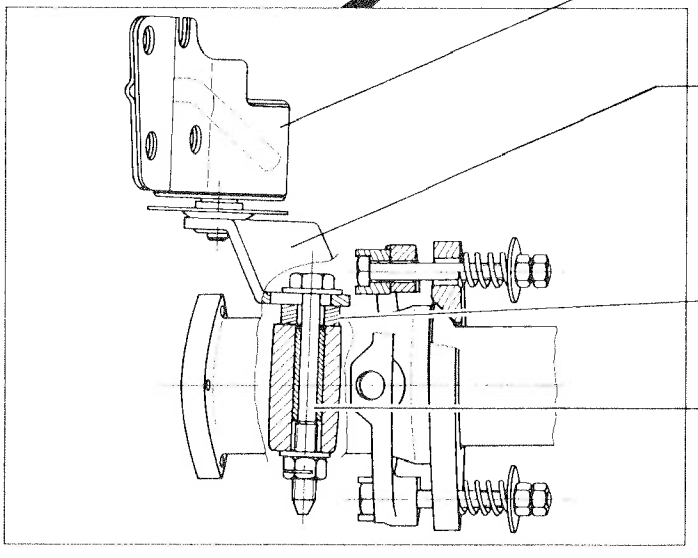

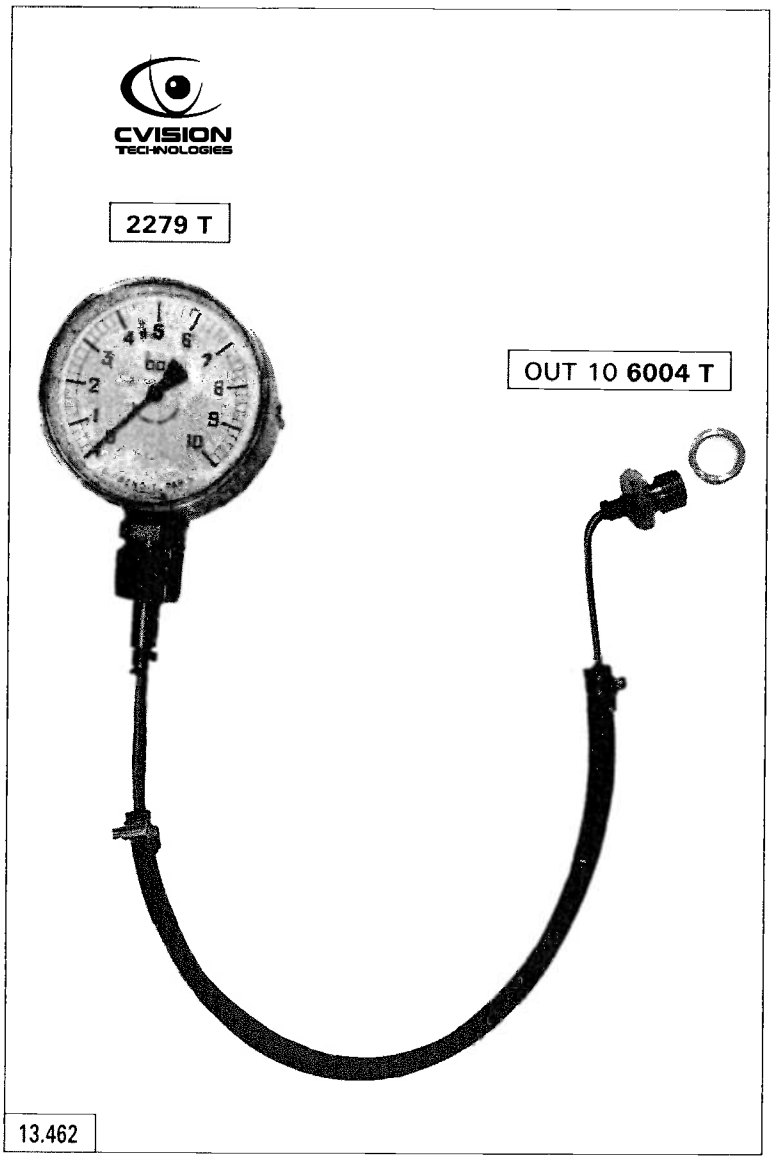

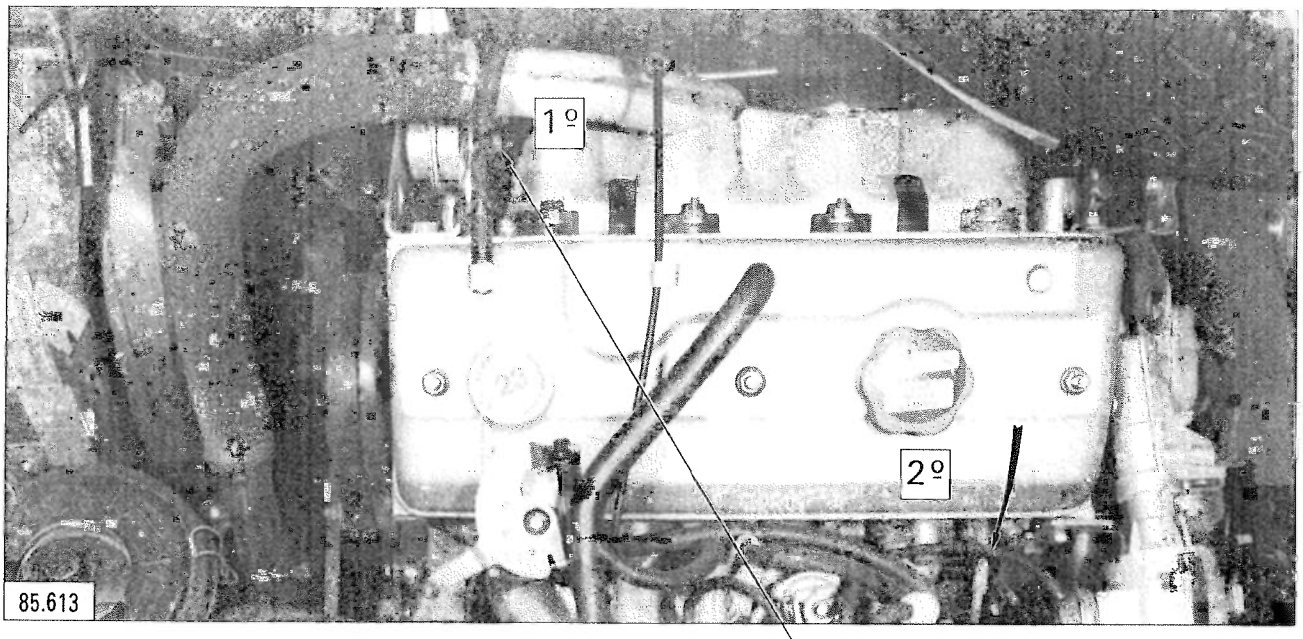

85.613

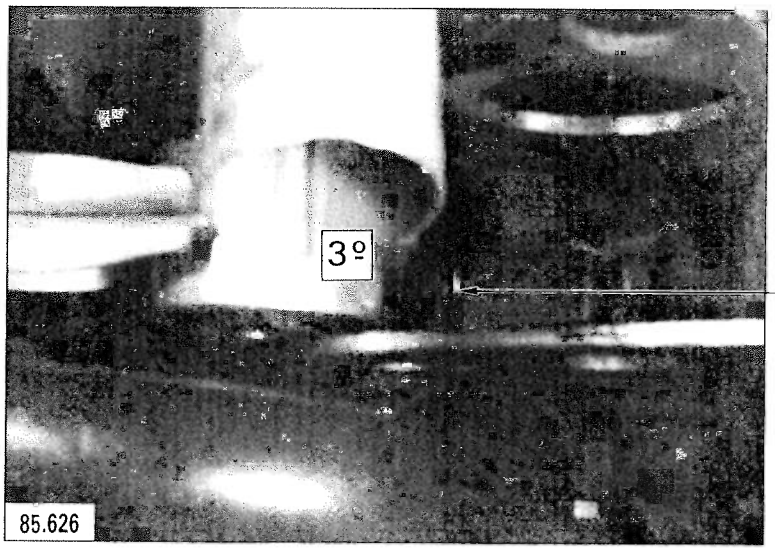

85.626

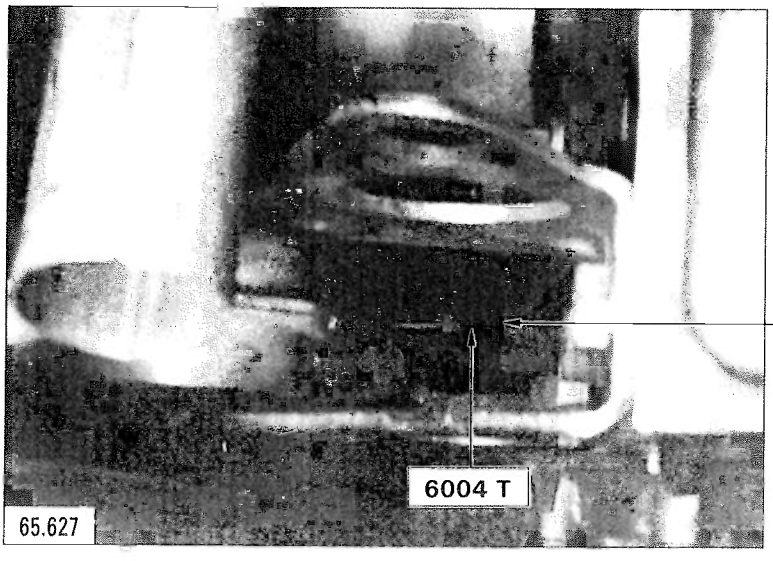

65.627

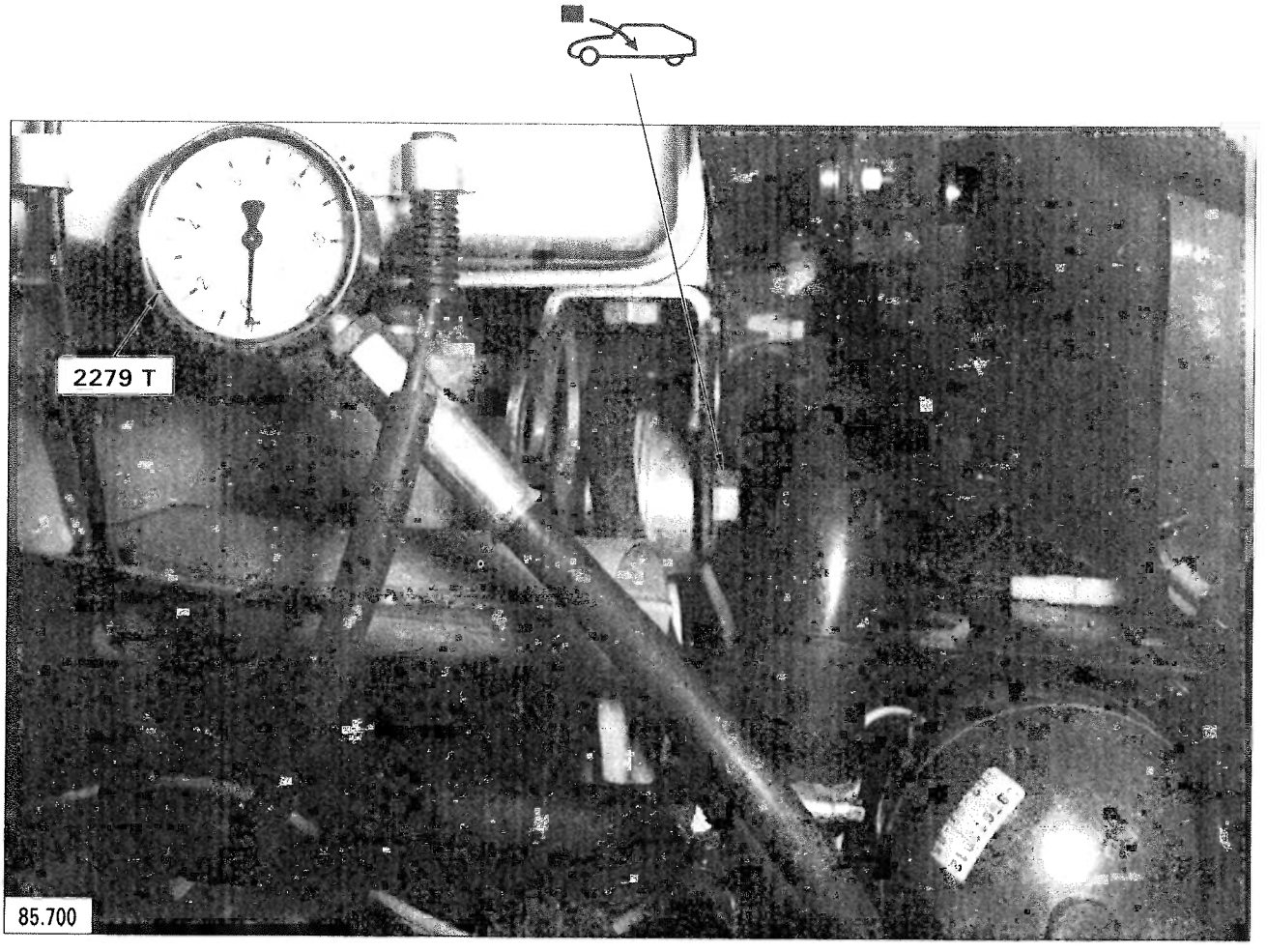

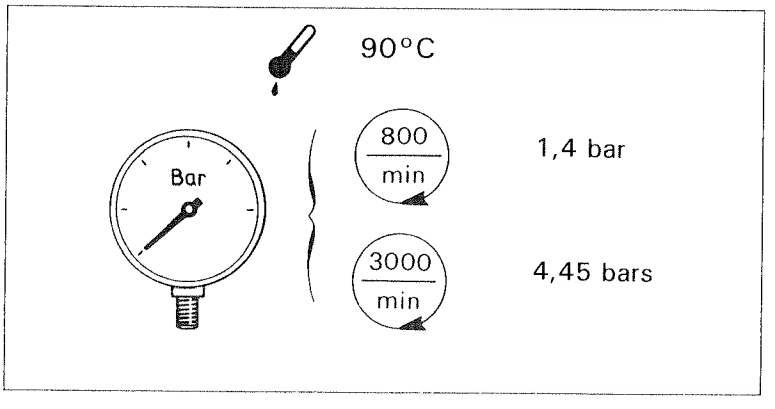

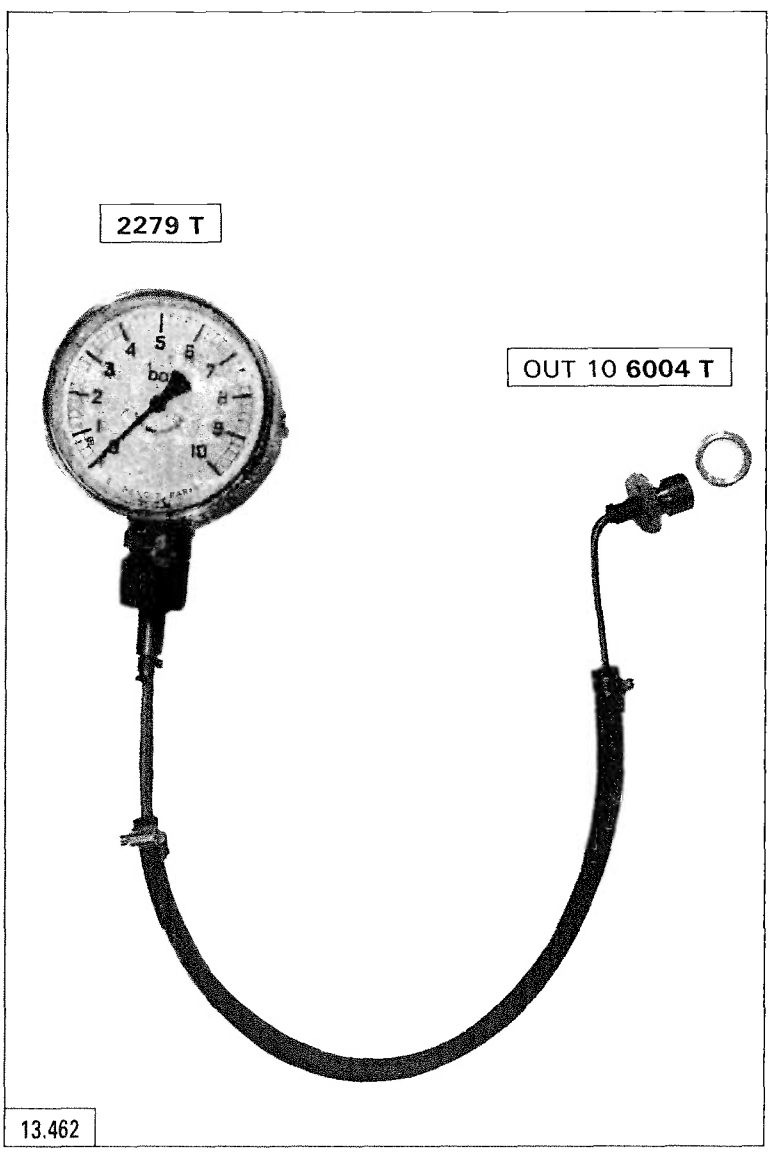

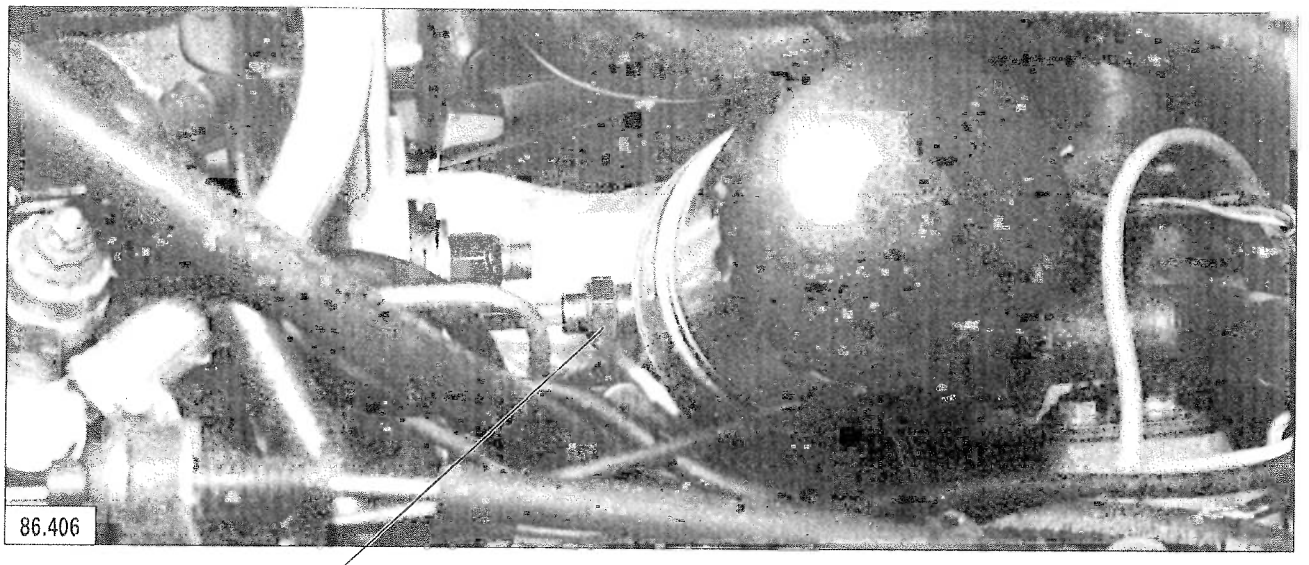

6004 T

2279 T

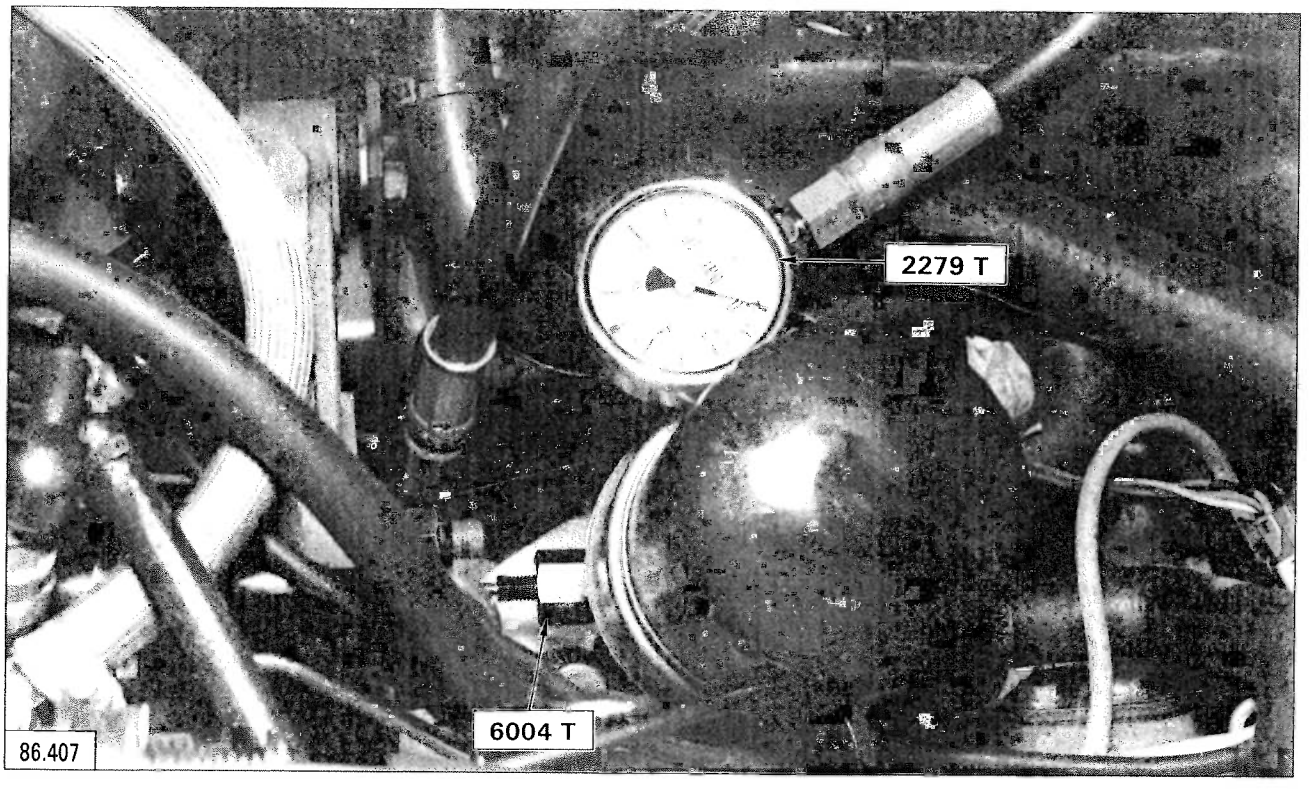

95°C

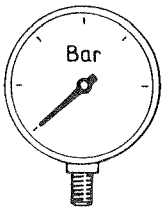

2,5 bars mini

4,5 → 5 bars

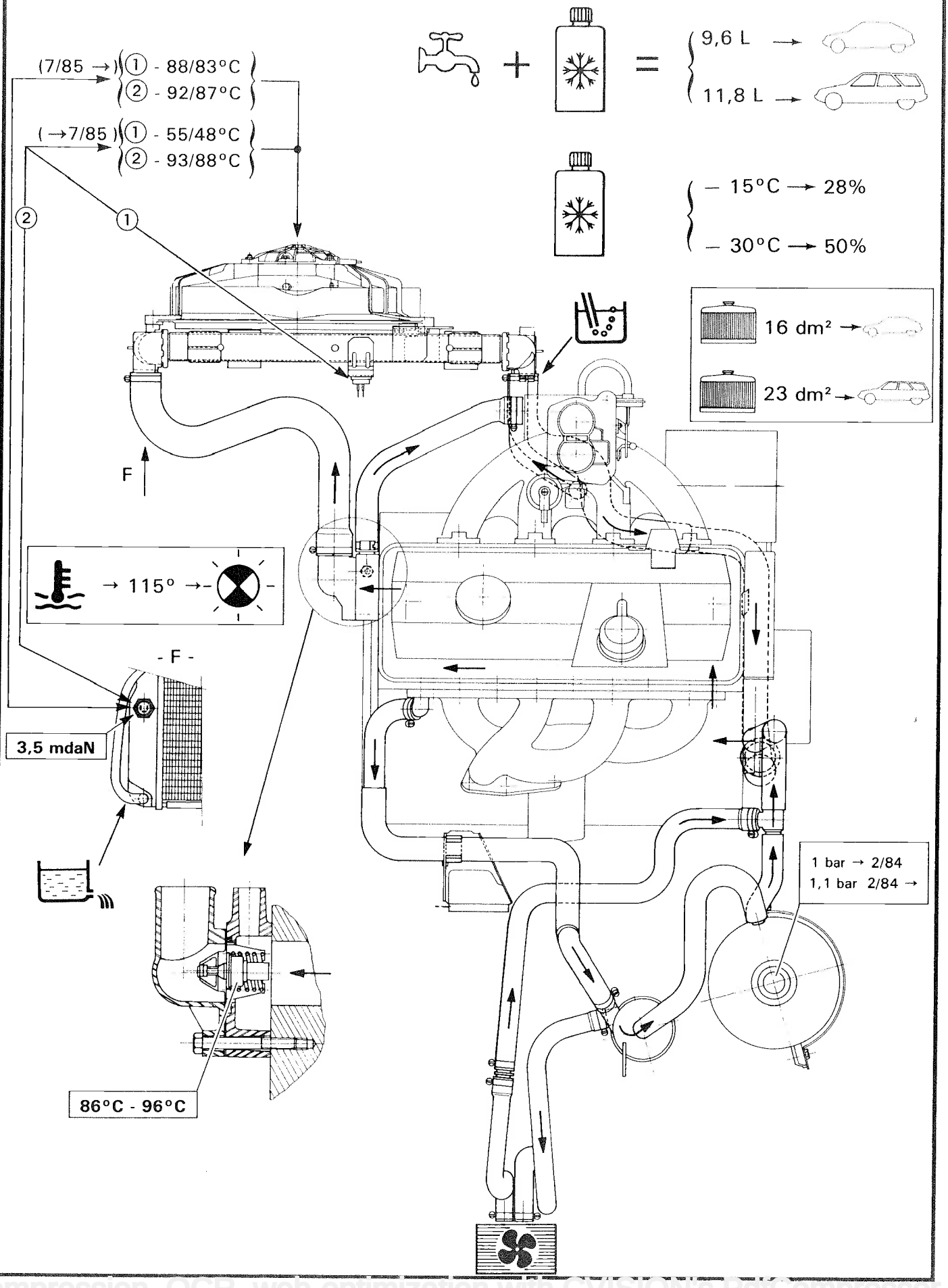

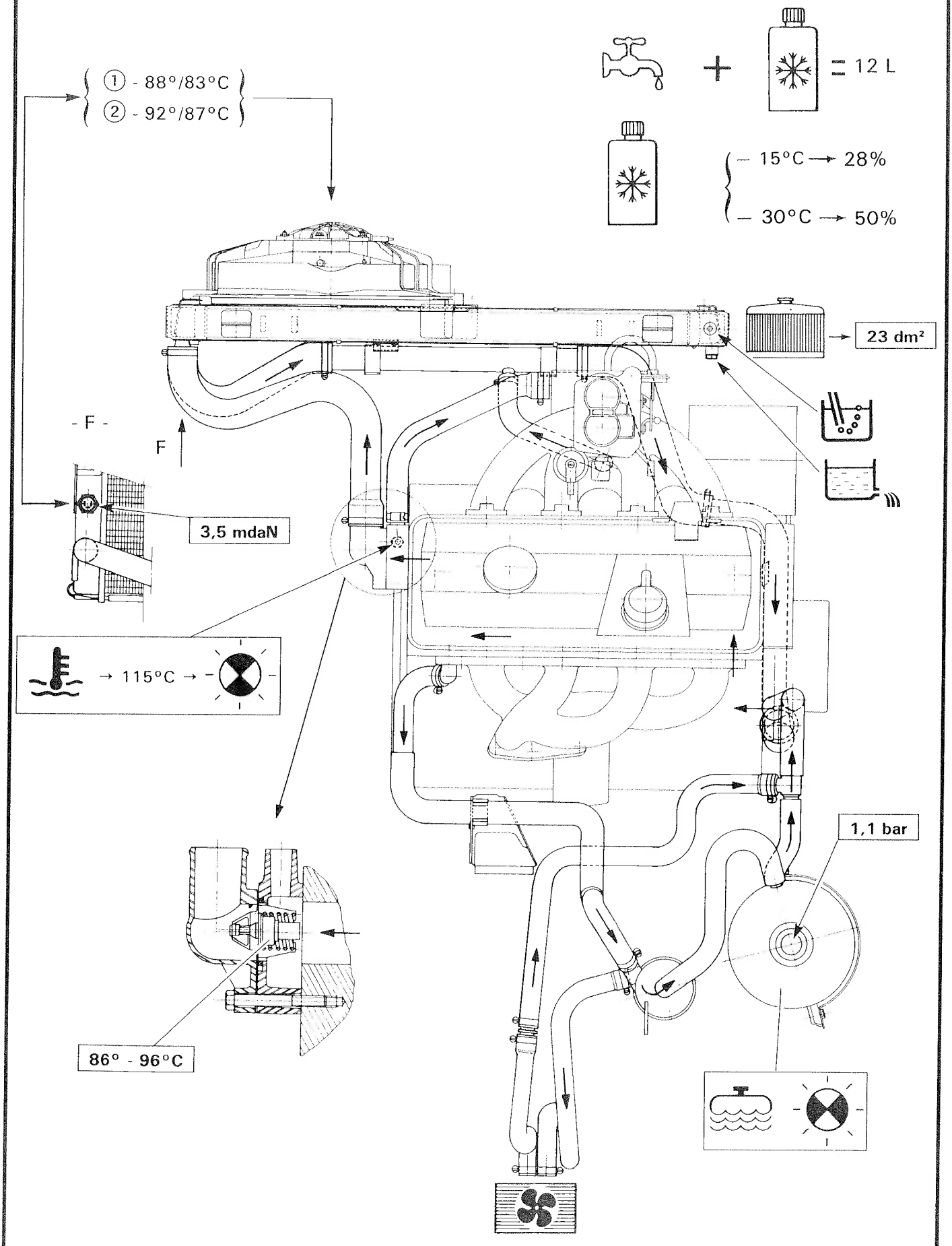

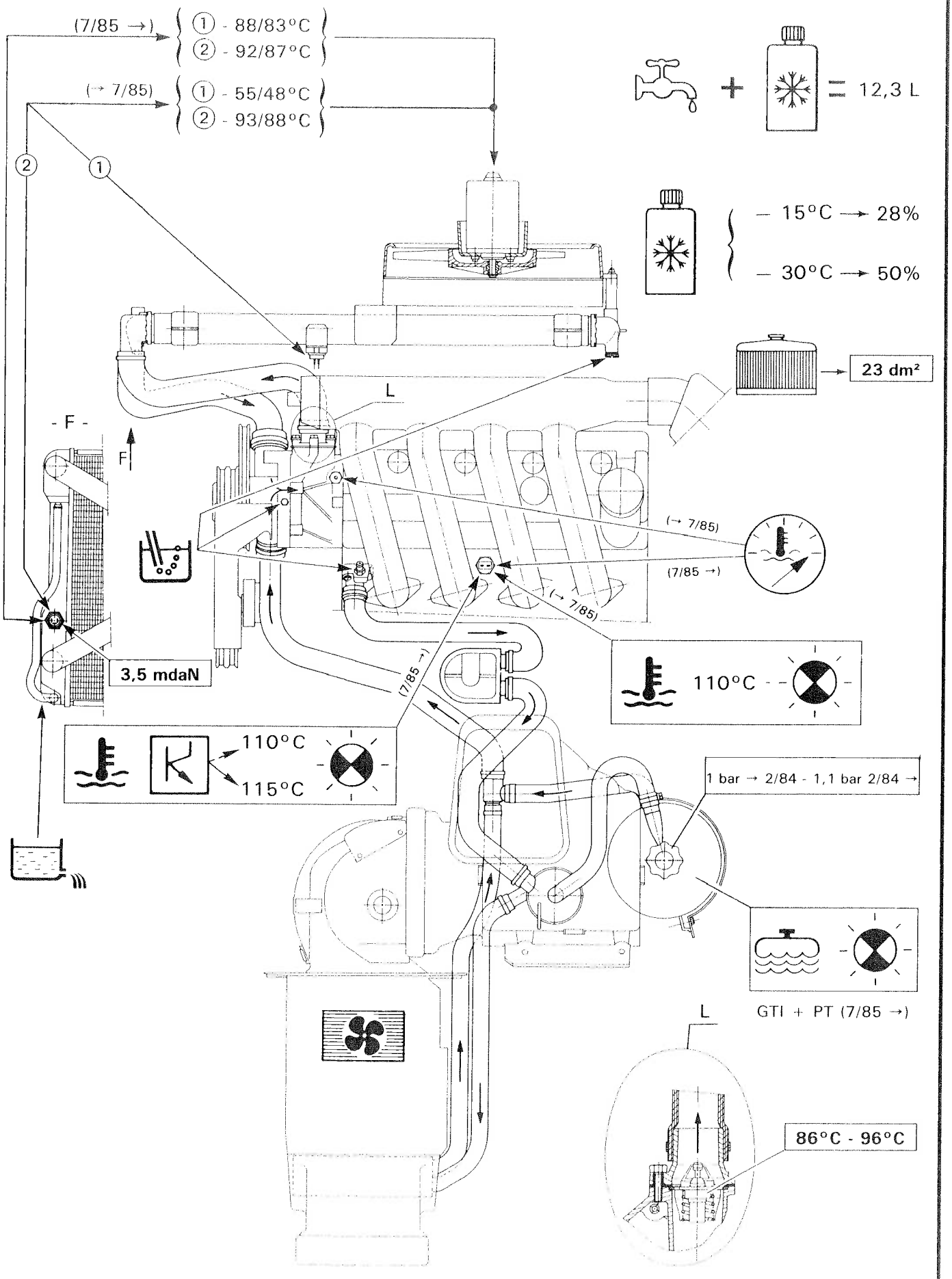

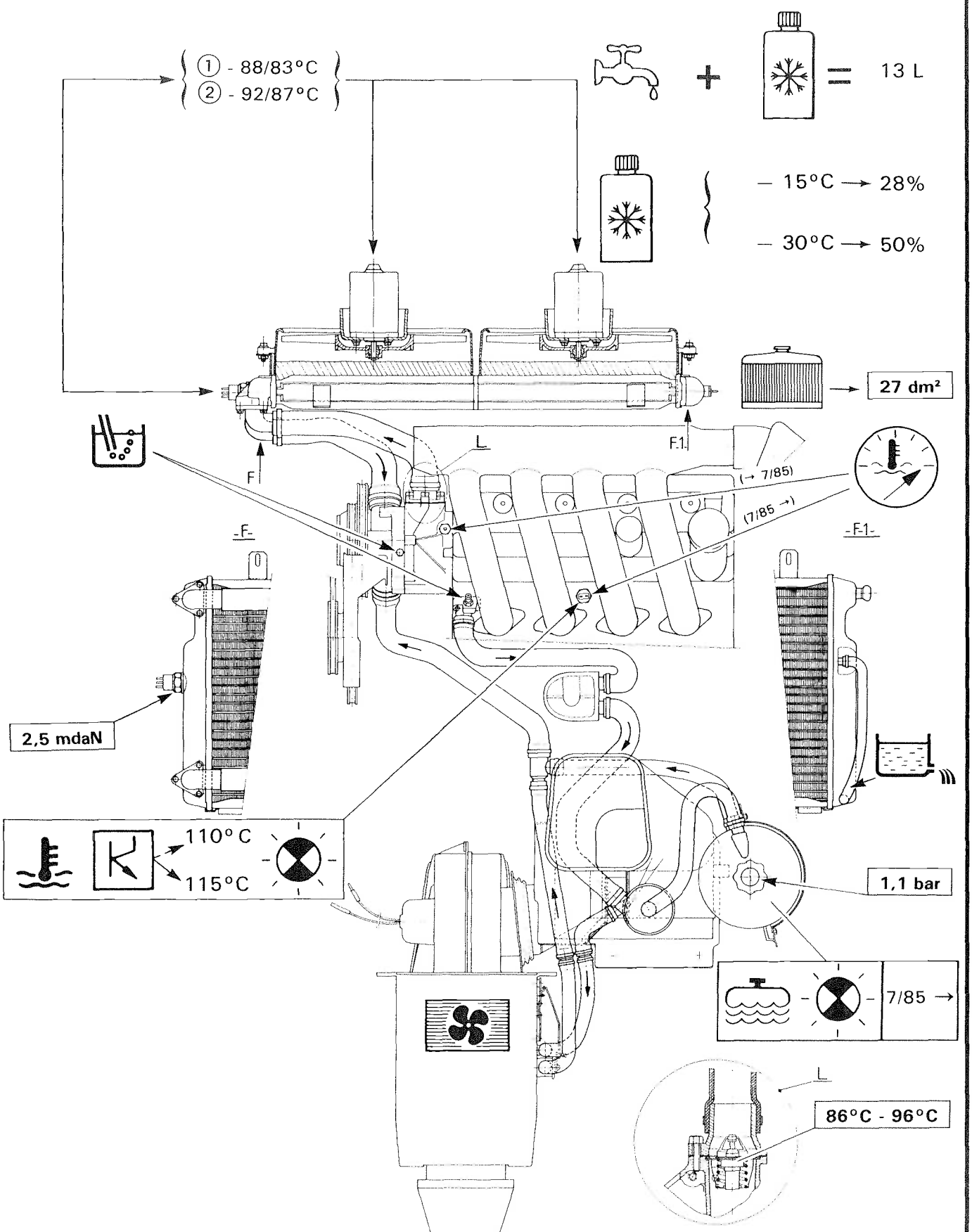

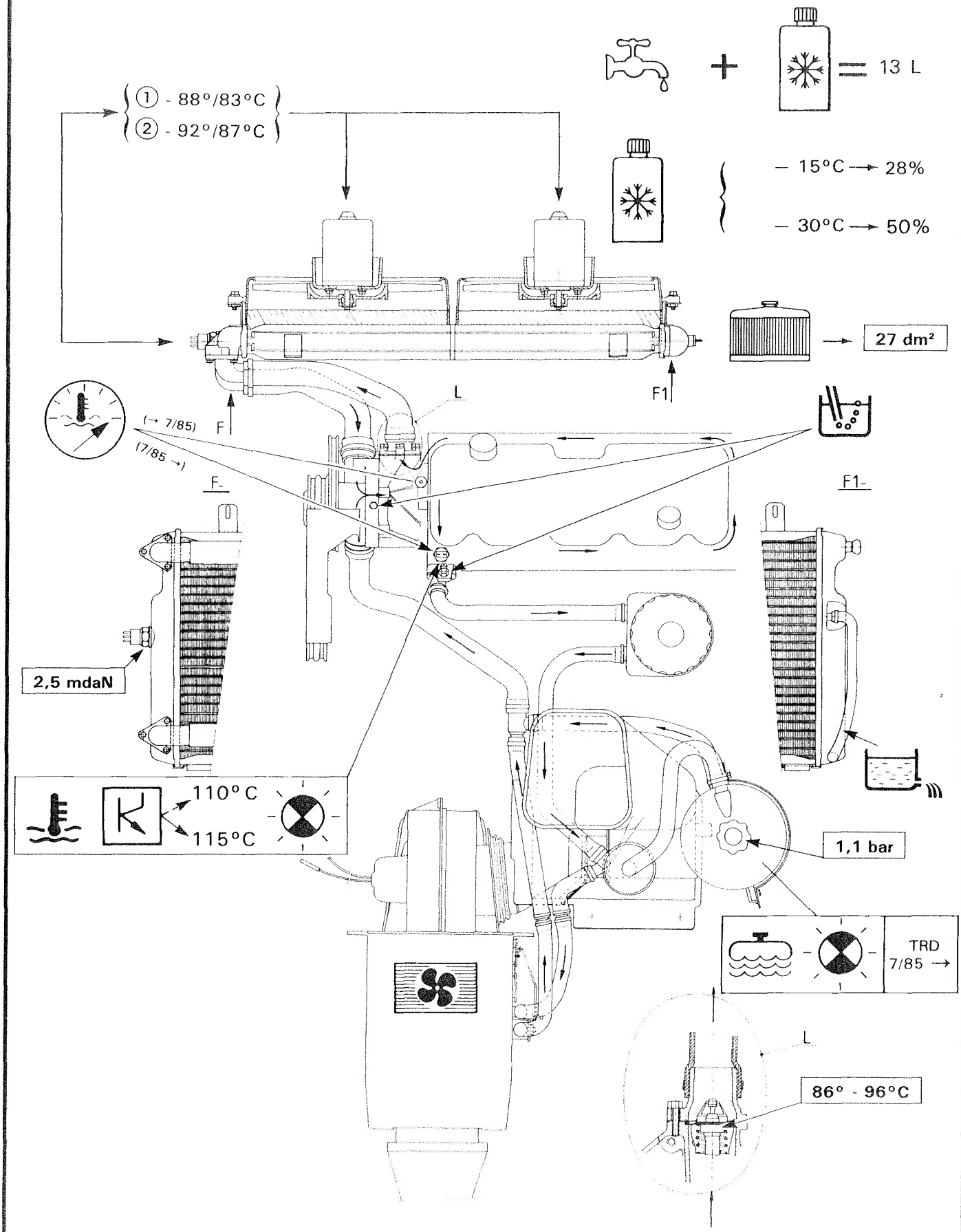

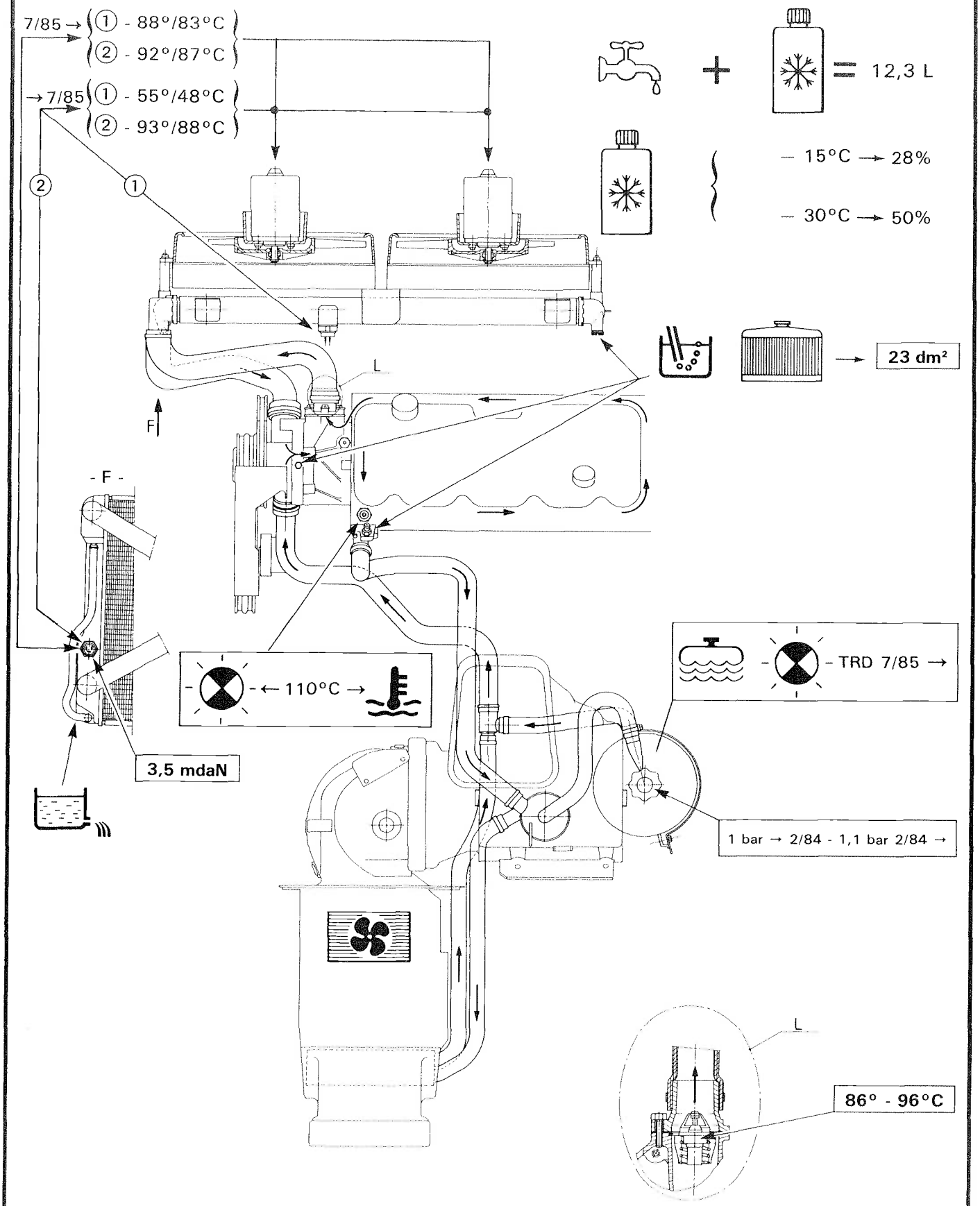

FILLING AND BLEEDING
THE COOLING SYSTEM

— Fully open the interior heater control.

— **Protect** the alternator.

— **Loosen** the bleed screws.

Prepare the mixture of water and antifreeze (the components and proportions should be observed).

— **Remove** the header tank cap.

— **Slowly fill** the circuit. When water flows, tighten the bleed screws. Top up until overflowing the header tank

— **Refit** the cap.

— **Run** the engine at 2000 rpm approx., until the cooling fan(s) has (have) cut in.

— **NEVER OPEN THE CAP OF THE HEADER TANK WHEN THE ELECTRIC COOLING FAN(S) IS (ARE) OPERATING**.

— **Top up** the coolant level in the header tank.

2

LIST OF OPERATIONS APPEARING IN THE CHAPTER: FUEL AND AIR SUPPLY - CARBURATION

OPERATION No.	DESCRIPTION	OPERATIONS △ TEXTS	OPERATIONS ○ SYMBOLS	VEHICLE CONCERNED ENGINE TYPE: 20 Petrol 829 A 5	22 Petrol J6T A 500	25 Fuel Injection 25/659	25 Prestige 25/659	25 Petrol Turbo 25/662	25 Prestige Petrol Turbo 25/662	25 Diesel 25/660	25 Diesel Turbo 25/648	25 Limousine Diesel Turbo 25/648	Safari 20 Petrol + Familiale 829 A 5	Safari 25 Fuel Injection 25/659	Safari 25 Diesel + Familiale 25/660	Safari 25 Diesel Turbo 25/648	Ambulance 829 A 5 or 25/660		
MA 140/1	Tools		○							X	X	X			X	X	X		
MA 142.000/1	General information on carburation	△		X	X								X				X		
MA 142.00/1	WEBER carburettor specification	△		X									X				X		
MA 142.00/2	SOLEX carburettor specification	△		X									X				X		
MA 142.00/3	WEBER carburettor specification	△			X														
MA 142.00/5	WEBER carburettor specification	△			X														
MA 142.0/1	WEBER carburettor checks and adjustments		○	X									X				X		
MA 142.0/2	SOLEX carburettor checks and adjustments		○	X									X				X		
MA 142.0/3	WEBER carburettor checks and adjustments		○	X	X														
MA 143.00/1	Anti-pollution system specification	△			X														
MA 144.00/1	M25/659 engine fuel-injection system specification	△				X	X							X					
MA 144.0/1	M25/659 engine fuel-injection system: checks and adjustments		○			X	X							X					
MA 144.00/2	M25/662 engine fuel-injection system specification	△						X	X										
MA 144.0/2	M25/662 engine fuel-injection system: checks and adjustments		○					X	X										
MA 146.00/1	Specification and particular features of the DIESEL fuel-inj. system	△								X	X	X			X	X	X		
MA 146.0/1	Fuel-injection system: checks and adjustments	△								X	X	X			X	X	X		
MA 146.1/1	Removing/refitting an injection pump	△								X	X	X			X	X	X		
MA 151.00/1	Specification and particular features of the turbocharger		○					X	X										
MA 151.00/2	Specification and particular features of the turbocharger		○								X	X				X			
MA 171.00/1	Air circuit specification	△		X	X								X				X		
MA 173.0/1	Checking the fuel pressure	△		X	X								X				X		

LIST OF OPERATIONS APPEARING IN THE CHAPTER: FUEL AND AIR SUPPLY - CARBURATION

OPERATION No.	DESCRIPTION	OPERATIONS △ TEXTS	OPERATIONS ○ SYMBOLS	VEHICLE CONCERNED ENGINE TYPE: 20 Petrol 829 A 5	22 Petrol J6T A 500	25 Fuel Injection 25/659	25 Prestige 25/659	25 Petrol Turbo 25/662	25 Prestige Petrol Turbo 25/662	25 Diesel 25/660	25 Diesel Turbo 25/648	25 Limousine Diesel Turbo 25/648	Safari 20 Petrol + Familiale 829 A 5	Safari 25 Fuel Injection 25/659	Safari 25 Diesel + Familiale 25/660	Safari 25 Diesel Turbo 25/648	Ambulance 829 A 5 or 25/660		
MA 175.00/1	Fuel circuit specification		○	X	X								X				X		
MA 175.00/2	Fuel-injection system specification		○			X	X	X	X					X					
MA 175.00/3	Diesel fuel-injection system specification		○							X	X	X			X	X	X		

2437 T

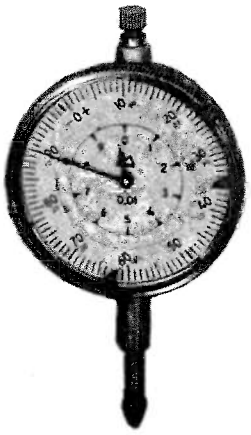

12.827

OUT 10 **6030 T**

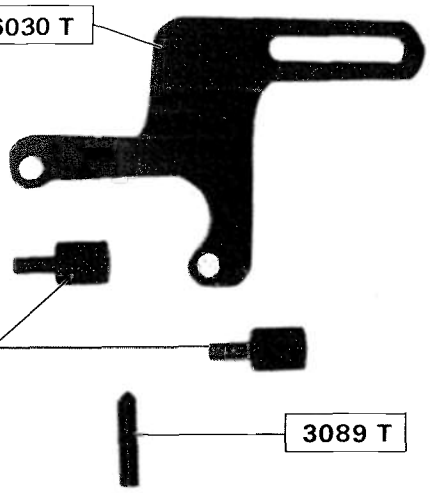

83.1198

OUT 10 **4059 T**

3089 T

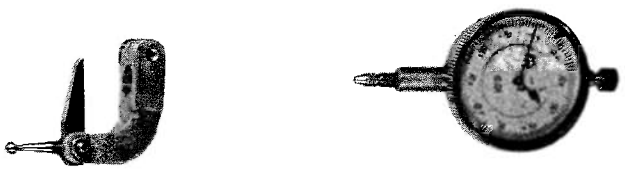

83.279

OUT 10 **6027 T**

83.1192

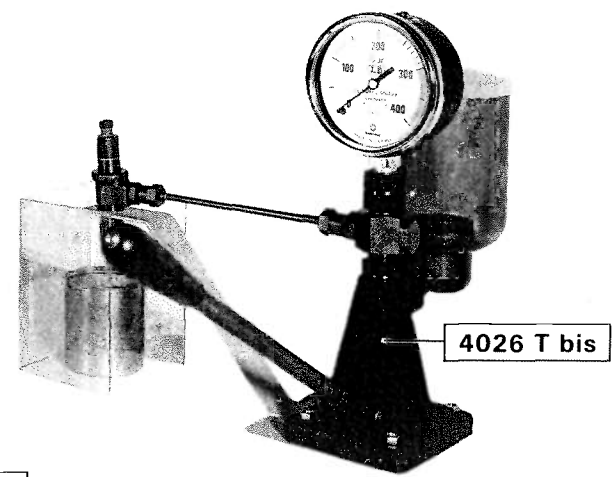

78.228

OUT 20 **6028 T**

H

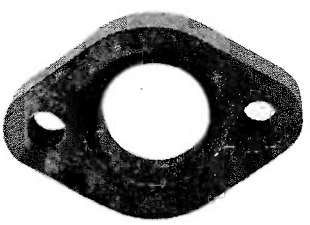

J

83.281

GENERAL FEATURES OF THE CARBURATION

SOLEX and WEBER carburettors are fitted with tamper-proof devices for the mixture adjustment screws.
The SOLEX carburettor is fitted with protective caps for the throttle spindle stop-screw of 2nd choke and butterfly adjustment screw.

If the carburettor is not properly adjusted, the original protective plug *(white on WEBER carburettors, black on SOLEX carburettors)* will be removed, and after adjustment of the carburettor, will be replaced by a «REPAIR» protective plug *(black on WEBER carburettors, and white on SOLEX carburettors)*.

The Replacement Parts Department supplies under Reference number **4029-T** a kit for removing and refitting the protective plugs on SOLEX and WEBER carburettors.

TOOLS INCLUDED IN KIT 4029-T, Fig. I et II:

A. Gun.
B. Tool for loading the gun.
C. Tool for extracting the plug **(a)** protecting the sunken mixture adjustment screw (SOLEX).
D. Tool for extracting the plug **(a)** protecting the sunken mixture adjustment screw (WEBER).
E. Tool for fitting plug **(a)** and cap **(b)** (SOLEX and WEBER).
F. Tool for breaking the head of cap **(b)** of the sunken mixture screw with collar (SOLEX).
G. Tool for extracting cap **(b)** (SOLEX).
H. Tool for fitting cap **(c)** protecting the stop-screw for the throttle spindle (SOLEX).
This kit also contains a set of plugs for SOLEX carburettors:
- **a)** Protective plug for mixture adjustment screw.
- **b)** Protective cap for mixture adjustment screw with collar.
- **c)** Protective cap for throttle spindle stop-screw.

The Replacement Parts Department supplies caps in packets of 10, under the following reference numbers:

- **Protective plug for sunken mixture adjustment screw**
  SOLEX carburettor . . . . . No. 75 489 718 (white)
  WEBER carburettor . . . . . No. 5 489 716 (black)

- **Protective cap for mixture adjustment screw with collar**
  SOLEX carburettor . . . . . No. 5 501 075 U (white)

- **Protective cap for throttle spindle stop-screw and butterfly opening adjusting screw**
  SOLEX carburettor . . . . . No. 5 507 643 (white)

UTILISATION

I. REMOVING AND FITTING A PROTECTIVE PLUG FOR SUNKEN MIXTURE ADJUSTMENT SCREW ON A SOLEX CARBURETTOR.

REMOVAL. **Fig. III, IV et V:**

1. Load gun **A** on tool **B.**

2. Pierce plug **(a)**:
- position tool **C** and hold it against gun **A.**
- position the gun and tool assembly against plug **(a)** making sure that the nozzle of gun **A** is properly centred against the plug, and that the assembly is aligned as precisely as possible in the axis of the plug.
- actuate the gun, and remove it, leaving tool **C** on the carburettor.

3. Remove plug **(a)**:
- load gun **A**.
- screw tool **C** *into the back* of gun **A**.
- actuate the gun to remove the plug.

4. Adjust the level of pollution.

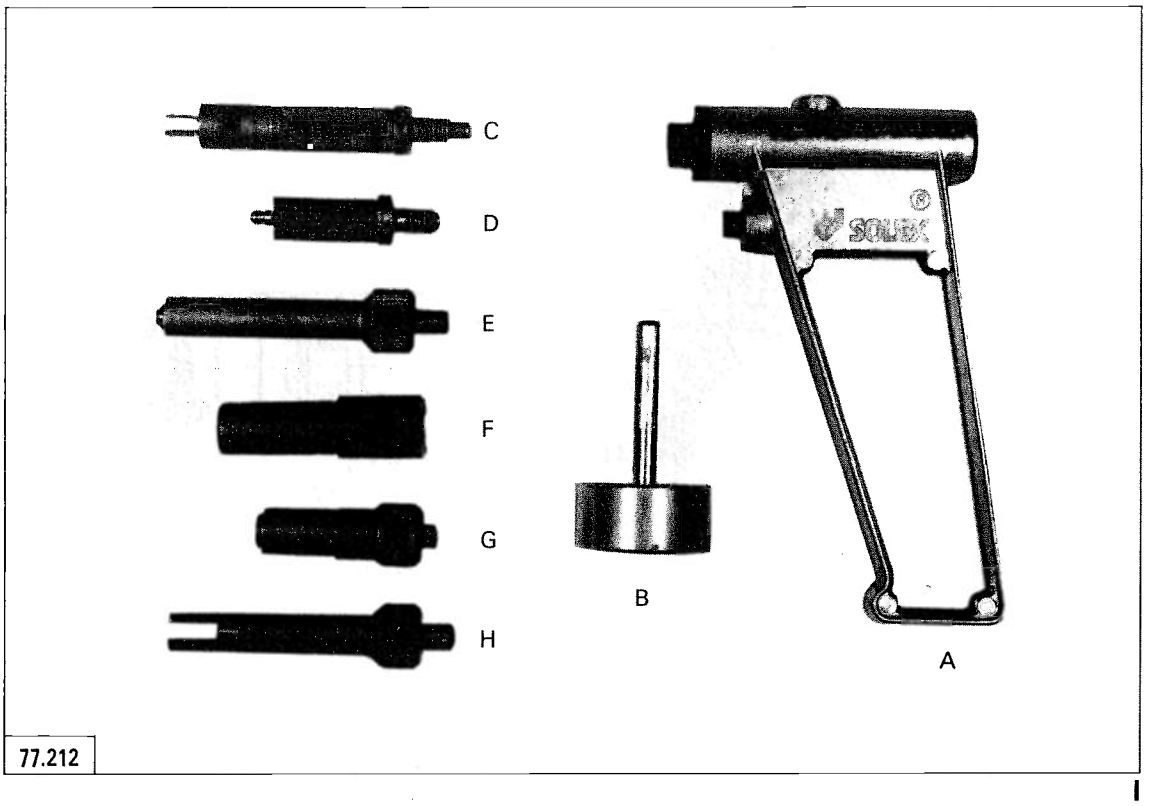

I

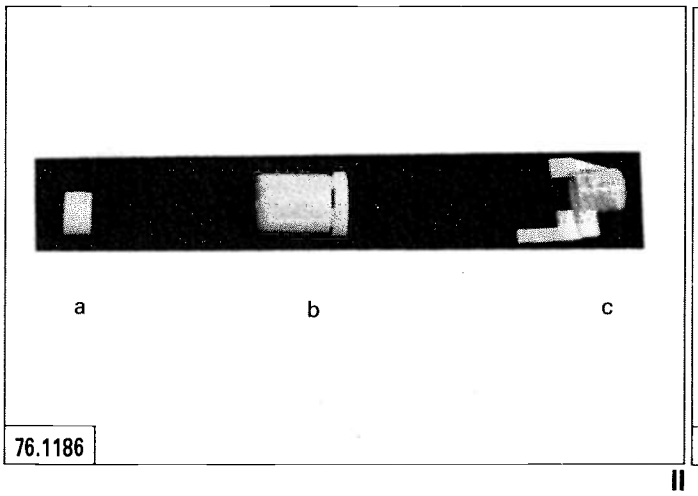

II

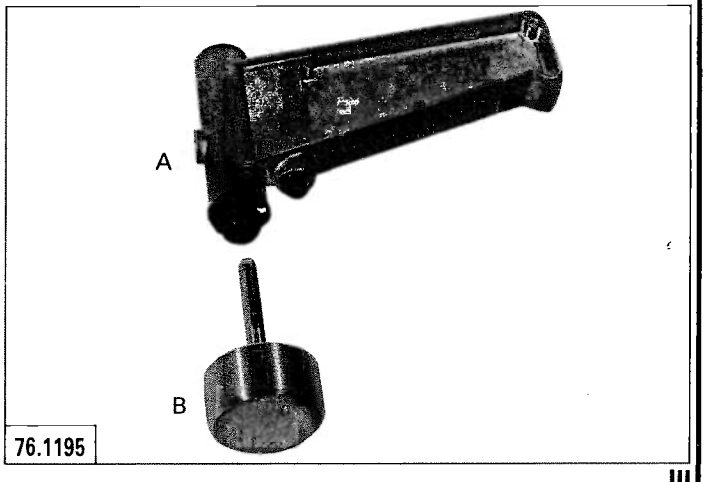

III

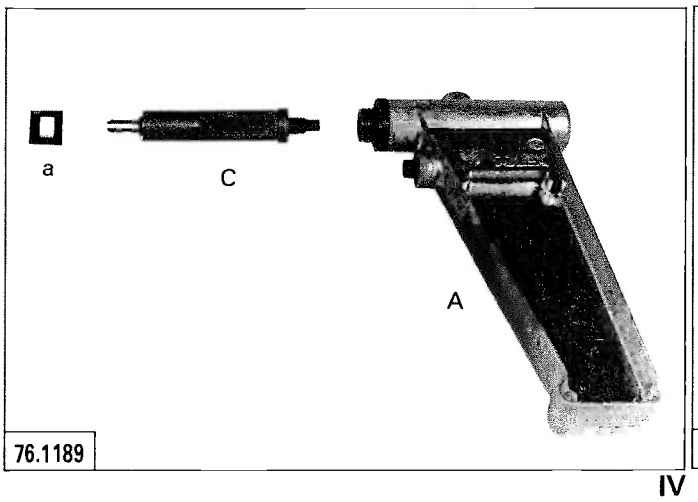

IV

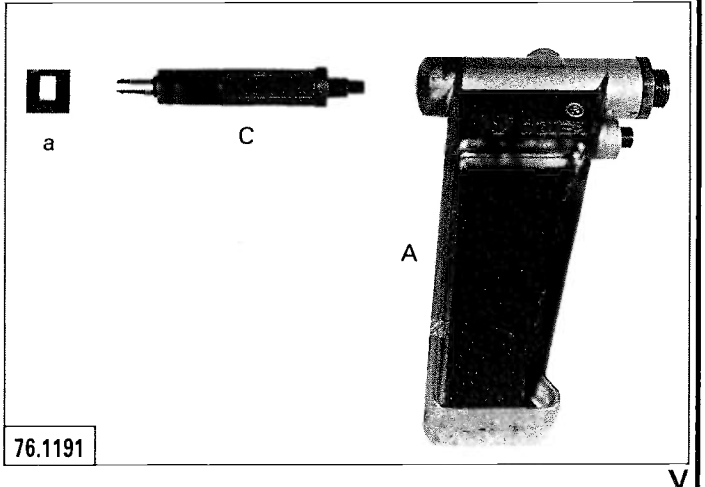

V

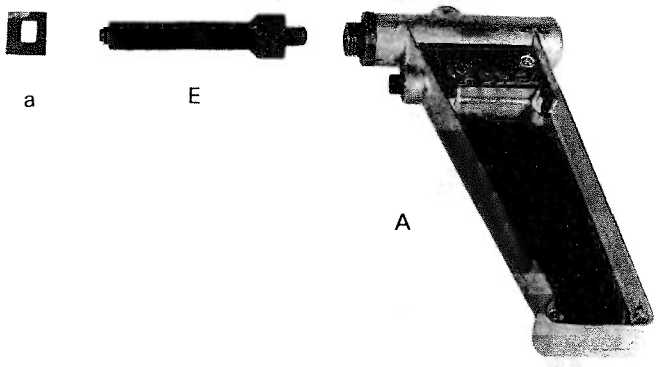

76.1193

I

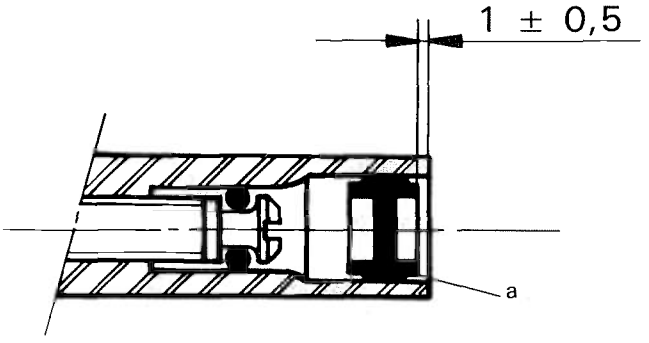

G 14.27

II

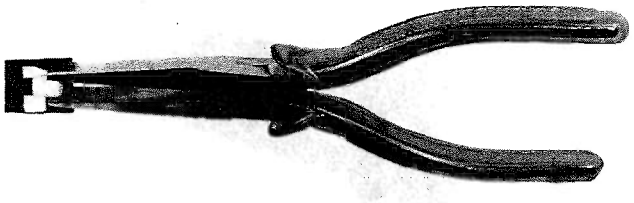

76.1188

III

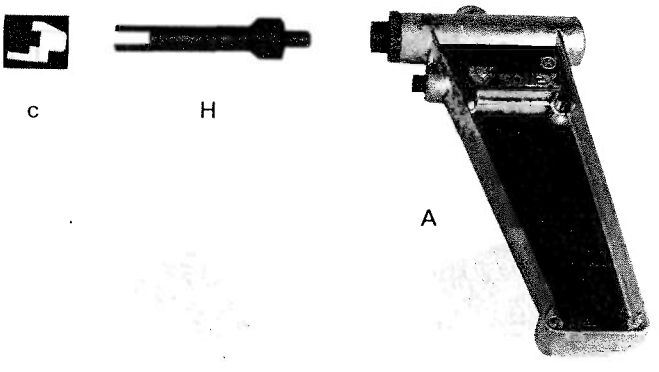

76.1192

IV

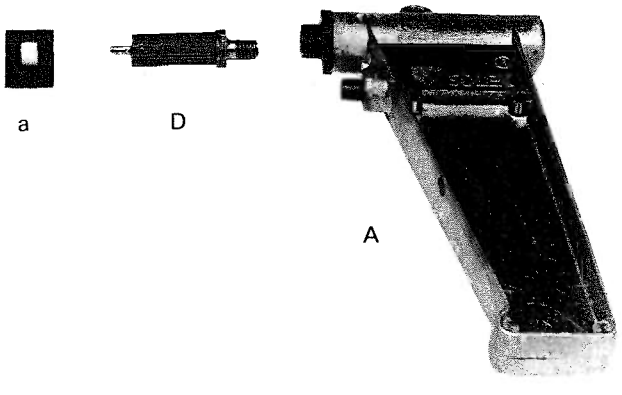

76.1351

V

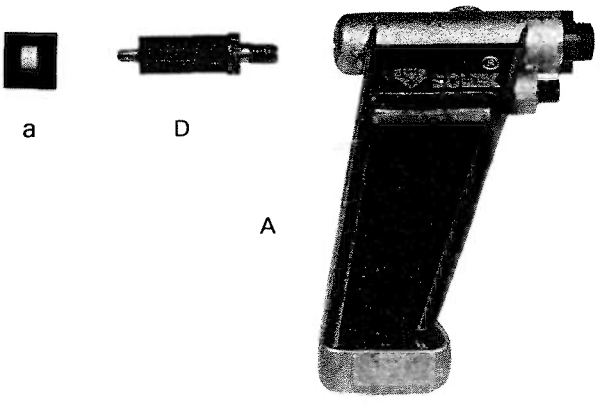

76.1352

VI

FITTING. **Fig. I and II:**

5. Fit the tamper-proof protective plug **(a)**:
- load gun **A**.
- screw tool **E** onto gun **A**.
- position plug **(a)** in its housing on the carburettors.
- actuate the gun until the plug is properly located.

II. REMOVING AND FITTING THE PROTECTIVE CAP FOR THROTTLE SPINDLE STOP-SCREW OF 2nd CHOKE (cap c), ON A SOLEX CARBURETTOR.

This operation is to be carried out only in the case of a check and adjustment on a carburettor test bench (L'POLLU 2000 type).

REMOVING AND FITTING THE PROTECTIVE CAP FOR OPENING ADJUSTING SCREW OF BUTTERFLY UNDER OPERATION OF COLD START DEVICE.

REMOVAL. **Fig. III:**

1. Remove cap **(c)** using flat-nose pliers.

2. Adjust the butterfly opening:
Adjust the butterfly opening using the test bench according to the specifications *(sent upon request by the bench Maker to the users of carburettor test benches)*.

FITTING. **Fig. IV:**

3. Fit cap **(c)**:
- load gun **A**,
- screw tool **H** onto the gun,
- fit cap **(c)** onto the throttle spindle stop-screw,
- place the tool and gun assembly against the cap **(c)** and actuate the gun.

III. REMOVING AND FITTING A PROTECTIVE PLUG FOR SUNKEN MIXTURE ADJUSTMENT SCREW ON A WEBER CARBURETTOR.

REMOVAL. **Fig. V:**

1. Load gun **A** on tool **B**.

2. Pierce plug **(a)**:
- position and hold tool **D** against gun **A**,
- position the gun and tool assembly against plug **(a)**, making sure that the nozzle of the gun is properly centred against the plug, and that the assembly is aligned as precisely as possible in the axis of the plug.
- actuate the gun, and screw the tool into the plug (L.H. thread).
- remove the gun, leaving tool **D** on the carburettor.

3. Remove plug **(a)**, **Fig. VI:**
- load gun **A**,
- screw tool **D** into the back of gun **A**.
- actuate the gun to remove the plug.

4. Adjust the level of pollution.

FITTING. **Fig. I:**

5. Fit the tamper-proof protective plug **(a)**:
- load gun **A**,
- screw tool **E** onto gun **A**,
- position plug **(a)** in its housing on the carburettor *(make sure it is fitted the right way round* **Fig. II***)*,
- actuate the gun until the plug is properly located.

EXHAUST EMISSION CONTROL

In order to comply with current regulations, the checking and adjustment of the exhaust emission from vehicles with a petrol engine must, without fail, be performed after the following operations:

I. ENGINE REPLACEMENT.

II. CARBURETTOR REPLACEMENT.

III. WORK ON THE CARBURETTOR.

Replacement of parts of the carburettor.
Carburettor adjustment.
Work on the carburettor controls.

IV. WORK ON THE INLET MANIFOLD.

Replacement or removal of:
- the inlet manifold,
- the air filter,
- crankcase gas recirculation system.

V. WORK ON THE ENGINE.

Rocker adjustment.
Replacement or removal of:
- the cylinder head,
- the camshaft,
- the rockers,
- the valves,
- the liners and pistons.

VI. WORK ON THE IGNITION.

Replacement or reconditioning of the distributor (wholly or partially).
Adjustment or replacement of the sparking plugs.
Adjustment of the ignition timing.

VII. WORK ON EXHAUST SYSTEM.

Replacement or removal of:
- the exhaust manifold,
- the silencer or any part of the exhaust.

VIII. WORK ON THE EMISSION CONTROL SYSTEM.

When the vehicle is fitted with a specific equipment *(e.g. on vehicles of SWEDEN, AUSTRALIA or JAPAN type)*.

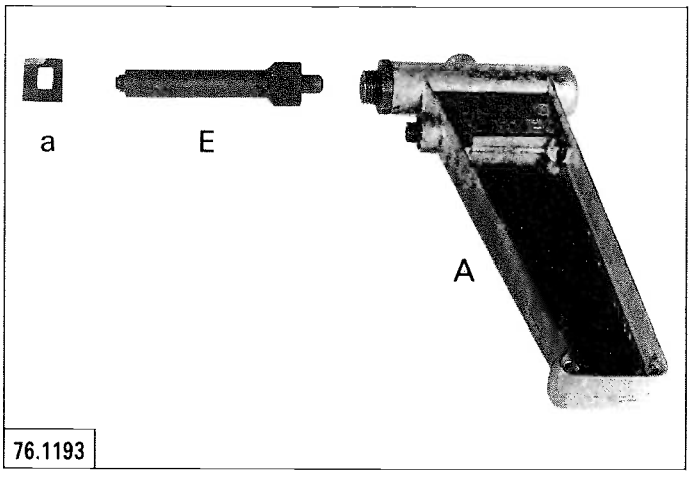

I

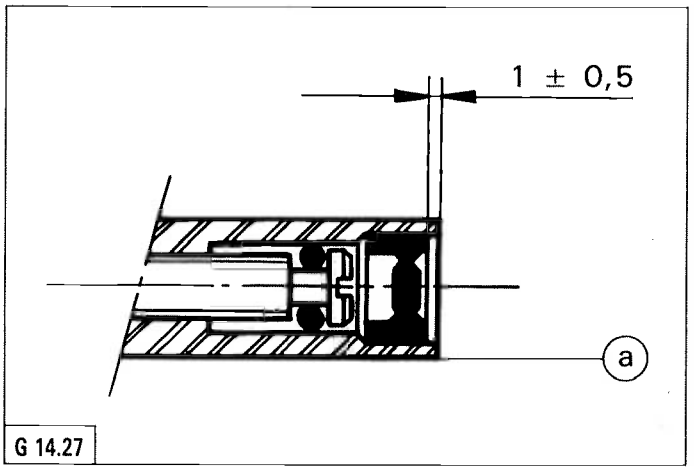

II

CARBURETTOR SPECIFICATION

Engine type 829.A5

MAKE : WEBER

Type : **34 DMTR 46/250** Ref. **W 88-50**
34 DMTR 46/250 **W 89-50** fast idle device

Choke flap in primary barrel
Idle cut off solenoid
Dual choke carburettor of the compound type
Fuel return pipe to tank located on the carburettor top cover

DESCRIPTION	1st choke		2nd choke	
Venturi	23	Ref. No. 12	26	Ref. No. 13
Main jet	112	Ref. No. 5	120	(under Ref. No. 14)
Air compensator jet	240	Ref. No. 3	230	Ref. No. 14
Emulsion tube	F45	Ref. No. 4	F25	(under Ref. No. 14)
Idling jet	47	Ref. No. 6	50	Ref. No. 15
Idling air correction jet	125		70	
Accelerator pump jet	40	Ref. No. 7		
Enrichment device jet (petrol)			130	Ref. No. 1
Enrichment device jet (air)			110	
Twin fuel float weight	13 ± 0.5 g			
Ball type needle valve	1.75 Ref. No. 2			
Positive opening of 1st choke butterfly	$1.35 \begin{smallmatrix} +0.05 \\ 0 \end{smallmatrix}$ mm			
Opening of the strangler flap with 400 mm Mg (530 mb)	3.75 ± 0.25 mm			
Idle shut off solenoid	Ref. No. 9			
Air regulating screw	Ref. No. 8			
Mixture control screw	Ref. No. 11			
Throttle opening device	Ref. No. 10			

Adjustments carried out on «L'POLLU » test bench:

OPENING OF THE THROTTLE BUTTERFLY		INITIAL SETTING OF IDLING SPEED		
1st choke W mixture screw closed	2nd choke	1st choke W mixture screw open	2nd choke	Positive opening 1st choke
N 210	K 230	N 265	K 230	Y 280

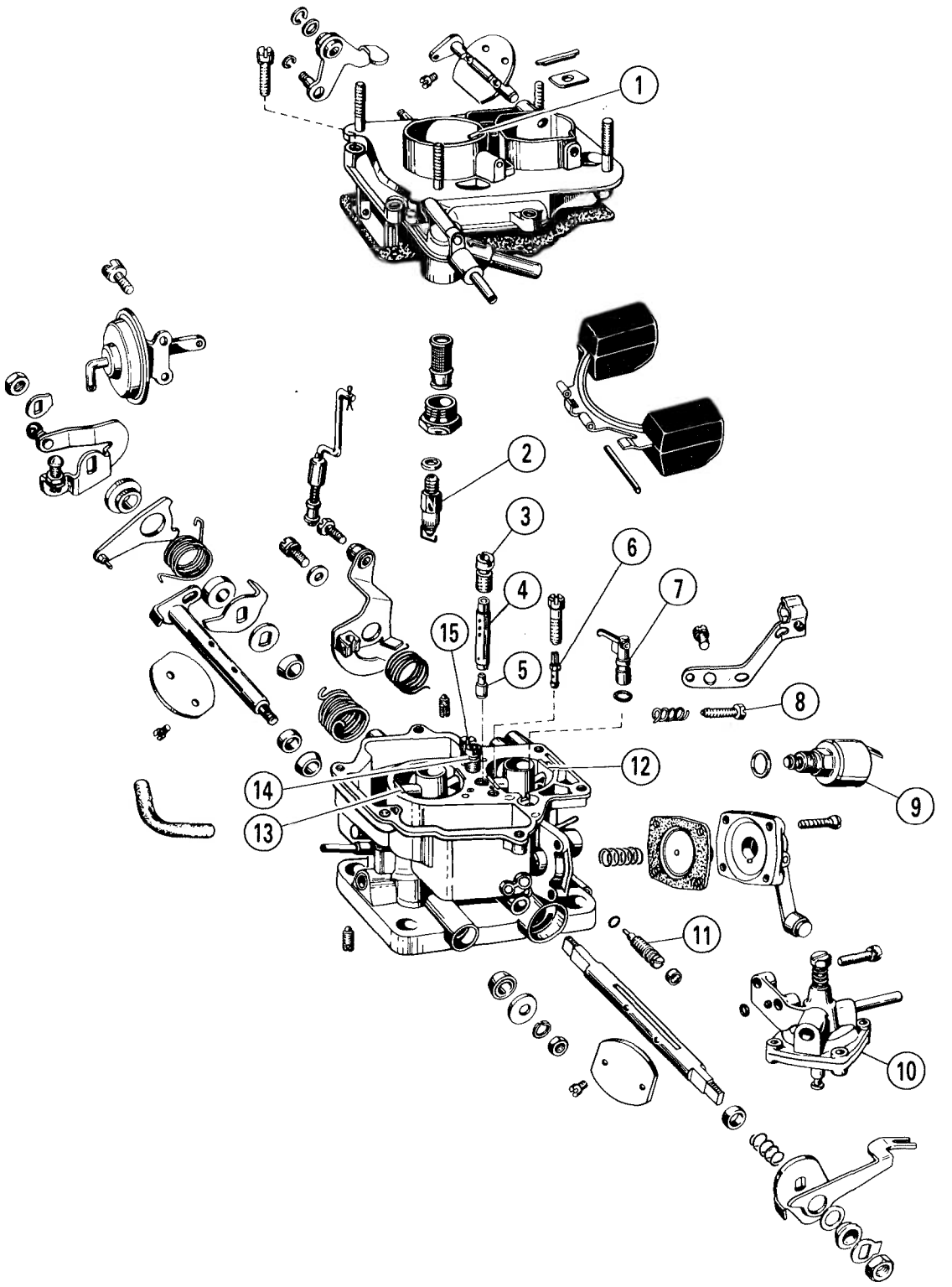

*

CARBURETTOR SPECIFICATION

Engine type 829.A5

MAKE : SOLEX

Type : 34 CICF Ref. **CIT 214** and **214-1**

Choke flap in primary barrel
Dual choke carburettor of the compound type
Fuel return pipe to tank located on the carburettor top cover

DESCRIPTION	1st choke		2nd choke	
Venturi	23	Ref. No. 13	26	Ref. No. 10
Main jet	127.5	(under Ref. No. 12)	115	(under Ref. No. 11)
Air compensator jet	205	Ref. No. 4	140	Ref. No. 7
Emulsion tube	VA	(under Ref. No. 4)	ZA	(under Ref. No. 7)
Idling jet	55	Ref. No. 2		
Idling air correction jet		Ref. No. 3		
By-pass jet			60	Ref. No. 8
By-pass air jet			90	Ref. No. 9
Accelerator pump injector	60	Ref. No. 15		
Econostat - Petrol jet			145	Ref. No. 5
Air jet			80	Ref. No. 6
Polyamide fuel float	Ref. No. 16	12 ± 2 g		
Ball type needle valve	Ref. No. 17	1.8		
Positive opening of 1st choke butterfly	1.25 ± 0.05 mm			
Opening of the strangler flap with 400 mm Mg (530 mb)	4.4 ± 0.5 mm			
Mixture control screw	Ref. No. 14			
Idle cut off solenoid	Ref. No. 1			

Adjustments carried out on «L'POLLU» test bench:

OPENING OF THE THROTTLE BUTTERFLY		INITIAL SETTING OF IDLING SPEED		
1st choke W mixture screw closed	2nd choke	1st choke W mixture screw open	2nd choke	Positive opening 1st choke
N 195	K 205	N 240	K 205	

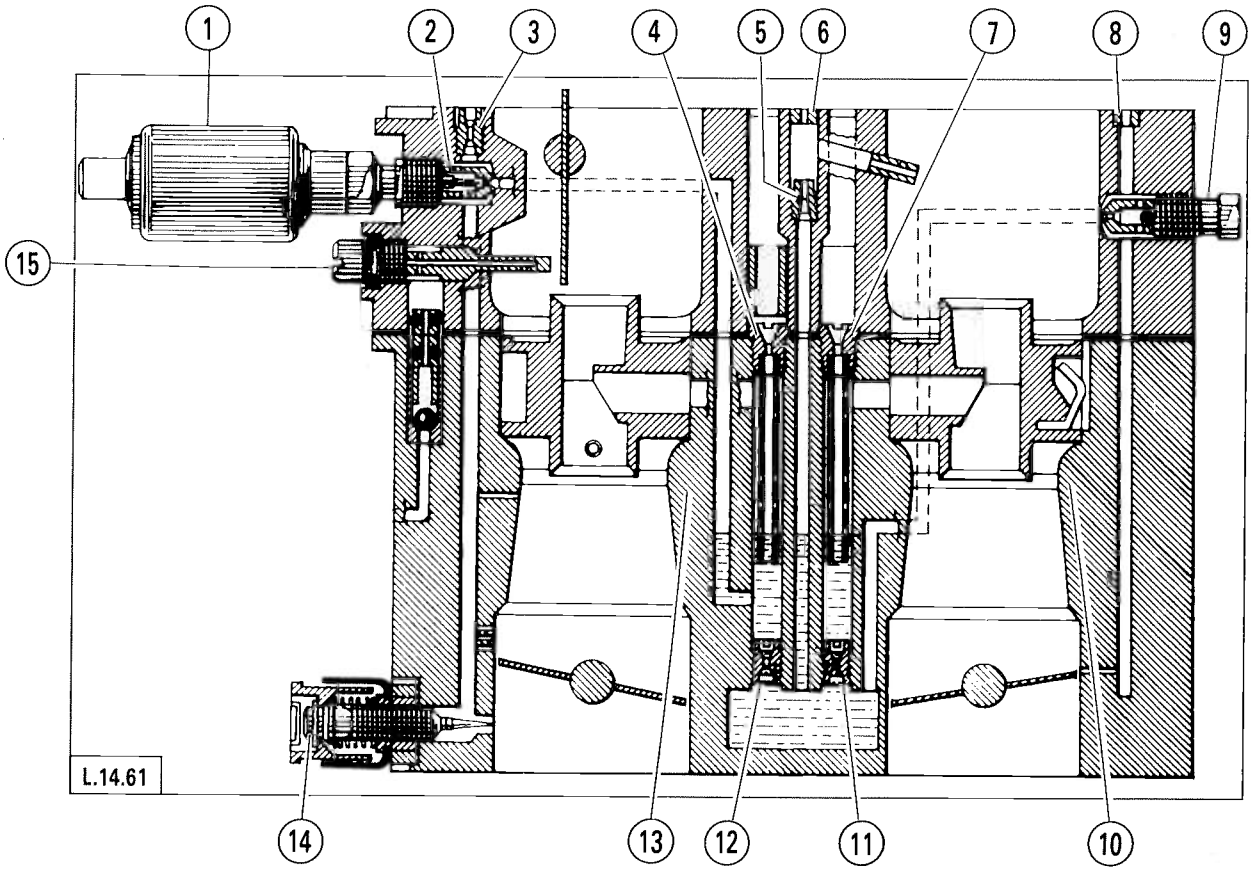

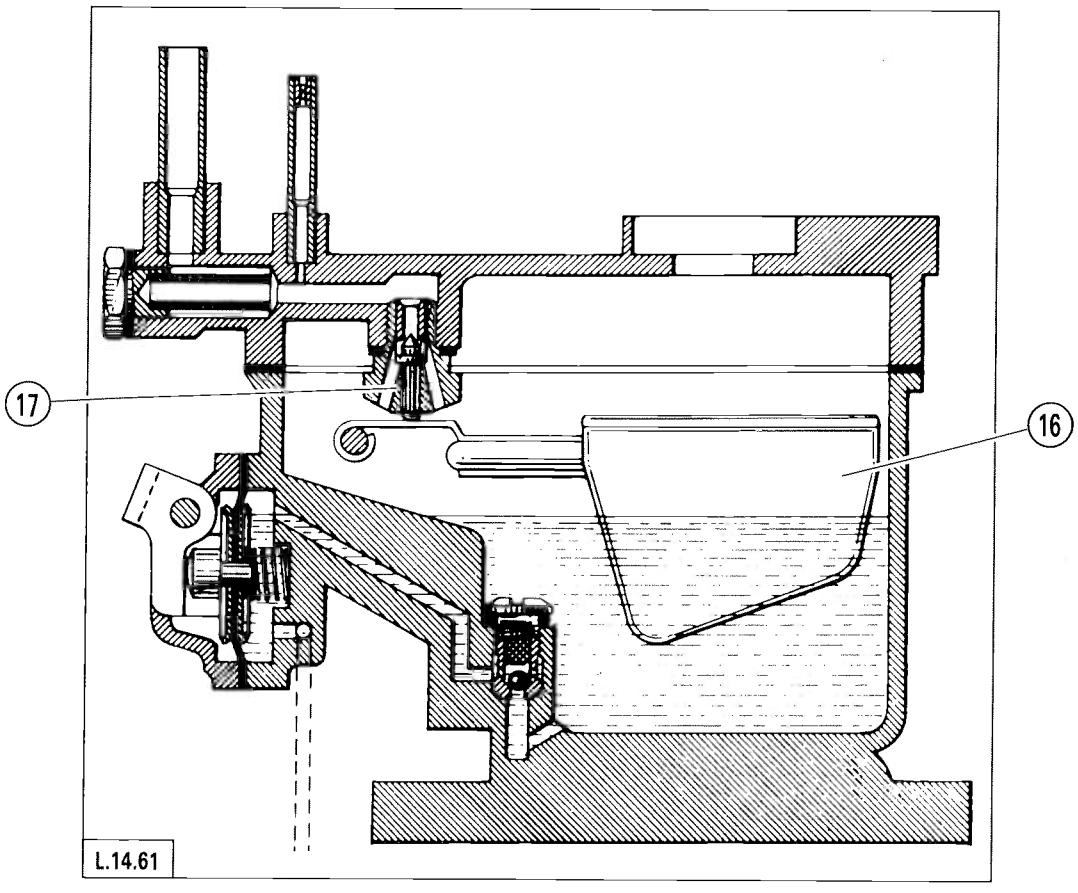

CARBURETTOR SPECIFICATION

Engine type J6T.A500

MAKE : WEBER

Type : 34 DMTR 110/100 Ref. **W 145-50**

Choke flap in primary barrel
Idle cut off solenoid
Dual choke compound carburettor
Fuel return pipe to tank located on the carburettor top cover
Throttle closing dashpot
Anti-pollution device

DESCRIPTION	→ 30/10/85		30/10/85 →	
	1st choke	2nd choke	1st choke	2nd choke
Venturi	24 Ref. No. 7	26 Ref. No. 12	24 Ref. No. 7	26 Ref. No. 12
Main jet	115 Ref. No. 4	97 (under Ref. No. 13)	115 Ref. No. 4	117 (under Ref. No. 13)
Air compensator jet	210 Ref. No. 2	130 Ref. No. 13	240 Ref. No. 2	130 Ref. No. 13
Emulsion tube	F63 Ref. No. 3	F25 (under Ref. No. 13)	F63 Ref. No. 3	F25 (under Ref. No. 13)
Idling jet	52 Ref. No. 5	50 Ref. No. 14	50 Ref. No. 5	50 Ref. No. 14
Idling air correction jet	170	70	170	70
Ball type needle valve	1.75 Ref. No. 1		1.75 Ref. No. 1	
Float setting	7 ± 0.25 mm		7 ± 0.25 mm	
Petrol enrichment jet	130 (under Ref. No. 11)		130 (under Ref. No. 11)	
Air enrichment jet	115 (under Ref. No. 11)		115 (under Ref. No. 11)	
Accelerator pump jet	50 Ref. No. 6		50 Ref. No. 6	
Air regulating screw	Ref. No. 8		Ref. No. 8	
Mixture control screw	Ref. No. 15		Ref. No. 15	
Idle shut off solenoid	Ref. No. 9		Ref. No. 9	
Throttle opening device	Ref. No. 10		Ref. No. 10	
Positive opening full choke	1.20 ± 0.05 mm		1.20 ± 0.05 mm	
Opening of the strangler flap with 400 mm Mg (530 mb)	4.25 ± 0.25 mm		4.25 ± 0.25 mm	

Adjustments carried out on «L'POLLU» test bench:

Positive opening	1st choke W mixture screw closed	2nd choke	1st choke W mixture screw open	Cumulation
X 110	N 200	K 245	N 255	N 310

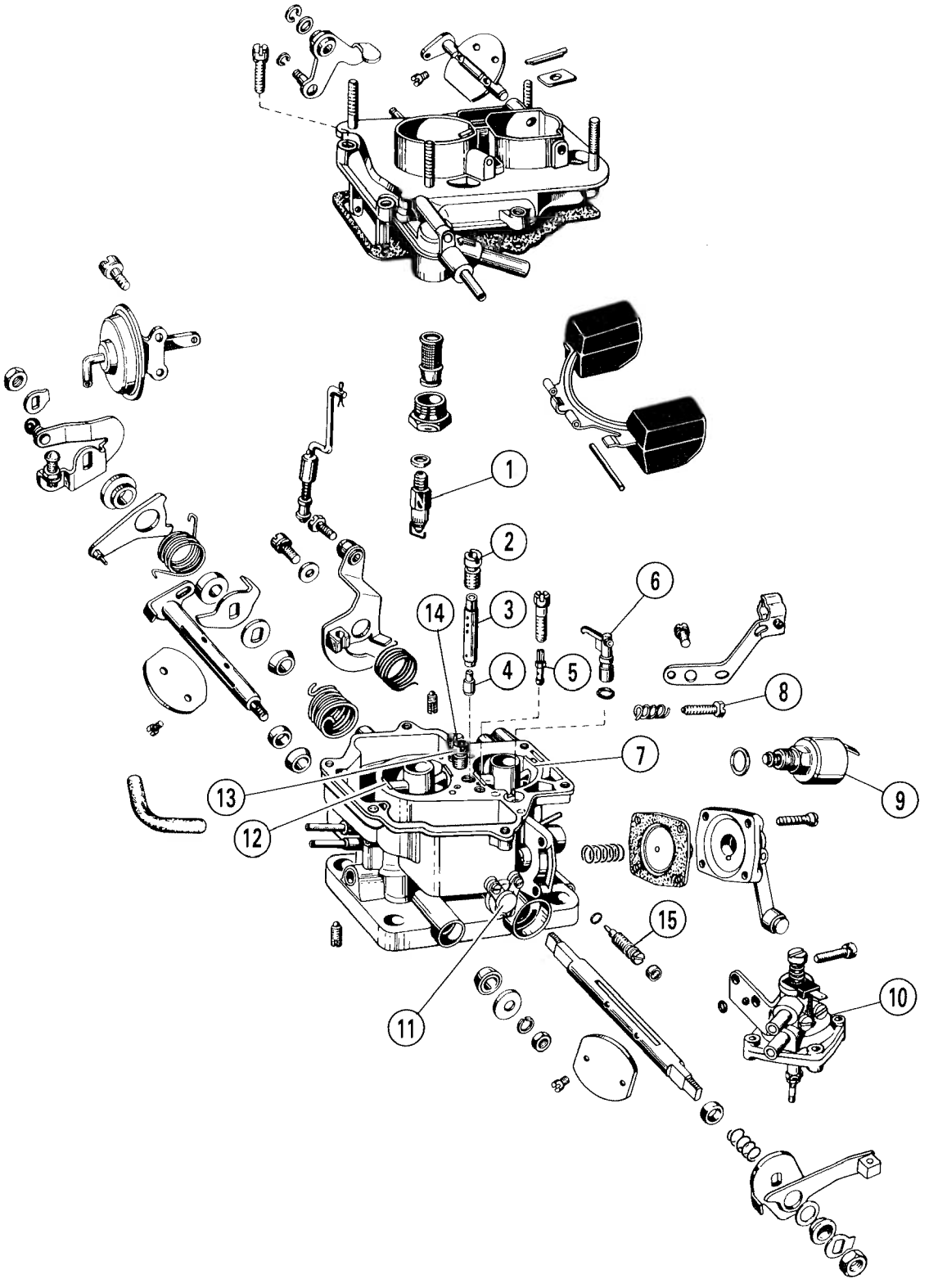

CARBURETTOR SPECIFICATION

Engine type J6R A 500

MAKE : WEBER

Type **34 DMTR 120/100** Ref. **W 149-50**

Choke flap in primary barrel
Idle cut off solenoid
Dual choke compound carburettor
Fuel return pipe to tank located on the carburettor top cover
Throttle closing dashpot
Anti-pollution device

DESCRIPTION	1st choke		2nd choke	
Venturi	24	Ref. No. 7	26	Ref. No. 12
Main jet	110	Ref. No. 4	125	Under Ref. No. 13
Air compensator jet	180	Ref. No. 2	240	Ref. No. 13
Emulsion tube	F45	Ref. No. 3	F25	Under Ref. No. 13
Idling jet	52	Ref. No. 5	50	Ref. No. 14
Idling air correction jet	155		70	
Ball type needle valve	1.75 Ref. No. 1			
Float setting	7 mm ± 0.25			
Petrol enrichment jet	115	Under Ref. No. 11		
Air enrichment jet	115	Under Ref. No. 11		
Accelerator pump jet	50	Ref. No. 6		
Air regulating screw		Ref. No. 8		
Mixture control screw		Ref. No. 15		
Idle shut off solenoid		Ref. No. 9		
Throttle opening device		Ref. No. 10		
Positive opening full choke	1.20 mm ± 0.5			
Opening of the strangler flap with 400 m Mg (530 mb)	4 mm ± 0.25			
Mechanical opening	8 ± 0.5 mm			

Refer to:
specifications: MA 142.00/3 p.3
checks and adjustments: MA 142.0/3
anti-pollution devices: MA 143.0/1

WEBER

34 DMTR
46/250 W 88-50

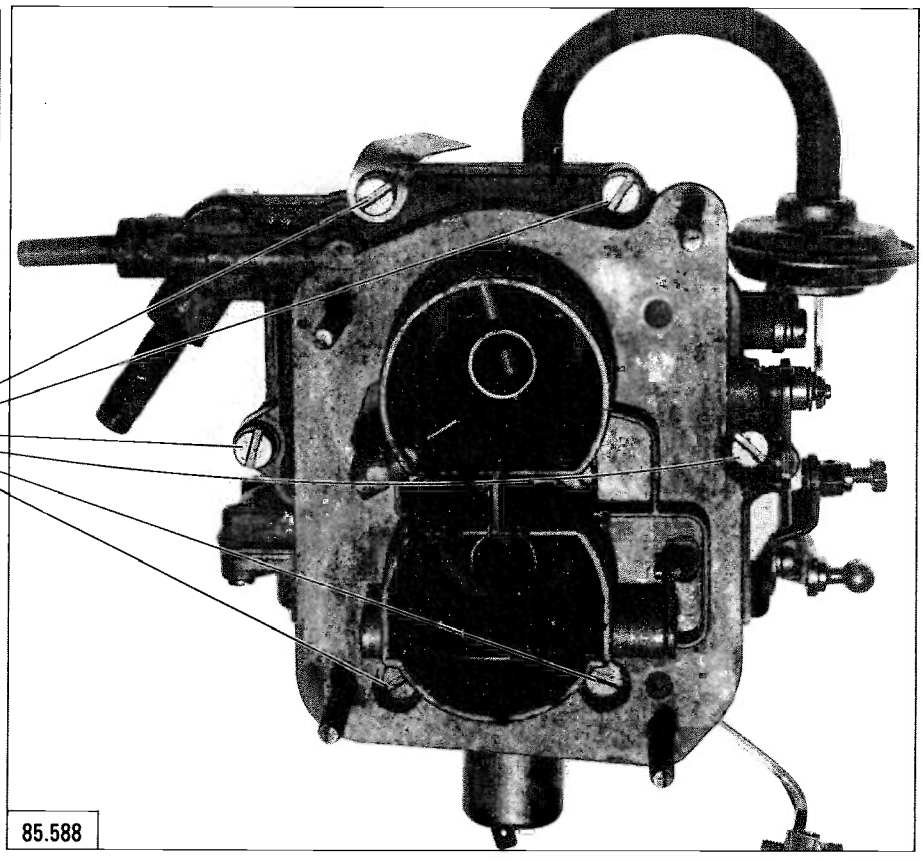

85.588

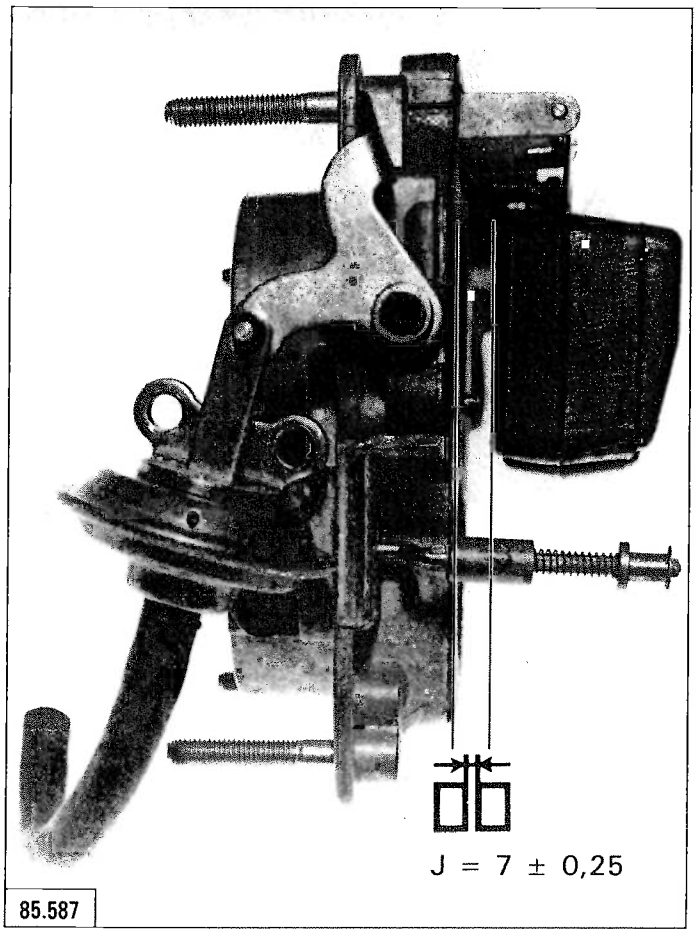

85.587

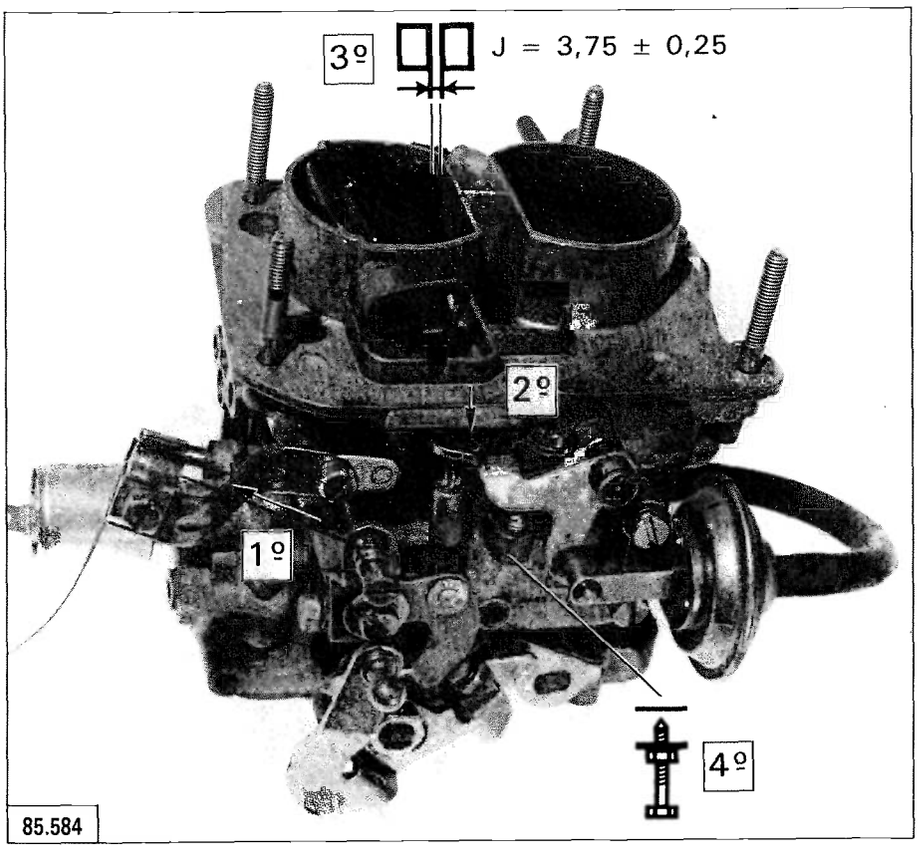

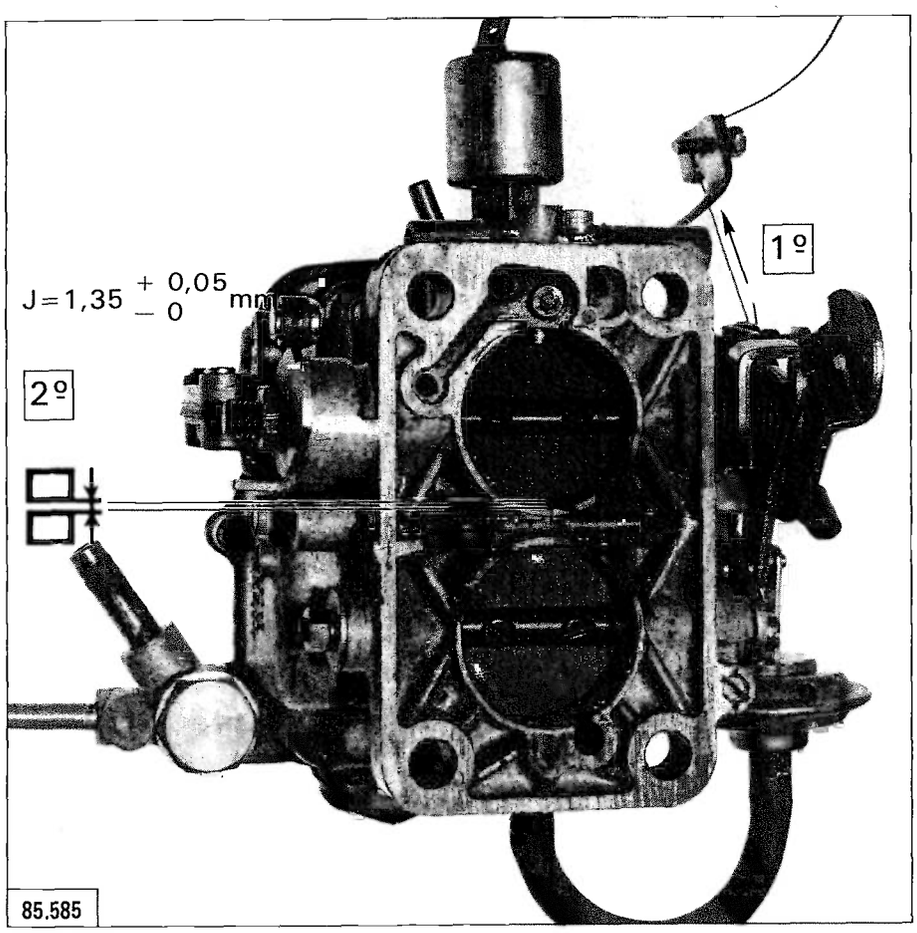

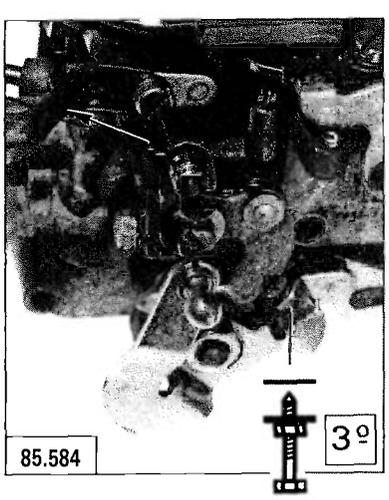

80°C

1 º

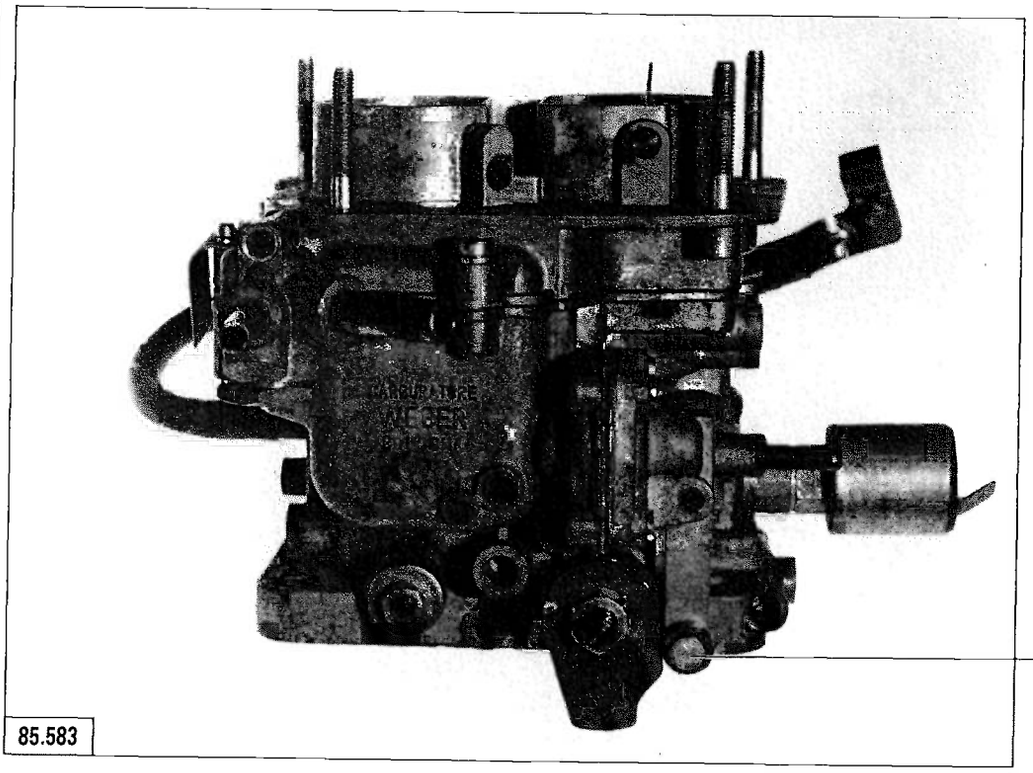

85.583

I

Co > 1
< 2,5

Co_2 > 9

2 º

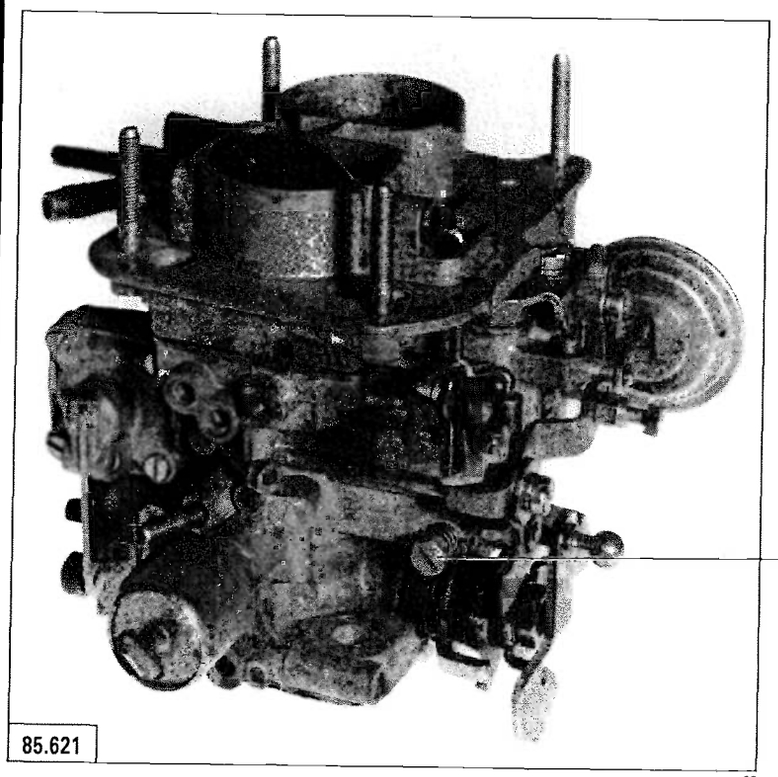

85.621

II

750 + 50 − 0 tr/min.

*

SOLEX Rep 214
Rep 214.I

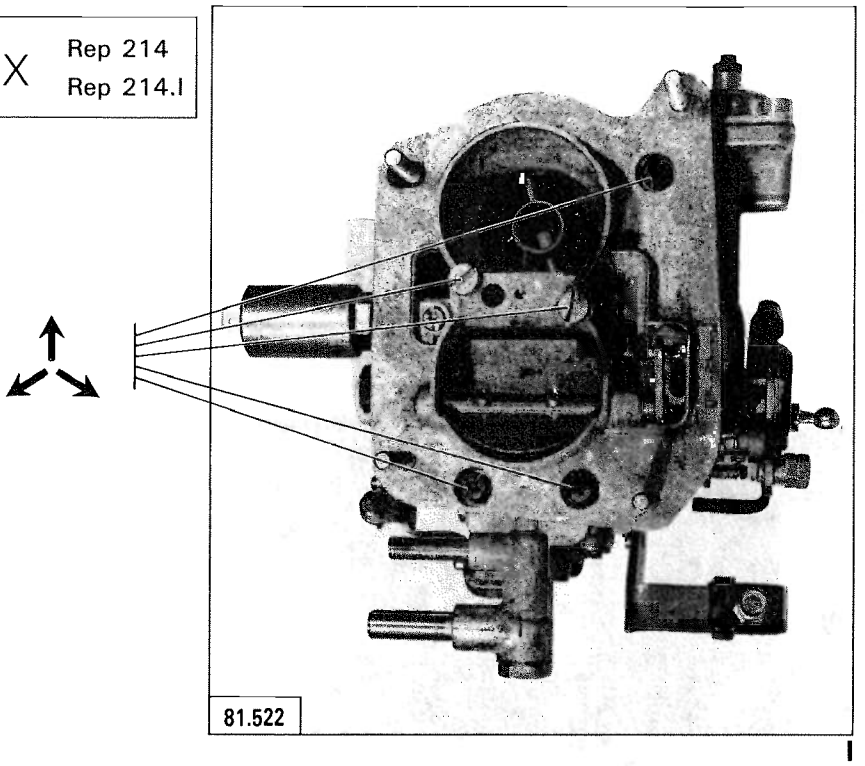

I

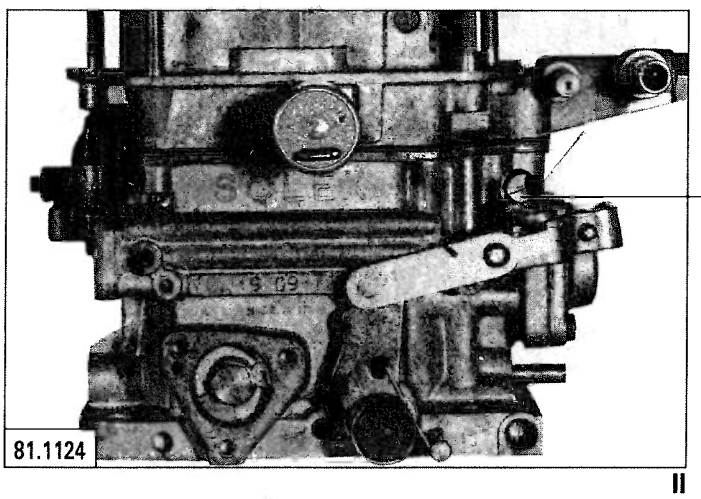

II

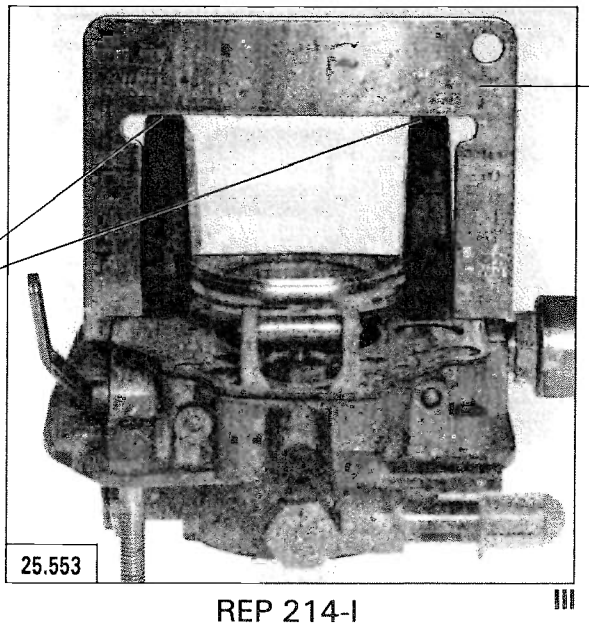

REP 214-I III

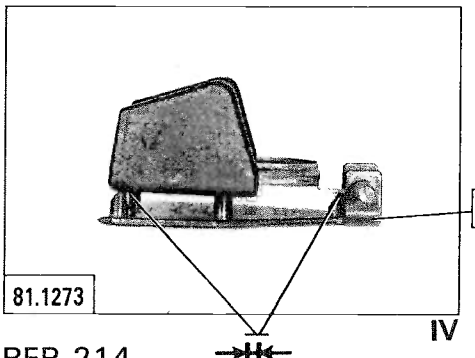

IV

REP 214

J = O

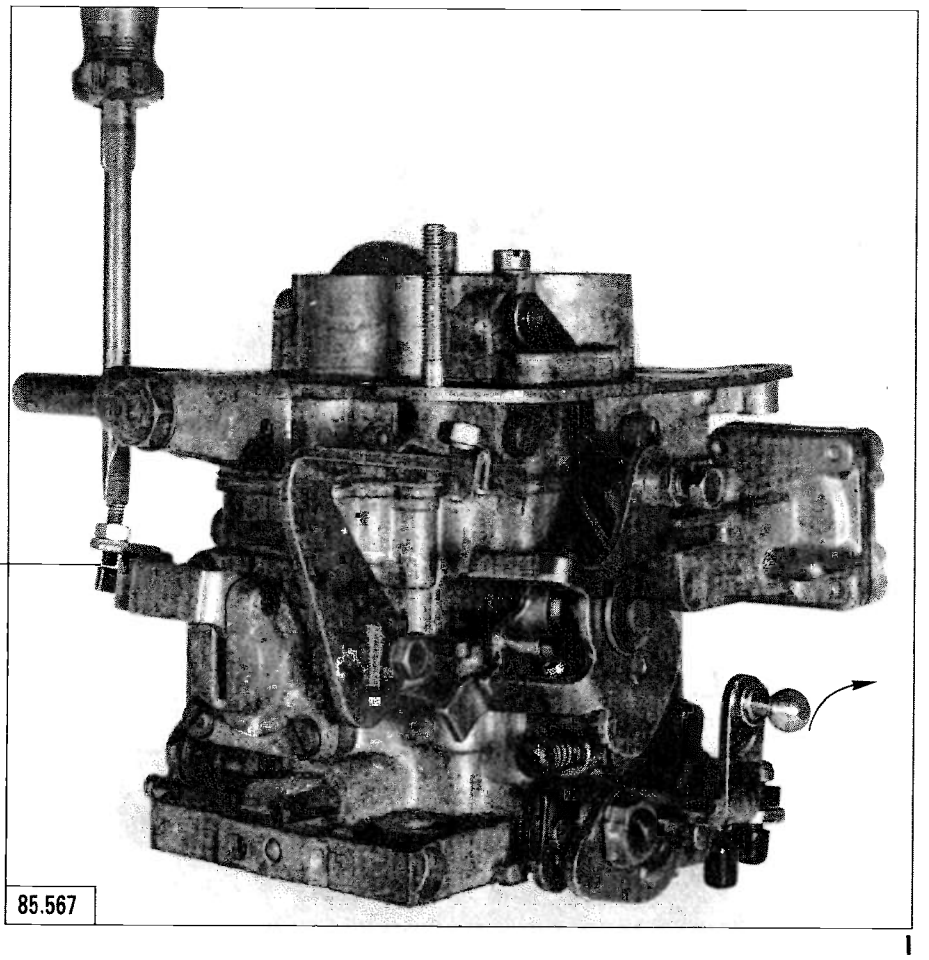

I

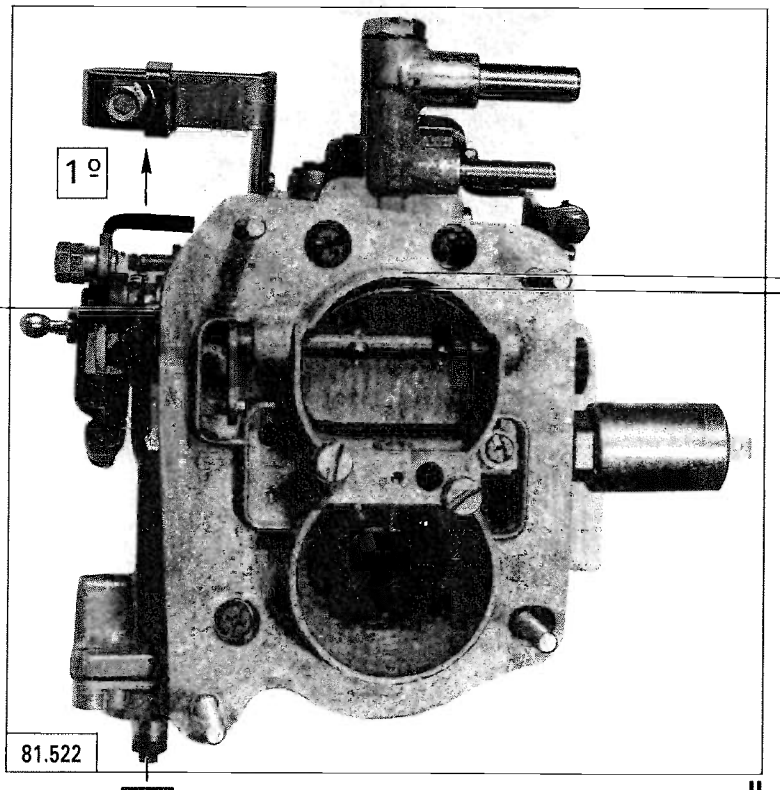

II

4 º

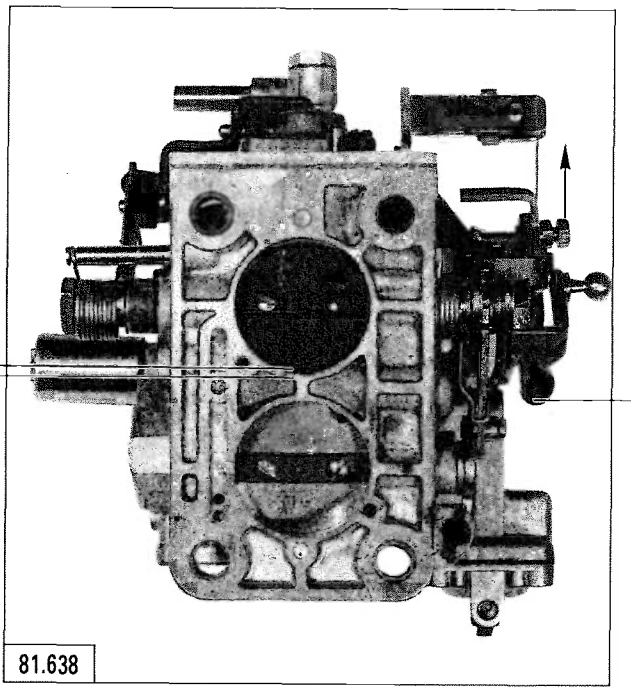

1º

3º

J = 1,25 ± 0,5

I

80°C

1º

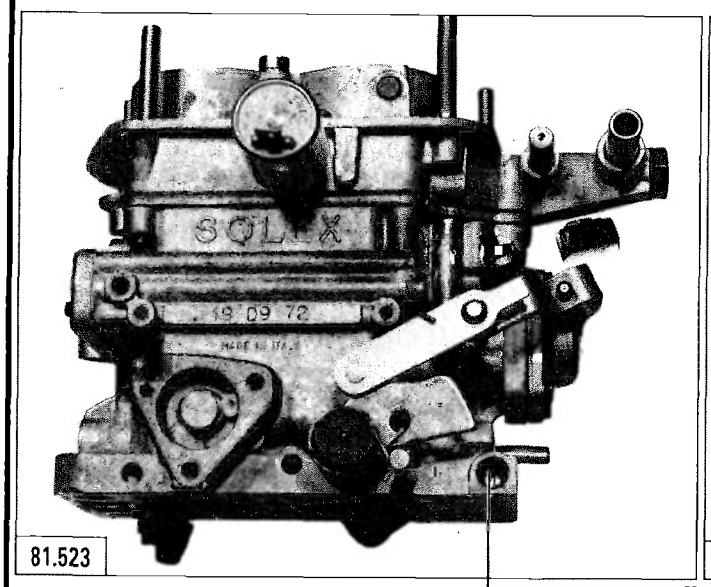

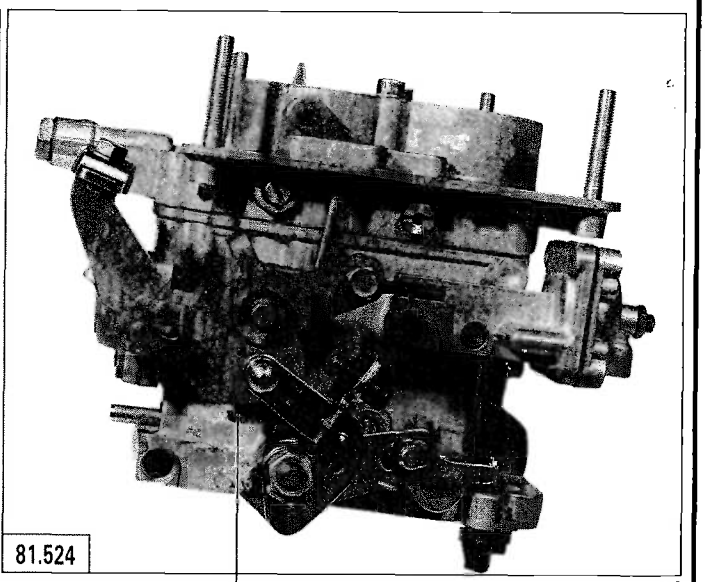

II III

2º

Co > 1
< 2,5

Co_2 > 9

750 + 50 − o tr/min.

WEBER

34 DMTR
110/100 W145-50

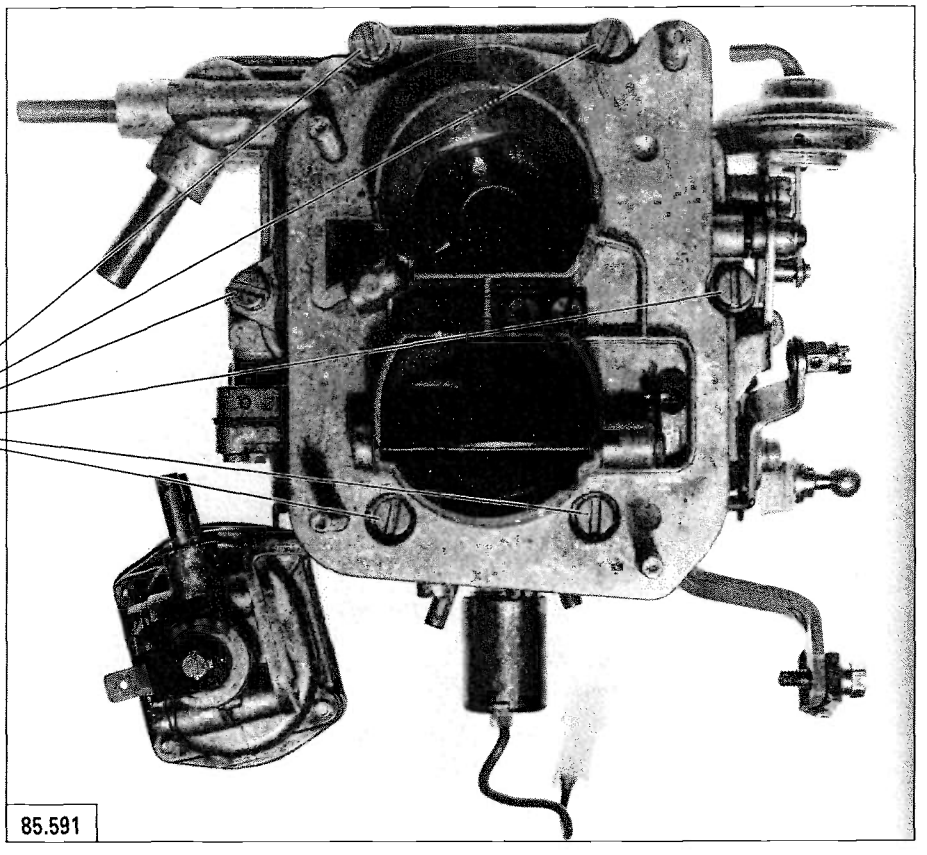

85.591

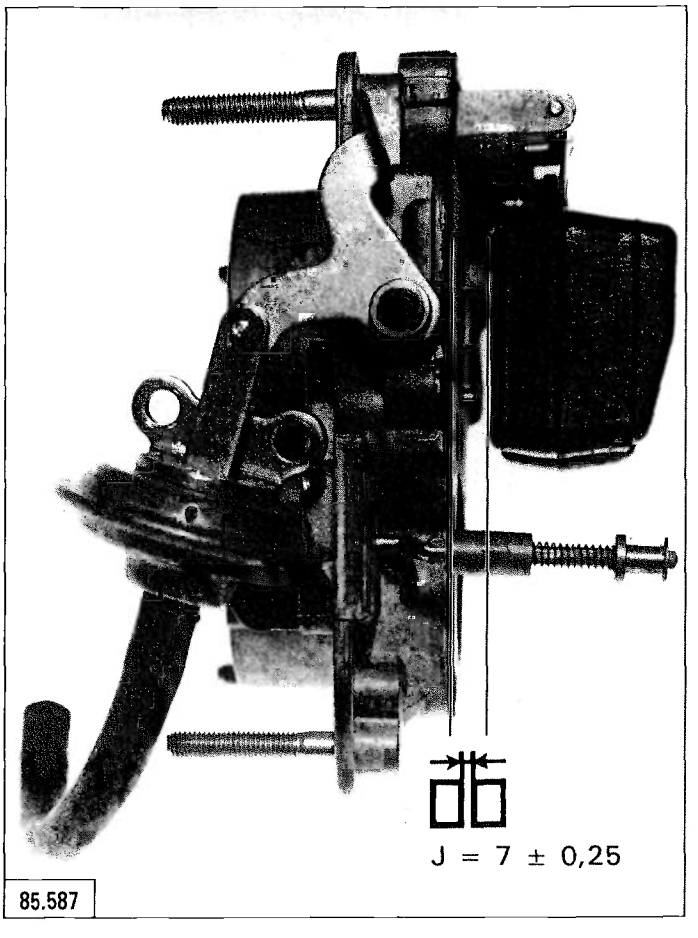

85.587

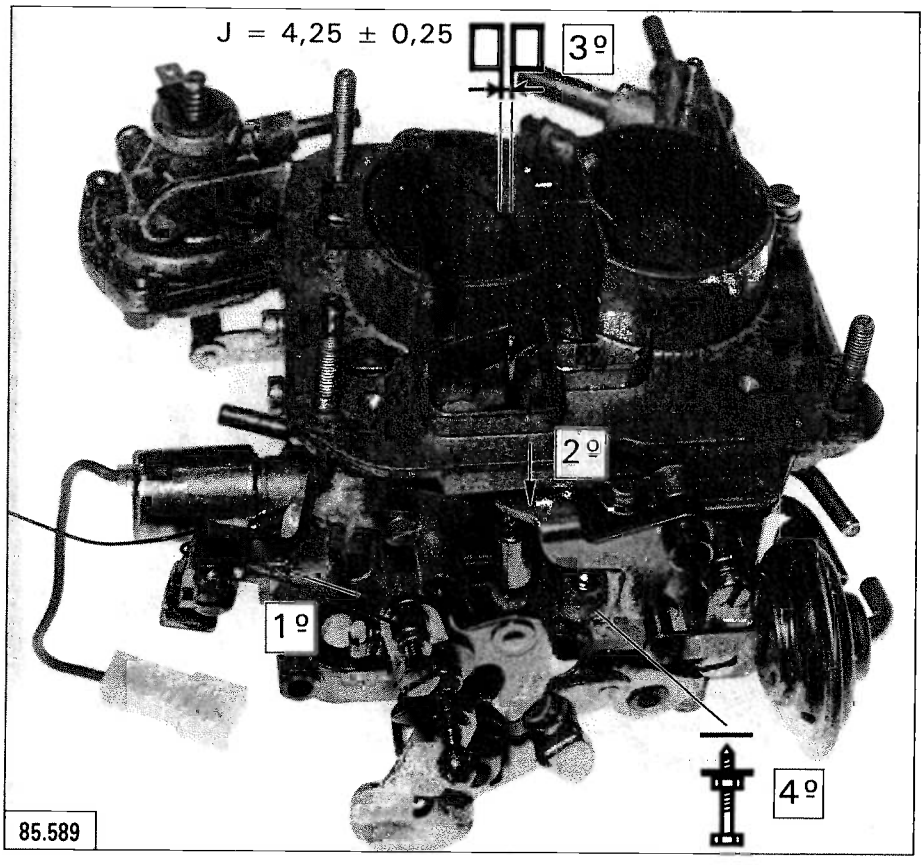

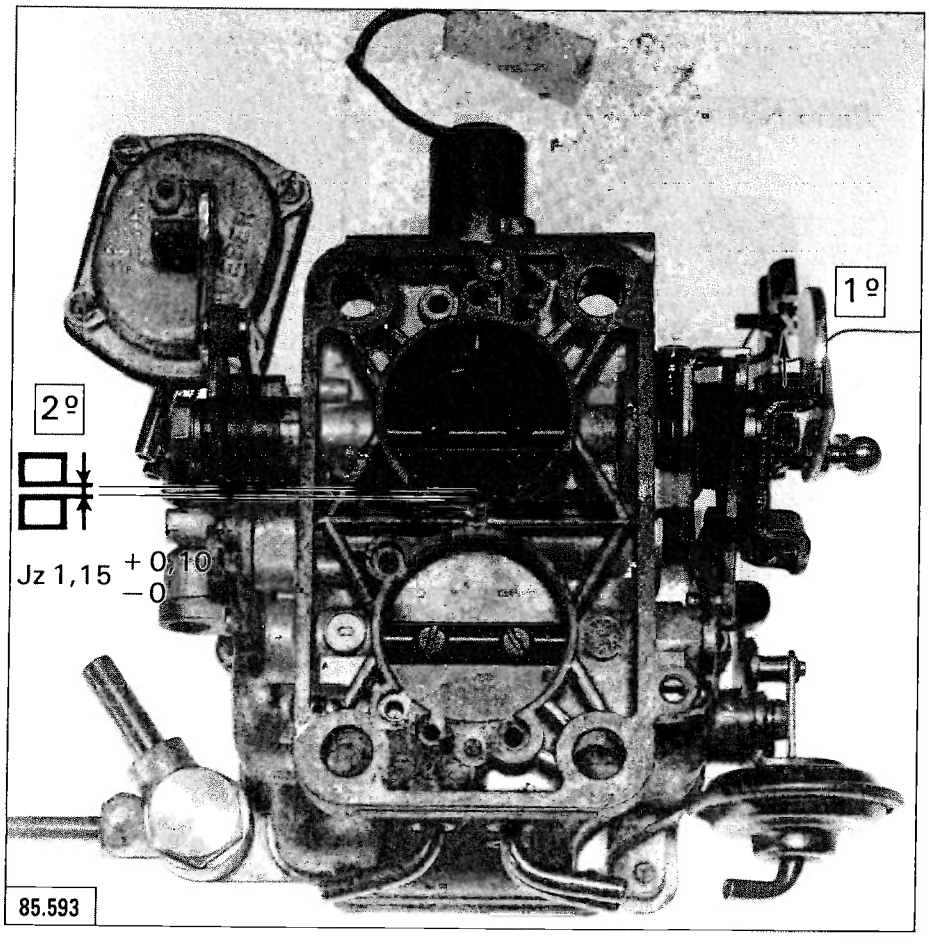

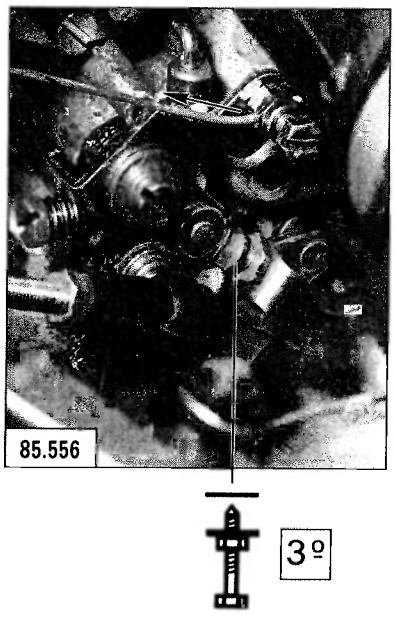

82°C

1 º

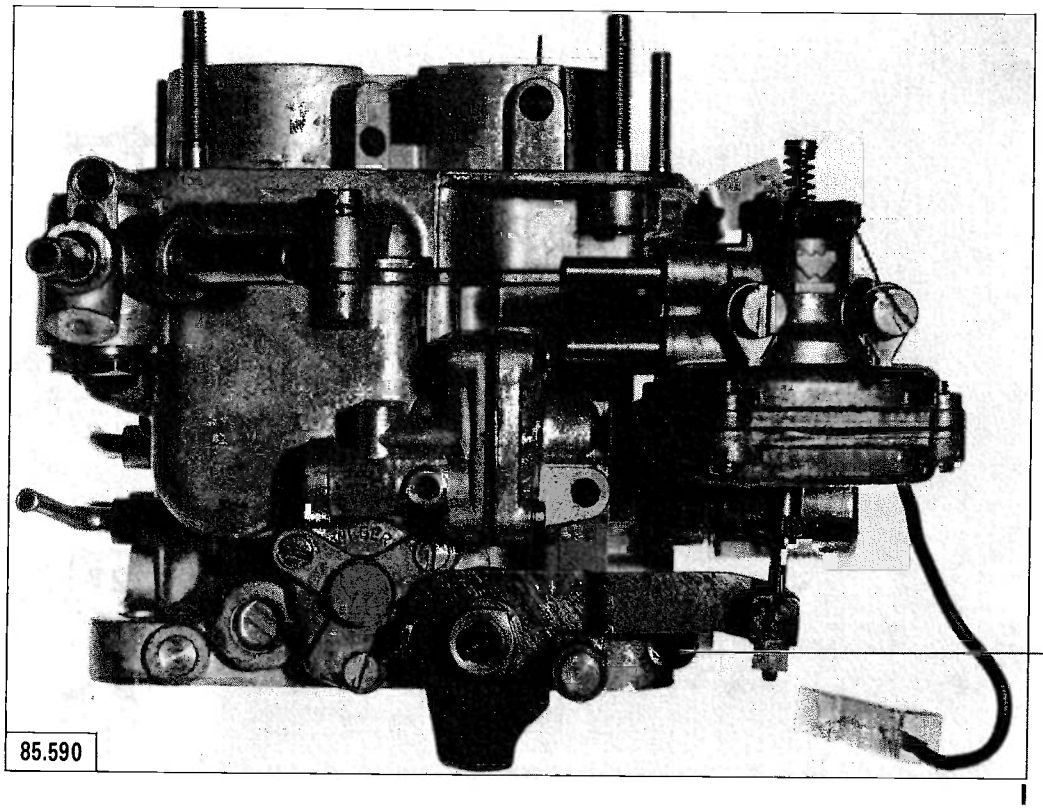

I

Co > 0,8
< 1,5

Co_2 > 9

2 º

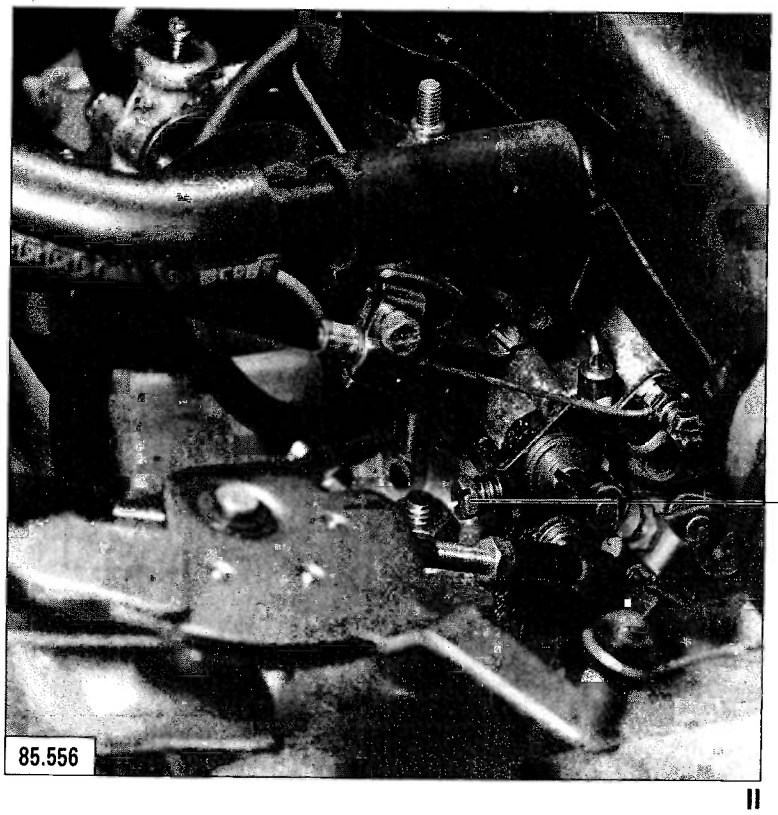

II

tr/min 800 ± 50


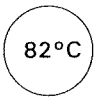


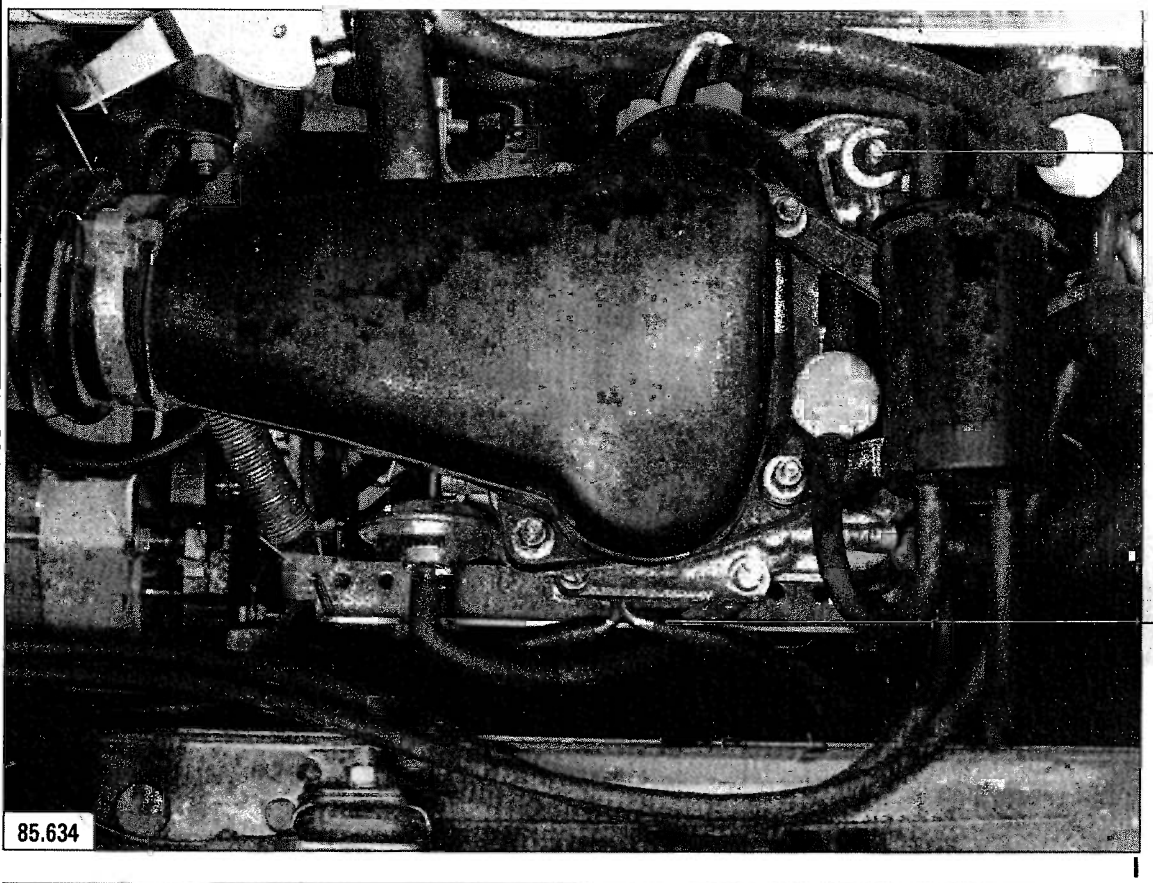

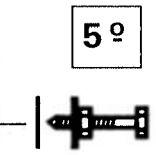

1400 $^{+100}_{-0}$

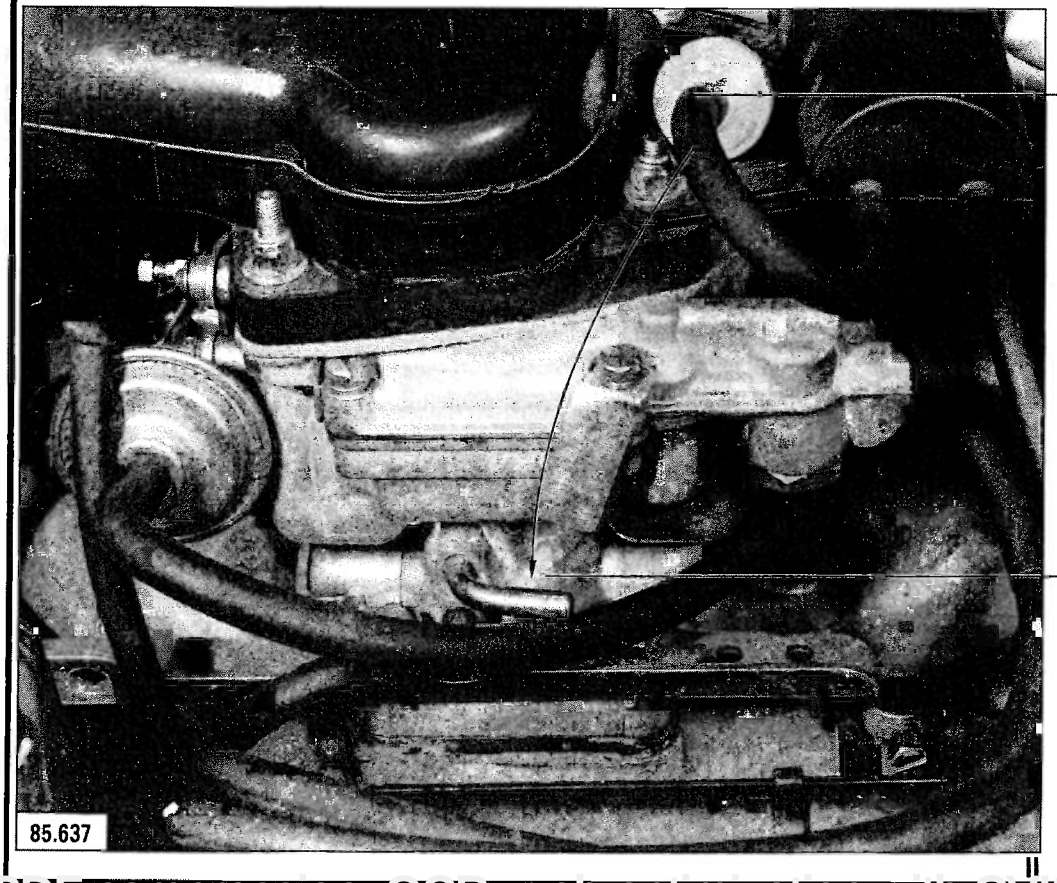

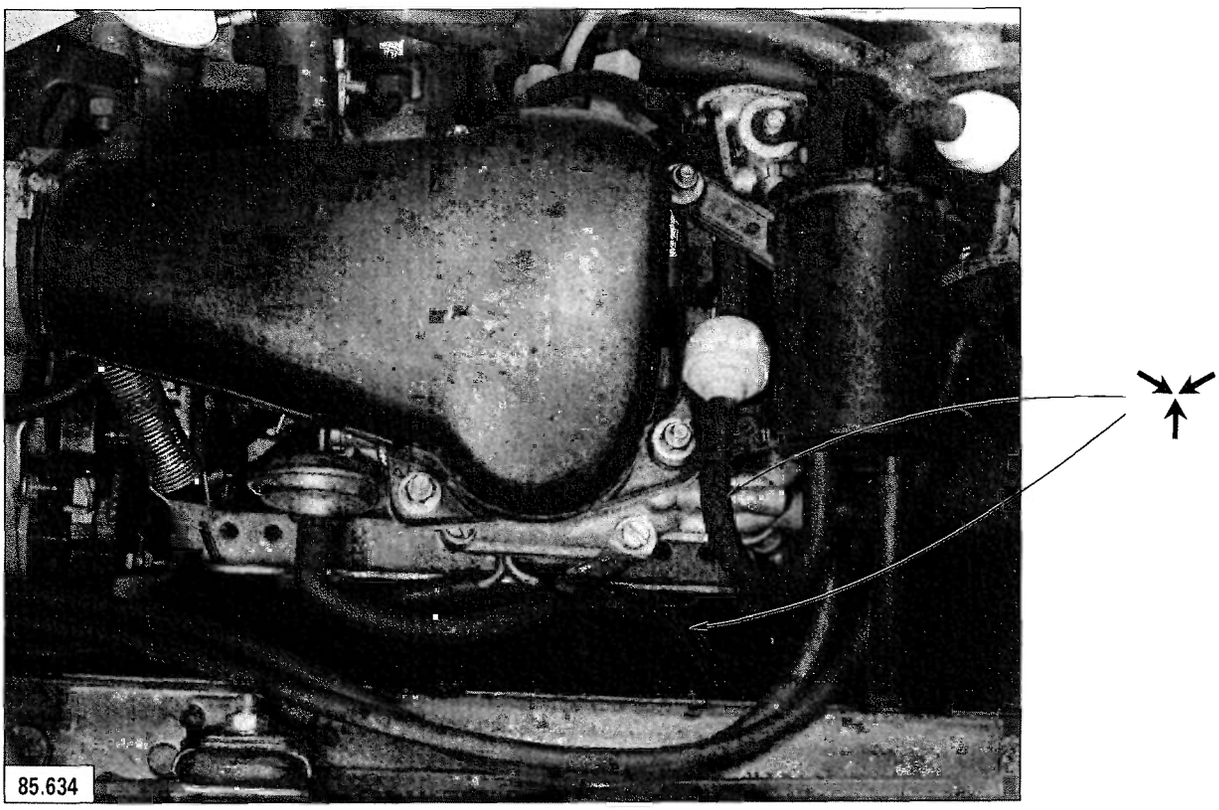

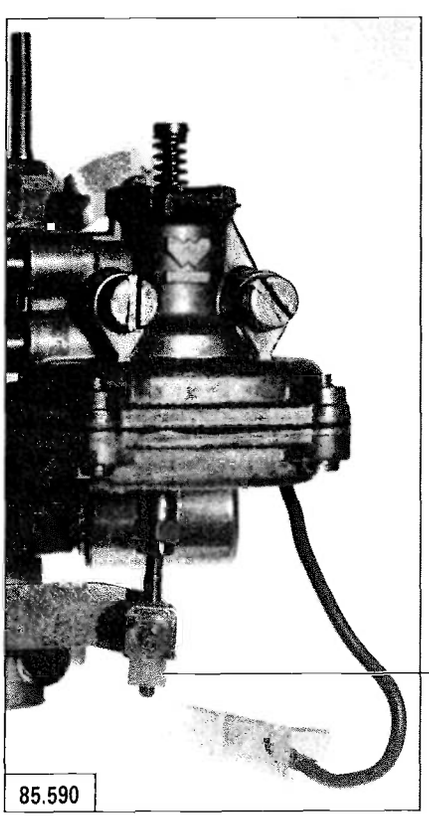

tr/min.

$850 \begin{smallmatrix} +50 \\ -0 \end{smallmatrix}$

SPECIFICATION AND PARTICULAR FEATURES OF THE ANTI-POLLUTION SYSTEM

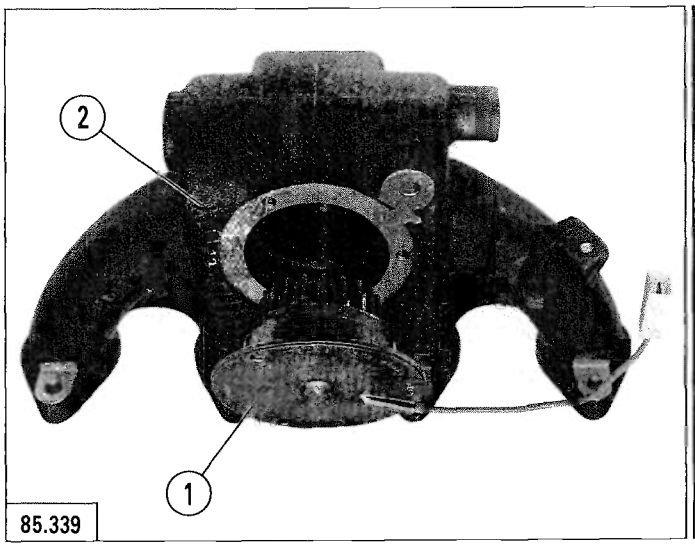

I

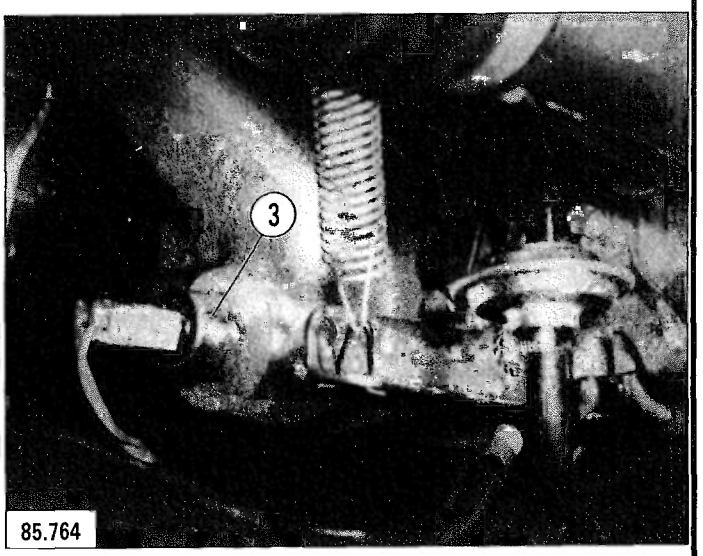

II

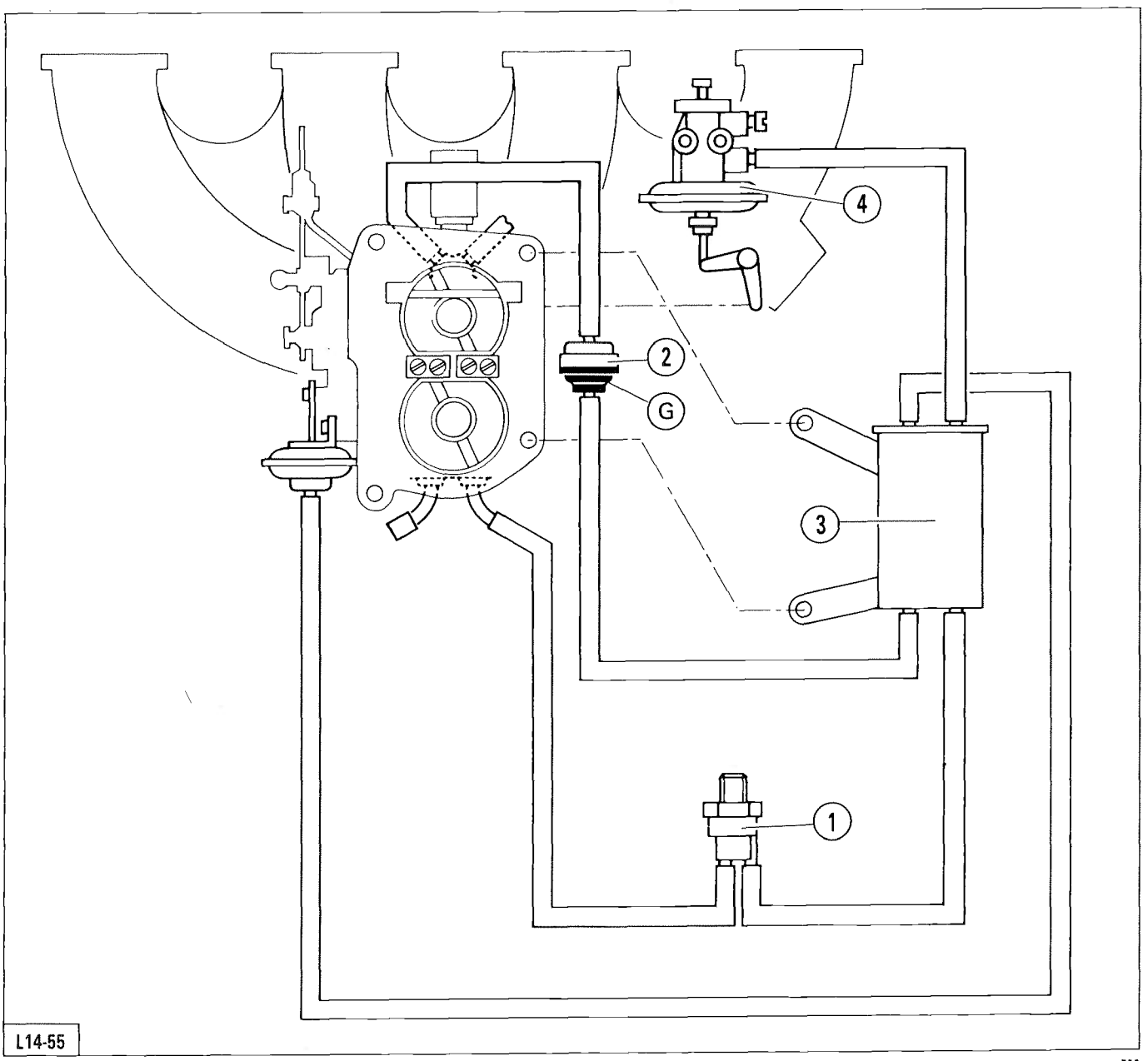

III

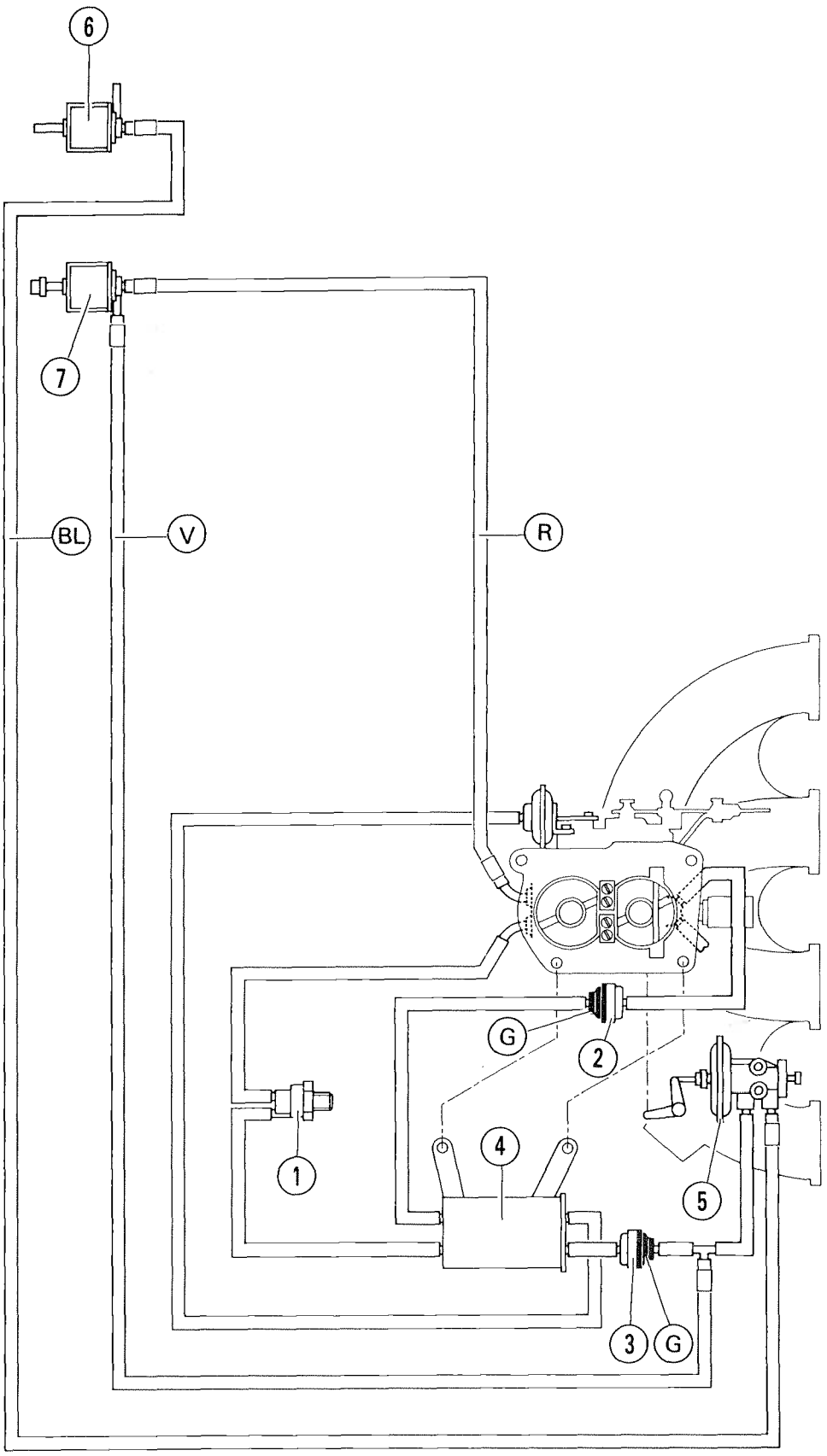

IV

''LE Jetronic''

System

"LE Jetronic" system

The **"LE Jetronic"** is a fuel injection system which injects intermittently petrol, at low pressure, into the inlet manifold.

The main characteristic of the device is to meter directly the air drawn in by the engine, which is the only reference for the fuel quantity to be injected. The fuel metering is carried out by electro-magnetically triggered injectors. These are under a constant fuel pressure.

The quantity of fuel injected depends on how long the injectors remain open. The duration of opening is optimally determined for each engine operating phase by an electronic control unit, from data supplied by various electric sensors.

The "LE Jetronic" device is composed of:

No.	COMPONENTS	MADE BY	REFERENCE
142	Electronic Control Unit (E.C.U.)	BOSCH	0280 000 300
192	Throttle spindle switch	«	0280 120 301
280	Supplementary air control	«	0280 140 172
302	Flow meter	»	0280 202 021
345	Electrovalve	»	0280 141 011
576	Injector	»	0280 150 254
683	Electrical fuel pump	»	0580 464 008
731	Relay	»	0280 230 009
841	Water temperature sensor	»	0280 130 026
F	Fuel filter	»	0450 905 002
R	Fuel pressure regulator	»	0280 160 216

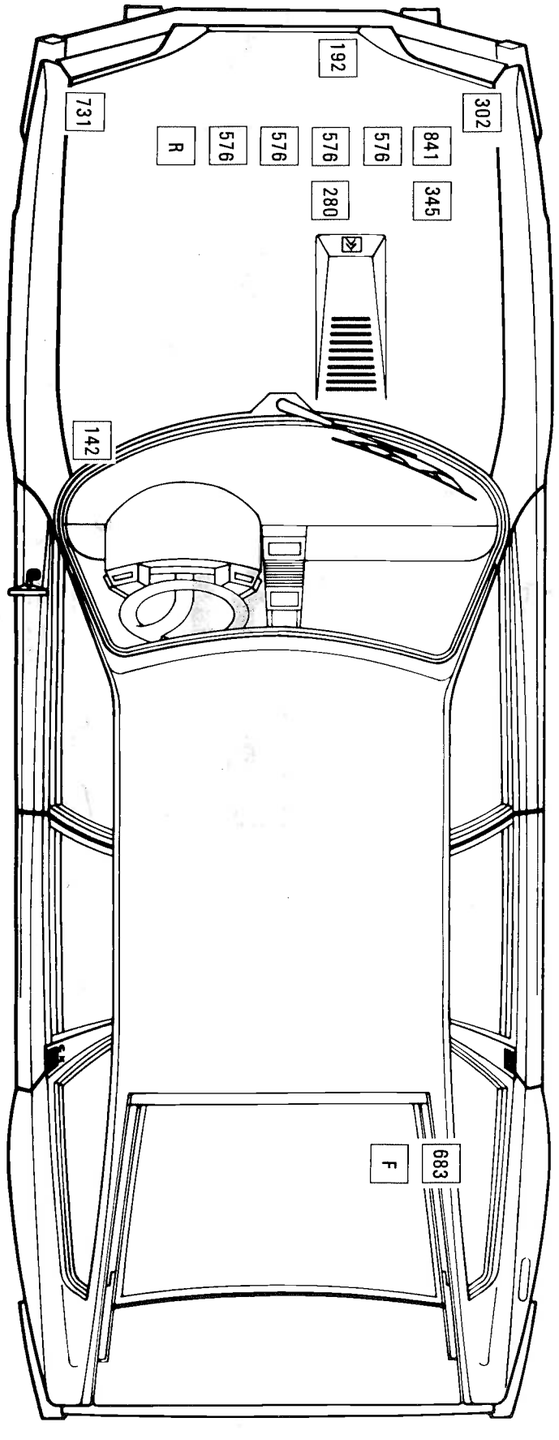

L 80.2

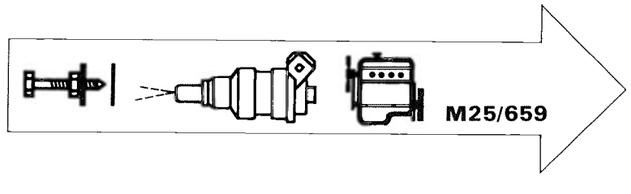

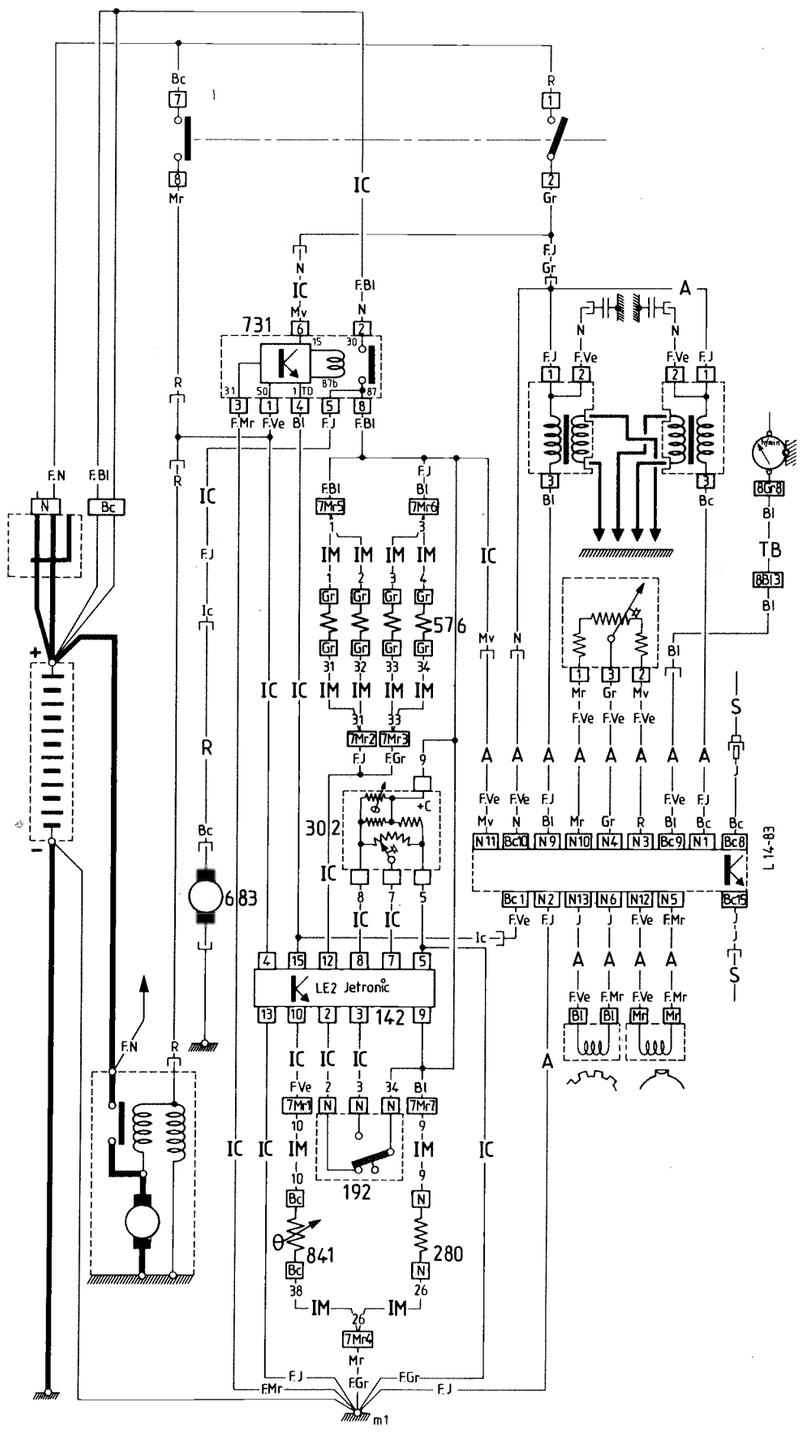

L14.83

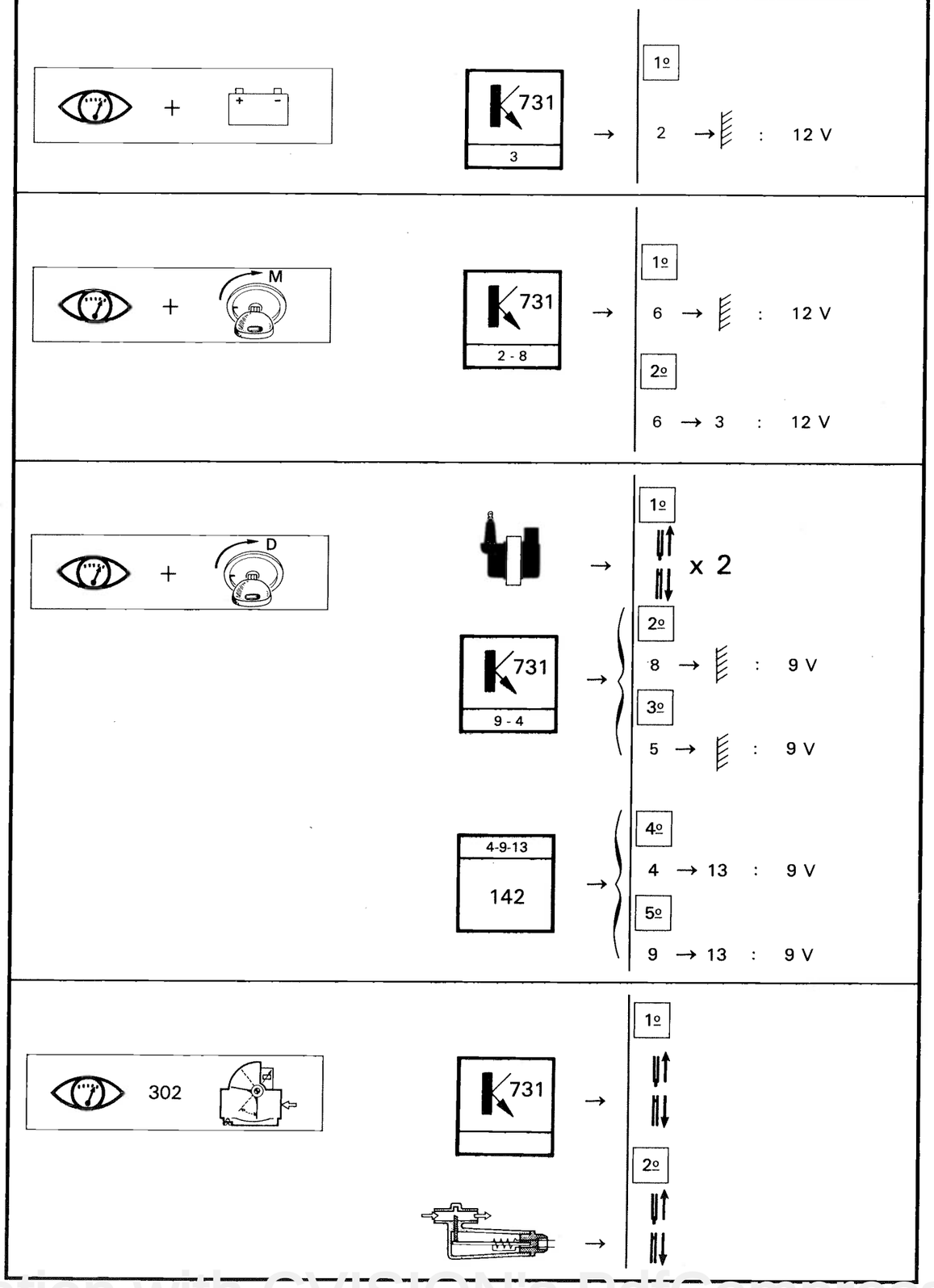

142 →

3º

4º

5 → 9 : 20°C → ≠ 3000Ω

5º

9 → 8 : 20°C ≠ 200 Ω

302

6º

8 → 7 : 20°C 100 Ω (1000 Ω)

→ 302

576

5 - 12

142 →

1º

2º

5 → 12 : 4 → 5 Ω

3º

→ 576

1 → 2 ≠ 16 Ω

192

2 - 3 - 9

142 →

1º

2º

2 → 9 : 0 Ω

3º

2 → 9 : ∞

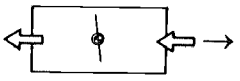

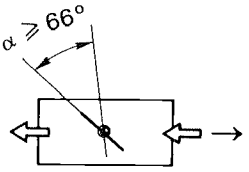

4º

9 → 3 : ∞

5º

9 → 3 : 0 Ω

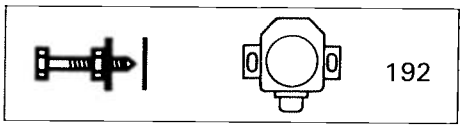

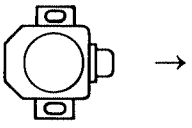

1º

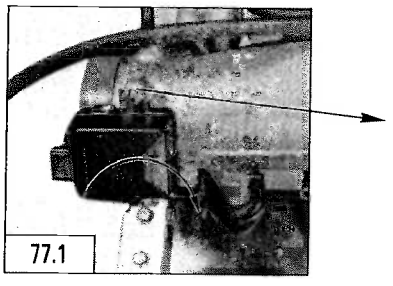

2º

X 2

3º

192

4º

192

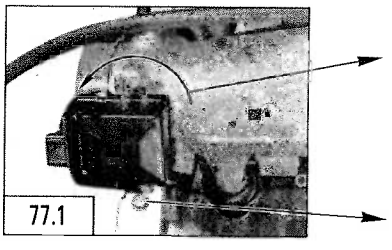

9 → 2 = 0 Ω

5º

x 2

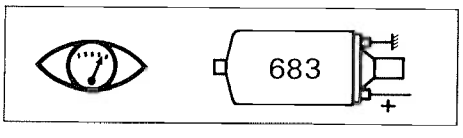

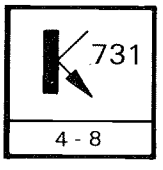

1º

5 → 3 : ≠ 1 Ω

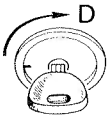

2º

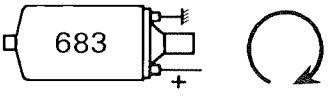

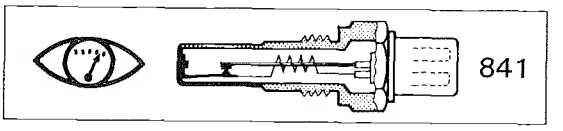

5 - 10

142 →

1º

2º

5 → 10

0°C : 5000 Ω
20°C : 2500 Ω
80°C : 300 Ω

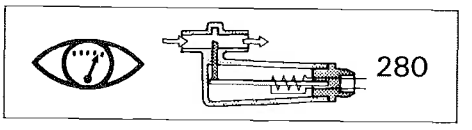

731 →

1º

5-9-13

142 →

2º

3º

9 → 5 ≠ 50 Ω

9 → 13 ≠ 50 Ω

4º

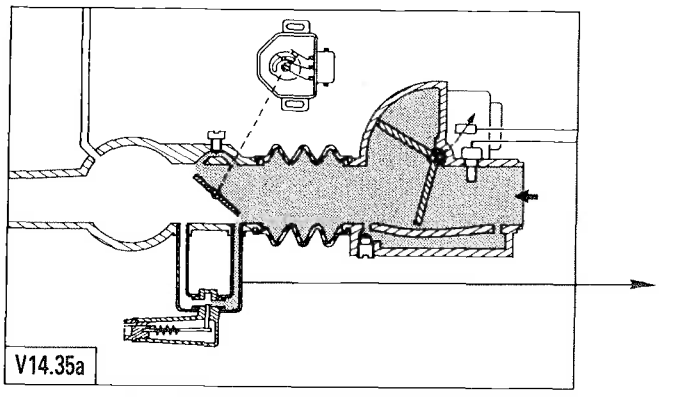

5º

→ min ↘

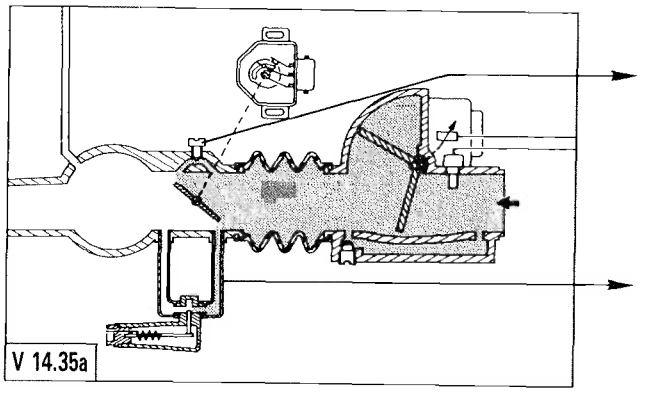

6º

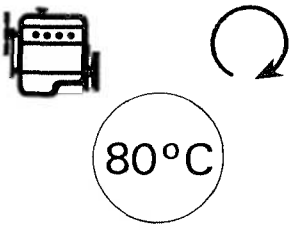

7º

8º

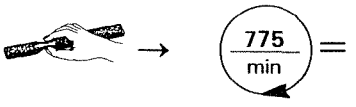

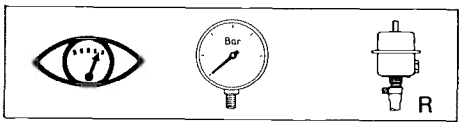

↑

4073-T

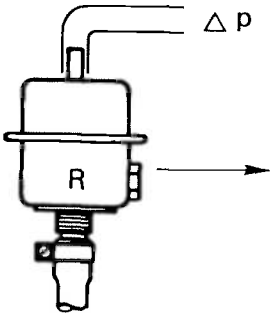

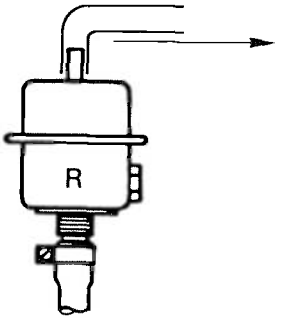

1º

2º

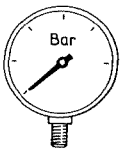

: 2 bars

3º

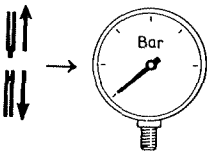

: 2,5 bars

1º

80°C

2º

750 +50 / min

1000 +50 / min

3º

0,5 → 1,3% Co

> 10% Co_2

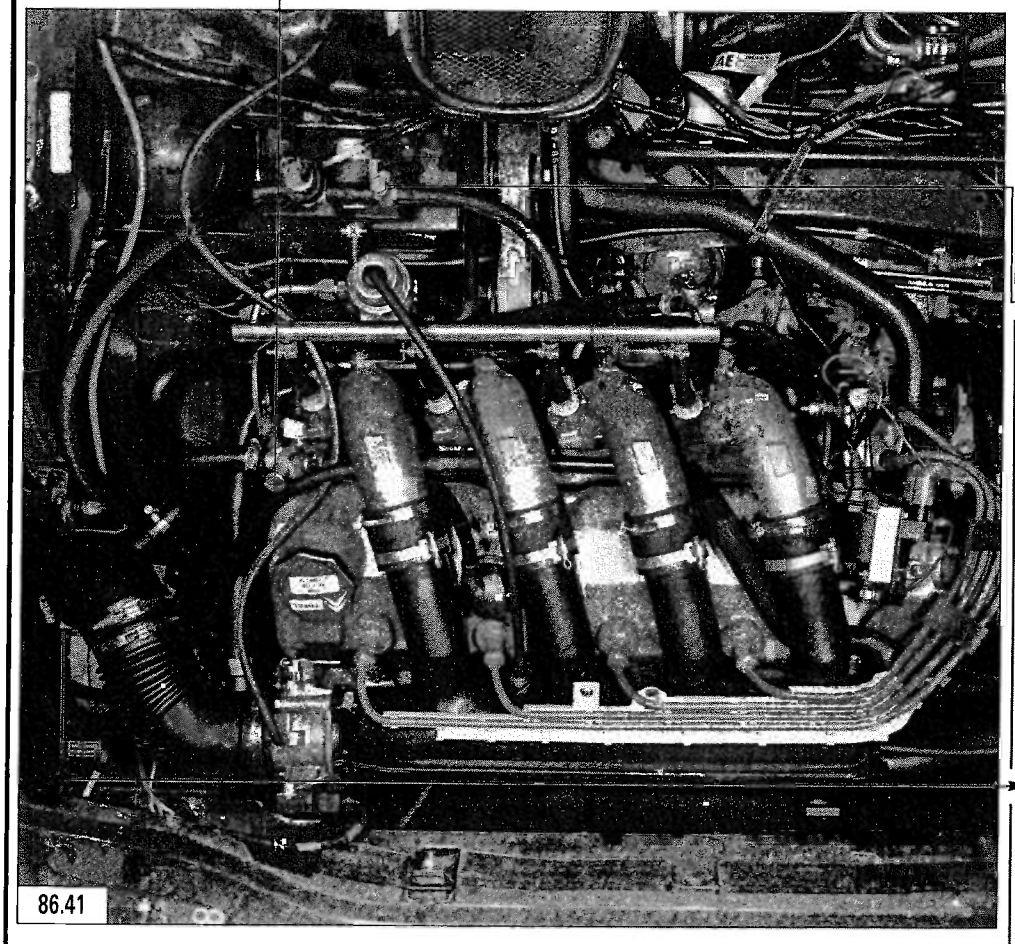

A

700 +50 / min

''LE Jetronic''

System

''LE Jetronic'' system

The **''LE Jetronic''** is a fuel injection system which injects intermittently petrol, at low pressure, into the inlet manifold.

The main characteristic of the device is to meter directly the air drawn in by the engine, which is the only reference for the fuel quantity to be injected. The fuel metering is carried out by electro-magnetically triggered injectors. These are under a constant fuel pressure.

The quantity of fuel injected depends on how long the injectors remain open. The duration of opening is optimally determined for each engine operating phase by an electronic control unit, from data supplied by various electric sensors.

The ''LE Jetronic'' device is composed of:

No.	COMPONENTS	MADE BY	REFERENCE
142	Electronic Control Unit (E.C.U.)	BOSCH	0280 000 224
192	Throttle spindle switch	«	0280 120 313
280	Supplementary air control	«	0280 140 178
302	Flow meter	»	0280 202 061
345	Electrovalve	»	0280 141 011
575	Cold start injector	»	0280 170 409
576	Injector	»	0280 150 200
683	Electrical fuel pump	»	0580 464 008
731	Relay	»	0280 230 009
841	Coolant temperature sensor	»	0280 130 026
870	Slow thermal switch	»	0280 130 214
F	Fuel filter	»	0450 905 002
R	Pressure regulator	»	0280 160 216

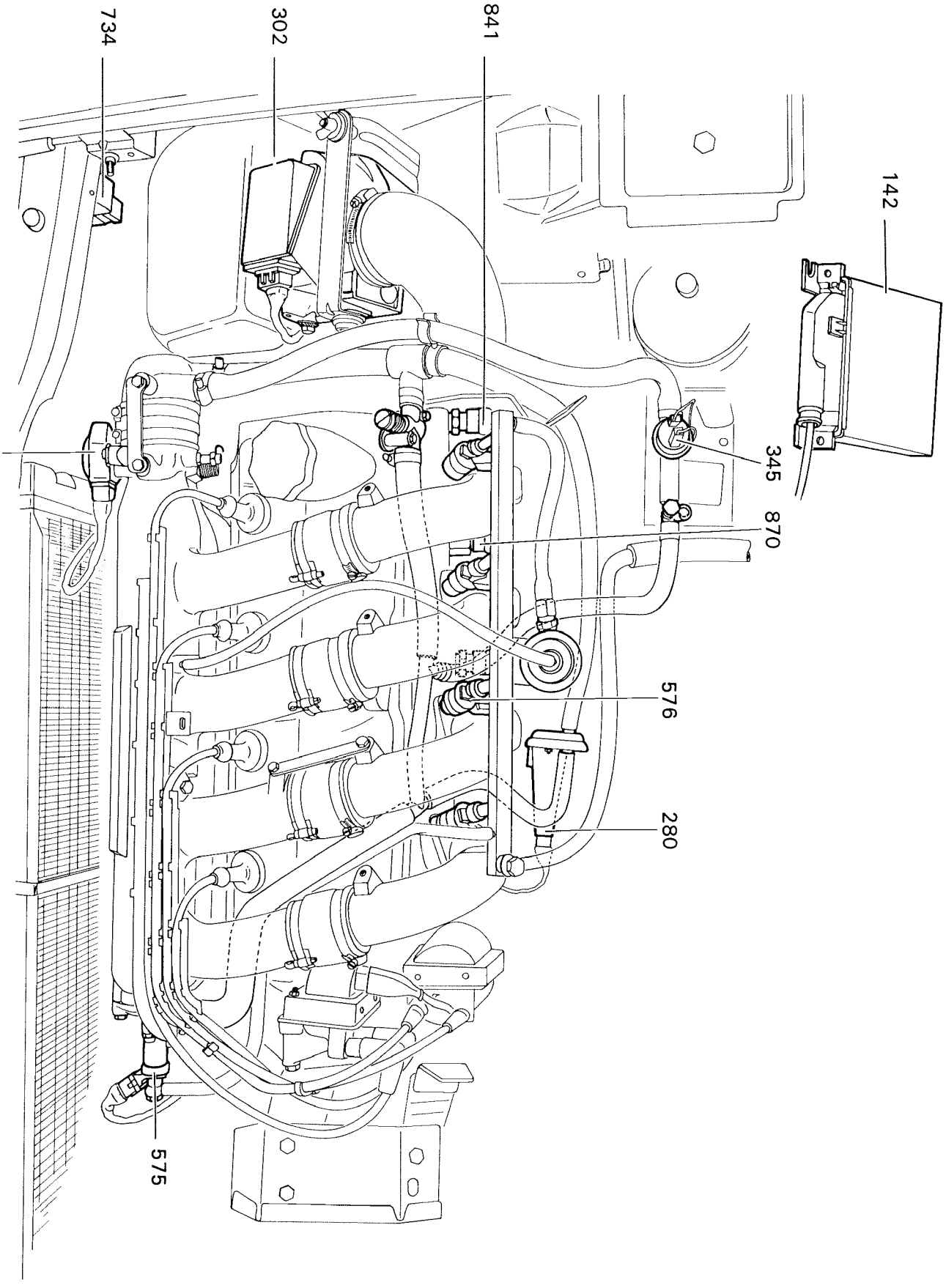

L 14.64

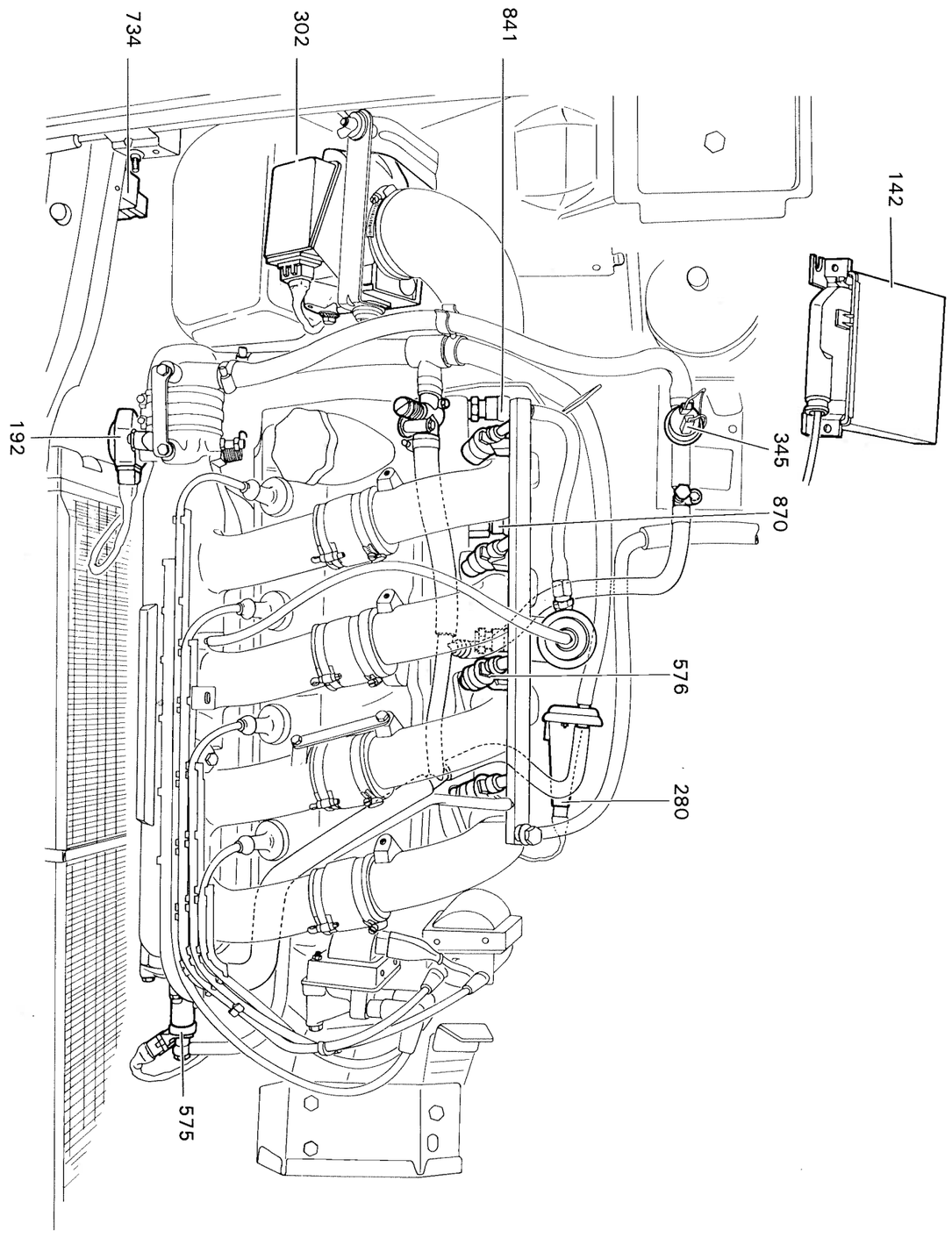

L 14.64

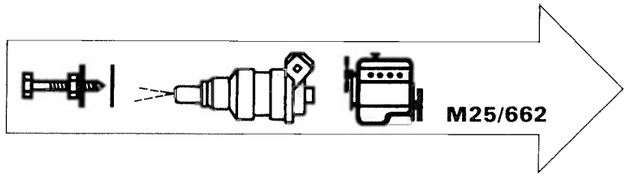

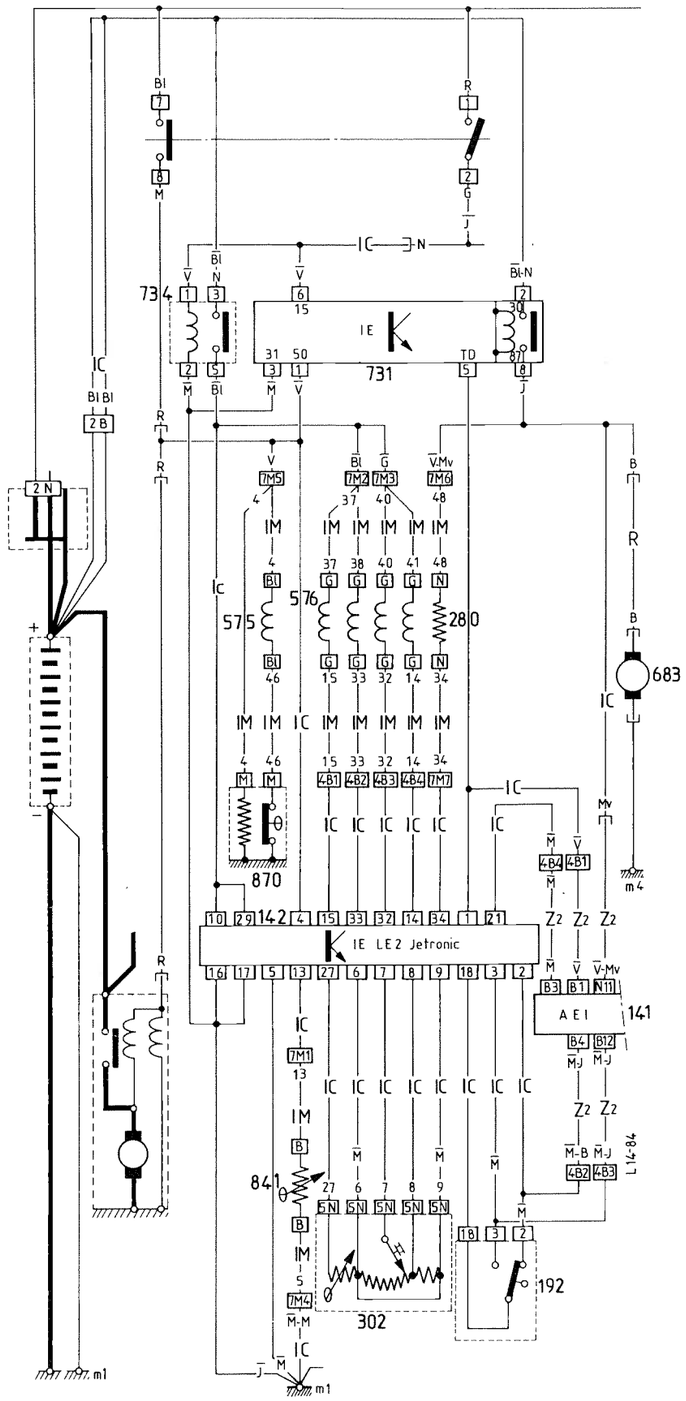

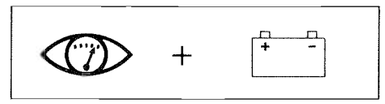

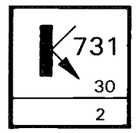

1º
30 → 2 → : 12 V

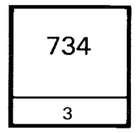

2º
3 → : 12 V

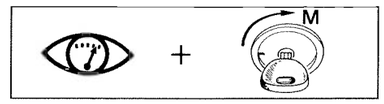

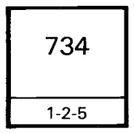

1º
1 → 2 : 12 V

2º
5 → : 12 V

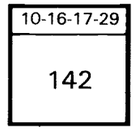

3º
10 → 29 → : 12 V

4º
10 → 16
10 → 17 : 12 V

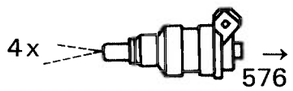

5º
1 → 2 → : 12 V

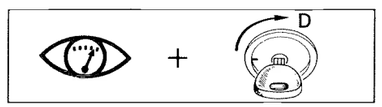

1º

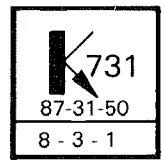

→

2º

1 → ⊥ : 9 V
8 → 3

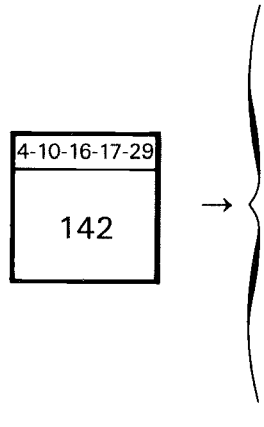

→

3º

4 → ⊥
10 → ⊥ : 9 V
29 → ⊥

4º

10 → 5
10 → 16 : 9 V
10 → 17

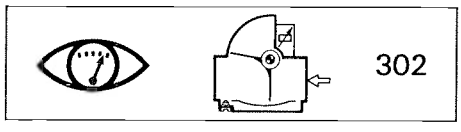

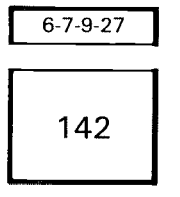

→

1º

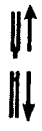

2º

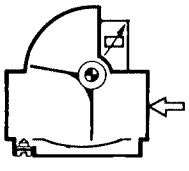

→ 27 → 9 20°C ≠ 2800 Ω

3º

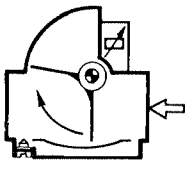

→ 7 → 9 20°C ≠ 500 Ω ↗ 1000Ω ↘

4º

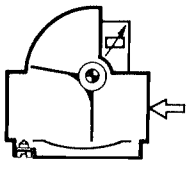

→ 6 → 27 20°C ≠ 200 Ω

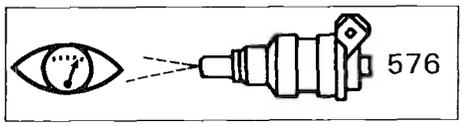

10-14-15-32-33

142 →

1º

2º

10 → 14, 15, 32, 33 : 4 à 5 Ω

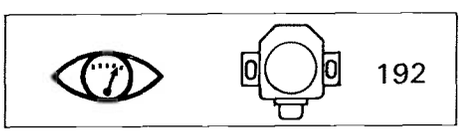

2-3-18

142 →

1º

2º

→ 2 → 18 : 0 Ω

3º

→ 2 → 18 : ∞

4º

→ 3 → 18 : ∞

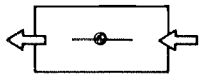

5º

→ 3 → 18 : 0 Ω

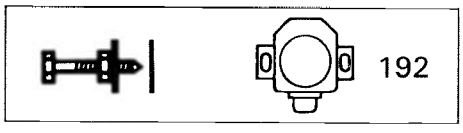

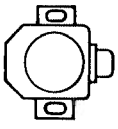

→

1º

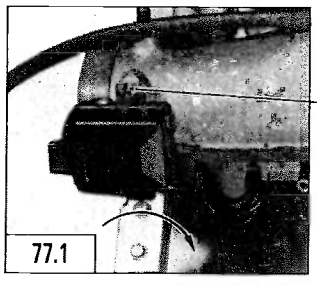

2º

x 2

3º

192

4º

→ 2 → 18 : 0 Ω

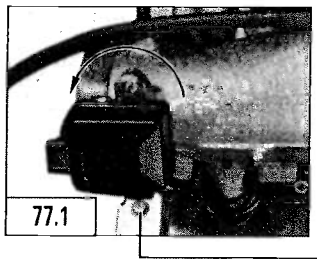

5º

x 2

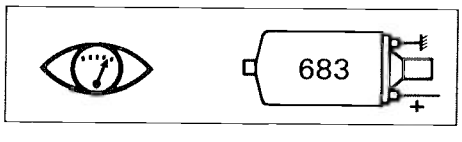

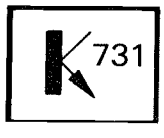

3 - 8

→

1º

2º

8 → 3 ≠ 1 Ω

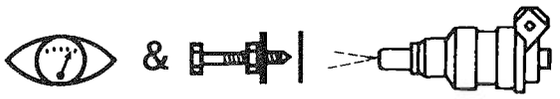

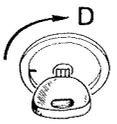

3º

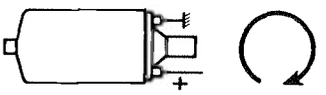

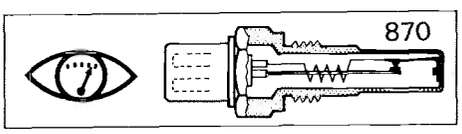

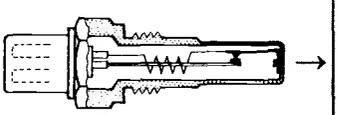

1º

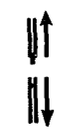

2º

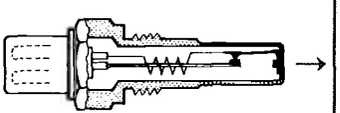

> 30°C

1 → 2 : 0 Ω

3º

< 20°C

1 → 2 : 30 Ω ≠

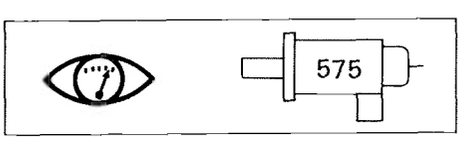

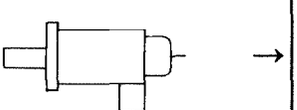

1º

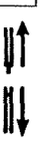

2º

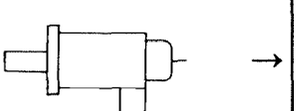

1 → 2 : 4,2 Ω 20°C

3º

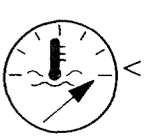

< 20°C

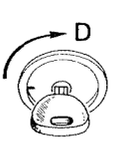

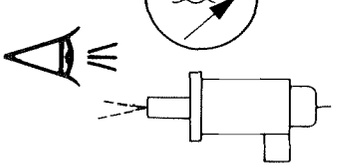

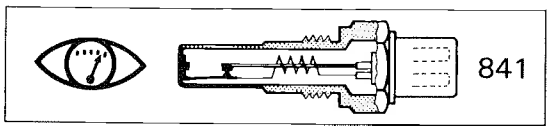

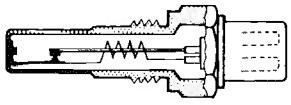

1º

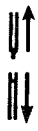

2º

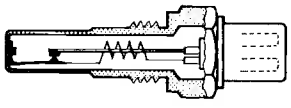

1 → 2

0°C : 5000 Ω
20°C : 2500 Ω
80°C : 300 Ω

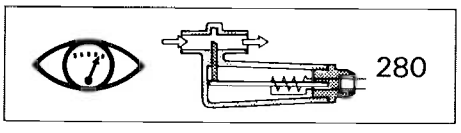

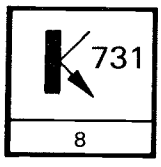

1º

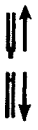

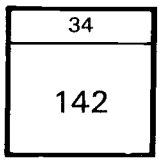

2º

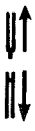

3º

8 → 34 ≠ 50 Ω

4º

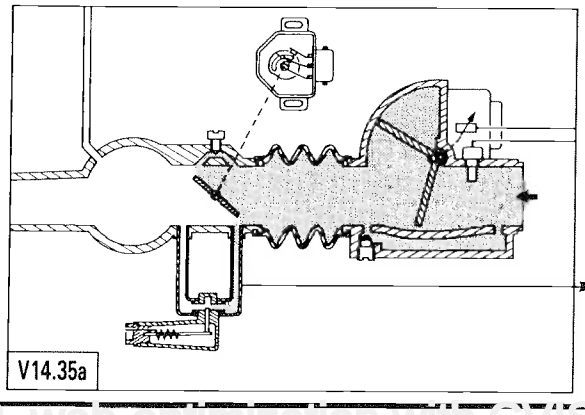

5º

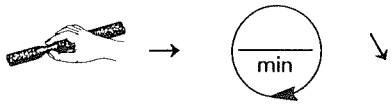

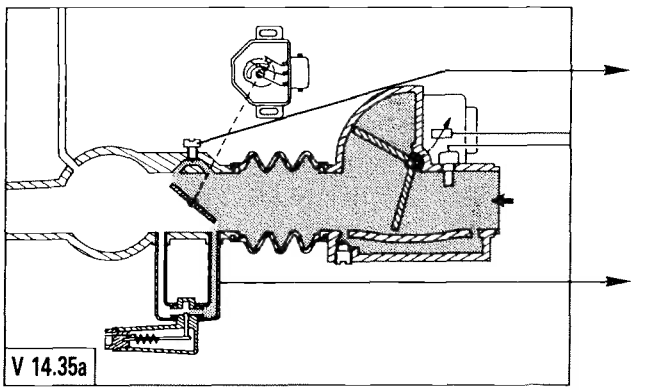

6º

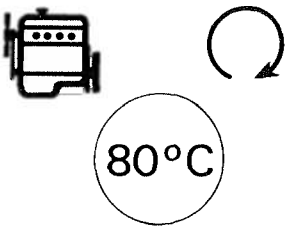

7º

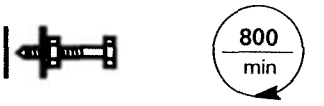

8º

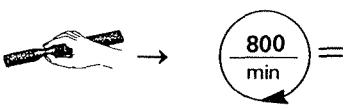

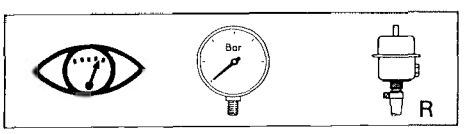

↑

4073-T

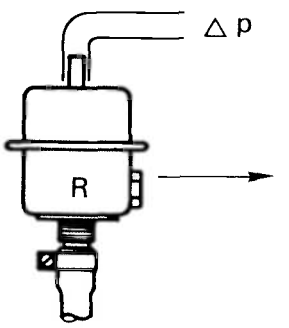

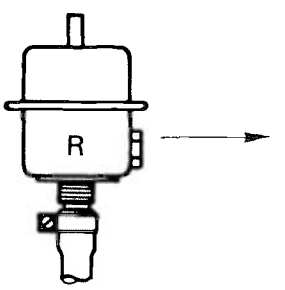

1º

2º

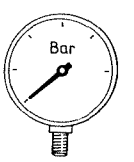

2 bars

3º

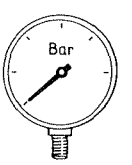

2,5 bar

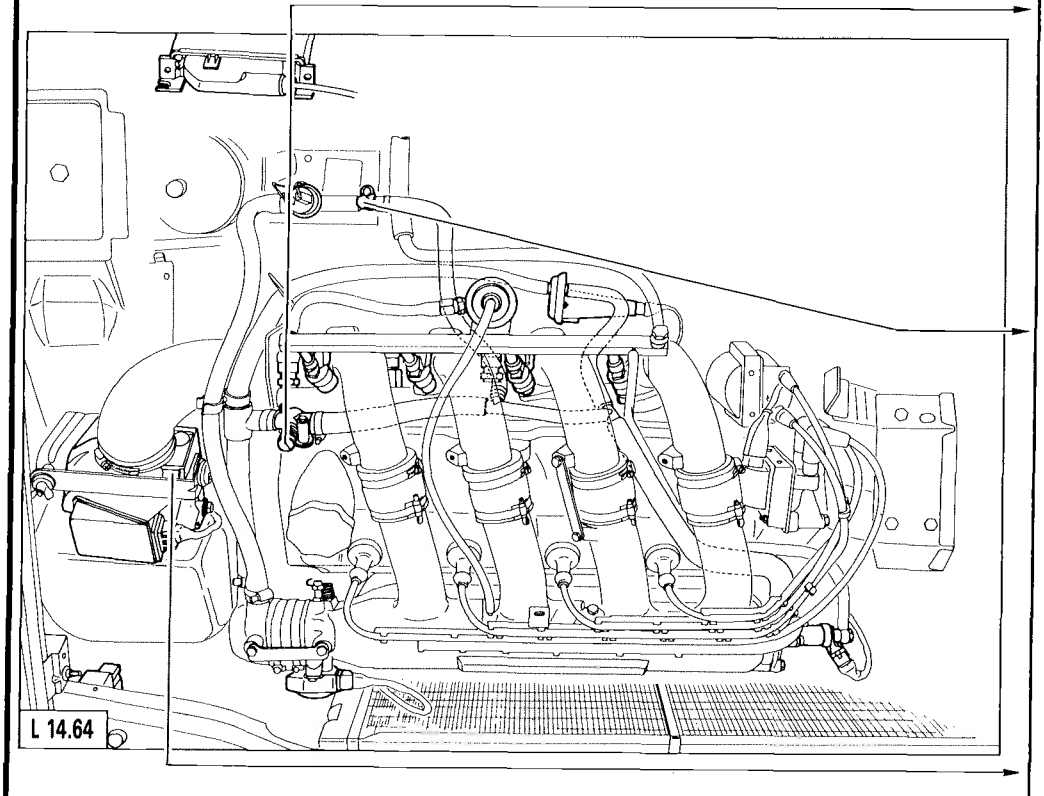

1º

80°C

2º

750 +50 / min

4º

1000 +50 / min

3º

0,8 → 1,2% Co

> 10% Co_2

*

CVISION TECHNOLOGIES

SPECIFICATION AND PARTICULAR FEATURES
OF THE DIESEL FUEL INJECTION SYSTEM

* **CX** ① No. 48

M25/660 →2/87	M25/660 *2/87→		M25/648	M25/669 (2/87)
ROTO-DIESEL DPA MA 300	DPC MA 260 8443 A 1114	①	ROTO-DIESEL DPC MAS100	DPC MAS 200 R 8443 A 360 A or B 361 B
ROTO-DIESEL F SL AC		②	ROTO-DIESEL F SL AC	
CAV 7111/796		③	CAV 7111/796	
ROTO-DIESEL RKB 45 SD 5422		④	ROTO DIESEL RKB 45 SD 5422	
ROTO-DIESEL RDNOSDC 6577B		⑤	ROTO-DIESEL RDNOSDC 6751	ROTO-DIESEL RDNOSDC 6850 C
BERU 0100 221 106		⑥	BERU 0100 221 106	
BOSCH 0 250 200 059			BOSCH 0 250 200 059	

ROTO-DIESEL R53 56 501B	④ + ⑤	ROTO-DIESEL R 53 56 502	R 53 56 503 C
Orange paint	Ⓡ	White paint	Blue paint

	M 25/660	M 25/648	M 25/669
	By timing marks on cylinder block and flywheel		
STATIC SETTING →2/87 2/87→	4.32 ± 0.05 mm BTDC or 22° 4.71	3.24 ± 0.05 mm BTDC or 19°	3.58 ± 0.05 mm BTDC
DYNAMIC TIMING	Engine hot at a speed of 800 ± 25 rpm 10.30′ ± 1°	9° ± 1°	
IDLING SPEED	800 ± 25 rpm		
ANTI-STALL	DPA 800 ± 25 rpm DPC 800 ± 50 rpm	800 ± 50 rpm	
MAXIMUM NO LOAD SPEED	4625 ± 125 rpm	4550 ± 200 rpm	4400 ± 125 rpm

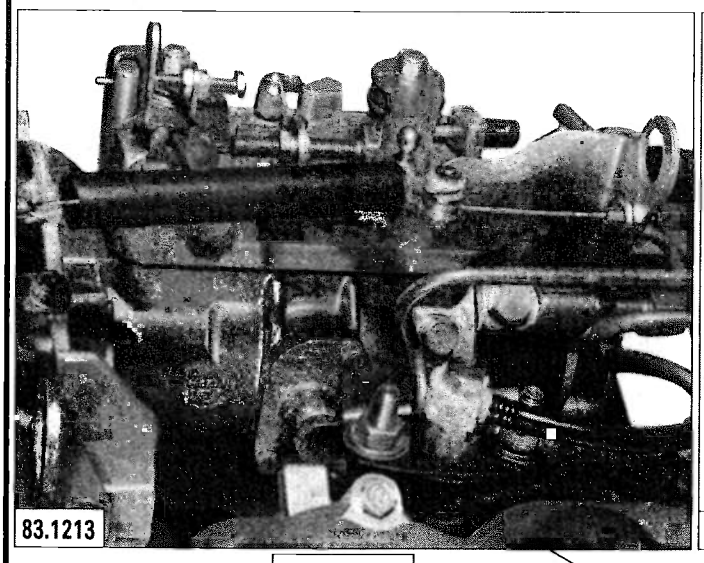

M25/660

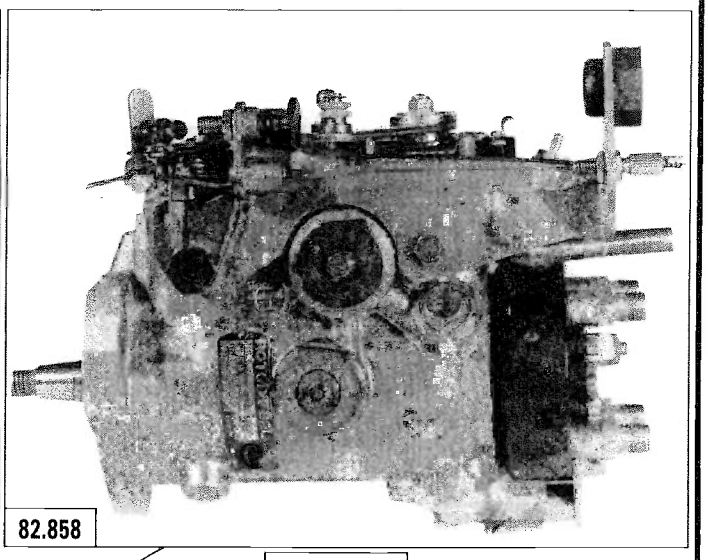

M25/648

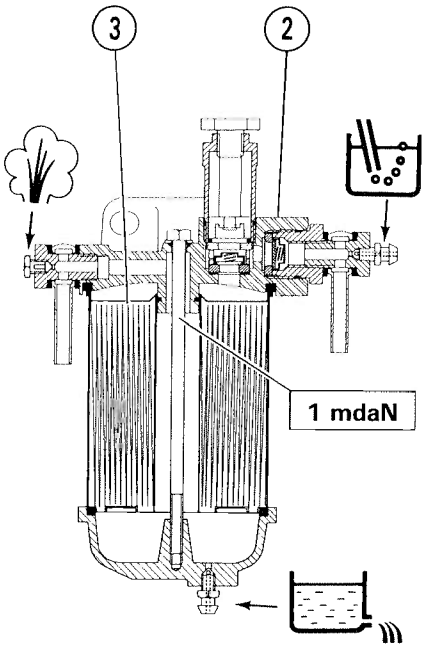

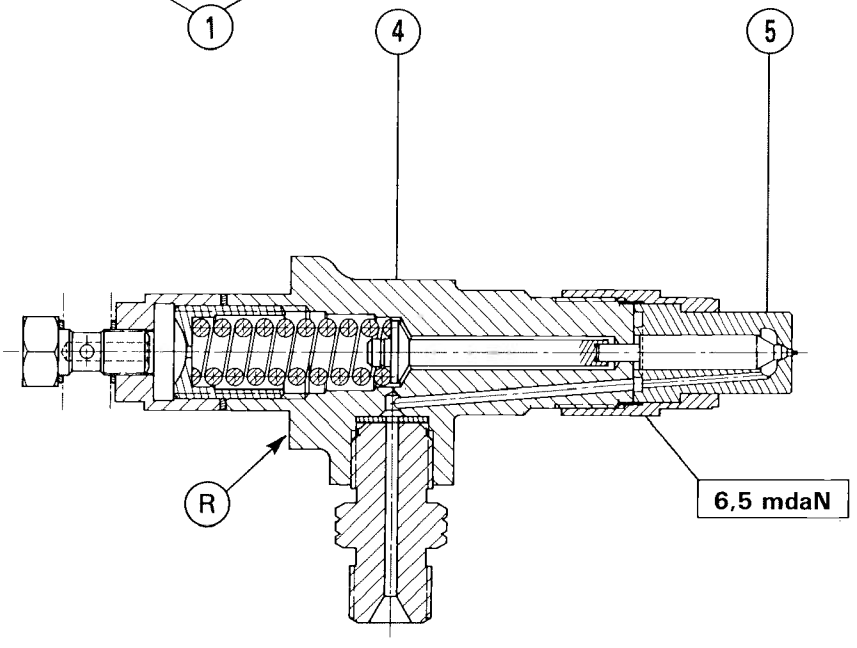

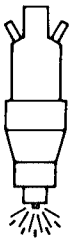

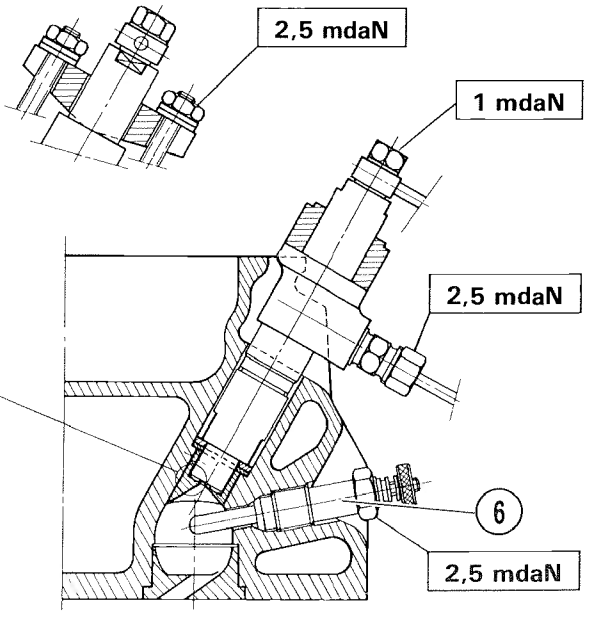

112 $^{+5}_{0}$ bars	M25/660	122 $^{+5}_{0}$ bars
127 $^{+5}_{0}$ bars	M25/648	137 $^{+5}_{0}$ bars

RECOMMENDED TOOLS

2437-T.	Dial-gauge.
3089-T.F.	Dial-gauge.
3089-T.H.	Feeler.
4026-T-bis.	Injector test bench.
4059-T.	Right angled lever for dial-gauge.
5008-T.C.	Dial-gauge mounting fixing screw.
6027-T.	Set of 3 tools.
6030-T.	Dial-gauge mounting.

CHECKING AND ADJUSTING THE FUEL INJECTION SYSTEM

I. - ADJUSTING THE INJECTOR SETTING PRESSURE

Test fluid:

- Deodorized petroleum or Kerdanne or Dilutine.
- Viscosity: 1 to 2.5 centistoks at 20°C.
- Density: 0.770 to 0.810 at 20°C.

Precautions to be taken:

- As the flash point of paraffin is low, it is essential to ensure that all safety precautions are taken before the test.
- Keep your hands away from the spray (use a transparent protective screen).
  The penetrating strength of these sprays is such that they could create serious injuries and cause blood poisoning.

Checking the setting pressure:

Actuate the pump lever slowly; record the pressure value measured by the manometer on opening the injector (calibration pressure). Write the value down.

The pressure setting is carried out using screw (2). **Fig. I.**

Injector setting pressure adjustment screw (2) is to be screwed in or out on the test bench **4026-T. bis** only. The fuel pump lever must be operated continually to keep the needle and its seat lubricated and cleaned.

DISMANTLING

To open an injector-carrier, place it in a vice equipped with lead vice grips.

Never tighten an injector-carrier alone in vice.

Keep the equipment clean.
The parts should be lubricated before assembly.

- In the injector-carrier body (3), place:

- injector (4) and its nut (5),
  Tighten to 6.5 mdaN
- push-rod (6),
- spring (7),
- adjustment screw (2).

- Adjust the pressure:

	M 25/660	M 25/648	M 25/669
Pressure setting	112 $^{+5}_{0}$ bars	127 $^{+5}_{0}$ bars	
Injector	RDNOSD 6577 B	RDNOSD 6751	RDNOSD 68-50 C
Injector carrier	RKB45SD 5422	RKB45SD 5422	RKB45SD 5422
Paint mark	orange	white	blue

- Fit seal (8) and cap nut (1).
Tighten to 2 mdaN

Checking the spray:

If the pump lever is actuated with a brisk sharp action, the injector should produce a very fine and homogeneous spray.

Checking the needle seat for leaks:

Test should be carried out with the injector in a vertical position.

Wipe the end of the injector until dry.

By actuating the pump lever, **maintain a pressure 10 bars below the setting pressure.**
The injector should not drip **within 30 seconds**.

Moistening should not be regarded as a reason for rejection.

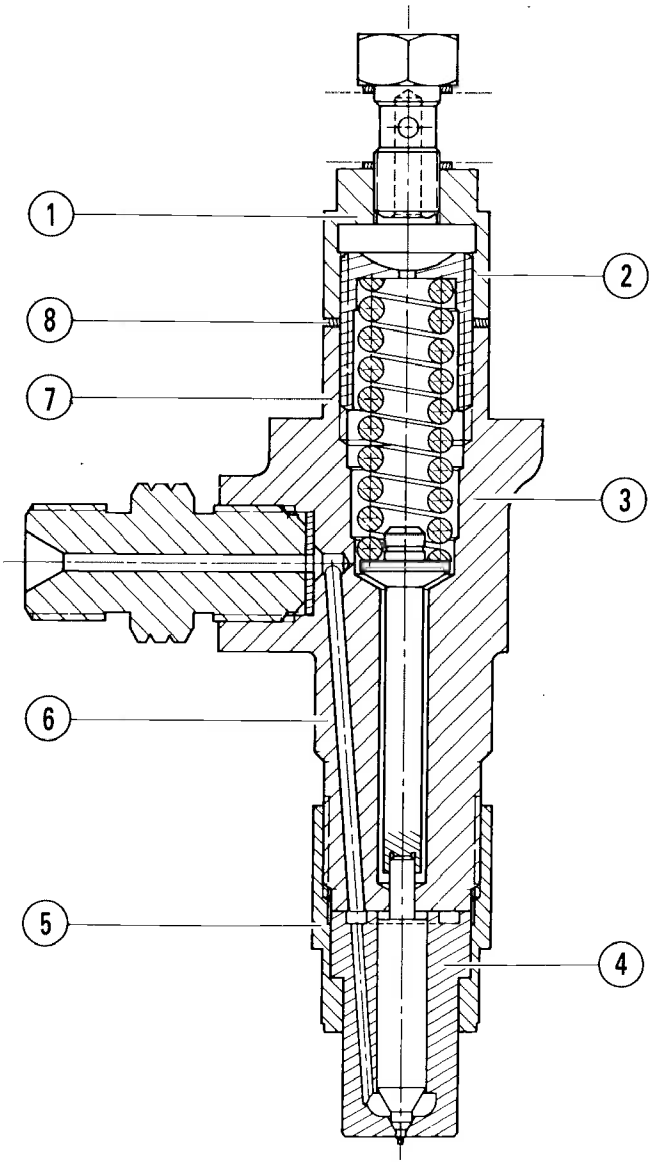

L 14.2

I

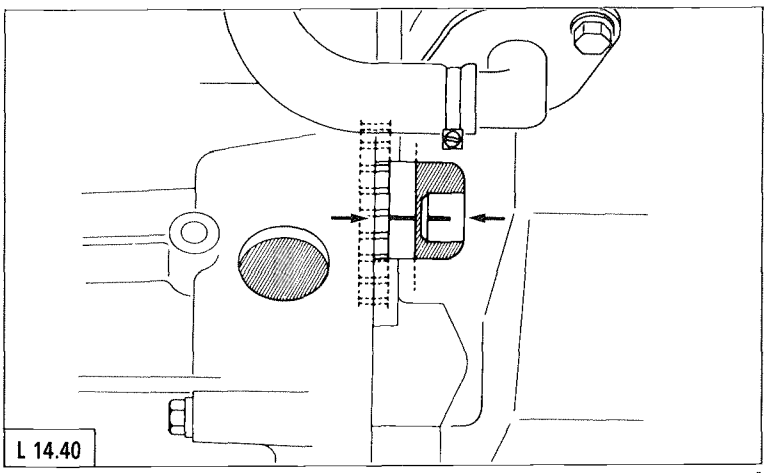

I

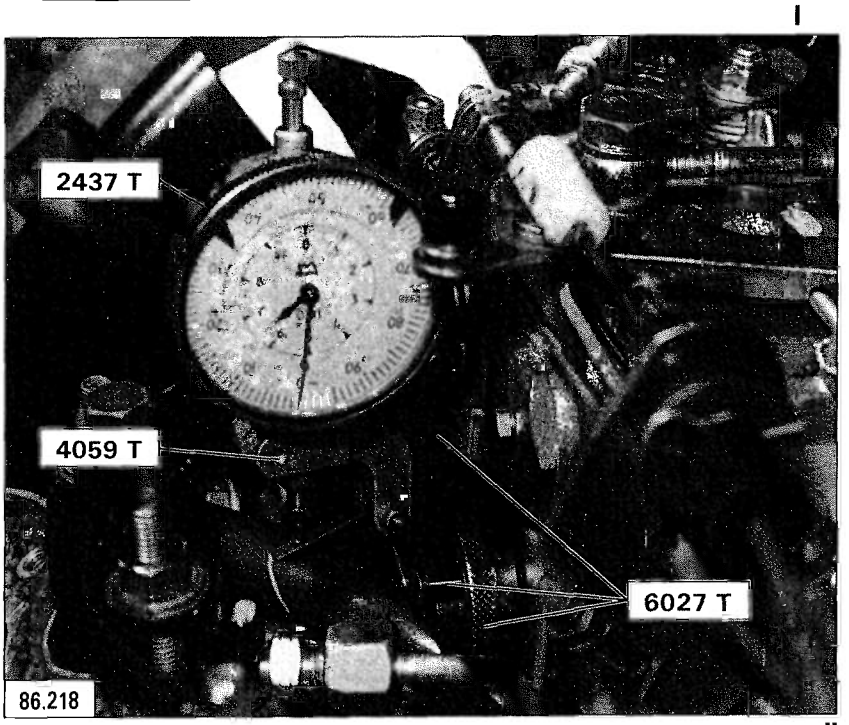

II

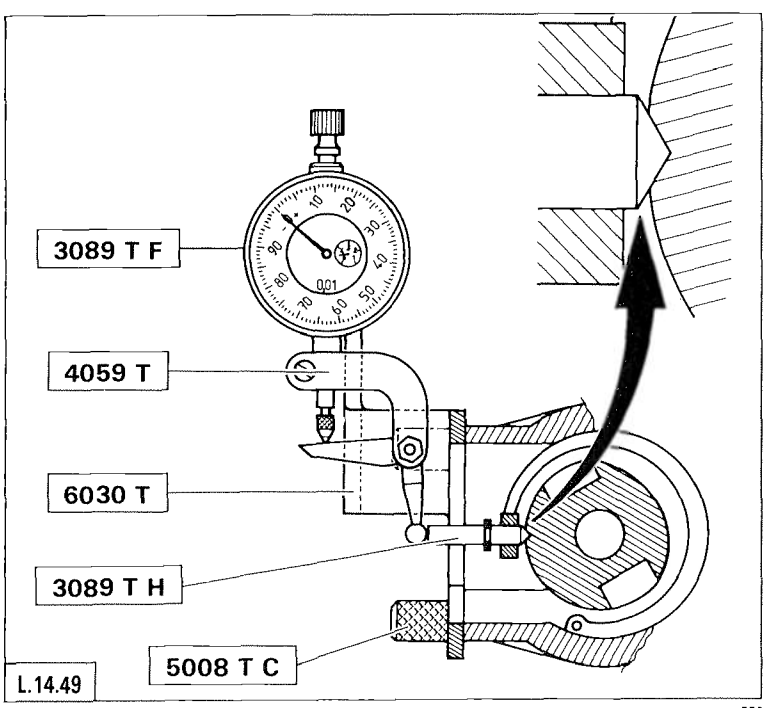

III

II. - INSPECTION AND TIMING OF THE "ROTO-DIESEL" INJECTION PUMP

Raise the LH side of the vehicle and support it on stands.

Disconnect the battery negative lead.

Engage the 5th gear. Rotate the engine by turning the wheel.

Set the No. 1 cylinder to the initial timing point, Fig.I.

(look into the oil filter orifice).

- place cylinder No. 1 valves in the rocking position; turn the crankshaft by one turn in the normal direction of engine rotation.
- align marks on the flywheel and on the crankcase (→ ←).
- turn the crankshaft back through a quarter of a turn.

Remove either the plug (with a 32 mm ring spanner) or the inspection plate depending on the type of the pump.

Refit, Fig II or III, according to pump:

- the feeler,
- the support for the dial-gauge.
- the dial-gauge equipped with its right-angled lever.

Finding the pump internal timing point:

- turn the crankshaft in the direction of rotation until the large pointer on the dial indicator starts moving in the opposite direction.
- set **"O"** mark on the dial-gauge in line with the large pointer.

Checking the injection pump timing:

- rotate the crankshaft by a quarter turn in the opposite direction to its direction of rotation.
- turn back in the normal direction of rotation until the **"O"** mark on the dial-gauge has been reached.
- in that position, marks (→) and (←) should be in line, **Fig. I.**

If not, re-check the timing.

Timing the injection pump:

- set the engine to the initial timing point, **Fig. I.**
- turn the crankshaft by 1/4 turn in the opposite direction to normal direction of rotation, then turn back in the direction of rotation to bring marks (→) and (←) opposite.

Adjusting the pump timing, **Fig. III:**

Slacken off the injector pipe connections and the 4 attachment points.

Bring the pump to the injection point with the feeler at the base of **V-shaped** groove (timing point).

Set the **"O"** mark on the dial opposite the needle on the dial-gauge. Orientate the pump casing towards the engine.

Slowly turn back to the injection point (needle facing the **"O"** mark on the dial), by moving the pump casing away from the engine *(in the opposite direction to engine rotation).*

Tighten the pump fixing nuts **to 2.4 mdaN**. During this operation, the needle should not move.

Check the pump timing

Remove the timing tools.

Refit the plug, **(tighten to 2 mdaN)**, or the inspection plate.

Seal the injection pump plug.

Tighten the injector pipe connections **to 2 mdaN**.

Reconnect the battery negative cable

Switch on the ignition (electrical STOP solenoid excitation) and prime the fuel circuit using the manual pump (5) located on the filter.

Fully depress the accelerator pedal to facilitate the engine bleeding and start.

Note: the initial timing point corresponds to:

3.24 ± 0.05 mm BTDC: **M 25/648**
4.32 ± 0.05 mm BTDC: **M 25/660** DPA pump
4.71 ± 0.05 mm BTDC: **M 25/660** DPC pump

III. - ADJUSTING THE ROTO-DIESEL INJECTION PUMP CONTROLS

DPC type pump from engine **M 25/648, Fig. I**

DPA type pump from engine **M 25/660, Fig. II**

ENGINE COLD

Checking the fast-idle control

Ensure that lever **(7)** is against its stop, by pushing it in the direction of arrow (→).

*If not, adjust tension of cable by means of cable end clamp **(6)**. Complete tightening of cable using sheath tensioner **(4)**.*

ENGINE WARM

Checking the fast-idle control

Make sure that the cable is slack.

*If not, check the operation of the thermal sensor **(10)** located on the water outlet duct: the cable must operate over a range of 6 mm between its "ENGINE COLD" and "ENGINE WARM" positions.*

Adjusting the accelerator control

Engine stopped:

Fully depress the accelerator pedal.

Check that lever **(1)** is against stop **(2)**.

*If not, move pin **(3)** of accelerator cable.*

*Make sure that, at idle, lever **(1)** is against stop **(5)**.*

Adjusting the anti-stalling device

Engine running:

Insert a 1.5 mm thick shim (DPC pump, **Fig. I**)
2 mm thick shim (DPA pump, **Fig. II**)

between lever **(1)** and stop-screw **(5)** at **"b"**.

Place a **3 mm dia.** rod through the hole in lever **(7)** at **"a"** by pushing STOP lever **(9)** outwards.

Set the engine speed to:

800 ± 50 rpm (DPC pump)
800 ± 25 rpm (DPA pump)

by turning stop screw **(5)**.

Remove the **3 mm dia.** rod and the shim.

Adjust the idling speed to:

800 ± 25 rpm

by turning stop screw **(8)**.

Checking the engine deceleration:

Accelerate the **engine** to **3.000 rpm**, then release the accelerator lever sharply.

- if the deceleration is **too fast** (engine often stalling), *unscrew stop-screw **(5)** by 1/4 turn,*
- if the deceleration is **too slow** (poor engine braking), *screw up stop-screw **(5)** by 1/4 turn.*

In both cases, check the idling speed and adjust if necessary.

If the malfunction continues to exist, carry out the adjustments again.

Check the efficiency of the mechanically operated STOP control **(9)**.

Note: The setting figures are identical if the vehicle is equipped with air-conditioning and the adjustments are to be effected with the air-conditioning off.

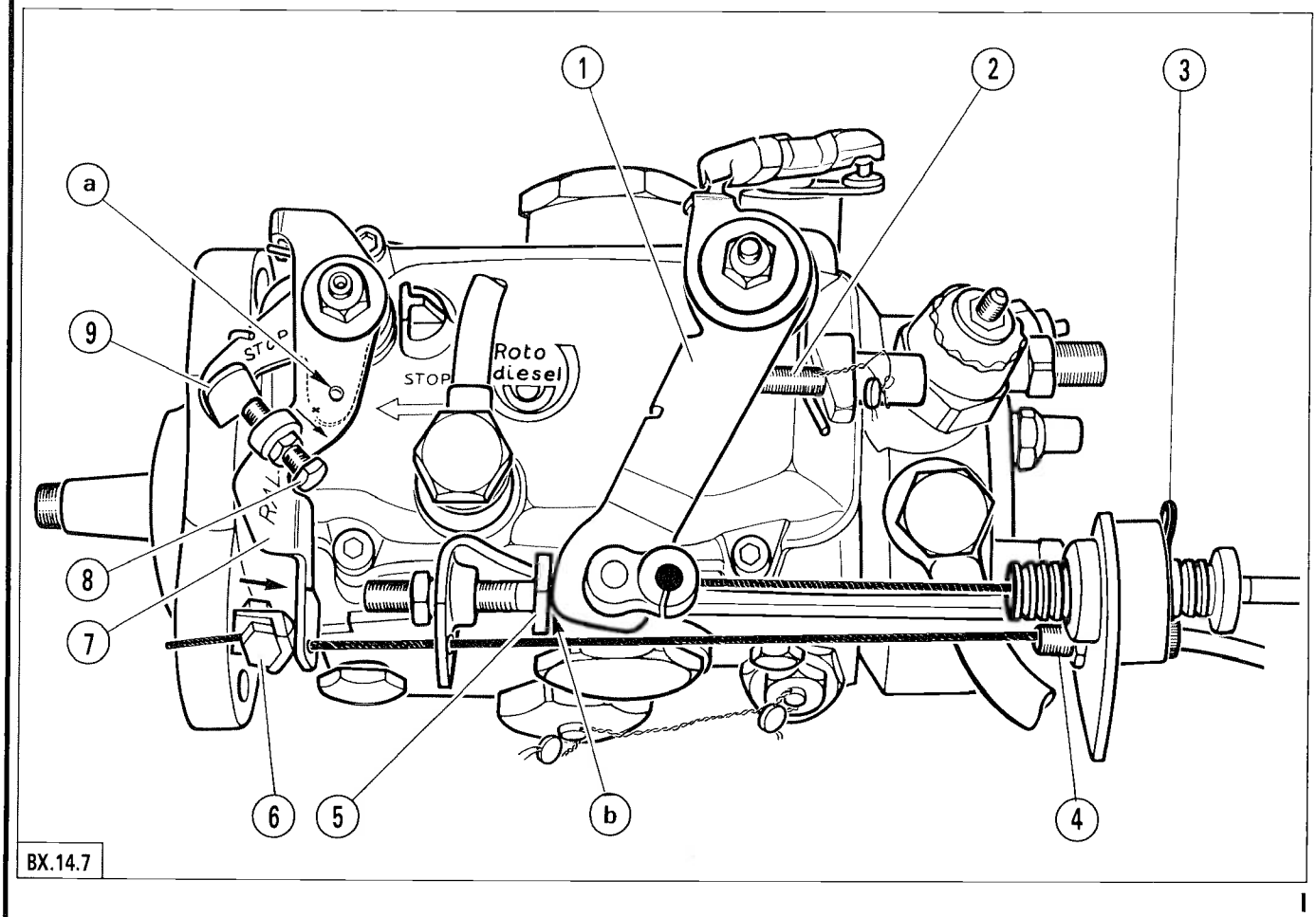

BX.14.7

I

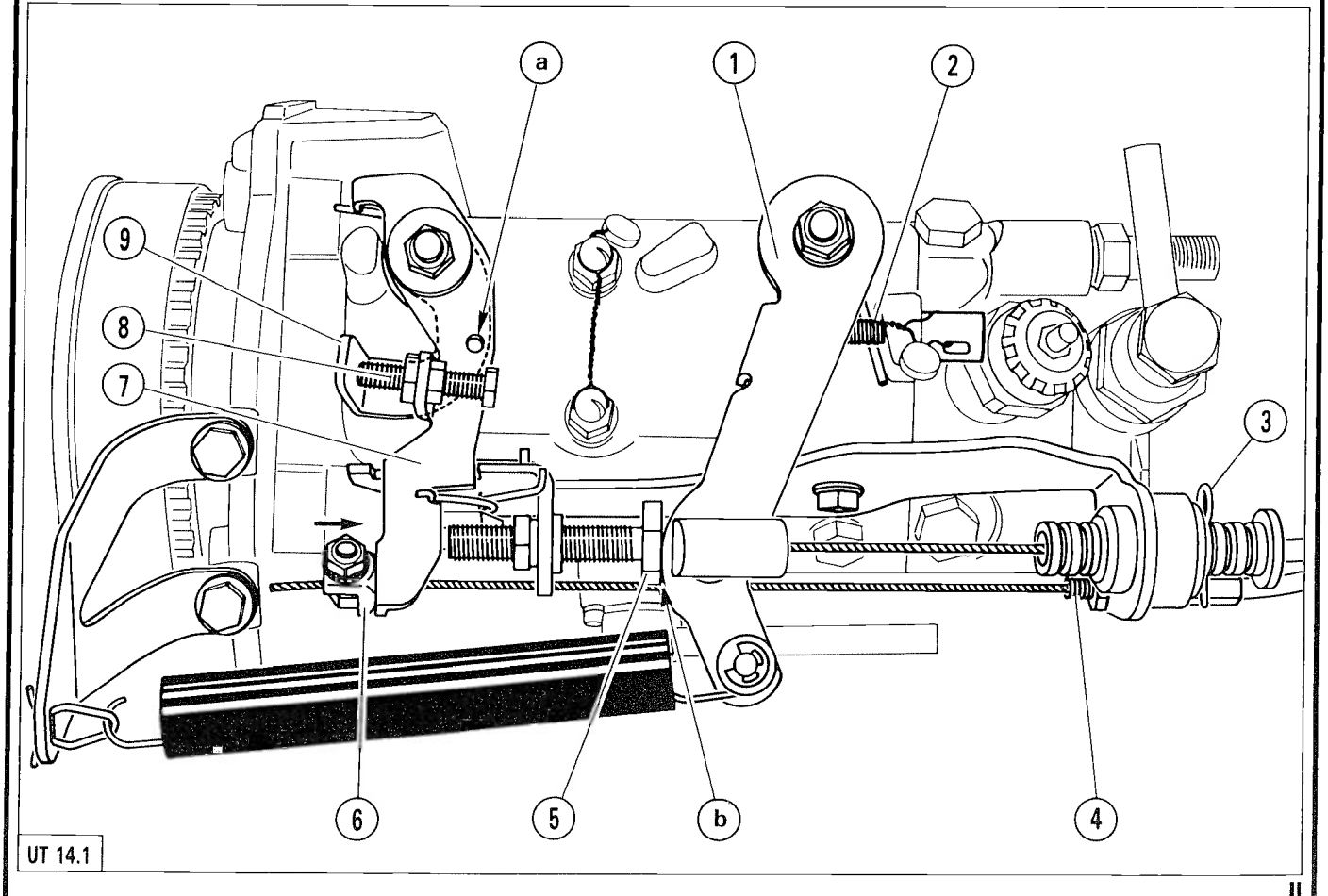

UT 14.1

II

RECOMMENDED TOOLS

2437-T.	: Dial-gauge
3089-T.F.	: Dial-gauge.
3089-T.H.	: Feeler.
4059-T.	: Right-angled lever for dial-gauge
5008-T.C	: Dial-gauge mounting fixing screw.
6027-T.	: Set of 3 tools to check the timing.
6028-T.	: Driving pinion extractor.
6030-T.	: Dial-gauge mounting.

REMOVING AND REFITTING D.P.A. AND D.P.C. ROTO DIESEL INJECTION PUMPS

REMOVAL

Raise the R.H. side of the vehicle and support it on stands.

Disconnect the negative lead from the battery.

Engage the highest gear. Using the road wheel, turn the engine.

Set No. 1 cylinder to the initial timing point, Fig. I.

(look into the oil filler hole)

- Bring cylinder No. 1 valves into the rocking position by rotating the engine one turn clockwise.

- Marks → and ← should be aligned.

Remove:

- the road wheel,
- the wheelarch lining,
- the belt upper protection cover.

Loosen:

- the injection pump driving pinion nut,
- the belt tensioner nut,
- compress the spring of the tensioner.

Remove:

- the pinion nut,
- the injection pump driving belt.

MANDATORY: TO AVOID THE PUMP BEING DAMAGED INTERNALLY WHEN REMOVING THE DRIVING PINION, PULLER REF. H AND ITS NUT J FROM TOOL BOX 6028.T MUST BE USED.

Fit the nut and clamp of tool **6028.T, Fig. II.**

Slacken the nut of tool **6028.T until** the injection pump drive shaft **starts moving.**

Disconnect the electrical STOP solenoid.

Uncouple:

- the accelerator cable,
- the fast idling cable,
- the fuel supply pipe,
- the fuel return pipe.

DPC injection pump, Fig. III:

Disconnect from the overfuelling circuit:

- the diesel fuel return pipe (2),
- the air pipe (1).

Push the diesel fuel filter to one side.

Remove:

- the spring,
- the injectors sets of feed pipes,
- the pump fixing nuts (3) **Fig. IV.**

by means of a *13 mm A/F open spanner and a 6 mm hexagon Allen key.*

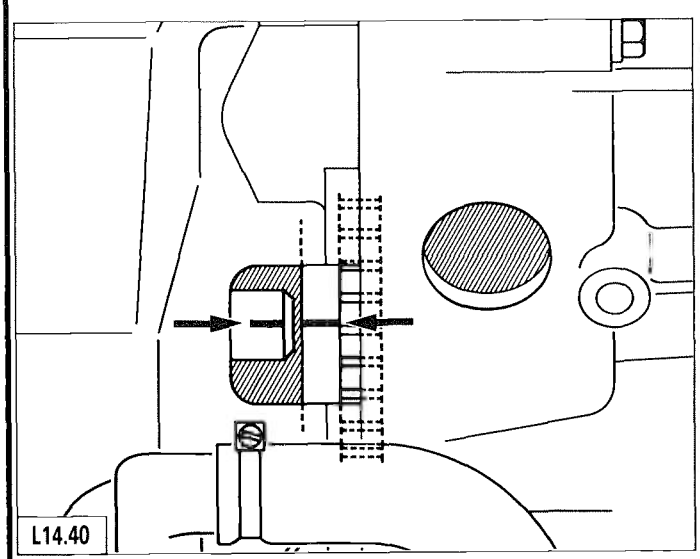

I

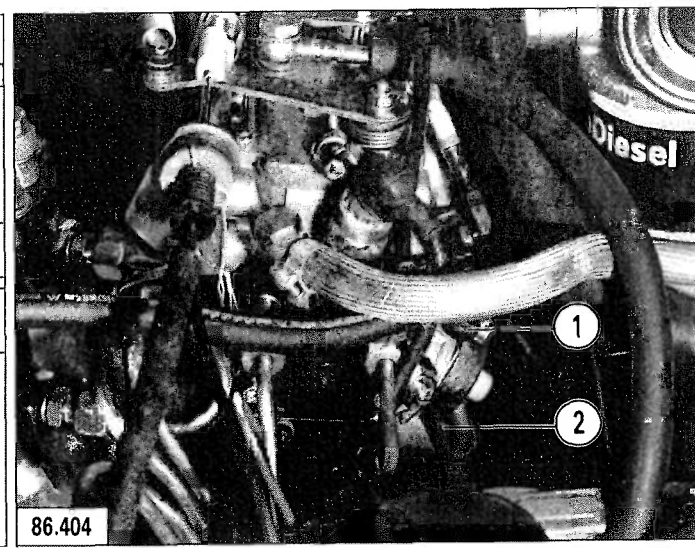

III

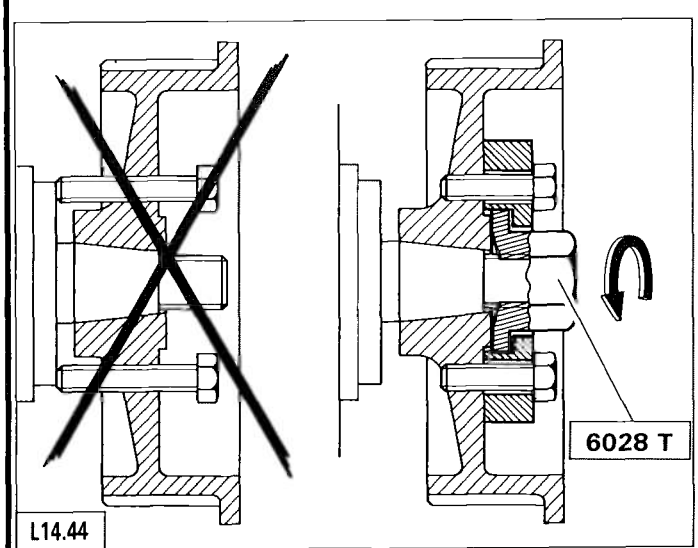

II

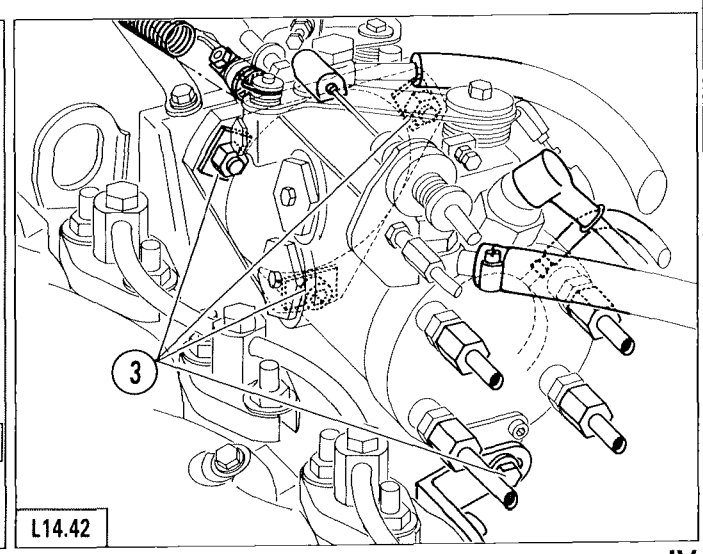

IV

REFITTING

Prepare

- the pump *(see Op. (2) MA 146.0/1).*

Fit

- the pump with the mounting studs in the middle of the slots,
- the pump fixing nuts but do not tighten home.

Assemble, Fig. I:

- the injection pump driving pinion (1); hand tighten nut (2),
- the pump drive belt with the side opposed to the tension roller being without slack (take care not to rotate the pump).

Unscrew, Fig. I:

- tensioner nut (3); let the tensioner load the belt without assistance.

Retighten, Fig. I:

- tensioner nut (3) to **2 mdaN,**
- pinion nut (2) to **5 mdaN.**

Carry out the pump timing:

Turn the pump towards the engine to find the point of injection, (needle facing the **"0"** mark on the dial).

Screw up, Fig. II, to 2.4 mdaN,

- the pump fixing screws (4); when tightening, the dial gauge needle should not move.

Check the pump timing

(refer to (2) MA 146.0/1).

Remove the tools

Refit:

- either the plug **(tighten to 2 mdaN),**
- or the inspection plate.

Seal the injection pump plug.

Refit:

- the belt upper protection cover,
- the wheelarch lining,
- the accelerator return spring,
- the injector set of feed pipes.

Tighten to 2.5 mdaN.

Recouple:

- the fast idle cable,
- the accelerator cable,
- the fuel pipe,
- the return pipe,

D.P.C. pump, Fig. III.

Connect to the overfuelling circuit,

- the diesel fuel return pipe (6),
- the air pipe (5).

Put the fuel filter back into place.

Reconnect:

- the electric STOP solenoid,
- the negative cable to the battery.

Prime the fuel system using the manually operated pump located on the filter.

Adjust the injection pump controls and idling speed as explained in *Op. (2) MA 146.0/1.*

Garrett TAO3 → M 25/662
T3 → M 25/666

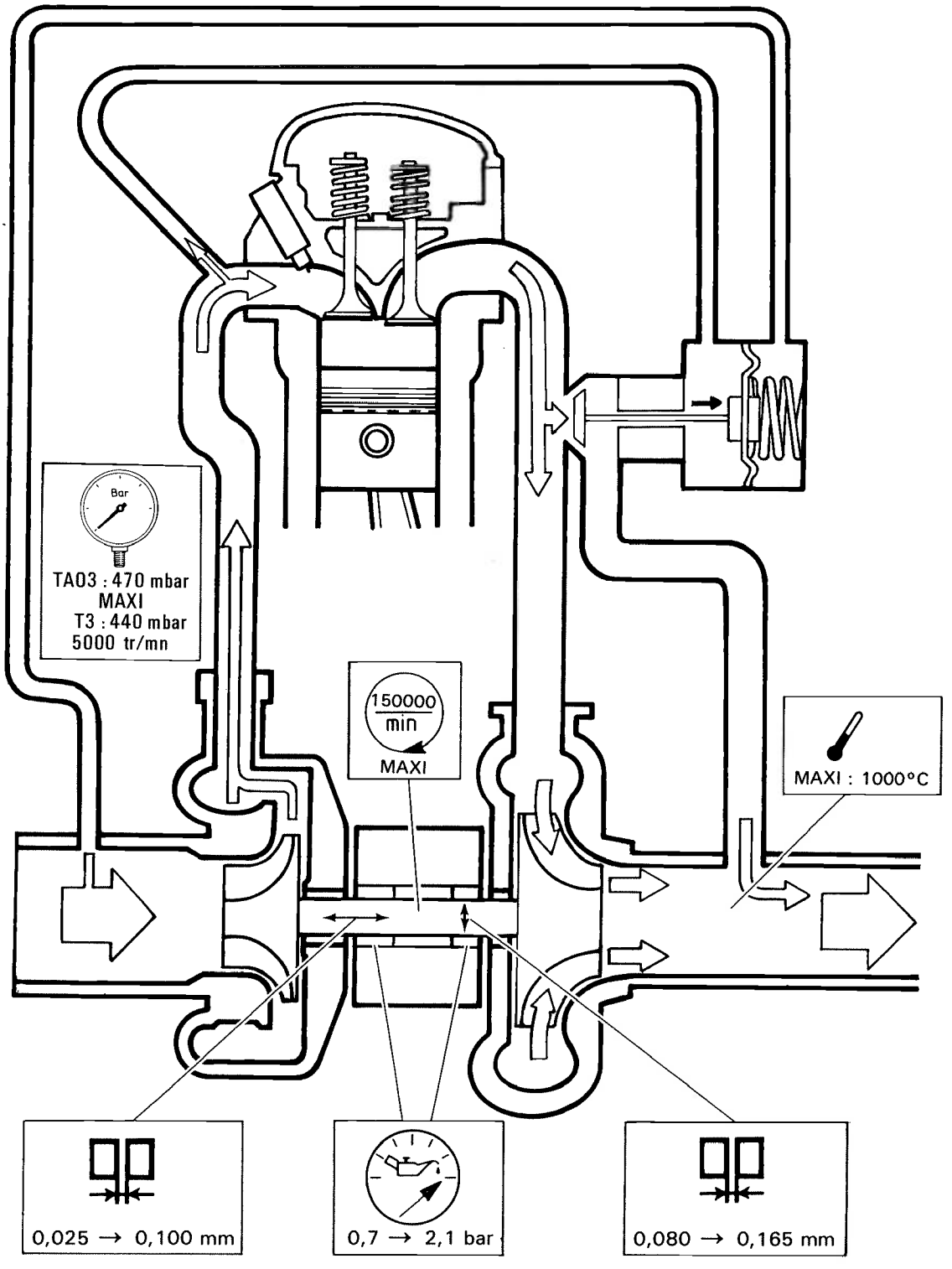

Garrett TAO3 → M 25/648
TO25 → M 25/669

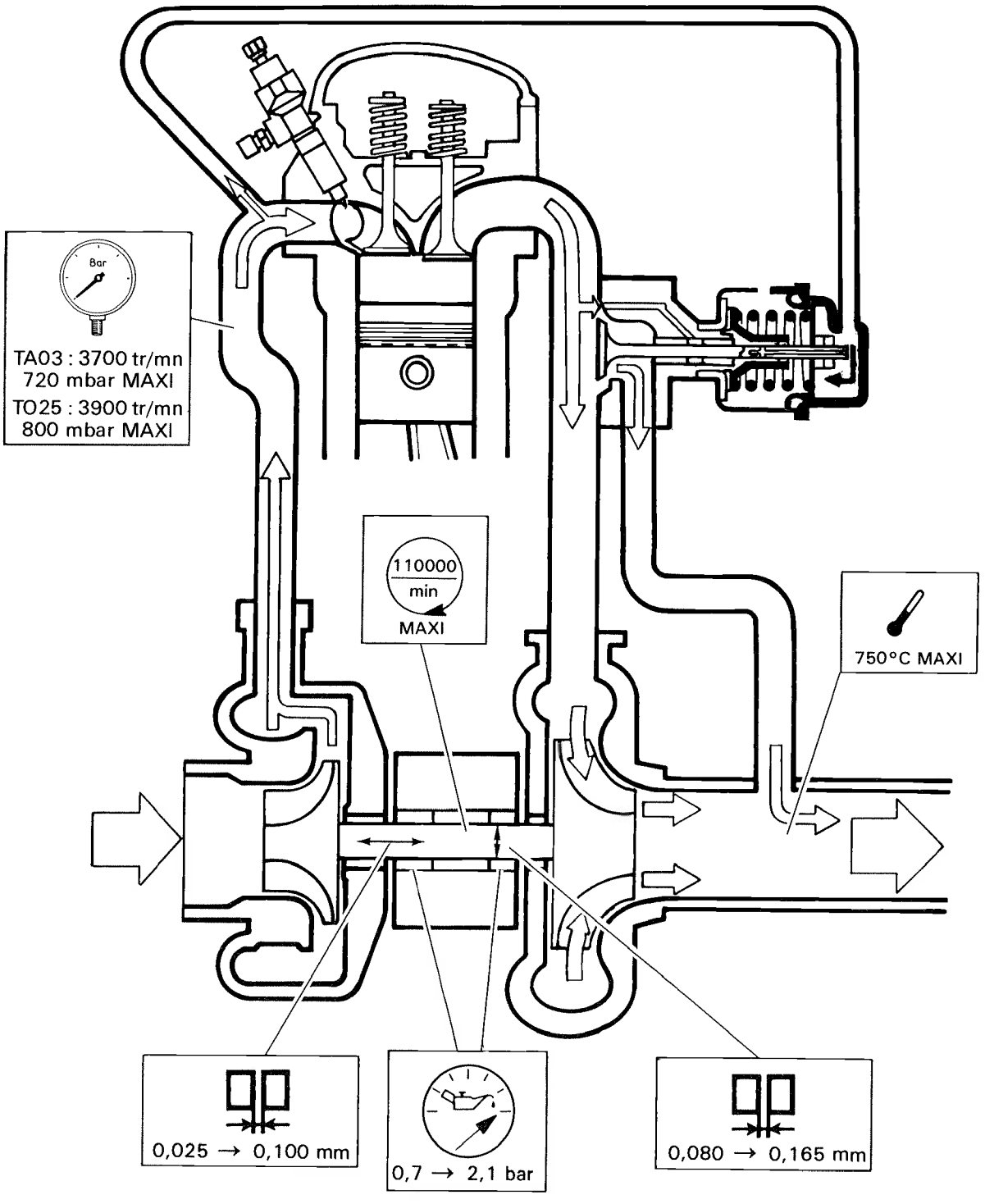

SPECIFICATION AND PARTICULAR FEATURES
OF THE AIR SUPPLY SYSTEM

Engines types **829.A5** and **J6T.A500** are fitted with a device regulating the temperature of intake air.

This device has been designed for maintaining a minimum temperature of the air drawn into the carburettor It consists of a thermal sensor and a vacuum capsule operating a flap.

Thermal source

The thermal sensor is located in the pipe connecting the air filter to the inlet manifold of the carburettor.

This bi-metal type thermostat, is subjected to the inlet air temperature.

It controls the opening of valves allowing passage for a depression towards the capsule.

This depression is picked up by a union having a calibrated orifice, fitted to the pipe connecting the oil breather to the intake manifold of the carburettor, and by a T-shaped union situated near the carburettor base plate, so as to have an action over the engine load.

The thermal sensor allows the depression to circulate when the temperature is below 15°C and stops it when the temperature exceeds 25°C.

Vacuum capsule.

The capsule, located in the inlet of the air filter, is subjected to the depression. When energised, it operates a flap which lets the heated air coming from a tapping located on the exhaust shield enter. At rest, the flap lets intake air coming from behind the grill enter.

CHECKING THE PETROL SUPPLY

829.A5-J6T.A500

Pump AC DELCO TYPE: PB3

CHECKING THE PETROL PRESSURE WITH APPARATUS 4005-T:

- Position apparatus **4005-T.**
- Disconnect the carburettor fuel return pipe; fit plug (2).
- Unscrew tap ① by one turn approx.
- Start the engine.

a) Check the petrol pressure at zero delivery:

- Fully screw up the tap; the pressure should **not** show a reading of **more than 325 m.bar for the stabilised pressure.**

b) Check the tightness of the pump delivery valve:

- Stop the engine: **there should not be a sudden drop in pressure.**

c) Check the tightness of the carburettor needle valve:

- Unscrew tap ① ; start the engine, leave it running for a few minutes.
- Stop the engine: **there should not be a sudden drop in pressure.**
- Remove apparatus **4005-T** and fit the fuel supply pipe and the fuel return pipe to the carburettor. (after plug (2) has been removed).

CHECKING THE PUMP FOR LEAKS:

Close the pump delivery tube. Blow compressed air under 800 m.bar pressure into the suction pipe. Immerse the pump in a container filled with clean White Spirit: no leak should be detected.

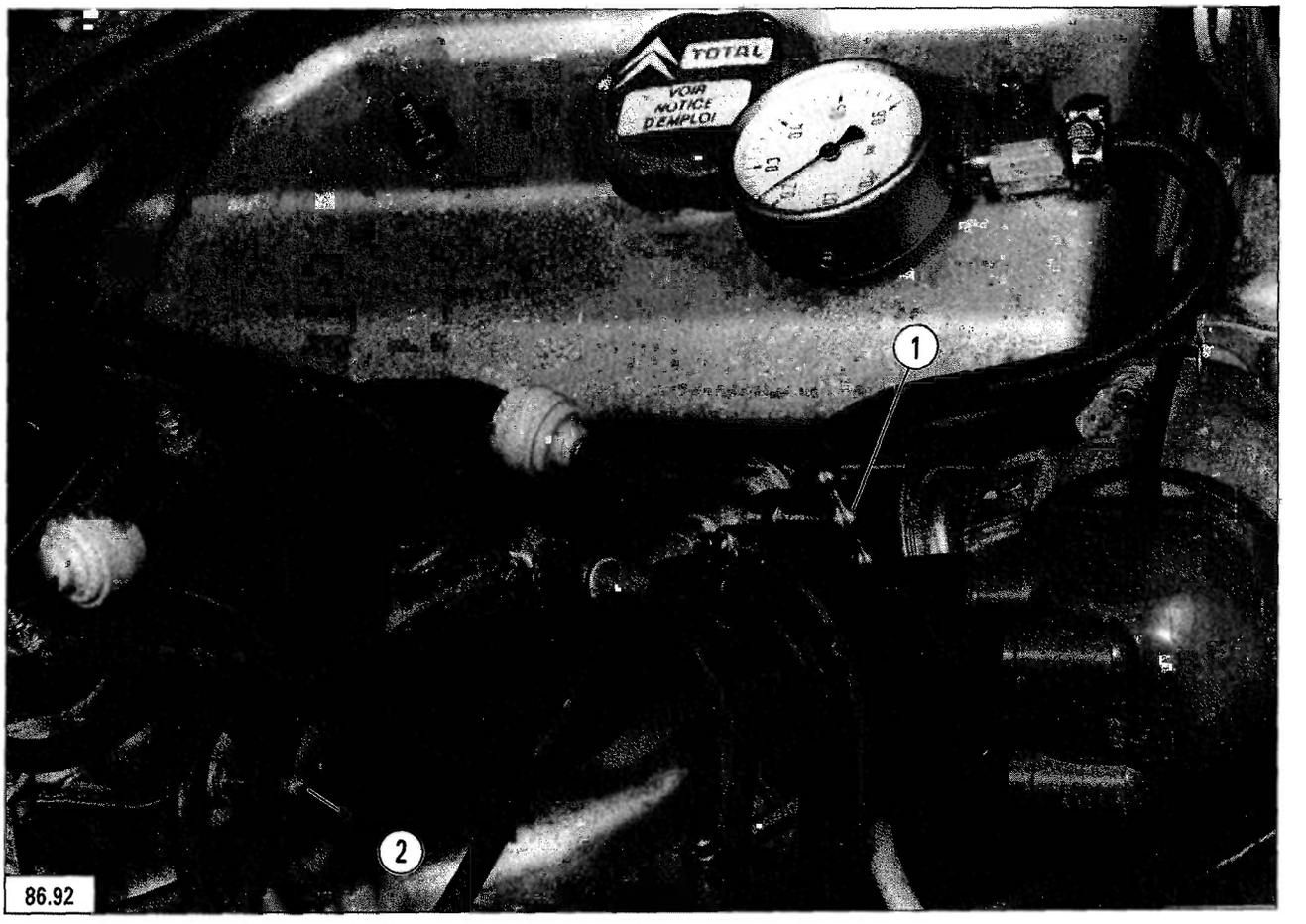

86.92

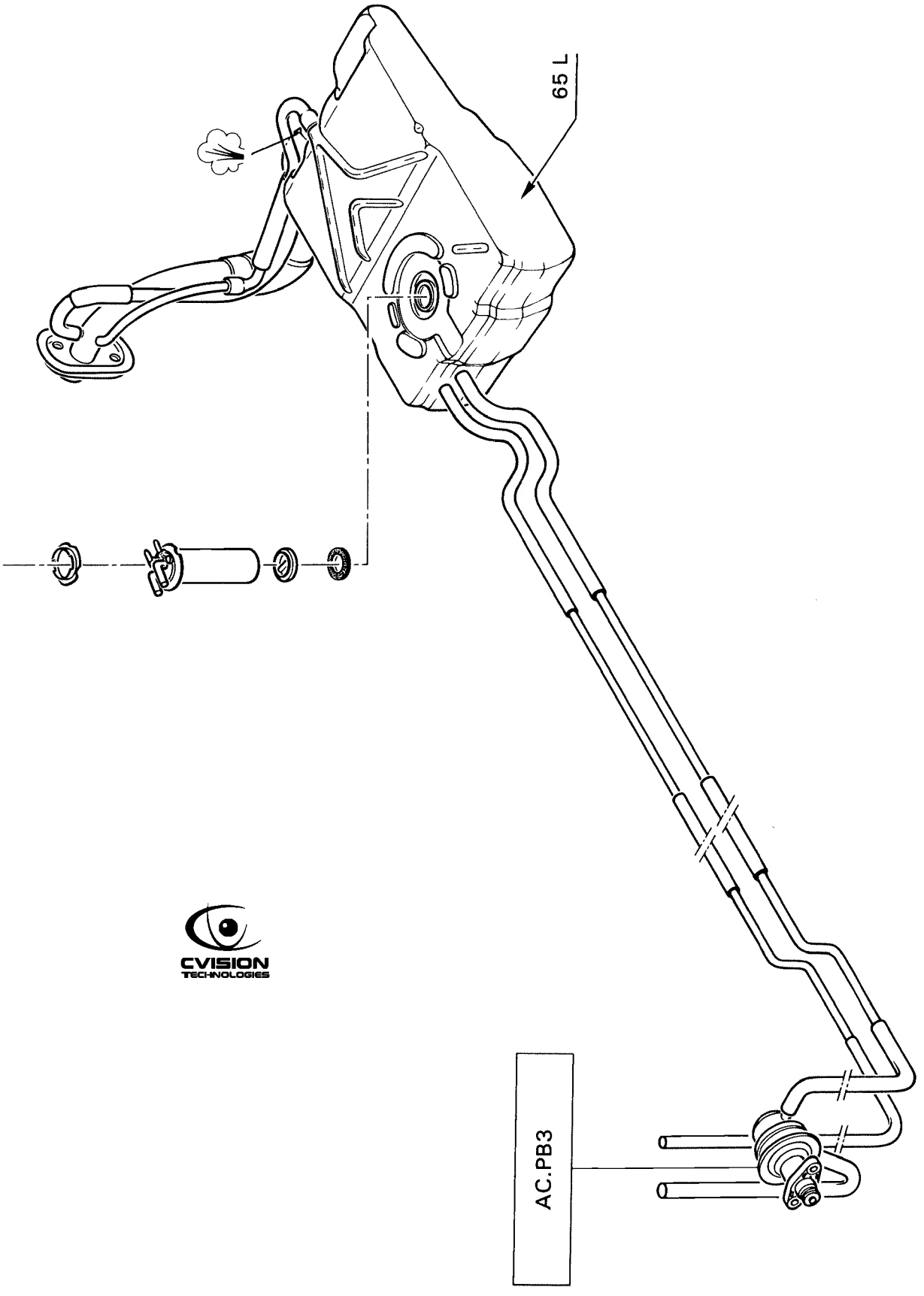

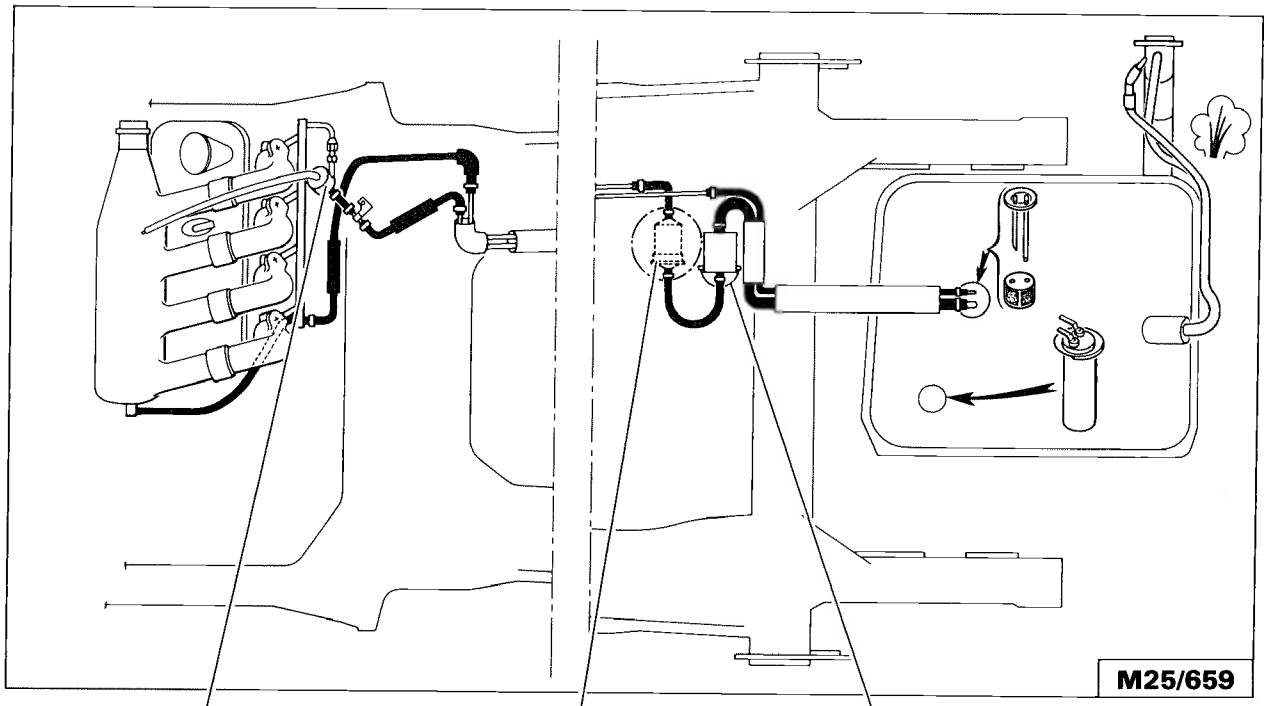

BOSCH A 280 500 141

BOSCH A 450 024 108

BOSCH A 580 112 368

BOSCH A 280 500 160

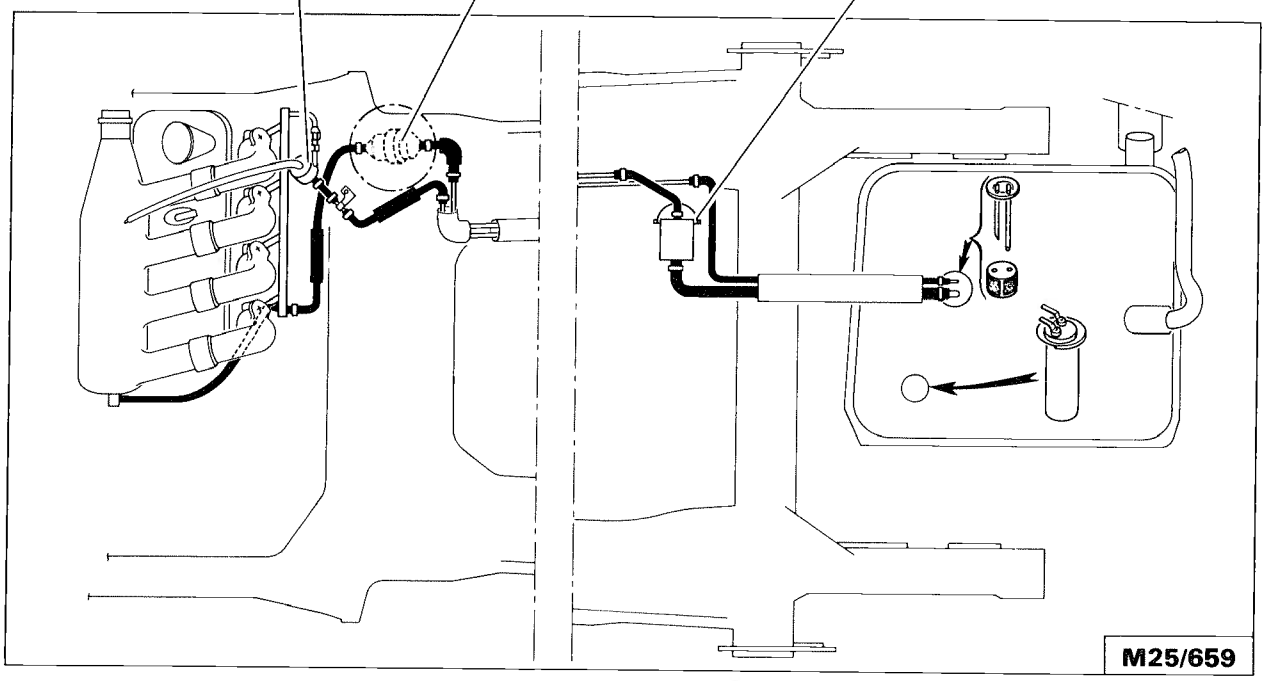

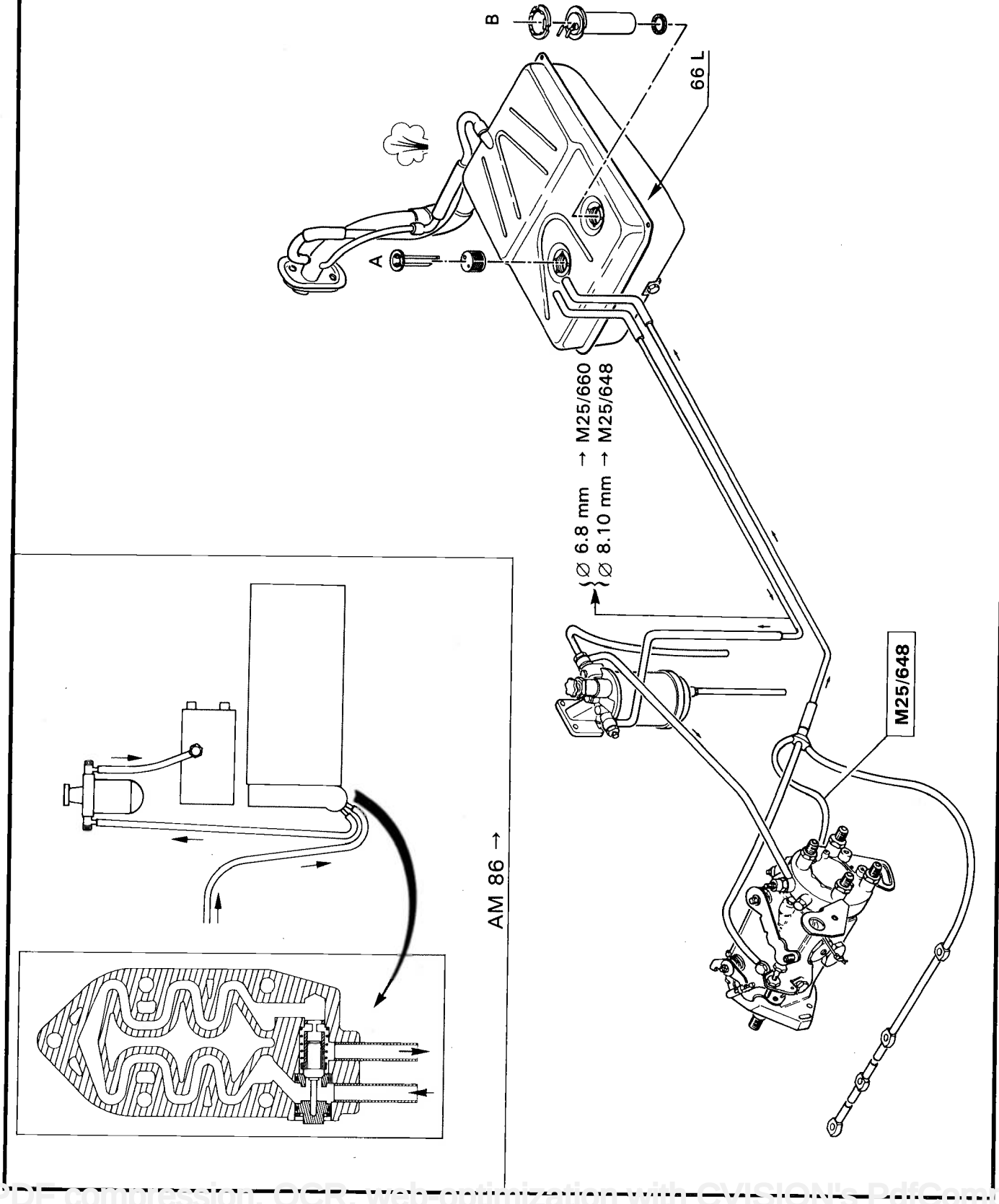

3

OPERATION No.	DESCRIPTION	OPERATION △ TEXTS	OPERATION ○ SYMBOLS	ENGINE TYPE: 20 Petrol 829 A 5	22 Petrol J6T A 500	25 Petrol Injection 25/659	25 Prestige 25/659	25 Petrol Turbo 25/662	25 Prestige Petrol Turbo 25/662	25 Diesel 25/660	25 Diesel Turbo 25/648	25 Limousine Diesel Turbo 25/648	20 Safari Petrol + Familiale 829 A 5	25 Safari Petrol Injection 25/659	25 Safari Diesel + Familiale 25/660	25 Safari Diesel Turbo 25/648	Ambulance 829 A 5 or 25/660		
MA 210.000/1	General information on the transistorised ignition	△		X	X								X				X		
MA 210.000/2	General information on the integrated electronic ignition	△				X	X	X	X					X					
MA 210.00/1	Transistorised ignition specification	△		X	X								X				X		
MA 210.00/2	Special features of the I.E.I. 2400 (→ 7/83)		○																
MA 210.00/3	Special features of the I.E.I. 2500 (7/83 → 7/85)		○			X	X							X					
MA 210.00/3a	Special features of the I.E.I. 2500 (7/85 → 7/86)		○			X	X							X					
MA 210.00/3b	Special features of the I.E.I. with single sensor 2500 (7/86 →)		○			X	X							X					
MA 210.00/4	Special features of the I.E.I. 2.500 litres Turbo (→ 7/85)		○					X	X										
MA 210.00/4a	Special features of the I.E.I. 2.500 litres Turbo (7/85 → 7/86)		○					X	X										
MA 210.00/4b	Special features of the I.E.I. with single sensor 2.500 litres Turbo (7/86 →)		○					X	X										
MA 210.0/1	Transistorised ignition: checks and adjustments	△		X	X								X				X		
MA 210.0/2	Checking the I.E.I.	△				X	X	X	X					X			X		

GENERAL INFORMATION
ON THE TRANSISTORISED IGNITION

TRANSISTORISED IGNITION

PRINCIPLE OF OPERATION

The plug spark is triggered by **distributor (1)** which comprises a coil located inside the field of a magnetic circuit permanent magnet. The magnetic circuit has four fixed branches and four movable branches driven by the distributor shaft.

When the movable branches, in their rotation, come opposite the fixed ones, a variation of the magnetic field is brought and current is induced into the sensor winding.

This current, in turn, triggers **electronic module (2)** which builds up the current in **ignition coil (3)** primary winding and then cuts it off, thus creating a high tension current in the coil secondary winding and triggering a spark from the plug selected by the distributor rotor arm.

IGNITION DISTRIBUTOR (1)

The advance curves are specific for each engine type

N: Distributor rpm
A: Distributor degrees

D = Vacuum { D1, in m.bars / D2, in mm.hg.

Pick-up coil resistance: 1100 Ω ± 10% *(990 to 1210 Ω)*.

Setting the distributor static timing on the engine is impossible owing to design.

A revolution of the distributor is required to create a variation of the magnetic field which will send a signal to the module. Consequently, when fitting a distributor, place it in mid-slot; start the engine and adjust the distributor by means of a timing light or a diagnosis console.

The duration and amplitude of the signal depend on the speed, therefore the **DWELL ratio** is not significant.

The air gap between the branches is non-adjustable and it cannot be measured.

ELECTRONIC MODULE (2)

Intended to operate with the magnetically-triggered distributor.

Do not carry out a check with an ohmmeter since the results would not be significant.

Do not operate the module without cooling (aluminium plate heat sink and heat conductor grease).

The operation of the ignition system is possible with the engine stopped: - connect an earthed sparking plug to the coil HT lead; short "+12 volts" pulses on module red lead (path 5) (with all leads connected, cap lifted) will generate a spark from the plug: simulation of a signal from the distributor pick up).

Do not operate the module and coil without a plug and HT lead. (It could result in the module being destroyed).

IGNITION COIL (3)

The coil must not be kept alive under 12 volts without its module (overheating).
The coil current flow is generated by the module which then reduces it, prior to cutting it off when the engine ignition timing occurs.

Only use a rev. counter with a HT induction clip.

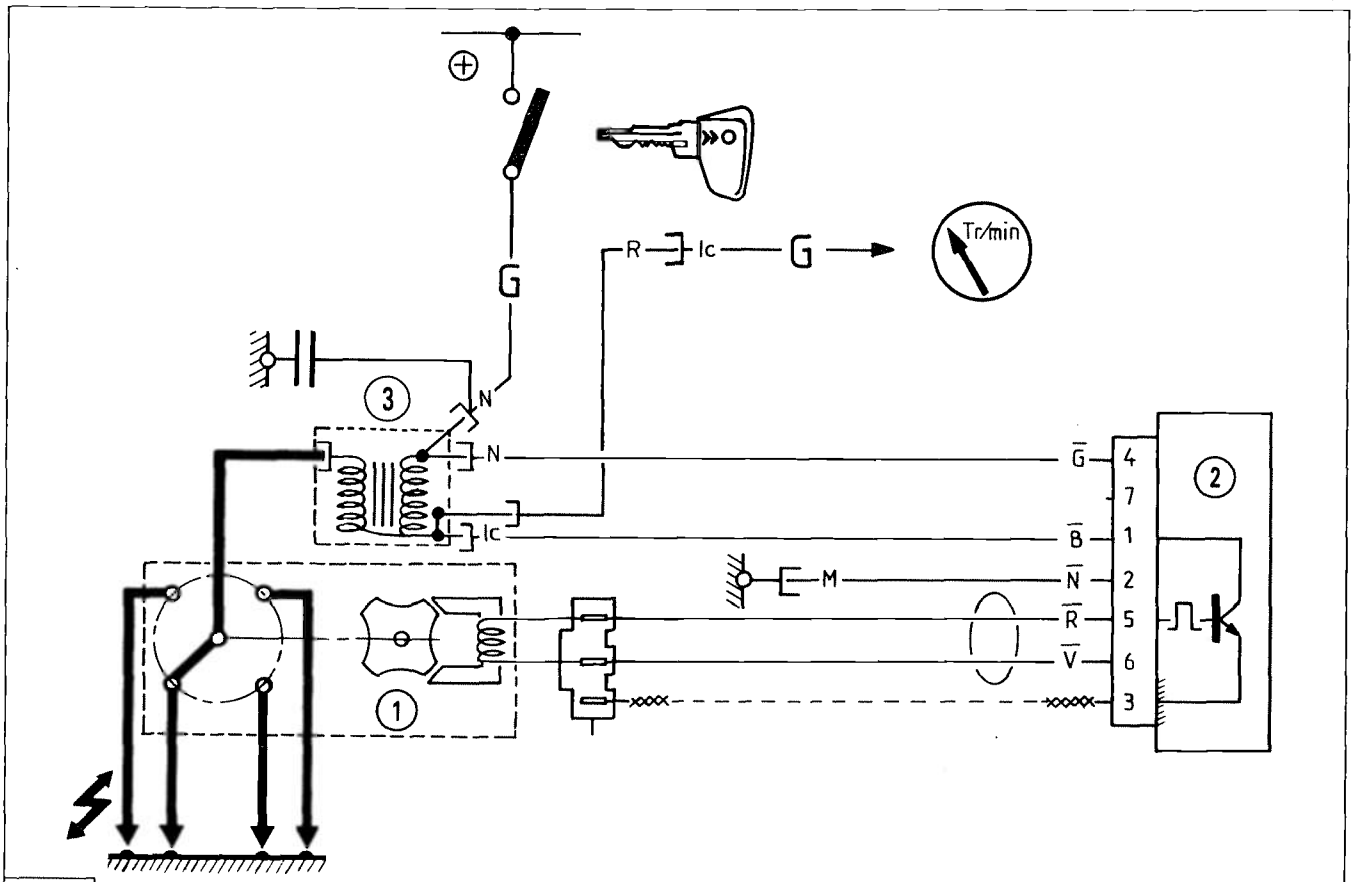

L 21.31

CX 20 829 A5

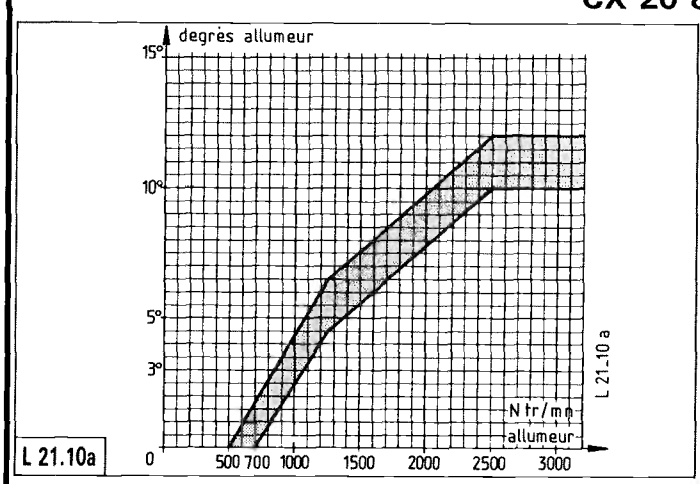

L 21.10a

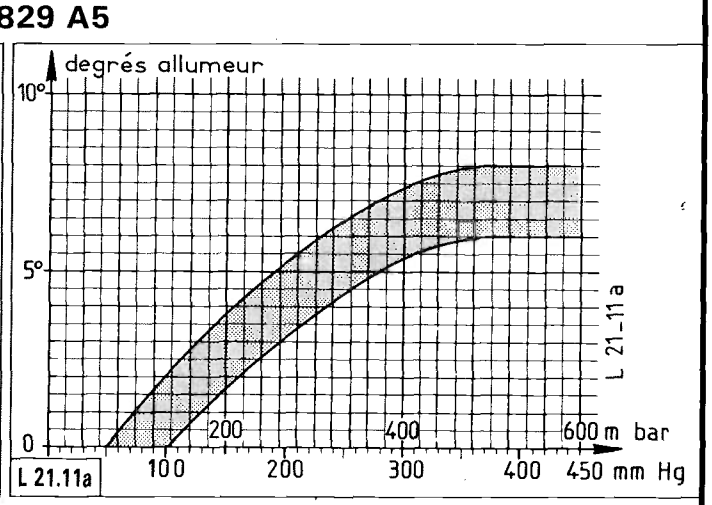

L 21.11a

CX 22 J6T A 500

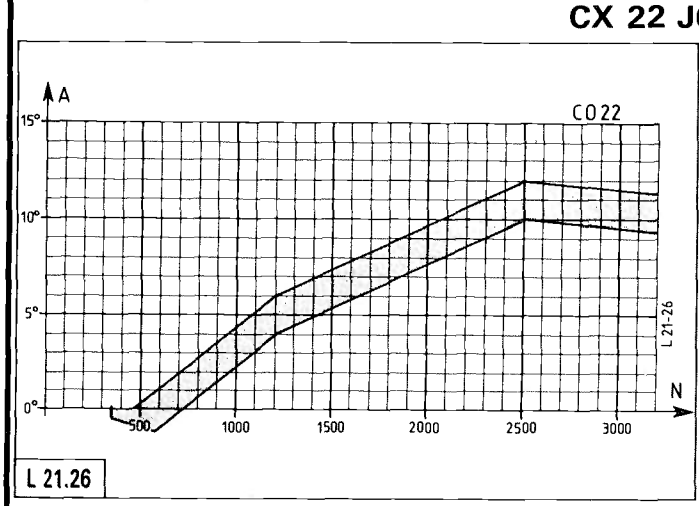

L 21.26

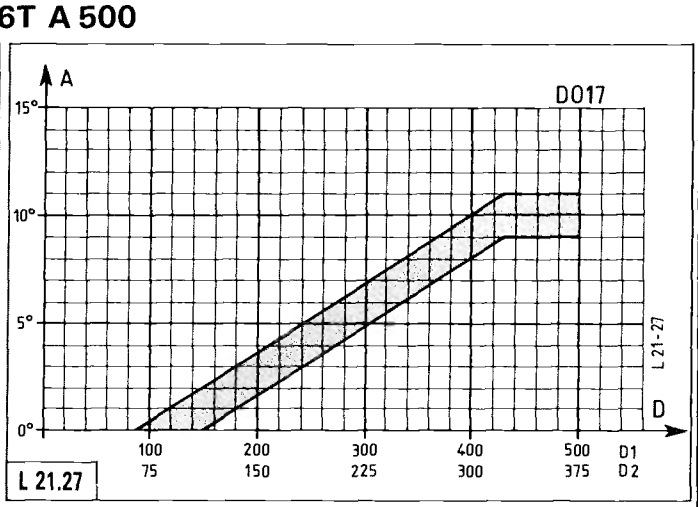

L 21.27

	→ 784 829A5	6/84 → 7/85 829A5	7/85 → 829A5	7/85 → J6TA500
	DUCELLIER : 525 368			DUCELLIER : 525 541
	R 303 D 59			C 022 D 017
	AC 42 LTS CHAMPION BN9Y EYQUEM 755 LJS	BOSCH H7 DC EYQUEM 755 LJS	CHAMPION S 281 YC	CHAMPION S279 YC EYQUEM C72 LJS
	BOSCH : 0227 100 111 DUCELLIER : 520 007		BOSCH : 227 190 111 DUCELLIER : 521 013 MARELLI : 6 F $ 750 92 AE SOLEX : 18 10 001	
	BOSCH : 0221 122 317 DUCELLIER : 5200 15	BOSCH : D 221 100 352 DUCELLIER : 520 015		

1 _ 3 _ 4 _ 2

	Ω_1		Ω_2	
	DUCELLIER	BOSCH	DUCELLIER	BOSCH
	0,8 Ω ± 5 %	0,82 Ω ± 10 %	6000 Ω ± 5 %	8250 Ω ± 10 %

	M 14 × 1,25	16 mm	0,6 → 0,7 mm	1 → 1,3 mdaN	8301-T + 8302-T

mm & Ω	829 A5	J6T A 500
1	480 mm	615 Ω
2	270 mm	310 Ω
3	300 mm	350 Ω
4	425 mm	825 Ω
	500 mm	900 Ω

IGNITION SYSTEM

GENERAL INFORMATION
ON THE INTEGRATED ELECTRONIC IGNITION

LIST OF COMPONENTS

45 : Battery
46 : Instrument panel
51 : Ignition coil, 1 & 4
52 : Ignition coil, 2 & 3
59 : Knock sensor control unit
90 : Door lock control unit
114 : Sparking plugs
131 : Datum sensor
132 : Flywheel pick up sensor
136 : Vacuum sensor (Turbo) - Pressure sensor
137 : Anti-knock sensor
141 : I.E.I. control unit
142 : Fuel injection control unit
192 : Throttle spindle switch
229 : Anti-theft/ignition switch
279 : Heating control lighting
280 : Supplementary air control
285 : Interference supression capacitor
300 : Starter motor
302 : Flowmeter
576 : Injectors
683 : Fuel pump
731 : Tachometer injection relay
784 : Injector resistances
795 : Lighting rheostat
841 : Water temperature sensor (injection)

LIST OF HARNESSES

AV : Front (→7/85)
B : Junction box
CD : Vacuum sensor lead end
G : Front left
H : Interior
FP : Pump feed wire
IC : Injection chassis
IM : Injection engine
MP : Pump earth wire
O : On-board computer
R : Rear
SV : (S) Speed control
TB : (T) Instrument panel
Z : (Z1 and Z2) IEI

OPERATING PRINCIPLE OF THE I.E.I

on 4 cylinder CX

The ignition should produce a spark, at the exact moment, in a determined cylinder. This is done by several units:

A datum sensor (1) : It consists of a coil around a magnetic core, which generates a current when the stud (3) fixed on the flywheel, is passing, (which causes a variation of the magnetic field).

A flywheel pick up sensor (2) : Identical to the previous one, but situated in line with the flywheel ring, this sensor records the passing of the teeth; since 1987 Model Year (7/86), sensor (1) has been deleted, and replaced by the dual function pick up sensor (2), one of the teeth of the starter ring being now shorter than the others. This single sensor informs the **E.C.U.** of the engine speed and of the position of the crankshaft/con rod/piston assembly. This allows the E.C.U. to determine the right instant when the current must be cut off in one of the two coils.

Two coils (5) are in turn controlled by the E.C.U. The current cut off in the primary winding generates a high tension current at the secondary winding terminals. Each terminal is connected to a **spark plug** (4) which produces a spark in a cylinder. One cylinder is at the end of its exhaust phase; the spark, lost in the cylinder which is at the end of its compression phase, ignites the air/fuel mixture and operates the engine. The E.C.U. also receives information about the state of engine load from an inlet manifold **vacuum sensor.**

Finally, on a turbocharged engine, an **anti-knock sensor (6)** can detect the area of frequencies generated by the pinging and send it to the Electronic Control Unit.
Thus, from the information it receives : speed, depression and knock, the E.C.U. computes the optimum ignition advance.
The electronic control unit supplies the instruments on the instrument panel with information on speed **(rev. counter), turbo pressure** and **knock.**

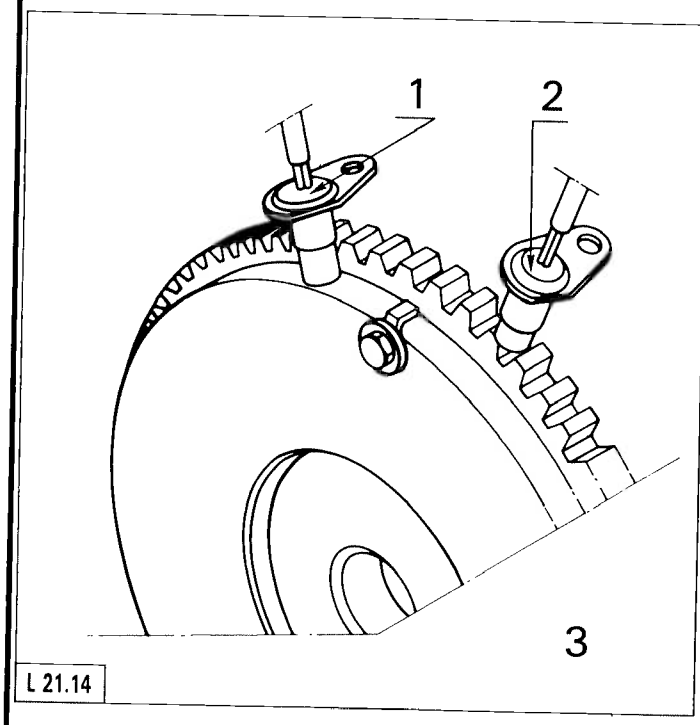

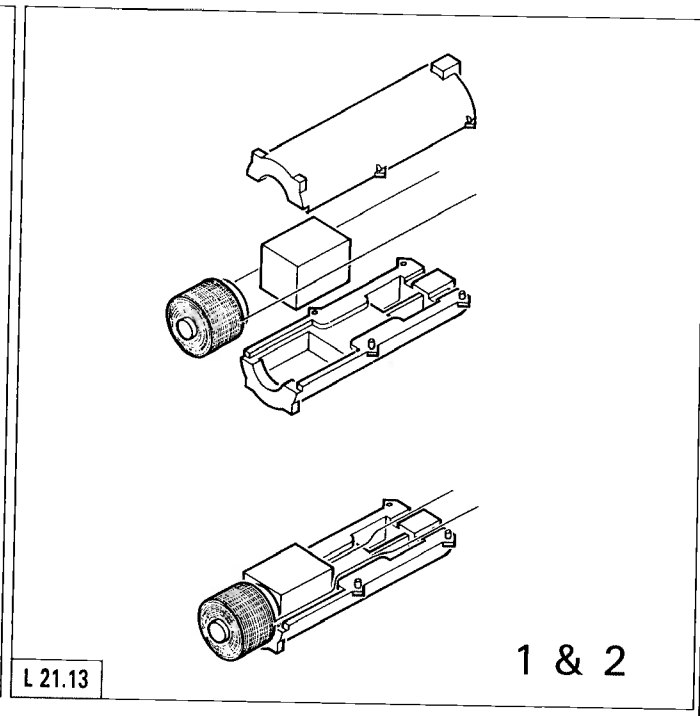

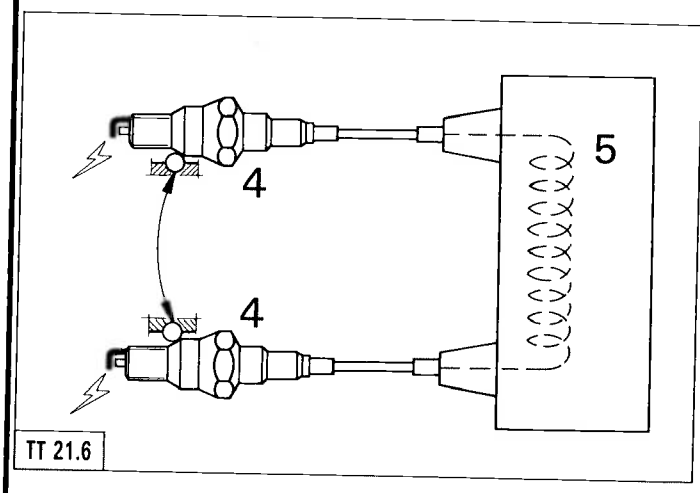

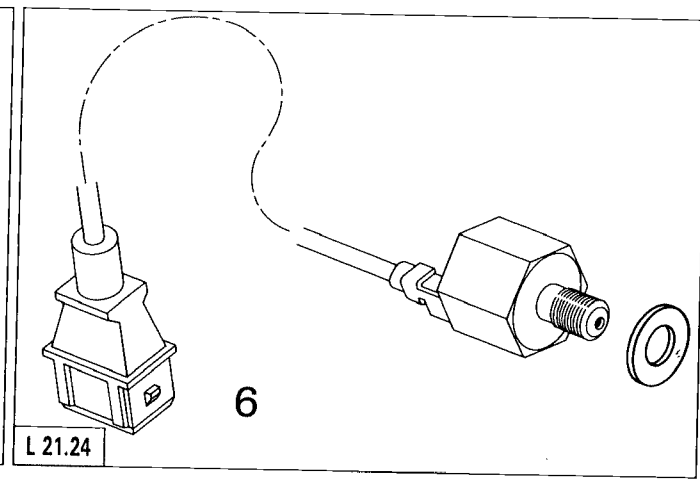

	→ 784 829A5	6/84 → 7/85 829A5	7/85 → 829A5	7/85 → J6TA500
	DUCELLIER : 525 368			DUCELLIER : 525 541
	R 303 D 59			C 022 D 017
	AC 42 LTS CHAMPION BN9Y EYQUEM 755 LJS	BOSCH H7 DC EYQUEM 755 LJS	CHAMPION S 281 YC	CHAMPION S279 YC EYQUEM C72 LJS
	BOSCH : 0227 100 111 DUCELLIER : 520 007		BOSCH : 227 190 111 DUCELLIER : 521 013 MARELLI : 6 F $ 750 92 AE SOLEX : 18 10 001	
	BOSCH : 0221 122 317 DUCELLIER : 5200 15	BOSCH : D 221 100 352 DUCELLIER : 520 015		

1 _ 3 _ 4 _ 2

	Ω_1		Ω_2	
	DUCELLIER	BOSCH	DUCELLIER	BOSCH
	0,8 Ω ± 5 %	0,82 Ω ± 10 %	6000 Ω ± 5 %	8250 Ω ± 10 %

	M 14 × 1,25	16 mm	0,6 → 0,7 mm	1 → 1,3 mdaN	8301-T + 8302-T

mm & Ω	829 A5	J6T A 500
1	480 mm	615 Ω
2	270 mm	310 Ω
3	300 mm	350 Ω
4	425 mm	825 Ω
	500 mm	900 Ω

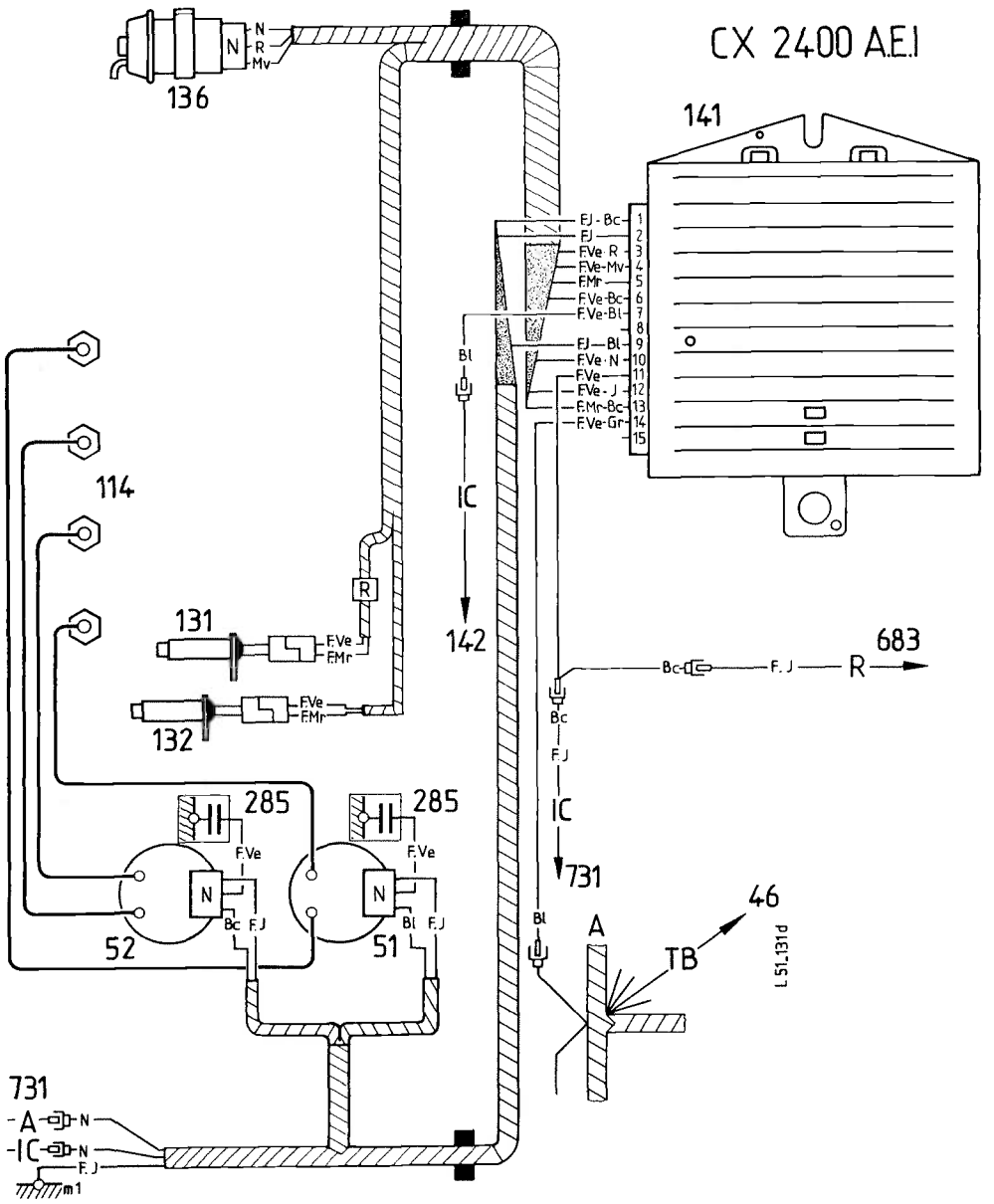

51 & 52	:	Delco Remy 3 474220
131 & 132	:	Thomson 20 165 521
136	:	Ducellier 16 038 177
141	:	Thomson 20 165 562 LA5 LD3

	AC 42 FS			
114	Champion L87 Y	∅ M14 x 1,25	> 0,6 → 0,7 mm <	2 → 2,5 mdaN
	Eyquem 705 S			

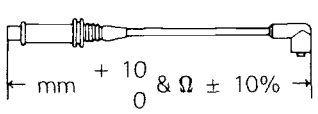

1 : 500 mm 2300 Ω 3 : 825 mm 4150 Ω

2 : 700 mm 3450 Ω 4 : 4550 Ω

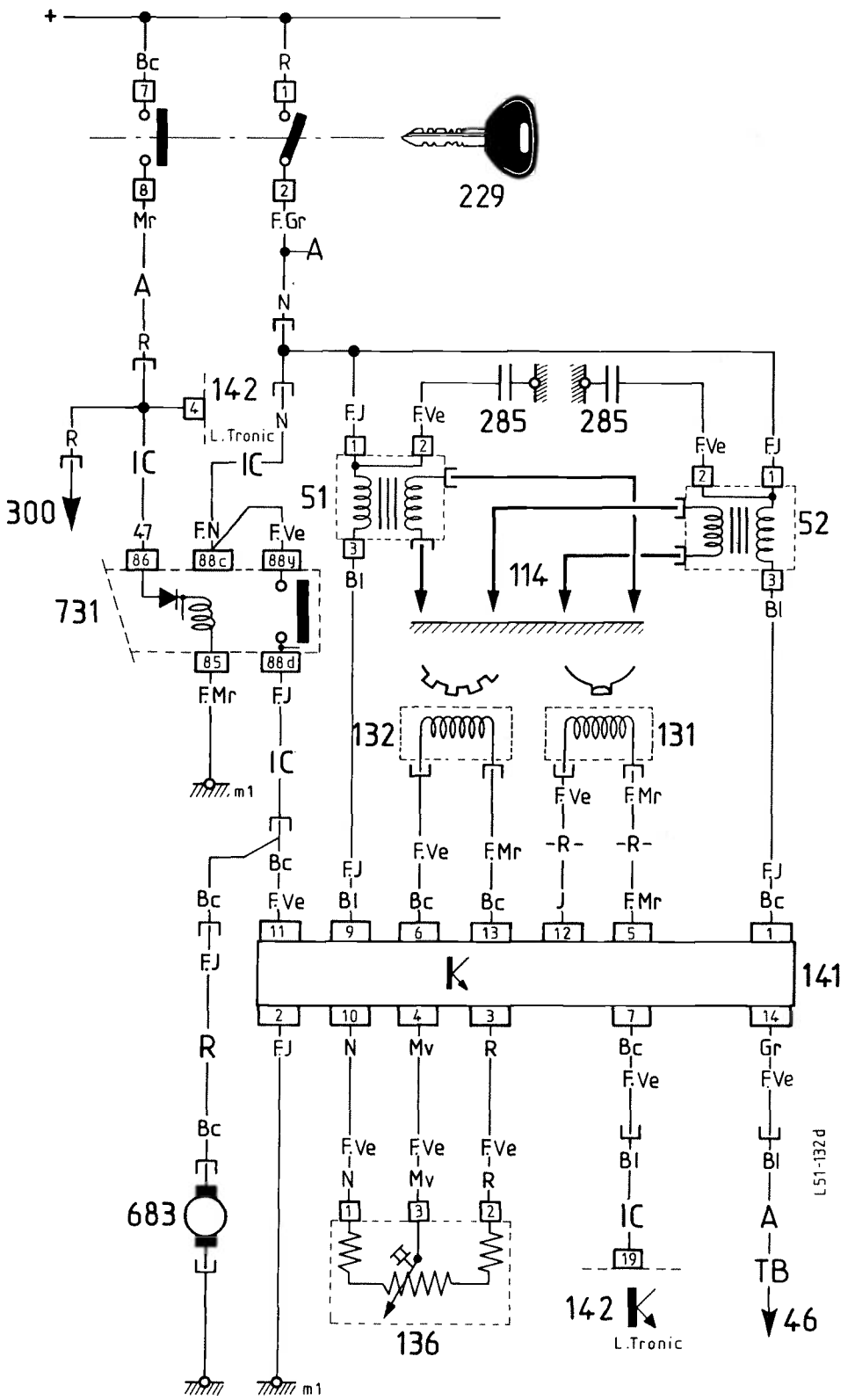

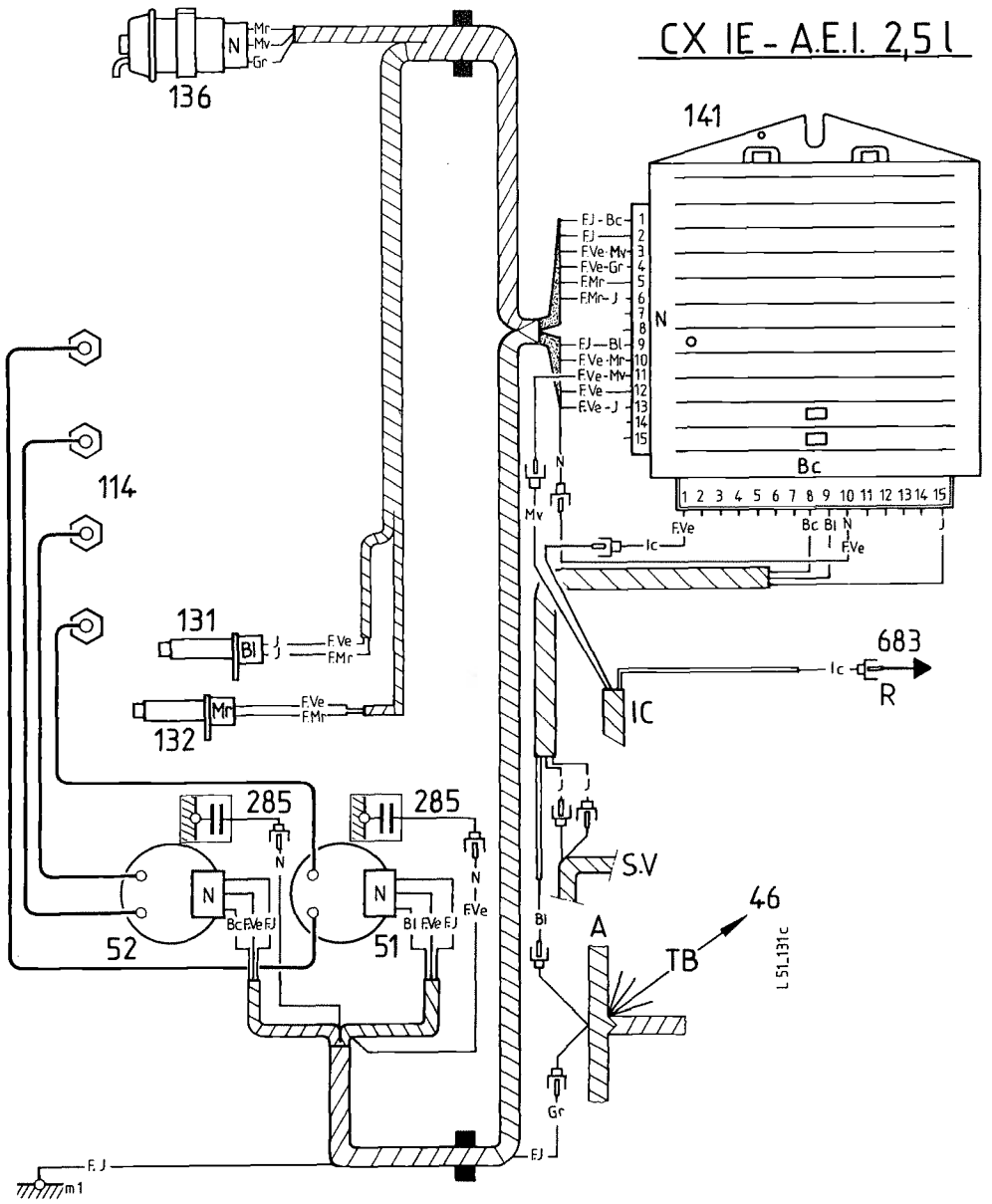

51 & 52	:	Delco Remy 3 474 220
131 & 132	:	Thomson (EA) 20 165 653
136	:	Ducellier 527 005 A
141	:	Thomson EA 20 165 646 LA8 LD4

114	Champion L82 Y Eyquem 755 SX	∅ M14 x 1,25	> 0,8 → 0,9 mm <	1,5a → 2 mdaN

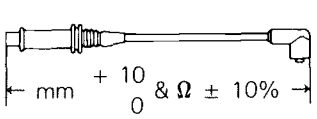

1 : 500 mm 2300 Ω 3 : 825 mm 4150 Ω

2 : 700 mm 3450 Ω 4 : 4550 Ω

CX - IE A.E.I 2,5 l

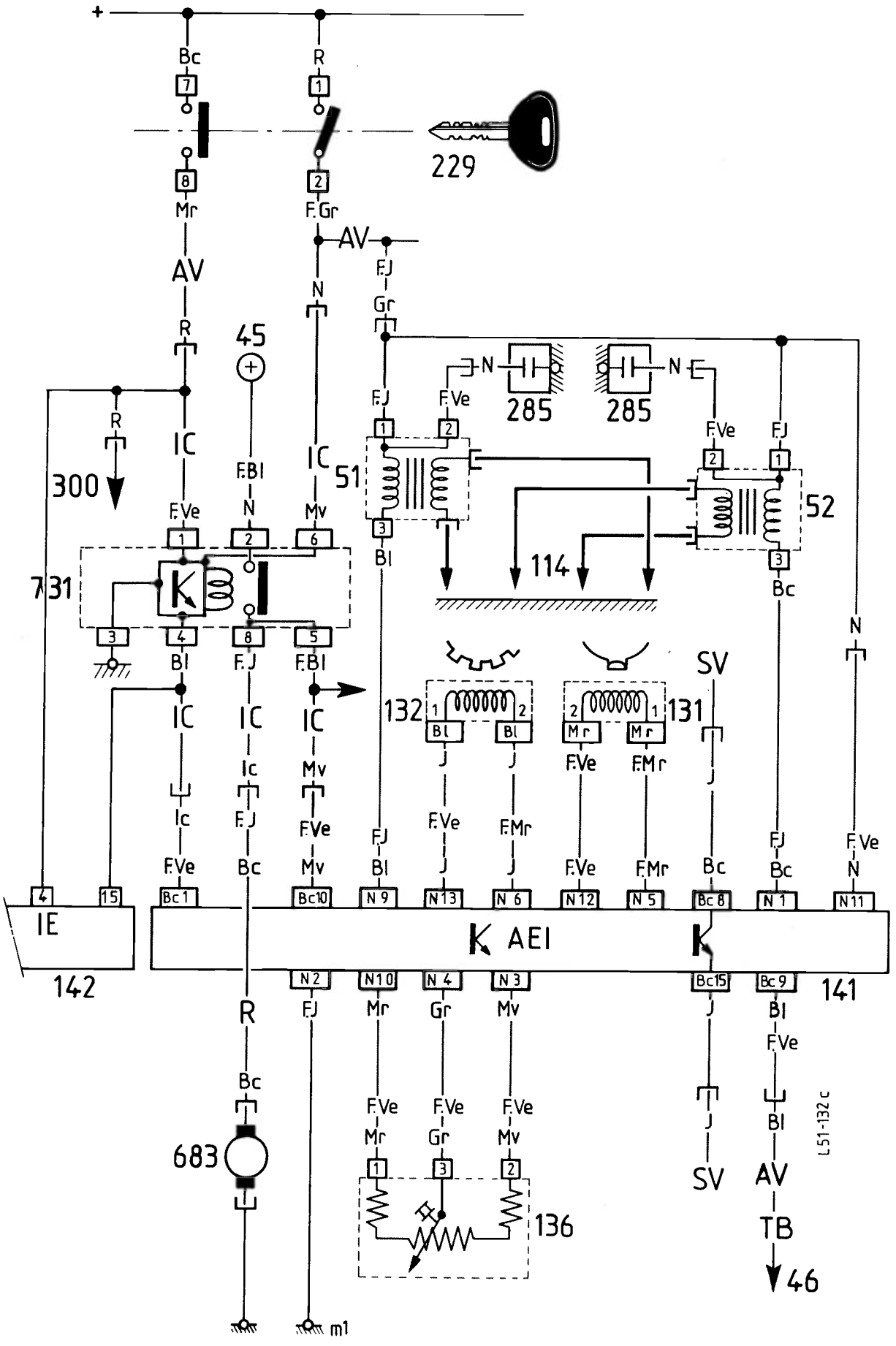

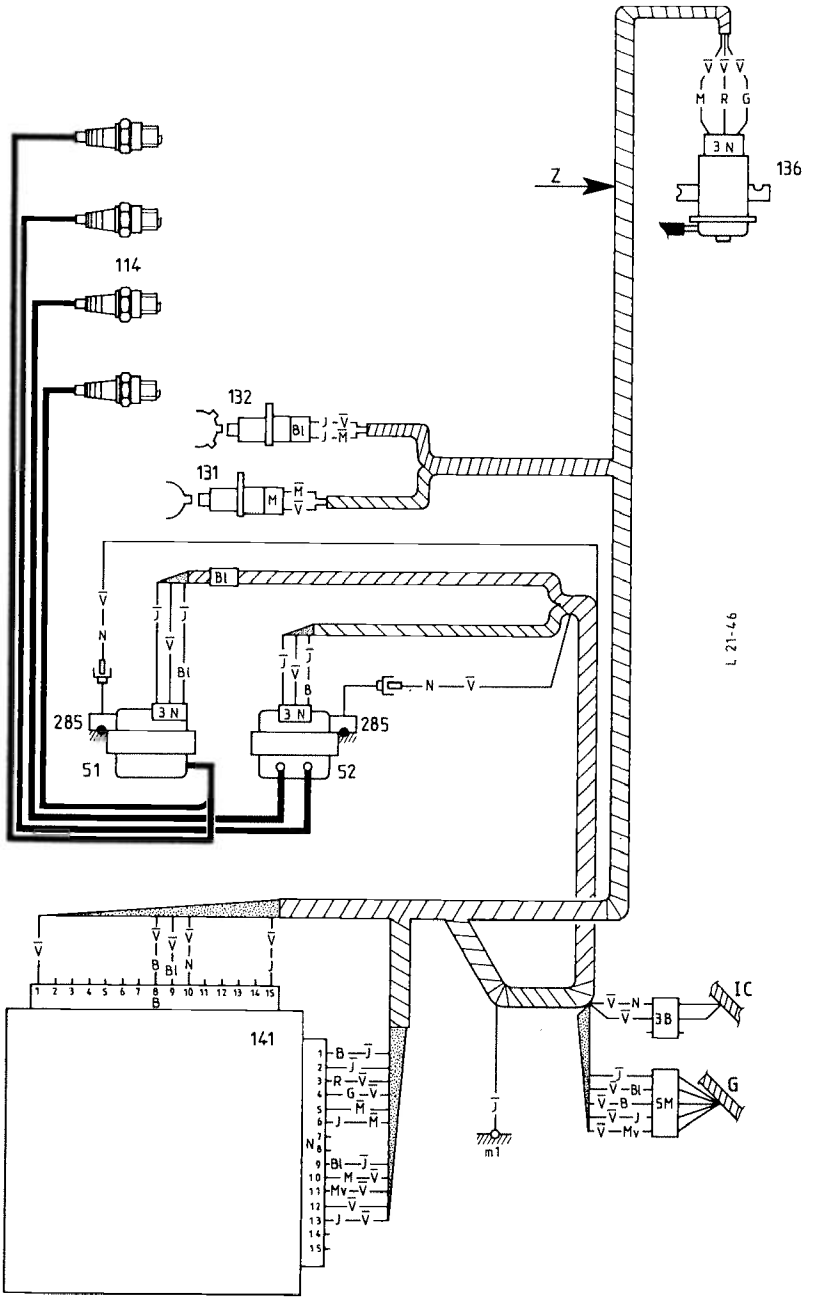

51 & 52	:	Delco Remy 3 474 220
131 & 132	:	Thomson (EA) 20 165 653
136	:	Ducellier 527 005 A
141	:	Thomson EA 20 165 970 D LA8 LD4

114 { Champion L82 Y ⌀ M14 x 1,25 > 0,8 → 0,9 mm < ◯ 1,5a → 2 mdaN
Eyquem 755 SX

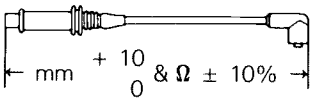

1 : 500 mm 2300 Ω 3 : 825 mm 4150 Ω
2 : 700 mm 3450 Ω 4 : 900 mm 4550 Ω

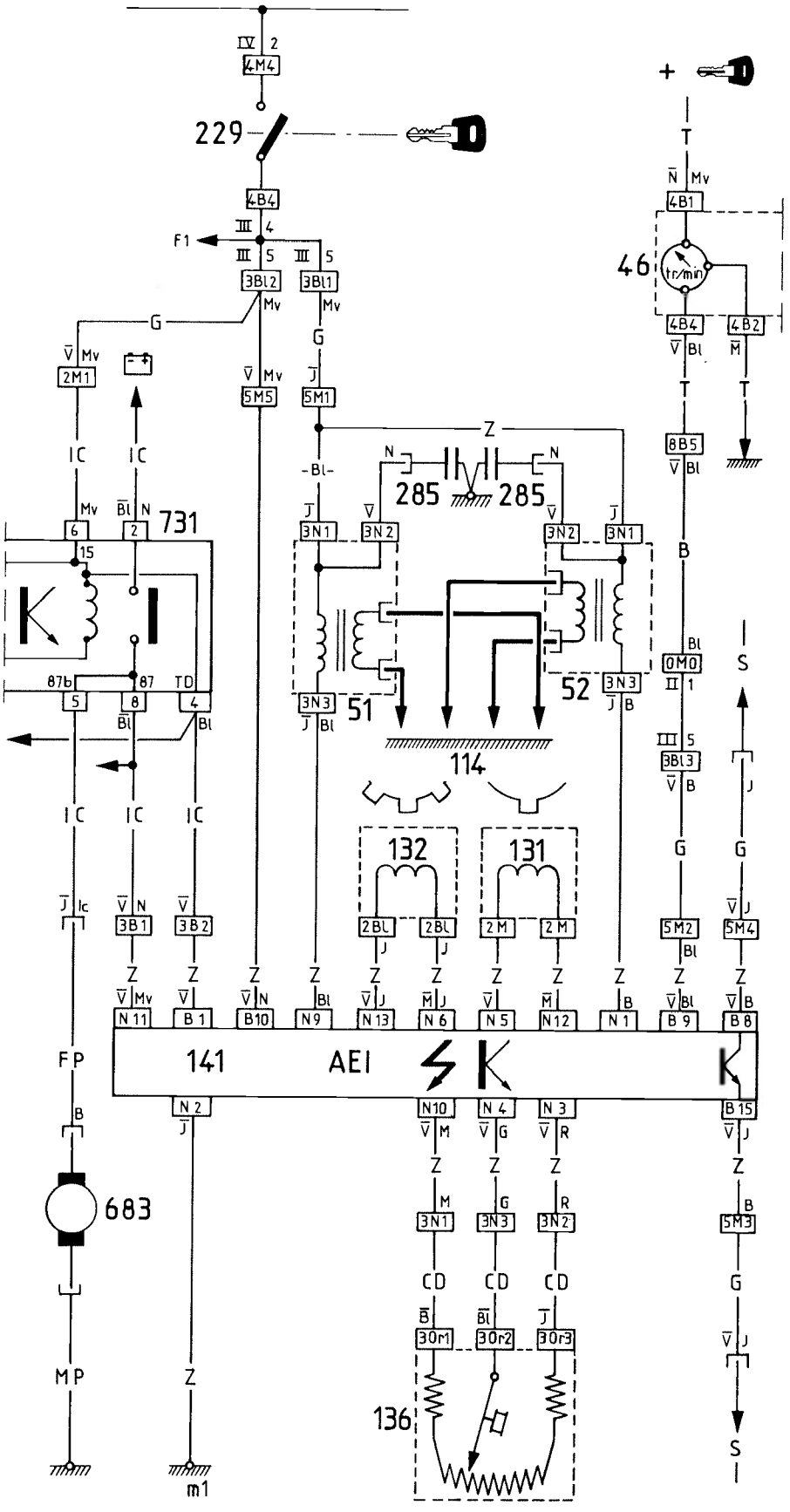

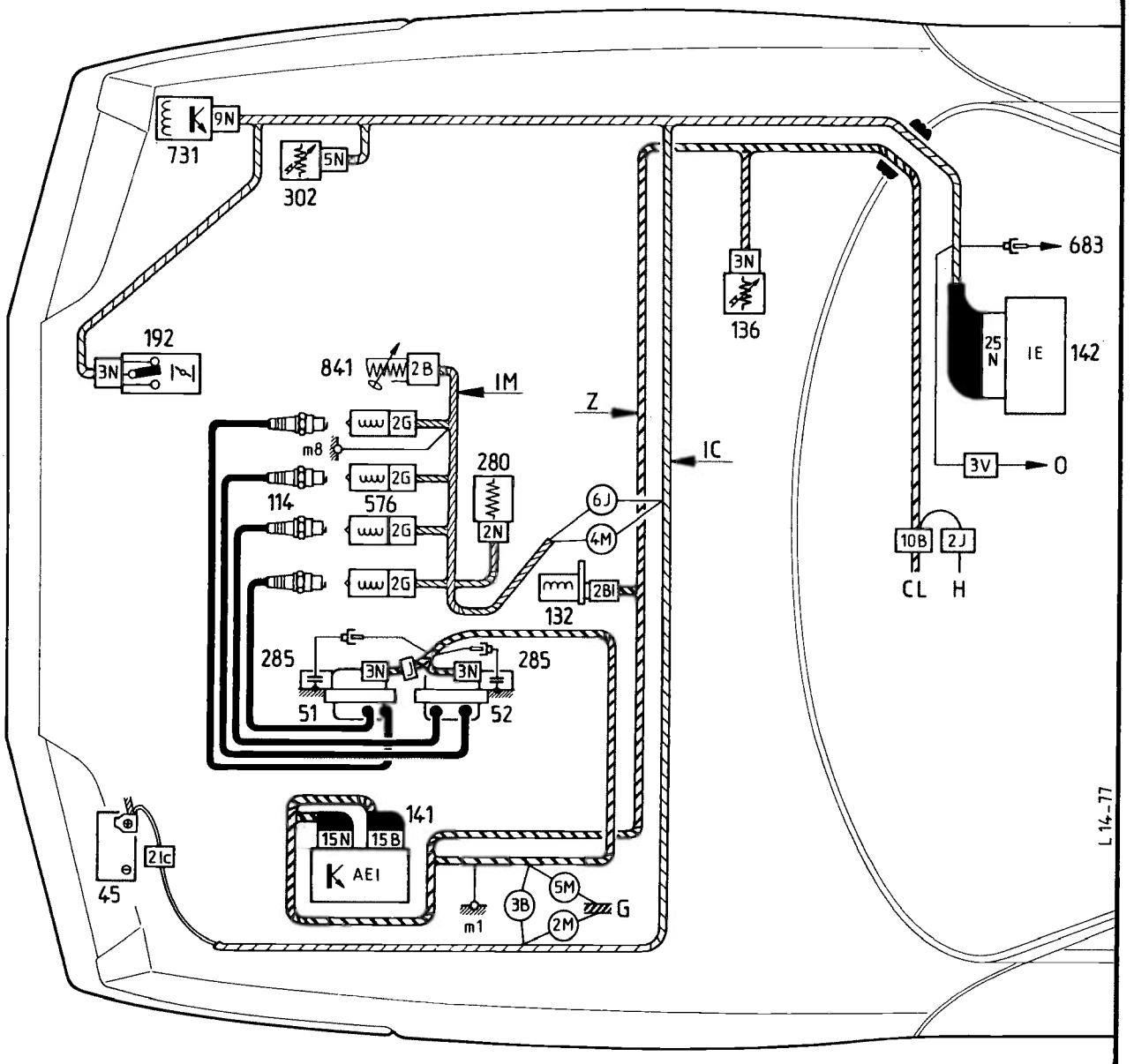

51 & 52	:	Delco Remy 3 474 220
132	:	Thomson (EA) 20 165 653
136	:	Ducellier 527 005 A
141	:	Thomson EA 85 102 F LA8 LD4

114 { Champion L82 Y ⌀ M14 x 1,25 > 0,8 → 0,9 mm < 1,5 → 2 mdaN
Eyquem 755 SX

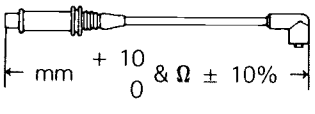

Bougicord 403 1 : 500 mm 2300 Ω 3 : 825 mm 4150 Ω
2 : 700 mm 3450 Ω 4 : 900 mm 4550 Ω

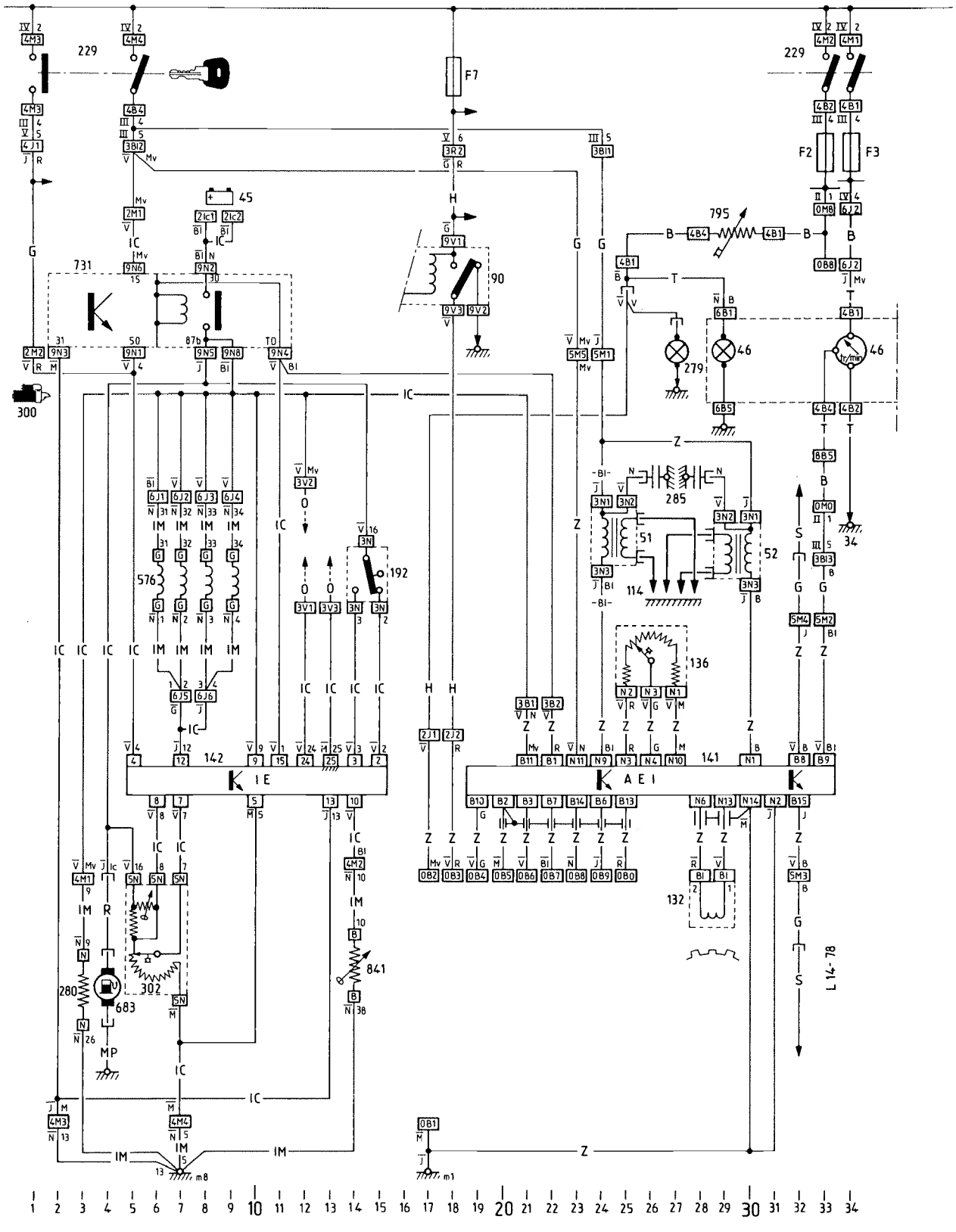

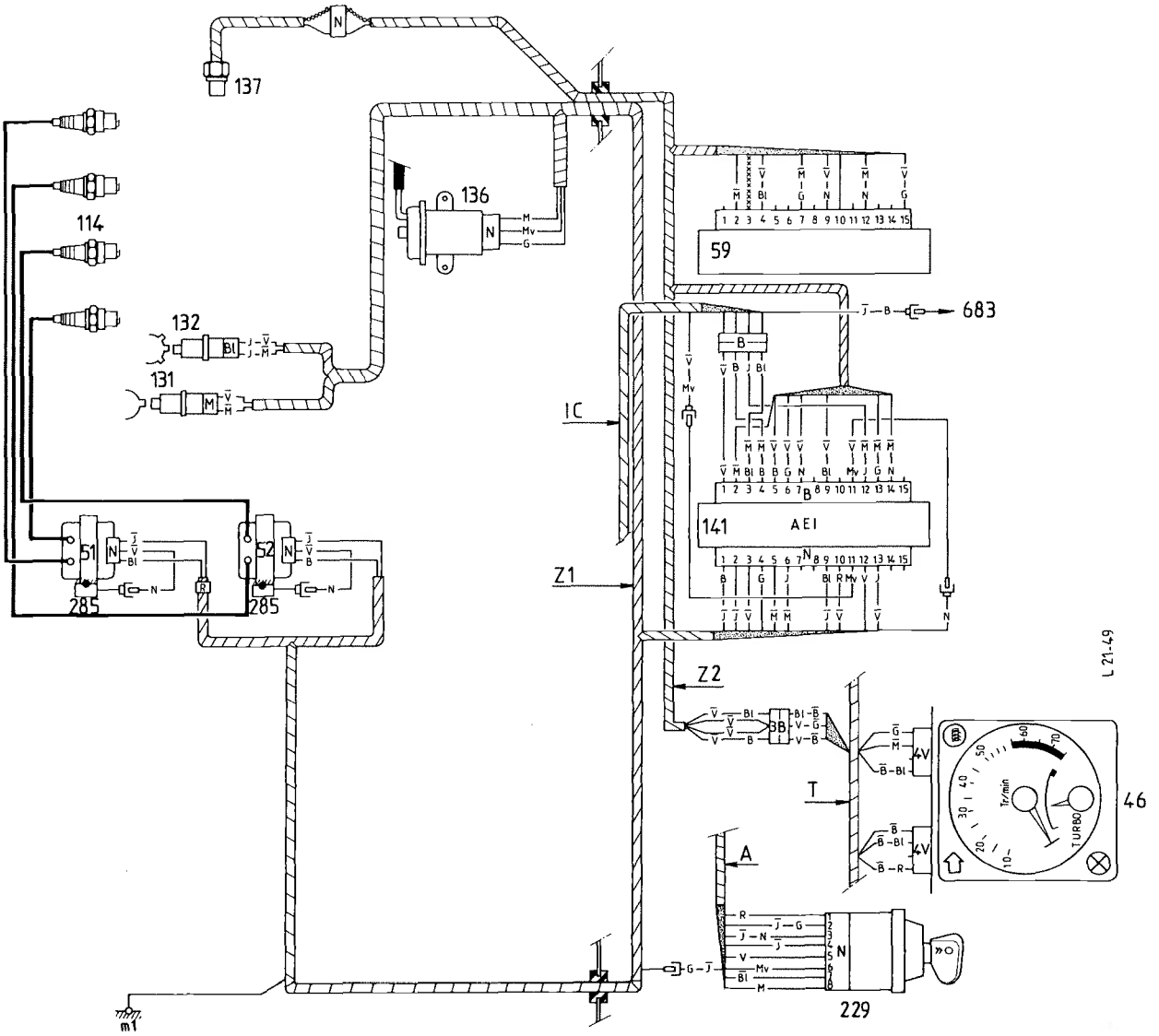

51 & 52	:	Delco Remy 3 474 220
59	:	Melco E 002 B90 131
131 & 132	:	EA Thomson 20 165 653
136	:	General Motors 16 038 177
137	:	Melco E 001 T90 272
141	:	(EA) Thomson 20 165 865 - B - LA 11 - LD6

2 → 2,5 mdaN

114 { Champion L82 / Eyquem 755 X } ⌀ M14 x 1,25 > 0,8 → 0,9 mm <

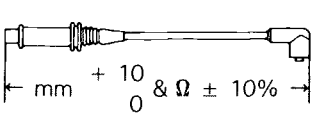

Bougicord 403

1 : 500 mm 2300 Ω		3 : 825 mm 4150 Ω	
2 : 700 mm 3450 Ω		4 : 900 mm 4550 Ω	

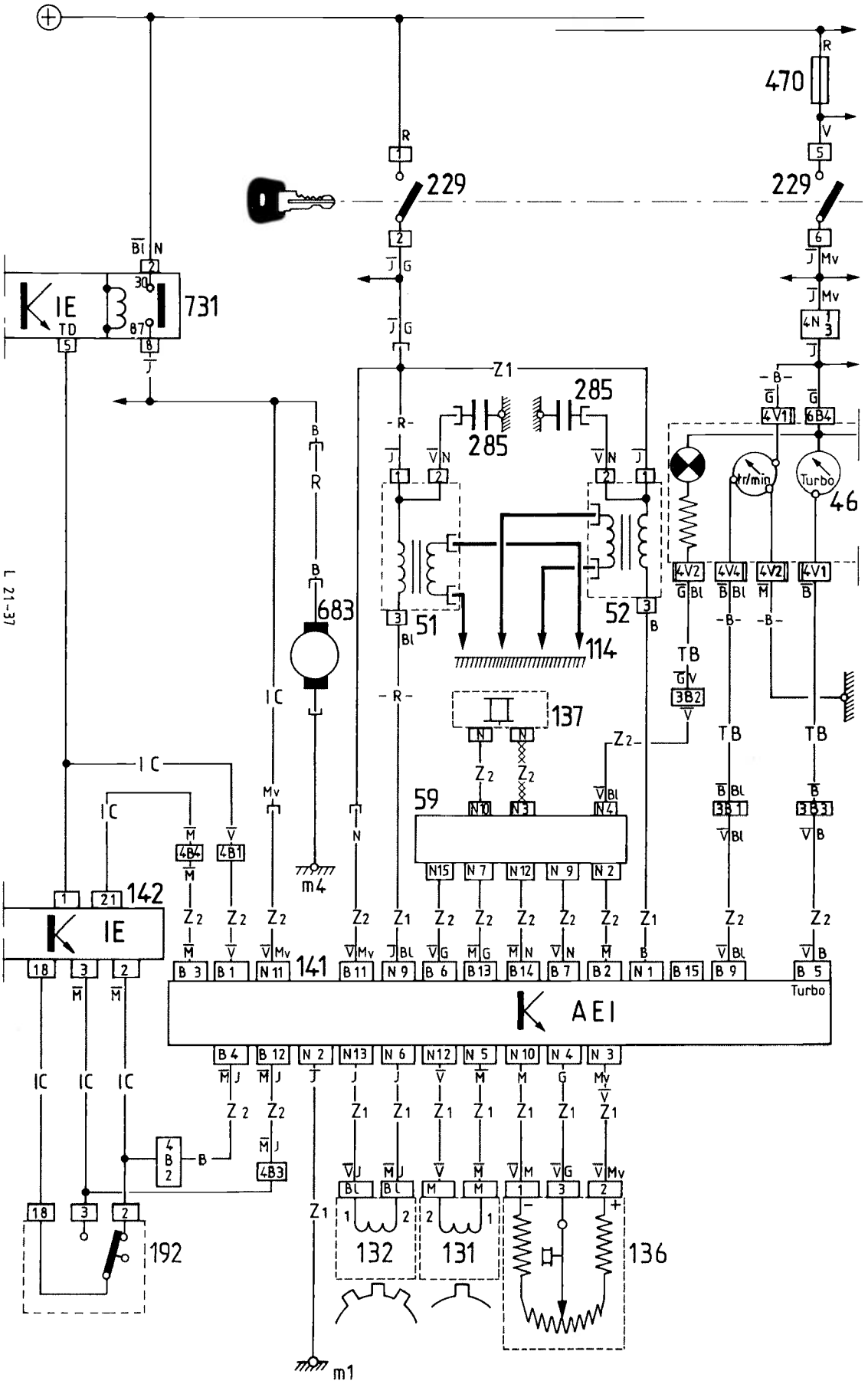

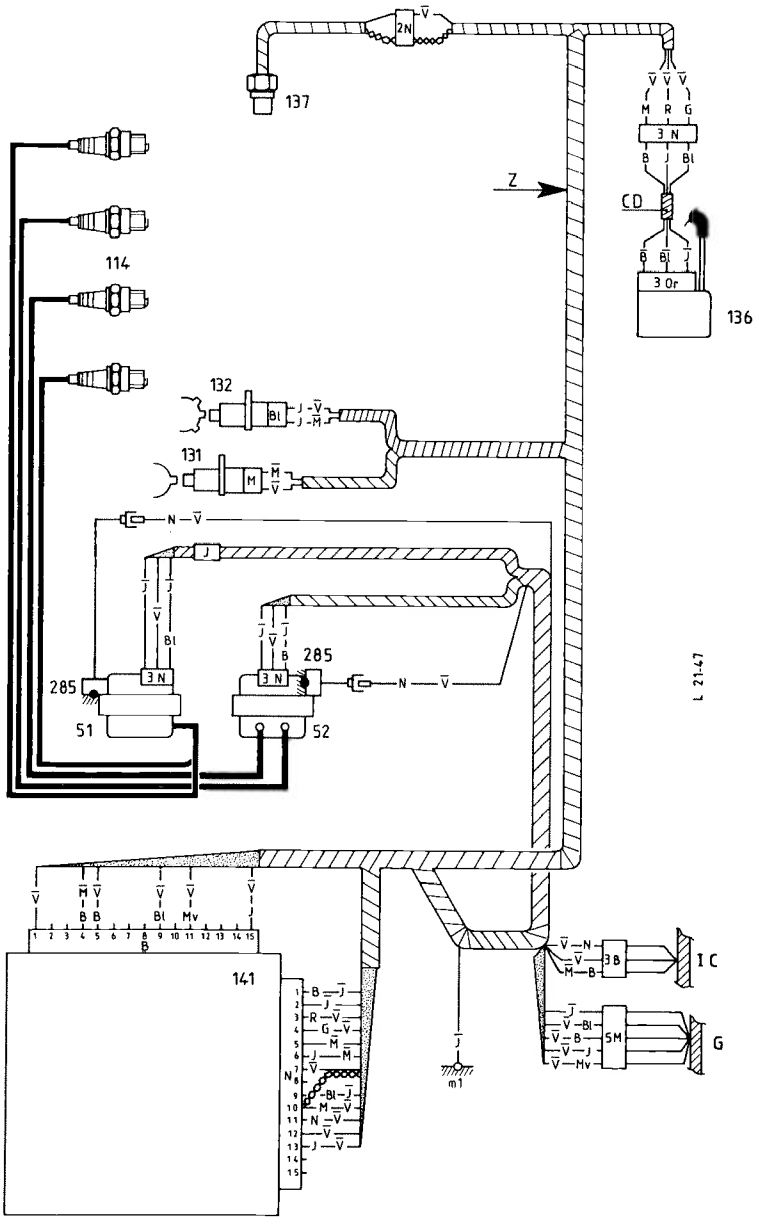

51 & 52	:	Delco Remy 3 474 220
131 & 132	:	EA (Thomson) 20 165 653
136	:	General Motors 16 038 177
137	:	Melco E 001 T90 272
141	:	EA (Thomson) 20 165 951 - C - LA11 - LD6

2 → 2,5 mdaN

114 { Champion L82 / Eyquem 755 X } Ø M14 x 1,25 > 0,8 → 0,9 mm < 1,5 → 2 mdaN

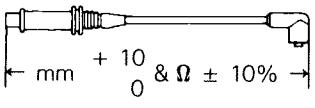

Bougicord 403 1 : 500 mm 2300 Ω 3 : 825 mm 4150 Ω
2 : 700 mm 3450 Ω 4 : 900 mm 4550Ω

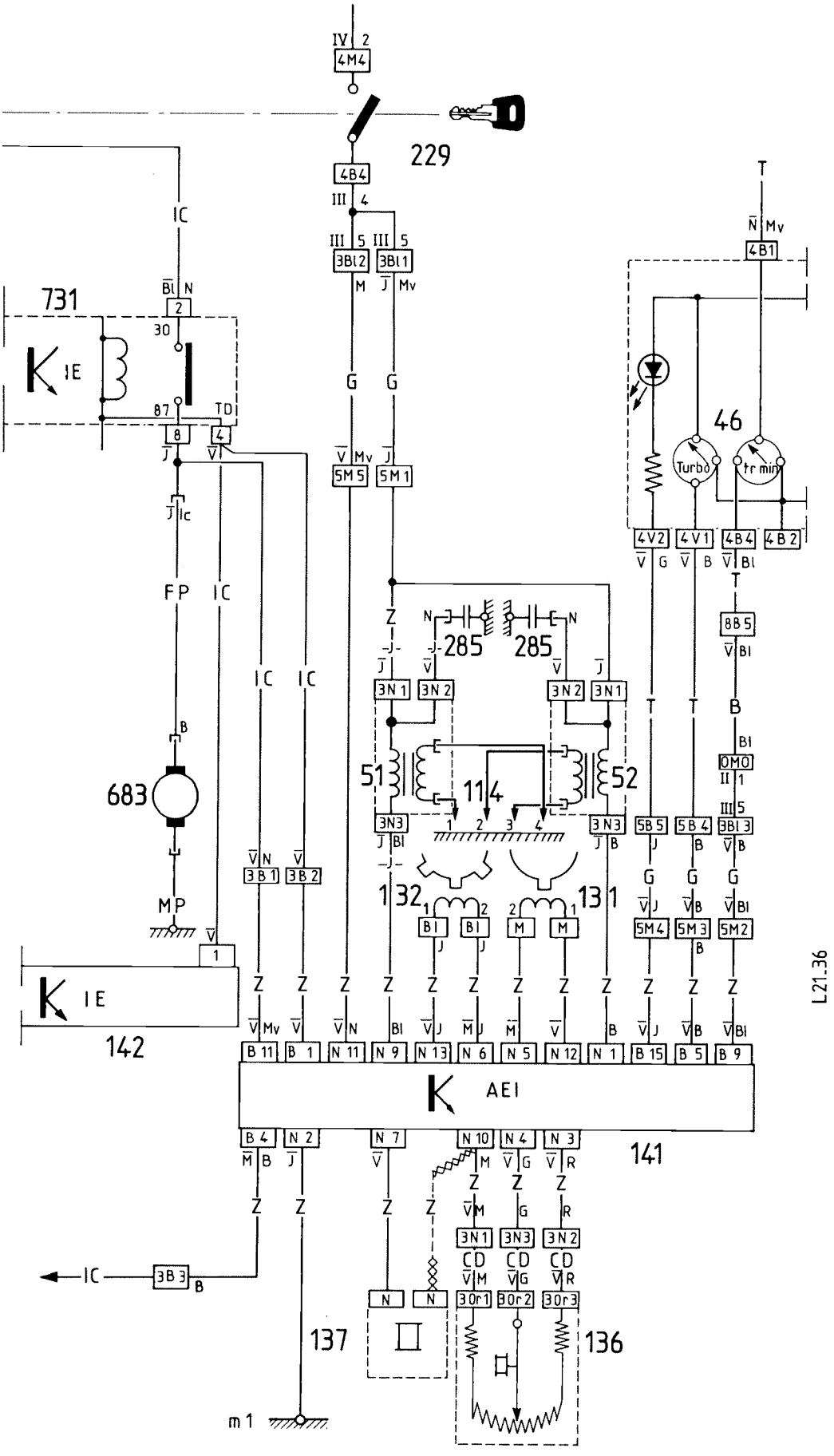

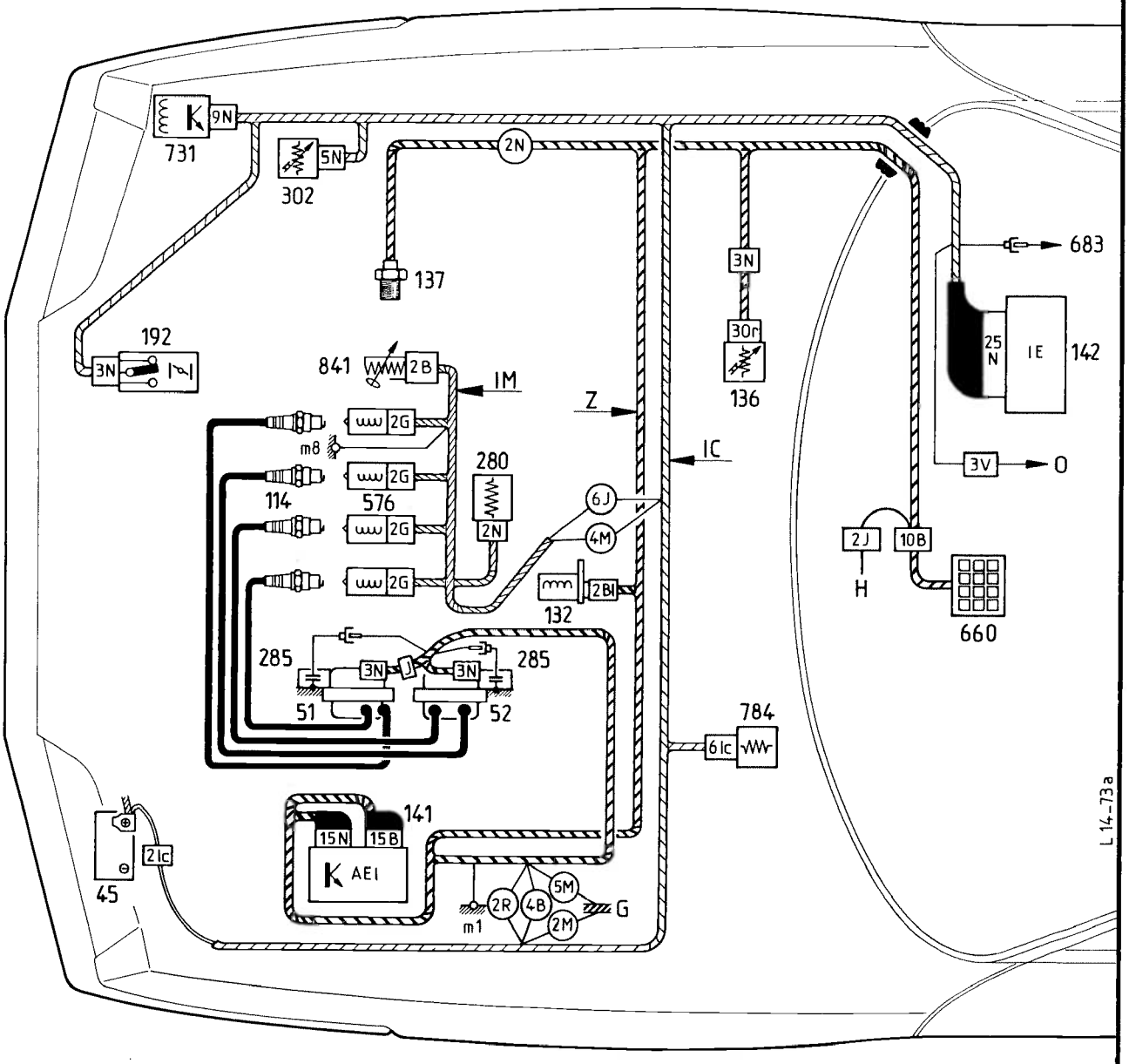

51 & 52 : Delco Remy 3 474 220

132 : EA (Thomson) 20 165 653

136 : General Motor 16 038 177

137 : Melco E 001 T90 272 — 2 → 2,5 mdaN

141 : EA (Thomson) 85 095 - H - EC 002 ED 003

114 { Champion L82 / Eyquem 755 X — Ø M14 x 1,25 — > 0,8 → 0,9 mm < — 1,5 → 2 mdaN

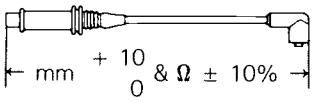

Bougicord 1 : 500 mm 2300 Ω — 3 : 825 mm 4150 Ω

2 : 700 mm 3450 Ω — 4 : 900 mm 4550 Ω

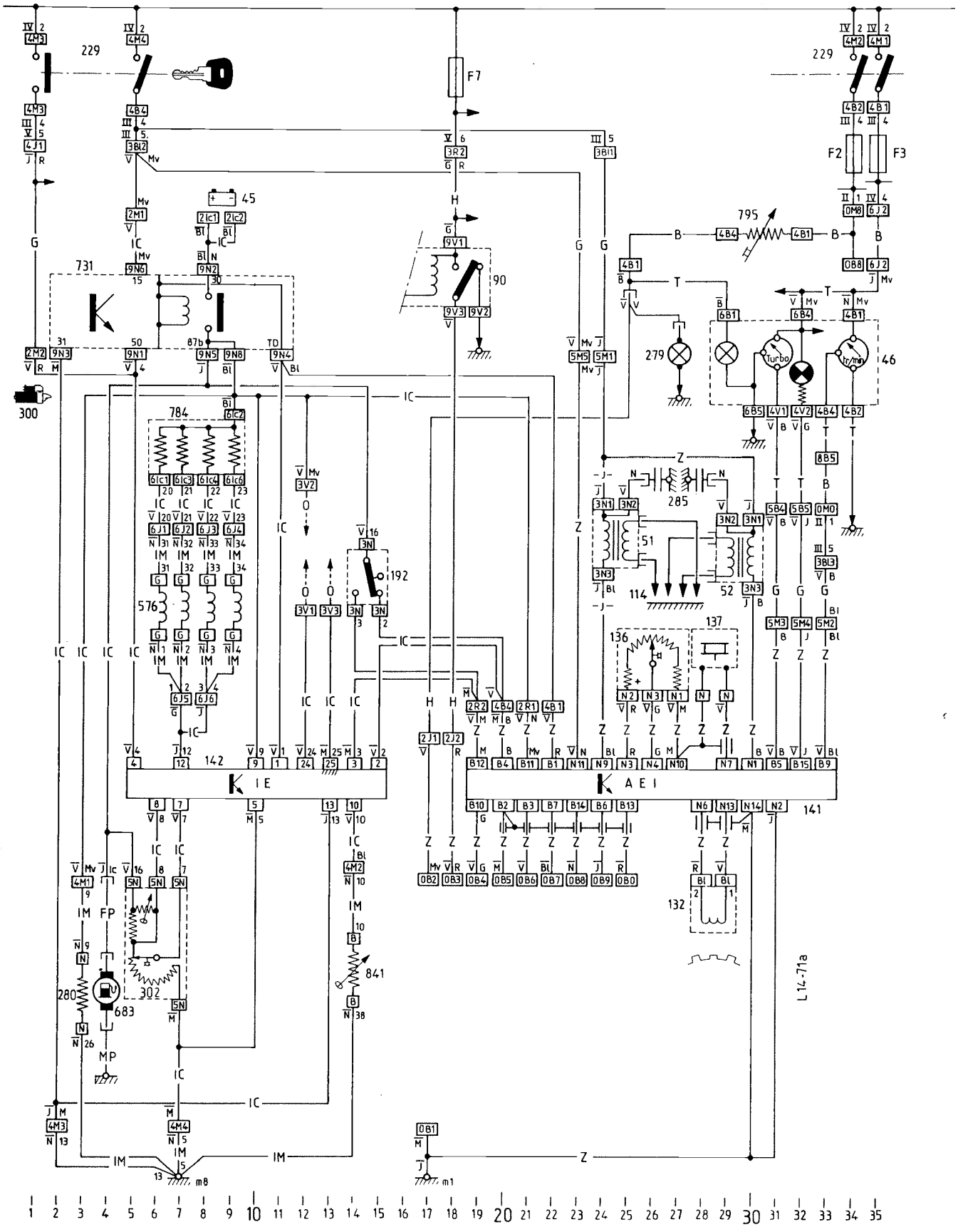

CHECKING THE TRANSISTORISED IGNITION

ELECTRO-MAGNETICALLY TRIGGERED TRANSISTORISED IGNITION

PRELIMINARY CHECKS:

Inspect:
- the connection of the different leads (in particular to coil: a bad connection can cause a high voltage drop preventing the current from passing into the coil primary winding (15 A approx),
- condition of the leads : (circuits broken, short-circuits across screening, etc.),
- condition of the sparking plugs (deposits, cracks due to overtightening),
- condition of the distributor cap (wear, cracks) and the rotor arm (loose).

Disconnect the interference suppression capacitor and the diagnosis harness, from the circuit.

Carry out a «spark test» with the starter motor and one plug earthed.

IMPORTANT: The module may be destroyed if one of the secondary wires is too far from the earth.

CHECKING THE COIL (3) *(ignition module and supply to coil disconnected)*:

MEASUREMENT OF	Ohmmeter placed between channels No.	Reading (in Ω)
Primary winding resistance	1 and 4	DUCELLIER 0.76 to 0.84 BOSCH 0.74 to 0.90
Secondary coil resistance	1 or 4 and HT coil contact	DUCELLIER 5700 to 6300 BOSCH 7425 to 9075
Insulation	1 or 4 and earth	∞

Checking the coil power supply using a lamp or a voltmeter:
- Switch on the ignition: there should be a 12V current between the ''BAT'' terminal of the coil and the earth.
- Switch off ignition.

CHECKING THE IGNITION MODULE (2):

The module is designed to function with the ignition distributor and the coil.
- Do not operate the module without cooling (aluminium plate heat sink) or ventilation.
- Do not check the module with an ohmmeter since the results will be non-significant.

Checking the module power supply using a lamp or a voltmeter:
- Disconnect the module connector
- Switch on the ignition: there should be a 12 V current between the channel 4 of the connector and the earth.
- Switch off ignition.

The low voltage ignition circuit being connected (in working order), disconnect the coil - distributor HT lead on the distributor side and connect it up to an earthed plug: by sending short pulses (+ 12 V) to channel 5 (red wire) from the module, sparks should occur at the plug (simulation of distributor spark current).

CHECKING THE IGNITION DISTRIBUTOR (1):

Test the impulse generator with the *module connector disconnected*.

MEASUREMENT OF:	Ohmmeter placed between channels No.	Readings (in Ω)
Resistance	5 and 6	950 to 1250 approx.
Earth	2 and engine earth	0
Insulation	5 and 2 then 5 and 3	∞

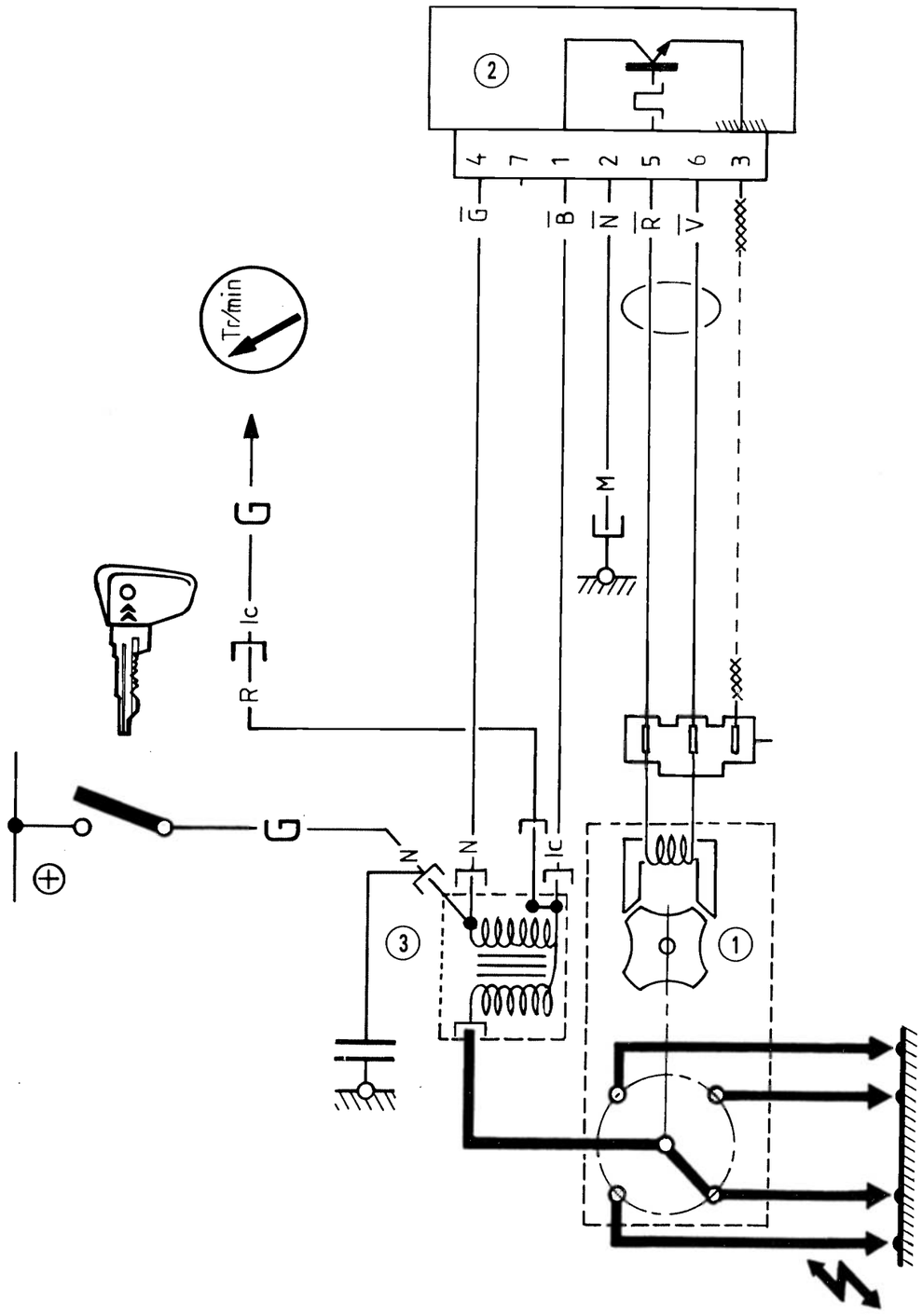

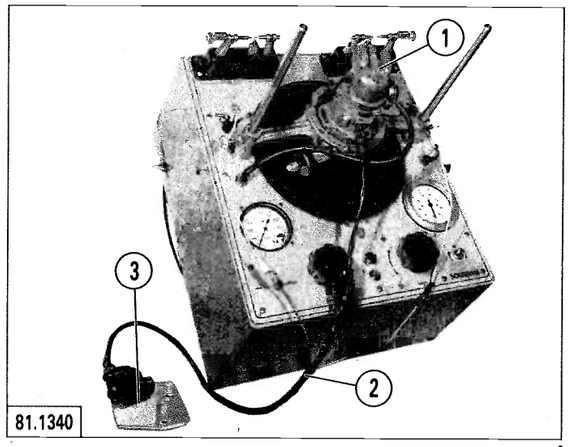

81.1340

I

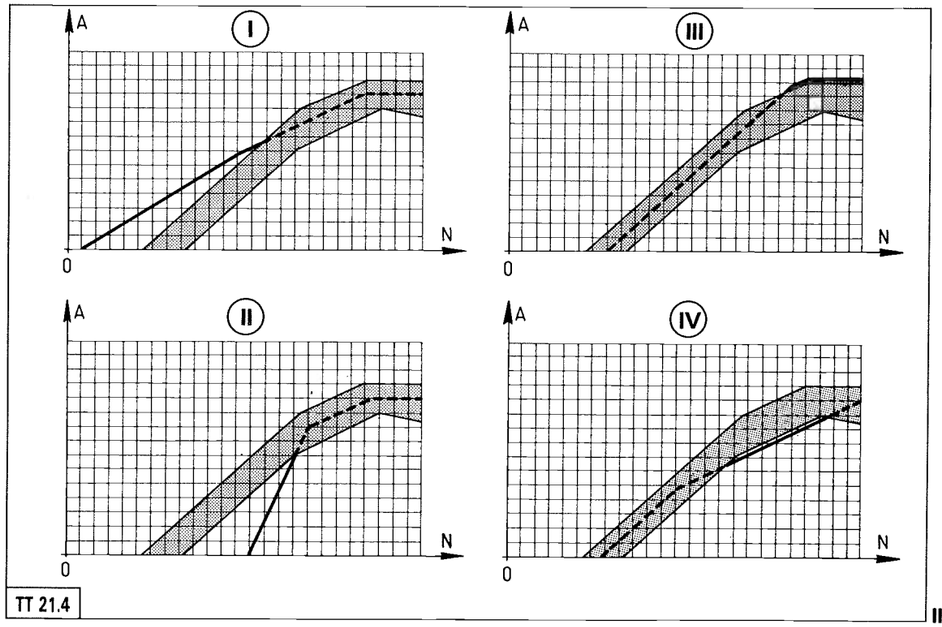

TT 21.4

II

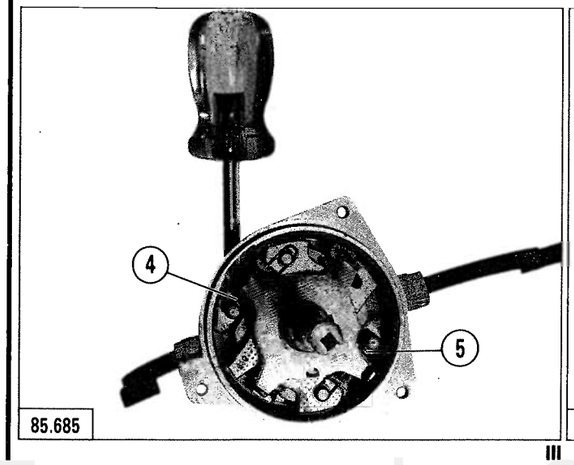

85.685

III

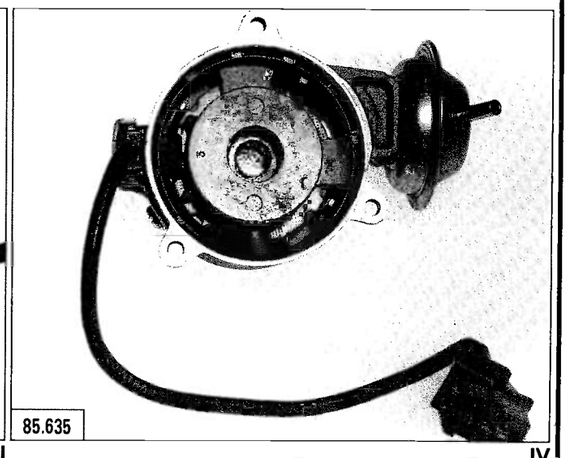

85.635

IV

CX 20 829 A5

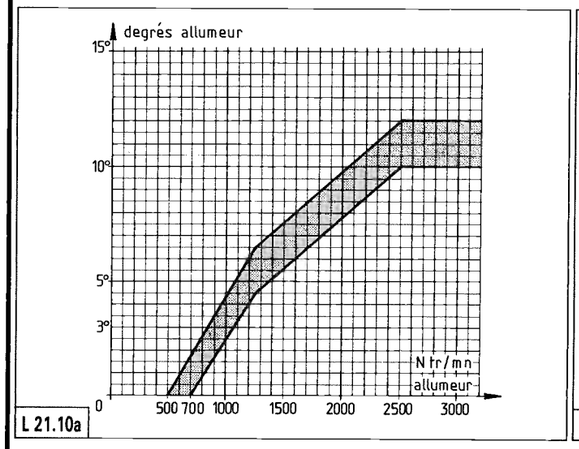

L 21.10a

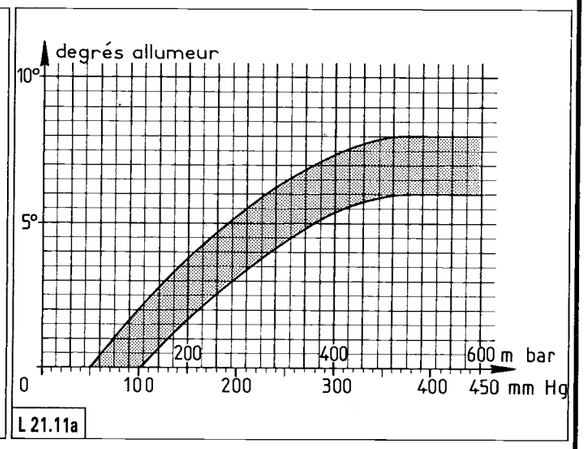

L 21.11a

CX 22 J6T A 500

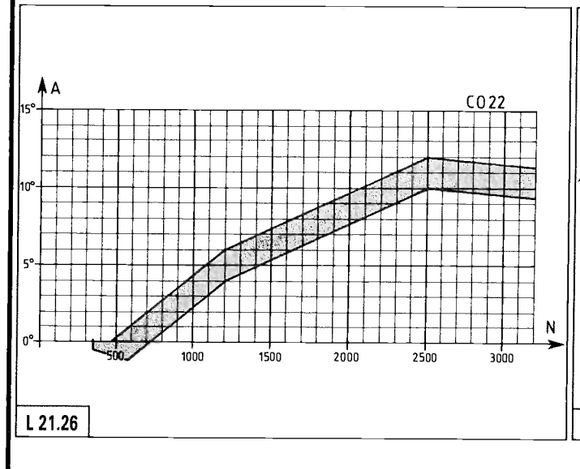

L 21.26

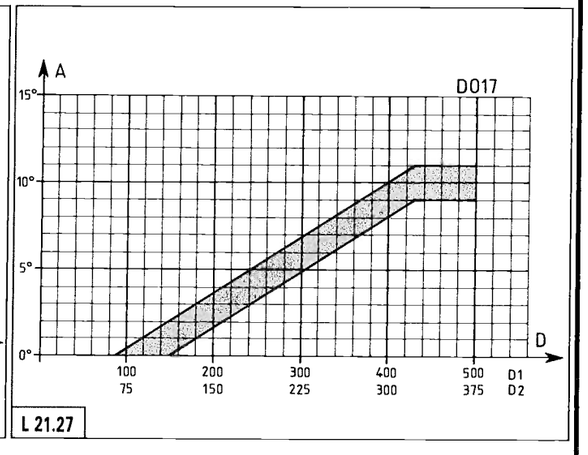

L 21.27

CHECKING THE DISTRIBUTOR ON TEST BENCH, Fig. I

To check the magnetic distributor on the bench, a transistorised module in good condition is essential. Use the vehicle module and leads if the bench is not equipped. The ignition coil is not required.

CHECKING THE CENTRIFUGAL SPARK ADVANCE

Fit the distributor onto the bench:

Connect module (3) and distributor (1) to the harness (2).

Connect wiring harness plugs (2) to test bench:

To check the distributor: **Fig. II and III.**

Compare the distributor centrifugal spark advance curve with the theoretical curve:

- If the curve plotted does not correspond to the theoretical curve, modify the spring tension by bending the spring hooking point support plate.

In order to do this, remove the cap and alter the spring tension by bending the attaching bracket, **Fig. III and IV.** (**D :** release the spring, **T :** tighten the spring)

Curve measured	Spring concerned	Bending direction
I	5	**T**
II	5	**D**
III	4 released	**T**
IV	4 not in use	**D**

CHECKING THE VACUUM SPARK ADVANCE

Compare the distributor vacuum spark advance curve with the theoretical curve.

NOTE: *The vacuum spark advance device is not adjustable: If the curve measured is out of tolerance, change the capsule.*

ADJUSTMENT ON THE VEHICLE

Distributor timing:

- Fit the distributor, positioning it approximately midway between the slotted holes.
- Start the engine.
- *The vacuum capsule being disconnected,* use a strobe lamp to set the distributor timing to:

	CX20	CX22
Advance (degrees before TDC)	10°	10°
Engine rpm	750	800

- Reconnect the vacuum capsule.

TEST PROCEDURE USING CONVENTIONAL EQUIPMENT

on the CX 2500 vehicle with M 25/659 type engine

- **Checking the voltage in the secondary winding** of each coil

① *Operating procedure:* Disconnect one sparking plug and bring the end of the released wire 1 cm approx. from the crankcase. (Repeat the operation for each set of cylinders).
- Operate the starter motor:

if a spark occurs	The incident is not to be attributed to the I.E.I. Check the injection system, the valve timing, the rockers etc. - examine the engine sparking plugs. - inspect the circuit between the I.E.I. control unit white terminal 1 and the fuel injection control unit terminal 15 for continuity: read 0 Ω, the connectors from the control units being disconnected.
if no spark occurs	The incident is due to the ignition system → carry on to next tests.

- **Working on the primary winding** of each coil

② *Operating procedure:* Connect a 12V warning lamp of the Wedge base type between the negative and the positive terminals of the coil (i.e. between terminals 1 and 3, connectors connected to coil).
- Operate the starter motor:

if no regular breaks occur	incident in the coil primary winding or incident in the E.C.U. control circuit.
if regular breaks occur	incident in the secondary winding

The following checks are to be carried out with I.E.I. and fuel injection control units connectors disconnected.

- **Checking the coil primary windings:**

③ *Operating procedure:* Measure the resistance between terminals 1 and 9 of the I.E.I. control unit black connector: Read ≃ 2.5 Ω.
Warning: the ignition should be switched off.
If the reading is incorrect, investigate for a failure in this circuit.

- **Checking the E.C.U. pick up sensors:**

④ *Operating procedure:* Measure the resistance between terminals 5 and 12 then 6 and 13 of the I.E.I. control unit black connector: Read ≃ 50 Ω.

- **Checking the feed for the E.C.U. and earth connection,** with ignition switched on.

⑤ *Operating procedure:* Measure the voltage between terminals 10 (white connector) and 2 (black connector) of the I.E.I. computer: Read the battery voltage.
The same check should be carried out between terminals 2 (earth) and 11 of the black connector: ignition switched on, starter motor operated, read the voltage.

⑥ • **Check that the distance between the datum sensor and the flywheel ring is 1 mm ± 0.5.**

⑦ • **Incident on the ignition circuit secondary winding:** make sure that the resistance of each coil winding is: 3500/4000 Ω.

TEST PROCEDURE USING CONVENTIONAL EQUIPMENT

on the CX 2500 Turbo vehicle with M 25/662 type engine

- **Checking the voltage in the secondary winding** of each coil

① *Operating procedure:* Disconnect one sparking plug and bring the end of the released wire 1 cm approx. from the crankcase. (Repeat the operation for each set of cylinders).
- Operate the starter motor,

if a spark occurs	The incident is not to be attributed to the I.E.I. Check the injection system, the valve timing, the rockers etc. - examine the engine sparking plugs. - inspect the circuit between the I.E.I. control unit white terminal 1 and the fuel injection control unit terminal 15 for continuity: read 0 Ω, the connectors from the control units being disconnected.
if no spark occurs	The incident is due to the ignition system → carry on to next tests.

- **Working on the primary winding** of each coil

② *Operating procedure:* Connect a 12V warning lamp of the Wedge base type between the negative and the positive terminals of the coil (i.e. between terminals 1 and 3, connectors connected to coil).
- Operate the starter motor,

if no regular breaks occur	incident in the coil primary winding or incident in the E.C.U. control circuit.
if regular breaks occur	incident in the secondary winding

The following checks are to be carried out with I.E.I. and fuel injection control units connectors disconnected.

- **Checking the coil primary windings:**

③ *Operating procedure:* Measure the resistance between terminals 1 and 9 of the I.E.I. control unit black connector: Read ≃ 2.5 Ω.
Warning: the ignition should be switched off.
If the reading is incorrect, investigate for a failure in this circuit.

- **Checking the E.C.U. pick up sensors:**

④ *Operating procedure:* Measure the resistance between terminals 5 and 12 then 6 and 13 of the I.E.I. control unit black connector: Read ≃ 50Ω

- **Checking the feed for the E.C.U. and earth connection,** with ignition switched on.

⑤ *Operating procedure:* Measure the voltage between terminals 10 (white connector) and 2 (black connector) of the I.E.I. computer: Read the battery voltage.
The same check should be carried out between terminals 2 (earth) and 11 of the black connector: ignition switched on, starter motor operated, read the voltage.

⑥ • **Check that the distance between the datum sensor and the flywheel ring is 1 mm ± 0.5.**

⑦ • **Incident on the ignition circuit secondary winding:** make sure that the resistance of each coil winding is: 3500/4000Ω.

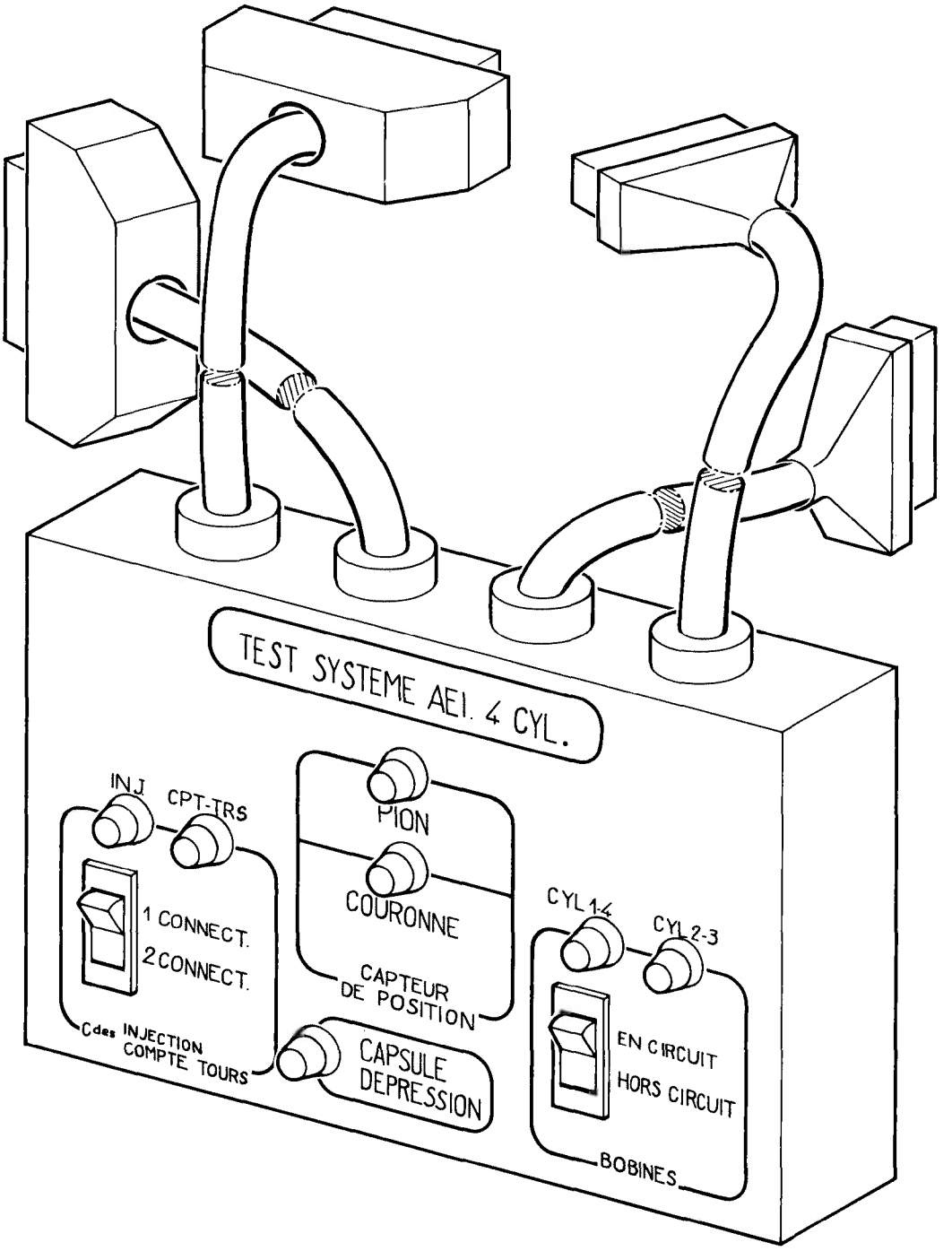

USING CHECKING EQUIPMENT OUT 106 029T

The instrument can be utilised on CX **2400 I.E.** with naturally aspirated engine and CX 2500 I.E. TURBO. However, on CX **2400 I.E.** having an integrated electronic ignition system with a single connector E.C.U., it is necessary to proceed as follows:
- connect the I.E.I. control unit to the black connector of OUT 105 029.T
- **set the switch** of the apparatus to the "**1 connector**" position
- I.E.I. with 1 or 2 sensors can be checked with this device.

a) Testing the ignition coil primary winding:

— The warning lamps, one at each coil, **blink rythmically with the impulses** transmitted to their primary winding. Steady blinks indicate that there is enough current to generate a spark in the secondary winding.

— The switch situated under the warning lamps makes it possible for the primary windings of both coils to be insulated, by pushing, in the "out of circuit" position, any interference coming from the HT circuit when the frequency of illumination for sensor warning lamps is checked.

— If the warning lamps blinking is correct, the failure may be caused by:
- the ignition information to the fuel injection control unit, (paragraph c),
- the secondary winding (coil wires, coils),
- any other item required for a correct operation of the engine such as injection, valve gear, rockers etc.)

— If the warning lamps blinking is not correct, examine the control unit warning lamps, (paragraph b),

b) Testing the sensors:

— The warning lamp connected with the "datum" sensor blinks rythmically with the impulses transmitted by the peg, i.e. **one blink per engine revolution, (2 sensors fitted)**.

— The warning lamp connected with the "flywheel pick up" sensor, blinks rythmically with the impulses sent by the flywheel teeth.
The frequency of the flashes is such as they can hardly be seen.
Apparently, the lamp stays on, (1 or 2 sensors fitted).

On the CX 2400 I.E. and 2500 I.E. with normally aspirated engine, the vacuum pressure warning lamp **lights up momentarily** after a sharp acceleration: this warning lamp is no longer usable on the CX 2500 I.E. with turbocharger.

c) Tests related with the I.E.I. control unit:

E.C.U. functions:

— The rev. counter warning lamp **blinks rythmically with the impulses** transmitted to the rev. counter.

— The injection warning lamp **blinks rythmically with the impulses** sent to the fuel injection control unit.

On CX vehicles fitted with I.E.I.

These vehicles having fixed sensors, are not equipped with TDC sensors

1) Marking the TDC:

Draw a mark on the crankcase, in the opening located next to the flywheel pick up sensor

- Remove the 1st or 4th cylinder sparking plug
- **Finding the T.D.C. with a locating peg:** jack up the vehicle on one side and engage a gear.
  Rotate the road wheel in one direction.
  Mark down the place where locating pin will enter the flywheel.
  Draw a temporary line on the flywheel ring. Rotate the lifted road wheel in the opposite direction, with the pin still engaged. Mark the position of the pin in the flywheel ring. Take an average of these two marks- which corresponds to the TDC. Draw a white paint mark on the flywheel ring, opposite the one on the crankcase.
- Refit the sparking plug.

2) Testing the development of the speedometer advance curve:

- Connect a phase shifting strobe lamp
- Set the strobe lamp to the 2 cyl. u stroke or 1 cyl. 2 stroke position.
- Disconnect the pipe of the load correction depression operated capsule from the inlet manifold. Blank off the orifice.
- Run the engine and check the advance curve development.

3) Testing the operation of the air-operated capsule on normally aspirated engines:

- Blank off the vacuum capsule venting orifice.
- Connect a vacuum pump to the capsule pipe.
- Run the engine to 2.000 rpm; record the advance reading.
- Create a 400 mbar depression in the vacuum capsule.
  The ignition advance increases by about 15° and the engine accelerates to 200 rpm approx.

On turbocharged engines:

- Connect a vacuum-pressure pump to the capsule pipe.
- Rotate the engine to 200 rpm. Read the advance.
- Build up a 500 mbar depression in the capsule:
  - There will be a 22° increase of the ignition advance, approx. and about a 500 rpm engine acceleration.
- Build up a 500 mbar pressure in the capsule:
  - There will be a 11° decrease of the ignition advance, approx. and about a 500 rpm engine slowing down
- Pinking: occurs when the engine speed exceeds 1.000 rpm. The warning lamp should light up in the following cases:
  - anti-knock sensor system broken or short-circuited,
  - knock sensor broken or short circuited,
  - improper earthing provided by the knock sensor.
- Check the operation with the strobe lamp, and a 2.000 rpm engine speed Record the ignition timing.
- Disconnect the knock sensor:
  The ignition advance decreases by 10° approx.

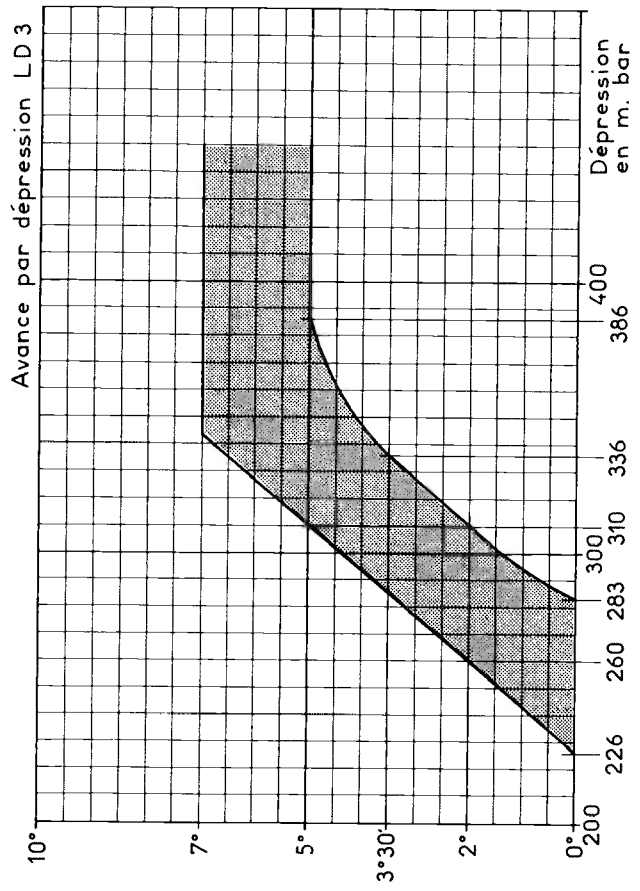

CX 2400

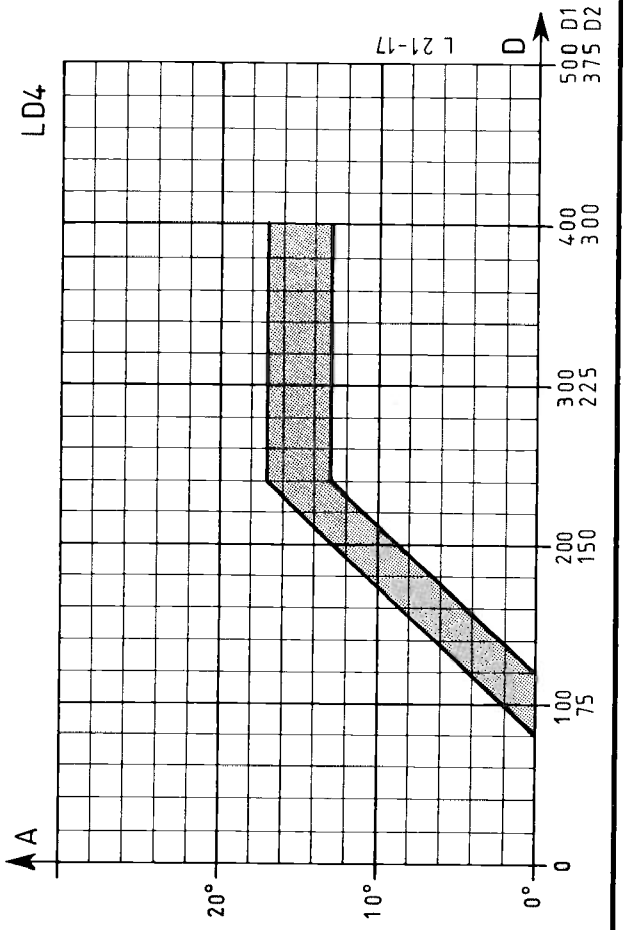

CX 2500

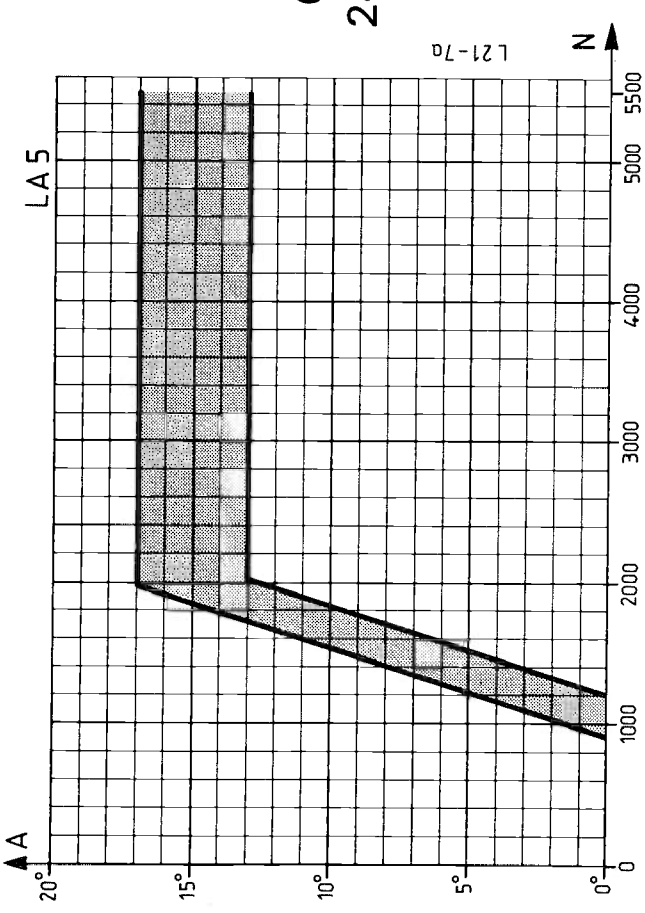

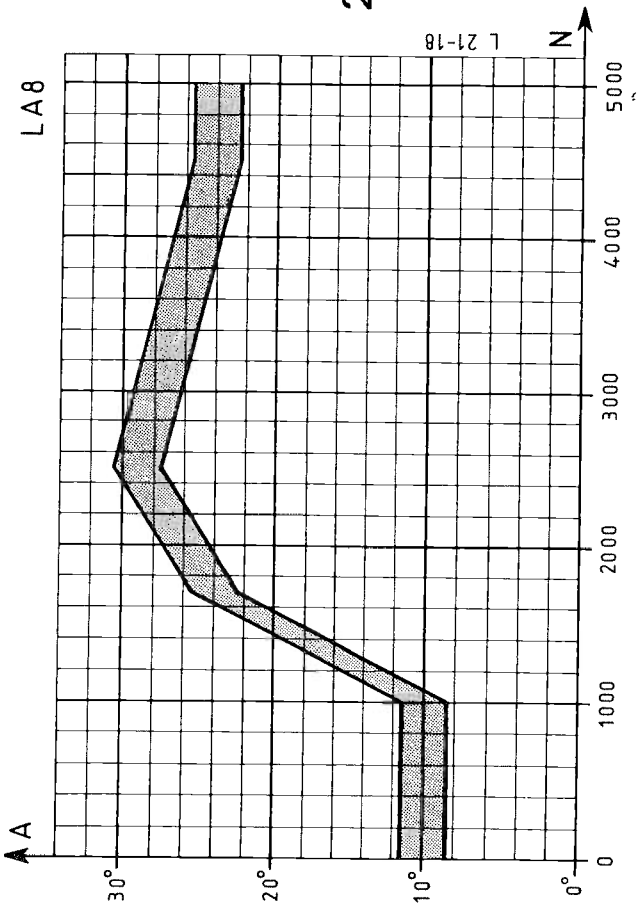

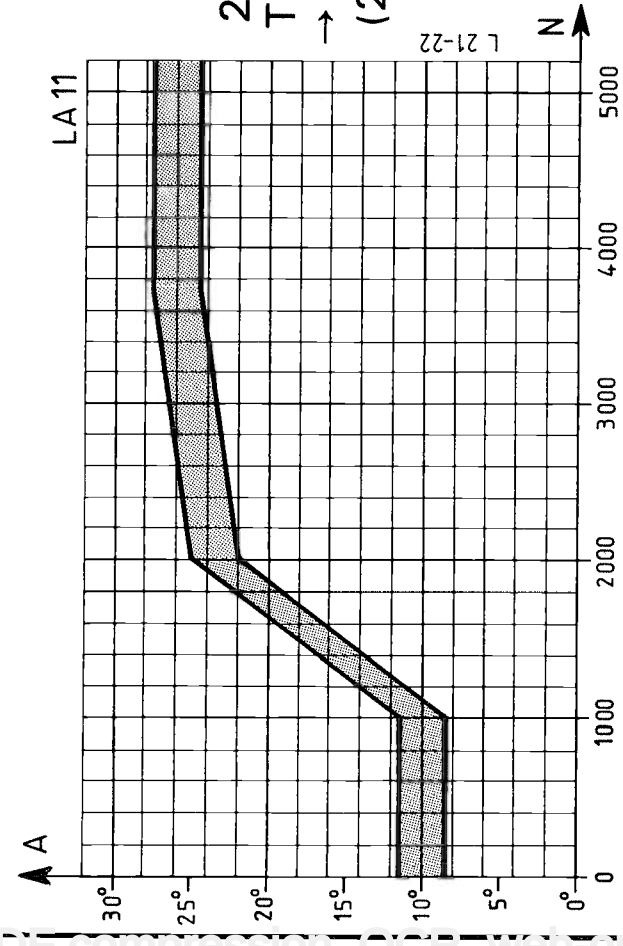

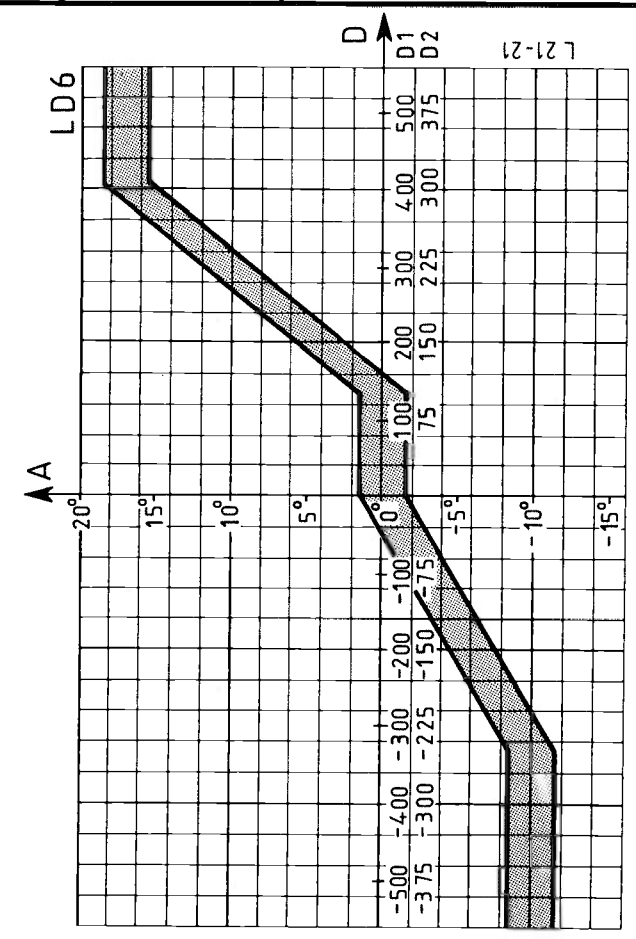

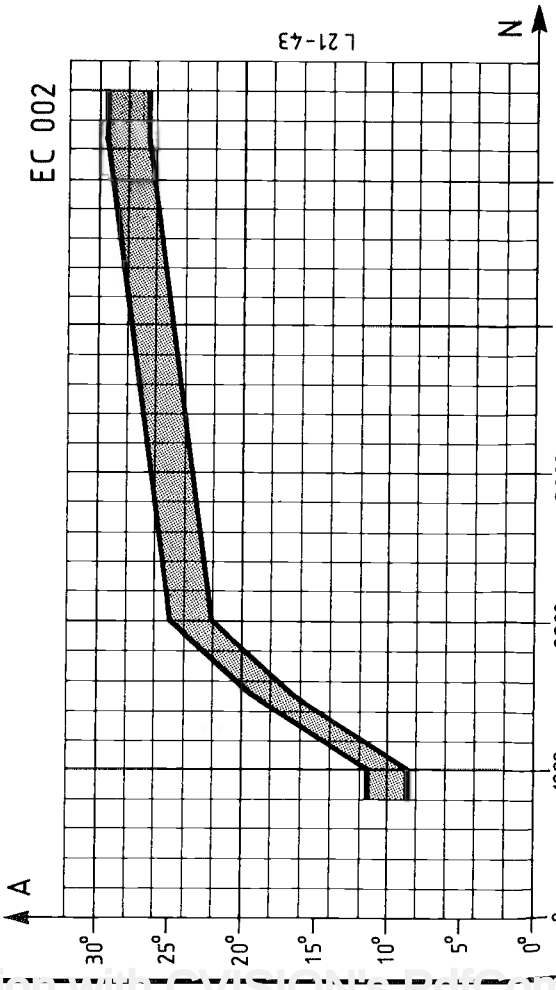

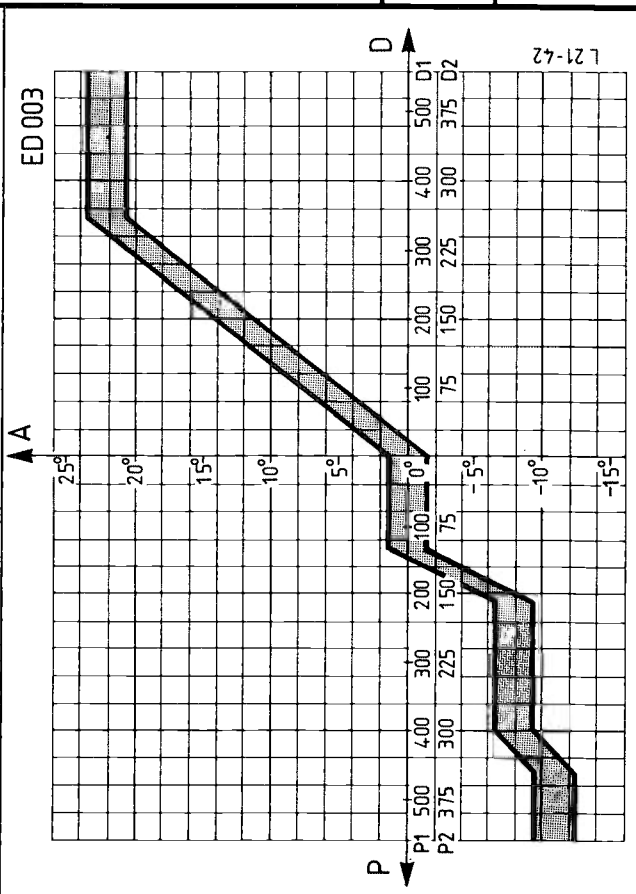

LIST OF OPERATIONS APPEARING IN THE CHAPTER: CLUTCH

OPERATION No.	DESCRIPTION	OPERATION △ TEXTS	OPERATION ○ SYMBOLS	VEHICLE CONCERNED ENGINE TYPE: 20 Petrol 829 A 5	22 Petrol J6T A 500	25 Fuel Injection 25/659	25 Prestige 25/659	25 Petrol Turbo 25/662	25 Prestige Turbo 25/662	25 Diesel 25/660	25 Diesel Turbo 25/648	25 Limousine Diesel Turbo 25/648	20 Safari Petrol + Familiale 829 A 5	25 Safari Petrol Injection 25/659	25 Safari Diesel + Familiale 25/660	25 Safari Diesel Turbo 25/648	Ambulance 829 A 5 or 25/660		
MA 312/1	Tools		○	X	X	X	X	X	X	X	X	X	X	X	X	X	X		
MA 312.00/1	Specification and particular features of the clutch		○	X	X	X	X	X	X	X	X	X	X	X	X	X	X		
MA 312.0/1	Clutch cable adjustment		○	X	X	X	X	X	X	X	X	X	X	X	X	X	X		

OUT 20 **6017 T**

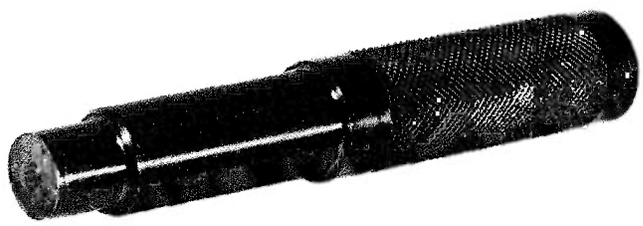

79.260

OUT 30 **4062 T**

81.813

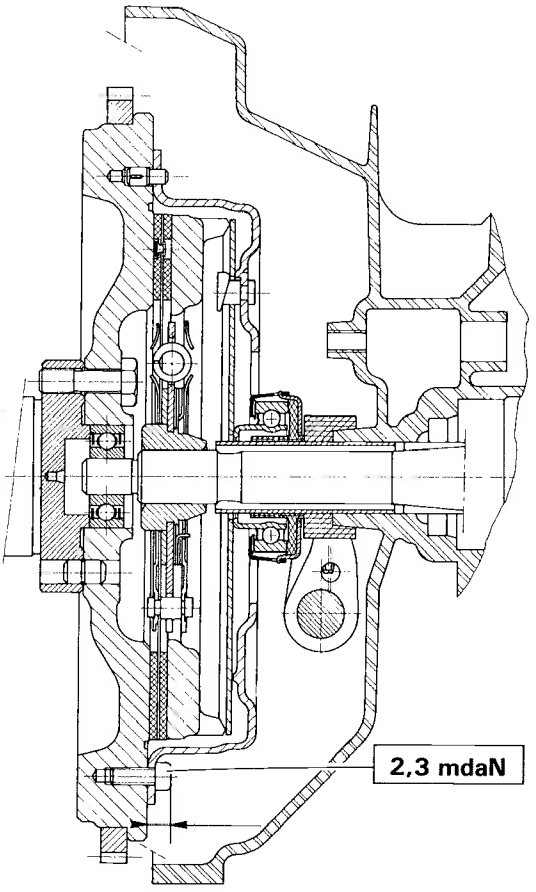

→ 10/85	829.A5	215 mm	8	21	215 CP 450
	J6T A 500				
10/85 →	829.A5				215 CP 510
	J6T A 500				
	M25/660	228,6 mm			235 DBR 450
	M25/648				235 DBR 525
	M25/659				
	M25/662 M25/666 M25/669				235 DBR 575

TT → 6/85

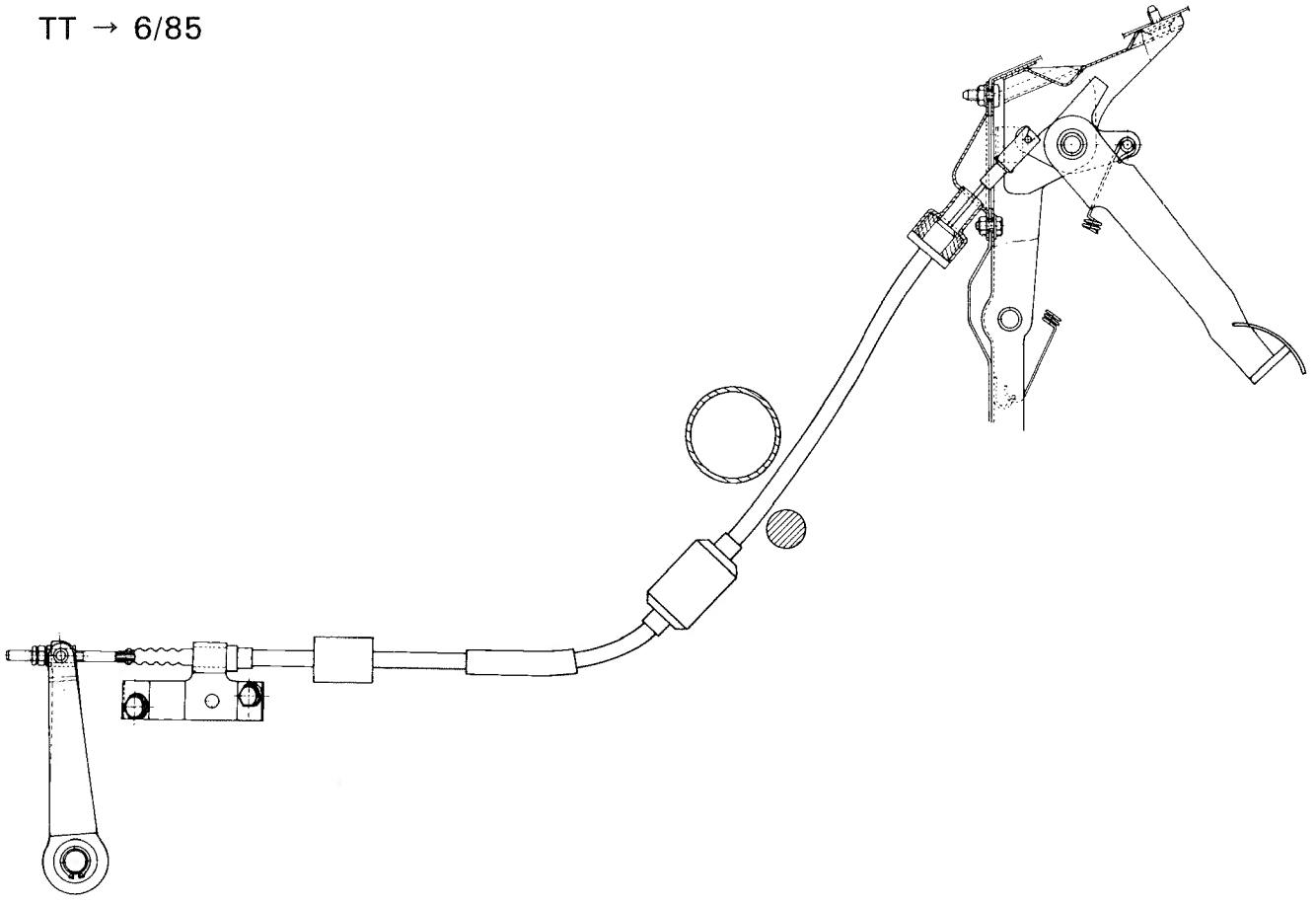

TT 6/85 →

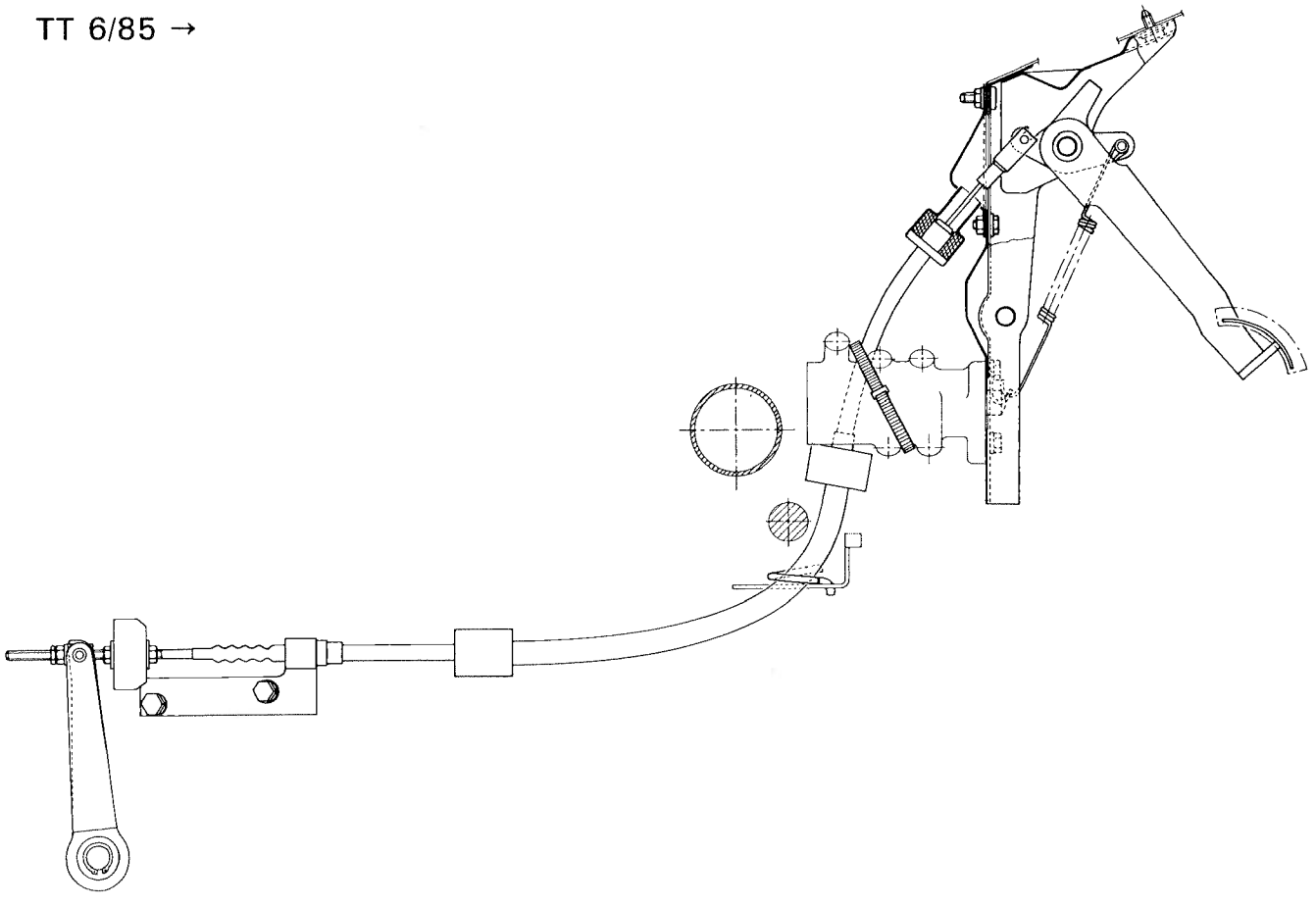

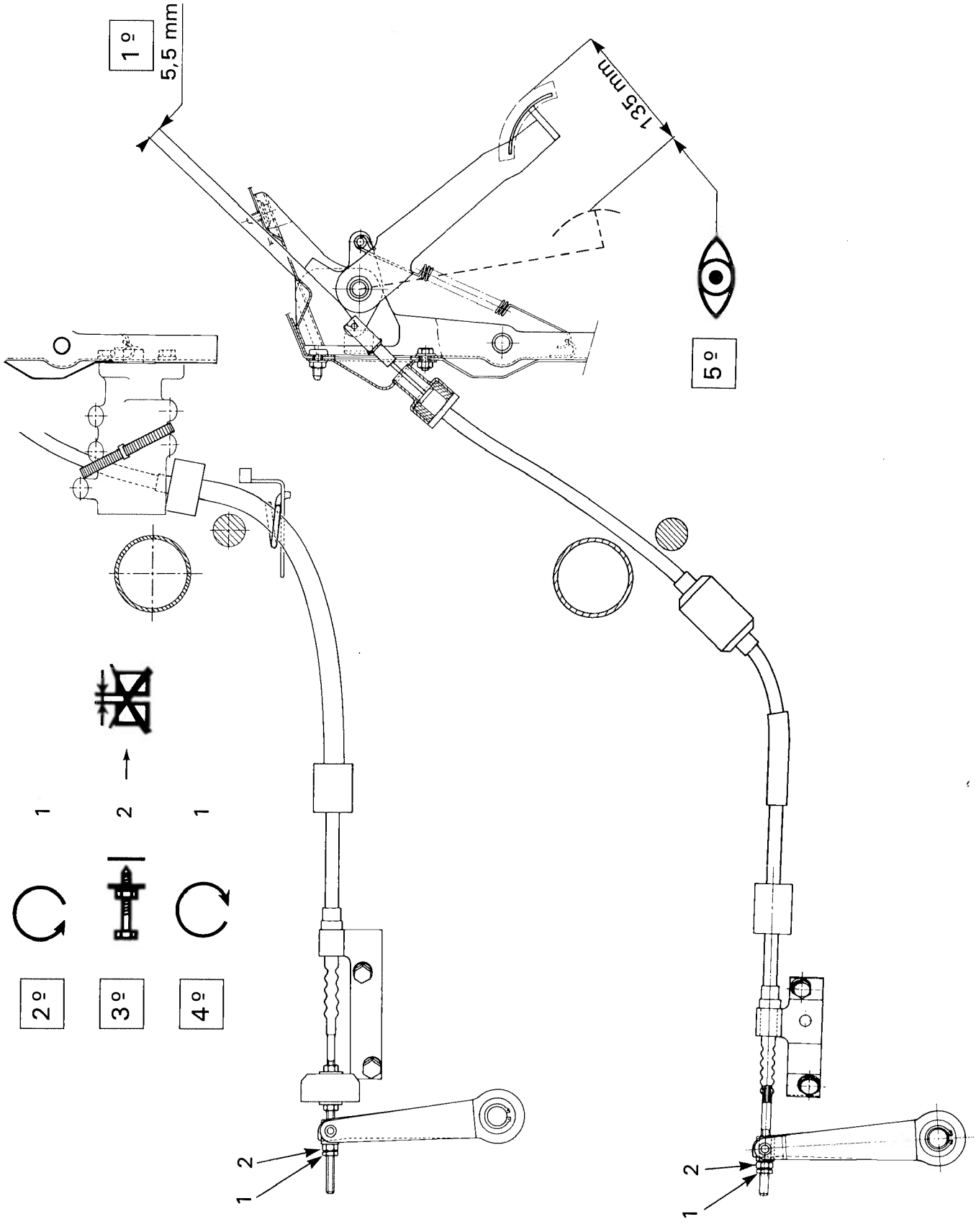

5

LIST OF OPERATIONS APPEARING IN THE CHAPTER: GEARBOX - DRIVE SHAFTS

OPERATION No.	DESCRIPTION	OPERATIONS △ TEXTS	OPERATIONS ○ SYMBOLS	VEHICLE CONCERNED ENGINE TYPE: 20 Petrol	22 Petrol	25 Fuel Injection	25 Prestige	25 Petrol Turbo	25 Prestige Turbo	25 Diesel	25 Diesel Turbo	25 Limousine Diesel Turbo	20 Safari Petrol + Familiale	25 Safari Petrol Injection	25 Safari Diesel + Familiale	25 Safari Diesel Turbo	Ambulance		
				825 A 5	J6T A 500	25/659	25/659	25/662	25/662	25/660	25/648	25/648	829 A 5	25/659	25/660	25/648	829 A 5 or 25/660		
MA 330/1	Tools		○	X	X	X	X	X	X	X	X	X	X	X	X	X	X		
MA 330.00/1	Specification and particular features of 4-speed gearboxes		○	X						X							X		
MA 330.00/2	Specification and particular features of 5-speed gearboxes		○	X	X	X	X	X	X	X	X	X	X	X	X	X	X		
MA 350.00/3	Specification and particular features of the automatic gearboxes		○			X	X							X					
MA 372.00/1	Specification and particular features of the drive shaft assemblies		○	X	X	X	X	X	X	X	X	X	X	X	X	X	X		
MA 372.1/1	Removing and refitting the drive shafts	△		X	X	X	X	X	X	X	X	X	X	X	X	X	X		
MA 372.3/1	Overhauling the drive shafts		○	X	X	X	X	X	X	X	X	X	X	X	X	X	X		

3312 T

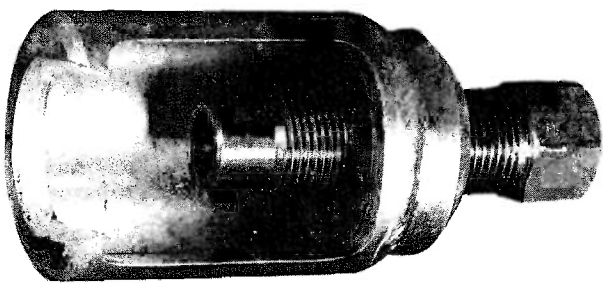

79.959

OUT 20 **6310 T**

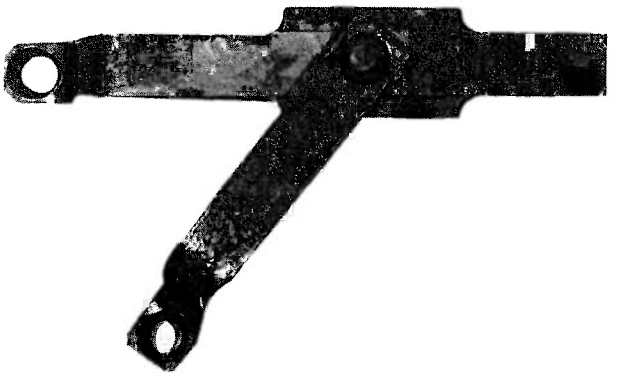

13.723

OUT 20 **6320 T**

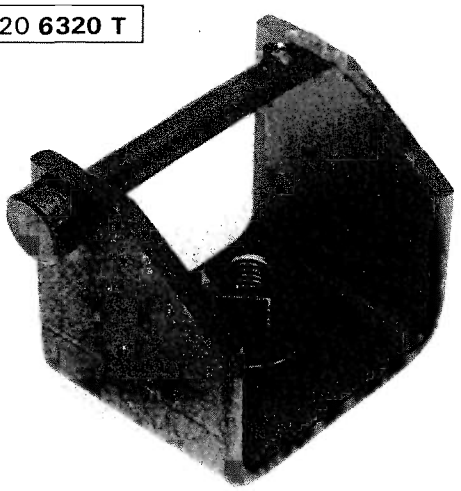

85.333

OUT 20 **6323 T**

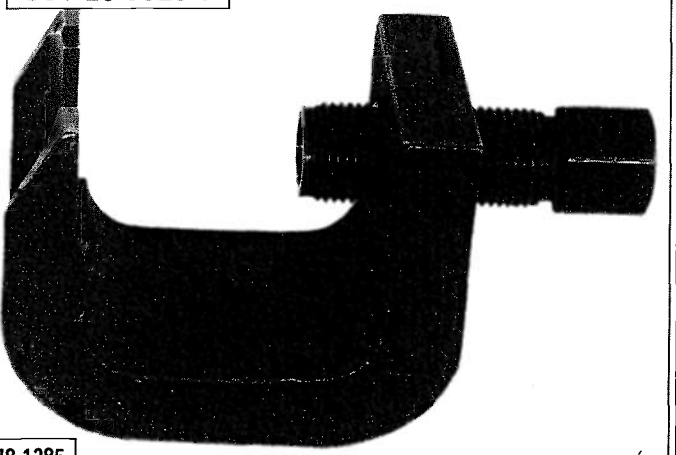

78.1285

OUT 50 **6602 T**

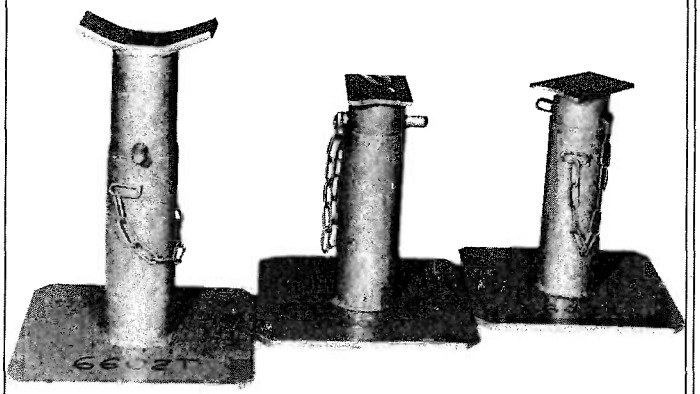

13.815

OUT 30 **4083 T**

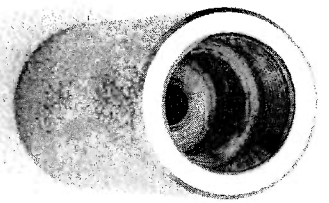

84.795

1671 T

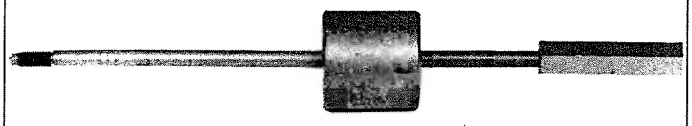

13.551

2405 T

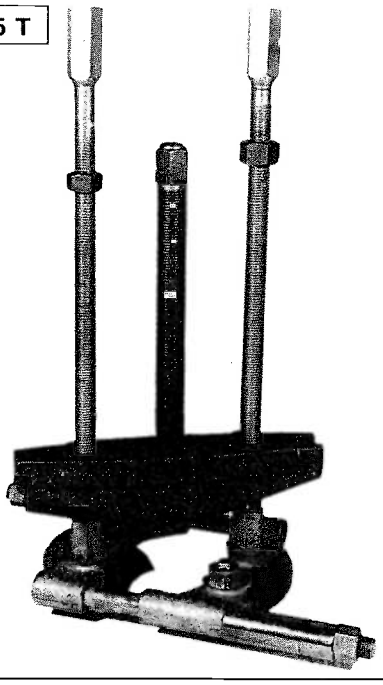

12.429

10 / 85 →

2,8 mdaN

1,3 mdaN

1,5 mdaN

E6

14,5 mdaN

20,5 mdaN

2,3 mdaN

→ 12/85

12/85 →

8,5 mdaN

2,8 mdaN

TOTAL TRANSMISSION 75 W/80 W

1,6 L

2,8 mdaN

5 mdaN

4 mdaN

4 mdaN

81.433

0,15 L

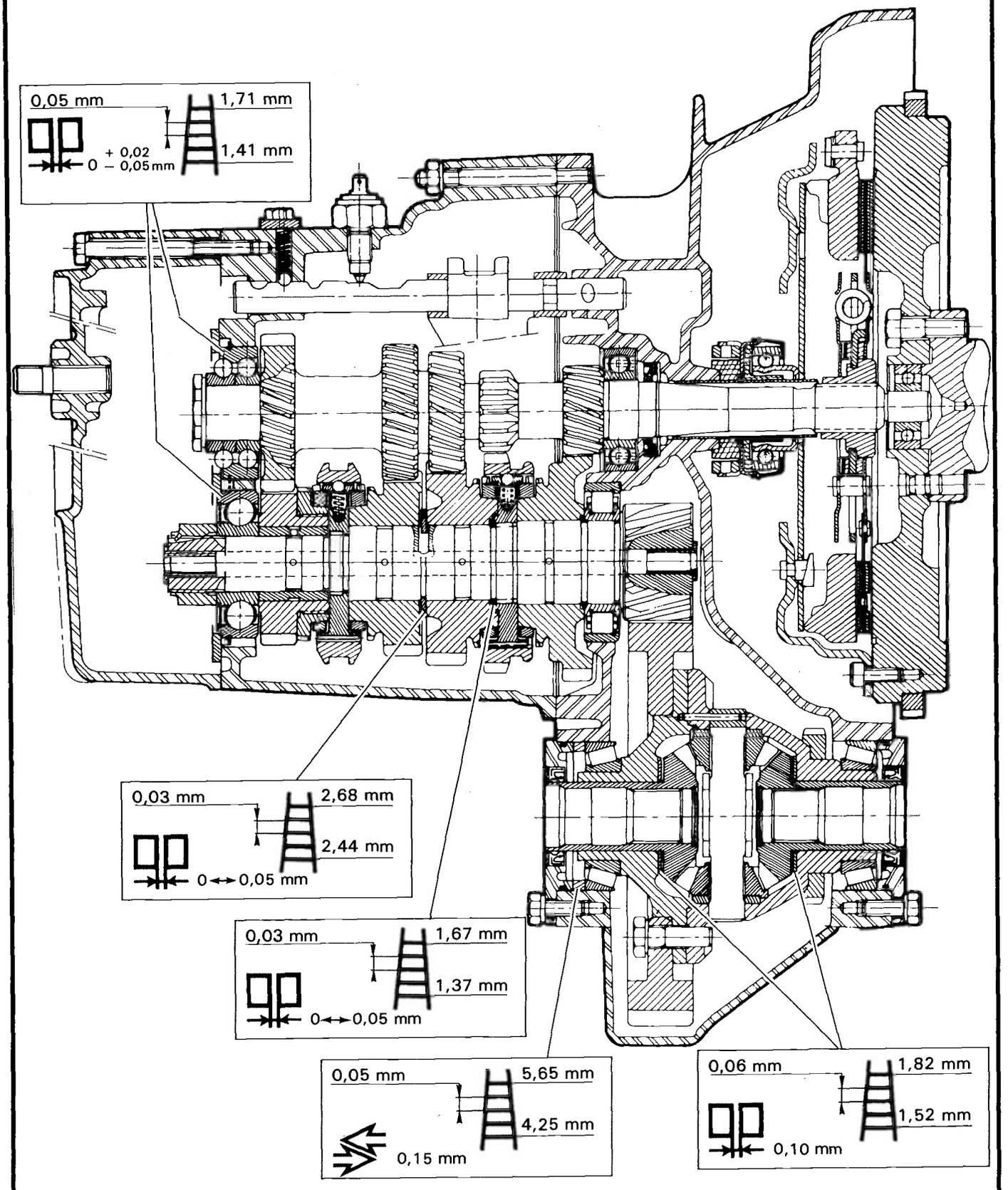

N°

451 → CX 20

2 GE 41 → CX 25 D

→ 7/84

1 3 R 2 4			x	KM/h 1000/min
1	12/38	13/59	0,0695	8,21
2	18/33		0,1201	14,19
3	30/34		0,1944	22,97
4	35/28		0,2754	32,55
R	13/41		0,0698	8,25
		10/20		

CX 20 : MICHELIN 185 HR 14 XVS

CX 25 D : MICHELIN 185 SR 14 XZX

= 1,970 mètre

N°

2 GE 65
2 GE 66 → CX 20

2 GE 71
2 GE 72 → CX 25 D

7/84 ⊢→ 3/86

2 GE 73 → CX 20 RE
2 GE 63 → CX 25 RD

3/86 ⊢→

1 3 R 2 4			x	KM/h 1000/min
1	12/38	14/61	0,0726	8,39
2	18/33		0,1253	14,49
3	30/34		0,2024	23,44
4	35/28		0,2875	33,21
R	13/41		0,0729	8,42
		15/29		

MICHELIN
195/70 R14 MXL
= 1,930 mètre

1

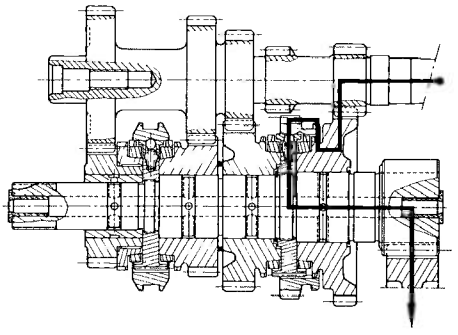

2

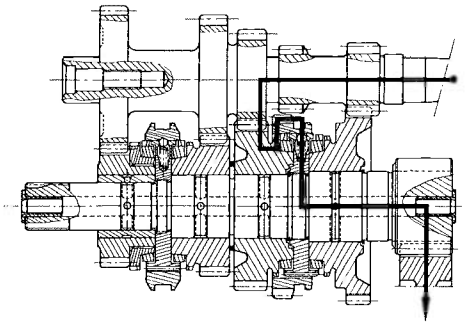

3

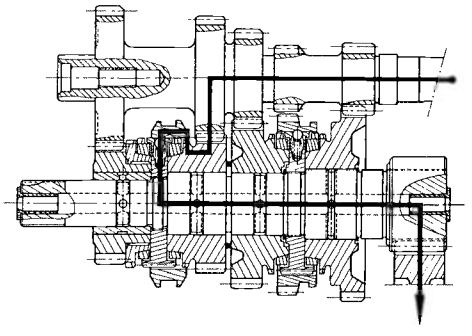

4

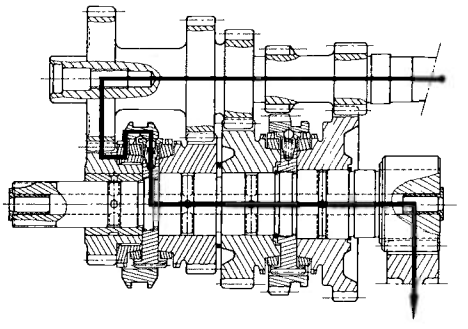

R

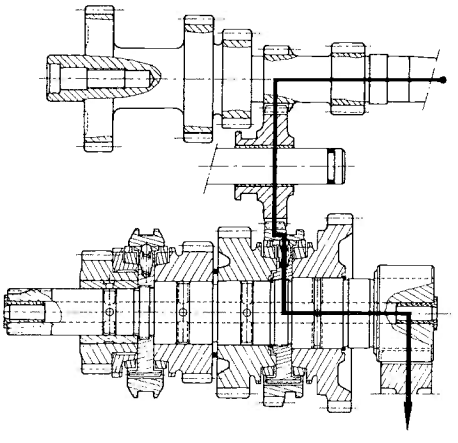

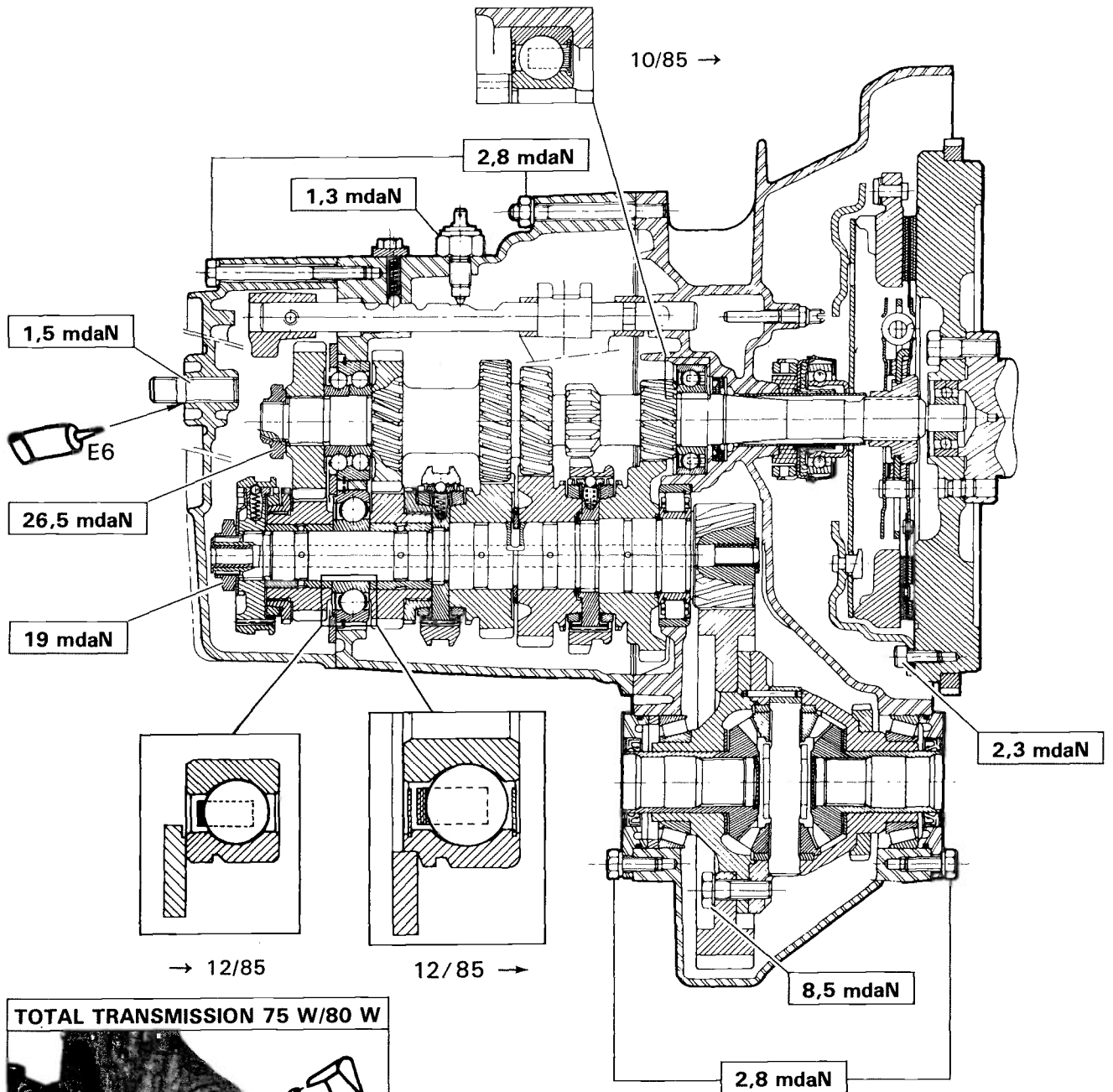

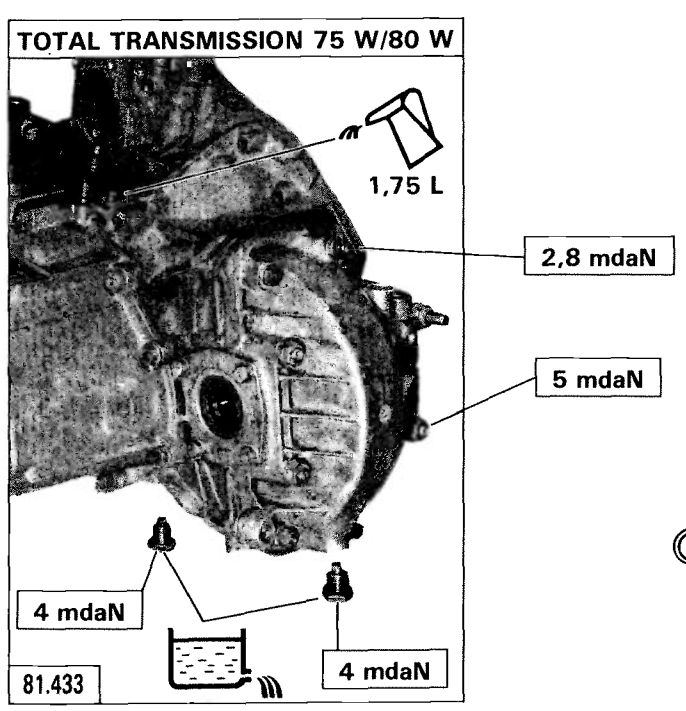

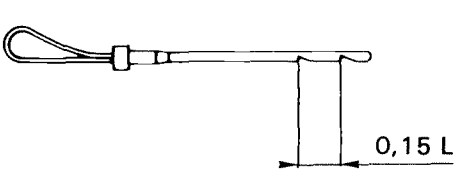

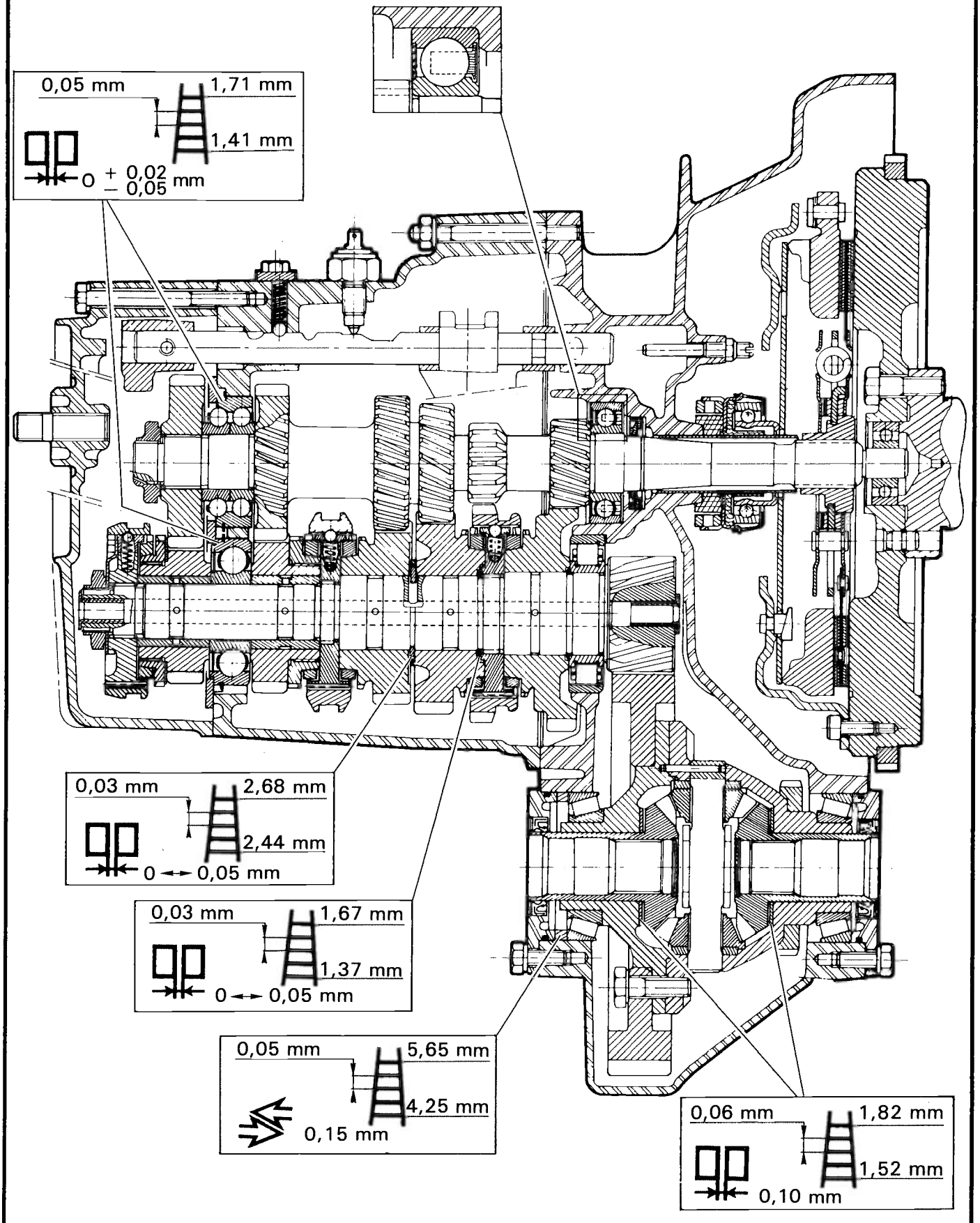

N°

522 → CX 20

N°

2 GE 10 → CX 25 D

→ 7/84

1 3 5 / 2 4 R			x	Km/h 1000/min
1	12/38	13/59	0,0695	8,21
2	18/33		0,1201	14,19
3	28/35		0,1762	20,82
4	33/31		0,2345	27,71
5	45/33		0,3004	35,50
R	13/41		0,0698	8,25
		10/20		

CX 20 : MICHELIN 185 HR 14 XVS

CX 25 D : MICHELIN 185 SR 14 XZX

= 1,970 mètre

N°

2 GE 69
2 GE 70 → CX 20

2 GE 67
2 GE 68 → CX 25 D

7/84 ↦ 3/86

2 GE 70 → CX 22 TRS — 7/85 ↦ 3/86

2 GE 75 → CX 25 RD / TRD
2 GE 76 → CX 20 RE / TRS — 3/86 →

1 3 5 / 2 4 R				KM/h 1000/min
1	12/38	14/61	0,0786	8,3
2	18/33		0,1253	14,49
3	28/35		0,1840	21,26
4	33/31		0,2438	28,29
5	45/33		0,3128	36,23
R	13/41		0,0729	8,42
		15/29		

MICHELIN
195/70 R14 MXL
= 1,930 mètre

N°

2 GE 35

→ CX Limousine TURBO →| 7/84

1 3 5 / 2 4 R			x	Km/h 1000/mn
1	12/38	16/61	0,0822	9,8
2	18/33		0,143	16,9
3	29/35		0,2158	25,7
4	33/31		0,2756	35,1
5	46/31		0,3848	46
R	13/41		0,0824	9,8
				10/20

MICHELIN
185/70 SR 14 XZX
= 1,97 mètre

DIESEL TURBO

N°

487
2 GE 36

2 GE 77

→ CX 25	4/83 →	
→ CX Break		
→ CX Limousine	7/84 → 3/86	
→ CX 25 RD / TRD :	3/86 →	

4/83 → 7/84	7/84 →
CX 25 CX Break	CX25 CX Break CX Limousine

1 3 5 / 2 4 R			x	Km/h 1000/mn	
1	12/38	16/61	0,0822	9,49	9,59
2	18/33		0,143	16,40	16,56
3	29/35		0,2158	24,91	25,16
4	34/30		0,2938	34,07	34,42
5	46/31		0,3848	44,60	45,06
R	13/41		0,0824	9,52	9,62

15/29

MICHELIN
190/65 HR 390 TRX
= 1,91 mètre

4/83 → 7/84 { CX 25 / CX BREAK

MICHELIN
190/66 HR 390 TRX
= 1,93 mètre

7/84 → CX Break

MICHELIN
195/70 HR 14 MXV
= 1,93 mètre

7/84 → { CX 25 / CX Limousine

N°

2 GE 53
2 GE 54

2 GE 79

CX 25 GTI 7/83 →
→ CX 25 RI 7/84 → 3/86
→ CX 25 RI : 3/86 →

7/83 → 7/84	7/84 →
CX 25 GTI	CX 25 GTI CX 25 RI

1 3 5 / 2 4 R			x	Km/h 1000/min	
1	12/38	14/59	0,0727	8,6	8,67
2	18/33		0,1265	14,8	14,98
3	28/33		0,184	21,75	21,98
4	33/31		0,2438	28,95	29,24
5	45/33		0,3128	37,1	37,46
R	13/41		0,0729	8,61	8,71

15/29

MICHELIN
190/65 HR 390 TRX
= 1,91 mètre

7/83 → 7/84 CX 25 GTI

MICHELIN
190/65 HR 390 TRX
= 1,93 mètre

7/84 → CX 25 GTI

MICHELIN
195/70 HR 14 MXV
= 1,93 mètre

7/84 → CX 25 RI

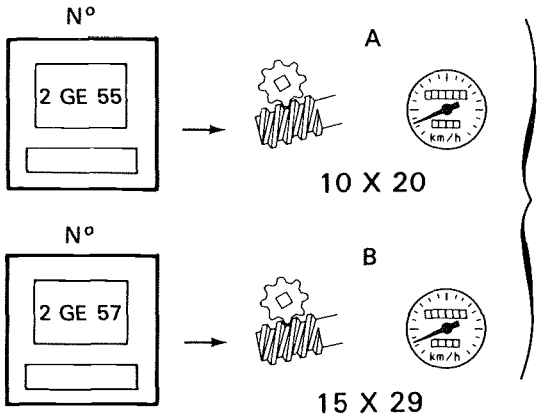

CX 25 Pallas IE

CX 25 Prestige

CX 25 Break TRI

→ 7/84

				XVS	TRX
				A	B
1 3 5 / 2 4 R			x	Km/h 1000/min	
1	12/38	15/61	0,0758	9,2	8,9
2	18/33		0,132	15,9	15,4
3	28/35		0,192	23,3	22,5
4	33/31		0,2544	30,9	30,
5	45/33		0,3264	39,6	38,4
R	13/41		0,0760	9,2	8,9

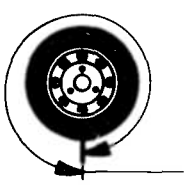

MICHELIN
185 HR 14 XVS
= 1,97 mètre

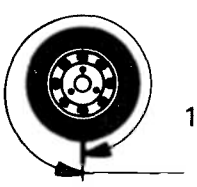

MICHELIN
190/65 HR 390 TRX
= 1,97 mètre

N°

2 GE 57
2 GE 58

→ CX 25 Pallas
→ CX Prestige
→ CX Break TRI

} 7/84 ⊢→ 3/86

2 GE 78 → CX 25 GTi / CX Break TRI : 3/86 ⊢→ 7/86

2 HE 02 → CX 25 GTi / CX Break TRI : 7/86 ⊢→

1 3 5 / 2 4 R			x	Km/h 1000/min
1	12/38	15/61	0,0758	8,99
2	18/33		0,132	15,53
3	28/35		0,192	22,78
4	33/31		0,2544	30,30
5	45/33		0,3264	38,83
R	13/41		0,0760	9,02
km/h		15/29		

MICHELIN
190/65 HR 390 TRX
= 1,93 mètre

MICHELIN
195/70 HR 14 MXV
= 1,93 mètre

N°

2 GE 59
2 GE 60

→ CX GTI TURBO
9/84 ↦ 3/86

2 GE 80 → CX 25 GTI TURBO 2 : 3/86 ↦

1 3 5 / 2 4 R			x	Km/h 1000/min
1	12/38	14/59	0,0749	8,63
2	18/33		0,1294	14,90
3	29/35		0,1866	22,64
4	34/30		0,2689	30,98
5	46/31		0,3521	40,55
R	13/41		0,0752	8,66
		15/29		

MICHELIN
210/55 VR 390 TRX
= 1,92 mètre

1

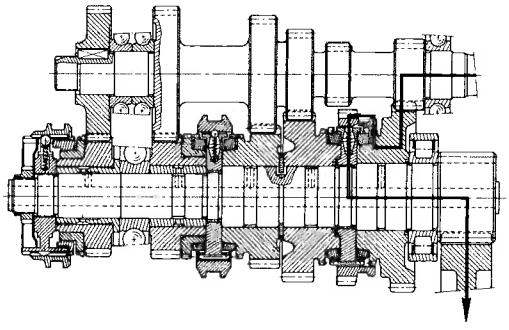

2

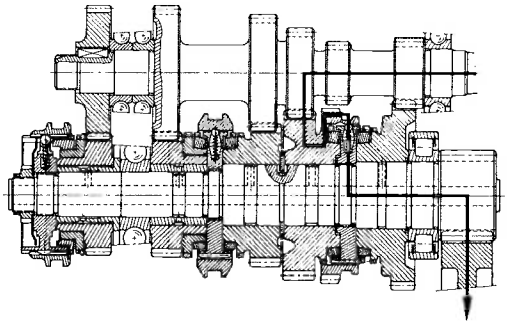

3

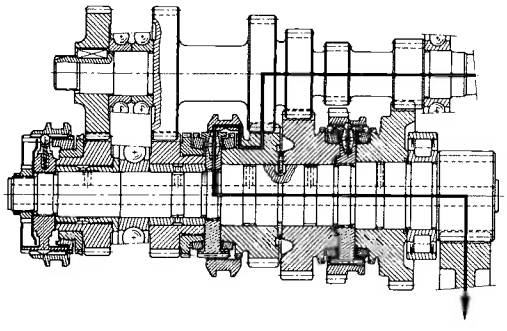

4

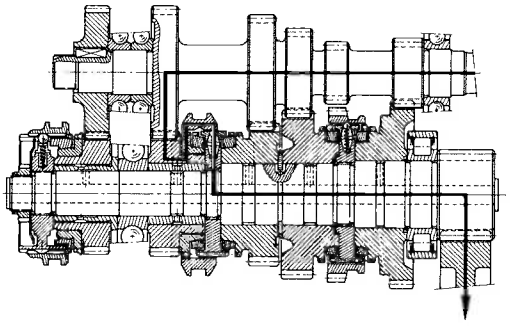

5

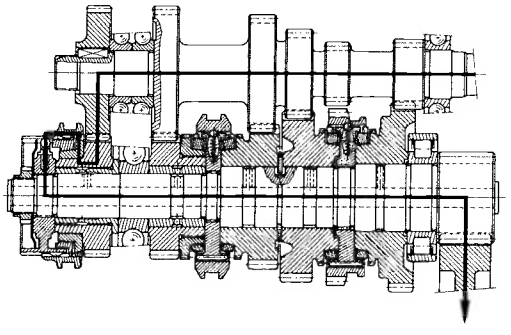

R

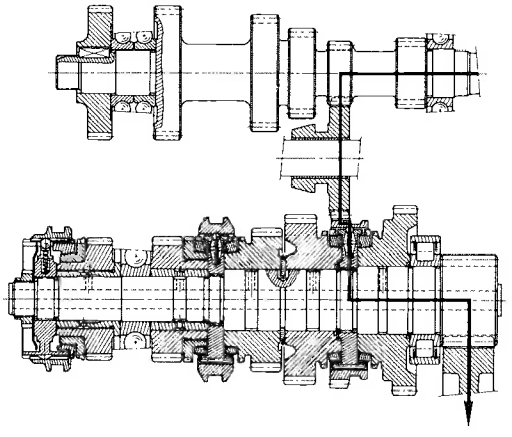

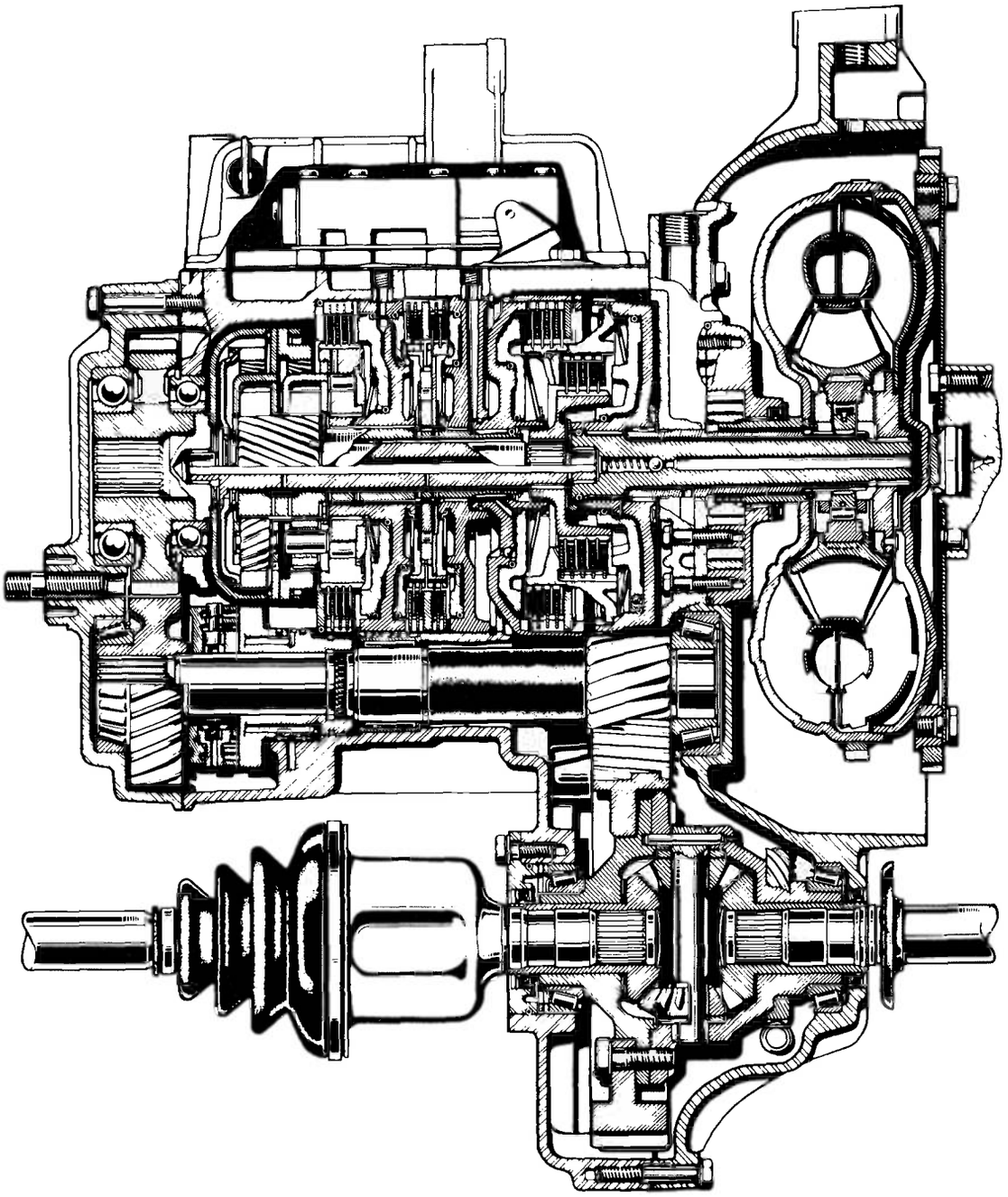

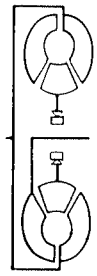

TOTAL DEXTRON D20-356

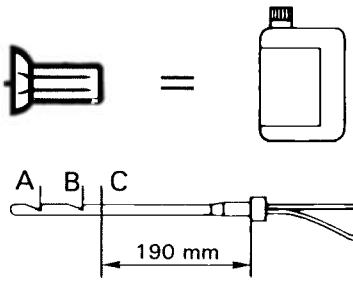

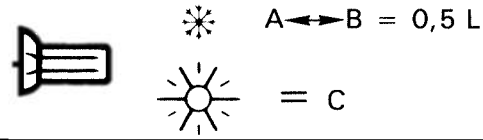

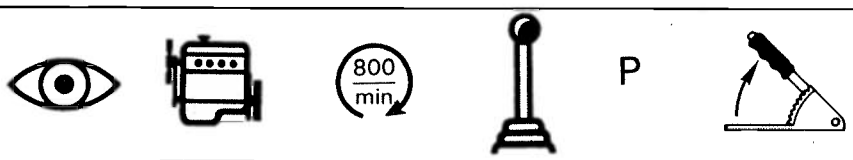

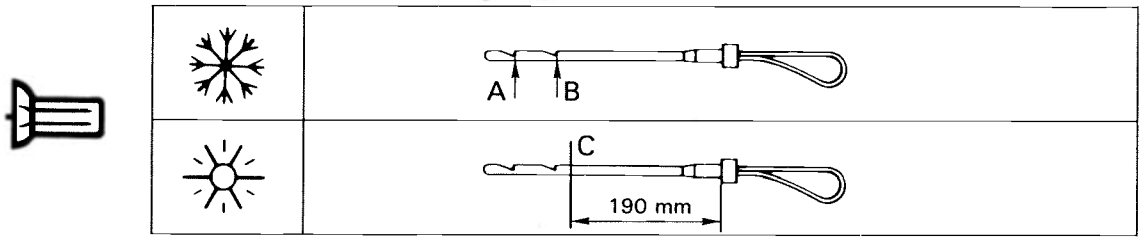

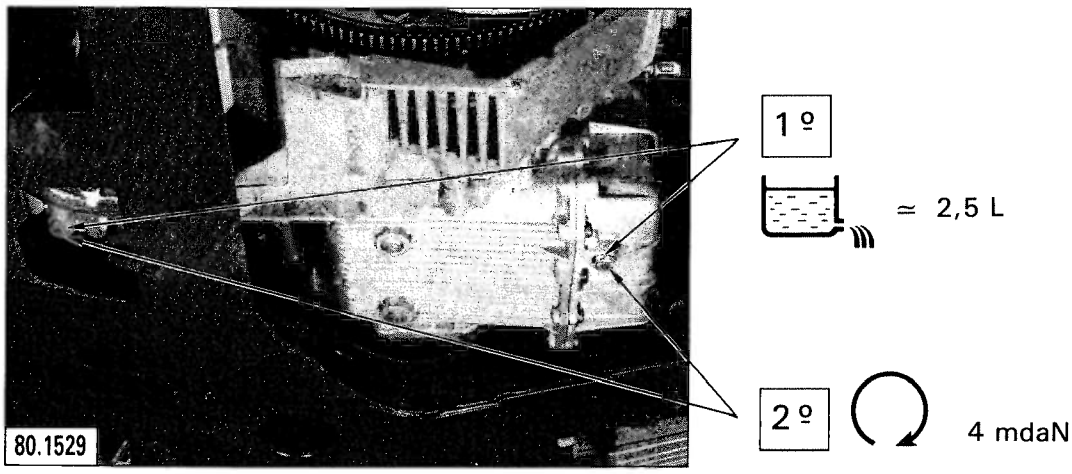

1º ≃ 2,5 L

2º 4 mdaN

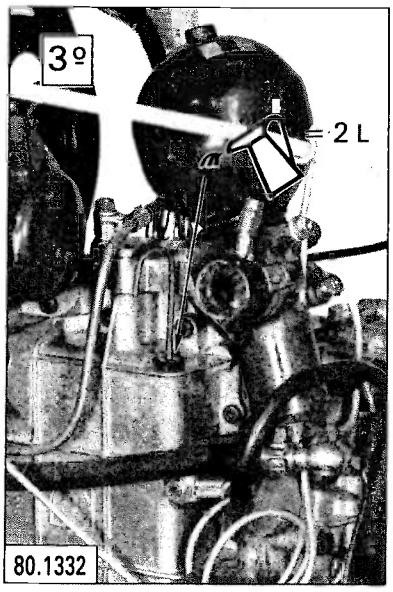

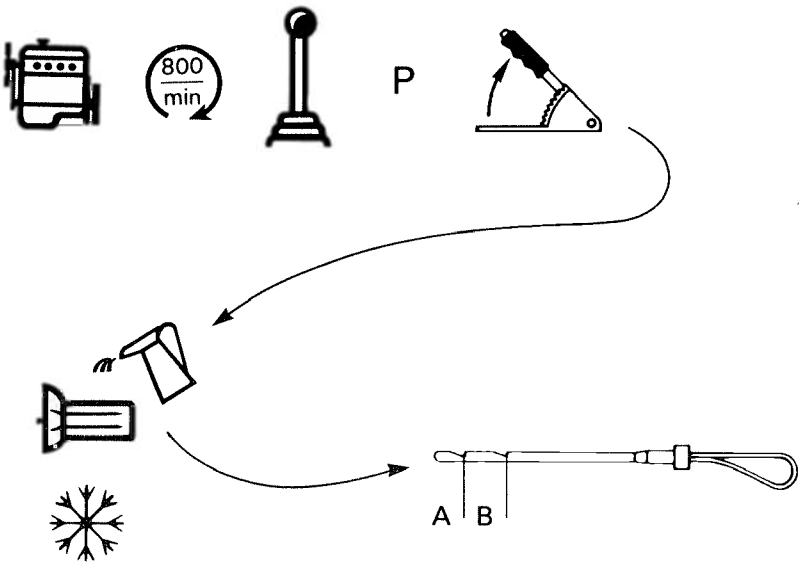

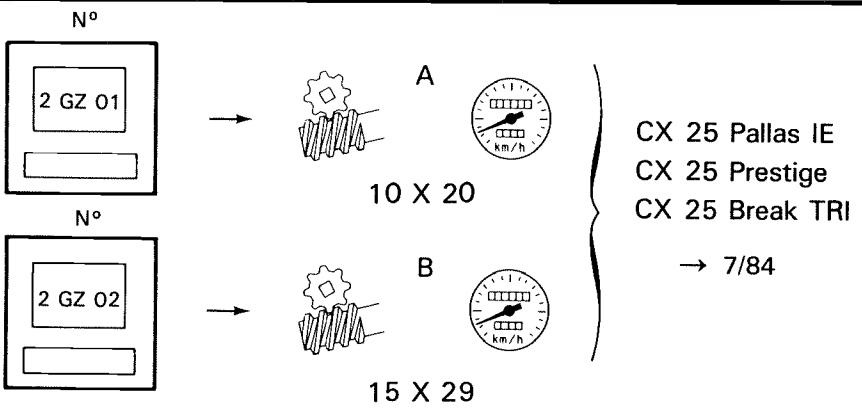

CX 25 Pallas IE
CX 25 Prestige
CX 25 Break TRI

→ 7/84

				XVS	TRX
				A	B
Automatic			x	Km/h 1000/min	
1	$\frac{1 \times 42}{2,478 \times 29}$	13/62	0,1169	14,5	14
2	$\frac{1 \times 42}{1,478 \times 29}$		0,1960	24,3	23,5
3	$\frac{1 \times 42}{1 \times 29}$		0,2897	35,9	34,8
R	$\frac{1 \times 42}{2,085 \times 29}$		0,1389	17,2	16,7

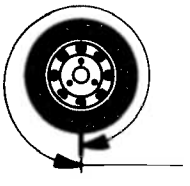

MICHELIN
185 HR 14 XVS
= 1,97 mètre

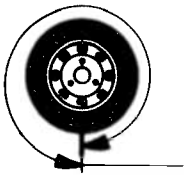

MICHELIN
190/65 HR 390 TRX
= 1,91 mètre

2 GZ 09 → CX 25 Prestige / CX 25 GTI *(option)*

Automatic				Km/h 1000/min
1	$\frac{1 \times 42}{2,478 \times 29}$	13/62	0,1169	14,18
2	$\frac{1 \times 42}{1,478 \times 29}$		0,1960	23,76
3	$\frac{1 \times 42}{1 \times 29}$		0,2897	36,16
R	$\frac{1 \times 42}{2,085 \times 29}$		0,1389	16,85
		15/29		

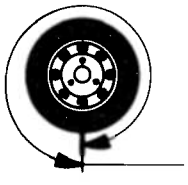

MICHELIN
190/65 HR 390 TRX
= 1,93 mètre

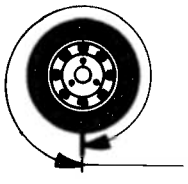

MICHELIN
195/70 HR 14 MVX
= 1,93 mètre

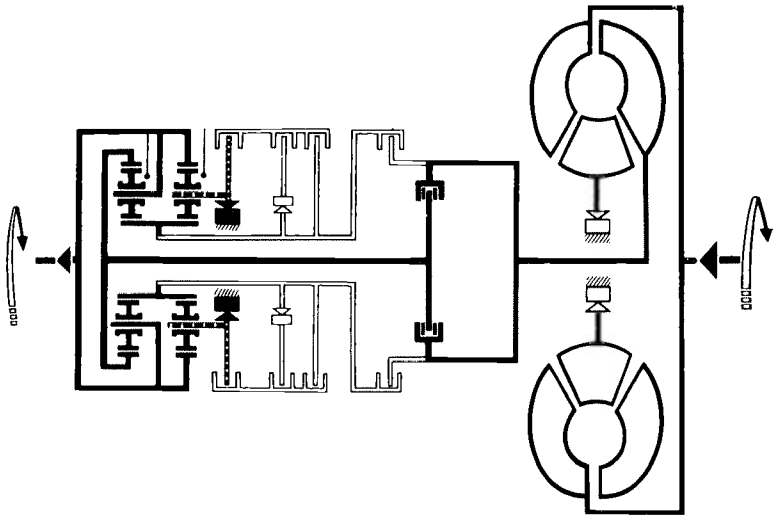

1

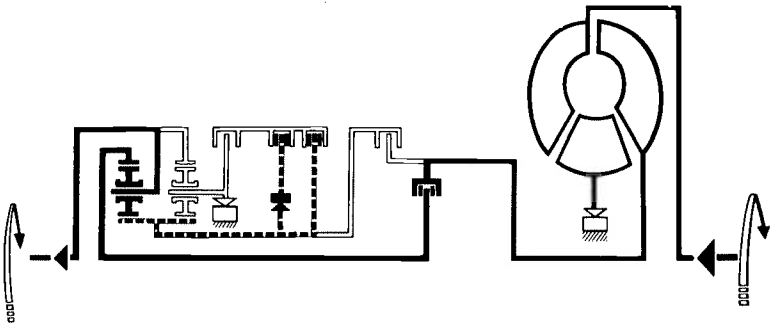

2

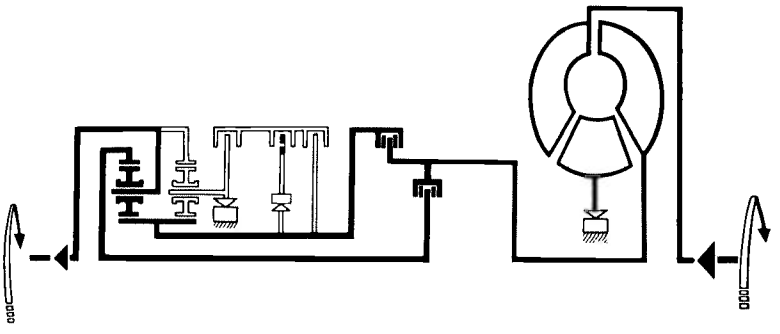

3

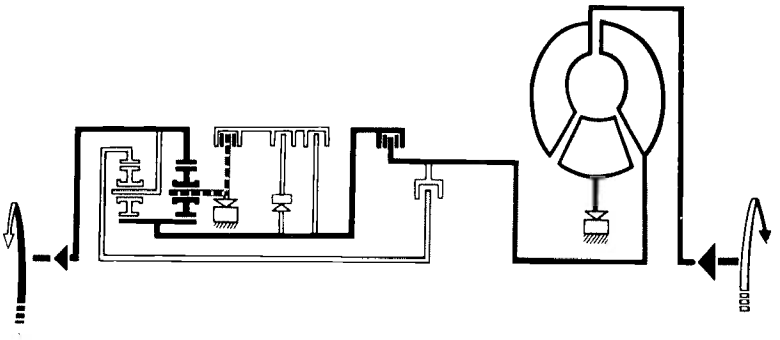

R

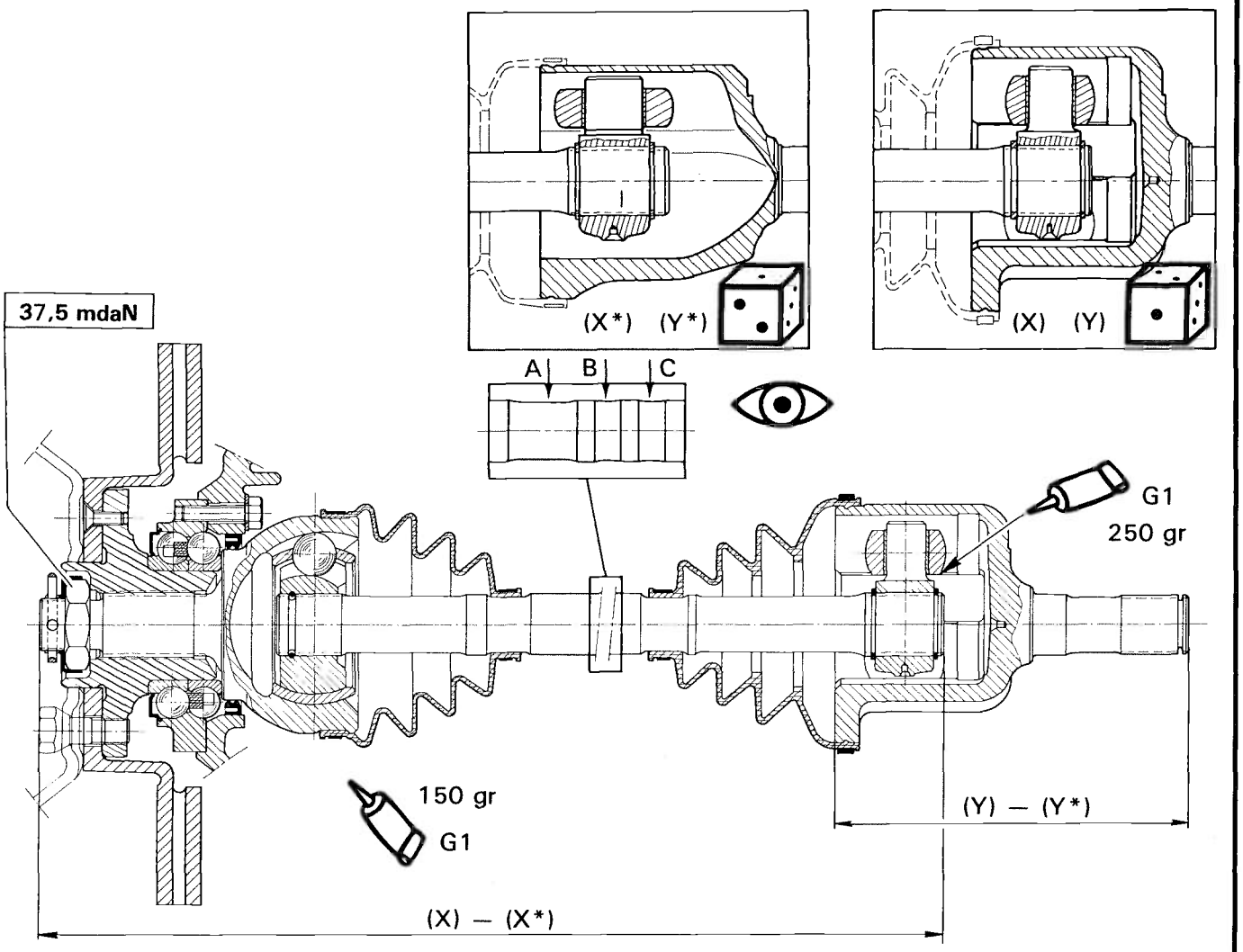

	X	X*	X X*	Y	Y*
4. V → 6/84 829 A5	516 mm	508 mm	A	161,5 mm	174 mm
4. V 7/84 → 829 A5 5 V	551 mm	543 mm	AB		
Automatique	527 mm	519 mm	ABC		
M 25/662		543 mm	AB		174 mm

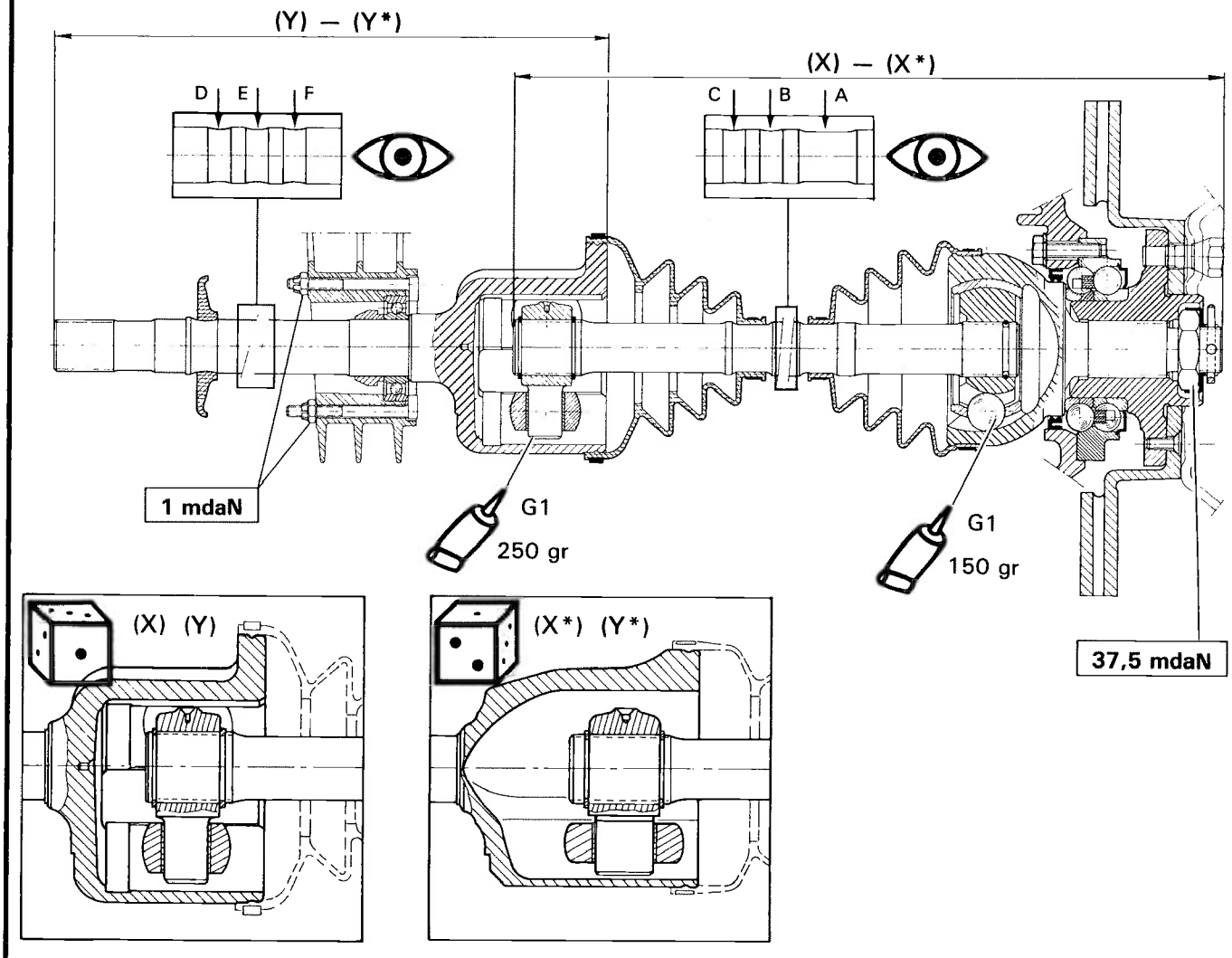

	Y	Y*	Y Y*	X	X*	X X*
4. V → 6/84 829 A5	525,5 mm	538 mm	D	516 mm	508 mm	A
4. V 7/84 → 829 A5 5 V	490,5 mm	503 mm	DE			
Automatique	516 mm	528,5 mm	DEF			
M 25/662		503 mm	DE		508 mm	A

RECOMMENDED TOOLS

3312-T Lower arm ball-joint extractor with bosses

or

6323-T Lower arm ball-joint extractor with or without bosses.

6310-T Hub locking tool.

6320-T Anti-roll bar link rod extractor.

6602-T Set of three stands
- Torque wrench (40 mdaN)
- Socket 35 mm A/F

REMOVING AND REFITTING THE DRIVE-SHAFTS

Support the front of the vehicle on stands **6602-T.**

Release the pressure in the hydraulic system.
Set the height control to the "low" position.

Remove: Fig. I:

- the road wheel,
- the pin and nut lock,
- the nut *(35 mm A/F)*. Retain the wheel hub using tool **6310-T, Fig. I.**

Fig. II,

- suspension cylinder swivel ball maintaining pin (1),
- anti-roll bar link-rod nut (2).

Uncouple spherical ball (3) from the anti-roll bar link-rod by means of puller **6320-T, Fig. III:** *(Screw up the tool nut to the ball-joint stem and fit the tool "U" part and spindle).*

Disconnect the brake pad wear warning lamp electrical harness.

Take off the brake disc cooling plate securing screws.

Extract the nut of the swivel lower ball pin.

Uncouple the swivel lower ball pin with extractor **3312-T** or **6323-T** ***(Avoid damaging the ball joint protection rubber).***

Removing the LH drive-shaft assembly:

Push the LH drive shaft (5) aside with a chisel (6), bearing against the heads of the gearbox flange screws, **Fig. V.**

Important : If a few hammer strokes are not enough to push aside drive shaft (5), the circlip is probably blocked inside the sun gear. In that case, undo clamp (4) and remove the transmission without its drive-shaft, ***(retrieve the roller).***

Turn the steering through full lock to the left.

Leave the swivel hanging.

Liberate the LH transmission from the hub and remove it.

Removing the RH drive-shaft assembly:

Slacken the drive-shaft bearing support nuts (7), **Fig. VI**.

Swing through a half turn tie rods (8), so as to release the bearing outer track.

Withdraw drive shaft (9) from the sun gear. (Remove the shaft, the o'ring seal, bush, and dust seal).

Turn the steering to full right lock; leave the swivel hanging.

Disengage the RH transmission from the wheel hub and remove it.

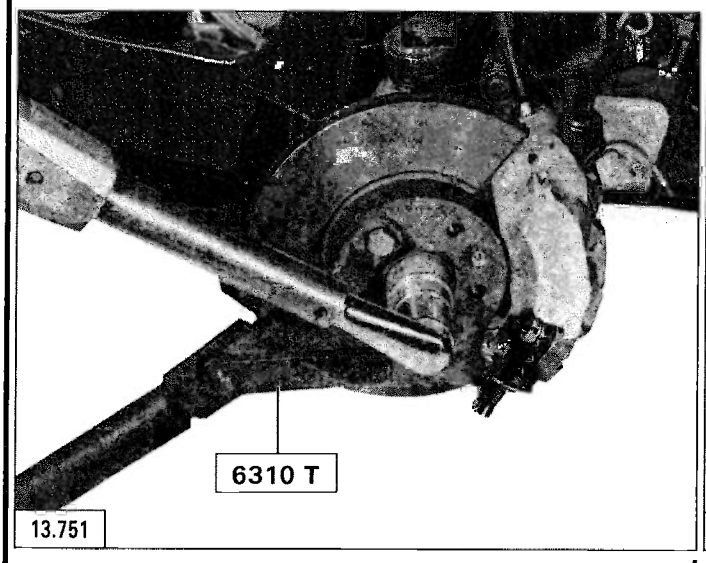

I

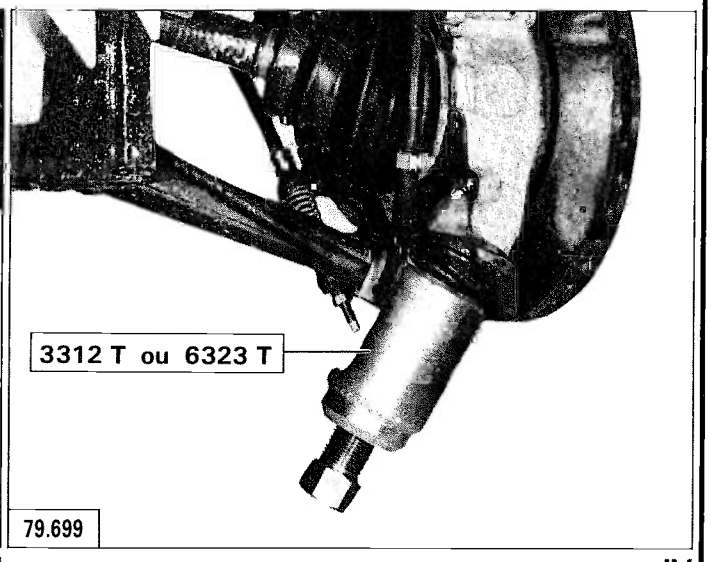

IV

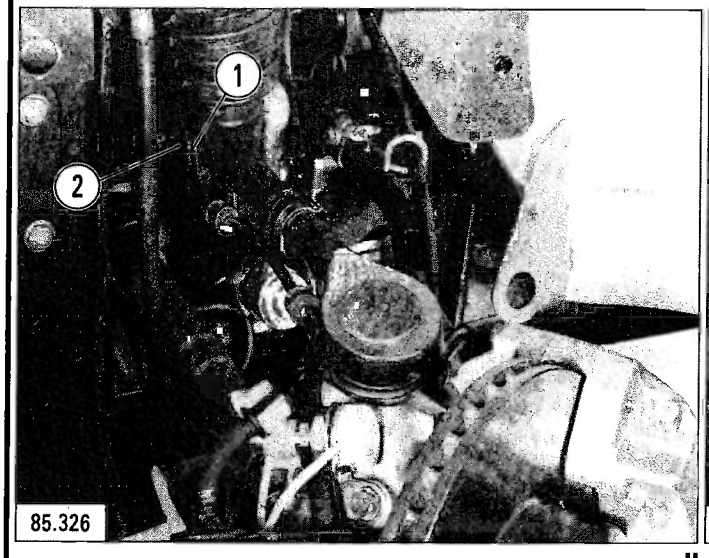

II

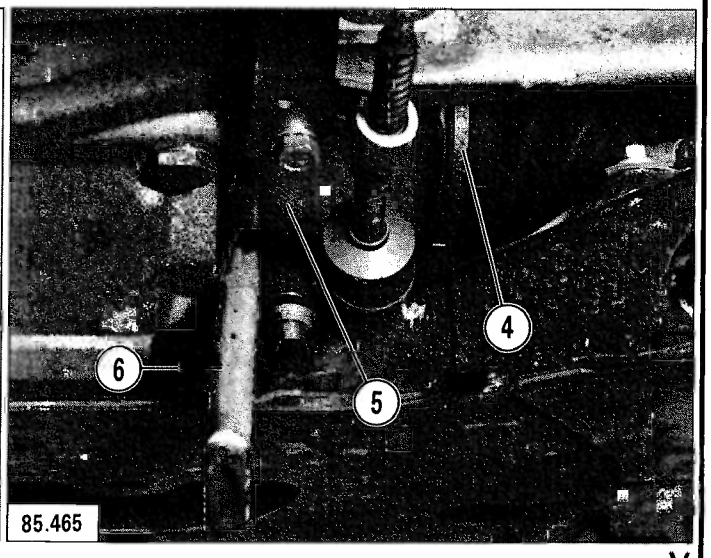

V

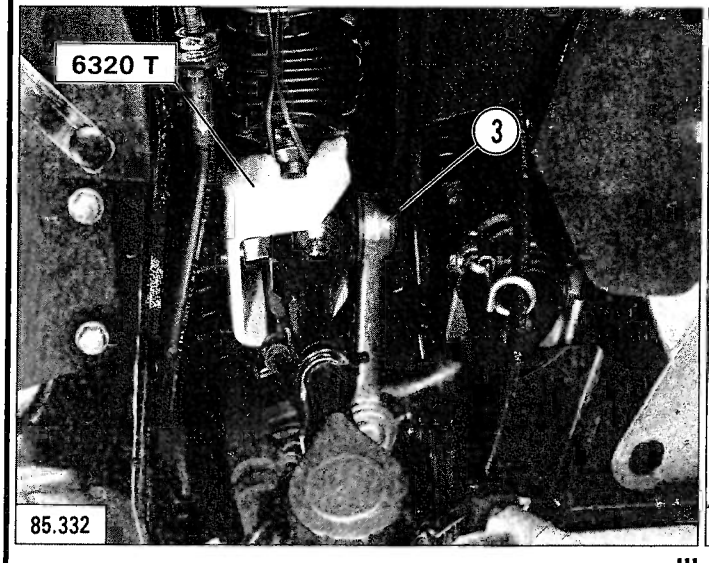

III

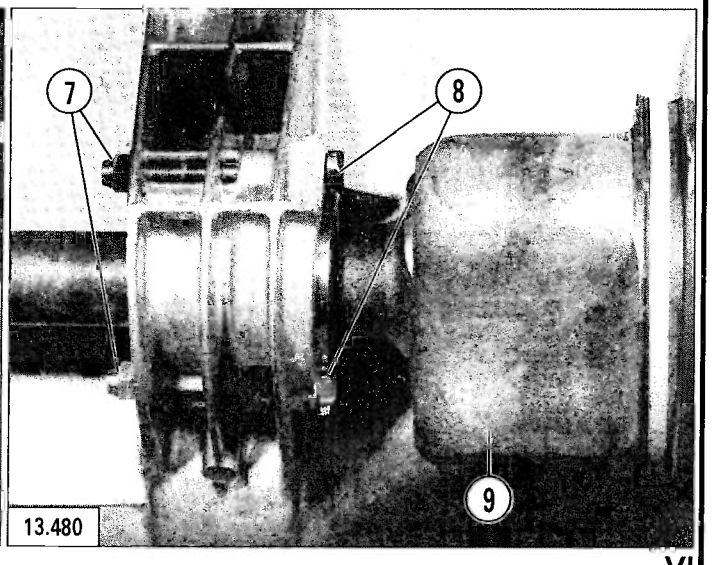

VI

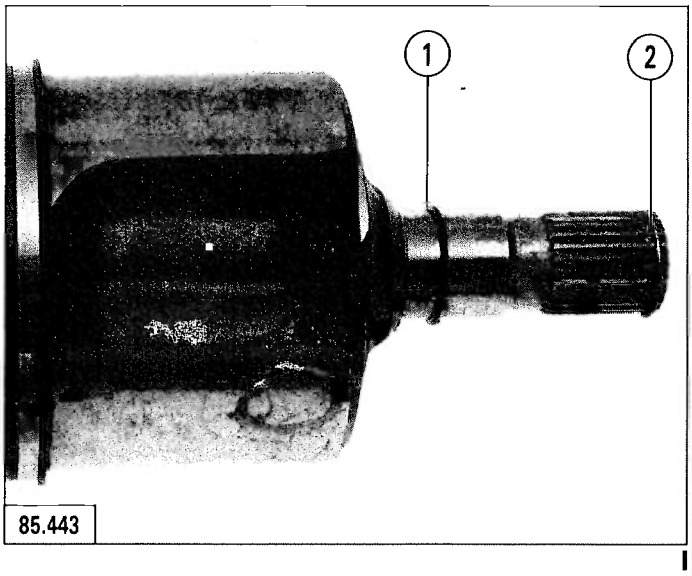

I

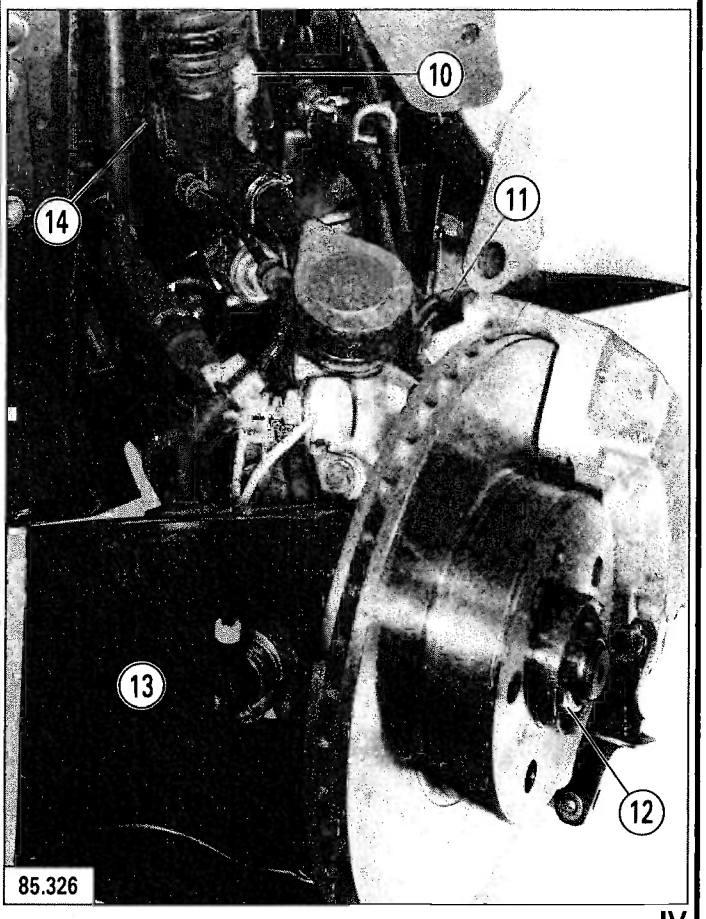

IV

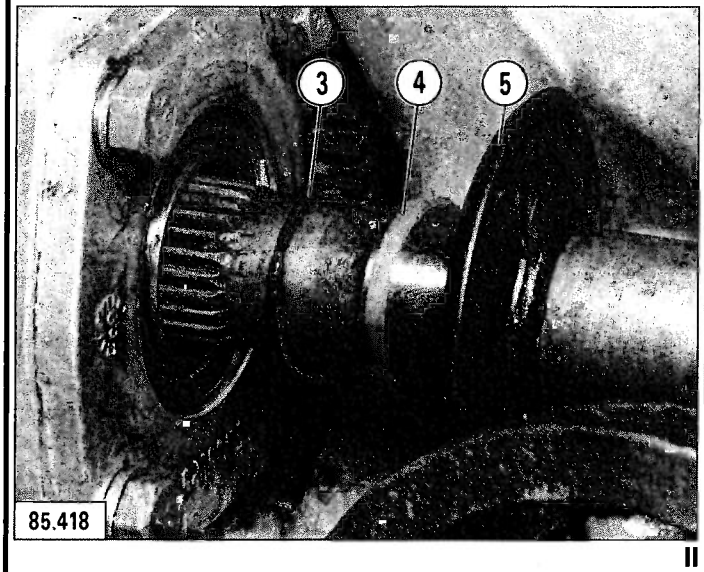

II

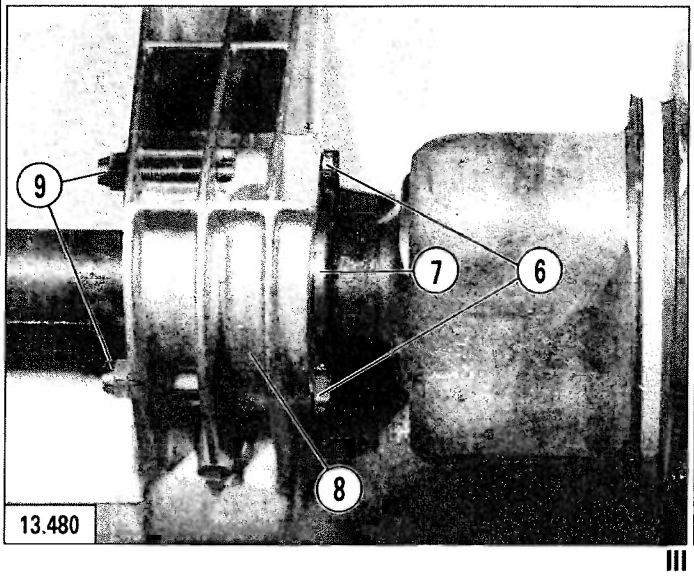

III

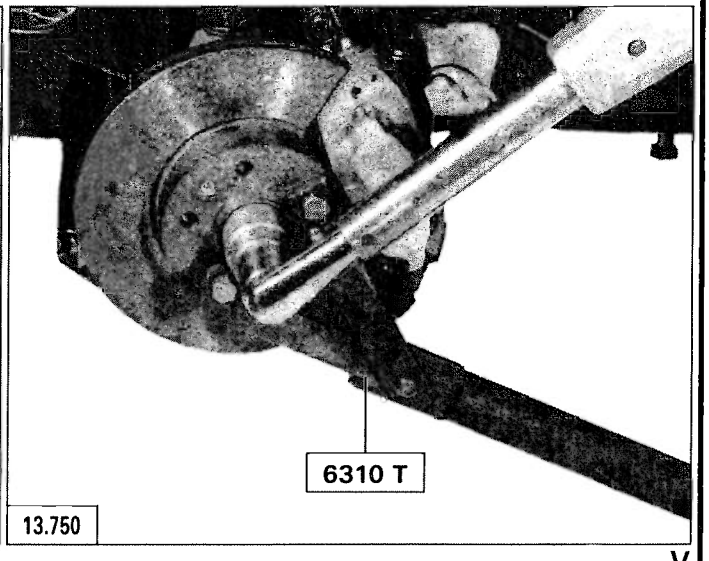

V

REFITTING

Lubricate the wheel hub seal lips.

Fitting the LH drive-shaft assembly:

Install:

- a NEW circlip (2),
- O'ring seal (1).

on the shaft, **Fig. I.**

Turn the steering through full lock to the left.

Insert the shaft splines home in the sun gear.

Make sure that the circlip is fully entered into its location within the sun gear by pulling the shaft.

Engage the drive-shaft into the wheel hub.

Fitting the RH drive-shaft assembly:

Turn the steering through full right lock.
Slide the shaft into bearing (3).

Install:

the dust cover (5)

- ring (4),
- o'ring seal (3).

on the drive shaft, **Fig. II**

Slightly grease the bearing outer ring (7) before entering it into bearing (8), **Fig. III**.

Introduce the drive-shaft into the hub.

Swivel tie rods (6) by a half turn so that they can grip the bearing outer ring.

Tighten nuts (9) to **1 mdaN.**

Couple up the lower ball-joint, *(Wipe the ball-joint fixing but do not use solvent).*

Tighten to **6 mdaN** the *(NEW NYLSTOP) nut.*

Recouple link rod (10) with the anti-roll bar. *(Wipe the ball-joint fixing, do not use solvent).*

Tighten to **4.7 mdaN** the *NEW NYLSTOP* type nut.

Refit the suspension cylinder swivel ball and pin (14).

Reconnect the electrical harness to the brake pad wear warning lamp (11).

Reinstall the brake disc cooling plate (13).

Fit the drive-shaft nut *(with faces and threads lubricated).*

Clamp the wheel hub with tool **6310-T.**

Tighten to: **37.5 mdaN.**

Replace:

- nut lock (12),
- the pin,
- the road wheel.

Lower the vehicle to the ground.

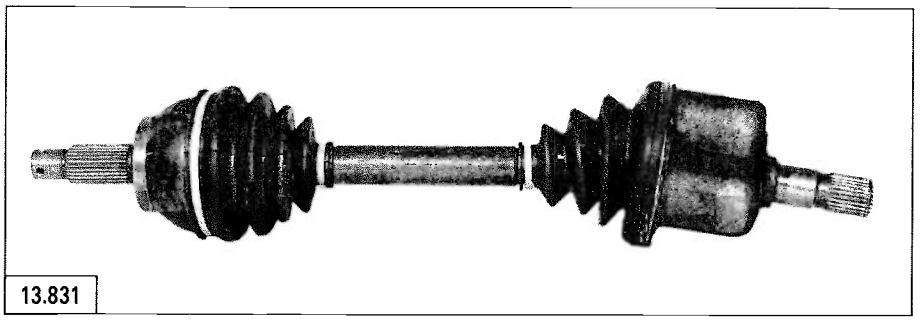

13.831

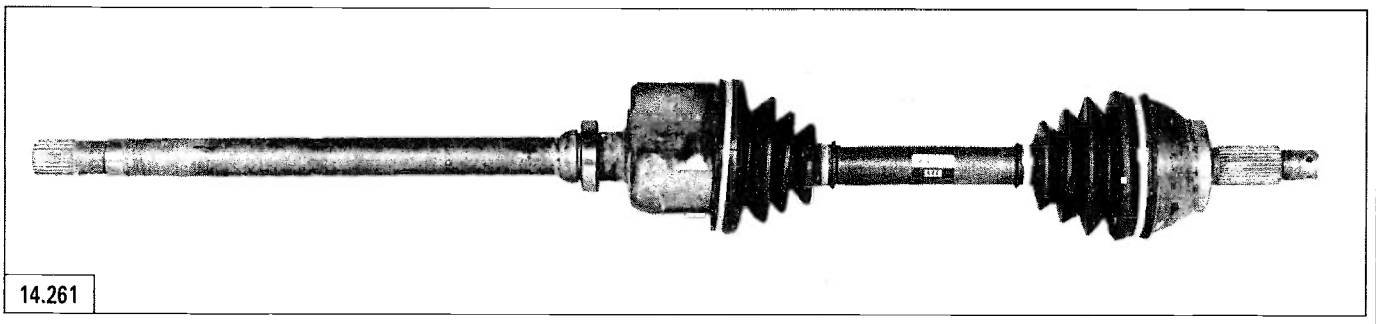

14.261

1671 T

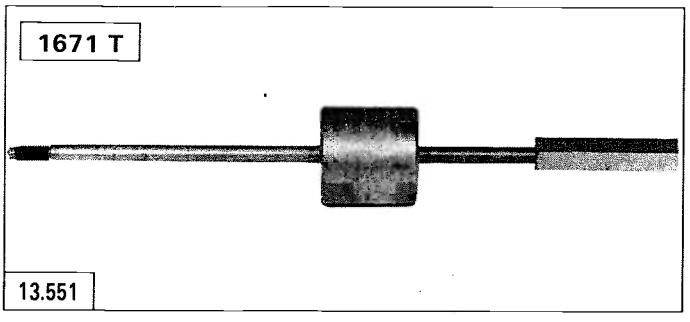

13.551

2405 T

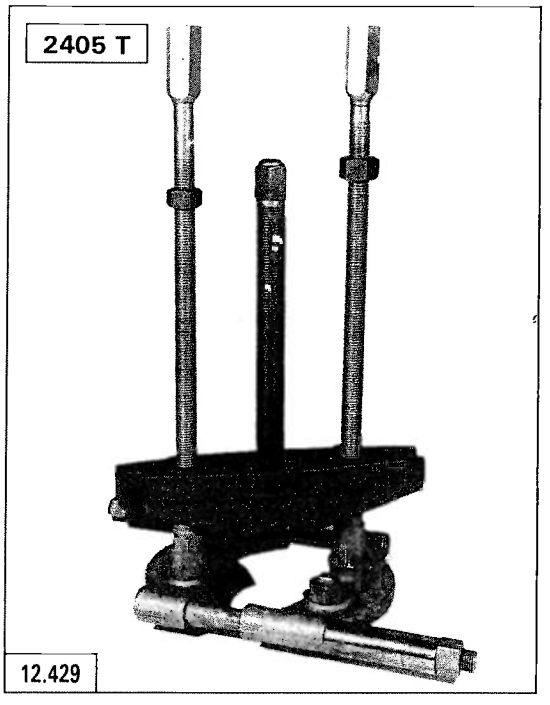

12.429

4083 T

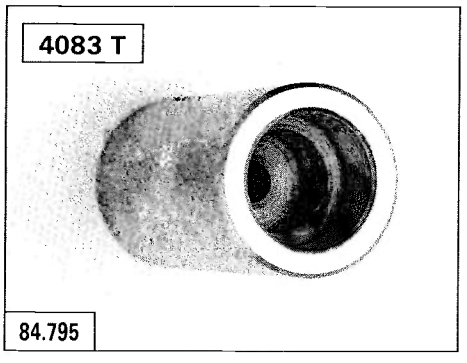

84.795

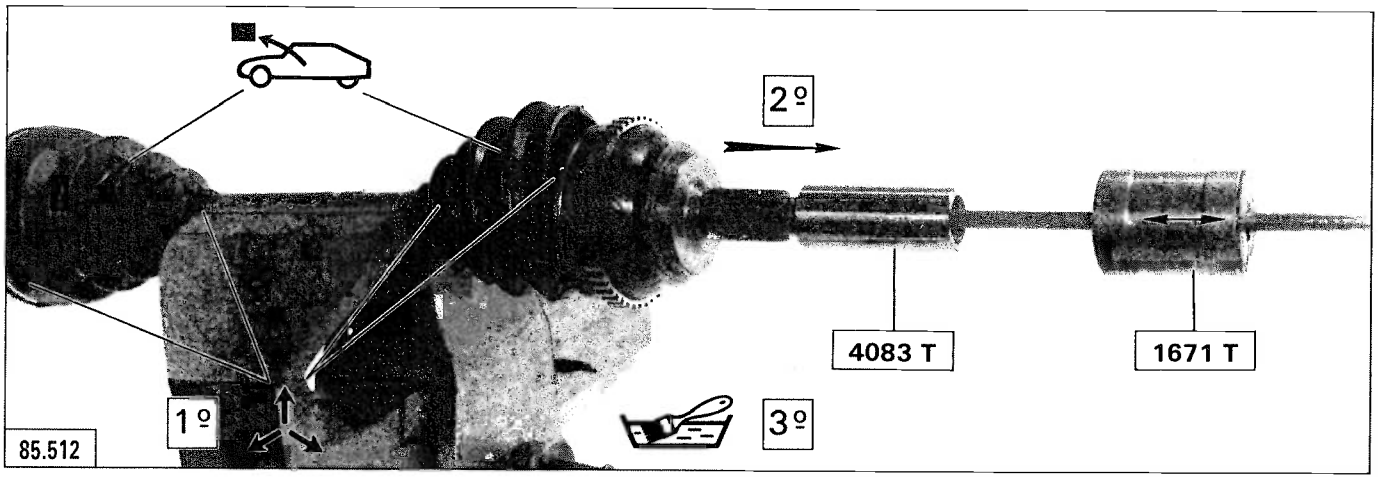

85.512

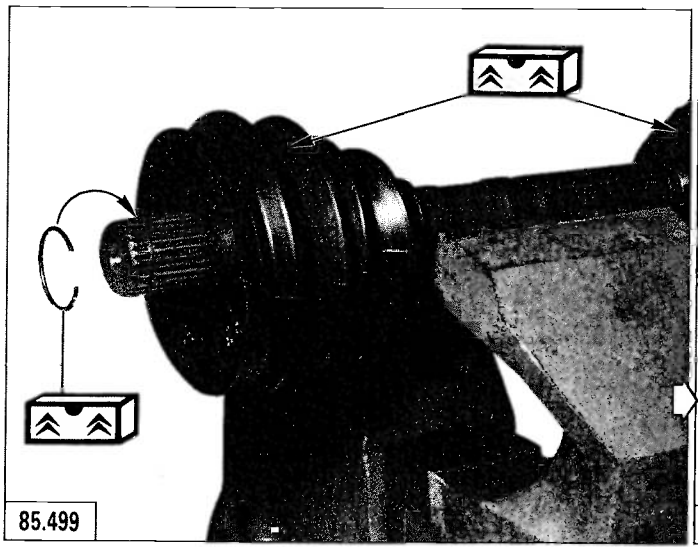
85.499

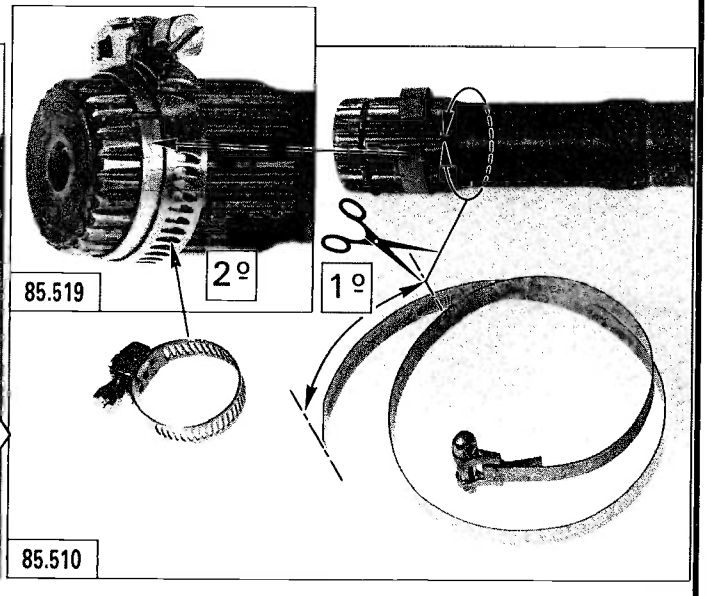

85.519

85.510

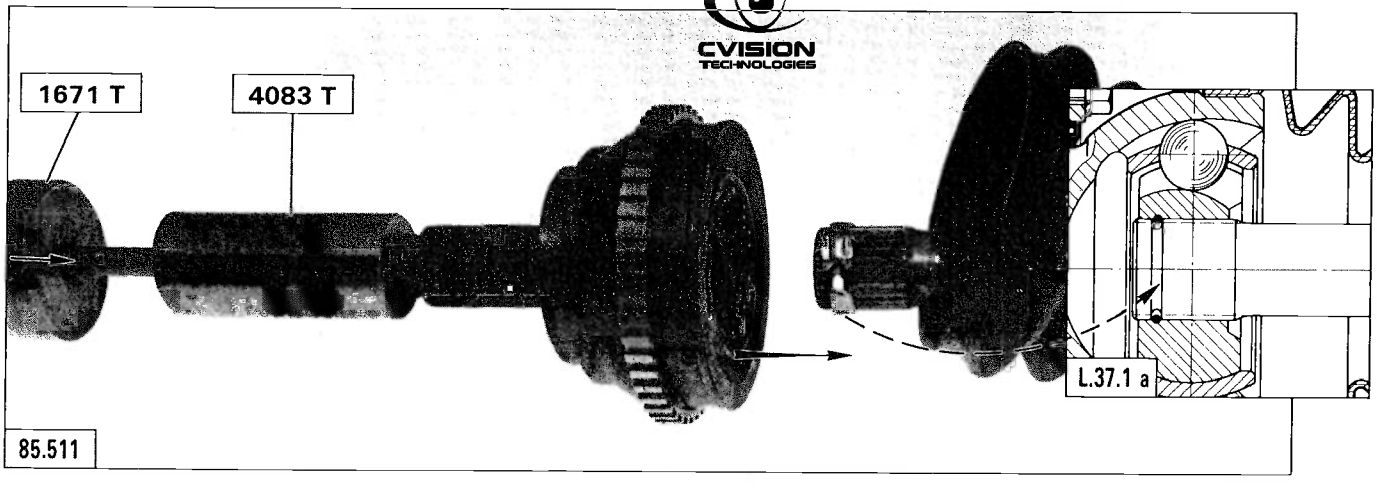

85.511

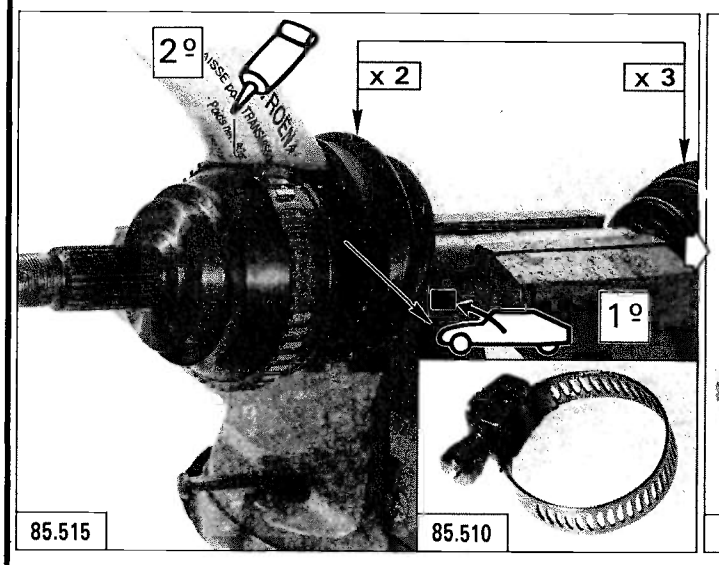

85.515

85.510

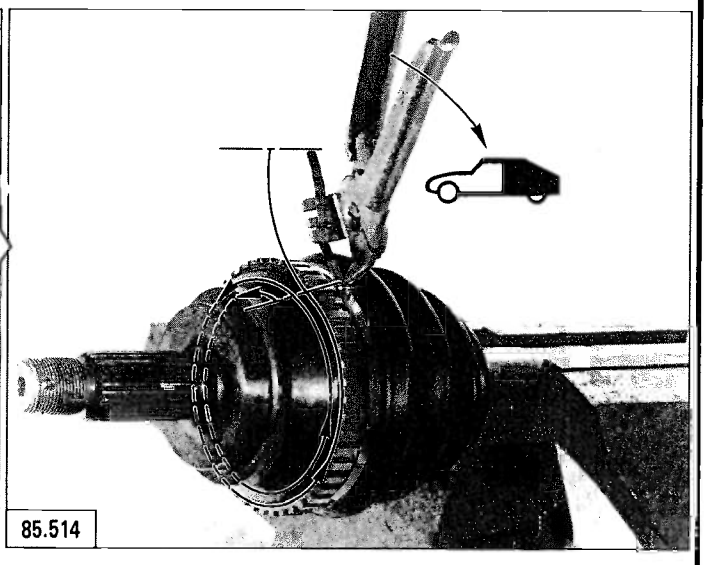
85.514

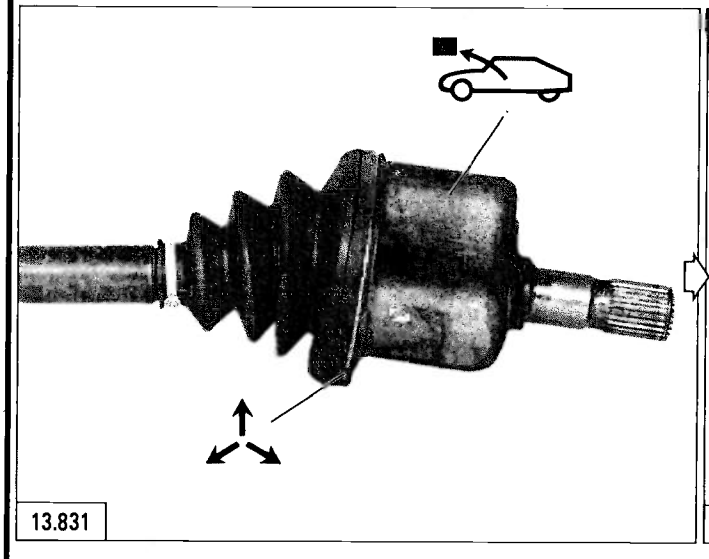
13.831

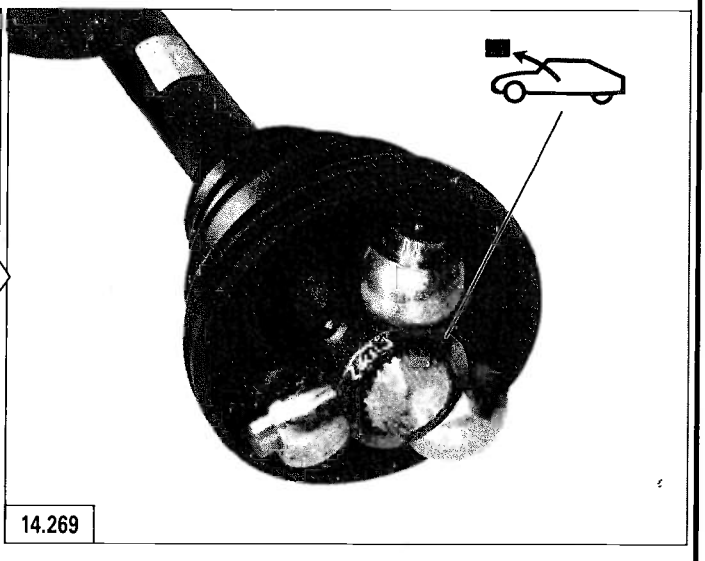
14.269

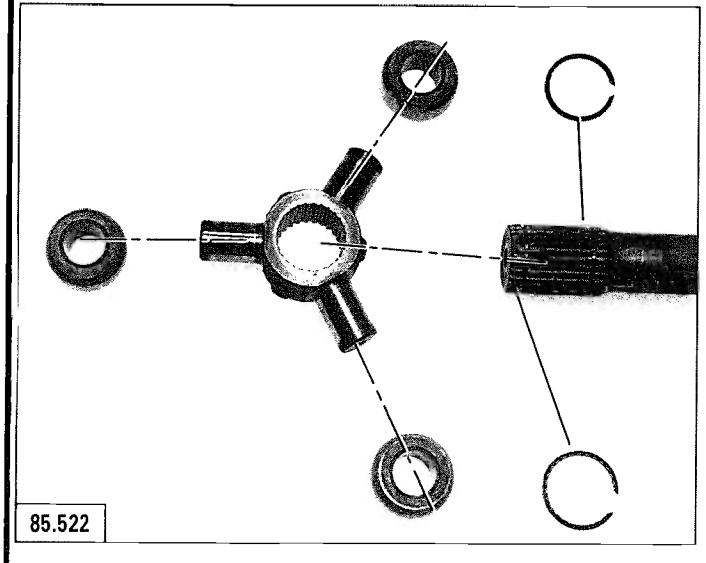
85.522

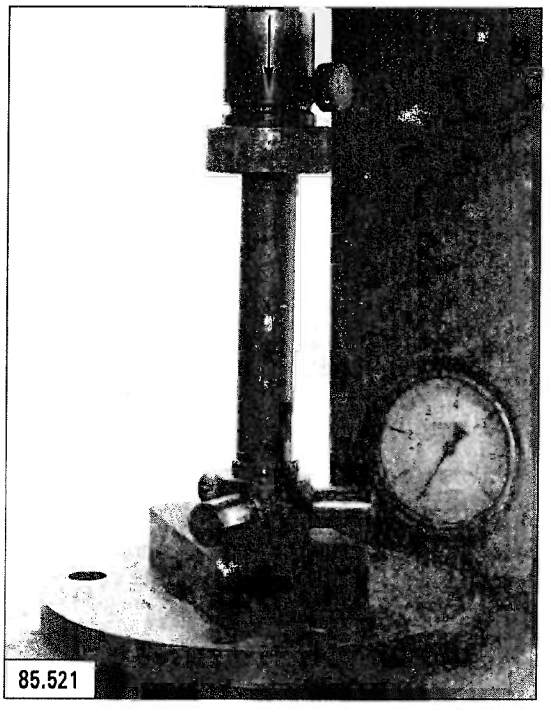
85.521

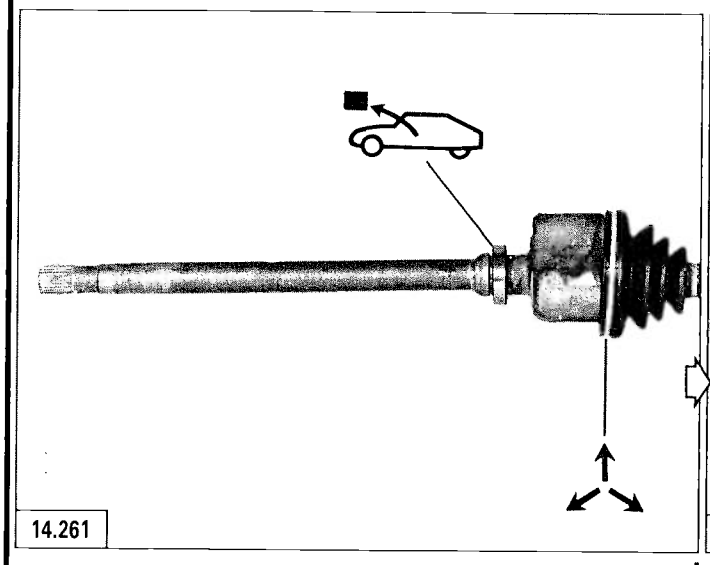

I

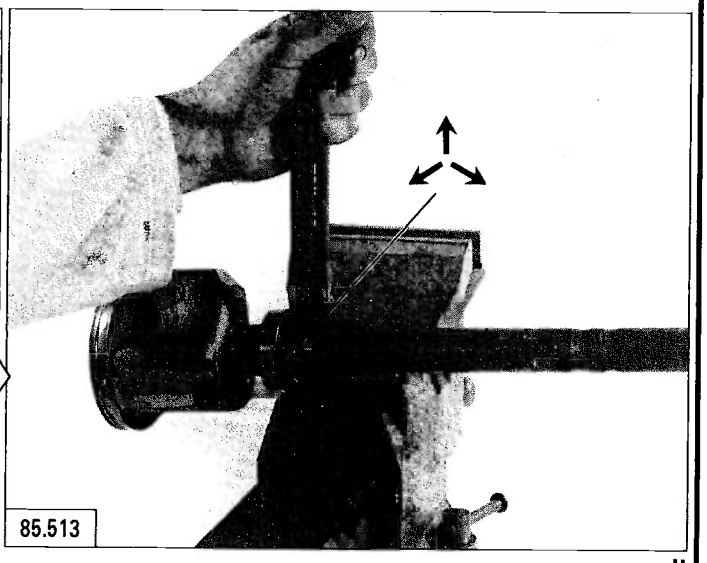

II

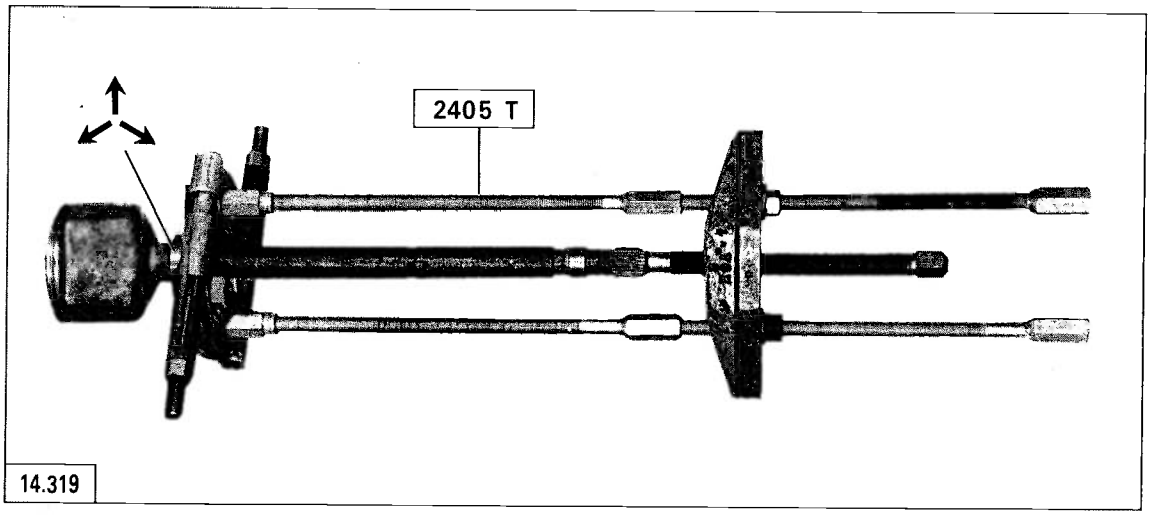

III

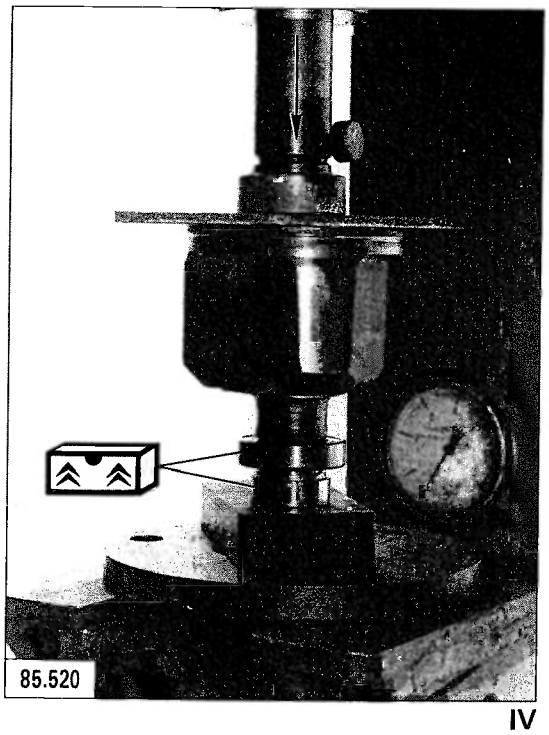

IV

6

LIST OF OPERATIONS APPEARING IN THE CHAPTER: SOURCE AND RESERVE OF PRESSURE

OPERATION No.	DESCRIPTION	OPERATIONS △ TEXTS	OPERATIONS ○ SYMBOLS	VEHICLE CONCERNED ENGINE TYPE: 20 Petrol 829 A 5	22 Petrol J6T A 500	25 Petrol Injection 25/659	25 Prestige 25/659	25 Petrol Turbo 25/662	25 Prestige Turbo 25/662	25 Diesel 25/660	25 Diesel Turbo 25/648	25 Limousine Diesel Turbo 25/648	20 Safari Petrol + Familiale 829 A 5	25 Safari Petrol Injection 25/659	25 Safari Diesel + Familiale 25/660	25 Safari Diesel Turbo 25/648	Ambulance 829 A 5 or 25/660		
MA 390/1	Tools		○	X	X	X	X	X	X	X	X	X	X	X	X	X	X		
MA 390.000/1	Working on the hydraulic system-Precautions to be taken on refitting	△		X	X	X	X	X	X	X	X	X	X	X	X	X	X		
MA 390.00/1	Specification and particular features of the source and reserve of pressure	△		X	X	X	X	X	X	X	X	X	X	X	X	X	X		

4034 T

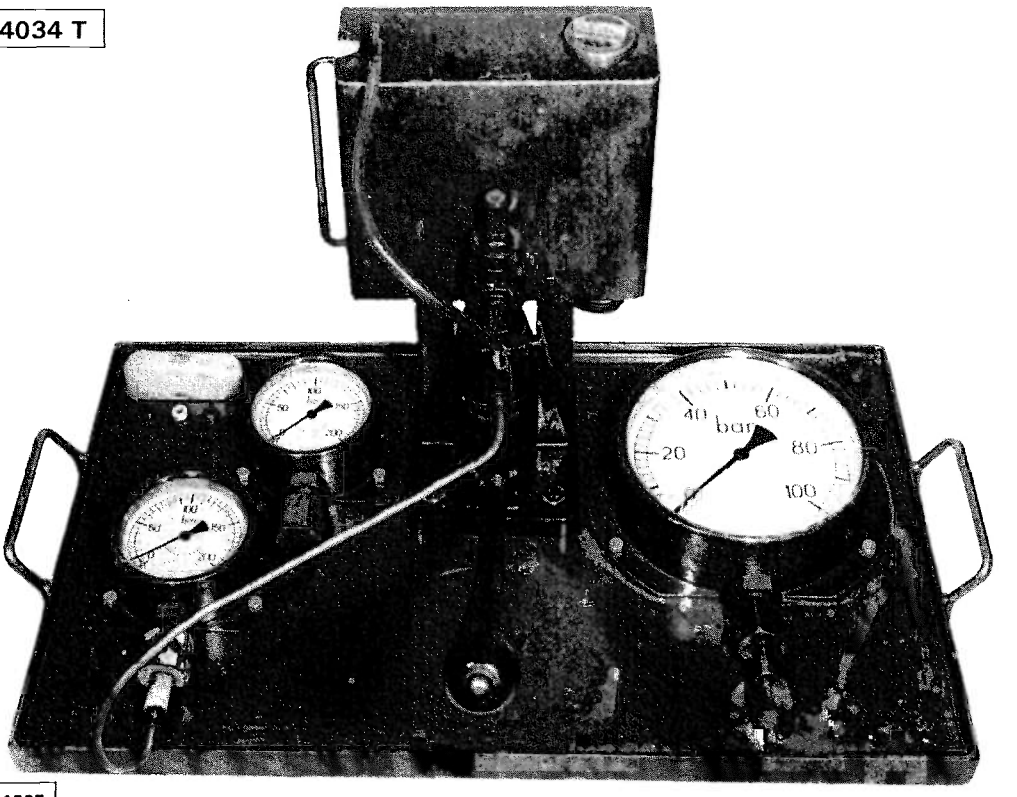

82.1297

I

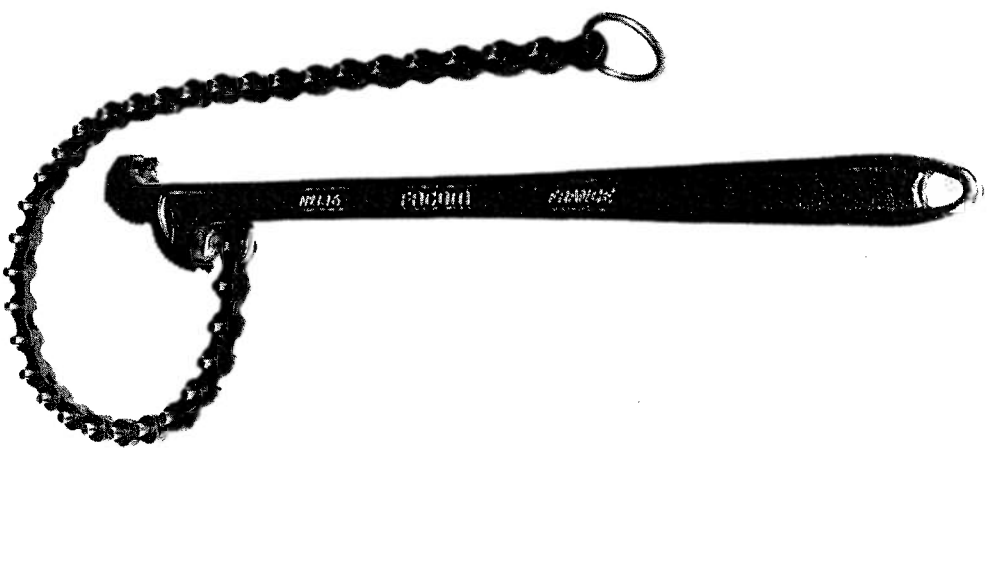

82.827

II

WORKING ON THE HYDRAULIC SYSTEM
FITTING PRECAUTIONS

PRECAUTIONS TO BE TAKEN WHEN WORKING ON THE HYDRAULIC UNITS OR THE SYSTEM

The correct functioning of the entire system presupposes perfect cleanliness of the fluid and the hydraulic units. Stringent precautions must therefore be taken when working on the hydraulic system and during the storage of the fluid and components.

1. HYDRAULIC FLUID:

Mineral hydraulic fluid (LHM) is the only suitable type and must be used to the exclusion of all others in the hydraulic system of the car.
This LHM fluid is *green in colour* and similar to engine oil.
The use of *any other would ruin* the rubber rings and seals in the system.

2. RUBBER UNITS AND PARTS:

Suitable components are identified by their *green colour* and may only be replaced by *genuine replacement components* painted or marked in green.
All rubber components (seals, hoses, diaphragm, etc...) are of a *special quality for use with LHM fluid* and are identified by their white or green colour.

3. STORAGE:

Components must be stored, *full of fluid and blanked off.* Like the piping, they must be protected against shock and the ingress of dust.
Rubber tubing and joints must be stored away from dust, air, light and heat.
LHM hydraulic fluid must be stored in its original containers carefully sealed. We advise the use of one litre (for topping up) or five litre cans (for refilling) to avoid having to keep opened containers.

4. CHECKS BEFORE CARRYING OUT WORK:

Before working on the hydraulic system in case of faulty operation, ensure the following:

a) That the controls or the mechanical linkages of the units or the group of hydraulic units involved are not stiff in operation

b) and that the HP circuit is under pressure, as follows:
With the engine at idling speed:
- Unscrew the pressure-release screw on the pressure regulator by one turn to one turn and a half: a sound of leakage should be heard from the regulator.
- Retighten the release screw: cut-out must occur which results in a reduction in the running noise emitted by the H.P. pump.

If not, check in the following sequence:
- that there is sufficient fluid in the reservoir,
- that the reservoir filter is clean and in good condition,
- that the H.P. pump is primed and there is no air leak on the suction side of the pump,
- that the release screw of the pressure regulator is correctly tightened,
- that sealing ball (2) is in position, **(see Fig. I and II, page 5).**

5. PRECAUTIONS TO BE TAKEN BEFORE WORKING ON THE HYDRAULIC SYSTEM:

a) *Carrefully clean* the aera of work, the unions and the unit to be removed.
- Disconnect the lead from the negative terminal of the battery.
- Only use petrol or lead-free petrol cleaning.

b) *Release the pressure* in the circuits:
- Place the vehicle in the *«low» position*.
- Slacken the pressure regulator release screw *(by one turn to one turn and a half*, **do not remove the screw: the sealing ball (2), see Fig. I and II page 5, could get lost**,
- Wait until the front of the car has reached the low position.

6. PRECAUTIONS TO BE TAKEN DURING REMOVAL.

a) *Blank off the metal pipes* with plugs, and rubber tubes with round pins of the correct diameter.

b) *Blank off the openings* of components with plugs of the correct diameter.

NOTE: Plugs and pins must be carefully cleaned before insertion.

7. CHECK OR TEST OF HYDRAULIC UNITS:

- use *4034-T test bench* equipped and designed for use with LHM fluid.
- This bench is *painted green* and its accessories are marked in green.
- Never use the bench with another fluid or for testing components operating with another fluid (units of a «D» car using LHS 2 for instance).

NOTE: The «Le Bozec» pump used on test benches for checking DIESEL injectors can be resorted to for testing components operating with LHM mineral fluid provided that the bench is cleaned first.

8. PRECAUTIONS TO BE TAKEN DURING REFITTING.

a) *Cleaning:*
- steel pipes must be blown through with compressed air,
- rubber tubes and seals must be washed in petrol or lead-free petrol and then dried with compressed air,
- hydraulic units must also be cleaned with petrol or lead-free petrol and blown through with compressed air.

NOTE: Renew all joints and seals during refitting.

b) *Lubrication:*
- Follow the indications as stated in the operations in the Manual.
- Joints and internal parts must be lightly oiled before fitting (use mineral fluid LHM only).
- If parts in contact with hydraulic units have to be greased, use a mineral grease only (as employed for cardan shafts or bearings).

c) *Fitting:*

Only use joints of a quality compatible with LHM mineral fluid.

To connect a union, proceed as follows: **Fig. III**

- Position sleeve-seal **« a »** lightly coated with LHM fluid ; this sleeve must not reach the extremity of pipe **«b»**.
- Centre the pipe in the housing by lining it up with the axis of the hole, avoiding all stress. (Ensure that the end **«b»** of the pipe enters into the small bore **«c»**).
- **Start screwing in the union-nut by hand,** slacken the unit fixings, *if necessary*, to make this operation easier.
- Tighten nut moderately: excessive force could cause a leak because of the deformation of the pipe.

Tightening torques:

3.5 mm dia. pipe 4.5 dia. pipe	**0.8 to 0.9 m.daN**
6.0 mm dia. pipe	**0.9 to 1.1 m.daN**

The design of the various seals ensures that their sealing action increases with fluid pressure. **In the case of a leak, check the tightening torque of the union-nut. If the leak does not stop, replace the sleeve-seal.**

To connect a rubber tube, a rubber ring of suitable diameter has to be positioned between the tube and the hose clip.

9. CHECKS ON COMPLETITION OF WORK.

On completion of work on hydraulic units or the system itself, check the following:

a) *The union for leaks.*

b) ***The clearance between the pipes:*** **pipes must not touch one another or any component, nor may any other unit., whether fixed or movable, exert any stress on them.**

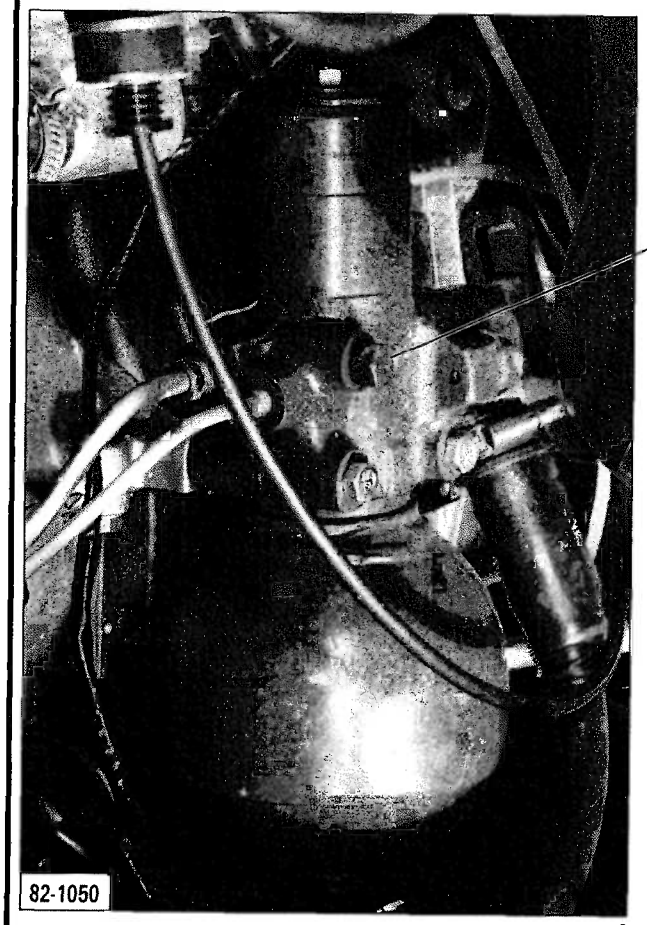

I

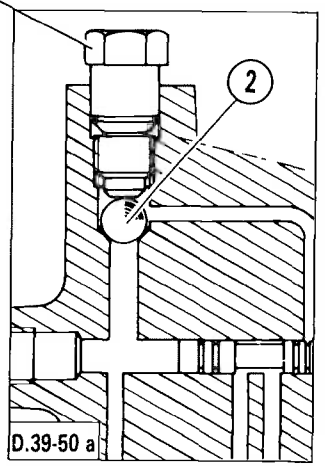

II

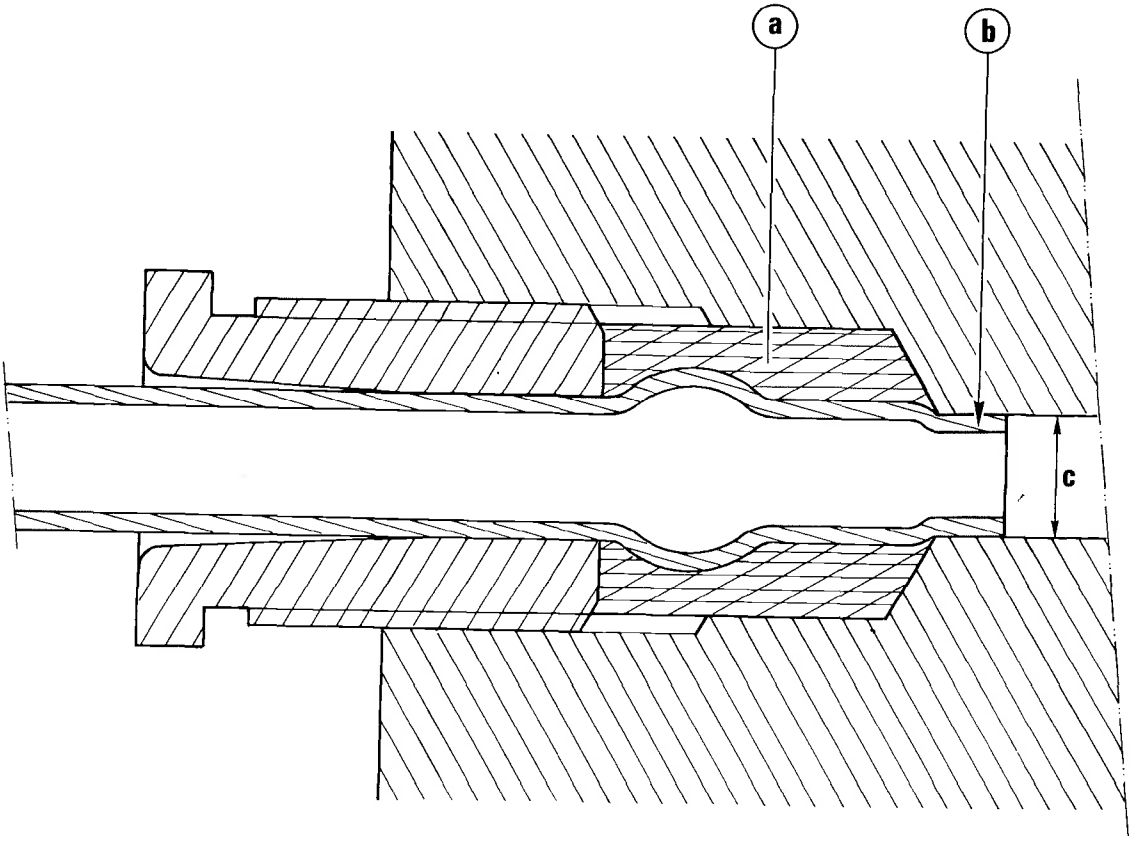

III

SPECIFICATION AND PARTICULAR FEATURES OF THE SOURCE AND RESERVE OF PRESSURE

Reservoir:

The reservoir is located in the left hand rear section of the engine compartment. Its breather, situated on the filler cap, is connected to a filter-capsule placed in the LH wheelarch.

Level indicator: Fig. I

A: maximum mark.

B: minimum mark.

Key to reservoir diagram: Fig. I and II

1 - Overflow return from front and rear suspension cylinders.

2 - Overflow return from security valve and front rear height correctors.

3 - Reservoir breather with filter in wheelarch.

4 - Hydraulic control block return pipe (ABS).

5 - Operational and overflow return pipes from compensator-brake control valve.

6 - Operational return pipe from pressure regulator and front and rear height correctors.

7 - Suction line for HP pump.

8 - Baffle deflector.

9 - Filter for overflow and operational return pipes.

10 - Fluid level indicator float.

11 - Filter on HP pump suction line.

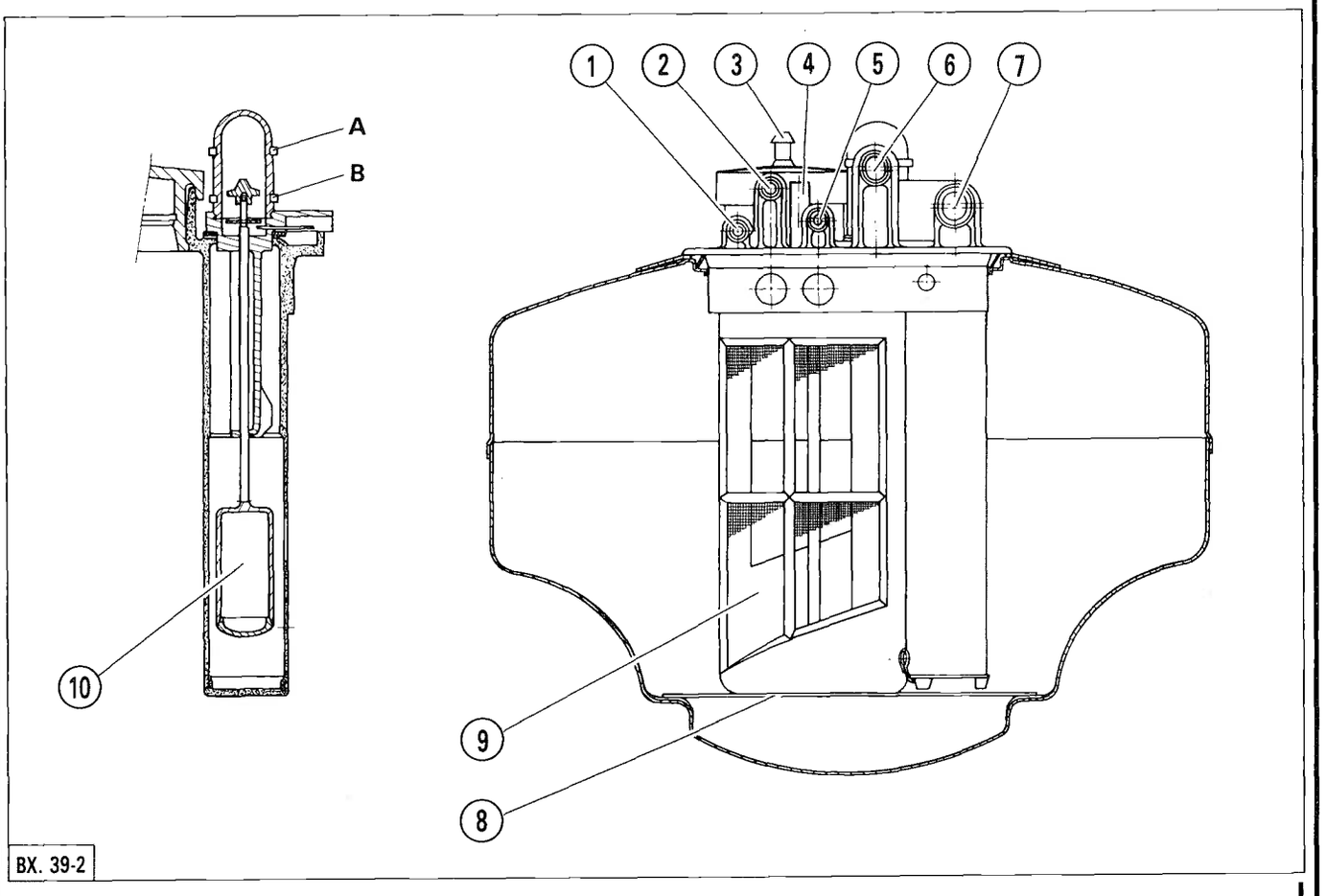

I

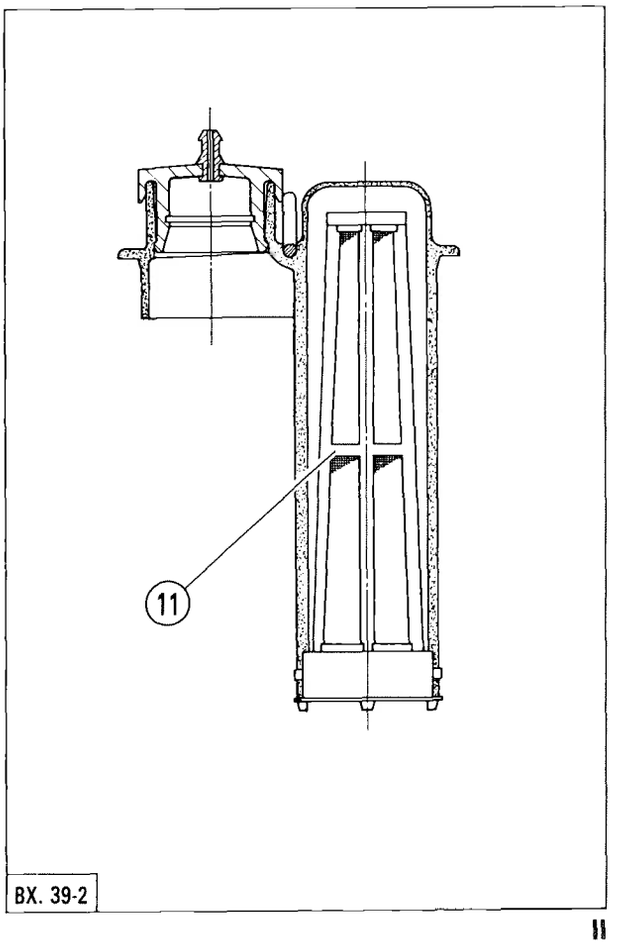

II

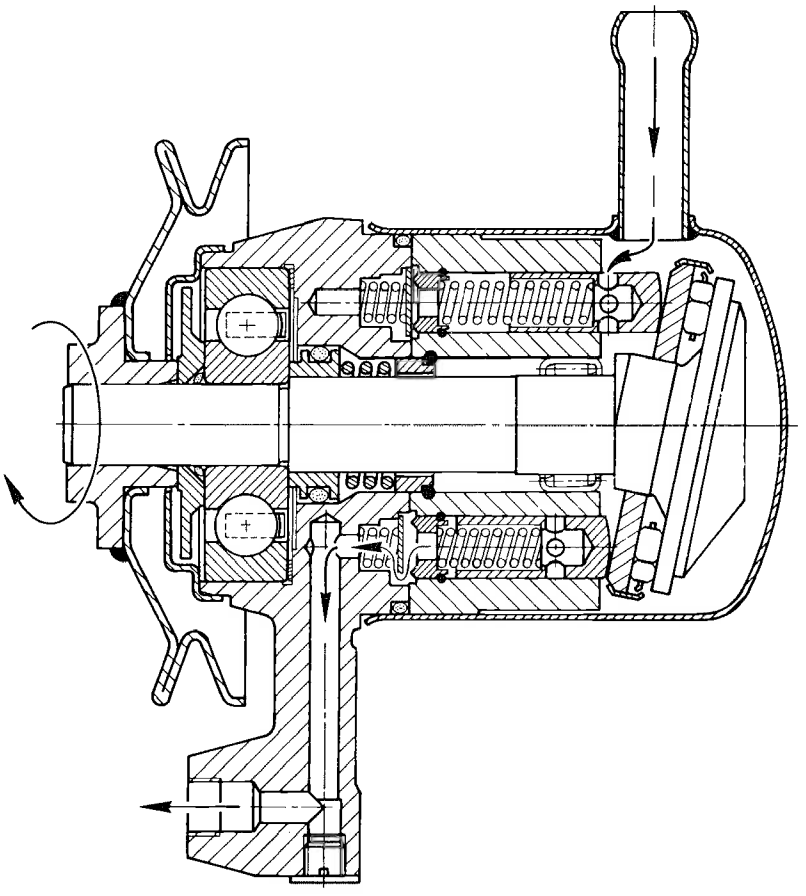

L.39-20

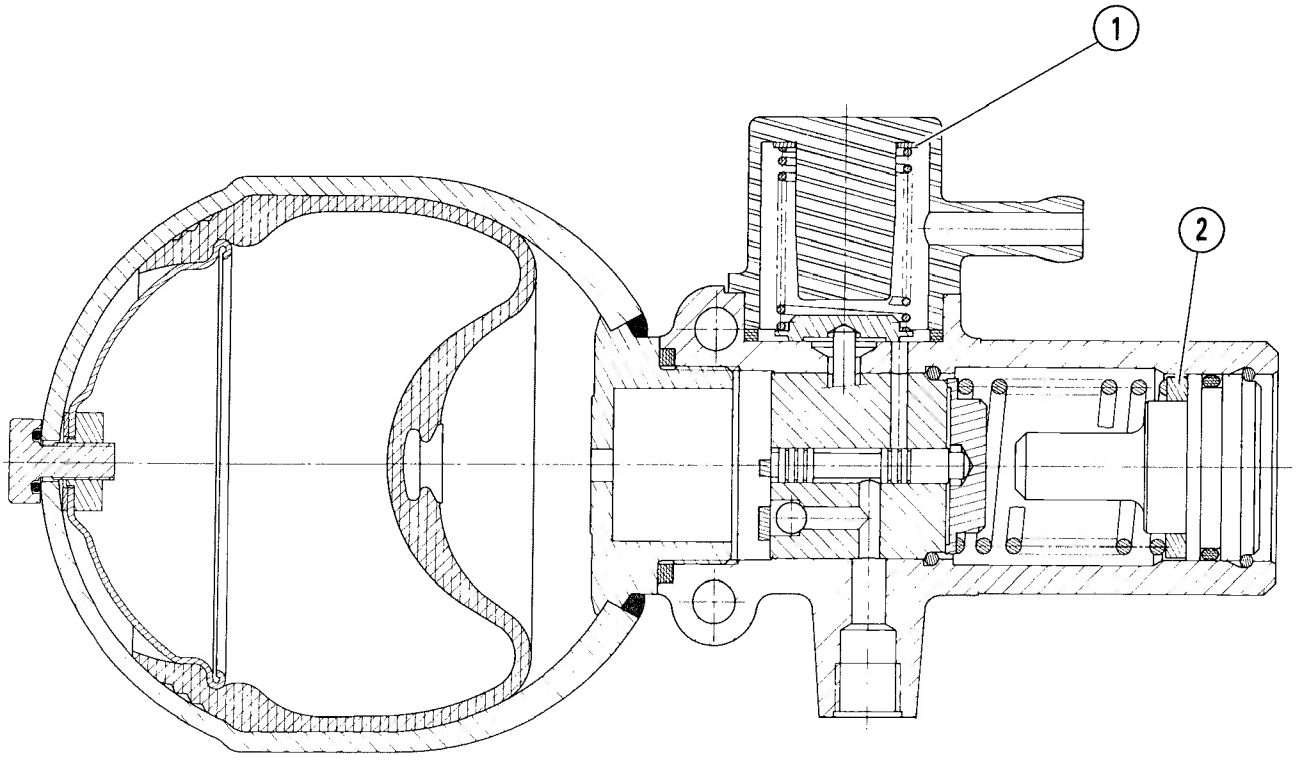

G. 39-9

High pressure pump: Fig. I

- Five-piston volumetric-type pump.

- The pump rotates at half engine speed.

- Pump delivery per turn *(for information)* : . . . . . **4 cm³**

- Maximum pressure: Theoretically, there is no limit to the maximum pressure. In practice, the maximum pressure is controlled by the pressure regulator. Priming the five-piston HP pump can only be carried out when the pressure-release screw of the regulator is **open.**

Pressure regulator with pilot slide-valve: Fig. II

- Cut-out pressure: . . . . . **170 ± 5 bars**

- Cut-in pressure: . . . . . **145 ± 5 bars**

- Thickness of shims (1) for cut-out adjustment: . . . . . **0.3 mm**

- Thickness of shims (2) for cut-in adjustment: . . . . . **0.3 and 0.7 mm**

- One 0.3 mm shim brings about a change in pressure by: . . . . . **approx. 3 bars**

- One 0.7 mm shim brings about a change in pressure by: . . . . . **approx. 7 bars**

Main accumulator: Fig. II

- Capacity: . . . . . **0.4 litres**

- Calibration pressure: . . . . . **$62 \pm \frac{2}{32}$ bars**

Security valve: Fig. I

Calibration pressures for slide valve return spring:

- Pressure for isolation *(no supply to suspension at A and D)* : . . . . . **110 bars min.**
- Pressure for supply to suspension *(delivery at A and D)* : . . . . . **130 bars min.**

Key to diagram:

A : Feed to front height corrector.

B : Feed to steering rack and control unit.

C : H.P. inlet

D : Feed to rear height corrector.

E : Leakage return.

(1) : Adjusting shims for the *calibration of slide valve return spring.*
Shim thickness . . . . . **0.9 mm**

(2) : Slide valve.

(3) : Fault detector **(mechanically operated through shifting of slide-valve (2)).**

Brake accumulator: Fig. II

- Capacity: . . . . . **0.4 litres**
- Calibration pressure: . . . . . **$62 \pm \frac{2}{32}$ bars**

F : HP inlet.

G : Centrifugal regulator, security valve.

H : Brake control valve.

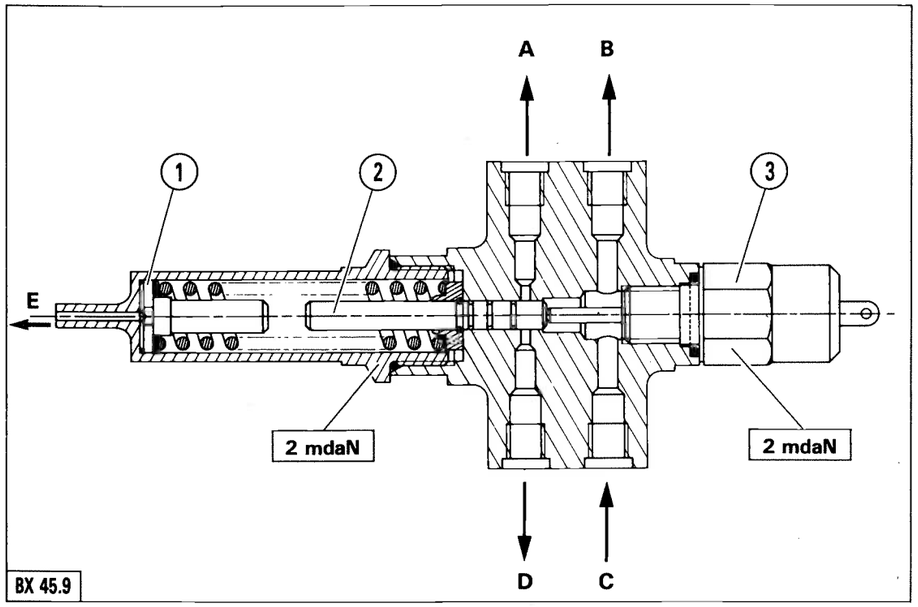

I

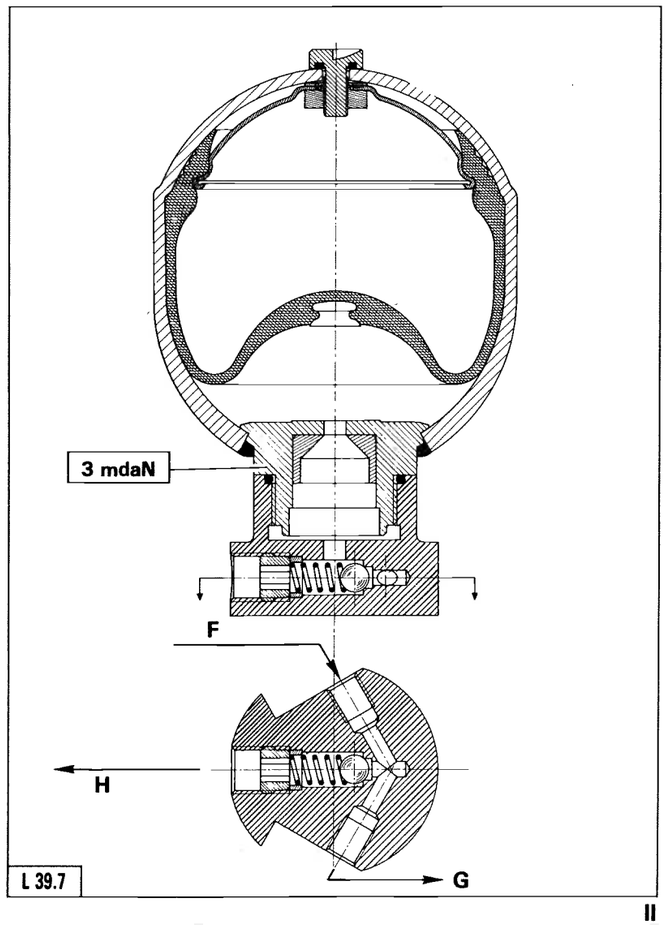

II

– KEY TO THE HYDRAULIC CIRCUITS

- high pressure
- HP/2 (supply to the steering rack)
- pressure sent by the centrifugal regulator
- pressure to the suspension cylinders
- hydraulic feed to the brakes
- return to the reservoir
- overflow return
- venting for the suspension cylinders

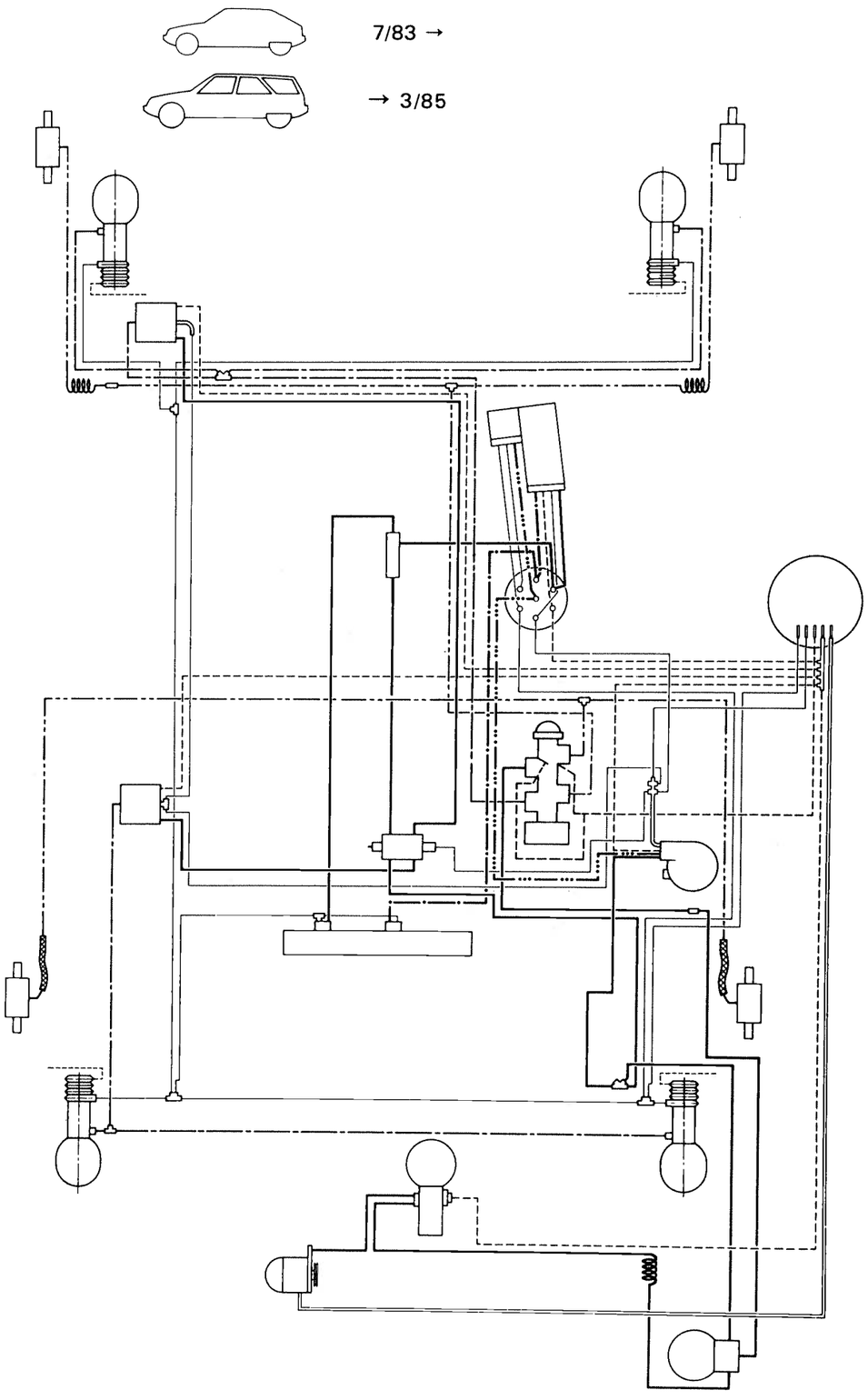

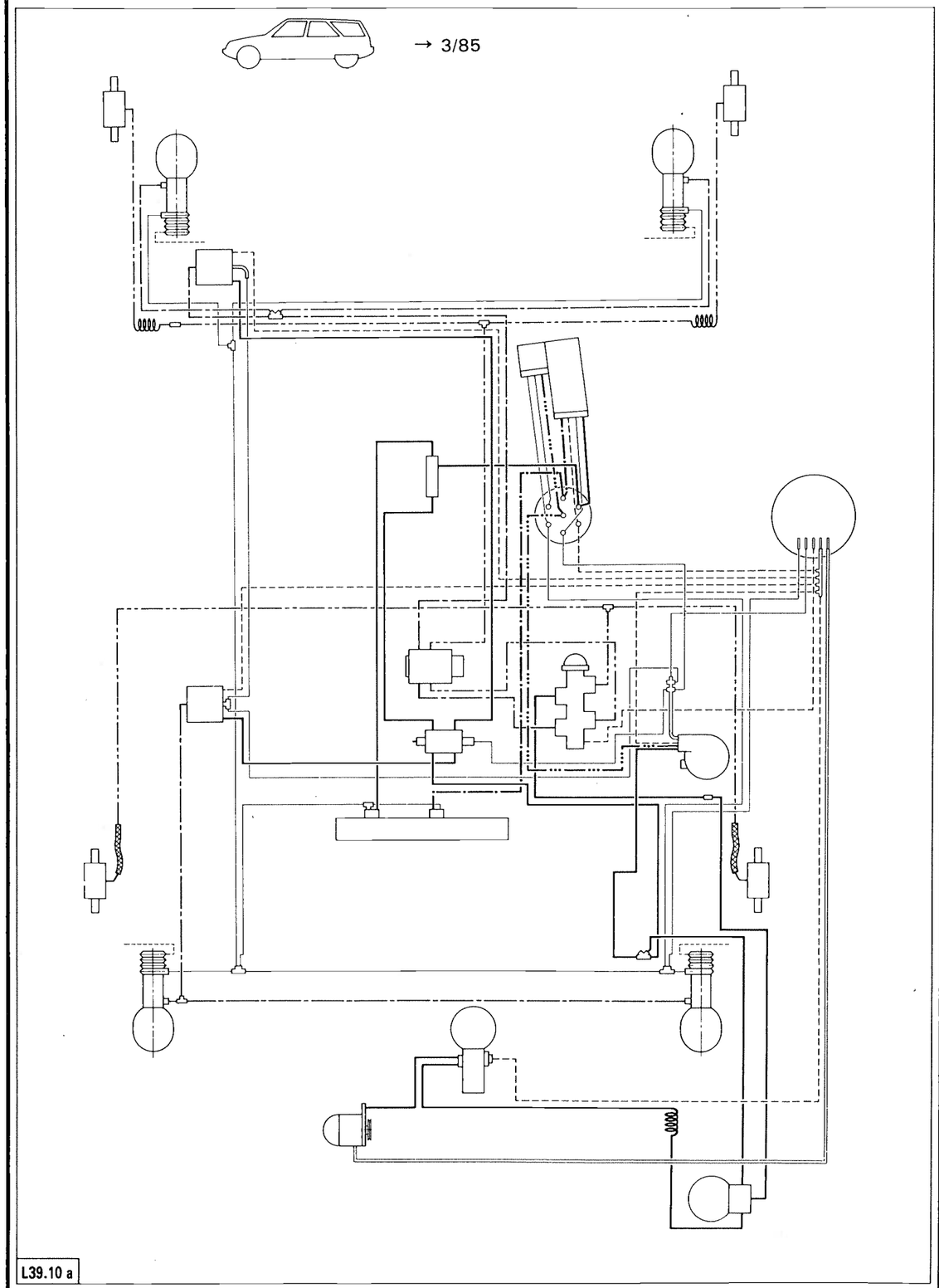

L39.10 a

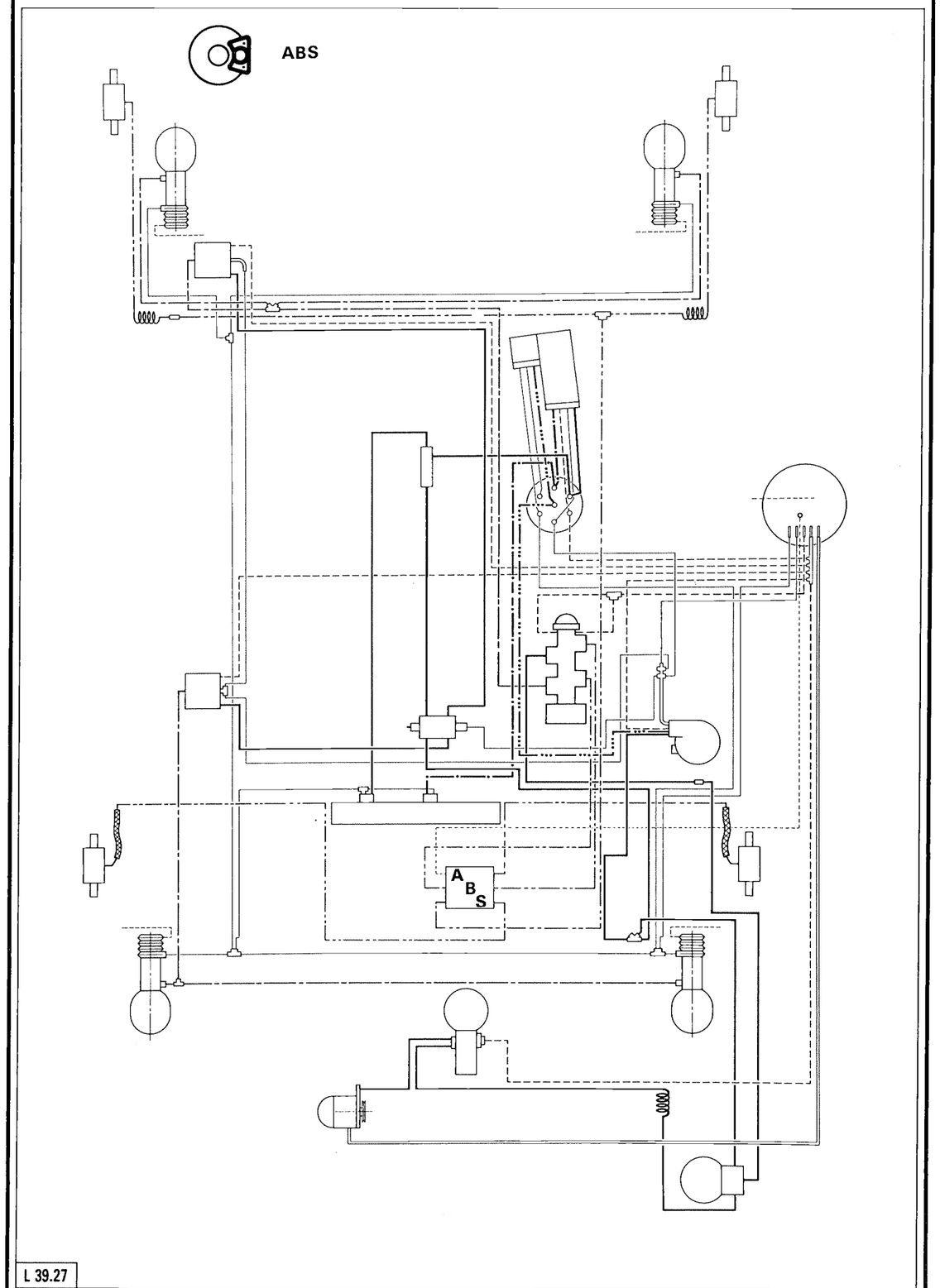

L 39.27

7

CVISION
TECHNOLOGIES

LISTE OF OPERATIONS APPEARING IN THE CHAPTER: FRONT AXLE

OPERATION No.	DESCRIPTION	OPERATIONS △ TEXTS	OPERATIONS ○ SYMBOLS	VEHICLE CONCERNED ENGINE TYPE: 20 Petrol 829 A 5	22 Petrol J6T A 500	25 Petrol Injection 25/659	25 Prestige 25/659	25 Petrol Turbo 25/662	25 Prestige Petrol Turbo 25/662	25 Diesel 25/660	25 Diesel Turbo 25/648	25 Limousine Diesel Turbo 25/648	20 Safari Petrol + Familiale 829 A 5	25 Safari Petrol Injection 25/659	25 Safari Diesel + Familiale 25/660	25 Safari Diesel Turbo 25/648	Ambulance 829 A 5 or 25/660		
MA 410/1	Tools		○	X	X	X	X	X	X	X	X	X	X	X	X	X	X		
MA 410.00/1	Specification and particular features of the front axle		○	X	X	X	X	X	X	X	X	X	X	X	X	X	X		
MA 412.1/1	Removing/refitting an upper wheel arm	△		X	X	X	X	X	X	X	X	X	X	X	X	X	X		
MA 412.1/2	Removing/refitting a lower wheel arm	△		X	X	X	X	X	X	X	X	X	X	X	X	X	X		
MA 412.3/1	Reconditioning an upper wheel arm		○	X	X	X	X	X	X	X	X	X	X	X	X	X	X		
MA 412.3/2	Reconditioning a lower wheel arm		○	X	X	X	X	X	X	X	X	X	X	X	X	X	X		
MA 413.1/1	Removing/refitting a swivel	△		X	X	X	X	X	X	X	X	X	X	X	X	X	X		
MA 426.1/1	Removing/refitting a front wheel hub	△		X	X	X	X	X	X	X	X	X	X	X	X	X	X		

OUT 20 **6303 T**

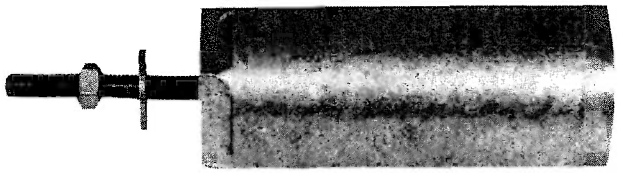

13.810

OUT 20 **6320 T**

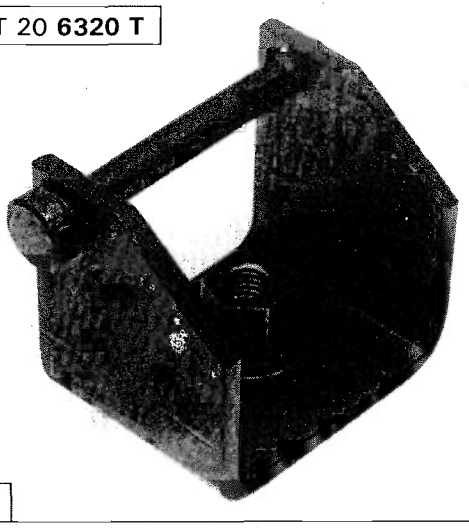

85.333

OUT 20 **6323 T**

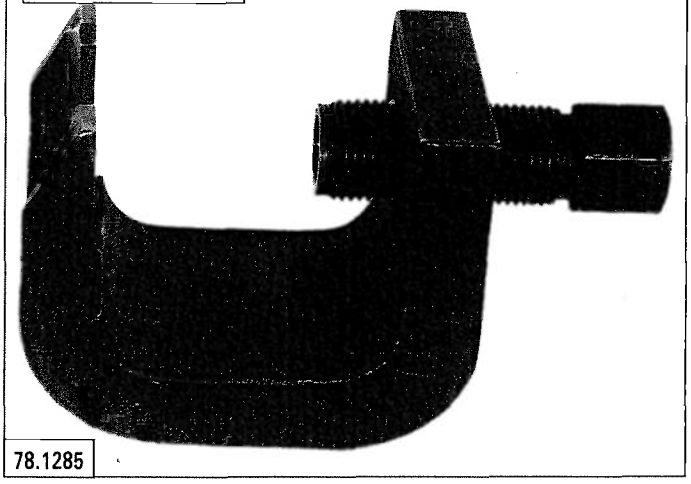

78.1285

OUT 50 **6602 T**

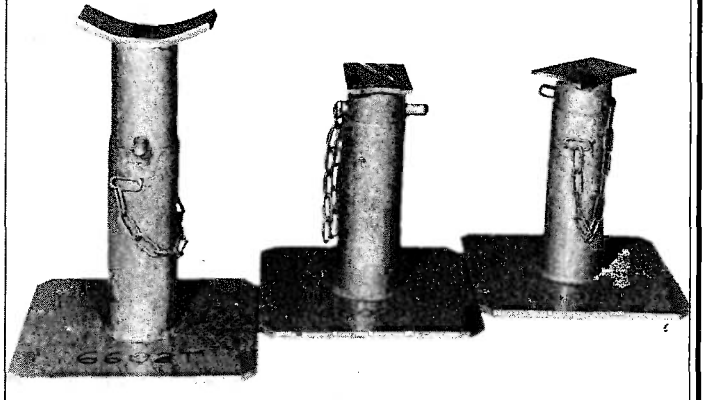

13.815

1671 T

76.923

3312 T

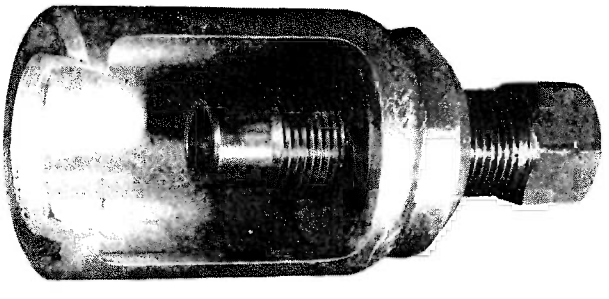

79.959

OUT 20 **6306 T**

13.808

OUT 20 **2063 12 T**

13.809

OUT 32 **6335 T**

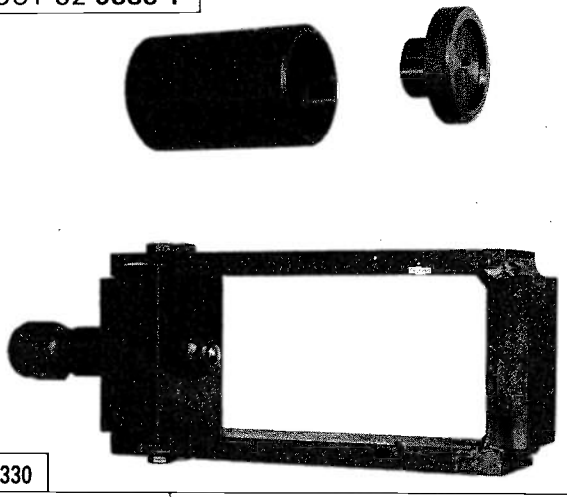

84.330

OUT 30 **6322 T bis**

14.159

OUT 30 **6308 T**

80.1096

OUT 30 **6314 T**

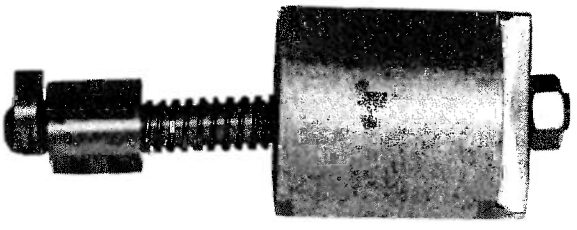

14.122

7 mdaN

2,6 mdaN

37,5 mdaN

6 mdaN

P = 1 à 4 mm

P

C = – 0°25′ → – 1°15′

C

B = 0 $^{+\ 13'}_{-\ 29'}$

B

→ 7/85

7/85 →

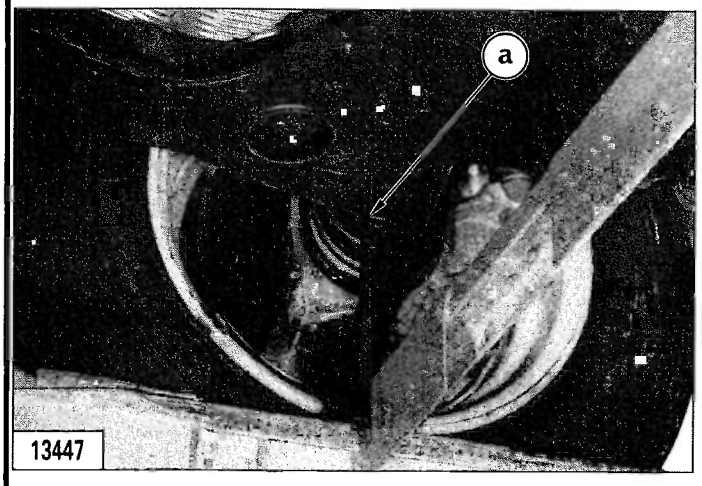

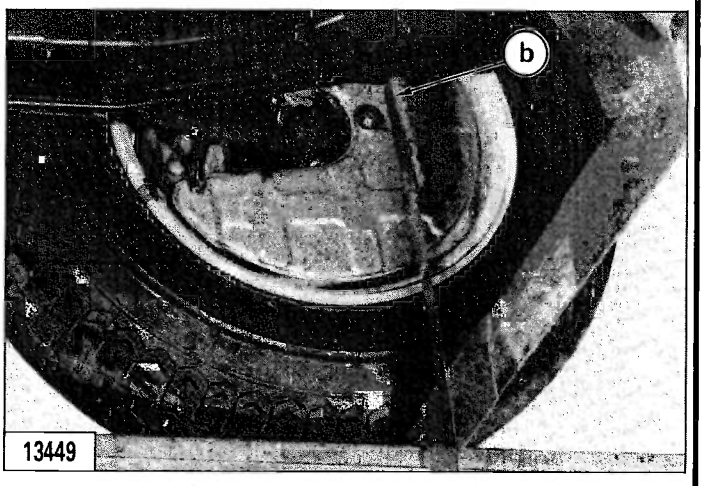

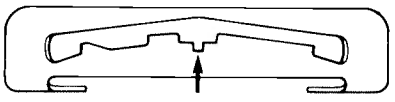

→ 7/85

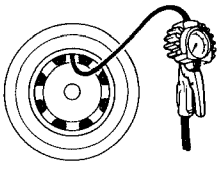

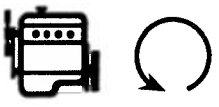

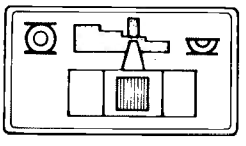

→ 7/85

	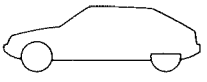	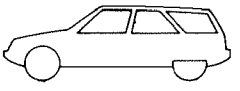
a	b	
165 ± 8 mm	215 ± 8 mm	210 ± 8 mm

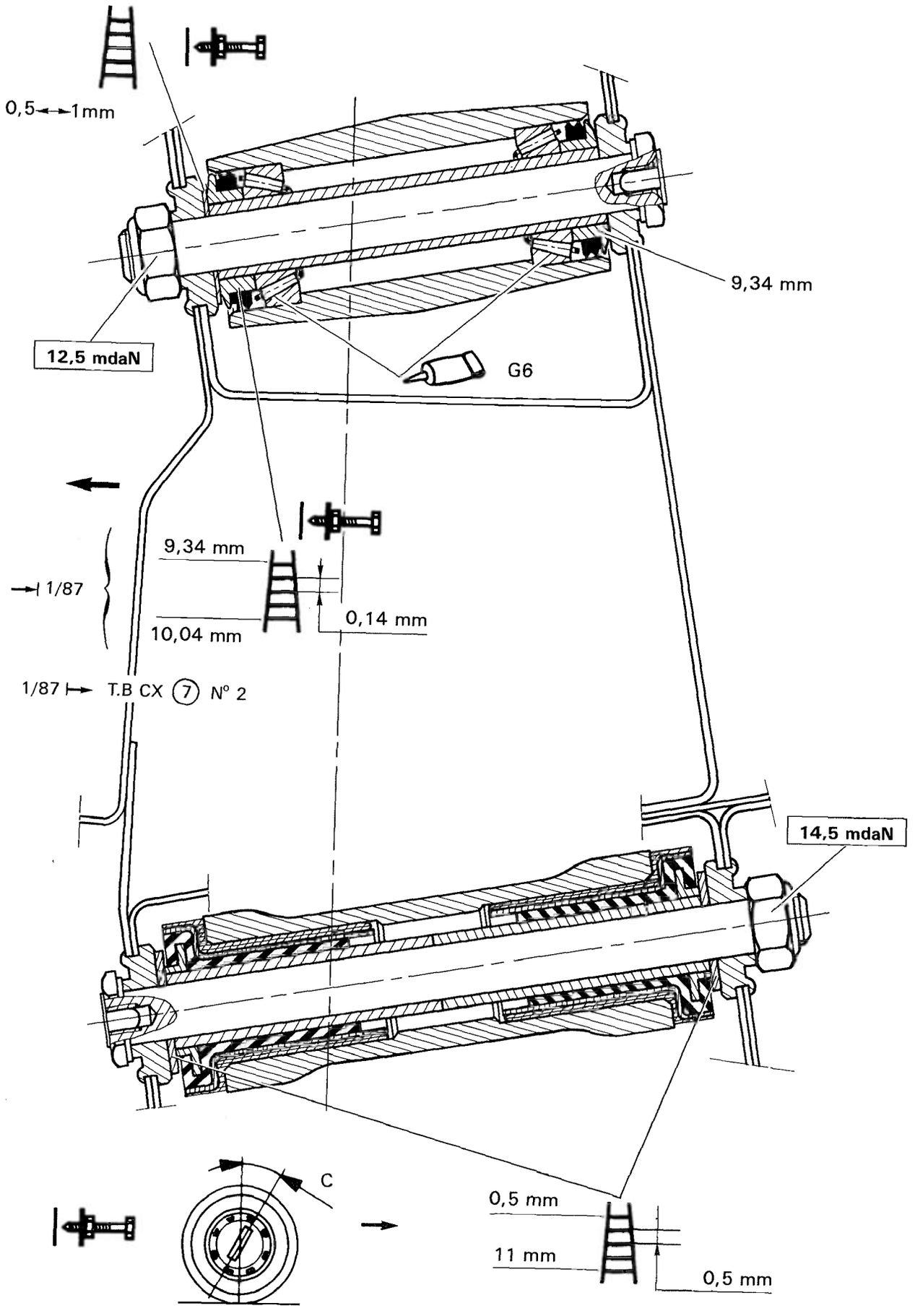

*

RECOMMENDED TOOLS

6303-T. Upper arm shaft extractor.

6320-T. Anti-roll bar link rod extractor.

6602-T. Set of three stands.

REMOVING AND REFITTING AN UPPER WHEEL ARM

REMOVAL

Raise and support the front of the vehicle on stands **6602-T**.

Depressurize the hydraulic circuit.
Set the height control lever to the « low » position

Remove, Fig. I :
- the wheel,
- the suspension cylinder pivot retaining pin (1),
- the anti-roll bar link rod nut (2).

Uncouple ball-joint (3) from the anti-roll bar link rod using puller **6320-T, Fig. II**.

Screw up the tool nut in the ball-joint stem. Fit the tool cross piece and pin.

Extract, Fig. III,
- the nut from upper ball-joint (4).

Disconnect the upper ball-joint.

NOTE:

If the **vehicle** is **fitted with the ABS,** the removal of the upper ball-joint nut requires pushing back the transmission.

Remove:
- the pin,
- the nut lock,
- the drive-shaft nut.

Fig. IV
- nut (5),

Fig. V
- the spindle with extractor **6303-T**.

Remark: *An adjustment shim may be found between the arm and the front face of the subframe.*

REFITTING

The LH wheel arm is different from the RH one. Boss **« a »** *should be directed towards the rear of the vehicle when the wheel arm has been fitted.*

Reinstall, Fig. V :
- the arm fitted with its thrust cups (7)
  (the thinner cup facing rearwards),
- the adjustment shim (6) found on dismantling, facing forward.

Engage the spindle ; place a *new NYLSTOP nut.*

Tighten to **12.5 mdaN**

Recouple the upper ball-joint.
Tighten the *new NYLSTOP nut* to **7 mdaN**

Reconnect the anti-roll bar link rod *(wipe the ball-joint fixing but do not use solvent).*

Tighten the *new NYLSTOP nut* to **4.7 mdaN**

Refit the suspension cylinder pivot and pin.

Vehicles equipped with the ABS:

Fit the drive-shaft nut *(with the faces and threads lubricated).*

Tighten to **37.5 mdaN.**

Replace:
- the nut lock,
- the pin,
- the road wheel.

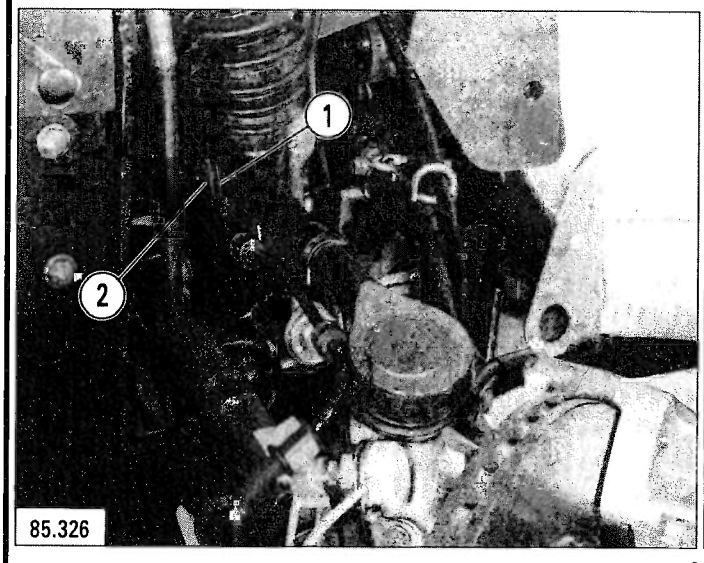

I

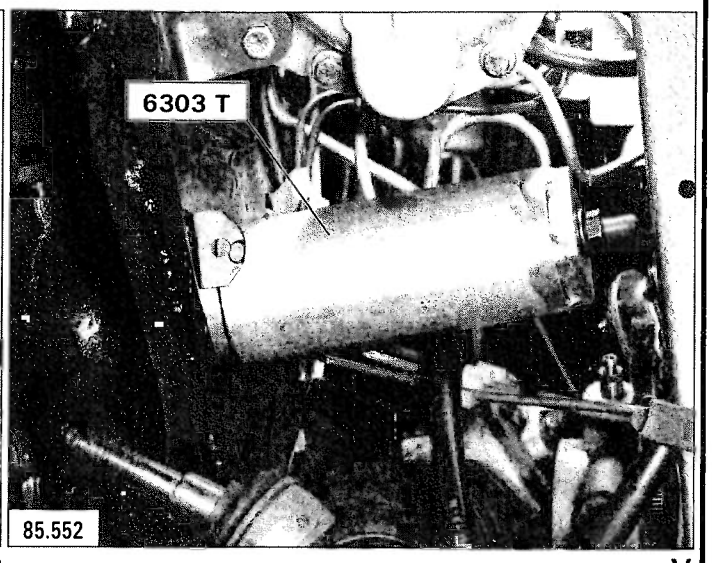

V

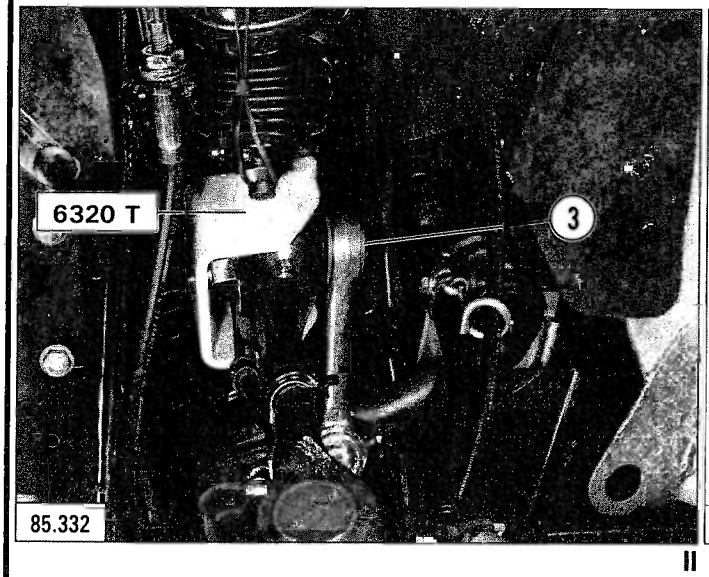

II

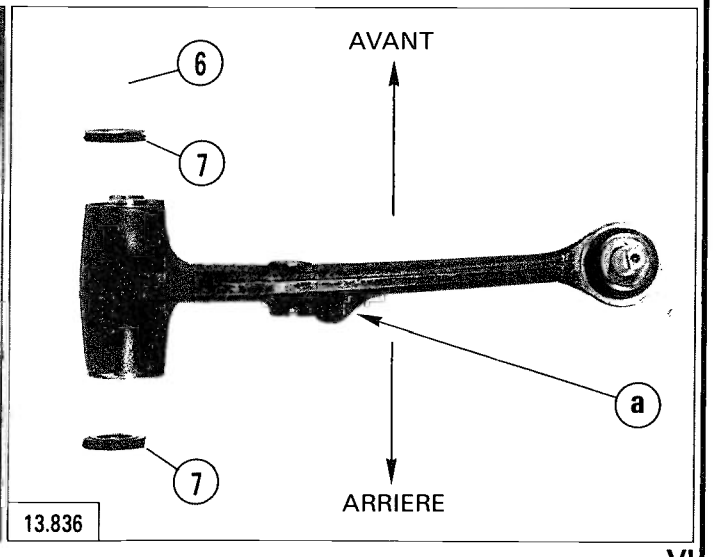

VI

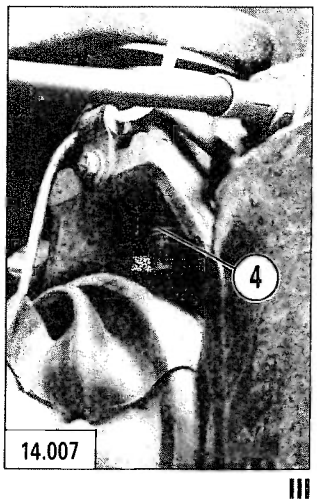

III

IV

TOOLS TO BE USED

1671-T	Inertia extractor.
3312-T	Lower wheel arm ball-joint extractor with bosses.
or	
6323-T	Lower arm ball-joint extractor with or without bosses.
6306-T	Adaptor.
6312-T	Expandable element to secure the lower wheel arm fluid blocks.
6602-T	Set of three stands.

REMOVING AND REFITTING A LOWER WHEEL ARM

REMOVAL

Support the front of the vehicle on stands **6602-T**.

Release the pressure in the hydraulic system.
Set the height control lever to the « low » position.

Withdraw:

- the road wheel,
- the brake pad wear warning lamp harness holding clips,
- the lower ball-joint nut.

Uncouple the lower ball-joint from the arm using puller

3312-T or 6323-T, Fig. I

Take off:

- the plastic trim cover,
- nut (1), **Fig. II**,
- spindle (2) with the help of inertia extractor **1671-T** and adaptor **6306-T, Fig. III.**

Mark adjustment shims (3) and (4) location, Fig. IV.

Remove the wheel arm.

REFITTING

Note: ***the RH and LH arms are not alike.***

If the wheel arm has been removed following an impact, it will be necessary to readjust the caster angle.

Place the expander of tool **6312-T** in the wheel arm, with **screw A pointing rearwards, Fig V.**

Bring tubes (5) and (6) into contact, **Fig. V.** In order to do so:

Fig. VI :

- **Grip** the arm in a vice,
- **Tighten** the expandable element by means of spanner **B** from tool **6312-T.**

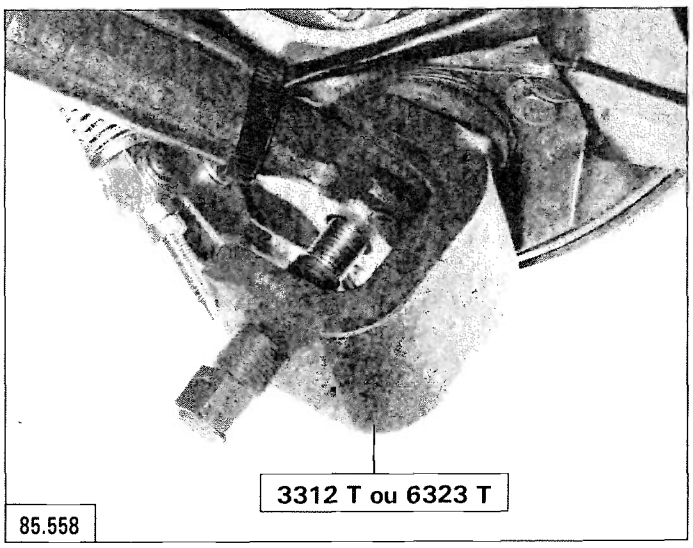

I

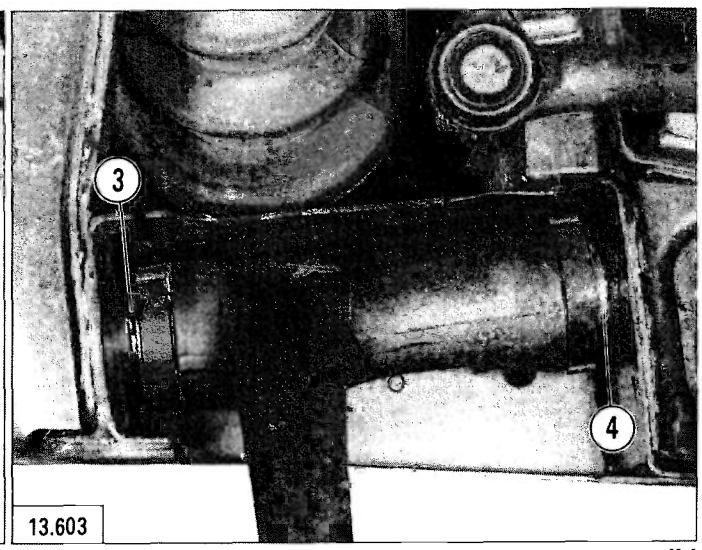

IV

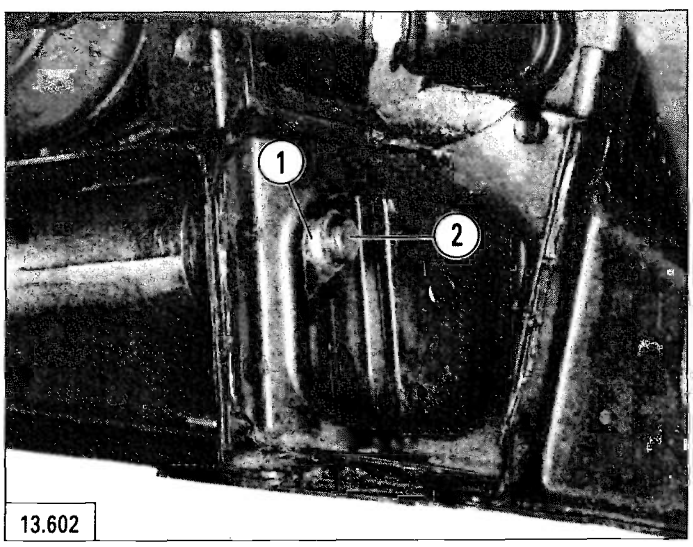

II

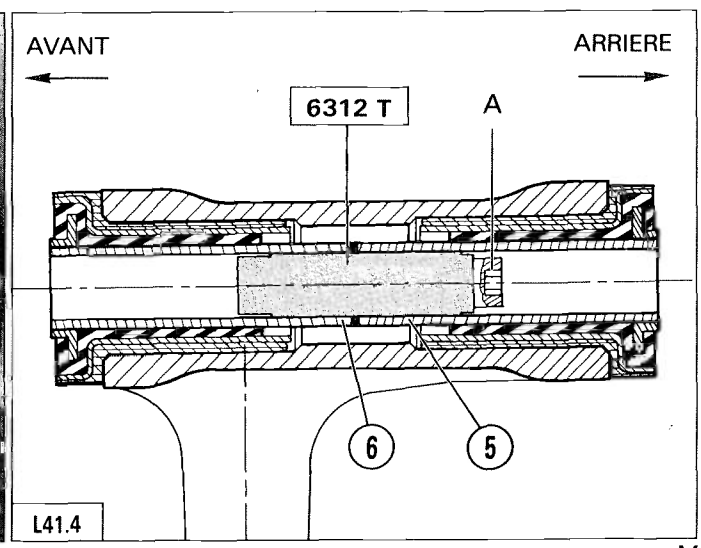

V

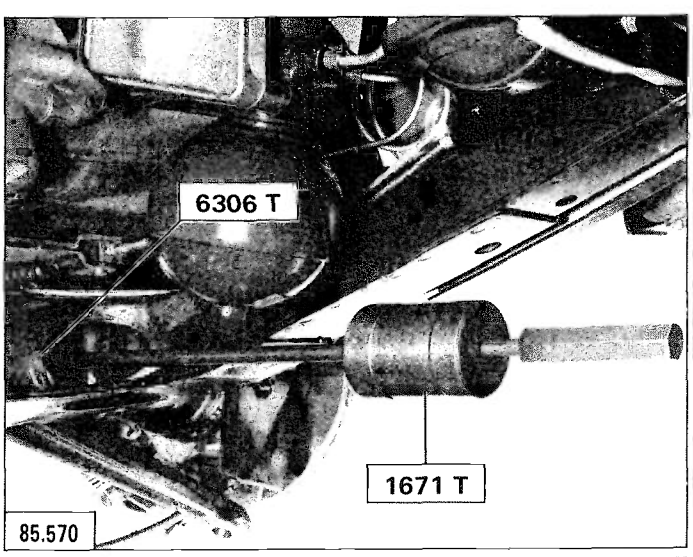

III

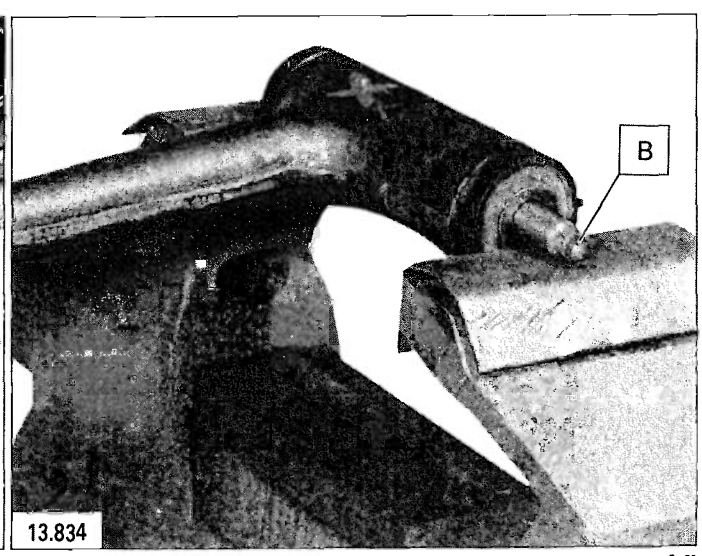

VI

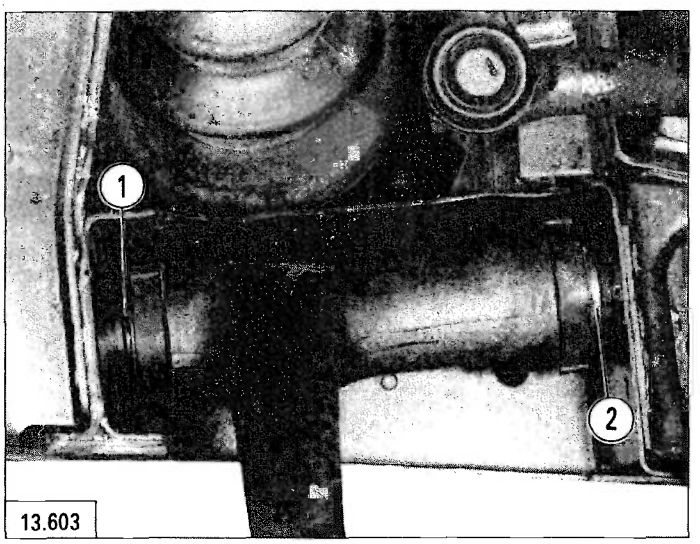

13.603

I

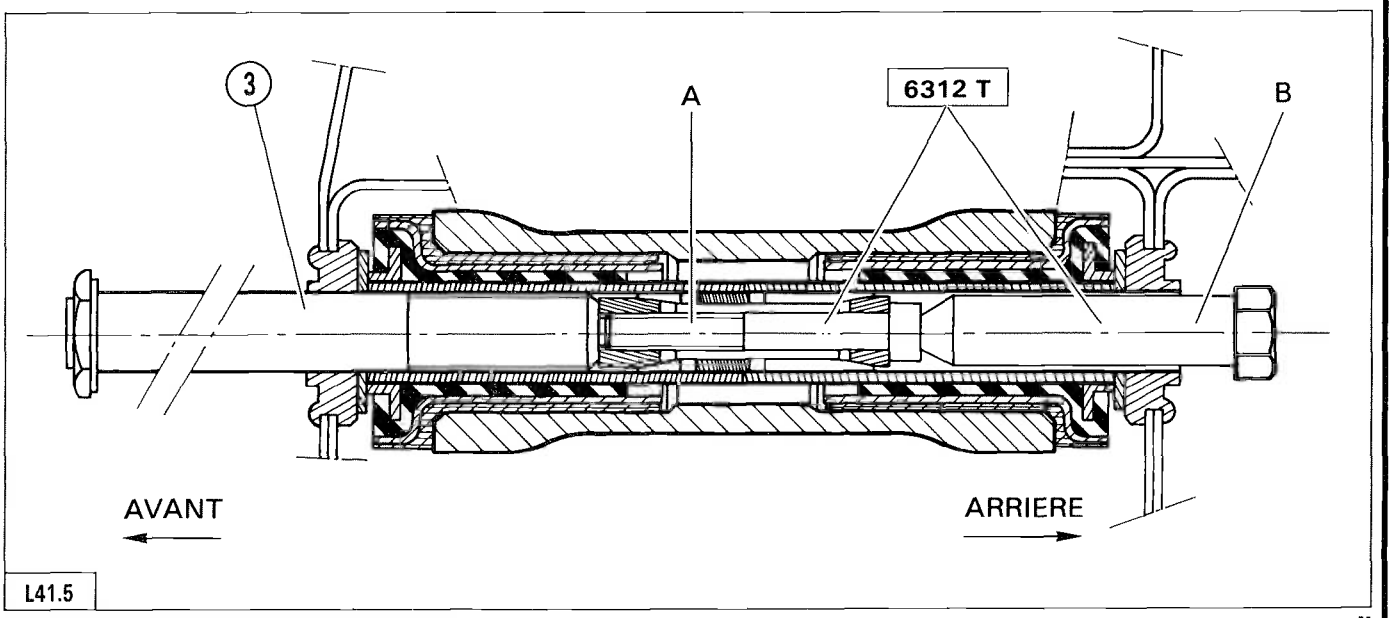

L41.5

II

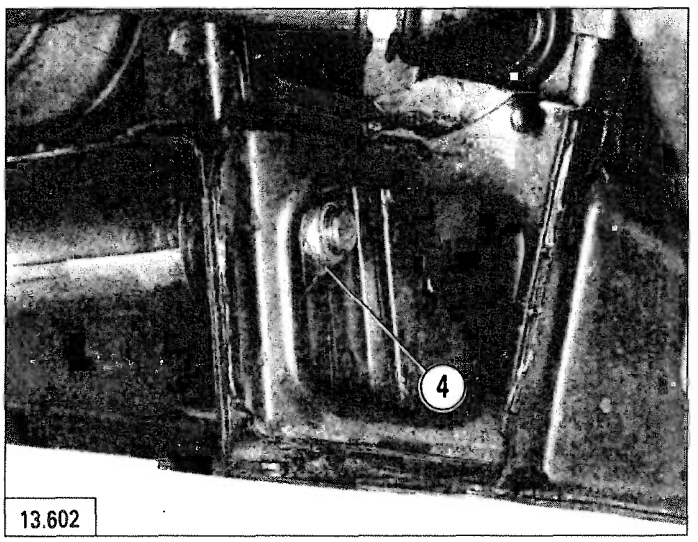

13.602

III

Refit **Fig. I**

the arm together with its adjustment shims (1) and (2) **placed in the position they were found on dismanting.**

Insert spindle (3), **Fig. II**.

Loosen expander **A** with tool **6312-T** spanner **B**.

Drift out the assembly via shaft (3).

Tighten the *new NYLSTOP* nut (4) to **14.5 mdaN, Fig III**.

Reconnect the lower ball-joint to the arm *(wipe the ball-joint fixing but do not use solvent).*

Tighten the *new NYLSTOP* nut to **6 mdaN**.

Reinstall
- the brake pad wear warning lamp harness securing clips,
- the road wheel.

Lower the vehicle to the ground.

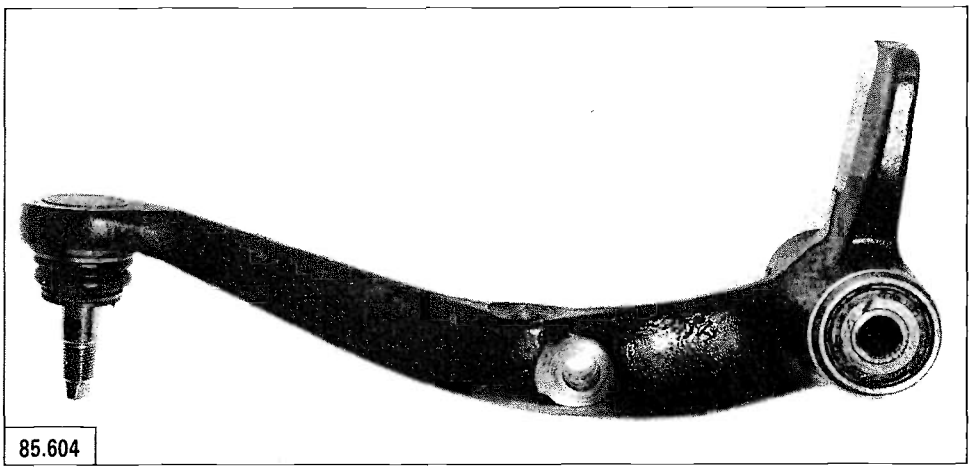

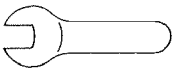

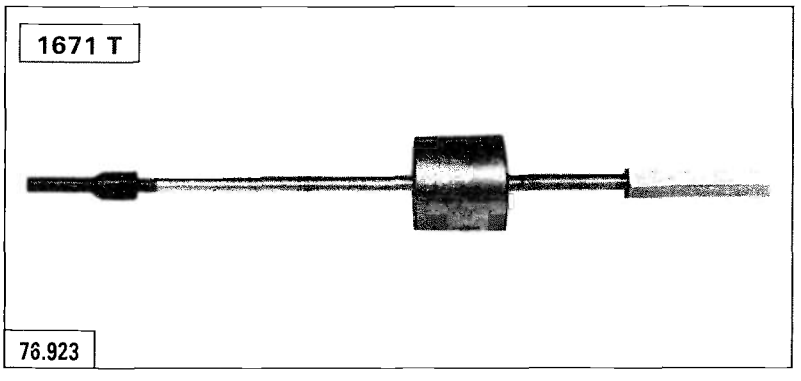

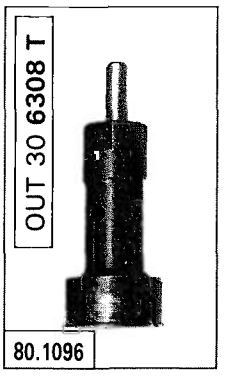

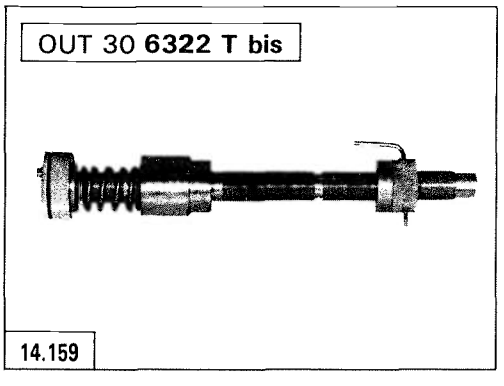

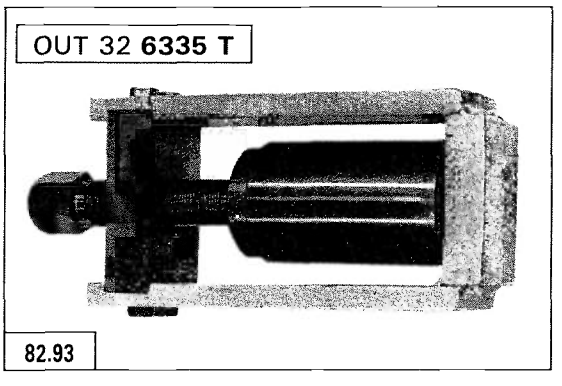

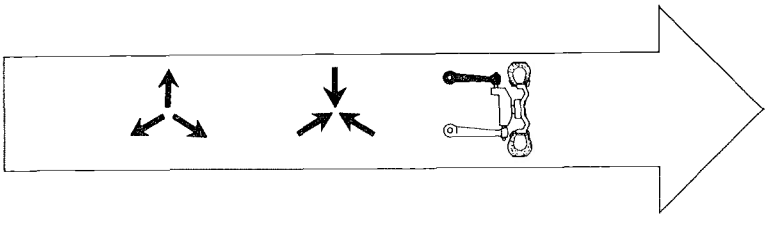

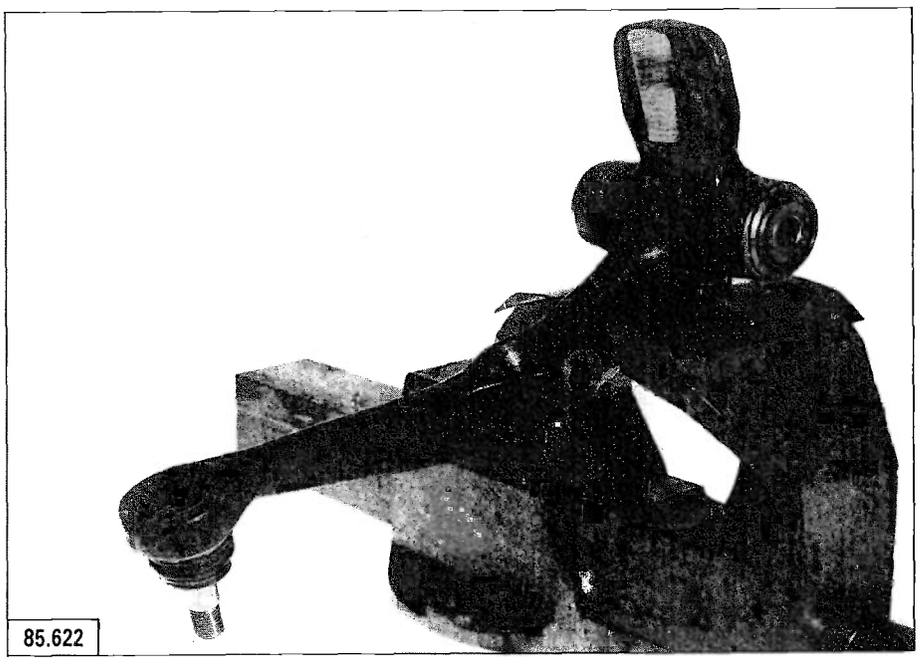

85.622

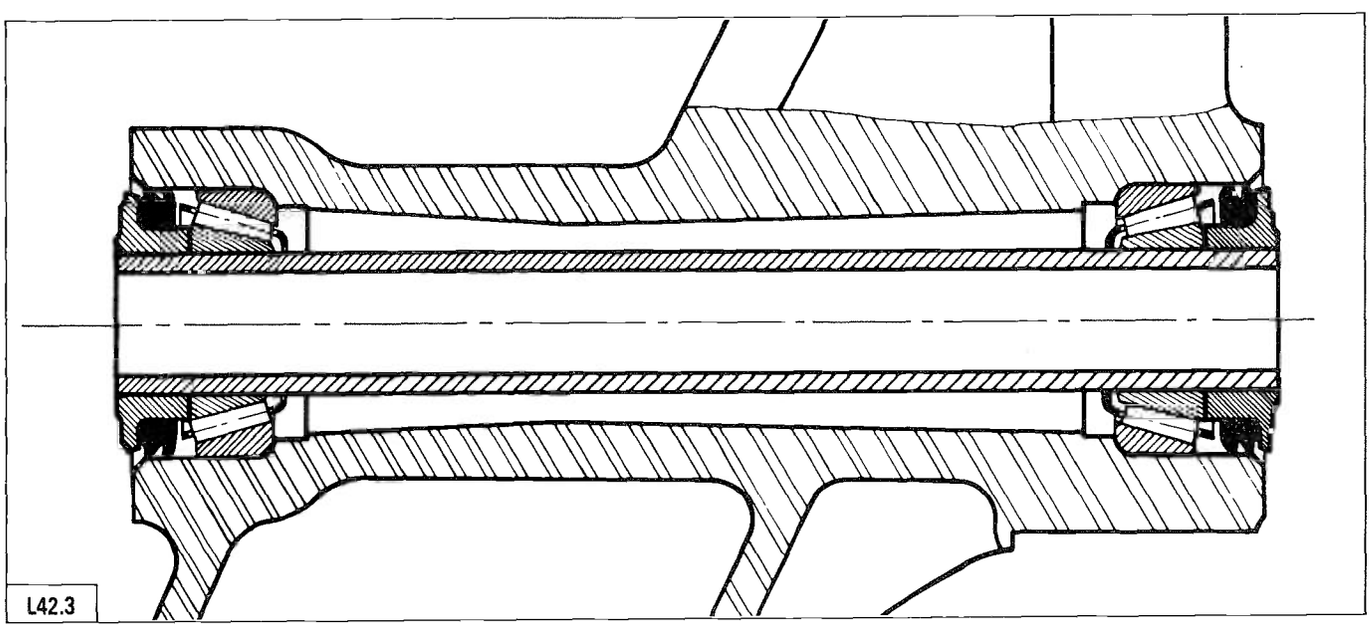

L42.3

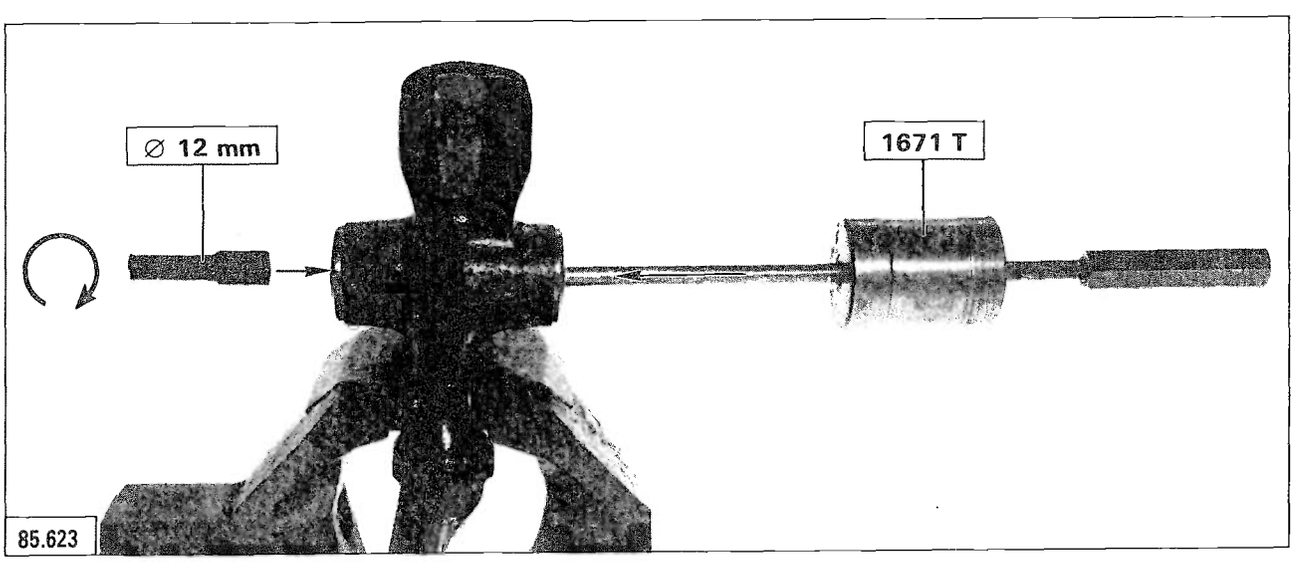

85.623

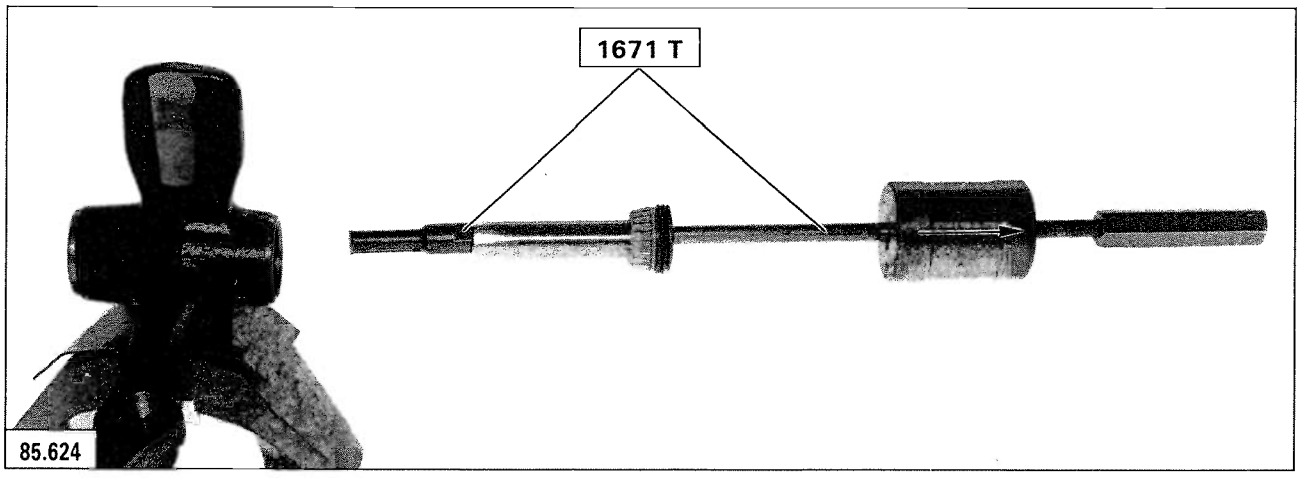

85.624

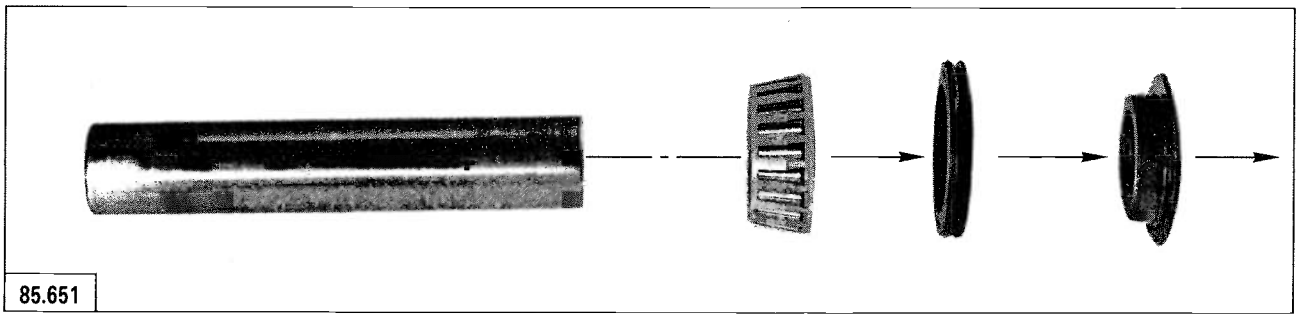

85.651

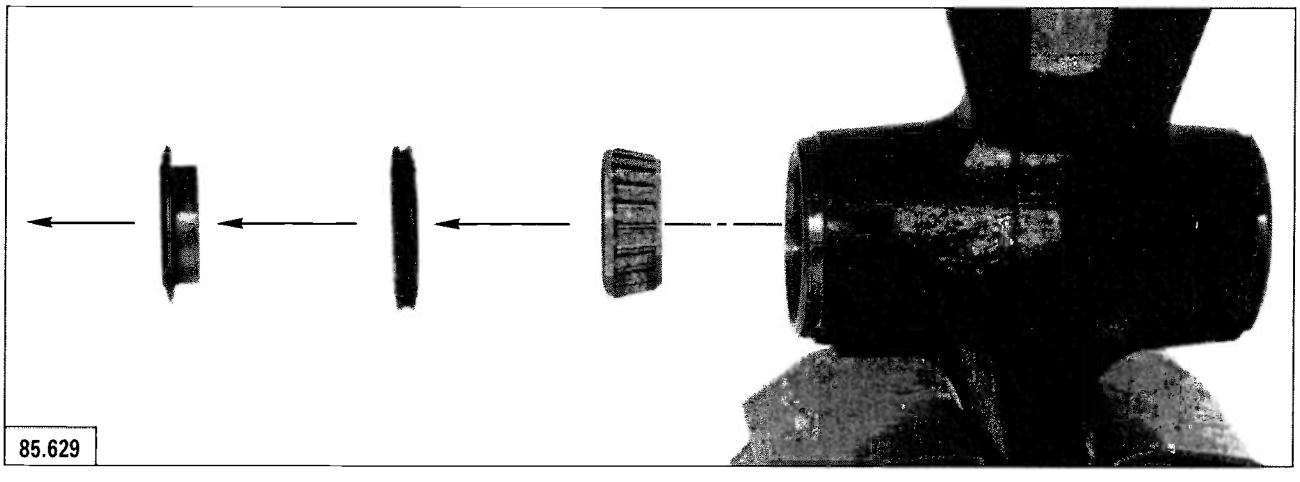

85.629

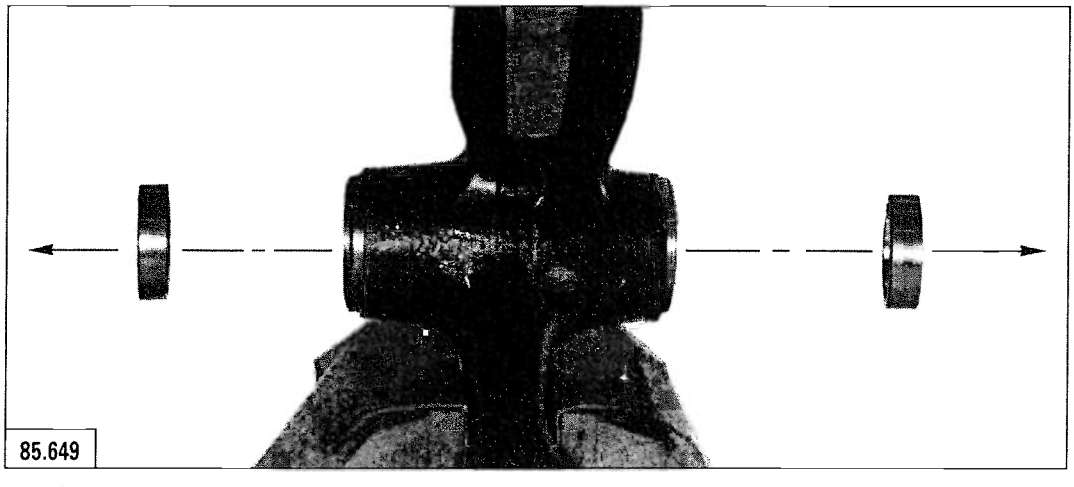

85.649

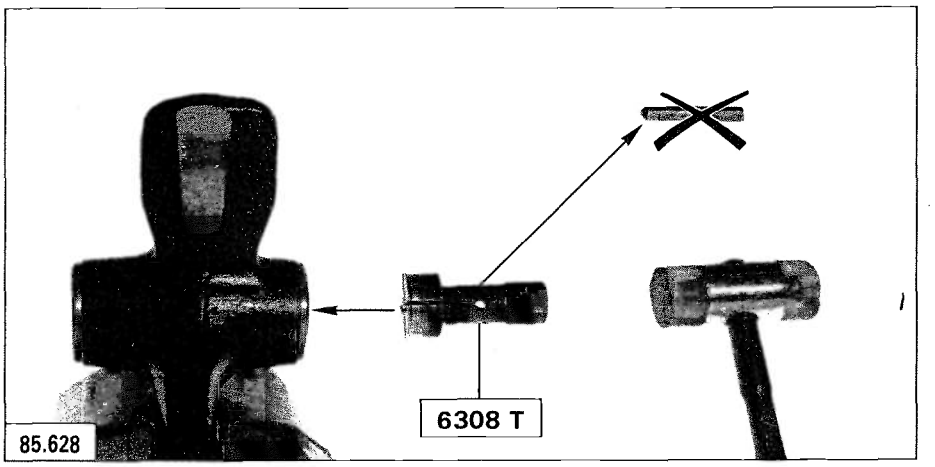

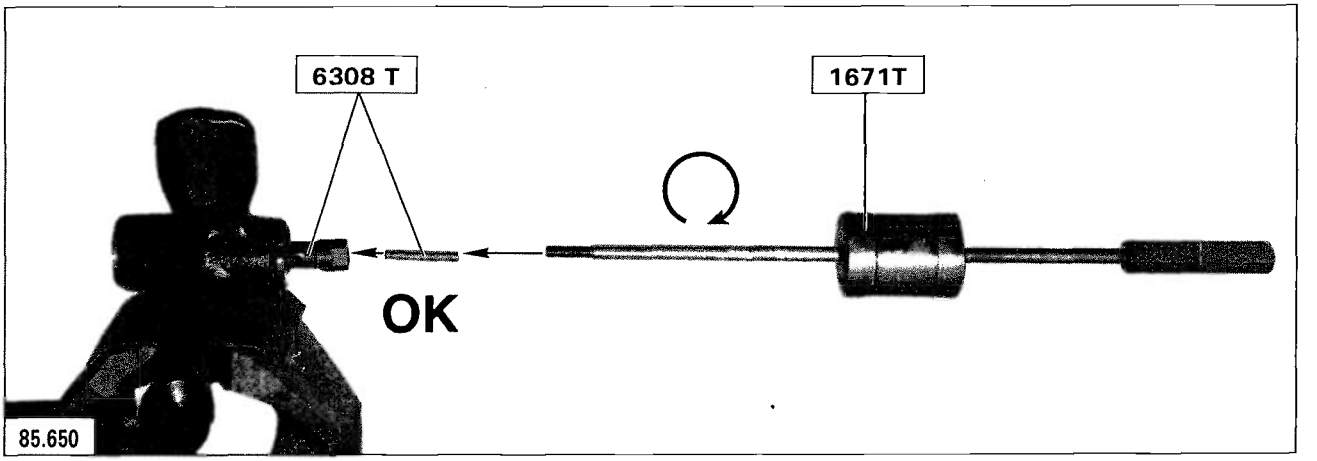

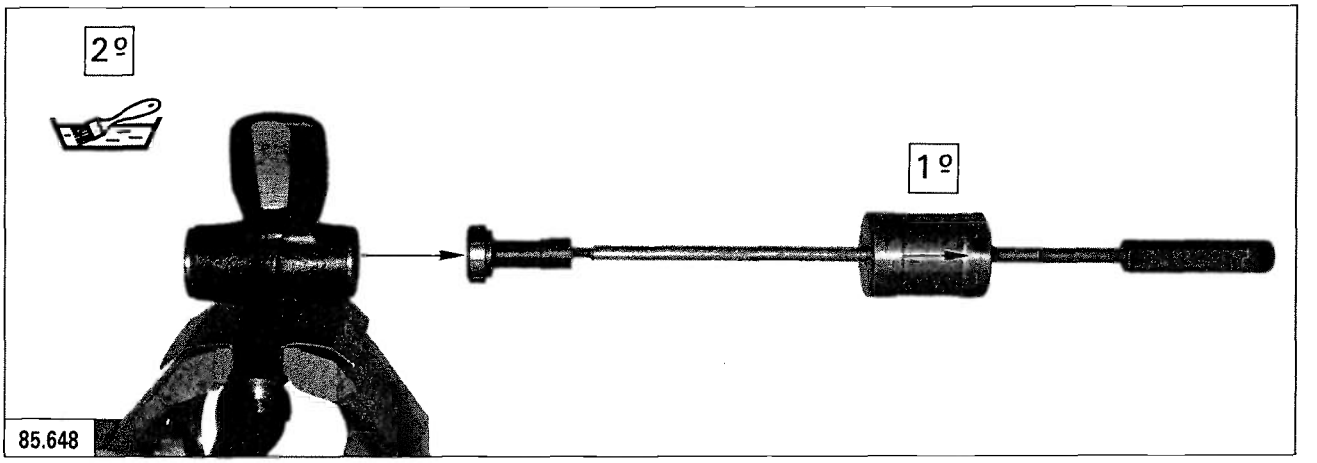

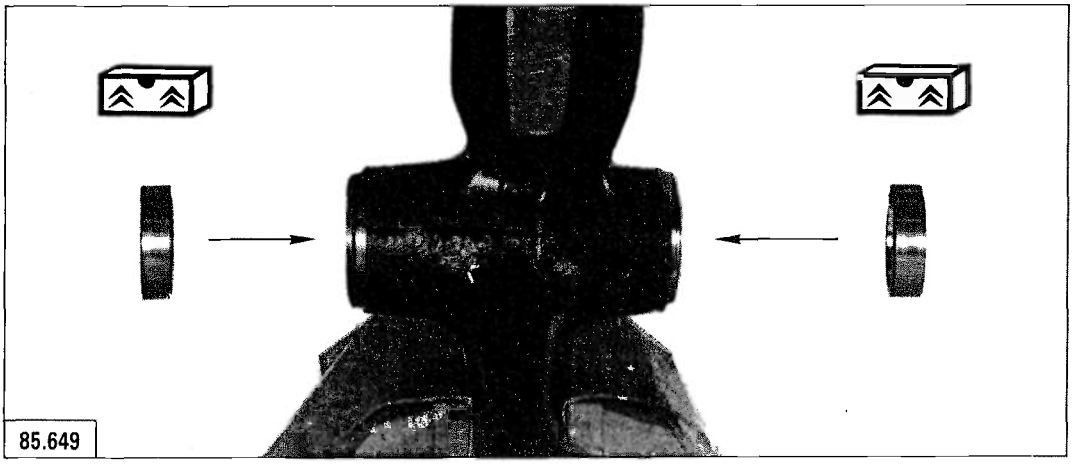

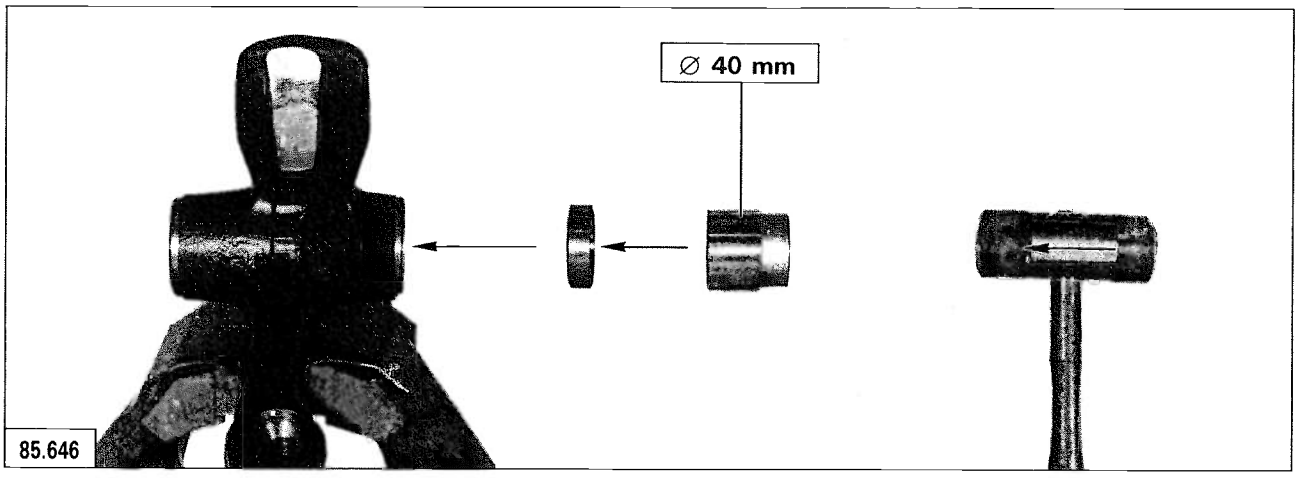

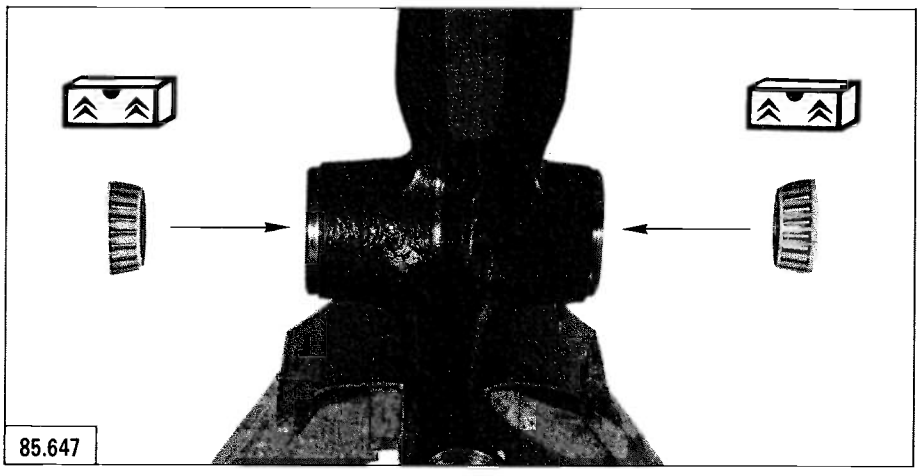

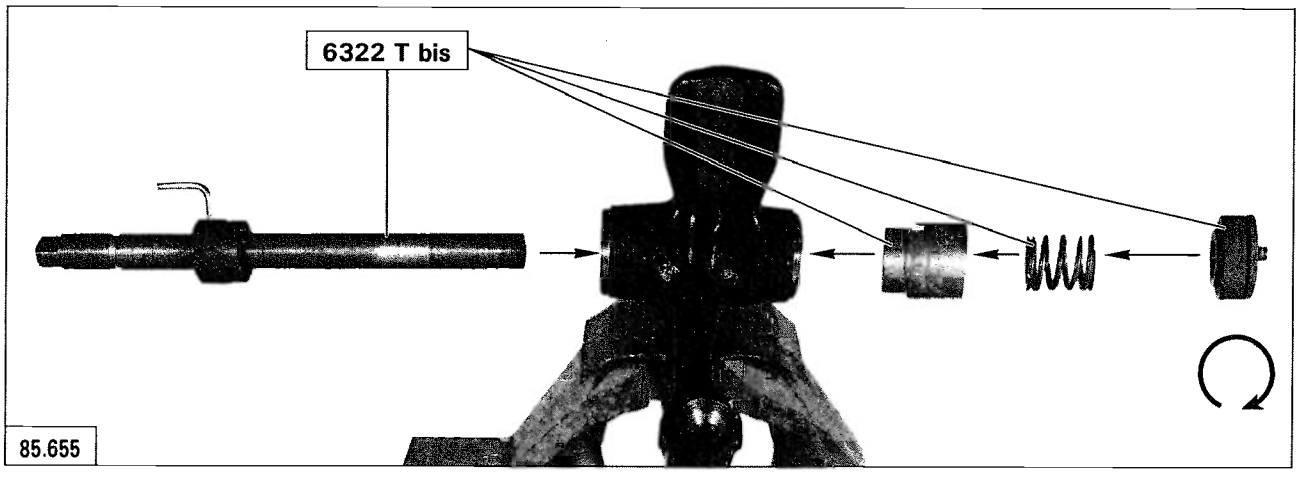

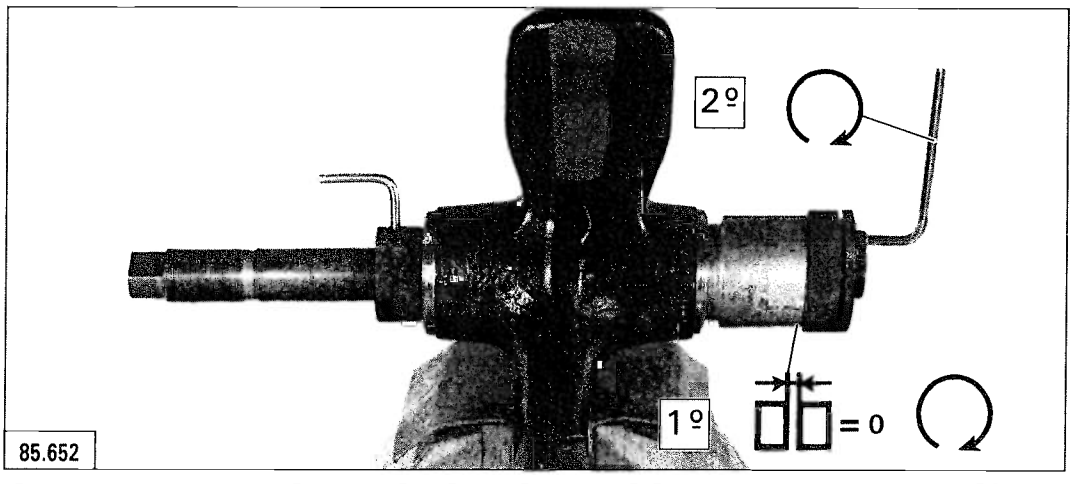

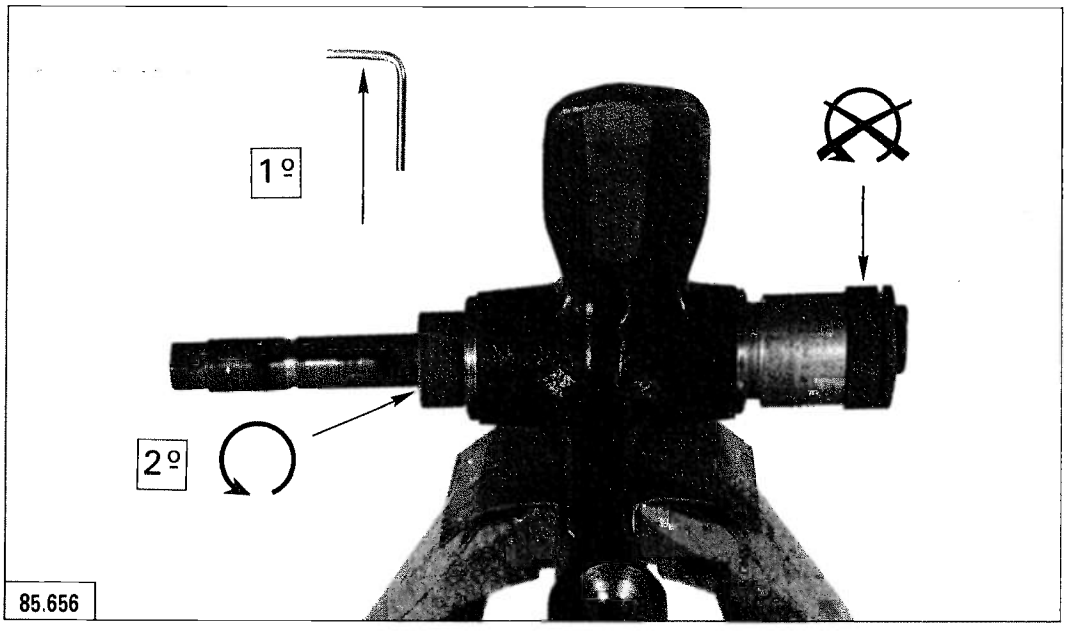

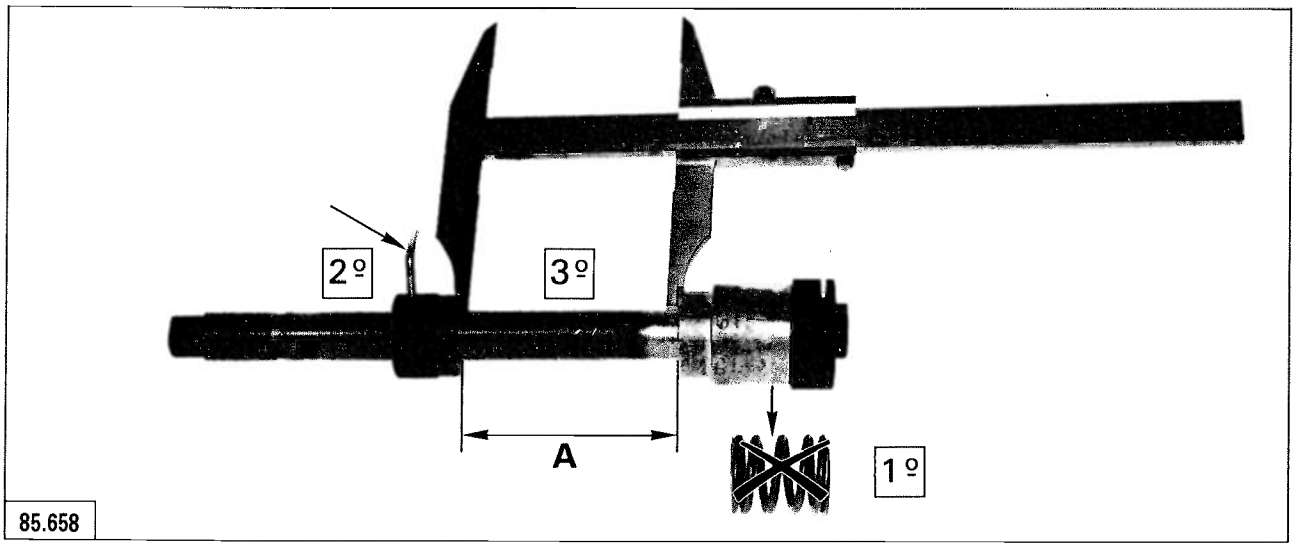

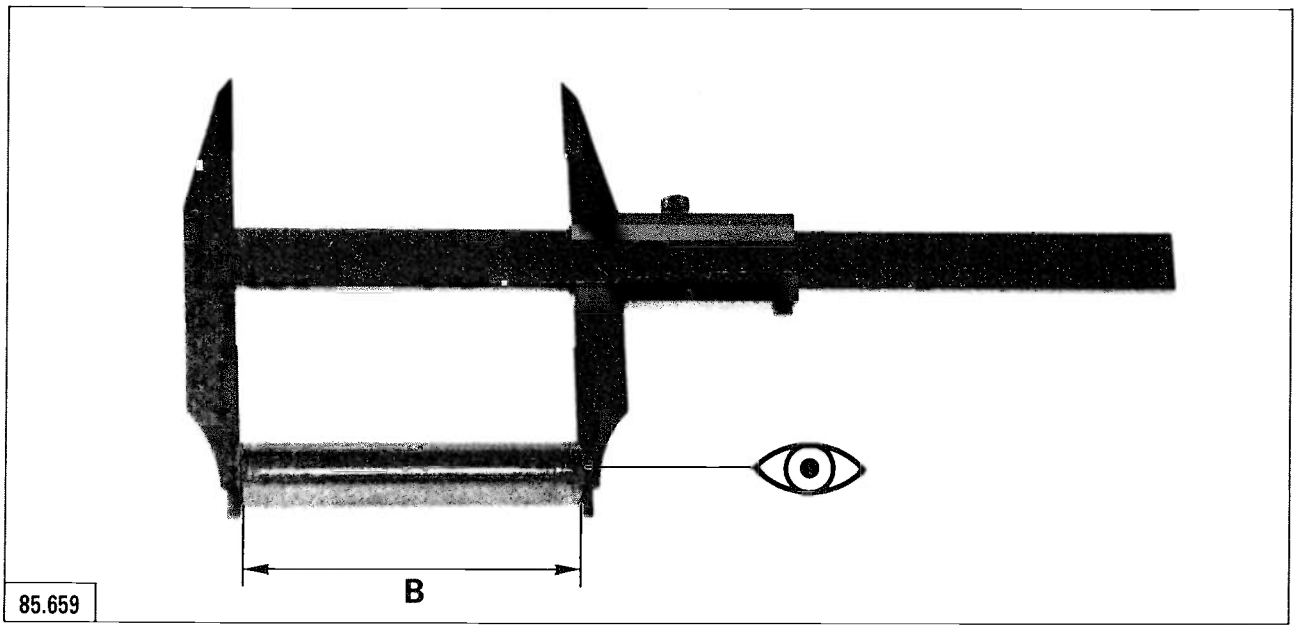

→ 1/87

$$X = B - A$$

$$\underbrace{e}_{AV} = X - \underbrace{9{,}34 \pm 0{,}08 \text{ mm}}_{AR}$$

1/87 ⟼ T.B CX (7) N° 2

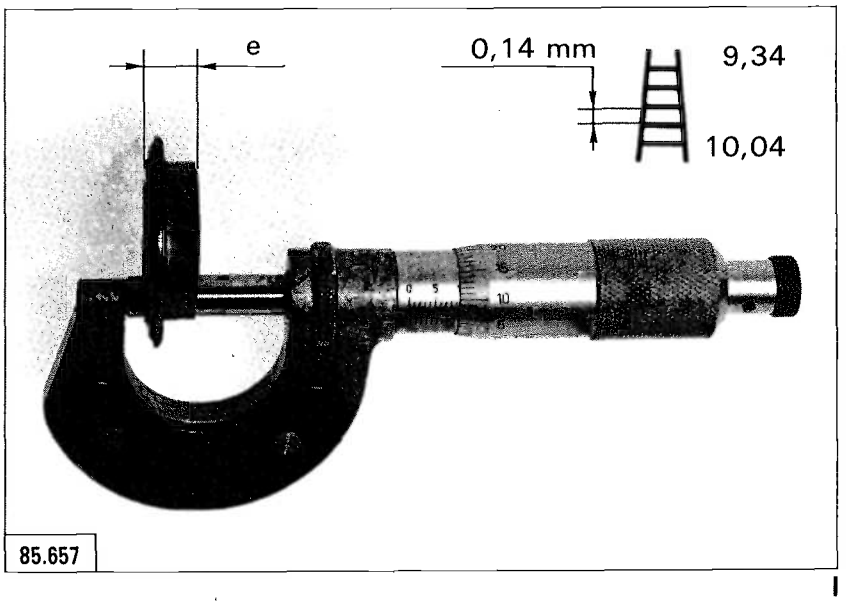

I

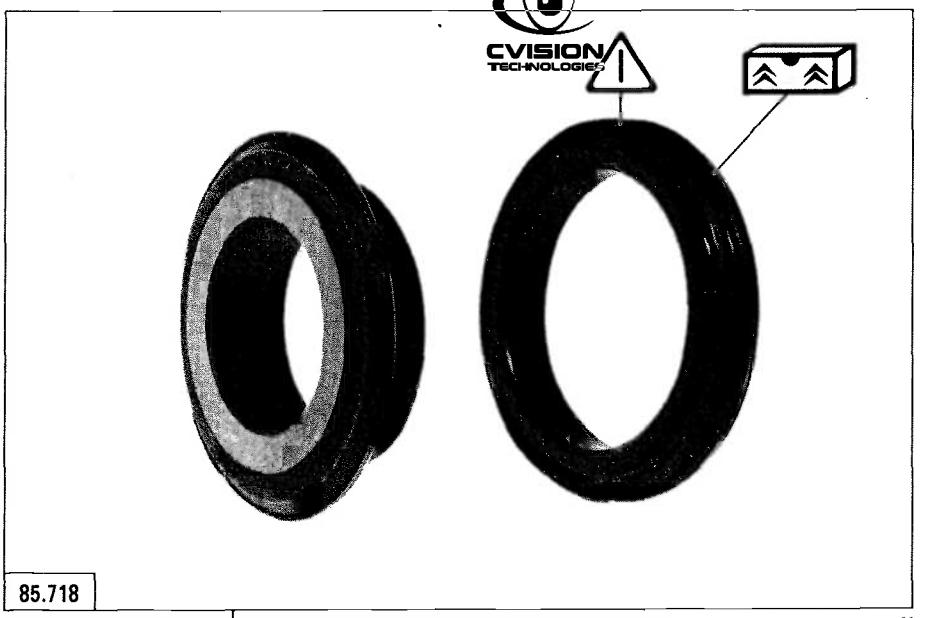

II

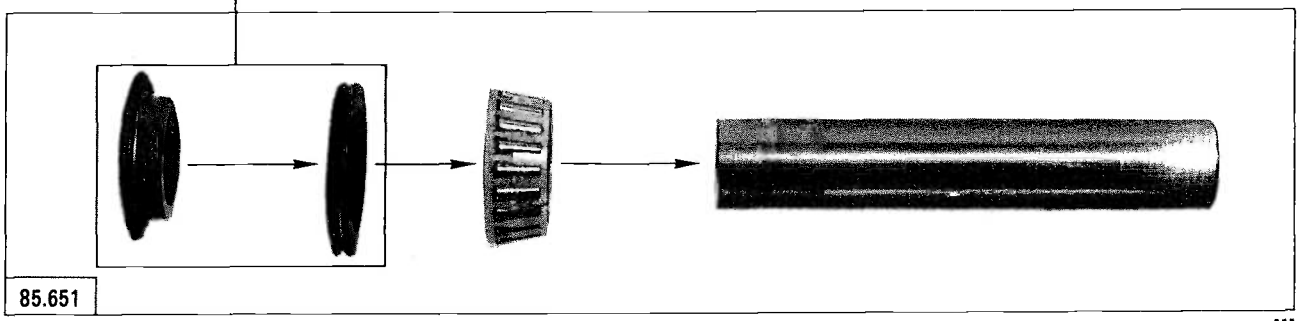

III

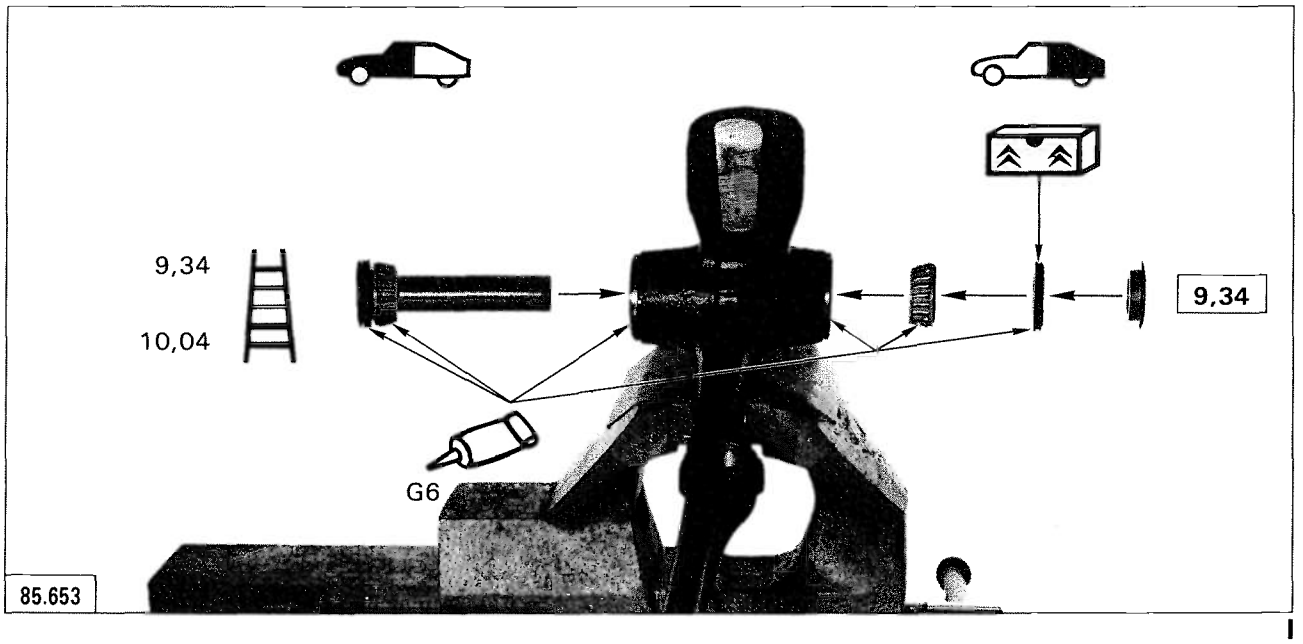

I

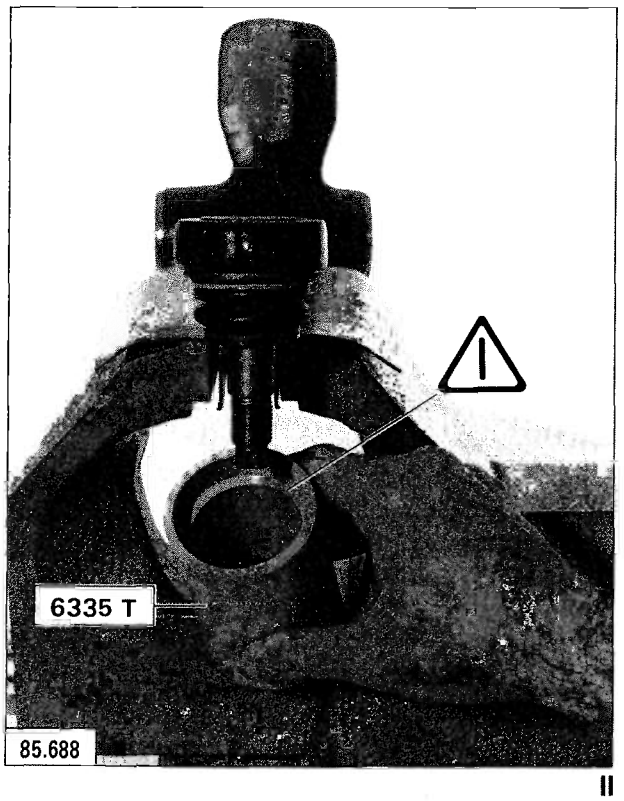

II

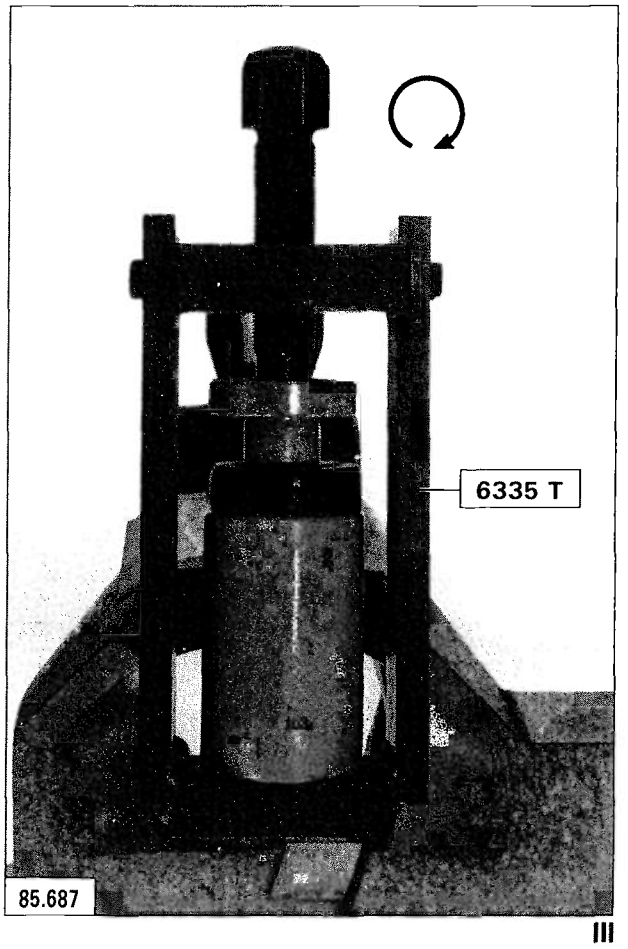

III

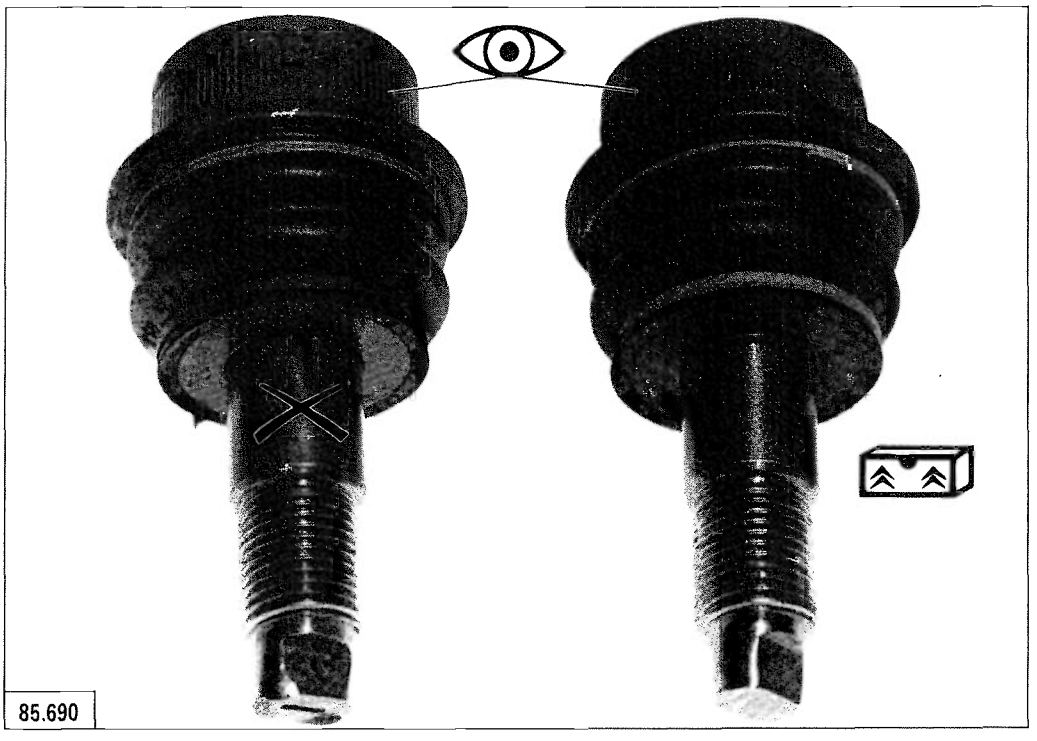

85.690

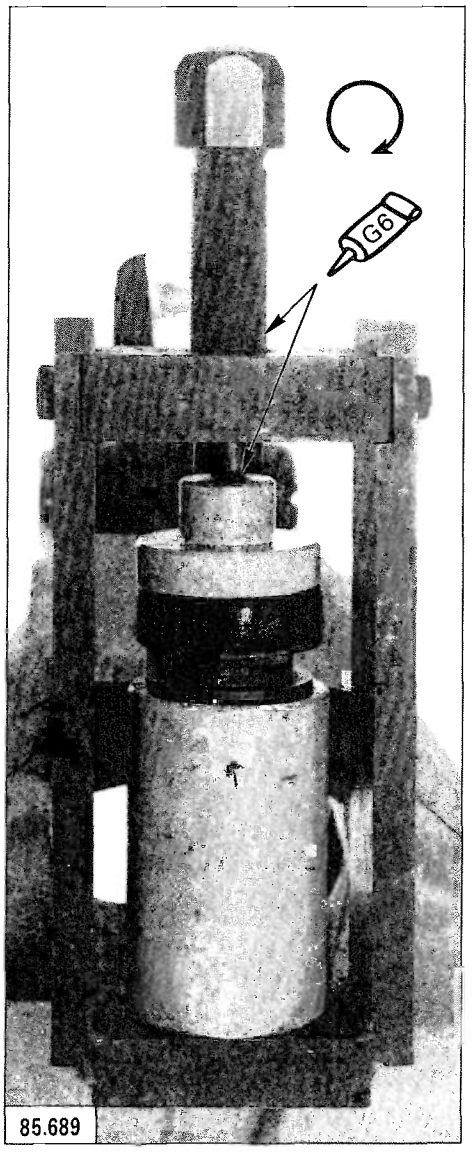

85.689

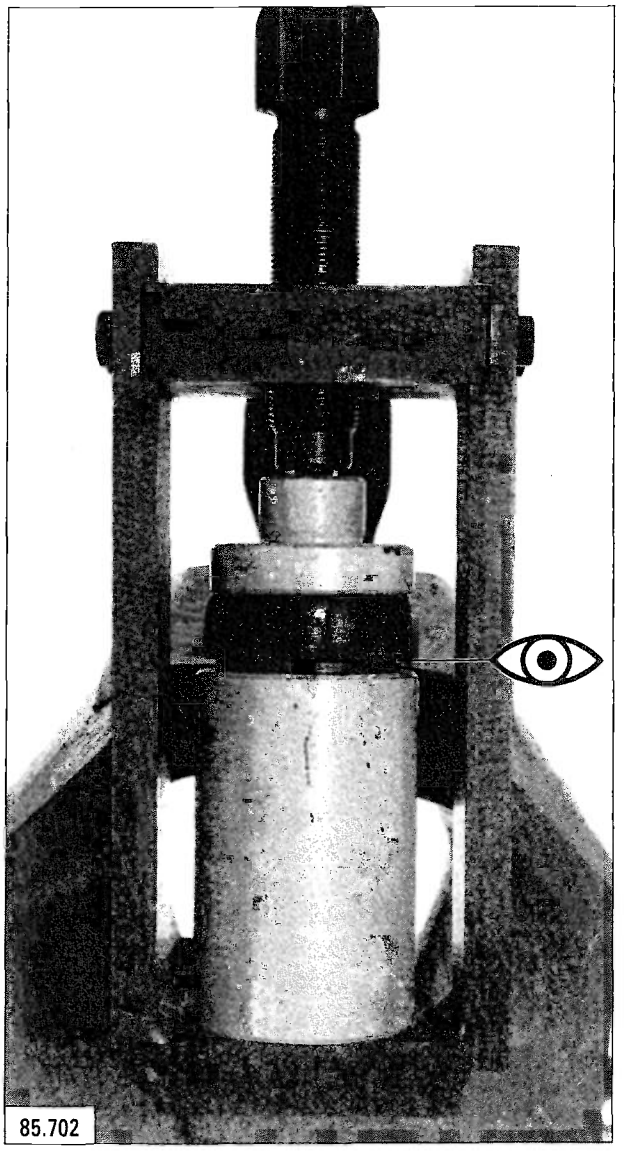

85.702

85.605

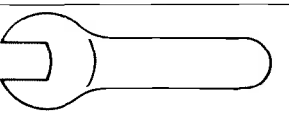

OUT 20 **6312 T**

13.809

OUT 30 **6314 T**

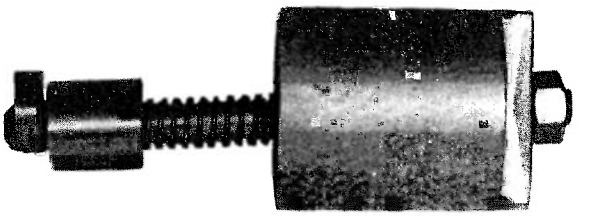

14-122

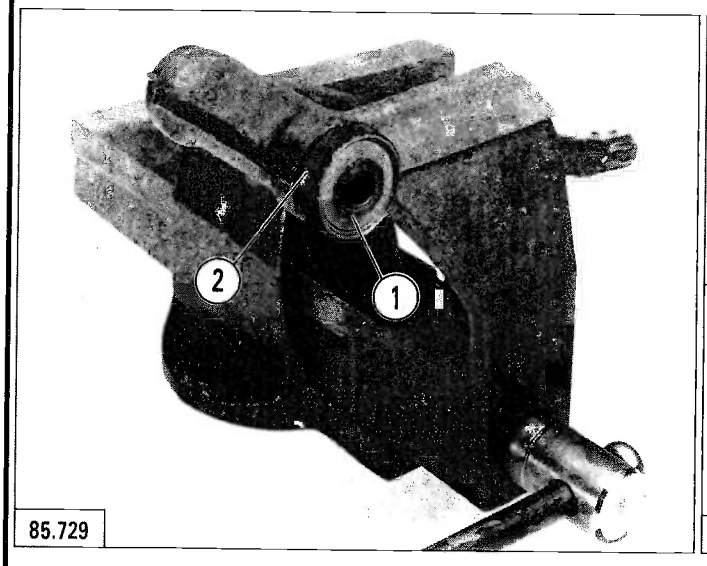

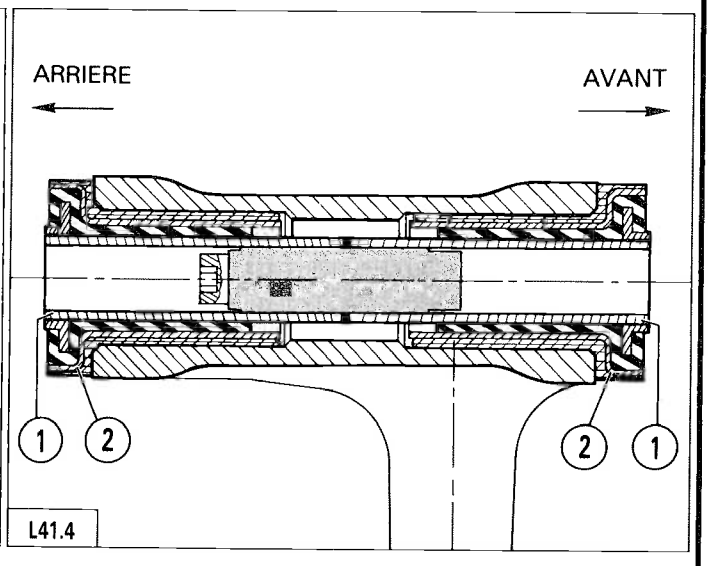

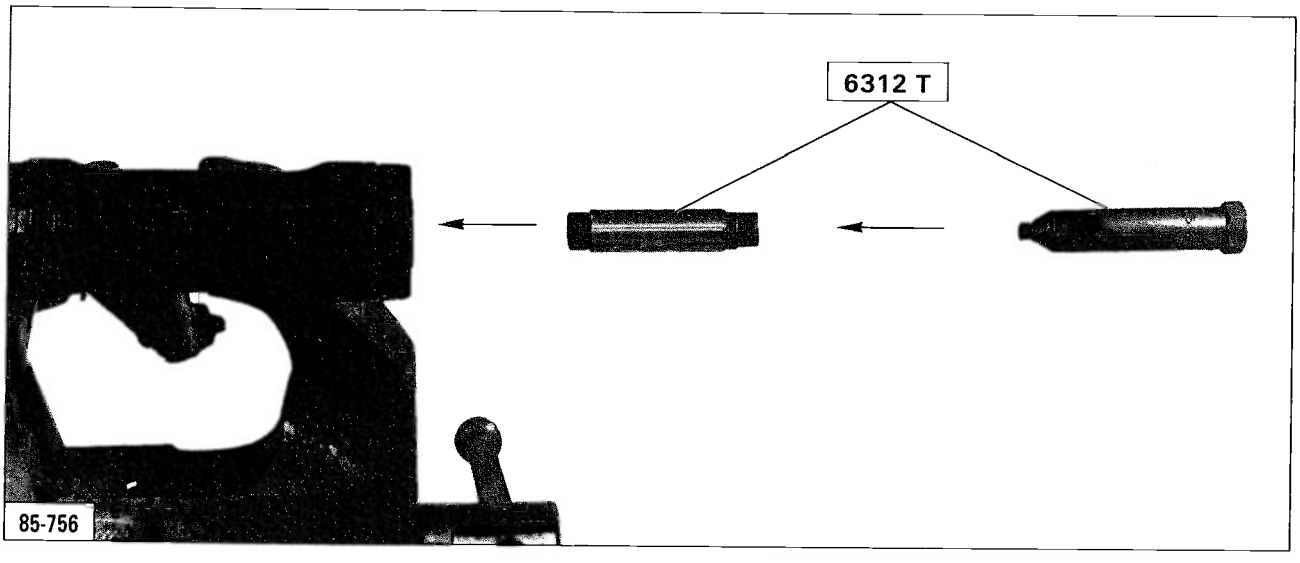

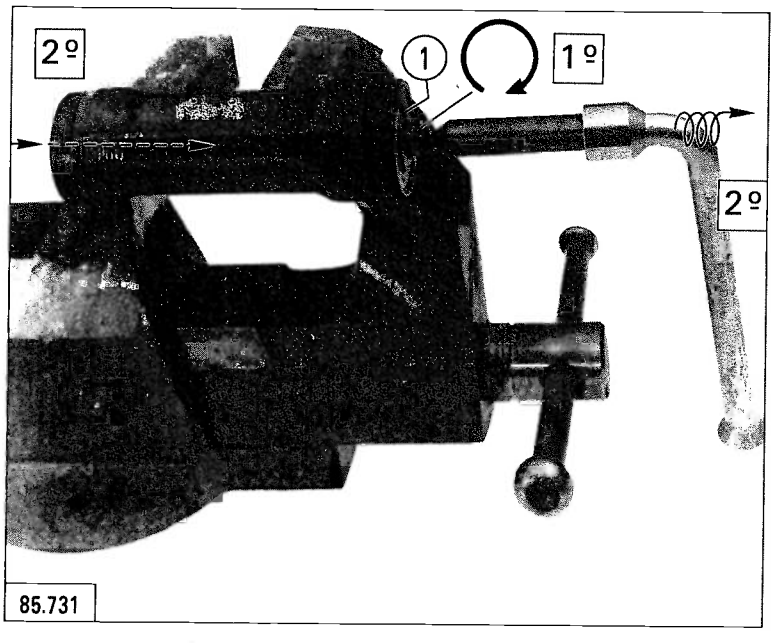

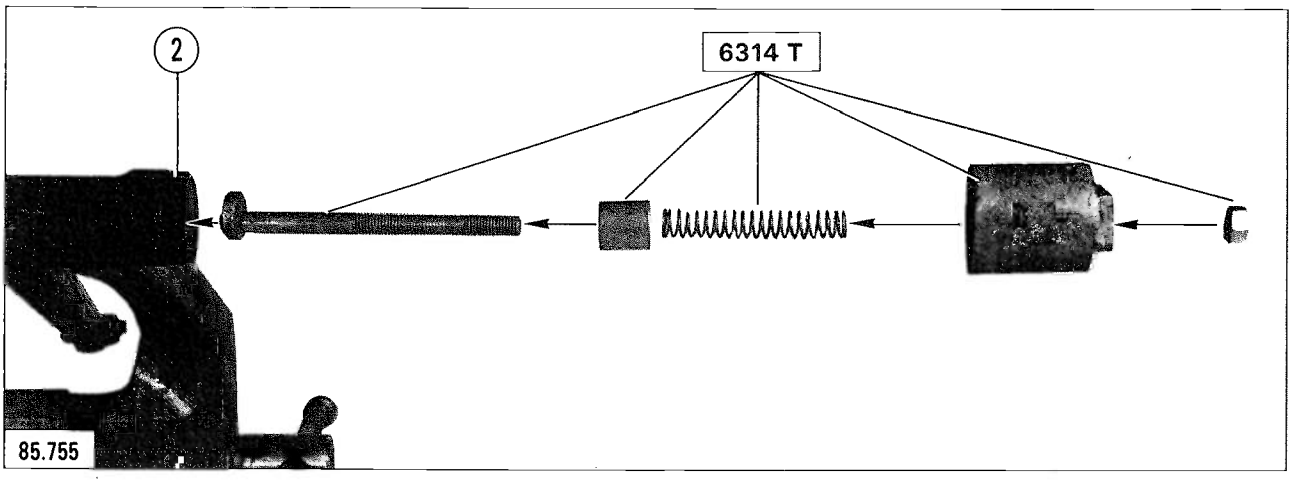

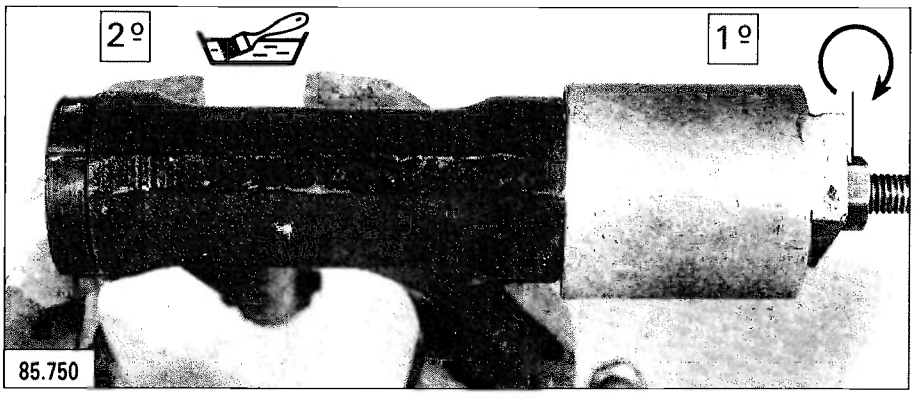

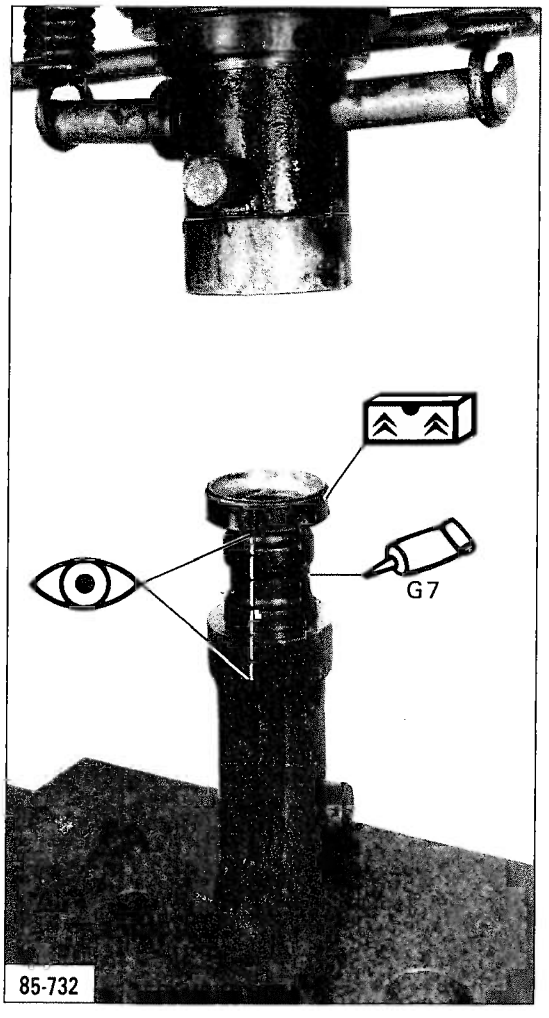

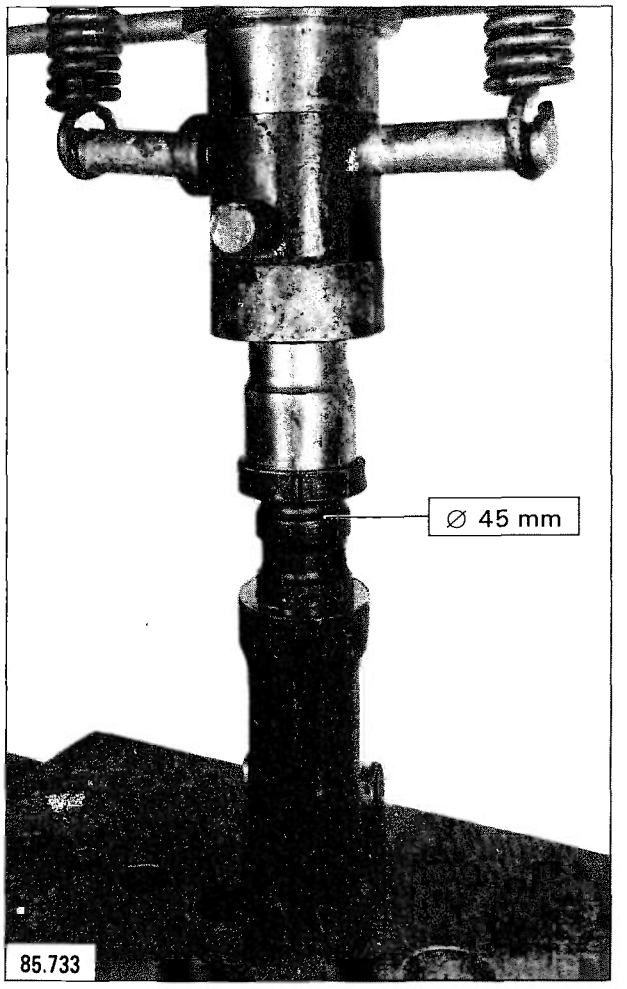

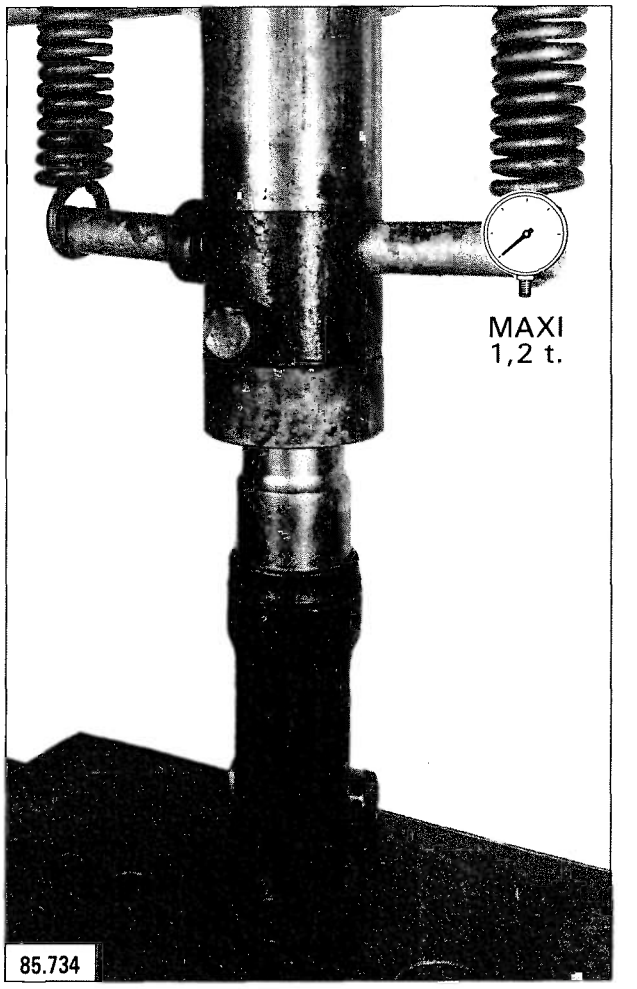

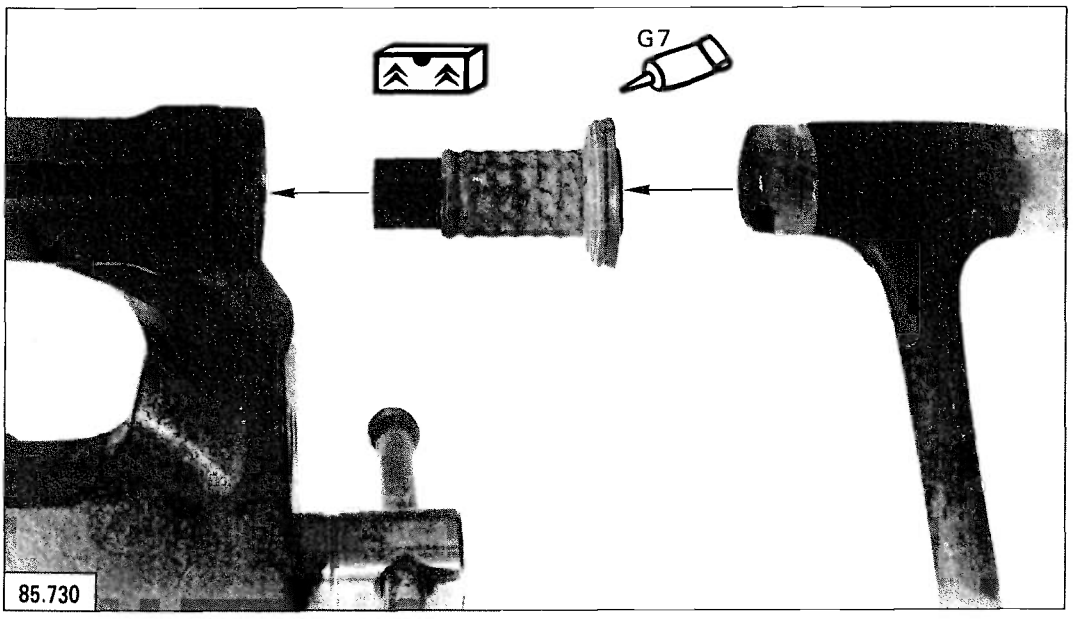

TOOLS TO BE USED

6310-T.	Hub locking tool
3312-T.	Lower arm ball-joint extractor, with bosses
or	
6323-T.	Lower arm ball-joint extractor, with or without bosses
	Torque wrench (40 mdaN)
	Sleeve 35 mm A/F

REMOVING AND REFITTING A SWIVEL

REMOVAL

Support the front of the vehicle on stands.

Depressurize the hydraulic systems.

Remove:

- the road wheel,
- the pin,
- the nut lock,
- the nut *(35 mm A/F)*

Lock the wheel hub with tool. **6310-T, Fig. I.**

Fig. II :

- nut (1) and its washer ; disengage the ball-joint from the swivel,
- lock nut (6),
- nut (5).

Uncouple, Fig. II and III :

- cable (2) from the control lever,
- spring (3),
- cup (4),
- connection (7).

Take off, Fig. III, nut (8) together with its washer.

Liberate flexible pipe (9) from its fixing bracket, **Fig. III.**

ABS vehicles, Fig. IV

Extract the screw (10) securing the sensor.

Disconnect the brake pad wear warning lamp harness.

Withdraw:

- the brake disc cooling plate,
- the harness screw and fixing bracket; release the harness.

Remove the lower ball-joint nut.

Uncouple the swivel lower ball-joint using extractor **3312 T** or **6323 T, Fig. V,**
(avoid damage to the ball-joint protection rubber).

Pull out the drive-shaft.

Take off nut (11) from the upper ball-joint, **Fig. VI.**

Uncouple the upper ball-joint.

Remove the swivel.

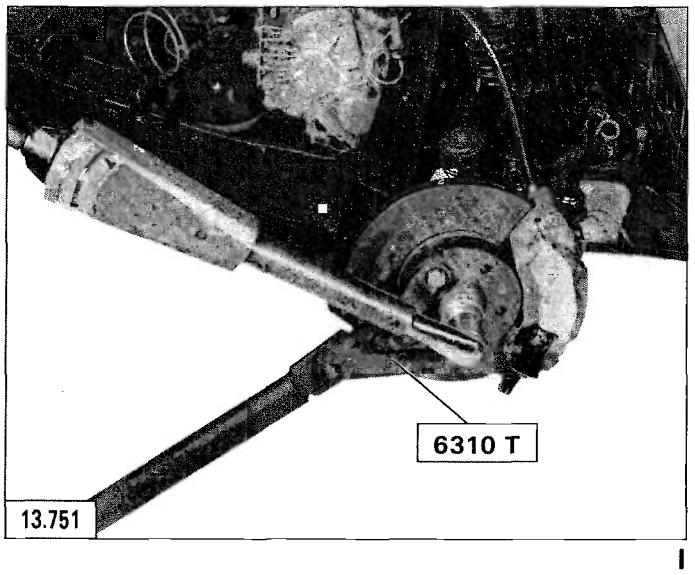

I

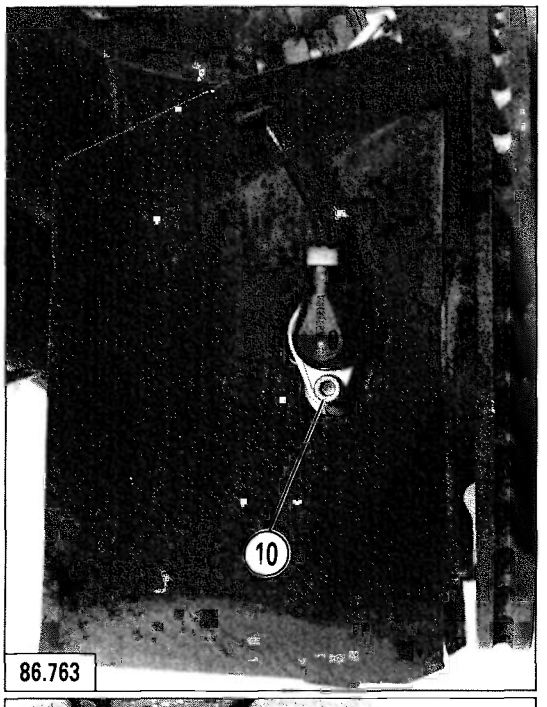

IV

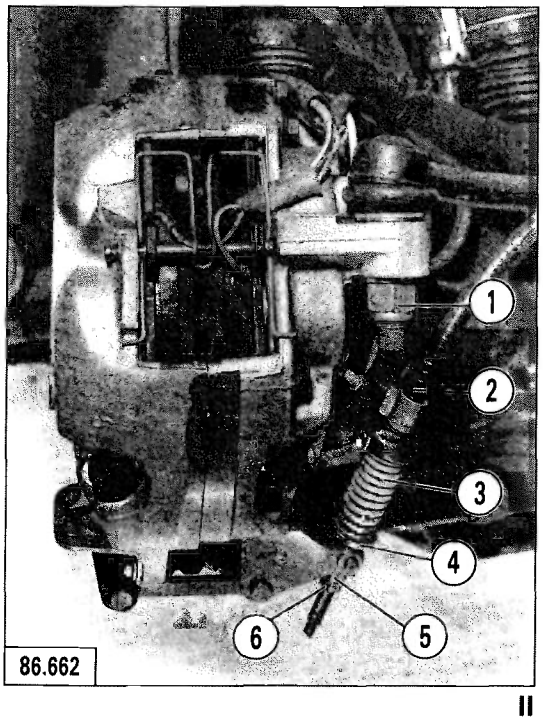

II

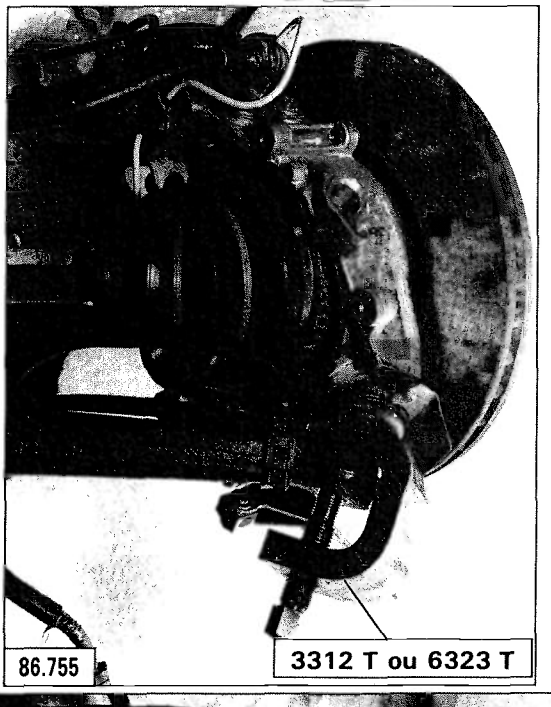

V

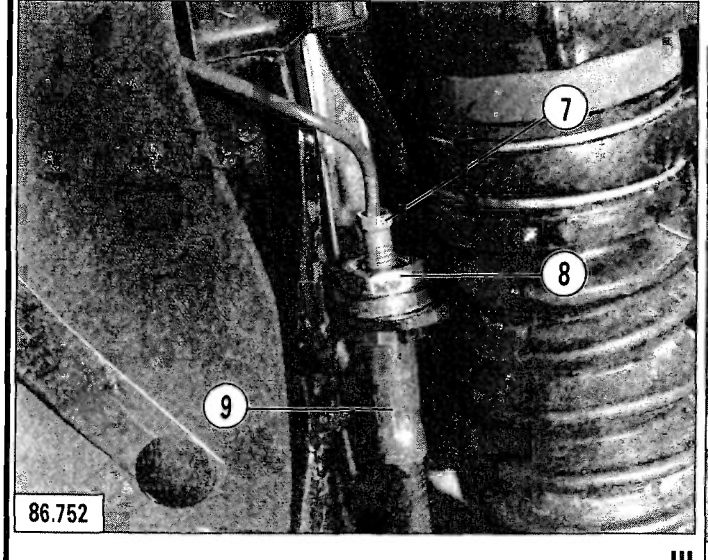

III

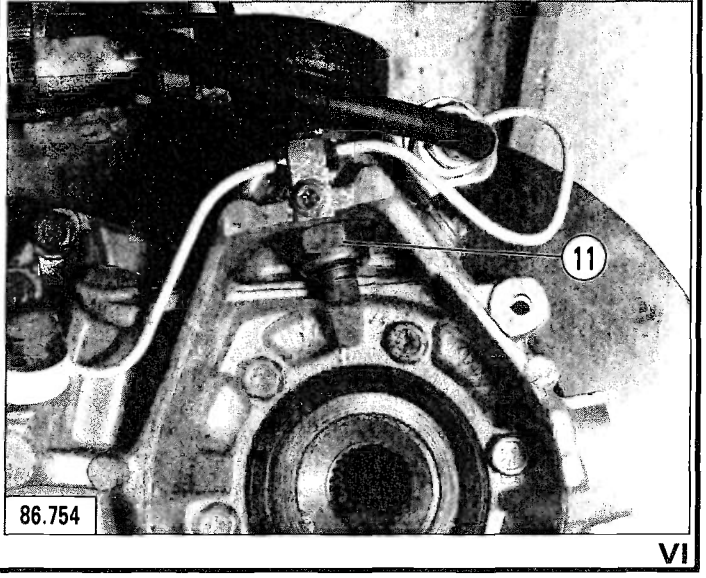

VI

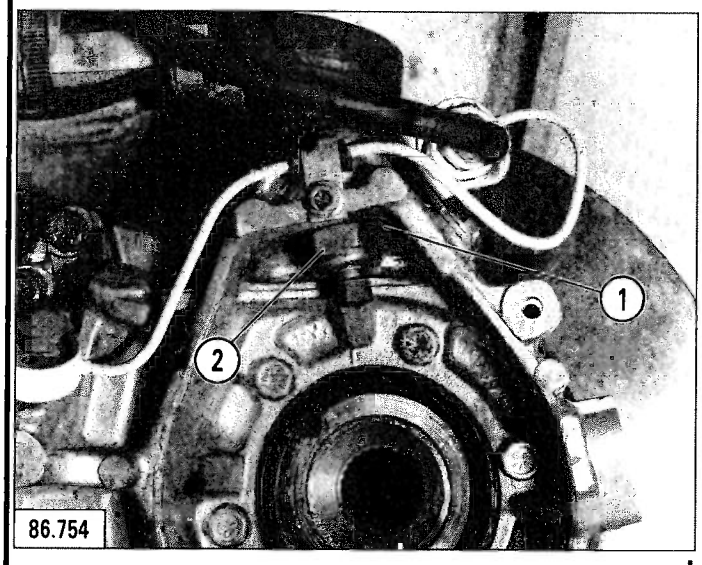

I

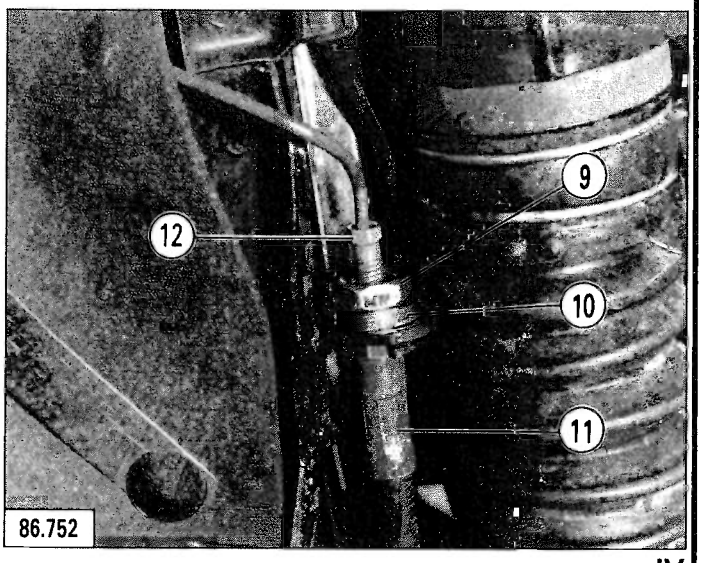

IV

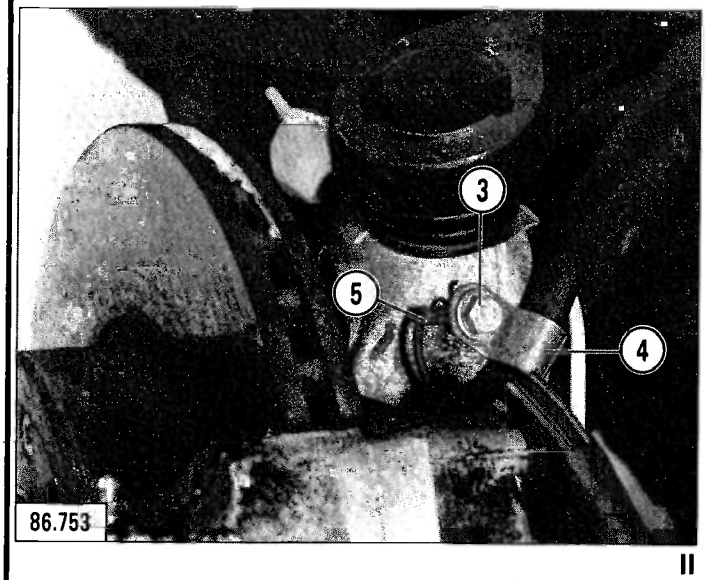

II

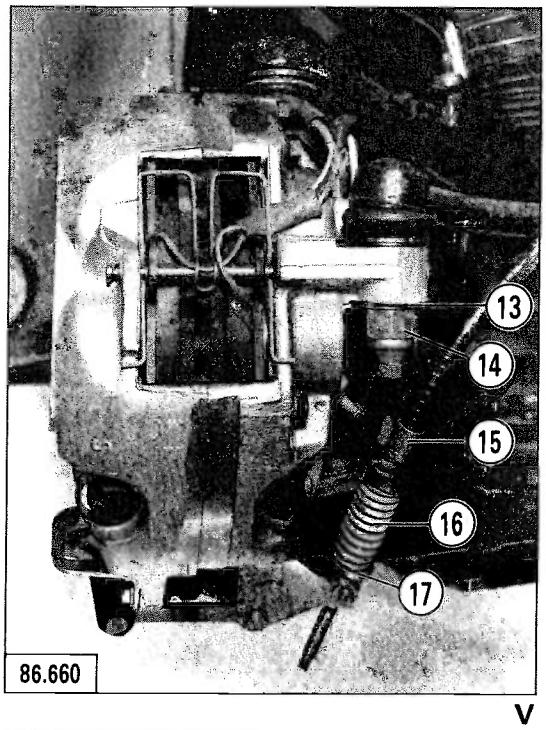

V

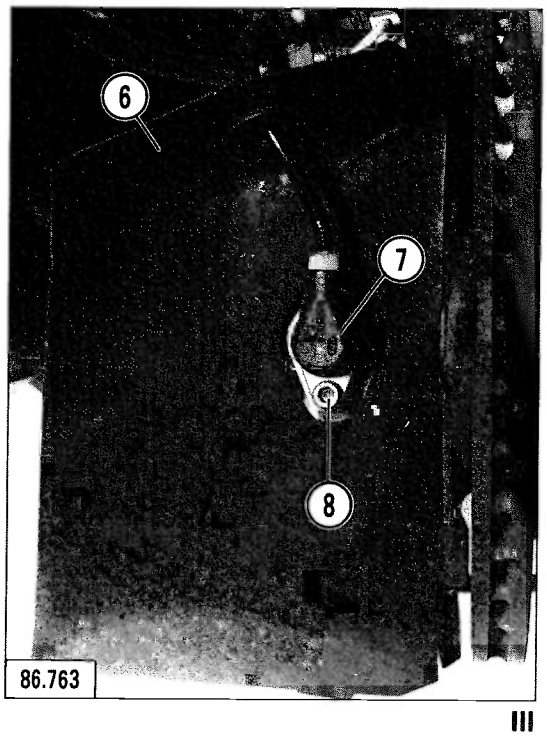

III

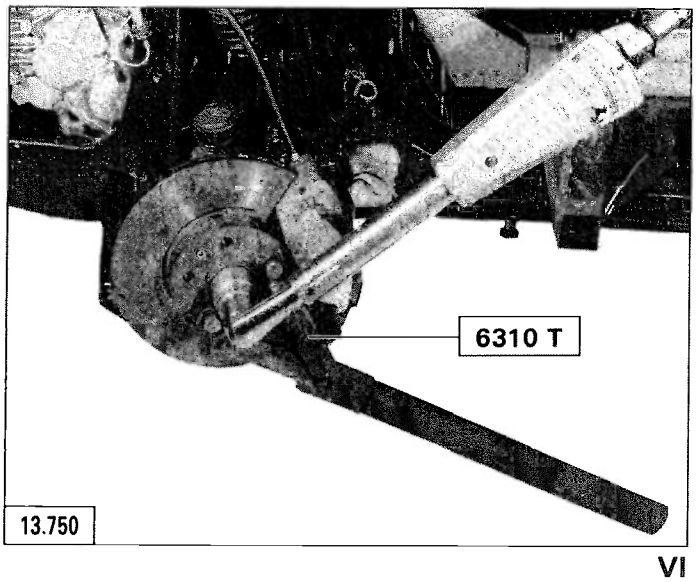

VI

REFITTING

Wipe the ball-joint fixings and location, do not use solvent.

Recouple the upper ball-joint with the swivel.

Refit, Fig. I:

- washer (1),
- nut (2).

Tighten to **7 mdaN** *(New NYLSTOP nut).*

Introduce the drive-shaft end into the wheel hub *(lubricate the hub seal lips).*

Couple up the lower ball-joint.

Tighten to **6 mdaN** *the new NYLSTOP nut.*

Reconnect the brake pad wear warning lamp harness.

Refit, Fig. II and III:

- electrical harness fixing bracket (4),
- earth lead (5),
- screw (3),
- metal panel (6).

ABS vehicles, Fig. III:

Reinstall sensor (7) *(spread MOBIL TEMP No. 1 grease over the outside of the sensor.*

Tighten screw (8) to **1 mdaN.**

Replace, Fig. IV:

- flexible pipe (11) into its fixing bracket,
- washer (10).

Tighten nut (9) to **2.2 mdaN.**

Recouple:

- **Fig. IV,** connection (12) provided with a *new seal.*
- **Fig. V,** the steering ball-joint.

Refit:

- washer (13),
- nut (14) *(New NYLSTOP one).*

Tighten to **6 mdaN.**

Reconnect:

- cup (17),
- spring (16),
- cable (15).

Adjust the handbrake *(as indicated in* (11) *454.0/1).*

Put the drive-shaft nut **into place.**
(Faces and threads lubricated).

Lock the hub, utilizing tool **6310-T Fig. VI.**

Tighten to **37.5 mdaN.**

Bleed the front brakes *(see* (11) *453.0/1).*

Fit the wheel.

Lower the vehicle to the ground.

TOOLS TO BE USED

3312-T.	Lower arm ball-joint extractor, with bosses
or	
6323-T.	Lower arm ball-joint extractor, with or without bosses
6310-T.	Hub locking tool
	Torque wrench tool **(40 mdaN)**
	Socket, 35 mm A/F

REMOVING AND REFITTING A FRONT WHEEL HUB

REMOVAL

Support the front of the vehicle on stands.

Take off the road wheel.

Withdraw, Fig. I :

- the pin,
- the nut lock,
- the *35 mm A/F* nut.

Lock the hub with tool **6310-T.**

Remove the brake disc *(as stated in chapter* (11)*, op. MA 451.1/3).*

Extract the swivel lower ball-joint nut

Uncouple the swivel lower ball-joint, **Fig. II,** using either puller **3312-T** or puller **6323-T** *(be careful not to damage the ball-joint protection rubber).*

Liberate the drive-shaft.

Take out, Fig. III :

- the screws,
- the hub.

REFITTING

Introduce the wheel hub into the swivel.

Position the screws previously fitted with *lugged contact washers,* **Fig. III.** Tighten to **2.7 mdaN.**

Insert the drive-shaft end into the wheel hub *(grease the seal contact face).*

Couple up the lower ball-joint.
Tighten the *new NYSLTOP nut* to **6 mdaN.** *(Wipe the ball-joint fixing and recess, do not use solvent).*

Refit the brake disc *(Refer to* (11) *MA 451.1/3).*

Relocate, Fig. IV :

- the nut, use tool **6310-T** to hold the hub in position, tighten to **37.5 mdaN**,
- the nut lock,
- the pin.

Bleed the front brakes
(See (11) *MA 453.0/1).*

Reassemble the road wheel.

Lower the vehicle to the ground.

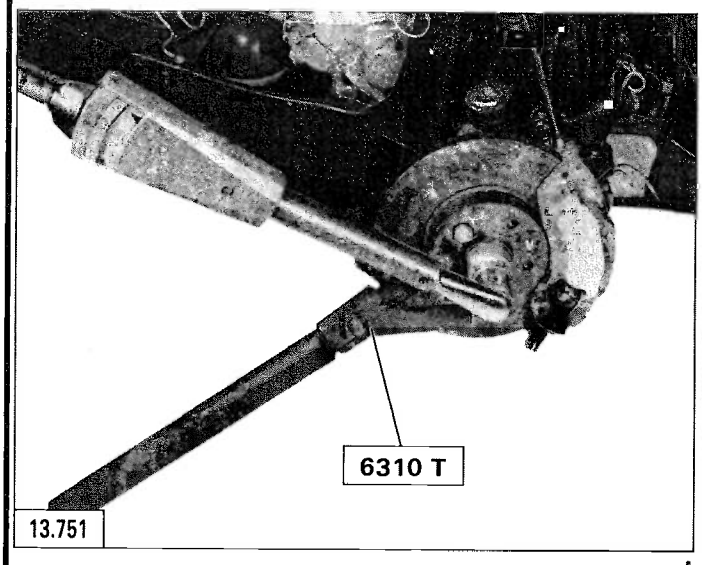

I

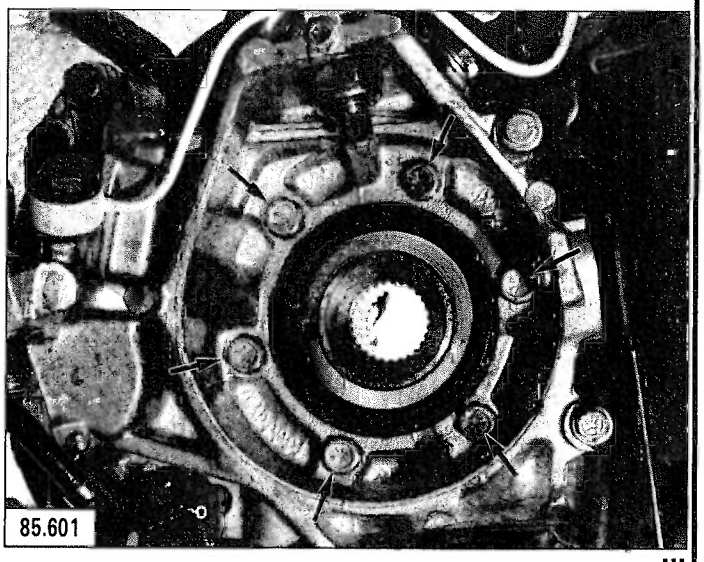

III

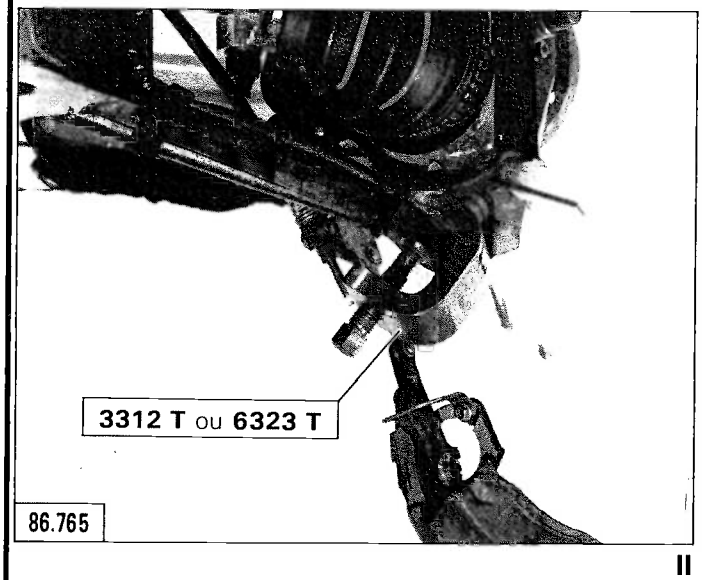

II

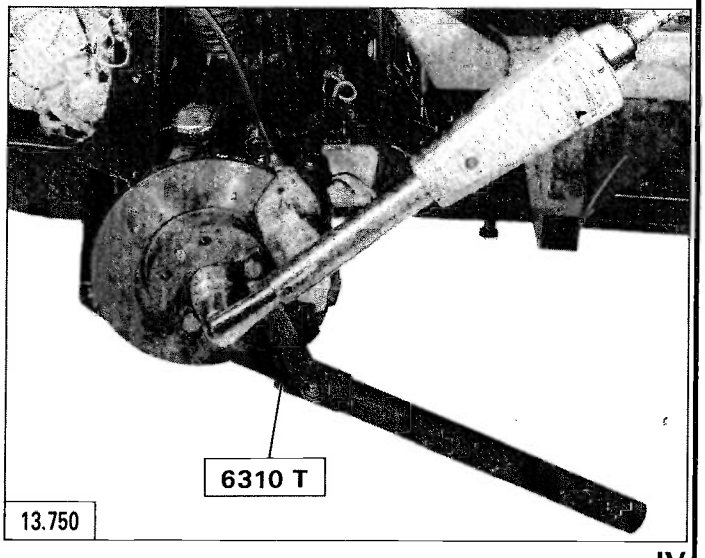

IV

8

LIST OF OPERATIONS APPEARING IN THE CHAPTER: REAR AXLE

OPERATION No.	DESCRIPTION	OPERATIONS △ TEXTS	OPERATIONS ○ SYMBOLS	VEHICLE CONCERNED ENGINE TYPE: 20 Petrol 829 A 5	22 Petrol J6T A 500	25 Petrol Injection 25/659	25 Prestige 25/659	25 Petrol Turbo 25/662	25 Prestige Petrol Turbo 25/662	25 Diesel 25/660	25 Diesel Turbo 25/648	25 Limousine Diesel Turbo 25/648	20 Safari Petrol + Familiale 829 A 5	25 Safari Petrol Injection 25/659	25 Safari Diesel + Familiale 25/660	25 Safari Diesel Turbo 25/648	Ambulance 829A5 or 25/660		
MA 420.00/1	Specification and particular features of the rear axle		○	X	X	X	X	X	X	X	X	X	X	X	X	X	X		
MA 422.1/1	Removing/refitting a rear axle arm	△		X	X	X	X	X	X	X	X	X	X	X	X	X	X		

10 mdaN

G6

0,5
1
2
3
mm

3,4 mdaN

0,5
1
2
3
4
mm

6 mdaN

40 mdaN

60 mdaN

1,1 mdaN

→ 7/85

7/85 →

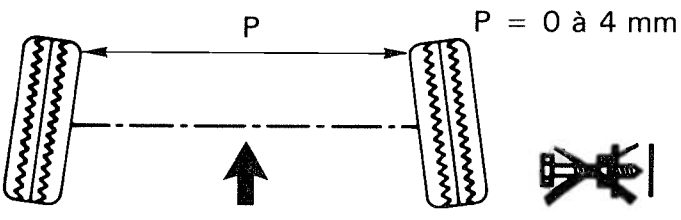

P = 0 à 4 mm

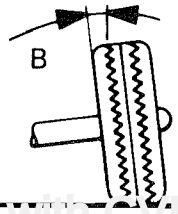

B = 0° — 0
24′

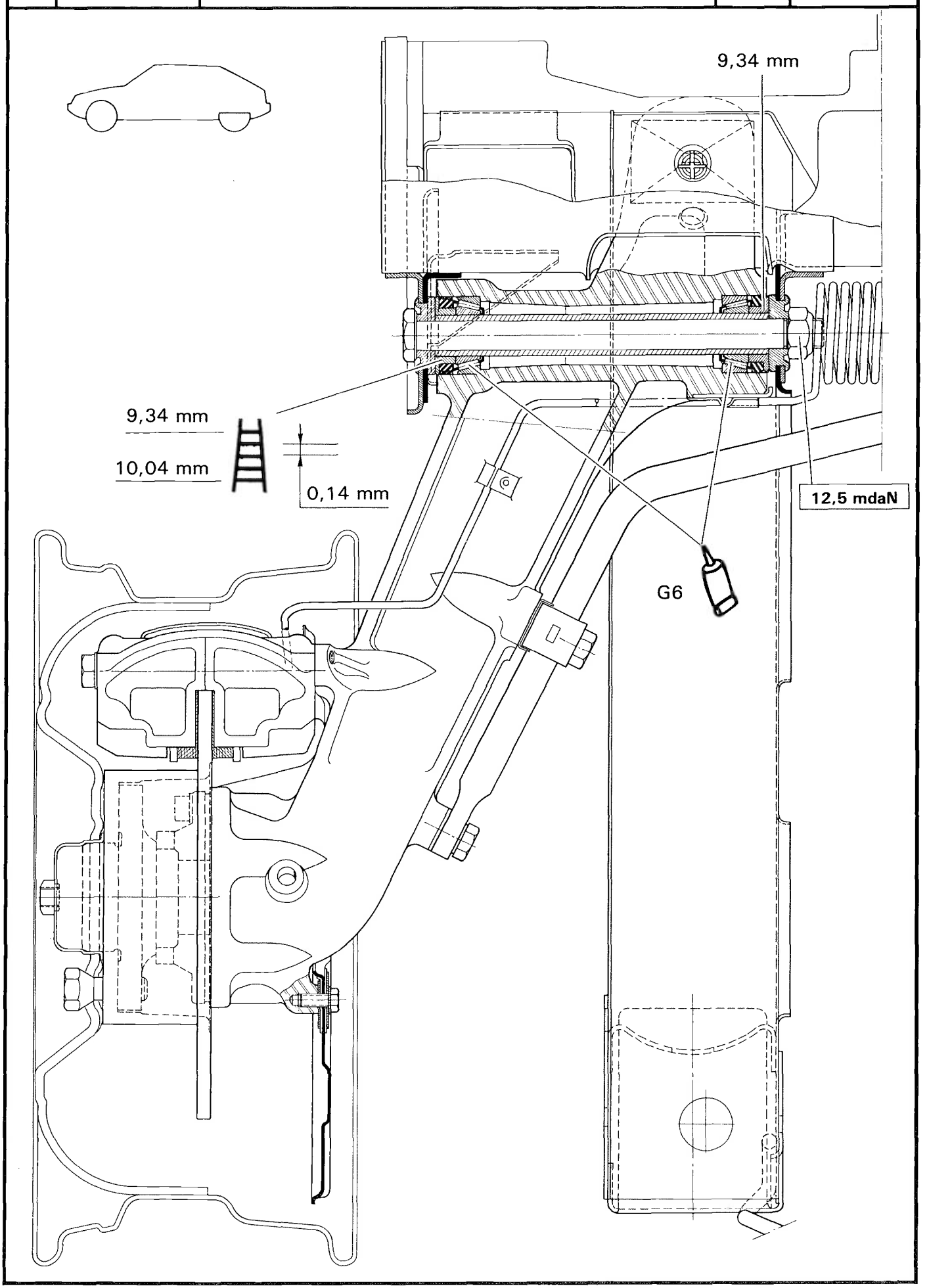

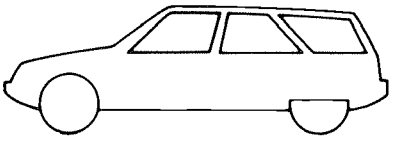

9,34 mm

9,34 mm

10,46 mm

0,14 mm

12,5 mdaN

G6

REMOVING AND REFITTING A REAR AXLE ARM

REMOVAL

Raise the rear of the vehicle and support it on stands, wheels free.

Remove the road wheel.

Release the pressure in the hydraulic systems.

Remove protection plate (1), **Fig. I.**

Vehicle having the A.B.S. fitted, Fig. II :

Withdraw sensor (3) and push aside the metal panel and sensor, liberating the electrical harness from the retaining clips.

Remove suspension cylinder (5), **Fig. III.**
(As explained in (9) MA 433.1/2).

Take off fixing lug (4), **Fig. III.**

Uncouple:

- brake hose (2), **Fig. I,**
- the anti-roll bar, **Fig. III.** In order to do so, extract screws (6) and (7) and keep adjustment shims and washers **«a»** and **«b».**

Take off nut (8) *24 mm A/F,* **Fig. IV.**

Free the shaft and remove the arm.

REFITTING

Position the axle arm (the thinner thrust cup (9) : 9.34 mm thick at **«c»** facing the interior of the vehicle, → *1/87),* **Fig. V).**

1/87 → the thrust cups are identical and the adjustment is effected by means of shims facing the exterior of the vehicle.

Return the shaft to its original location.

Place nut (8), *new NYSLTOP nut,* **Fig. IV.**
Tighten to **13 mdaN.**

Recouple the anti-roll bar, **Fig. III.** Add the screws (6) and (7) together with the adjustment shims and washers found at **«a»** and **«b»** on dismantling.

Tighten screws (7) to **6 mdaN** and (6) to **10 mdaN.**

Reconnect brake hose (2) **Fig. I,** fitted with a *NEW sleeve seal.* Tighten it.

Refit fixing lug (4), **Fig. III.**

Locate suspension cylinder (5), **Fig. IV.**
(See (9) MA 433.1/2).

ABS vehicle, Fig. II :

Refit sensor (3), *(grease the outside of the sensor with MOBIL TEMP No. 1).*

Tighten the screw to **1 mdaN.**

Reassemble:

- protection plate (1), **Fig. I,**
- the road wheel.

Lower the vehicle to the ground.

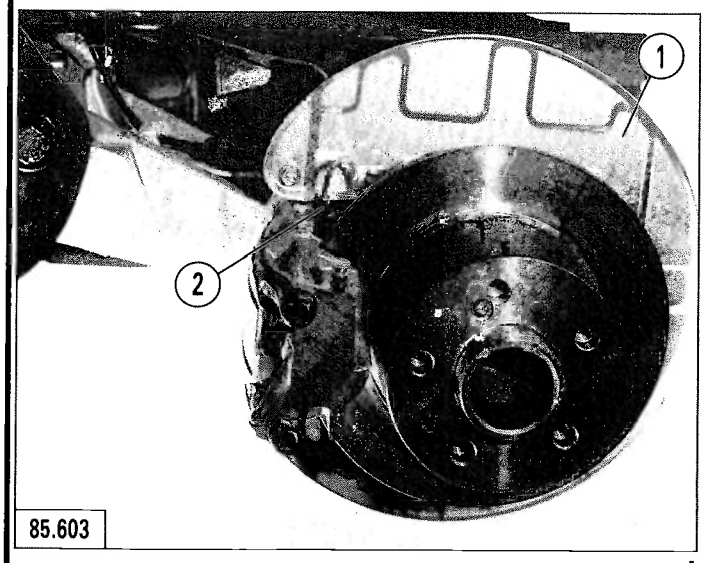

I

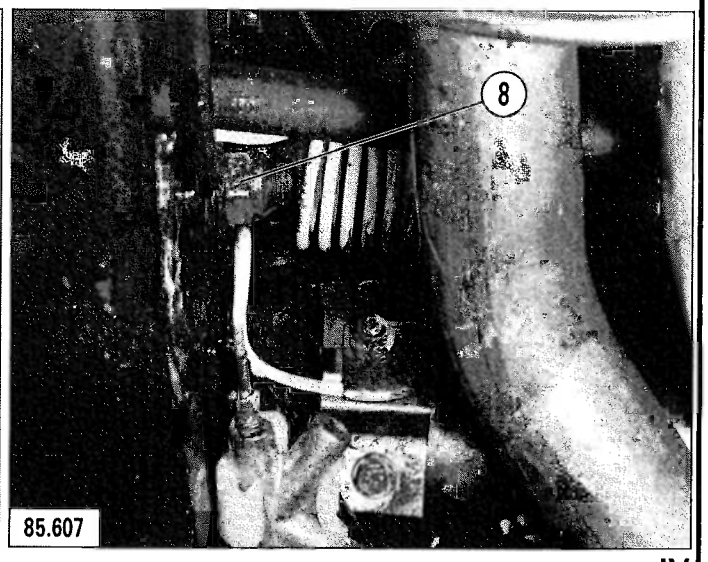

IV

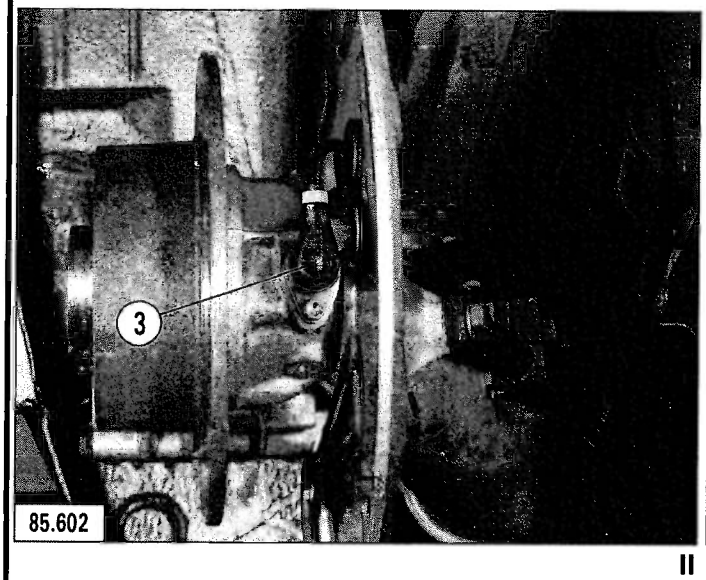

II

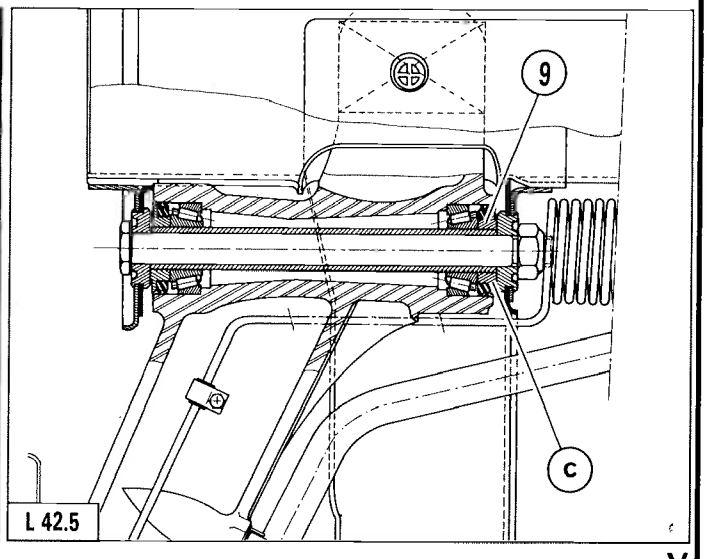

V

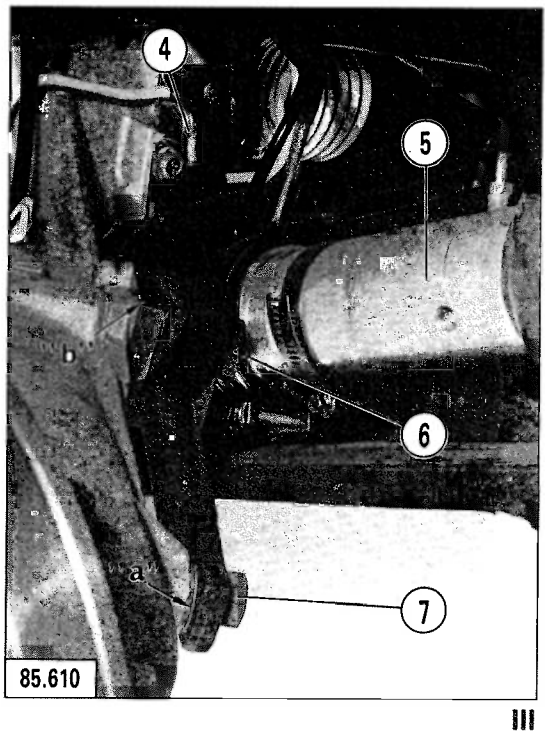

III

9

3505 T

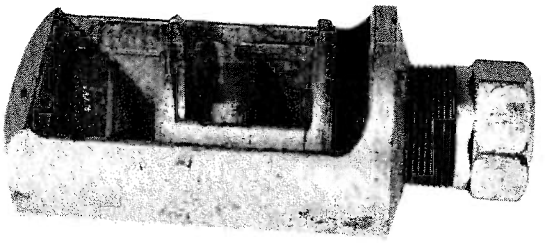

79.250

6301 T

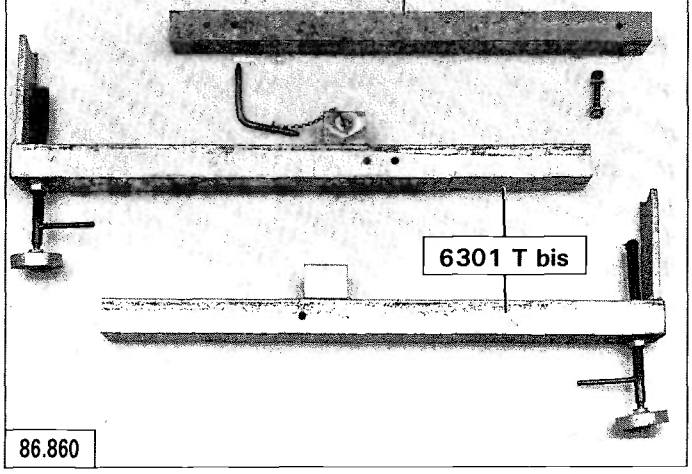

6301 T bis

86.860

6302 T

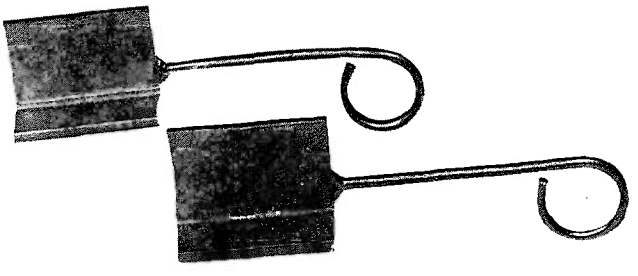

13.811

OUT 20 6320 T

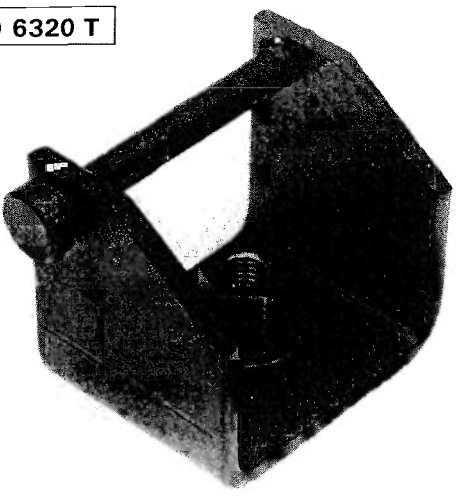

85.333

6401 T

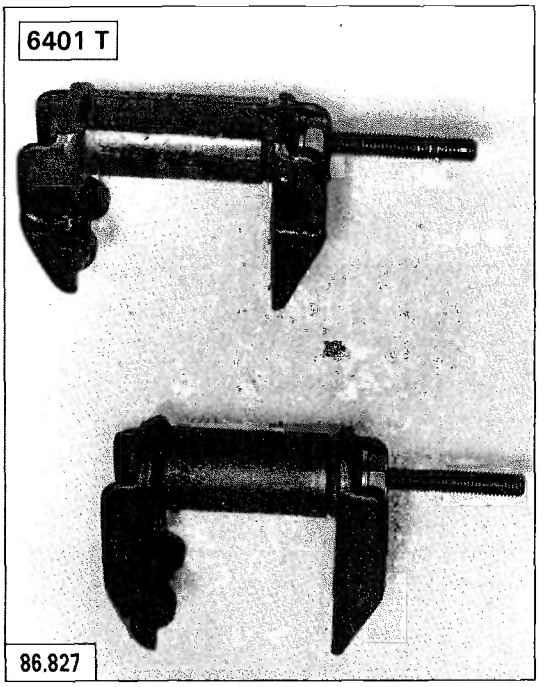

86.827

OUT 50 6602 T

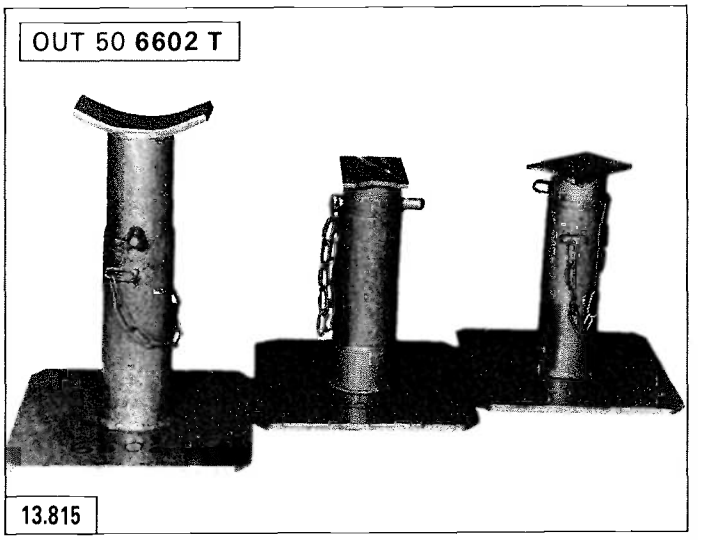

13.815

136 FACOM

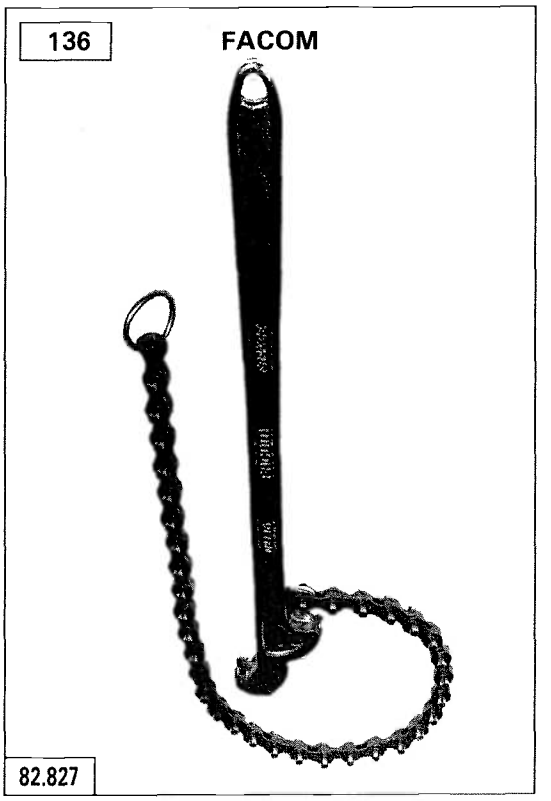

82.827

MR 630-58/31a

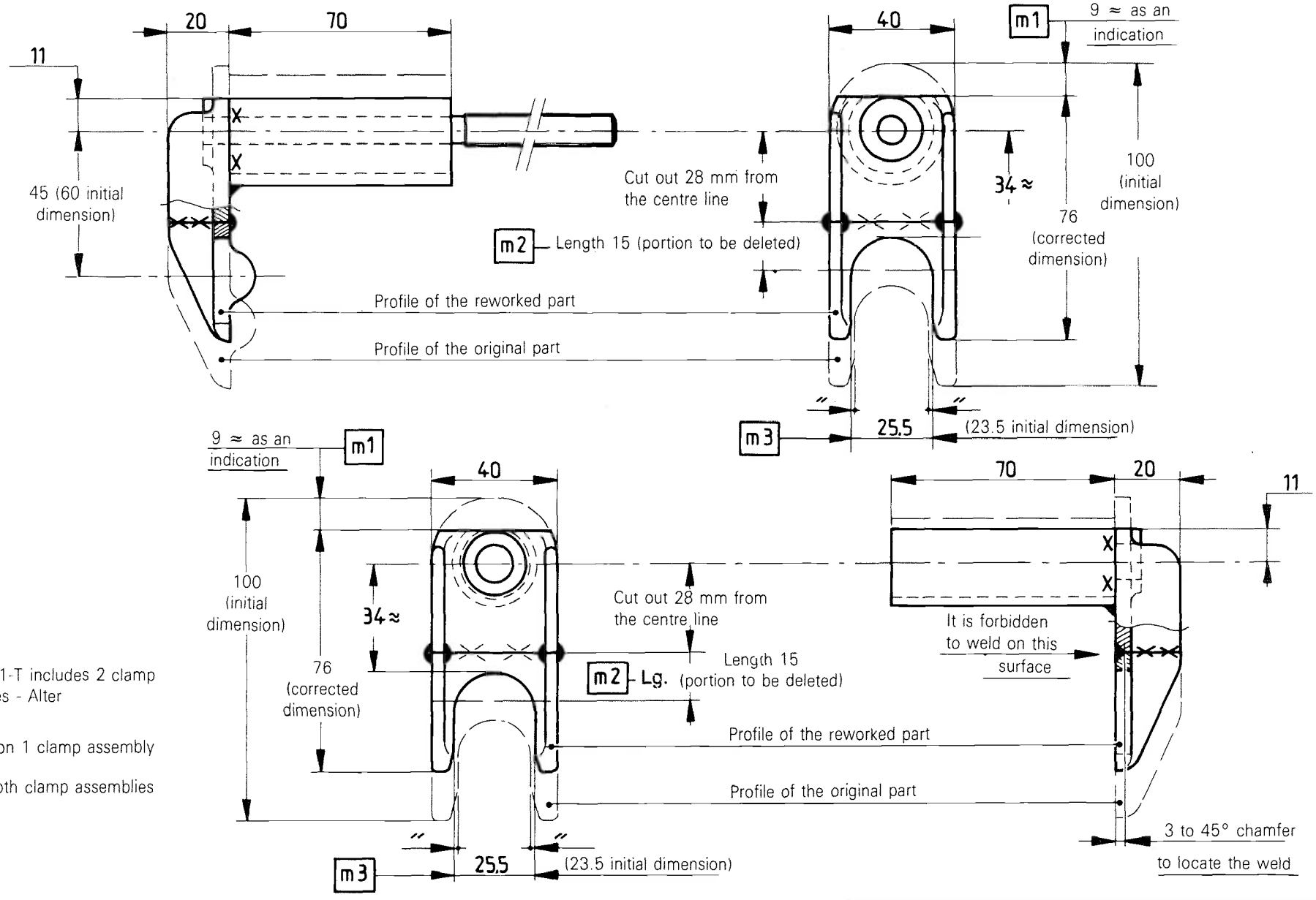

- Tool 6401-T includes 2 clamp assemblies - Alter

m1, m2 on 1 clamp assembly

m3 on both clamp assemblies

8531-8532

*

MR 630-51 / 95

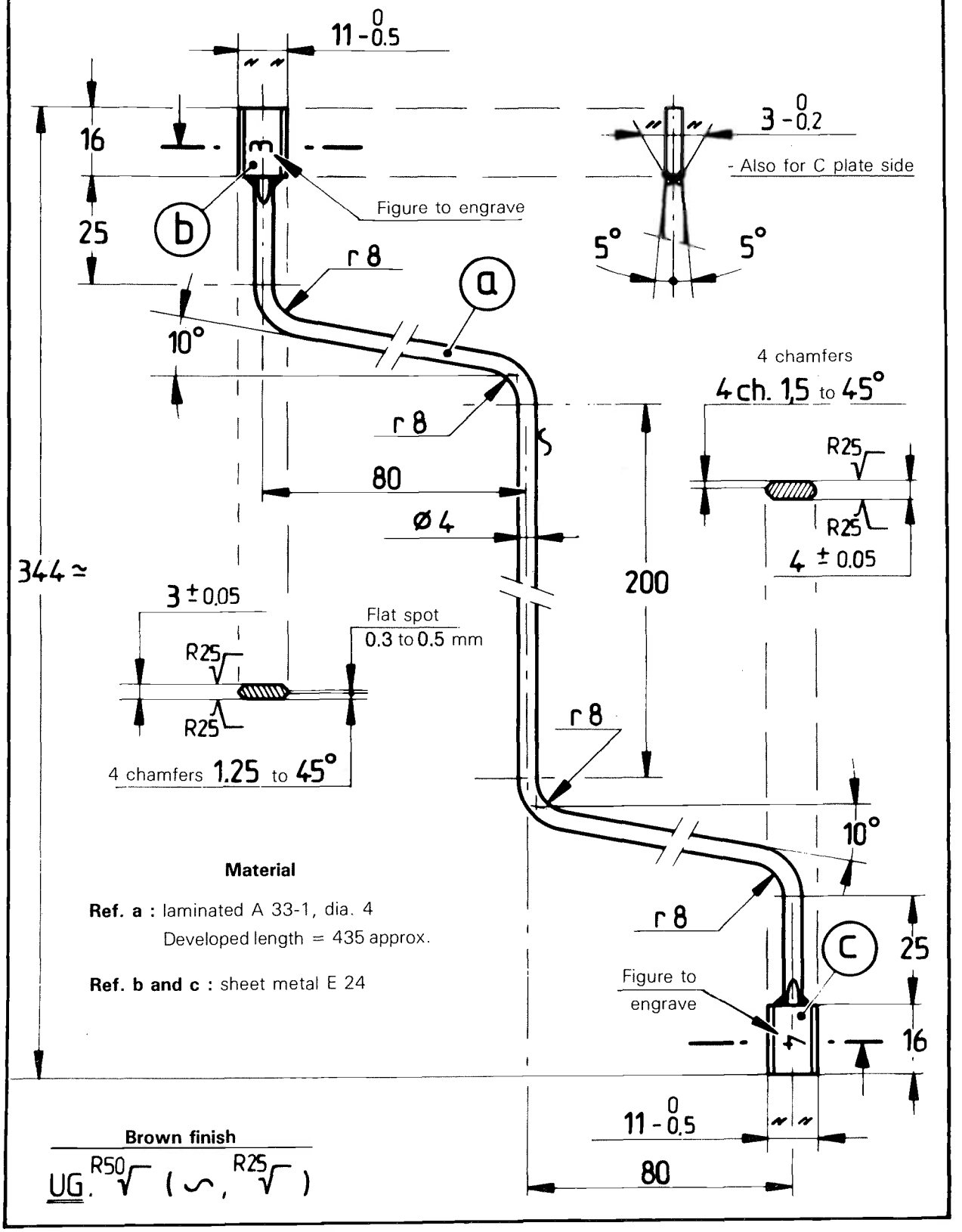

Material

Ref. a : laminated A 33-1, dia. 4
Developed length = 435 approx.

Ref. b and c : sheet metal E 24

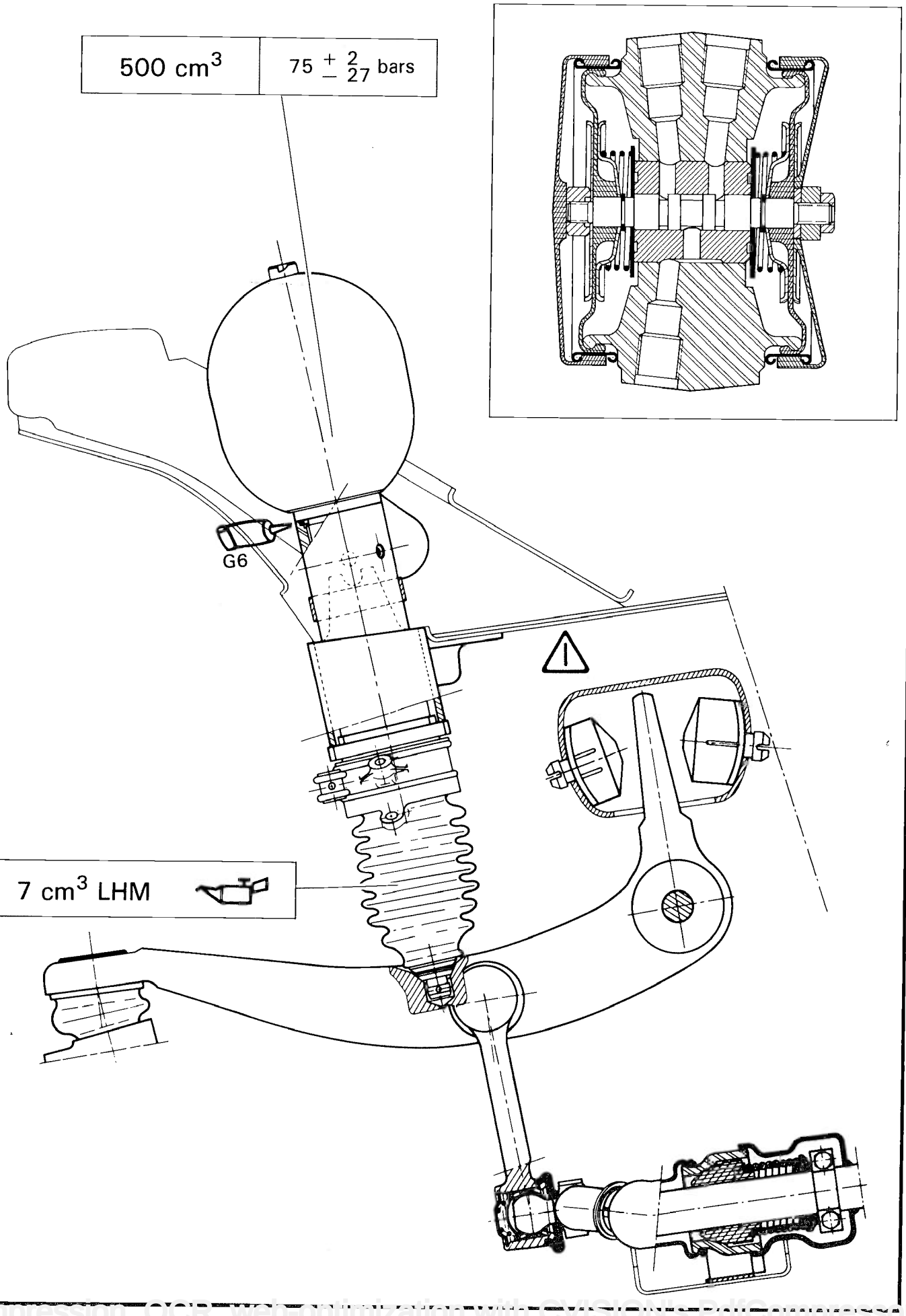

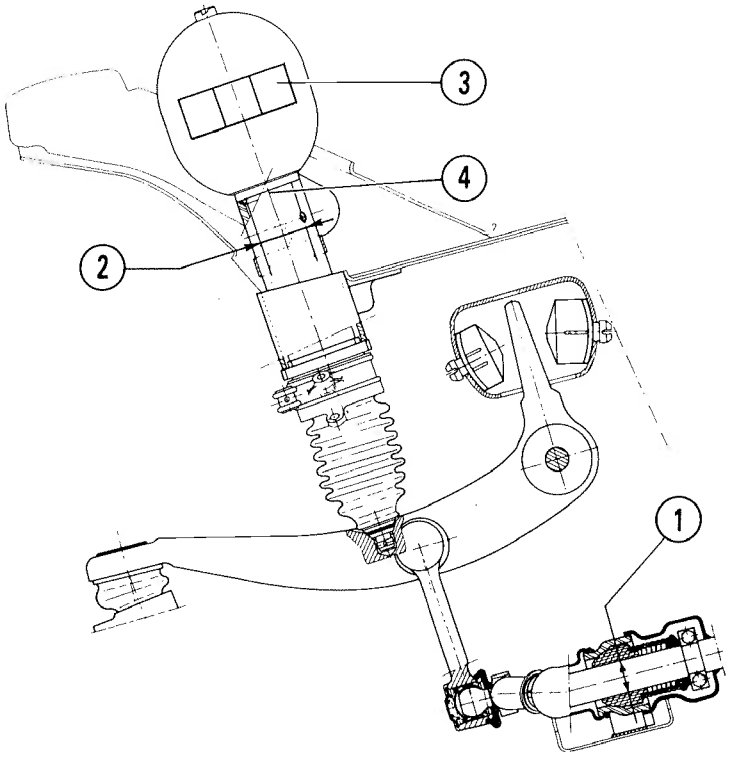

		⌀ ①	⌀ ②	③	④
	829-A5 J6T A 500	23 mm	35 mm	V.V.Bl	⌀ 1,9
	829-A5	24 mm → 7/85 25 mm 7/85 →			
	M25/659	24 mm	37 mm	V.V.Bl	⌀ 1,9
		24 mm → 7/85 25 mm 7/85 →			
	M25/660	24 mm	37 mm	V.V.Bl	⌀ 1,9
		24 mm → 7/85 25 mm 7/85 →			
	M25/648 M25/669	24 mm	37 mm	V.V.Bl.	⌀ 1,9
		24 mm → 7/85 25 mm 7/85 →			
	M25/662 M25/666	25 mm	37 mm	V.V.Br	⌀ 1,65

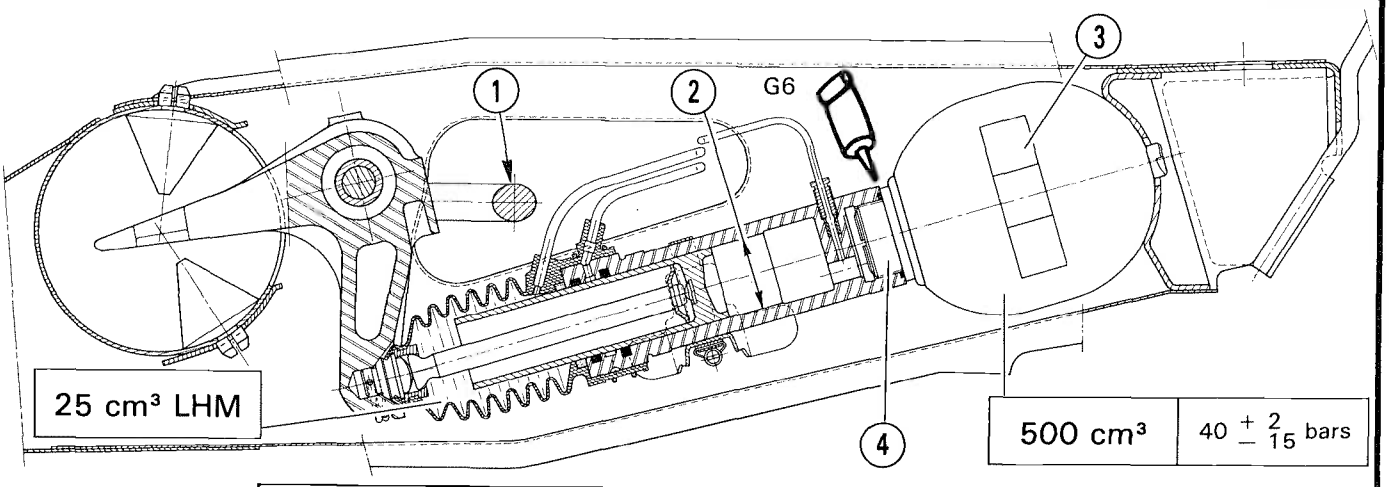

		⌀ ①	⌀ ②	③	④
	829.A5 M25/660 M25/659 M25/648 M25/669 J6T.A 500	17,5 mm	35 mm	Bl.Bl.Br	⌀ 1,25
	M25/662 M25/666	19,5 mm	35 mm	Bl.Bl.Br	⌀ 1,25

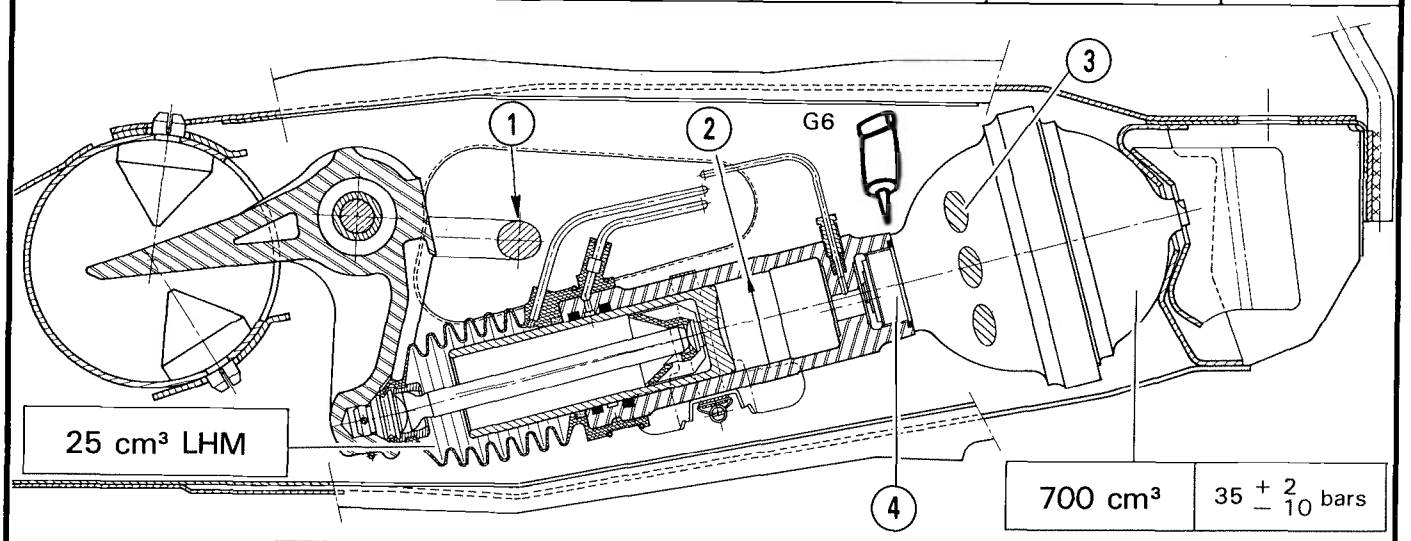

		⌀ ①	⌀ ②	③	④
	829.A5 M25/659	17,5 mm → 7/85	42 mm	J.J.J.	⌀ 1,5
	M25/648 M25/669 M25/660	19,5 mm 7/85 →			

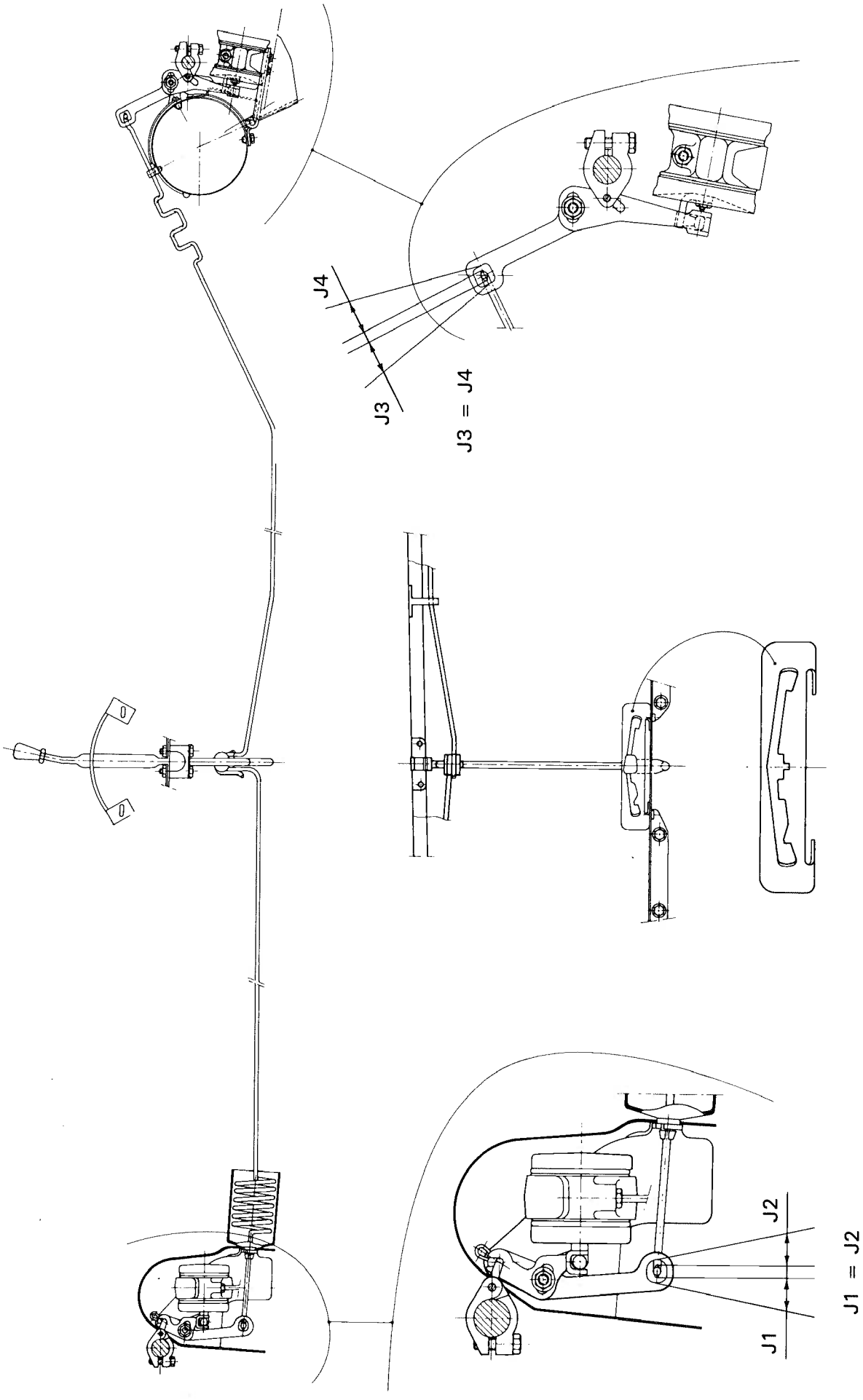

→ 7/85

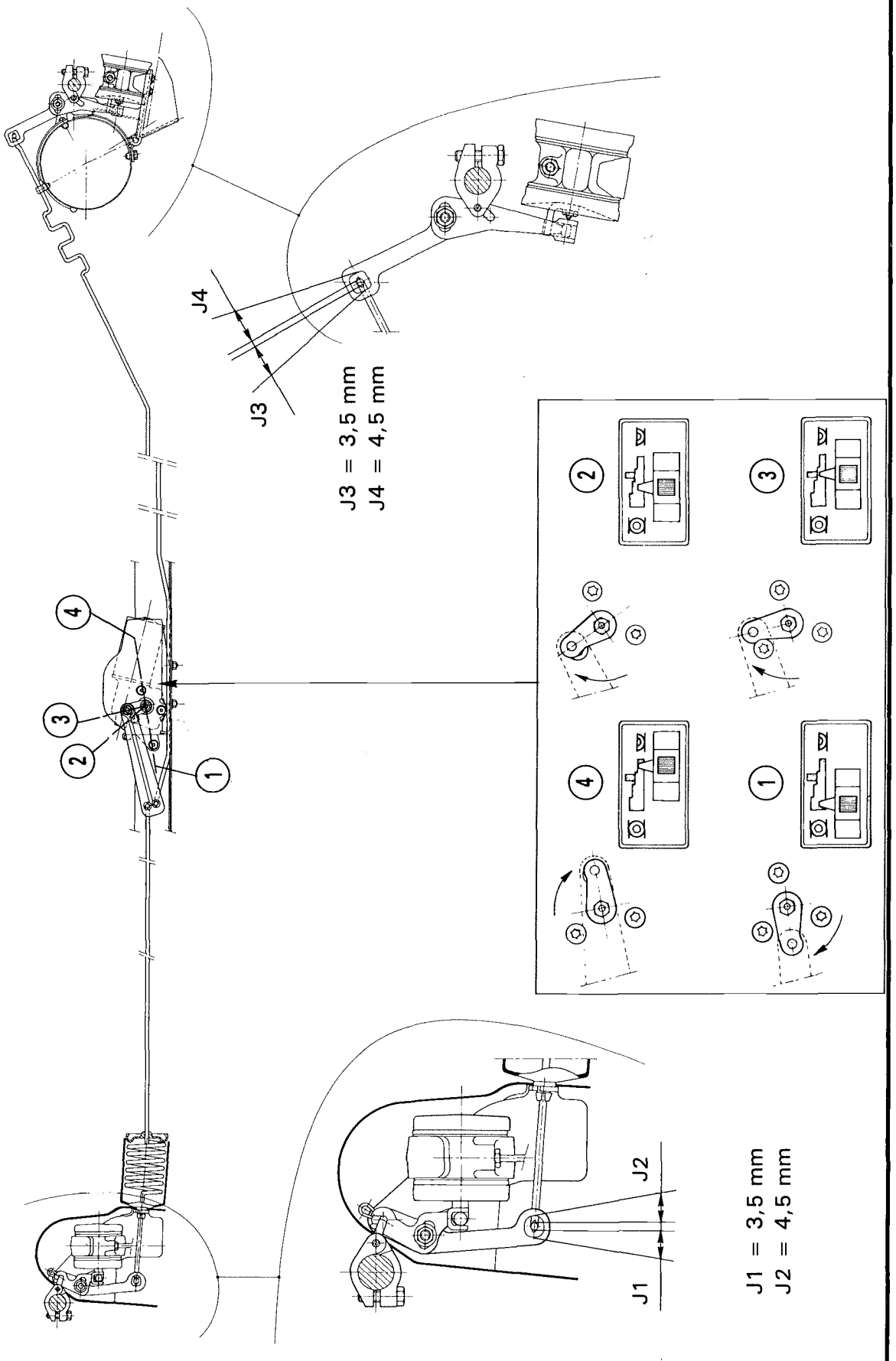

7/85 →

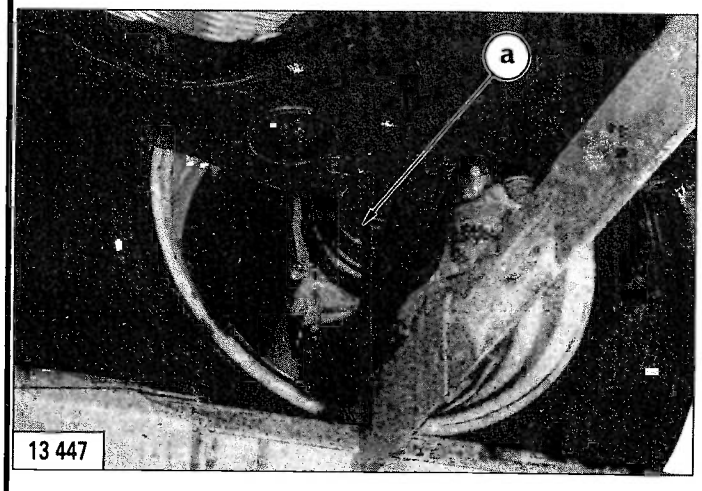

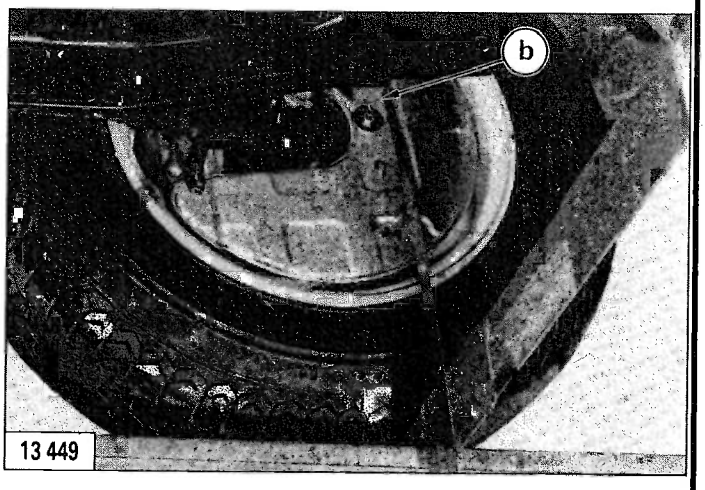

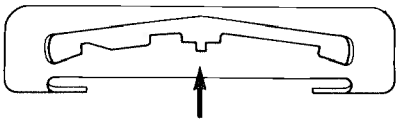

→ 7/85

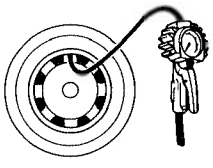

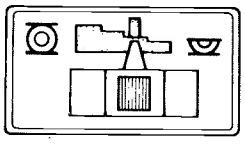

7/85 →

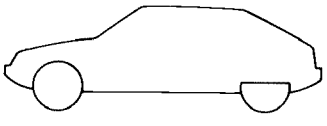

a	b
165 ± 8 mm	215 ± 8 mm

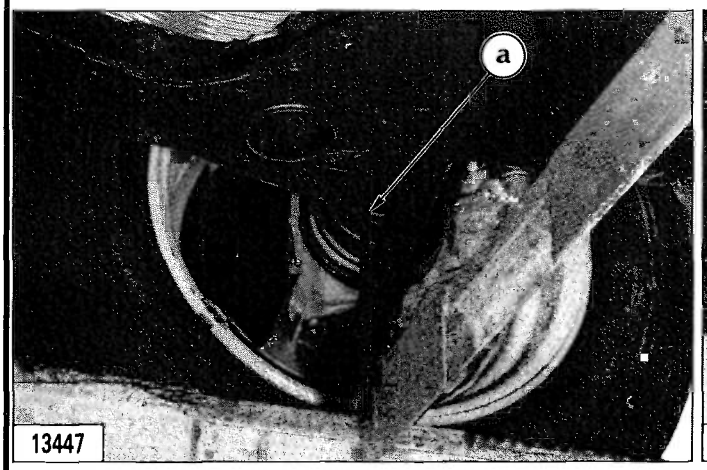

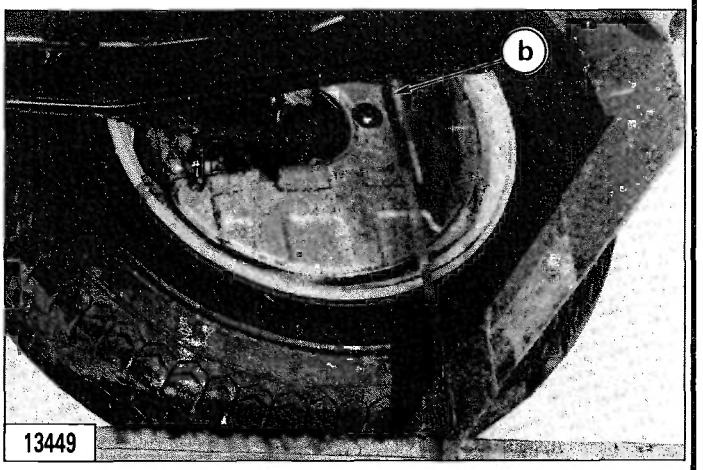

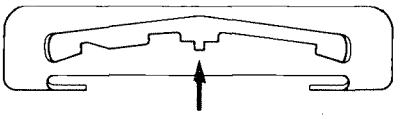

→ 7/85

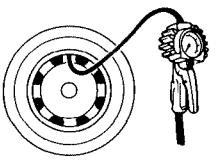

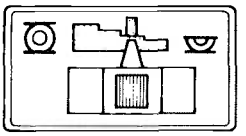

7/85 →

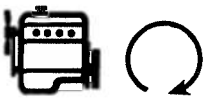

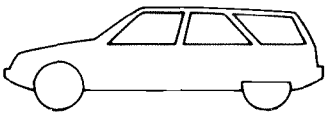

a	b
165 ± 8 mm	210 ± 8 mm

TOOL TO BE USED

Chain wrench

REMOVING AND REFITTING A FRONT HYDROPNEUMATIC SUSPENSION SPHERE AND CYLINDER

REMOVAL

Unlock the pneumatic unit by 1/4 turn **max.** with a chain wrench.

Chock the front of the vehicle.

Remove the road wheel,

Depressurise the hydraulic systems.
(See ⑥ MA 390.000/1).

Take off suspension cylinder hinge retaining pin (3), **Fig. I.**

Push back the piston rod so as to drive out the fluid contained in the cylinder.

Remove the suspension sphere.

Uncouple, Fig. I and Fig. II

- pipes (1) and (2),
- pipe (5).

Remove:

- clip (6), **Fig. II,**
- the suspension cylinder.

REFITTING

Check that the suspension cylinder dust-guard contains LHM fluid. If this is not the case, fill with 7 cc. of fluid.

Fit the suspension cylinder and thrust race (4).

Recouple feed pipe (5) *(equipped with a NEW sleeve seal,* **Fig. II).**

Reinstall:

- clip (6), **Fig. II,**
- the hydropneumatic sphere whose *contact face* ***«a»*** *has been slightly lubricated, fitted with a NEW seal.*
- tighten by hand.

Couple up, Fig. I :

- overflow return pipe (1),
- venting pipe (2).

Insert pin (3), **Fig. I.**

Start the engine.

Check the circuit for leaks.

Replace the road wheel.

Lower the vehicle to the ground.

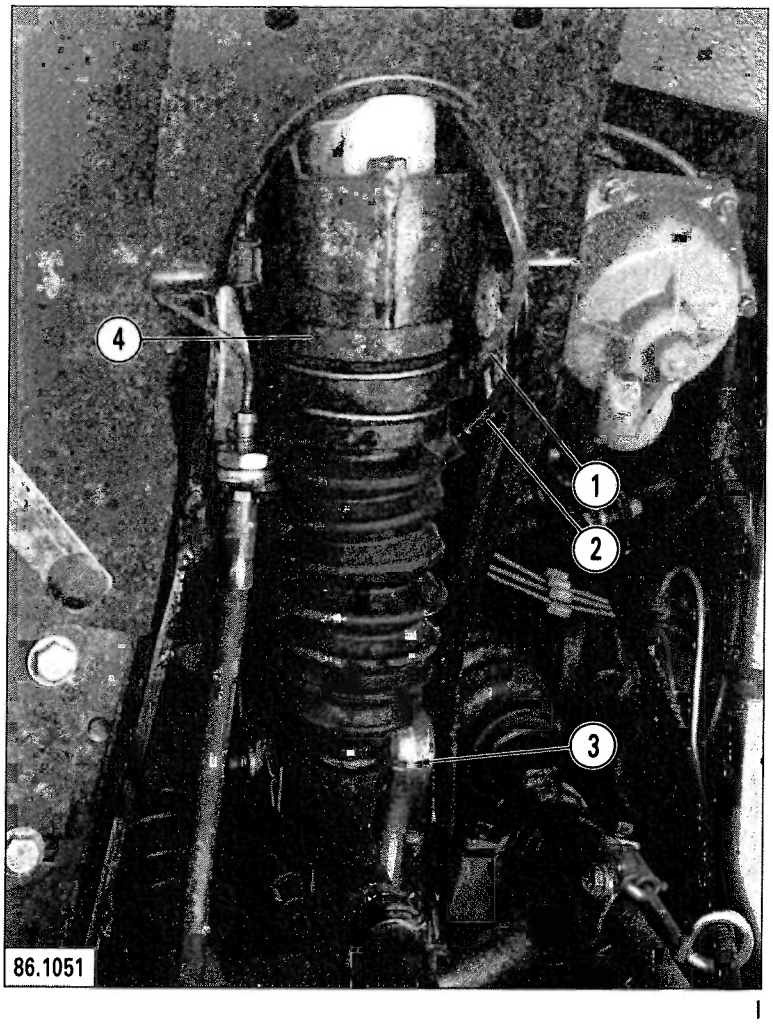

I

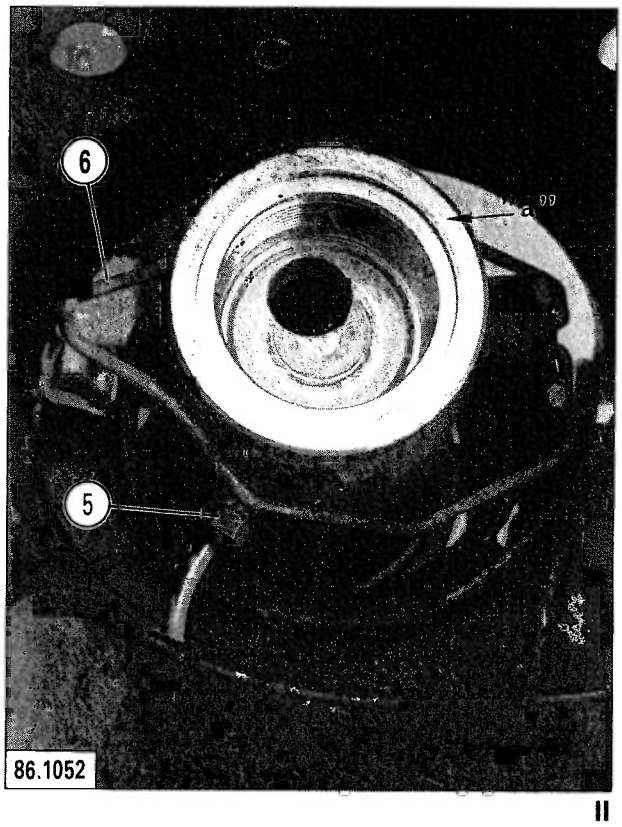

II

TOOL TO BE USED

Chain wrench

REMOVING AND REFITTING A REAR HYDROPNEUMATIC SUSPENSION SPHERE AND CYLINDER

REMOVAL

Jack up the rear of the vehicle.

Remove the road wheel.

Depressurise the hydraulic circuits.
(See ⑥ MA 390.000/1).

Extract the suspension cylinder hinge retaining pin (1), **Fig. I.**

Disconnect pipes (2), (3) and (4), **Fig. II.**

Remove clamp (5), **Fig. II.**

Disengage the pneumatic suspension unit/cylinder assembly.

Grip the suspension cylinder in a vice fitted with soft jaws, and introduce a 8 mm dia. rod in orifice **A** to prevent the cylinder from rotating.
Tighten the vice MODERATELY.

Slacken the pneumatic unit using the chain wrench.

REFITTING

Position the suspension sphere with the contact surface slightly greased and equipped with a *NEW seal;* hand tighten.

> Ascertain that the suspension cylinder dust-guard contains LHM fluid. If not, fill with 25 cc of fluid.

Put the suspension cylinder/pneumatic unit **into place.**

Reconnect, Fig. II :

- feed pipe (4) having a *NEW sleeve-seal fitted,*
- overflow return pipe (3),
- venting pipe (2).

Install, Fig. I and II :

- holding pin (1),
- clamp (5) without tightening.

Run the engine.

Set the height adjustment control switch to the «high» position.

Make sure that the hydropneumatic sphere makes contact with the axle unit. Tighten clamp (5), **Fig. II.**

Test the hydraulic system for leaks.

Refit the wheel.

Lower the vehicle to the ground.

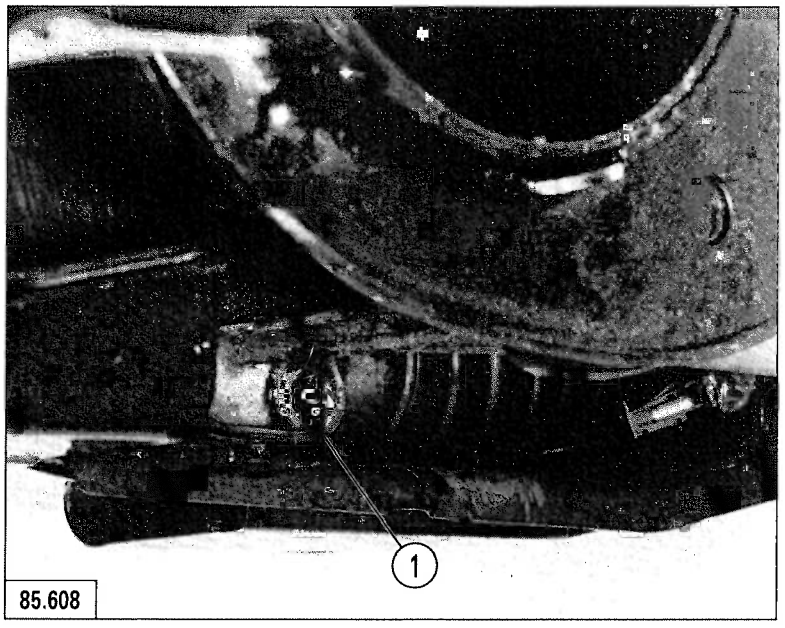

I

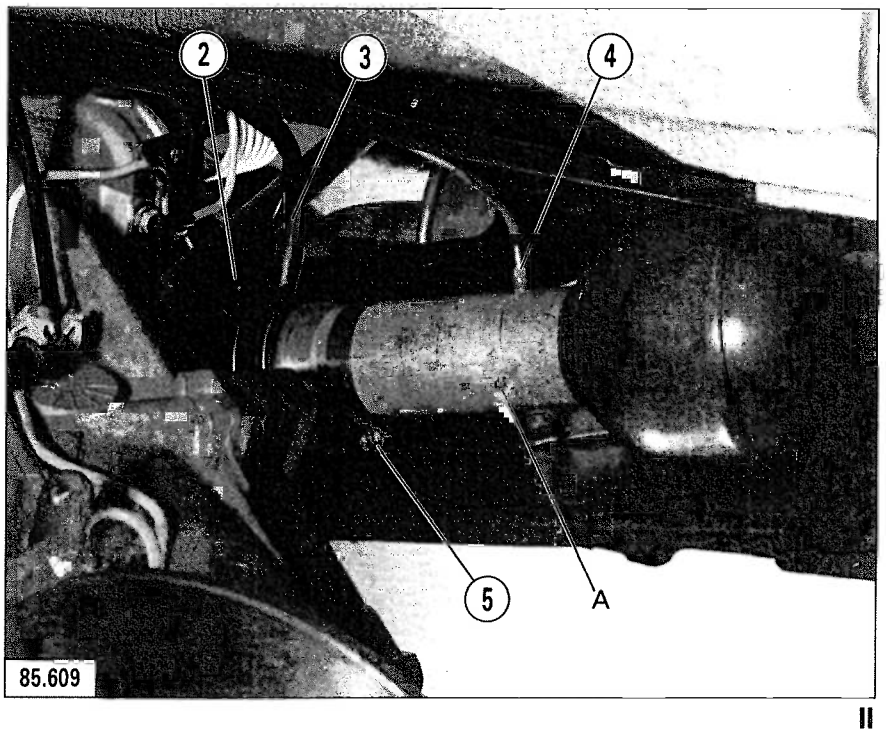

II

TOOLS TO BE USED

3505-T.	Ball-joint extractor
6301-T.	Equipment for positioning the half front axles
6301.T bis.	Front axle locking tool
6320-T.	Anti-roll bar link rod extractor
6401-T.	Set of 2 clamps for fitting the anti-roll bar bearing
6602-T.	Set of 3 stands

Modification to clamps **6401 T**
See drawing MR 630-58/31a
⑨ 430/1 page 3

REMOVING AND REFITTING AN ANTI-ROLL BAR

REMOVAL

Raise and support the vehicle horizontally on stands **6602-T.**

Release the pressure in the hydraulic circuits. Set the height control switch to the "normal driving position".

Remove:

- the road wheels,
- the wheel arch rubber seals,
- both brake control valve securing screws,
- exhaust shields (2), **Fig. I,**
- cover (3), base plate (5) from the height corrector protection casing and the casing (4) itself, **Fig. I.**

Uncouple and free automatic height control clamp (1), **Fig. I.**

Remove automatic height control rod (6), **Fig. II.**

Disconnect the swivel track rods.

Disengage rubber gaiters (7) and plastic trim cover (8), **Fig. III.**

Loosen maintaining clamp (9), **Fig. IV.**

Take off the screws (10) fixing the bearings to the axle unit, **Fig. IV.**

LH side

Remove:

- suspension cylinder retaining pin (12), **Fig. V,**
- upper wheelarm link-rod nut (11), **Fig. V.**

Uncouple the link-rod (13) from the anti-roll bar, using tool **6320-T, Fig. VI.**

RH side

Withdraw the anti-roll bar link-rod nut (14), **Fig. VIII.**

Disconnect link-rod (15) from the anti-roll bar with tool **3505-T, Fig. VIII.**

(Pull out the anti-roll bar to allow passage for tool 3505-T).

Strip down the anti-roll bar, on the vehicle.

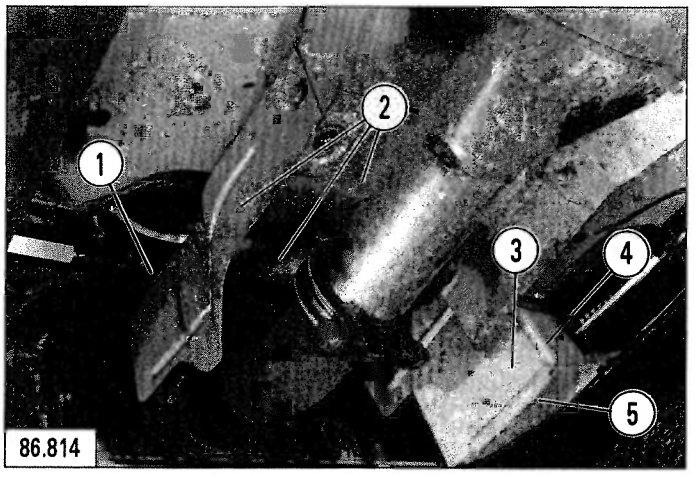

I

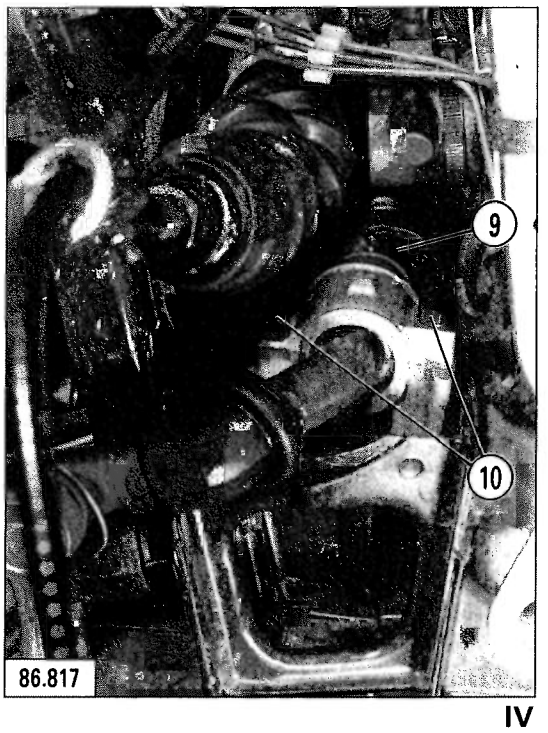

IV

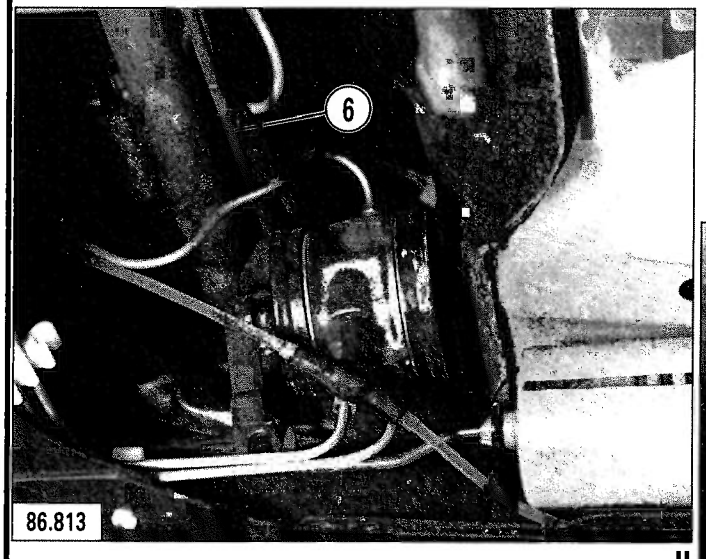

II

V

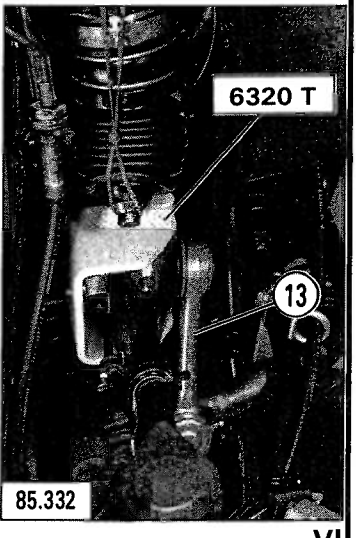

VI

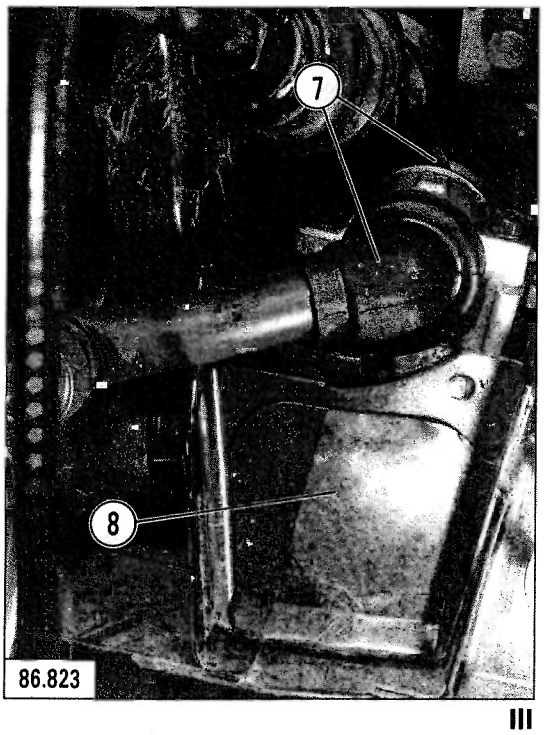

III

VII

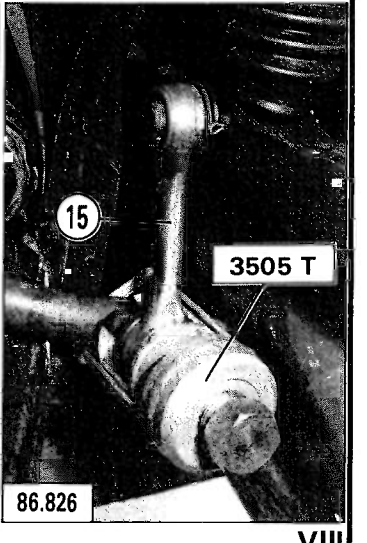

VIII

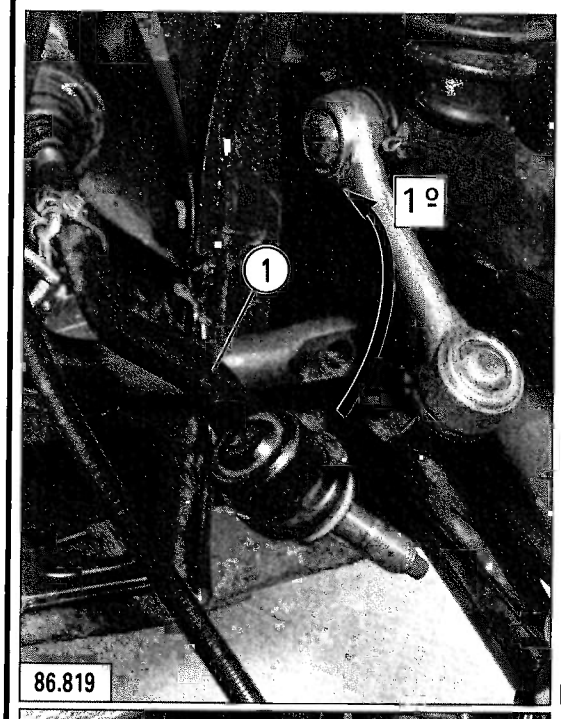

86.819

I

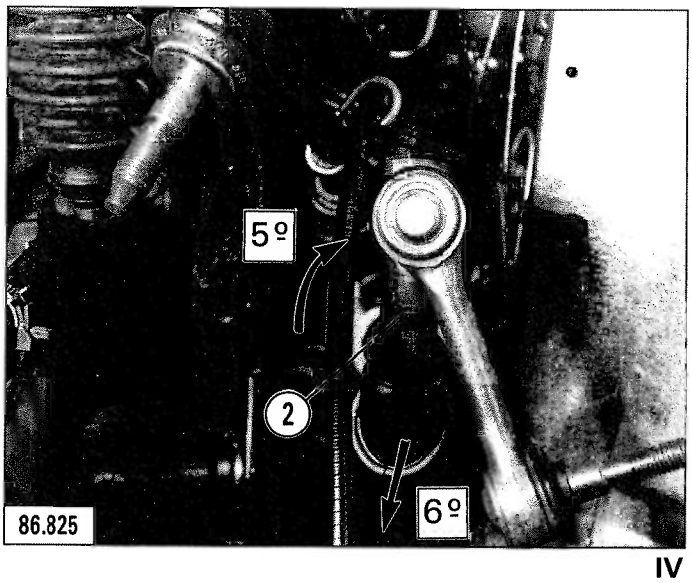

86.825

IV

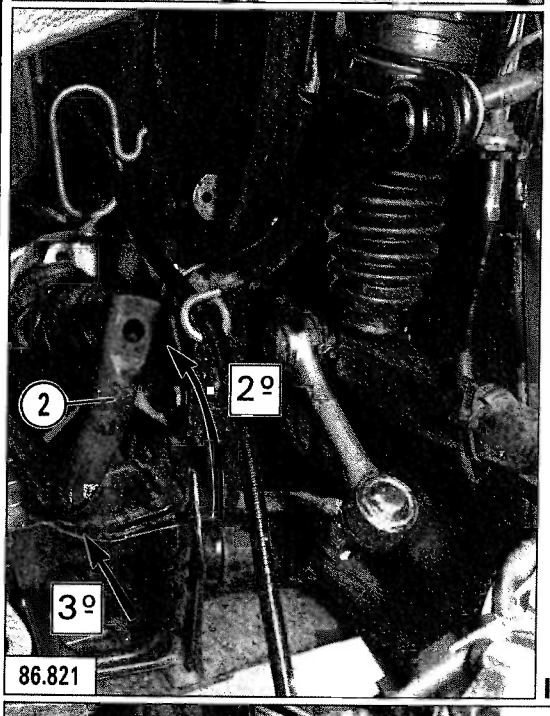

86.821

II

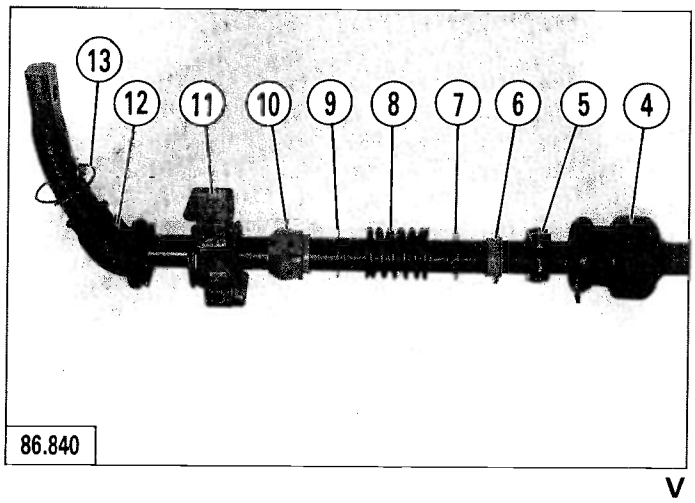

86.840

V

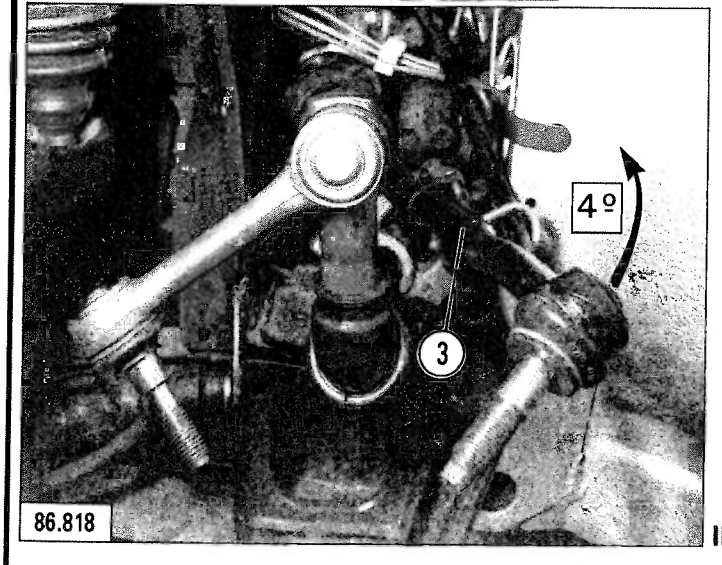

86.818

III

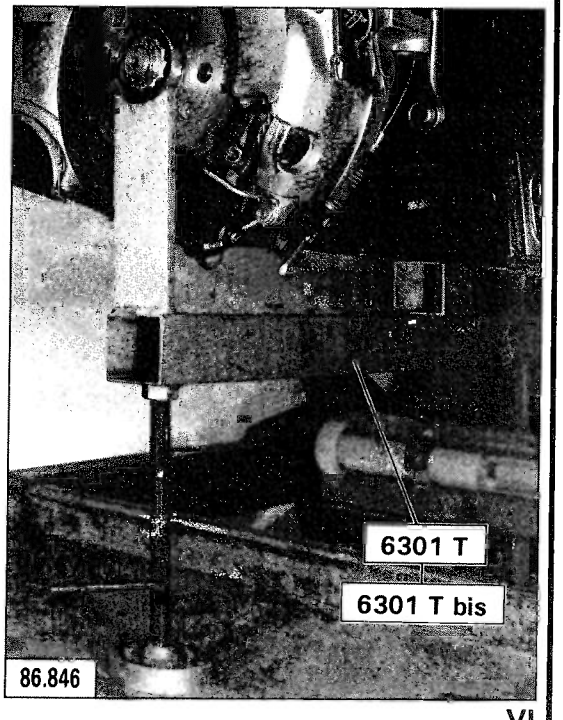

86.846

VI

Extracting the anti-roll bar

RH side

Turn the steering through full lock to the right.

1. Lift up steering track rod (1), **(Fig. I).**

2. Rotate by a quarter turn toward the upper section of the anti-roll bar (2), **(Fig. II).**

3. Push the anti-roll bar to the left, **(Fig. II).**

LH side

Turn the steering through full lock to the left.

4. Lift up steering track rod (3), **(Fig. III).**

5. Slightly rotate anti-roll bar (2), **(Fig. IV).**

6. **Free the anti-roll bar from the LH side of the vehicle, (Fig. IV).**

REFITTING

Reassemble the anti-roll bar on the LH side.

Add the bearing items, **(Fig. V):**

- gaiter (4),
- retaining clamp (5),
- the two half thrust cups (6),
- steal thrust washer (7),
- spring (8),
- steel thrust washer (9),
- the two half ball-joints (10),
- bearing (11),
- ring (13),
- sheath (12).

Coat all the parts with *TOTAL MULTIS grease.*

Put the anti-roll bar into place **towards the LH side of the vehicle.**
(Reverse the fitting procedure, **Fig. IV, III, II, I).**

Reassemble the anti-roll bar on the RH side, in the order indicated below.

Place the half axles in line, (in the normal driving position) using tools **6301 T** and **6301 T bis (Fig. VI).**

Wipe the ball-joint cones, do not use solvent.

Recouple

- the LH link rod with the upper wheel arm; hand tighten the nut *(new NYLSTOP one)*,
- the RH link rod with the anti-roll bar; hand tighten the nut *(new NYLSTOP one)*.

Refit bearing fixing screws (1) and nuts (2), **Fig. I** and **II.** *Check that plate (3) has been fitted the right way.*

Equip each bearing with the set of clamps **6401-T, Fig. III** and **IV,** placing the *modified tool to the LH side).* Compress springs (5) and (8) moderately. *(The aim of this operation is to hold both half ball-joints and thrust cups in position).*

Make sure that bearings (6) and (7) are in contact with the axle unit.

IMPORTANT : if one bearing does not touch the axle, proceed as follows:

Tighten the bearing which is touching the axle unit correctly. Insert shims beween the unit and the second bearing so as to **secure it without exerting any stress on the anti-roll bar,** *(one shim thickness only = 1 mm).*

Tighten, Fig. I, screws (1) fitted with *lugged contact washers,* to **2.7 mdaN.**

Tighten the nuts until springs (5) and (8) turns touch, by means of clamps **6401-T.**

Slacken the nuts of **each tool** by 1/2 turn, **Fig. III and IV.**

Centre the anti-roll bar in the axle unit, **Fig. V.** The LH and RH ends of the bar should be the same distance **«L»** from the subframe, **to within 2 mm.**

Tighten retaining clamping collar screws (4) and (9) to **1.3 mdaN, Fig. III and IV.**

Remove clamps **6401-T**

Fill dust cover (10) with TOTAL MULTIS grease, **Fig. VI.**

Return, Fig. VI:

- dust covers (10) and (13),
- ring (11),
- trim cover (12),

to their rest location.

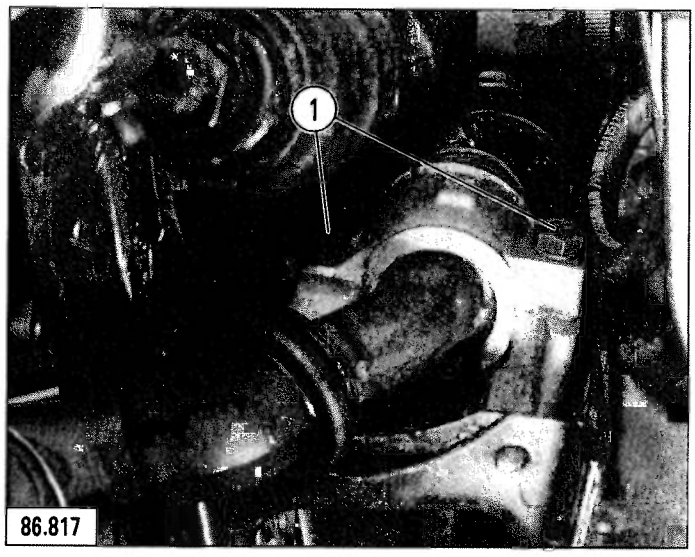

I

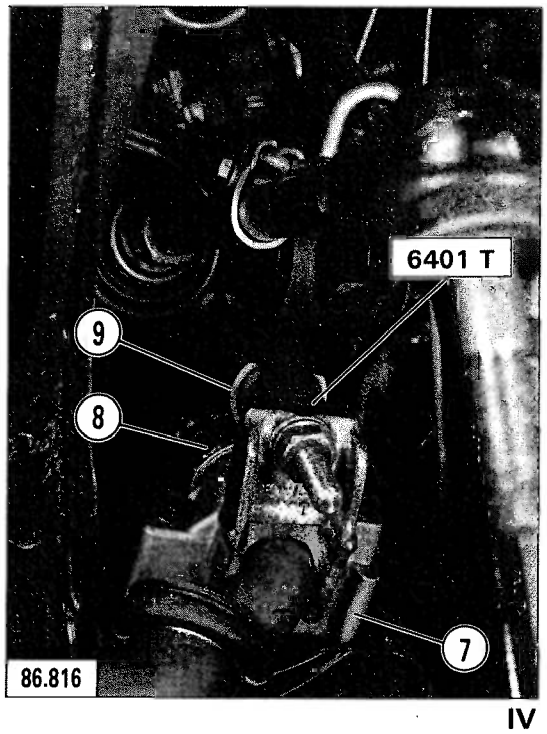

IV

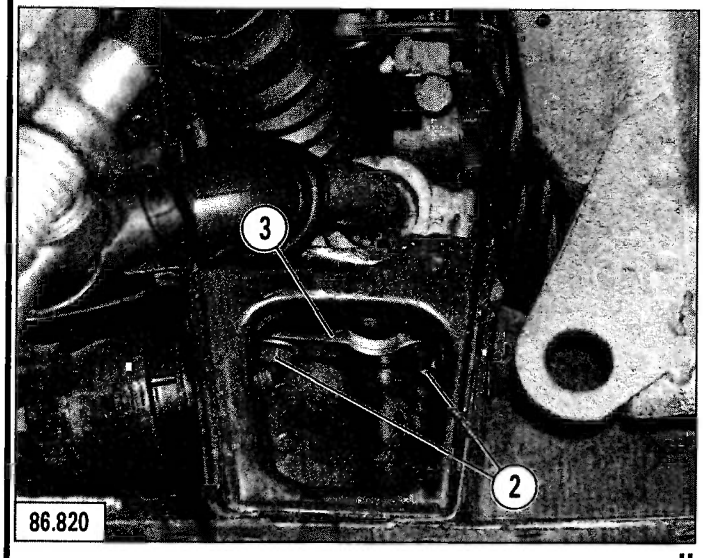

II

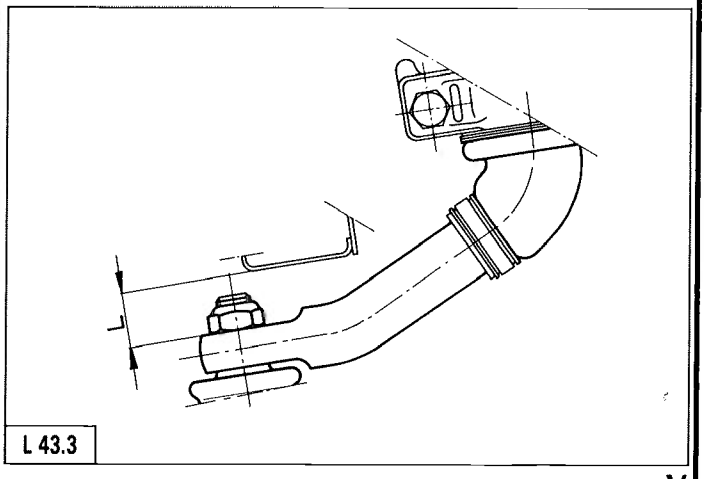

V

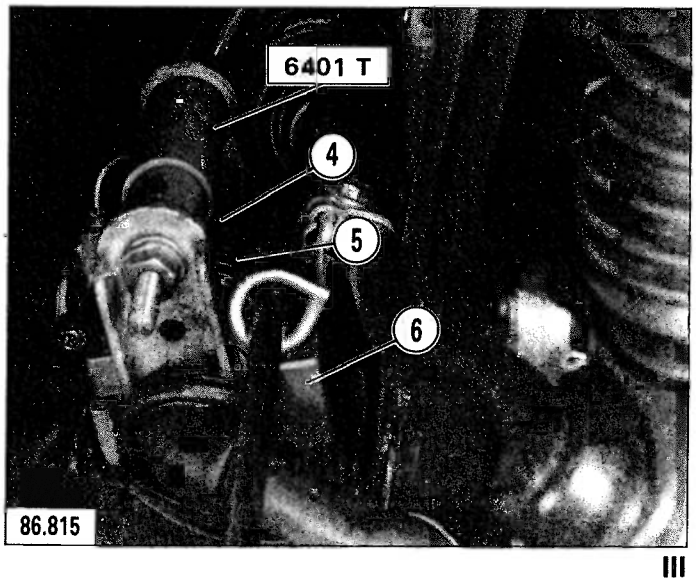

III

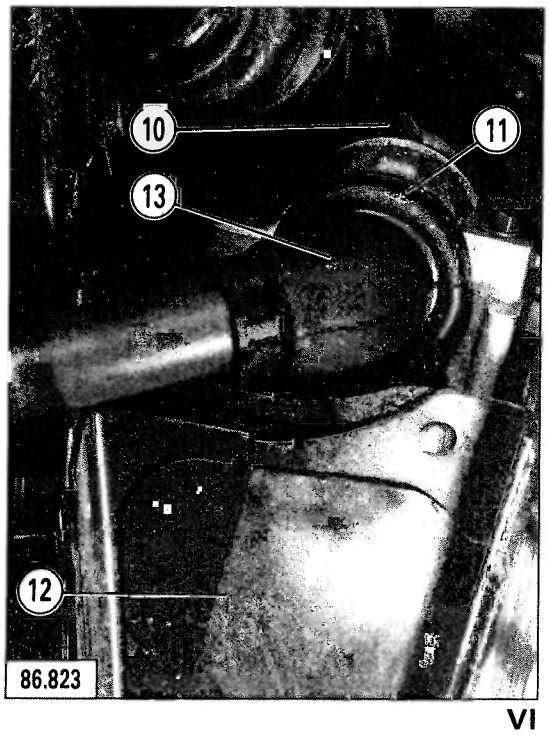

VI

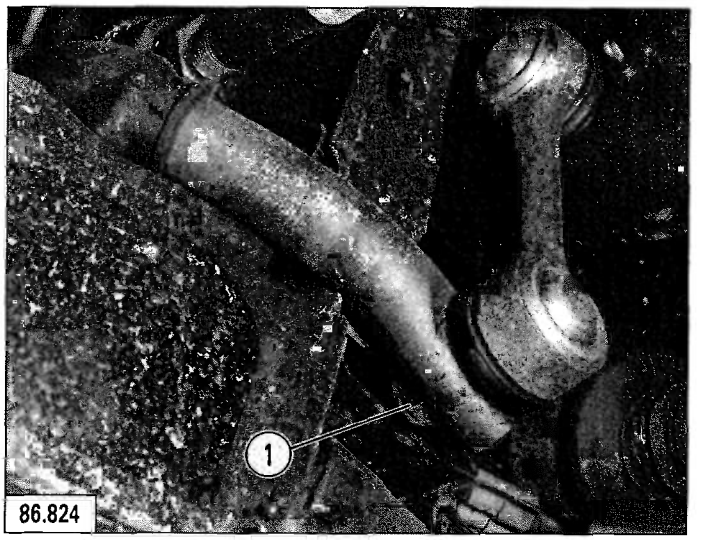

I

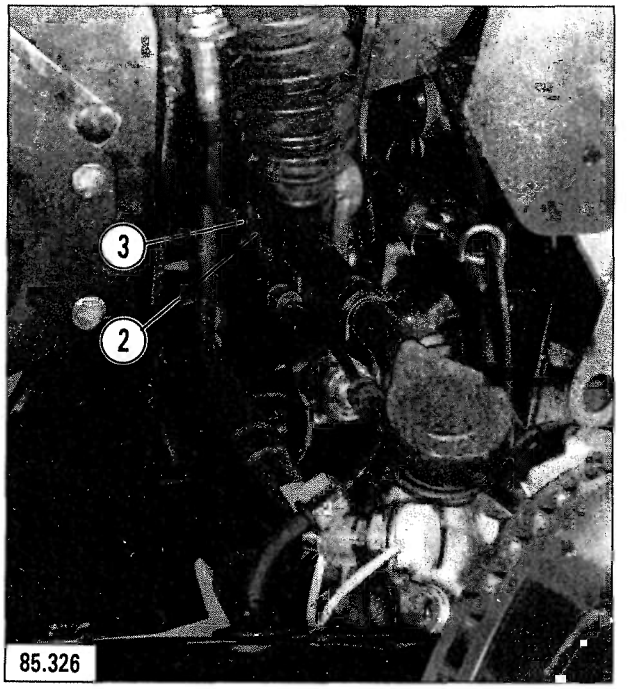

II

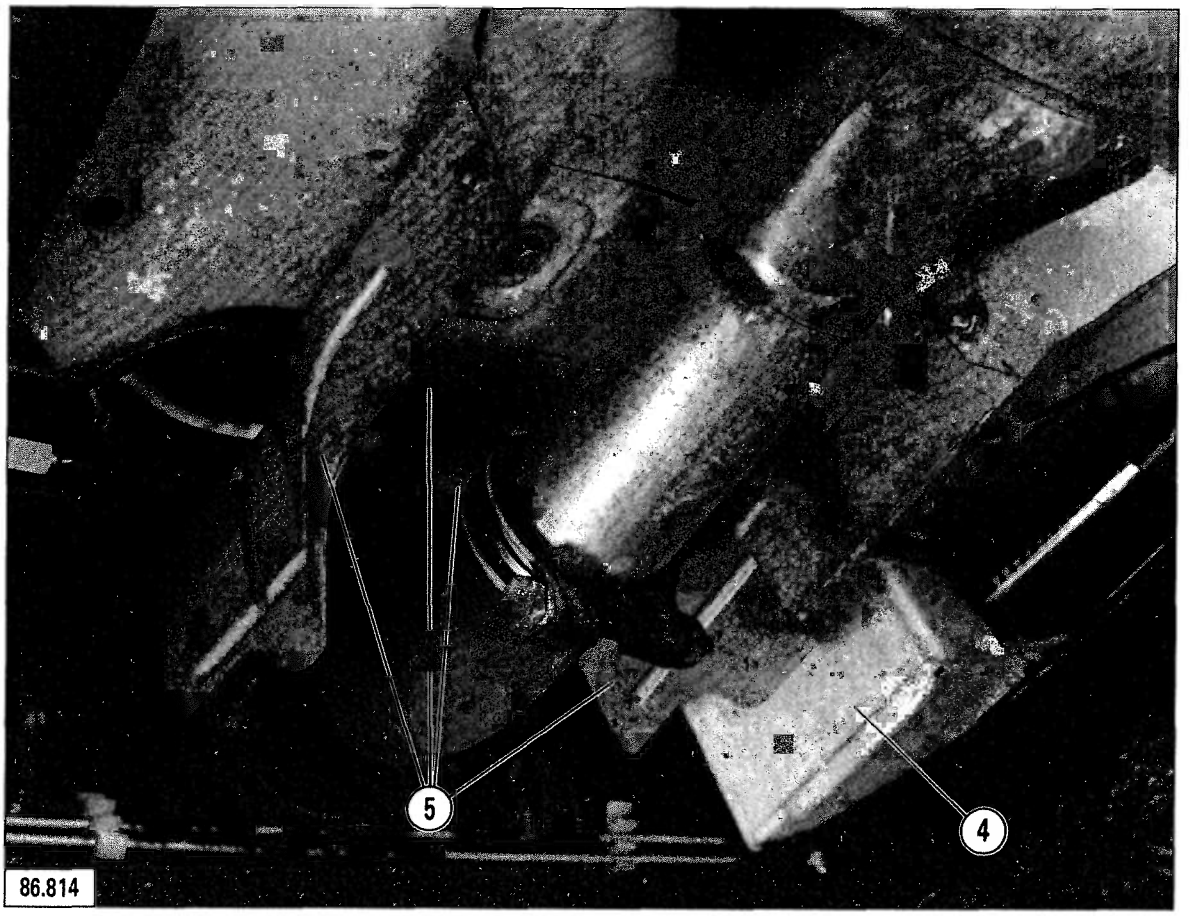

III

RH side:

Tighten the anti-roll bar link-rod nut (1) **Fig. I**, to **5 mdaN.**

LH side:

Tighten the anti-roll bar nut (3) **Fig. II** to **5 mdaN.**

Fit the suspension cylinder pivot and pin (2).

Recouple the steering track rod to the swivel, equipped with washer and nut *(new NYLSTOP one)*. Tighten to **10 mdaN.**

Refit the automatic height control to the height corrector.

Reconnect the automatic control clamp with the anti-roll bar.

> **Centre** the automatic height control sideways in the height corrector ball-joint to prevent the slide valve from being stressed.

Tighten the automatic height control clamp to **1.5 mdaN.**

Remove tools **6301-T** and **6301-T bis.**

Refit, Fig. III :

- the height corrector protection casing (4),
- the exhaust shield (5).

Attach the brake control valve. Tighten the screws to **1.8 mdaN,** equipped with contact washers.

Reposition:

- the wheelarch rubber seals,
- the wheels.

Lower the vehicle to the ground.

Check the front heights.

Adjust if necessary.
(See MA ⑨ 430.00/1).

TOOL TO BE USED

6302-T. Set of 2 chocks for positioning the rear axle.

REMOVING AND REFITTING A REAR ANTI-ROLL BAR

REMOVAL

Raise the rear of the vehicle **and support** it on stands.

Remove the road wheel.

Depressurize the hydraulic circuits.

Set the height control switch to the «normal running» position.

Uncouple the automatic height corrector clamp and move it clear.

Take off, Fig. I :

- screw (1) and its adjustment washers at **«b»**,
- screw (3), the two half-bearings (2) and shims **«a»**.

Free the anti-roll bar from the R.H. side of the vehicle.

REFITTING

Engage the anti-roll bar towards the R.H. side of the car.

Utilize tools **6302-T** to **place** the axle arms in line, (in the «normal driving» position), **Fig. II**.

Position, but do not tighten:

- both half-bearings (6),
- screw (5),
- screw (4).

Centre the anti-roll bar in the rear axle unit ; the clearance at **«a»** should be the same on either side (LH and RH), to within 1 mm.

Available shim thicknesses:
0.5 - 1 - 2 - 3 - 4 mm.

Tighten bolt (7) fitted with a *contact washer*, **Fig. IV,** to **6 mdaN.**

If necessary, **place shims** at **«b»** with a 0.3 mm clearance max.

Tighten screw (8) to **10 mdaN.**

Reconnect the automatic height control with the anti-roll bar.

> **Centre** automatic control (9) sideways in the height corrector ball-joint, **Fig. V,** to avoid the slide valve being stressed.

Tighten the automatic height control clamp screw to **1.5 mdaN.**

Remove tools **6302-T.**

Lower the vehicle to the ground; check the front heights.

Readjust if required. (Refer to ⑨ MA 430.00/1).

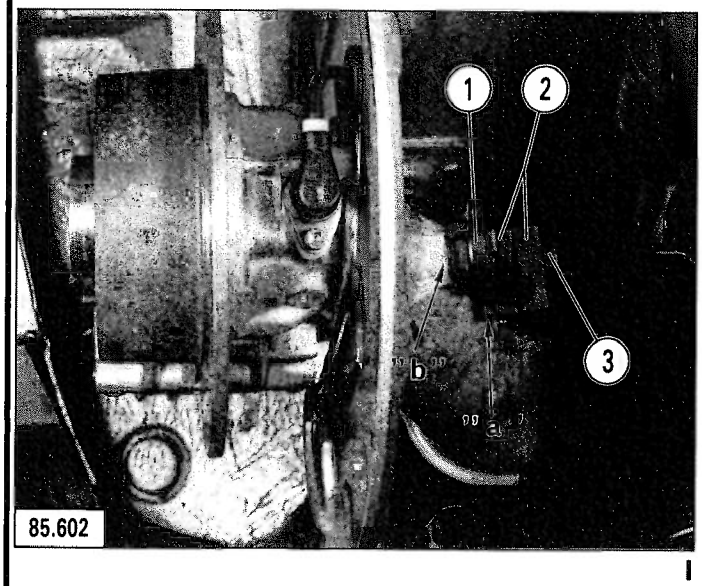

I

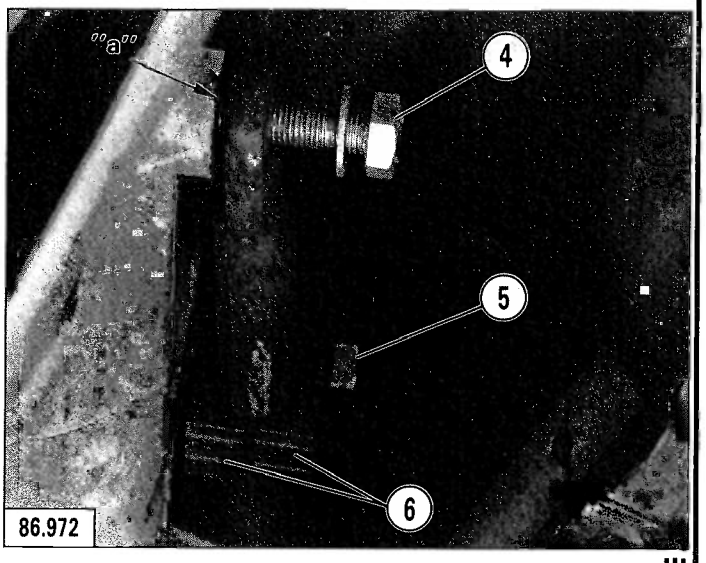

III

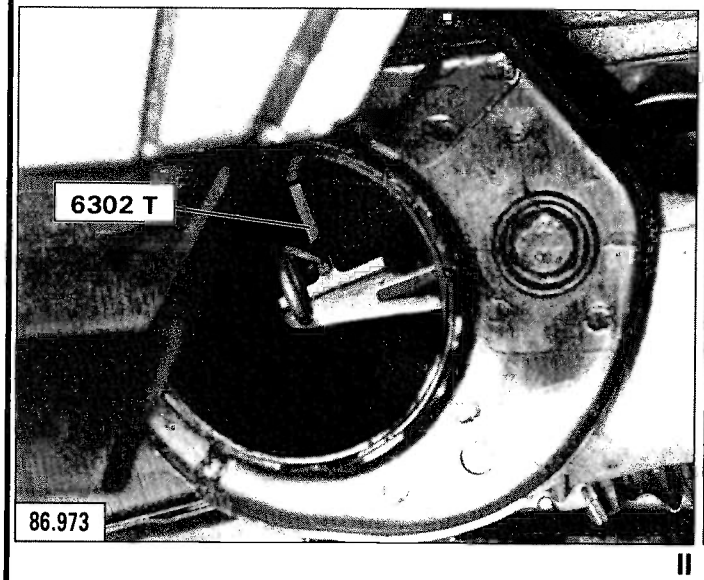

II

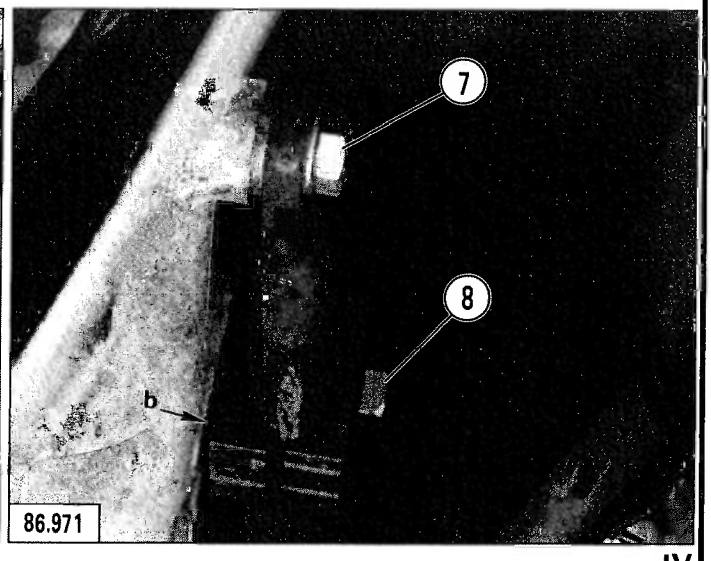

IV

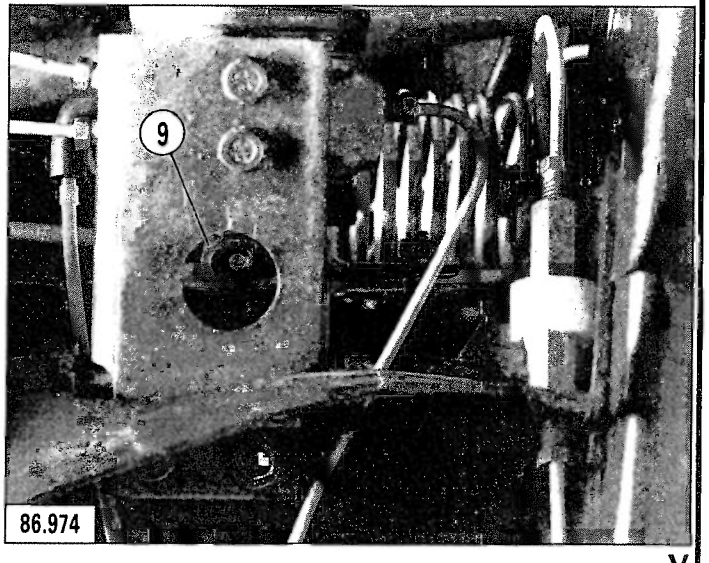

V

		①	②	③	④	⑤	⑥	⑦
		XVS 175 HR 14	XVS 185 HR 14	XVS 185 HR 14	390 TRX 190/65 HR	390 TRX 190/65 HR	XZX 175 SR 14	XZX 185 SR 14
9 mdaN		5 1/2 J14	5 1/2 J14		150 TR 390		5 1/2 J14	5 1/2 J14
9 mdaN				6 J14		150 TR 390		

		BAR		AM.84		BAR	
CX20	A	2	②		A	2	③
CX 20 TRE	B	2,1	①		B	2,1	③
	C	2,6	①	130 km/h maxi	C	2,6	③
CX 25 Pallas IE	A	2	②		A	2,2	⑤
	B	2,1	②		B	1,4	⑤
	C	2,6	②	130 km/h maxi	C	2,6	①
CX 25 GTI	A	2,2	⑤				
	B	1,4	⑤				
	C	2,6	①	130 km/h maxi			
CX 25 Prestige	A	2,2	②		A	2,2	⑤
	B	2,2	②		B	1,4	⑤
	C	2,6	②	130 km/h maxi	C	2,6	①
CX 25 D CX 25 D Pallas	A	2,2	⑦		A	2,2	③
	B	2,1	⑥		B	2,1	③
	C	2,6	⑥	130 km/h maxi	C	2,6	③
CX 25 RD	A	2,4	④		A	2,4	⑤
	B	2	④		B	2	⑤
	C	2,6	①	130 km/h maxi	C	2,6	①
CX25 TRD	A	2,4	⑤				
	B	2	⑤				
	C	2,6	①	130 km/h maxi			
CX Limousine	A	2,2	②		A	2,4	⑤
	B	2,1	②		B	2	⑤
Turbo	C	2,6	②	130 km/h maxi	C	2,6	①

	①	②	③	④	⑤	⑥
	MXL 185/70 R14	MXL 195/70 R14	MXV 195/70 R14	MXV 195/70 R14	390 TRX 190/65 HR	390 TRX 210/55 VR
9 mdaN	5 1/2 J14 FHA 5-45	5 1/2 J14 FHA 5-45	5 1/2 J14 FHA 5-45			
9 mdaN				6 J14	150 TR 390	150 TR 390

	A	B	C	BAR		AM.85	BAR	
CX20 CX 20 TRE	A	2,2	②			A	2,2	⑤
	B	1,4	①			B	1,4	⑤
	C	2,8	①	130 km/h maxi		C	2,8	①
CX 25 RI CX 25 Pallas IE CX25 Prestige	A	2,4	②			A	2,2	⑤
	B	2	②			B	1,4	⑤
	C	2,8	①	130 km/h maxi		C	2,8	①
CX 25 GTI	A	2,2	⑤					
	B	1,4	⑤					
	C	2,8	①	130 km/h maxi				
CX 25 D	A	2,4	②			A	2,2	⑤
	B	1,8	①			B	1,4	⑤
	C	2,8	①	130 km/h maxi		C	2,8	①
CX 25 RD	A	2,4	③			A	2,4	⑤
	B	2	③			B	2	⑤
	C	2,8	①	130 km/h maxi		C	2,8	①
CX 25 TRD	A	2,4	④			A	2,4	⑤
	B	2	④			B	2	⑤
	C	2,8	①	130 km/h maxi		C	2,8	①
CX Limousine Turbo	A	2,4	③			A	2,5	⑤
	B	2	③			B	2	⑤
	C	2,8	①	130 km/h maxi		C	2,8	①
CX 25 GTI Turbo	A	2,3	⑥					
	B	1,5	⑥					
	C	2,8	①	130 km/h maxi				

	①	②	③	④	⑤	⑥
	MXL 185/70 R14	MXL 195/70 R14	MXV 195/70 R14	MXV 195/70 R14	390 TRX 190/65 HR	390 TRX 210/55 VR
9 mdaN	5 1/2 J14 FHA 5-45	5 1/2 J14 FHA 5-45	5 1/2 J14 FHA 5-45			
9 mdaN				6 J14	150 TR 390	150 TR 390

	A	BAR		AM.86	A	BAR	
CX20 RE CX 22 TRS	A	2,2	②		A	2,4	⑤
	B	2,1	①		B	2	⑤
	C	2,8	①	130 km/h maxi	C	2,8	①
CX 25 D	A	2,4	②		A	2,4	⑤
	B	1,8	①		B	2	⑤
	C	2,8	①	130 km/h maxi	C	2,8	①
CX 25 RI CX 25 Prestige CX 25 RD CX 25 Limousine	A	2,4	③		A	2,4	⑤
	B	2	③		B	2	⑤
	C	2,8	①	130 km/h maxi	C	2,8	①
CX 25 TRD CX 25 TRI	A	2,4	④		A	2,4	⑤
	B	2	④		B	2	⑤
	C	2,8	①	130 km/h maxi	C	2,8	①
CX 25 GTI Turbo CX 25 Prestige Turbo	A	2,3	⑥				
	B	1,5	⑥				
	C	2,8	①	130 km/h maxi			

	①	②	③	④	⑤
	XVS 175 HR 14	XZS 185 SR 14	XVS 185 HR 14	XVS 185 HR 14	390 TRX 190/65 HR
9 mdaN	5 1/2 J14	5 1/2 J14	5 1/2 J14		
9 mdaN				6 J14	150 TR 390

		BAR		AM.84		BAR	
CX 20	A	2	③		A	2	④
	B	2,1	③		B	2,1	④
	C	2,6	③	130 km/h maxi	C	2,6	④
CX 25 D	A	2,2	②		A	2,2	④
	B	2,2	②		B	2,2	④
	C	2,6	②	130 km/h maxi	C	2,6	④
CX 25 TRI	A	2,4	⑤				
	B	1,9	⑤				
	C	2,6	①	130 km/h maxi			
CX 25 TRD	A	2,4	⑤				
	B	1,9	⑤				
	C	2,6	①	130 km/h maxi			

	①	②	③	④
	MXL 185/70 R14	MXL 195/70 R14	MXV 195/70 R14	390 TRX 190/65 HR
9 mdaN	5 1/2 J14	5 1/2 J14		
9 mdaN			6 J14	150 TR 90

		BAR	AM.85		BAR	
CX 20	A	2,4	②		A	2,5	④
	B	2	②		B	2,3	④
	C	2,8	①	130 km/h maxi	C	2,8	①
CX 25 TRI	A	2,4	④				
	B	1,9	④				
	C	2,8	①	130 km/h maxi			
CX 25 D	A	2,5	②		A	2,6	④
	B	2	②		B	2,3	④
	C	2,8	①	130 km/h maxi	C	2,8	①
CX 25 TRD	A	2,6	④				
	B	2,3	④				
	C	2,8	①	130 km/h maxi			

		BAR	AM.86		BAR	
CX 20 CX 25 D	A	2,5	②		A	2,6	④
	B	2,3	②		B	2,3	④
	C	2,8	①	130 km/h maxi	C	2,8	①
CX 25 TRI CX 25 TRD	A	2,5	③		A	2,6	④
	B	2,3	③		B	2,3	④
	C	2,8	①	130 km/h maxi	C	2,8	①

LIST OF OPERATIONS APPEARING IN THE CHAPTER: SUSPENSION - WHEELS - TYRES

OPERATION No.	DESCRIPTION	OPERATION TEXTS △	OPERATION SYMBOLS ○	VEHICLE CONCERNED ENGINE TYPE: 20 Petrol 829 A 5	22 Petrol J6T A 500	25 Petrol Injection 25/659	25 Prestige 25/659	25 Petrol Turbo 25/662	25 Prestige Petrol Turbo 25/662	25 Diesel 25/660	25 Diesel Turbo 25/648	25 Limousine Diesel Turbo 25/648	20 Safari Petrol + Familiale 829 A 5	25 Safari Petrol Injection 25/659	25 Safari Diesel + Familiale 25/660	25 Safari Diesel Turbo 25/648	Ambulance 829A5 or 25/660		
MA 430/1	Tools		○	X	X	X	X	X	X	X	X	X	X	X	X	X	X		
MA 430.00/1	Specification and particular features of the suspension		○	X	X	X	X	X	X	X	X	X	X	X	X	X	X		
MA 433.1/1	Removal/refitting of a front suspension cylinder	△		X	X	X	X	X	X	X	X	X	X	X	X	X	X		
MA 433.1/2	Removal/refitting of a rear suspension cylinder	△		X	X	X	X	X	X	X	X	X	X	X	X	X	X		
MA 435.1/1	Removal/refitting of an anti-roll bar	△		X	X	X	X	X	X	X	X	X	X	X	X	X	X		
MA 435.1/2	Removal/refitting of a rear anti-roll bar	△		X	X	X	X	X	X	X	X	X	X	X	X	X	X		
MA 471.00/1	Special features of the wheels and tyres	△		X	X	X	X	X	X	X	X	X	X	X	X	X	X		

3505 T

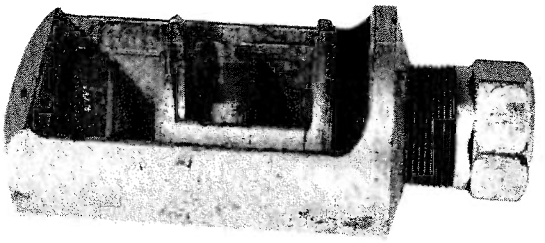

79.250

6301 T

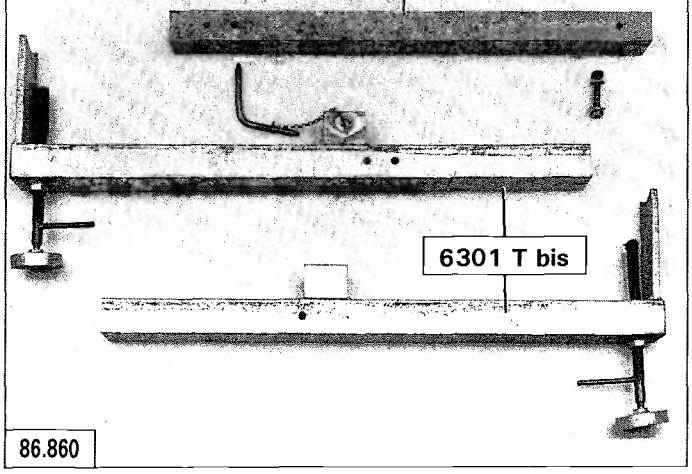

6301 T bis

86.860

6302 T

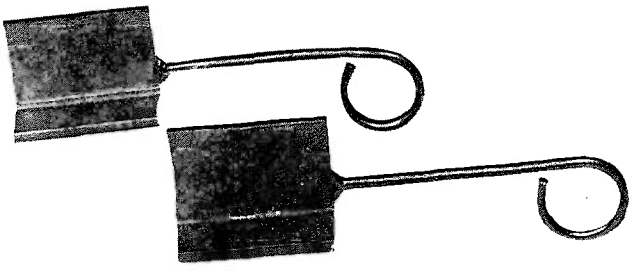

13.811

OUT 20 6320 T

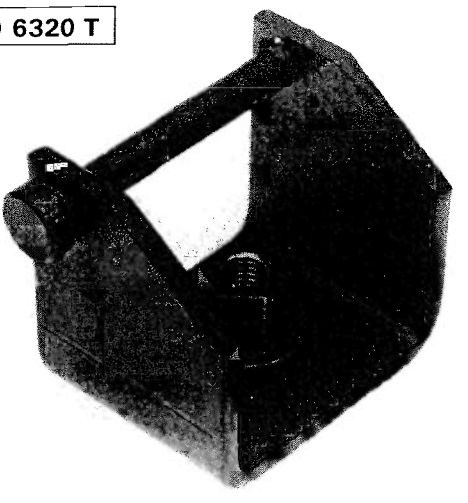

85.333

6401 T

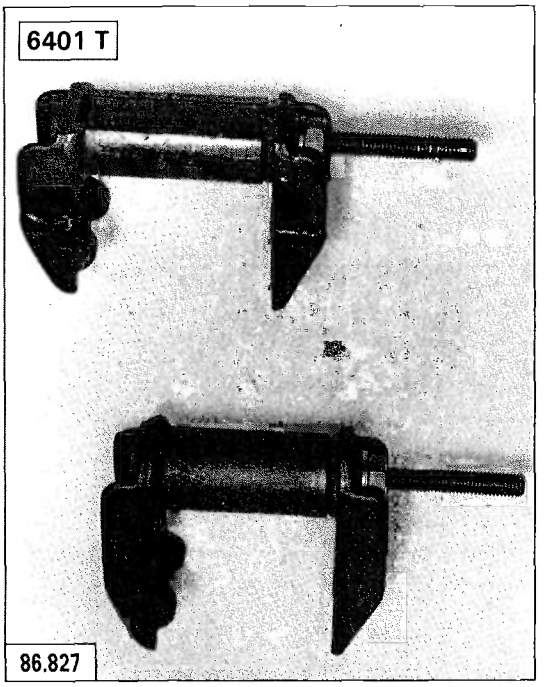

86.827

OUT 50 6602 T

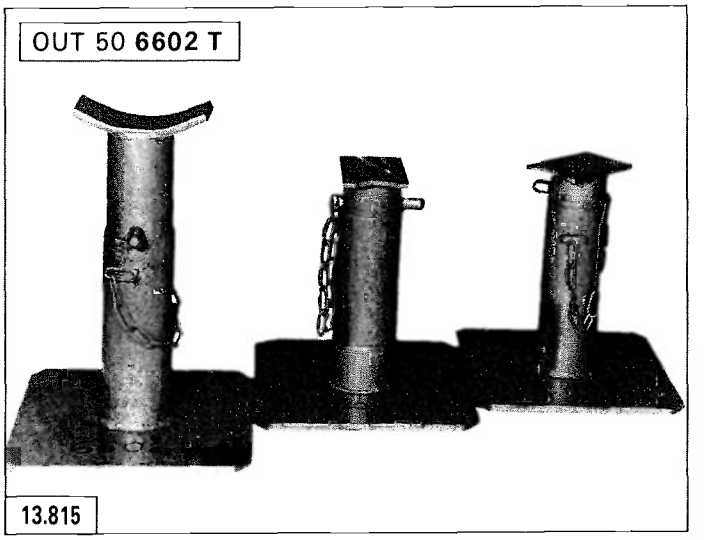

13.815

136 FACOM

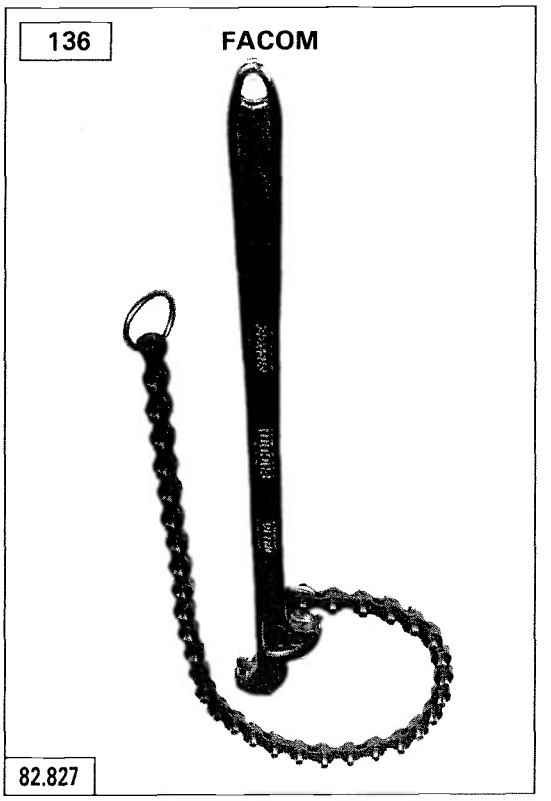

82.827

MR 630-58/31a

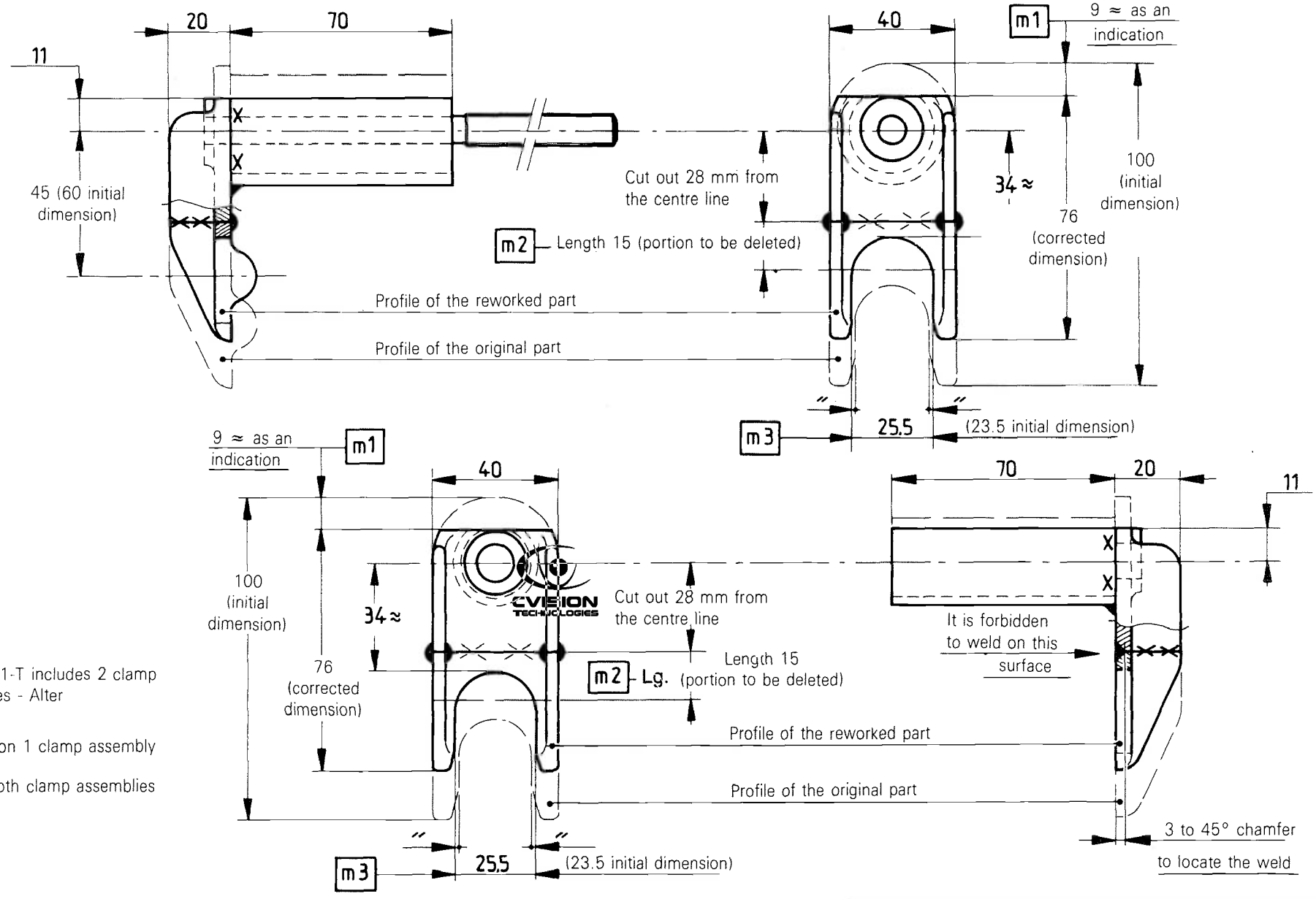

- Tool 6401-T includes 2 clamp assemblies - Alter

m1, m2 on 1 clamp assembly

m3 on both clamp assemblies

8531-8532

*

MR 630-51 / 95

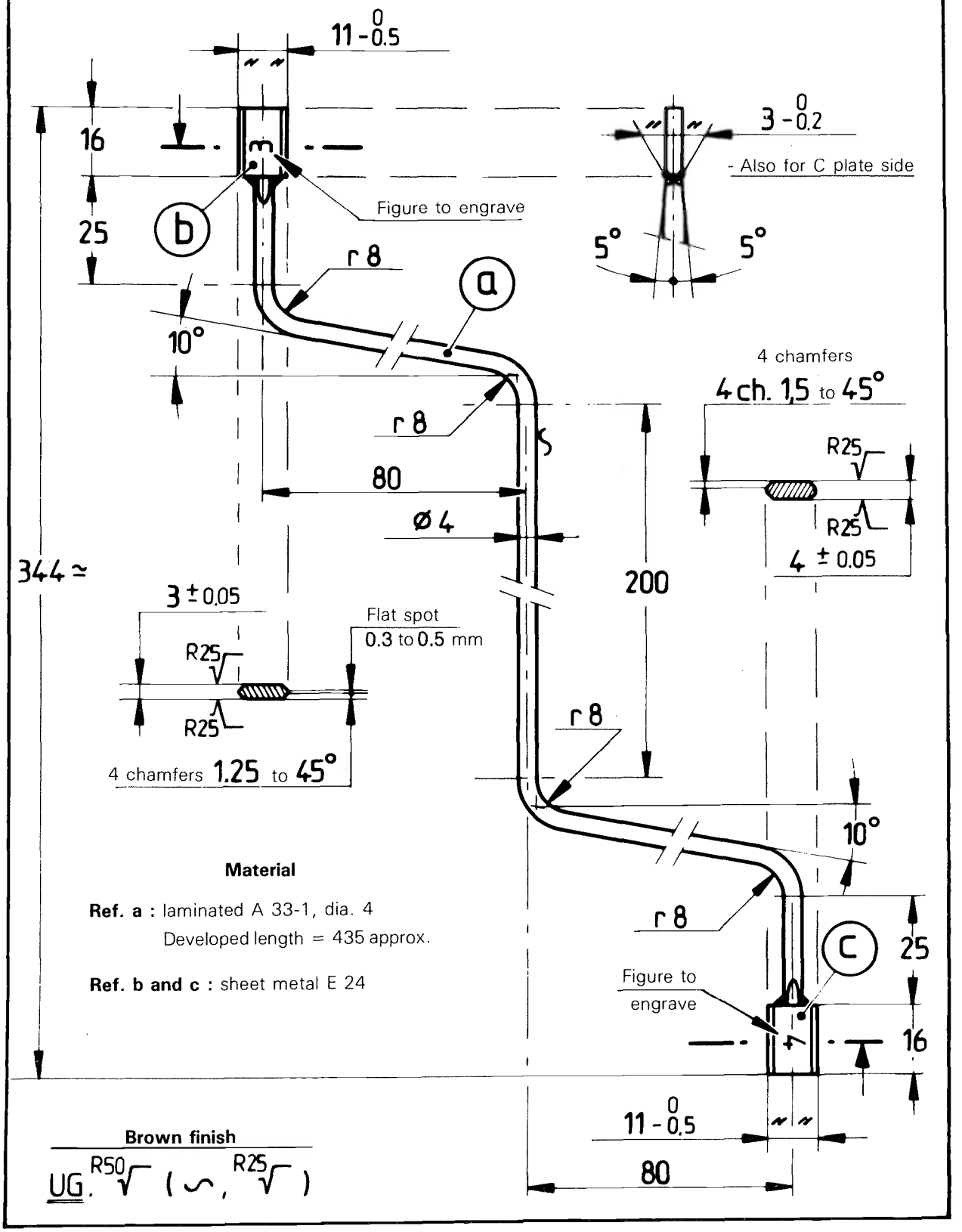

Material

Ref. a : laminated A 33-1, dia. 4
Developed length = 435 approx.

Ref. b and c : sheet metal E 24

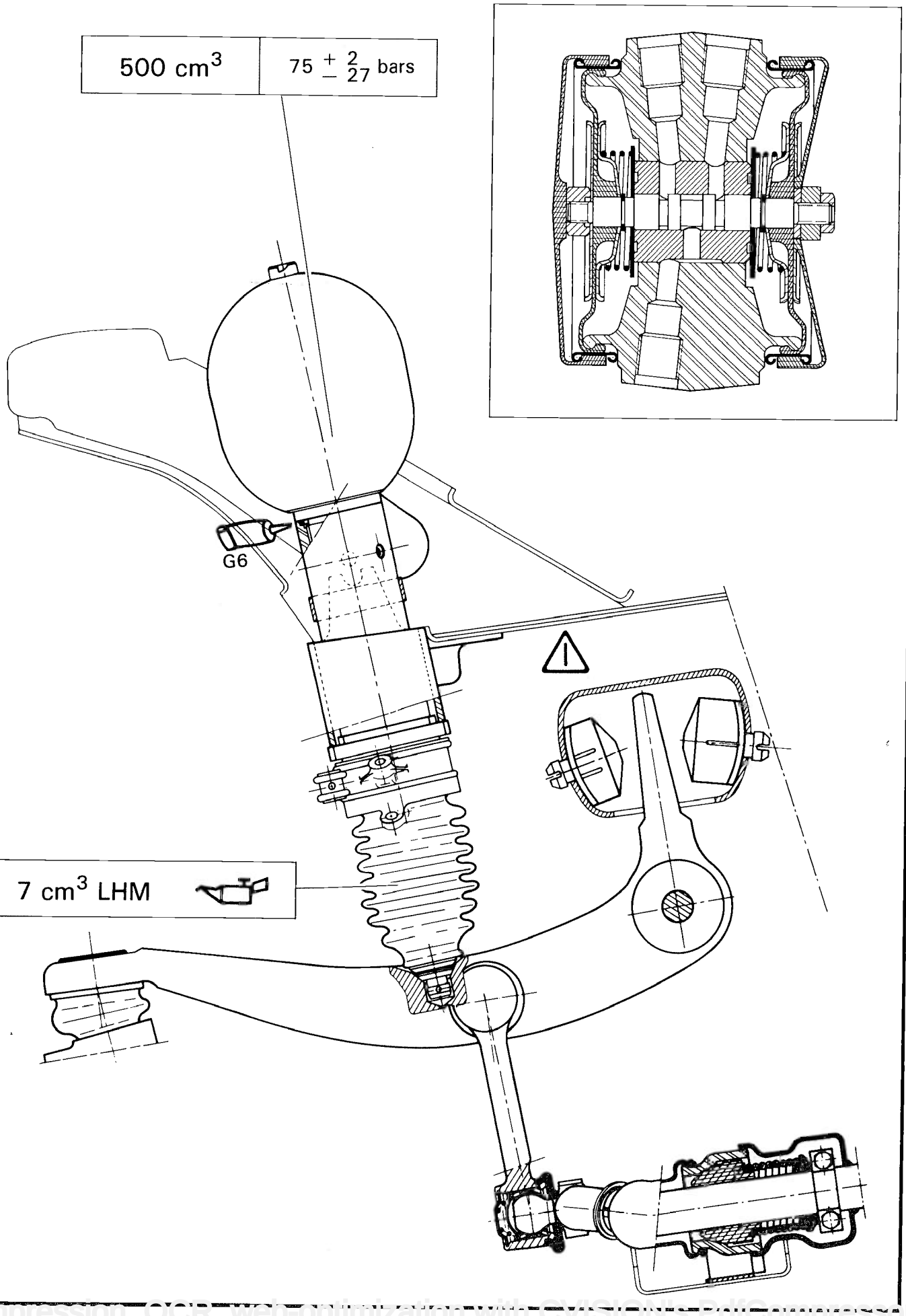

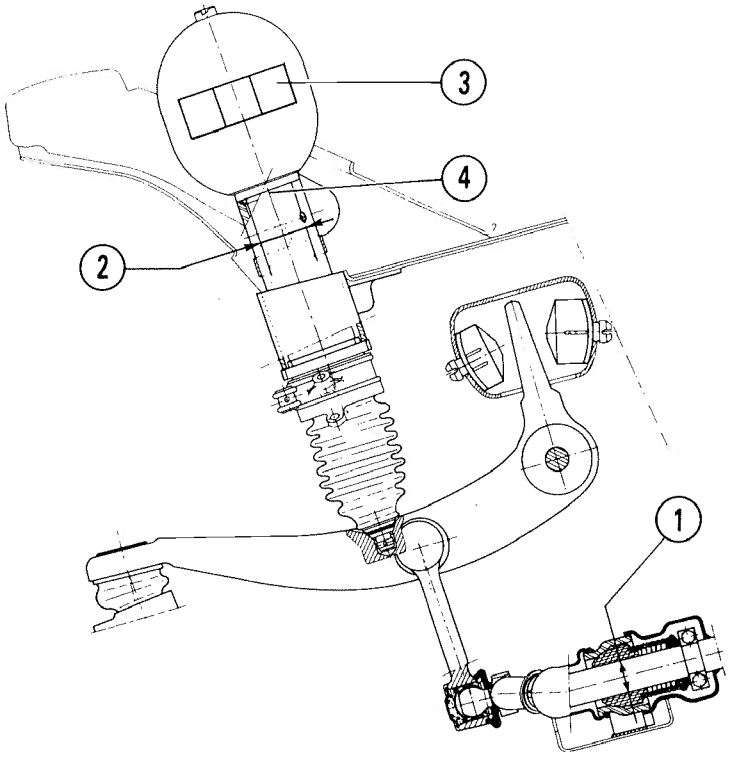

		⌀ ①	⌀ ②	③	④
	829-A5 J6T A 500	23 mm	35 mm	V.V.Bl	⌀ 1,9
	829-A5	24 mm → 7/85 25 mm 7/85 →			
	M25/659	24 mm	37 mm	V.V.Bl	⌀ 1,9
		24 mm → 7/85 25 mm 7/85 →			
	M25/660	24 mm	37 mm	V.V.Bl	⌀ 1,9
		24 mm → 7/85 25 mm 7/85 →			
	M25/648 M25/669	24 mm	37 mm	V.V.Bl.	⌀ 1,9
		24 mm → 7/85 25 mm 7/85 →			
	M25/662 M25/666	25 mm	37 mm	V.V.Br	⌀ 1,65

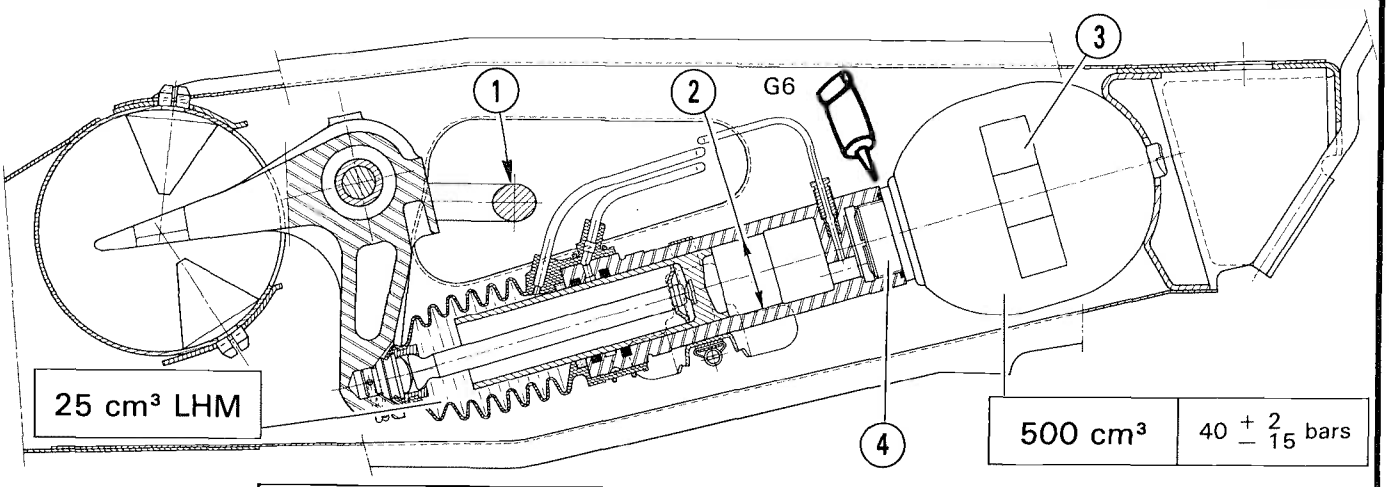

		⌀ ①	⌀ ②	③	④
	829.A5 M25/660 M25/659 M25/648 M25/669 J6T.A 500	17,5 mm	35 mm	Bl.Bl.Br	⌀ 1,25
	M25/662 M25/666	19,5 mm	35 mm	Bl.Bl.Br	⌀ 1,25

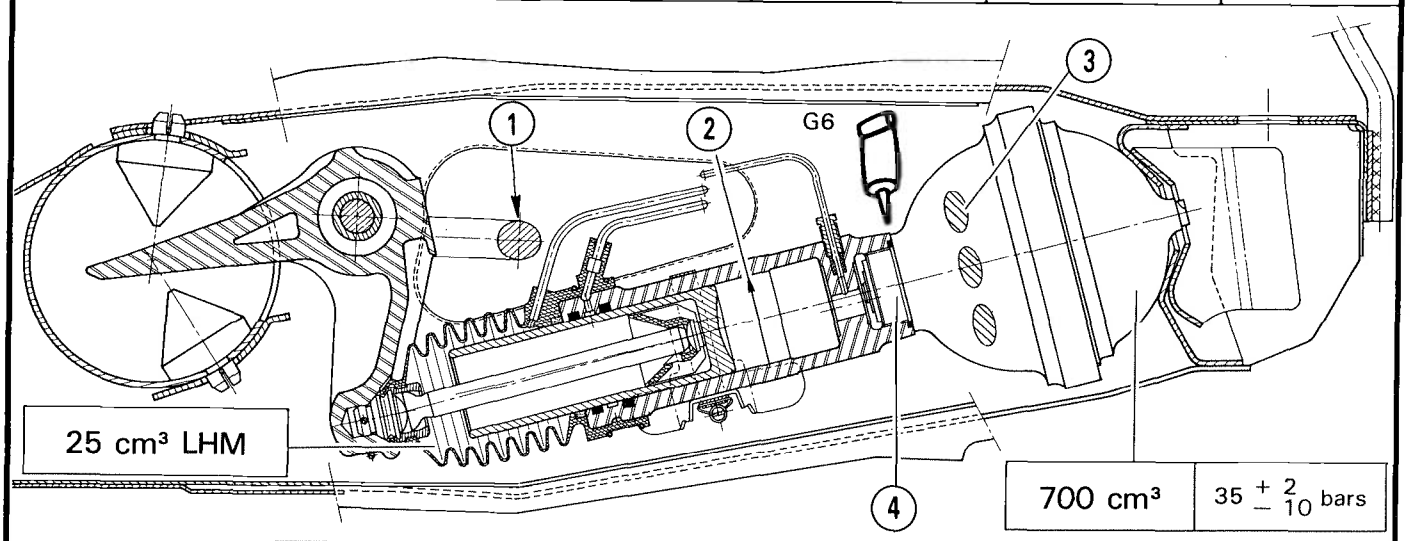

		⌀ ①	⌀ ②	③	④
	829.A5 M25/659	17,5 mm → 7/85	42 mm	J.J.J.	⌀ 1,5
	M25/648 M25/669 M25/660	19,5 mm 7/85 →			

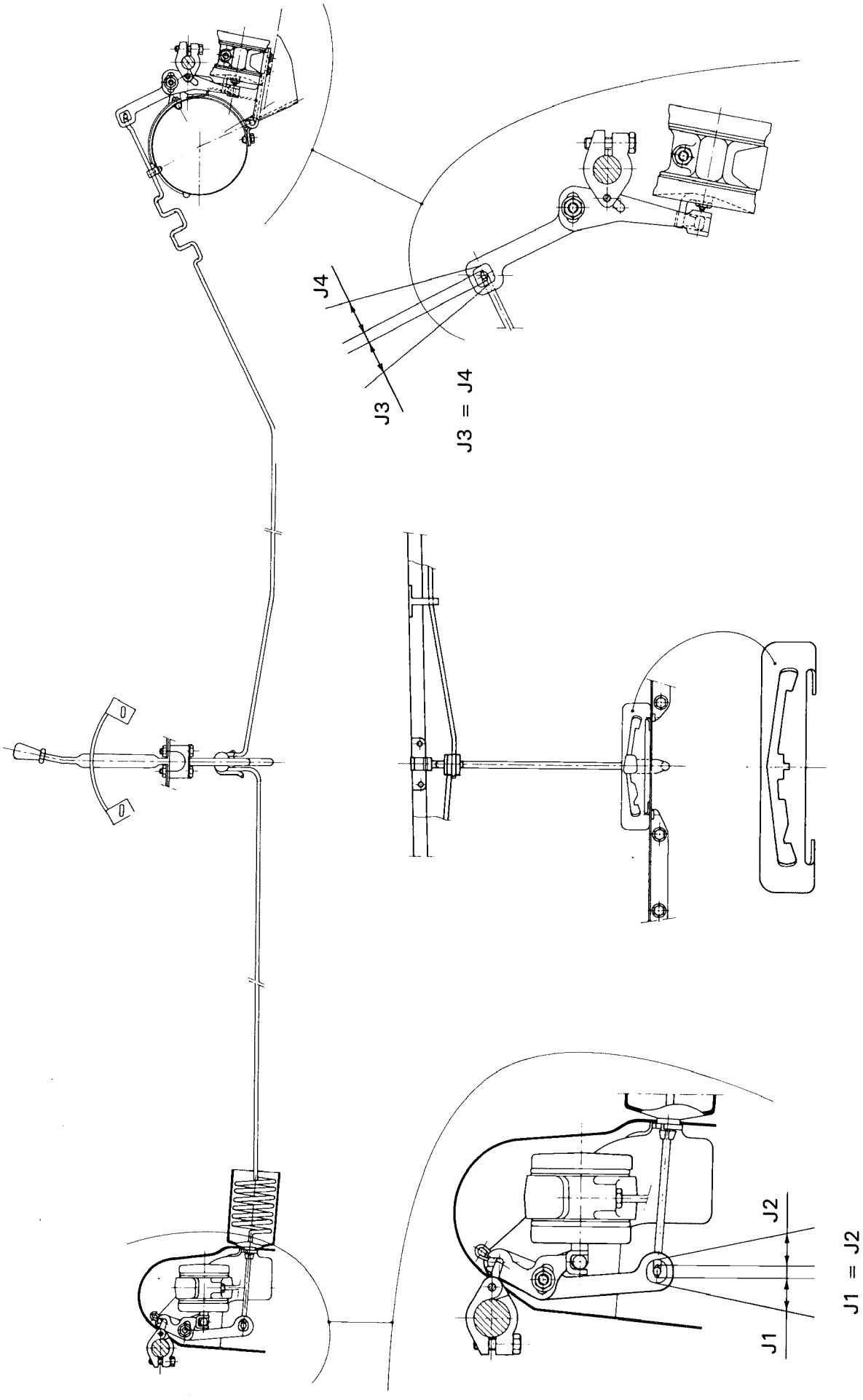

→ 7/85

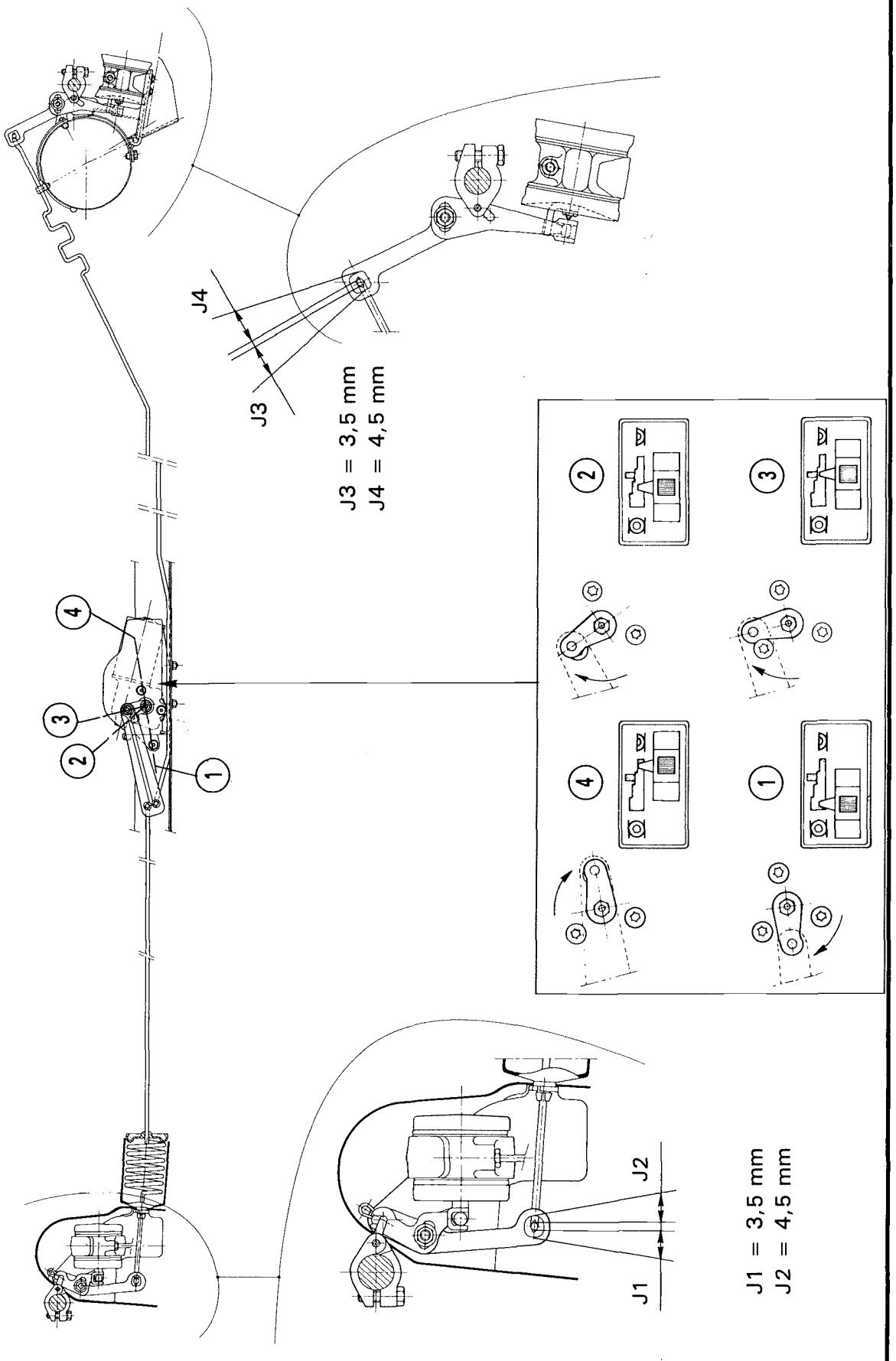

7/85 →

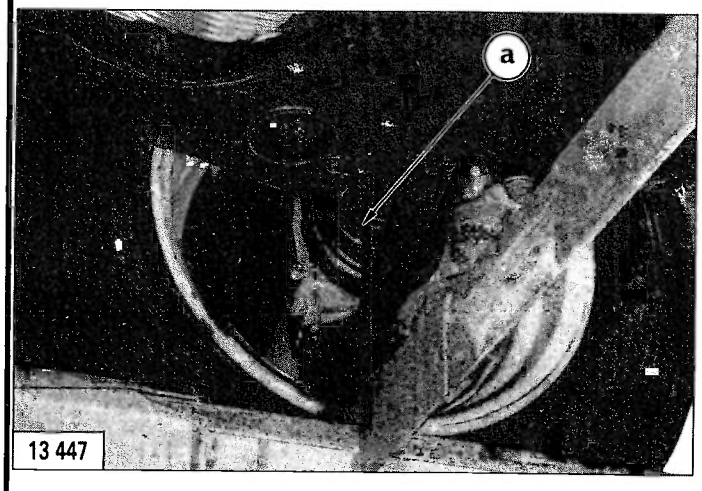

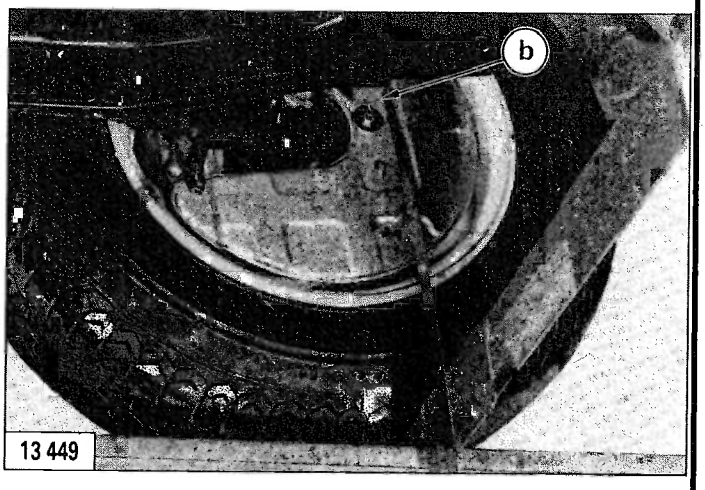

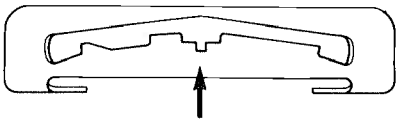

→ 7/85

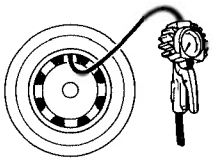

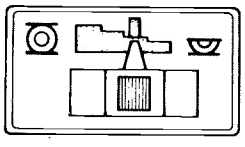

7/85 →

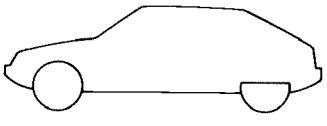

a	b
165 ± 8 mm	215 ± 8 mm

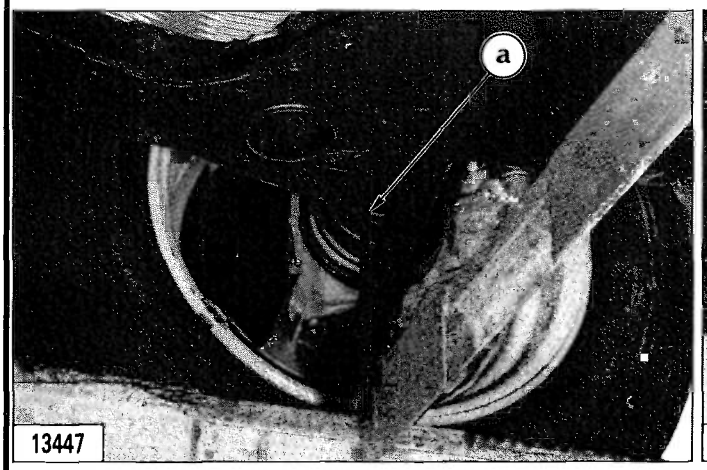

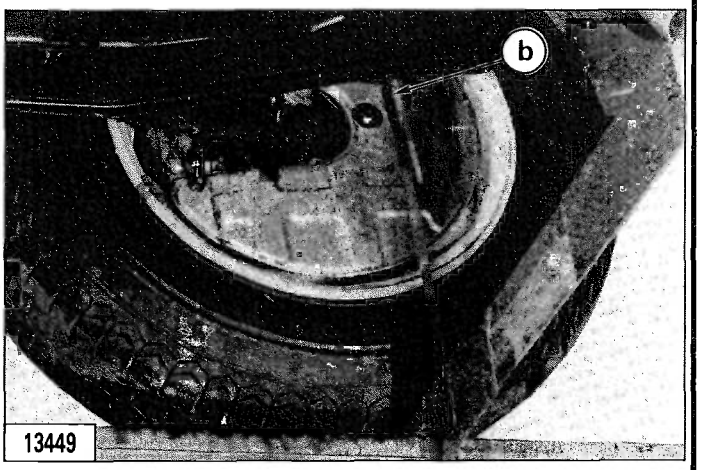

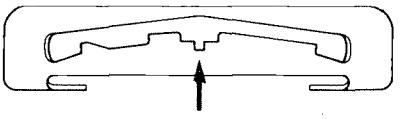

→ 7/85

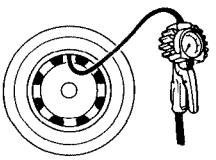

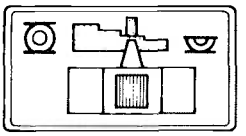

7/85 →

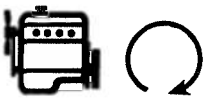

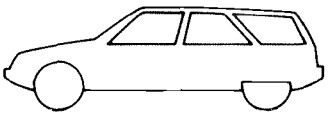

a	b
165 ± 8 mm	210 ± 8 mm

TOOL TO BE USED

Chain wrench

REMOVING AND REFITTING A FRONT HYDROPNEUMATIC SUSPENSION SPHERE AND CYLINDER

REMOVAL

Unlock the pneumatic unit by 1/4 turn **max.** with a chain wrench.

Chock the front of the vehicle.

Remove the road wheel,

Depressurise the hydraulic systems.
(See ⑥ MA 390.000/1).

Take off suspension cylinder hinge retaining pin (3), **Fig. I.**

Push back the piston rod so as to drive out the fluid contained in the cylinder.

Remove the suspension sphere.

Uncouple, Fig. I and Fig. II

- pipes (1) and (2),
- pipe (5).

Remove:

- clip (6), **Fig. II,**
- the suspension cylinder.

REFITTING

Check that the suspension cylinder dust-guard contains LHM fluid. If this is not the case, fill with 7 cc. of fluid.

Fit the suspension cylinder and thrust race (4).

Recouple feed pipe (5) *(equipped with a NEW sleeve seal,* **Fig. II).**

Reinstall:

- clip (6), **Fig. II,**
- the hydropneumatic sphere whose *contact face* ***«a»*** *has been slightly lubricated, fitted with a NEW seal.*
- tighten by hand.

Couple up, Fig. I :

- overflow return pipe (1),
- venting pipe (2).

Insert pin (3), **Fig. I.**

Start the engine.

Check the circuit for leaks.

Replace the road wheel.

Lower the vehicle to the ground.

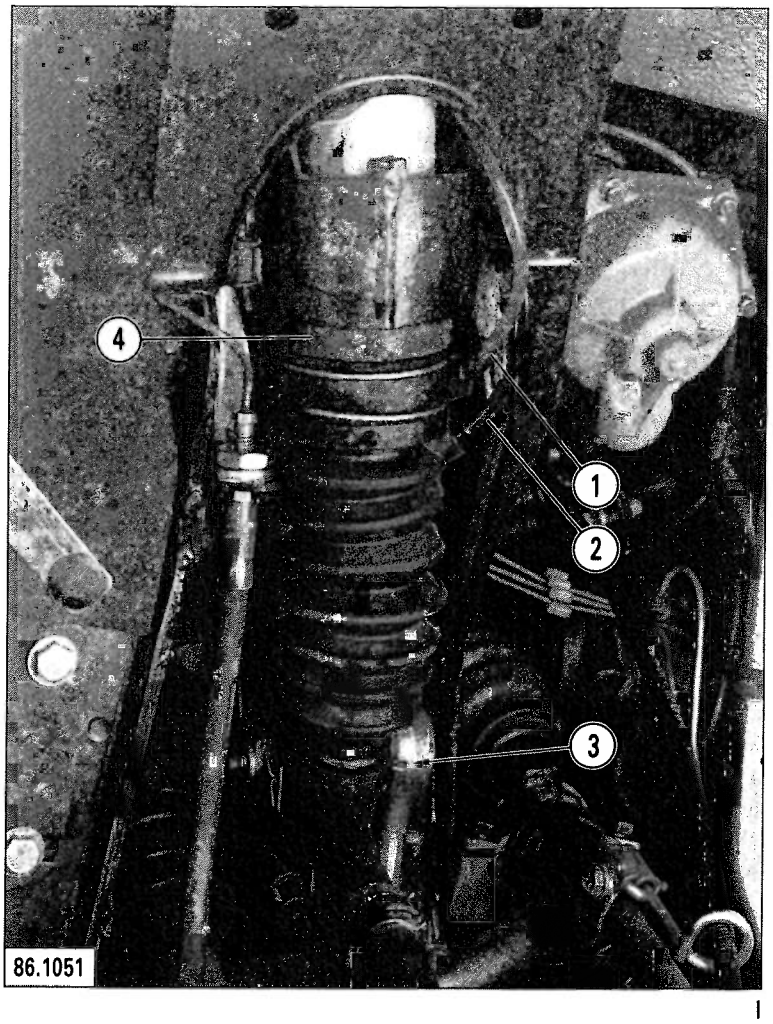

I

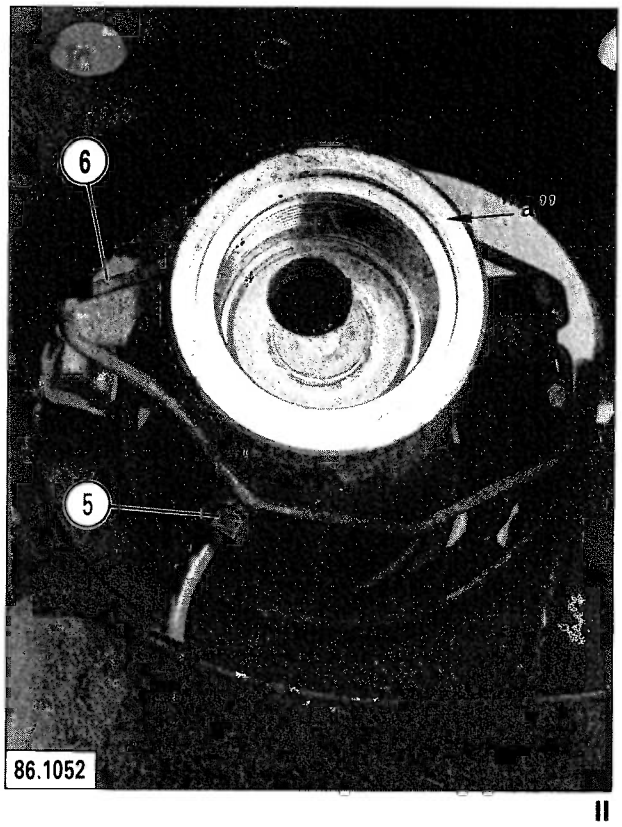

II

TOOL TO BE USED

Chain wrench

REMOVING AND REFITTING A REAR HYDROPNEUMATIC SUSPENSION SPHERE AND CYLINDER

REMOVAL

Jack up the rear of the vehicle.

Remove the road wheel.

Depressurise the hydraulic circuits.
(See ⑥ MA 390.000/1).

Extract the suspension cylinder hinge retaining pin (1), **Fig. I.**

Disconnect pipes (2), (3) and (4), **Fig. II.**

Remove clamp (5), **Fig. II.**

Disengage the pneumatic suspension unit/cylinder assembly.

Grip the suspension cylinder in a vice fitted with soft jaws, and introduce a 8 mm dia. rod in orifice **A** to prevent the cylinder from rotating.
Tighten the vice MODERATELY.

Slacken the pneumatic unit using the chain wrench.

REFITTING

Position the suspension sphere with the contact surface slightly greased and equipped with a *NEW seal;* hand tighten.

> Ascertain that the suspension cylinder dust-guard contains LHM fluid. If not, fill with 25 cc of fluid.

Put the suspension cylinder/pneumatic unit **into place.**

Reconnect, Fig. II :

- feed pipe (4) having a *NEW sleeve-seal fitted,*
- overflow return pipe (3),
- venting pipe (2).

Install, Fig. I and II :

- holding pin (1),
- clamp (5) without tightening.

Run the engine.

Set the height adjustment control switch to the «high» position.

Make sure that the hydropneumatic sphere makes contact with the axle unit. Tighten clamp (5), **Fig. II.**

Test the hydraulic system for leaks.

Refit the wheel.

Lower the vehicle to the ground.

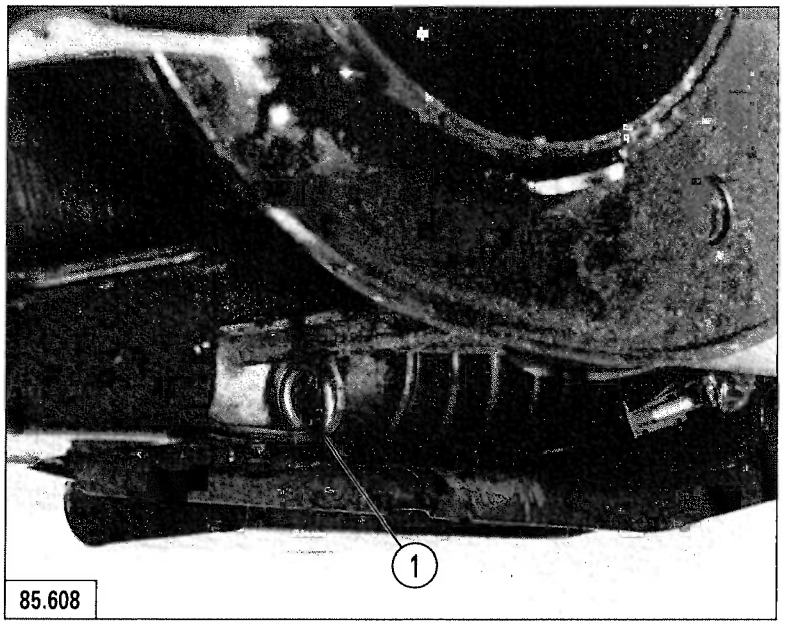

I

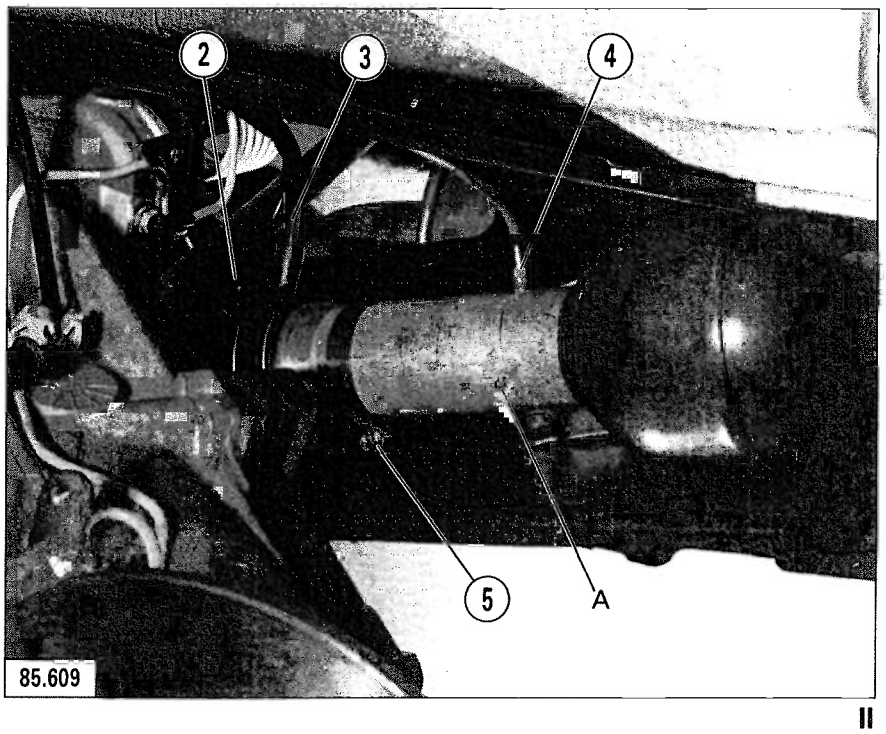

II

TOOLS TO BE USED

3505-T.	Ball-joint extractor
6301-T.	Equipment for positioning the half front axles
6301.T bis.	Front axle locking tool
6320-T.	Anti-roll bar link rod extractor
6401-T.	Set of 2 clamps for fitting the anti-roll bar bearing
6602-T.	Set of 3 stands

Modification to clamps **6401 T**
See drawing MR 630-58/31a
⑨ 430/1 page 3

REMOVING AND REFITTING AN ANTI-ROLL BAR

REMOVAL

Raise and support the vehicle horizontally on stands **6602-T.**

Release the pressure in the hydraulic circuits. Set the height control switch to the "normal driving position".

Remove:

- the road wheels,
- the wheel arch rubber seals,
- both brake control valve securing screws,
- exhaust shields (2), **Fig. I,**
- cover (3), base plate (5) from the height corrector protection casing and the casing (4) itself, **Fig. I.**

Uncouple and free automatic height control clamp (1), **Fig. I.**

Remove automatic height control rod (6), **Fig. II.**

Disconnect the swivel track rods.

Disengage rubber gaiters (7) and plastic trim cover (8), **Fig. III.**

Loosen maintaining clamp (9), **Fig. IV.**

Take off the screws (10) fixing the bearings to the axle unit, **Fig. IV.**

LH side

Remove:

- suspension cylinder retaining pin (12), **Fig. V,**
- upper wheelarm link-rod nut (11), **Fig. V.**

Uncouple the link-rod (13) from the anti-roll bar, using tool **6320-T, Fig. VI.**

RH side

Withdraw the anti-roll bar link-rod nut (14), **Fig. VIII.**

Disconnect link-rod (15) from the anti-roll bar with tool **3505-T, Fig. VIII.**

(Pull out the anti-roll bar to allow passage for tool 3505-T).

Strip down the anti-roll bar, on the vehicle.

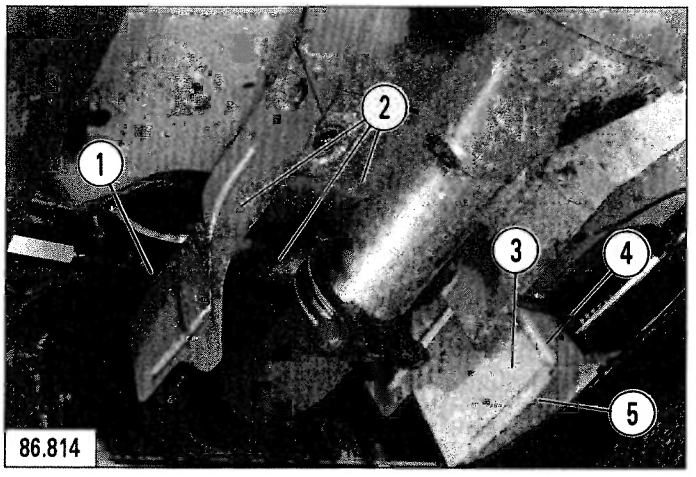

I

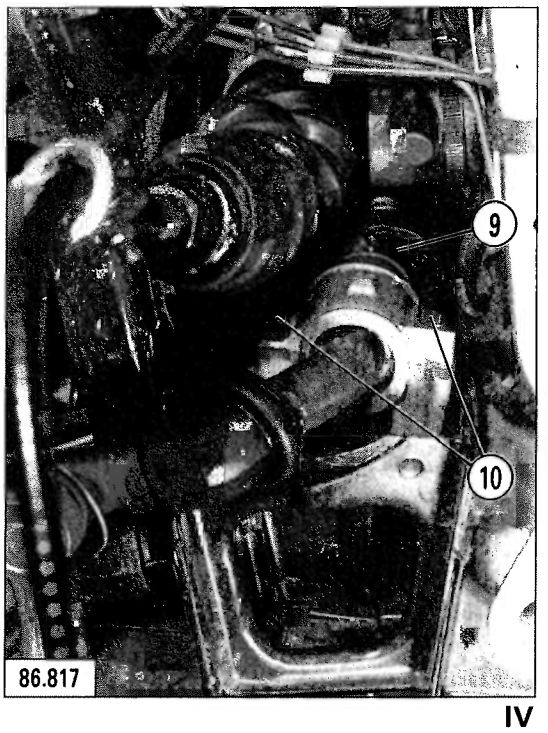

IV

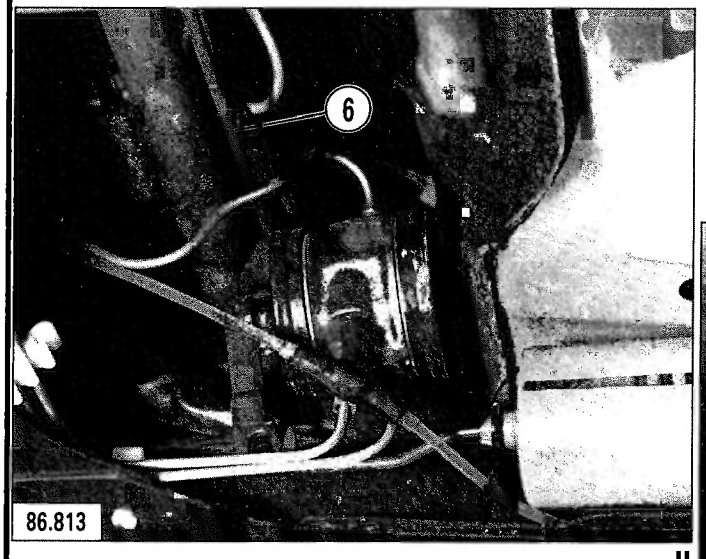

II

V

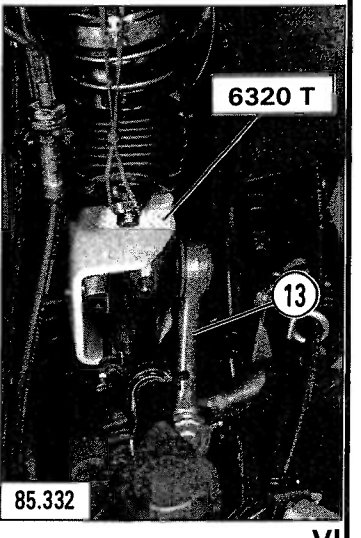

VI

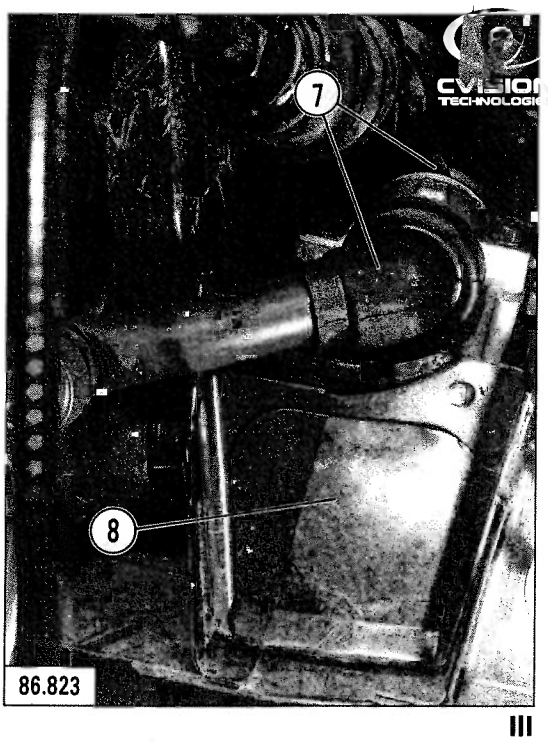

III

VII

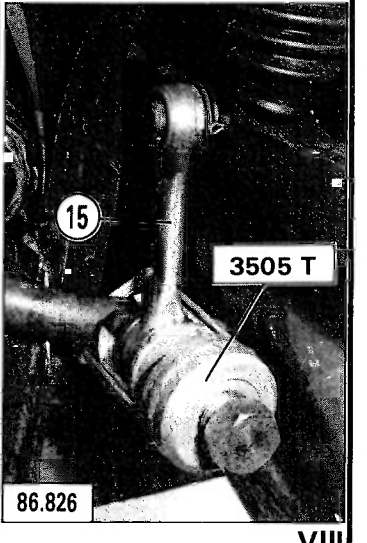

VIII

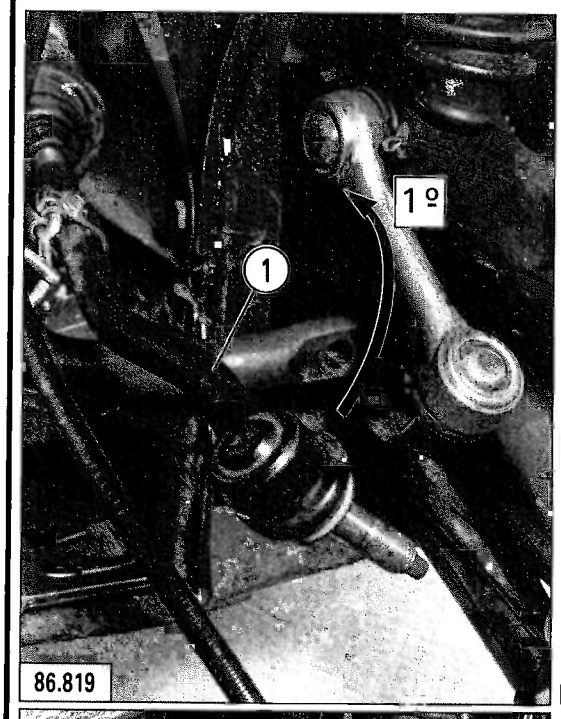

86.819

I

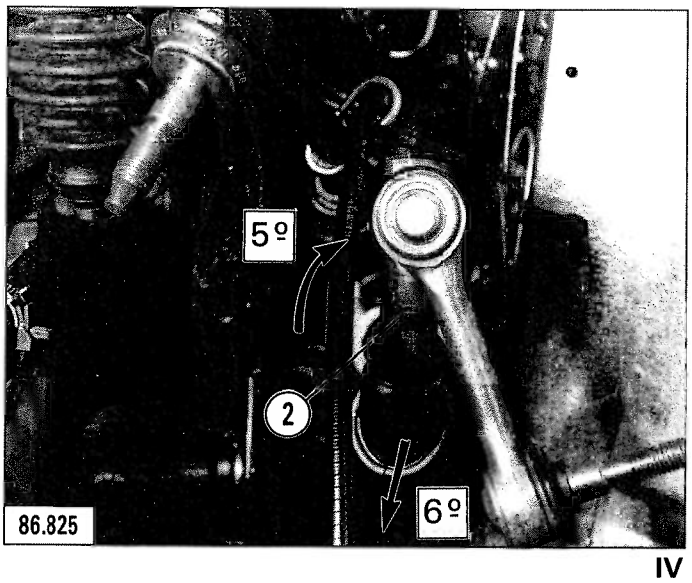

86.825

IV

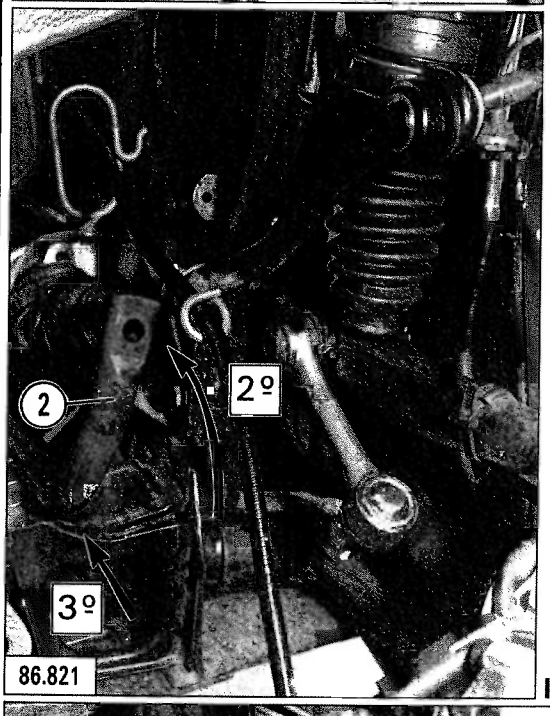

86.821

II

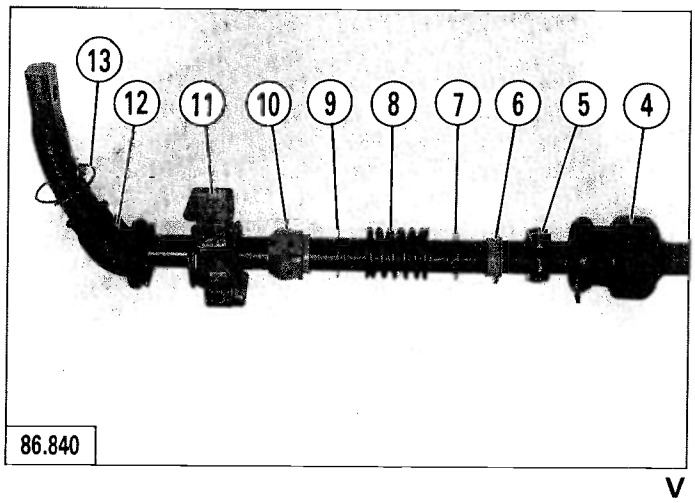

86.840

V

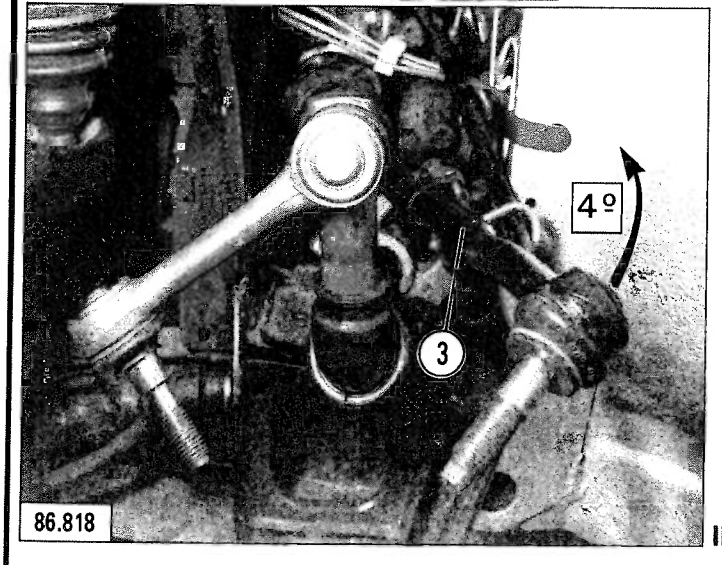

86.818

III

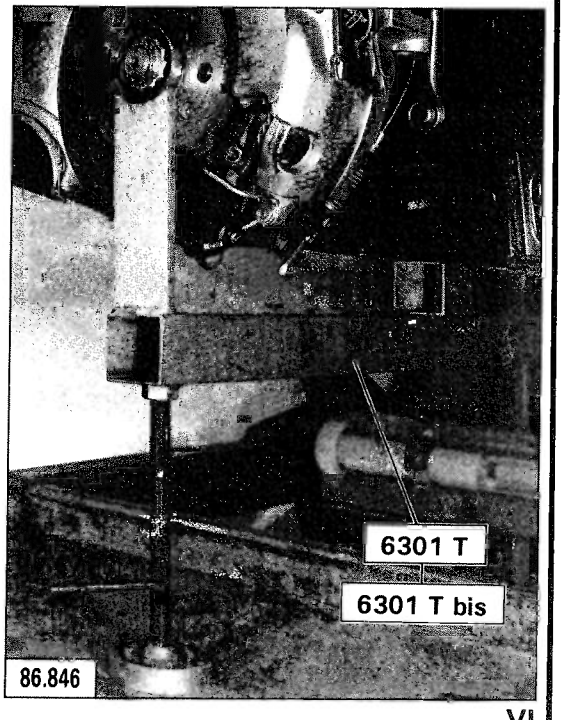

86.846

VI

Extracting the anti-roll bar

RH side

Turn the steering through full lock to the right.

1. Lift up steering track rod (1), **(Fig. I).**

2. Rotate by a quarter turn toward the upper section of the anti-roll bar (2), **(Fig. II).**

3. Push the anti-roll bar to the left, **(Fig. II).**

LH side

Turn the steering through full lock to the left.

4. Lift up steering track rod (3), **(Fig. III).**

5. Slightly rotate anti-roll bar (2), **(Fig. IV).**

6. **Free the anti-roll bar from the LH side of the vehicle, (Fig. IV).**

REFITTING

Reassemble the anti-roll bar on the LH side.

Add the bearing items, **(Fig. V):**

- gaiter (4),
- retaining clamp (5),
- the two half thrust cups (6),
- steal thrust washer (7),
- spring (8),
- steel thrust washer (9),
- the two half ball-joints (10),
- bearing (11),
- ring (13),
- sheath (12).

Coat all the parts with *TOTAL MULTIS grease.*

Put the anti-roll bar into place **towards the LH side of the vehicle.**
(Reverse the fitting procedure, **Fig. IV, III, II, I).**

Reassemble the anti-roll bar on the RH side, in the order indicated below.

Place the half axles in line, (in the normal driving position) using tools **6301 T** and **6301 T bis (Fig. VI).**

Wipe the ball-joint cones, do not use solvent.

Recouple

- the LH link rod with the upper wheel arm; hand tighten the nut *(new NYLSTOP one)*,
- the RH link rod with the anti-roll bar; hand tighten the nut *(new NYLSTOP one)*.

Refit bearing fixing screws (1) and nuts (2), **Fig. I** and **II.** *Check that plate (3) has been fitted the right way.*

Equip each bearing with the set of clamps **6401-T, Fig. III** and **IV,** placing the *modified tool to the LH side).* Compress springs (5) and (8) moderately. *(The aim of this operation is to hold both half ball-joints and thrust cups in position).*

Make sure that bearings (6) and (7) are in contact with the axle unit.

IMPORTANT : if one bearing does not touch the axle, proceed as follows:

Tighten the bearing which is touching the axle unit correctly. Insert shims beween the unit and the second bearing so as to **secure it without exerting any stress on the anti-roll bar,** *(one shim thickness only = 1 mm).*

Tighten, Fig. I, screws (1) fitted with *lugged contact washers,* to **2.7 mdaN.**

Tighten the nuts until springs (5) and (8) turns touch, by means of clamps **6401-T.**

Slacken the nuts of **each tool** by 1/2 turn, **Fig. III and IV.**

Centre the anti-roll bar in the axle unit, **Fig. V.** The LH and RH ends of the bar should be the same distance **«L»** from the subframe, **to within 2 mm.**

Tighten retaining clamping collar screws (4) and (9) to **1.3 mdaN, Fig. III and IV.**

Remove clamps **6401-T**

Fill dust cover (10) with TOTAL MULTIS grease, **Fig. VI.**

Return, Fig. VI:

- dust covers (10) and (13),
- ring (11),
- trim cover (12),

to their rest location.

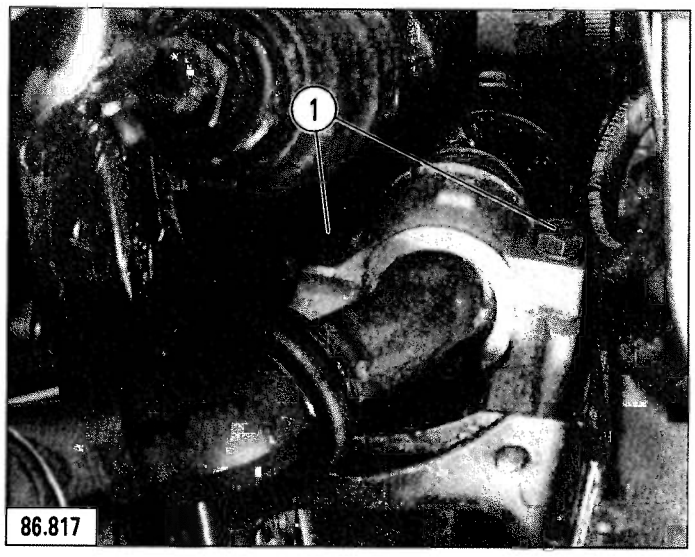

I

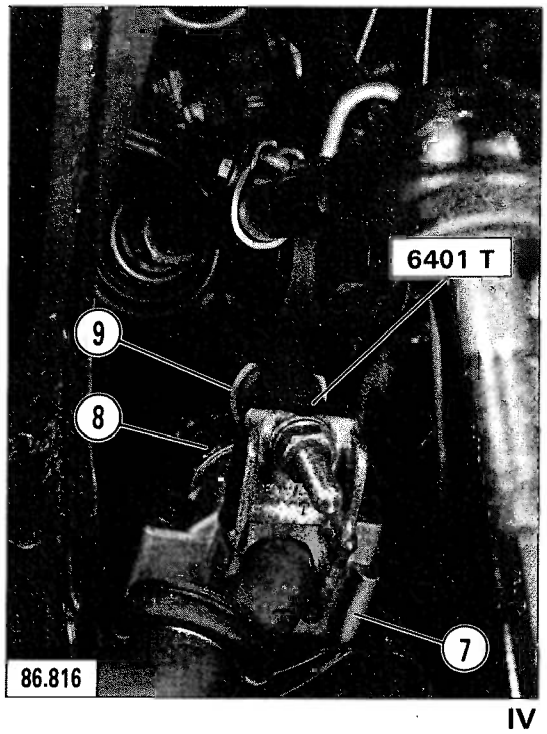

IV

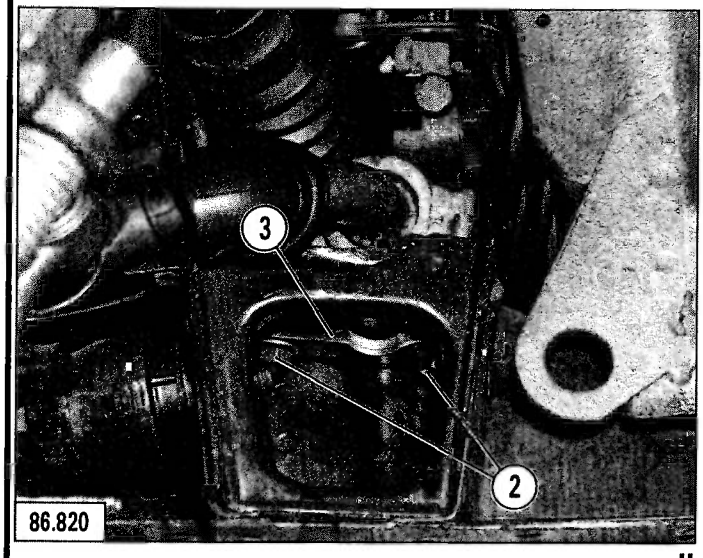

II

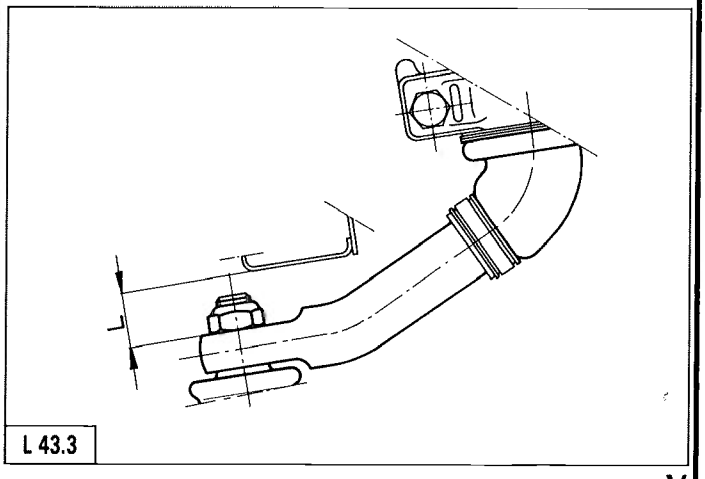

V

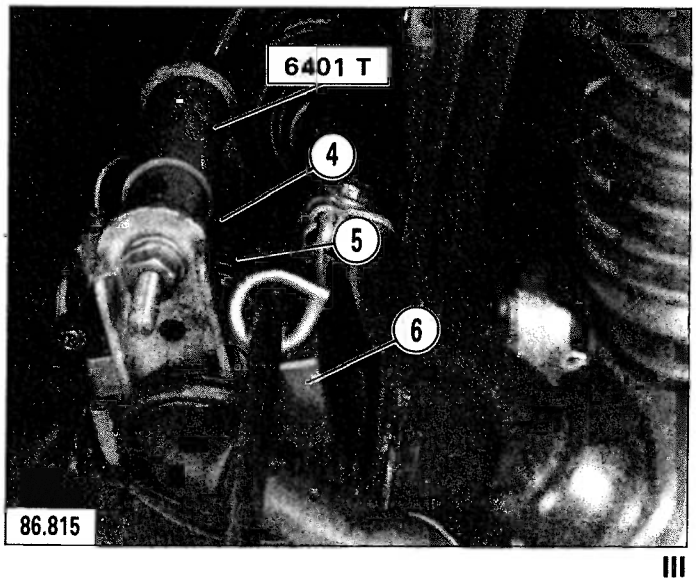

III

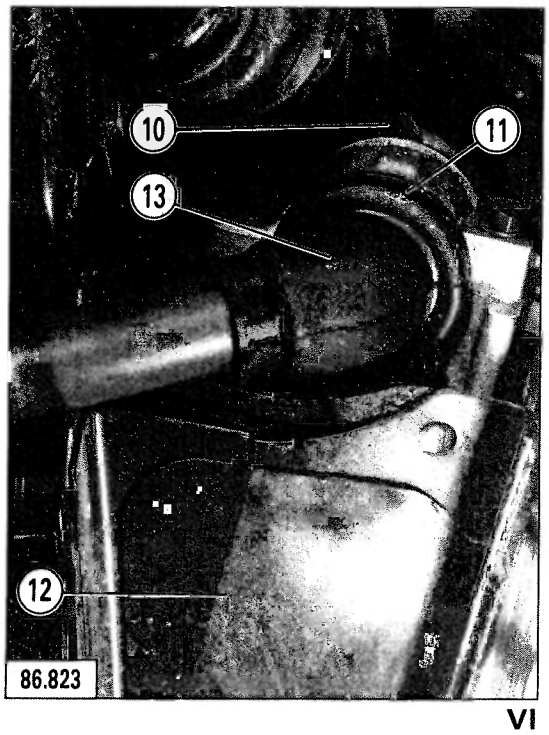

VI

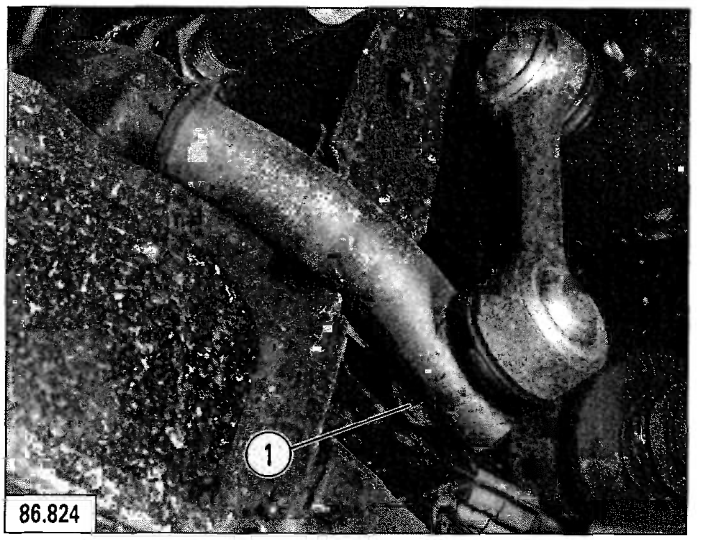

I

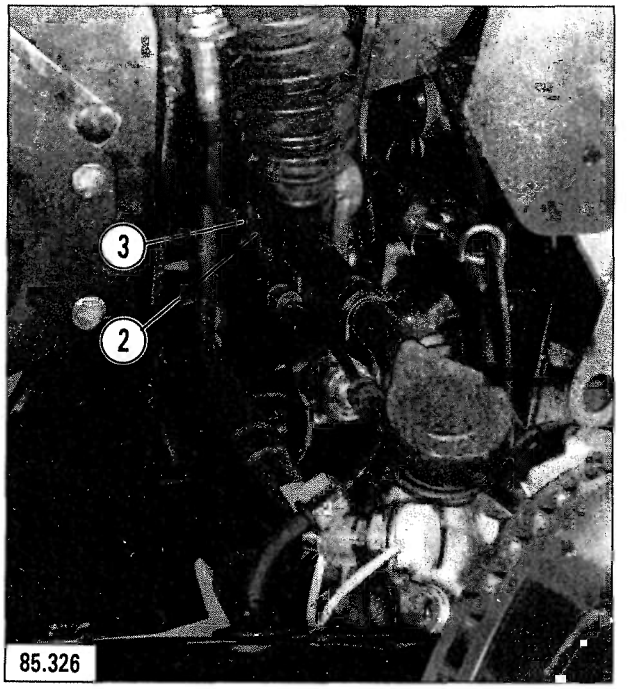

II

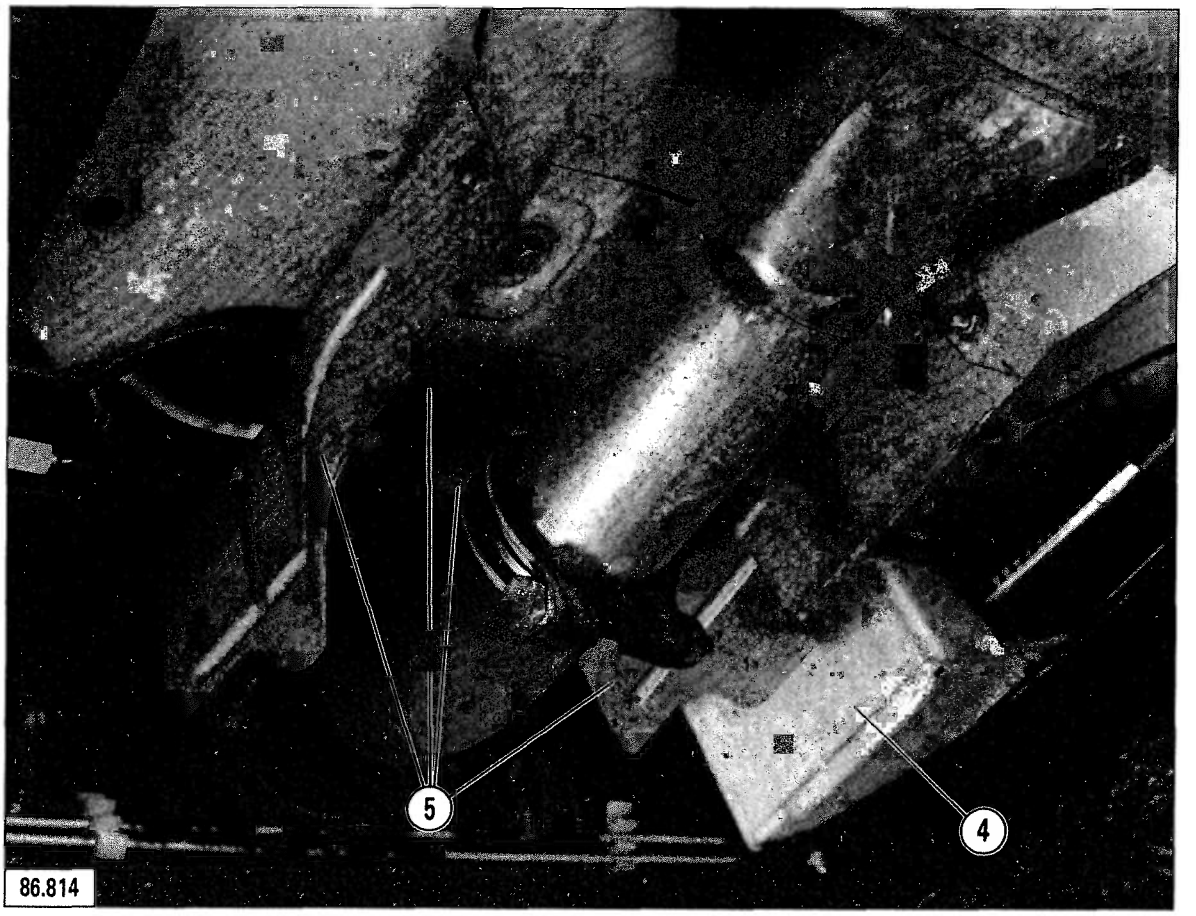

III

RH side:

Tighten the anti-roll bar link-rod nut (1) **Fig. I**, to **5 mdaN.**

LH side:

Tighten the anti-roll bar nut (3) **Fig. II** to **5 mdaN.**

Fit the suspension cylinder pivot and pin (2).

Recouple the steering track rod to the swivel, equipped with washer and nut *(new NYLSTOP one)*. Tighten to **10 mdaN.**

Refit the automatic height control to the height corrector.

Reconnect the automatic control clamp with the anti-roll bar.

> **Centre** the automatic height control sideways in the height corrector ball-joint to prevent the slide valve from being stressed.

Tighten the automatic height control clamp to **1.5 mdaN.**

Remove tools **6301-T** and **6301-T bis.**

Refit, Fig. III :

- the height corrector protection casing (4),
- the exhaust shield (5).

Attach the brake control valve. Tighten the screws to **1.8 mdaN,** equipped with contact washers.

Reposition:

- the wheelarch rubber seals,
- the wheels.

Lower the vehicle to the ground.

Check the front heights.

Adjust if necessary.
(See MA ⑨ 430.00/1).

TOOL TO BE USED

6302-T. Set of 2 chocks for positioning the rear axle.

REMOVING AND REFITTING A REAR ANTI-ROLL BAR

REMOVAL

Raise the rear of the vehicle **and support** it on stands.

Remove the road wheel.

Depressurize the hydraulic circuits.

Set the height control switch to the «normal running» position.

Uncouple the automatic height corrector clamp and move it clear.

Take off, Fig. I :

- screw (1) and its adjustment washers at **«b»**,
- screw (3), the two half-bearings (2) and shims **«a»**.

Free the anti-roll bar from the R.H. side of the vehicle.

REFITTING

Engage the anti-roll bar towards the R.H. side of the car.

Utilize tools **6302-T** to **place** the axle arms in line, (in the «normal driving» position), **Fig. II**.

Position, but do not tighten:

- both half-bearings (6),
- screw (5),
- screw (4).

Centre the anti-roll bar in the rear axle unit ; the clearance at **«a»** should be the same on either side (LH and RH), to within 1 mm.

Available shim thicknesses:
0.5 - 1 - 2 - 3 - 4 mm.

Tighten bolt (7) fitted with a *contact washer*, **Fig. IV,** to **6 mdaN.**

If necessary, **place shims** at **«b»** with a 0.3 mm clearance max.

Tighten screw (8) to **10 mdaN.**

Reconnect the automatic height control with the anti-roll bar.

> **Centre** automatic control (9) sideways in the height corrector ball-joint, **Fig. V,** to avoid the slide valve being stressed.

Tighten the automatic height control clamp screw to **1.5 mdaN.**

Remove tools **6302-T.**

Lower the vehicle to the ground; check the front heights.

Readjust if required. (Refer to ⑨ MA 430.00/1).

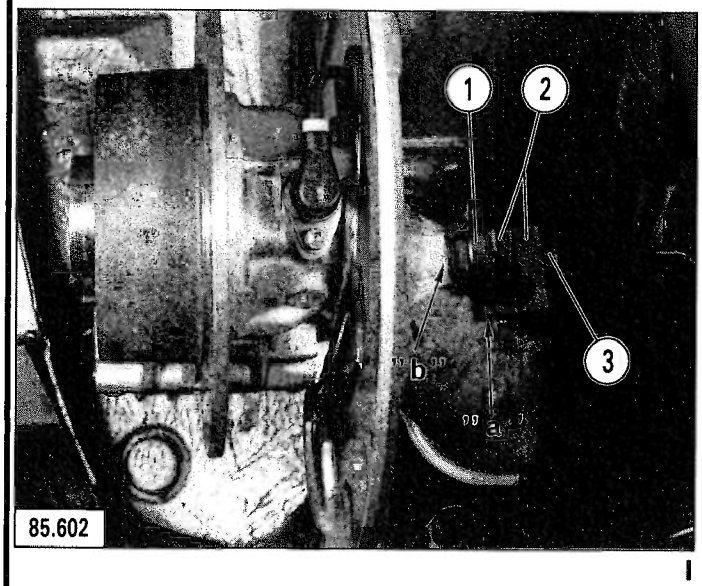

I

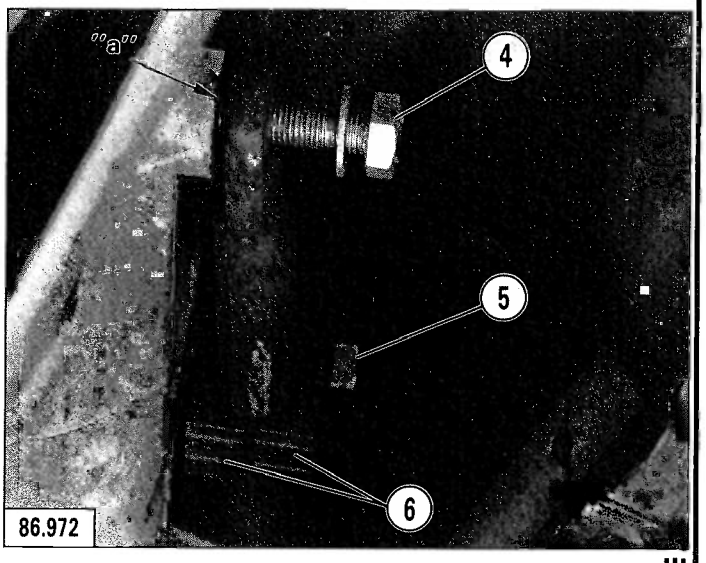

III

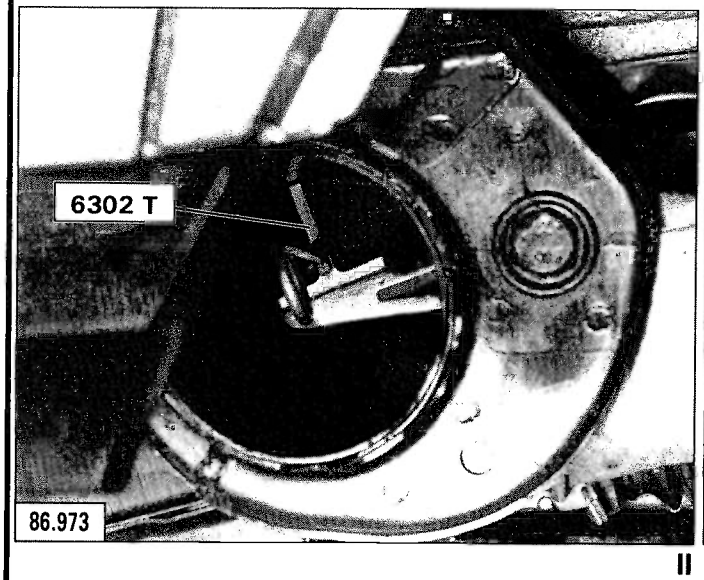

II

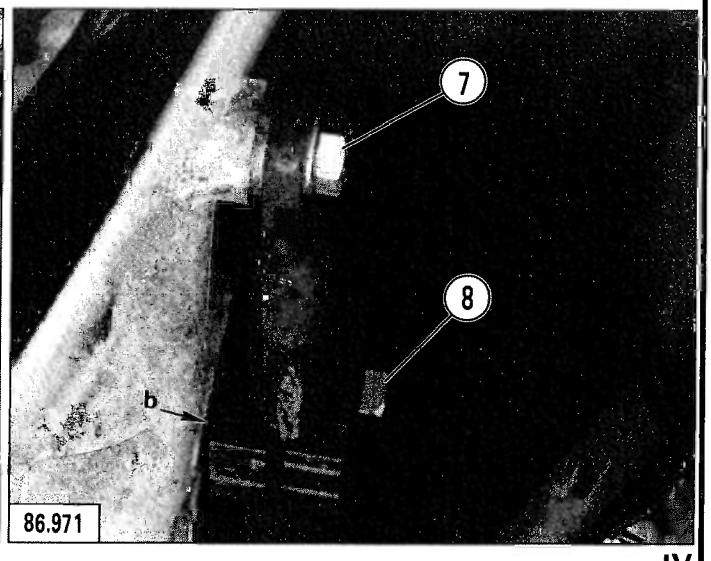

IV

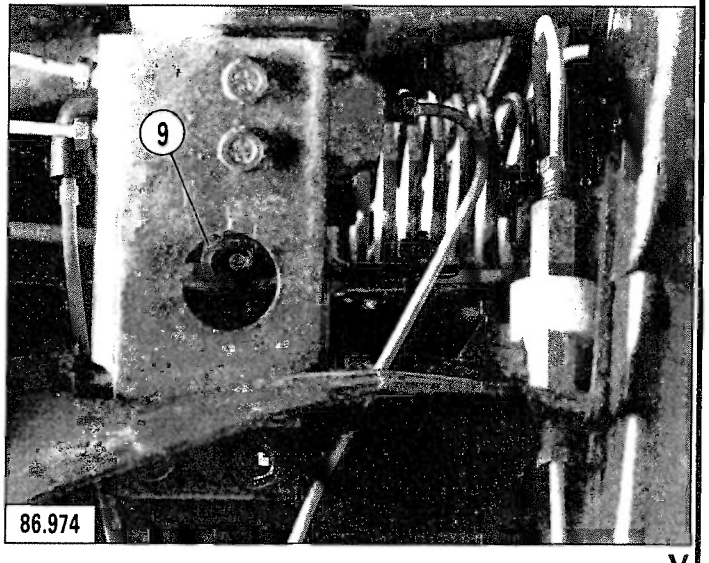

V

		①	②	③	④	⑤	⑥	⑦
		XVS 175 HR 14	XVS 185 HR 14	XVS 185 HR 14	390 TRX 190/65 HR	390 TRX 190/65 HR	XZX 175 SR 14	XZX 185 SR 14
9 mdaN		5 1/2 J14	5 1/2 J14		150 TR 390		5 1/2 J14	5 1/2 J14
9 mdaN				6 J14		150 TR 390		

		BAR		AM.84		BAR	
CX20	A	2	②		A	2	③
CX 20 TRE	B	2,1	①		B	2,1	③
	C	2,6	①	130 km/h maxi	C	2,6	③
CX 25 Pallas IE	A	2	②		A	2,2	⑤
	B	2,1	②		B	1,4	⑤
	C	2,6	②	130 km/h maxi	C	2,6	①
CX 25 GTI	A	2,2	⑤				
	B	1,4	⑤				
	C	2,6	①	130 km/h maxi			
CX 25 Prestige	A	2,2	②		A	2,2	⑤
	B	2,2	②		B	1,4	⑤
	C	2,6	②	130 km/h maxi	C	2,6	①
CX 25 D CX 25 D Pallas	A	2,2	⑦		A	2,2	③
	B	2,1	⑥		B	2,1	③
	C	2,6	⑥	130 km/h maxi	C	2,6	③
CX 25 RD	A	2,4	④		A	2,4	⑤
	B	2	④		B	2	⑤
	C	2,6	①	130 km/h maxi	C	2,6	①
CX25 TRD	A	2,4	⑤				
	B	2	⑤				
	C	2,6	①	130 km/h maxi			
CX Limousine	A	2,2	②		A	2,4	⑤
	B	2,1	②		B	2	⑤
Turbo	C	2,6	②	130 km/h maxi	C	2,6	①

	①	②	③	④	⑤	⑥
	MXL 185/70 R14	MXL 195/70 R14	MXV 195/70 R14	MXV 195/70 R14	390 TRX 190/65 HR	390 TRX 210/55 VR
9 mdaN	5 1/2 J14 FHA 5-45	5 1/2 J14 FHA 5-45	5 1/2 J14 FHA 5-45			
9 mdaN				6 J14	150 TR 390	150 TR 390

		BAR		AM.85		BAR	
CX20	A	2,2	②		A	2,2	⑤
CX 20 TRE	B	1,4	①		B	1,4	⑤
	C	2,8	①	130 km/h maxi	C	2,8	①
CX 25 RI	A	2,4	②		A	2,2	⑤
CX 25 Pallas IE	B	2	②		B	1,4	⑤
CX25 Prestige	C	2,8	①	130 km/h maxi	C	2,8	①
CX 25 GTI	A	2,2	⑤				
	B	1,4	⑤				
	C	2,8	①	130 km/h maxi			
CX 25 D	A	2,4	②		A	2,2	⑤
	B	1,8	①		B	1,4	⑤
	C	2,8	①	130 km/h maxi	C	2,8	①
CX 25 RD	A	2,4	③		A	2,4	⑤
	B	2	③		B	2	⑤
	C	2,8	①	130 km/h maxi	C	2,8	①
CX 25 TRD	A	2,4	④		A	2,4	⑤
	B	2	④		B	2	⑤
	C	2,8	①	130 km/h maxi	C	2,8	①
CX Limousine Turbo	A	2,4	③		A	2,5	⑤
	B	2	③		B	2	⑤
	C	2,8	①	130 km/h maxi	C	2,8	①
CX 25 GTI Turbo	A	2,3	⑥				
	B	1,5	⑥				
	C	2,8	①	130 km/h maxi			

	①	②	③	④	⑤	⑥
	MXL 185/70 R14	MXL 195/70 R14	MXV 195/70 R14	MXV 195/70 R14	390 TRX 190/65 HR	390 TRX 210/55 VR
9 mdaN	5 1/2 J14 FHA 5-45	5 1/2 J14 FHA 5-45	5 1/2 J14 FHA 5-45			
9 mdaN				6 J14	150 TR 390	150 TR 390

	A	BAR		AM.86	A	BAR	
CX20 RE CX 22 TRS	A	2,2	②		A	2,4	⑤
	B	2,1	①		B	2	⑤
	C	2,8	①	130 km/h maxi	C	2,8	①
CX 25 D	A	2,4	②		A	2,4	⑤
	B	1,8	①		B	2	⑤
	C	2,8	①	130 km/h maxi	C	2,8	①
CX 25 RI CX 25 Prestige CX 25 RD CX 25 Limousine	A	2,4	③		A	2,4	⑤
	B	2	③		B	2	⑤
	C	2,8	①	130 km/h maxi	C	2,8	①
CX 25 TRD CX 25 TRI	A	2,4	④		A	2,4	⑤
	B	2	④		B	2	⑤
	C	2,8	①	130 km/h maxi	C	2,8	①
CX 25 GTI Turbo CX 25 Prestige Turbo	A	2,3	⑥				
	B	1,5	⑥				
	C	2,8	①	130 km/h maxi			

	①	②	③	④	⑤
	XVS 175 HR 14	XZS 185 SR 14	XVS 185 HR 14	XVS 185 HR 14	390 TRX 190/65 HR
9 mdaN	5 1/2 J14	5 1/2 J14	5 1/2 J14		
9 mdaN				6 J14	150 TR 390

		BAR		AM.84		BAR	
CX 20	A	2	③		A	2	④
	B	2,1	③		B	2,1	④
	C	2,6	③	130 km/h maxi	C	2,6	④
CX 25 D	A	2,2	②		A	2,2	④
	B	2,2	②		B	2,2	④
	C	2,6	②	130 km/h maxi	C	2,6	④
CX 25 TRI	A	2,4	⑤				
	B	1,9	⑤				
	C	2,6	①	130 km/h maxi			
CX 25 TRD	A	2,4	⑤				
	B	1,9	⑤				
	C	2,6	①	130 km/h maxi			

	①	②	③	④
	MXL 185/70 R14	MXL 195/70 R14	MXV 195/70 R14	390 TRX 190/65 HR
9 mdaN	5 1/2 J14	5 1/2 J14		
9 mdaN			6 J14	150 TR 90

		BAR	AM.85		BAR	
CX 20	A	2,4	②		A	2,5	④
	B	2	②		B	2,3	④
	C	2,8	①	130 km/h maxi	C	2,8	①
CX 25 TRI	A	2,4	④				
	B	1,9	④				
	C	2,8	①	130 km/h maxi			
CX 25 D	A	2,5	②		A	2,6	④
	B	2	②		B	2,3	④
	C	2,8	①	130 km/h maxi	C	2,8	①
CX 25 TRD	A	2,6	④				
	B	2,3	④				
	C	2,8	①	130 km/h maxi			

		BAR	AM.86		BAR	
CX 20 CX 25 D	A	2,5	②		A	2,6	④
	B	2,3	②		B	2,3	④
	C	2,8	①	130 km/h maxi	C	2,8	①
CX 25 TRI CX 25 TRD	A	2,5	③		A	2,6	④
	B	2,3	③		B	2,3	④
	C	2,8	①	130 km/h maxi	C	2,8	①

10

LIST OF OPERATIONS APPEARING IN THE CHAPTER: STEERING

OPERATION No.	DESCRIPTION	OPERATIONS △ TEXTS	OPERATIONS ○ SYMBOLS	VEHICLE CONCERNED / ENGINE TYPE: 20 Petrol 829 A 5	22 Petrol J6T A 500	25 Petrol Injection 25/659	25 Prestige 25/659	25 Petrol Turbo 25/662	25 Prestige Petrol Turbo 25/662	25 Diesel 25/660	25 Diesel Turbo 25/648	25 Limousine Diesel Turbo 25/648	20 Safari Petrol + Familiale 829 A 5	25 Safari Petrol Injection 25/659	25 Safari Diesel + Familiale 25/660	25 Safari Diesel Turbo 25/648	Ambulance 829 A 5 or 25/660		
MA 440.00/1	Specification and particular features of the steering system		○	X	X	X	X	X	X	X	X	X	X	X	X	X	X		

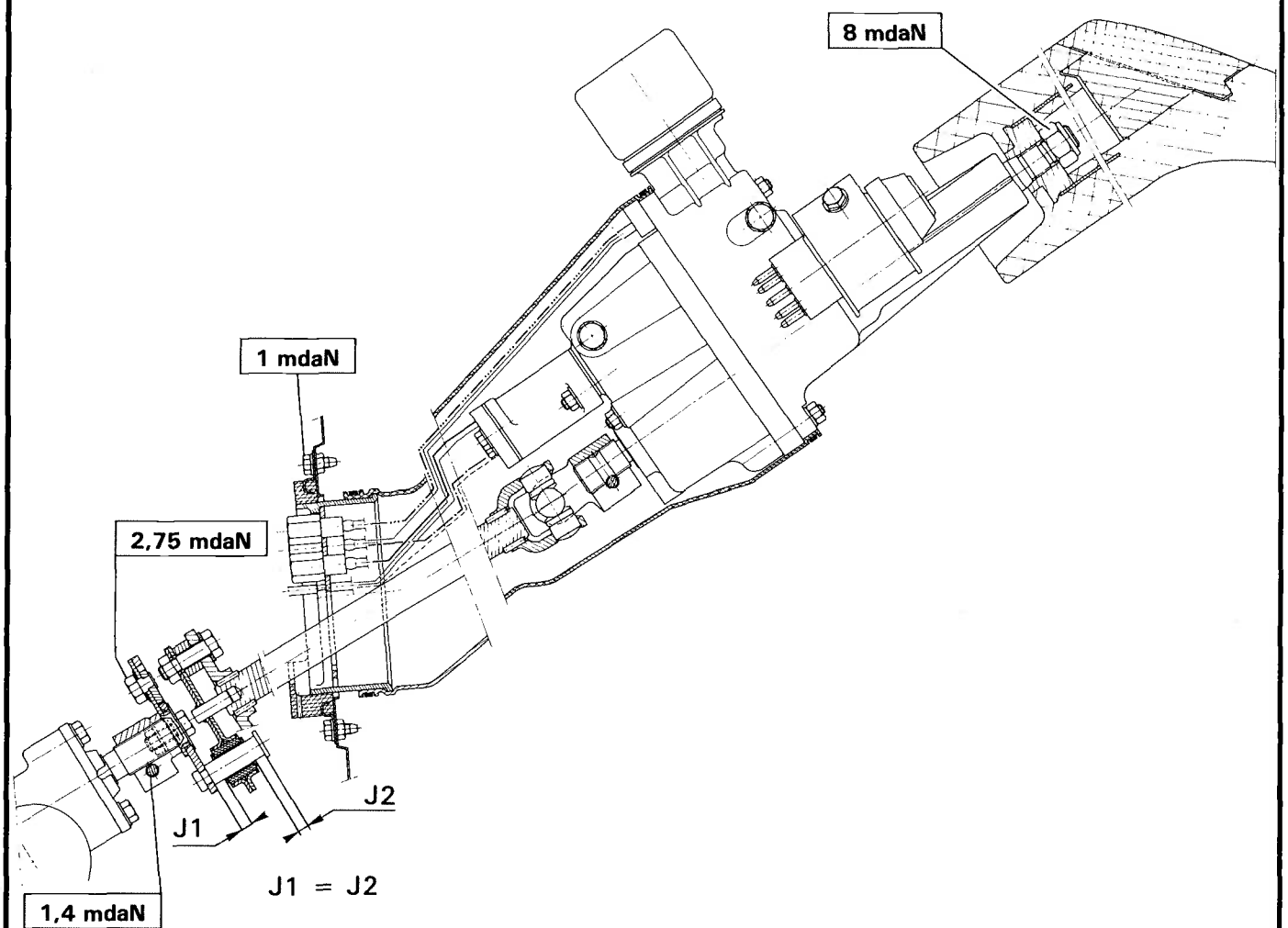

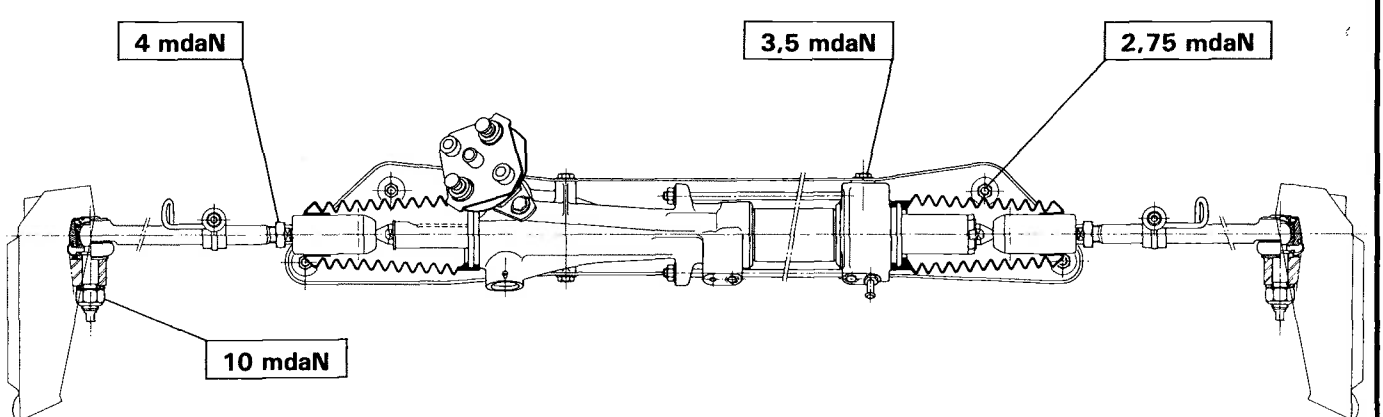

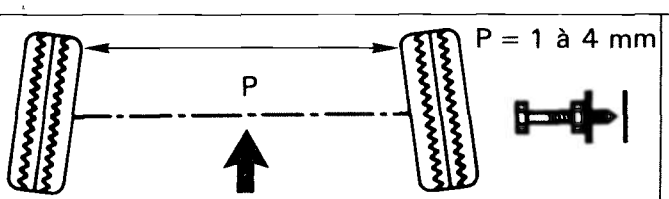

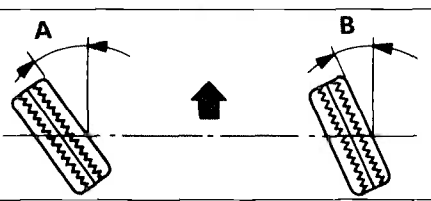

A = 40°

B = 32°

2,5

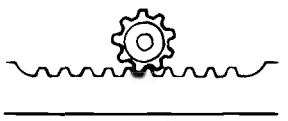

1/13,5

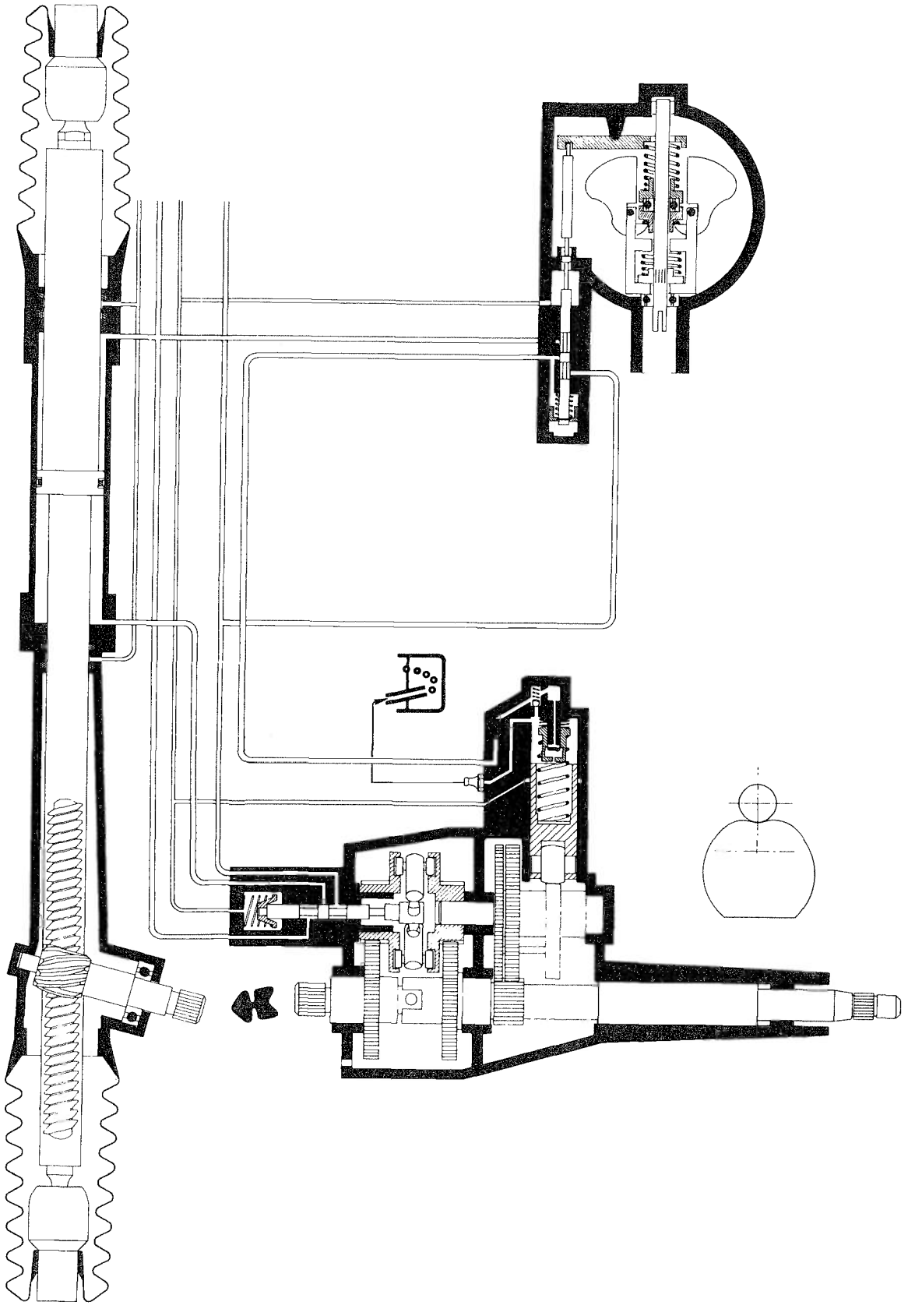

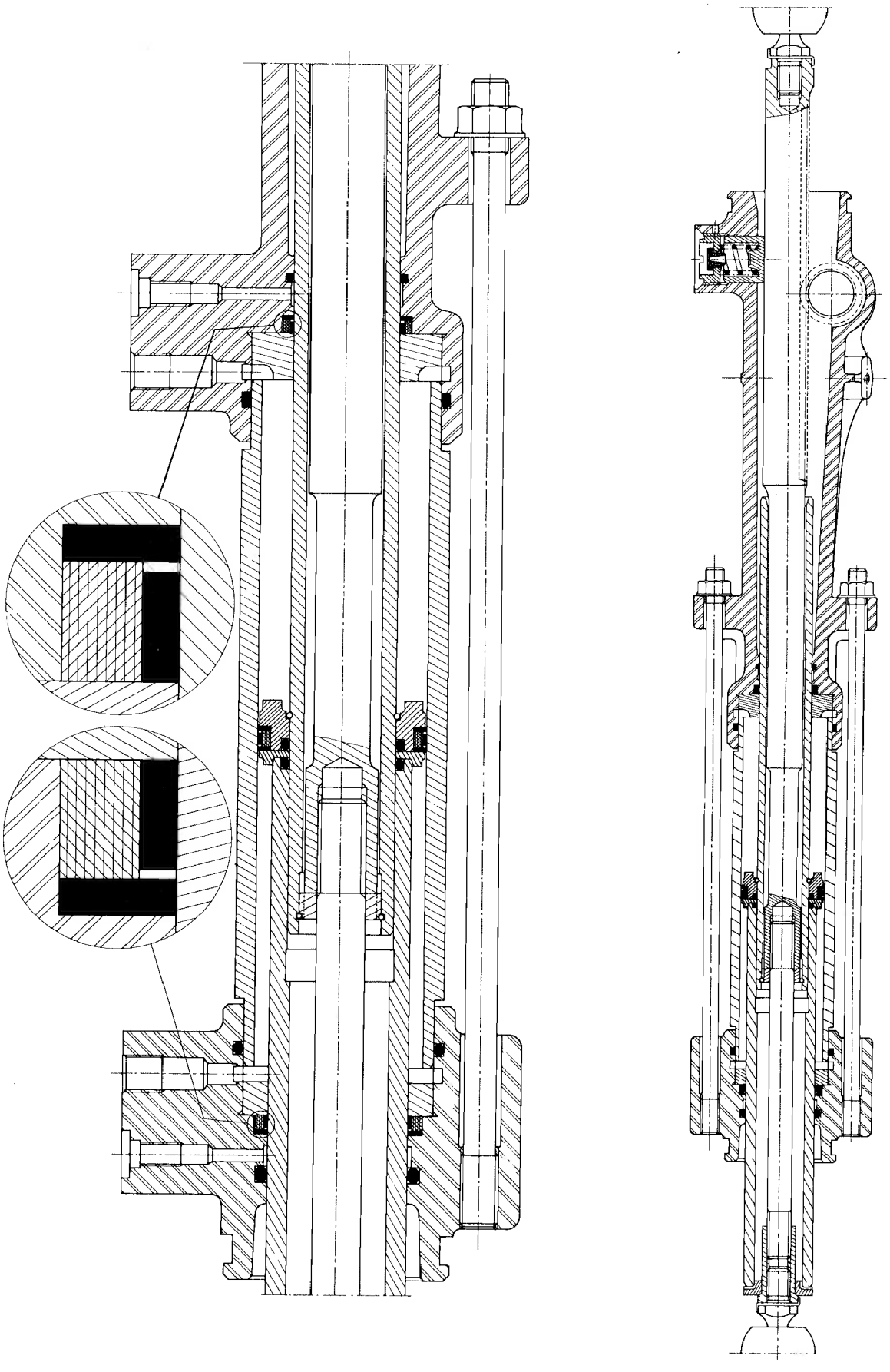

11

LIST OF OPERATIONS APPEARING IN THE CHAPTER: BRAKES

OPERATION No.	DESCRIPTION	OPERATIONS △ TEXTS	OPERATIONS ○ SYMBOLS	VEHICLE CONCERNED ENGINE TYPE: 20 Petrol 829 A 5	22 Petrol J6T A 500	25 Petrol Injection 25/659	25 Prestige 25/659	25 Petrol Turbo 25/662	25 Prestige Petrol Turbo 25/662	25 Diesel 25/660	25 Diesel Turbo 25/648	25 Limousine Diesel Turbo 25/648	20 Safari Petrol + Familiale 829 A 5	25 Safari Petrol Injection 25/659	25 Safari Diesel + Familiale 25/660	25 Safari Diesel Turbo 25/648	Ambulance 829 A 5 or 25/660		
MA 450/1	Tools		○	X	X	X	X	X	X	X	X	X	X	X	X	X	X		
MA 450.00/1	Specification and particular features of the braking system		○	X	X	X	X	X	X	X	X	X	X	X	X	X	X		
MA 451.0/1	Checking the run-out of the front and rear brake discs	△		X	X	X	X	X	X	X	X	X	X	X	X	X	X		
MA 451.1/3	Removing/refitting a front disc brake	△		X	X	X	X	X	X	X	X	X	X	X	X	X	X		
MA 453.0/1	Bleeding the braking circuit		○	X	X	X	X	X	X	X	X	X	X	X	X	X	X		
MA 454.0/1	Checking and adjusting the handbrake	△		X	X	X	X	X	X	X	X	X	X	X	X	X	X		
MA 456.1/1	Removing/refitting the ABS hydraulic control block	△				X		X	X		X	X		X		X			

5602 T

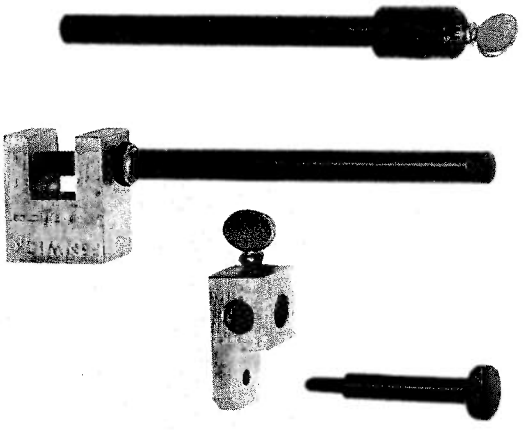

80.1854

I

2437 T

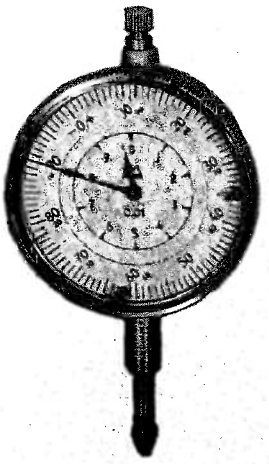

12.827

II

OUT 10 **4060 T**

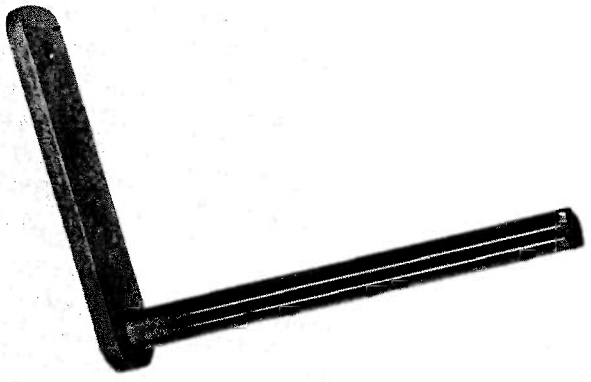

80.1855

III

OUT 10 **6501 T**

13.725

IV

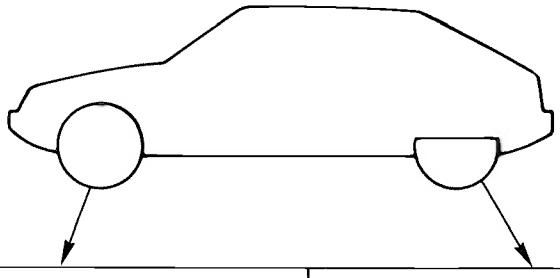

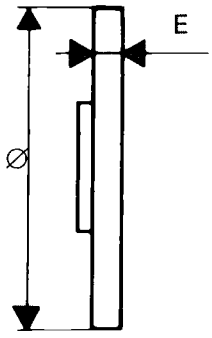	∅	260 mm	224 mm
	E	20 mm	7 mm
	E mini	18 mm	5 mm
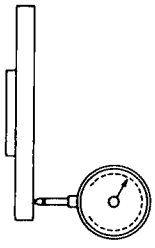	0,2 mm maxi		
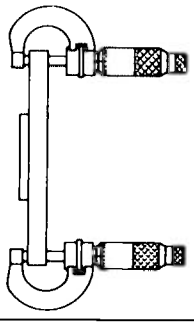	0,02 mm maxi		
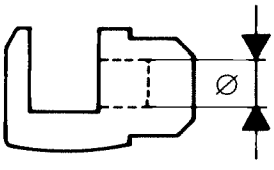	4 → 42 mm	2 → 30 mm	

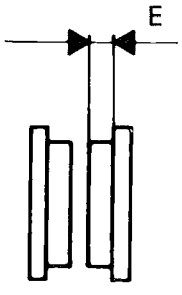		TEXTAR T288	TEXTAR T288 (→ 2/87)	FERODO 2430 T
	E	11,5 mm	12 mm	13 mm
	E mini	3 mm	2 mm	2 mm

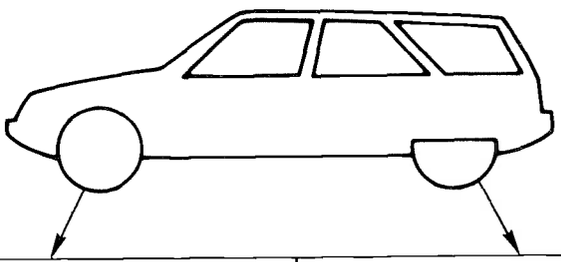

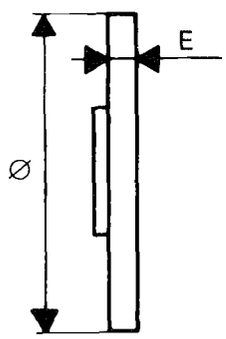	∅	260 mm	235 mm
	E	20 mm	18 mm
	Emini	18 mm	16 mm
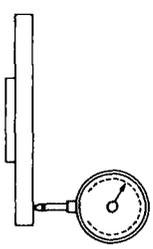	0,2 mm maxi		
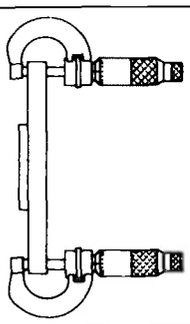	0,02 mm maxi		
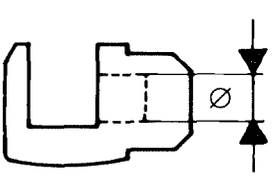	4 → 42 mm	2 → 40 mm	
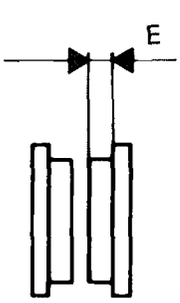	E	TEXTAR T288	TEXTAR T288 / FERODO 2430 T
		11,5 mm	13 mm / 12 mm
	E mini	3 mm	2 mm / 2 mm

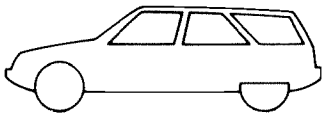

→ 3/85

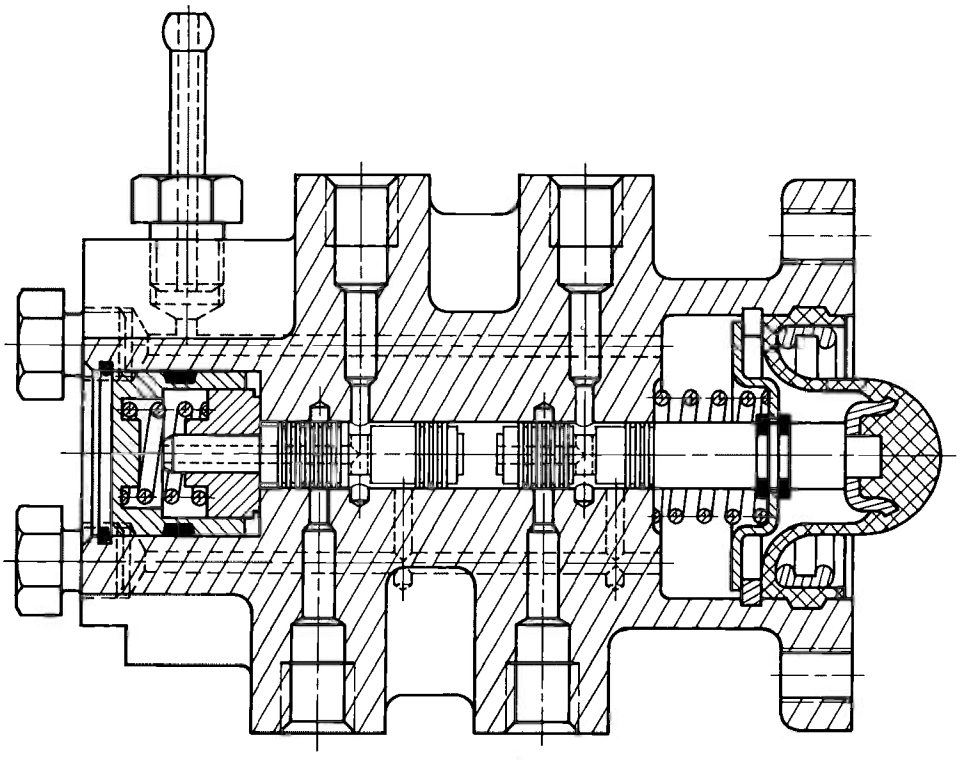

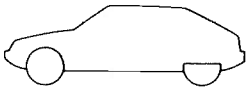

7/83 →

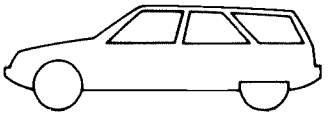

3/85 →

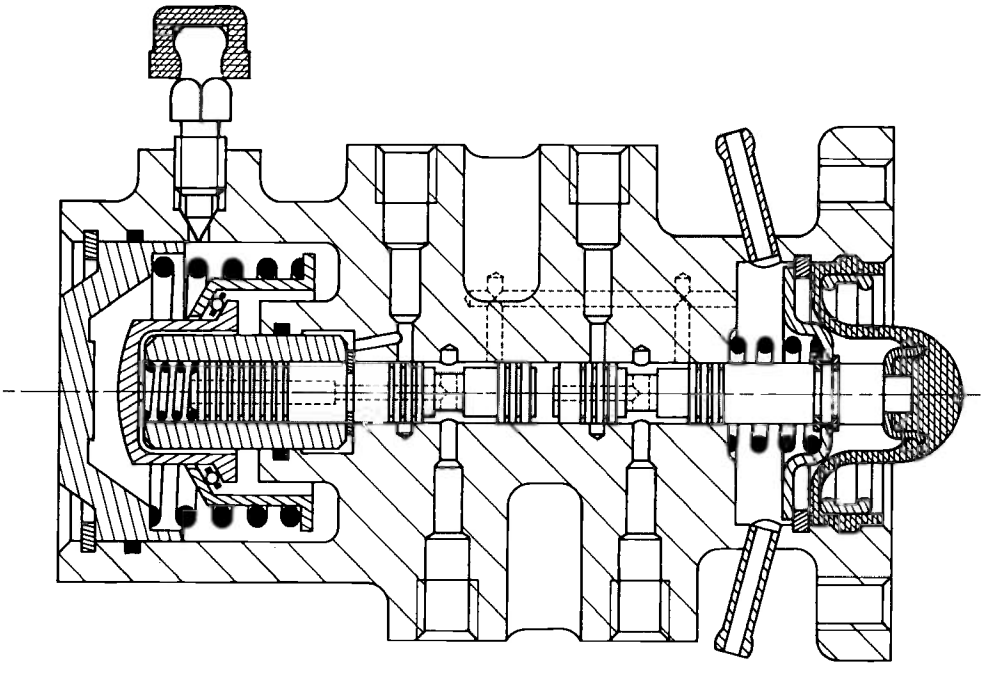

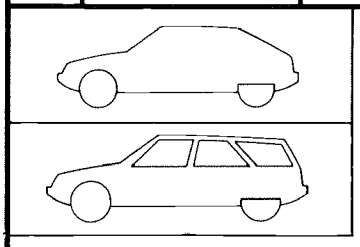

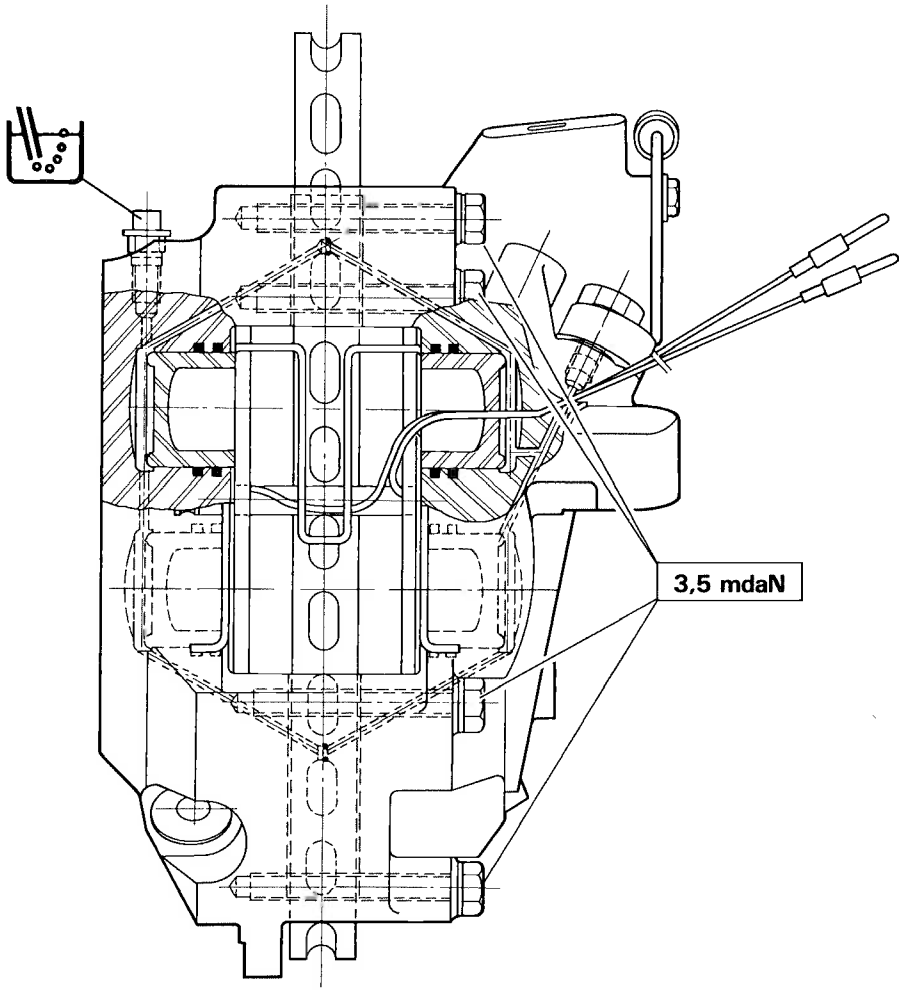

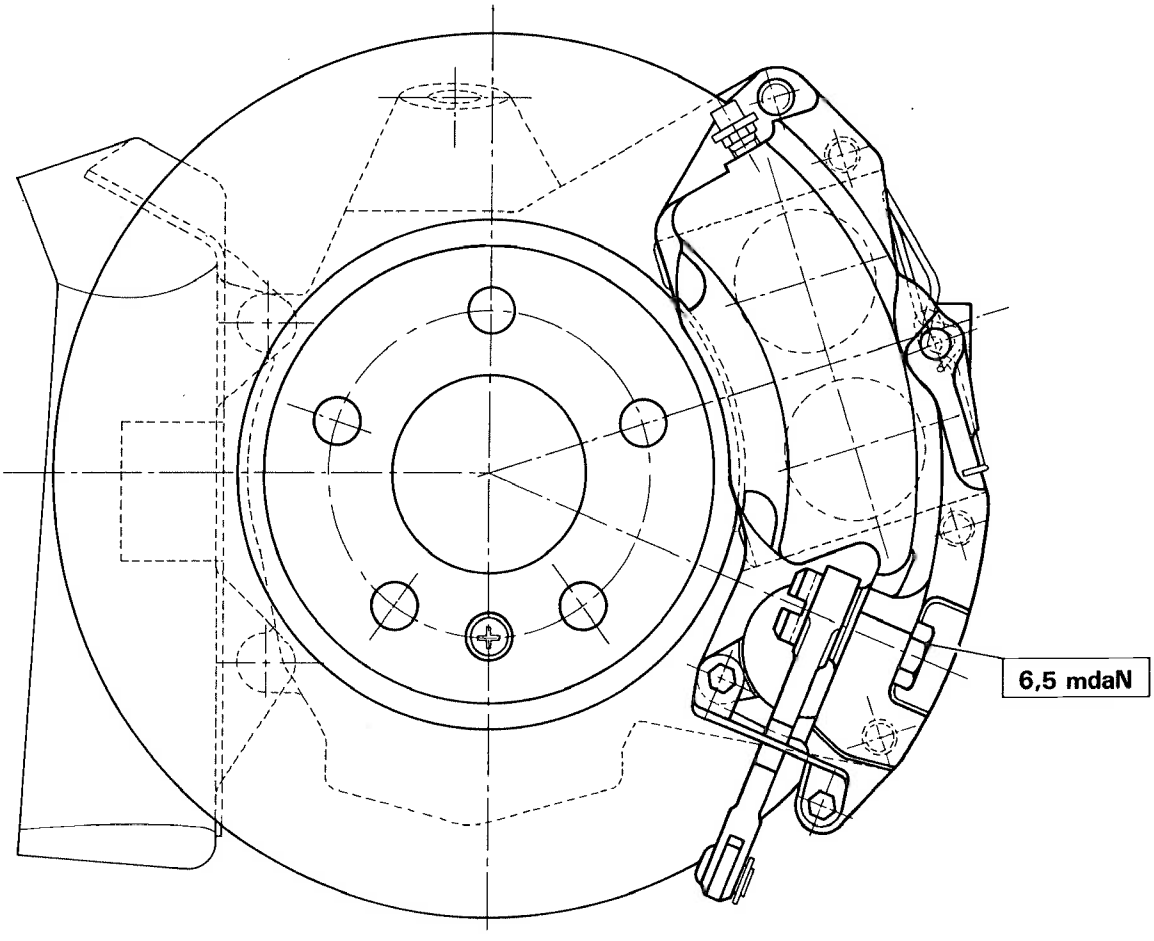

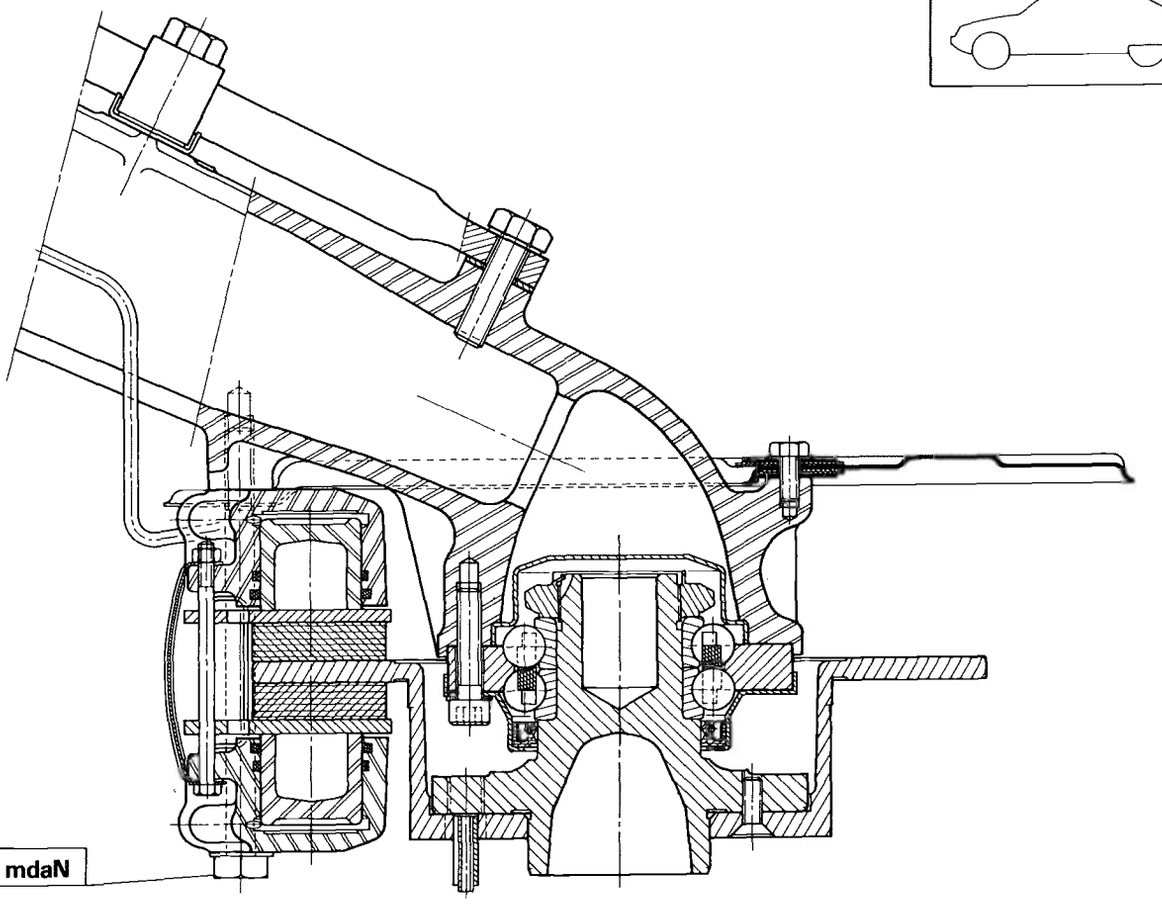

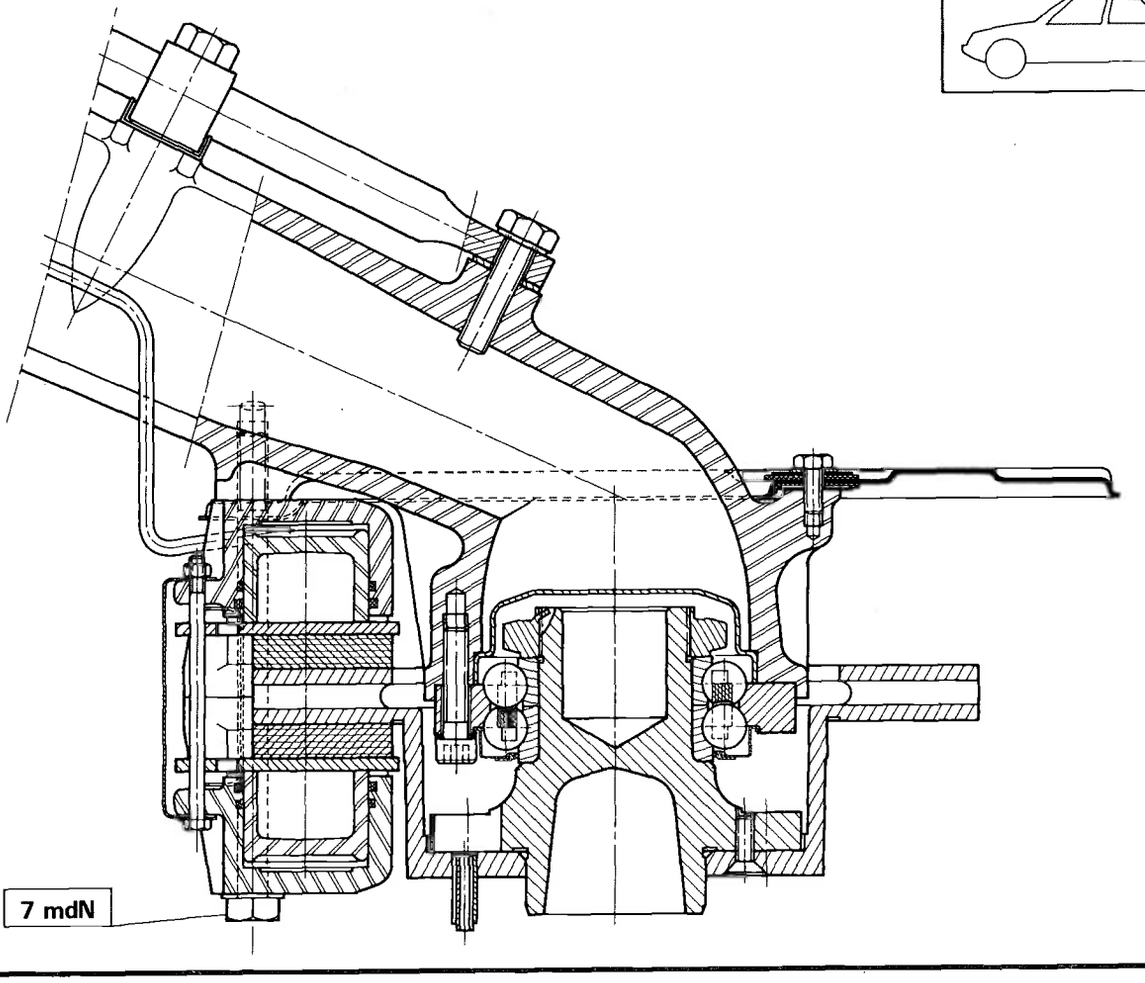

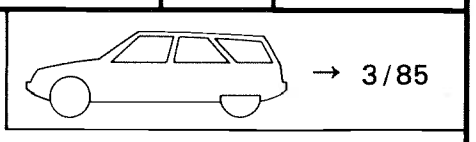

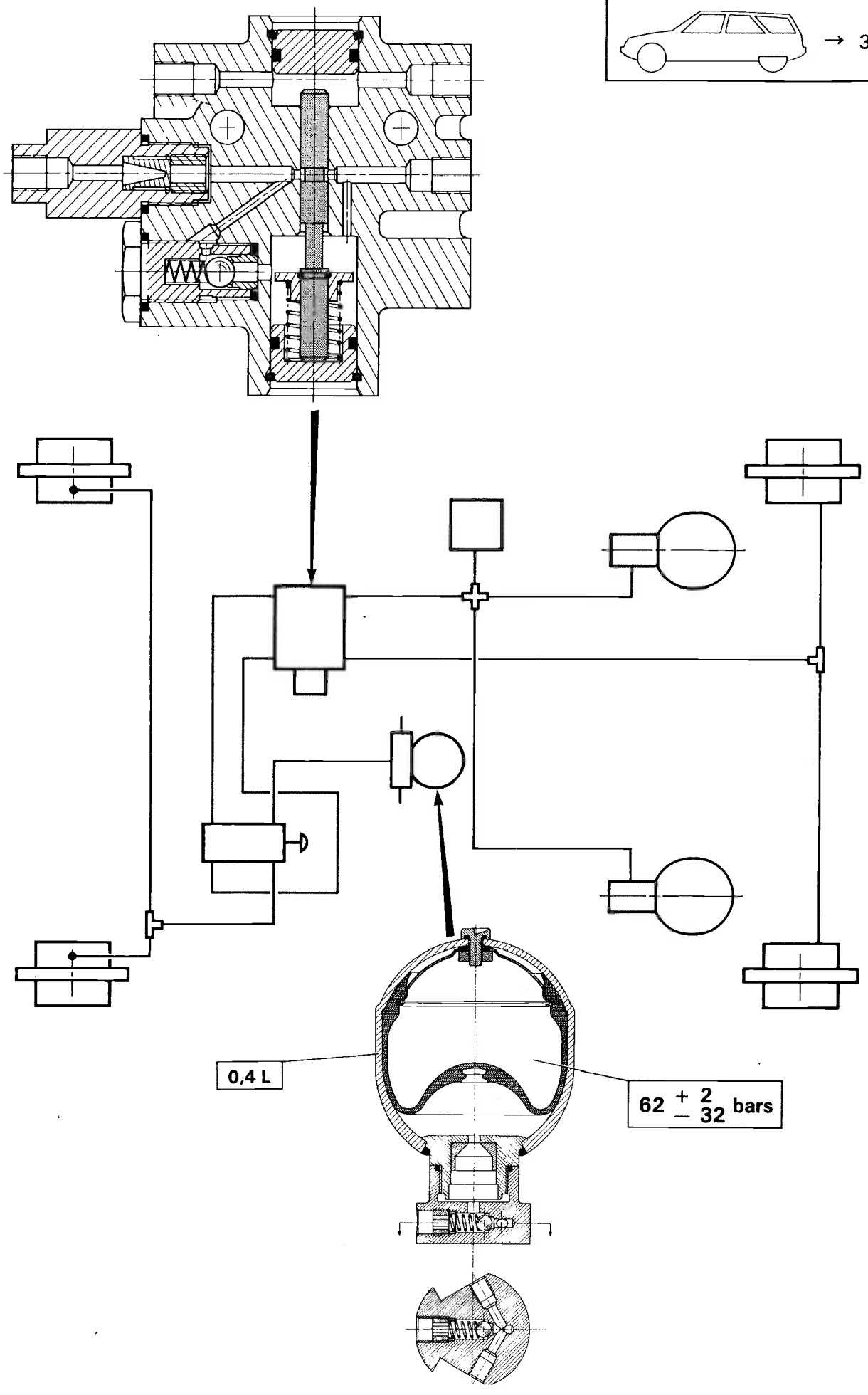

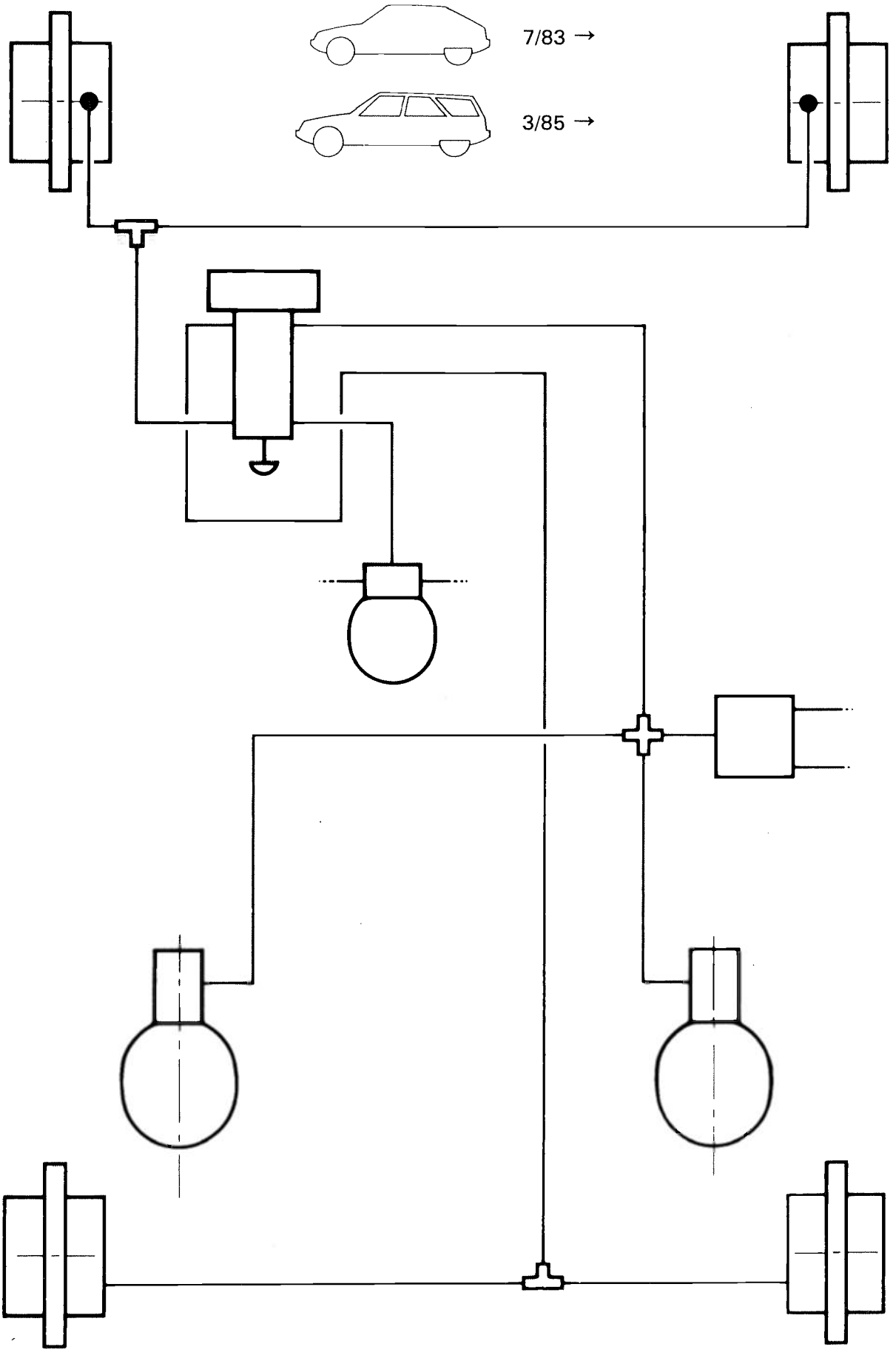

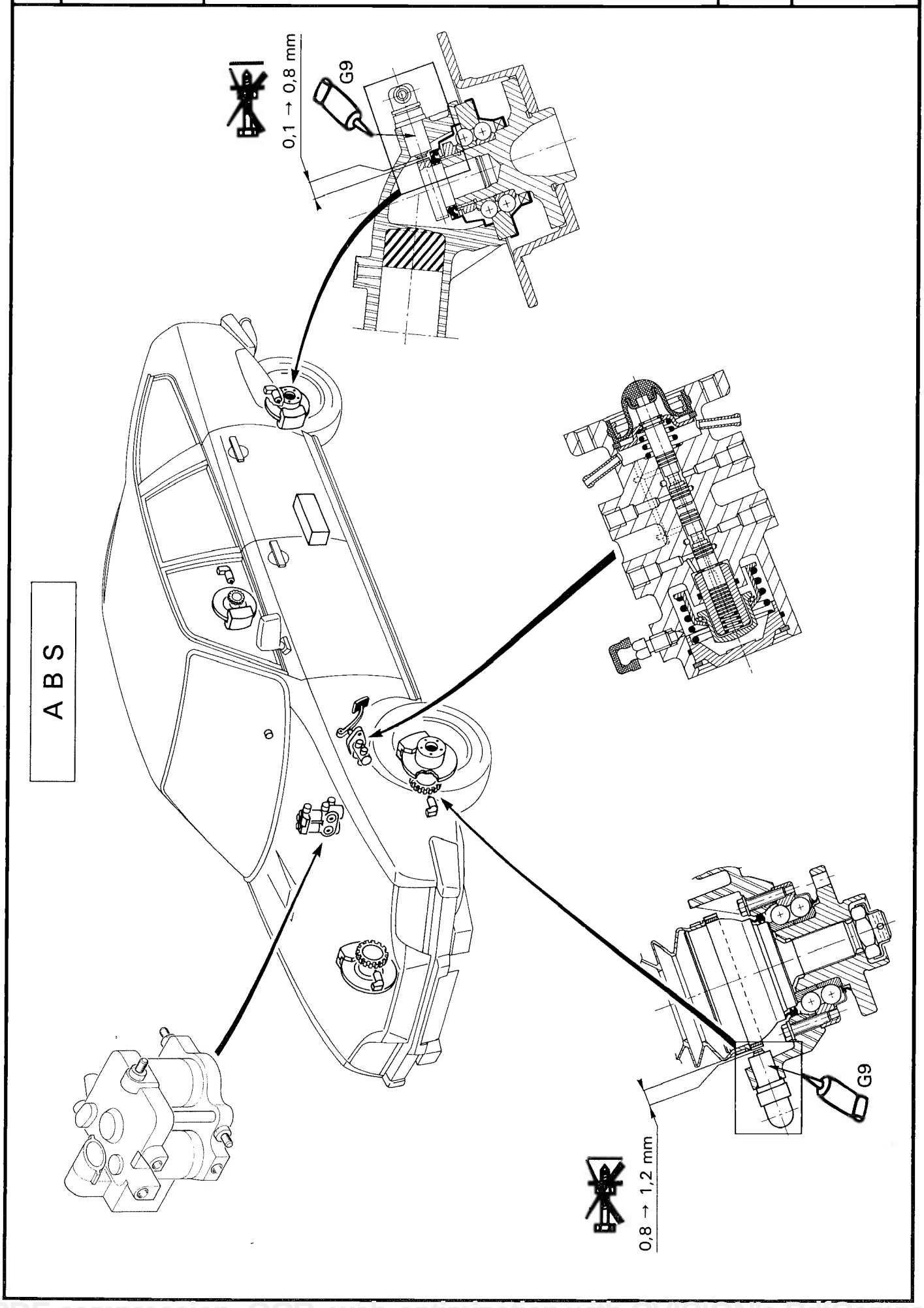

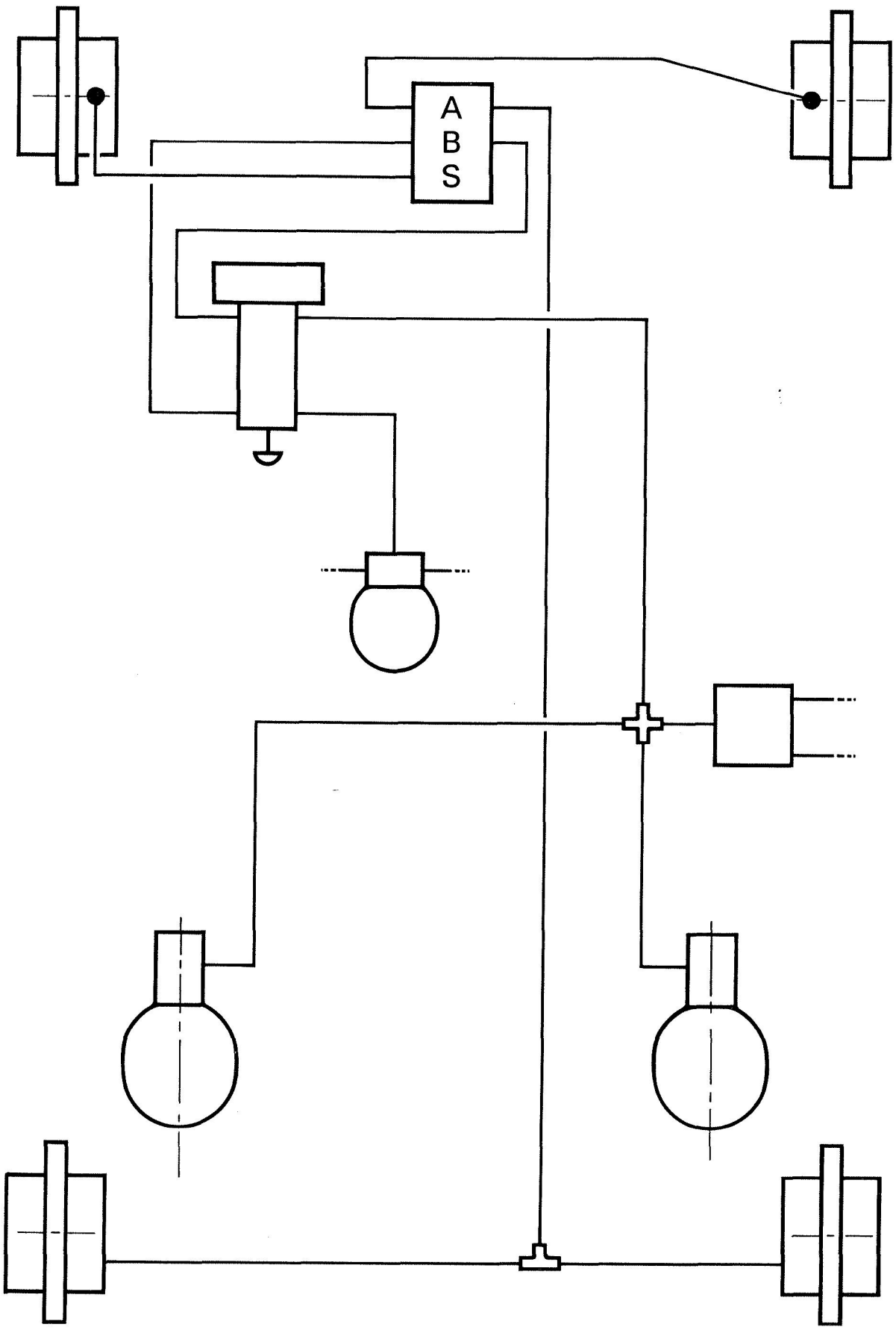

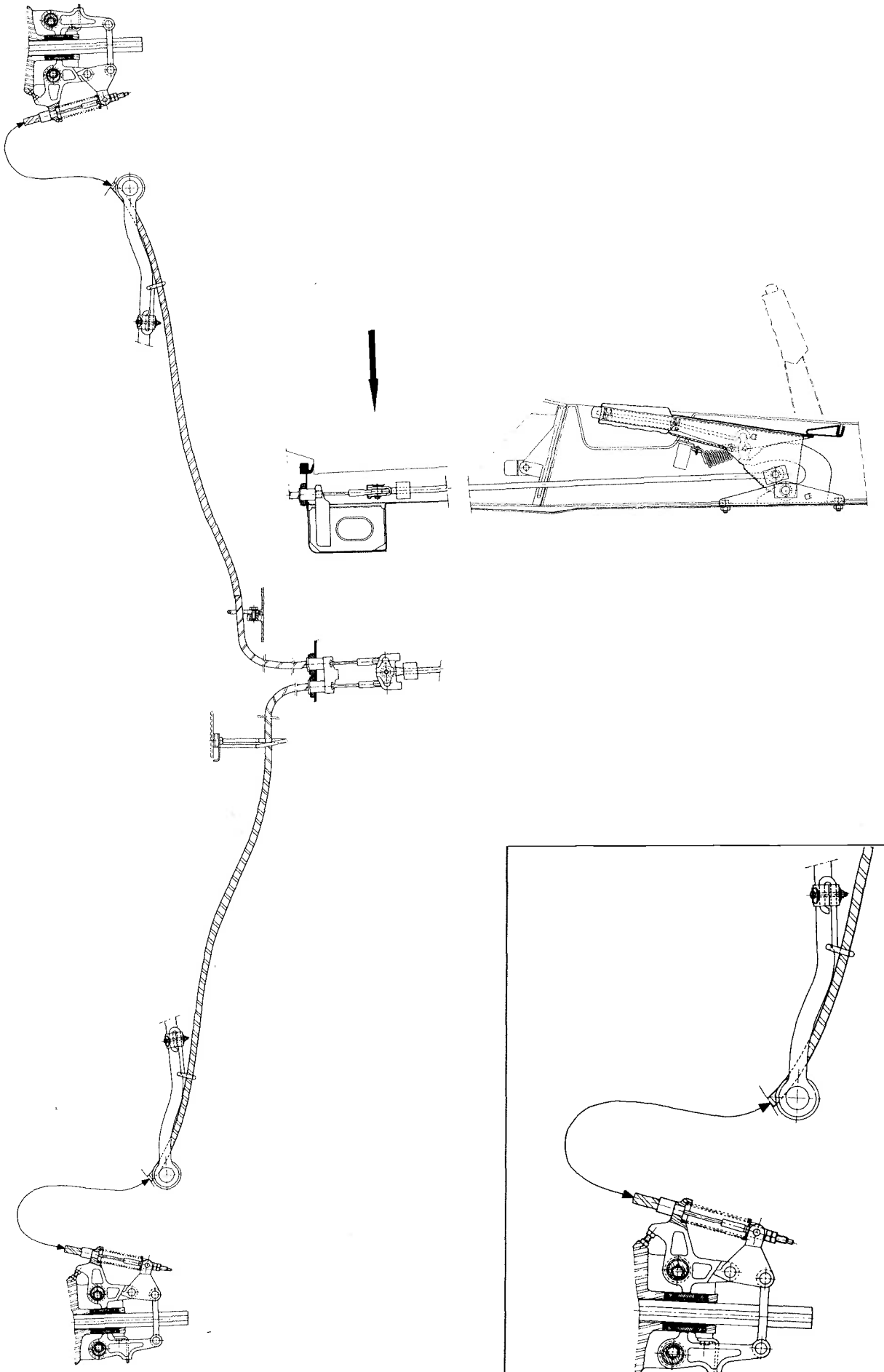

TOOLS TO BE USED

5602-T. Support for dial gauge.

2437-T. Dial gauge with total recorder needle.

4060-T. T.D.C. dial gauge mounting.

CHECKING THE RUN OUT OF FRONT AND REAR BRAKE DISCS

Jack up the vehicle.

(Fig. I and II).

Before carrying out any check, it is IMPERATIVE to bring the brake disc against the wheel hub.

To obtain this condition, fit and tighten two wheel screws (1) opposite disc securing screw (3) (whose tightening has been verified). Connect two 13 mm dia. spacers (2) to wheel screws (1) to ensure a correct contact.

Put the supports for universal dial - gauges **5602-T and 4060-T** into place. Set dial indicator **2437-T,** with pointer as perpendicular as possible to the disc face.

The run-out reading should not exceed 0.2 mm.

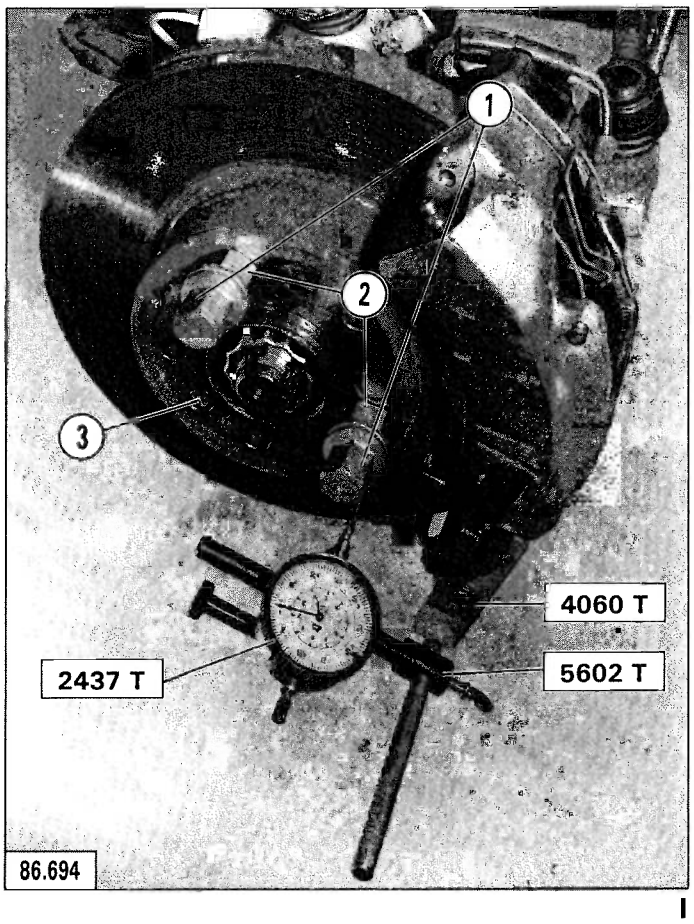

I

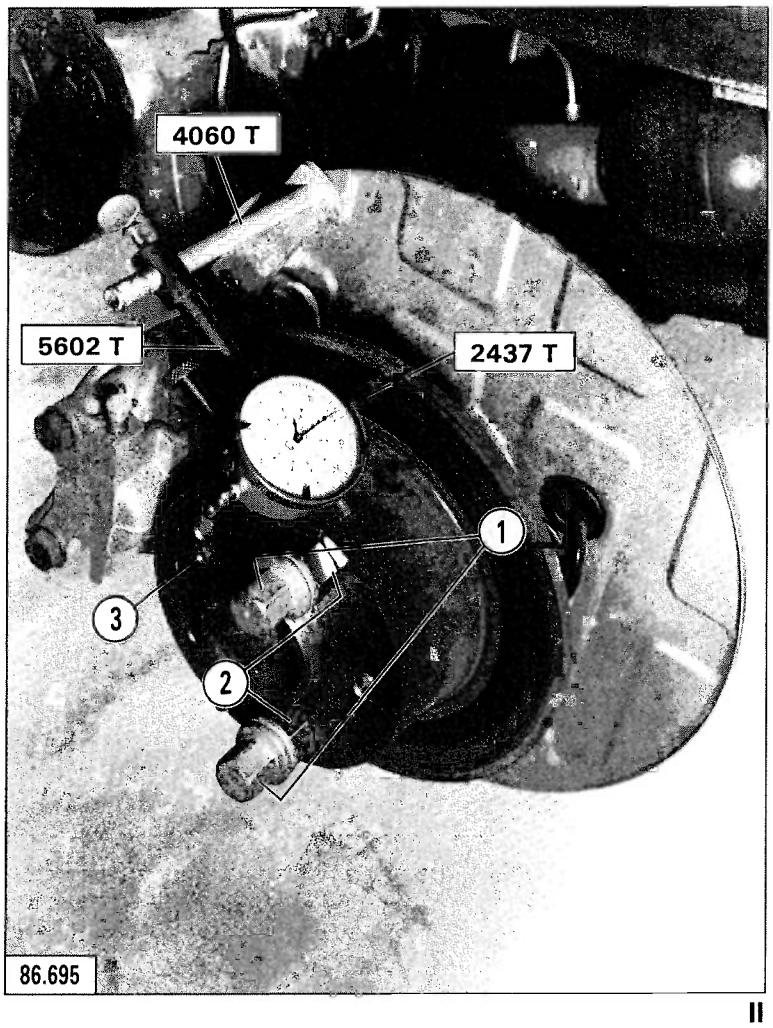

II

REMOVING AND REFITTING A FRONT BRAKE DISC

REMOVAL

Support the front of the vehicle on stands.

Remove the road wheel. Release pressure in the hydraulic circuits and brake accumulators.

Disconnect the wear warning wires (1), **Fig. I**.

Take off, Fig. I :

- spindle (5),
- spring (2).

Push back the brake pistons.

Slacken screws (4), **Fig. I**.

Draw back the parking brake pads using the eccentrics.

Withdraw, Fig. I and II :

- brake pads (3),
- screws (6).

Uncouple the half-caliper from the swivel and tilt it.

Remove, Fig. III :

- screw (7),
- disc (8).

REFITTING

Make sure that the parking brake internal pad is in situ.

Refit, Fig. III :

- brake disc (8),
- screw (7), tighten the screw,
- NEW o-ring seals (9).

Confirm that the parking brake external pad is in position.

Recouple the half-caliper.

Put screws (6) **into place, Fig. II.**
Tighten to **3.5 mdaN.**

Fit, Fig. I :

- brake pads (3),
- spring (2),
- spindle (5), pushing it to its locking position.

Reconnect the wear warning wires (1), **Fig. I.**

Adjust the parking brake.
(See (11) MA 454.1/1)

Bleed the front brakes.
(Refer to (11) MA 453.0/1)

Fit the road wheel and lower the vehicle to the ground.

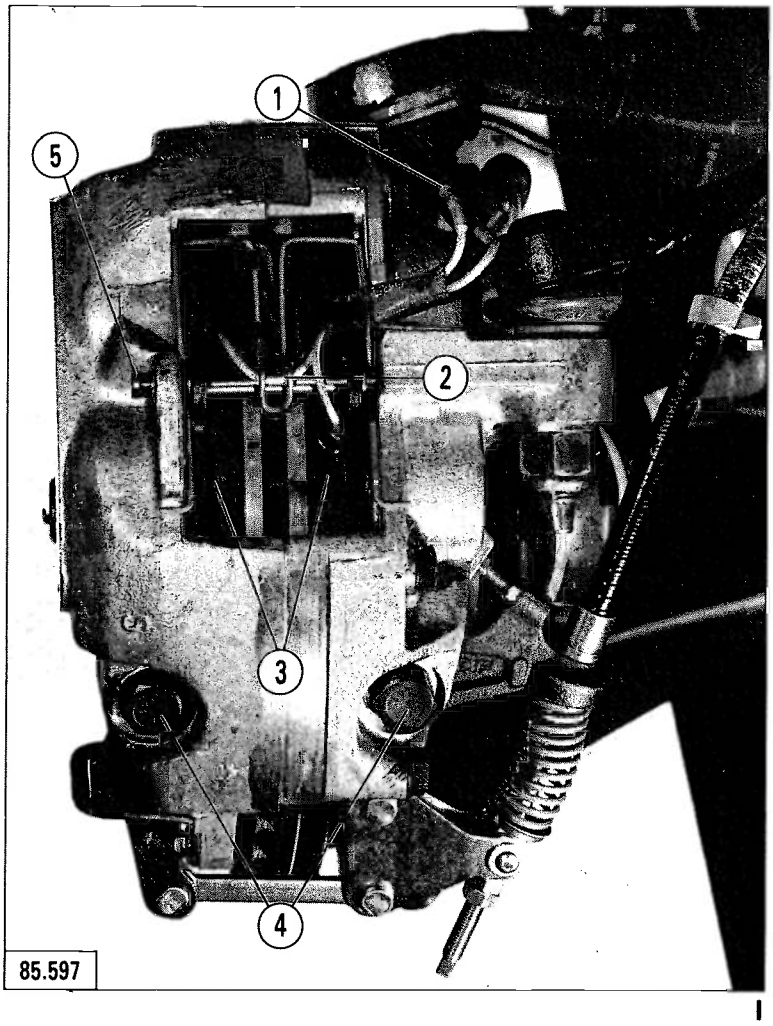

85.597

I

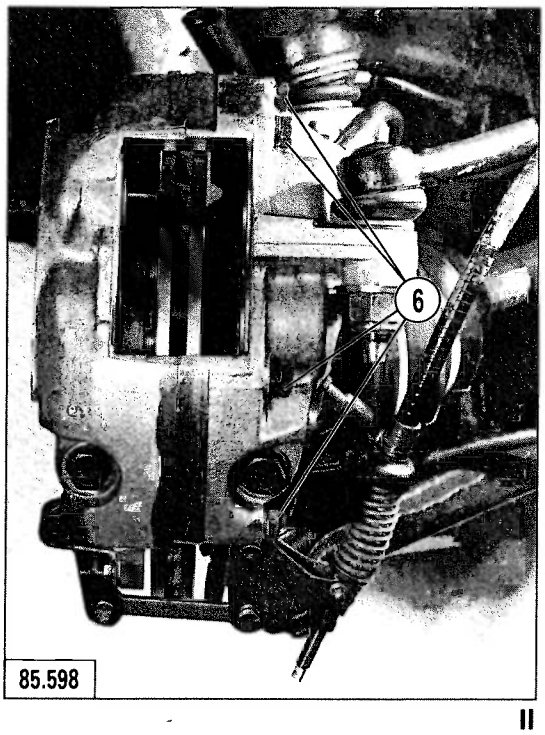

85.598

II

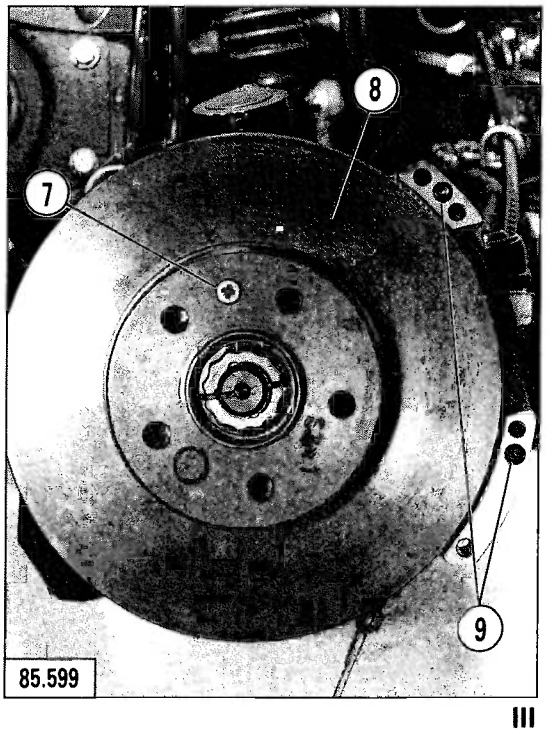

85.599

III

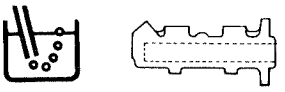

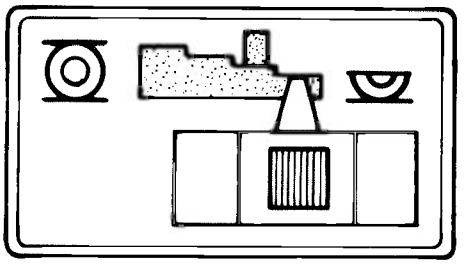

I

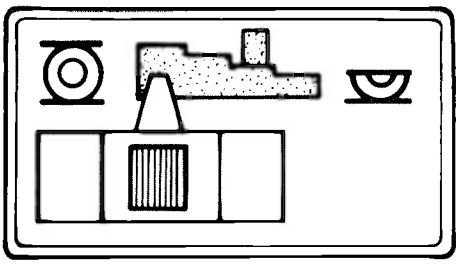

V

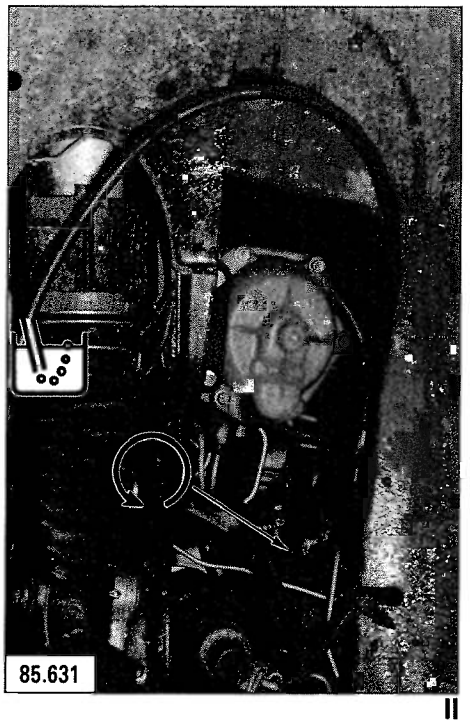

II

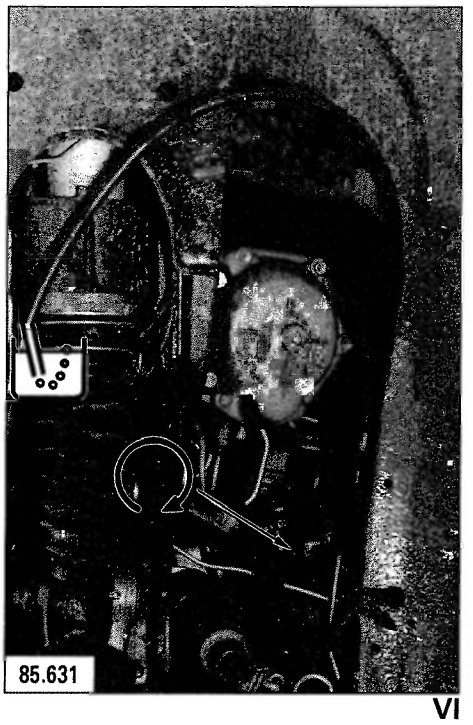

VI

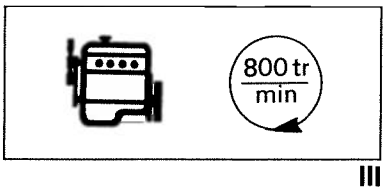

III

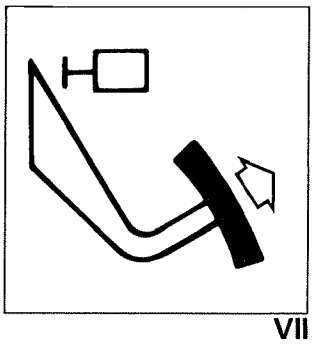

VII

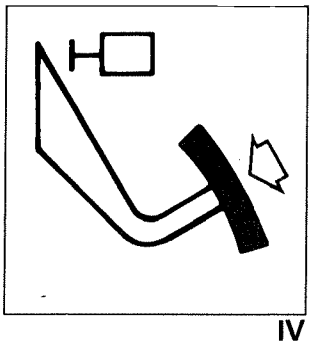

IV

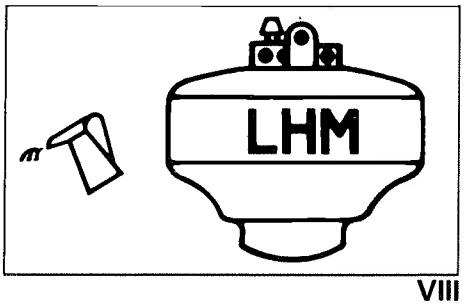

VIII

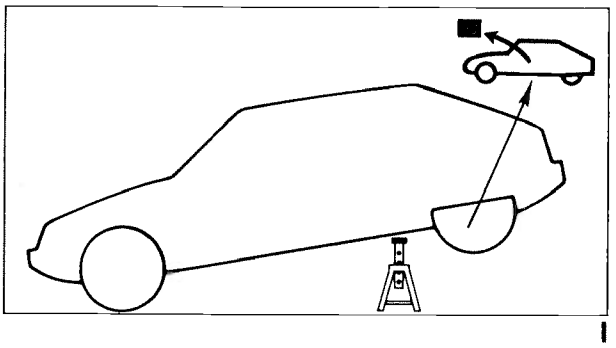

I

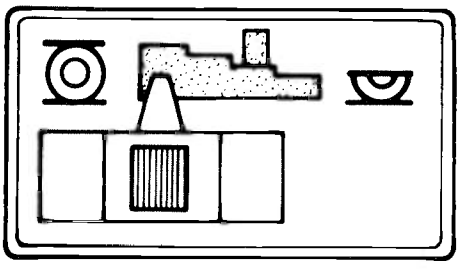

VI

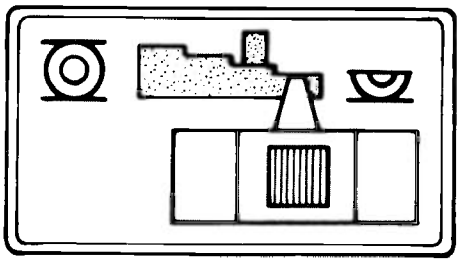

II

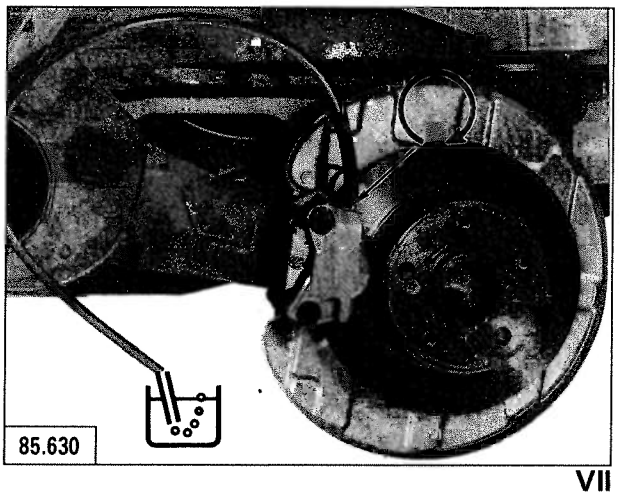

VII

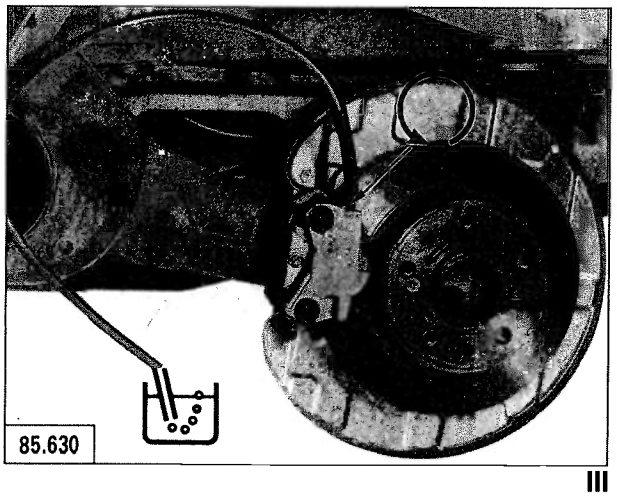

III

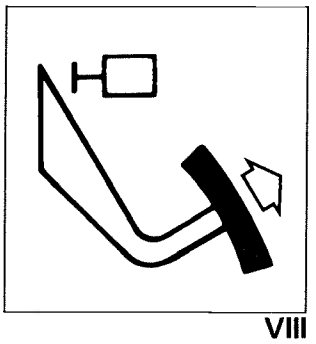

VIII

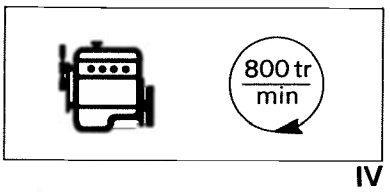

IV

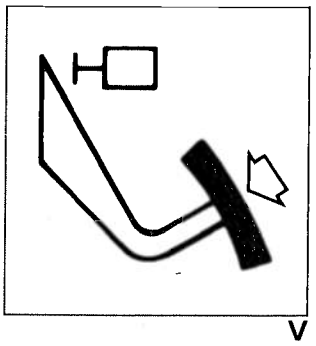

V

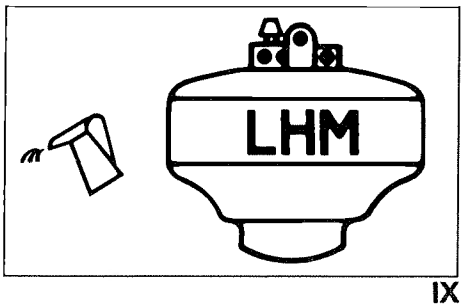

IX

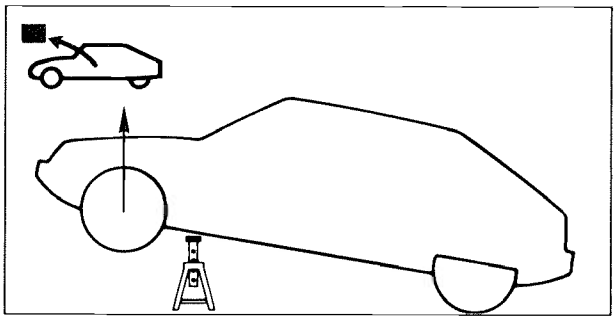

I

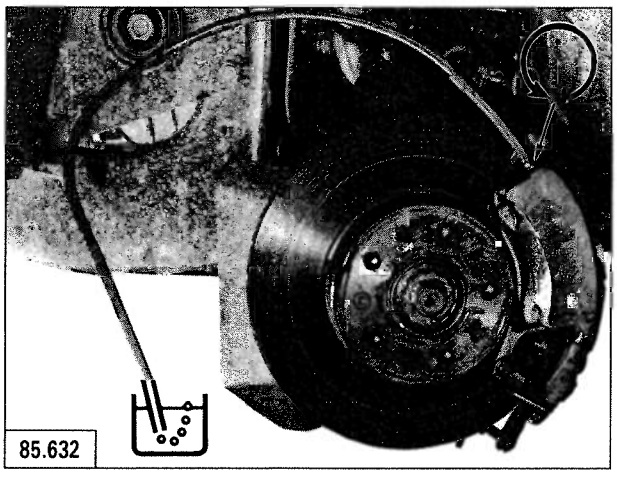

IV

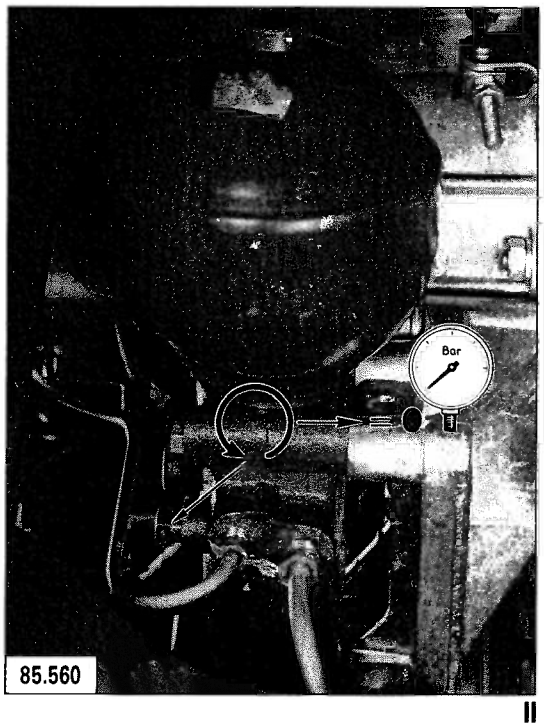

II

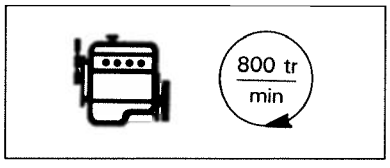

V

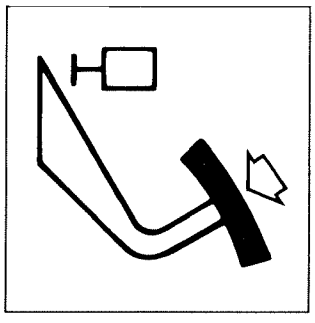

VI

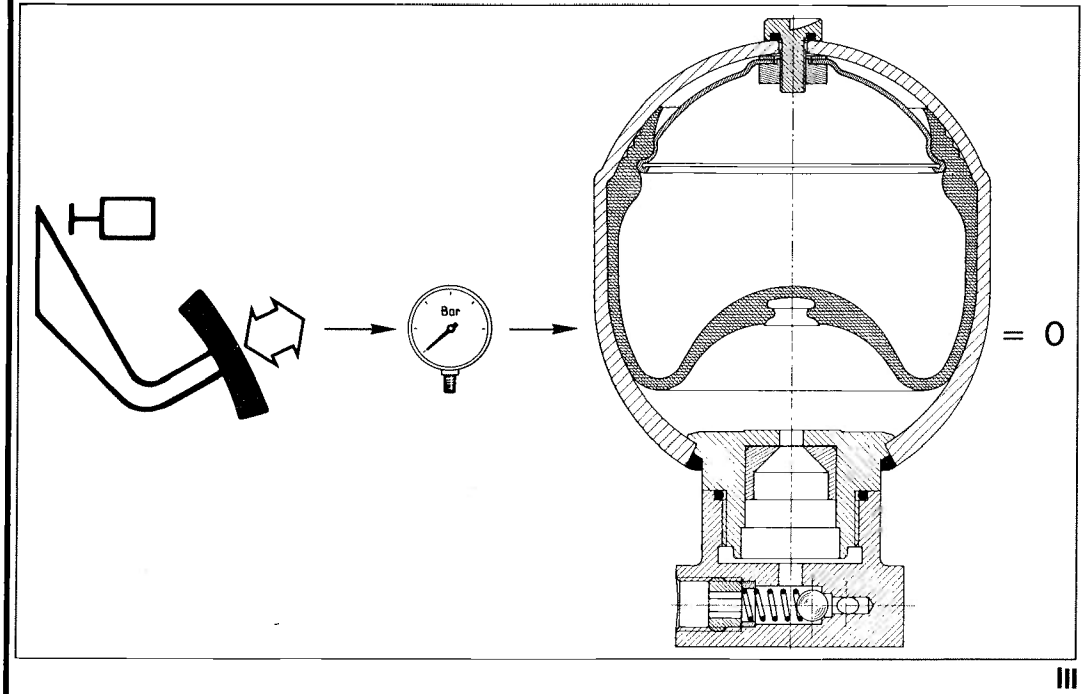

III

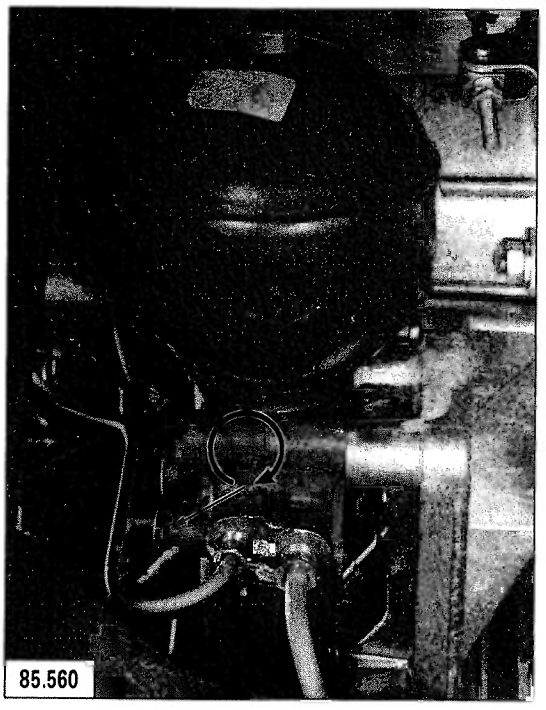

I

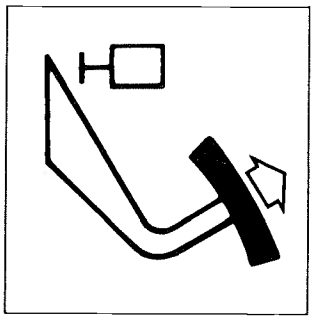

III

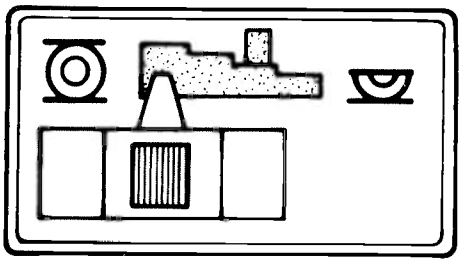

IV

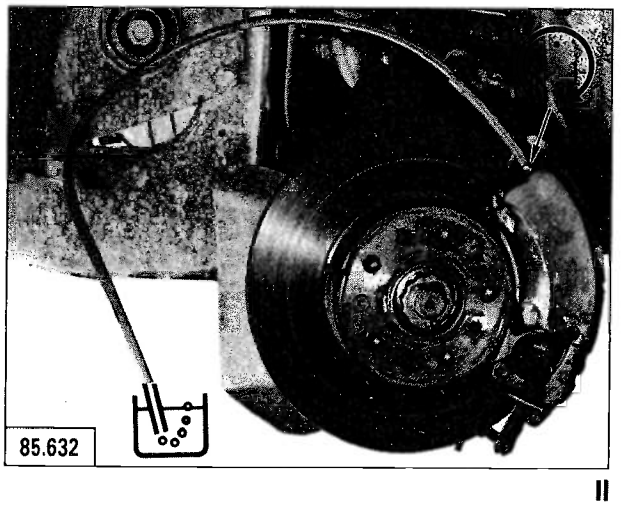

II

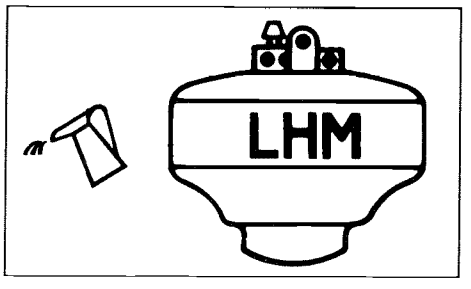

V

TOOL TO BE USED

6501-T Emergency brake eccentric adjusting spanner.

EMERGENCY BRAKE
CHECK AND ADJUSTMENT

Place the front of the vehicle on stands.

Remove the front wheels.

Release handbrake lever to maximum extent.

ADJUSTMENT OF THE ECCENTRICS

Remove, Fig. I :

- lock nut (2),
- adjustment nut (1) for operating cables.

Start the adjustment by the outer eccentric.

Slacken, Fig. II :

- stop (3) and make sure that levers (5) are on their stops **«a»** and **«b»**,
- screws (4).

Turn eccentric (6) with **TOOL 6501-T Fig. III, as shown on the table below, until the pads just contact the disc at the point of maximum run-out.**

	L.H. SWIVEL		R.H. SWIVEL	
	Outer eccentric	Inner eccentric	Inner eccentric	Outer eccentric
Direction of adjust.	↑ up-wards	down-wards ↓	↑ up-wards	down-wards ↓
(Clockwise, seen from the rear of the swivel)				

Tighten screws (4) to **7.5 mdaN, Fig. II.**

Apply same procedure to each eccentric of the brake unit.

Bring stop screw (3) into contact with the brake unit *(tighten its lock-nut)*, **Fig. II.**

ADJUSTMENT OF THE EMERGENCY BRAKE OPERATING CABLES:

On each brake unit, Fig. IV :

Ensure that the sleeve and its end piece (7) are correctly positioned.

Pull out each threaded end-piece (8) in turn and measure its protrusion **«c»**.

Difference in length of the cable must remain the same after adjustment. *(This operation ensures that the brake cable compensator is in a central position).*

Screw down cable adjusting nut (1) against lever (5), **Fig. V.**

Tighten lock-nut (2) to **1.5 mdaN.**

CHECKING THE EMERGENCY BRAKE

Operate handbrake lever several times.

Check that the adjustment does not change and that the locking system operates satisfactorily.

Refit the front wheels.

Lower the vehicle to the ground.

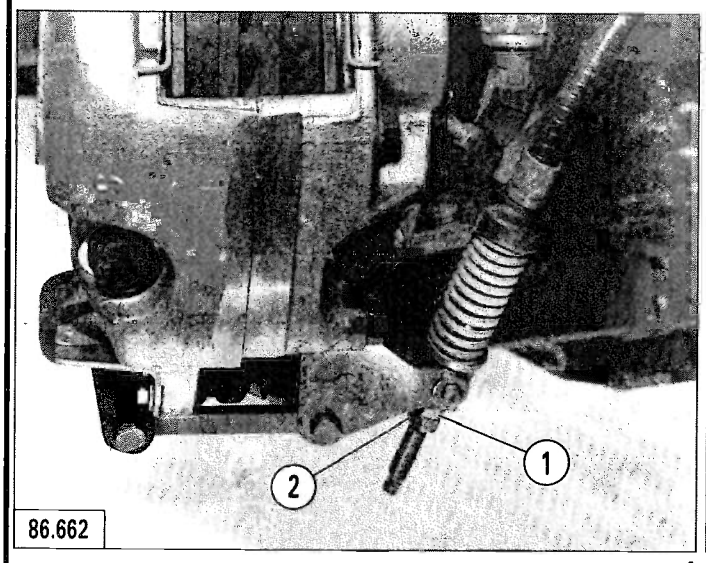

I

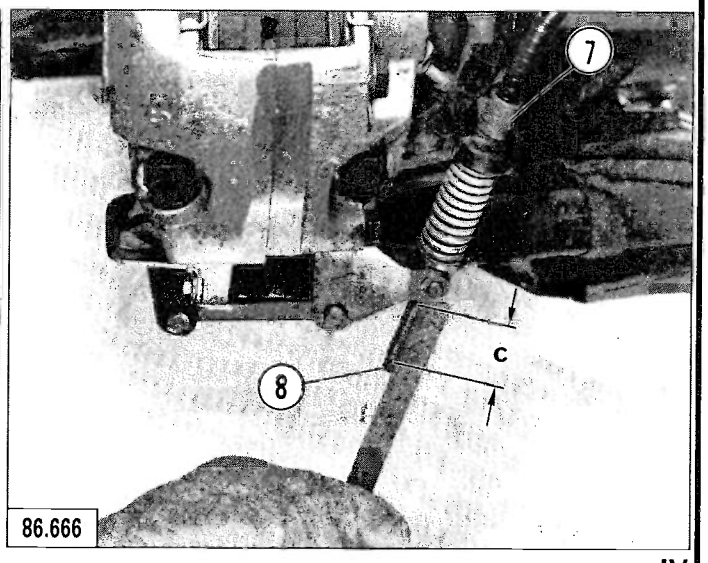

IV

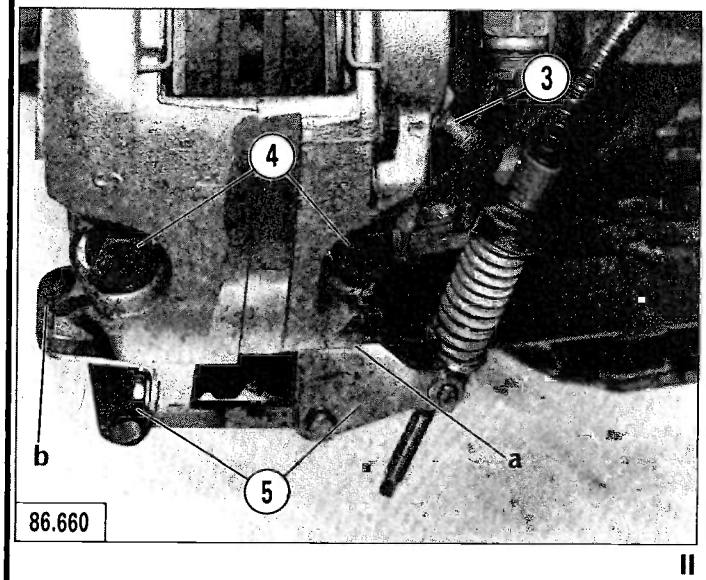

II

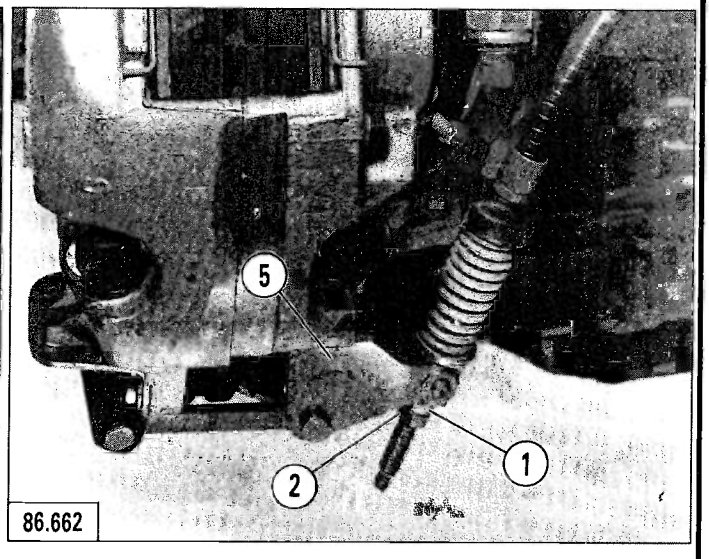

V

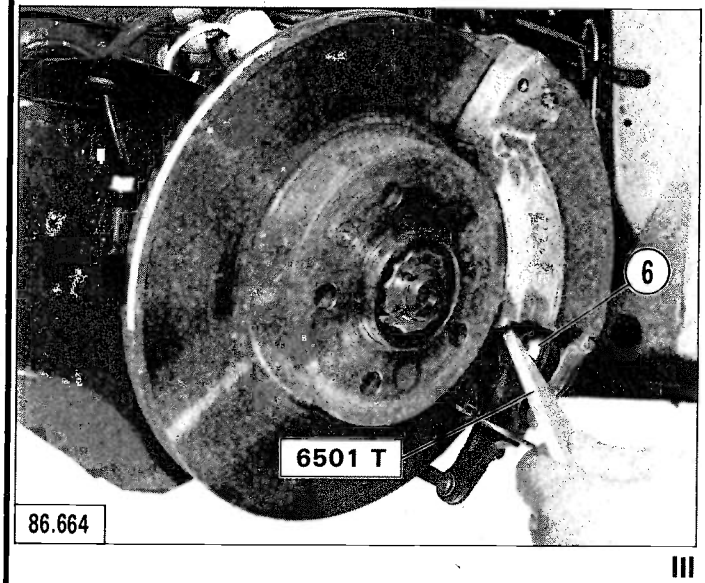

III

REMOVING/REFITTING THE A.B.S.
HYDRAULIC CONTROL BLOCK

REMOVAL

Set the height control switch to the «low» position.

Depressurize the hydraulic system.

Drain the brake accumulator.

Disconnect the battery.

Remove:
- the spare wheel,
- ABS control unit protection panel.

Uncouple the assistance cable from the centrifugal regulator.

Unclip control unit (1), **Fig. I.**

Extract, Fig. I :
- screws (2),
- trim cover (3).

Disconnect Fig. II, electrical harness (7).

Uncouple, Fig. II :
- rear brake outlet pipe (4),
- supply inlet from rear brake control valve (5),
- fuel tank return pipe (6),
- LH front brake outlet pipe (8),
- RH front brake outlet pipe (10),
- supply inlet from brake control valve (9).

Slacken the hydraulic control unit fixing nuts **«a», Fig. II.**

Remove the block.

REFITTING

- Place the hydraulic control block onto its support bracket, **Fig.II.**

Start screwing in by hand connecting nuts (4), (8) and (10) and feed pipe union nuts (5 and 9) provided with *NEW sleeve seals.*

Tighten:
- the three nuts **«a»** securing hydraulic control unit to its bracket, to **0.8 mdaN,**
- the connecting nuts.

Recouple return pipe (6).

Reconnect wiring harness (7).

Refit, Fig.I :
- trim cover (3),
- screws (2).

Clip the assembly in place on the control block.

Recouple the power cable with the centrifugal regulator.

Bleed the brakes:

Apply the same procedure as for non A.B.S. vehicles. *(See 11 MA 453.0/1).*

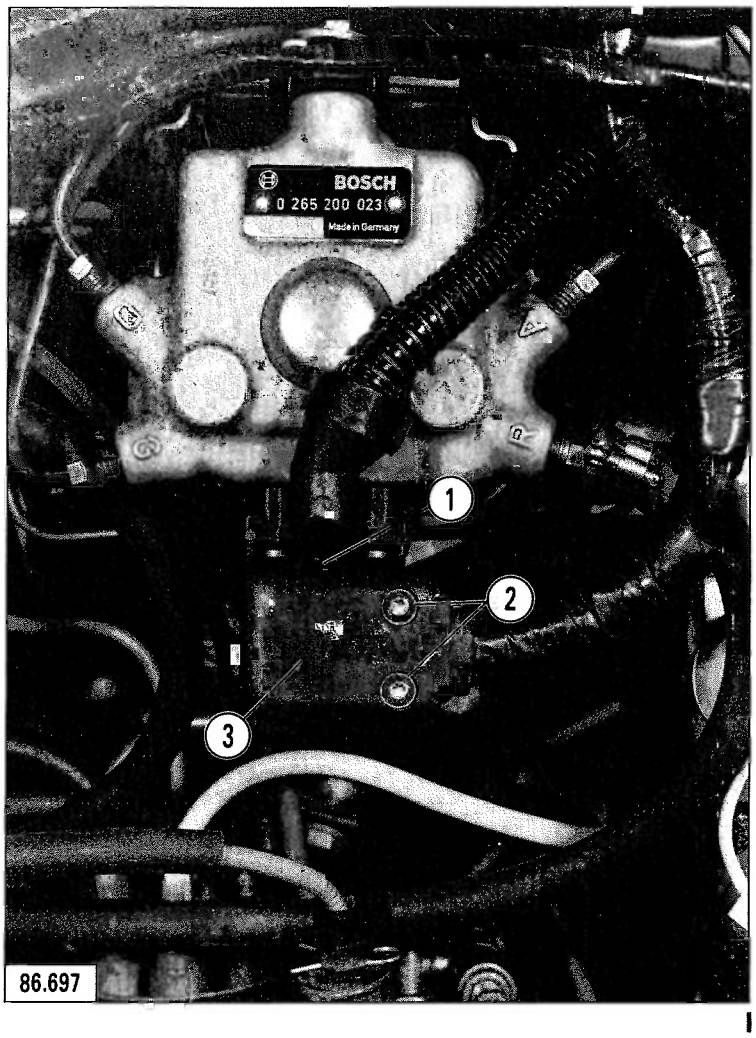

I

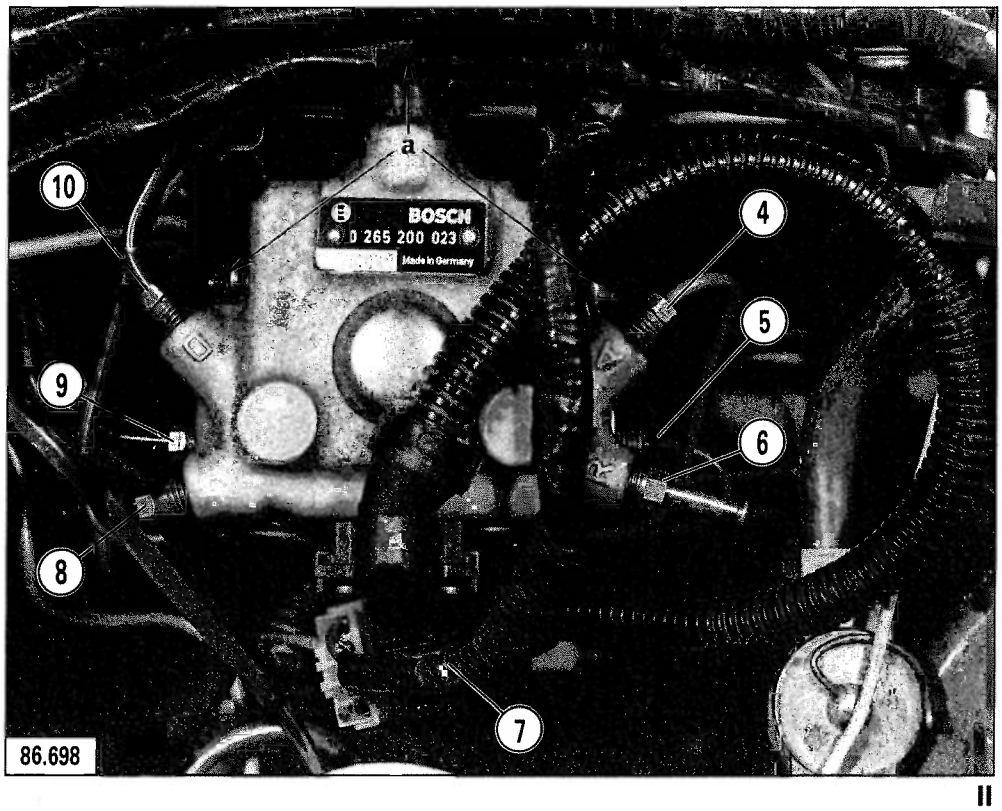

II

12

LIST OF OPERATIONS APPEARING IN THE CHAPTER: ELECTRICAL SYSTEM

OPERATION No.	DESCRIPTION	OPERATION: TEXTS △	OPERATION: SYMBOLS ○	VEHICLE CONCERNED – ENGINE TYPE: 20 Petrol 829 A 5	22 Petrol J6T A 500	25 Petrol Injection 25/659	25 Prestige 25/659	25 Petrol Turbo 25/662	25 Prestige Petrol Turbo 25/662	25 Diesel 25/660	25 Diesel Turbo 25/648	25 Limousine Diesel Turbo 25/648	20 Safari Petrol + Familiale 829 A 5	25 Safari Petrol Injection 25/659	25 Safari Diesel + Familiale 25/660	25 Safari Diesel Turbo 25/648	Ambulance 829 A 5 or 25/660		
MA 510.000/1	Electrical installation general characteristics	△		X	X	X	X	X	X	X	X	X	X	X	X	X	X		
MA 510.00/1	Junction box ALL MODELS	△		X	X	X	X	X	X	X	X	X	X	X	X	X	X		
MA 510.00/2	Instrument panel ALL MODELS	△		X	X	X	X	X	X	X	X	X	X	X	X	X	X		
MA 510.00/3	Positioning of relays and electronic controllers ALL MODELS		○	X	X	X	X	X	X	X	X	X	X	X	X	X	X		
MA 510.00/10	Arrangement of the electrical installation		○	X	X								X				X		
MA 510.00/11	Arrangement of the electrical installation		○			X	X							X			X		
MA 510.00/12	Arrangement of the electrical installation		○					X	X						X	X			
MA 510.00/13	Arrangement of the electrical installation		○							X	X	X							
MA 510.00/21	Electrical diagram for sun-roof, optional fitting		○	X	X	X		X		X	X								
MA 510.00/22	Cruise control system		○			X	X				X	X		X		X			
MA 510.00/23	Automatic gearbox		○			X	X							X					
MA 510.00/24	1986 Model Year Club Safari		○										X	X	X	X			
MA 510.00/25	Anti-locking brake system		○			X	X	X	X		X	X		X		X			
MA 510.00/26	Reinforced air-conditioning		○	X		X													
MA 520.1/1	Removing the instrument panel ALL MODELS		○	X	X	X	X	X	X	X	X	X	X	X	X	X	X		

ELECTRICAL INSTALLATION GENERAL OUTLINES

PRESENTATION:

The electrical system operations are composed of:

- A main wiring diagram.
- A circuit diagram.
- Lists of parts,
  harnesses,
  earth connections,
  connectors between harnesses.
- A fuse table.
  A lamp chart.
- Various circuit and wiring diagrams for special functions or optional equipment.

UTILISATION:

The **wiring diagram** indicates the location of the components, harnesses, earth connections and connectors on the vehicle.

The **circuit diagram** presents the electrical circuits in a functional way.

- The components symbols in the circuit diagram are those shown on the symbol key *(see pages 2 and 3)*.
- Several symbols can be used for a component and the item can be shown exploded on different lines according to the functions.
- Switches are shown at rest, with vehicle stationary, and the doors closed.
- The switches must be moved from right to left.
- The position of a relay coil, generally to the left of the contact switch, is not compulsorily so.
- In cases where the selector switch is complex, the contact movements are shown in the manner to be considered the most comprehensible.
- The electronic control units are not shown in detail.

Parts list: the parts are in the alphabetical order, and numbered.
The number of the item remains the same on all the diagrams provided the function has not changed. The parts list enables any item to be located on the wiring diagram (by means of letters and figures), and on the circuit diagram (with a vertical line No). The identification of the connector and the ref. letter of the harness attached to the part are also included in the parts list.

List of harnesses: it gives the position of electrical harnesses on the wiring diagram and the location of each lead of this harness on the circuit diagram (capital letter in the middle of the wire).

List of earth connections: it indicates the location of the earth connections and the wires or connectors and the connecting harnesses (letter «m», followed by a number).

List of harness inter connections : it indicates,

- the reference of the harness concerned,
- the type of end fittings: I, metal contact or connecting pin,
  U, clip or socket,
- the colour of the wire insulator and the marking or sleeve colour code,
- the junction connector: number of channels, colour and channel involved,
- the location of this connector on the wiring diagram,
- the location of each channel of the connector on the circuit diagram.

The harnesses are described in alphabetic order.

Example:

Harness	Connector									Harness	Location (Diagram)	
	Type	Colour		No. of channels Colour			Colour		Type		Circuit	Wiring
		Wire	Marker	No.		Chan.	Wire	Marker				
G	I	M	V	3	B	1 2 3	N	V	U	M	91	d5

Between harnesses G (LH front) & M (engine), there is a white 3 channel connector. On channel 1, the wire is colour brown with a green marker and a flat pin on the side of LH harness. On the side of engine harness, it is colour black with a green marker ending in a clip.

This connector is found on "d5" on the wiring diagram (referred as round 0. This circle can include other connectors).

The No. 1 channel of the white 3 channel connector is to be found on line **"91"** of the circuit diagram (reference **3B1**).

REF. MARKS: several ref. types are utilised.

Large capital figures identify the parts.
Large capital letters identify the harnesses.
Small letters denote the colours according to the code below:

B: White	G: Grey	Ic: Clear	Mv: Mauve (purple)	Or: Orange	Rz: Pink
Bl: Blue	J: Yellow	M: Brown	N: Black	R: Red	V: Green

- When used on their own, these letters indicate the colour either of a paint mark or of a colour stripe on the wire.
- When a horizontal bar is over them, the letters identify the colour of the wire insulator.
- Used in a box, a letter denotes the colour of the connector.

Small figures: indicate the number of channels or the channel No. of a connector. Marking is on the insulator (injection). The channels are numbered 1 to 10 but in fact, 10 is represented as 0.

Roman figures: are used to number the function diagrams and the columns on the junction box and to locate the various outlet connections of the latter.

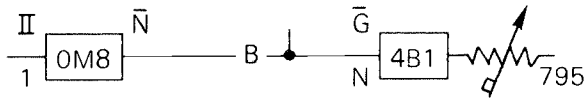

Example:

This connector is the first one of the 2nd column (II) of the junction box, situated to the right hand side. It is a brown (M) 10 channel 0 connector [ ] The channel is the 8th way (8) marked on the junction box, starting from the RH side. From the channel is a black wire (N), included in the instrument panel (B) to junction box harness. The wire has an internal splice: the grey spliced wire (G) incorporates a black (N) marker on the section entering the channel 1 from 4 way white connector **4B1** of lighting rheostat (795).

KEY TO SYMBOLS

1. Socket connection
2. Pin connection
3. Connector connection
4. Screened conductor
5. Fuse
6. Diode (rectifier)
7. Accumulator unit
8. Capacitor
9. Manual swich
10. Permanent position switch
11. Mechanically-operated switch
12. Pressure switch
13. Temperature switch
14. Lighting lamp
15. Warning lamp
16. Sound equipment
17. Engine
18. Indicator
19. Resistance
20. Rheostat
21. Winding (relay, etc.)
22. Ground connection
23. Electronic control unit
24. Delay unit

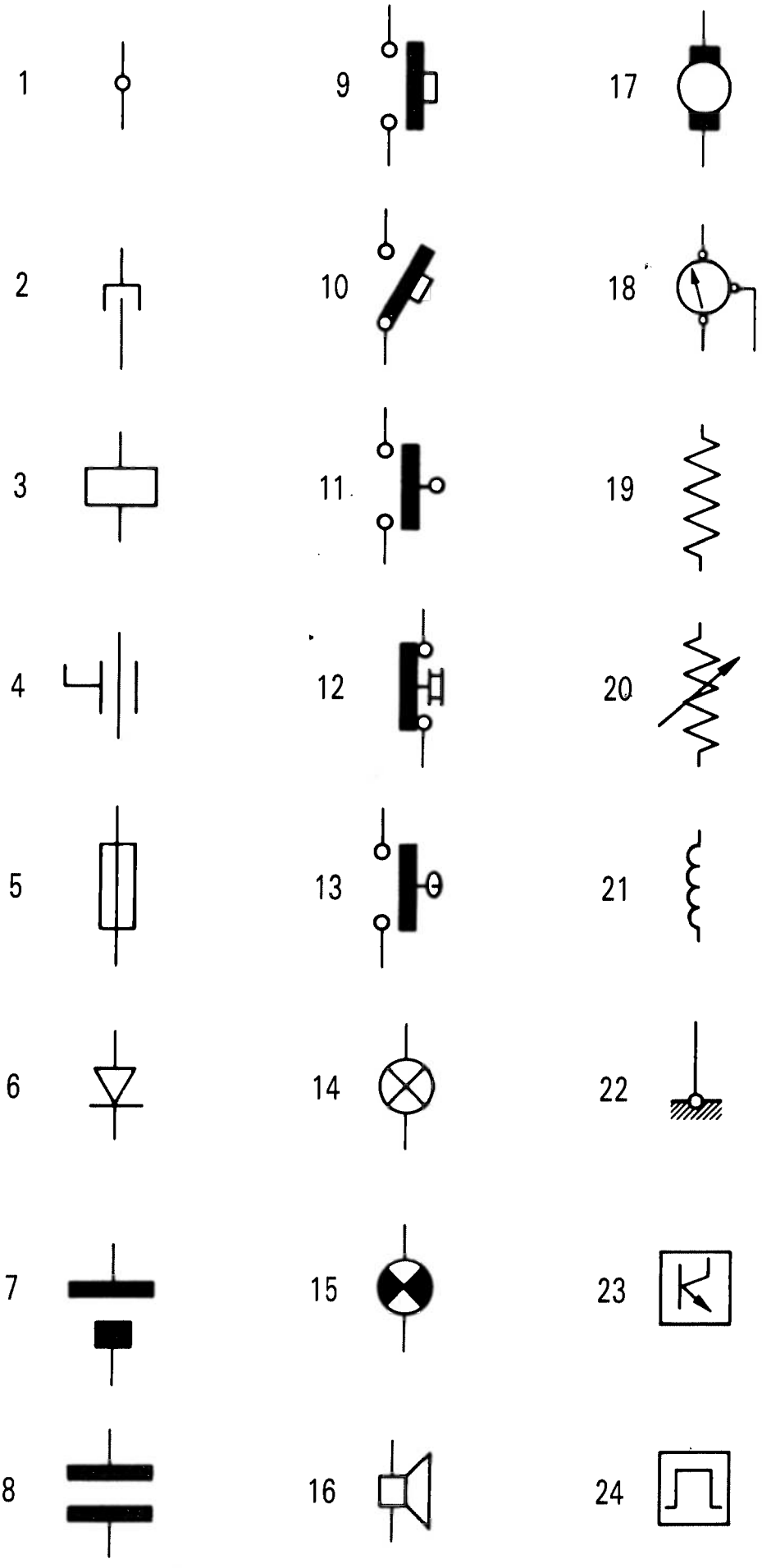

TT 51-8a

The junction box is to be found under the dashboard, to the left (right on RHD) of the steering wheel. It combines most of the electrical functions.

It is presented on page 3, as seen from above, the front of the vehicle being directed to the left.

COMPONENTS:

- 14 fuses (refer to the table)
- A relay for the electric cooling fan : **R1**
- A relay for the rear window winder motor : **R2**
- A relay for the front window winder motor : **R3**
- A relay for the heated rear screen : **R4**
- A direction indicator unit : **C**
- A delay/timer unit for the windscreen wiper : **I**
- Connectors

Connectors:

- 26, all different, can be connected.
- They are different by the number of channels and their colour, each colour being attributed a specific casing slot.
- They are grouped by columns **I to V** (from left to right) and stages **1 to 6** max. (from top to bottom).

All these figures are to be found either side of the conductor on the circuit diagram.

How to read the table *(page 2)*: **Example II 1 0 M 9**
B

Connector situated in the 2nd column **(II)**, 1st stage **(1).**

It is a brown **(M)** 10 channel **(O)** connector.

The lead (conductor) is located in the channel **9** of the connector concerned on the circuit diagram.

Function : lead supplying the clock electrically: + permanent after fuse **F**7.

Wires and stripes **(V $\overline{N}$)** Green wire with a black stripe.

Position **(68)**: number of the vertical line on the circuit diagram where the channel and the connector in question are to be found.

The letter positioned below indicates the harness which connects at that place: **B** (box).

Special features:

The two black 2 channel connectors used, cannot be mistaken: they differ by a 9 mm clip on the one hand and a 5 mm flat pin on the other hand.

The yellow 2 channel connector and fuse F14 are used in cold countries only.

Column Stage No. of Channels Colour	Channel	Colour Wire	Colour Marker	Function	Circuit diag. location
I 2 5 M On Harness G	1	J	M	Earth 106-201	211
	2	V		L/H Front Side Lamp	201
	3	J		Main Beam	212
	4	G	V	Dipped Beam	213
	5	V	Bl	L/H Direction Indicator	107
I 3 5 B D	1	G		Dipped Beam	214
	2	J	G	Main Beam	215
	3	V		R/H Side Lamp	202
	4	J	M	Earth 111-203	216
	5	V	Bl	R/H Direction Indicator	112
I 4 0 B R	1	Yellow Ribbon Cable		Heated Rear Screen	162
	2			Heated Rear Screen	163
	3			Boot Lighting	188
	4			Side Lamps	217
	5			Rear No Plate Lamps	219
	6			Stop Lamps	147
	7			L/H Direction Indicator	109
	8			R/H Direction Indicator	110
	9			Reversing Lamps	33
	0			Rear Fog Lamps	208
II 1 0 M B	1				
	2	J	G	Main Beam	216
	3				
	4				
	5	B	R	Side Lamps	211
	6				
	7	M	V	Hand Brake	90
	8	N		+ Ignition Switch	79
	9	V	N	+ Direct	68
	0	V	Bl	Tachometer	65
II 2 8 B B	1			Side Lamp	204
	2	B	G	Hazard Warning Switch	111
	3	B	N	+ Direct	110
	4	B	Bl	L/H Direction Indicator	111
	5	B	Mv	+ Ignition Switch	111
	6	B	J	+ Direction Indicator Unit	107
	7	B		R/H Direction Indicator	112
	8	M		Earth	113
II 3 2 B H	1	V		Cigar Lighter Lighting	203
	2				
II 4 3 M M B	1	J		Earth	94
	2	J		Earth	93
	3	J		Earth	92
II 5 3 B H	1	V	J	Rear View Mirror De-Icing	158
	2	V	B	Heated Rear Screen Switch	162
	3	V	Mv	+ Ignition Switch (Heated Rear Screen)	162
III 1 2 M H	1	J		Earth 204	189
		J	N	+ Cigar Lighter	90
III 2 6 M H	1	G	N	+ Stop Lamp Switch	147
	2	G	M	Earth	90
	3				
	4	V	R	+ Glove Box Lighting	187
	5	G		Stop Lamp Switch	147
	6	V		Hand Brake Switch	90
III 3 2 N H	1	V	R	+ Direct Radio	191
	2			(+ Ignition Switch)	
III 4 4 B	1			Ignition Switch + C (F3)	138
	2			Ignition Switch + C (F2)	27
	3			Starter Switch	5
	4			Ignition Switch + C Ignition	38

Column Stage No. of Channels Colour	Channel	Colour Wire	Colour Marker	Function	Circ. diag. location
III 5 3 Bl G	1	J	Mv	+ Ignition	40
	2	V	Mv	+ Ignition Switch	38
	3	V	B	Tachometer	66
III 6 6 B H	1	J	Mv	+ Ignition Switch - Heater	20
	2	J	G	+ Ignition Switch - Heater	27
	3				
	4				
	5	J	R	Heater Earth	24
	6	J	Bl	Heater Earth	31
IV 1 0 J B	1	Bl		Main Beam	215
	2	J	V	Dipped Beam	213
	3	G		Rear Fog Lamp Switch	208
	4	G	N	+ Direction Indicator Switch	108
	5	G	Bl	L/H Direction Indicator	109
	6	G	M	Earth	105
	7	G	R	Side Lamps	211
	8	G	B	R/H Direction Indicator	110
	9	J	N	+ Direct Lighting	201
	0	Bl	N	+ Direct Lighting	201
IV 2 4 M	1			+ Battery - Ignition Switch	138
	2			+ Battery - Ignition Switch	27
	3			+ Battery - Ignition Switch	5
	4			+ Battery - Ignition Switch	38
IV 3 1 N	1			Heated Rear Screen	
IV 4 6 J B	1	J	R	Windscreen Wiper Fast Speed	133
	2	J	Mv	Windsc. Wiper + Ignit. Switch	138
	3	G	Mv	Windscreen Washer Pump	138
	4	J	Bl	Windscreen Wiper Slow Speed	134
	5	G	V	Windscreen Wiper Parking	136
	6	G	J	Windscreen Wiper Timer	135
IV 5 7 B G	1	G	Mv	Windscreen Washer Pump	138
	2	G	M	Earth 6-80	138
	3	J	G	Earth	160
	4	M		Cooling Fan Relay	6
	5	G	B	Horn	159
	6	Bl		Cooling Fan	7
	7	V	J	+ Ignition Cooling Fan Relay	6
V 1 3 J B	1				
	2	B	V	Horn	159
	3	B	M	+ Horn	159
V 2 4 Bl H	1	Bl		Rear Window Motor	116
	2	J	V	Height Corrector Earth	141
	3	J	N	+ Direct height Corrector	144
	4	J	B	+ Ignition height Corrector	139
V 3 2 N G	1	N		+ Battery - Junction Box	2
		N		+ Battery - Junction Box	2
V 4 5 J D	1	J	R	Windscreen Wiper Fast Speed	133
	2	J	Bl	Windscreen Wiper Slow Speed	134
	3	G	B	Windscreen Wiper Parking	136
	4	J	N	+ Ignition Windscreen Wiper	137
	5	J		Earth Windscreen Wiper	134
V 5 4 J G	1	J	R	Starter Solenoid	5
	2	G	Bl	Reversing Lamps	33
	3	G		+ Ignition Switch After F1	34
	4	G	R	+ Ignition Switch Rev. Switch	33
V 6 3 R H	1	Bl	N	Rear Window Motor	128
	2	G	R	+ Direct After F7	179
	3	J	M	+ Direct Rear Cigar Ligther	139

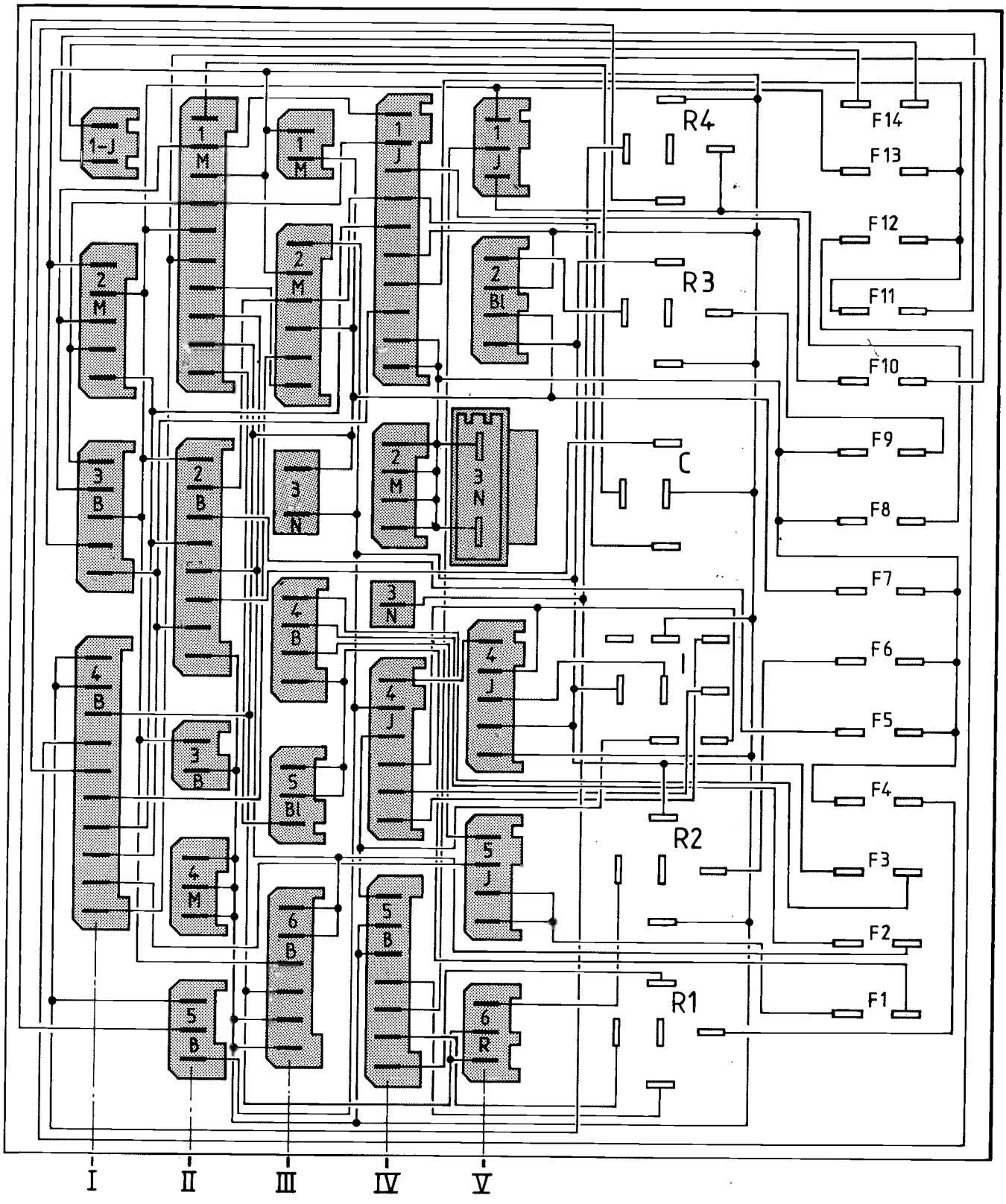

L 52.3b

INSTRUMENT PANEL CONNECTORS

	Connectors No.	Connectors Col.	Connectors Channel	Colour Wire	Colour Marker	Function	Circuit diag. Location
1	3	B	1	M	B	Eng. Oil Pressure Sensor	91
				M	G	Eng. Oil Sensor	93
				M			
2	3	B	1	N	V	Low Fuel Warning Lamp	94
			2	N	J	Fuel Gauge	95
			3	M	J	Fuel Transmitter Earth	96
3	6	B	1	B		Instrument Lighting	105
			2	B	Bl	L/H Dir. Ind. Warning	106
			3			Seat Belt Warning	
			4	V	Mv	+ Ignition Switch (After F2)	85
			5	G	M	Earth 107	- 211
			6	N	B	R/H Dir. Ind. Warning	108
4	4	B	1	N	Mv	+ Ignition Switch (After F2)	65
			2	M		Earth	66
			3			Diesel TDC	
			4			Tachometer	65
5	4	V	1	V	B	Turbo Pres. Warning	64
			2	V	G	Anti-knock Warning	63
			3				
			4				
6	4	—	1				
			2				
			3				
			4				
7	3	B	1	M	R	Earth Test Warning } Rear Bulb Failure Unit	81 82 83

	Connectors No.	Connectors Col.	Connectors Channel	Colour Wire	Colour Marker	Function	Circuit diag. Location
8	3	B	1	M		Choke	84
			2			Diesel Pre Heating	
			3			Front Bulb Failure	
9	9	J	1	M	R	"Stop" Warning	74
			2	M	V	Hydraulic Warning	80
			3	V	M	Eng. Oil Low Pressure Warning	79
			4	V	Mv	Water Low Level Warning	77
			5	V	B	Water Temp. Warning	73
			6	V	N	" + Ignition Switch	80
			7	M	Bl	Battery Charge Warning	89
			8	M	B	Eng. Oil Temp. Warning	70
			9			Water Low Temp. Warning	
10	6	V	1	N	M	L/H Rear Door Warning	100
			2	V		Boot Door Warning	102
			3	V	G	R/H Rear Door Warning	101
			4	M	B	L/H Front Door Warning	98
			5	N	B	R/H Front Door Warning	99
			6	V	R	Bonnet Door Warning	97
11	9	V	1			Yelow Warning } econoscope	
			2			Red Warning } econoscope	
			3	V	M	Brake Pad Wear Warning	85
			4	M	V	Hand Brake Warning	90
			5			Rear Fog Lamp Warning	
			6	V	R	Side Lamp Warning	211
			7	V	Bl	Dipped Beam Warning	212
			8	V	J	Main Beam Warning	214
			9			Clogged Filter Warning	
12	2	B	1	M		ABS Warning	103
			2	V	Mv	+ Ignition Switch ABS	103

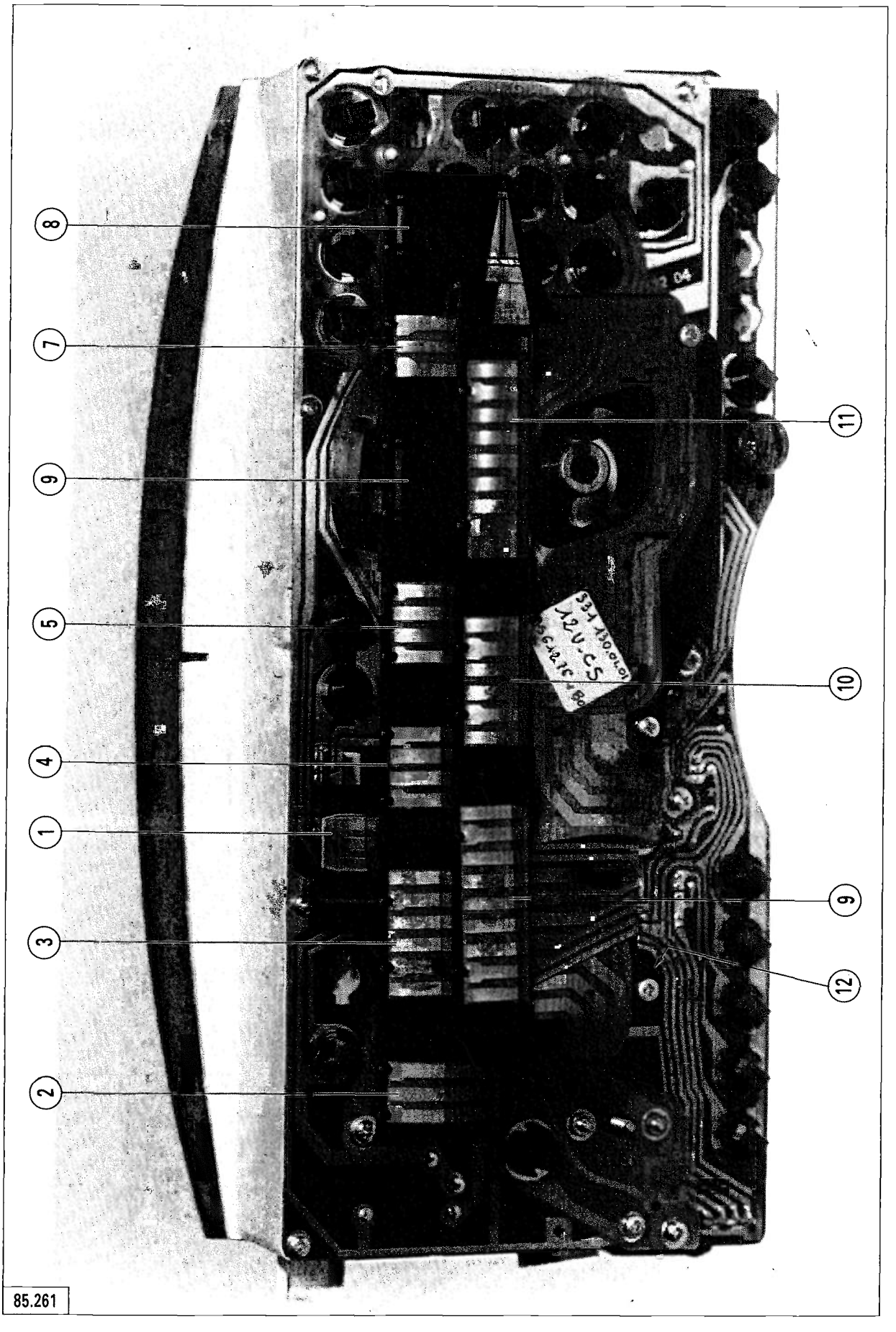

85.261

POSITIONING OF THE ELECTRONIC CONTROL UNITS AND RELAYS

No.	Description	Location
54	ABS Control Unit	G
57	Fuel Calculator Unit	A
60	Air Conditioning Control Unit	A
76	Window Winder Unit	F
80	Speed Regulating Unit	E
81	Heater Control Unit	A
84	Water Level Unit	L
87	Water Temperature Unit	B
89	Door Locking Warning Unit	A
90	Door Lock Control Unit	A
91	Remote Control door Lock Unit	C
92	Interior Lighting Timer	A
93	Bulb Failure Indicator Unit (Saloon)	H
93	Bulb Failure Indicator Unit (Safari)	J
110	Heater Plug Control Unit	K
127	Side lamp Audible Warning	D
141	Ignition ECU	K
142	Injection ECU	E
151	Water temperature Flasher unit	B
658	Blower Speed Control Unit	E
731	Fuel Injection electronic Relay	M
733	Air Cond. Engine Fan Relay	K
734	Injector relay	M
735	Main Beam Relay	D
739	Height Control relay	B
743	Air Horn Compressor Relay	K
745	Blower Motor Fast Speed Relay	A
750	Fog Lamp Relay	B
756	ABS Electro-Valve Relay	L
757	ABS Protection Relay	L
772	Blower Fan Motor 2nd Speed Relay	K
773	Engine Cooling Fan Inverter Relay	K
775	Starter Motor Safety Relay (Auto G/Box)	B
778	Fuel Heater/Starter Motor Relay (with diode)	K
779	Fuel Heater Oil pressure Relay (with diode)	K
781	Main fuel Heater Relay	K
R1	Engine Cooling Fan Relay	B
R2	Front Window Winder Relay	B
R3	Rear Window Winder Relay	B
R4	Heated Rear Screen Relay	B
I	Windscreen Wiper Timer Relay	B
C	Direction Indicator Unit	B

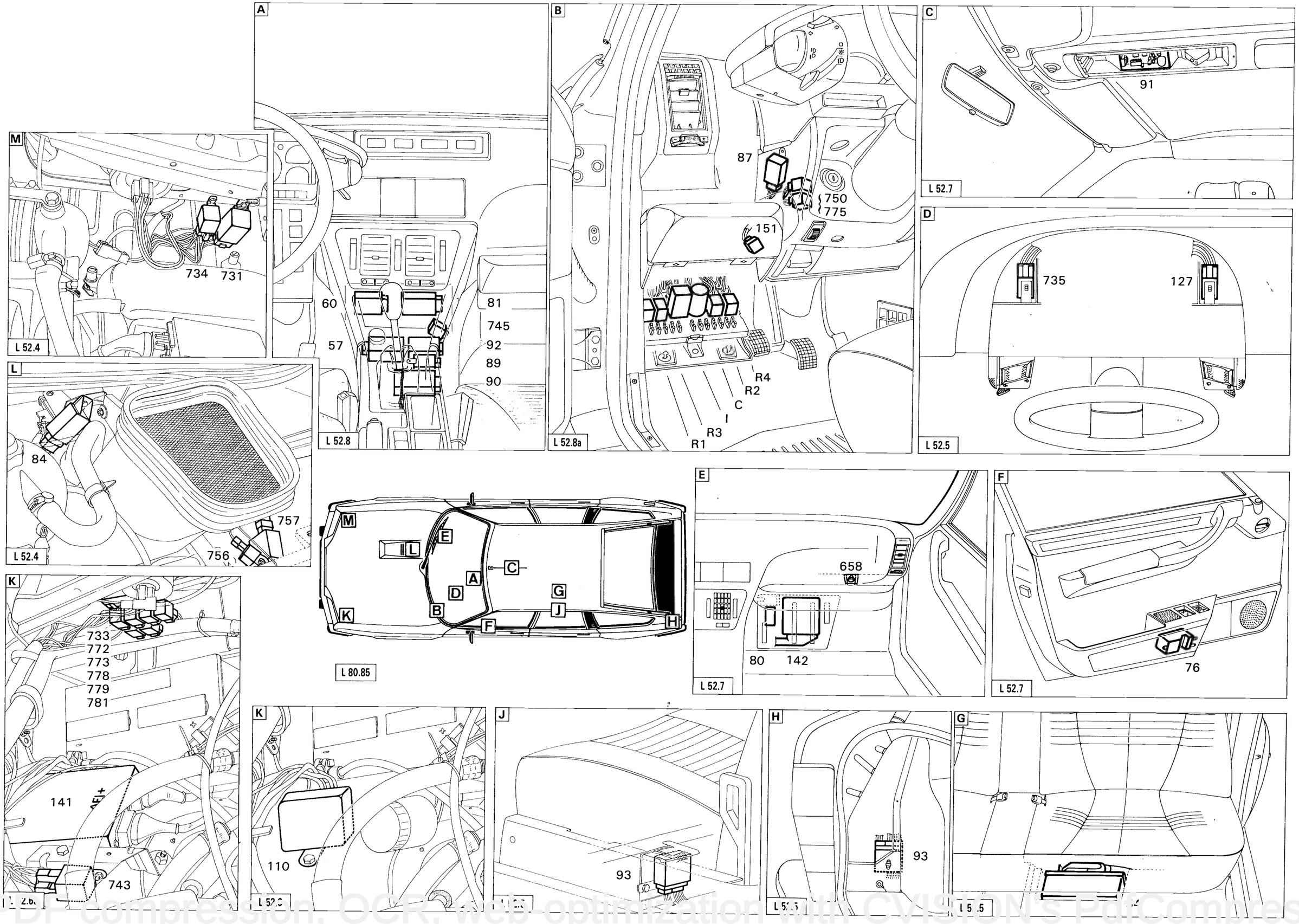

CX 22 TRS

7/85 →

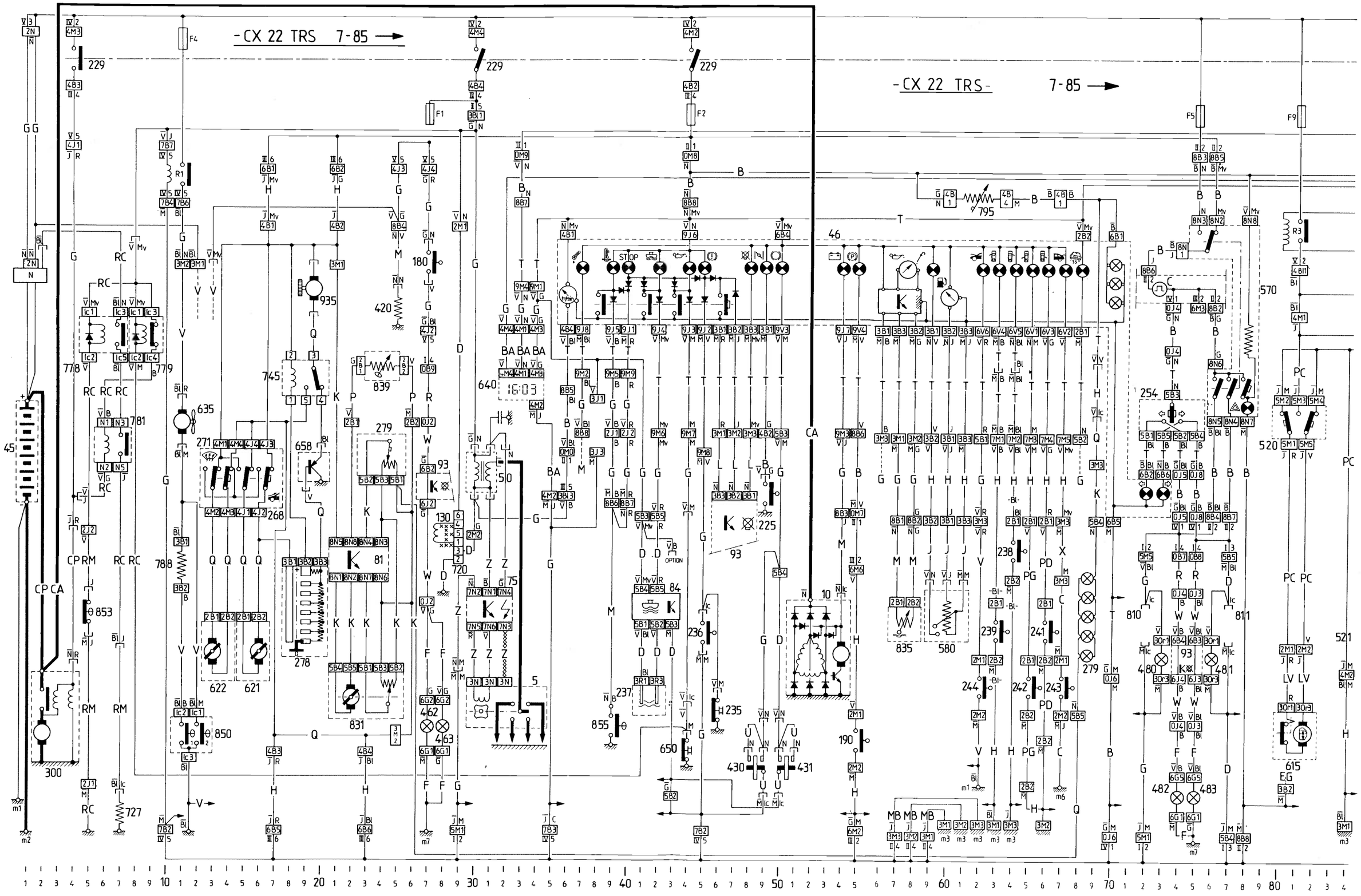

REF.	DESCRIPTION	LOCATION Circuit	LOCATION Wiring	CONNECTOR Number Channel-colour	HARNESS (or unit)
1	Front cigar lighter & lighting	137-151	j5	3B-1V	H
5	Ignition distributor	30 to 34		3N	Z
10	Alternator	51 to 54	b6	1N + 1Ic	CA & M
25	A & B Horn	107 - 108	c7	1N + 1N	A
45	Battery	1	b8	1N + 1N	CP & CN
46	Instrument panel 36 to 73	159 to 162	g6	*	T
50	Ignition coil	30-31		1N + 1Ic	G
75	Ignition module	30 to 32		7N	Z
81	Interior heating control unit	21 to 24	h5	8N	K
84	Coolant level indicator unit	41 to 43	e4	5B	D
89	Door locking indicator lamp unit	131-132	j5	5N	H
90	Door locking control unit	124 to 134	j5	9V	H
91	Remote control door locking unit "PLIP"	120 to 122	n5	8N	P
92	Interior lamp timer	117 to 122	j5	7M	H
93	Bulb failure detection unit 27, 46 to 48, 74-75,	104-165	s8	3B + 6B & 6J	L & W
95	Junction/Fuse box	*	g8	*	*
127	Side lamp audible warning	122-123	g6	5N	T
130	TDC sensor	28		3M	
170	Boot light switch	136	s6	1M	E
174	Boot door locking switch	126	t5	2M	C
180	Reversing lamp switch	27	d6	1N + 1V	G
185	Stop lamp switch	104	h6	1N + 1M	H
190	Hand brake switch	55	k5	2M	H
225	Carburettor choke switch	49		1G	B
229	Ignition switch 4-30,	44-95	h7	4M + 4B	(95)
230	L/H Front door switch	119	f9	1M	H
231	R/H Front door switch	120	f1	1M	H
232	L/H rear door switch	122	k9	1M	H
233	R/H Rear door switch	123	k1	1M	H
234	Glove box switch	135	f3	1 Ic + 1 Ic	H
235	Hydraulic fluid low pressure switch	46	e6	1M	G
236	Hydraulic fluid level switch	45	e8	1 Ic + 1M	G
237	Coolant low level switch	41-42	e3	3R	D
238	R/H Front door lock switch	64	j1	2B	H
239	L/H Front door lock switch	63	j8	2B	H
241	R/H Rear door lock switch	66	q1	2B	PD
242	L/H rear door lock switch	65	q9	2B	PG
243	Boot door lock switch	67	c5	2M	C
244	Bonnet lock switch	62	a5	2M	V
251	Height control switch	96 to 100	j5	2M & 4M	H & (608)
254	Lighting/Direction indicator switch 72 to 75,	57 to 163	g7	5B 4M 3M	T
255	Windscreen wiper/Washer & Horn switch 90 to 95,	107	g6	4B 5B 2B	T
268	Air recycling switch	15 to 17	h5	4J	Q
271	Air distribution switch	12 to 14	h5	4M	Q
278	Blower motor speed control	18 to 20	h6	3B	Q
279	Heater control & Lighting	23 to 25-68	h4	5B	K
300	Starter motor	2 to 4	b5	1N & 1R	CP
365	Ashtray lighting	152	j6	2B	H
370	Boot lighting	136	s4	1N & 1Ic	F
375	Glove box lighting	135	f4	1N & 1M	H
380	Engine compartment lighting	150	c6	1N	EC
385	L/H rear number plate lighting	166	t6	1Ic + 1M	E
386	R/H rear number plate lighting	167	t4	1Ic + 1M	E
390	Steering lock lighting	156	g7	1Ic + 1Ic	T
420	Carburettor idle cut-out solenoid	25		1N	M
430	L/H front brake caliper	48-49	d9	2N + 1N	U(g.)
431	R/H front brake caliper	50-51	d1	2N + 1N	U(d.)
440	L/H front side lamp	149	a8	2M	G
441	R/H front side lamp	151	a2	2M	D
442	L/H rear lamp	165			
443	R/H rear lamp	166			
445	L/H rear lamp cluster		t8	6G	F
446	R/H rear lamp cluster		t2	6G	F
457	L/H stop lamp	104			

* Particular Specification

REF	DESCRIPTION	LOCATION Circuit	LOCATION Wiring	CONNECTOR Number Channel-colour	HARNESS (or unit)
458	R/H stop lamp	105			
460	L/H rear fog lamp	156			
461	R/H rear fog lamp	157			
462	L/H reversing lamp	27			
463	R/H reversing lamp	28			
470	Fuse*		g8		
480	L/H front direction indicator	73	a7	3Or	G
481	R/H front direction indicator	76	a3	3Or	D
482	L/H rear direction indicator	74			
483	R/H rear direction indicator	75			
486	L/H long range lamp connector	159	a7	2B	G
487	R/H long range lamp connector	164	a3	2B	D
488	L/H headlamp	160-161	a8	3Ic	G
489	R/H headlamp	162-163	a2	3Ic	D
500	L/H front loudspeaker connections	139	g9	1B + 1R	H
501	R/H front loudspeaker connections	141	g9	1B + 1R	H
502	L/H rear loudspeaker connections	142	k9	2B	PG
503	R/H rear loudspeaker connections	147	k1	2B	PD
506	L/H front tweeter connections	140	h9	2B	H
507	R/H front tweeter connections	140	h1	2B	H
511	Rear fog lamp switch	156 to 158	g5	8BI	B
519	L/H window motor switch on driver's door	85 to 87	h9	5B	PC
520	R/H window motor switch on driver's door	80 to 82	h9	5M	PC
521	L/H window motor switch on passenger's door	85 to 87	h1	5B	PP
532	Heated rear screen switch	110 to 112	j5	5M	P
545	Interior lighting switch	114 to 116	j5	5B	P
570	Hazard warning switch	75 to 78	g5	8N	B
580	Fuel gauge transmitter	59 to 61	g6	1M 1N 1J	J
600	Windscreen wiper motor	90 to 94	e4	5B	D
608	Height control motor	97 to 103	j4	3B	H
615	R/H front window motor	80-81	g9	3Or	LV
616	L/H front window motor	85-86	g1	3OR	PP
621	Air intake motor	15-16	e3	2B	Q
622	Air distribution motor	13-14	g4	2B	Q
625	R/H front door lock motor	125-127	j9	2M-3B	H
626	L/H front door lock motor	128 to 131	j1	2M-3B	H
627	R/H rear door lock motor	125 to 127	p9	2M-3B	PG
628	L/H rear door lock motor	128 to 131	p1	2M-3B	PD
629	Boot door lock motor	131	t5	2B	C
630	Fuel flap lock motor	127	s2	2B	X
635	Engine cooling fan motor	11	a6	1M-1R	V
640	Clock	32 to 34	f5	4M	BA
650	Engine oil pressure switch	44	d3	1M	RC
658	Blower fan speed control module	2O	f3	1V-1BI	Q
680	Windscreen washer pump	95	e1	2N	D
690	Central interior lighting	113 to 115	n5	1N+2x1Ic+1M	P
695	Front interior spot lamp	113	n5	1N-1M	P
698	Headphone socket	143 to 146	k5	5B	H
710	12 V supply soket	89	k5	1N + 1M	H
721	Radio connections (12V and loudspeakers) ("+" - &, LS)	139 to 147	k5	1R+4x2B	H
727	Carburettor mixture heating element	7		1Ic	RM
735	Main beam relay	163-164	q7	5N	T
739	Height control relay	98 to 102	f7	5N	H
745	Blower motor fast speed relay	18 to 20	g4	5N	Q
778	Mixture element temperature relay	5 to 7		5Ic	RC
779	Mixture element engine running relay	8-9		5Ic	RC
781	Mixture element engine starting relay	6-7		5N	RC
788	Engine cooling fan resistance	11		3B	V
795	Lighting rheostat	62	g6	4B	B
810	L/H direction indicator repeater connections	72	e9	1Ic$\overline{M}$ + 1Ic$\overline{V}$	G
811	R/H direction indicator repeater connections	77	e1	1Ic$\overline{M}$ + 1Ic$\overline{V}$	D
831	Interior temperature selection motor	21 to 25	g5	5B	K
835	Oil level sensor	57-58	c4	2B	M
839	Interior air temperature sensor	24	j5	2B	P
850	2 stage engine cooling fan thermal switch	11-12	b6	3Ic	V
853	Mixture element temperature thermal switch	5		1J$\overline{V}$ + 1J$\overline{M}$	RM
855	Max. coolant temperature thermal switch	39	c4	1B	M
935	Blower motor	19	d5	1$\overline{N}$ + 1$\overline{N}$	Q
945	Heated rear screen	111	r3 to 7	1N + 1N	F + ML
980	Door locked warning lamp	132	g9	1Ic + 1Ic	H

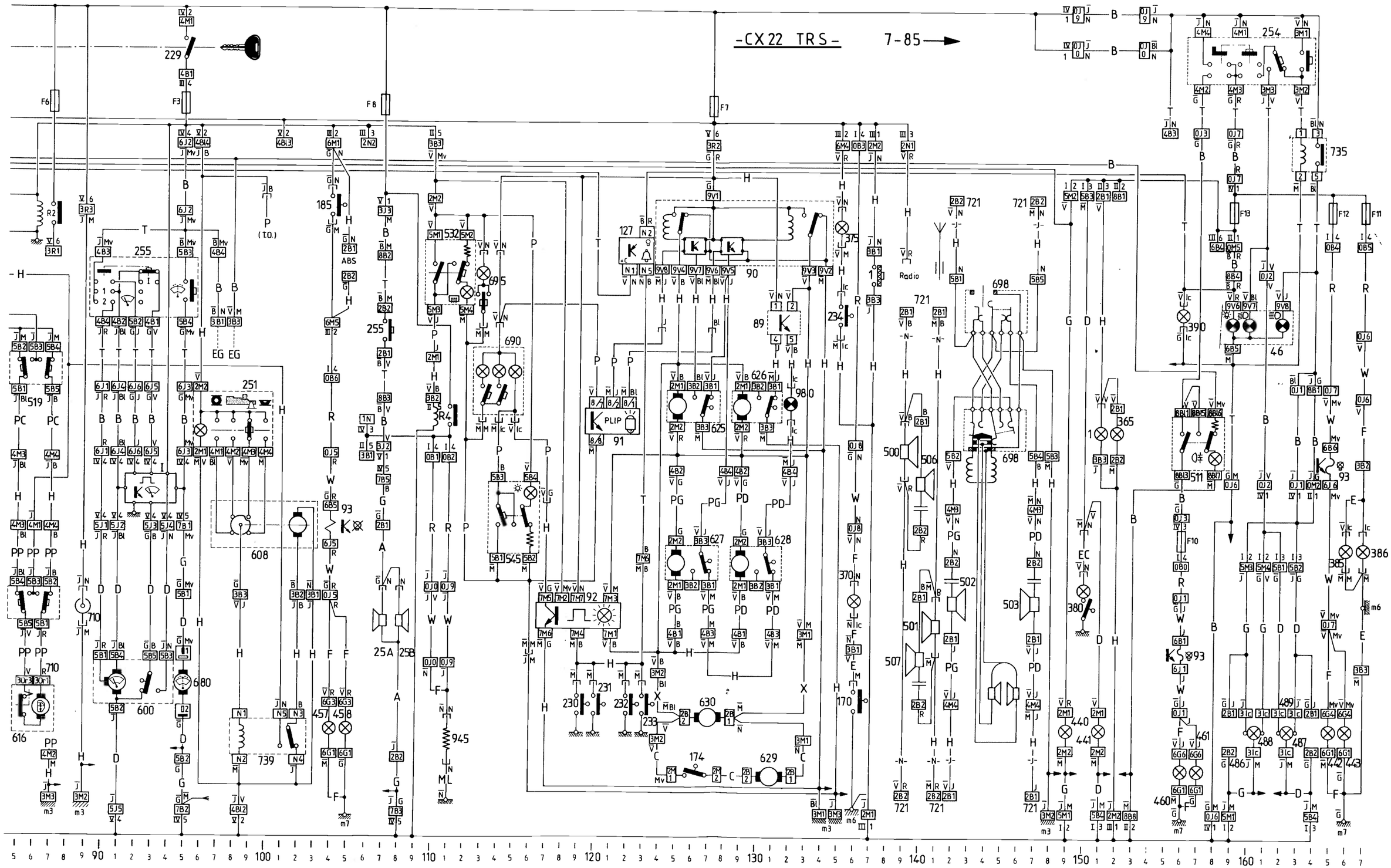

CX 25 GTI

7/85 →

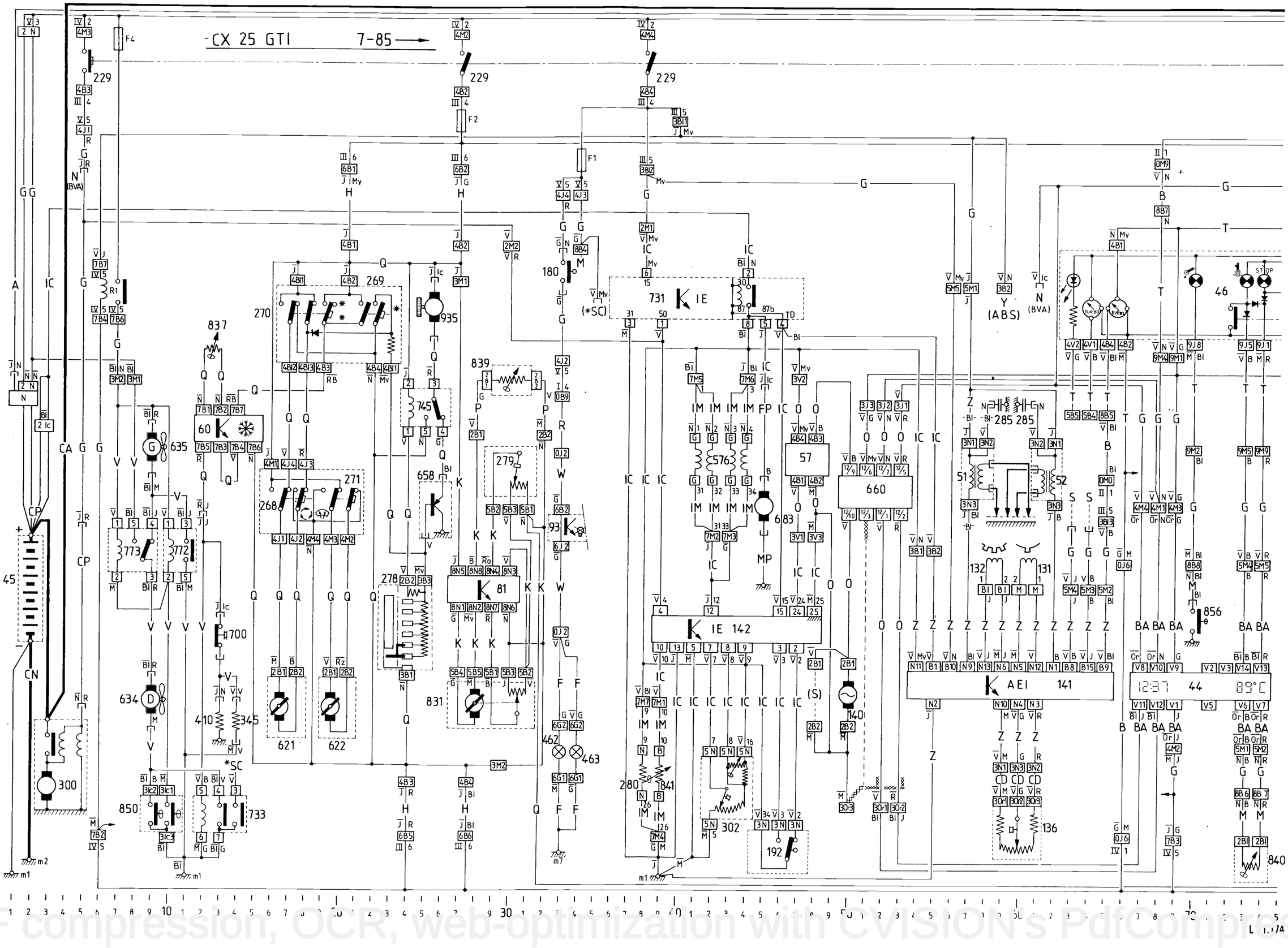

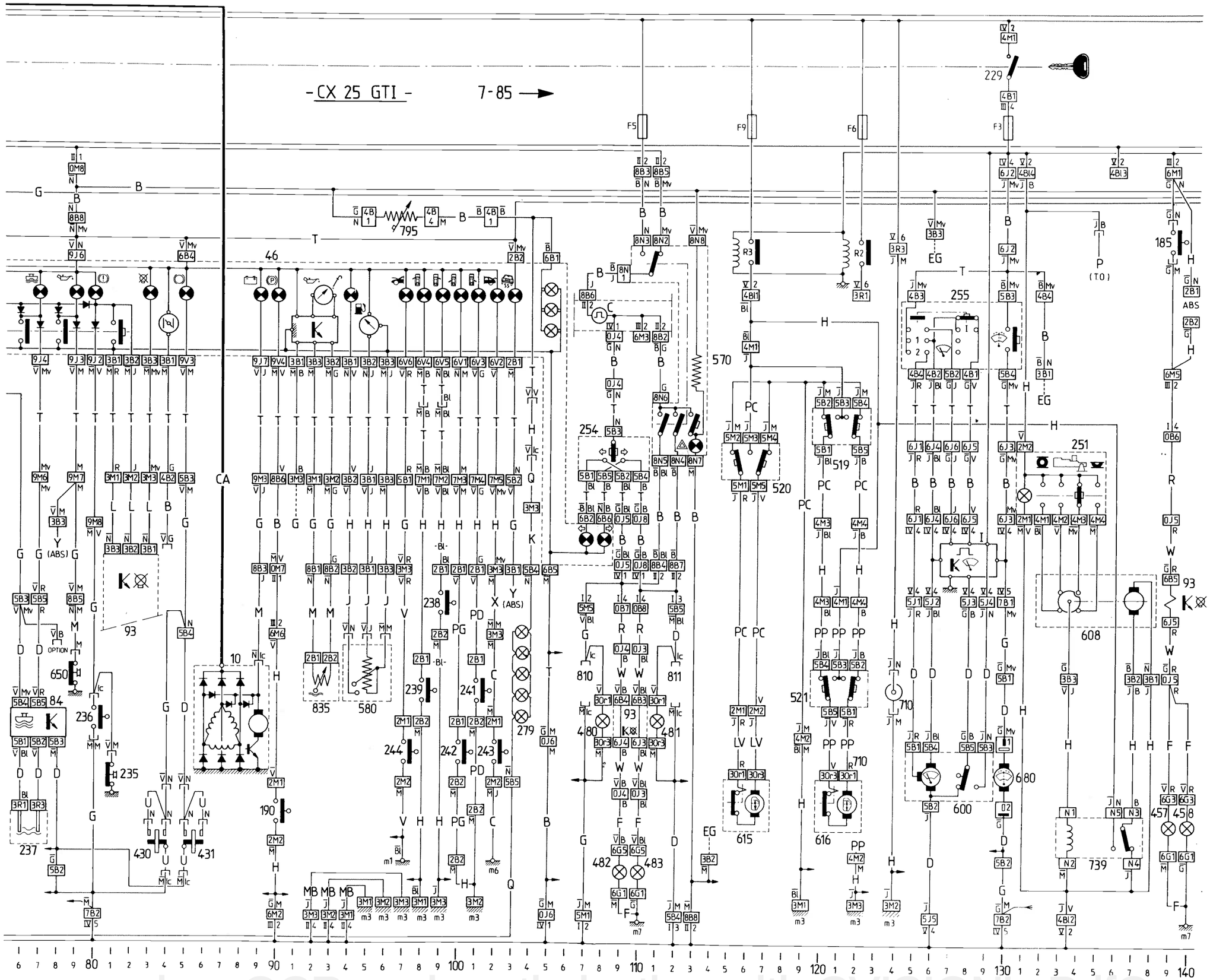

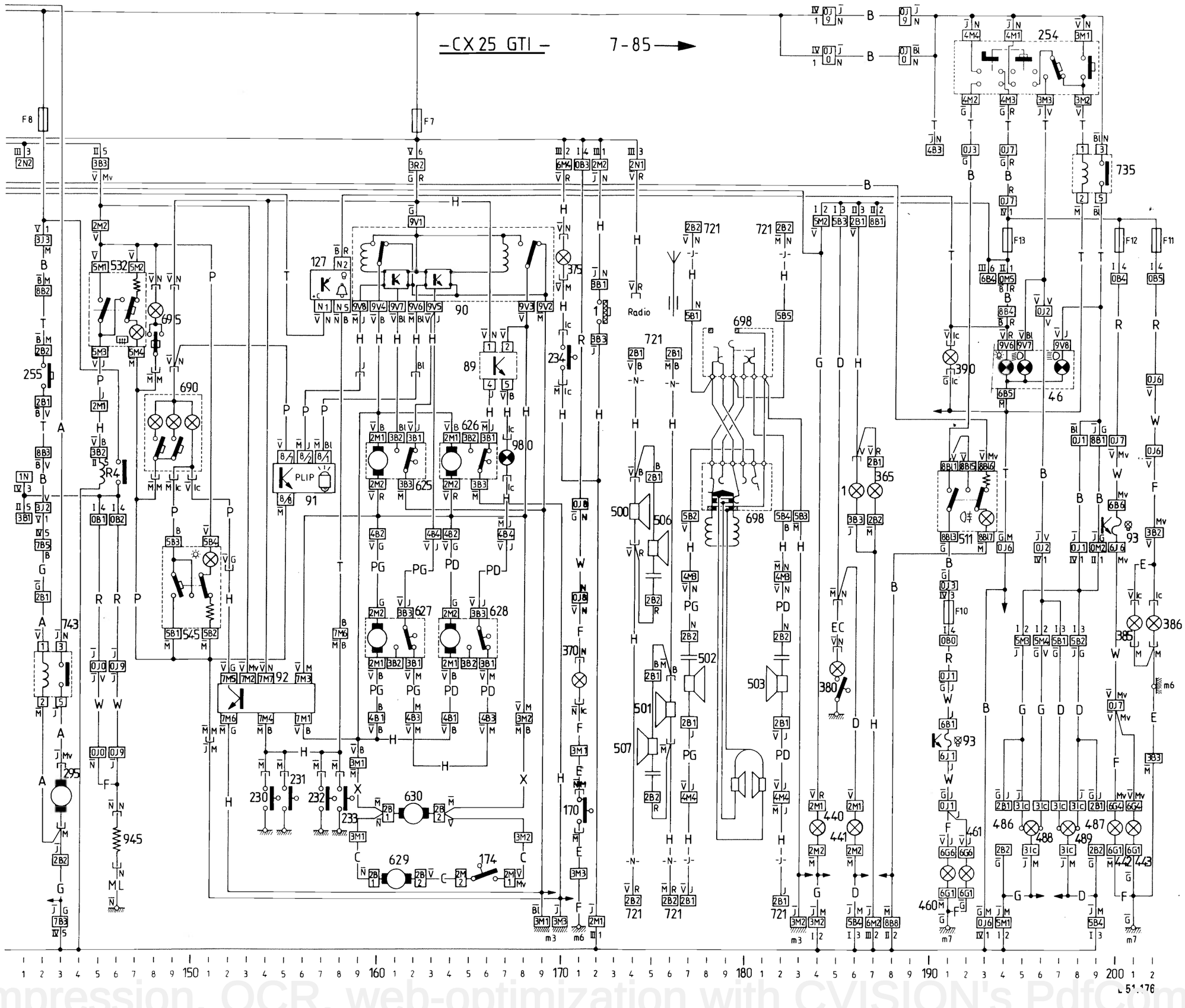

REP.	DESCRIPTION	LOCATION Circuit	LOCATION Wiring	CONNECTOR Number Channel-colour	HARNESS (or unit)
1	Front cigar lighter and lighting	172-186	j5	3B-1V	H
10	Alternator	86 to 89	b6	1Ic & 1N	M & CA
44	Digital display	67 to 74	f5	15V	BA
45	Battery	2	b8	1N & 1N	CP & CN
46	Instrument panel	63 to 108	g6	*	T
51	Ignition coil cyls 1 & 4	57-58	c6	3N	Z
52	Ignition coil cyls 2 & 3	61-62	c6	3N	Z
57	Fuel metering unit (option)	47-48	j5	4B	O
60	Air conditioning control unit (option)	12 to 15	h5	7B	Q
81	Interior heating control unit	27 to 30	h5	8N	K
84	Coolant level indicator unit	76 to 78	e4	5B	D
89	Door locking indicator lamp unit	166-167	j5	5N	H
90	Door locking control unit	159 to 169	j5	9V	H
91	Remote control door locking unit	155 to 157	n5	8N	P
92	Interior lighting timer	152 to 156	j5	7M	H
93	Bulb failure detection unit				
	33-109-110, 81 to 83, 139-	191-200	s8	3B 6B 6J	L & 2xW
95	Junction/fuse box	*	g8	*	*
127	Side lamp audible warning	157-158	g6	5N	T
131	Flywheel datum sensor	60-61	c6	2M	Z
132	Flywheel teeth sensor	58-59	d6	2BI	Z
136	Ignition vacuum sensor	59 to 61	e3	3Or	CD
140	Mileage sensor (option)	50	e7	2B	O
141	IEI control unit	54 to 65	e8	15B-15N	Z
142	Injection electronic control unit	39 to 49	g3	25N	IC
170	Boot light switch	171	s6	1M + 1	E
174	Boot door locking switch	166	t5	2M	C
180	Reversing lamp switch	33	d6	1N-1V	G
185	Stop lamp switch	139	h6	1N-1M	H
190	Hand brake switch	90	k5	2M	H
192	Throttle spindle switch	45 to 47	b4	3N	IC
229	Ignition switch 5-27,	38-130	h7	4M-4B	95
230	L/H front door switch	154	f9	1M	H
231	R/H front door switch	155	f1	1M	H
232	L/H rear door switch	157	k9	1M	H
233	R/H rear door switch	158	k1	1M	H
234	Glove box switch	170	f3	2x1Ic	H
235	Hydraulic fluid low pressure switch	81	e6	1M	G
236	Hydraulic fluid level switch	80	e8	1Ic-1M	G
237	Coolant low level switch	76-77	e3	3R	D

* Particular Specification

REP.	DESCRIPTION	LOCATION Circuit	LOCATION Wiring	CONNECTOR Number Channel-colour	HARNESS (or unit)
238	R/H front door lock switch	99	j1	2B	H
239	L/H front door lock switch	98	j8	2B	H
241	R/H rear door lock switch	101	q1	2B	PD
242	L/H rear door lock switch	100	q9	2B	PG
243	Boot door lock switch	102	t5	2M	C
244	Bonnet lock switch	97	a5	2M	V
251	Height control switch	131-135	j5	2M & 4M	H & 608
254	Lighting/direction indicator switch				
	107 to 110-	192 to 198	g7	5B-4M-3M	T
255	Windscreen wiper/washer & horn switch	125 to 129-142	g6	2B-4B-5B	T
271	Air distribution switch	19 to 21	h5	4M	Q
278	Blower motor speed control rheostat	23 to 25	h6	2B	Q
279	Heater control & lighting	29 to 31-103-104	h4	5B	K
280	Supplementary air control (injection)	38	b6	2N	IM
285	Ignition suppressors (radio)	59 & 60	b6	2x1N	Z
295	Air horn compressor	143	c7	1MV-1N	A
300	Starter motor	3 to 5	b5	1N-1R & 1N	CP & CA
302	Flowmeter	42 to 44	b2	5N	IC
345	Fast idling electrovalve (air con option)	14	d2	2x1V	V
365	Ashtray lighting	187	j6	2B	H
370	Boot lighting	171	s4	1N-1Ic	F
375	Glove box lighting	170	f4	1N-1M	H
380	Engine compartment lighting	185	c6	1N	EC
385	L/H rear No. plate lighting	211	t6	1M-1Ic	E
386	R/H rear No. plate lighting	212	t4	1M-1Ic	E
390	Steering lock lighting	191	g7	2x1Ic	T
410	Air con compressor clutch	13	c6	1N	V
430	L/H front brake caliper	83-84	d9	2N & 1N	U
431	R/H front brake caliper	85-86	d1	2N & 1N	U
440	L/H front side lamp	184	a8	2M	G
441	R/H front side lamp	186	a2	2M	D
442	L/H rear side lamp	200			
443	R/H rear side lamp	201			
445	L/H rear lamp cluster		t8	6G	F
446	R/H rear lamp cluster		t2	6G	F
457	L/H stop lamp	139			
458	R/H stop lamp	140			
460	L/H rear fog lamp	191			
461	R/H rear fog lamp	192			
462	L/H reversing lamp	33			

REF.	DESCRIPTION	LOCATION		CONNECTOR Number Channel-colour	HARNESS (or unit)
		Circuit	Wiring		
463	R/H reversing lamp	34			
470	Fuses	*	g8		
480	L/H front direction indicator	108	a7	3Or	G
481	R/H front direction indicator	111	a3	3Or	D
482	L/H rear direction indicator	109			
483	R/H rear direction indicator	110			
486	L/H long range lamp	194	a7	2B	G
487	R/H long range lamp	199	a3	2B	D
488	L/H main and dipped beam	195-196	a8	3Ic	G
489	R/H main and dipped beam	197-198	a2	3Ic	D
500	L/H front loudspeaker connections	174	g9	1B & 1R	H
501	R/H front loudspeaker connections	176	g2	1B & 1R	H
502	L/H rear loudspeaker connections	177	k9	2B	PG
503	R/H rear loudspeaker connections	182	k1	2B	PD
506	L/H front tweeter connections	175	h9	2B	H
507	R/H front tweeter connections	175	h1	2B	H
511	Rear fog lamp switch	191 to 193	g5	8 Bl	B
519	L/H window motor switch on driver's door	120 to 122	h9	5B	PC
520	R/H window motor switch on driver's door	115 to 117	h9	5M	PC
521	L/H window motor switch on passenger's door	120 to 122	h1	5B	PP
532	Heated rear screen switch	145 to 147	j5	5M	P
545	Interior lighting switch	149 to 151	j5	5B	P
570	Hazard warning switch	110 to 113	g5	8N	B
576	Injectors	41 to 44	c3	4x2G	IM
580	Fuel gauge transmitter	94 to 96	g6	1M-1N-1J	J
600	Winscreen wiper motor	125 to 129	e4	5B	D
608	Height control motor	132 to 138	j4	3B	H
615	R/H front window motor	116	g9	3Or	LV
616	L/H front window motor	121	g1	3Or	PP
621	Air intake motor	17	e3	2B	Q
622	Air distribution motor	20	g4	2B	Q
625	R/H front door lock motor	160 to 162	j9	2M-3B	H
626	L/H front door lock motor	164 to 166	j1	2M-3B	H
627	R/H rear door lock motor	160 to 162	p9	2M-3B	PG
628	L/H rear door lock motor	164 to 166	p1	2M-3B	PD
629	Boot door lock motor	161	t5	2B	C

REF.	DESCRIPTION	LOCATION Circuit	LOCATION Wiring	CONNECTOR Number Channel-colour	HARNESS (or unit)
630	Fuel flap lock motor	162	s2	2B	X
634	R/H engine cooling fan motor	9	a4	1M-1R	V
635	L/H engine cooling fan motor	9	a6	1M-1R	V
650	Engine oil pressure switch	79	d3	1M	M
655	Blower fan speed transistorised module	25-26	f3	1V-1BI	Q
660	On-board computer	50 to 53	g4	12N	O
680	Windscreen washer pump	130	e1	2N	D
683	Fuel pump	45	g4	1B & 1	FP-MP
690	Central interior lighting	148 to 160	n5	1N, 1M & 2 x 1Ic	P
695	Front interior spot lamp	148	n5	1N & 1M	P
698	Headphone socket	178 to 181	k5	5B	H
700	Air con refrigerant pressure switch	13	c7	2x1Ic	V
710	12V supply socket	124	k5	1N & 1M	H
721	Radio connections (12V and loudspeakers) («+»,- & H.P.)	174 to 182	k5	1R & 4 x 2B	H
731	Fuel injection relay	38 to 46	a2	9N	IC
733	Engine cooling fan relay (air con)	12 to 14	b8	5N	V
735	Main beam relay	198 to 199	g7	5N	T
739	Height control relay	134 to 137	f7	5N	H
743	Air horn compressor relay	142-143	c7	5N	A
745	Blower motor fast speed relay	24 to 26	g4	5N	Q
772	Engine cooling fan fast speed relay	10-11	b8	5N	V
773	Engine cooling fan inverter relay	7 to 9	f8	5N	V
795	Lighting rheostat	97	g6	4B	B
810	L/H direction indicator repeater connections	107	e9	2x1Ic ($\bar{V}$ & $\bar{M}$)	G
811	R/H direction indicator repeater connection	112	e1	2x1Ic ($\bar{V}$ & $\bar{M}$)	D
831	Interior temperature selection motor	27 to 31	g5	5B	K
835	Engine oil level gauge	92-93	c4	2B	M
837	Air con evaporator temperature sensor	12-13	f5	2N	Q
839	Interior air temperature sensor	30	j5	2B	P
840	Coolant temperature sensor (to display)	73-74	c4	2BI	M
841	Coolant temperature sensor (injection)	39	c3	2B	IM
850	2 stage engine cooling fan thermal switch	9-10	b8	3Ic	V
856	Critical oil temperature thermal switch	70	c5	1BI	M
935	Blower motor	25	d5	1	Q
945	Heated rear screen	146	r3	2x1N	F & ML
980	Door locked warning lamp	167	g9	2x1Ic	H

CX 25 GTI Turbo

7/85 →

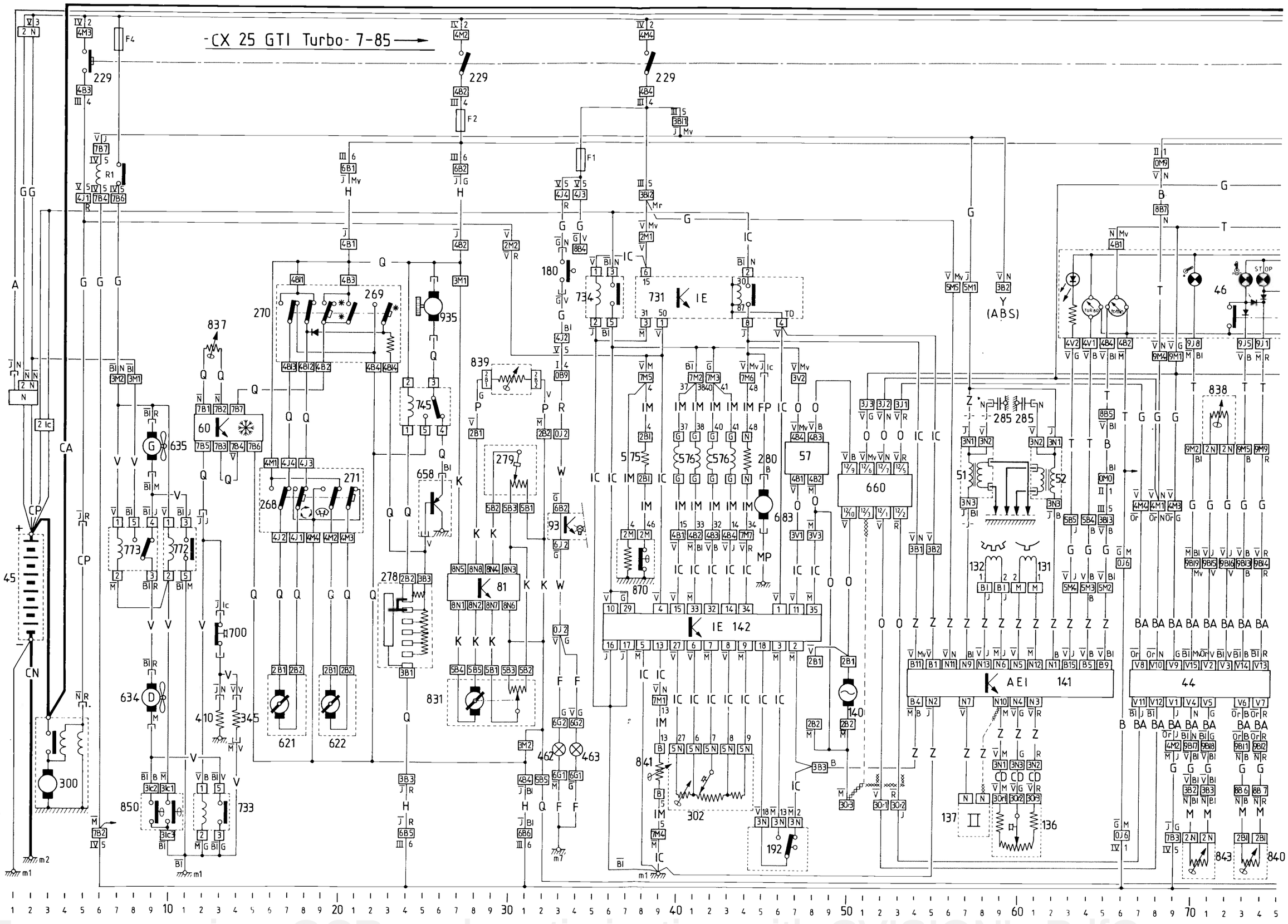

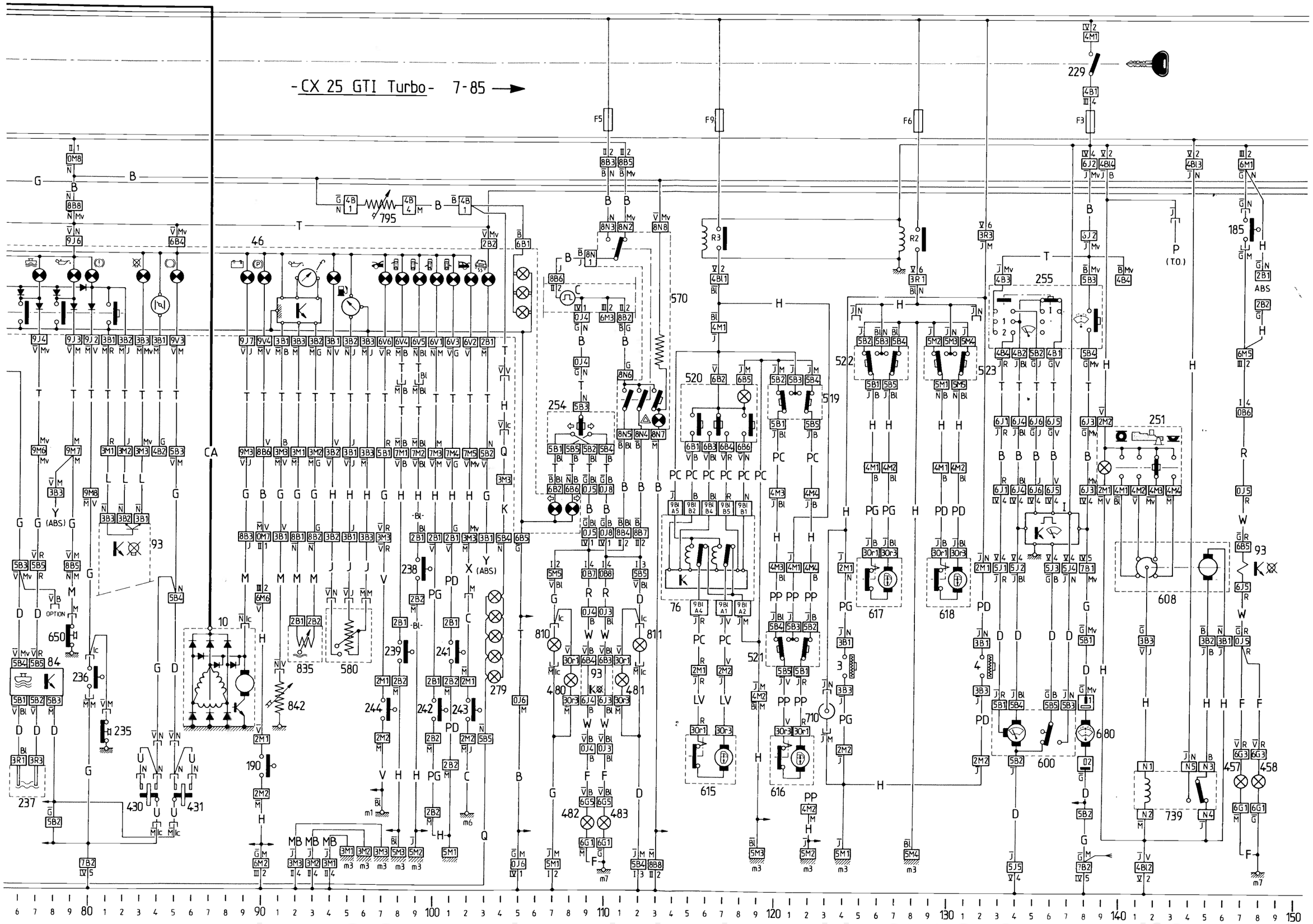

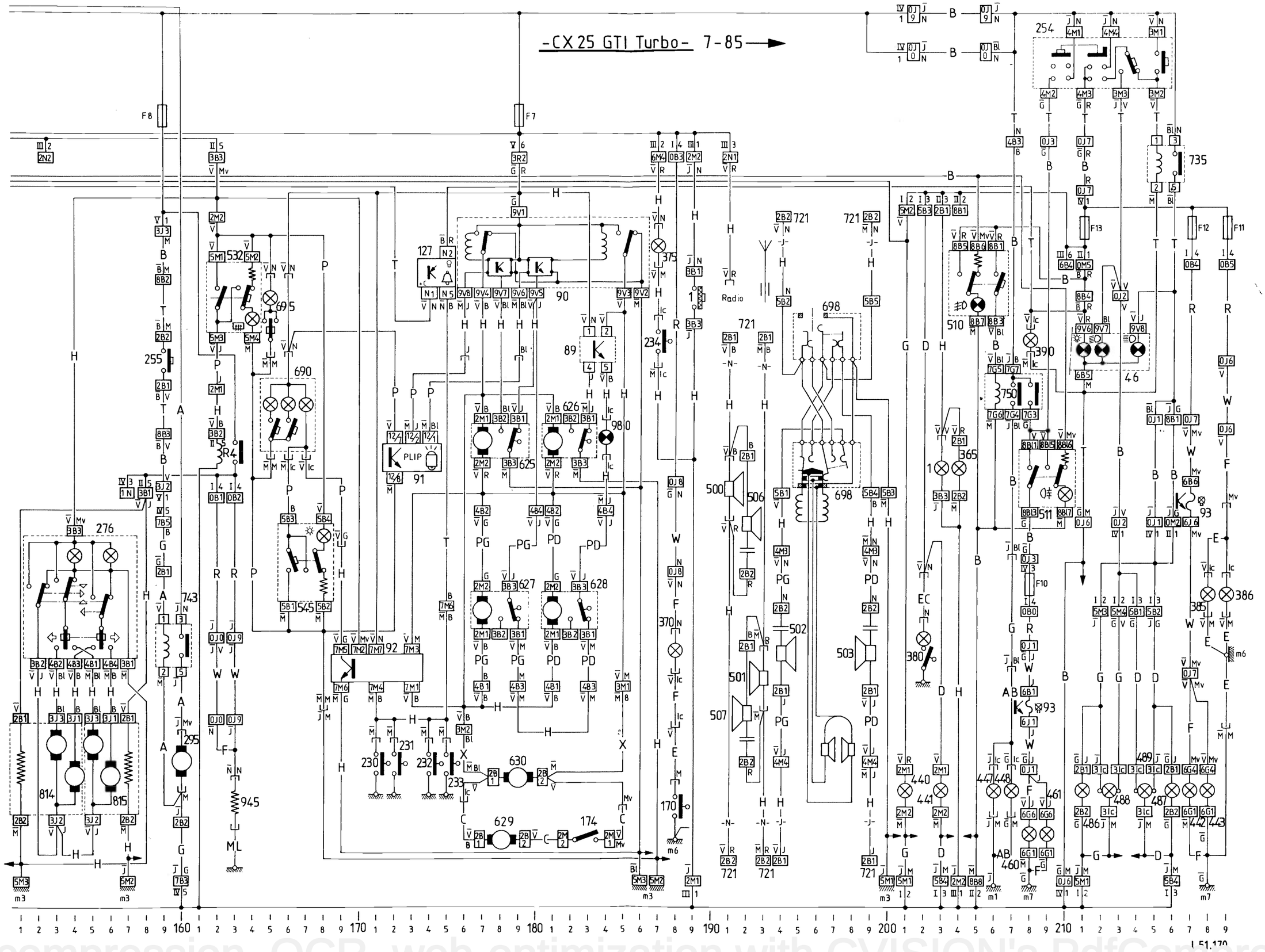

UNIT IDENTIFICATION

REP.	DESCRIPTION	LOCATION Circuit	LOCATION Wiring	CONNECTOR Number Channel-colour	HARNESS (or unit)
1	Front cigar lighter and lighting	189-203	j5	3B-1V	H
3	L/H rear cigar lighter	124	n9	3B	PG
4	R/H rear cigar lighter	132	n1	3B	PD
10	Alternator	86 to 89	b6	1Ic & 1N	M & CA
44	Digital display unit	67 to 74	f5	15V	BA
45	Battery	2	b8	1N	CP & CN
46	Instrument panel	63 to 108 and 211 to 214	g6	2B-3B-3B	T
46	Instrument panel		g6	3B-3B-4B	
46	Instrument panel		g6	6B-4V-6V	
46	Instrument panel		g6	9V-9J	
47	ABS hydraulic unit	* 7 to 9	e6	5B	Y
51	HT coil (Cyl 1 and 4)	57-58	c6	3N	Z
52	HT coil (Cyl 2 and 3)	61-62	c6	3N	Z
54	ABS control unit	* 2 to 12	p6	35N	Y
57	Fuel calculator	47-48	j5	4B	O
60	Air conditioning control unit	12 to 15	h5	7B	Q
76	L/H front window winder unit	113 to 115	j9	9 Bl	PC
81	Interior heating control unit	27 to 30	h5	8N	K
84	Water level indicator unit	76 to 78	e4	5B	D
89	Door locking indicator lamp unit	183-184	j5	5N	H
90	Door locking control unit	176 to 186	j5	9V	H
91	Remote control door locking unit	172 to 174	n5	8N	P
92	Interior lighting timer	169 to 173	j5	7M	H
93	Bulb failure unit	33-109-110	s8	3B	L
93	Bulb failure unit 81 to 83,	147-208-217	s8	6B-6J	W
95	Junction box	*	g8		B-D-G
95	Junction box	*	g8		H-MB-R
95	Junction box	*	g8		229
127	Side lamp audible warning	174-175	g6	5N	T
131	TDC sensor	60-61	c6	2M	Z
132	Flywheel sensor	58-59	d6	2Bl	Z
136	Vacuum advance warning	59 to 61	e3	3Or	CD
137	Anti-knock sensor	57-58	b2	2N	Z
140	Distance sensor	50	e7	2B	O
141	Ignition ECU	54 to 65	e8	18B-15N	Z
142	Injection ECU	36 to 48	g3	35N	IC
146	L/H front wheel sensor (ABS option)	* 5,6	d9	2M	Y
147	R/H front wheel sensor (ABS option)	* 7,8	d1	2M	Y
148	L/H rear wheel sensor (ABS option)	* 11,12	r8	2M	Y
149	R/H rear wheel sensor (ABS option)	* 8,9	r2	2M	Y
170	Boot light switch	198	s6	1M	E
174	Boot door locking switch	179	t5	2M	C
180	Reversing lamp switch	33	d6	1N-1V	G
185	Stop lamp switch	147	h6	1N-1M	H
190	Hand brake switch	90	k5	2M	H
192	Throttle spindle switch	45 to 47	b4	3N	IC

* Special diagram

UNIT IDENTIFICATION

REP.	DESCRIPTION	LOCATION Circuit	LOCATION Wiring	CONNECTOR Number Channel-colour	HARNESS (or unit)
229	Ignition Switch	5-27-38-138	h7	4M 4B	
230	Door Switch (L/H Front)	171	f9	1M	H
231	Door Switch (R/H Front)	172	f1	1M	H
232	Door Switch (L/H Rear)	174	k9	1M	H
233	Door Switch (R/H Rear)	175	k1	1M	H
234	Glove Box Switch	187	f3	1 Ic-1 Ic	H
235	Hydraulic Fluid Pressure Switch	81	e6	1M	G
236	Hydraulic Fluid Level Switch	80	e8	1 Ic-1M	G
237	Water Level Switch	76-77	e3	3R	D
238	R/H Front Door Lock Switch	99	j1	2B	H
239	L/H Front Door Lock Switch	98	j8	2B	H
241	R/H Rear Door Lock Switch	101	g1	2B	PD
242	L/H Rear Door Lock Switch	100	g9	2B	PG
243	Boot Door Lock Switch	102	t5	2M	C
244	Bonnet Lock Switch	97	a5	2M	V
251	Height Control Switch	139 to 143	j5	2M	H
251	Height Control Switch		J5	4M	608
254	Lighting/Direction Indicators Switch	209 to 215 107 to 110	g7	5B-4M-3M	T
255	Windscreen Wiper/Washer and Horn Switch	133 to 138 159	g6	2B-4B-5B	T
268	Air Recycling Switch	16 to 18	h8	4J	Q
269	Air Conditioning Switch	20 to 23	h5	4B	Q
270	Maximum Air Conditioning Switch	17 to 19	h5	4Bl	Q
271	Air distribution Switch	19 to 21	h5	4M	Q
276	Rear View Mirror Switch	152 to 157	h9	3B-4B	H
278	Blower Motor Speed Control	23 to 25	h6	3B	Q
279	Heater Control and Lighting	29 to 31 103-104	h4	5B	K
280	Supplementary Air Control	44	b6	1N	Z
285	HT Coil Suppressor	59	b6	1N	Z
285	HT Coil Suppressor	60	c5	1N	Z
295	Air Horn Compressor	160	c7	1MV-1M	A
300	Starter Motor	3 to 5	b5	1N-1R	CP
302	Flowmeter	40 to 44	b2	5N	IC
345	Fast Idle Electro-valve	14	d2	1V-1V	V
365	Ashtray Lighting	204	j6	2B	H
370	Boot Lighting	188	s4	1N-1Ic	F
375	Glove Box Lighting	187	f4	1N-1M	H
380	Engine Compartment Lighting	202	c6	1N	EC
385	L/H Rear No Plate Lighting	218	t6	1M-1Ic	E
386	R/H Rear No PLate Lighting	219	t4	1M-1Ic	E
390	Steering Lock Lighting	208	g7	1 Ic-1 Ic	T
410	Air Con Compressor Clutch	13	c6	1N	V
430	L/H Front Caliper	83-84	d9	2N-1N	U
431	R/H Front Caliper	85-86	d1	2N-1N	U

* On RDH vehicle, reverse the positions left and right

UNIT IDENTIFICATION

REP.	DESCRIPTION	LOCATION Circuit	LOCATION Wiring	CONNECTOR Number Channel-colour	HARNESS (or unit)
440	L/H Front Side Lamp	201	a8	2M	G
441	R/H Front Side Lamp	203	a2	2M	D
442	L/H Rear Lamp	217			
443	R/H Rear Lamp	218			
445	L/H Rear Lamp Cluster		t8	6G	F
446	R/H Rear Lamp Cluster		t2	G6	F
447	L/H Front Fog Lamp	206	a8	1 Ic-1M	AB
448	R/H Front Fog Lamp	207	a2	1 Ic-1M	AB
457	L/H Stop Lamp	147			
458	R/H Stop Lamp	148			
460	L/H Rear Fog Lamp	208			
461	R/H Rear Fog Lamp	209			
462	L/H Reversing Lamp	33			
463	R/H Reversing Lamp	34			
470	Fuses	*	g8		
480	L/H Front Direction Indicator	108	a7	3Or	G
481	R/H Font Direction Indicator	111	a3	3Or	D
482	L/H Rear Direction Indicator	109			
483	R/H Rear Direction Indicator	110			
486	L/H Long Range Lamp	211	a7	2B	G
487	R/H Long Range Lamp	216	a3	2B	D
488	L/H Head Lamp	212-213	a8	3Ic	G
489	R/H Head Lamp	214-215	a2	3Ic	D
500	L/H Front Loudspeaker	191	g9	1B - 1R	H
501	R/H Front Loudspeaker	193	g2	1B - 1R	H
502	L/H Rear Loudspeaker	194	k9	2B	PG
503	R/H Rear Loudspeaker	199	k1	2B	PD
506	L/H Front Tweeter	192	h9	2B	H
507	R/H Front Tweeter	192	h1	2B	H
510	Front Fog Lamp Switch	204 to 206	g5	8 B	B
511	Rear Fog Lamp Switch	208 to 210	g5	8BI	B
519	Driver's Door Window Winder Switch (R/H Window)	120 to 122	h9	5B	PC
520	Driver's Door Window Winder Switch (L/H Window)	115 to 118	h9	6B	PC
521	R/H Front Window Winder Switch	120 to 122	h1	5B	PP
522	L/H Rear Window Winder Switch	125 to 127	k5	5B	H
523	R/H Rear Window Winder Switch	129 to 131	k5	5M	H
530	Sun Roof Switch	* 141	j5	5J	P
532	Heated Rear Screen Switch	162 to 164	j5	5M	P
545	Interior Lighting Switch	166 to 168	j5	5B	P
570	Hazard Warning Switch	109 to 113	g5	8N	B
575	Cold Start Injector	38	b6	2 BI	IM
576	Injector	40 to 43	c3	2G (X 4)	IM
580	Fuel Gauge	94 to 96	q6	1M-1N-1J	J
600	Front window wiper	133 to 137	e4	5B	D
608	Height control Motor	140 to 146	j4	3B	H
610	Sun Roof Motor	* 141	p5	3B	P
615	L/H Front Window Motor	116	g9	3Or	LV
616	R/H Front Window Motor	121	g1	3Or	PP
617	L/H Rear Window Motor	126	n9	30r	PG
618	R/H Rear Window Motor	130	n1	30r	PD
621	Air Intake Motor	17	e3	2B	Q
622	Air Distribution Motor	20	g4	2B	Q
625	L/H Front Door Lock Motor	177 to 179	j9	2M-3B	H

UNIT IDENTIFICATION

REP.	DESCRIPTION	LOCATION Circuit	LOCATION Wiring	CONNECTOR Number Channel-colour	HARNESS (or unit)
626	R/H Front Door lock Motor	181 to 183	j1	2M-3B	H
627	L/H Rear Door Lock Motor	177 to 179	p9	2M-3B	PG
628	R/H Rear Door Lock Motor	181 to 183	p1	2M-3B	PD
629	Boot Door Lock Motor	183	t5	2B	C
630	Fuel Flap Lock Motor	179	s2	2B	X
634	R/H Engine Cooling Fan Motor	9	a4	1M-1R	V
635	L/H Engine Cooling Fan Motor	9	a6	1M-1R	V
650	Low Engine Oil Pressure Switch	79	d3	1M	M
658	Blower Fan Speed Control Module	25-26	f3	1V-1BI	Q
660	On-Board Computer	50 to 53	g4	12N	O
680	Windscreen Washer Pump	138	e1	2N	D
683	Fuel Pump	45	g4	1B	FP
690	Central Interior Lighting	165 to 167	n5	1V-1M	P
693	L/H Rear Interior Lighting (Sun roof option)	* 166	g7	1N	P
694	R/H Rear Interior Lighting (Sun roof option)	* 168	g3	1N	P
695	Front Interior Spot Lamp	165	n5	1N + 1M	P
698	Headphone Socket	195 to 198	k5	5B	H
700	Air Con. Pressure Switch	13	c7	1 Ic-1 Ic	V
710	12 V Supply socket	123	k5	1N-1M	H
721	Radio Connections ("+", "–" & LS)	191 to 199	k5	1R-2B-2B-2B-2B	H
731	Fuel Injection Electronic Relay	38 to 46	a2	9N	IC
733	Air Con. Engine Fan Relay	12-13	b8	5N	V
734	Injector Relay	35-36	a2	5N	IC
735	Main Beam Relay	215-216	g7	5N	T
739	Height Control Relay	142 to 145	f7	5N	H
743	Air Horn Compressor Relay	159-160	c7	5N	A
745	Blower Motor Fast Speed Relay	24 to 26	g4	5N	Q
750	Fog Lamp Relay	206 to 208	g8	7G	B
756	ABS Electro-Valve Relay (ABS option)	* 5 to 8	d5	5N	Y
757	ABS Protection Relay (ABS option)	* 3 to 5	d5	5Ic	Y
772	Blower Motor 2nd Speed Relay	10-11	b8	5N	V
773	Engine Cooling Fan Inverter Relay	7 to 9	b8	5N	V
795	Lighting Rheostat	97	g6	4B	B
810	L/H Direction Indicator Repeater (Export)	107	e9	1 IcV + 1 IcM	G
811	R/H Direction Indicator Repeater (Export)	112	e1	1 IcV + 1 IcM	D
814	L/H Rear View Mirror	151 to 154	g9	2B-3J	H
815	R/H Rear View Mirror	155 to 157	g1	2B-3J	H
831	Interior Heating Distribution Flap Motor	27 to 31	g5	5B	K
835	Engine Oil Level Sensor	92-93	c4	2B	M
837	Air con. Evaporator Temp. Sensor	12-13	f5	2N	Q
838	Outside Air Temp. Sensor	71-72	a5	2N	G
839	Interior Air Temp. Sensor	30	j5	2B	P
840	Water Temp. Sensor	73-74	c4	2BI	M
841	Water Temp. Sensor (injection)	39	c3	2B	IM
842	Engine Oil Pressure Sensor	91	c4	1V	M
843	Engine Oil Temp. Sensor	70-71	c5	2N	M
850	Engine Cooling Fan Thermal Switch	9-10	b6	3 Ic	V
870	Thermal Switch (Cold Start Injector)	37-38	c3	2M	IM
935	Blower Motor	25	d5	1N-1N	Q
945	Heated Rear Screen	163	r7 and r3	1N and 1N	F-ML
980	Door locking warning lamp	184	g9	1 Ic-1 Ic	H

A	U	J	1 N		I	CP	1	b7
	I	V J	2 B 1 2	G J	U	G	159 160	c8
AB	I	J	1 Bl	J	U		207	a8
B	U	J	1 Bl	J	I		207	
	U	J G B M B V B R V Bl M V V N N	8B 1 2 3 4 5 6 7 8	G J M B V B R B Bl V V M N V Mv N	I	T	211 159 159 211 65 90 68 79	f7
	U	B . . . J B . .	4B 1 2 3 4	V B G M N J Mv B	I		102 84 207	f7
	U	J J V G G N G Bl G M G R G B J N J N	10 J 1 2 3 4 5 6 7 8 9 10	Bl V J G N G Bl G M G R G B G N J N Bl	I		215 213 209 108 109 105 211 110 205 205	f7
	U	J R J Mv G Mv J Bl G V G J	6J 1 2 3 4 5 6	R J Mv J M G Bl J V G J G	I		133 138 138 134 136 135	f7
BA	U	Or B Or R Bl B Bl R Or V Bl V Bl N Bl G Bl Mv	9 Bl 1 2 3 4 5 6 7 8 9	B N R N B V R V J V J V Bl V Bl V Bl M	I	G	73 74 73 74 71 72 70 71 70	f6
	U	Or N Or J Or G Or	4 M 1 2 3 4	V N V J M G V V	I		68 69 69 67	f6
	U	Bl Bl J	3 Or 1 2 3	V R M	I	O	52 53 50	f6
C	U	V	I Ic	V	I	X	185	s2
	I	M	I M	M	U		102	
	I	V	I Mv	V	U		176	
CD			3 N 1 2 3	M V R V G V	U	Z	59 61 60	e3
CP	I	N N	2 N 1 2	N N	U	G	1 2	b7
	I		1 R	R J	U		5	
	I		2 Ic 1 2	Bl Bl	U	IC	2 3	b8
				Bl	U	Y	1	b7

D	U	V V	I N		I	EC	201	e2
		G Mv G V Mv V V V R	5 B 1 2 3 4	Mv G Mv V V V R V	U	G	138 138 76 85 77	f8
	I	M	1 Ic		U	U	85	d2
	U	V	1 N		I		85	
	U	V V	1 Ic				112	e2
	U	M	1 Ic				112	
	U	V	1 B				78	f6
E	U	V	1 Ic	V	I	F	188	
	I	M	1 Mv	M	U		219	s8
	I	V	1 Mv	V	U		219	
F	I	V J V V G V V Bl V B V R V V V Mv V V N J N	10 J 1 2 3 4 5 6 7 8 9 10	J G G Bl V B V R G V Mv V N G J J	U	W	208 33 110 109 147 219 217 188 163 162	t8
FP	I	J	1 Ic	J	U	IC	45	g2
G	I	V V R	2 M 1 2	Mv V V	U		38 30	d8
	U	M M G V J G V V M N B N R	8 B 1 2 3 4 5 6 7 8	N G N J N M N B N R N	I	M	92 93 89 34 79 73 74	d5
	I	M V V Bl V Bl	3 B 1 2 3	V N Bl N Bl N	U		91 70 71	
	I	V V N V G	3 J 1 2 3	R V N V G V	U	O	53 52 51	f6
	U	V R V V M V B V J	5 B 1 2 3 4 5	R V N M M V B V J V	I	T	97 103 85 64 63	f7
	I	V G M Bl V J V N V B V Mv V M V M V V R	9 M 1 2 3 4 5 6 7 8 9	G V Bl M J V N V B V Mv V M V V M R M	U		69 70 89 68 73 77 79 80 74	f7
	I	M M G M V	3 M 1 2 3	M G M B M	U		92 93 91	

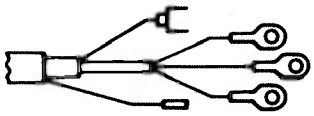

G	I	M	1 Ic		U	U	84	d8
	U	V	1 N		I		84	
	U	Bl Bl N V R	3 M 1 2 3	Bl N Bl R V	I	V	8 7 97	b7
	U	V V N V M	3 B 1 2 3	V N V J V	I	Y	103 59 78	f8
	I	J V Bl V B V J V Mv	5 M 1 2 3 4 5	J Bl V B V J V Mv V	U	Z	57 65 64 63 56	d8
	U	V V	1 Ic				107	e8
	U	M	1 Ic				107	
H	U	V J V M R	3 B 1 2 3	J V V M	I	J	95 94 96	k4
	U	J	1 B	J	I	P	142	g2
	U	M	1 Bl	M	I		179	
	U	V	1 G	V	I		169	
	U	M	1 J	M	I		176	
	U	J	1 M	J	I		168	
	U	V	1 N	V	I		166	
	U	V J V	2 M 1 2	J V V			162 162	
	I	Bl Bl M J Bl J B	4 M 1 2 3 4	J M J Bl J B J	U	PC	116 118 120 122	h9
	I	V B V G V M M J	4 B 1 2 3 4	B V G V M V J V	U	PD	181 181 183 184	k2
	I	V G M	2 B 1 2	V M	U		101 101	
	U	N B N Bl M N M J	4 M 1 2 3 4	B V Bl V N V J V	U		119 120 199 199	
	I	J N J	2 M 1 2	N J J	U		132 132	
	U	J	1 N				131	
	I	V B V G V M V J	4 B 1 2 3 1	B V G V M V J V	U	PG	177 177 179 180	k8
	I	V M	2 B 1 2	V M	U		100 100	
	U	J B J Bl V N V J	4 M 1 2 3 4	B V Bl V N V J V	I		125 126 194 194	
	I	J N J	2 M 1 2	N J J	U		124 124	
	U	J	1 N				125	
	I	J J M J Bl J B	4 M 1 2 3 4	J Bl J B J	U	PP	121 122 120 122	h1

	U	J Mv J J R J Bl	4 B 1 2 3 4	N N J J	I	Q	20 27 24 31	g4
	U	V	1 Ic	J	I		104	
H	U	V J V M	3 B 1 2 3	J N V N M	I	T	95 94 96	f7
	U	V B V Bl V M V G V Mv M B	7 M 1 2 3 4 5 6	B M Bl M M N G V Mv V B N	I		98 99 100 101 102 175	
	I	V	1 V	V	U		104	
	U	V M V B V Mv	3 M 1 2 3	B M Bl M M	I	X	185 176 102	k4
	U	G N G	2 B 1 2	M V	I	Y	148 148	f8
IC	U	V M Bl V B V J	4 B 1 2 3 4	(15) N (33) N (32) N (14) N	I	IM	40 41 42 43	d5
	U	V N Bl G M V M V Mv V R	7 M 1 2 3 4 5 6 7	(13) N (37) N (38) N (40) N (41) N (5) N (4) N N (48) N (34) N			39 41 41 42 39 38 44 44	
	U	V V Mv M	3 V 1 2 3	V Mv V M	I	O	47 47 49	g3
		V N N M M	3 B 1 2 3	N V V B M	I	Z	54 55 48	c7
K	I		2 B 1 2	V M	U	P	28 32	f5
	I	Bl N J	3 M 1 2 3	Bl N J	U	Q	27 31 104	h4
L	U	N N N	3 M 1 2 3	R M J M Mv M	I	T	81 82 83	f7
LV	I	J R J	2 M 1 2	R J V J	U	PC	115 117	h9
O	I	V M	2 B 1 2				48 48	e8
Q	U		1 J	J	I	V	12	d5
R	U	J J J J J J J J J J	10 J 1 2 3 4 5 6 7 8 9 10	J G G Bl V B V R G V Mv V N G J V J	I	W	208 33 109 109 147 219 217 188 163 162	s8
T	U	M	1 B	M	I	T	98	f6
	U	M	1 Bl	N	I	T	99	

LIST OF BULBS

Function	Quantity	Base	Voltage	Power	Type
Main and dipped beams	2	P43 t 38	12 V	60/55 W	H4
Complementary main beams	2	PK 22s	12 V	55 W	H3
Fog lamps	2	X 511	12 V	55 W	H2
Stop and tail lamps	2	BA 15d	12 V	21/5 W	P25/2
Direction indicators Rear fog lamps Reversing lights Interior lamp	4 2 2 2	BA 15s	12 V	21 W	P25/1
Engine compartment lighting	1	BA 15s	12 V	10 W	R19/10
Side lamps Number plate lamp	2 2	BA 15s	12 V	5 W	R19/5
Direction indicator repeater (Export)	2	BA 9s	12 V	4 W	T8/4
Glove compartment lighting Ignition key lighting	1 1	BA 9s	12 V	2 W	T8/2
Front interior spot lamp Boot lighting	1 1	festoon 35 mm	12 V	5 W	C11
Interior heater control lighting Ashtray lighting Cigar lighter lighting	5 1 1	wedge base ∅ 5	12 V	1.2 W	
Instrument panel warning lamps	31				
Except: battery charge w. lamp knock warning lamp	1 1	wedge base ∅ 10 LED	12 V	3 W	
Warning lamps incorporated in switches and selector switches	8	wedge base ∅ 5	12 V	0.36 W	

DESCRIPTION OF HARNESSES

A	Horn	LV	Window Winder Extension
AB	Front Fog Lamps	M	Engine
B	Junction Box	MB	Junction Box Earth
BA	Digital Display Unit	ML	Heated Rear Screen Earth
C	Booth Locking	MP	Fuel Pump Earth
CA	Alternator Wire	O	On-Board Computer
CD	Turbo Boost	P	Interior Lighting
CN	Battery Negative Cable	PC	Driver's Door
CP	Battery Positive Cable	PD	R/H Rear Door
D	R/H Front	PG	L/H Rear Door
E	No Plate Lighting	PP	Passenger's Front Door
EC	Under Bonnet Lighting	Q	Interior Blower
F	Rear Light Cluster Inter-Connection	R	Rear
FP	Fuel Pump Wire	T	Instrument Panel
G	L/H Front	U	Front Brake Pad Wear
H	Interior	V	Engine Cooling Fans
IC	Injection chassis	W	Bulb Failure Detection
IM	Injection Engine	X	Fuel Filler Flap Locking
J	Fuel Gauge	Y	ABS (Brakes)
K	Heating	Z	IEI (Ignition)
L	Bulb Failure		

DESCRIPTION AND LOCATION OF THE EARTH CONNECTIONS

No.	Location	Wiring diagram	Connector No. of channels Colour	Harness
m1	On L/H Front Wheel Arch	b8	1 $\overline{J}$ 1 $\overline{N}$ 1 $\overline{BI}$ - 1 $\overline{M}$ 1 $\overline{BI}$ 1 $\overline{J}$	AB CN IC Y Z
m2	On Gearbox Casing	c7	1N	CN
m3	Along L/H Side of the Steering Column	g7	5 M 3M	H MB
m4	At Rear of Centre Console	k5	1 $\overline{J}$	Y
m5	Behind R/H Rear Light Cluster	t2	1 $\overline{N}$	ML
m6	On Boot Door	t5	1 $\overline{M}$ 1 $\overline{M}$ - 1$\overline{V}$	C E
m7	Behind L/H Rear Light Cluster	t7	1 G	F

AB - CA - F - H - MP - U - Z
Y

CD - E - FP - G - IM - L - ML - PC - P
Å - B - BÅ - EC - P - W

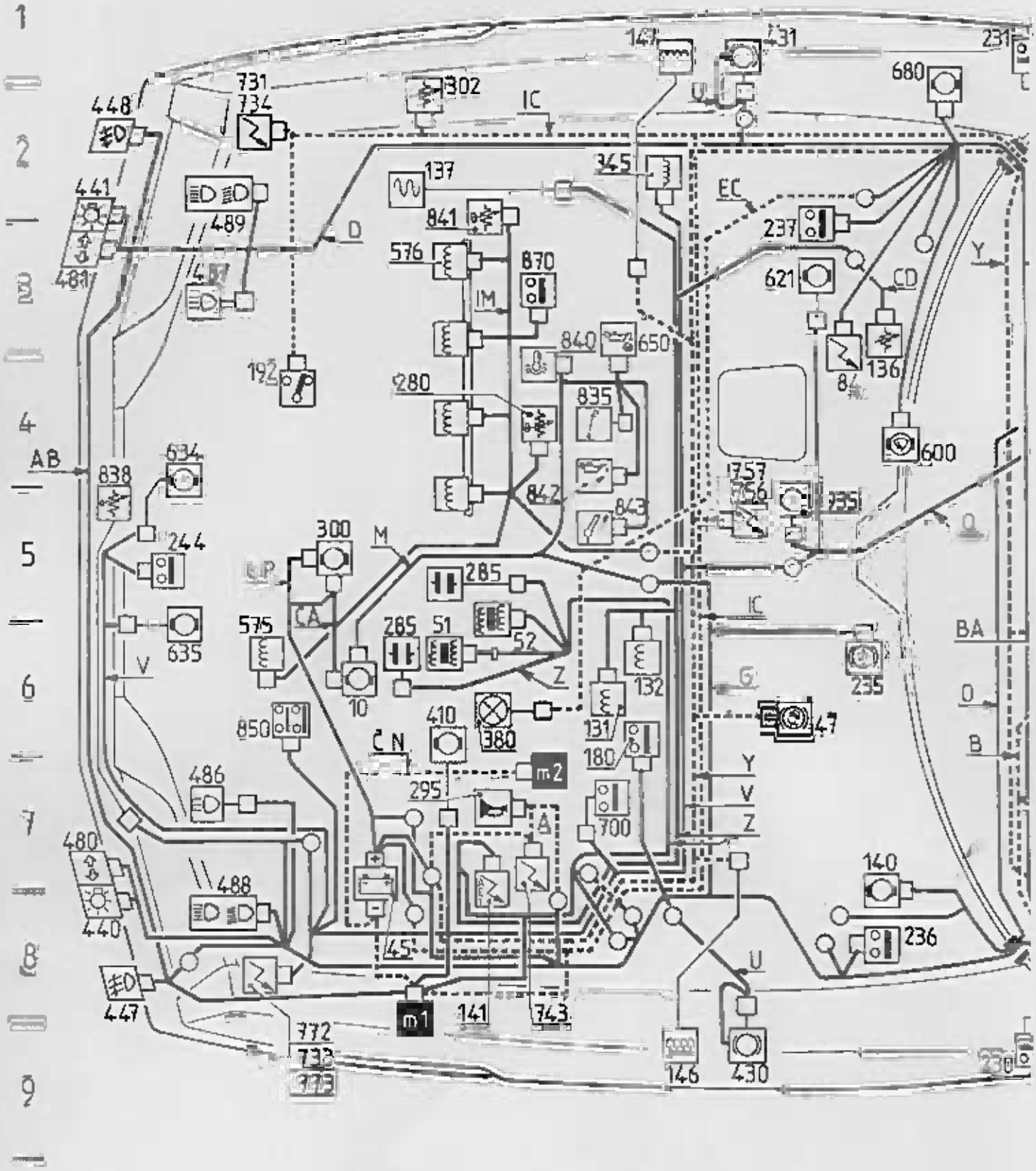

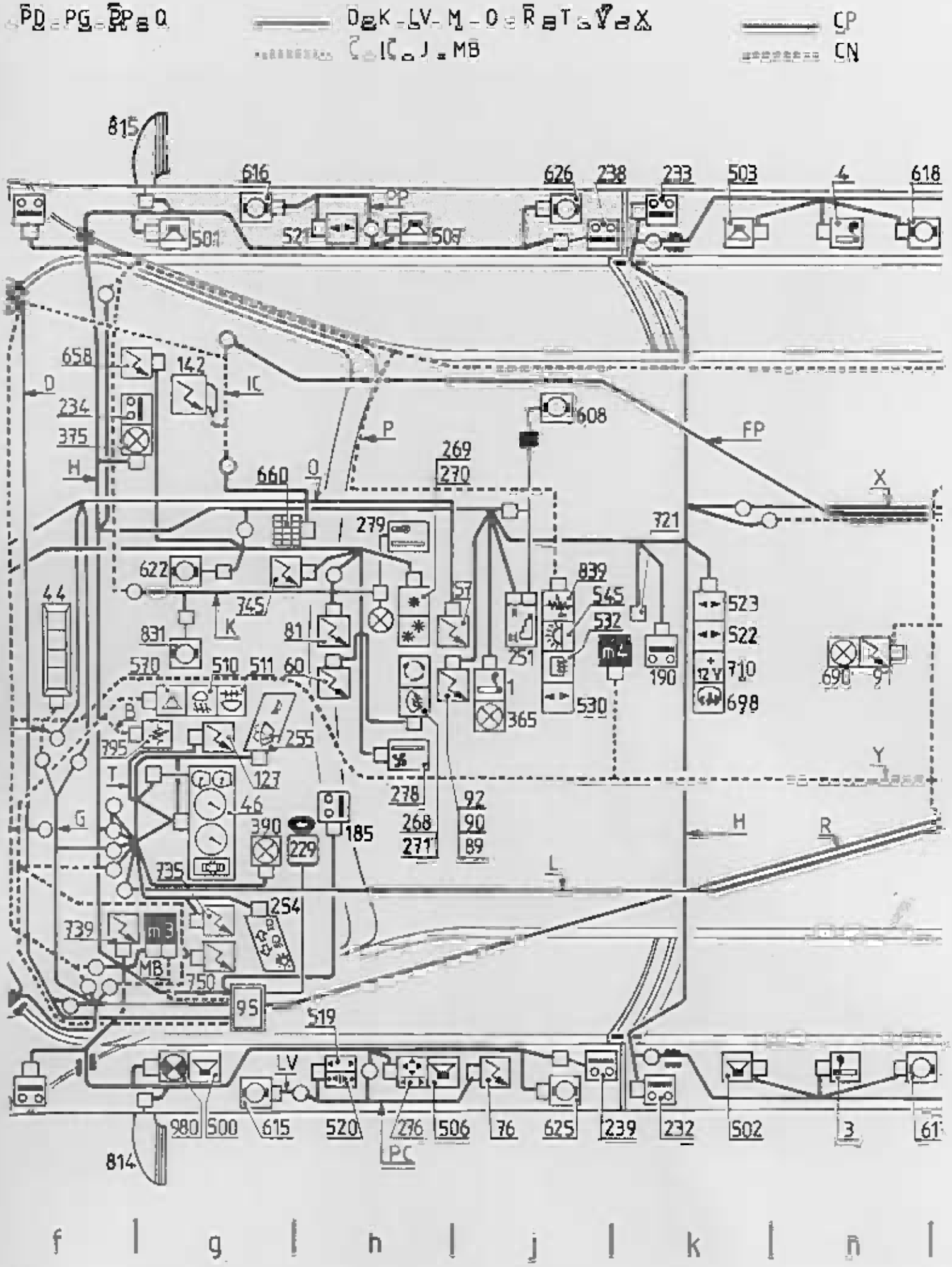

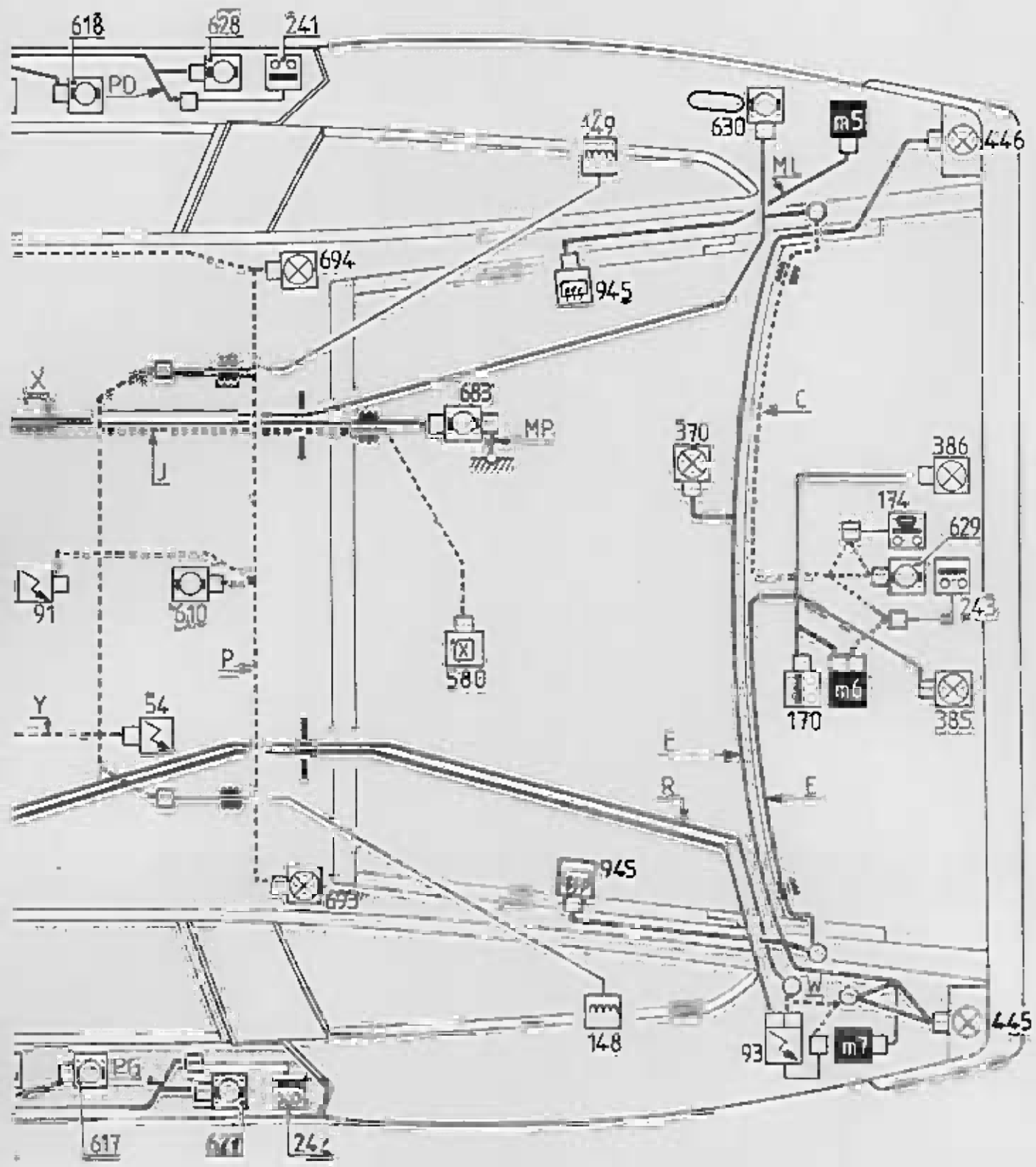

TABLE OF FUSE FUNCTIONS

FUSE No.	Rating	Colours	SUPPLY	PROTECTED CIRCUITS
1	10A	Red	+ From ignition switch Channel 4	Reversing lamps and switch. Engine harness, connector (8B 4) (not used).
2	25A	White	+ From ignition switch Accessories Channel 2	Heating, ventilation and air conditioning unit, Instrument panel: — Turbocharger, fuel level, engine oil pressure and level. Tachometer, gauges. — Warning lamps for: anti-knock, battery charge, ABS, front brake pad wear, engine oil and water temperature, hydraulic fluid pressure and level, water level, fuel low level, engine oil pressure, parking brake, bulbs failure, doors, bonnet and boot non-closure. — Instrument panel and heating control lighting and rheostat. — Digital display unit and computer keyboard. — Dimmed lighting for hazard warning, front and rear fog lamp switches. Direction indicators and warning lamps.
3	25A	White	+ From ignition switch Accessories Channel 1	Front and rear window winders, height corrector control, heated rear screen relay coils. Windscreen wiper, washer timer and switch. Stop lamps. Sun roof motor (option). Rear view mirror motors and switch.
4	30A	Green	+ Direct	Engine cooling fans (except R/H in fast speed).
5	10A	Red	+ Direct	Hazard warning lamps and switch.
6	30A	Green	+ Direct	Rear window winder motors.
7	30A	Green	+ Direct	Interior lamps and timer. Glove box and boot lighting. Height control motor. Digital display unit and computer keyboard (clock function). Radio. Centralised door locking, control units, warning lamps and motors.
8	25A	White	+ Direct	Horn switch and relay coil. Rear screen heater. Rear view mirror heaters.
9	30A	Green	+ Direct	Front window winder motors.
10	5A	Brown	Side lamps	Rear fog lamps.
11	5A	Brown	Side lamps	Rear number plate lighting.
12	5A	Brown	Side lamps	L/H and R/H rear lamps.
13	5A	Brown	Side lamps	L/H and R/H side lamps. Lighting: under bonnet, ashtray, cigar-lighter, key, side-lamps warning, digital unit and key-board dimmed lighting. Interior lighting timer. Switches and relay coil for front and rear fog lamps.
14				Not used.

CX 25 TRD Turbo

7/85 →

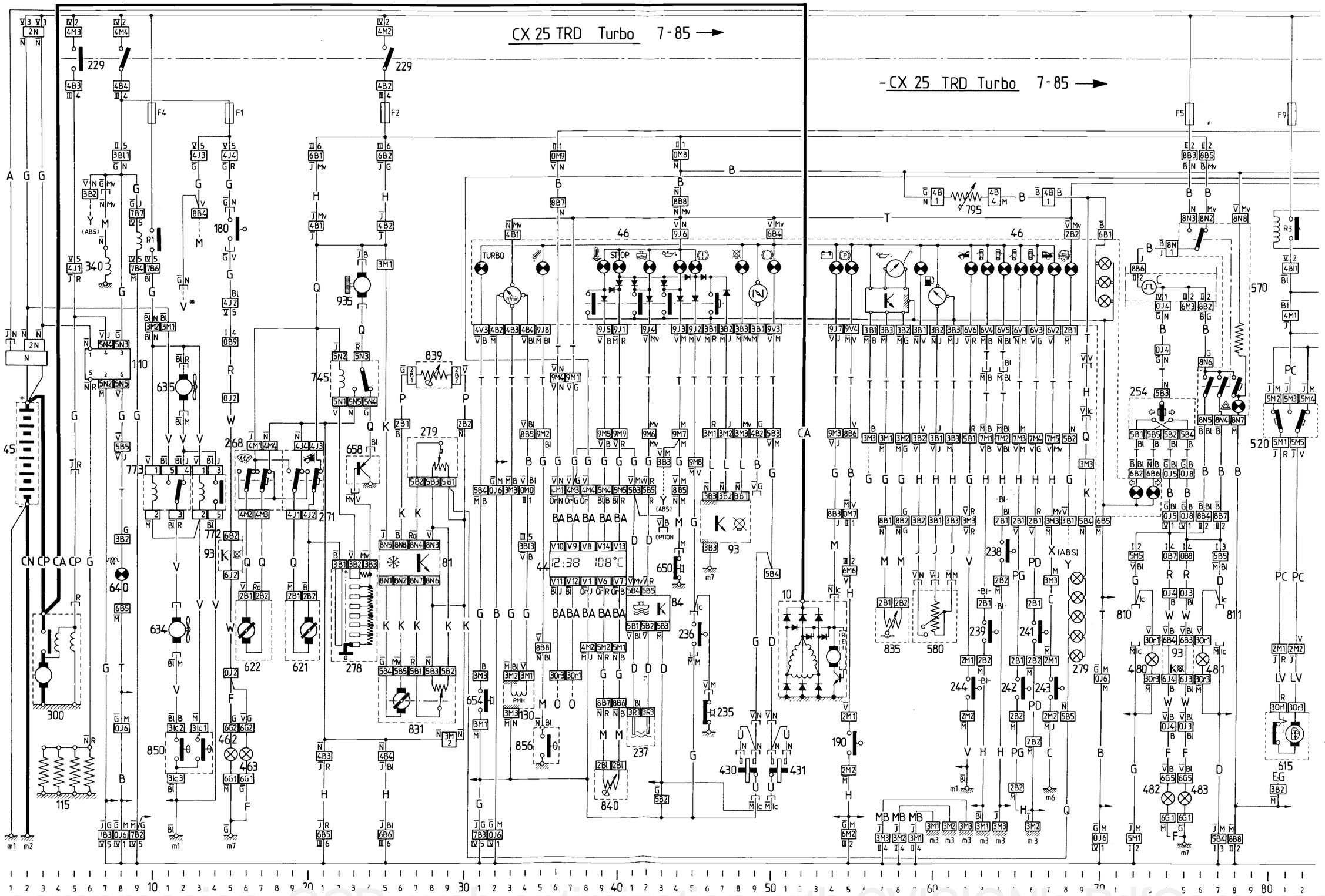

REF.	DESCRIPTION	LOCATION Circuit	LOCATION Wiring	CONNECTOR Number Channel-colour	HARNESS (or unit)
1	Cigar lighter and lighting	137-152	j5	3B-1V	H
10	Alternator (including regulator)	51 to 54	b6	1 Ic + 1N	M - CA
44	Digital display unit (clock and coolant thermometer)	36 to 40	f5	15V	BA
45	Battery	2	b8	1N + 1N	CP - CN
46	Instrument panel 8-31 to 73,	159 to 162	g6	*	T
81	Interior heating control unit	25 to 28	h5	8N	K
84	Coolant level indicator unit	41 to 43	e4	5B	D
89	Door locking indicator lamp unit	131-132	j5	5N	H
90	Door locking control unit	124 to 134	j5	9V	H
91	Remote control door locking unit «PLIP»	120 to 122	n5	8N	P
92	Interior lighting timer	117 to 122	j5	7M	H
93	Bulb failure detection unit 46 to 48, 74-75, 104,	156-165	s8	3B 6B 6J	L.W.W.
95	Junction / Fuse box	*	g8	*	*
110	Preheater unit	6 to 8	e8	5N 1N 1R	M
115	Preheater plugs	3 to 6	c3	4 x 1N	G + FV
127	Side lamp audible warning	122-123	g6	5N	T
130	TDC sensor	33-34	d6	3M	G
170	Boot light switch	136	s6	1M-1	E
174	Boot door locking switch	131	t5	2M	C
180	Reversing lamp switch	15	d6	1N-1V	G
185	Stop lamp switch	104	h6	1N-1M	H
190	Hand brake switch	55	k5	2M	H
229	Ignition switch 5-8,	25-95	h7	4M-4B	95
230	L/H front door switch	119	f9	1M	H
231	R/H front door switch	120	f1	1M	H
232	L/H rear door switch	122	k9	1M	H
233	R/H rear door switch	123	k1	1M	H
234	Glove box switch	135	f3	1Ic + 1Ic	H
235	Hydraulic fluid low pressure switch	46	e6	1M	G
236	Hydraulic fluid level switch	45	e8	1Ic + 1M	G
237	Coolant low level switch	41-42	e3	3R	D
238	R/H front door lock switch	64	j1	2B	H
239	L/H front door lock switch	63	j8	2B	H
241	R/H rear door lock switch	66	q1	2B	PD
242	L/H rear door lock switch	65	q9	2B	PG
243	Boot door lock switch	67	c5	2M	C
244	Bonnet lock switch	62	a5	2M	V
251	Height control switch	96 to 100	j5	2M & 4M	H & (608)
254	Lighting/Direction indicator switch 72 to 75,	157 to 163	g7	5B 4M 3M	T
255	Winscreen wiper/washer and horn switch 90 to 95,	107	g6	4B 5B 2B	T
268	Air recycling switch	19 - 20	h5	4J	Q
271	Air distribution switch	16 - 17	h5	4M	Q
278	Blower motor speed control	22 to 24	h6	3B	Q
279	Heater control and lighting	27 to 29-69	h4	5B	K
295	Air horn compressor	108	c7	1Mv-1M	A
300	Starter motor	3 to 5	b5	1N - 1R	CP
340	Fuel pump stop solenoid	7	c3	1N	M
365	Ashtray lighting	152	j6	2B	H
370	Boot lighting	136	s4	1N - 1Ic	F
375	Glove box lighting	135	f4	1N - 1M	H
380	Engine compartment lighting	150	c6	1N	EC
385	L/H rear No plate lighting	166	t6	1M + 1 Ic	E
386	R/H rear No plate lighting	167	t4	1M + 1 Ic	E
390	Steering lock lighting	156	g7	1Ic + 1Ic	T
430	L/H front brake caliper	48-49	d9	2N + 1N	U(g)
431	R/H front brake caliper	50-51	d1	2N + 1N	U(d)
440	L/H front side lamp	149	a8	2M	G
441	R/H front side lamp	151	a2	2M	D
442	L/H rear lamp	165			
443	R/H rear lamp	166			
445	L/H rear lamp cluster		t8	6G	F
446	R/H rear lamp cluster		t2	6G	F
457	L/H stop lamp	104			
458	R/H stop lamp	105			
460	L/H rear fog lamp	156			
461	R/H rear fog lamp	157			

* Particular specification

REF.	DESCRIPTION	LOCATION Circuit	LOCATION Wiring	CONNECTOR Number Channel-colour	HARNESS (or unit)
462	L/H reversing lamp	15			
463	R/H reversing lamp	16			
470	Fuses *		g8		
480	L/H front direction indicator	73	a7	3.Or	G
481	R/H front direction indicator	76	a3	3.Or	D
482	L/H rear direction indicator	74			
483	R/H rear direction indicator	75			
486	L/H long range lamp	159	a7	2B	G
487	R/H long range lamp	164	a3	2B	D
488	L/H headlamp	160-161	a8	3Ic	G
489	R/H headlamp	162-163	a2	3Ic	D
500	L/H front loudspeaker connections	139	g9	1B + 1R	H
501	R/H front loudspeaker connections	141	g2	1B + 1R	H
502	L/H rear loudspeaker connections	142	k9	2B	PG
503	R/H rear loudspeaker connections	147	k1	2B	PD
506	L/H front tweeter connections	140	h9	2B	H
507	R/H front tweeter connections	140	h1	2B	H
511	Rear fog lamp switch	156 to 158	g5	8BI	B
519	L/H window motor switch on driver's door	85 to 87	h9	5B	PC
520	R/H window motor switch on driver's door	80 to 82	h9	5M	PC
521	L/H window motor switch on passenger's door	85 to 87	h1	5B	PP
532	Heated rear screen switch	110 to 112	j5	5M	P
545	Interior lighting switch	114 to 116	j5	5B	P
570	Hazard warning switch	75 to 78	g5	8N	B
580	Fuel gauge transmitter	59 to 61	g6	1M 1N 1J	J
600	Windscreen wiper motor	90 to 94	e4	5B	D
608	Height control motor	97 to 103	j4	3B	H
615	R/H front window motor	80-81	g9	3Or	LV
616	L/H front window motor	85-86	g1	3Or	PP
621	Air intake motor	15-16	e3	2B	Q
622	Air distributor motor	13-14	g4	2B	Q
625	R/H front door lock motor	125 to 127	j9	2M-3B	H
626	L/H front door lock motor	128 to 131	j1	2M-3B	H
627	R/H rear door lock motor	125 to 127	p9	2M-3B	H
628	L/H rear door lock motor	129 to 131	p1	2M-3B	PD
629	Boot door lock motor	126	t5	2B	C
630	Fuel flap lock motor	127	s2	2B	X
634	R/H engine cooling fan motor	11	a4	1M-1R	V
635	L/H engine cooling fan motor	12	a6	1M-1R	V
650	Engine oil pressure switch	44	d3	1M	RC
654	Turbo pressure switch	31		3M	G
658	Blower fan speed control module	23 - 24	f3	1V-1BI	Q
680	Windscreen washer pump	95	e1	2N	D
690	Central interior lighting	113 to 115	n5	1V+1M	P
695	Front interior lighting	113	n5	1N-1M	P
698	Headphone socket	143 to 146	k5	5B	H
710	12 V supply socket	89	k5	1N + 1M	H
721	Radio connections (12 V and loudspeakers) (+, -, LS)	139 to 147	k5	1R+4x2B	H
735	Main beam relay	163-164	g7	5N	T
739	Height control relay	98 to 102	f7	5N	H
743	Air horn compressor relay	107-108	c7	5N	A
745	Blower motor fast speed relay	22 to 24	g4	5N	Q
772	Engine cooling fan fast speed relay	13-14	b8	5N	V
773	Engine cooling fan inverter relay	10 to 12	b8	5N	V
795	Lighting rheostat	62	g6	4B	B
810	L/H direction indicator repeater connections	72	e9	1IcV + 1IcM	G
811	R/H direction indicator repeater connections	77	e1	1IcM + 1IcV	D
831	Interior temperature selection motor	25 to 29	g5	5B	K
836	Engine oil level sensor	57-58	c4	2B	M
839	Interior air temperature sensor	27 to 29	j5	2B	P
840	Coolant temperature sensor	39-40	c4	2 BI	M
850	2 stage engine cooling fan thermal switch	11 to 13	b8	3 Ic	V
856	Critical oil temperature switch	35	c5	1BI	M
935	Blower motor	23	d5	1N + 1N	Q
945	Heated rear screen	111	r3 to 7	1N + 1N	F + ML
980	Door locked warning lamp	132	g9	1Ic + 1Ic	H

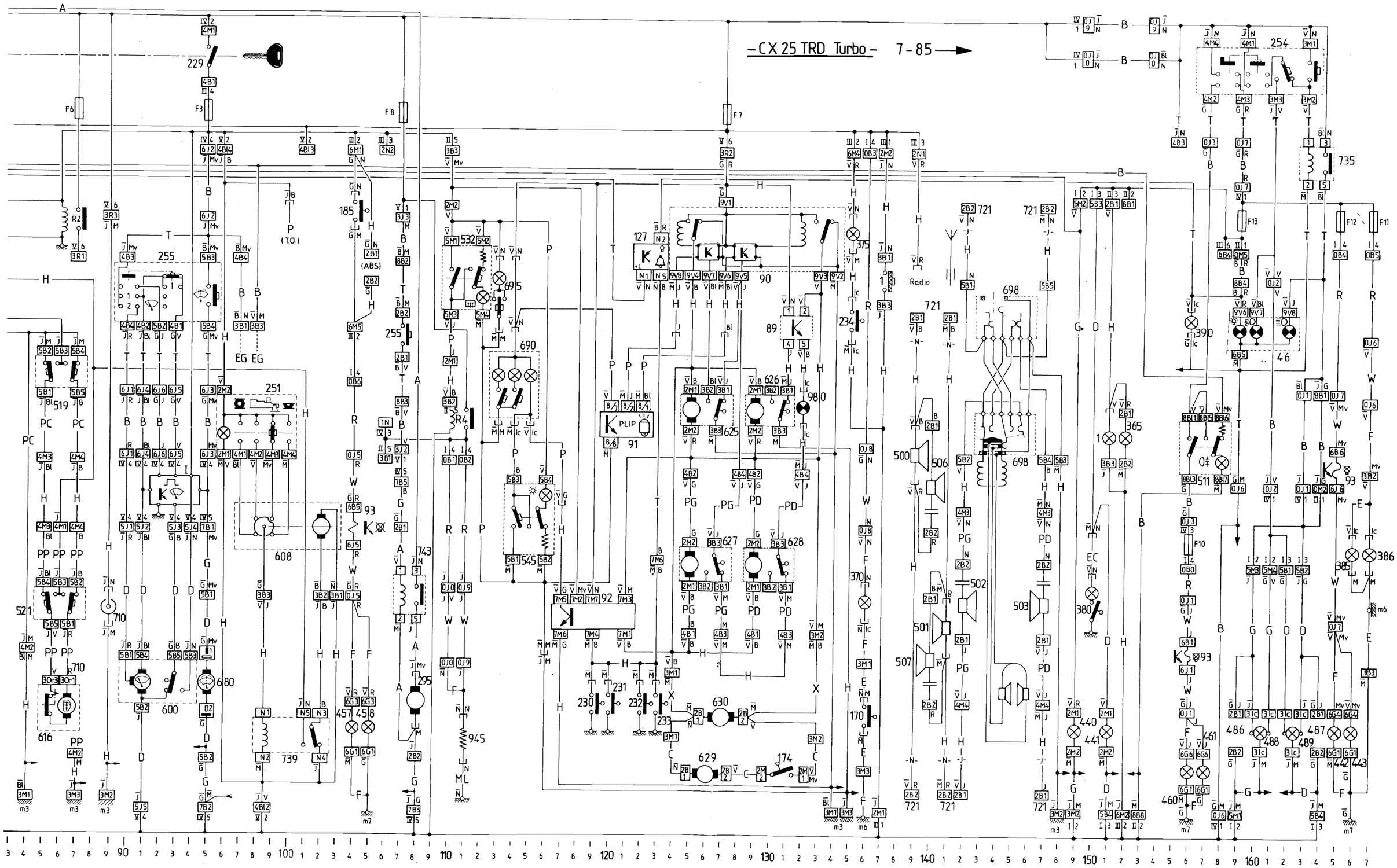

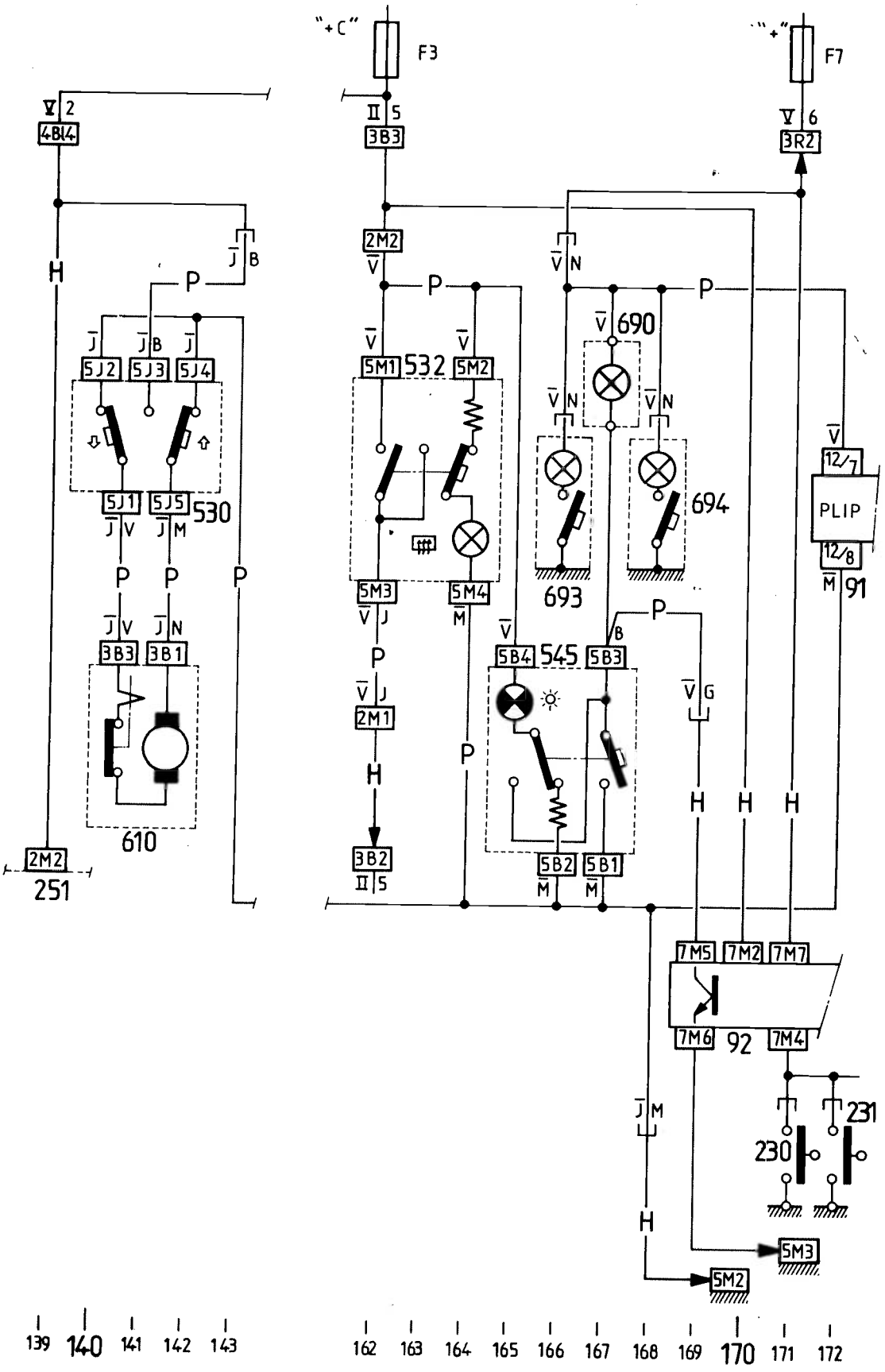

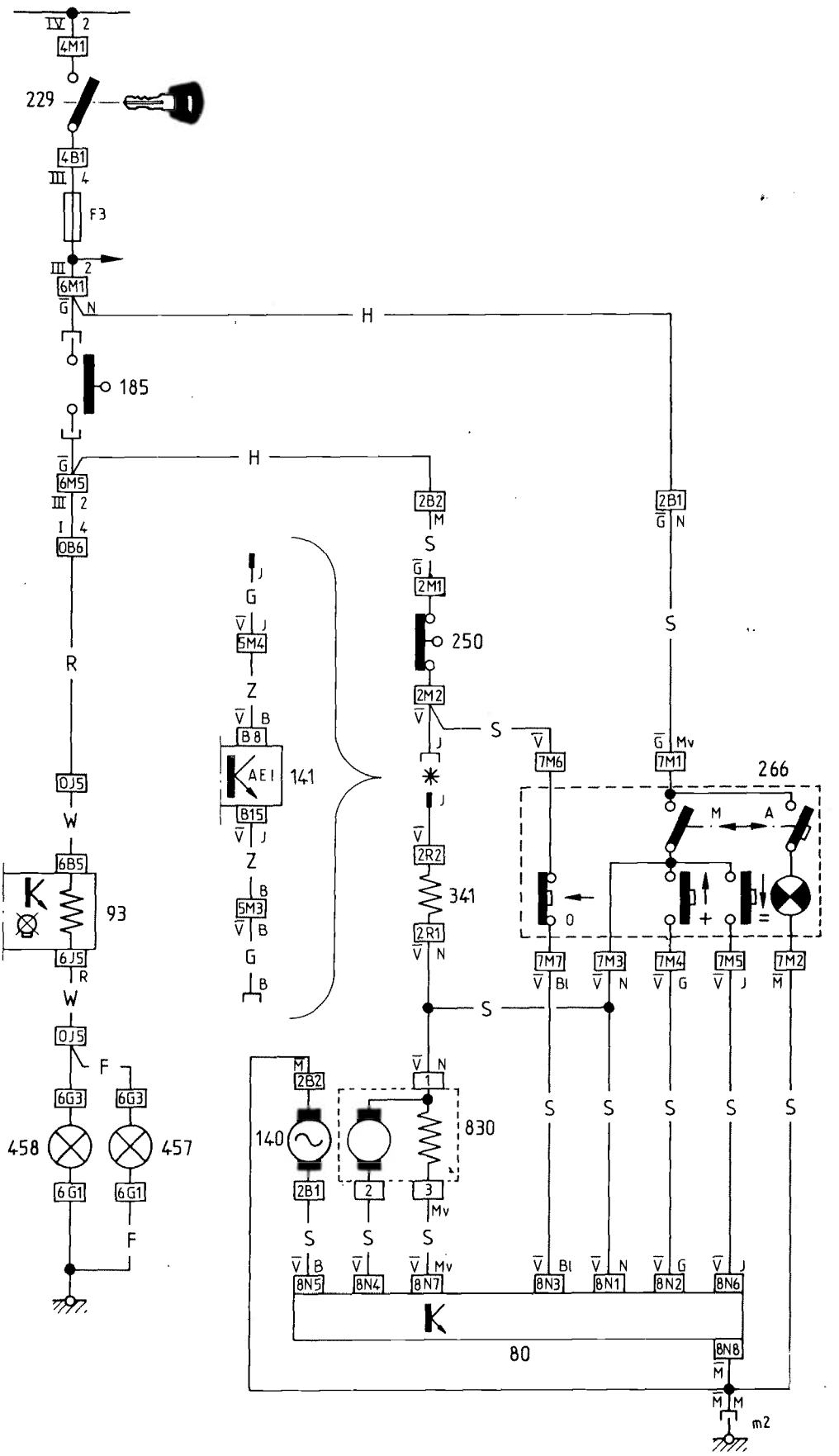

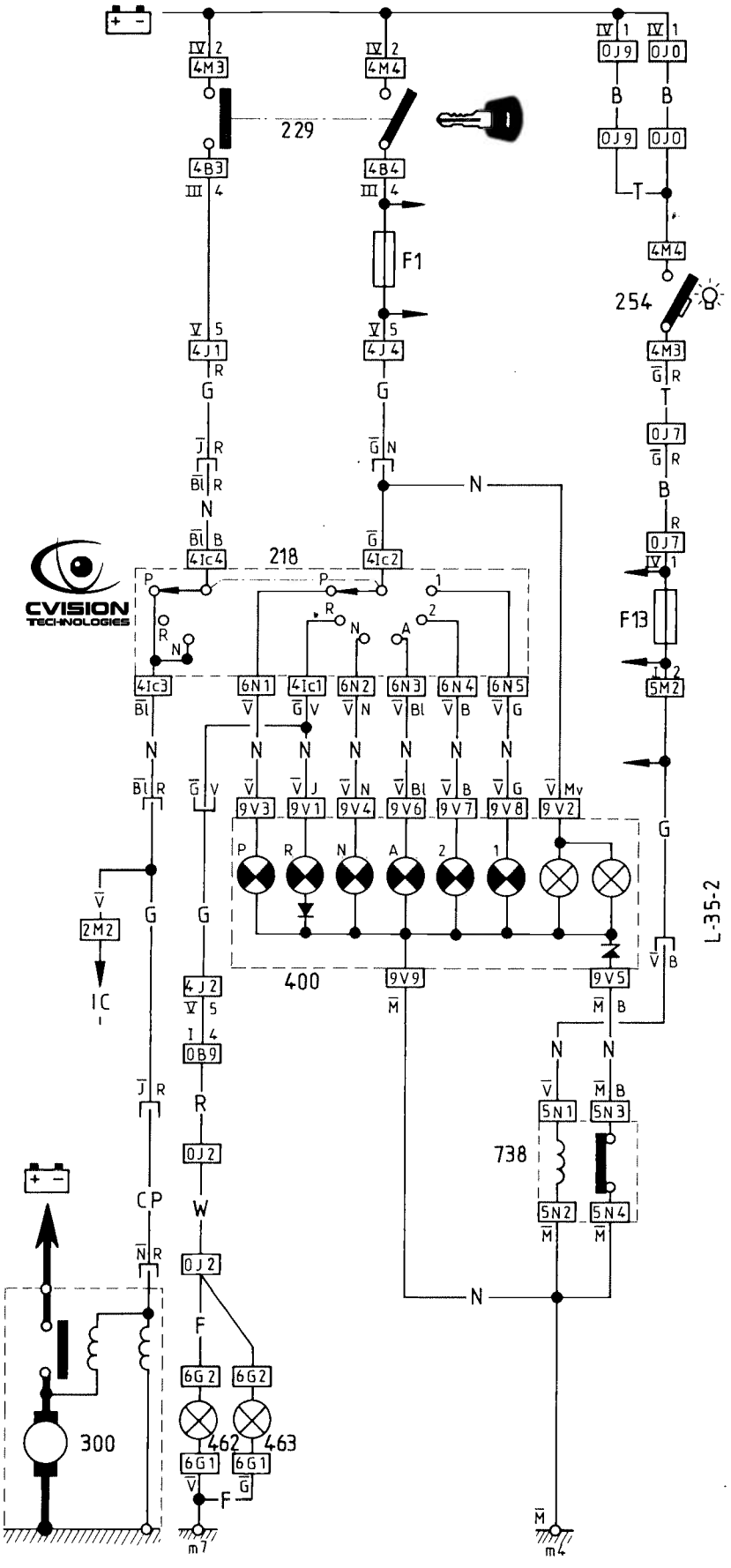

L 35.2

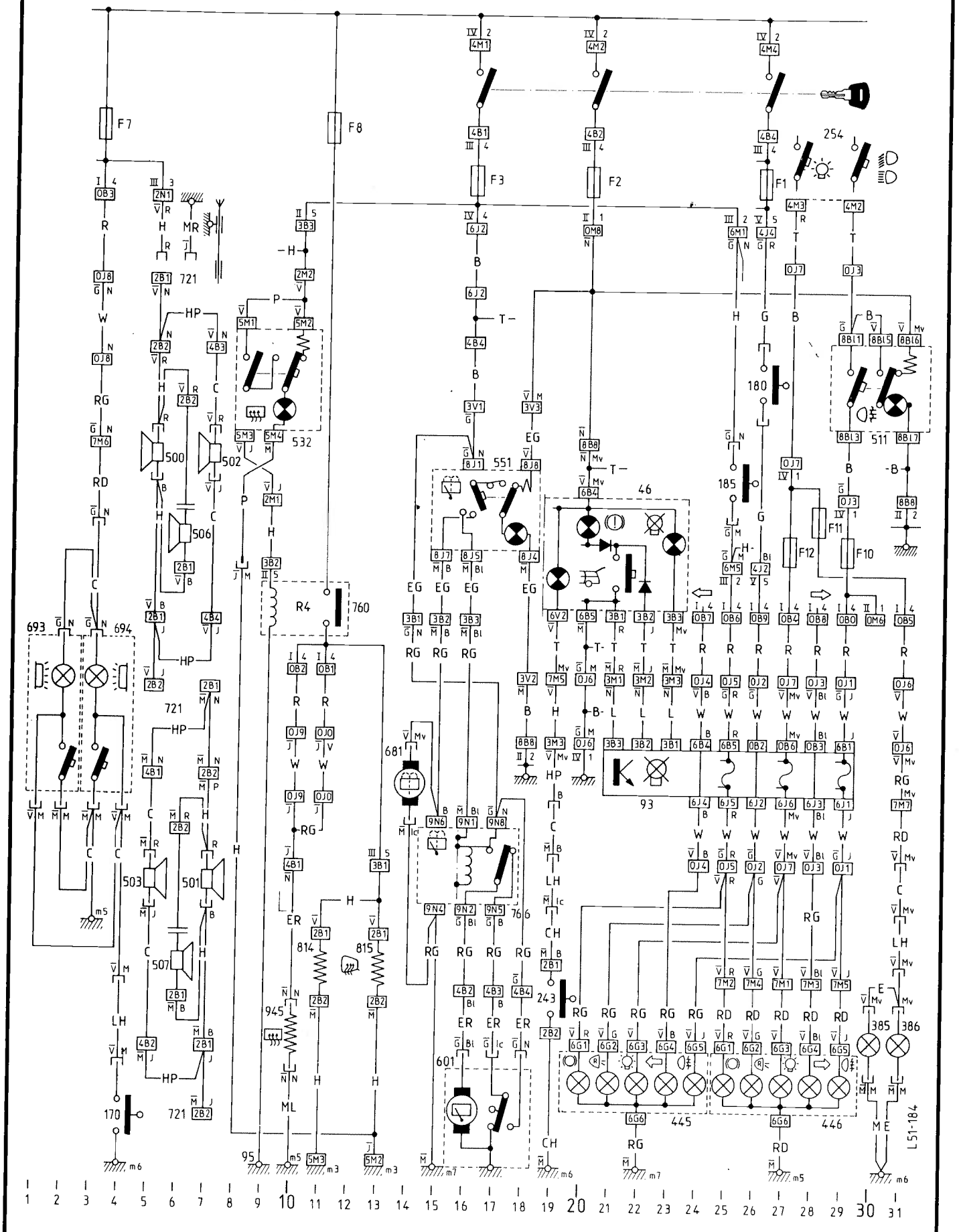

L 51.184

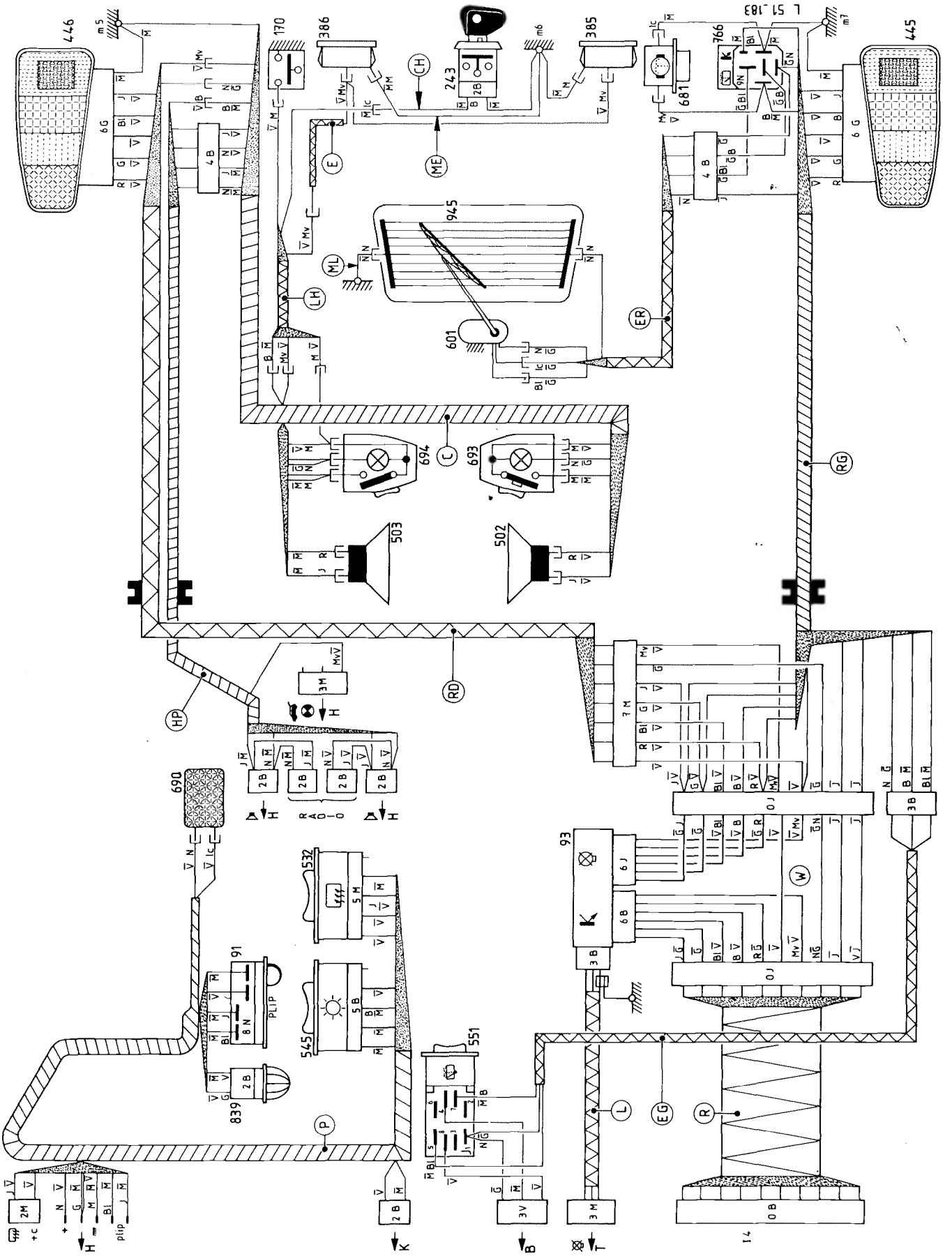

L 51.183

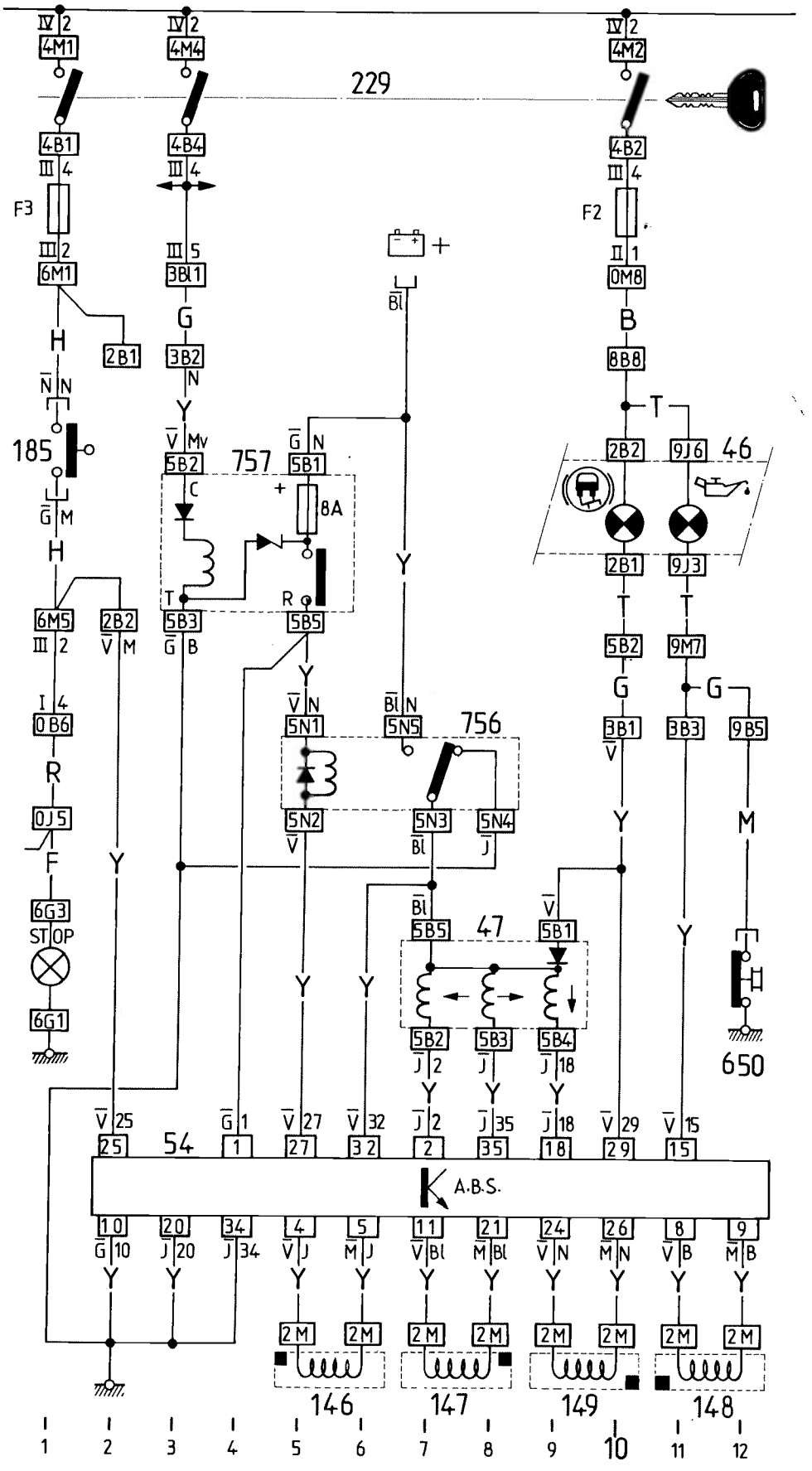

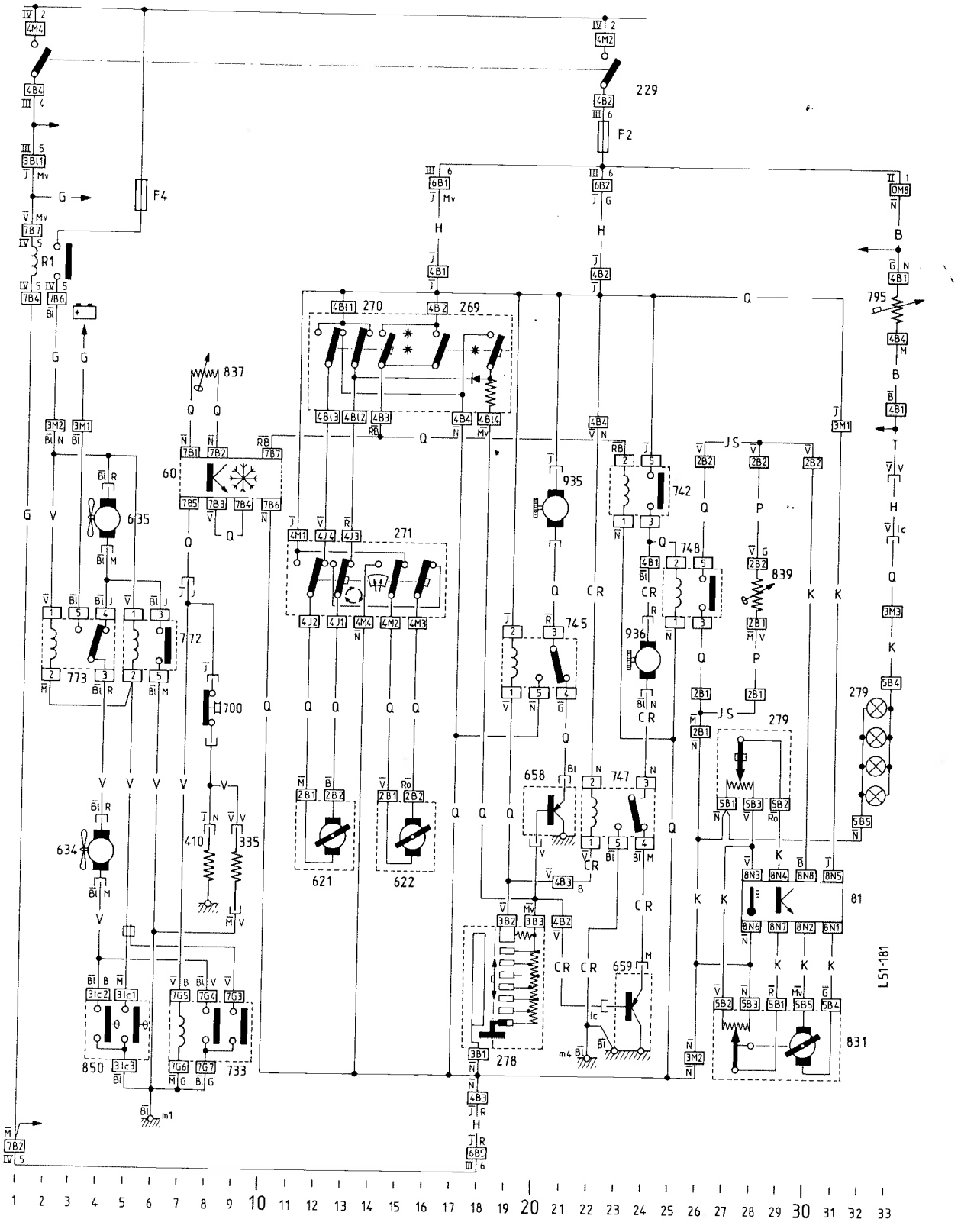

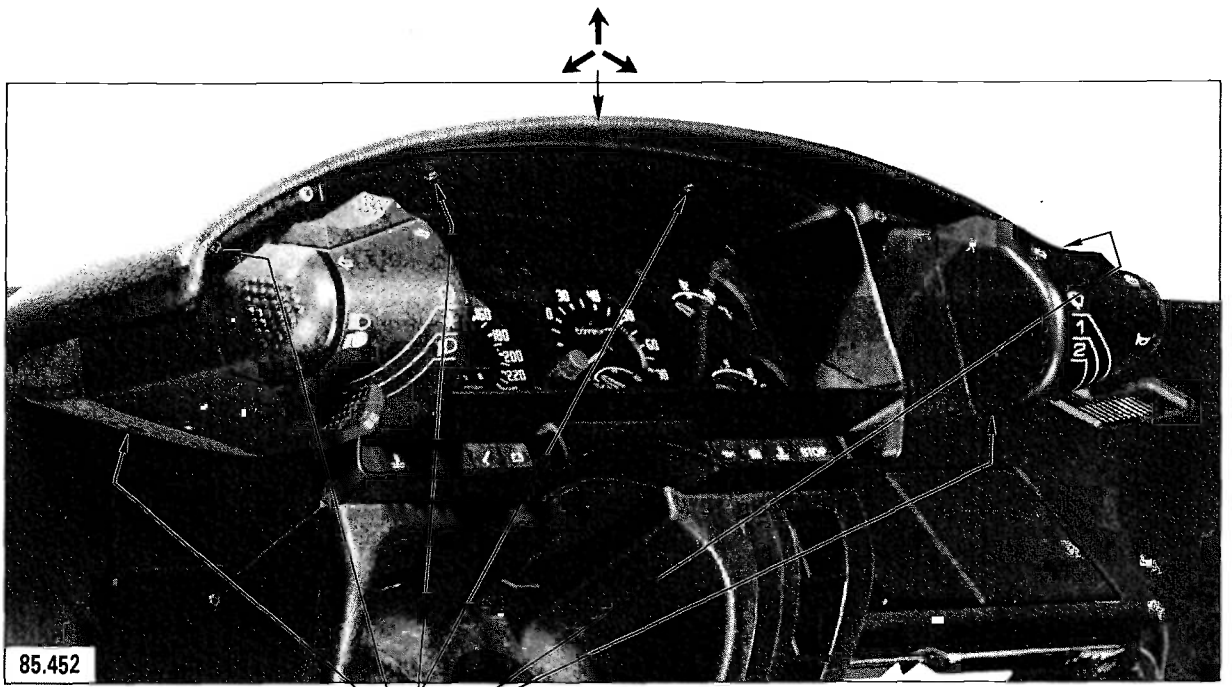

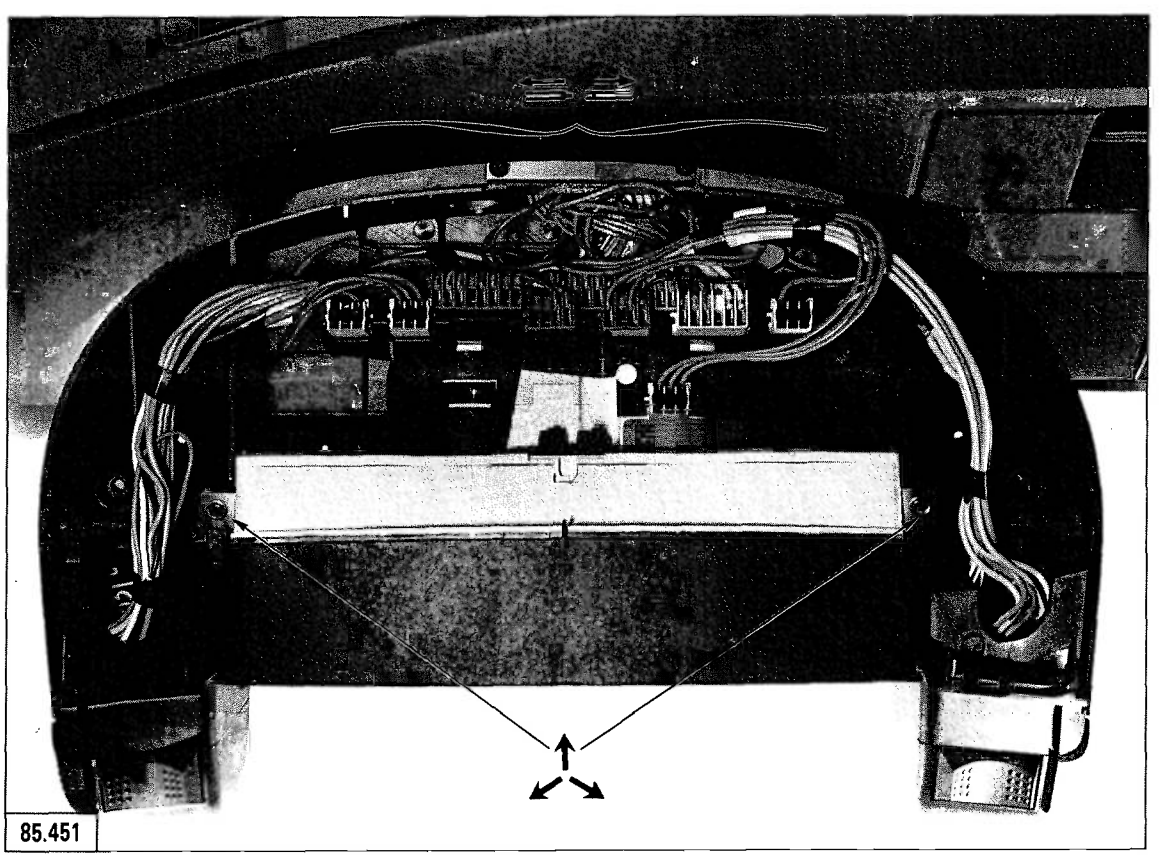

LIST OF OPERATIONS APPEARING IN THE CHAPTER: SUSPENSION - WHEELS - TYRES

OPERATION No.	DESCRIPTION	OPERATION TEXTS △	OPERATION SYMBOLS ○	VEHICLE CONCERNED ENGINE TYPE: 20 Petrol 829 A 5	22 Petrol J6T A 500	25 Petrol Injection 25/659	25 Prestige 25/659	25 Petrol Turbo 25/662	25 Prestige Petrol Turbo 25/662	25 Diesel 25/660	25 Diesel Turbo 25/648	25 Limousine Diesel Turbo 25/648	20 Safari Petrol + Familiale 829 A 5	25 Safari Petrol Injection 25/659	25 Safari Diesel + Familiale 25/660	25 Safari Diesel Turbo 25/648	Ambulance 829A5 or 25/660		
MA 430/1	Tools		○	X	X	X	X	X	X	X	X	X	X	X	X	X	X		
MA 430.00/1	Specification and particular features of the suspension		○	X	X	X	X	X	X	X	X	X	X	X	X	X	X		
MA 433.1/1	Removal/refitting of a front suspension cylinder	△		X	X	X	X	X	X	X	X	X	X	X	X	X	X		
MA 433.1/2	Removal/refitting of a rear suspension cylinder	△		X	X	X	X	X	X	X	X	X	X	X	X	X	X		
MA 435.1/1	Removal/refitting of an anti-roll bar	△		X	X	X	X	X	X	X	X	X	X	X	X	X	X		
MA 435.1/2	Removal/refitting of a rear anti-roll bar	△		X	X	X	X	X	X	X	X	X	X	X	X	X	X		
MA 471.00/1	Special features of the wheels and tyres	△		X	X	X	X	X	X	X	X	X	X	X	X	X	X		

13

LIST OF OPERATIONS APPEARING IN THE CHAPTER: HEATING, VENTILATION AND AIR CONDITIONING

OPERATION No.	DESCRIPTION	OPERATIONS △ TEXTS	OPERATIONS ○ SYMBOLS	VEHICLE CONCERNED ENGINE TYPE: 20 Petrol	22 Petrol	25 Petrol Injection	25 Prestige	25 Petrol Turbo	25 Prestige Petrol Turbo	25 Diesel	25 Diesel Turbo	25 Limousine Diesel Turbo	20 Safari Petrol + Familiale	25 Safari Petrol Injection	25 Safari Diesel + Familiale	25 Safari Diesel Turbo	Ambulance		
				829 A 5	J6T A 500	25/659	25/659	25/662	25/662	25/660	25/648	25/648	829 A 5	25/659	25/660	25/648	829 A 5 or 25/660		
MA 641.1/1	Removing and refitting a heating unit → 7/85	△		X		X	X	X		X	X	X	X	X	X	X	X		
MA 641.1/2	Removing and refitting the heating unit 7/85 →	△		X	X	X	X	X	X	X	X	X	X	X	X	X	X		

REMOVING AND REFITTING A HEATING UNIT → 7/85

REMOVAL

1. Disconnect the negative lead from the battery.
2. Empty the refrigerant from the air-conditioning system (refer to the relevant operation).
3. Remove the passenger seat.
4. Take off the anti-theft lock cowling (1).
5. **Removing the cubby hole** (2) :
   Uncouple speedometer cable (19).
   Disengage hydraulic fluid reservoir (20), but extract the 2 nuts (21).
   Withdraw the 3 screws located inside the vehicle.
   Remove the cubby hole, then disconnect:
   - the electrical oil gauge,
   - the clock,
   - the electronic control unit for injection.
6. **Removing the glove box (6):**
   Take off:
   - the 5 screws situated inside the vehicle (avoid slackening the 2 lock screws),
   - the 2 nuts positioned on the bulkhead, engine side (under the screen wiper motor and behind the screen washer bottle).

   Remove the glove compartment then disconnect:
   - the glove box lighting,
   - the cruise control unit.
7. **Removing the rear part of the console:**
   Disconnect the handbrake switch.
   Withdraw the handbrake lever gaiter.
8. **Removing the front part of the console:**
   Take off:
   - radio support bracket (3),
   - air intake housing (4),
   - oddment tray (8),
   - the 2 air vents (7),

   Disconnect:
   - window motor switches (10),
   - cigar lighter (9),
   - map reading lamp (5),
   - the centralised door lock control unit,
   - the door locking timer unit,

   Remove the air conditioning control switch (11) fixing nut.
   (Disconnect the white connector).
   Remove the console.
9. **Removing the heater unit:**
   Uncouple the 2 pipes (23) from the air conditioning system (paying attention to the 2 seals).
   Disconnect the 2 water pipes (12) and blank them off.
   Take off:
   - the 2 heating control bracket fixing screws,
   - the rear seat air duct (16),
   - the 2 air pipes (18),
   - the earth connection securing screws,
   - the 4 heating unit screws (14),
   - the 3 wind sleeve fastenings (24),
     (2 nuts (13) under the instrument panel and 1 bolt on the engine side).

   Disconnect, at the point of attachment to engine:
   - the feed wire and the earth lead (22) from the heater unit assembly,
   - the motor from the air recycling flap (2 channel white connector situated under the water header tank).

   Disconnect, from the interior:
   - the motor from the temperature regulation flap,
   - the feed wire from the temperature regulation device (1 channel mauve connector)
   - the potentiometer from the control lever,
   - the supply wire from the heater control lighting,
   - the temperature regulation control unit (17).

   Remove the heater unit fitted with its controlling units (Push aside wind sleeve (24)).
   Retrieve the de-frosting gaiter situated at (15).

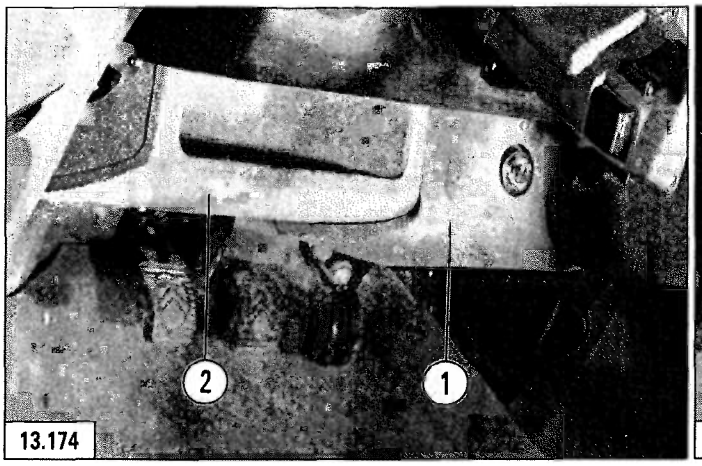

13.174

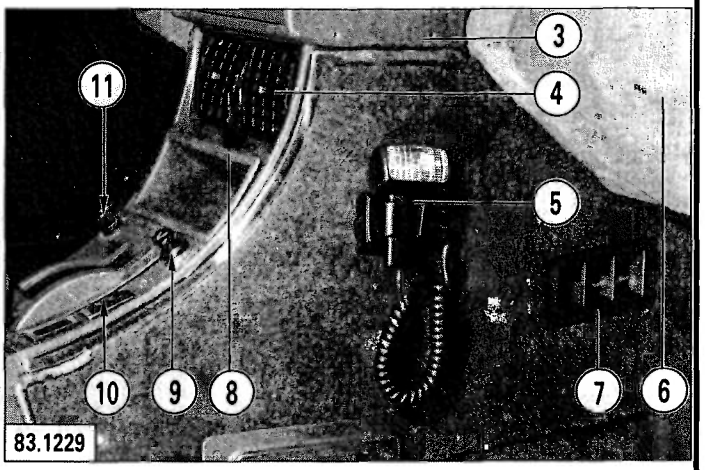

83.1229

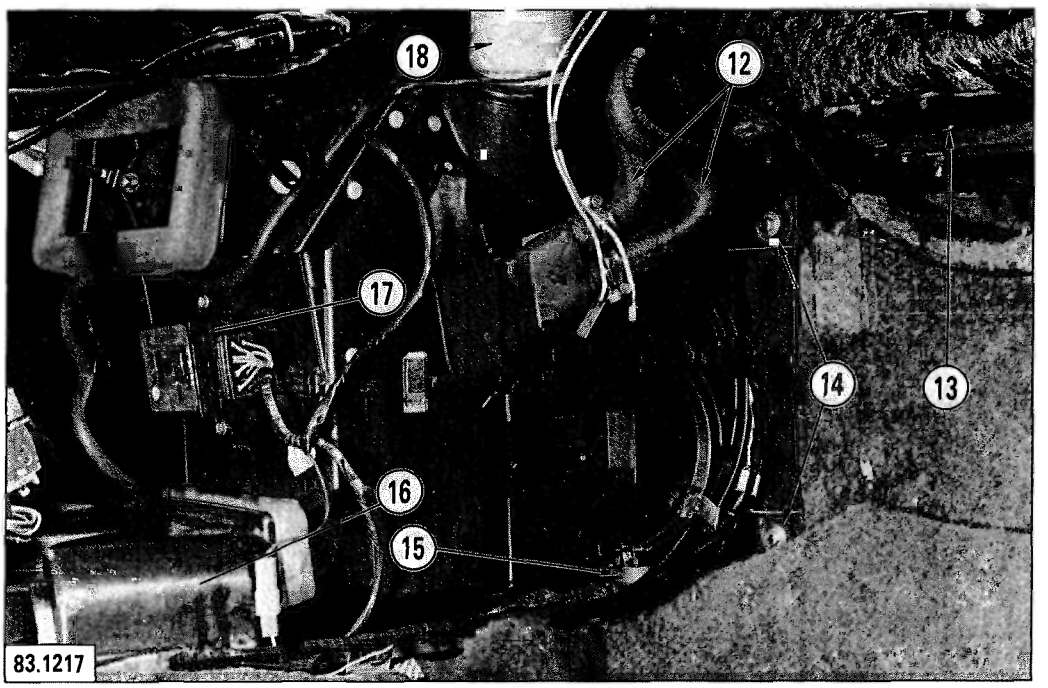

83.1217

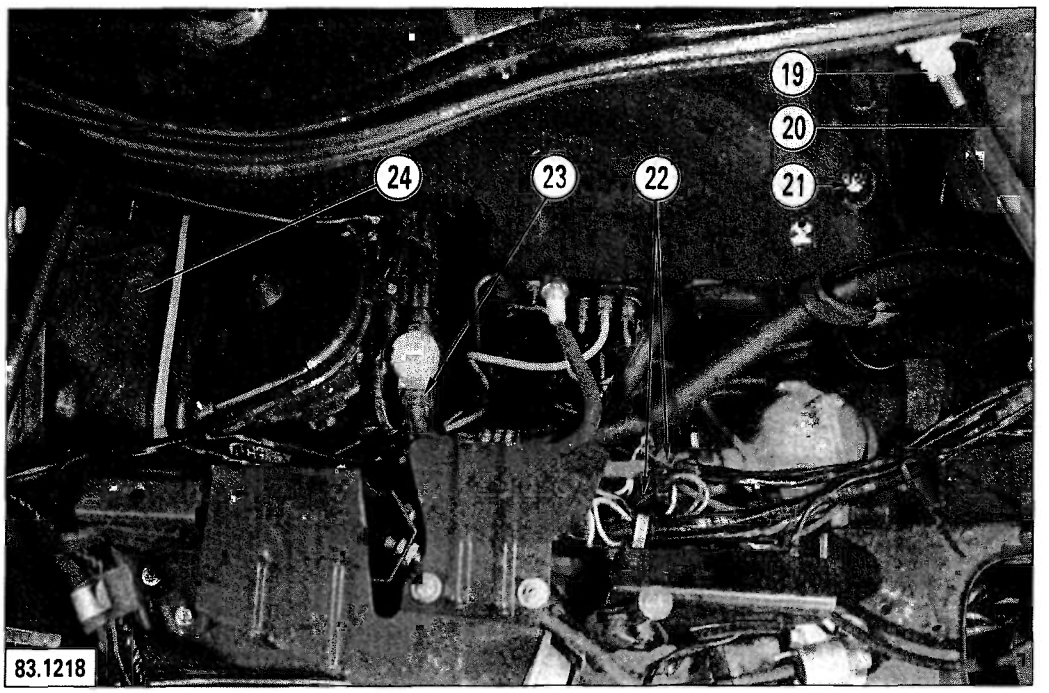

83.1218

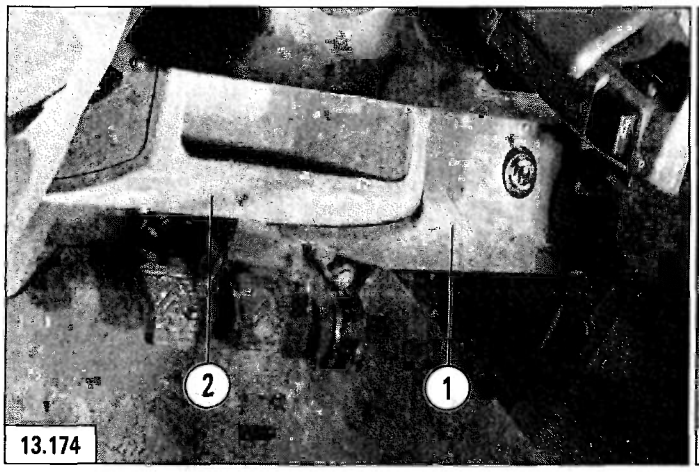

13.174

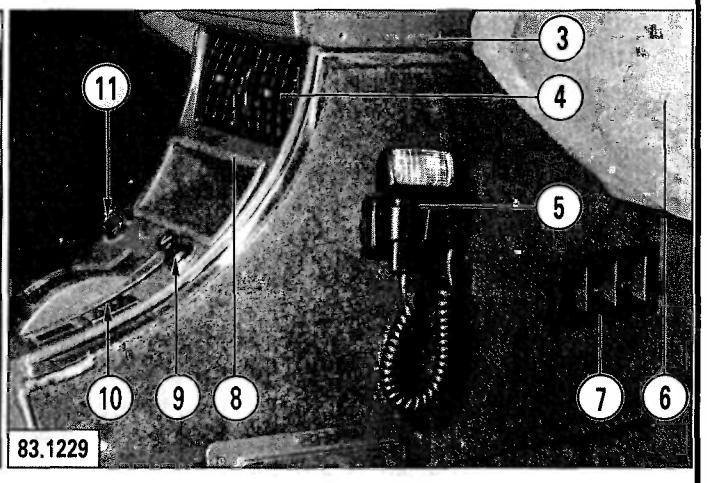

83.1229

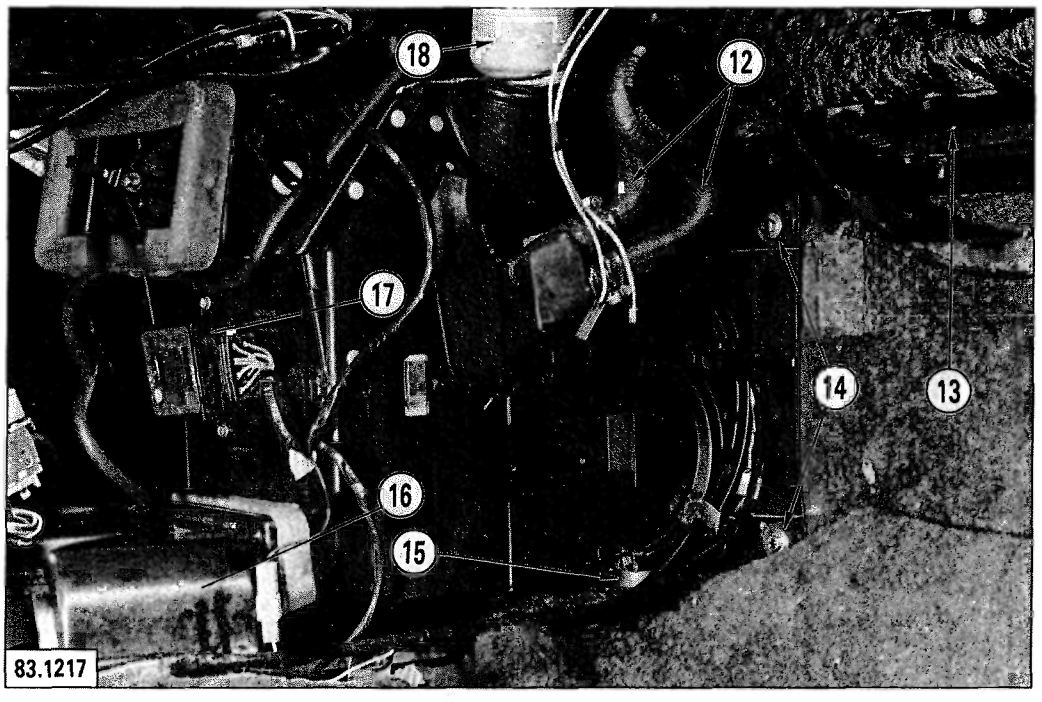

83.1217

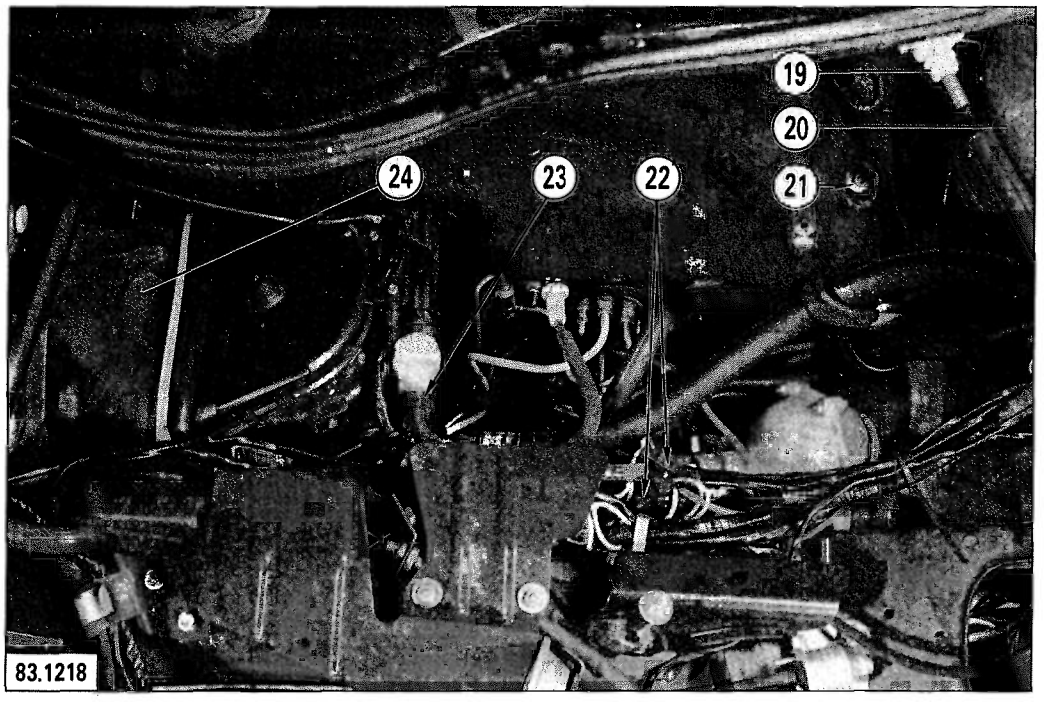

83.1218

REFITTING:

1. **Refitting the heater unit:**
   - Engage the unit in its location,
   - relocate the de-frosting gaiter (15),
   - secure the unit with the 4 screws (14)),
   - attach the wind sleeve (24) (2 nuts (13) under the instrument panel and 1 bolt on the engine side).

Reconnect, at the point of attachment to engine:
- the feed wire and the earth lead (22) to the heater unit assembly (2 one channel mauve connectors),
- the motor to the recycling flap (2 channel white connector under the water header tank).

Reconnect, inside the vehicle:
- the temperature regulation control unit (17) (8 channel black connector),
- the supply wire to the heater control lighting (1 channel red connector),
- the potentiometer to the control lever (3 channel white connector),
- the feed wire to the temperature regulation device (1 channel mauve connector),
- the motor to the temperature regulation flap (5 channel white connector),
- earth terminal clamps

Reposition:
- the 2 air pipes (18),
- the rear seat air duct (16),
- the 2 control bracket fixing screws.

Reconnect:
- the 2 water pipes (12),
- the 2 pipes (23) to the air conditioning system, fitted with the 2 seals.

2. **Refitting the front part of the console:**
   Introduce the front part of the console in its location, while positioning the harness and connecting up:
   - the centralised door lock control unit, (9 channel black connector),
   - the door locking timer unit,
   - cigar-lighter (9) (3 channel white connector),
   - the cigar lighter lighting,
   - the map reading lamp (5),
   - the window motor switches (10).

   Refit the air conditioning bolt (11) (Reconnect the white connector).
   Secure the console.
   Put into place:
   - the 2 air vents (7),
   - cubby hole (8),
   - air intake housing (4),
   - radio support bracket (3).

3. **Locate the rear part of the console,** and reconnect the handbrake switch.
   Replace the handbrake lever gaiter.

4. **Refitting the glove compartment (6).**
   Fit the glove box, connecting the cruise control unit and lighting.
   Screw up:
   - the 2 nuts on the bulkhead, engine side,
   - the 5 screws, inside the vehicle,

5. **Refitting the cubby hole (2):**
   Place the cubby hole, reconnecting:
   - the electrical oil gauge,
   - the clock,
   - the fuel injection ECU.

Reposition:
- the 2 nuts (21), engine side,
- the 3 screws, inside the vehicle.

Secure the hydraulic fluid reservoir, then recouple the speedometer cable (19).

6. **Fit the steering lock cowling (1).**

7. **Refill the air conditioning circuit with refrigerant** (see the appropriate operation).

8. **Attach the passenger seat.**

9. **Reconnect the battery.**

REMOVING AND REFITTING A HEATER UNIT
7/85 →

REMOVAL

1. Disconnect the negative battery lead.

2. Empty the refrigerant from the air-conditioning system (see corresponding operation).

3. **Remove** , from the interior:
   — The centre console sides (5) and (11),
   — the air-conditioning control bracket (4) (disconnect the controls),
   — the centre part of the console (3),
   — the rear part of the console (2),
   — the glove box (6),
   — the fuel injection ECU bracket (7),
   — the steering wheel,
   — the steering lower panel, (10),
   — the switch panel fixing (9),
   — the 3 storage boxes (1),
   — the L/H dashboard fixing screw (8),
   — the electrical unit support panel (19),
   — the rear seat duct (20).

4. **Remove**, from the engine compartment:
   — The water header tank fixing (13) to move it clear,
   — the ducting (12),
   — the securing (2 nuts and 1 bolt) for the air intake tower (14),
   — the 2 dashboard securing nuts (15) on the bulkhead.

5. **Disconnect**, engine compartment:
   — The yellow connector to the air-conditioning compressor clutch,
   — the 2 channel connector to the air intake motor flap (under header tank),
   — the 2 air-conditioning hoses (17) (be careful of the seals).

6. In the engine compartment, **clamp** the 2 pipes (16) to avoid losing the engine coolant.

7. **Disconnect**, inside the vehicle:
   — The blower motor speed control module (under the R/H side of the dashboard),
   — the connectors between the ventilation-air con and the interior harnesses,
   4 channel white connector } situated at (22)
   1 channel clear connector }
   — the connector between the heating and interior lighting harnesses,
   2 channel white connector situated above the unit
   (supply, interior air temperature sensor),
   — the 2 pipes (18).

8. **Remove**, the 4 fixing screws (23) from the unit.

9. **Remove the unit:**
   — Push the air intake tower (14) some 30 to 40 mm to the right (lift it to disengage the 2 studs),
   — lift the dashboard,
   — disengage the heater ducts (on the upper part of the unit),
   — remove the unit from inside the vehicle,
   — recuperate the gaiter situated at (21) from the de-frosting drain.

NOTE: *The units shown on the photographs opposite belong to L.H.D. vehicles, however, the removal/fitting operations for units belonging to R.H.D. models are the same as on a L.H.D. version.*

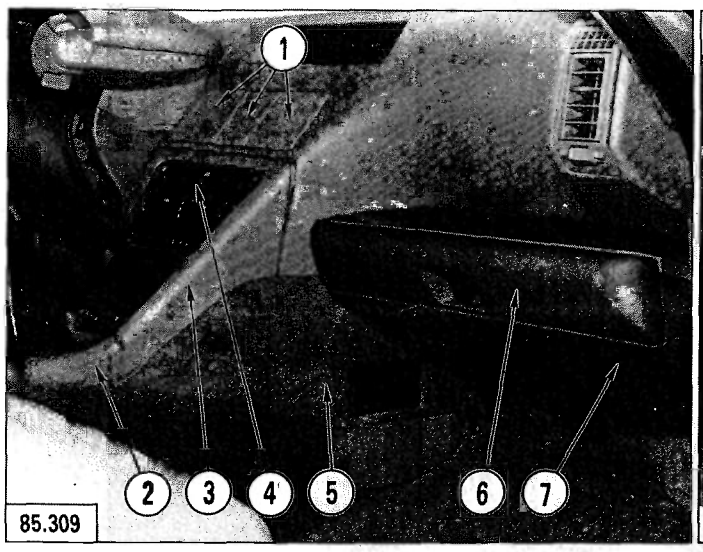

85.309

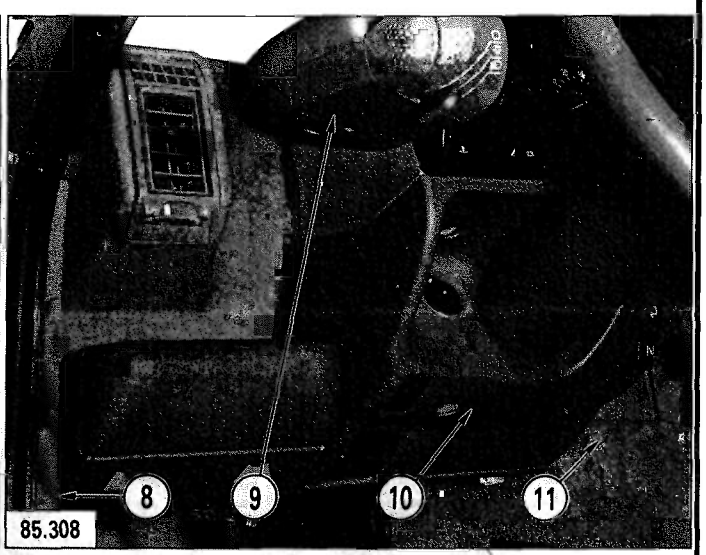

85.308

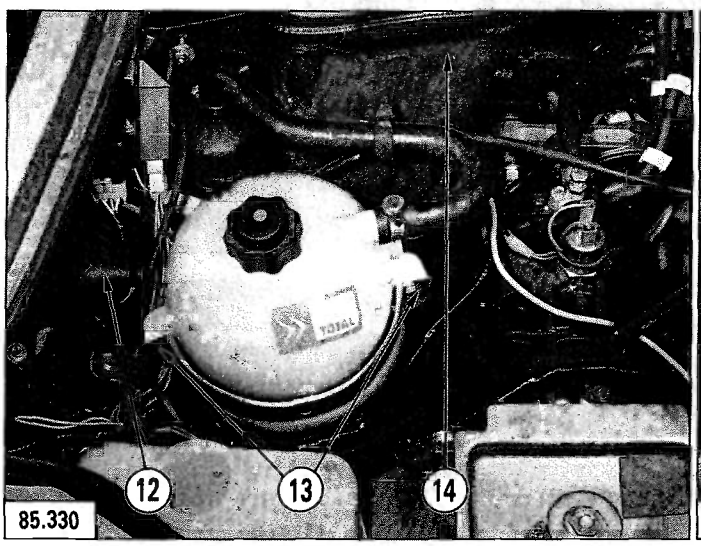

85.330

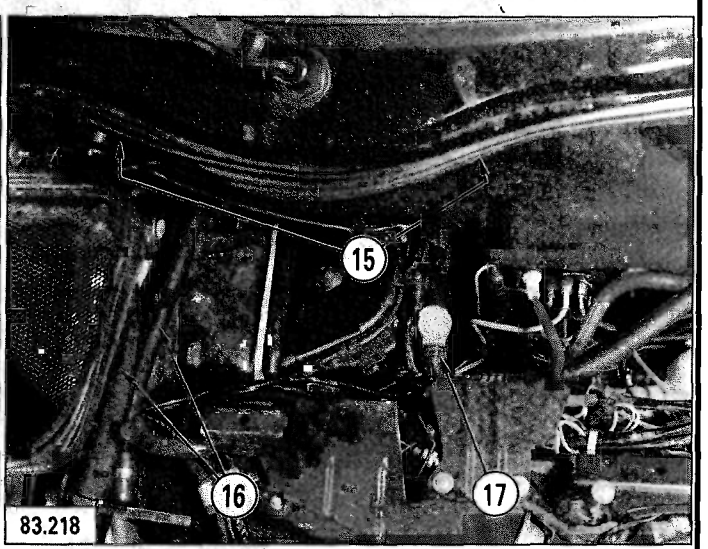

83.218

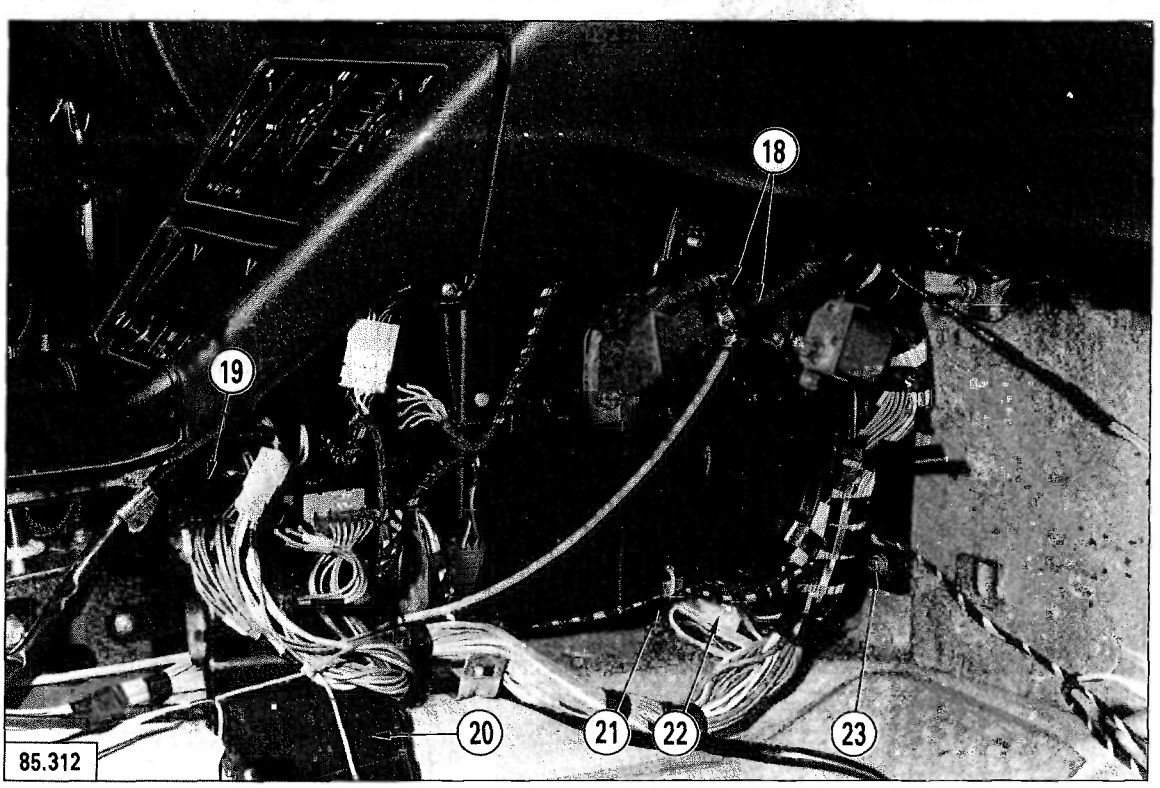

85.312

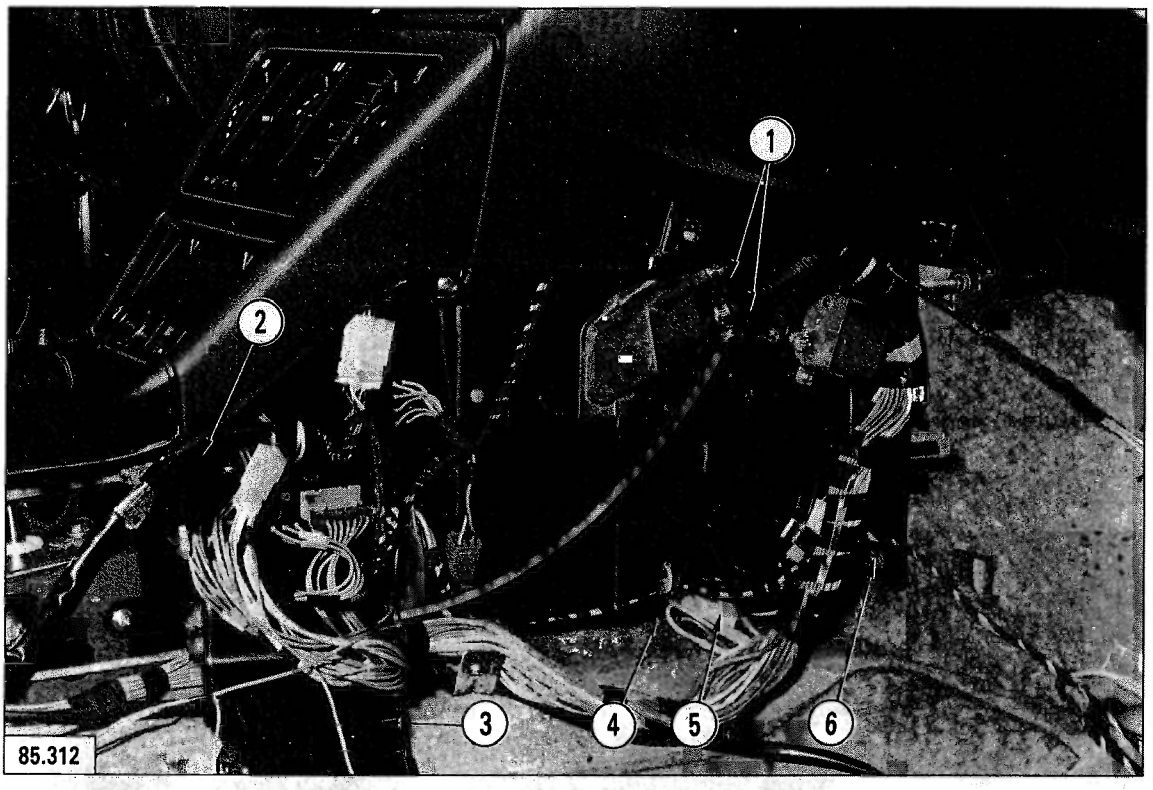

85.312

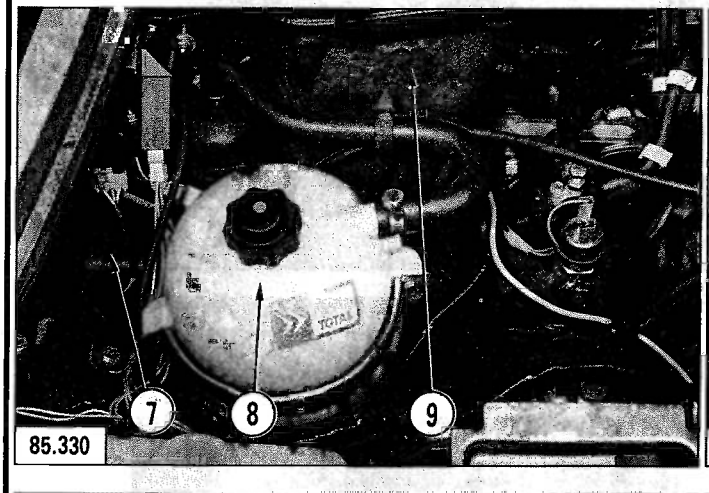

85.330

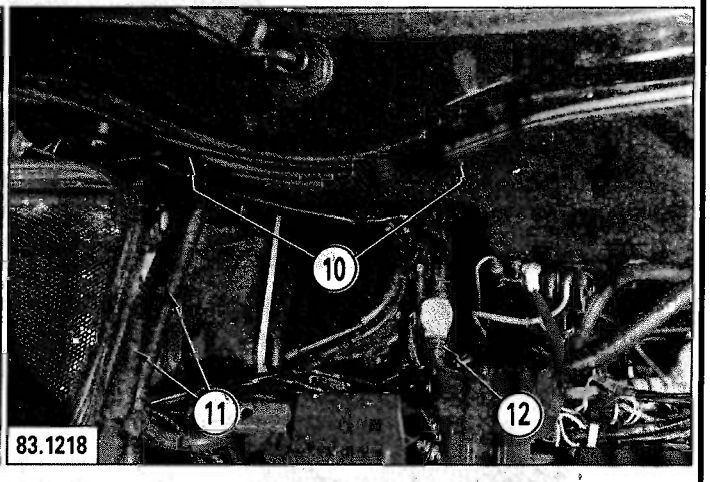

83.1218

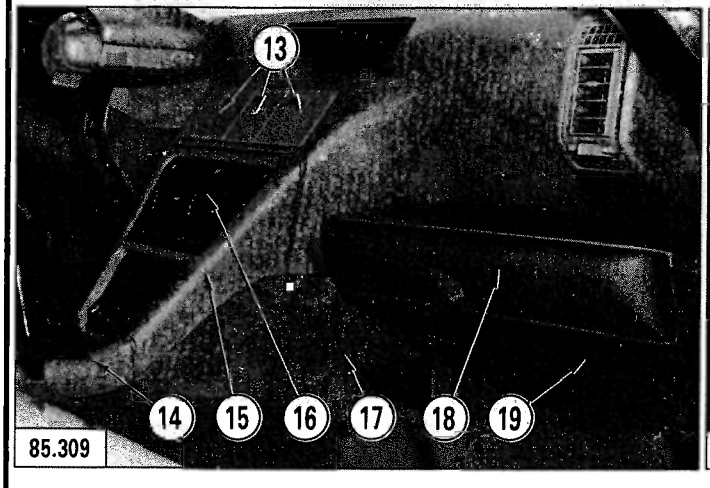

85.309

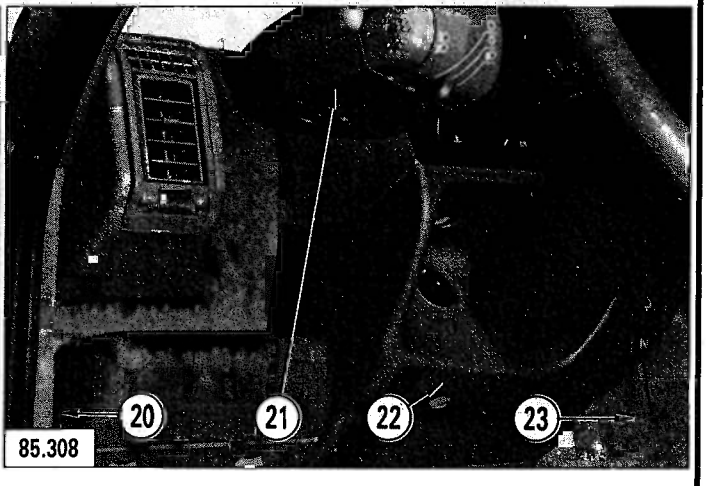

85.308

FITTING

1. **Refitting the unit:**
   — Engage the unit in its location, position the harnesses,
   — locate the defrosting drain gaiter (4),
   — connect the 2 pipes (1),
   — engage the heater ducts on the upper part of the unit,
   — secure the unit with the 4 screws (6).

2. **Connect**, inside the vehicle:
   — The connector between the heating and interior lighting harnesses,
   2 channel white connector situated above the unit.
   — The connectors between the ventilation-air con. and interior harnesses
   4 channel white connector } situated at (5)
   1 channel clear connector }
   — The blower motor speed control module (under the R/H side of the dashboard).

3. **Connect**, engine compartment:
   — The yellow connector to the air conditioning compressor clutch,
   — the 2 channel white connector to the air intake motor flap (under header tank).

4. **Locate**, and fix dashboard on the bulkhead, engine side (2 nuts at (10)).

5. **Refit**, the three storage boxes (13).

6. **Secure**, engine compartment:
   — The air intake tower (9),
   — the ducting (7),
   — the water header tank.

7. **Refit**, inside the vehicle:
   — The rear seat air duct (3),
   — the electrical unit support panel (2),
   — the L/H dashboard fixing screw (20),
   — the rear (14) and centre (15) part of the console.

8. **Connect** the controls of bracket (16) and refit it.

9. **Refit**, inside the vehicle:
   — The glove box (18),
   — the fuel injection ECU bracket (19),
   — the switch panel (21),
   — the steering wheel lower panel (22),
   — the steering wheel,
   — the console side panels (17) and (23).

10. In the engine compartment, **reconnect** the two pipes (12) for the air conditioning (2 seals).

11. **Remove** the clamps from the two pipes (11).

12. **Refill** the air conditioning system (see corresponding operation).

13. **Reconnect** the battery.

14. **Top-up** the coolant system.

LIST OF OPERATIONS

Operation number	DESCRIPTION
	14
MA 800-000	Overhauling the bodyshell
	I Components sold by the Replacement Parts Department
	II Electrically zinc-coated or galvanized items
	III Checking a damaged vehicle
MA 800-00	Preparation of the bodyshell
MA 800-01	Fitting and checking a bodyshell, stripped, on a CELETTE jig
MA 800-02	Exchanging the longerons, with the mechanical components in situ (using CELETTE jig)
MA 800-10	Fitting and checking a bodyshell, stripped, on a CAROLINER jig
MA 800-11	Fitting and checking a Safary bodyshell, stripped, on a CAROLINER jig
MA 800-12	Checks on a CAROLINER jig, with the mechanical components in situ
MA 800-13	Checking on CAROLINER jig, a Safary bodyshell with the mech. components in situ
MA 801-1	Replacing a front unit, complete
MA 801-2	Replacing the body fixed components
MA 802-1	Replacing a front wing
MA 802-2	Replacing a front wheelarch, complete
MA 824-1	Replacing a rear wing
MA 824-2	Replacing a rear wing, partly
	15
MA 841-2	Removing/refitting a side door
MA 841-3	Dismantling and rebuilding a side door, completely
MA 851-1	Replacing a front bumper
MA 851-2	Replacing a bonnet
MA 851-3	Opening a bonnet when the catch release fails to operate
MA 853-1	Replacing a rear bumper
MA 853-2	Bonding the rear quarter glasses
MA 856-1	Replacing a dashboard

BODYSHELL

OVERHAULING THE BODYSHELL

I. PARTS OBTAINABLE FROM THE REPLACEMENT PARTS DEPARTMENT.

REF. No.	DESCRIPTION	OPERATION No.
1	Windscreen frame	MA 812.1
2	Roof panel	MA 825.1
3	Rear screen pillar	MA 825.1
4	Roof panel with sun-roof	MA 825.1
5	Rear shelf	MA 831.6
6	Seat backrest upper spacer	MA 831.5
7	Sheet metal under backrest	MA 831.5
8	Seat backrest lower spacer	MA 831.5
9	Sun-roof rear crossmember	MA 825.1
10	Crossmember angle sheet	MA 825.1
11	Roof crossmember	MA 825.1
12	Interior lamp bracket	MA 825.1
13	Windscreen frame pillar	MA 812.2
14	Windscreen opening reinforcement	MA 812.3
15	Bulkhead with windscreen opening crossmember	MA 812.2
16	Louvre shelft	MA 812.2
17	Corner plate	MA 812.3
18	Header tank bracket	MA 802.3
19	Stay support bracket	MA 802.3
20	Air filter special support (82 M.Y.)	MA 802.3
21	Closing panel assembly	MA 802.3
22	Upper closing panel	MA 802.3
23	Side closing panel	MA 802.3
24	Body fixed component	MA 801.2
25	Trim panel upper crossmember	MA 801.2
26	Upper anti-recycling baffle	MA 801.2
27	Grille fixing bracket	MA 801.2
28	Bonnet lock support bracket	MA 801.2
29	Lower crossmember inner panel	MA 801.2
30	Trim panel lower crossmember	MA 801.3
31	Anti-recycling side baffle	MA 801.2
32	Upper closing panel	MA 801.1
33	Lower sheet metal	MA 801.1
34	Front wheelarch	MA 802.4
35	Front wheelarch, front section	MA 802.4
36	Front wheelarch assembly	MA 802.3
37	Unit, complete	MA 801.1
38	Front box crossmember	MA 801.1
39	Lower scuttle	MA 801.1
40	Fuel tank bracket	MA 801.1
41	Steering mounting bracket	MA 801.1
42	Centre box crossmember	
43	Centre box reinforcing plate	
44	Rear floor panel assembly	MA 831.1

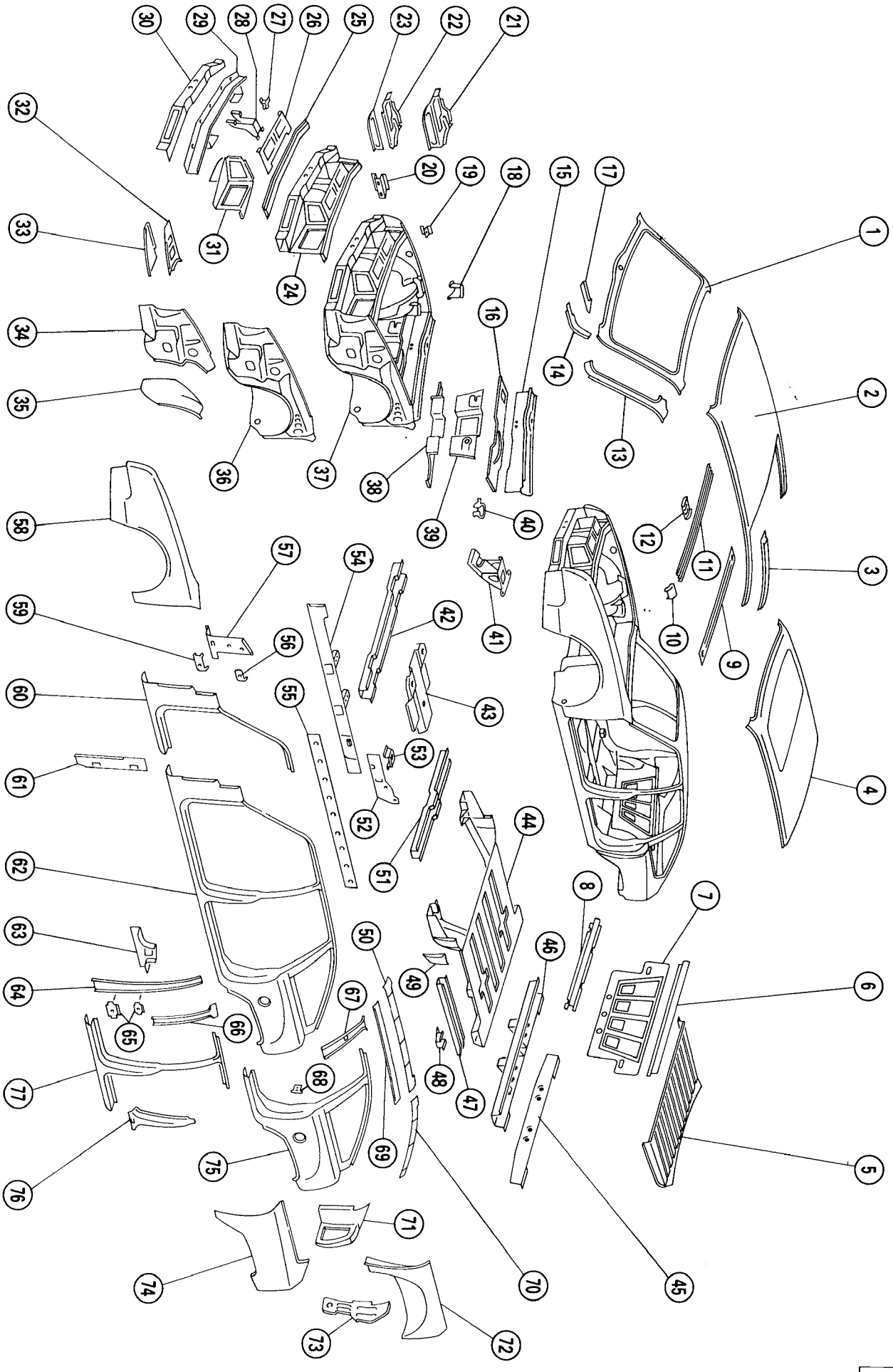

L.80.74

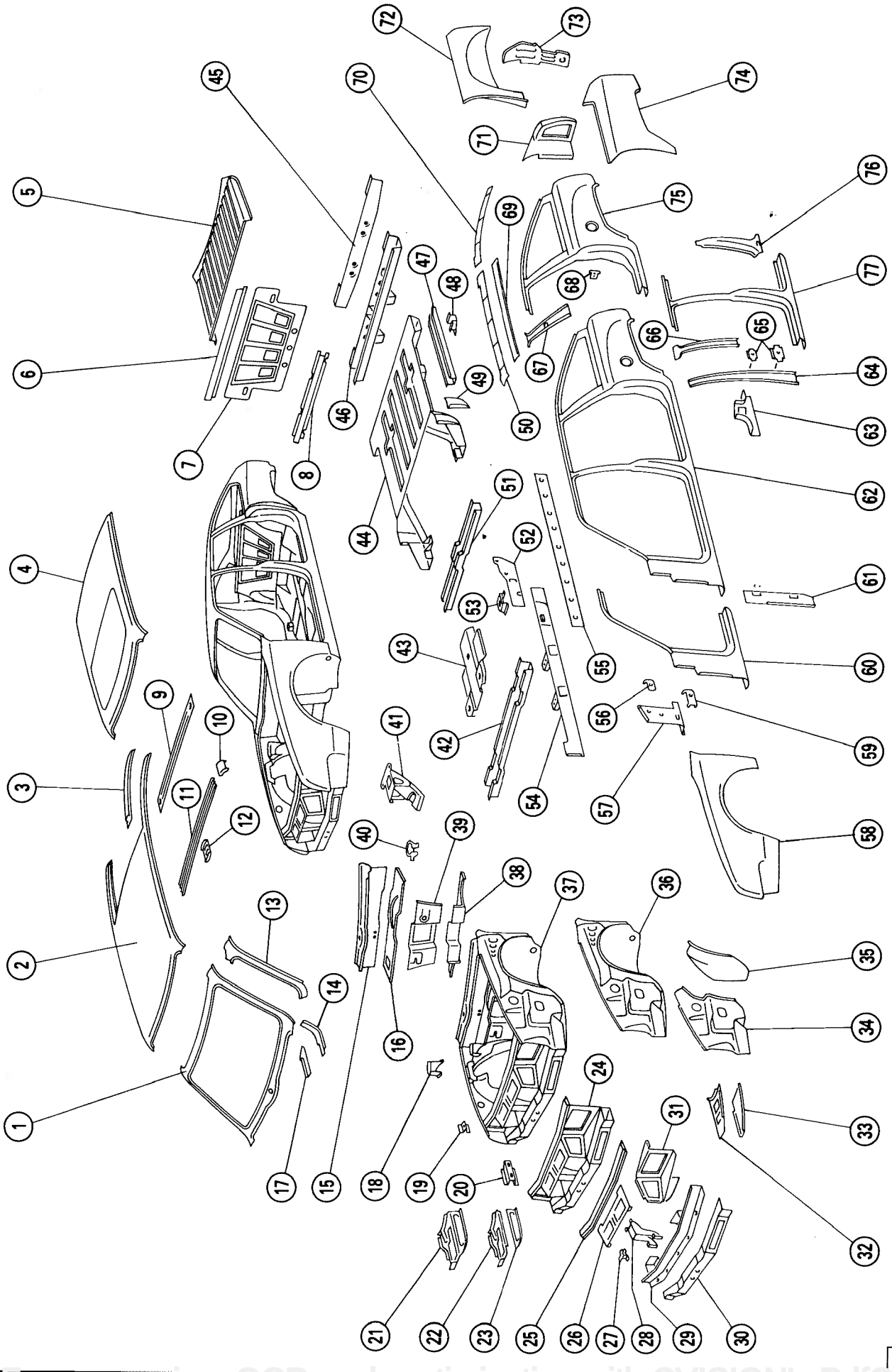

L.80.74

I. PARTS OBTAINABLE FROM THE REPLACEMENT PARTS DEPARTMENT

REF. No.	DESCRIPTION	No. OPERATION
45	Rear crossmember closing plate	MA 831.3
46	Floor panel rear crossmember	MA 831.3
47	Floor panel sidemember	MA 831.4
48	Side buffer bridging bracket	MA 831.4
49	Wheelarch tensioner	MA 824.4
50	Roof side member inner panel	MA 821.1
51	Crossmember under box	MA 831.1
52	Rear closing plate	MA 824.4
53	Rear bench seat mounting bracket	MA 824.4
54	Front closing plate	MA 821.1
55	Interior reinforcing plate	MA 821.5
56	Front door pillar upper angle sheet	MA 821.2
57	Front door pillar reinforcement	MA 821.2
58	Front wing	MA 802.1
59	Front door pillar lower angle sheet	MA 821.2
60	Side panel front section	MA 821.2
61	Front door pillar hinge support	MA 821.2
62	Side panel	MA 821.1
63	Centre door pillar lower reinforcement	MA 821.3
64	Centre door pillar lining	MA 821.3
65	Centre door pillar distance piece	MA 821.3
66	Centre door pillar upper reinforcement	MA 821.3
67	Rear door pillar lining	MA 821.4
68	Rear door pillar striking plate reinforcement	MA 821.4
69	Roof side upper sill	MA 821.1
70	Inner rear screen pillar	MA 821.4
71	Lamp cluster panel drip rail	MA 824.5
72	Rear wheelarch	MA 824.4
73	Rear wing closing plate	MA 824.1
74	Rear fender	MA 824.1
75	Rear section of the side panel	MA 821.4
76	Centre door pillar hinge support	MA 821.3
77	Centre section of a side panel	MA 821.3

II. ELECTRICALLY ZINC-PLATED COMPONENTS

The shaded parts represented on the opposite drawing are electrically zinc-plated to protect the bodyshell from corrosion.

The choice of these parts is function of the vulnerability of certain areas and may be modified.

The parts sold by the Replacement Parts Department have undergone the same treatment but the cataphoresis coat covering the whole frame prevents the repairer from seeing it.

REPAIRS

When carrying out a repair operation, it is necessary to destroy the coat of cataphoresis on both faces of the steel plates, on the welded areas, although it damages the zinc coating.

To avoid any risk of corrosion due to this repair operation (especially on the welded areas), some precautions should be taken:
- Avoid grinding the welded areas of the new parts, since sanding discs damage the coat of zinc. It is better to use a torch for heating the part slightly, and to brush it using a wire brush.
- After having separated the welding seams, only grind the areas where the welding is too thick.

PROTECTION BEFORE WELDING

In order to avoid any risk of corrosion, it is necessary to apply a coat of conductive primer on the inner face of all steel plates to be welded (zinc-plated or not).

REMARK: The conductive primers are zinc paints allowing the flow of electric current to pass without preventing the welding to be carried out. However, it is necessary to increase the current intensity slightly.

The primers which can be welded are sold by the suppliers of paint (BERGER, CORONA) and products for the automotive industry:

Examples of recommended products:

Primer before welding SWP
Supplier: KENT INDUSTRIES
Unit 4, Daux Road
Billingshurt
West Sussex RH 14 9SJ
(England)
Phone: 403-81.36.71

Welding paste
Supplier: FRANCE ARC
47, avenue A. Briand
92120 MONTROUGE
Tél. (1) 46.55.47.22

REMARK: This product enables the spot-welding to be carried out, beginning in an angle, without previously scouring the cataphoretic priming.

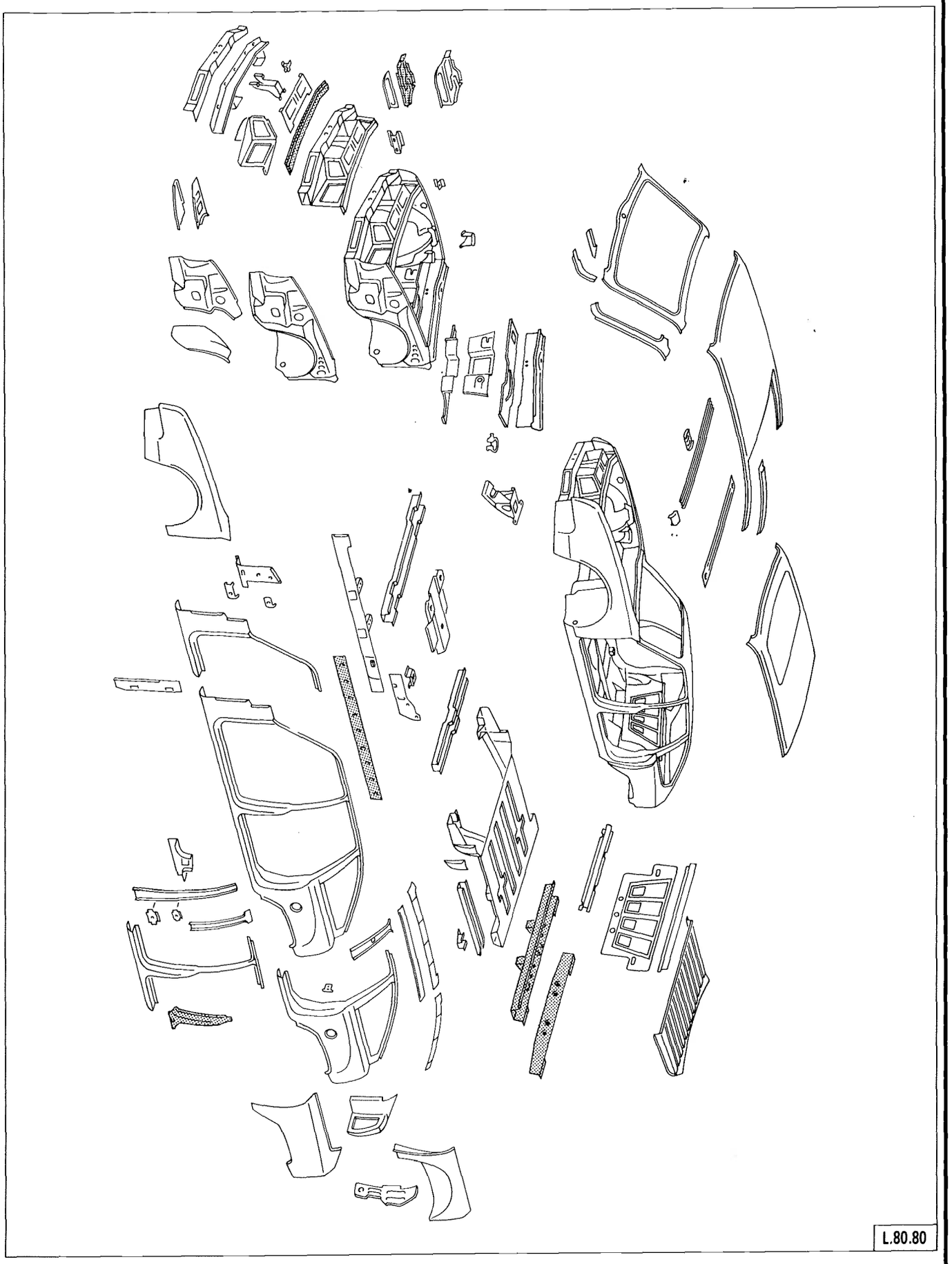

L.80.80

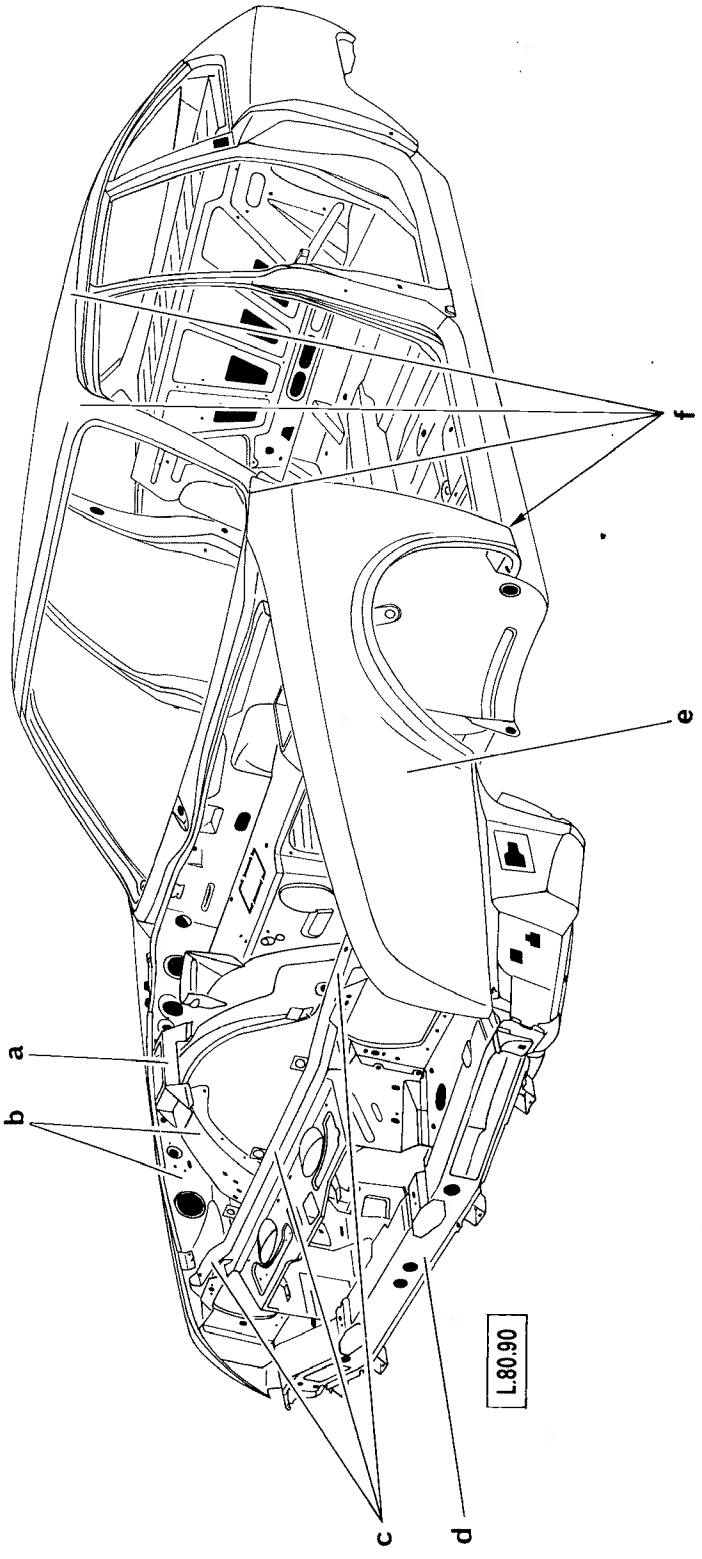

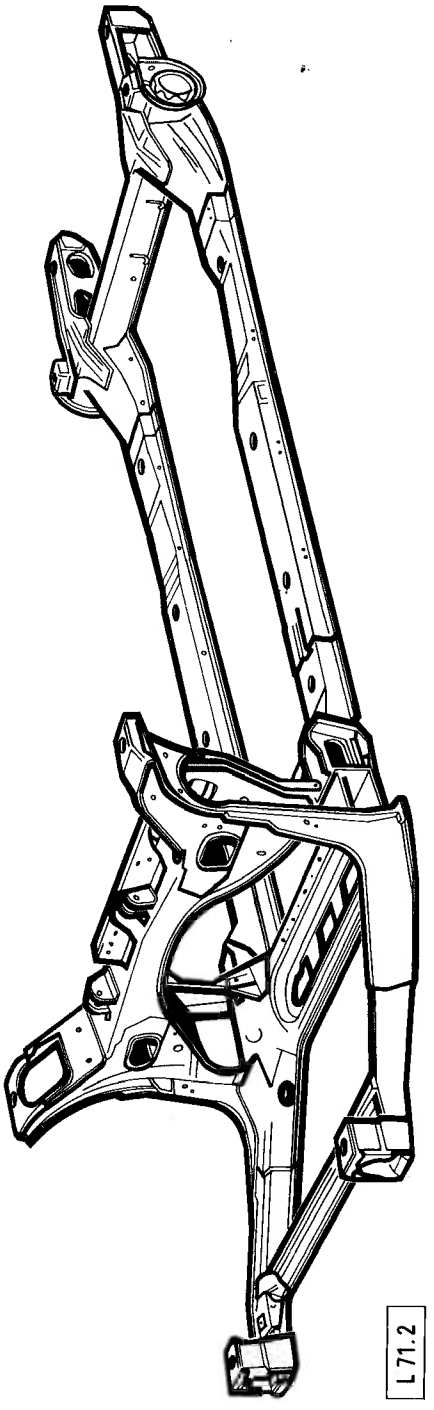

III - CHECKING A VEHICLE WITH ACCIDENT DAMAGE

When inspecting a damaged vehicle, the following checks must be carried out in the order indicated below:

Visual inspection: Inspect for creases, distorsion or cracks.
Check of the axle geometry: Operation to be effected using optical alignment devices, without removing the mechanical components.
Check of the dimensions of the subframe: On a jig, with the vehicle complete.

I — VISUAL INSPECTION

Distorsions on:

Fixed body components at (c) *(upper crossmember)* and (d) *(lower crossmenber)*.
Wings and wheelarches at (b) *(front portion of the wheelarch)* and (e) *(wing distension)*
Side panels and roof at (f) *(upper part of the side panel)*, windscreen frame *(lower section)*, roof panel *(at the centre pillar and windscreen upright levels)*.
Wheelarches (a) *(rear section, around attachment to axles)*.

CONCLUSION

If the visual inspection shows CLEARLY:

- distorsions at (d), only:
  replace the lower crossmember,
- distorsions at (b), (c) and (d) only:
  depending on the damages, either replace the parts concerned or change all the body fixed components + the front section of the wheel arch involved.
- distorsions at (a), (e) and (f)
  check the bodyshell on the test bench.

REMARK: Since distorsions affect simultaneously both the axles *(or longerons)* and the bodyshell, **the wheel alignment MUST be checked, when in doubt.**

II — CHECKING THE GEOMETRY OF THE FRONT AND REAR AXLES

Consult the Repair Manual, Mechanical Components volume MAN 008181 or 308181

Operation MA 410-0 for the condition of the front axle.

Operation MA 420-0 for the condition of the rear axle.

III — CHECKING THE SUBFRAME ON A JIG (without removal of the mechanical components from the vehicle)

Consult the following operations,	MA 800-2 and MA 800-3	(CELETTE Equipment)
	MA 800-5	(CAROLINER Equipment)
	MA 800-7	(DATALINER Equipment).

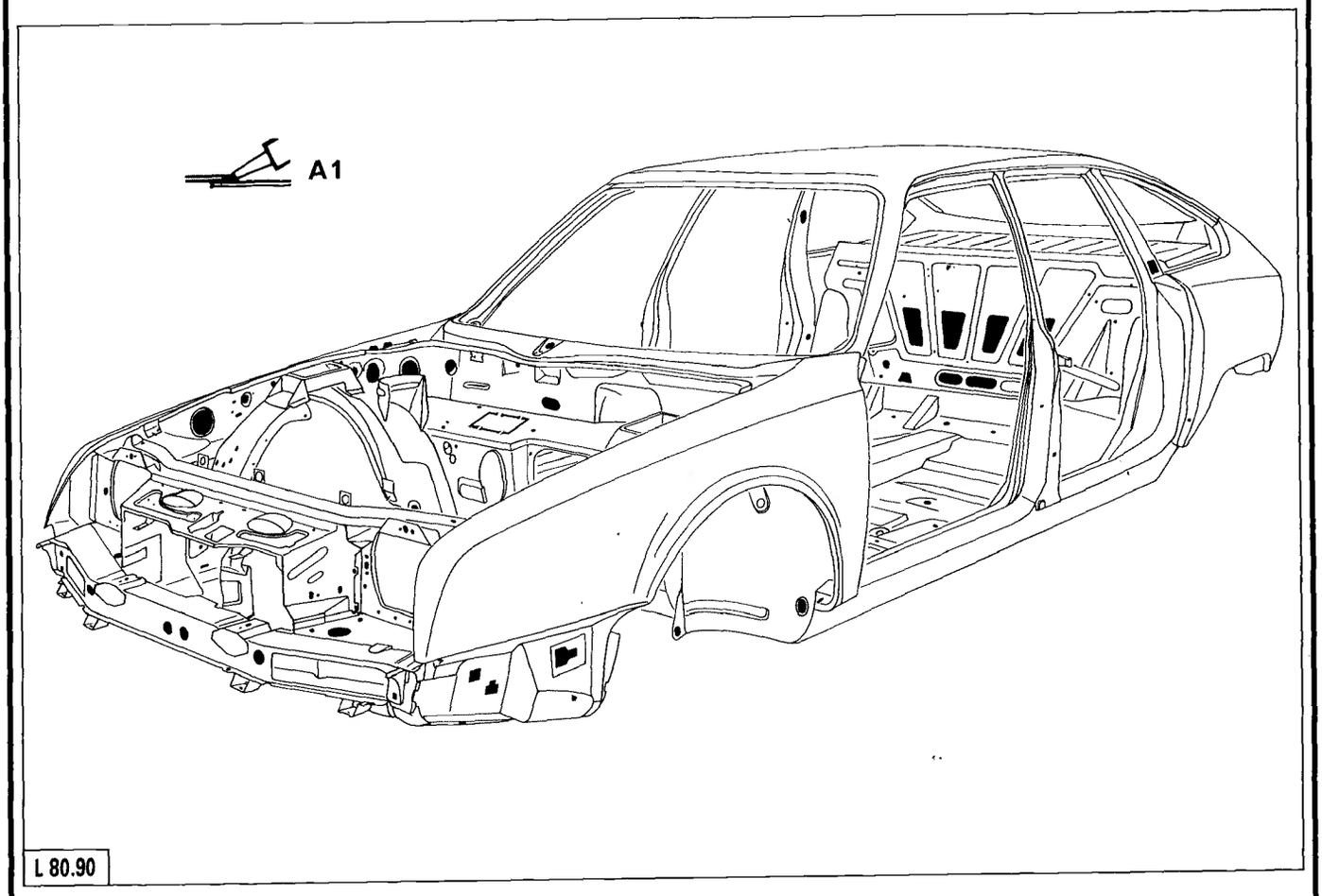

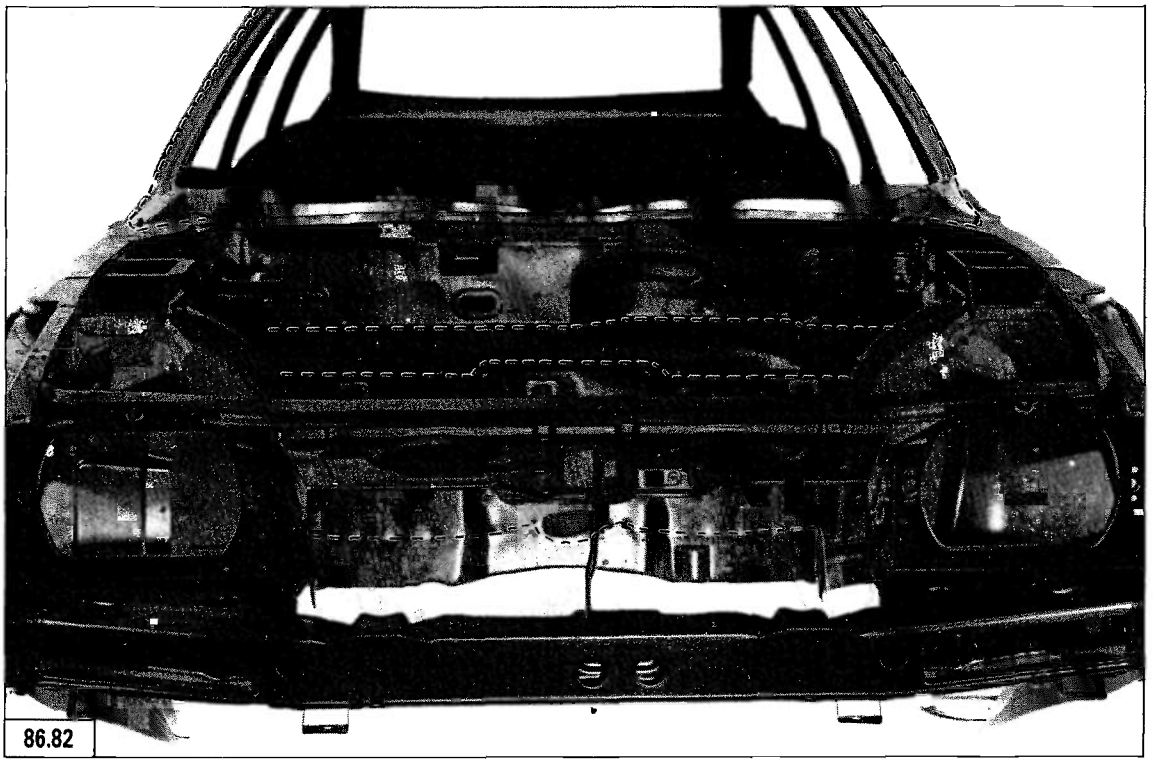
86.82

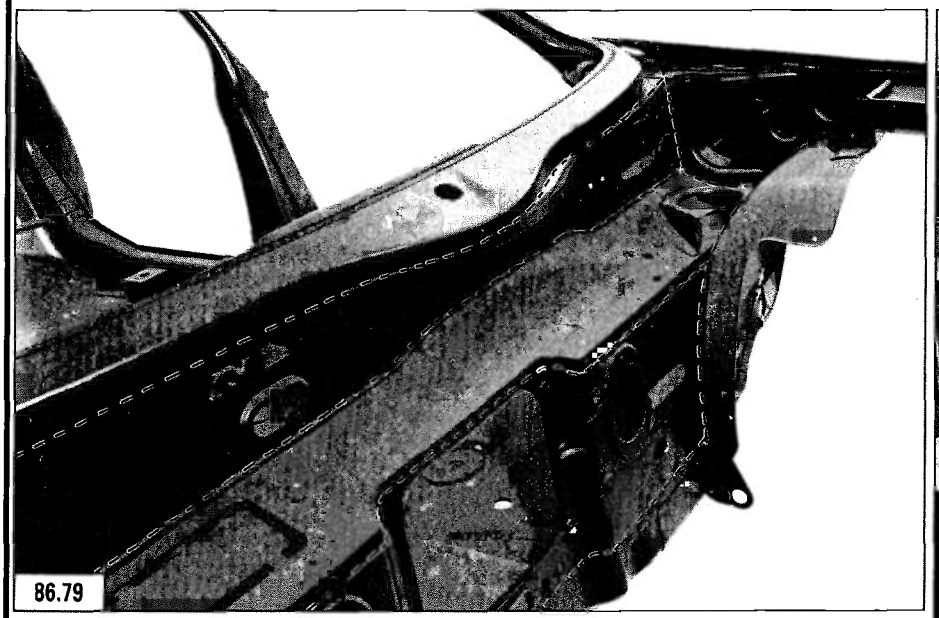
86.79

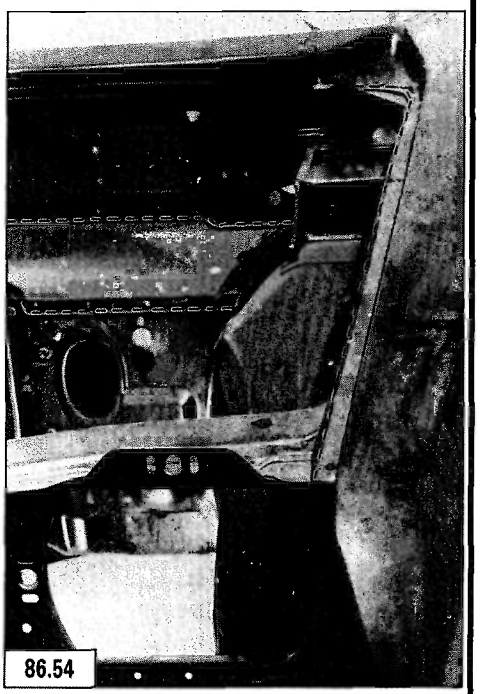
86.54

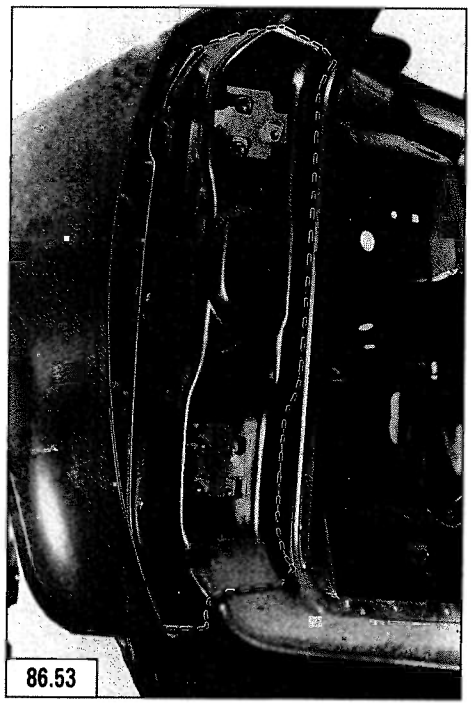
86.53

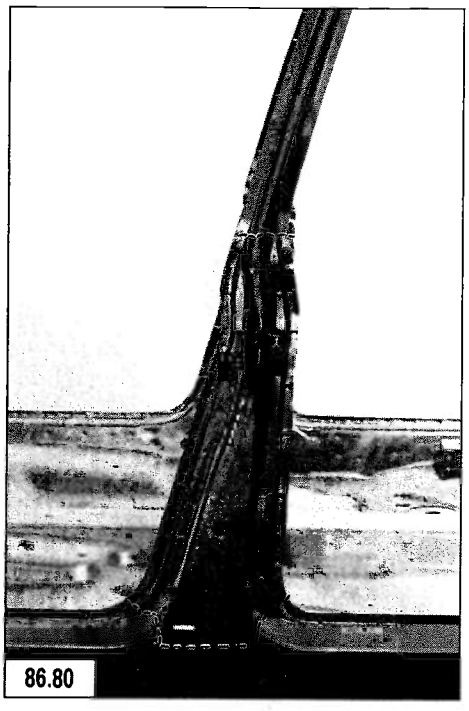
86.80

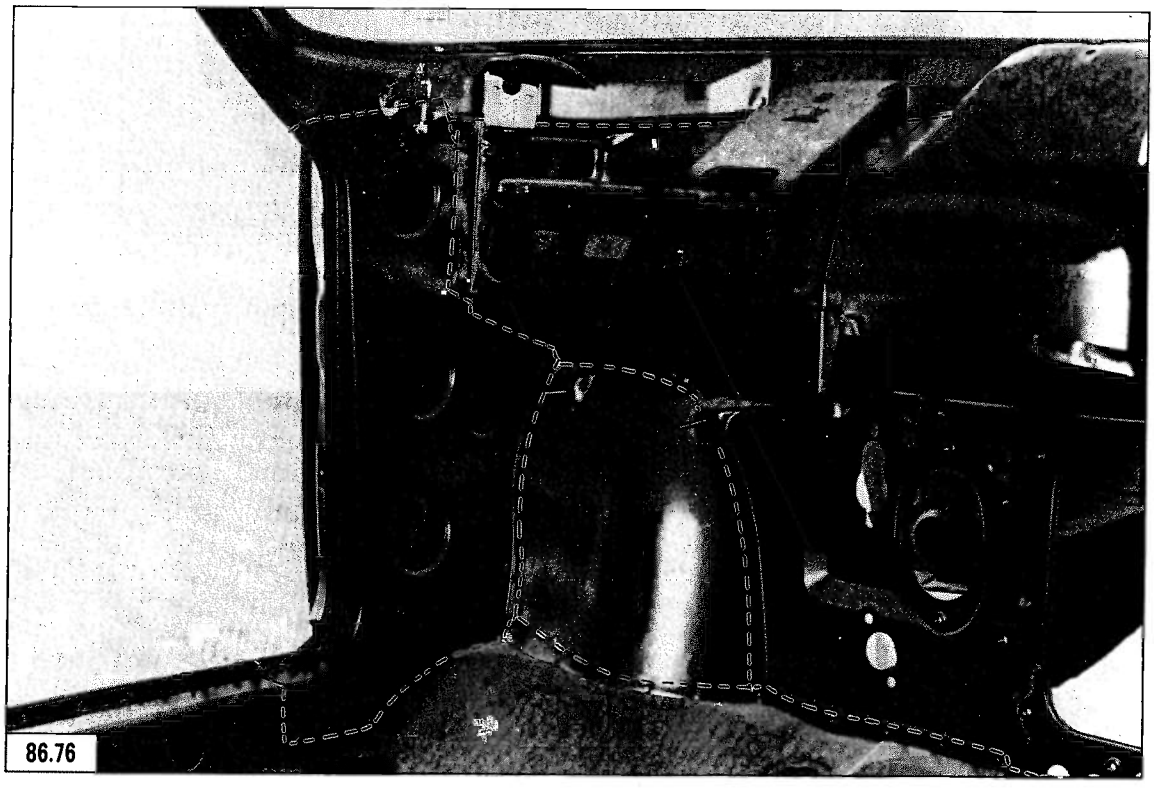
86.76

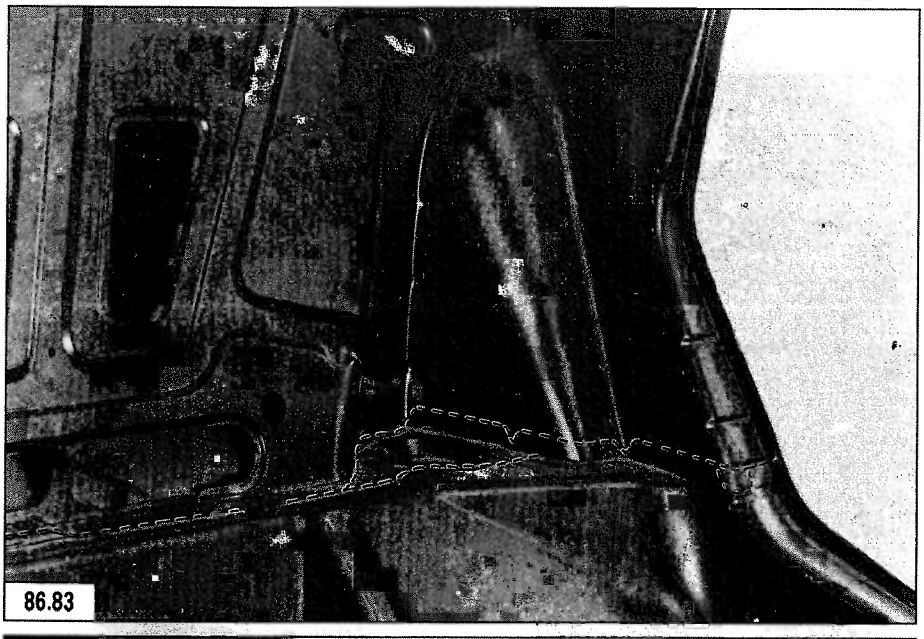
86.83

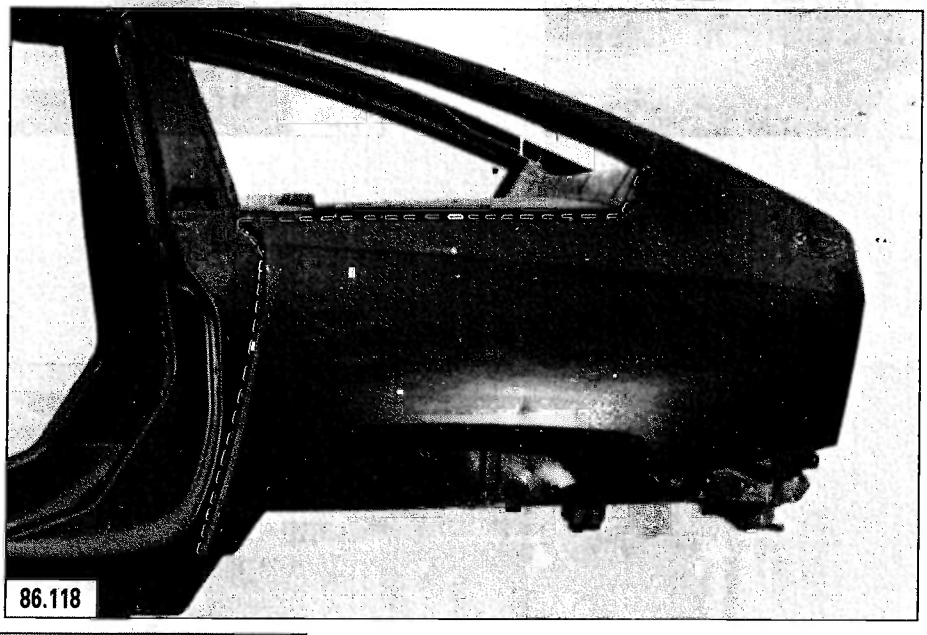
86.118

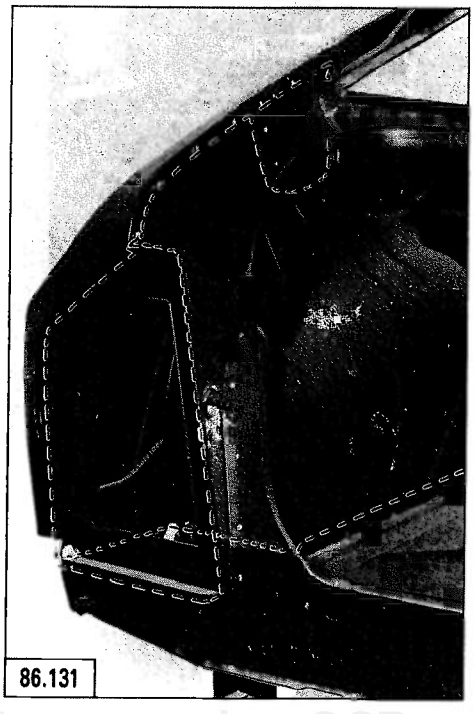
86.131

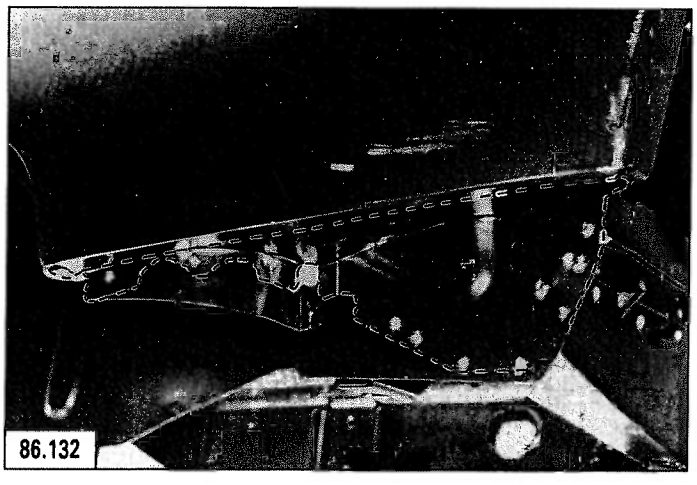
86.132

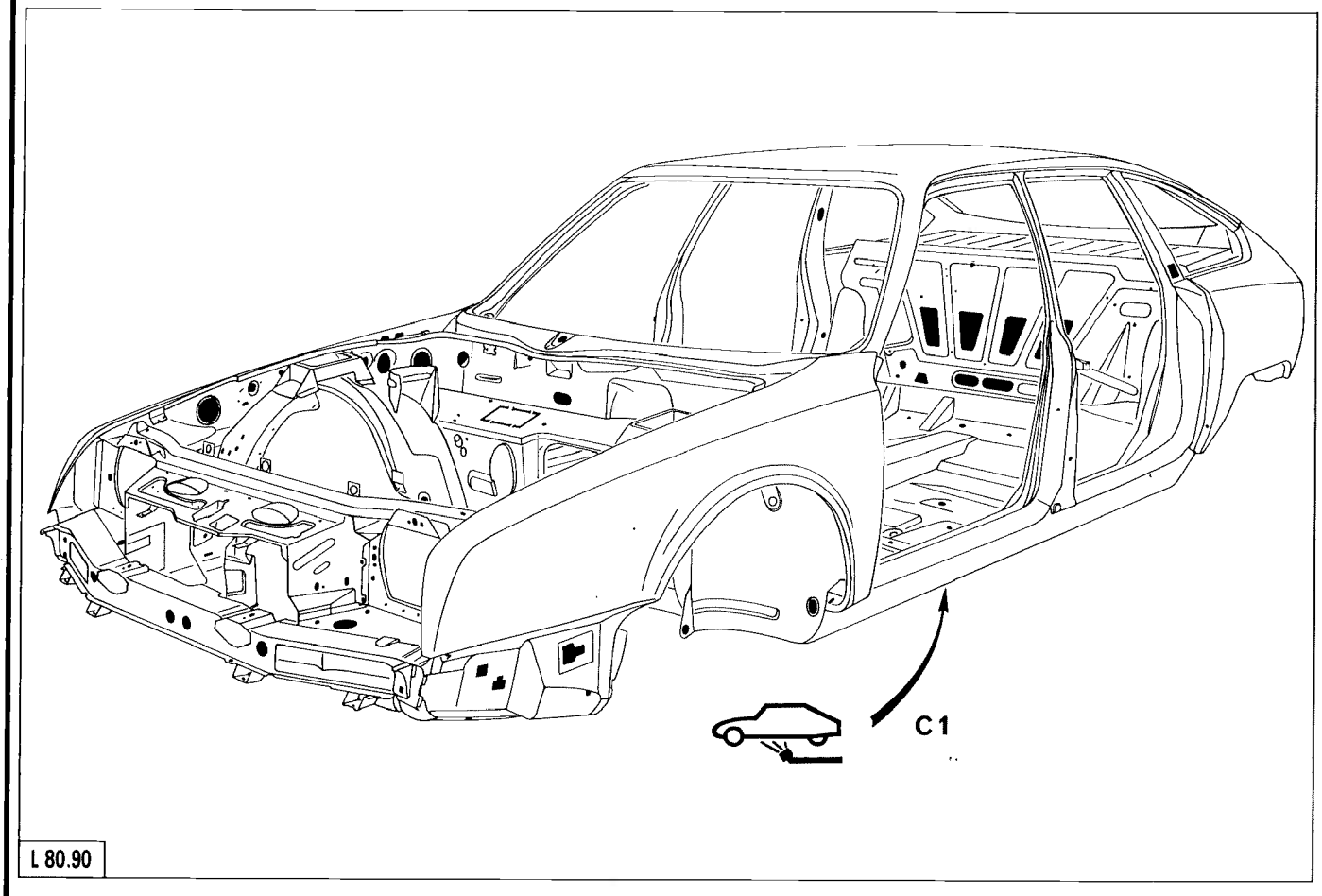

L 80.90

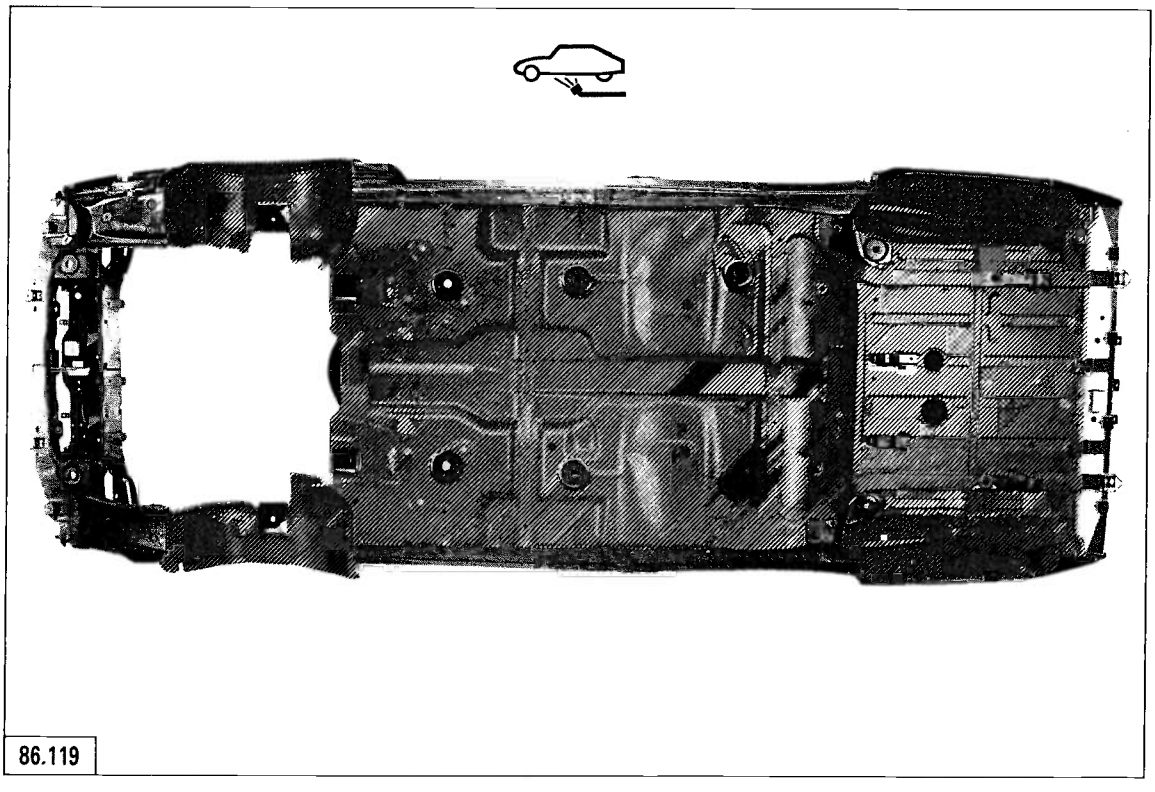

86.119

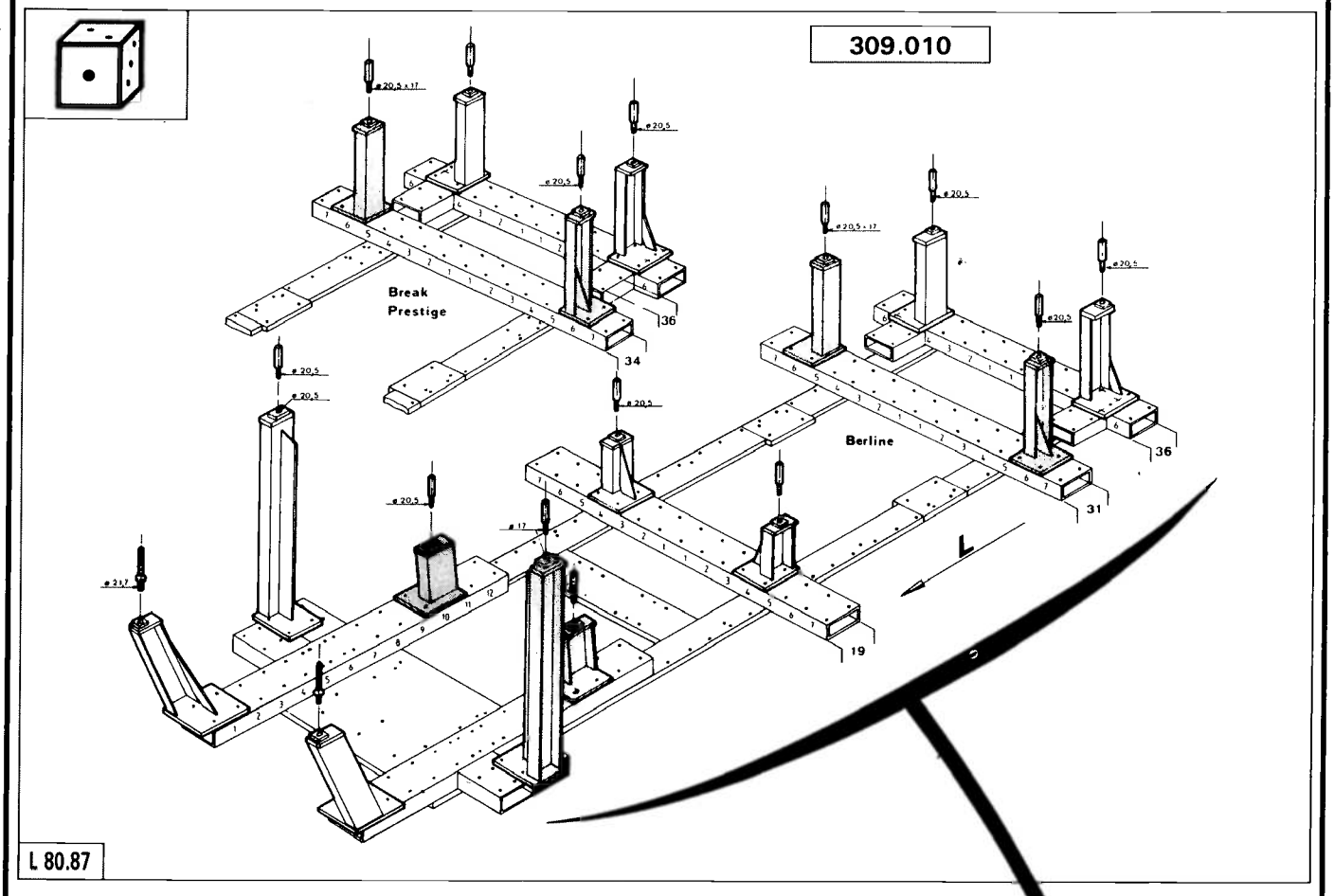

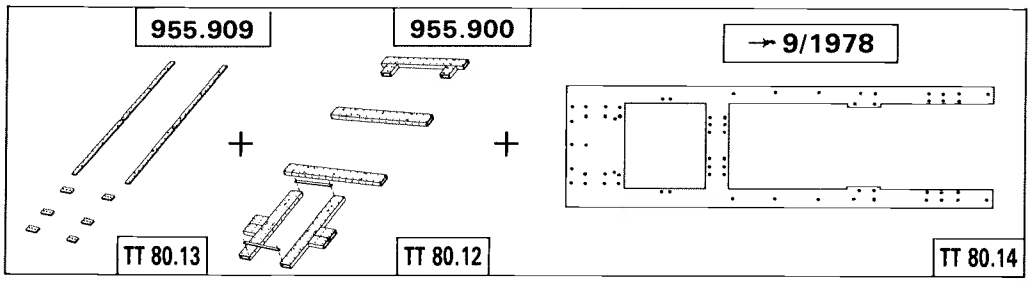

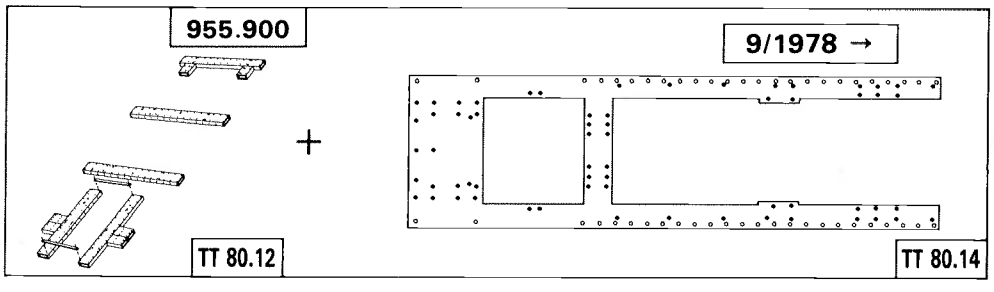

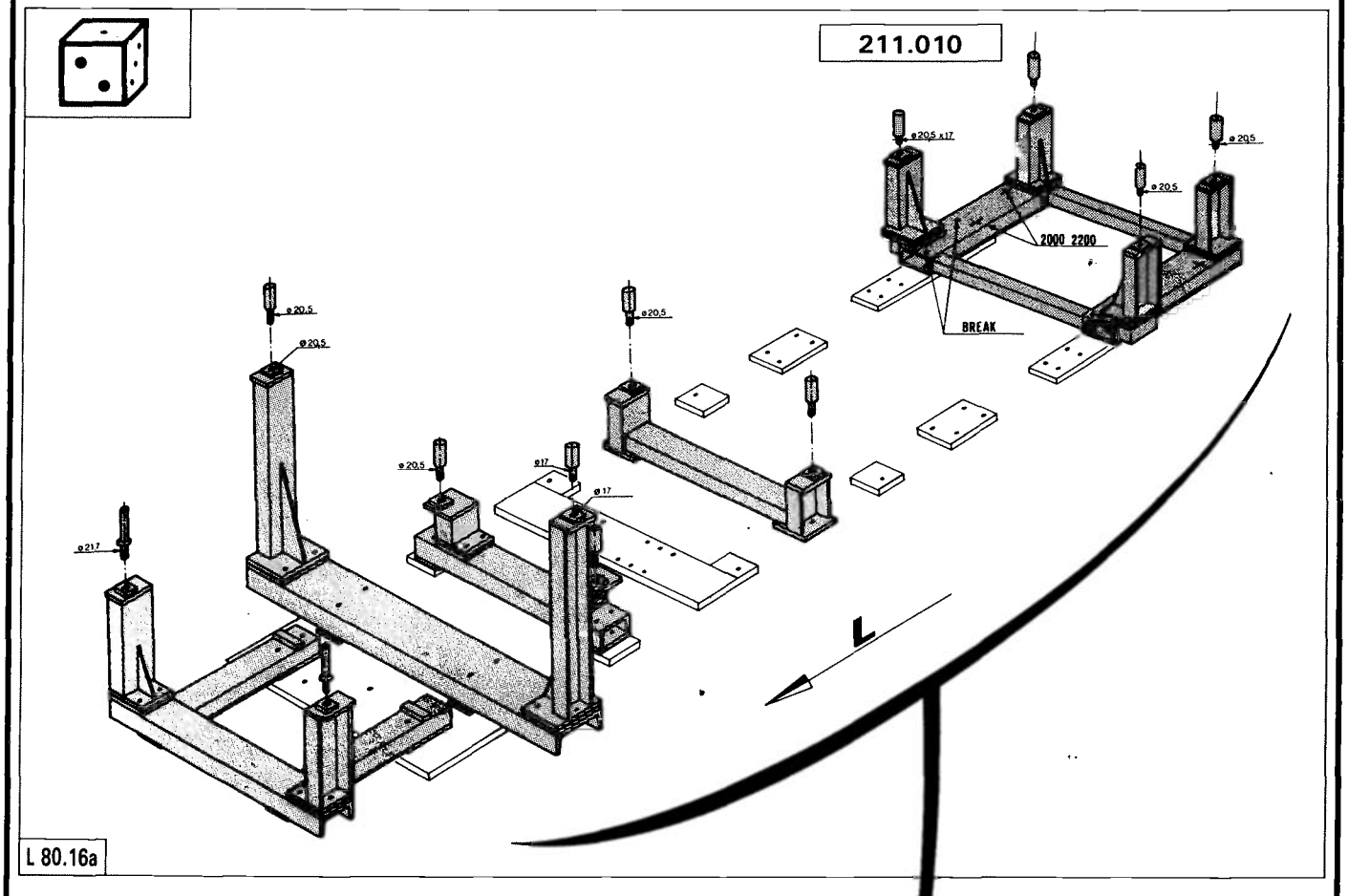

L 80.16a

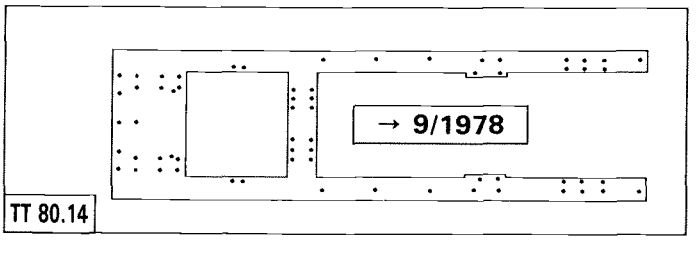

TT 80.14

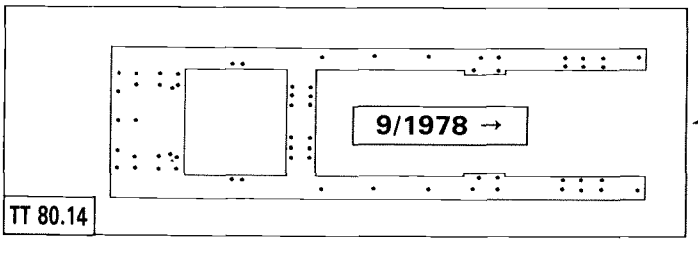

TT 80.14

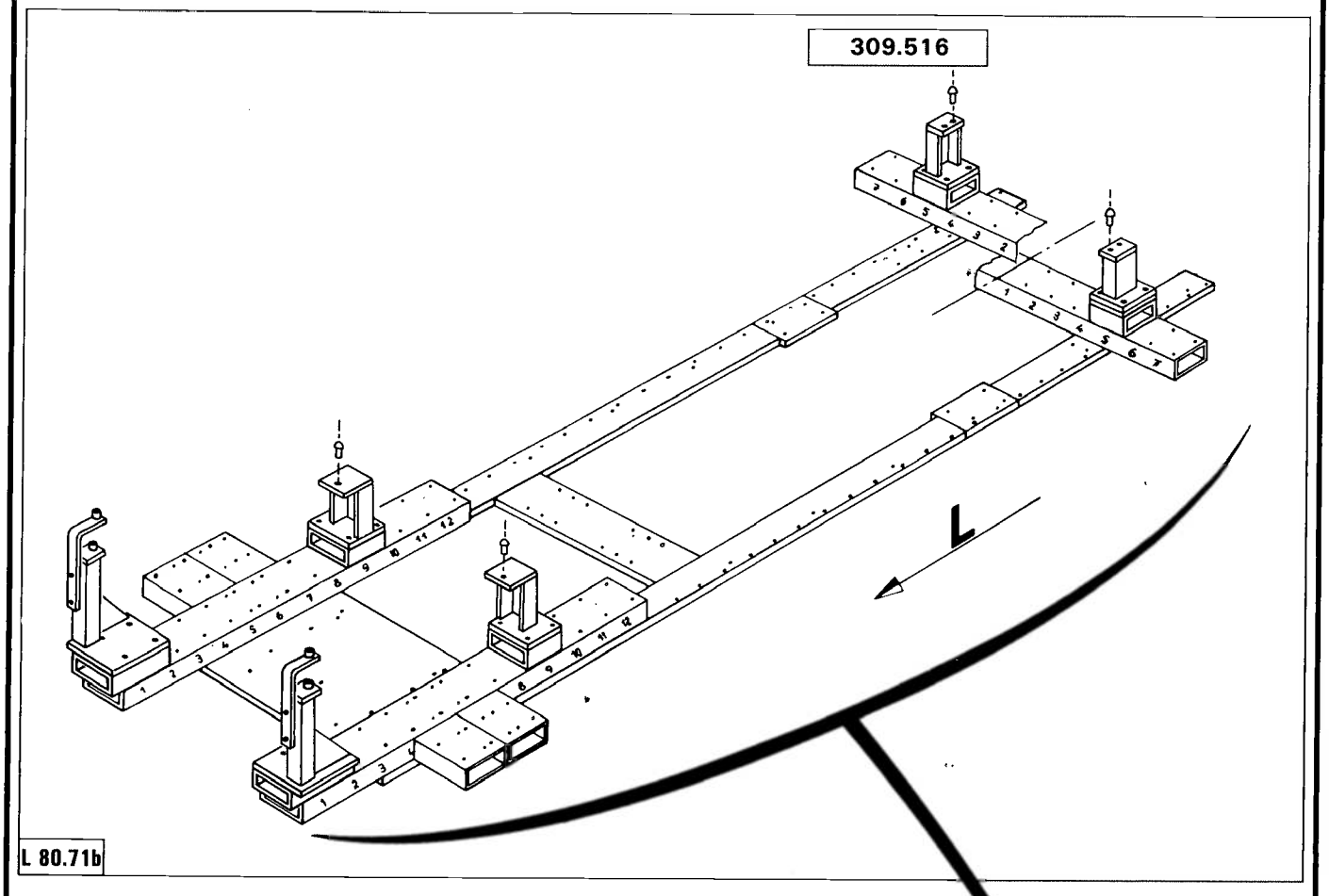

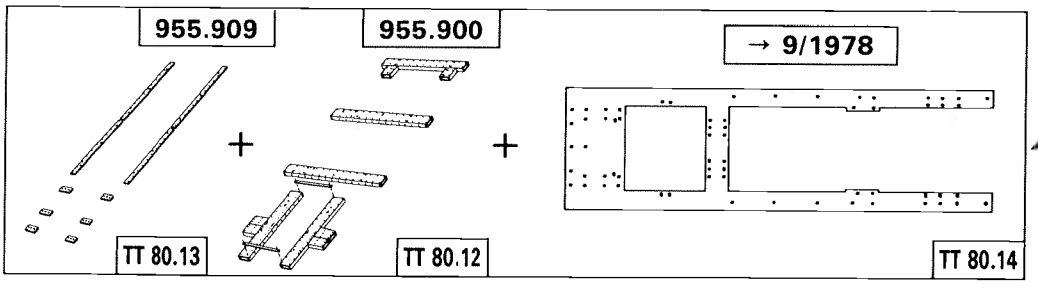

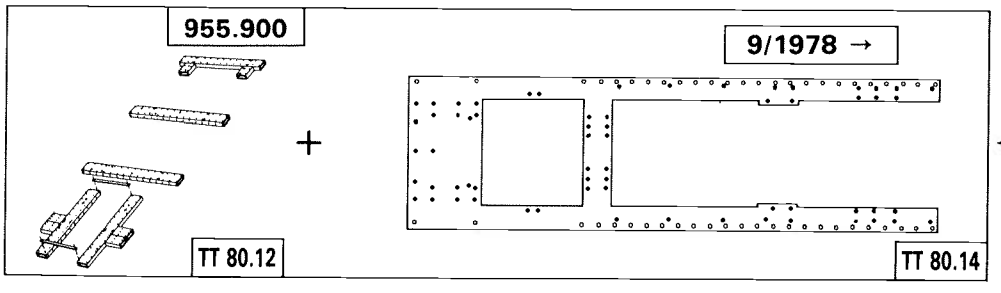

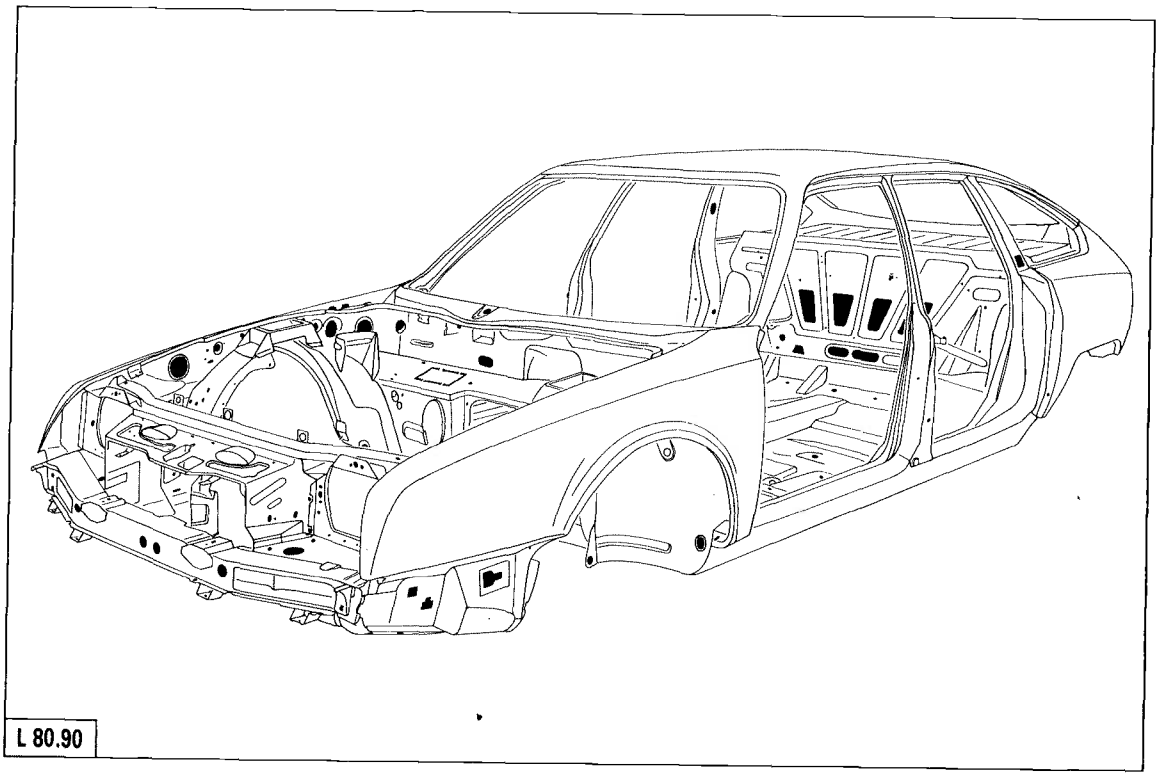

L 80.90

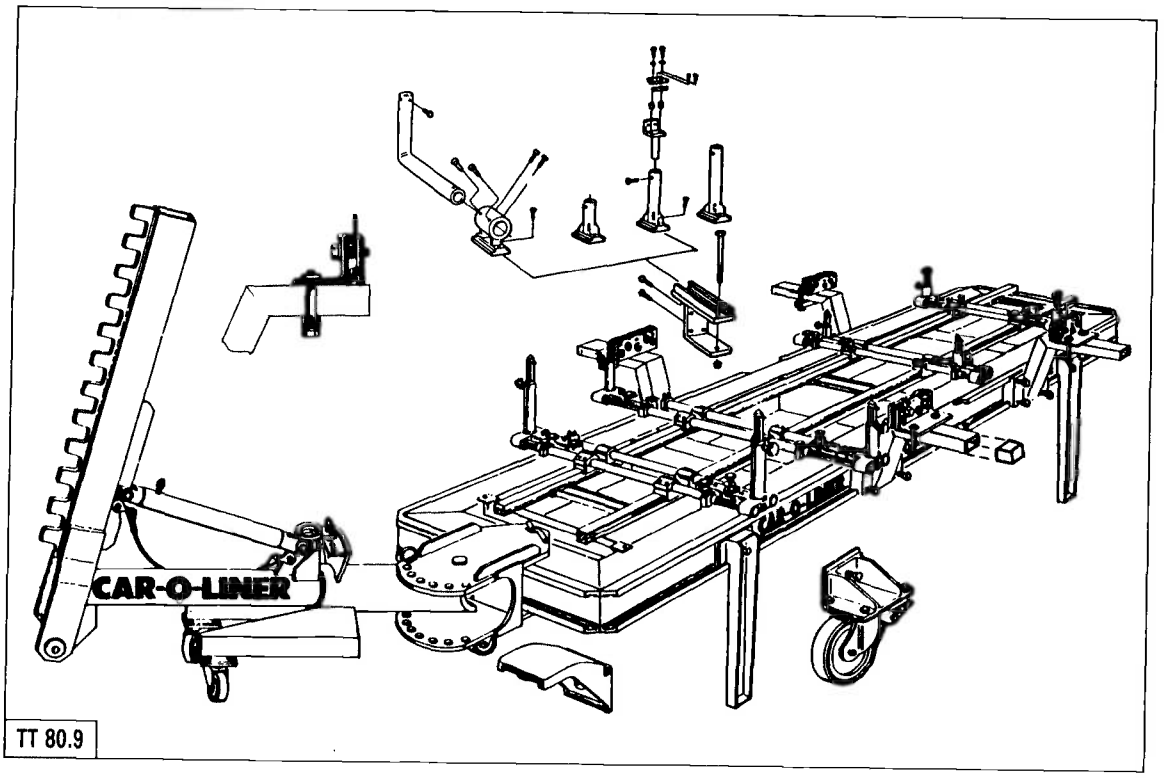

TT 80.9

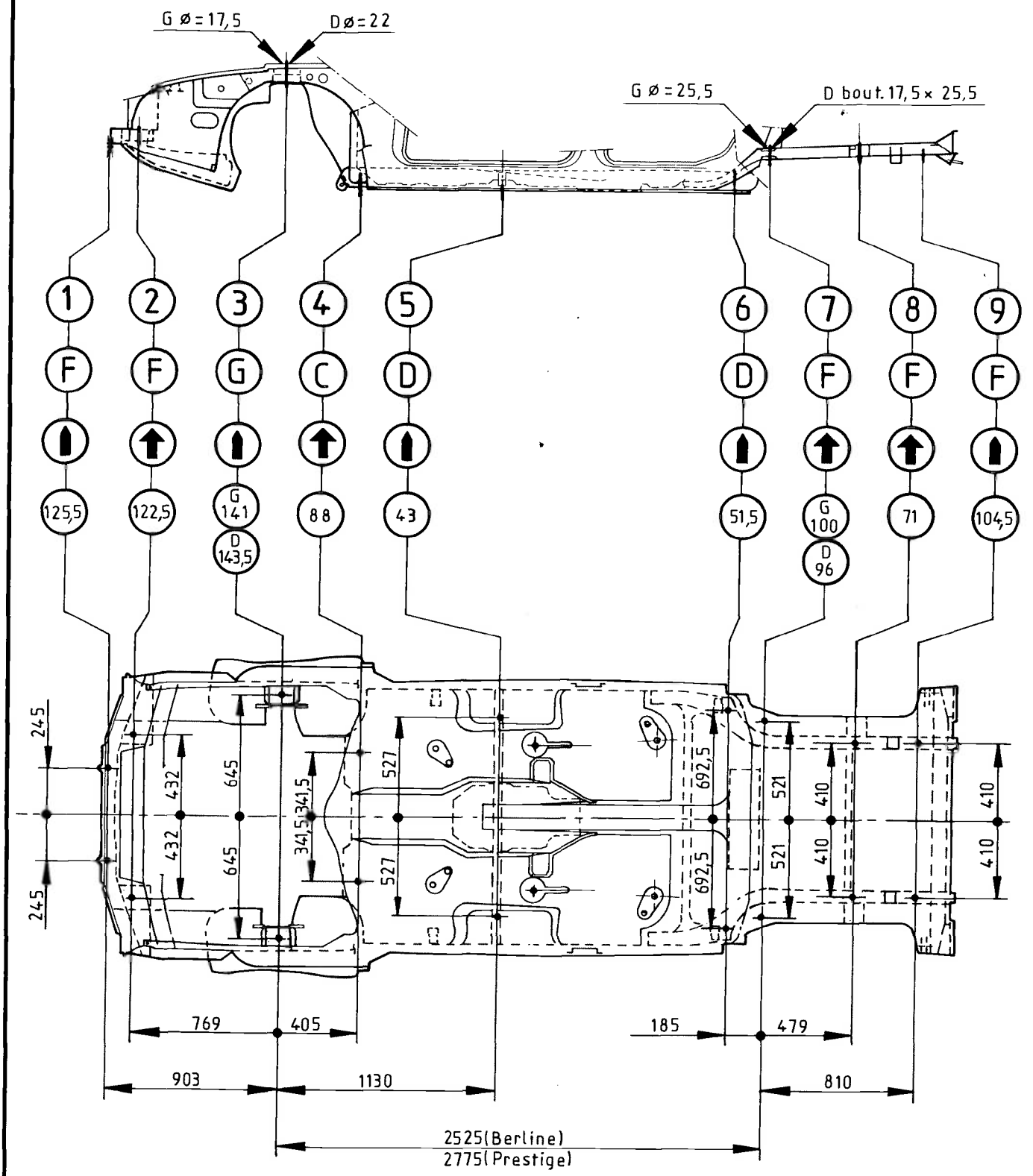

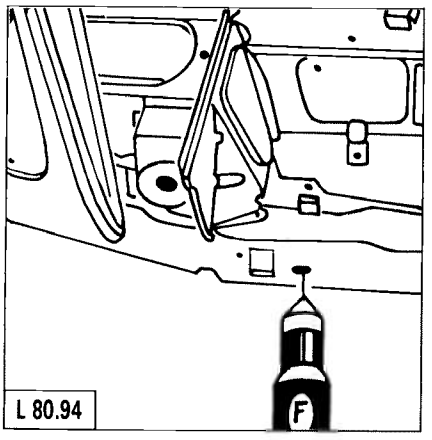

1

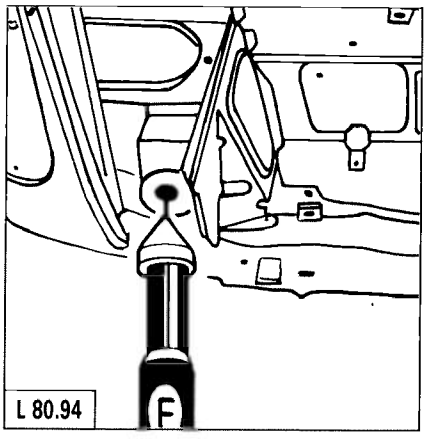

2

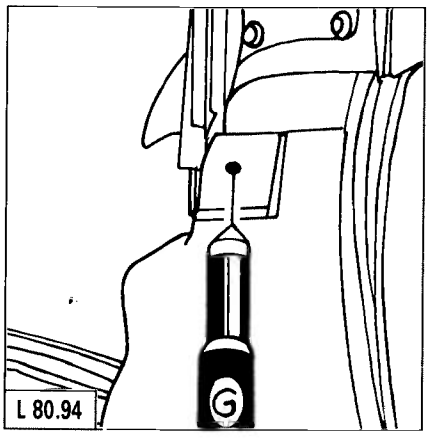

3

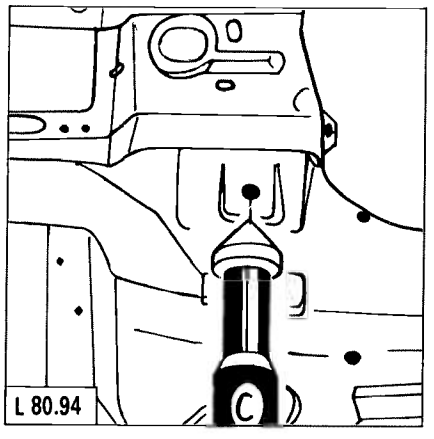

4

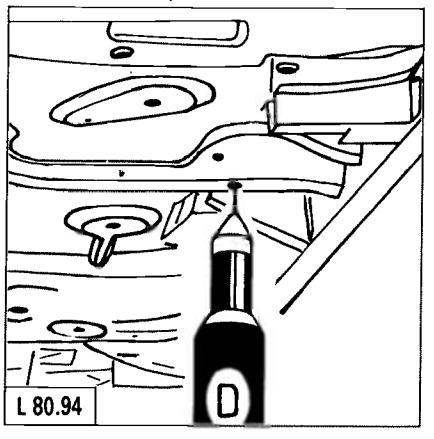

5

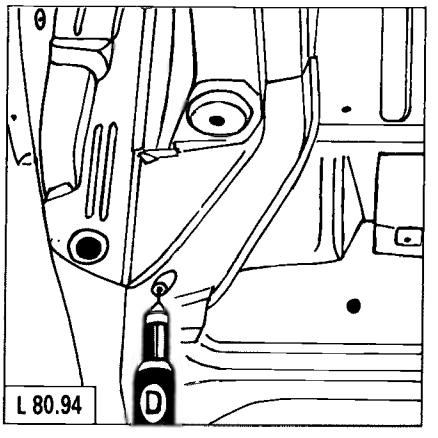

6

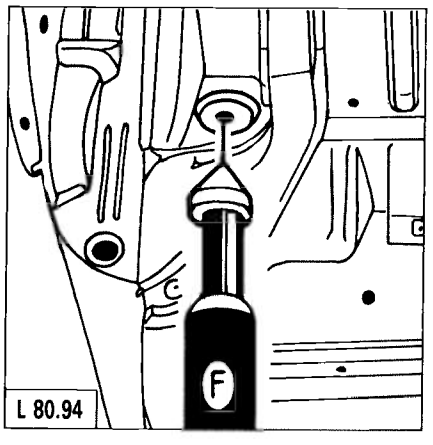

7

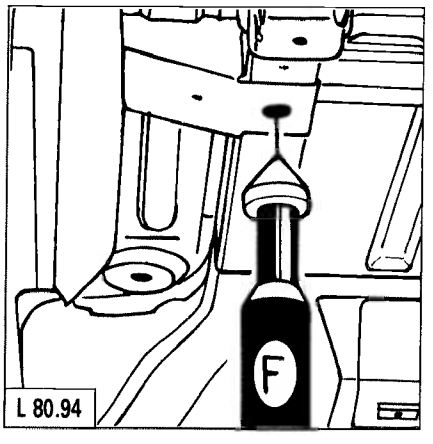

8

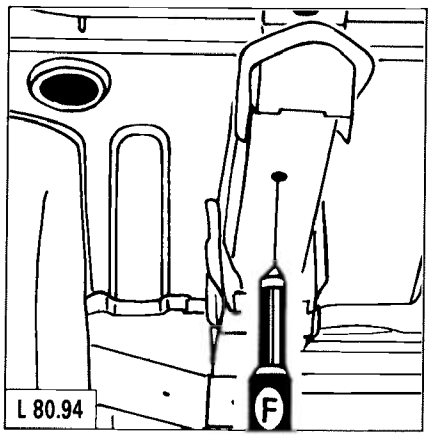

9

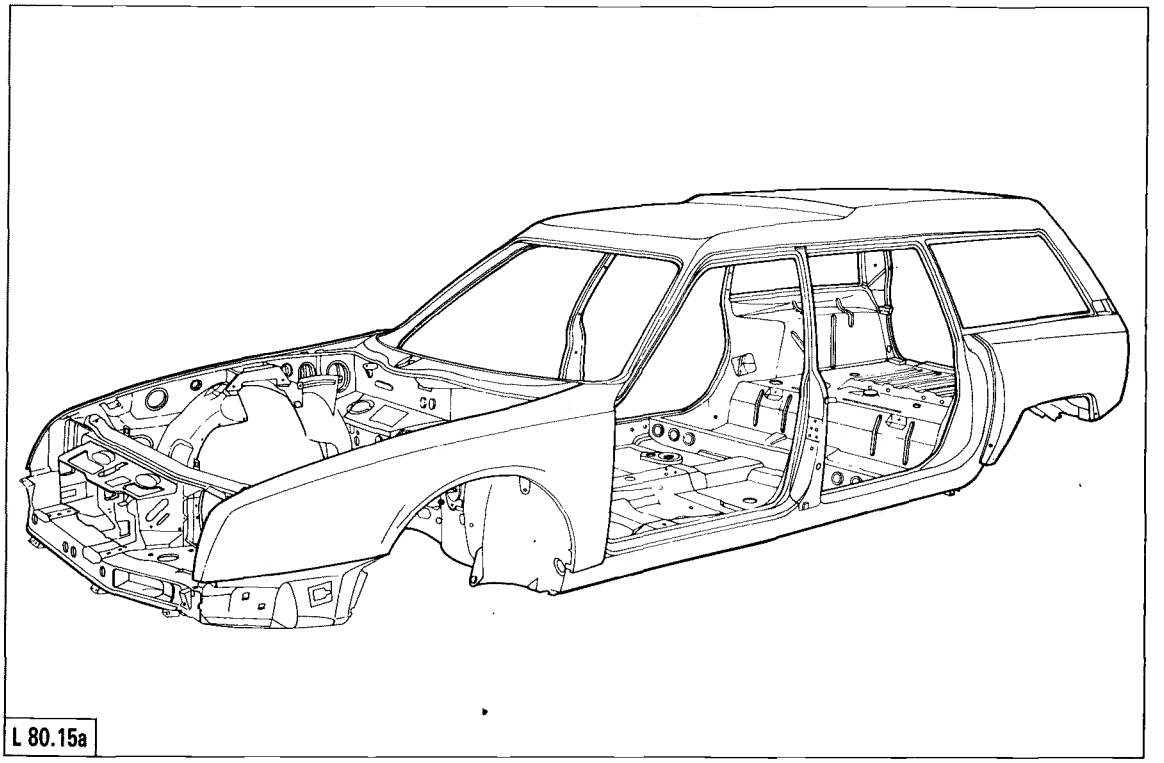

L 80.15a

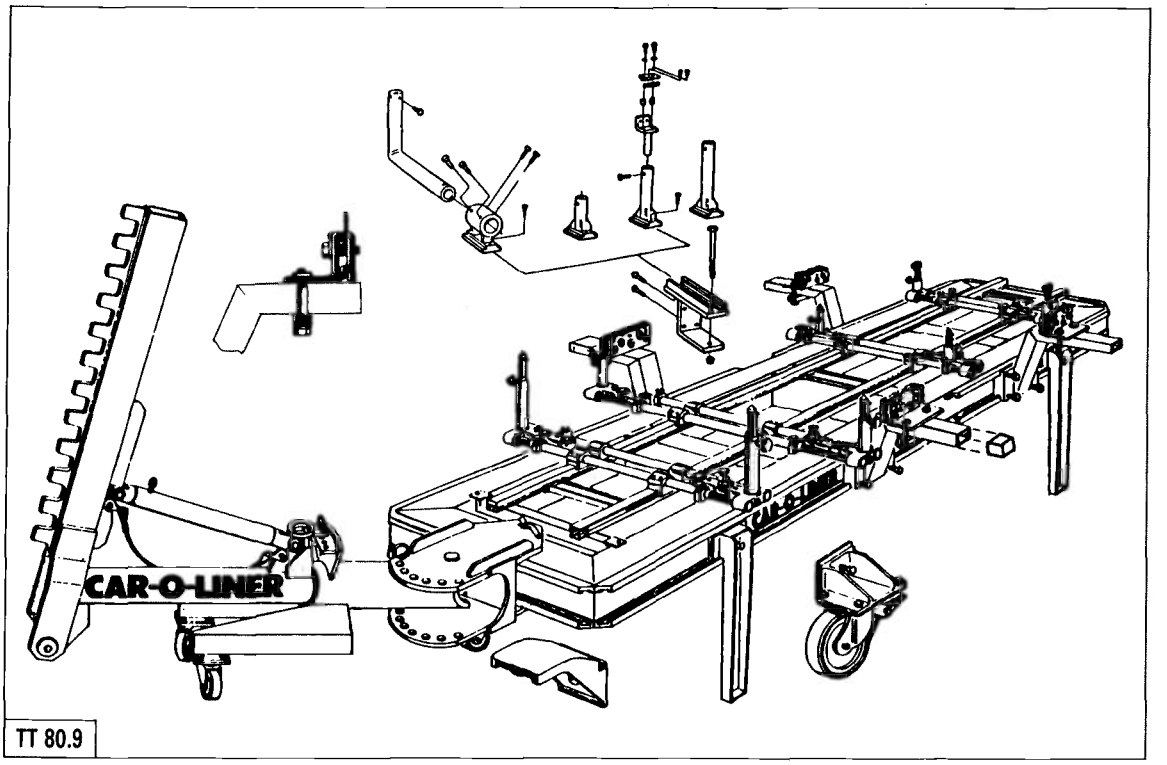

TT 80.9

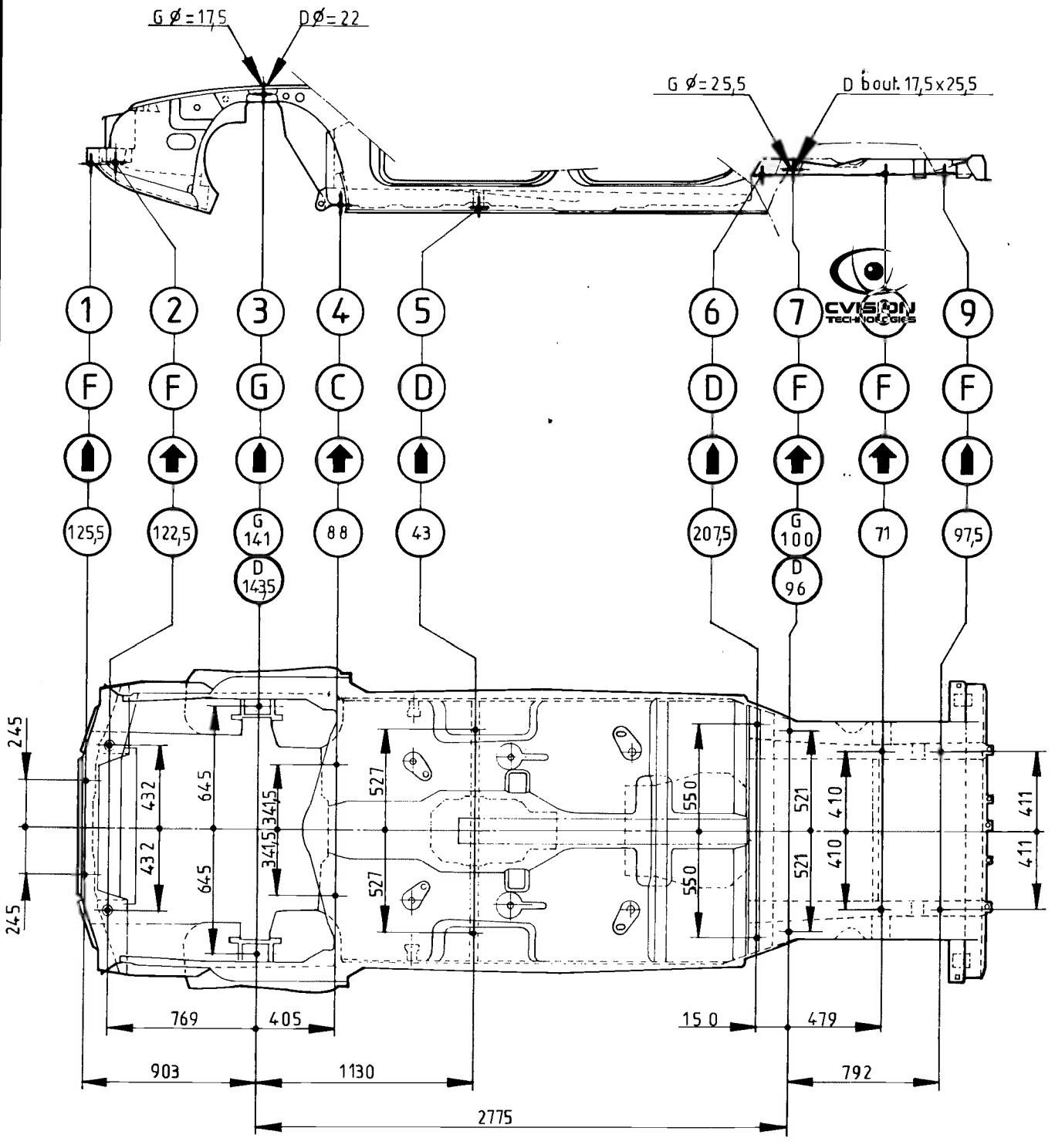

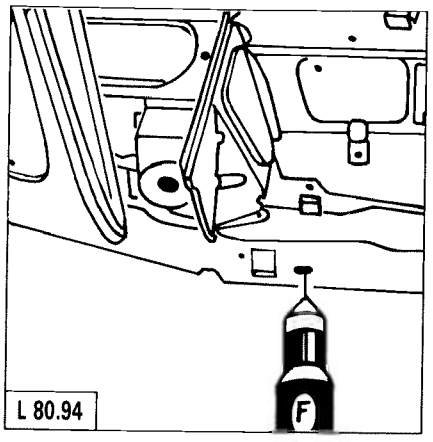

1

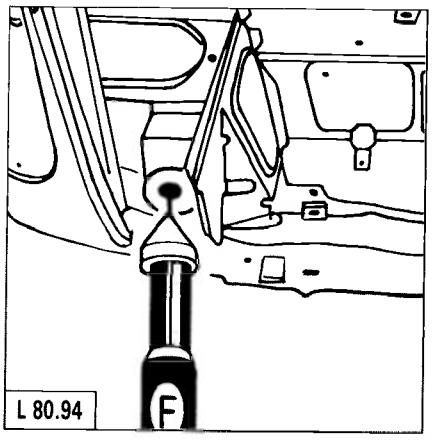

2

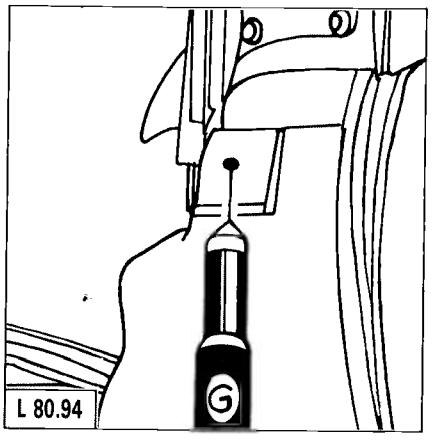

3

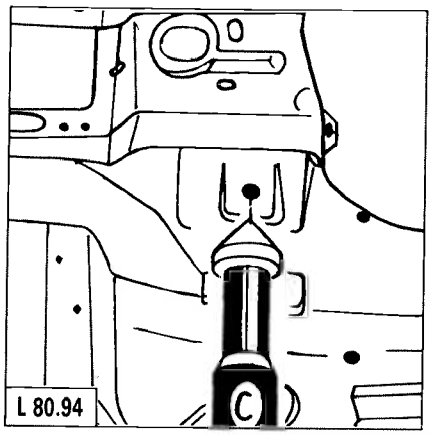

4

5

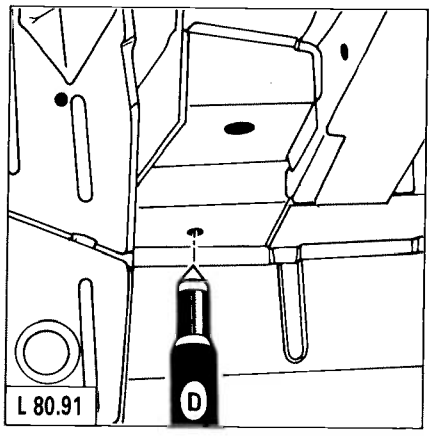

6

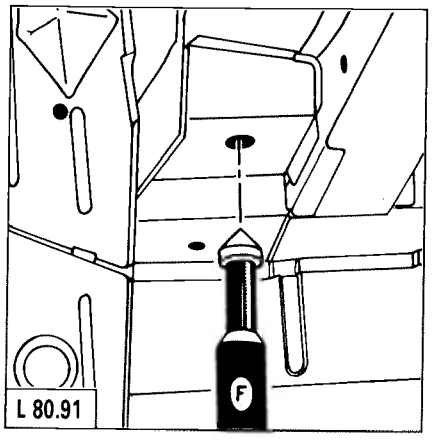

7

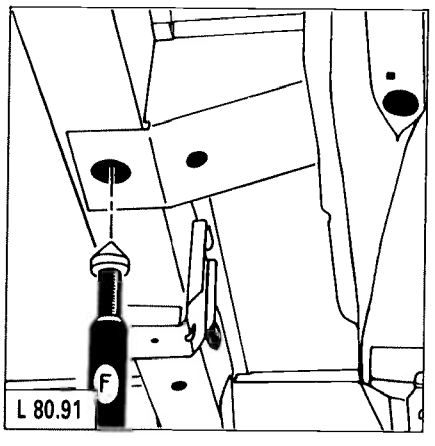

8

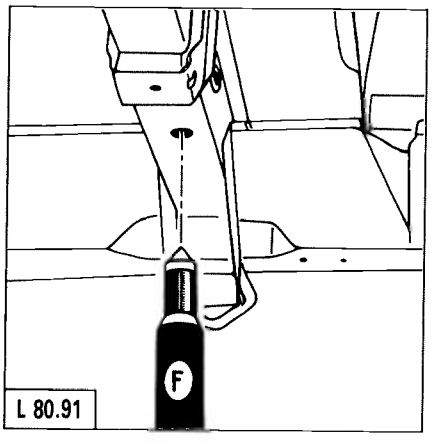

9

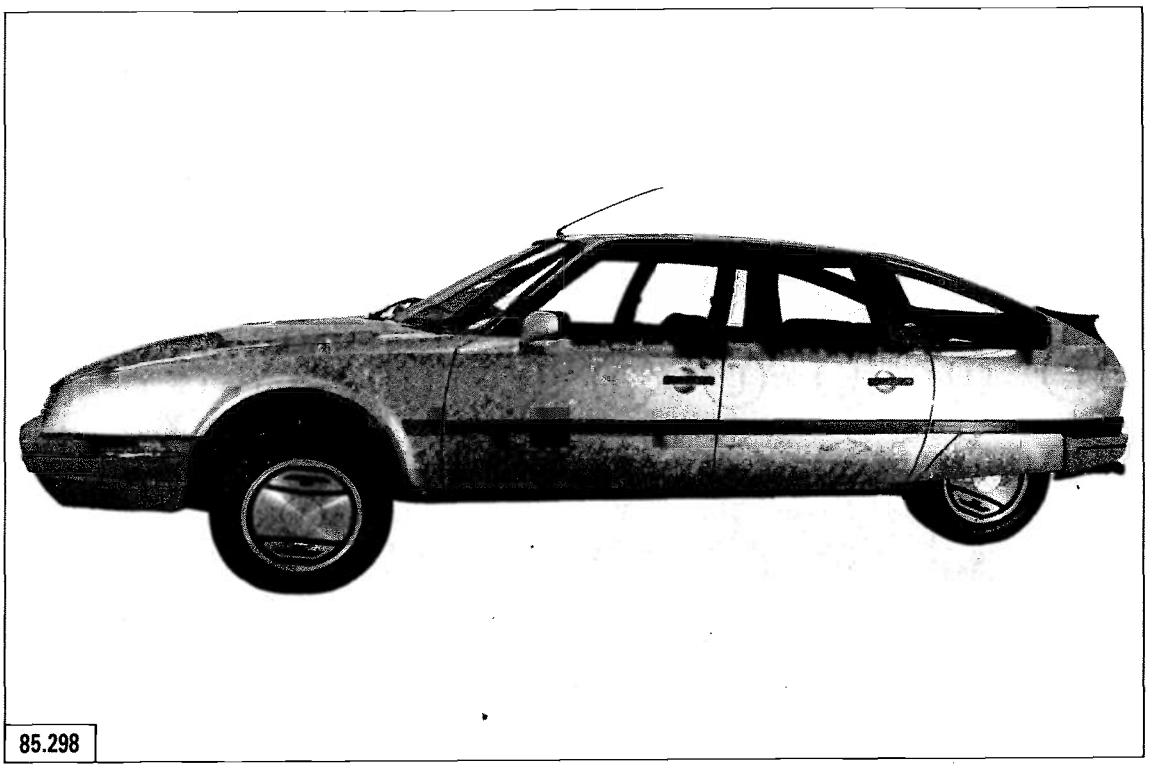

85.298

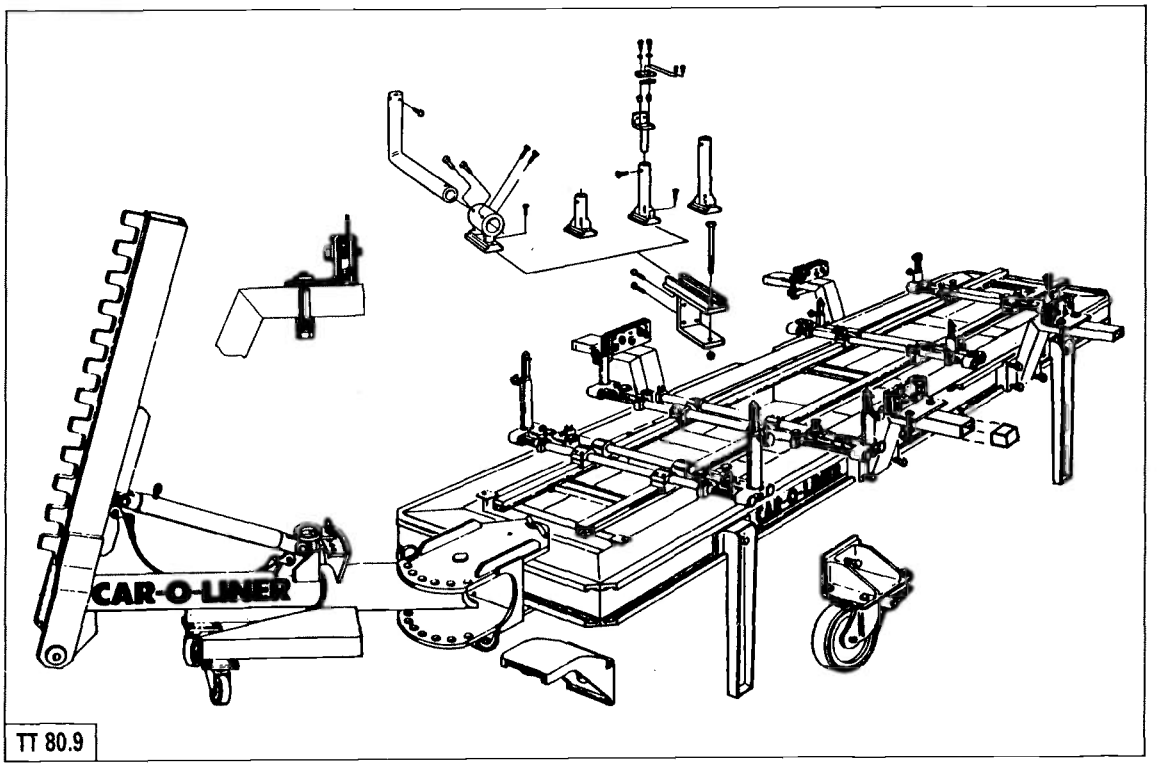

TT 80.9

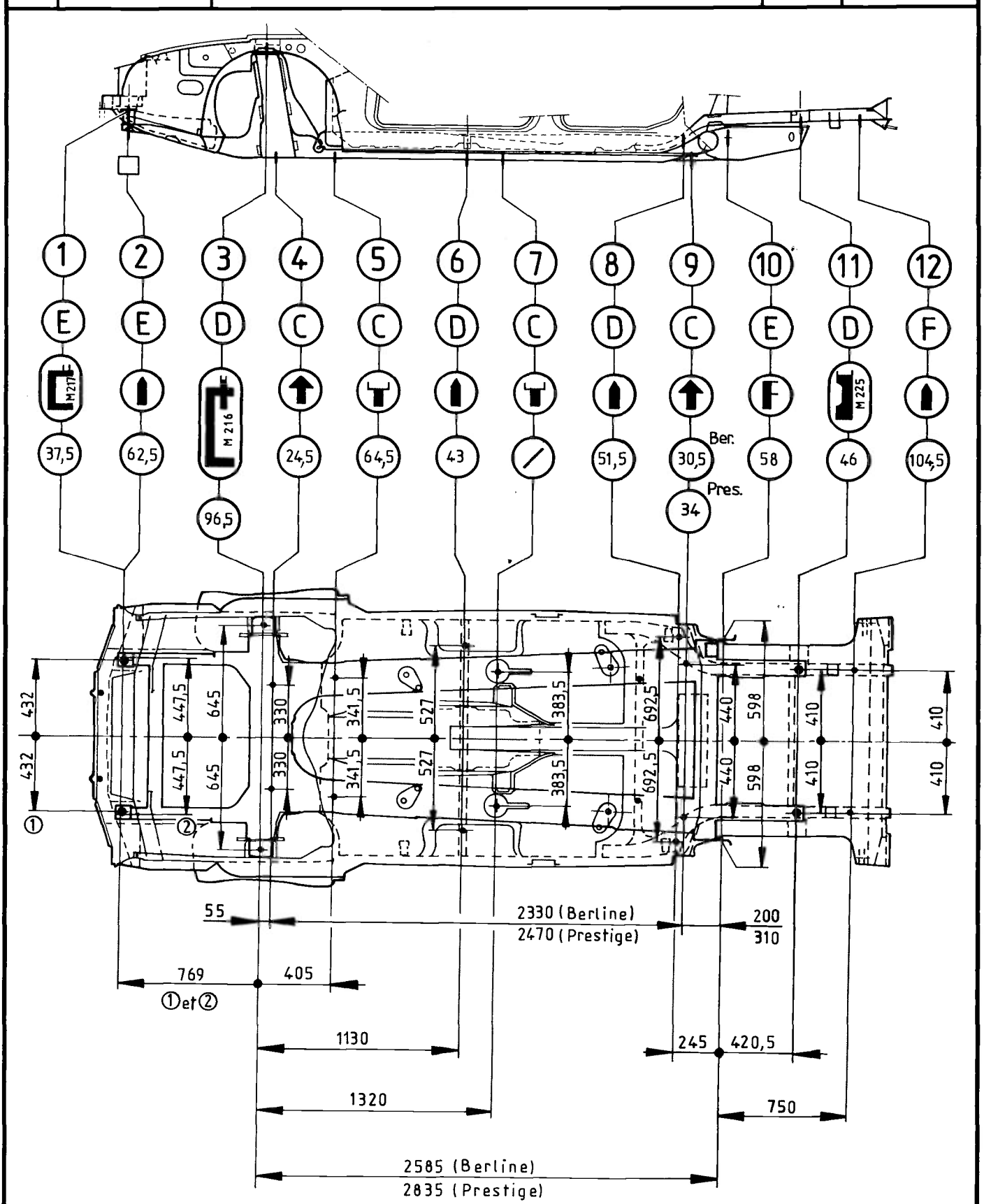

① M 217 L=120

② M 216 L=480

① ③ ⑤ ⑦ ⑪ ø 19 Impératif

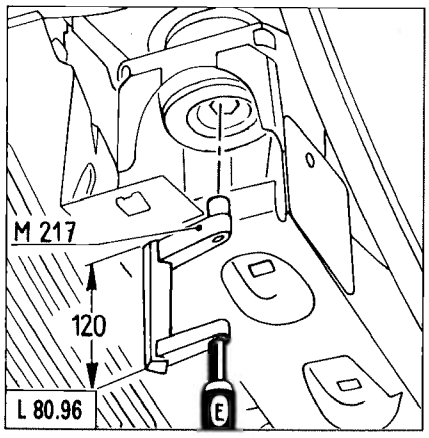

1

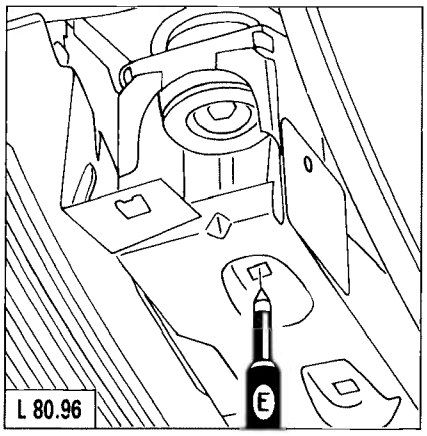

2

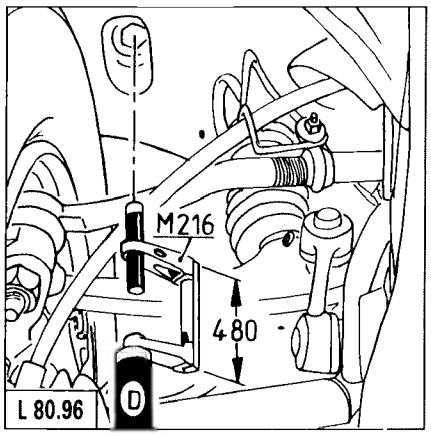

3

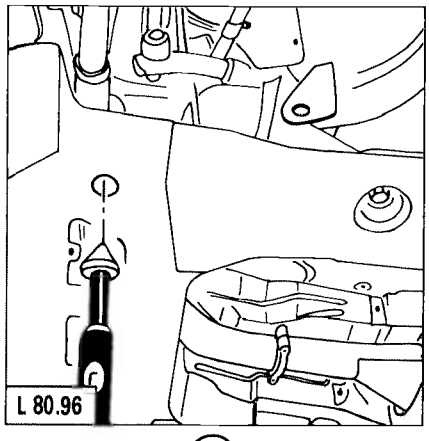

4

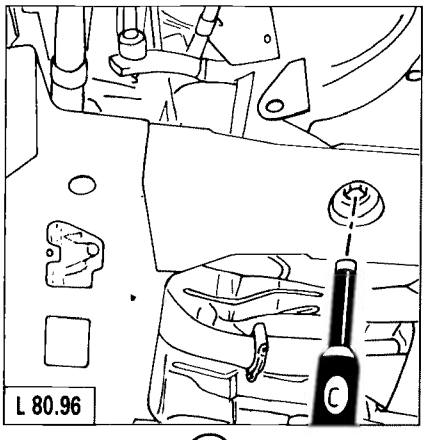

5

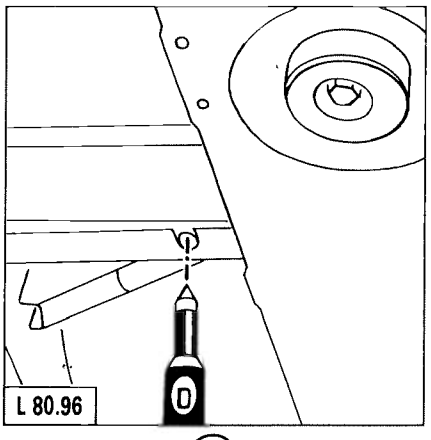

6

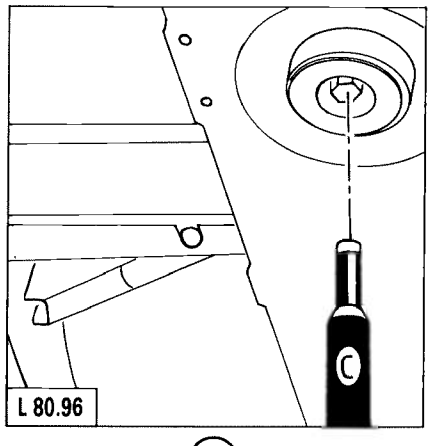

7

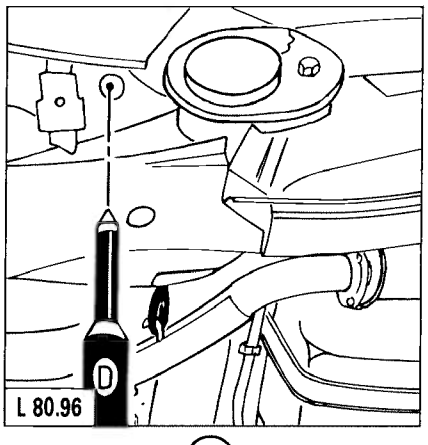

8

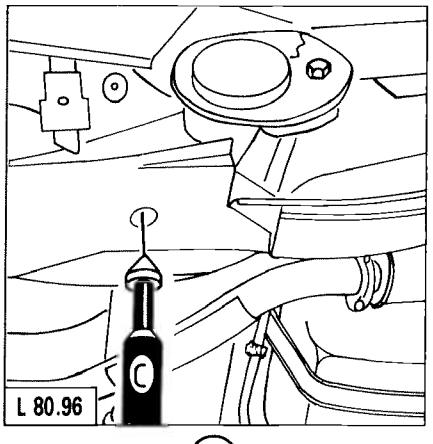

9

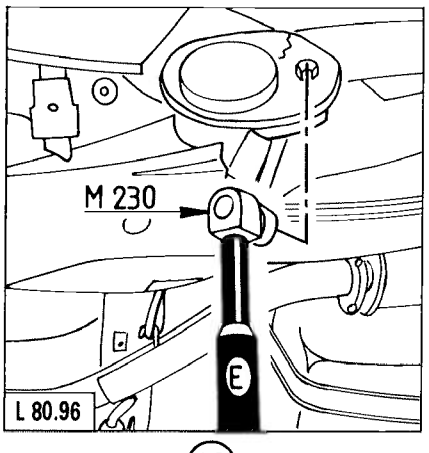

10

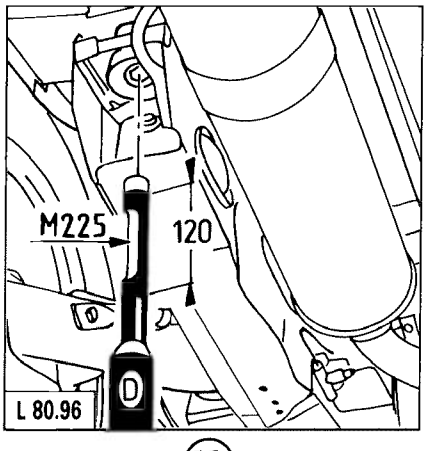

11

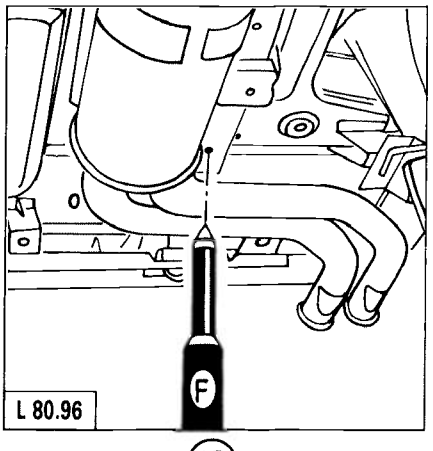

12

85.302

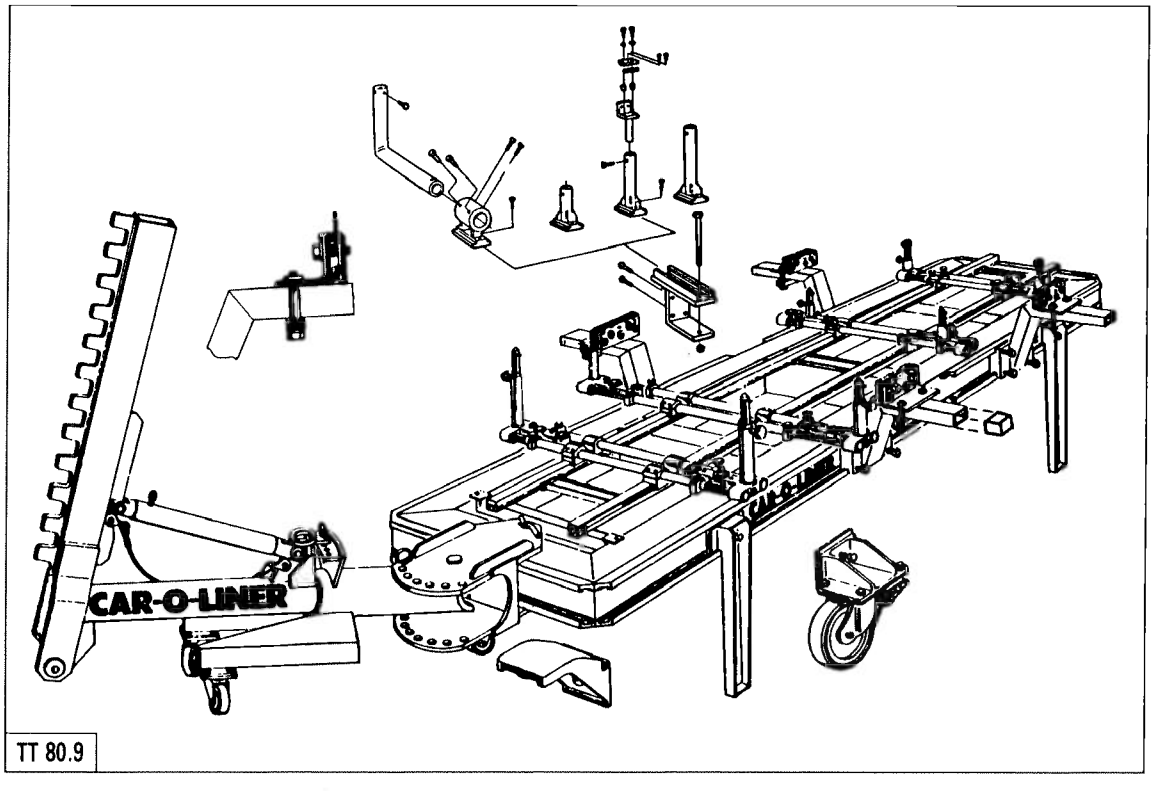

TT 80.9

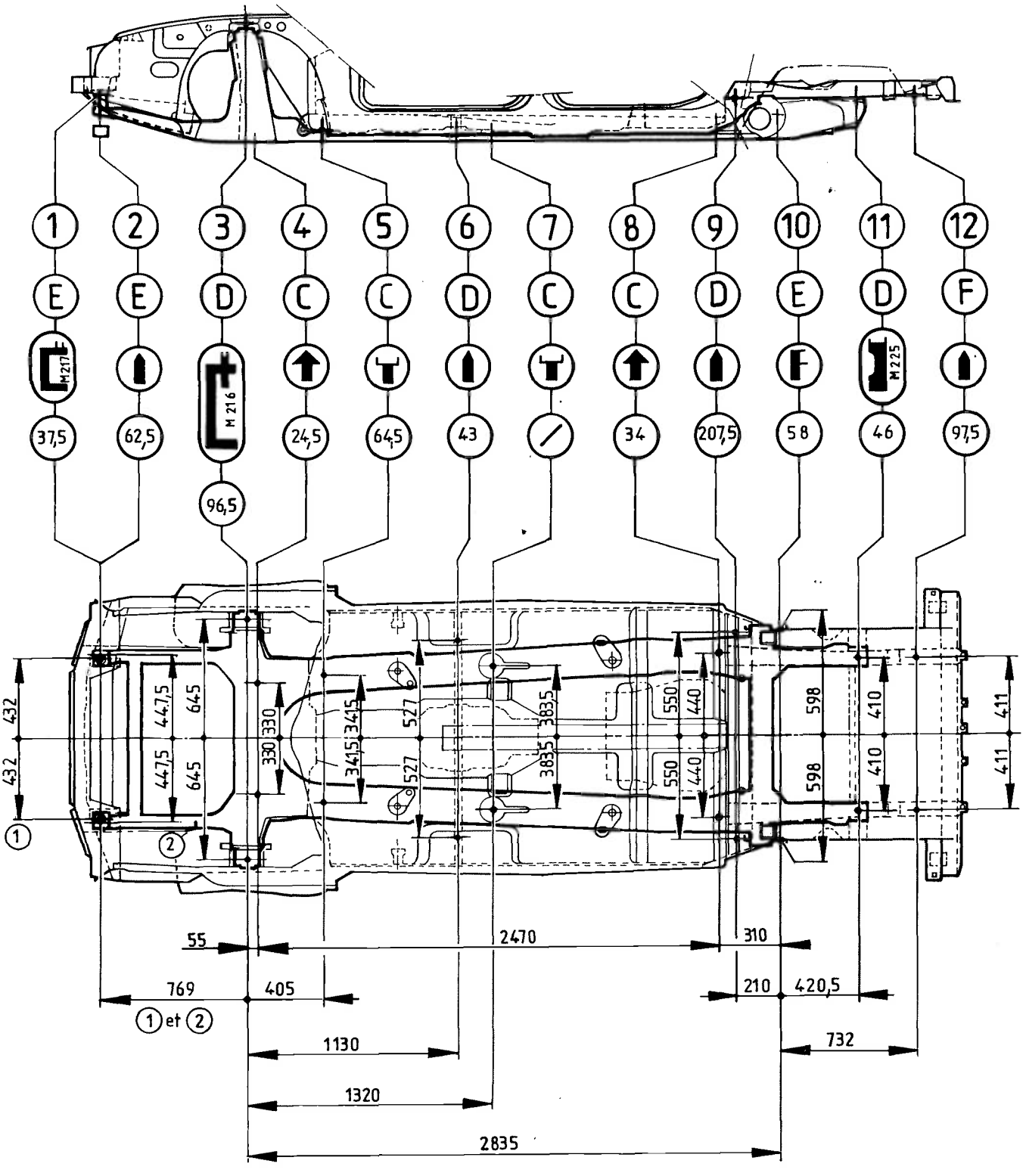

① M 217 L=120

③ M 216 L=480

①③⑤⑦⑪ ø=19 impératif

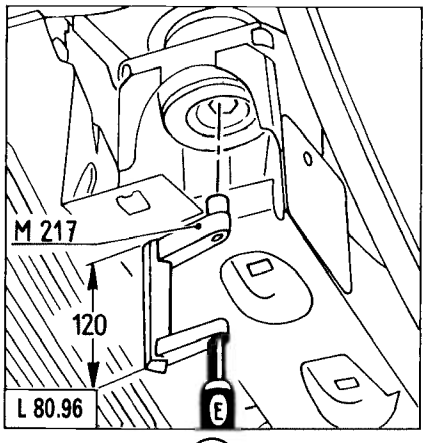

1

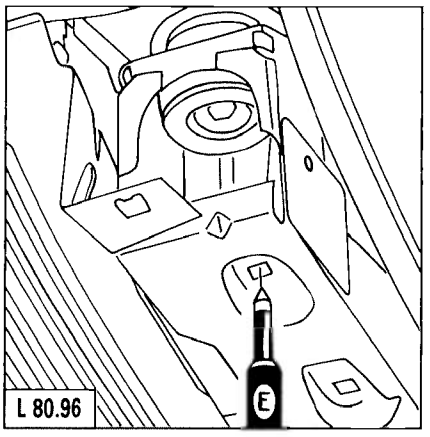

2

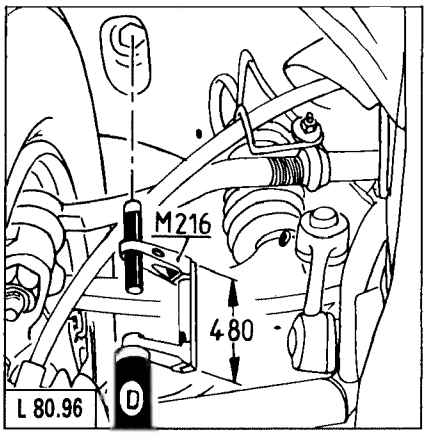

3

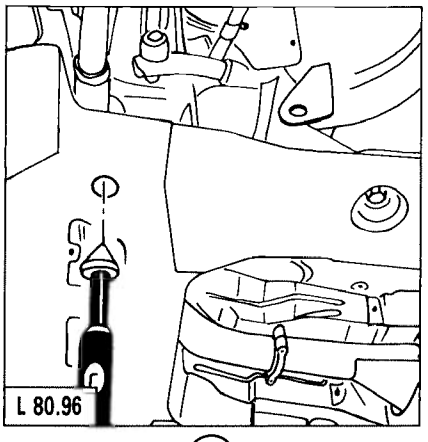

4

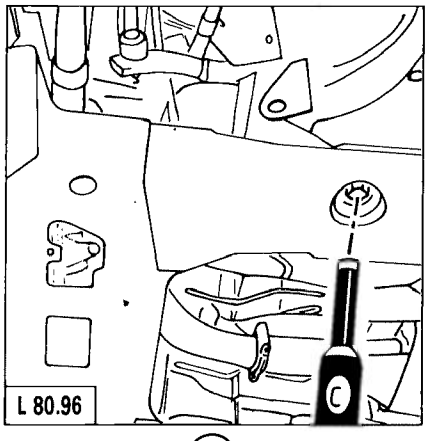

5

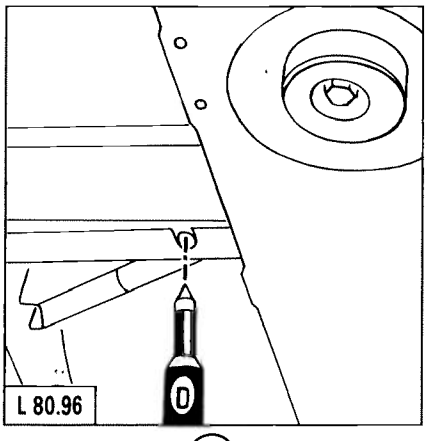

6

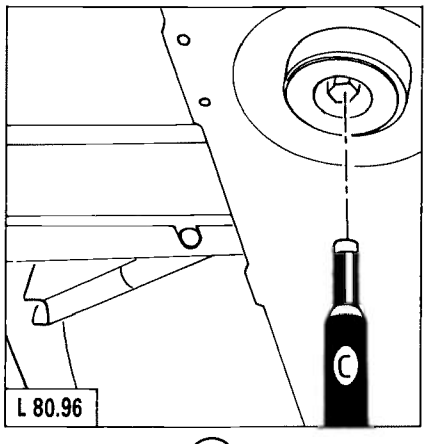

7

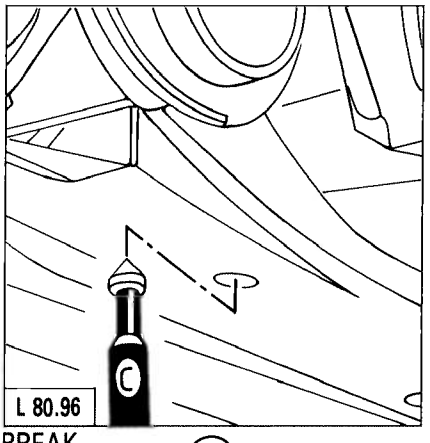

BREAK 8

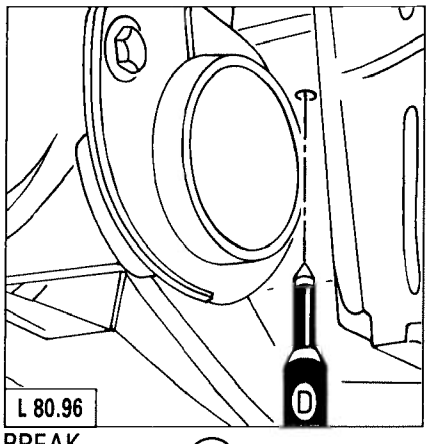

BREAK 9

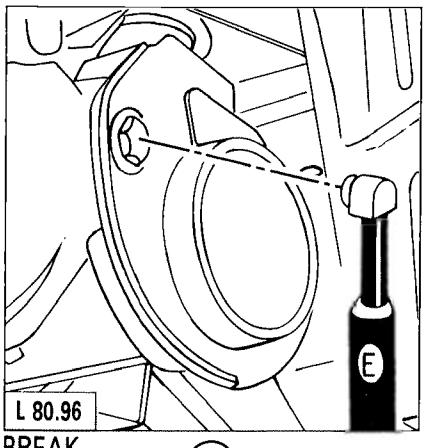

BREAK 10

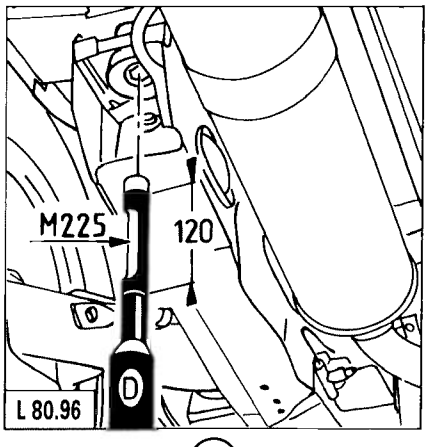

11

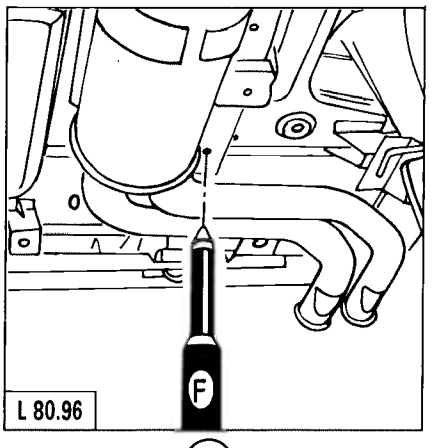

12

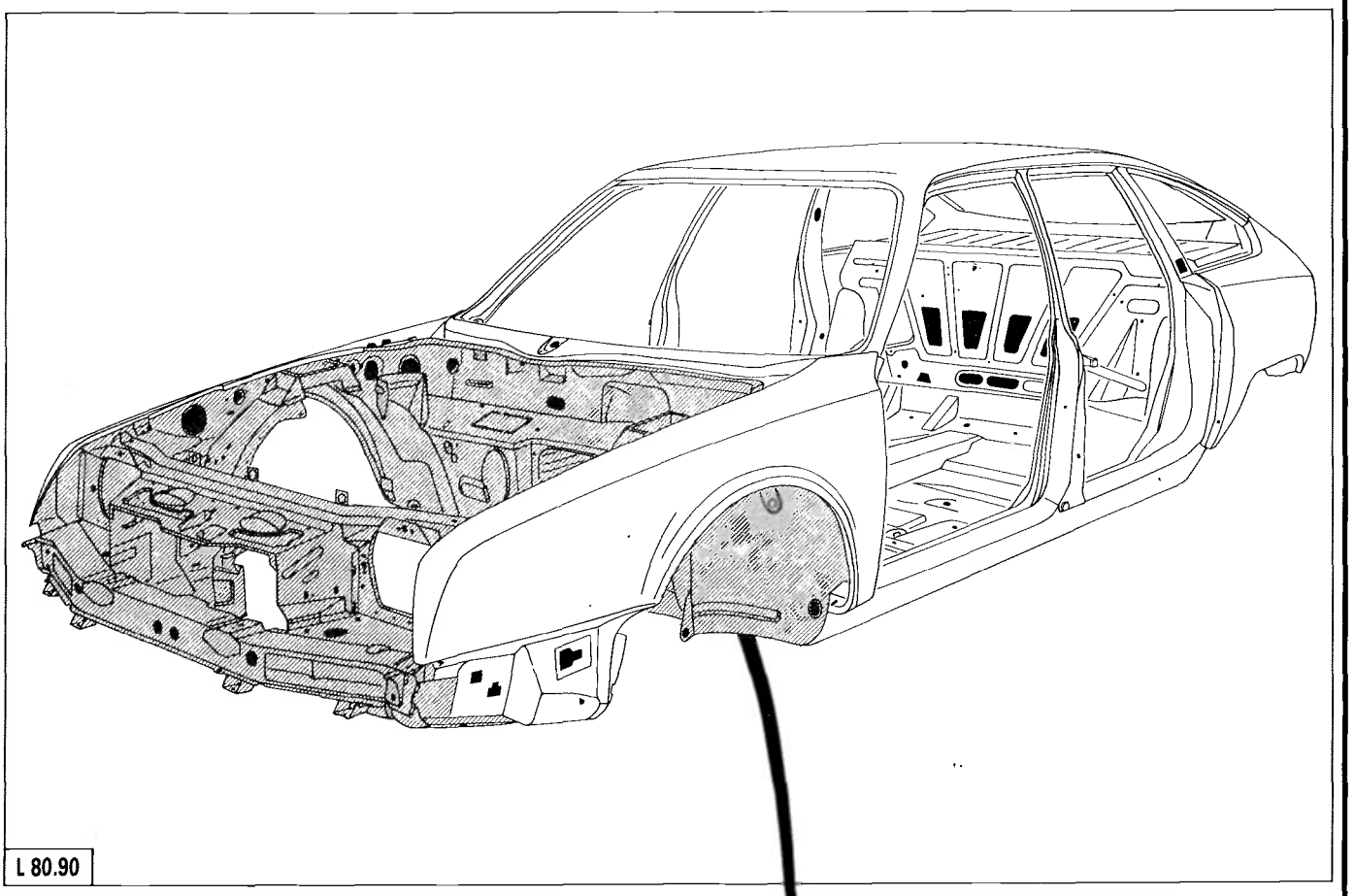

L 80.90

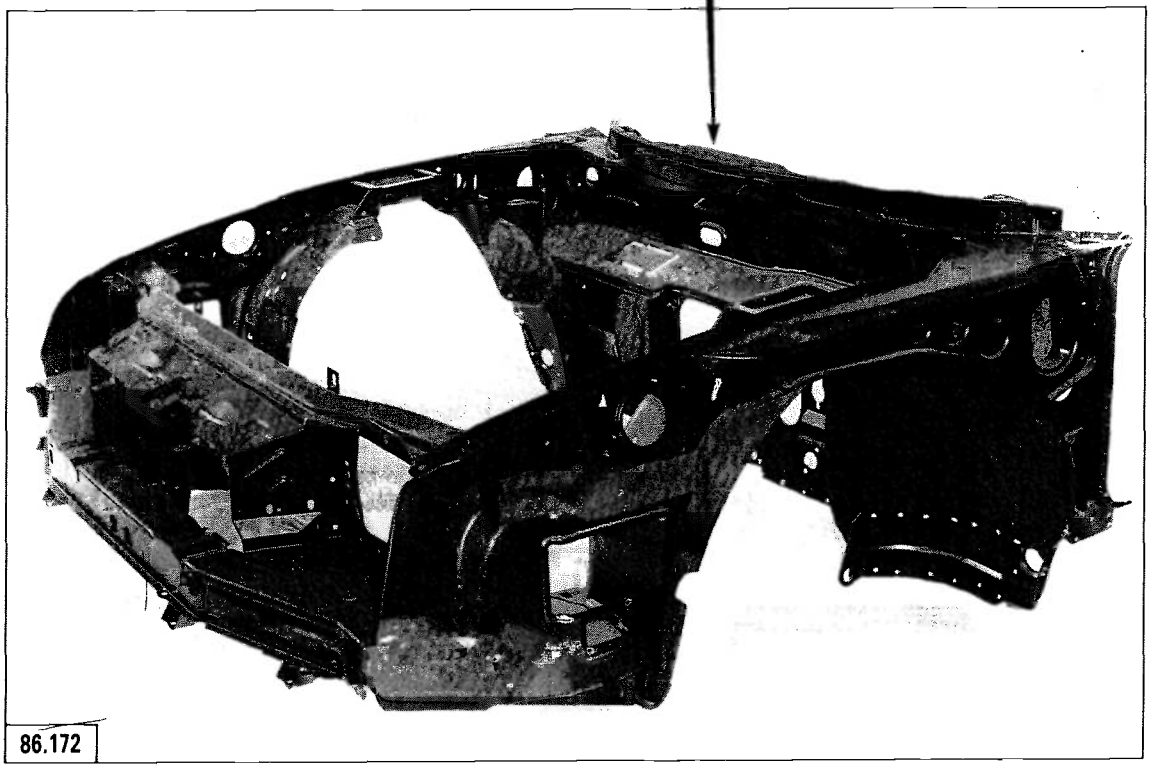

86.172

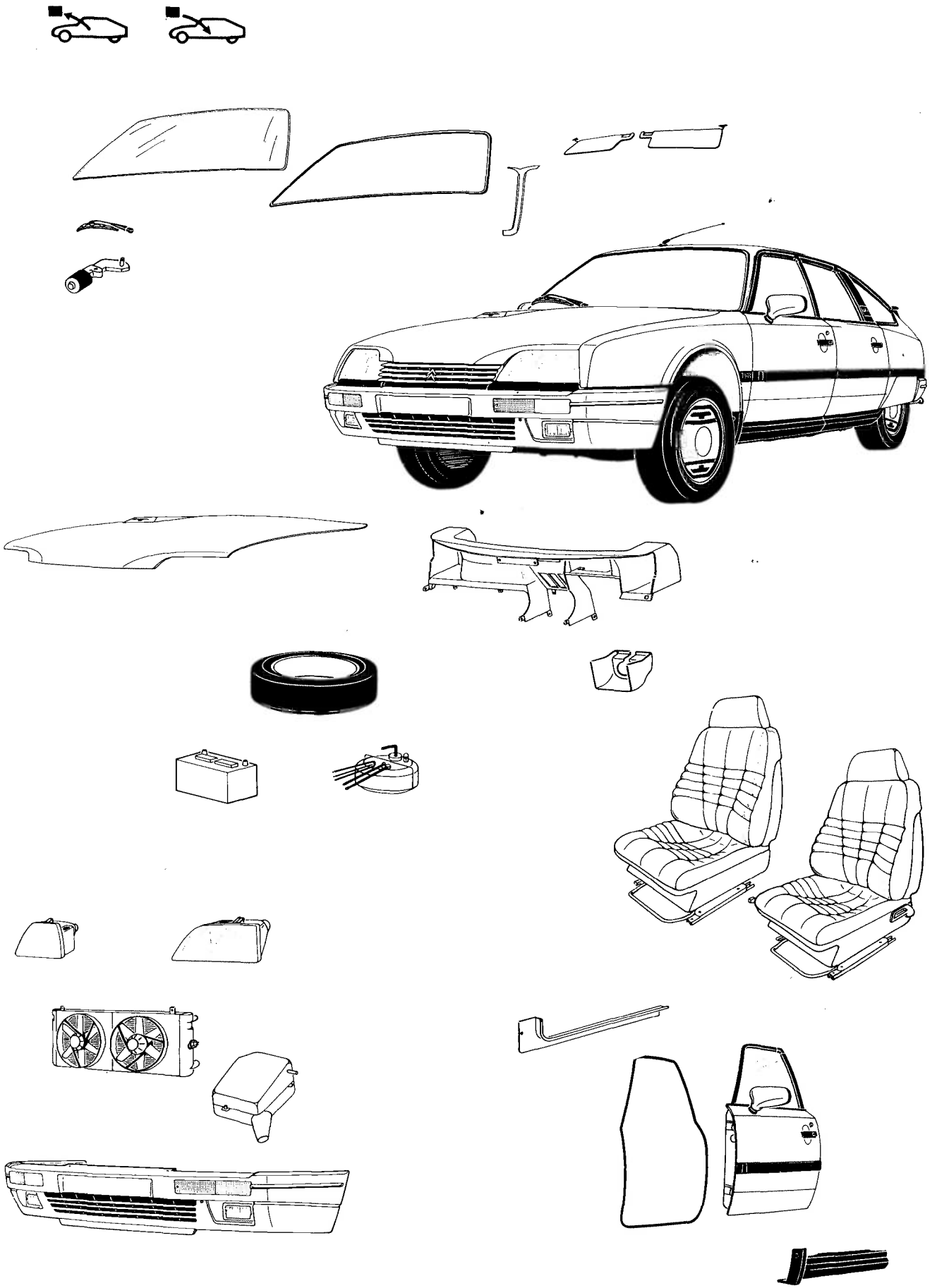

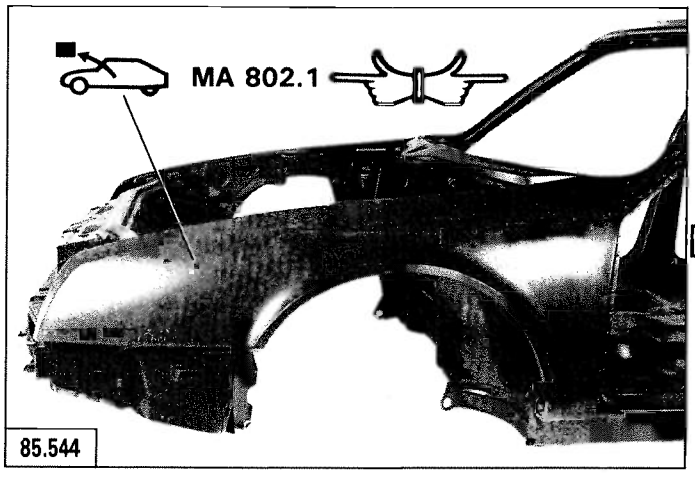

85.544

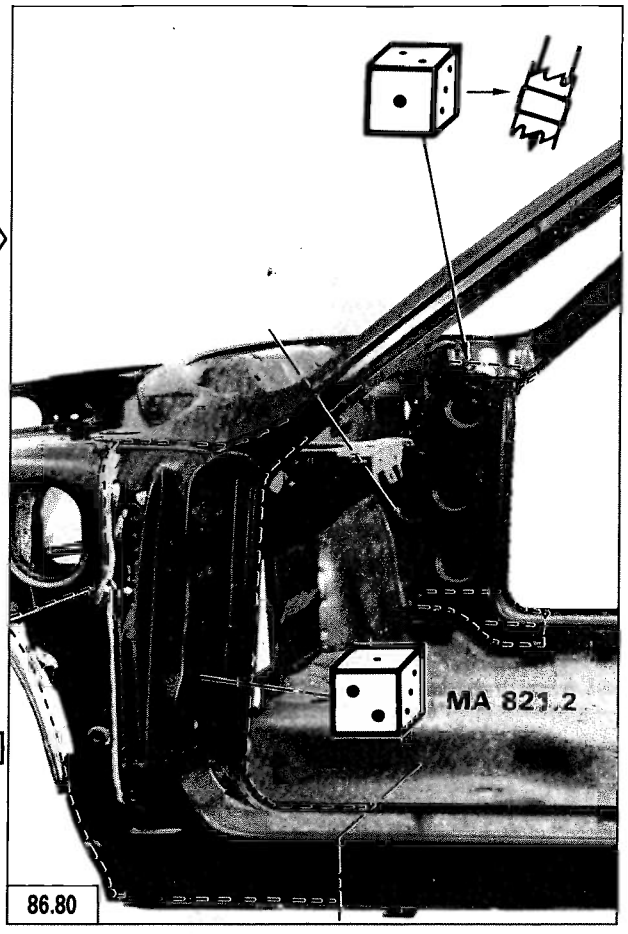

86.80

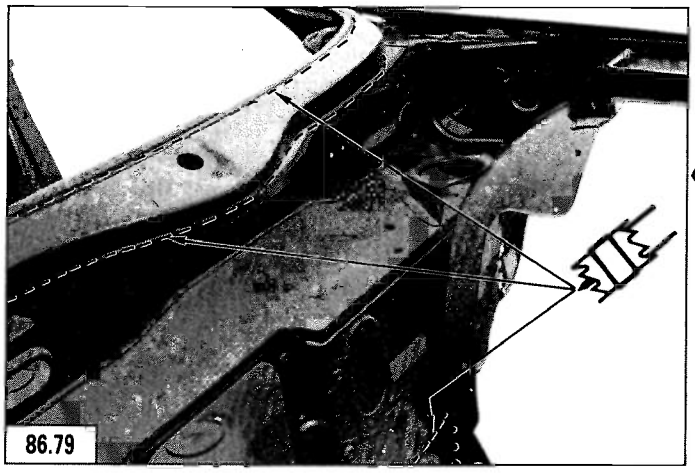

86.79

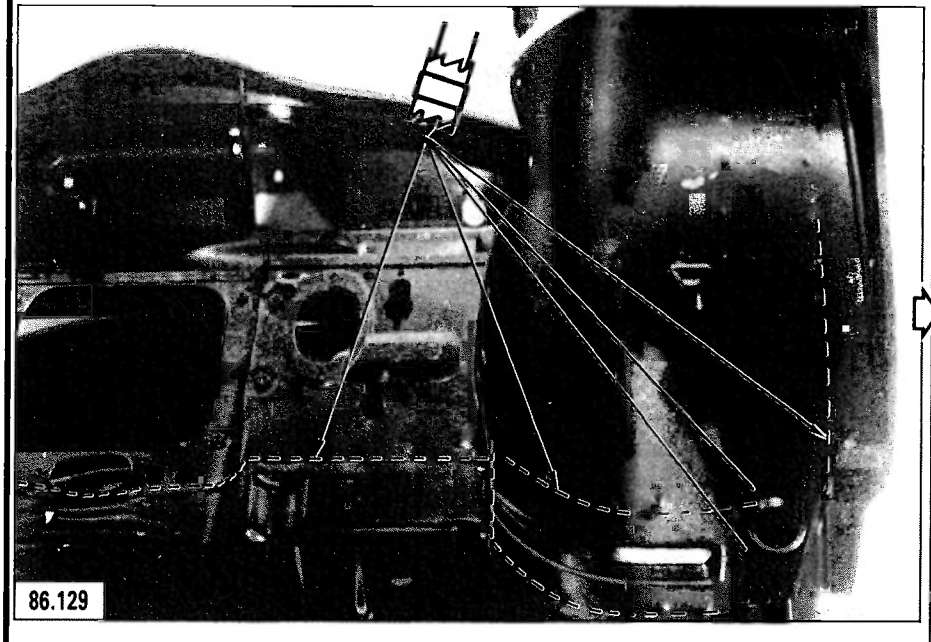

86.129

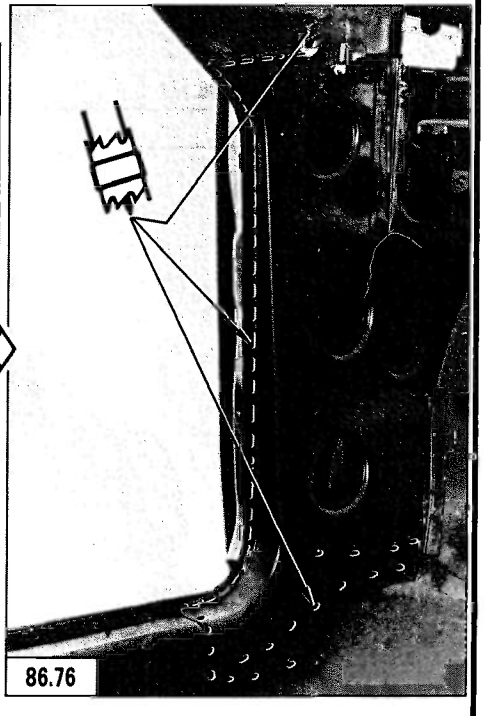

86.76

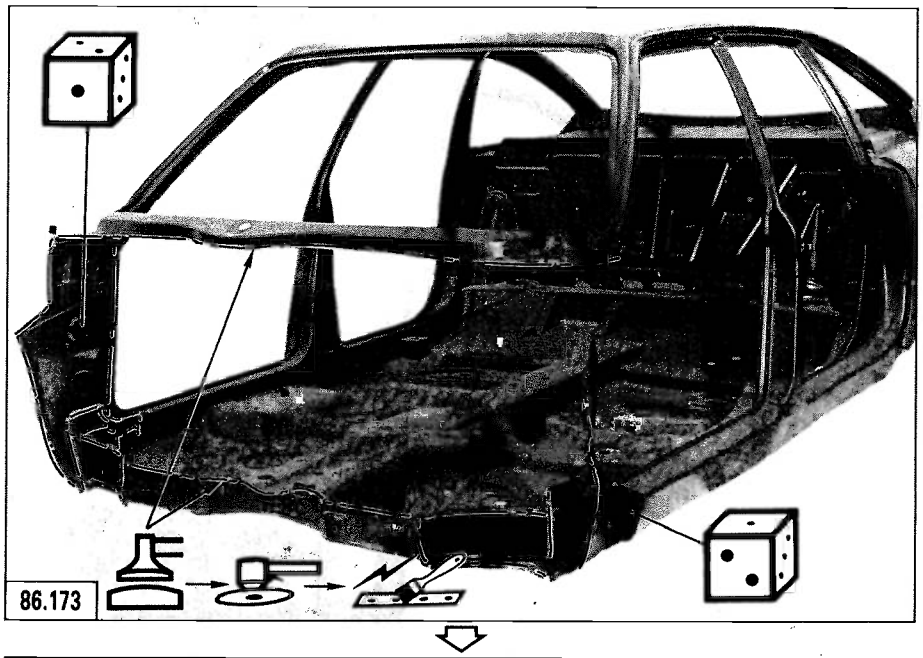
86.173

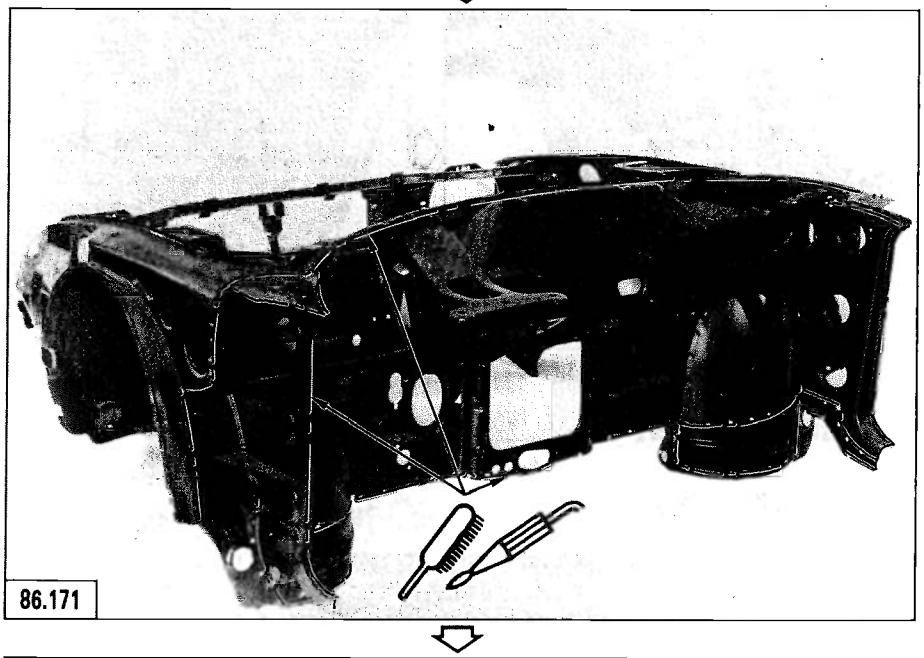
86.171

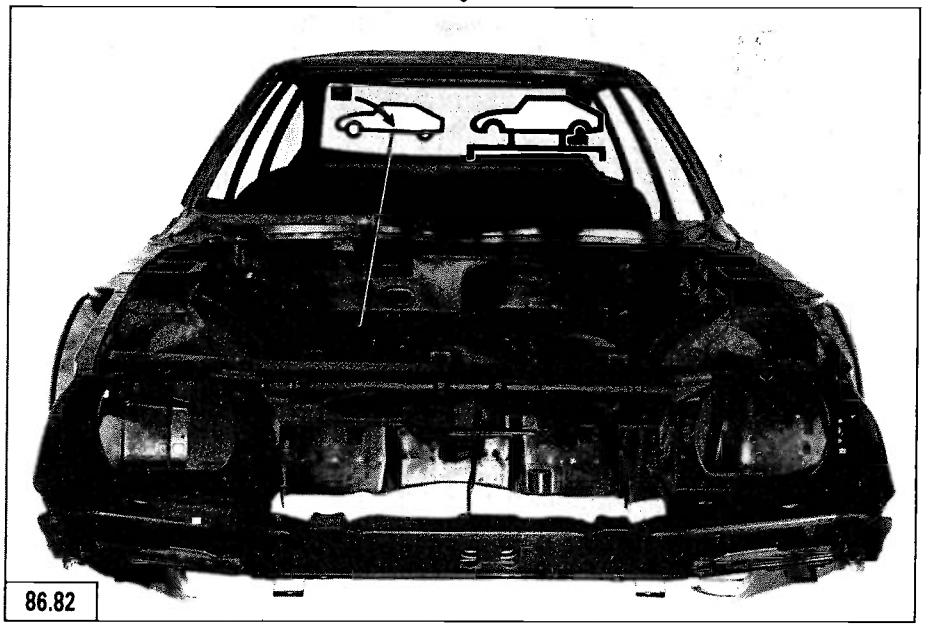
86.82

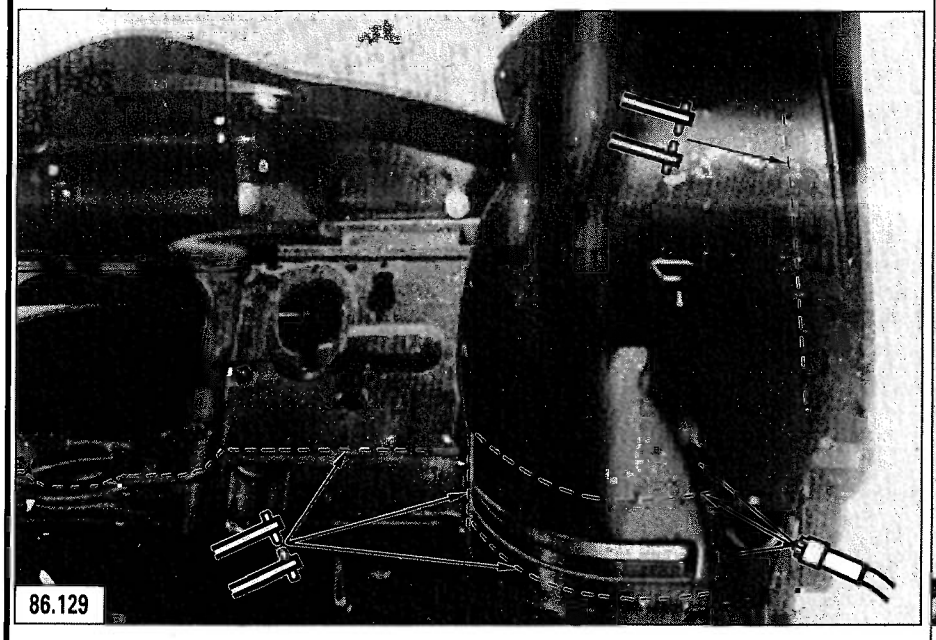
86.129

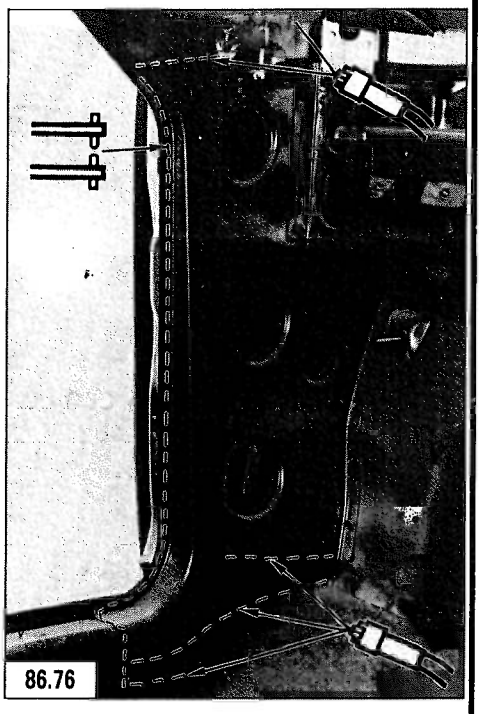
86.76

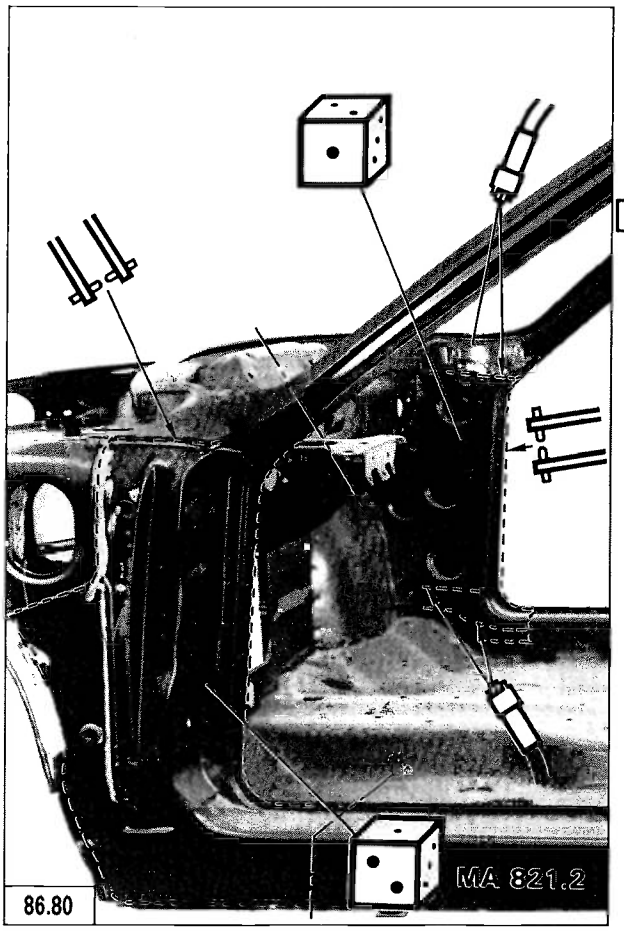

86.80

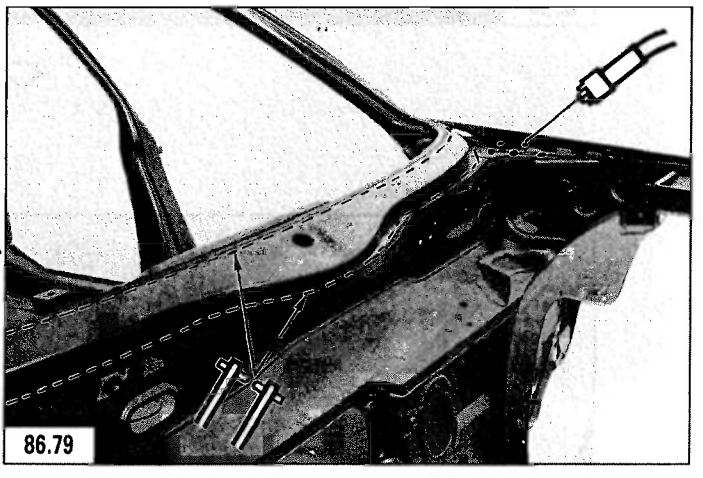
86.79

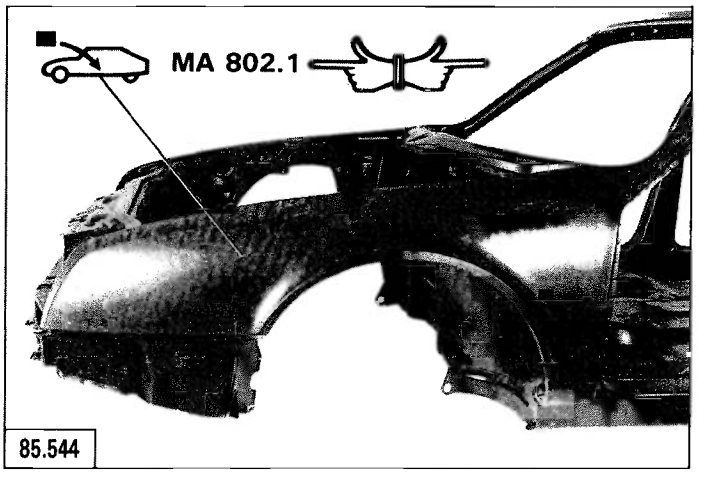

85.544

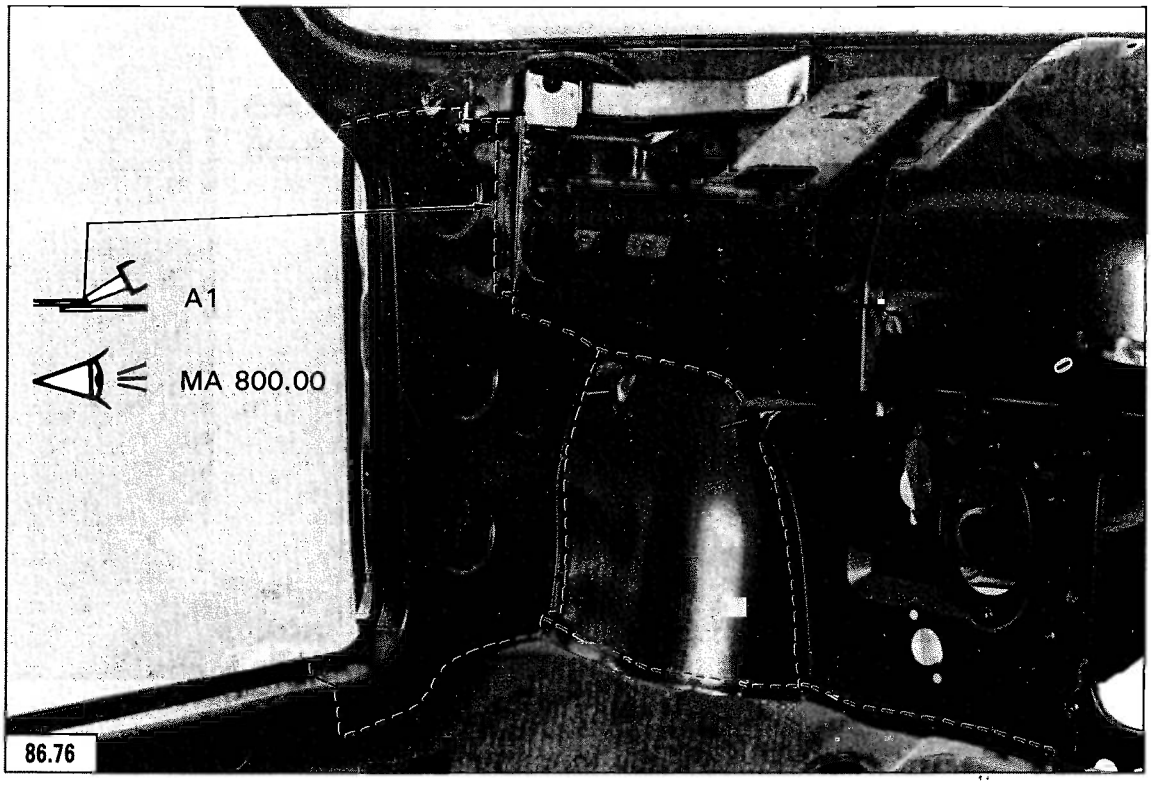

86.76

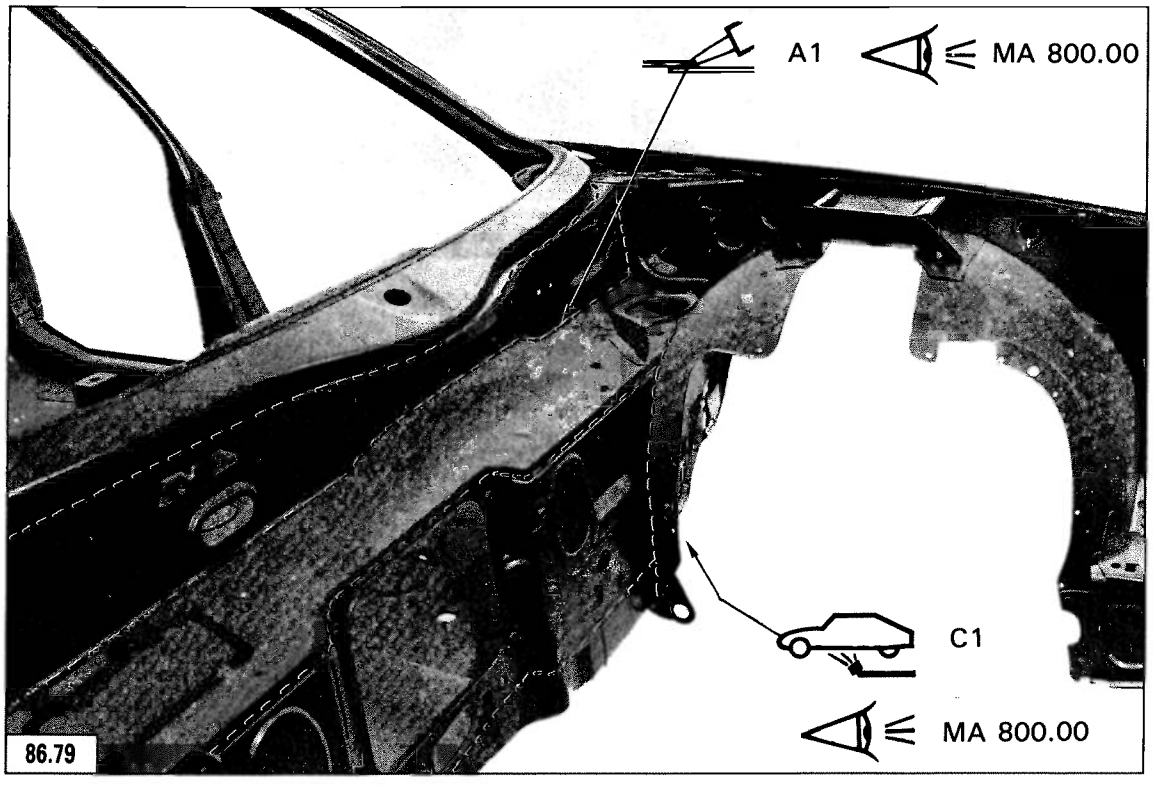

86.79

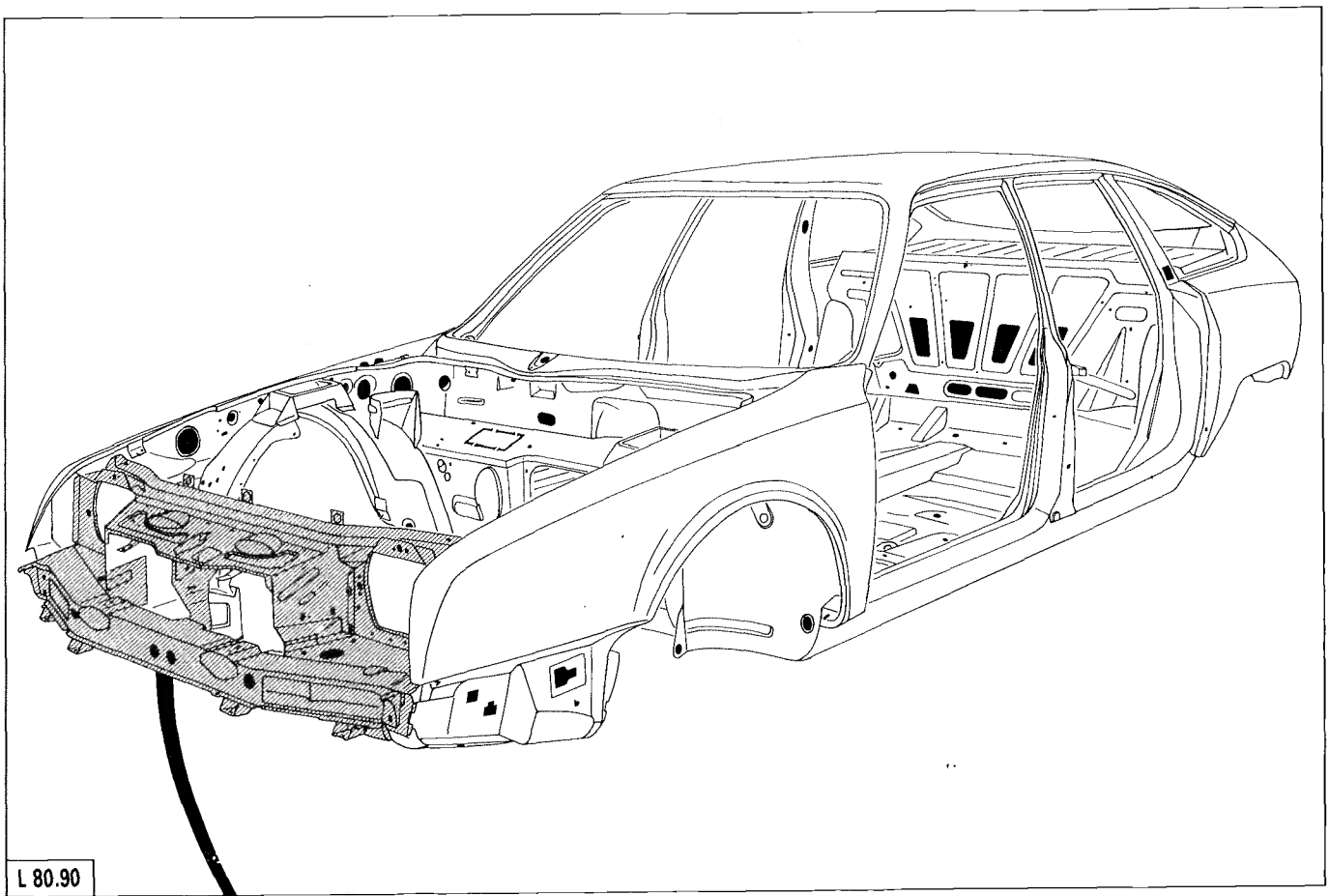

L 80.90

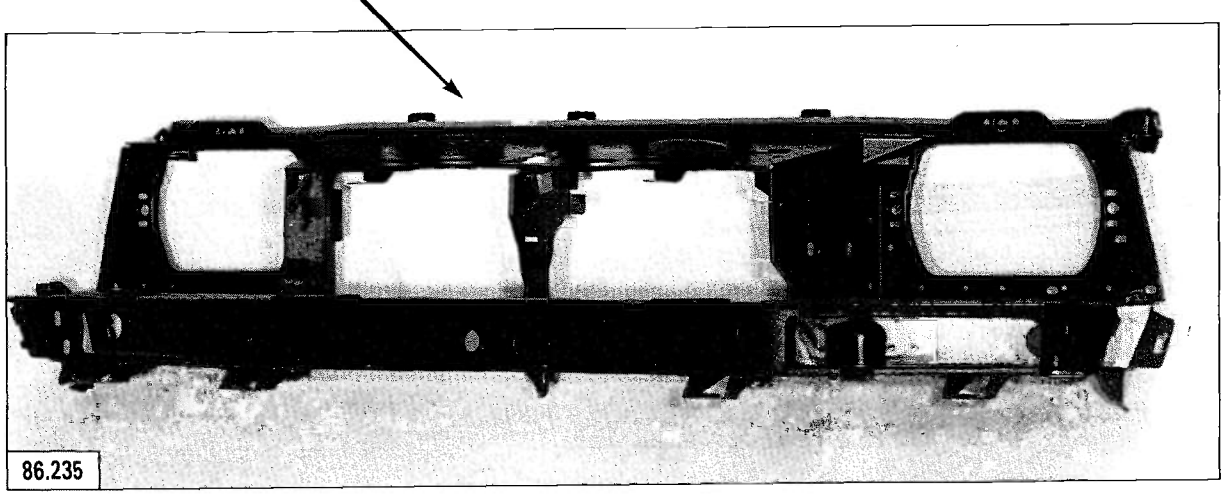

86.235

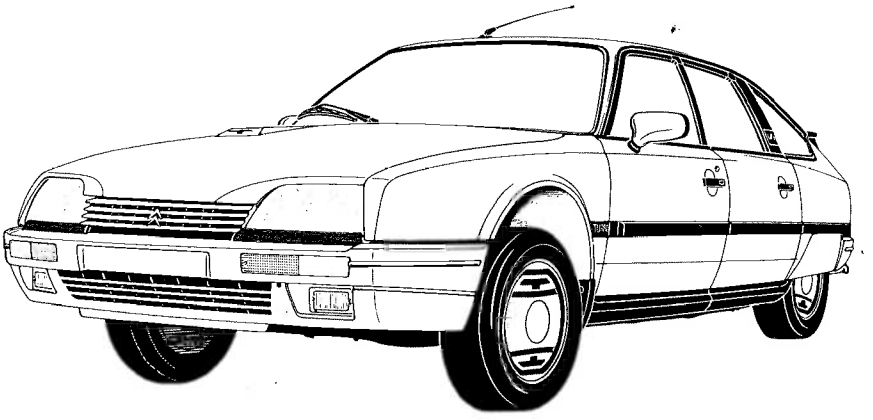

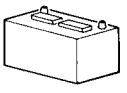

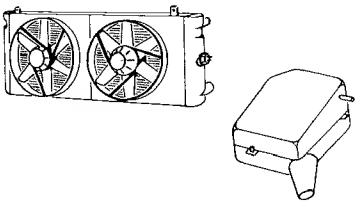

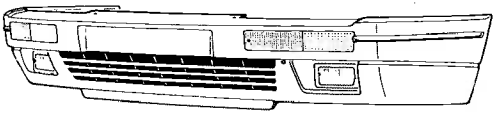

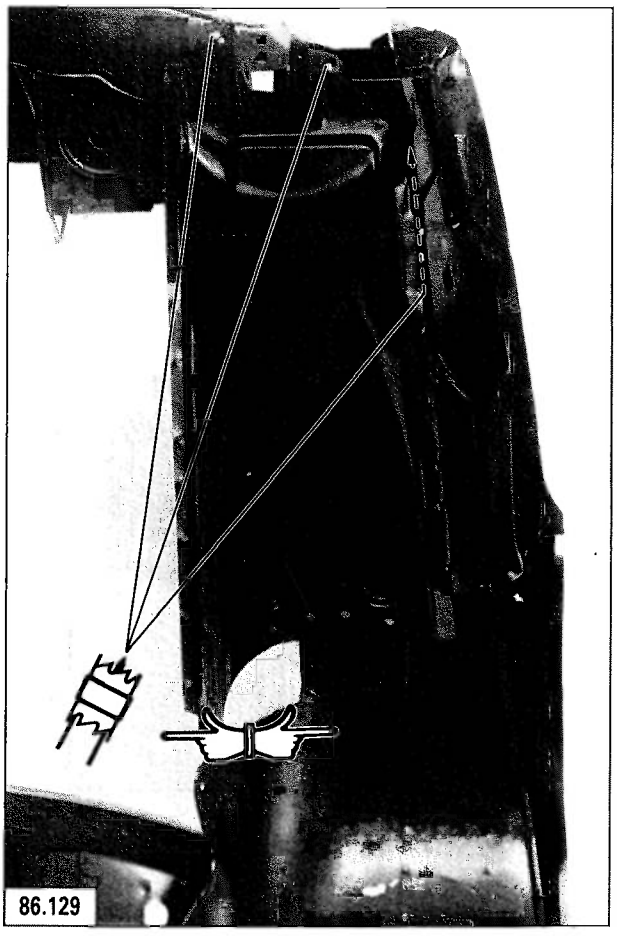
86.129

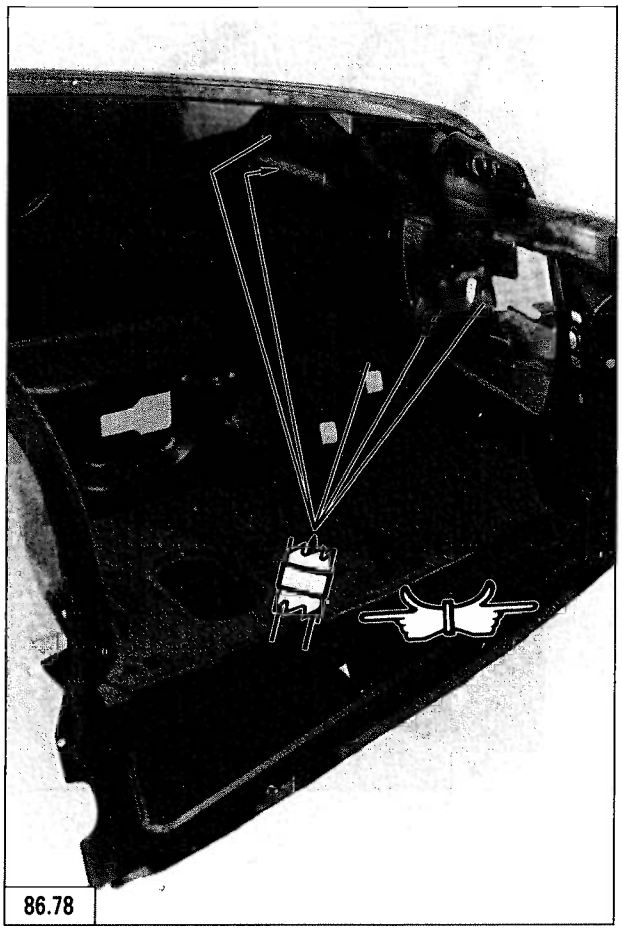
86.78

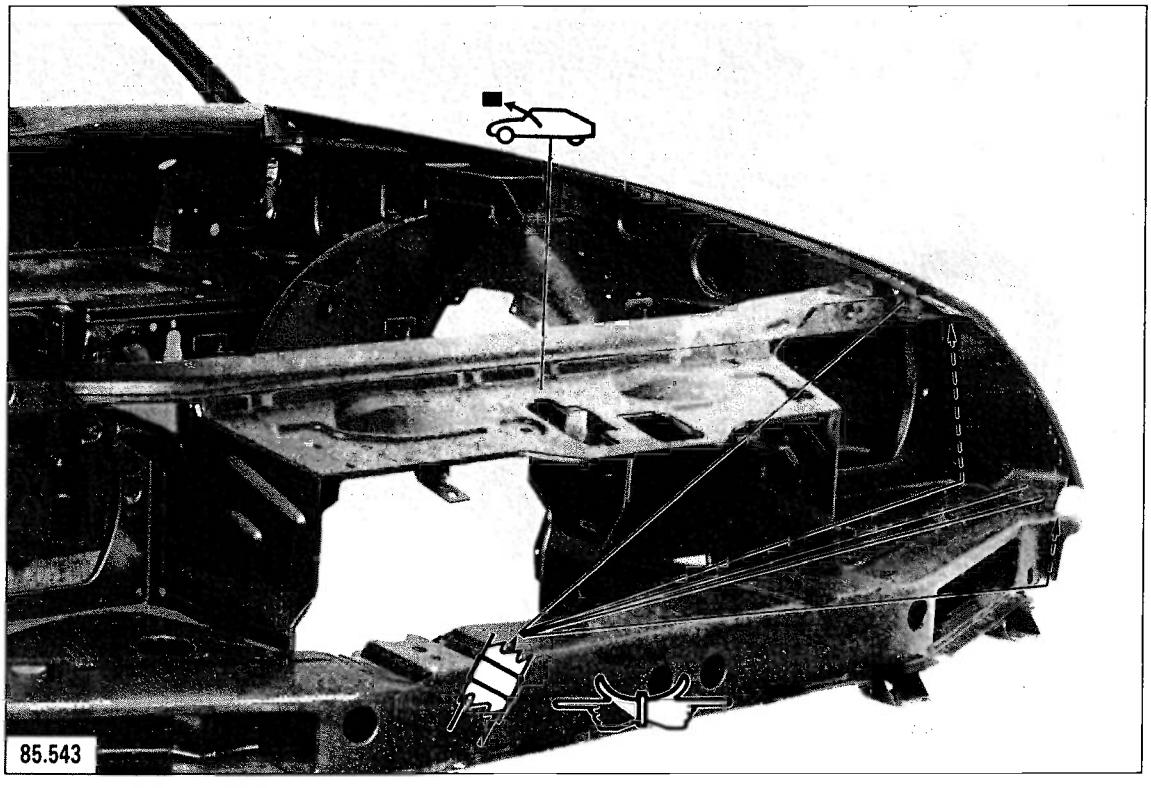
85.543

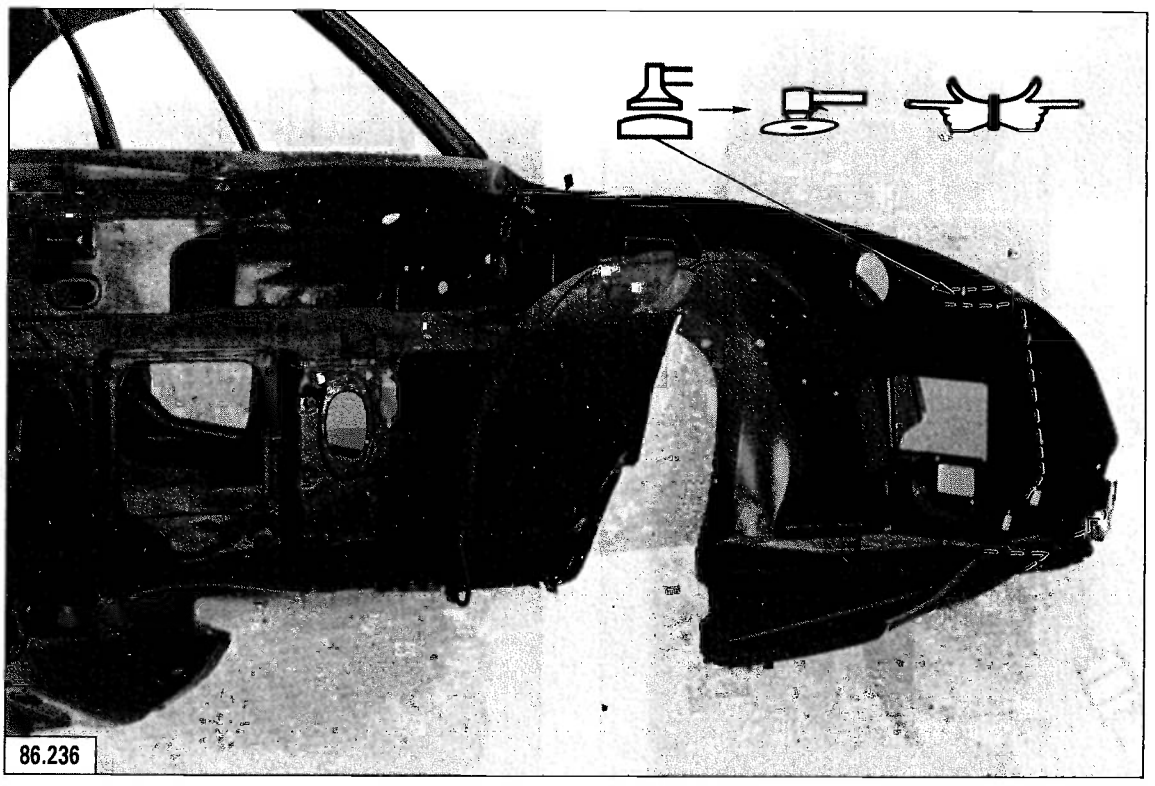

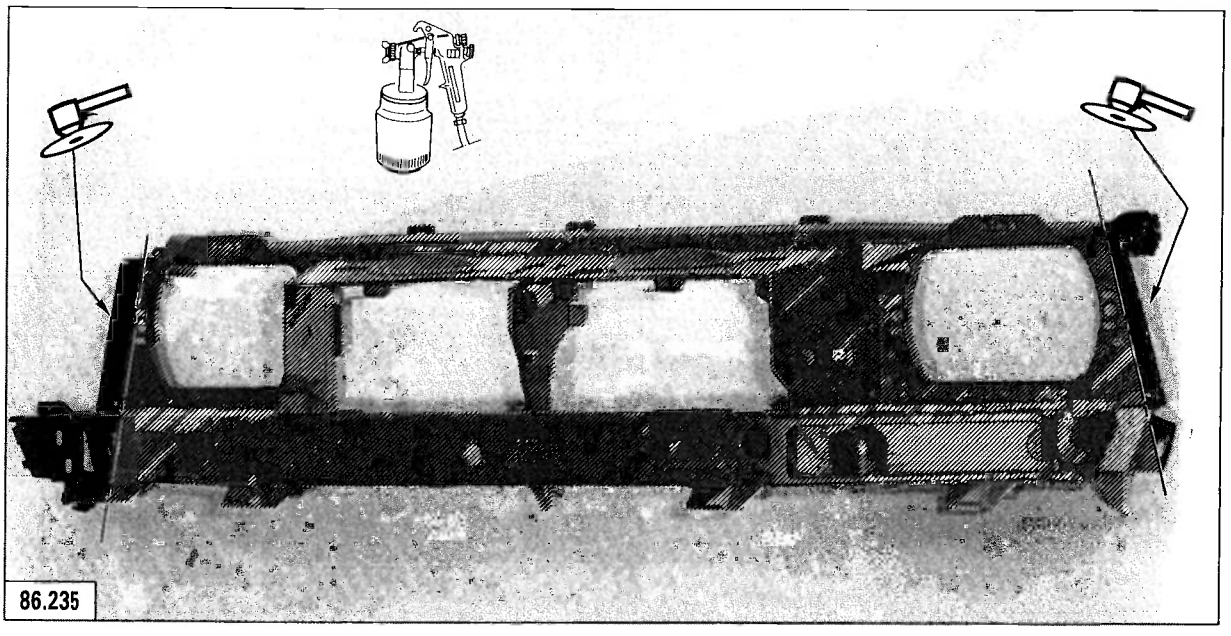

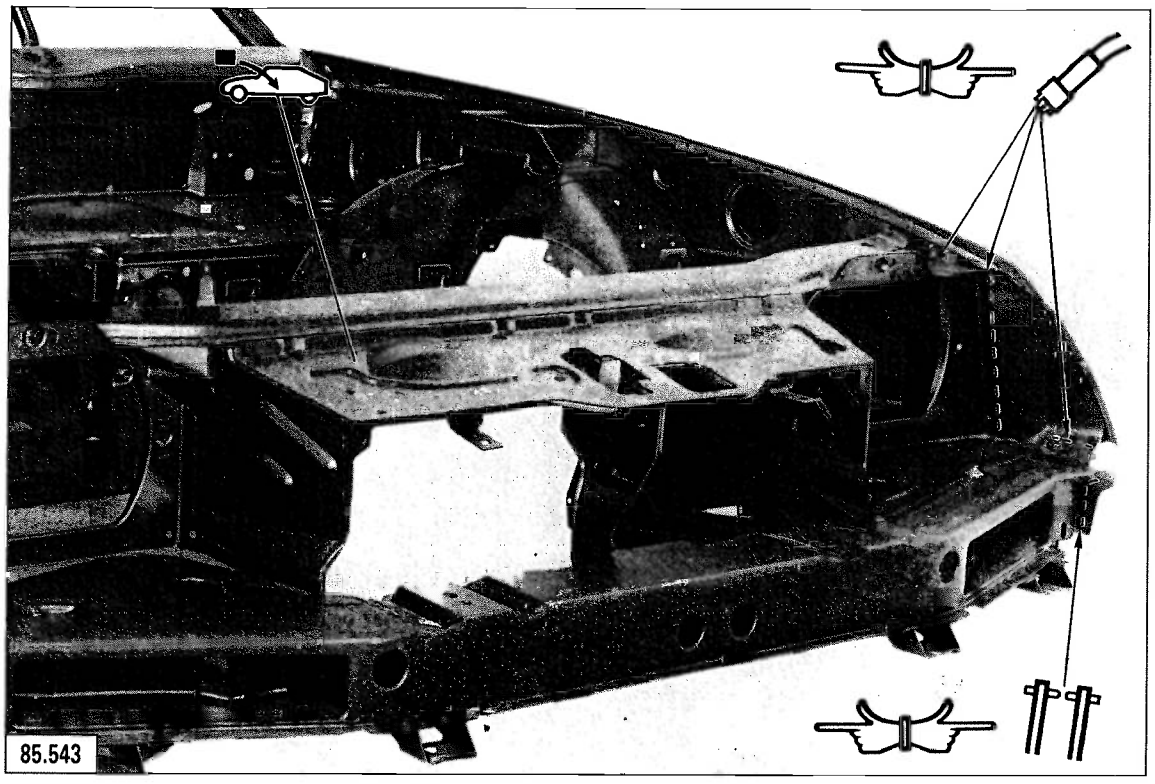
85.543

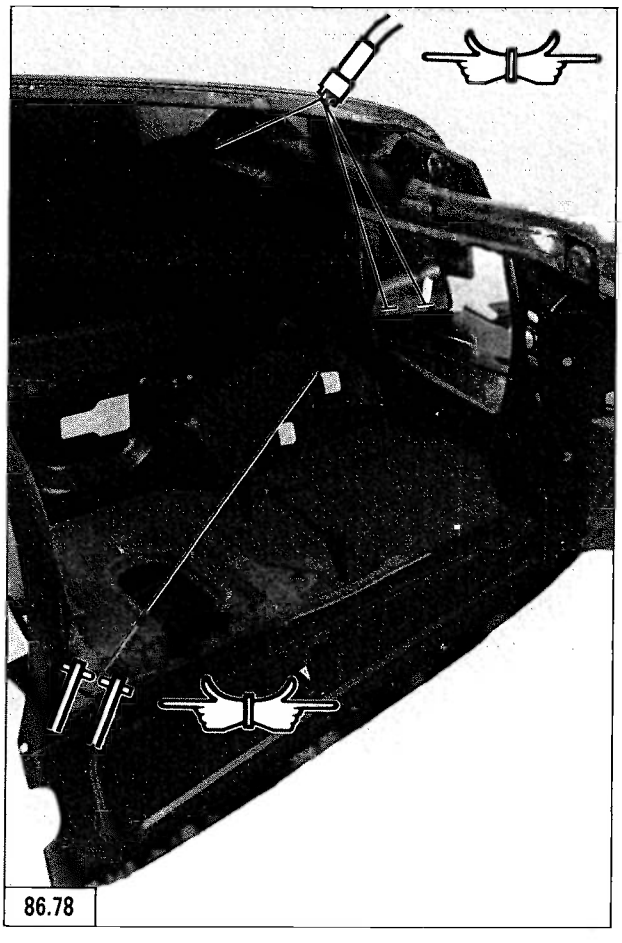
86.78

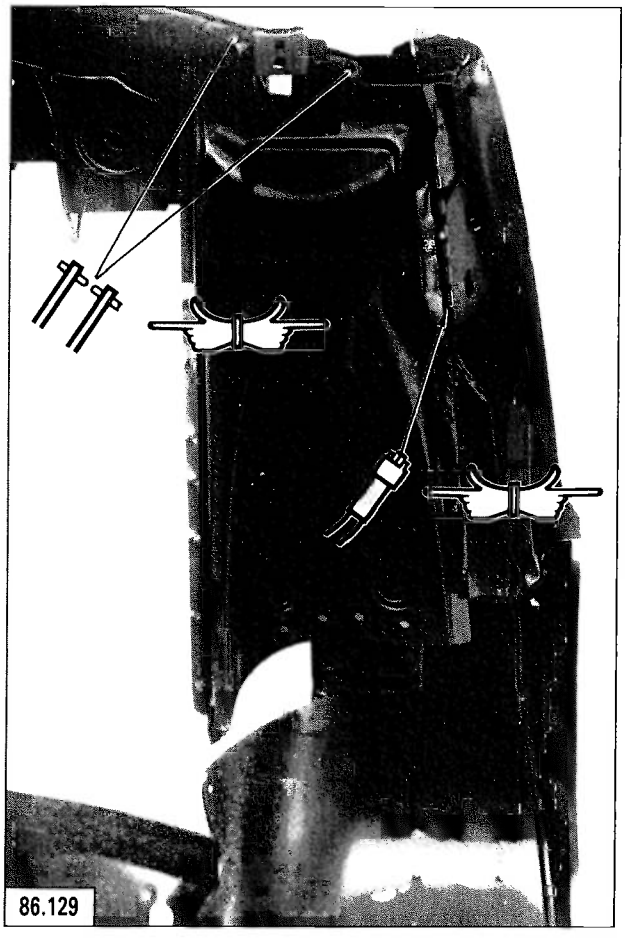
86.129

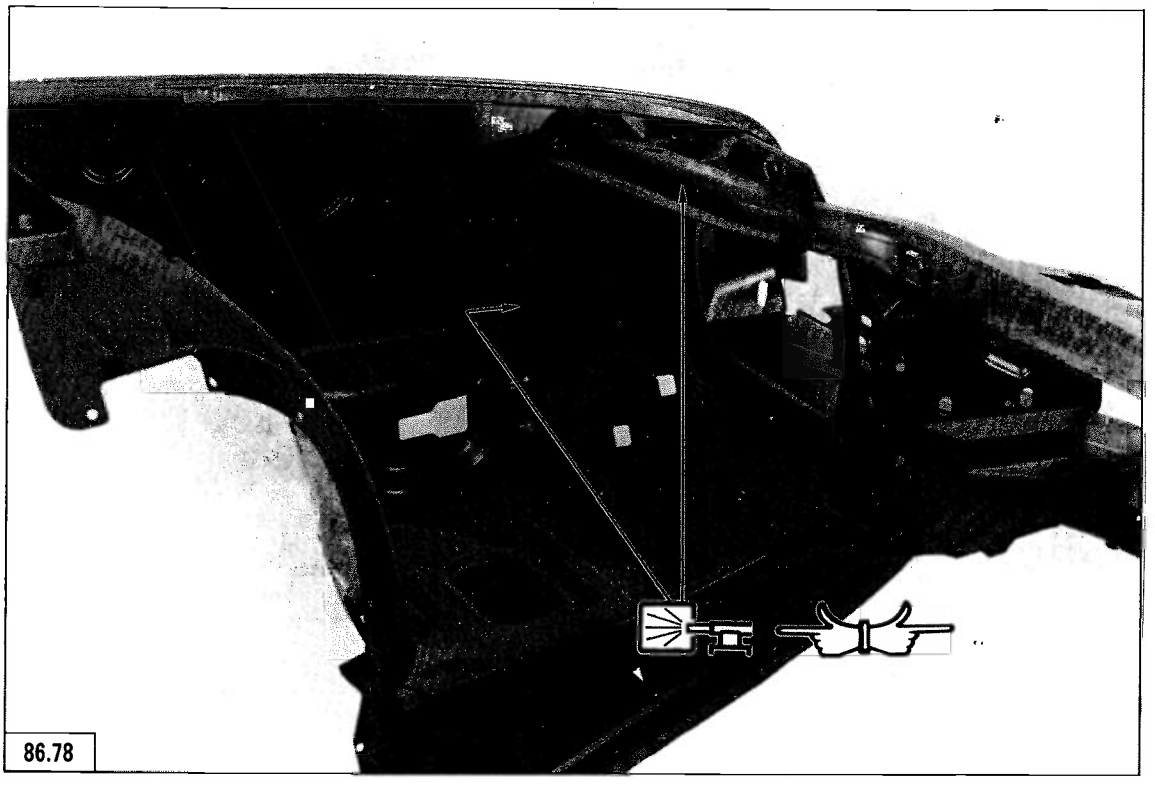

86.78

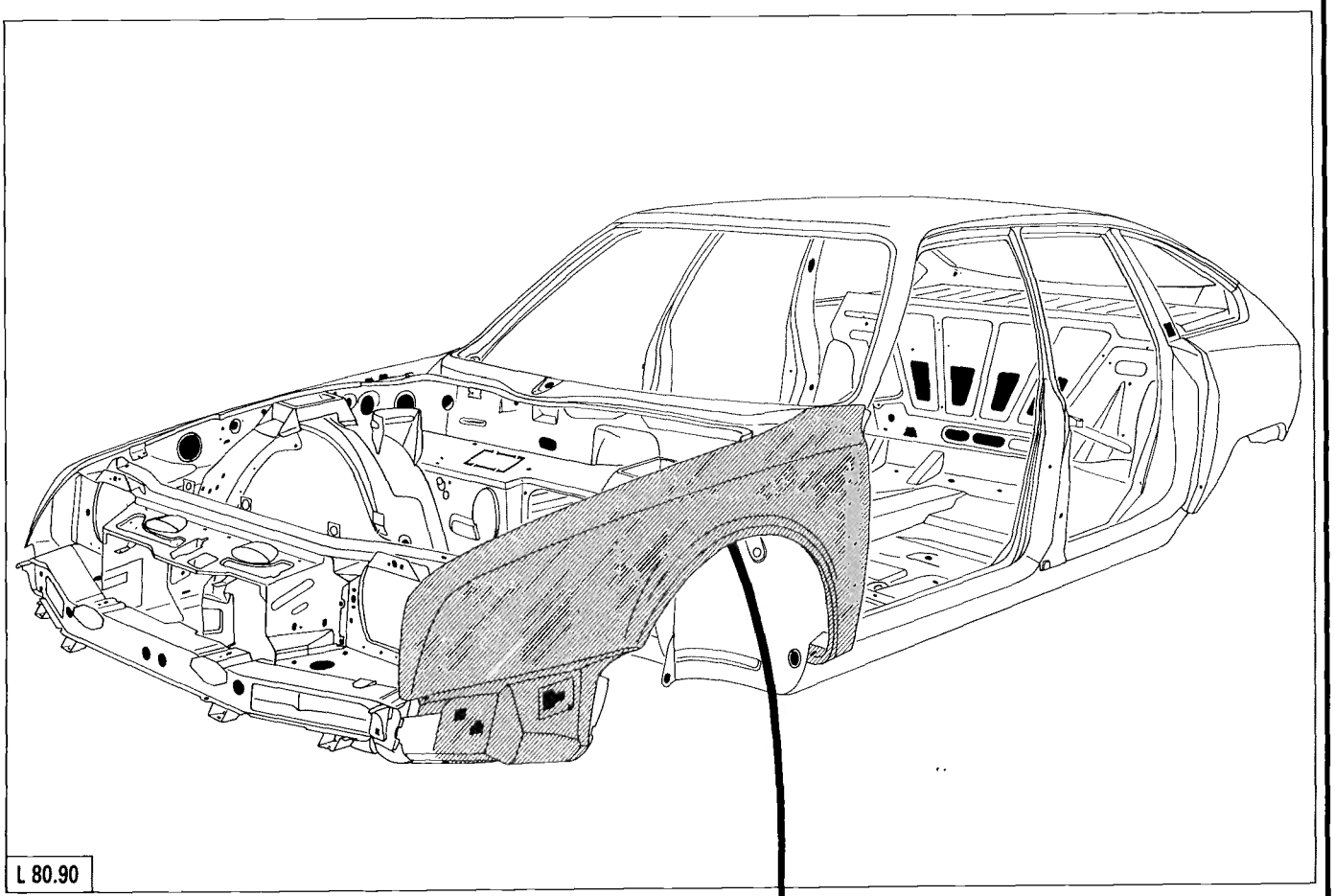

L 80.90

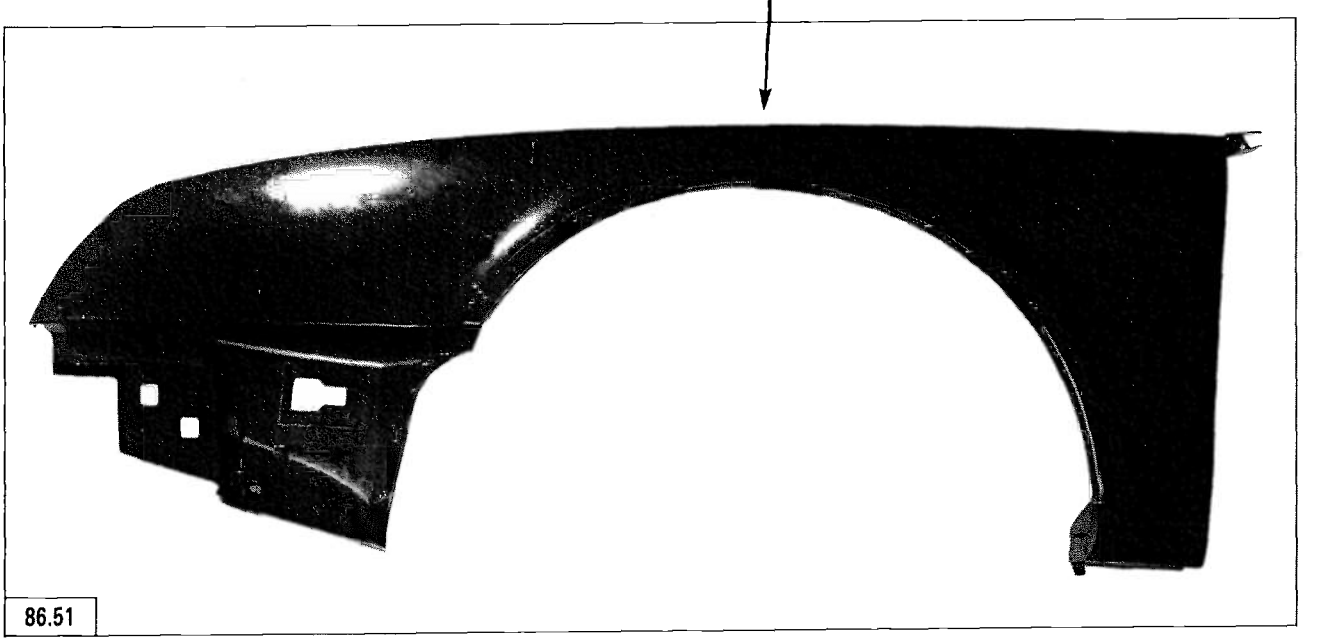

86.51

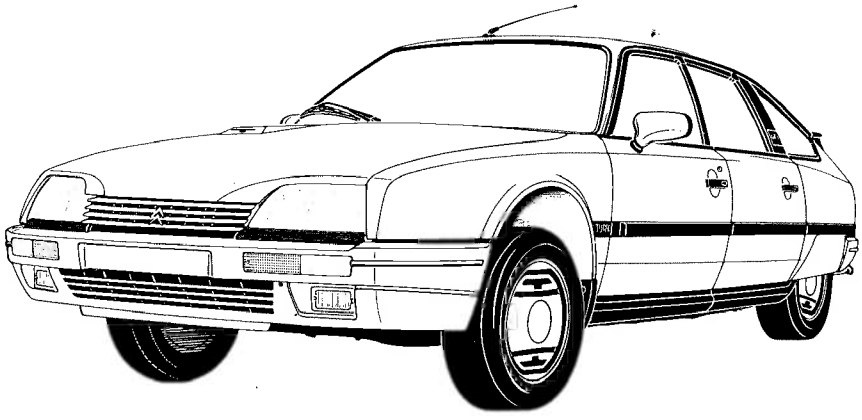

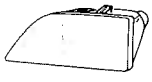

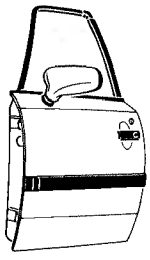

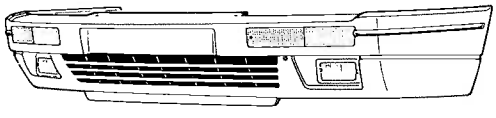

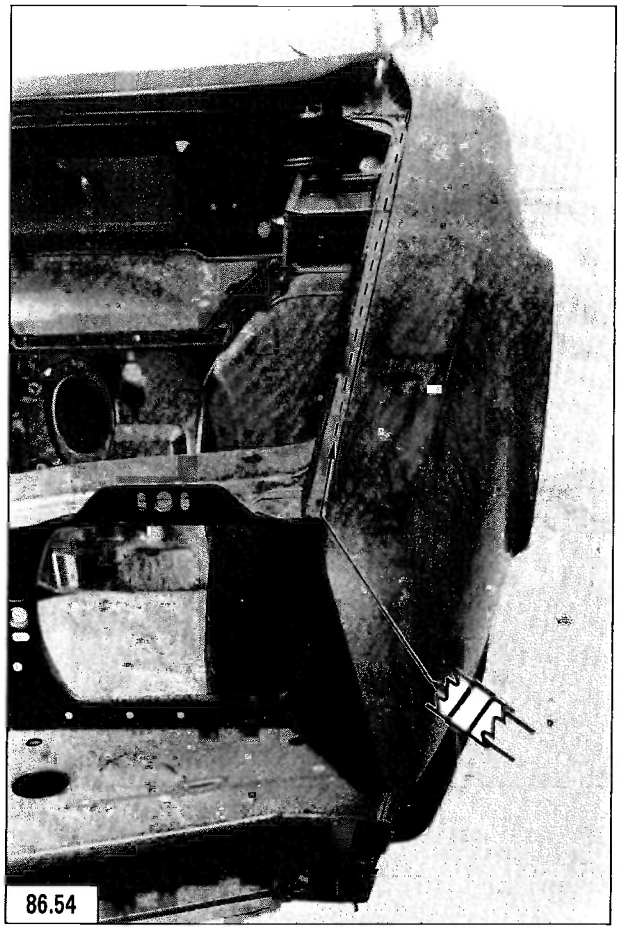
86.54

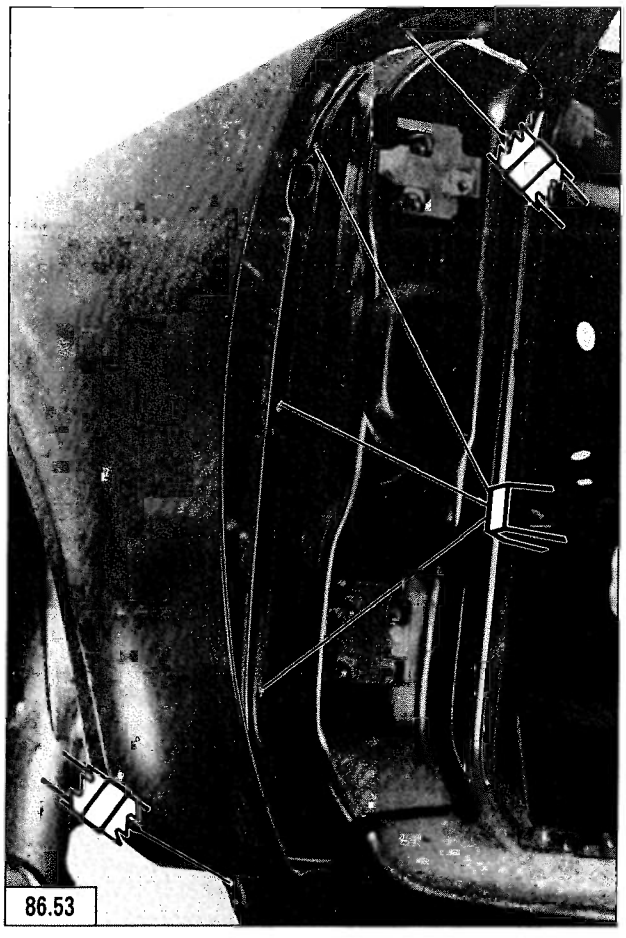
86.53

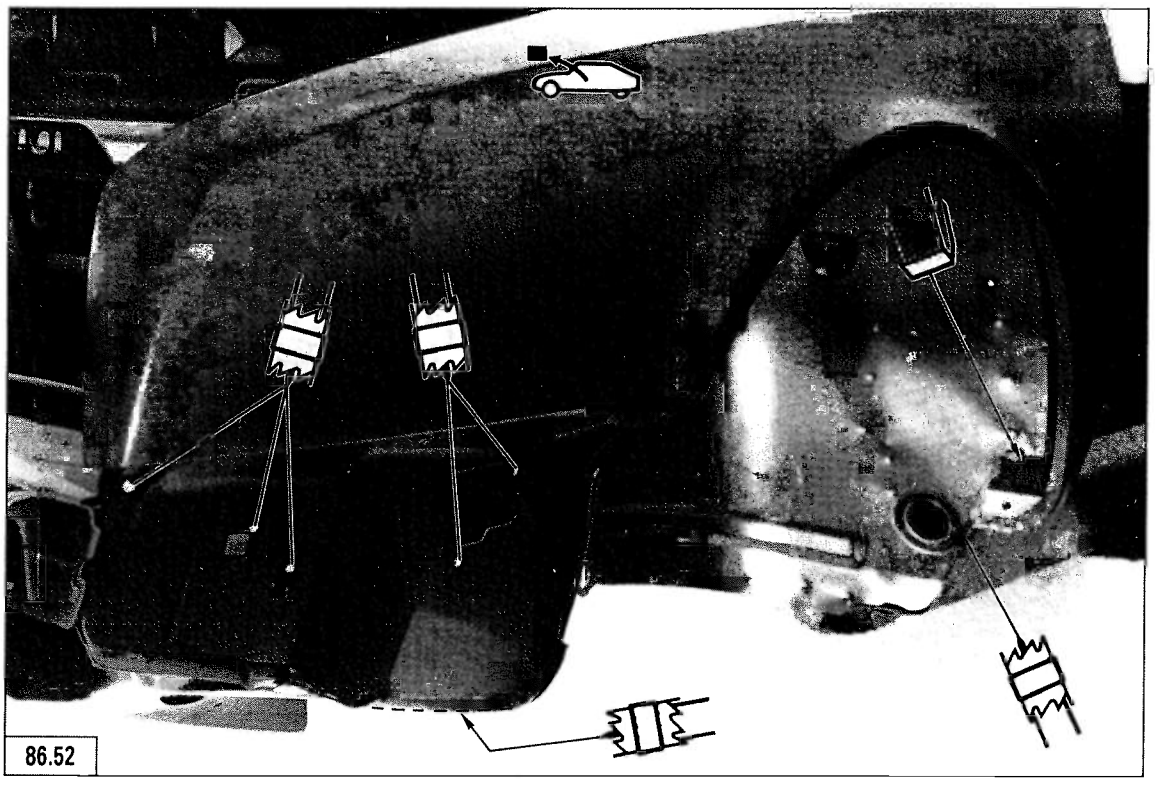
86.52

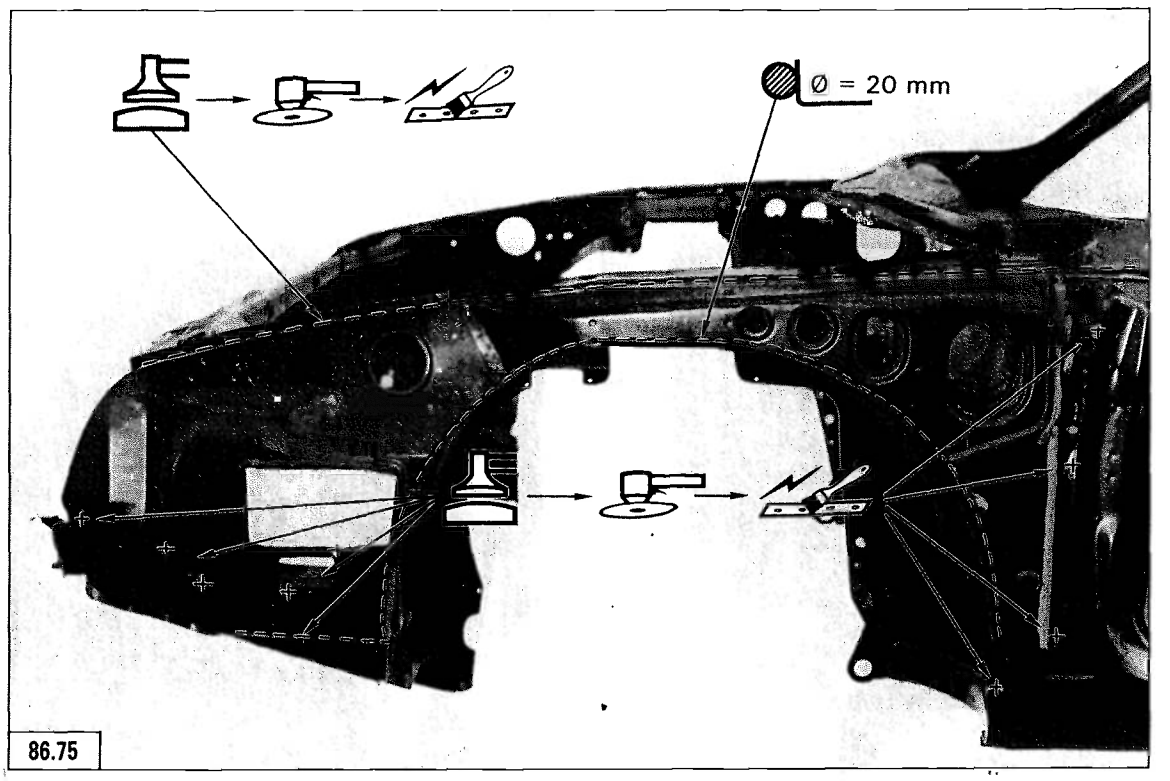

86.75

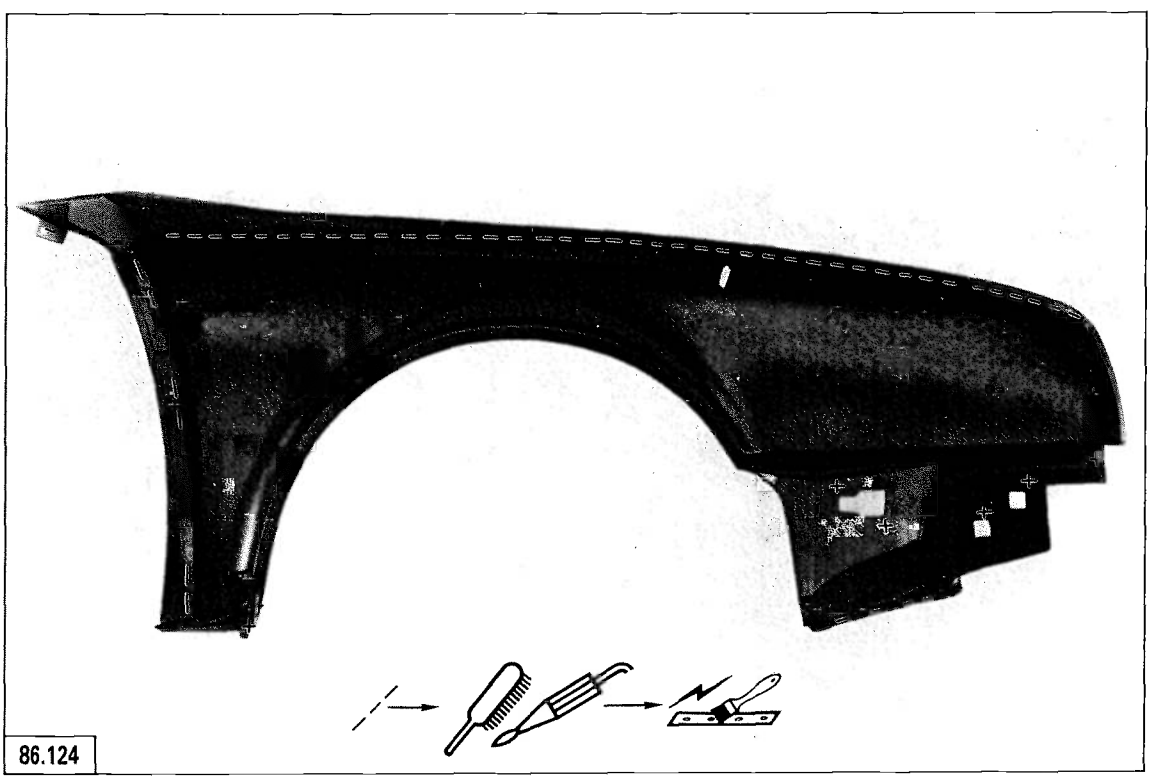

86.124

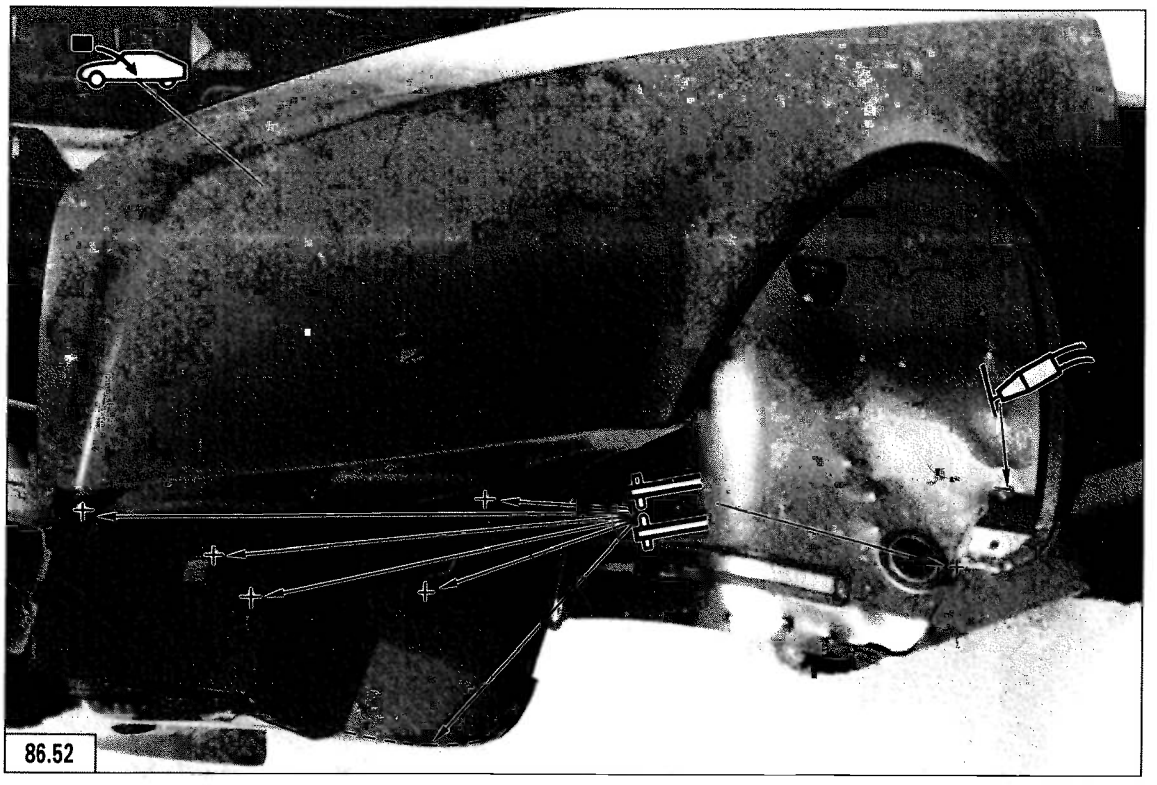

86.52

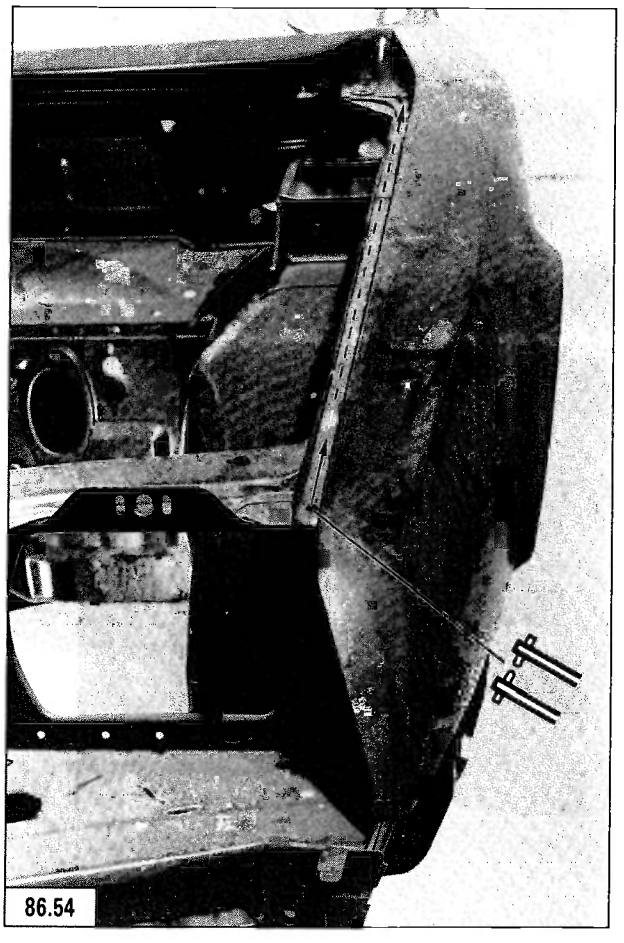

86.54

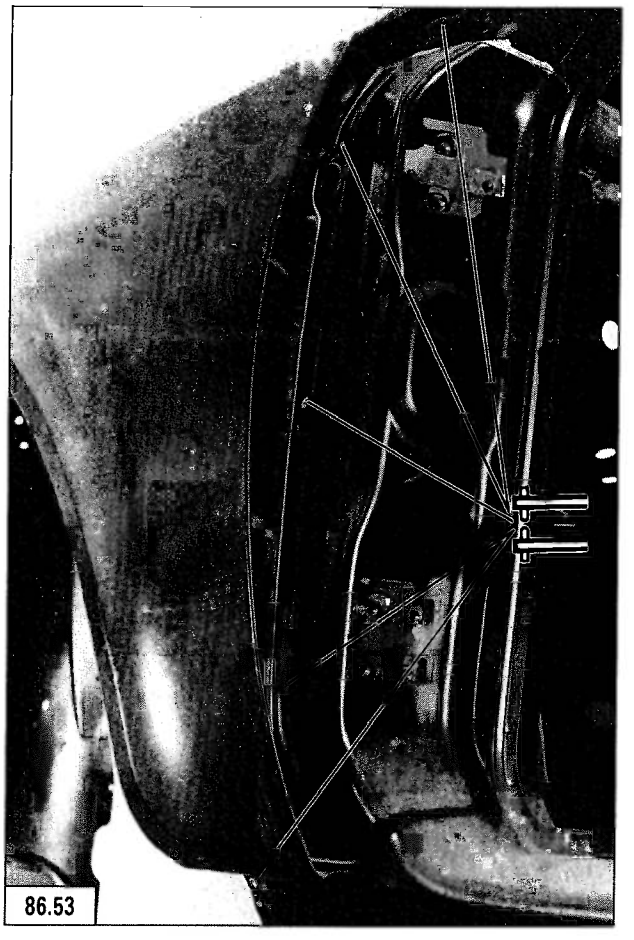

86.53

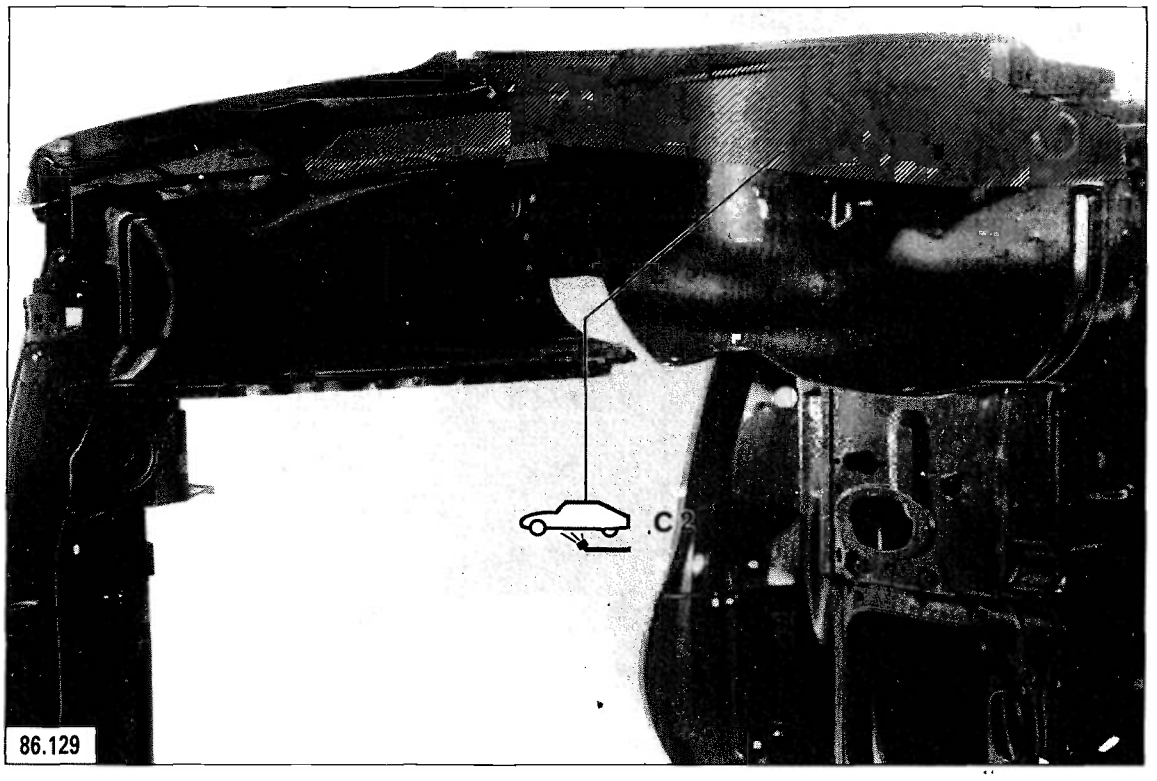

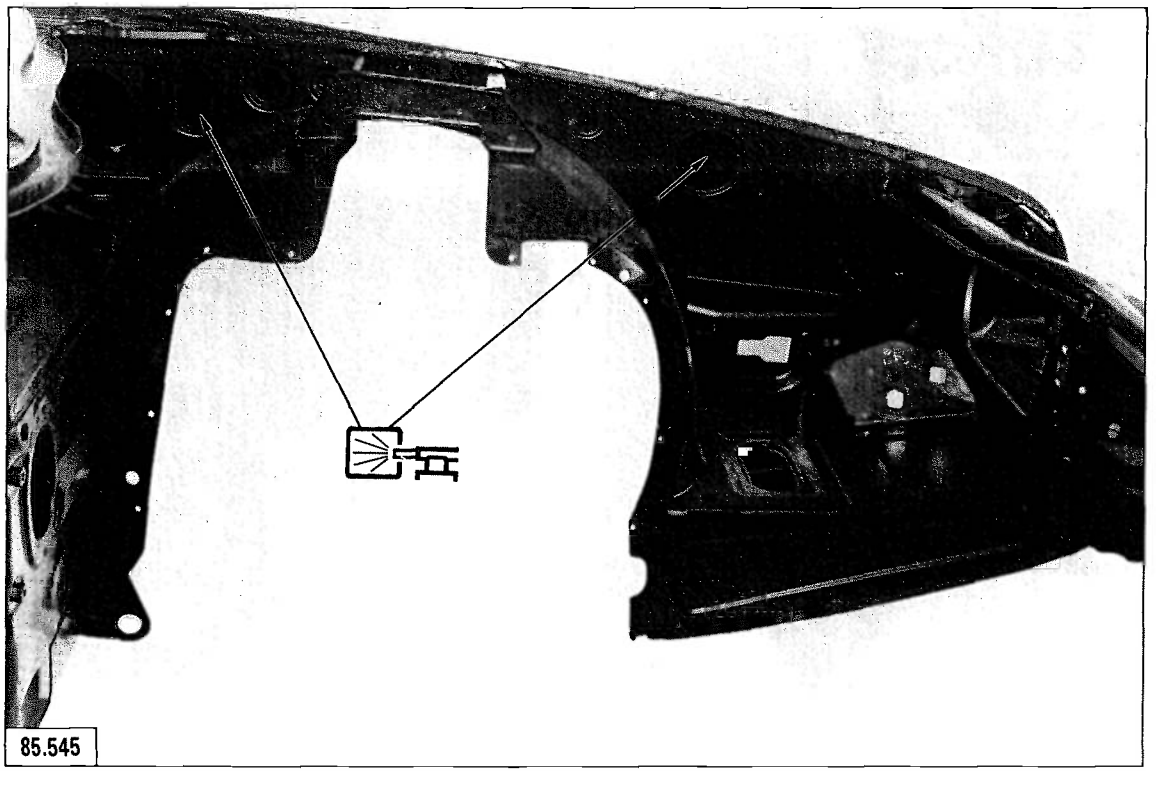

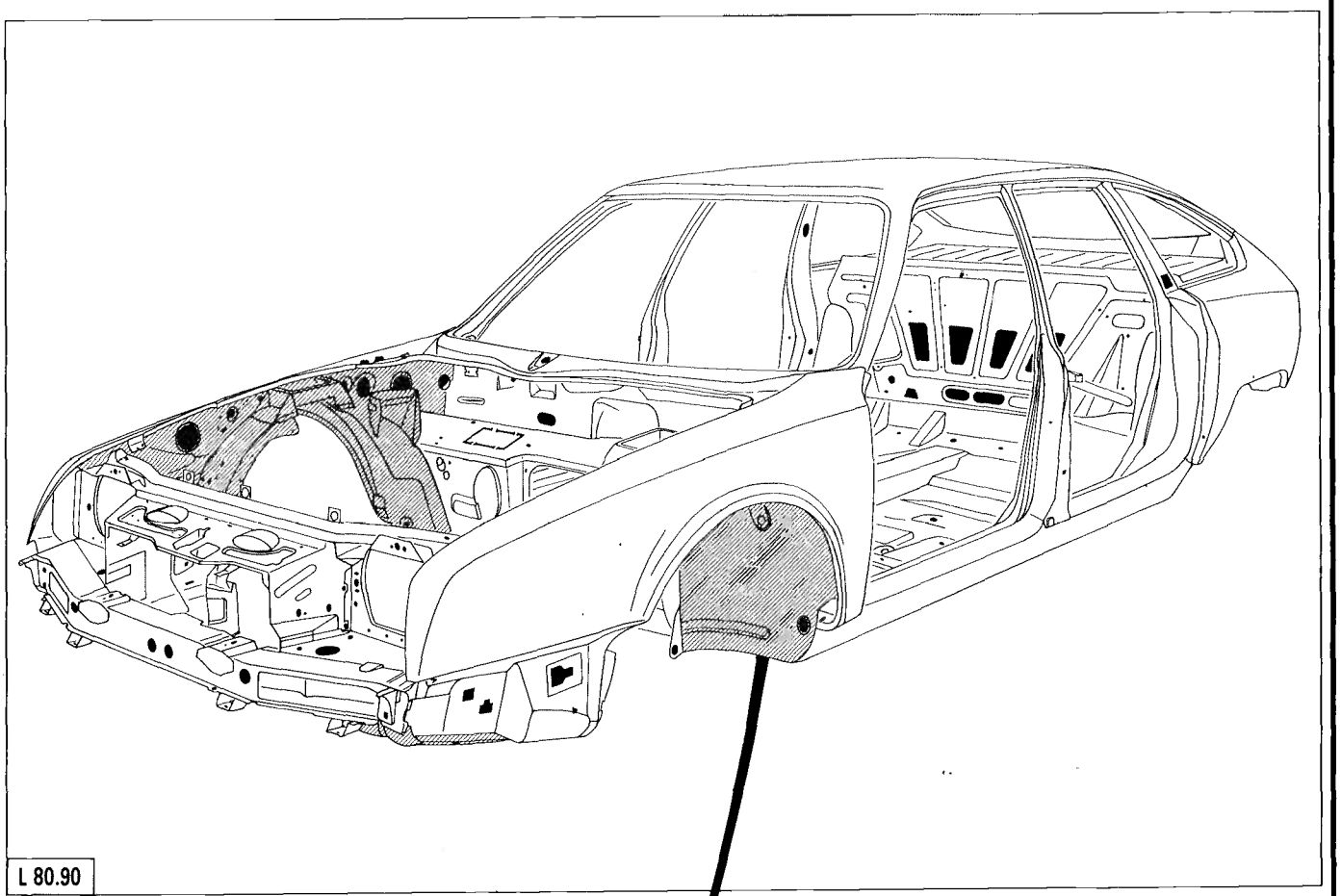

L 80.90

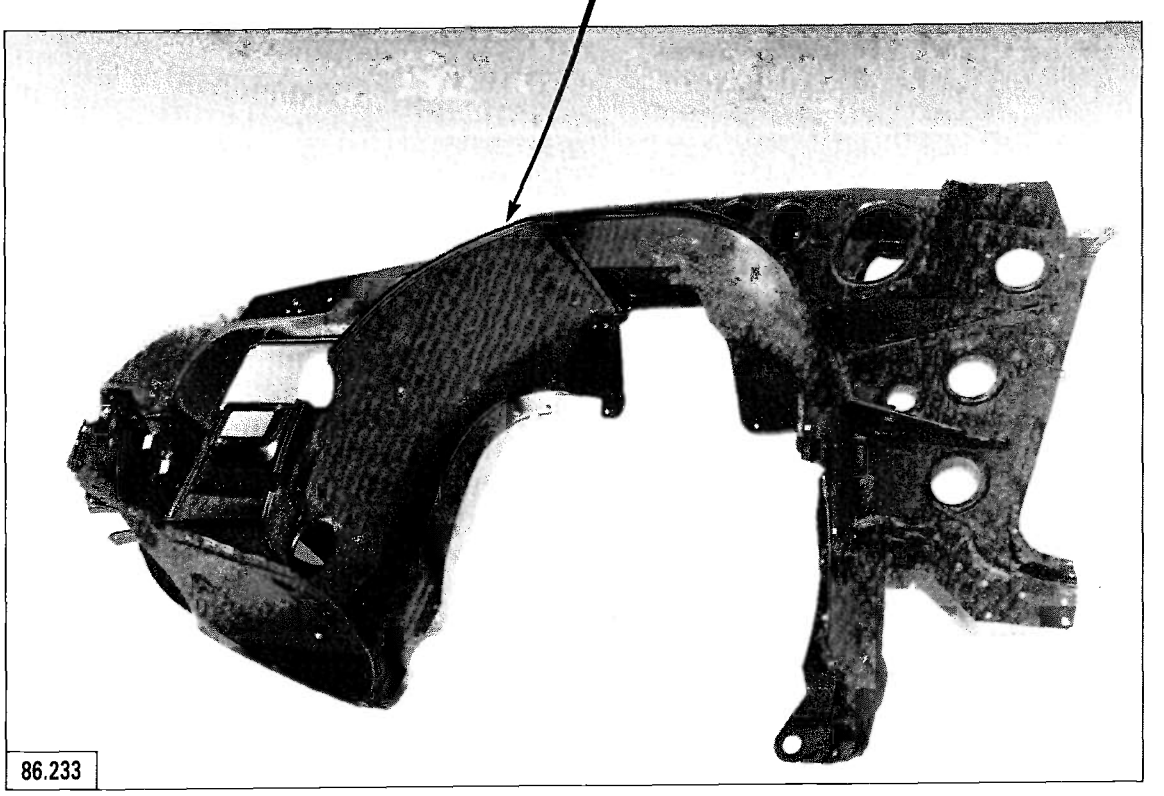

86.233

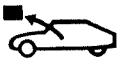
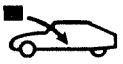

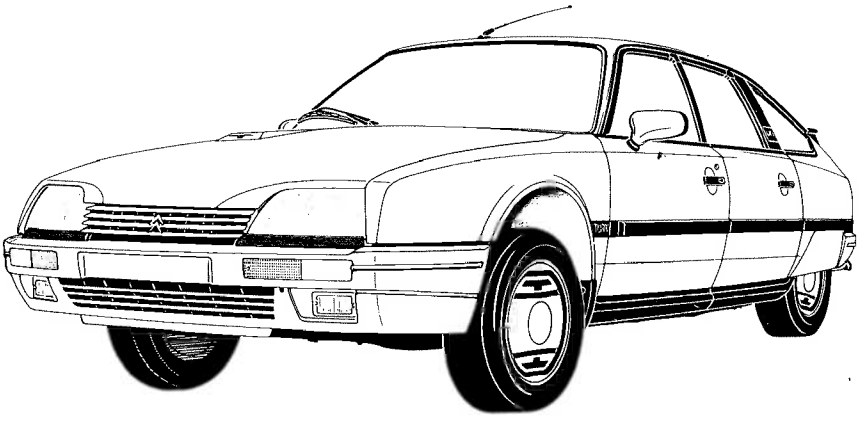

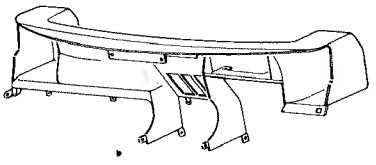

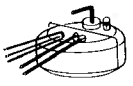

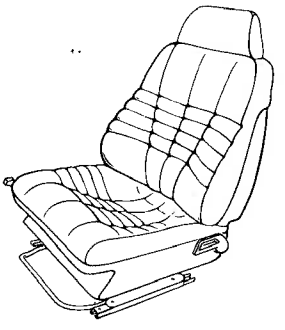

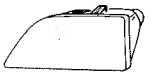

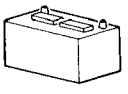

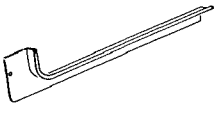

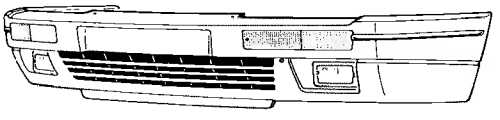

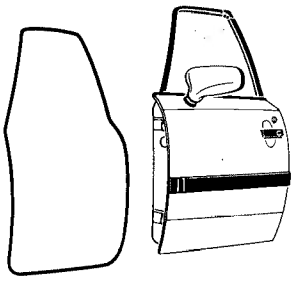

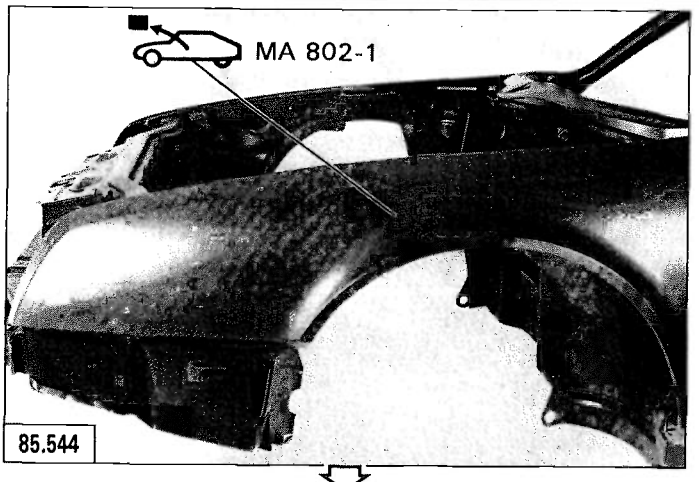

85.544

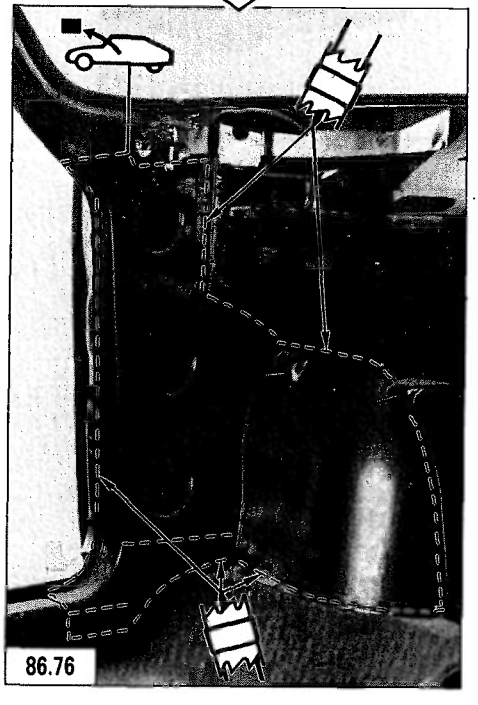

86.76

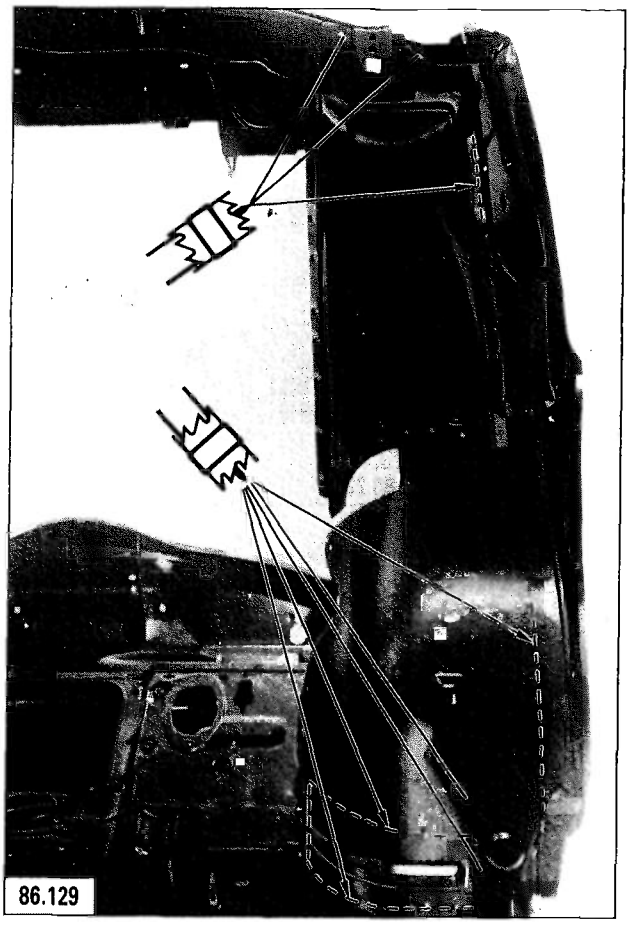

86.129

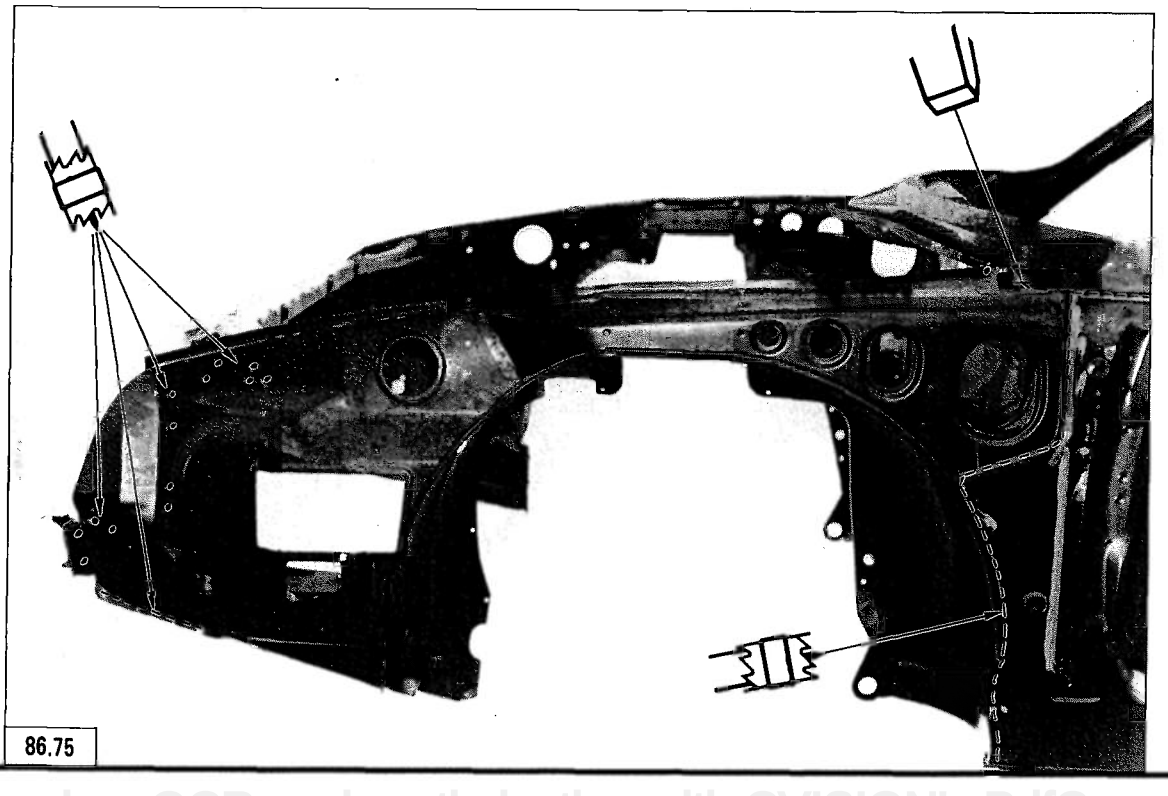

86.75

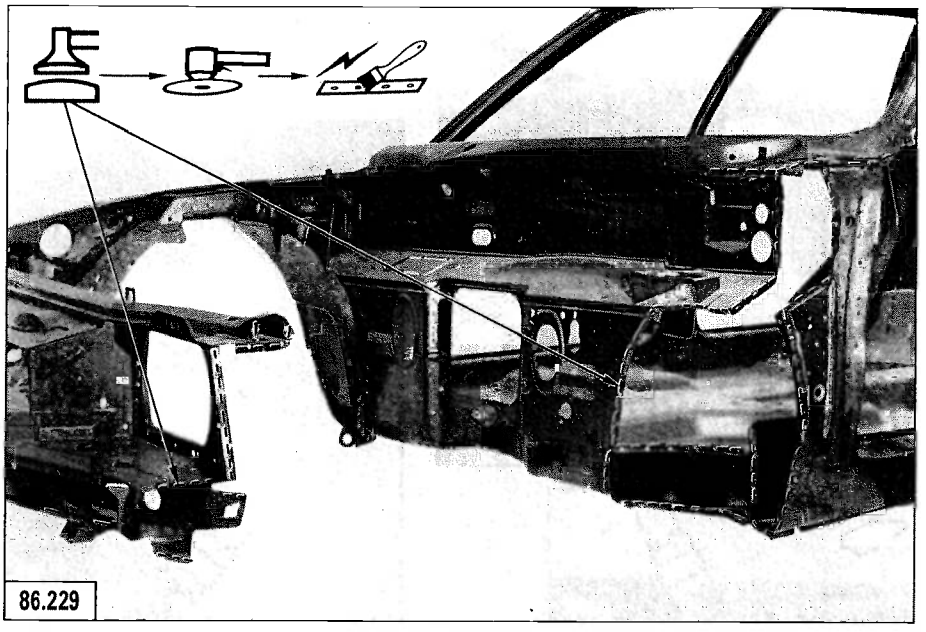

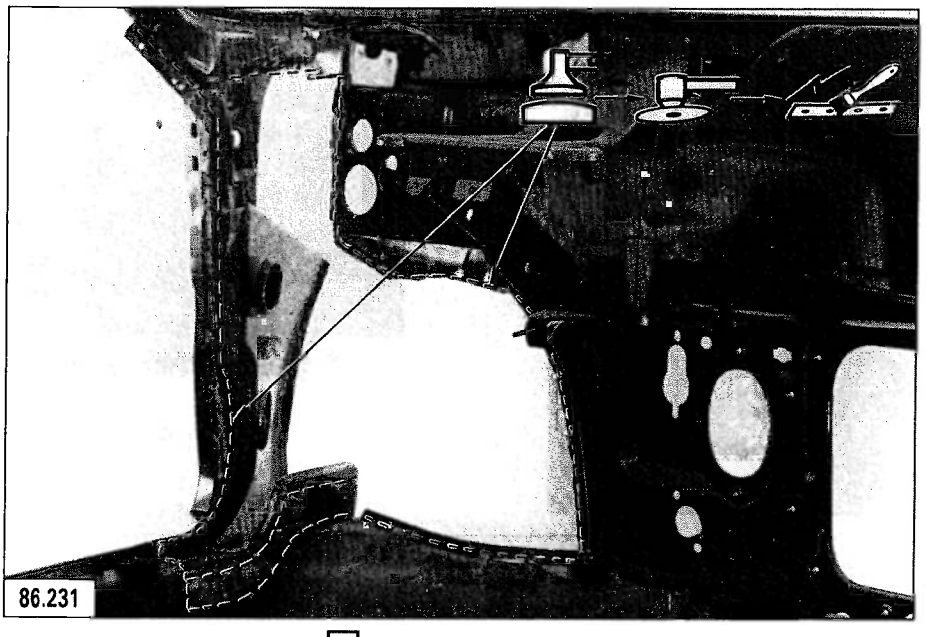

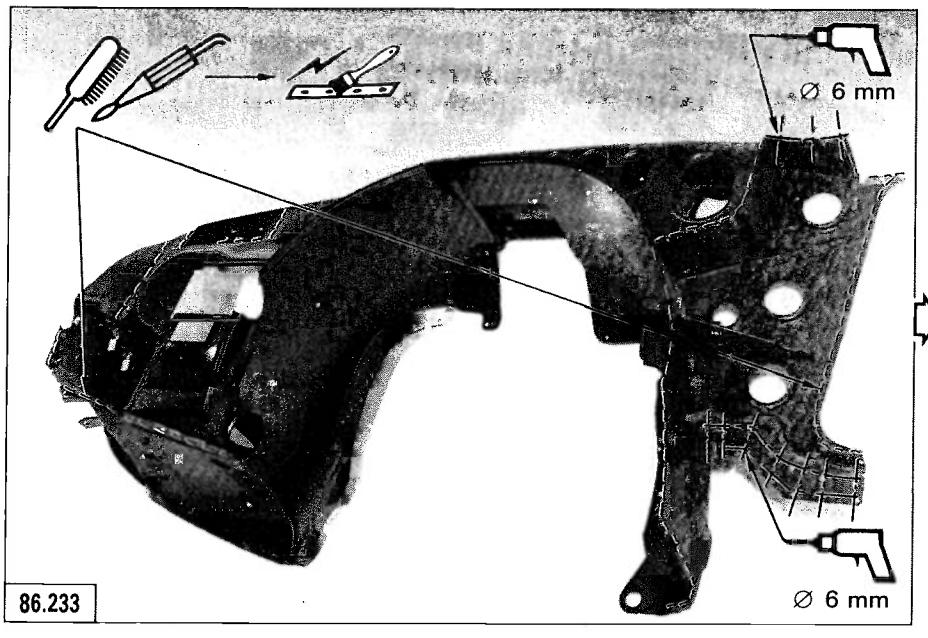

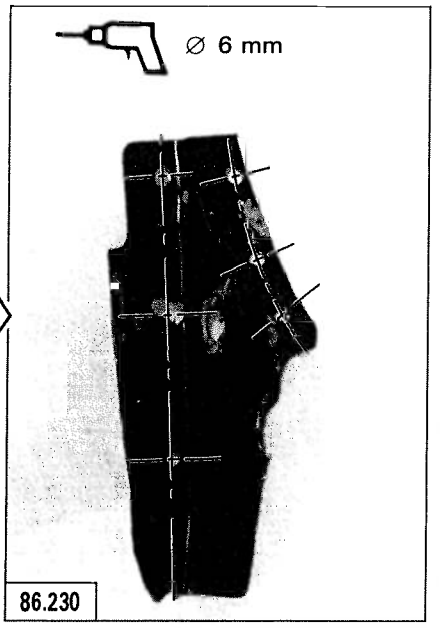

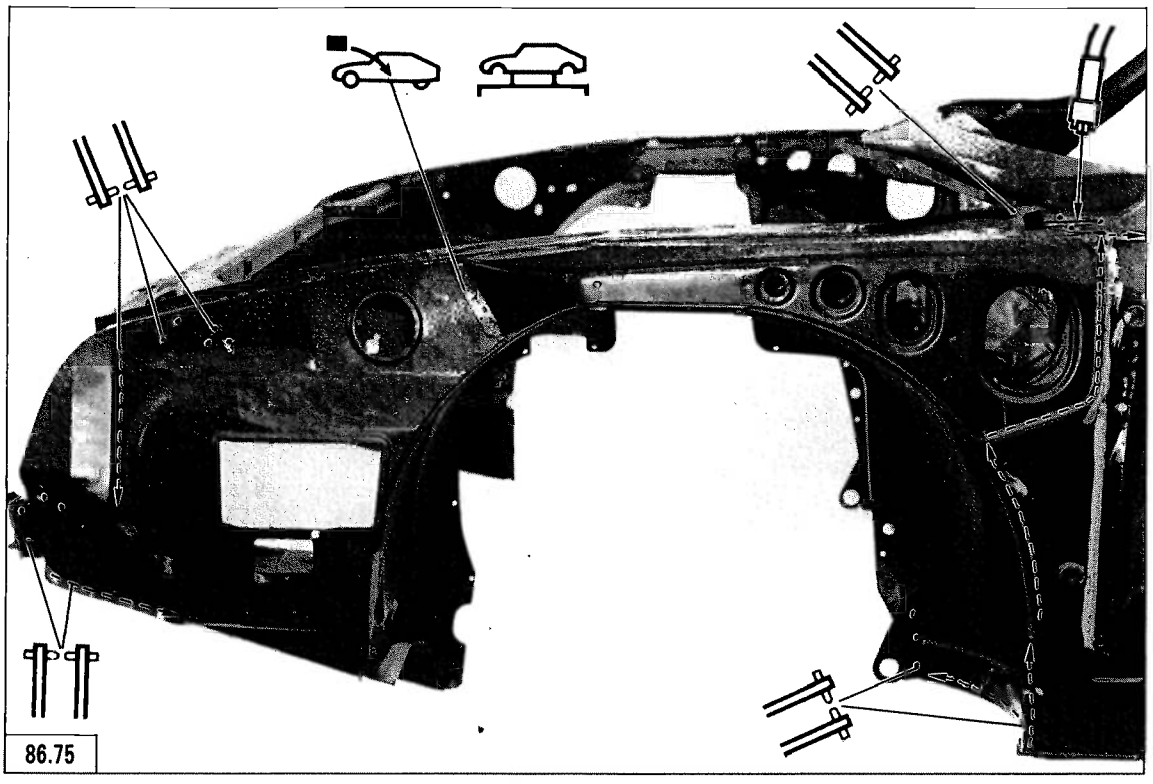
86.75

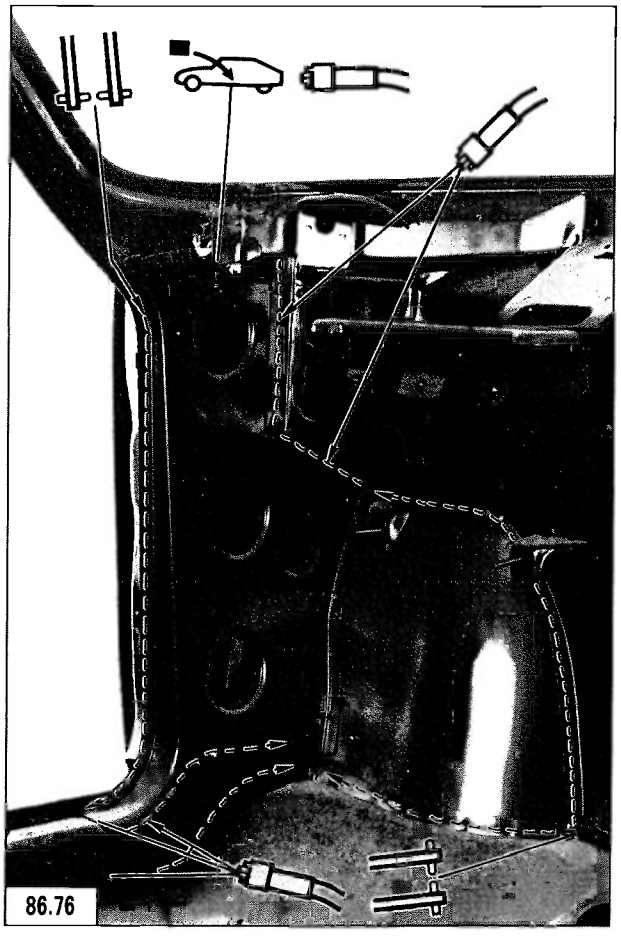
86.76

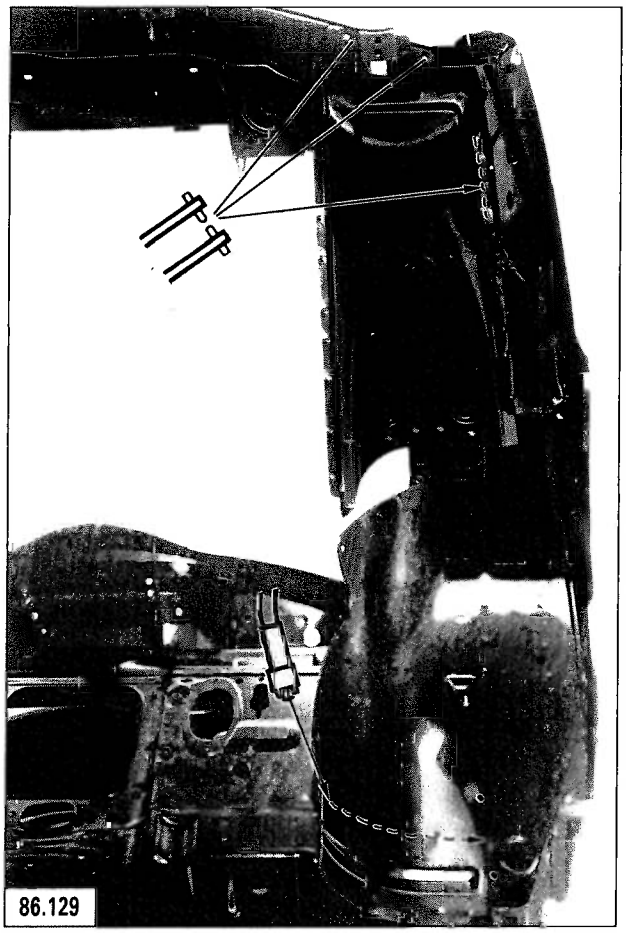
86.129

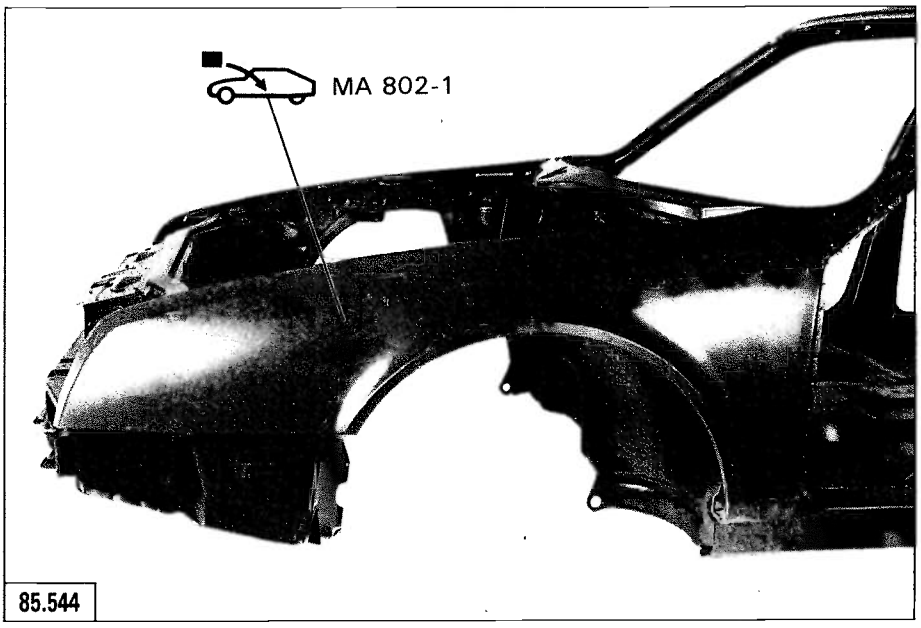

85.544

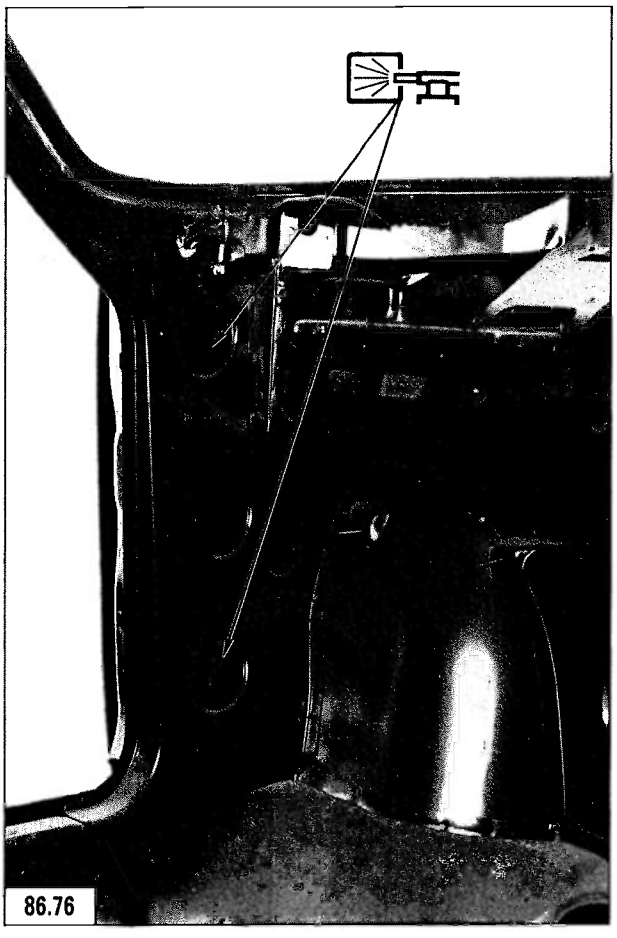

86.76

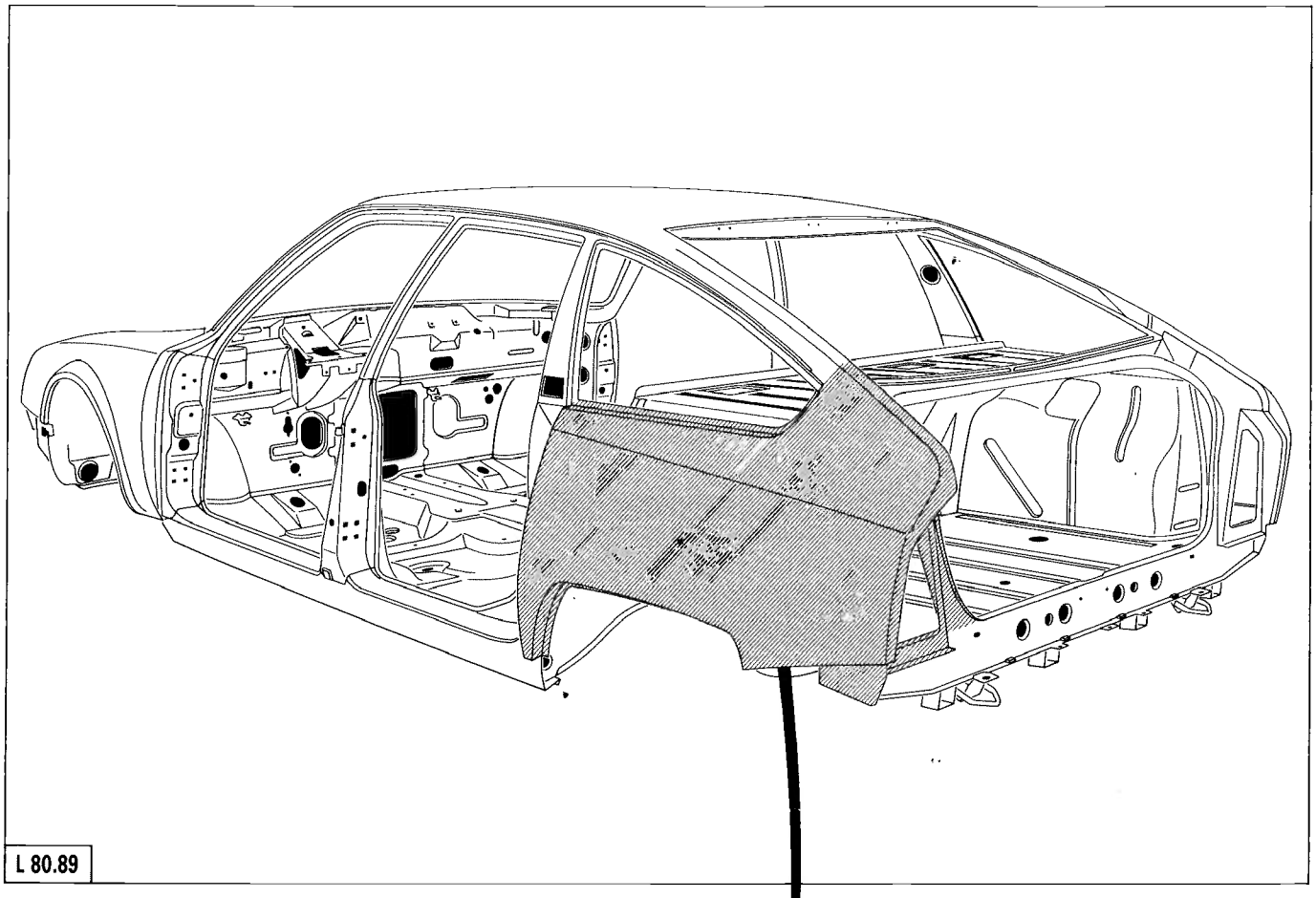

L 80.89

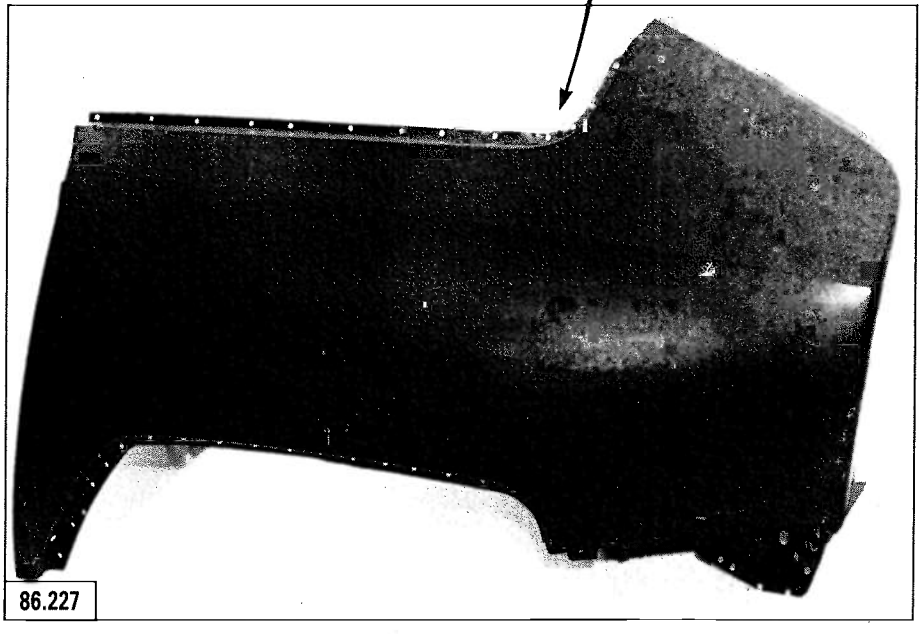

86.227

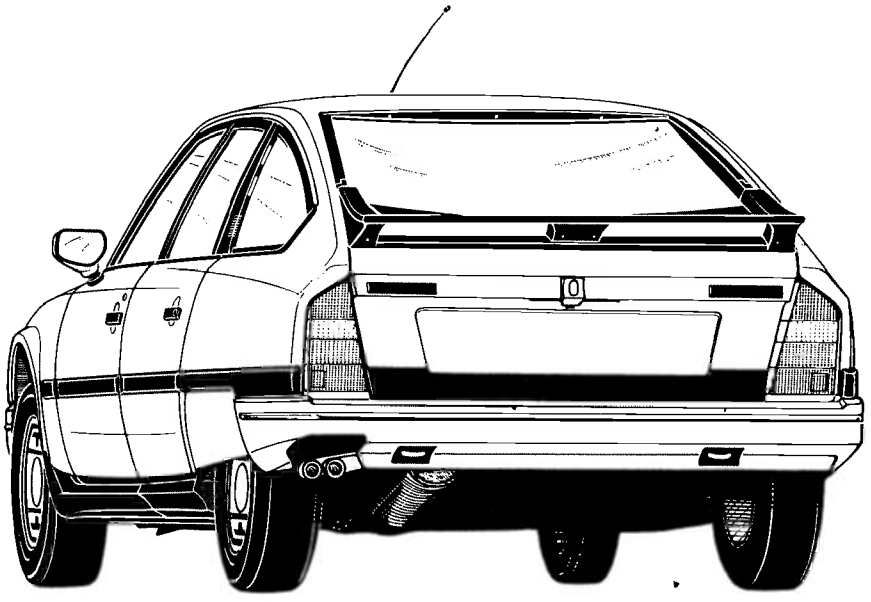

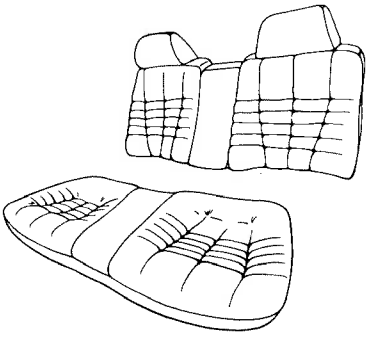

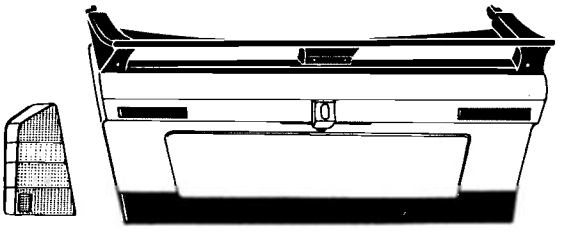

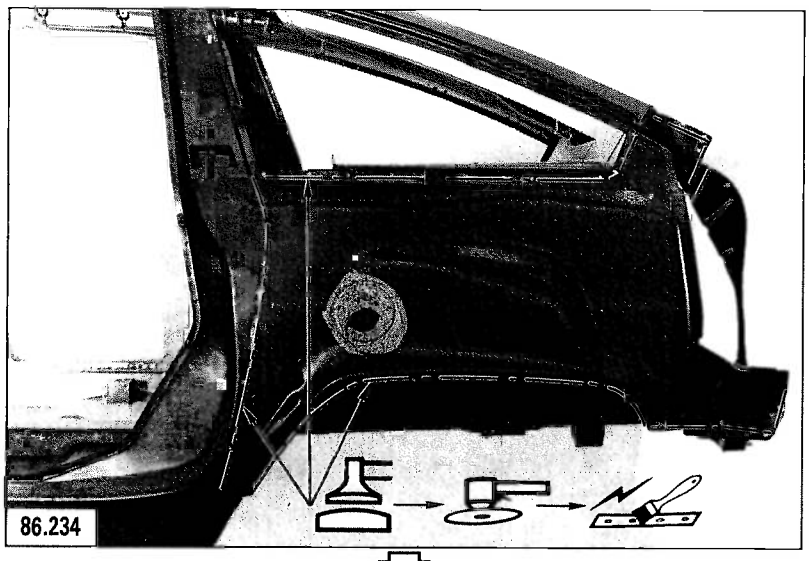
86.234

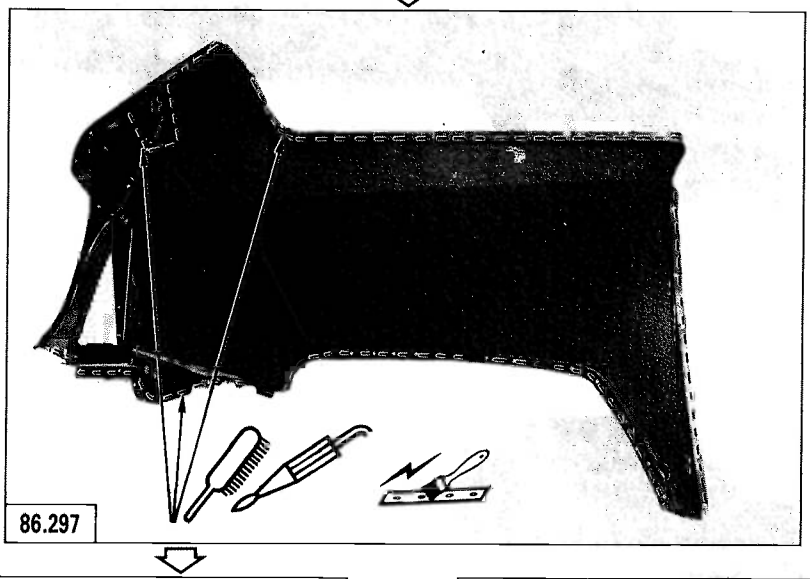
86.297

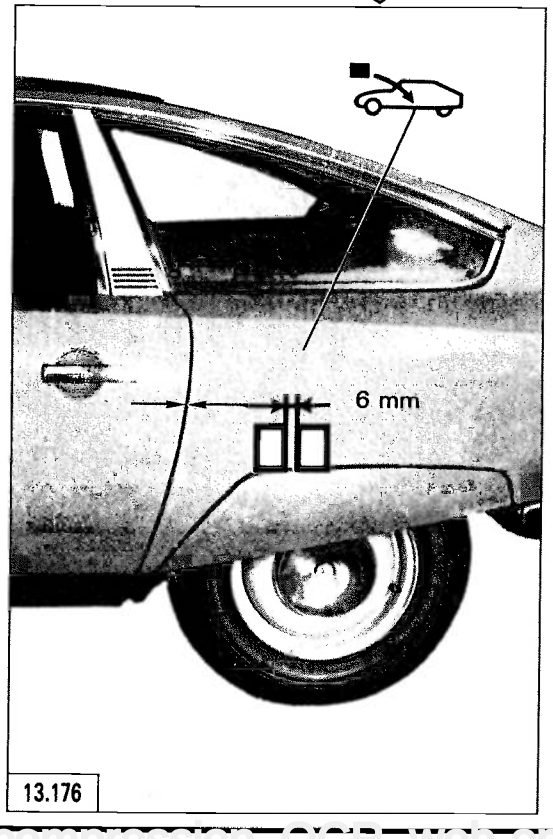

13.176

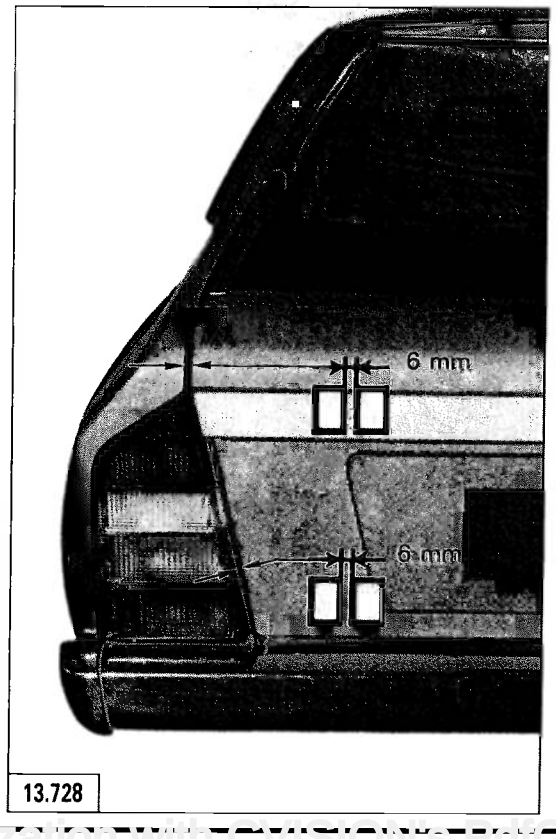

13.728

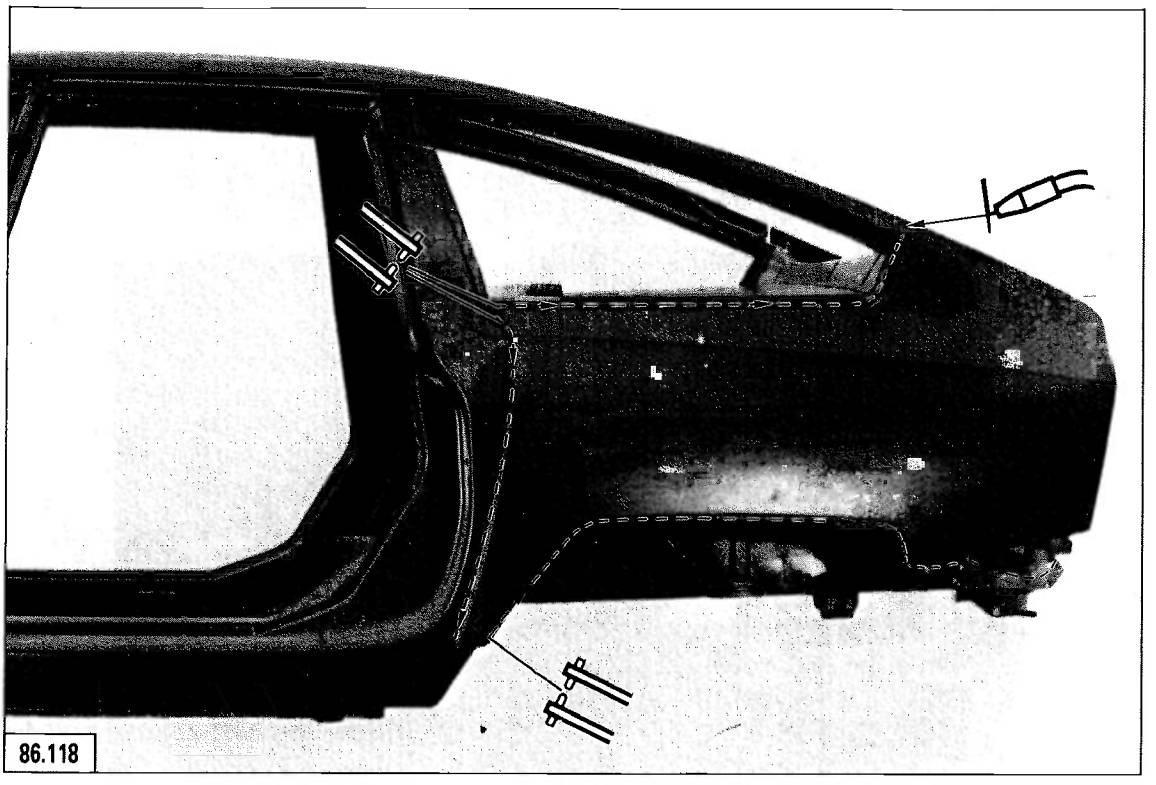

86.118

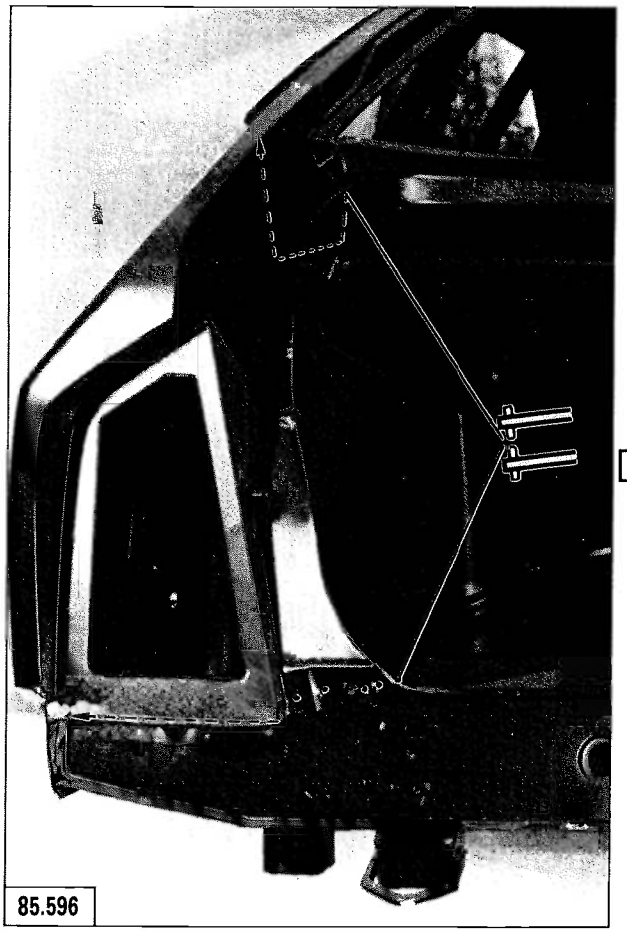

85.596

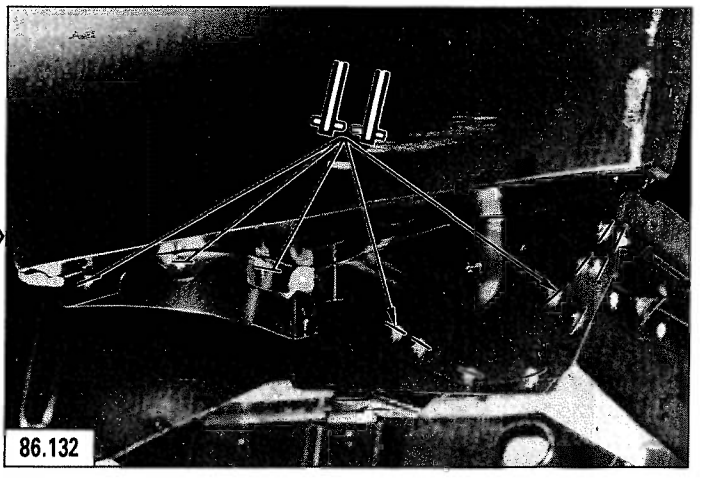

86.132

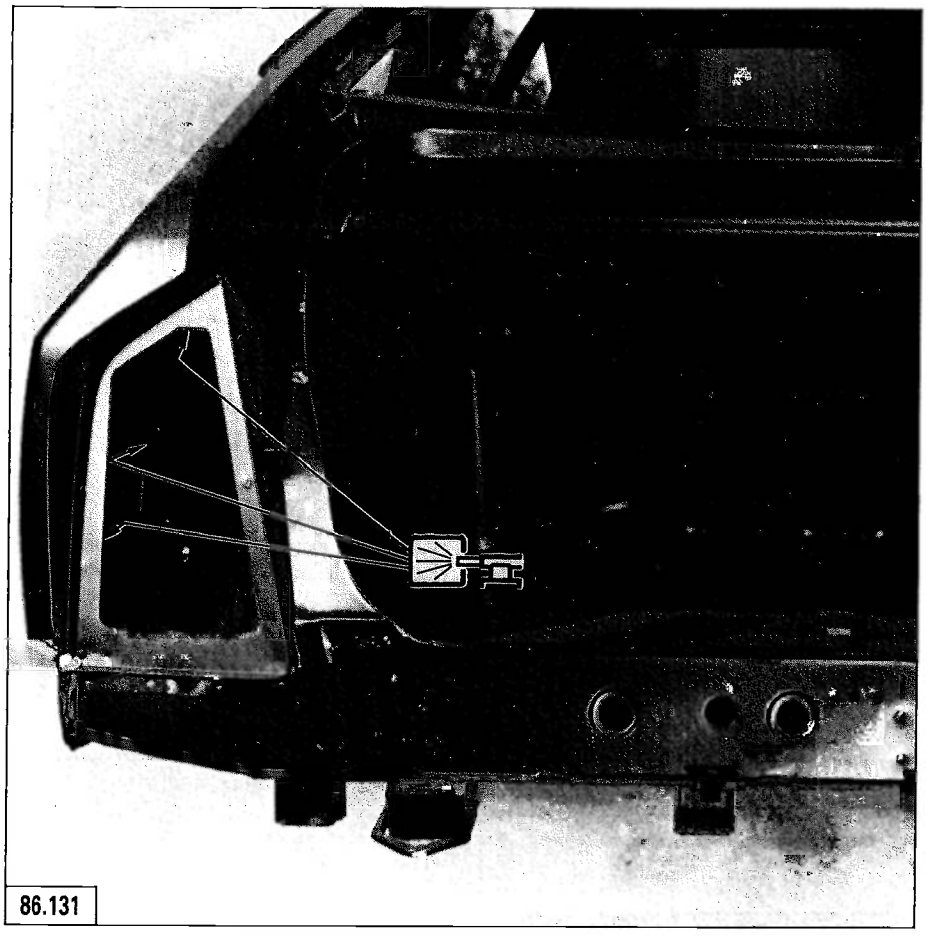

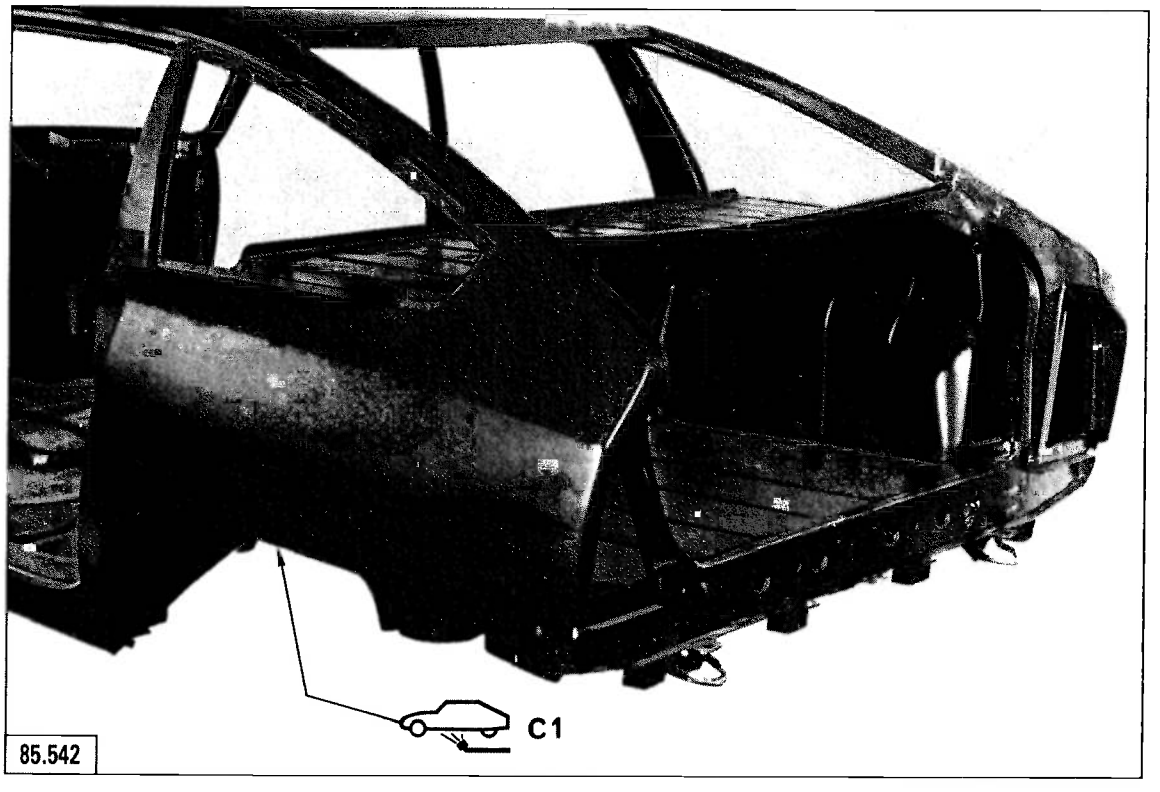

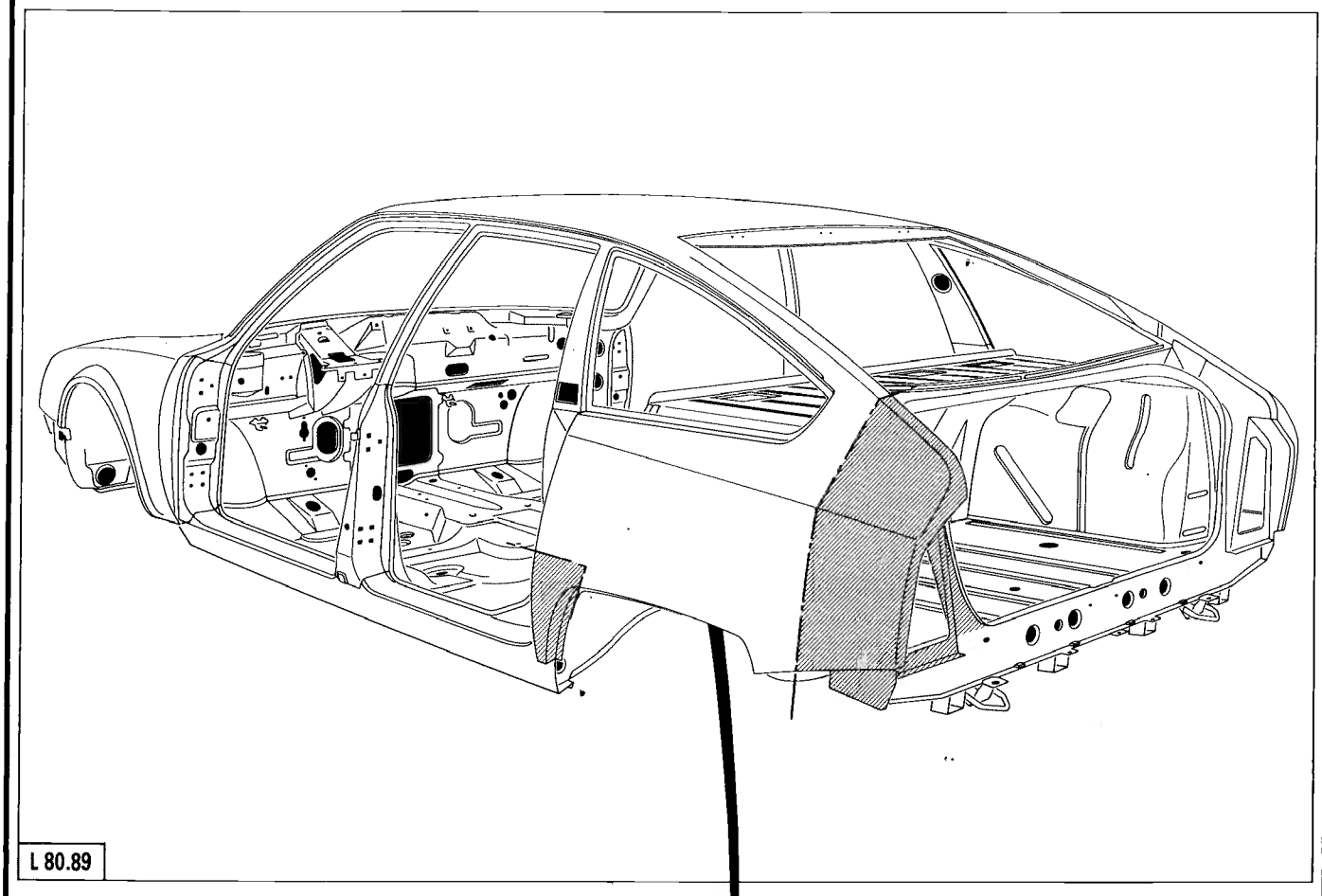

L 80.89

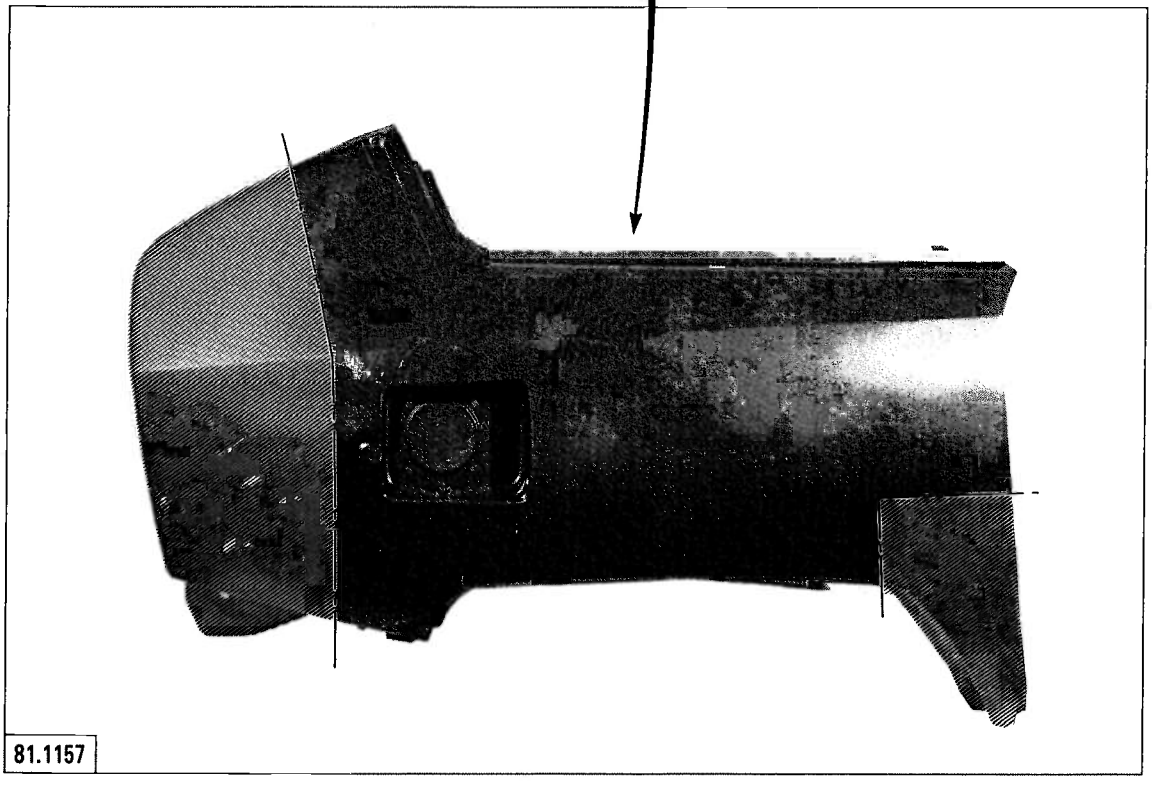

81.1157

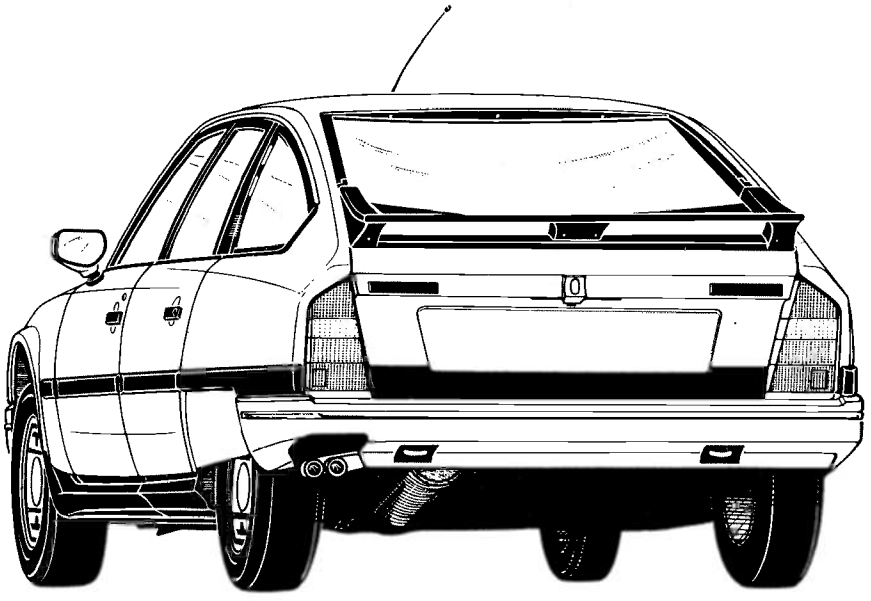

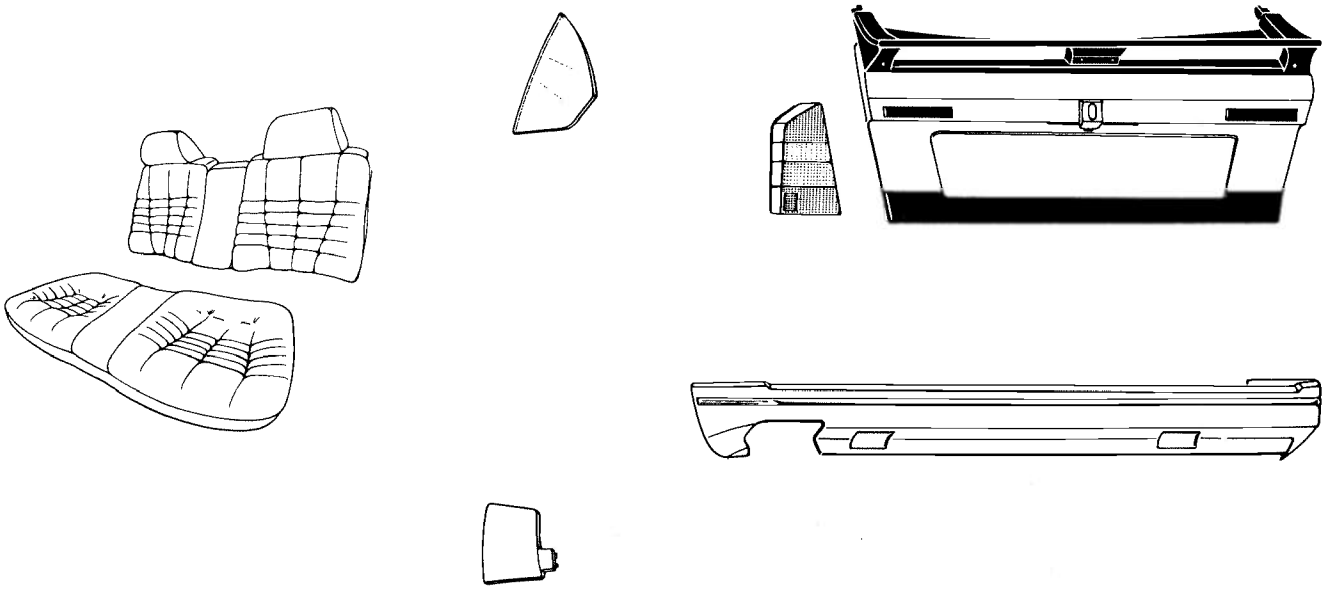

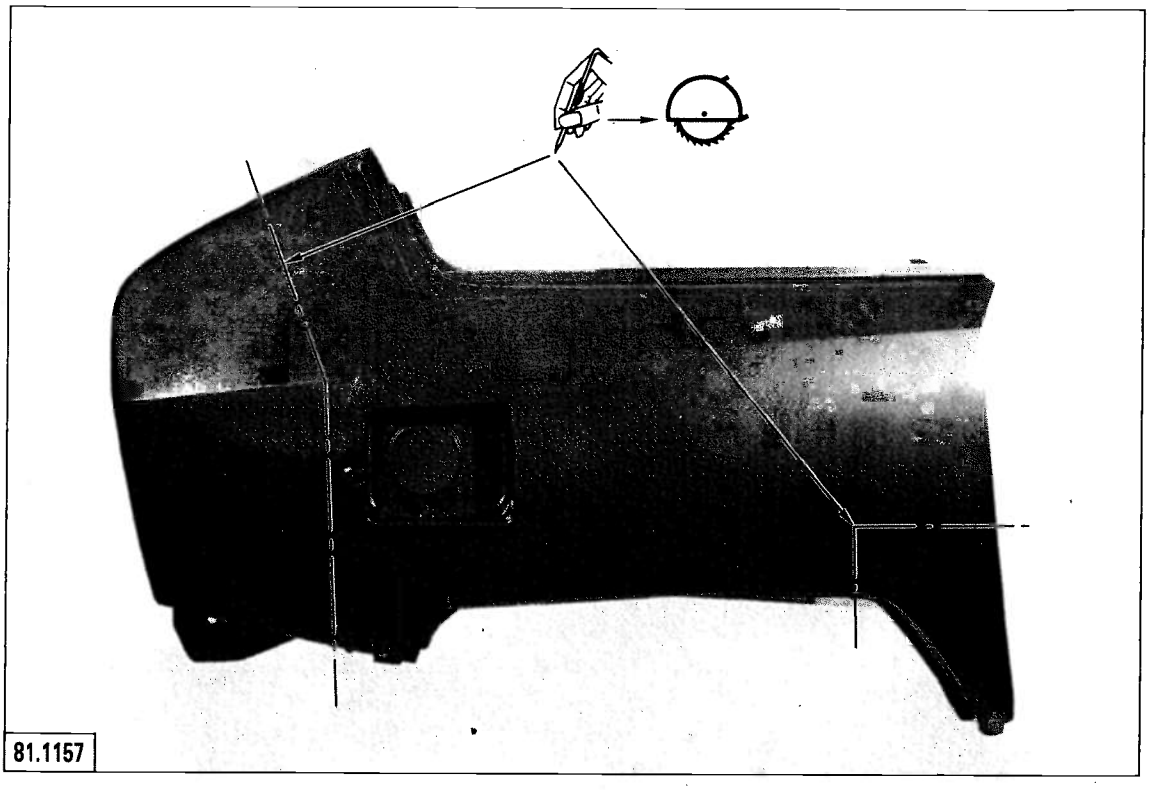

81.1157

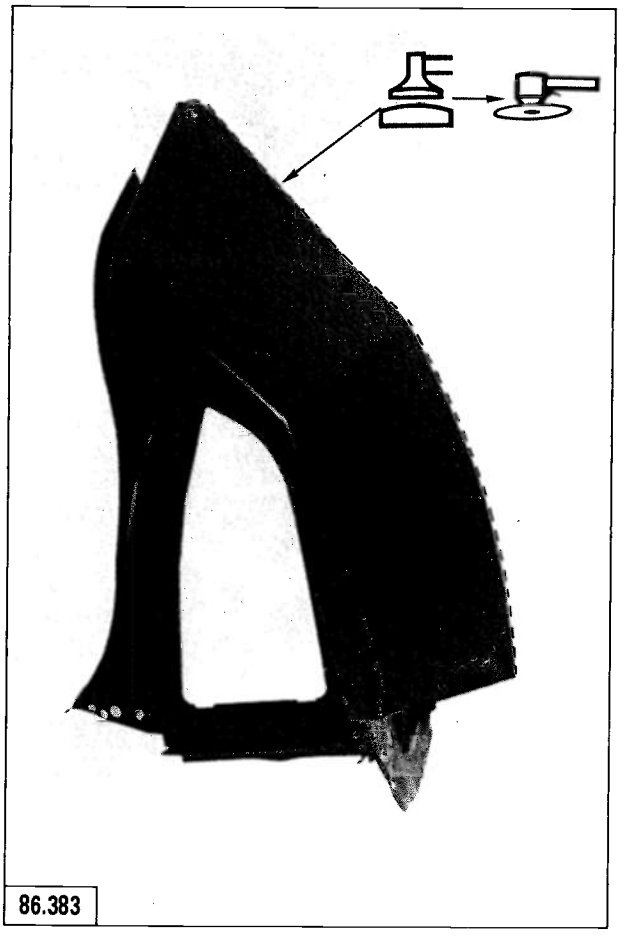

86.383

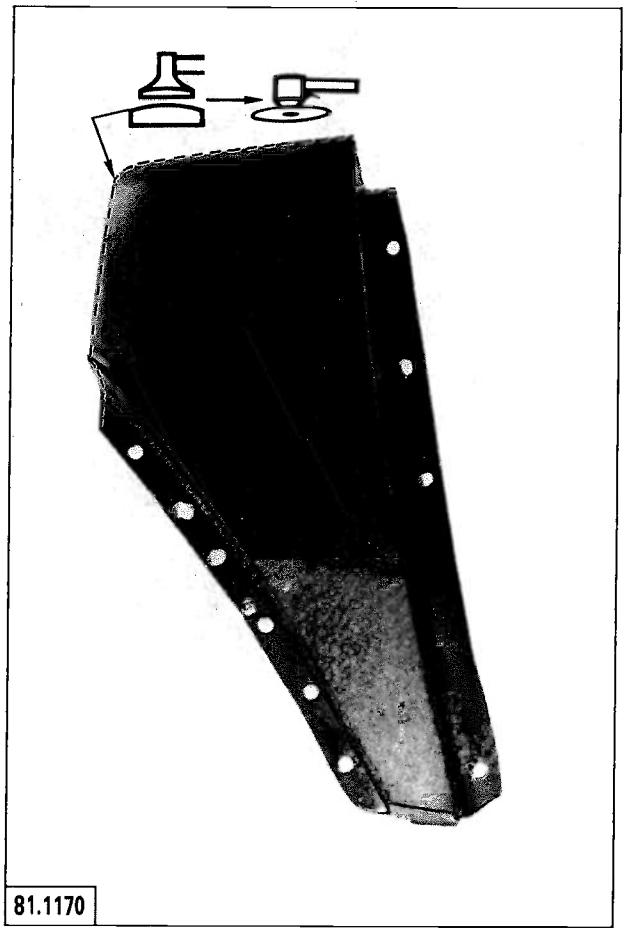

81.1170

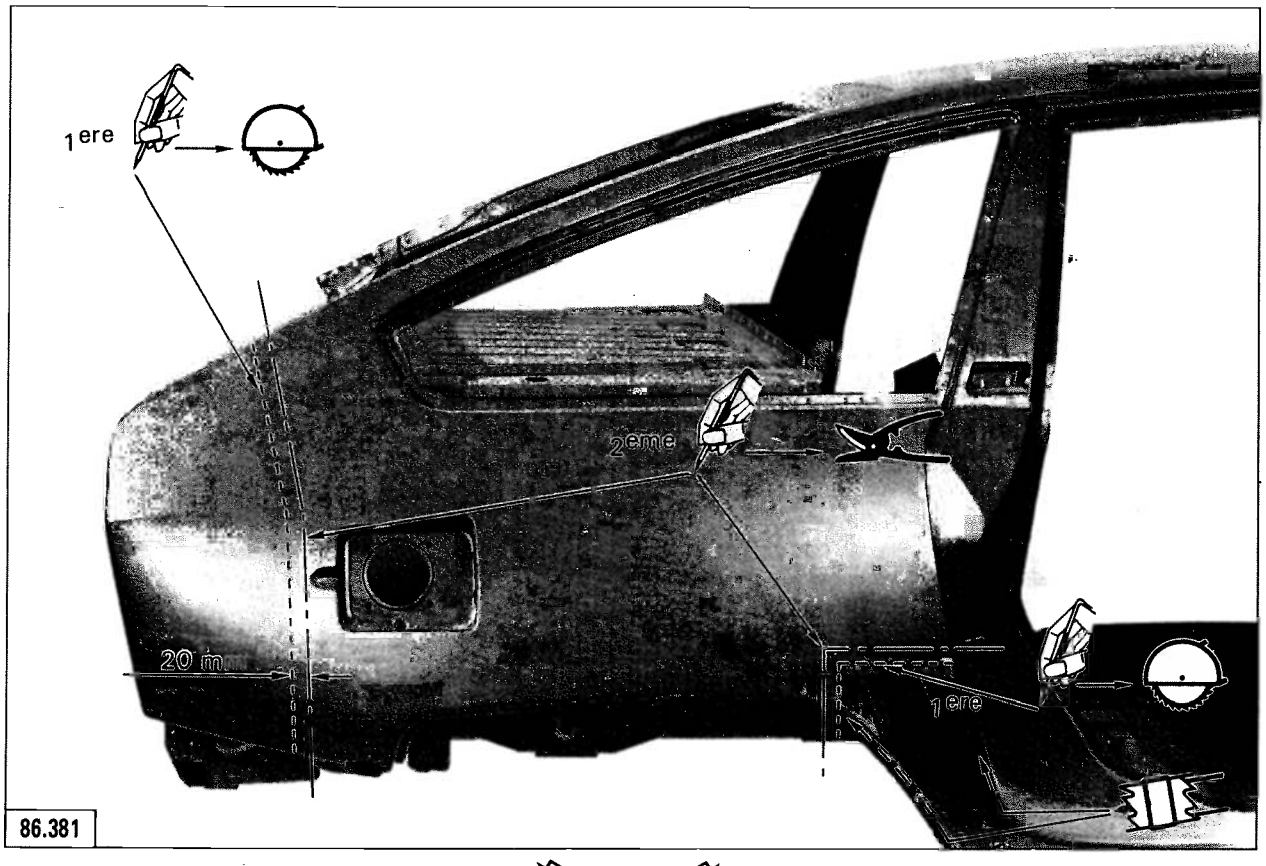

86.381

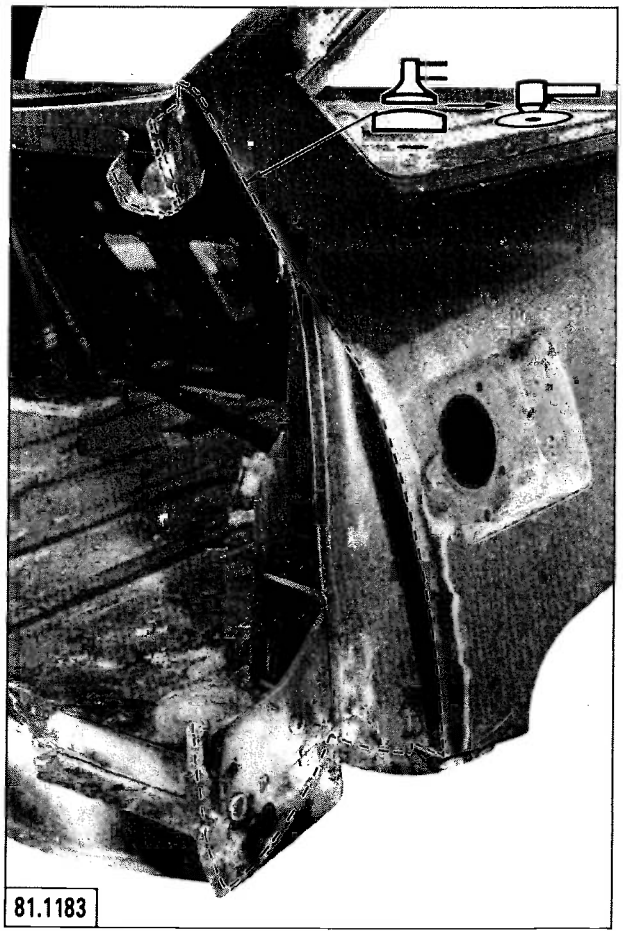
81.1183

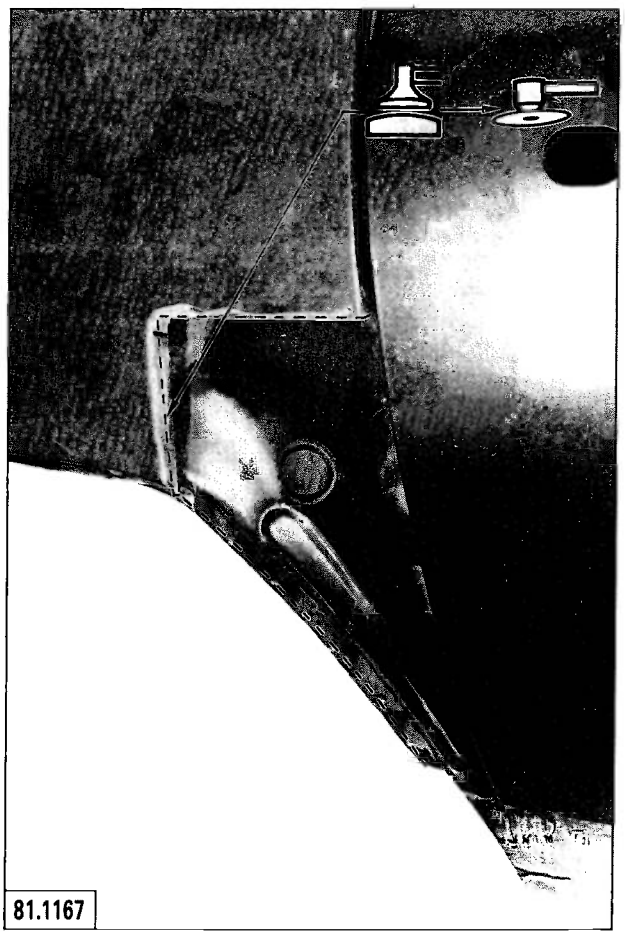
81.1167

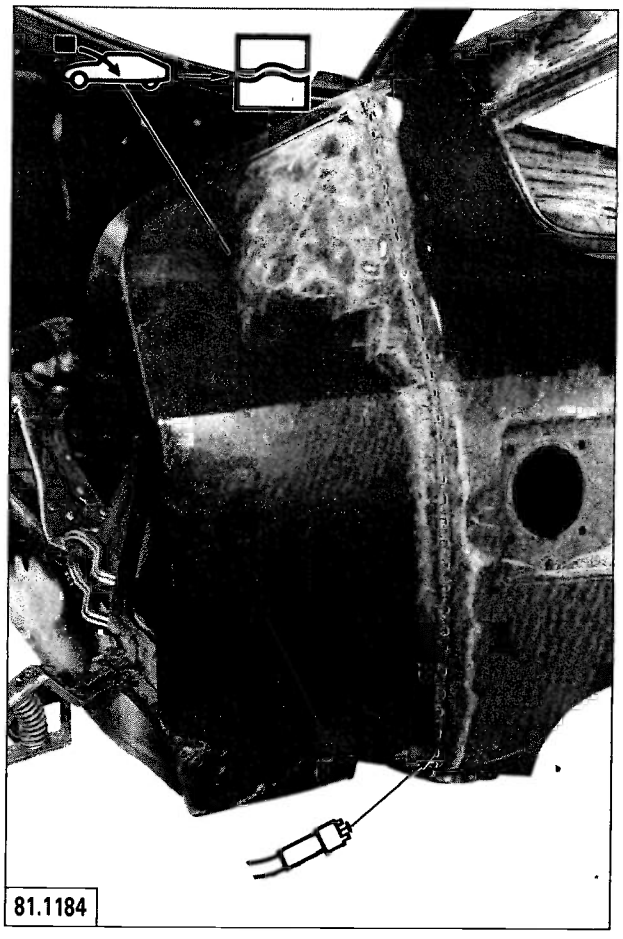
81.1184

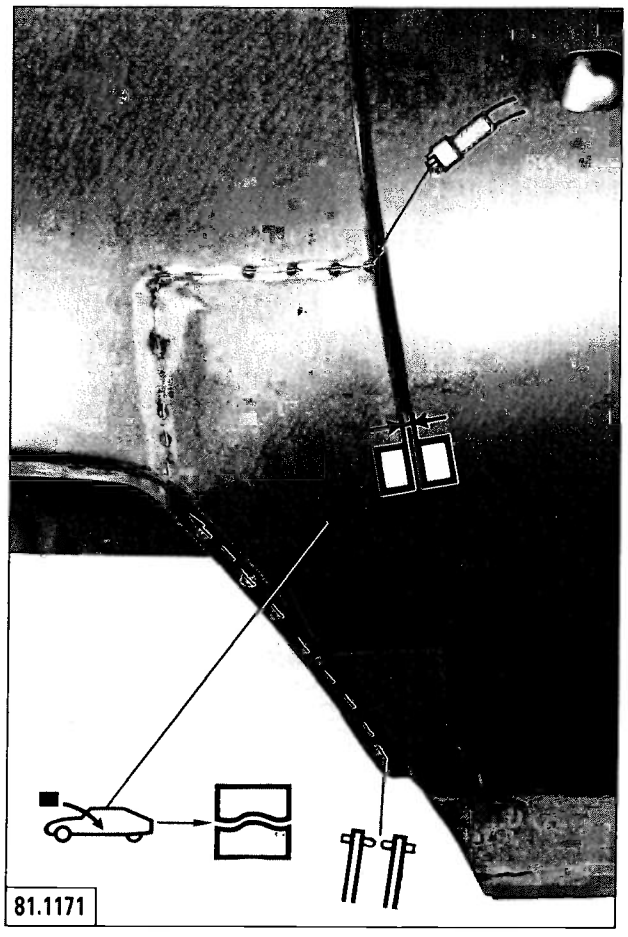
81.1171

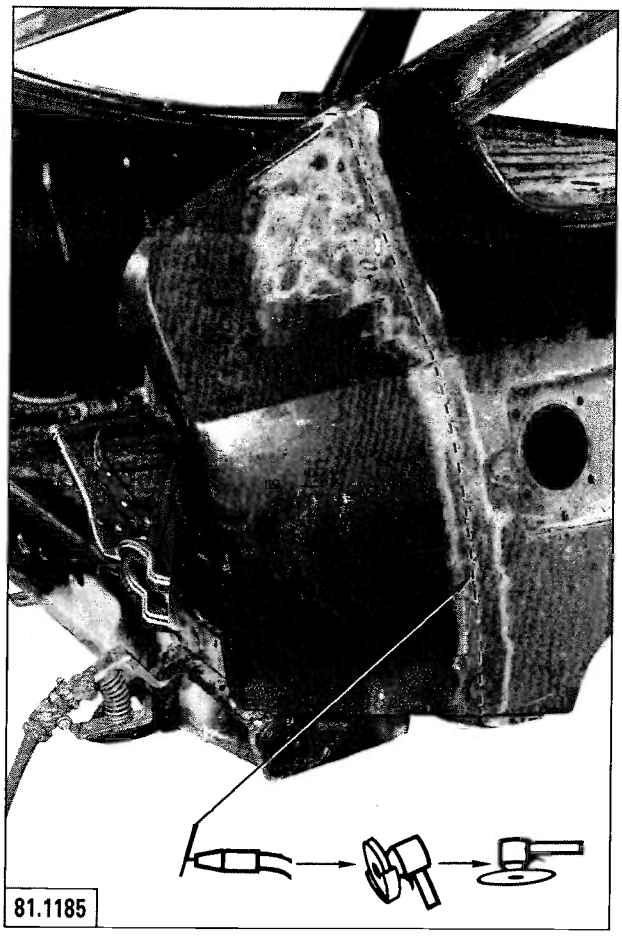
81.1185

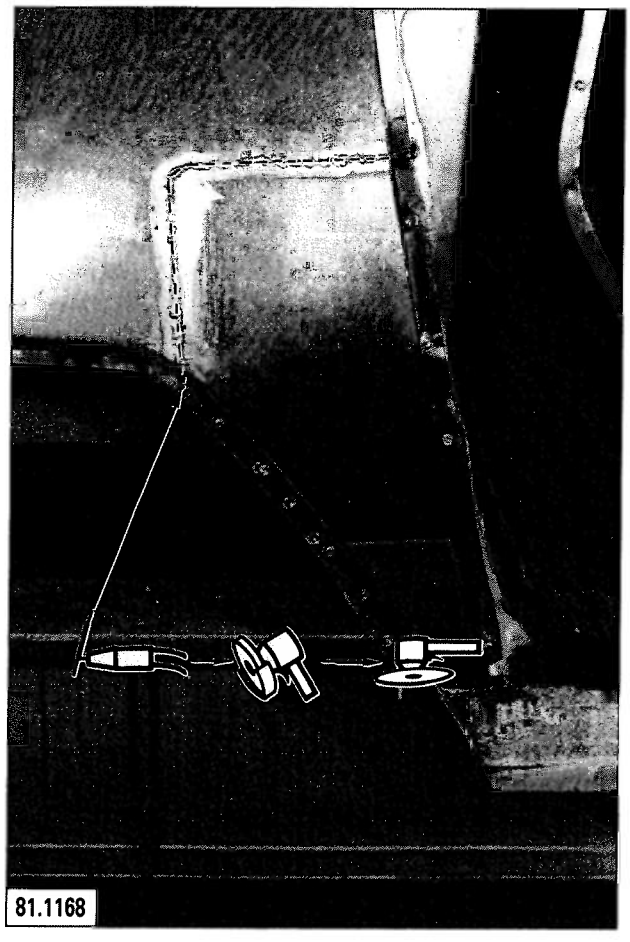
81.1168

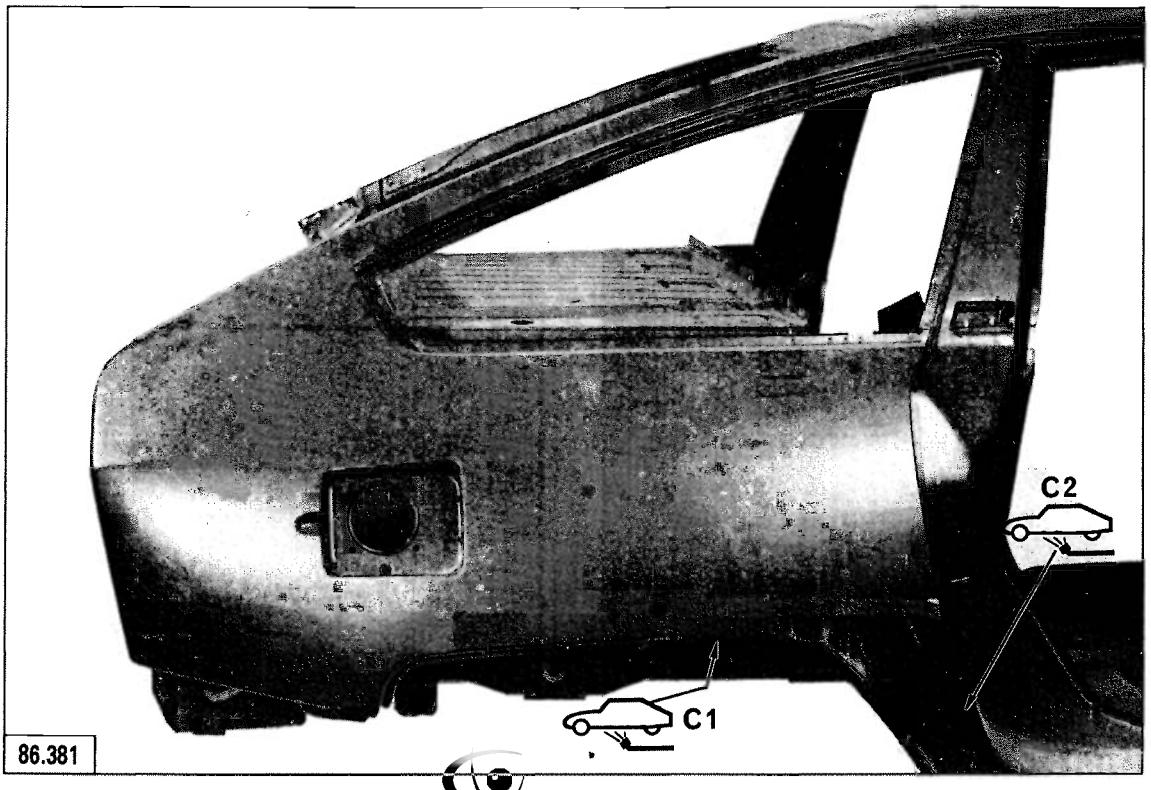

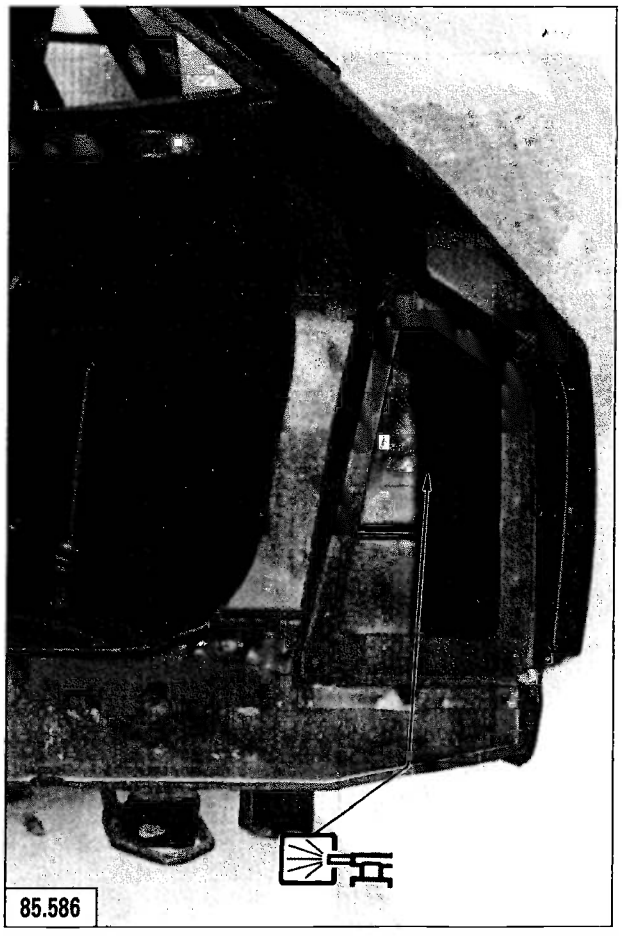

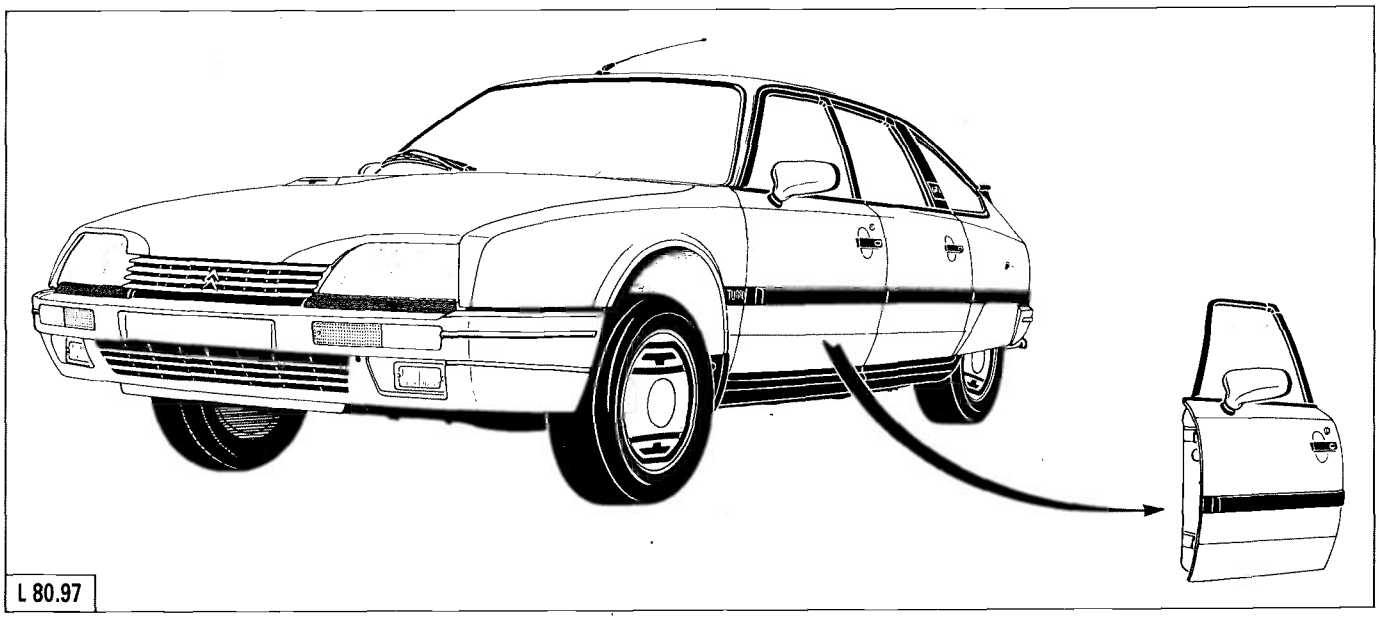

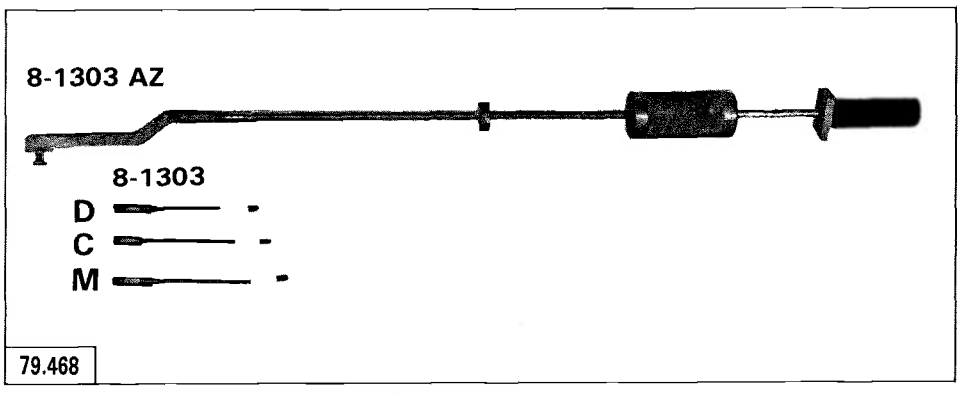

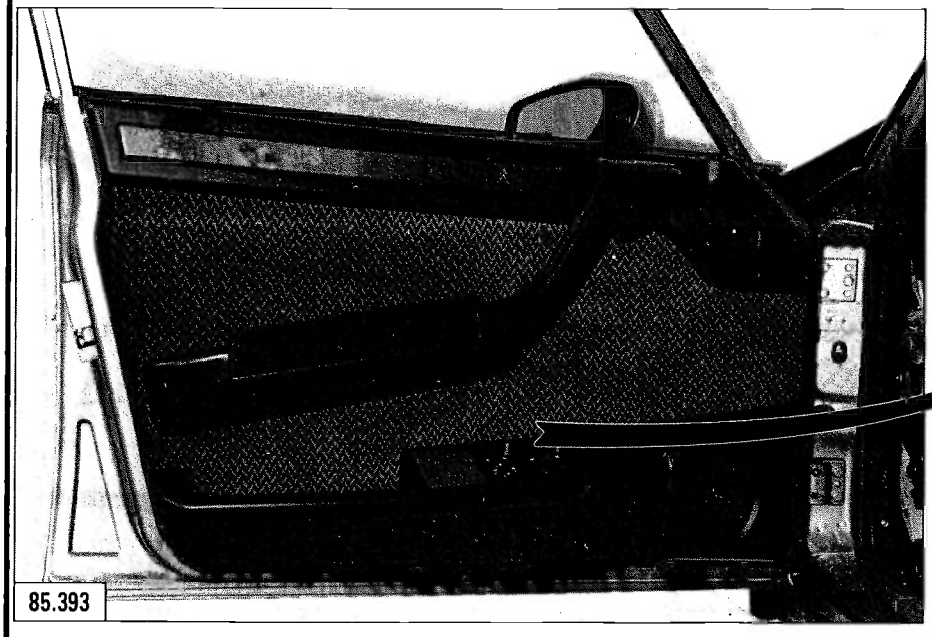
85.393

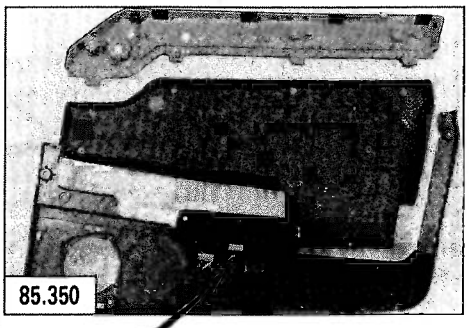
85.350

MA 841.3

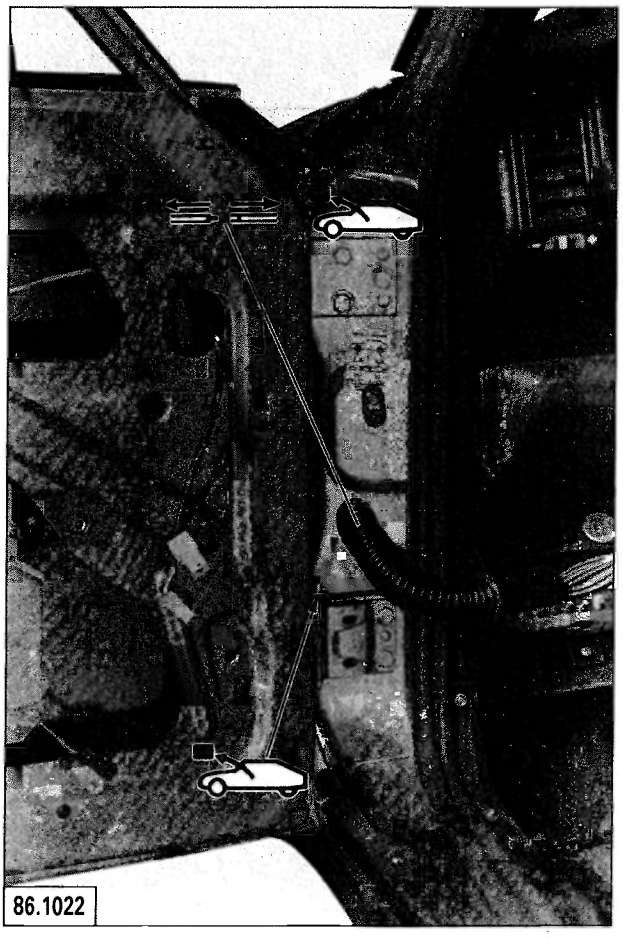
86.1022

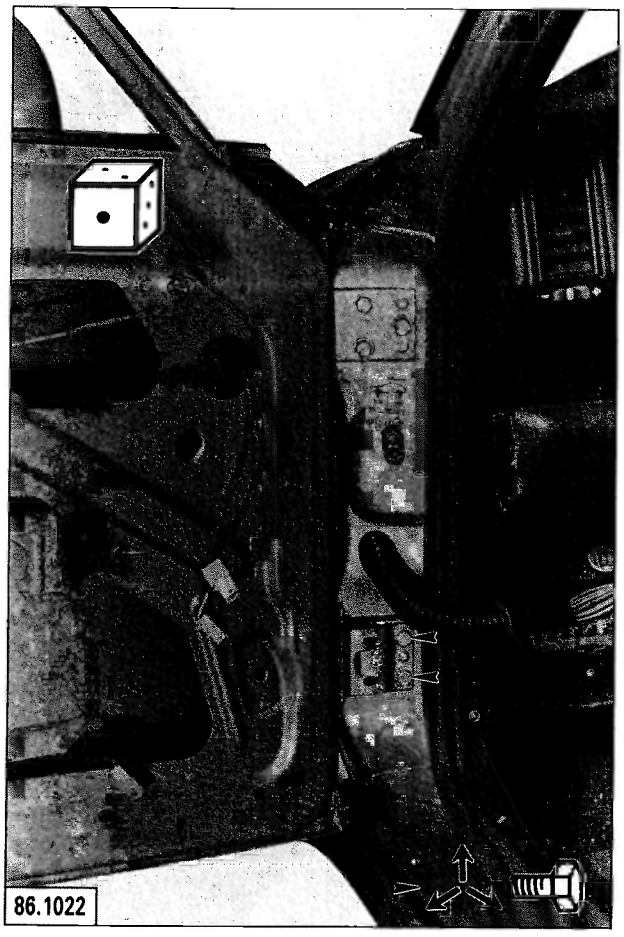
86.1022

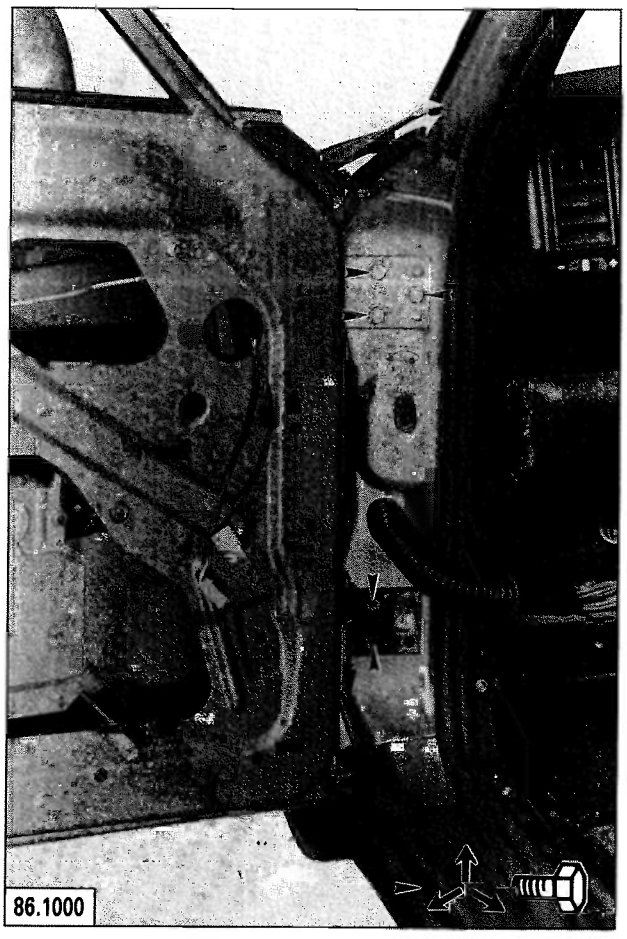
86.1000

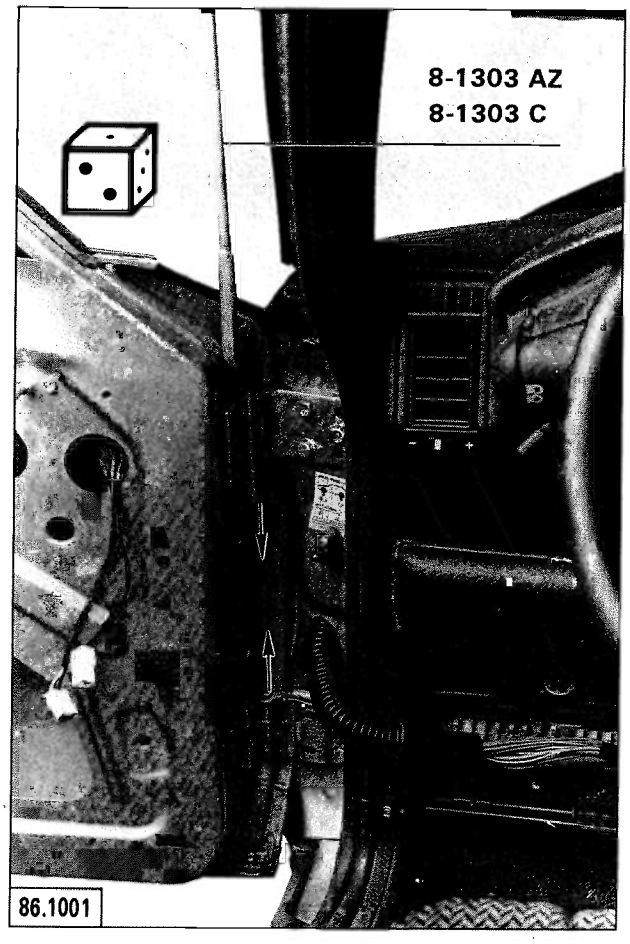

86.1001

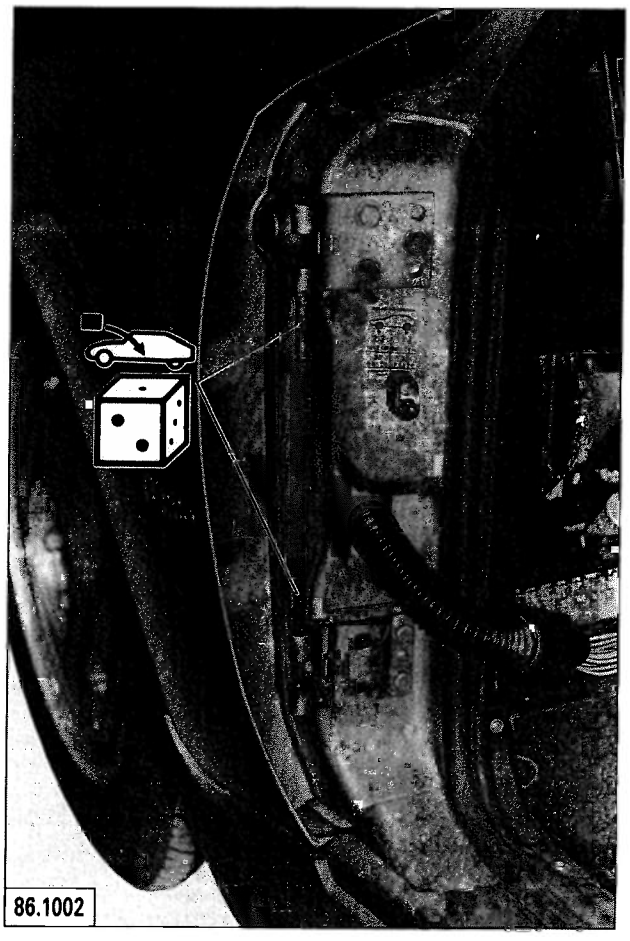
86.1002

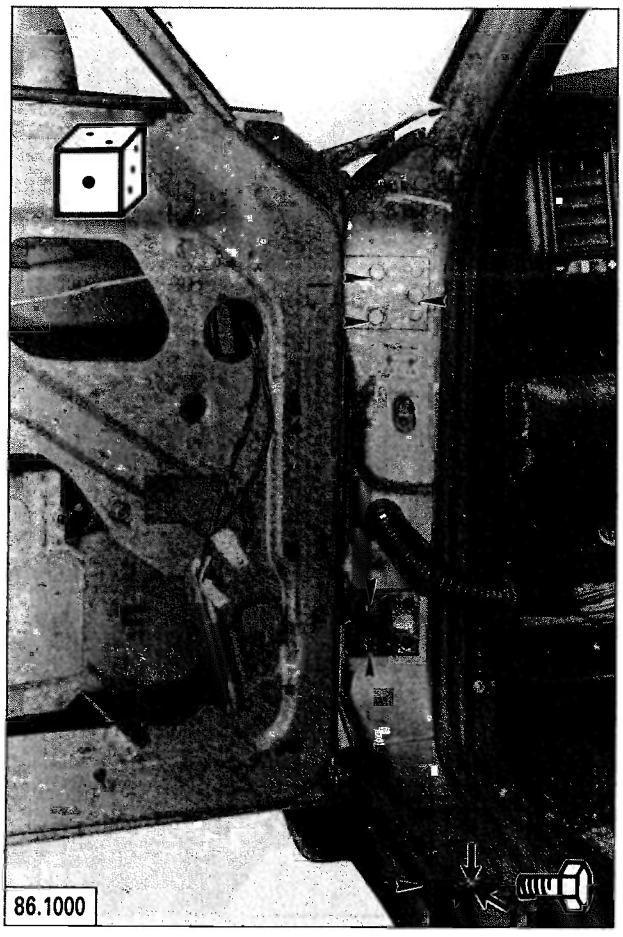
86.1000

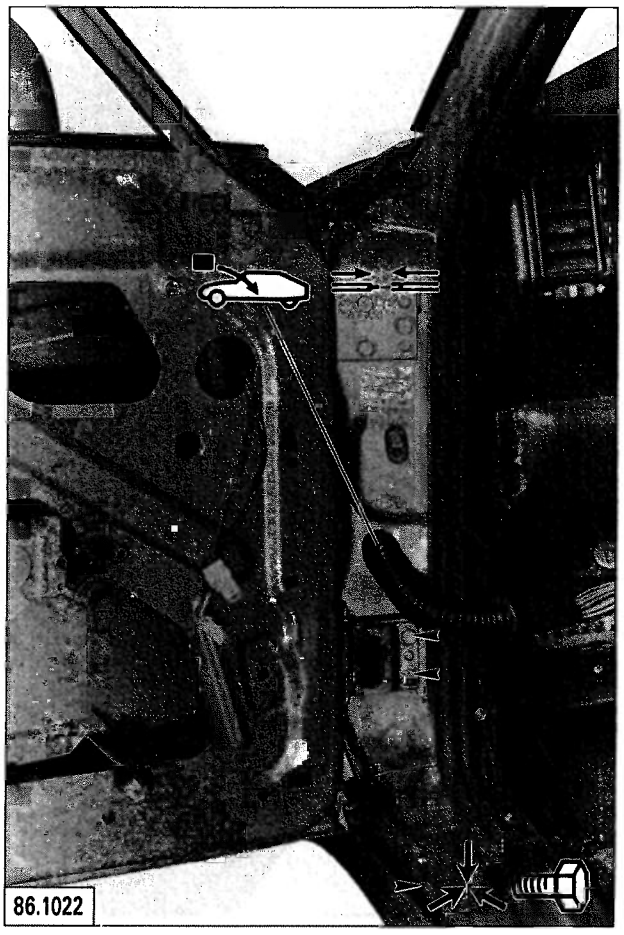
86.1022

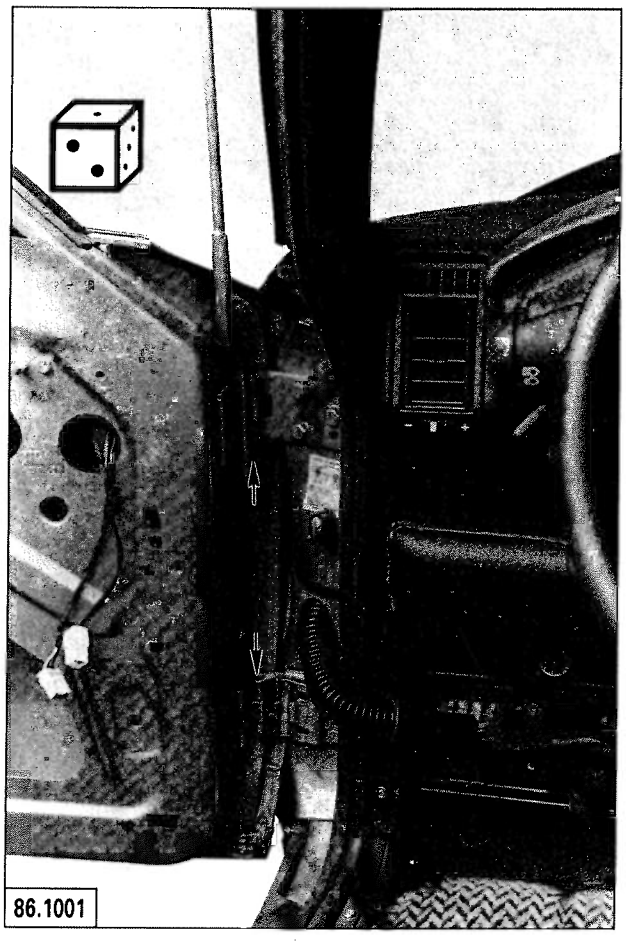
86.1001

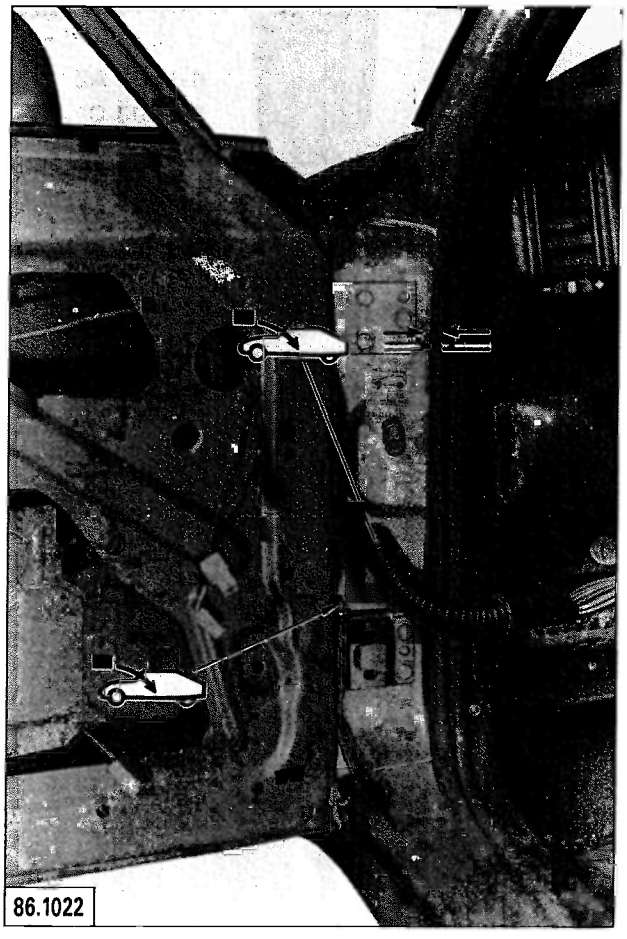
86.1022

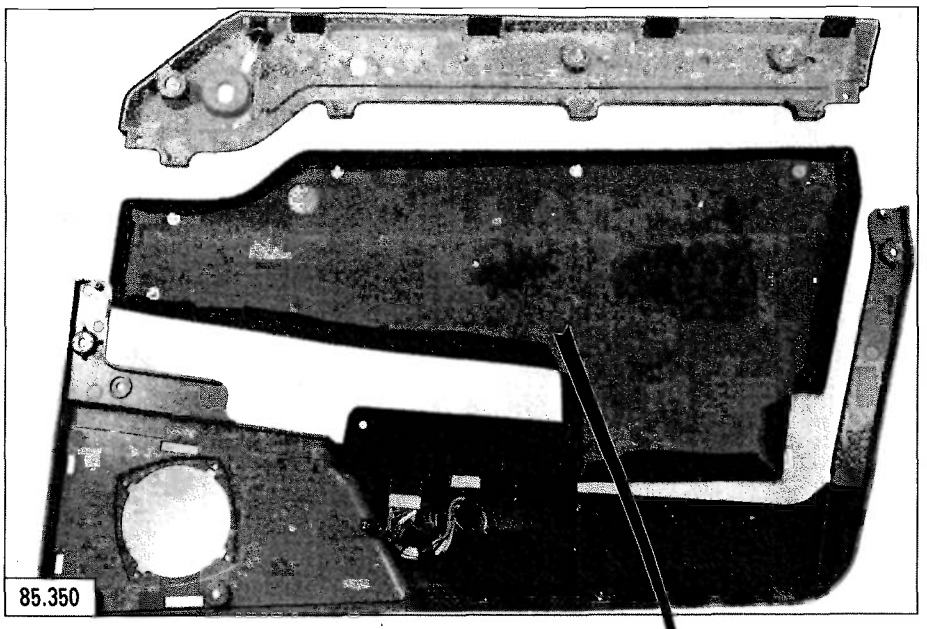

85.350

MA 841.3

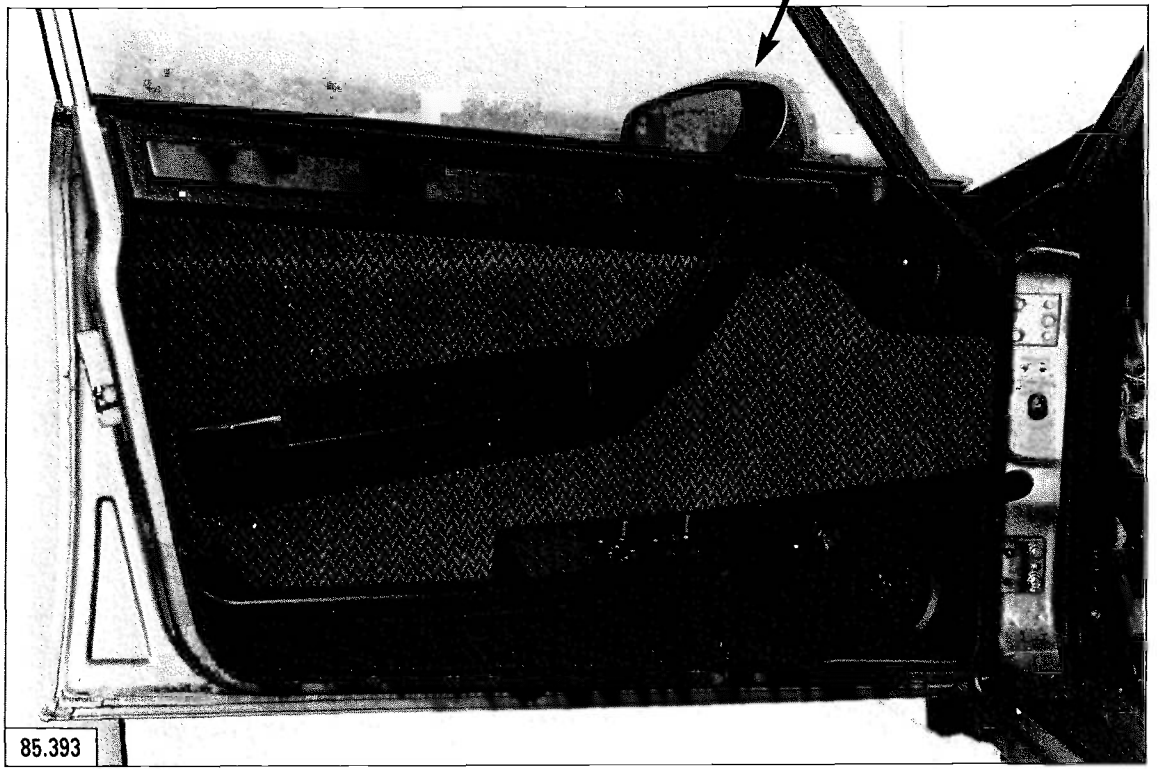

85.393

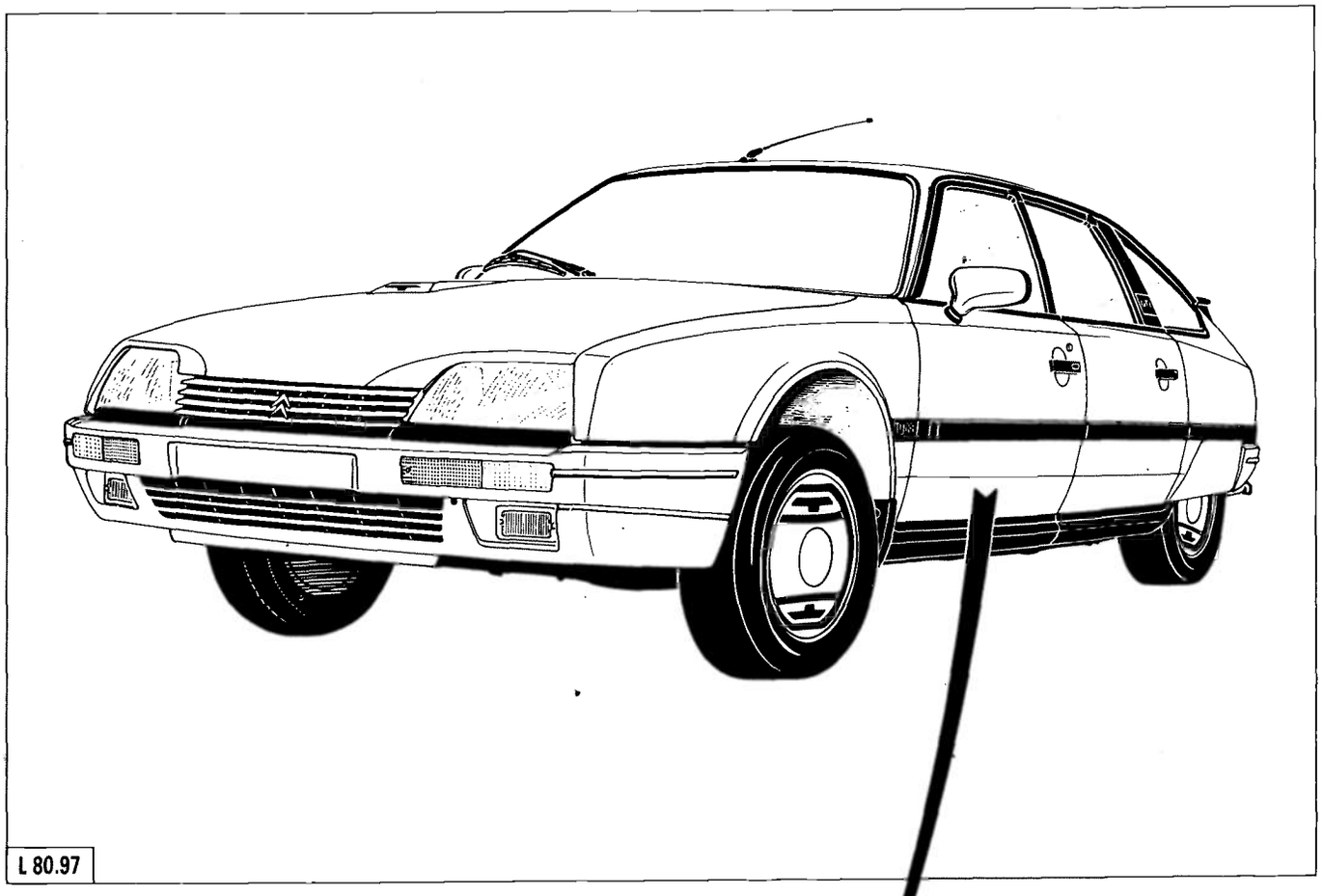

L 80.97

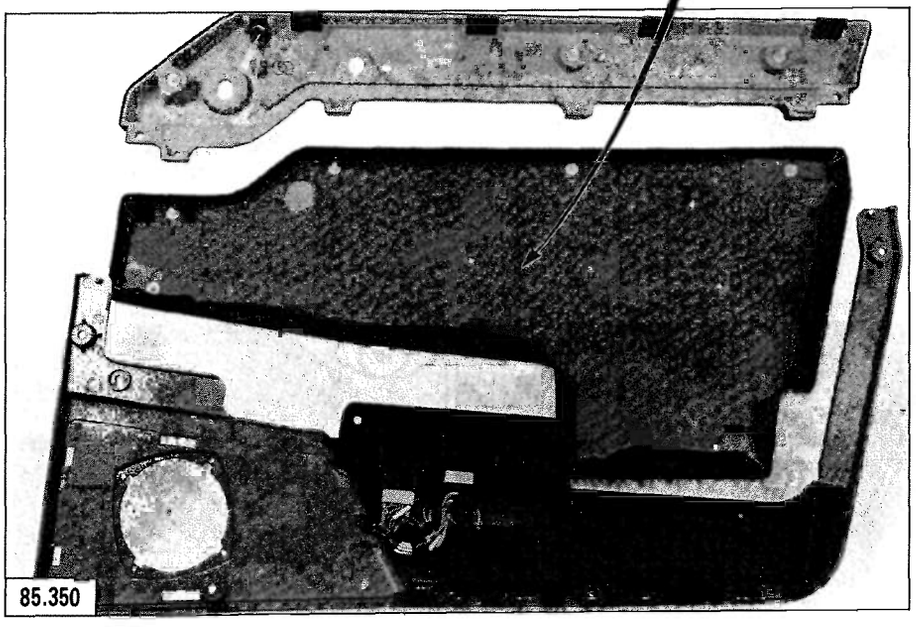

85.350

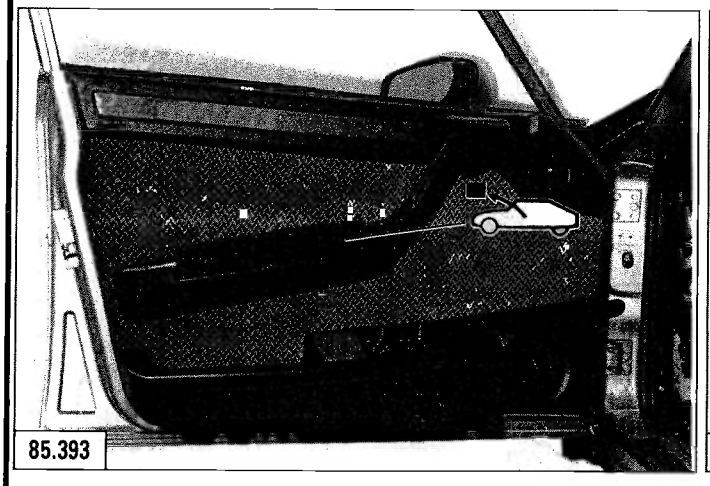
85.393

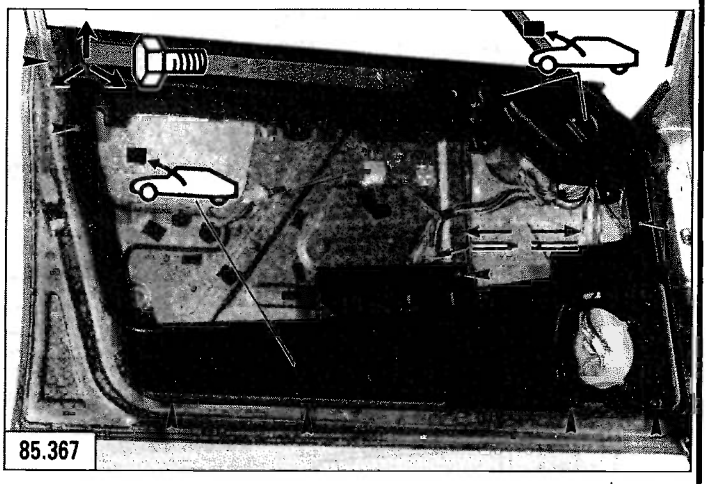
85.367

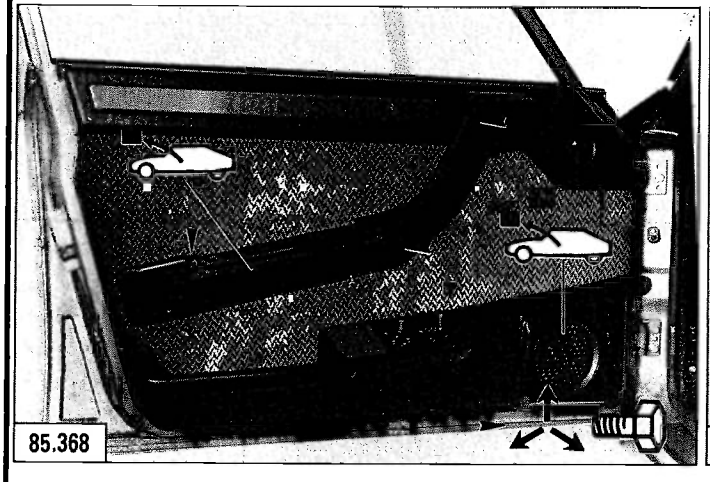
85.368

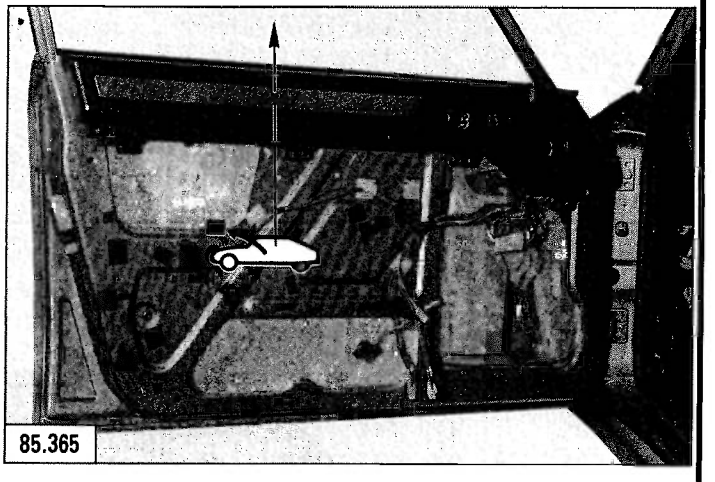
85.365

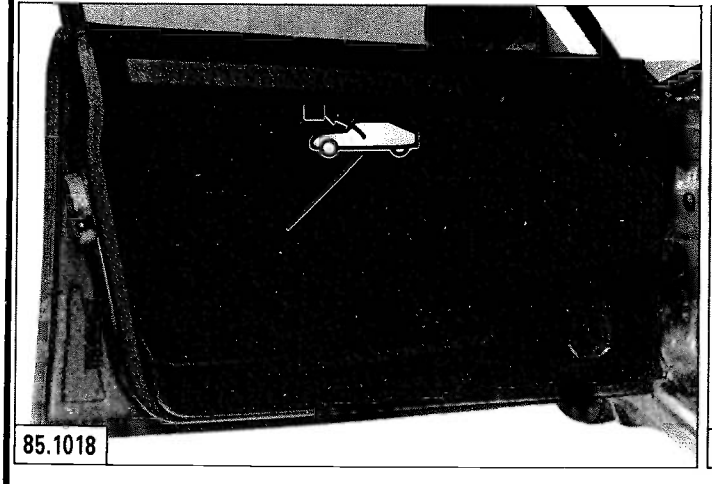
85.1018

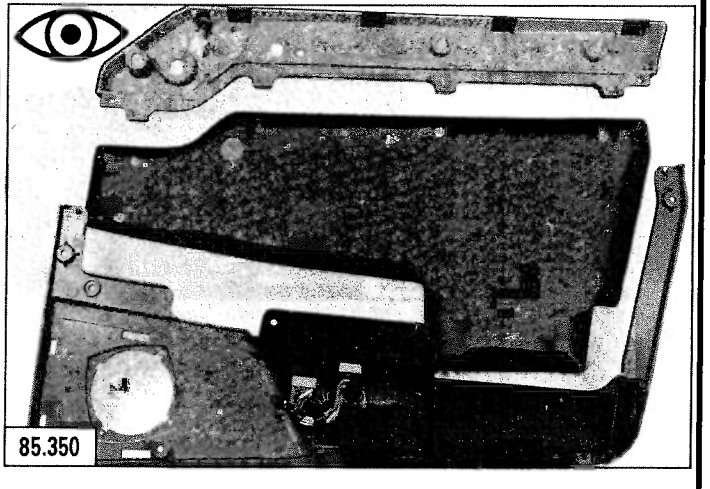
85.350

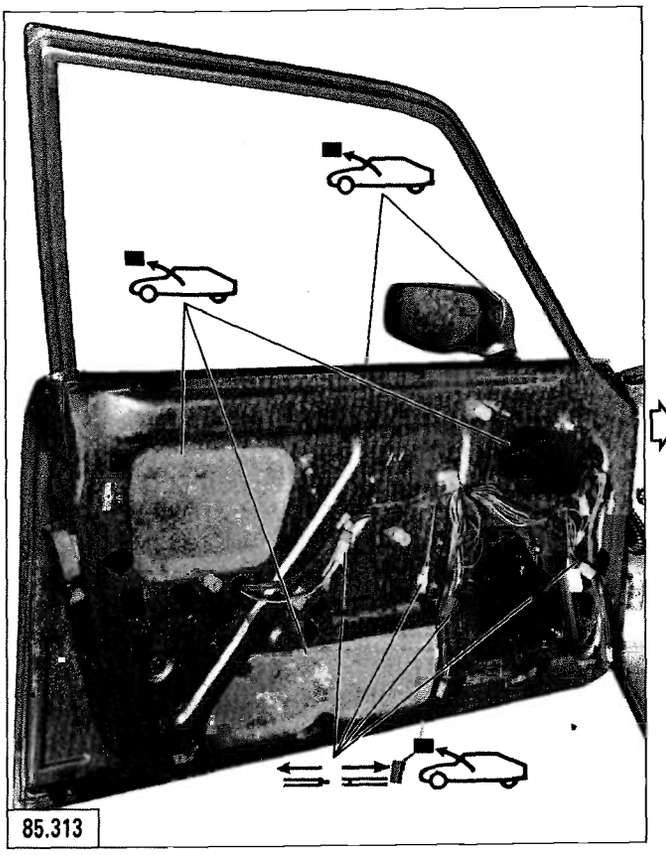
85.313

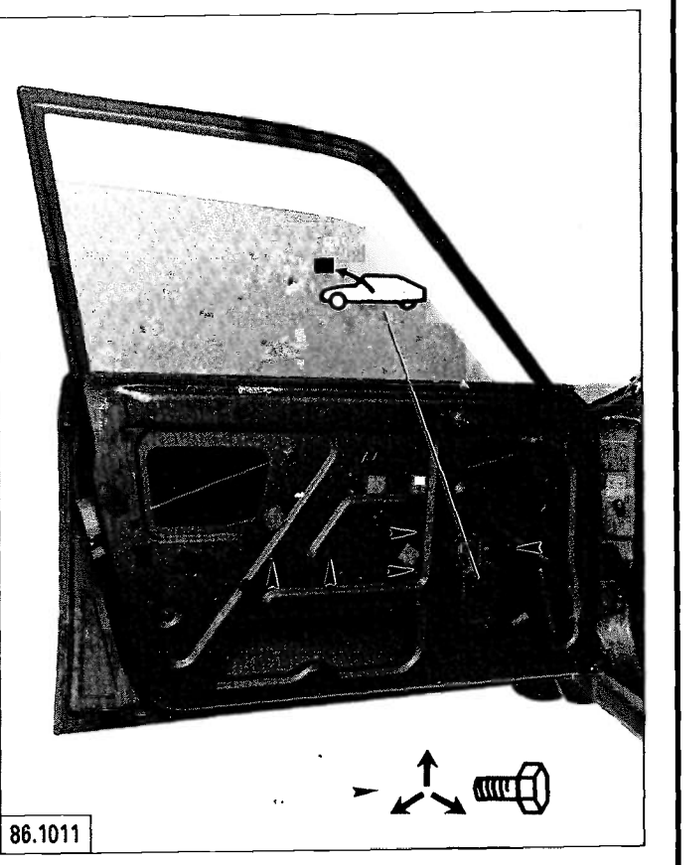
86.1011

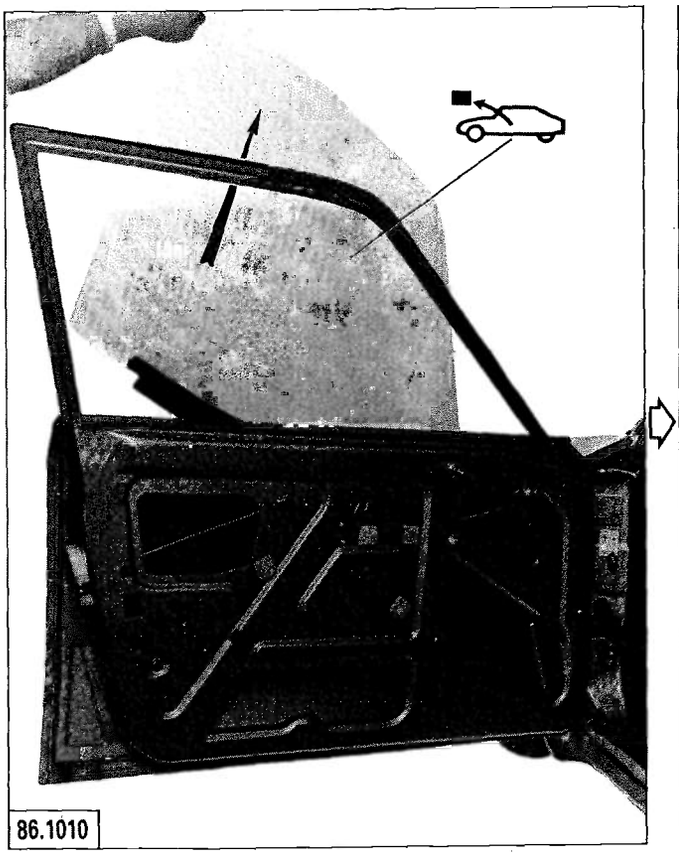
86.1010

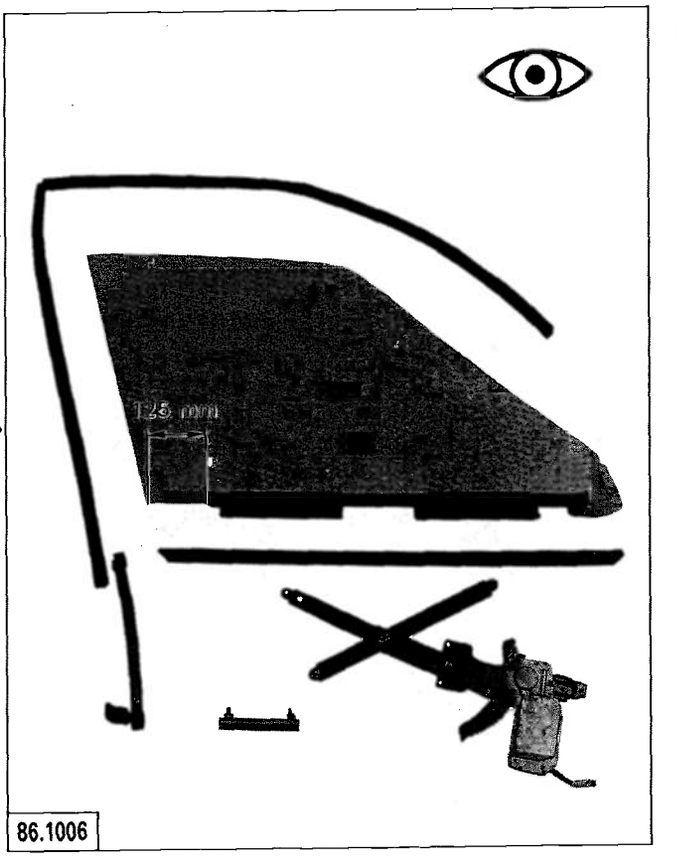

86.1006

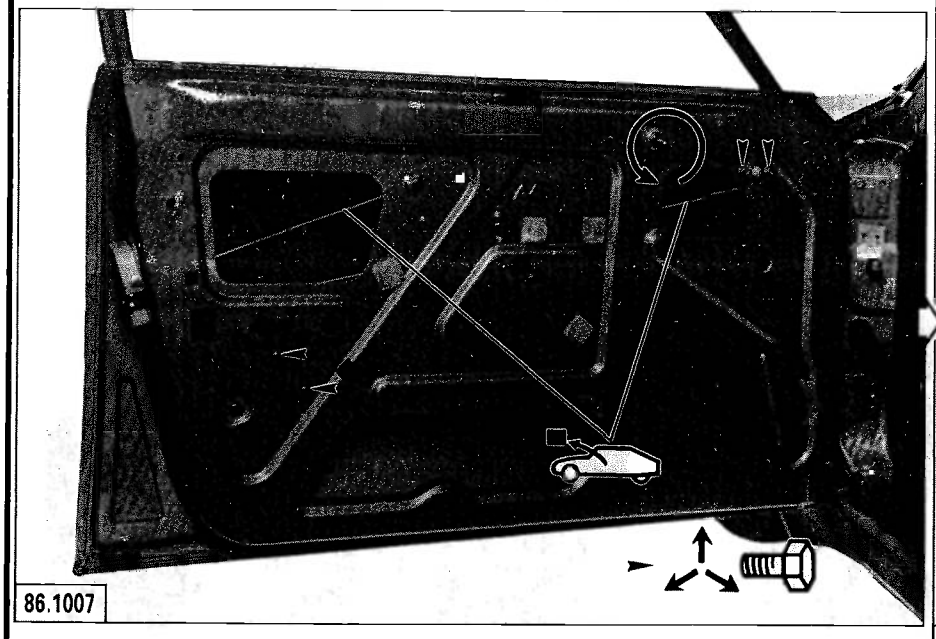
86.1007

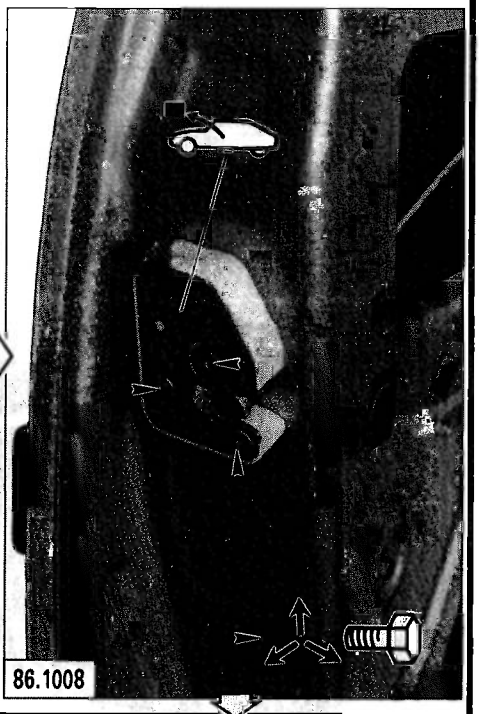
86.1008

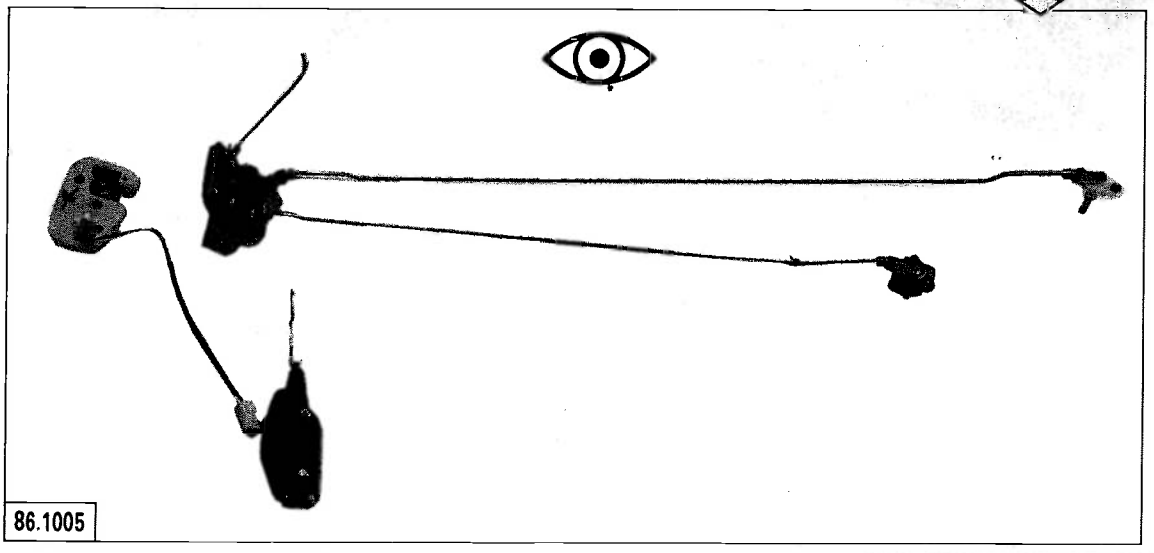
86.1005

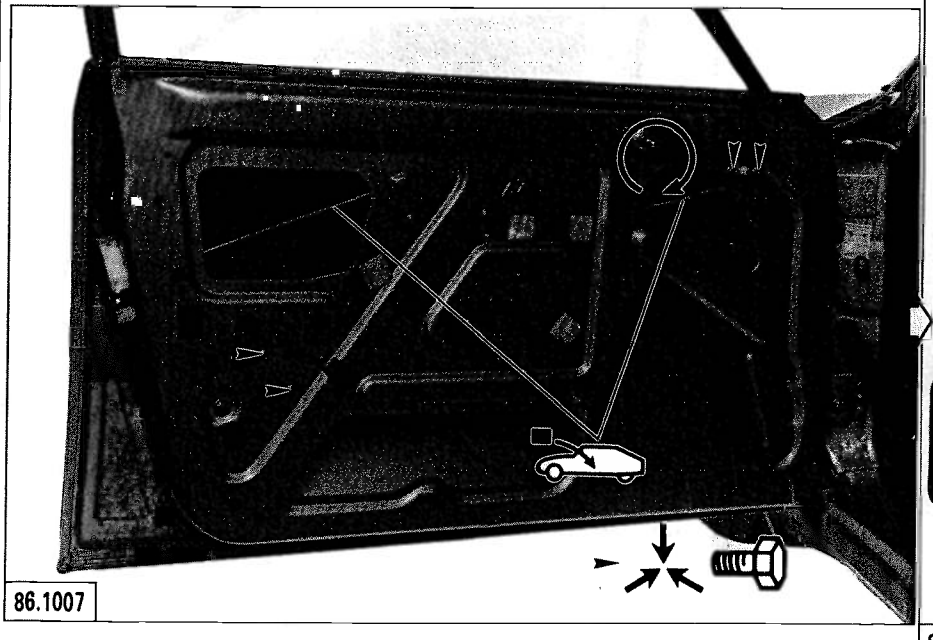
86.1007

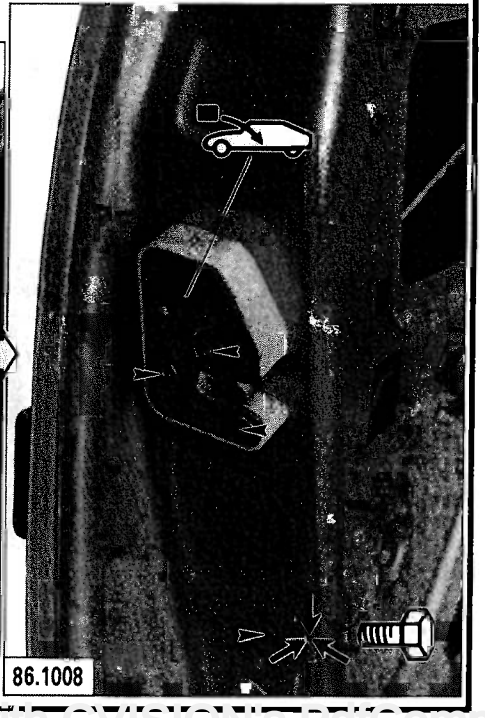
86.1008

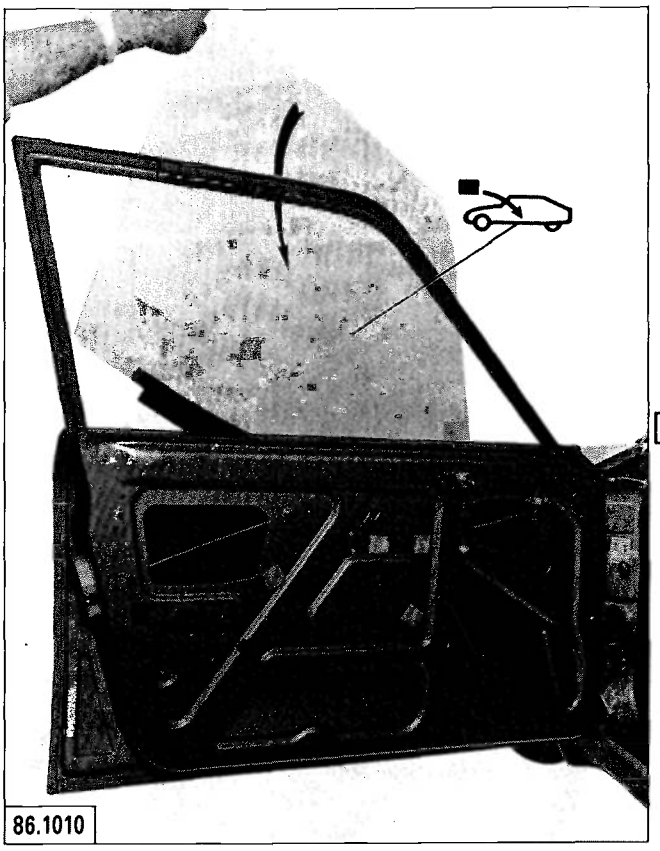
86.1010

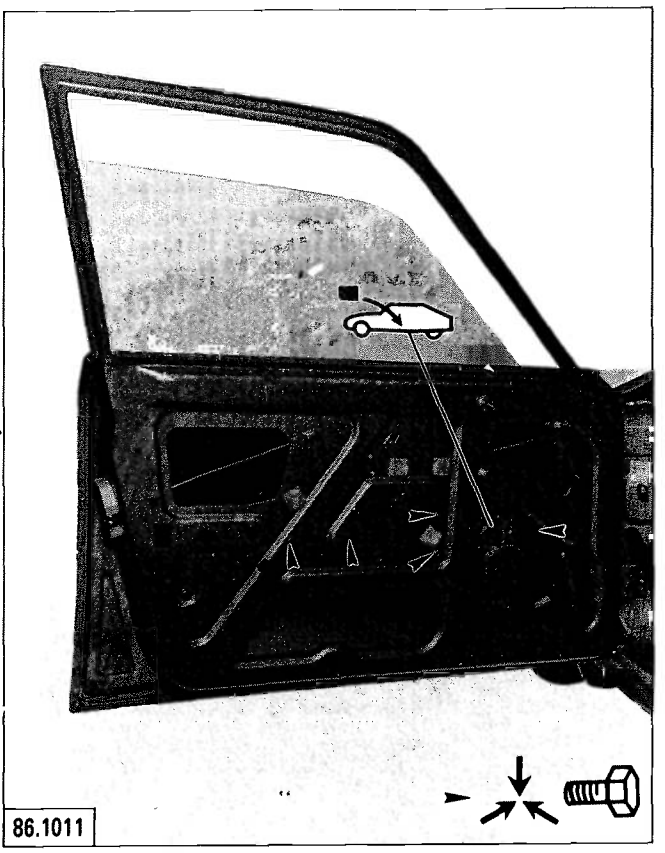
86.1011

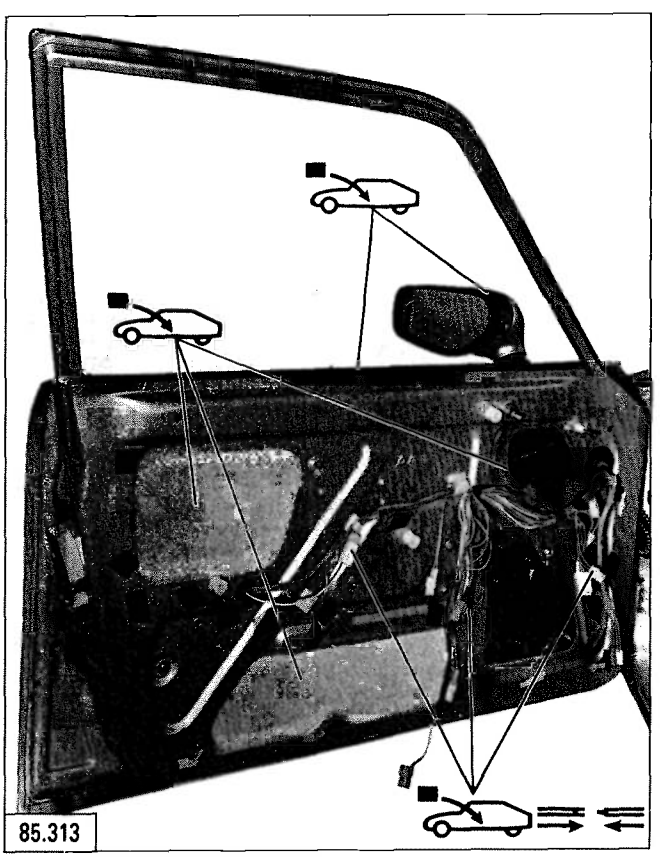
85.313

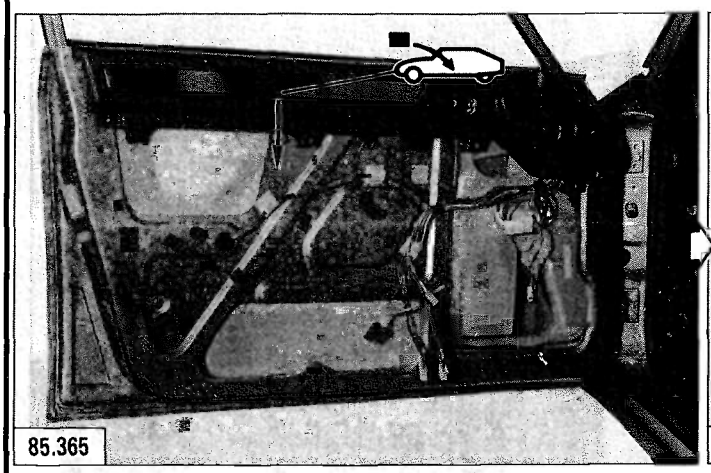
85.365

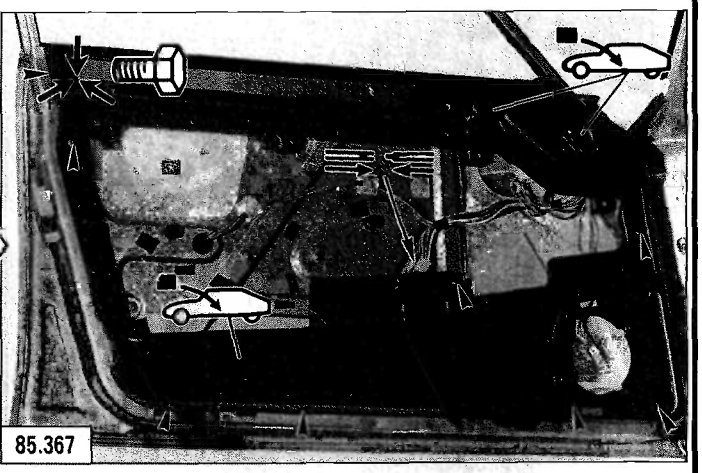
85.367

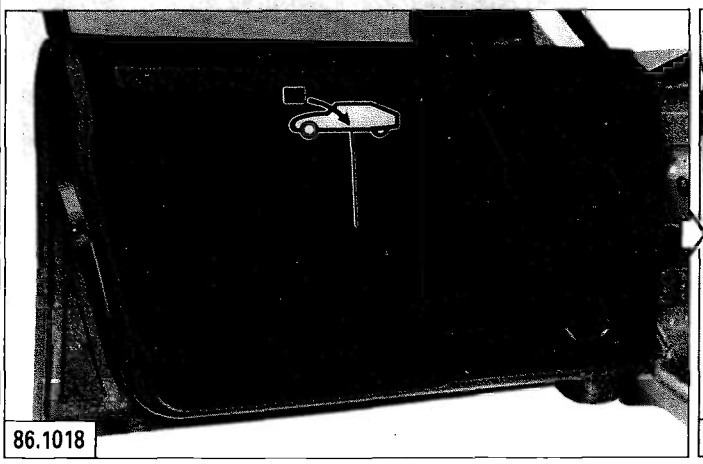
86.1018

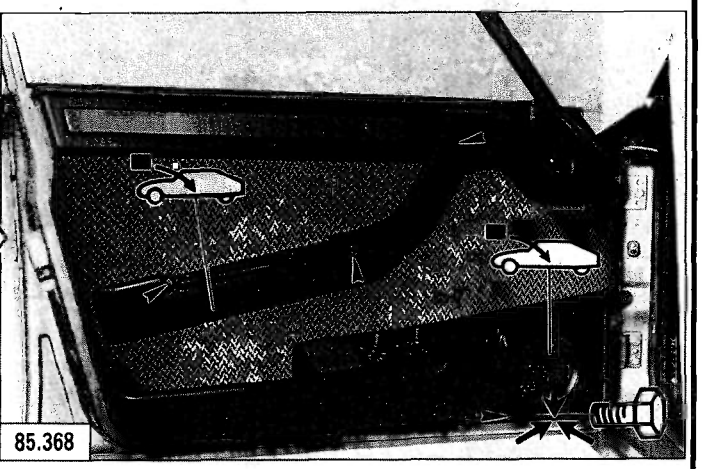
85.368

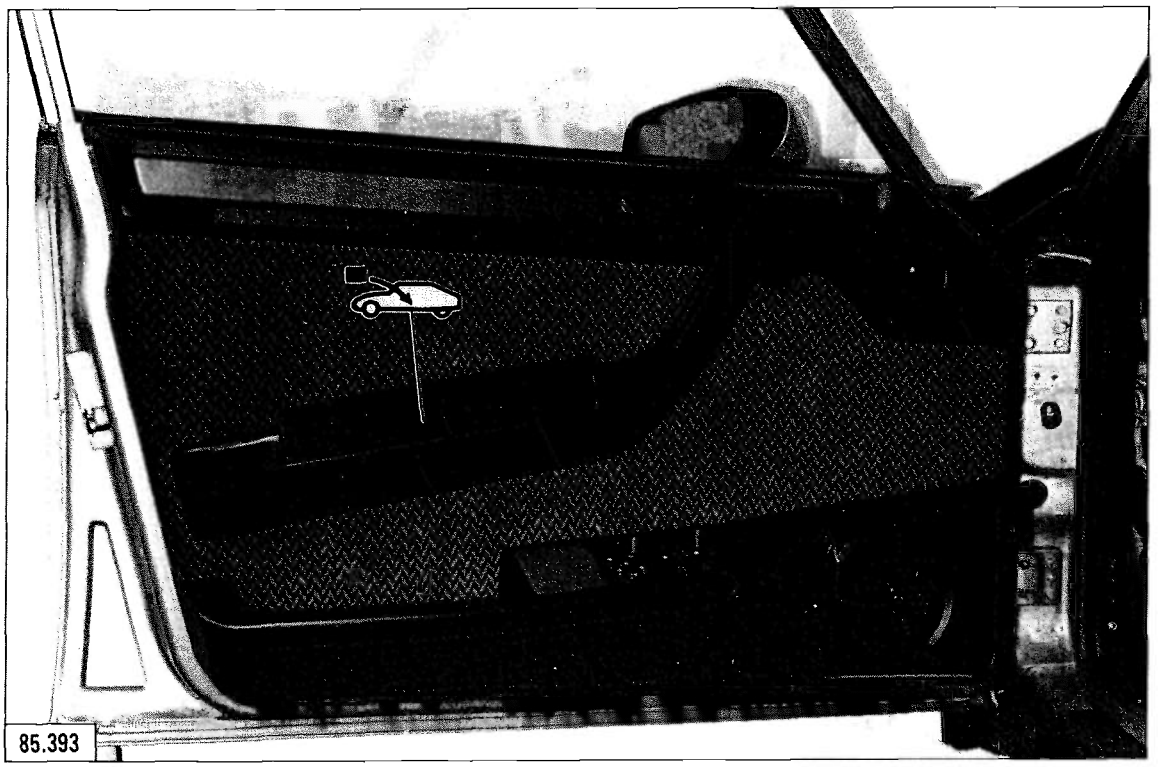
85.393

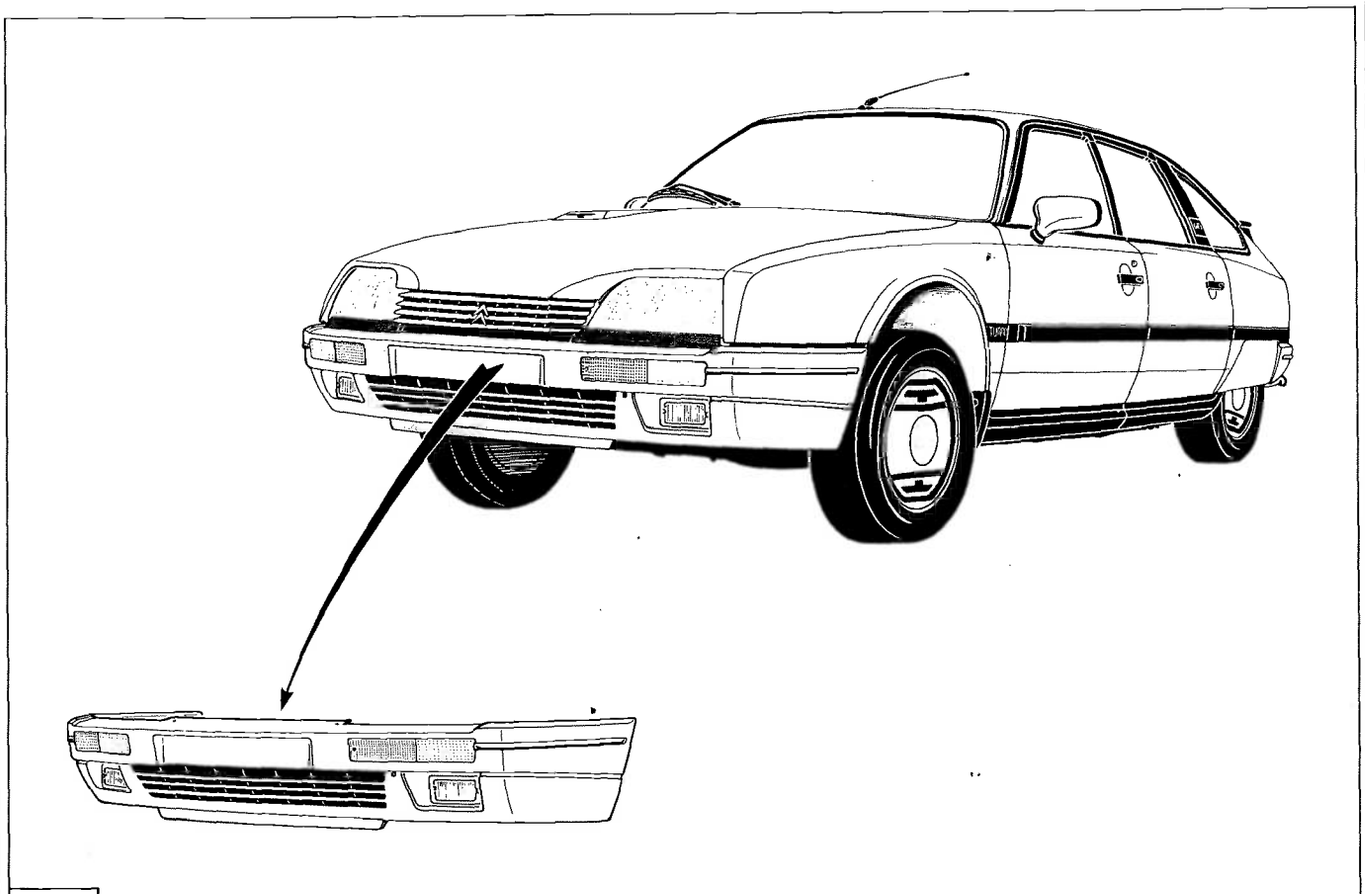

L 80.97

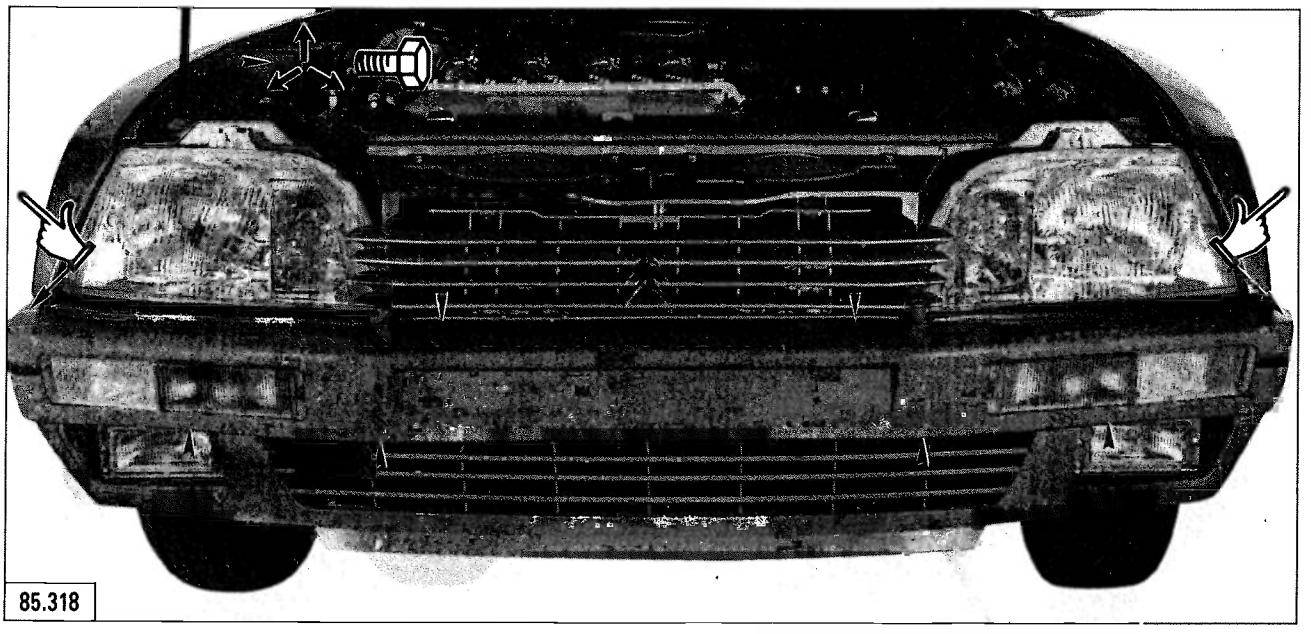
85.318

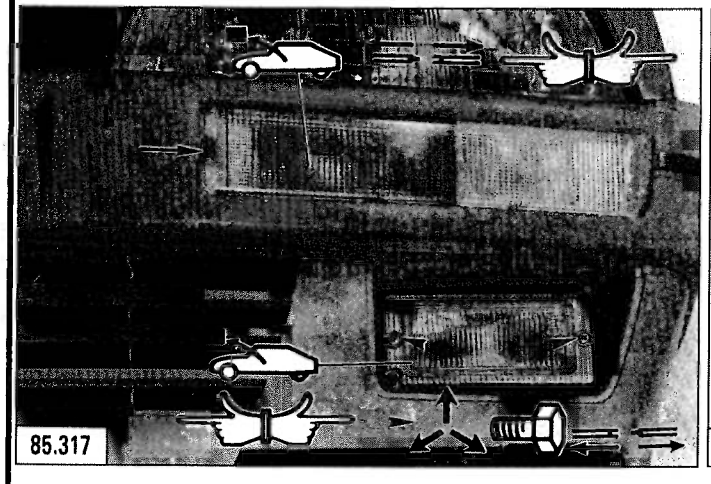
85.317

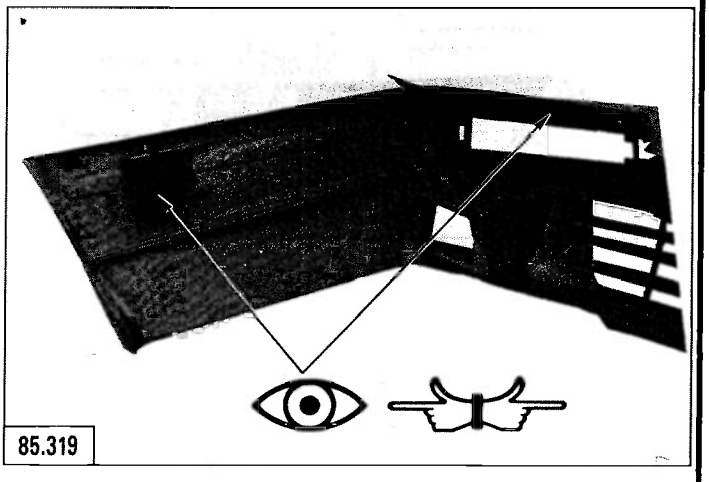
85.319

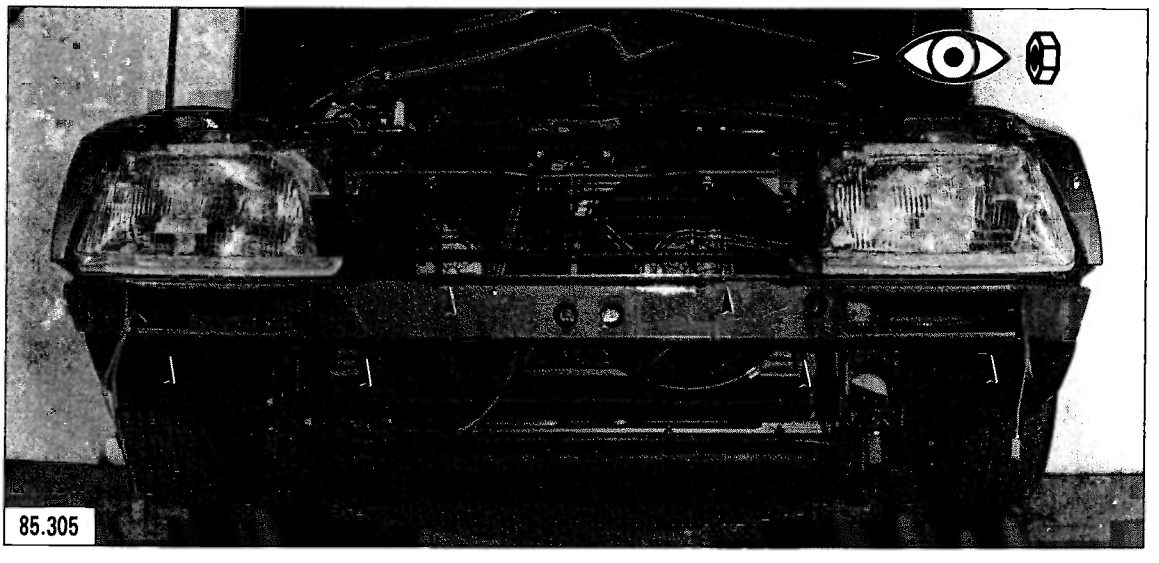
85.305

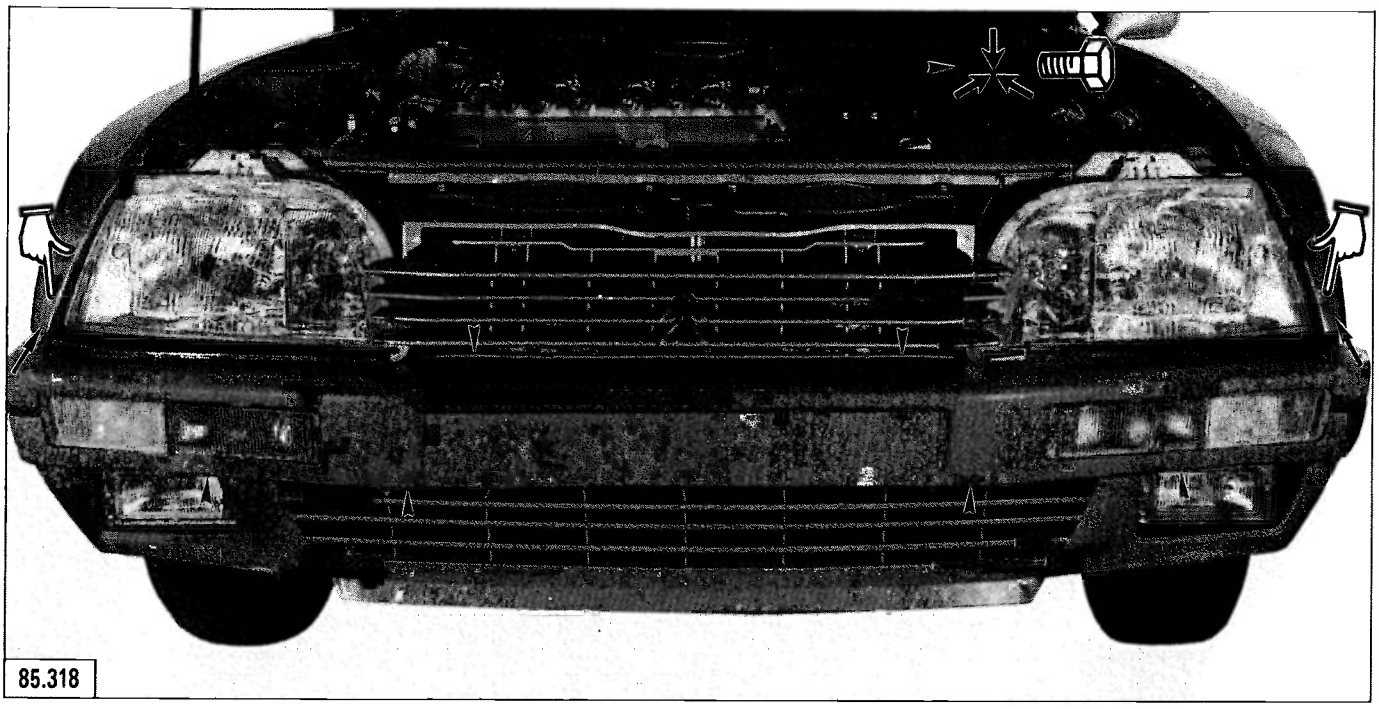

85.318

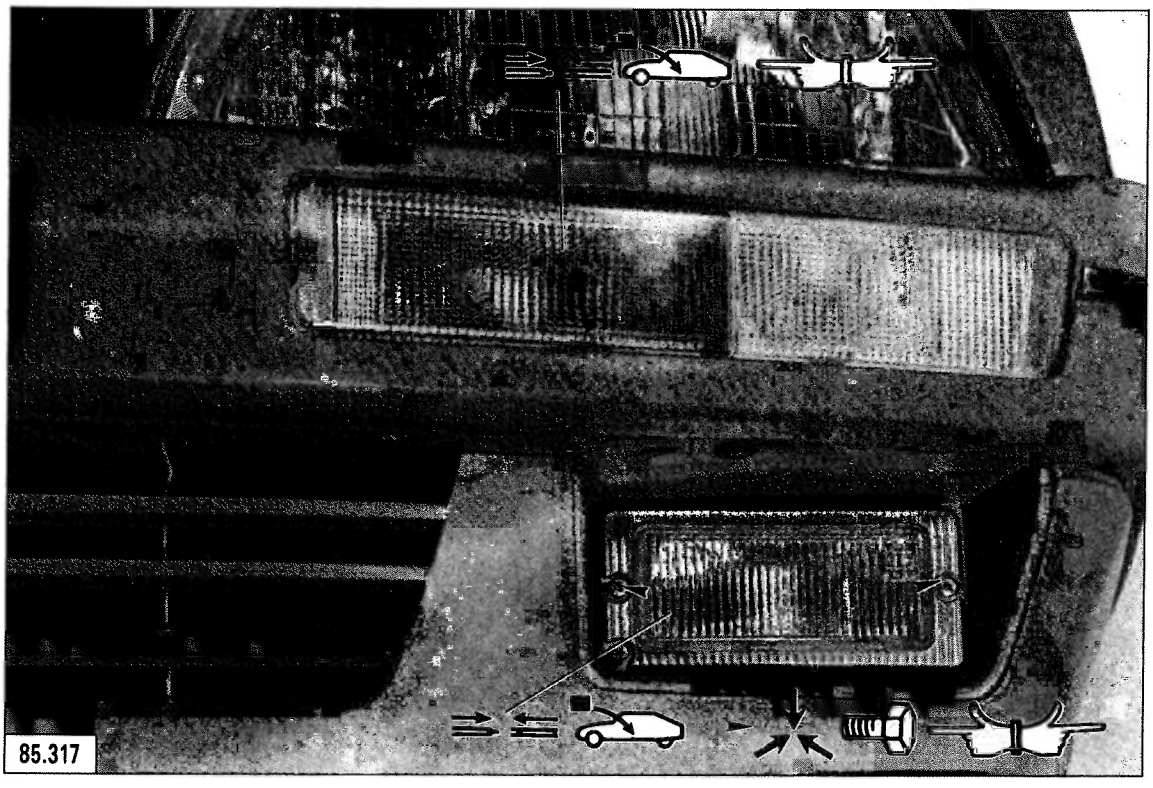

85.317

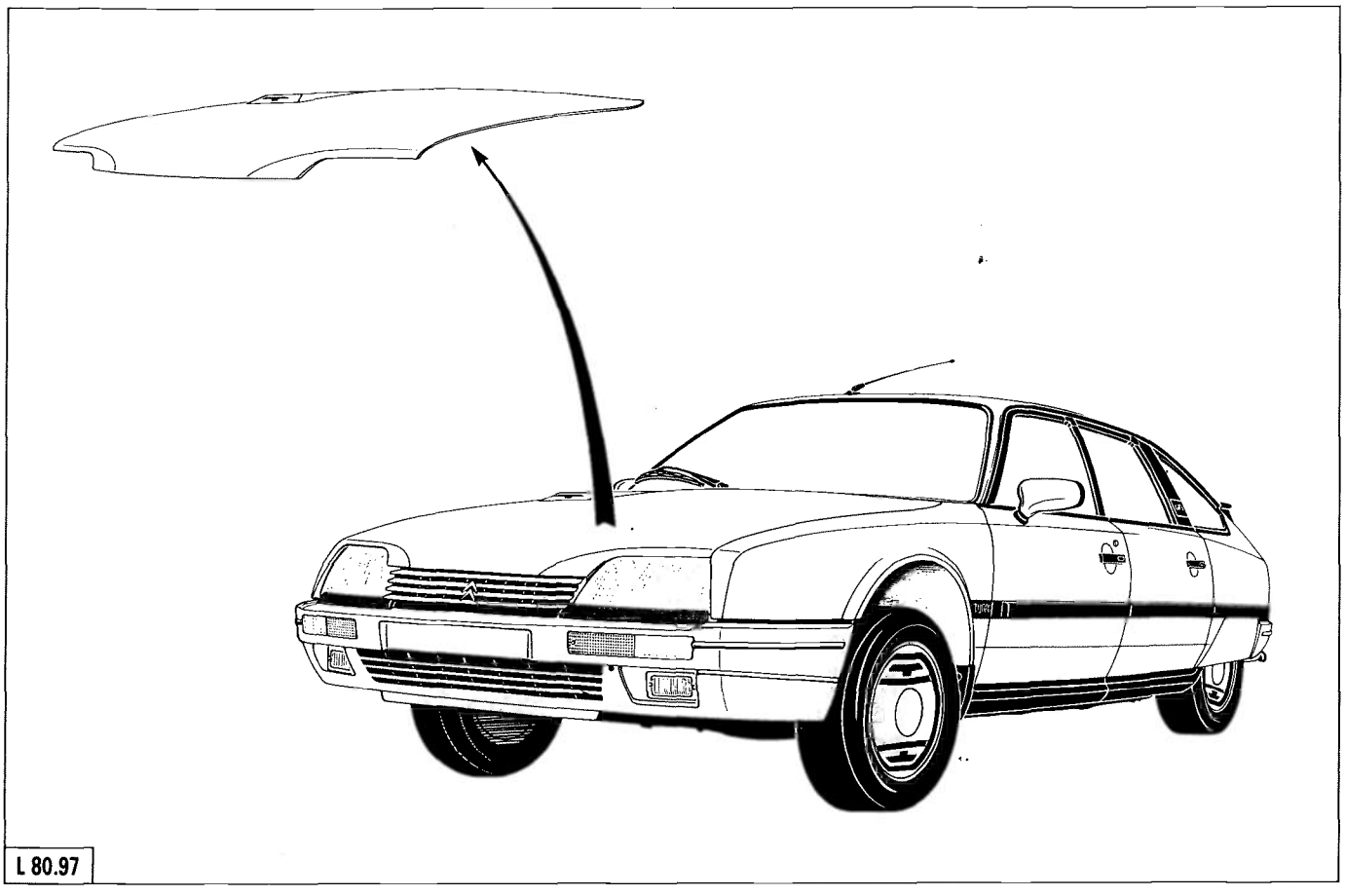

L 80.97

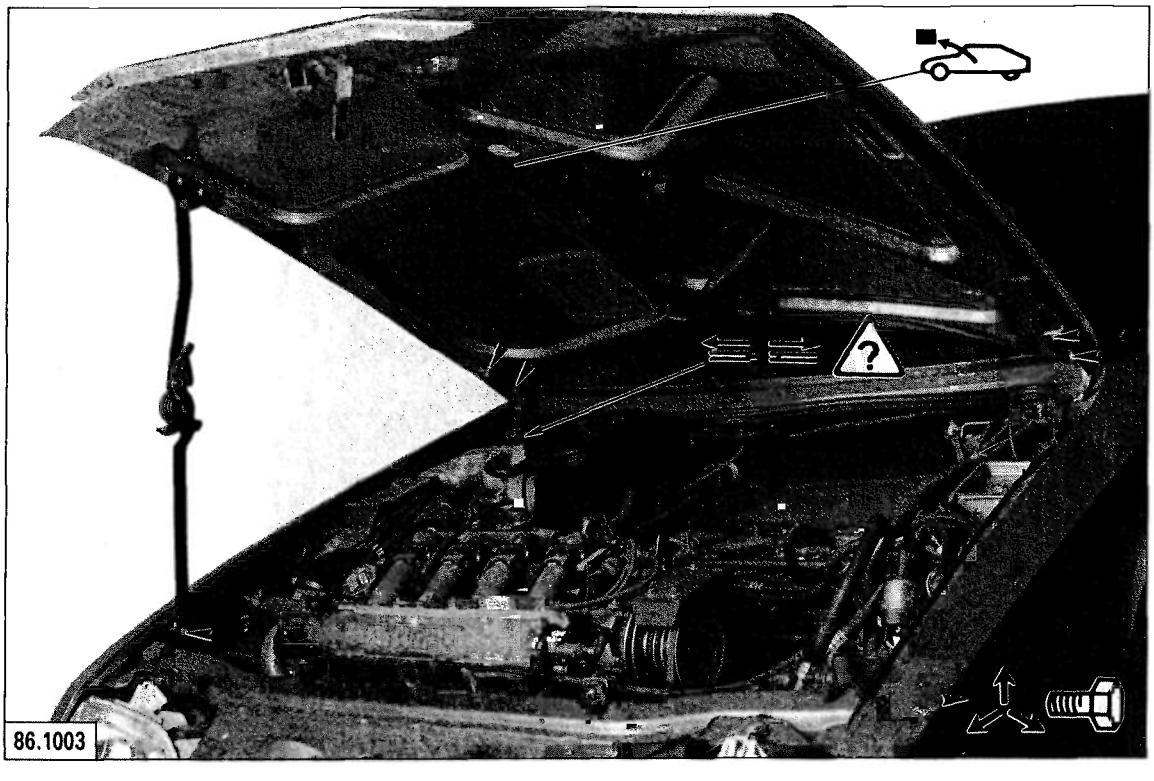

86.1003

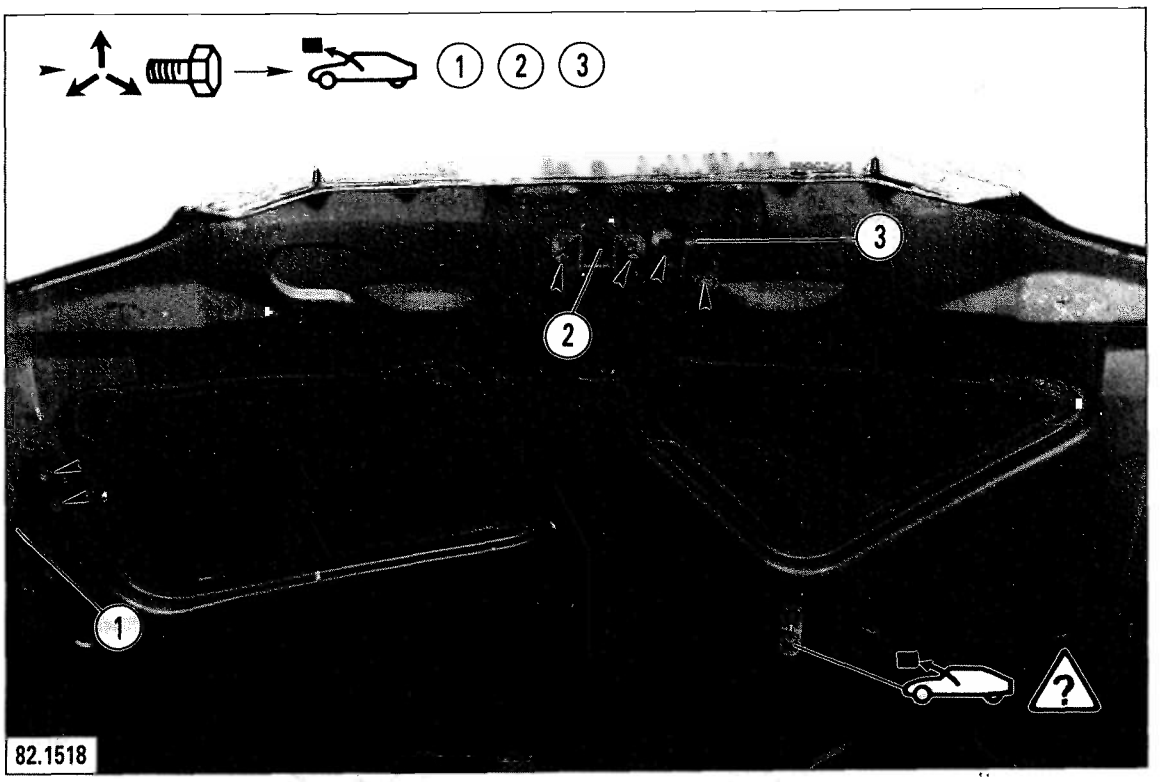

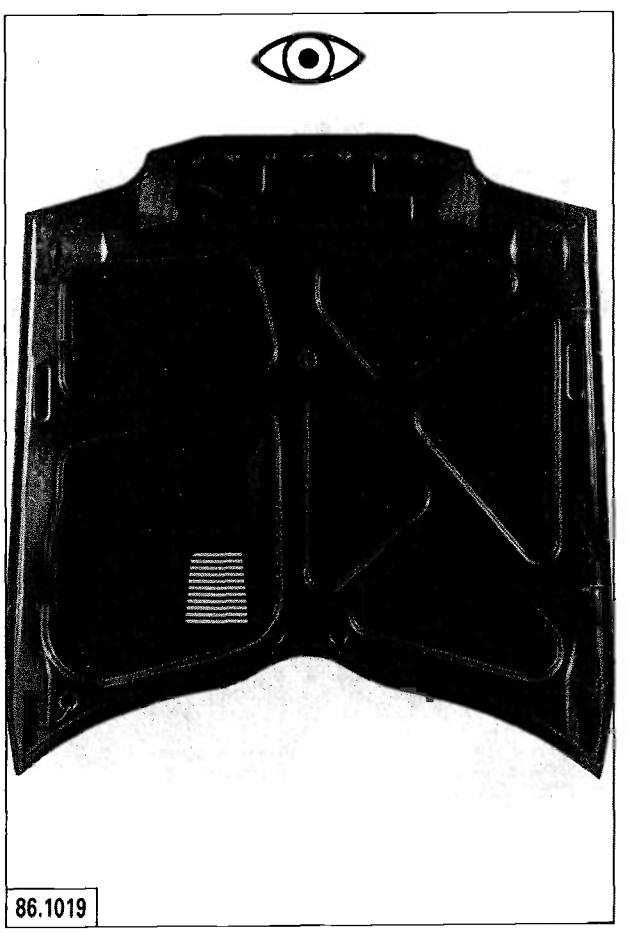

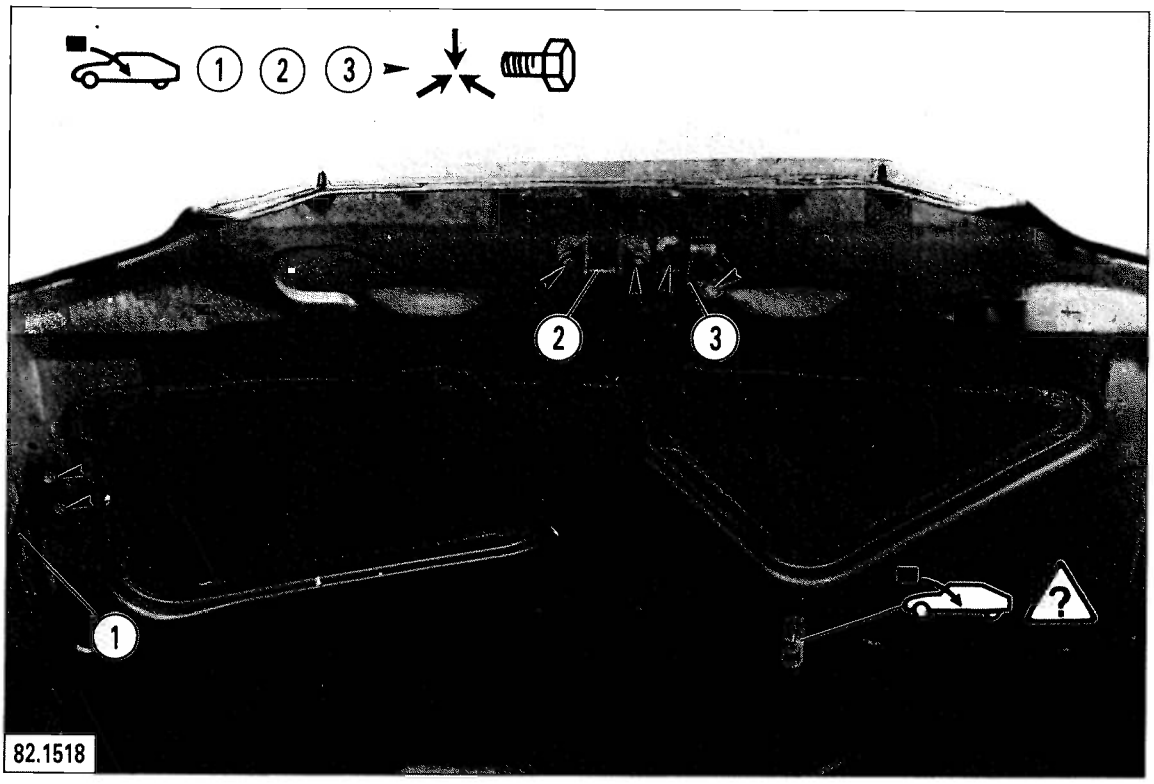

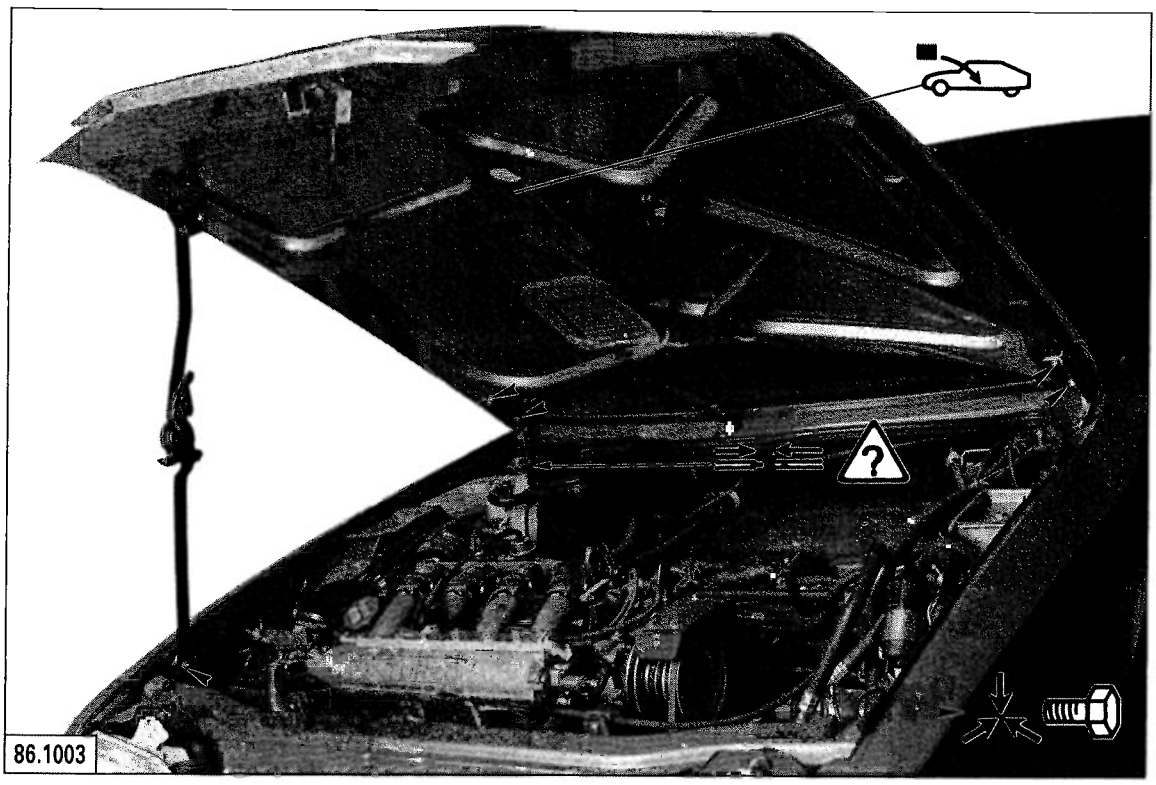

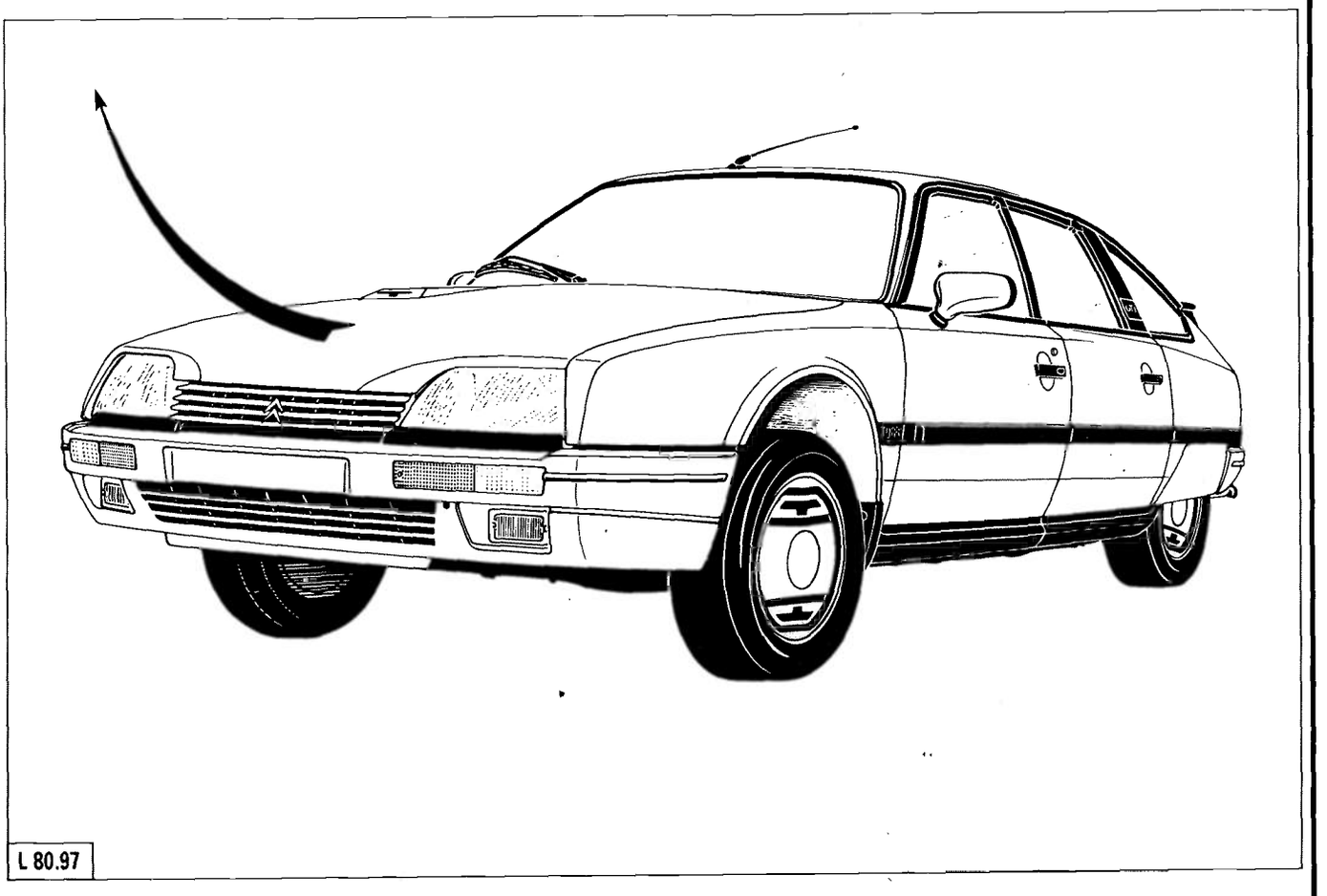

L 80.97

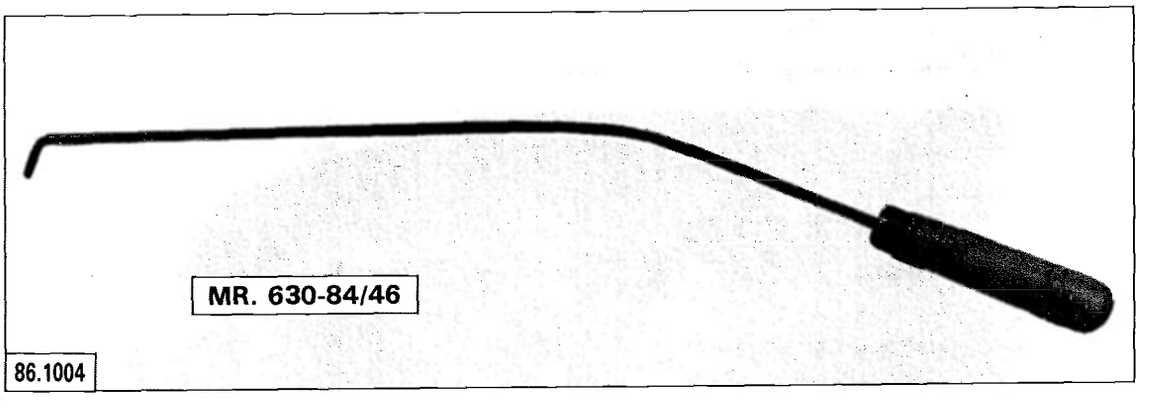

86.1004

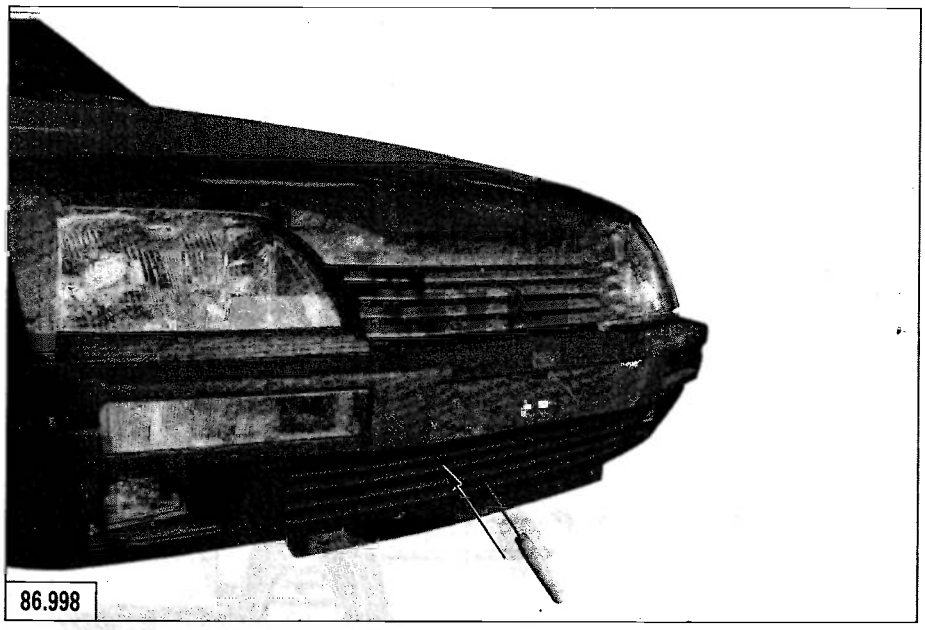

86.998

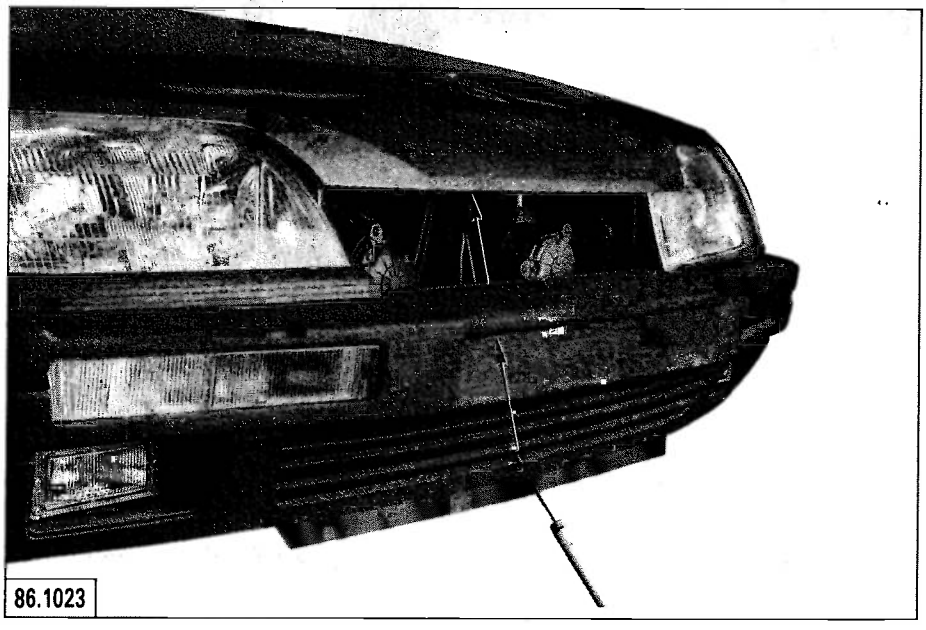

86.1023

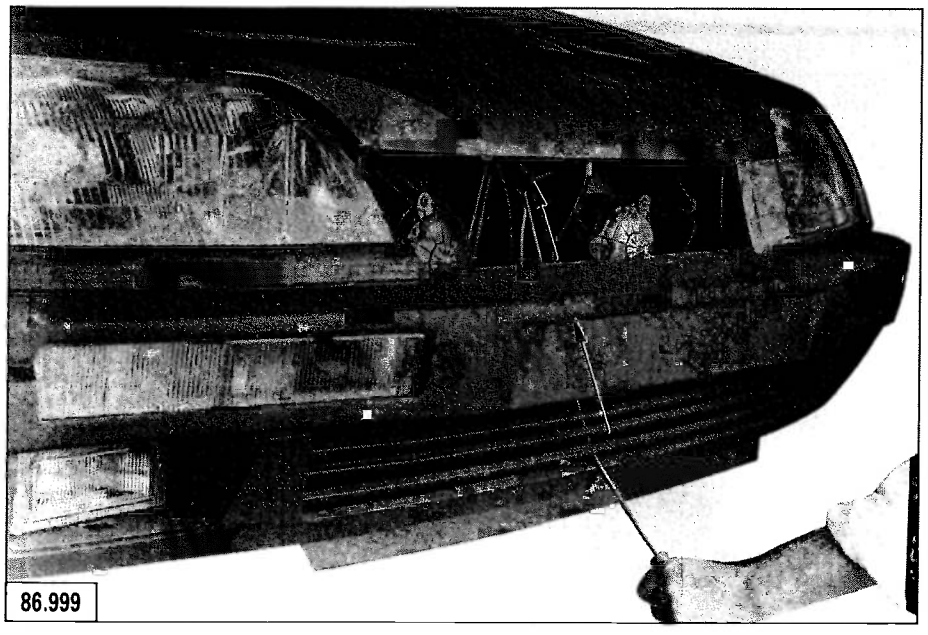

86.999

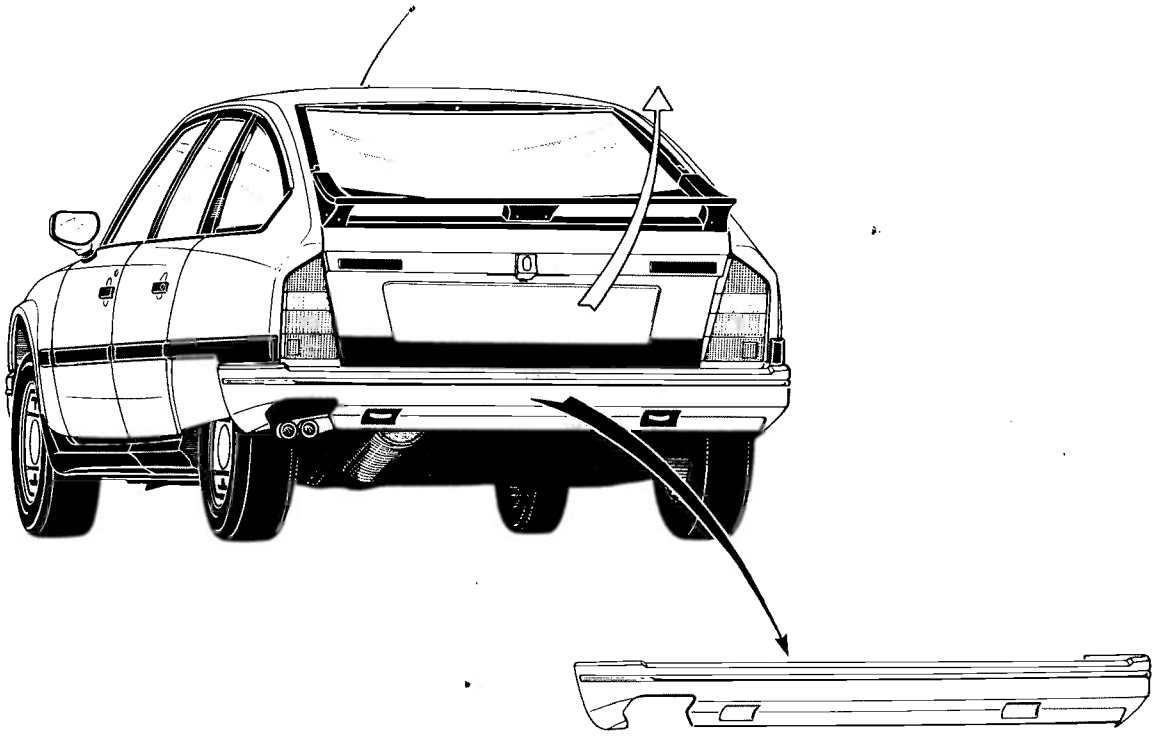

L 80.98

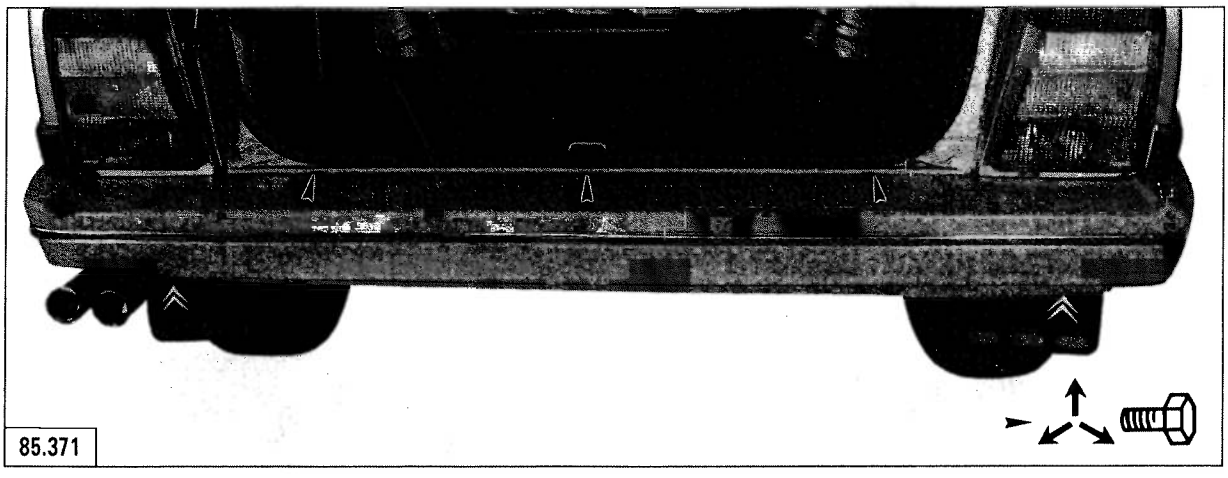

85.371

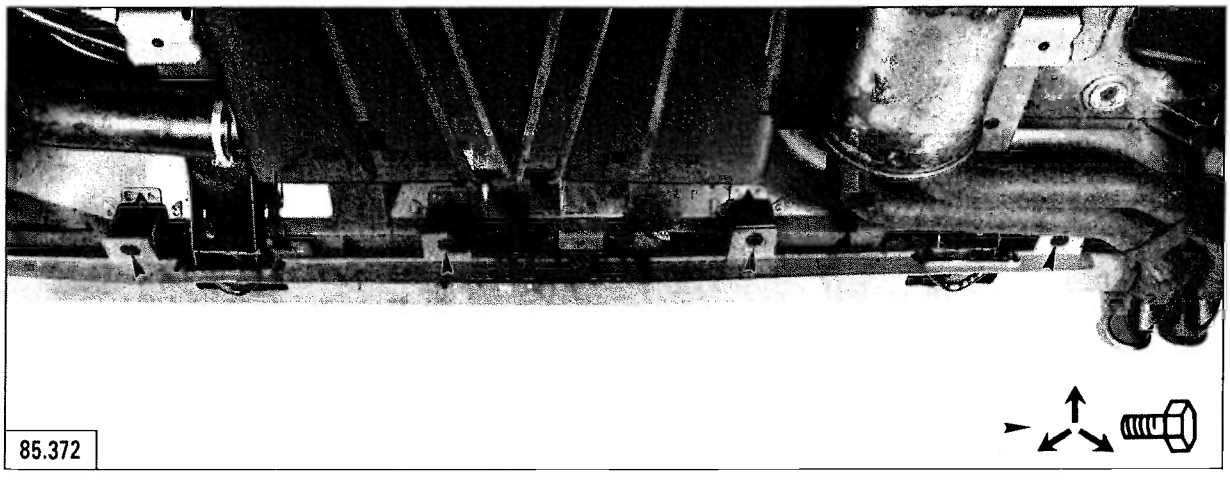

85.372

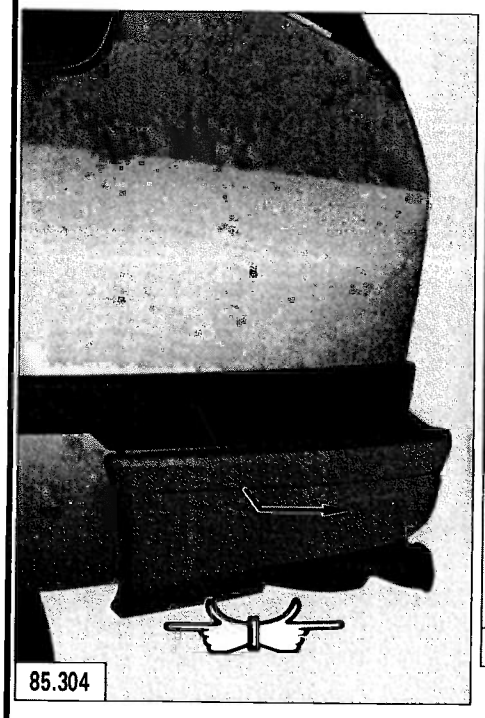
85.304

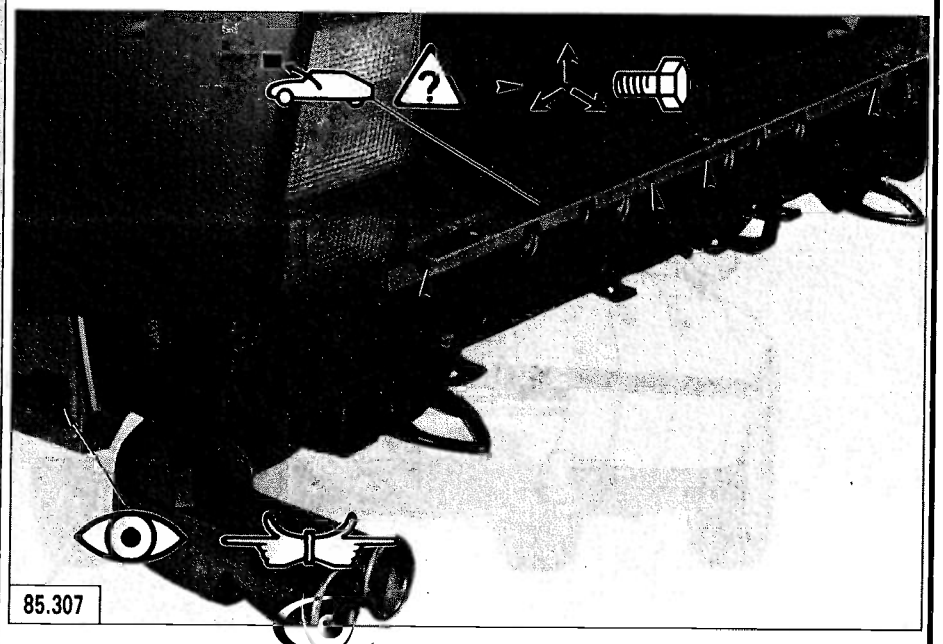
85.307

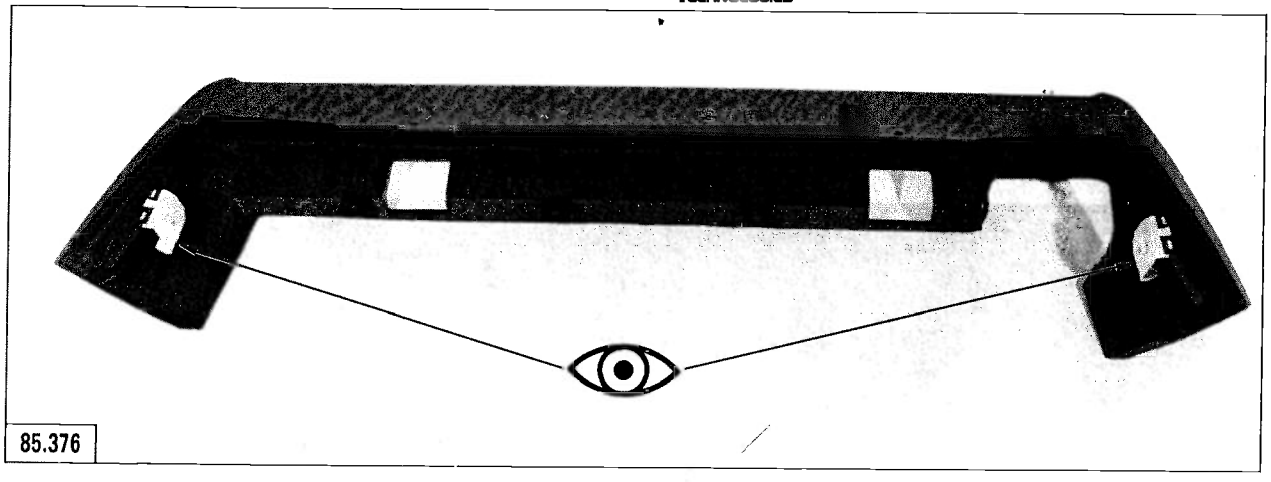
85.376

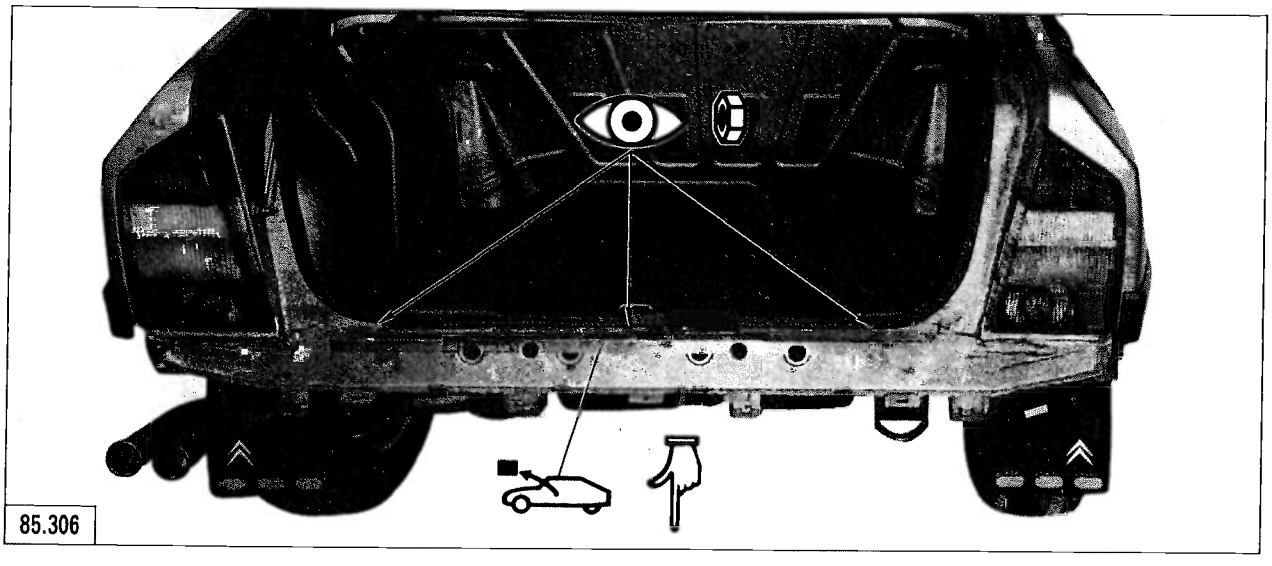
85.306

REPLACING A REAR QUARTER PANEL

TOOLS: Fig. I

1. Tool for cutting the sticking beads using a piano wire: **Reference 7503-T.**

2. Gun for extruding the adhesive sealant.

3. Set of suction pads

4. Tool for removing the adhesive bead left after the withdrawal of the rear quarter glass: **MR 630-84/43,** or cant chisel sharpened as shown on the drawing of **Fig. I,** opposite.

PRODUCTS: Fig. II

	Reference
"GURIT"	
Sticking kit	ZC 9 867 511 U
Cartridge of adhesive sealant	ZC 9 867 447 U
"BOSTIK"	
Sticking kit	ZCP 830-002
Cartridge of adhesive sealant	ZCP 830-003

PROTECTION

Goggles should be worn when cutting the adhesive sealant (in the case of the glass breaking)

CAUTION: The use of other bonding products than the ones recommended is strictly forbidden.
To retain the rigidity of the glass and the surrounding area, the quality of the sticking is of prime importance.

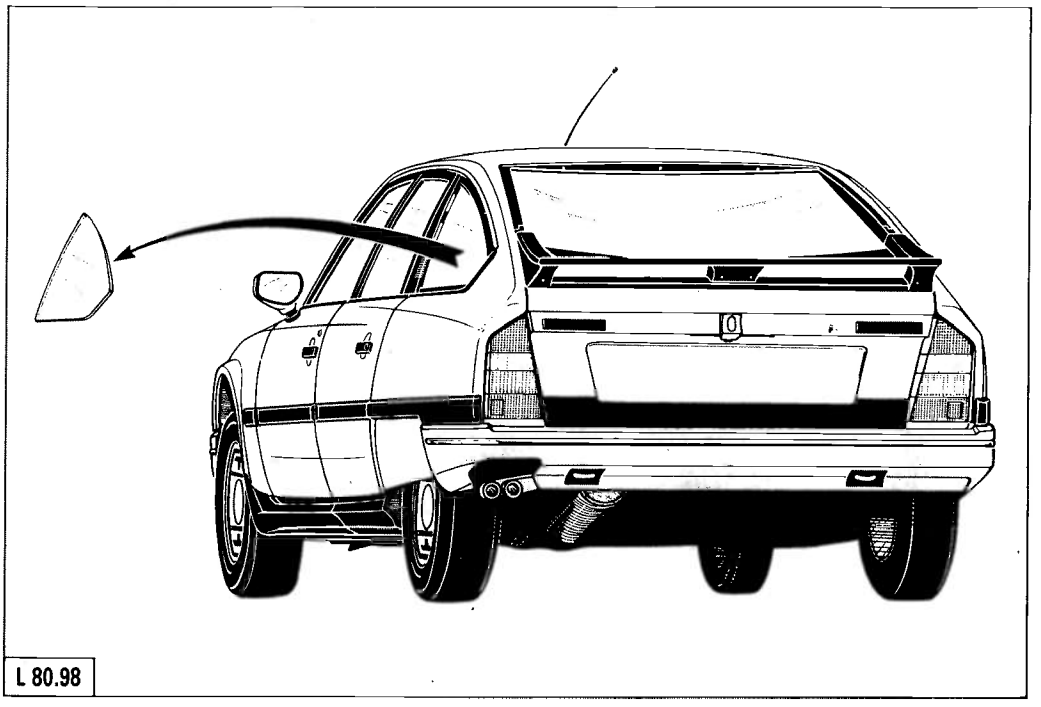

L 80.98

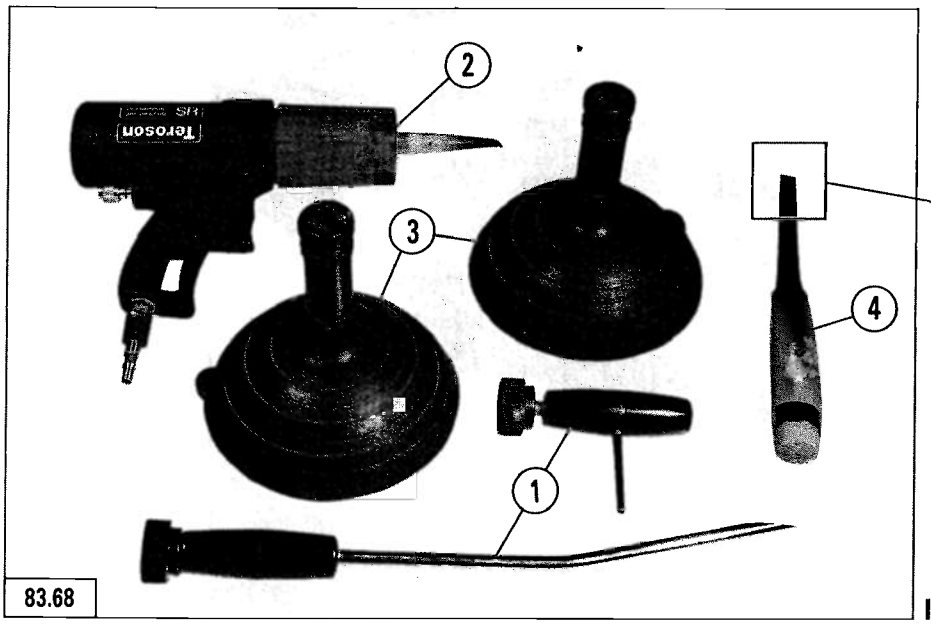

83.68

I

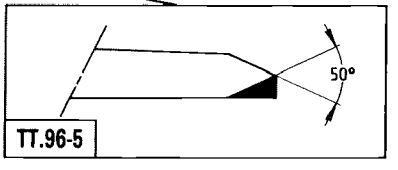

TT.96-5

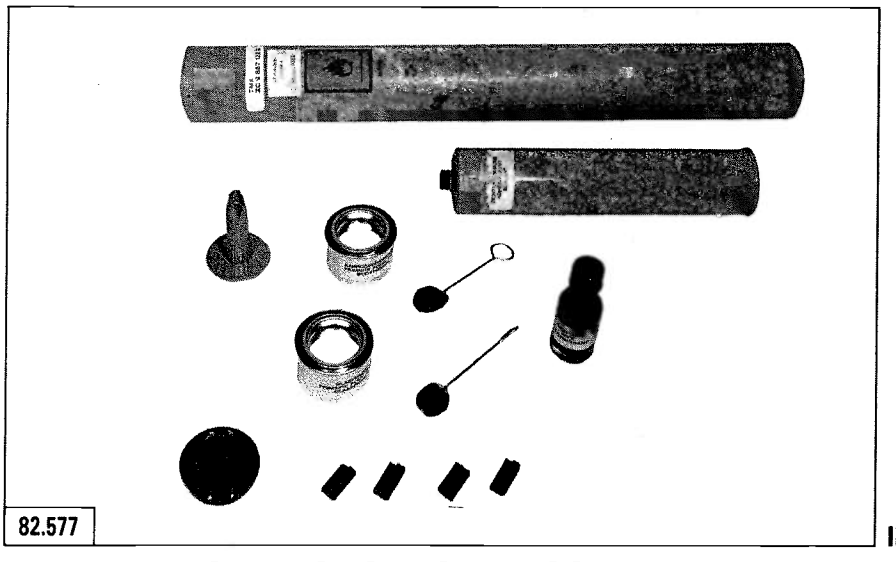

82.577

II

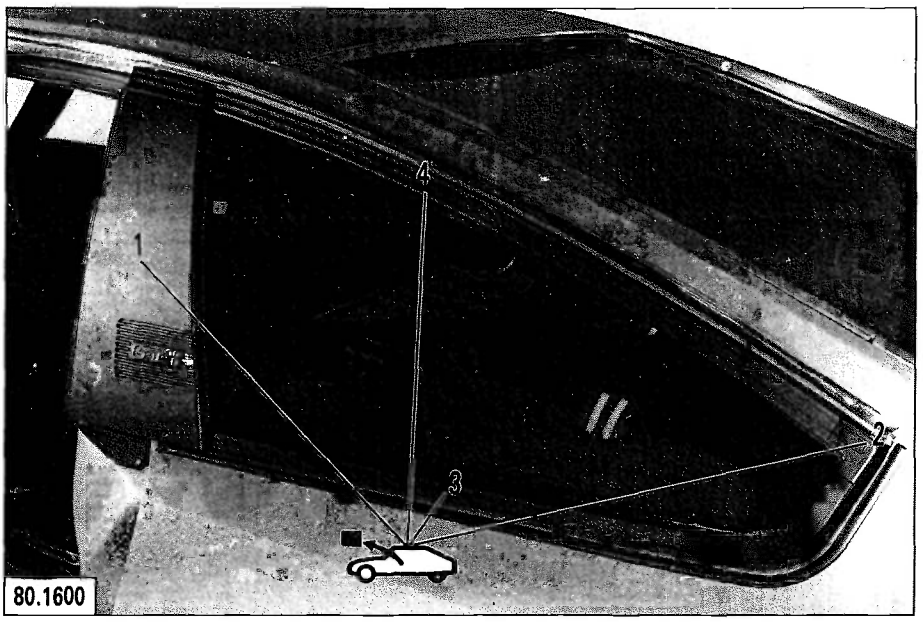

80.1600

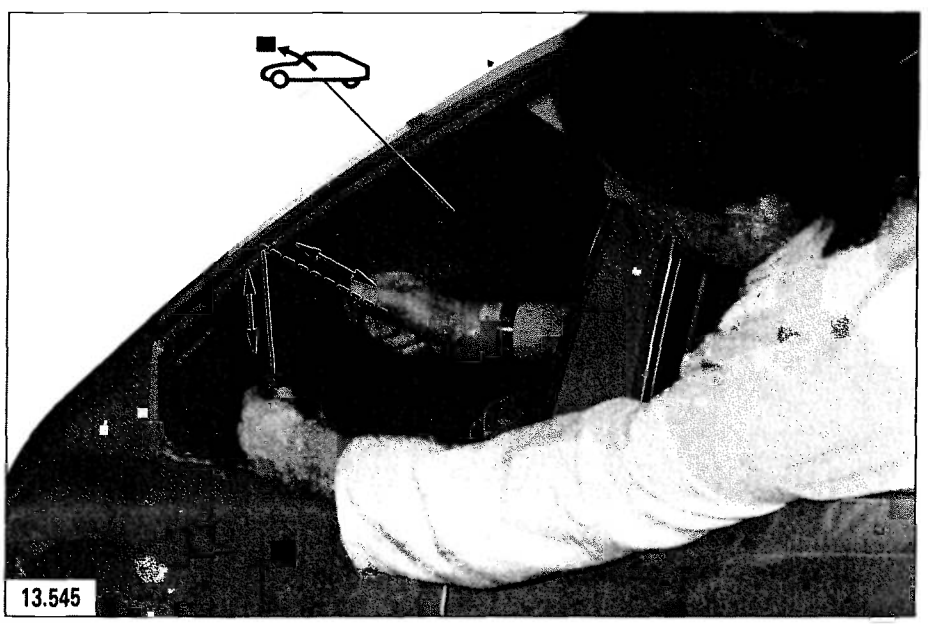
13.545

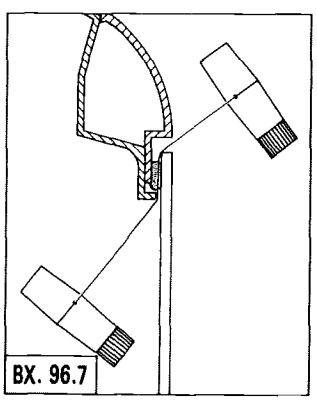
BX. 96.7

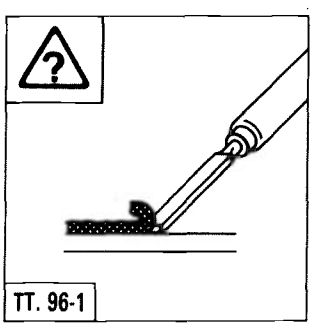
TT. 96-1

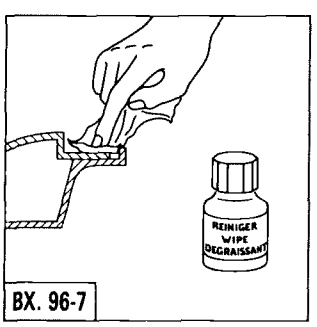

BX. 96-7

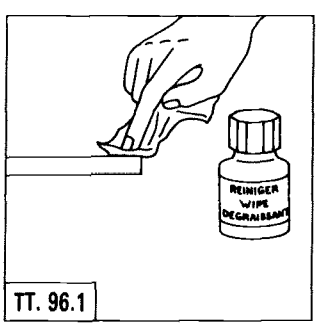

TT. 96.1

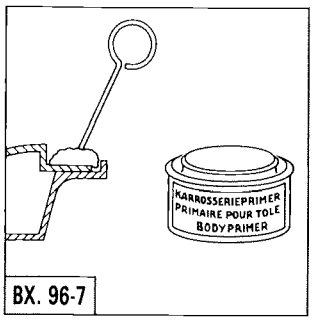

BX. 96-7

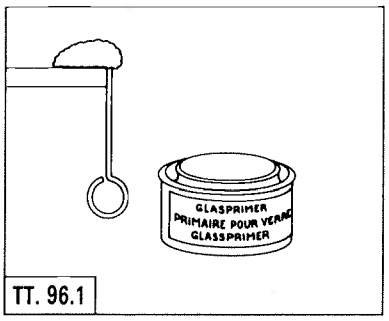

TT. 96.1

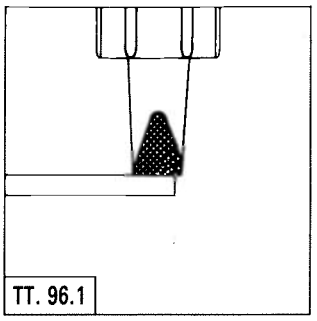
TT. 96.1

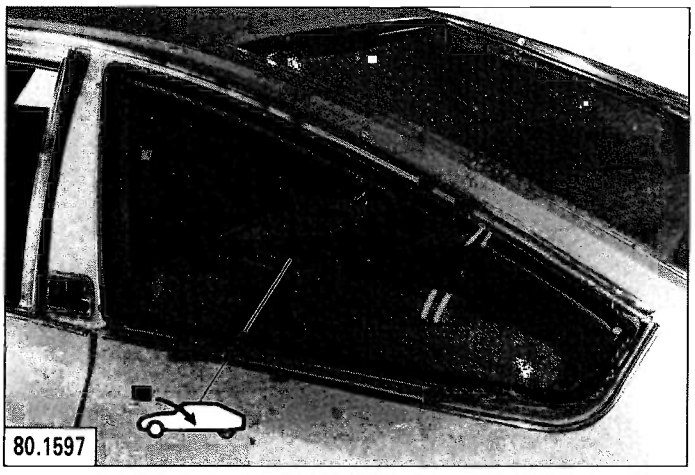
80.1597

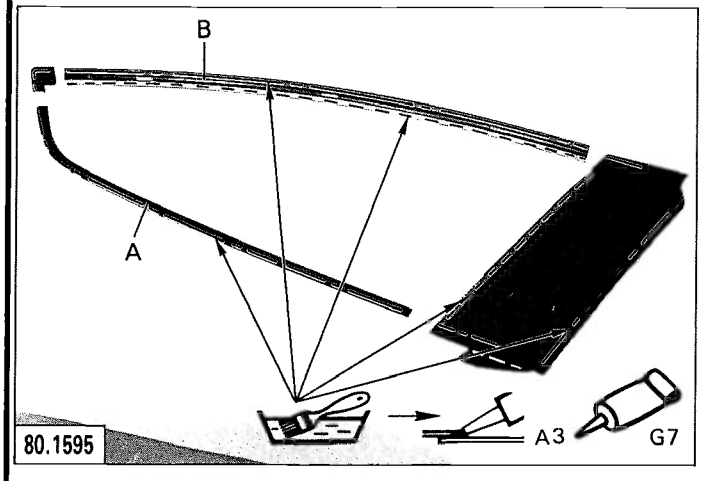

80.1595

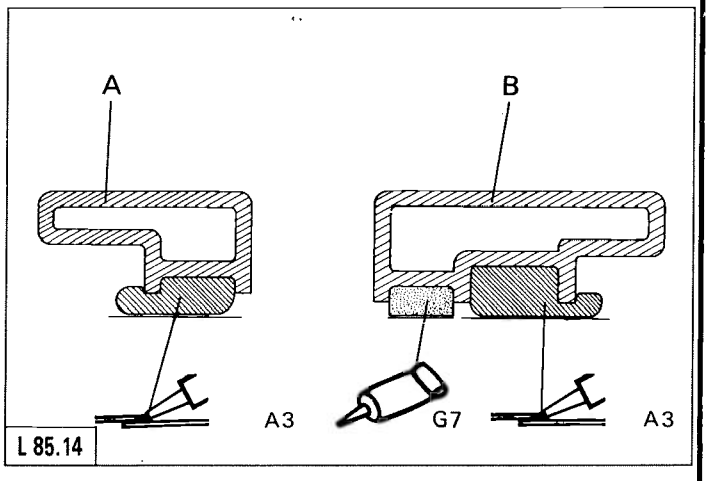

L 85.14

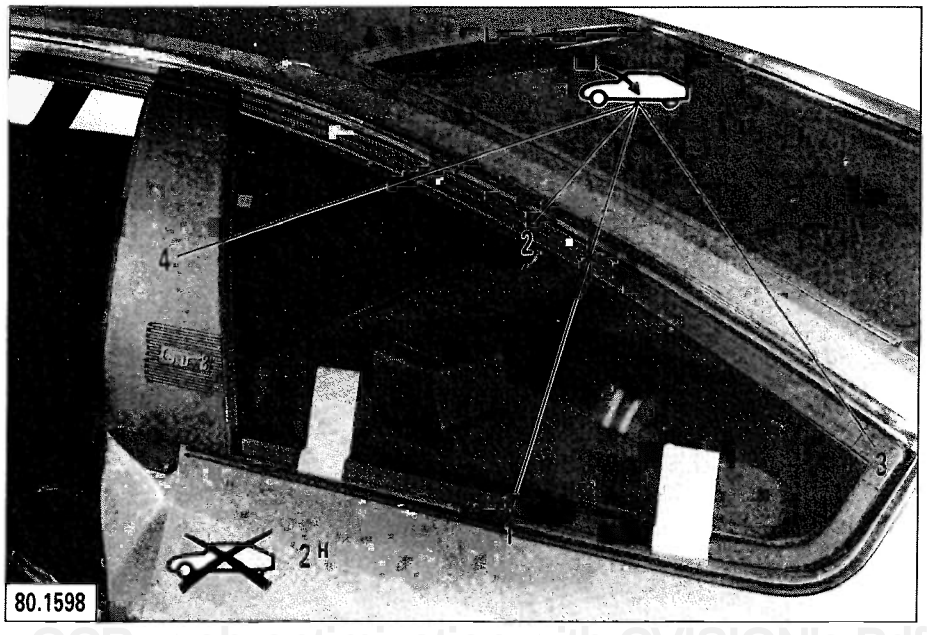

80.1598

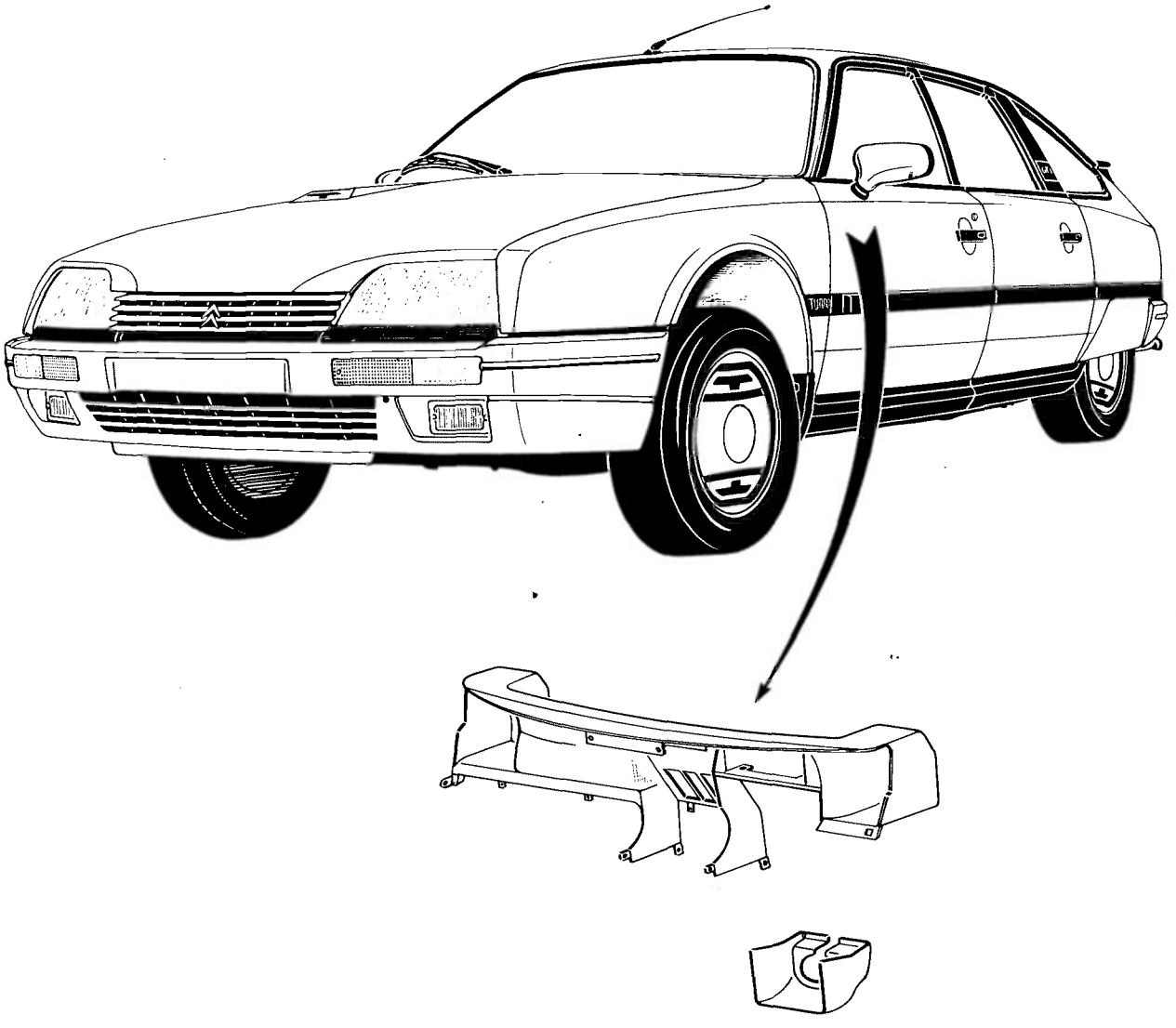

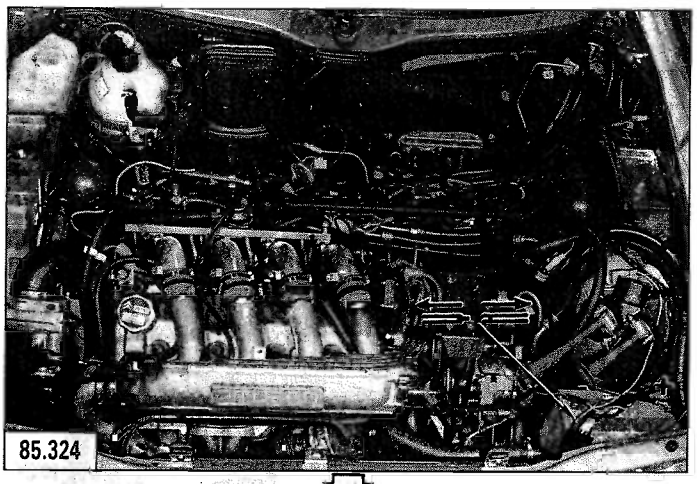
85.324

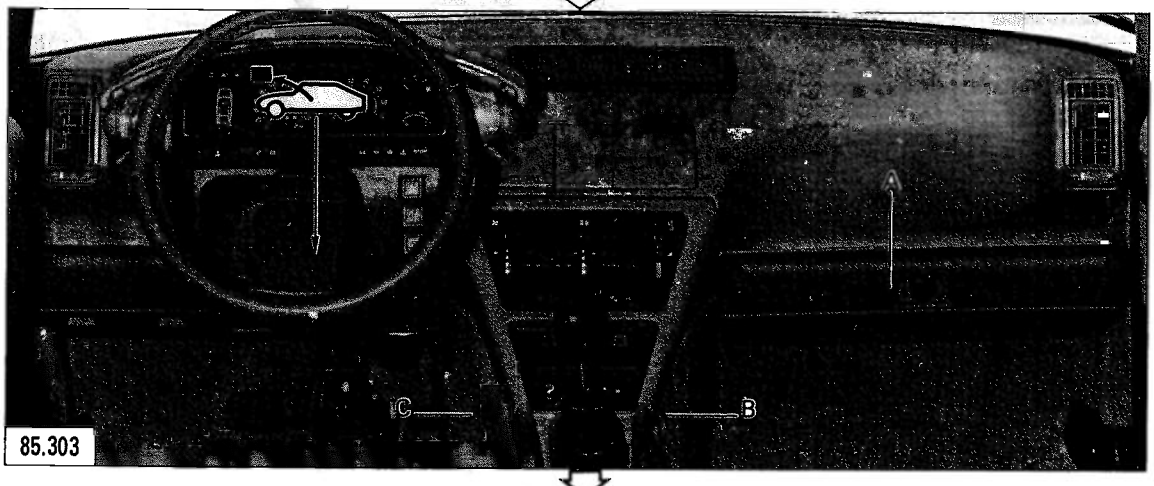

85.303

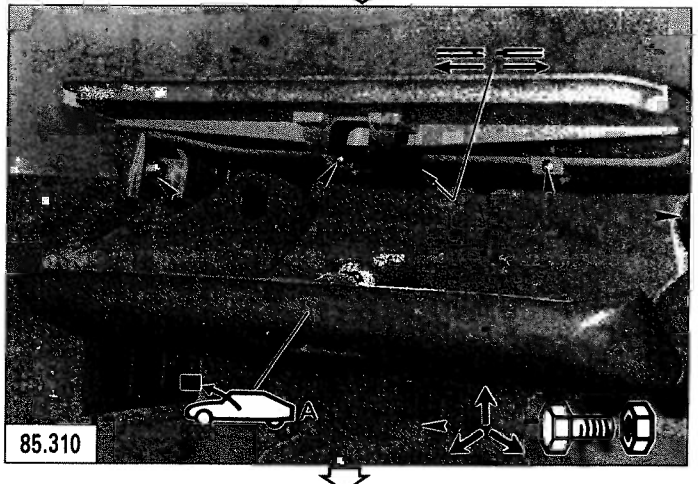

85.310

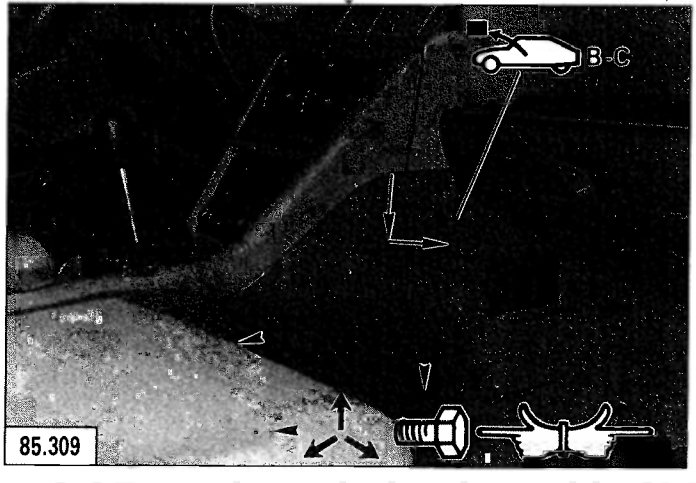

85.309

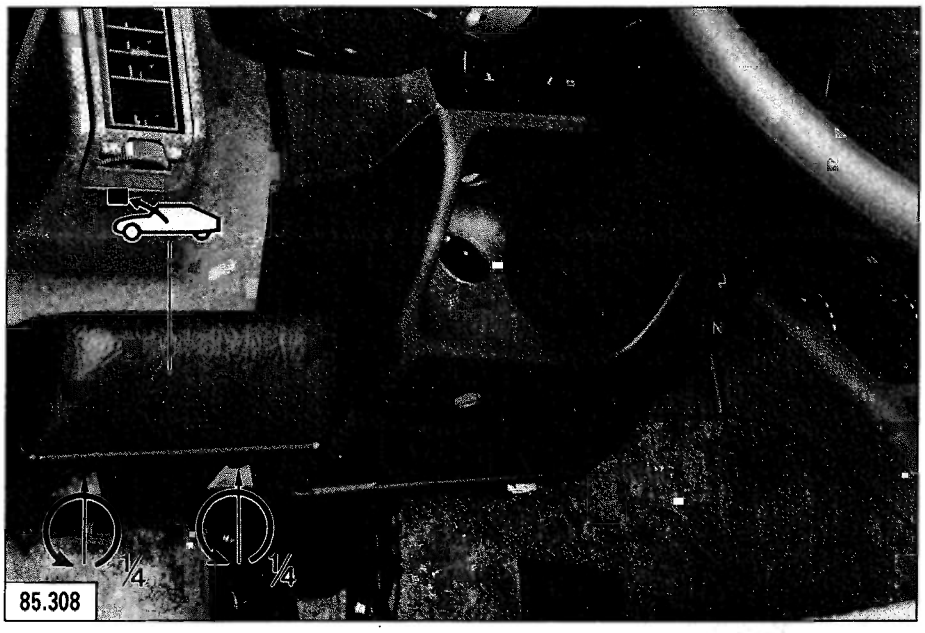

85.308

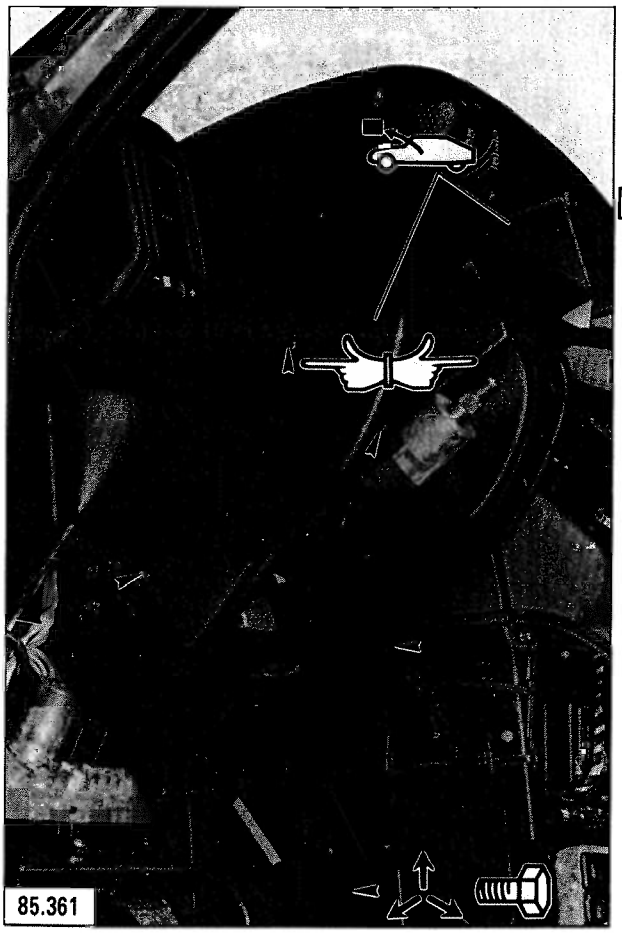
85.361

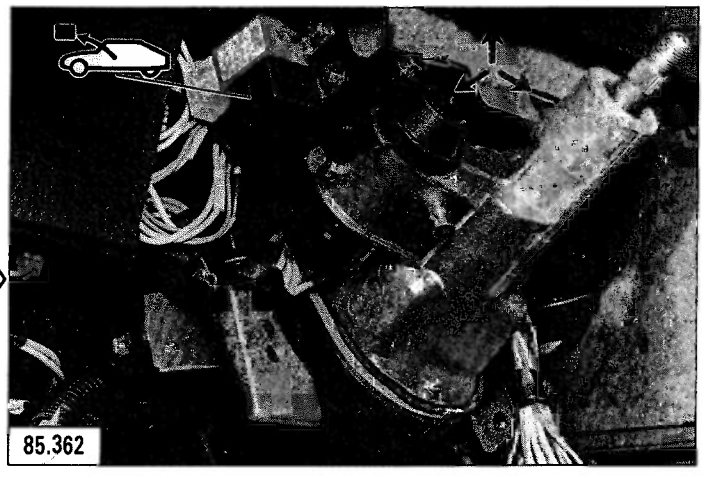
85.362

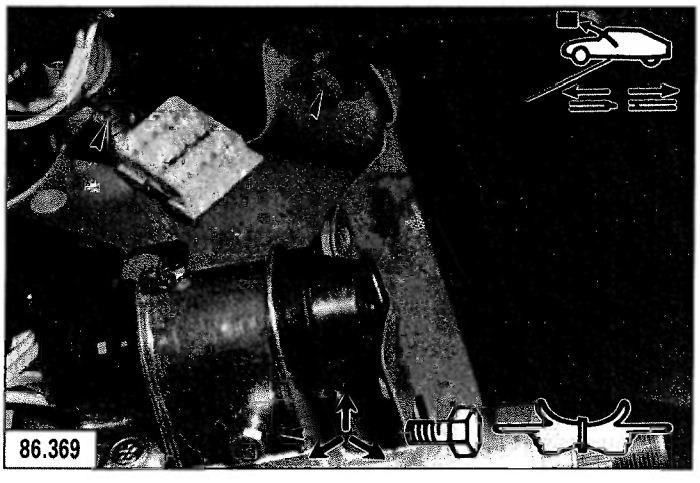
86.369

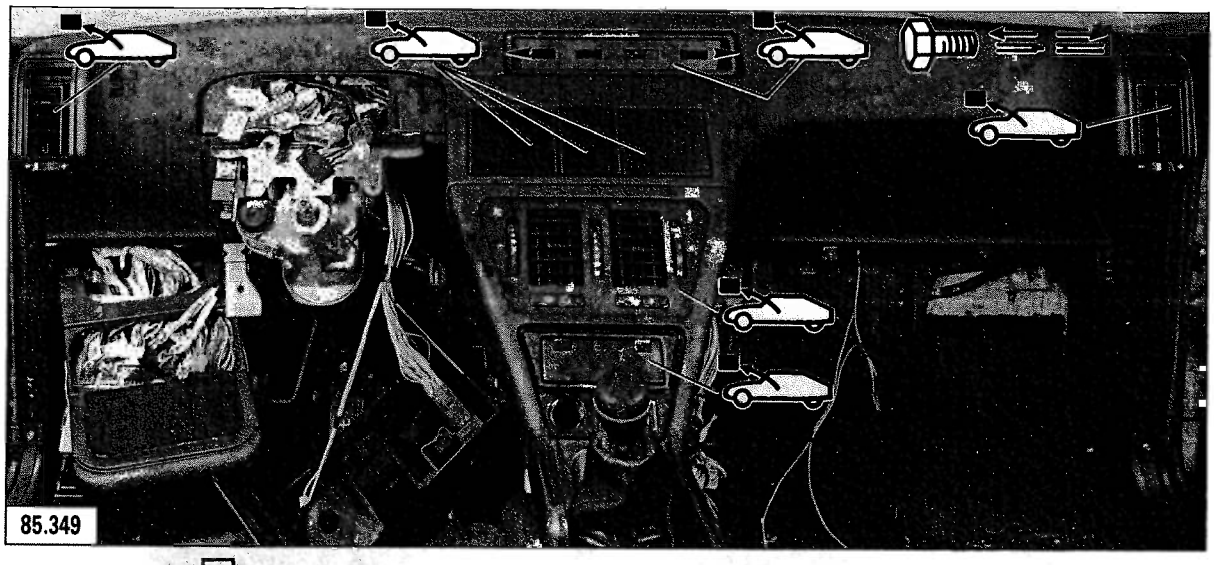
85.349


85.370

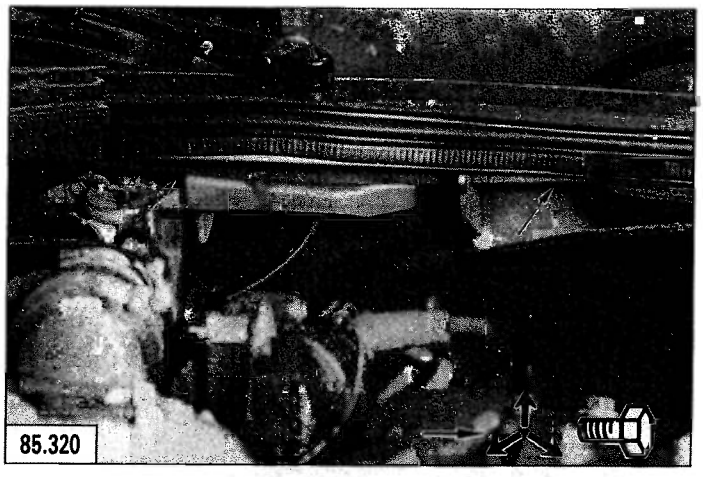
85.320

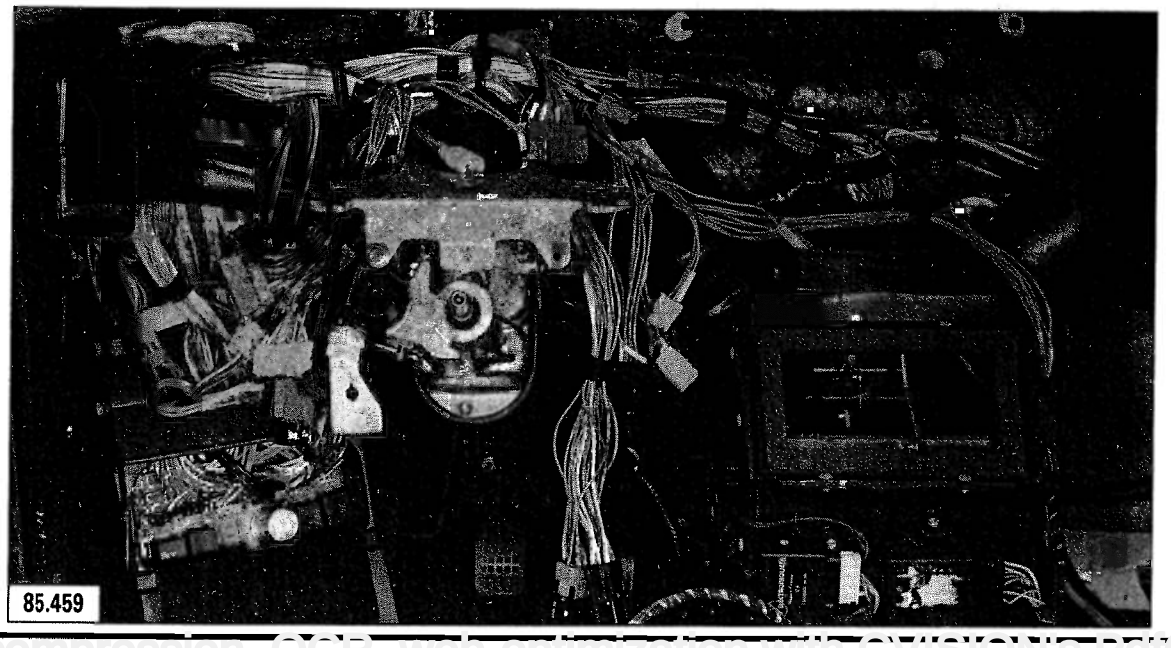
85.459

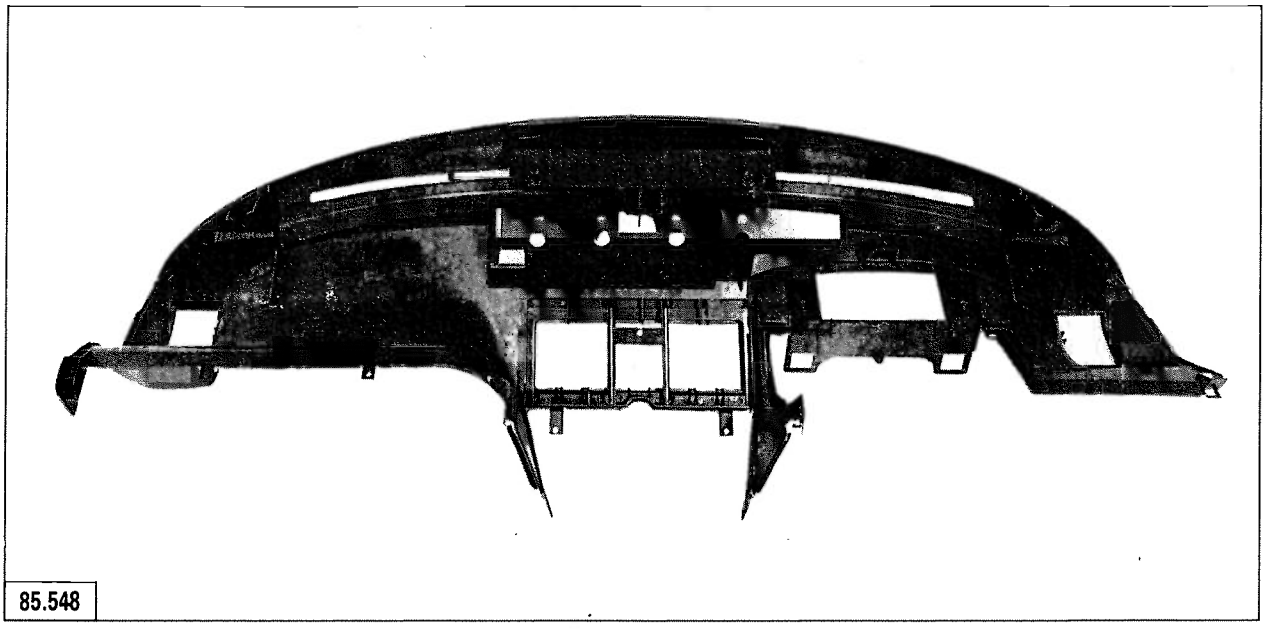

85.548

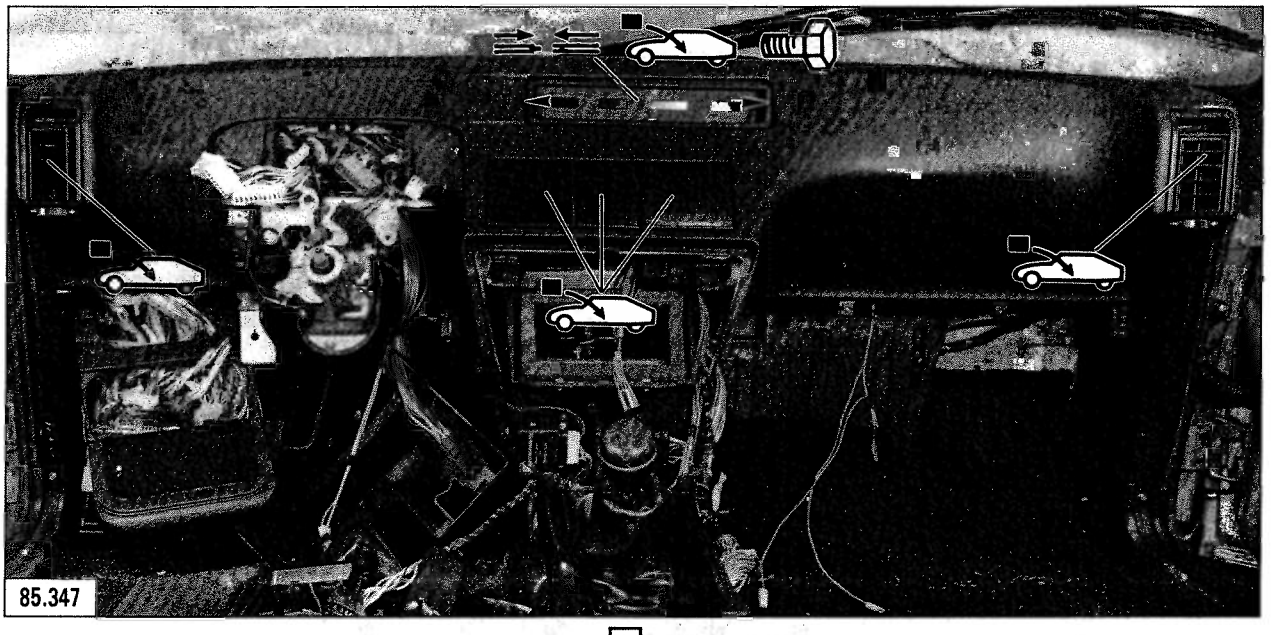

85.347

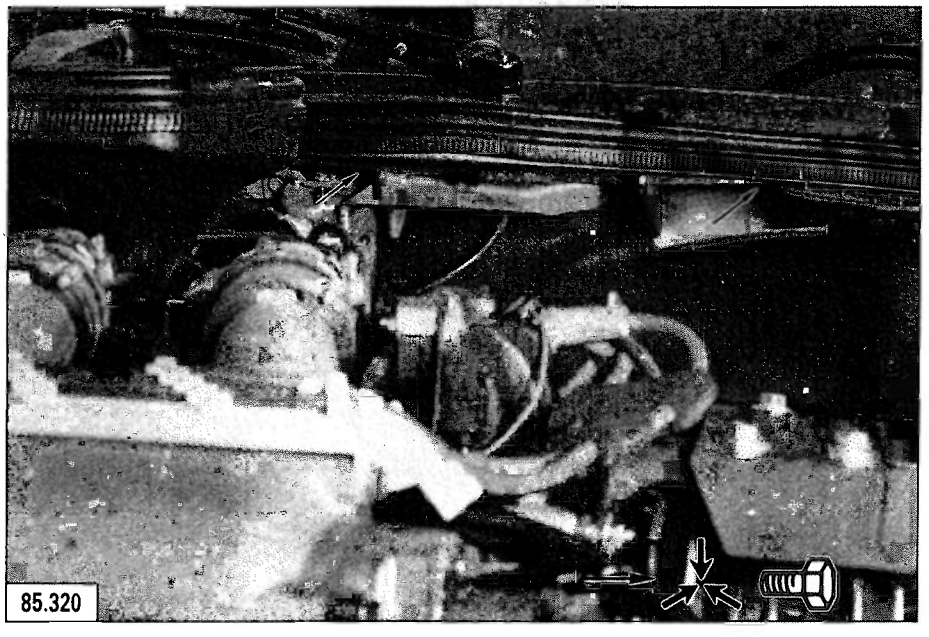

85.320

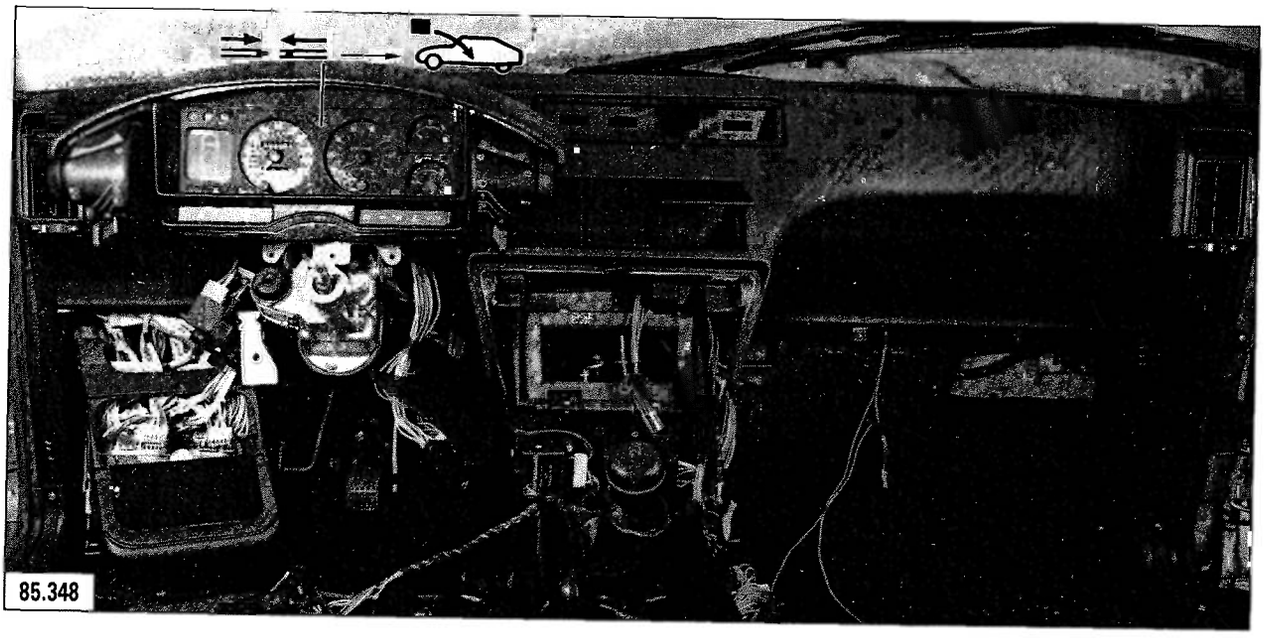
85.348

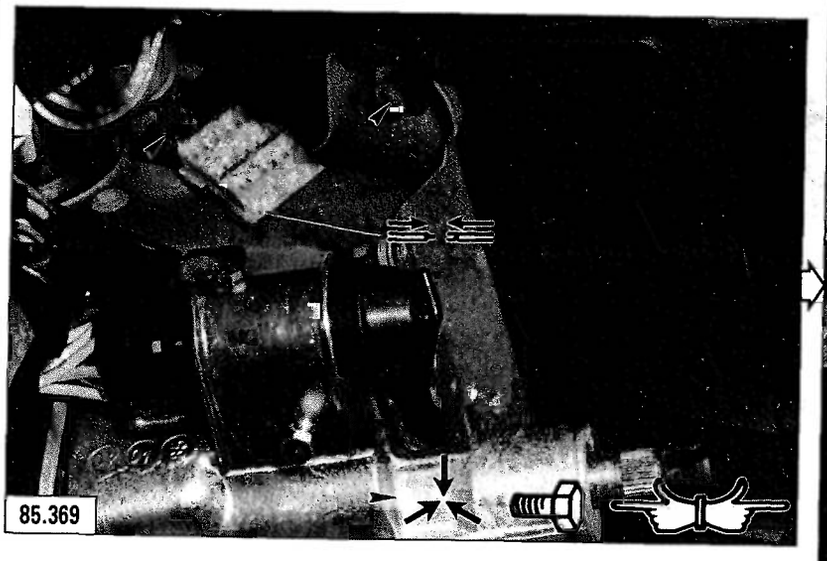
85.369

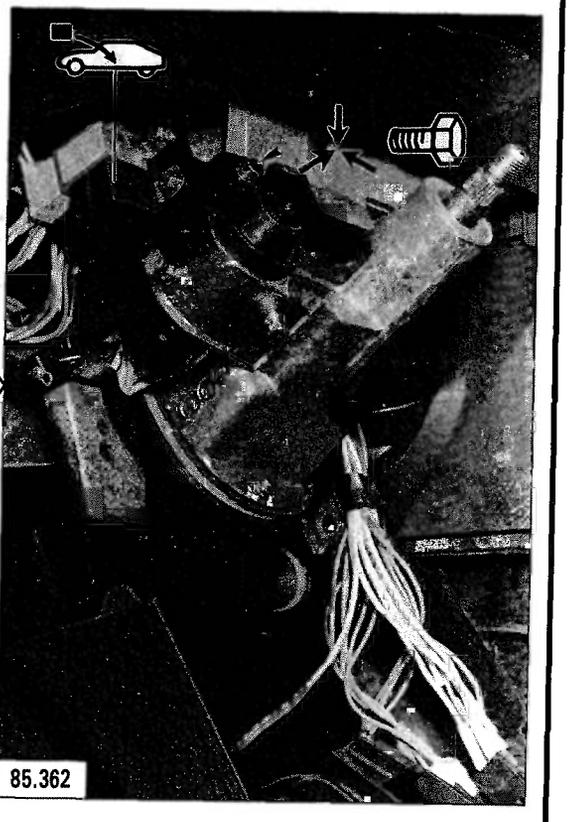
85.362

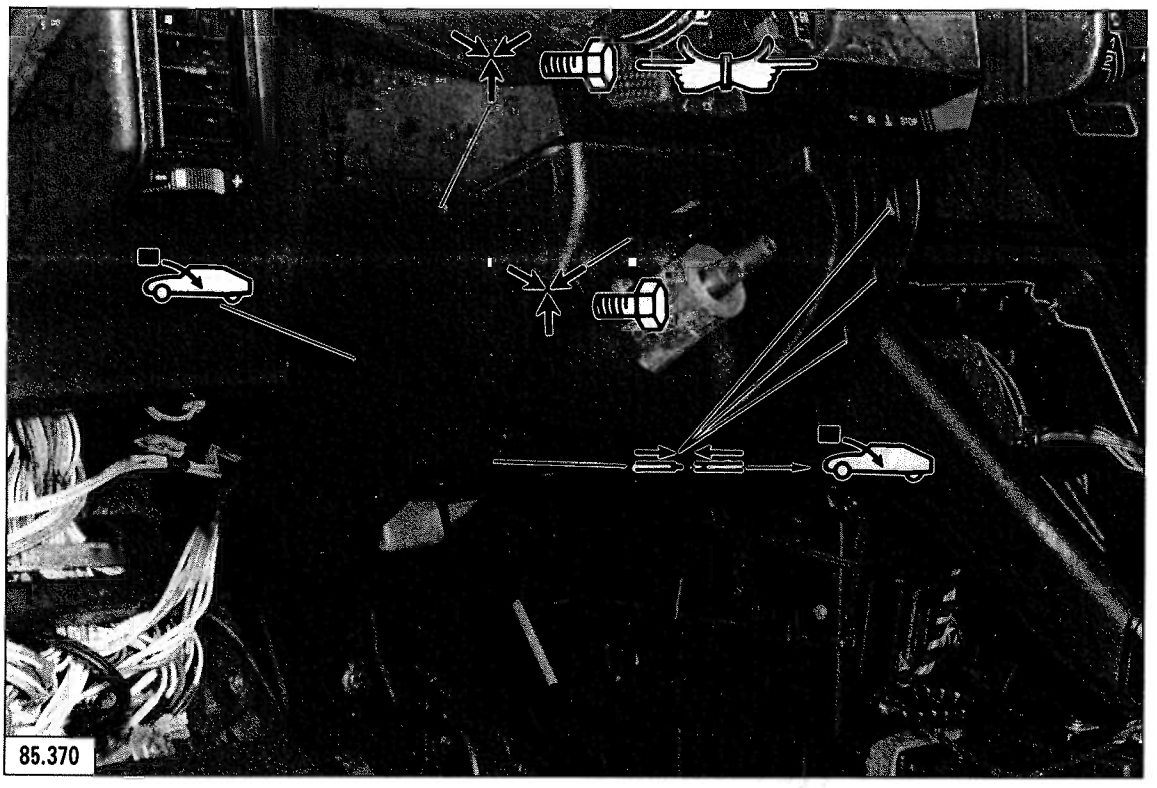
85.370

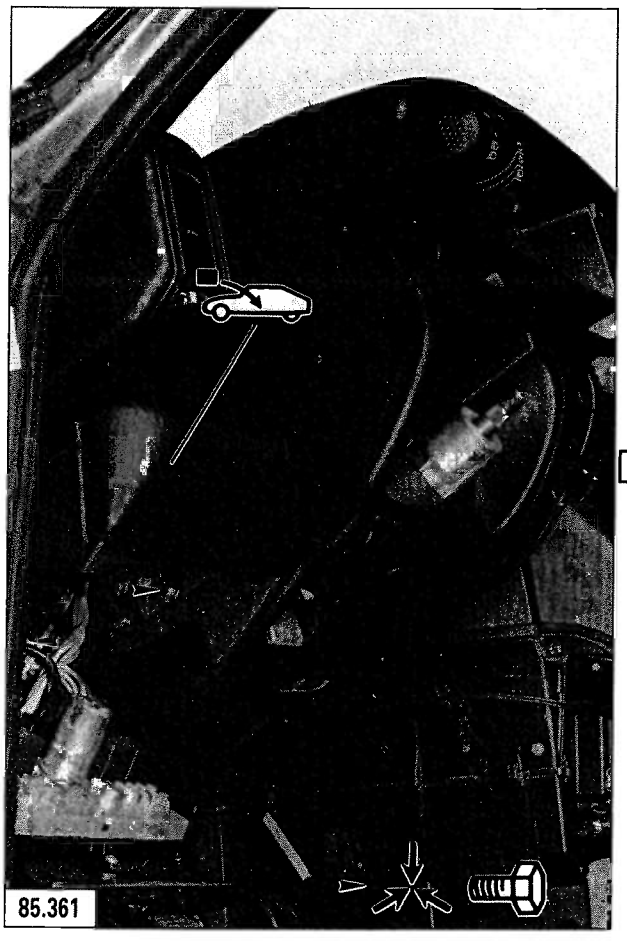
85.361

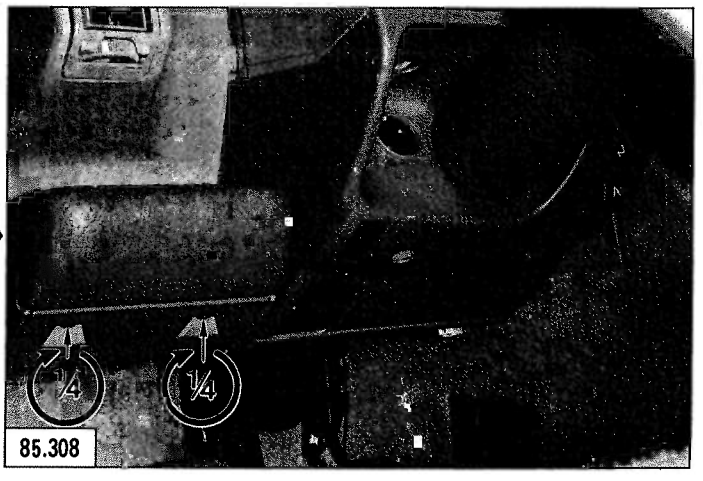

85.308

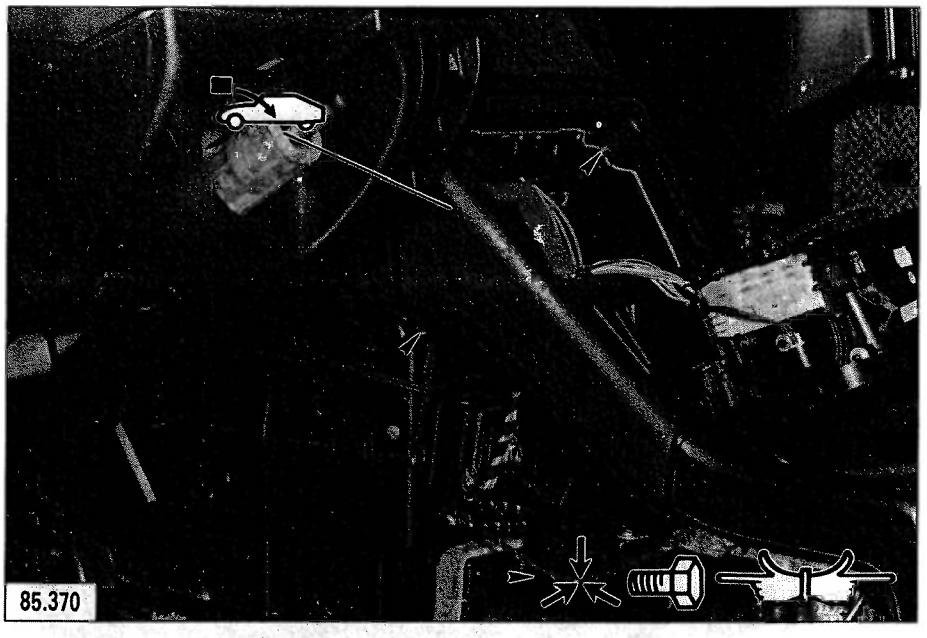
85.370

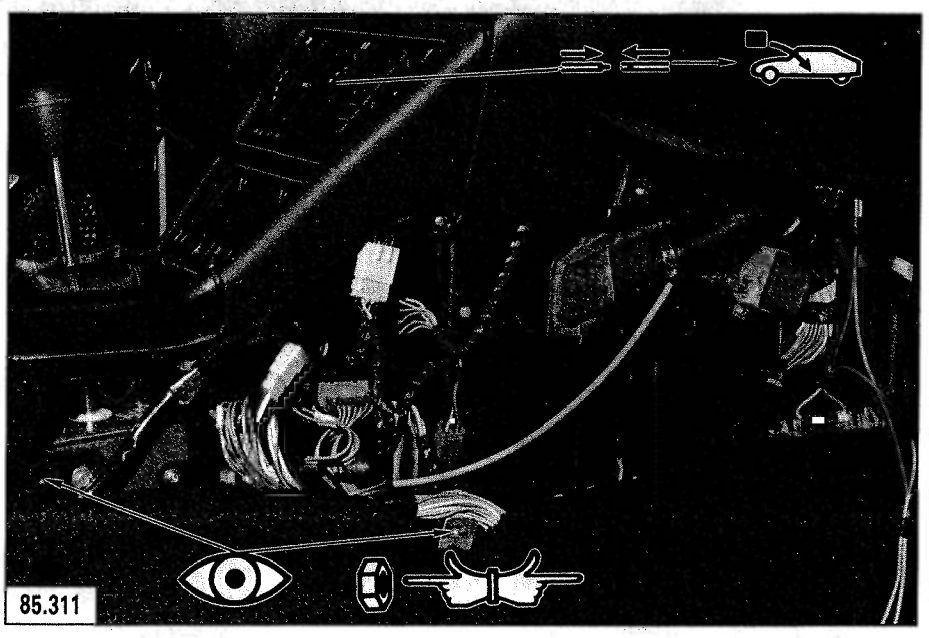
85.311

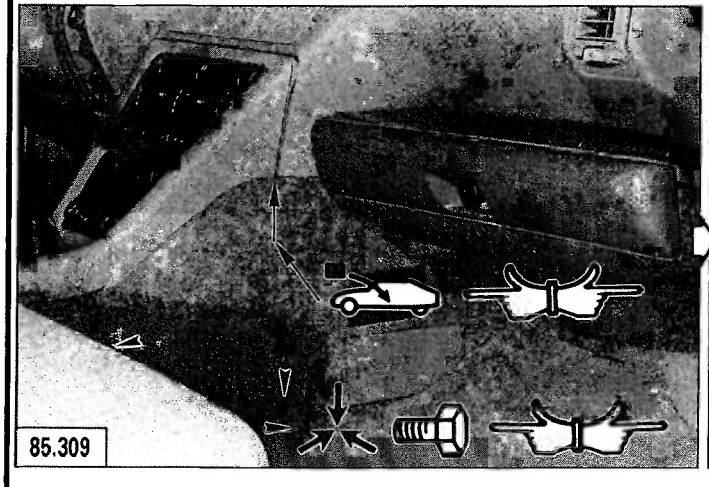
85.309

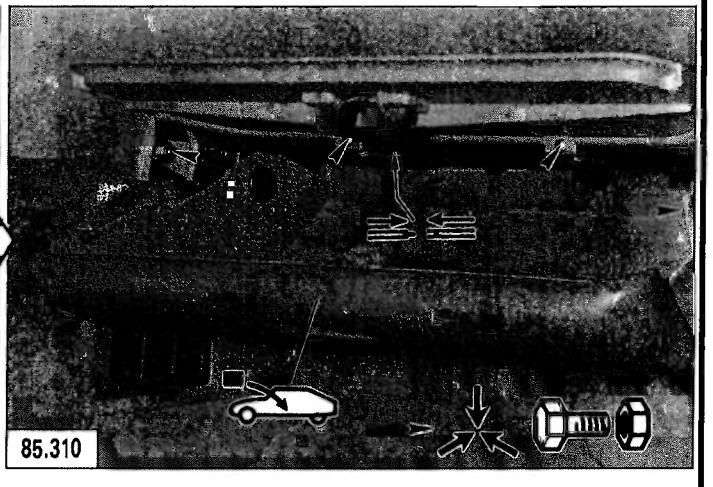
85.310

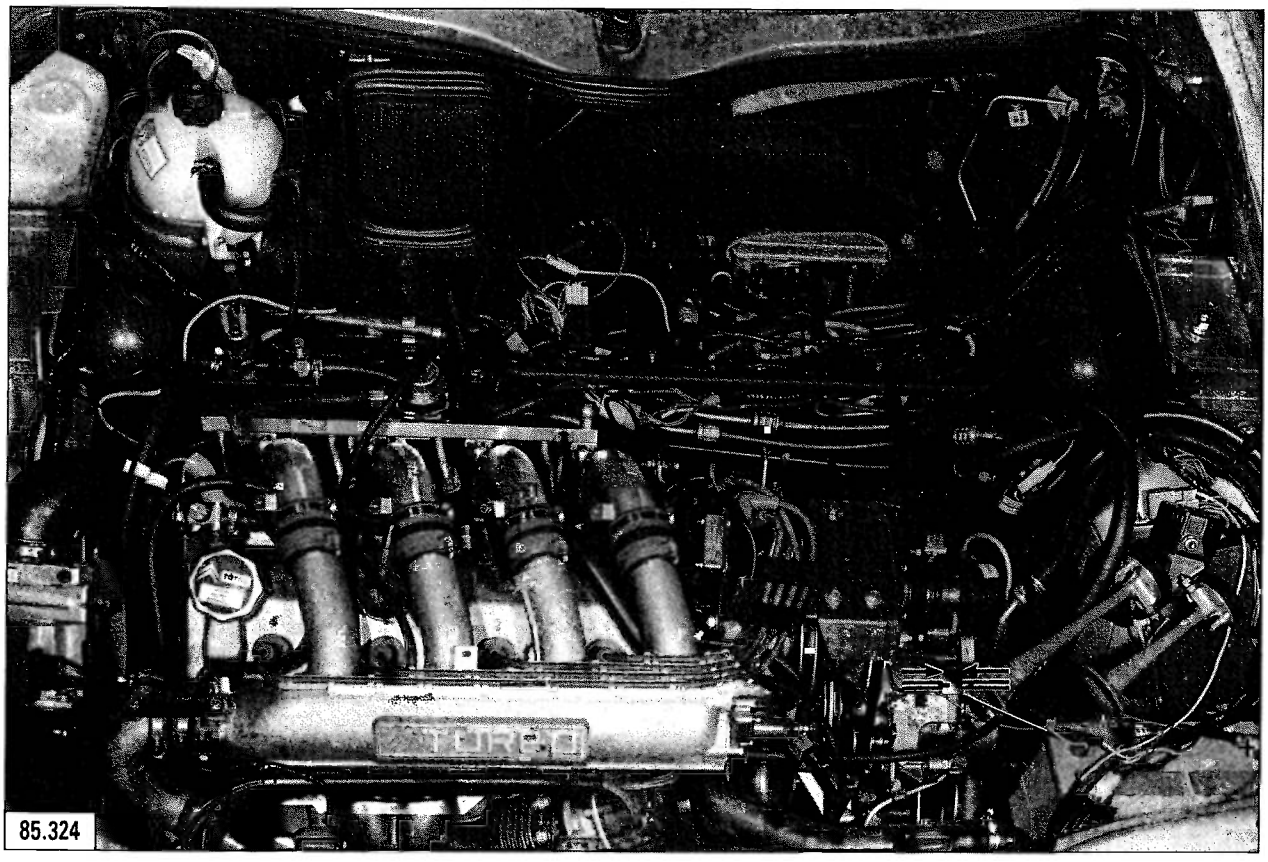

85.324

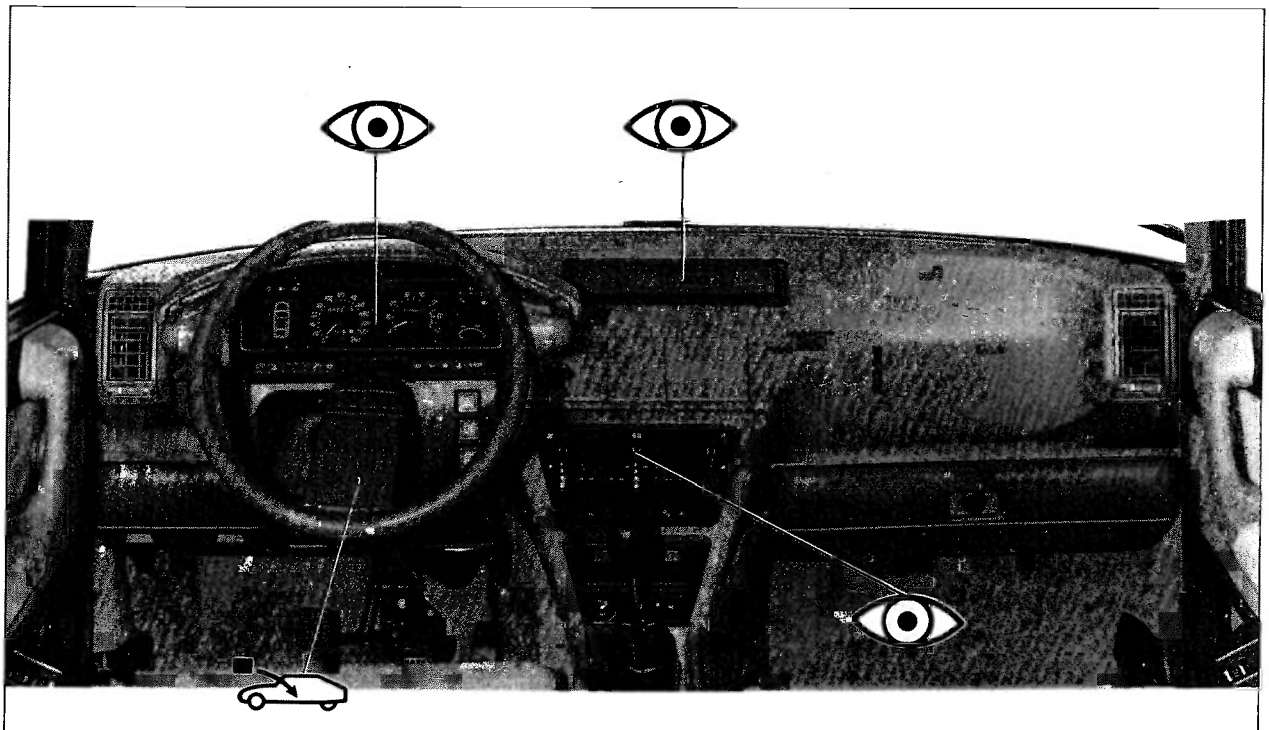

85.303

MANUFACTURING DRAWINGS FOR THE MR TOOLS APPEARING IN THE CHAPTER

TOOLS TO BE MADE UP

MR. 630.84/23 a: Tool for removing the plastic clips (page 3)
Developed length: 197 mm
Material: A 33-1 - Width: 20 mm - Thickness: 3 mm.

MR. 630.84/46: Tool for unlocking the bonnet (in case the lock does not operate correctly) (page 4).
Developed length: 540 mm approx.
Material: 5 mm dia. drawn steel bar (CC 35).

MR 630-84/23 a

UG. R50 √ (∽)

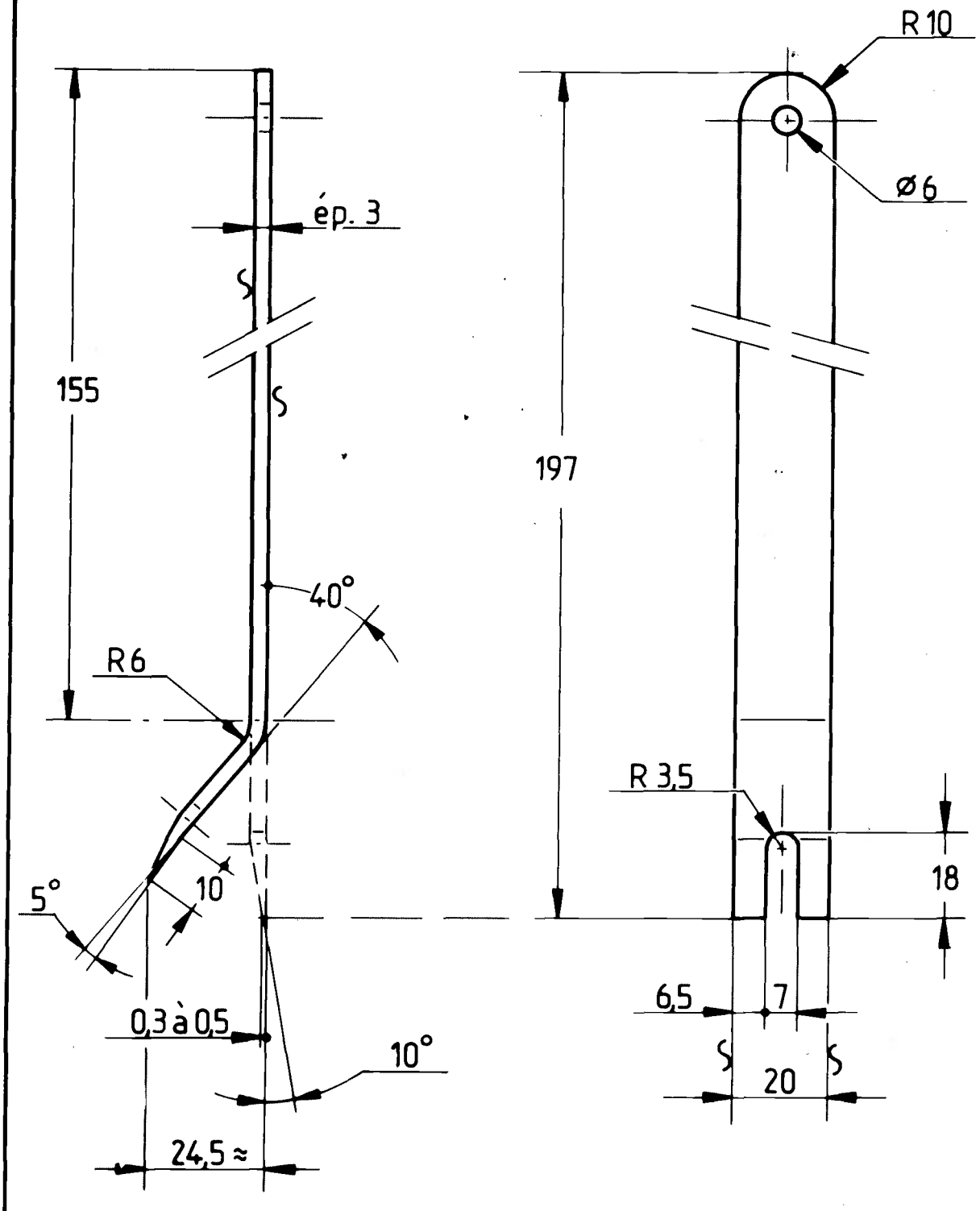

MR 630_84/46