YAMAHA

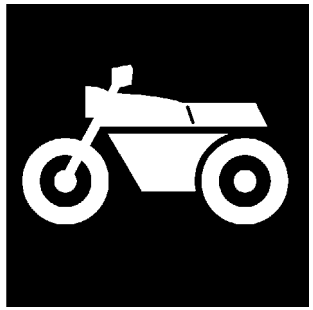

PARTS CATALOGUE
CATALOGO DE REPUESTOS

YBR125ESD (4P2G) C SOUTH AMERICA
YBR125E (4P2H) C SOUTH AMERICA
YBR125ED (4P2J) C SOUTH AMERICA

1M4P2-200S1

( )

YAMAHA
GENUINE
Parts & Accessories

YBR125E
YBR125ED/YBR125ESD
CATALOGO DE REPUESTOS
©2012 por Yamaha Motor Co., Ltd.
1ª edición, julio 2012
Todos los derechos reservados.
Toda reproducción o uso no autorizado
sin el consentimiento escrito de
Yamaha Motor Co., Ltd.
quedan expresamente prohibidos
Impreso en Japón.

YBR125E
YBR125ED/YBR125ESD
PARTS CATALOGUE
©2012 by Yamaha Motor Co., Ltd.
1st edition, July 2012
All rights reserved.
Any reprinting or unauthorized use
without the written permission of
Yamaha Motor Co., Ltd.
is expressly prohibited.
Printed in Japan.

PROLOGO

Este catálogo de repuestos corresponde a las piezas para el o los modelos que figuran en la página de portada. Al formular el pedido de repuestos, se ruega citar este catálogo y especificar correctamente el número y el nombre de las piezas.

1. Las modificaciones y agregados que se hayan realizado después de la edición de este Catálogo de Repuestos, serán anunciados en las Informaciones de Recambios.
   Es recomendable que se hagan las correcciones necesarias en el Catálogo de Repuestos de acuerdo con las Informaciones de Recambios.

2. Abreviaciones
   En este. Catálogo de Repuestos se emplean las siguientes abreviaciones.

   "UR" Usar el número de partes especificado
   "UN" Usar la cantidad necesaria
   "AP" Piezas sustitutivas
   "LM" Fabricación local (Hay que pedir los repuestos en las cercanías)
   "F#" Nº de bastidor (Nº aplicable a la máquina)
   "O/S" Sobredimensionado

3. La cantidad de componentes para el montaje
   - Los componentes, suministrados como conjunto, se describen con un punto (.) que precede al nombre del parte como se indica a continuación.
   - La numeración que aparece a la derecha de cada descripción indica la cantidad de partes por cada unidad de conjunto.

CODIGO Nº	DESCRIPCION	CANT.	OBSERVACIONES
2F5–83310–60	ENSAMBLAJE DE LA LUZ	2	
115–83311–60	.BOMBILLA (6V–18W)	1	

4. Los colores de los componentes se indican como sigue en la columna de "OBSERVACIONES".

CODIGO Nº	DESCRIPCION	CANT.	OBSERVACIONES
2N4–24110–00–X5	COMP. DEL TANQUE	2	MXR
3J1–24240–10	.GRAFICO, DEL TANQUE	1	PARA MXR

5. Debe tenerse en cuenta que las ilustraciones sirven como guia para la búsqueda de los números de partes y no deben usarse para el montaje. Durante el montaje, se recomienda usar el manual de taller correspondiente.

6. EL asterisco (*) antes del número de referencia indica los elementos modificados después de la primera edición.

FOREWORD

This Parts Catalogue is related to the parts for the model(s) on the cover page. When you are ordering replacement parts, please refer to this Parts Catalogue and quote both part numbers and part names correctly.

1. Modifications or additions which have been made after the issue of the Parts Catalogue will be announced in the Parts News.
   It is advisable that you make the necessary corrections to the Parts Catalogue according to the Parts News.

2. Abbreviations
   The following abbreviations are used in this Parts Catalogue.

   “UR” Use specified parts number.
   “UN” Use as many as needed.
   “AP” Alternate Parts
   “LM” Locally Made (Parts need to be ordered locally)
   “F#” Frame No. (Applicable machine No.)
   “O/S” Over Size

3. The number of components for assembly
   - Parts, which are to be supplied in an assembly, are listed with a dot (.) in front of the part name as shown below.
   - The numeral appearing to the right of each component part indicates the quantity of parts for each assembly unit.

PART NO.	DESCRIPTION	Q’TY	REMARKS
2F5–83310–60	FRONT FLASHER LIGHT ASSY	2	
115–83311–60	.BULB (6V–18W)	1	

4. Applicable colours of graphics are represented in the “REMARKS” as shown below.

PART NO.	DESCRIPTION	Q’TY	REMARKS
2N4–24110–00–X5	FUEL TANK COMP.	2	MXR
3J1–24240–10	.GRAPHIC, FUEL TANK	1	FOR MXR

5. Note that the illustrations for reference in finding parts numbers are not to be used for assembling. When assembling, please use the applicable service manual.

6. The asterisk (*) before a reference number indicates modified items after the first edition.

7. Números de serie

Nº de Serie del bastidor

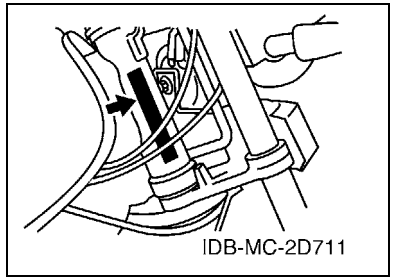

Nº de Serie del motor

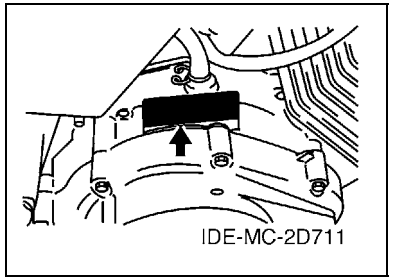

8. Códigos de color aplicables (El símbolo (*) muestra el color de modelo.)

Abreviatura	Nombre de color	Código de color
BWC1(*)	BLUISH WHITE COCKTAIL 1	0390
DPBMC(*)	DEEP PURPLISH BLUE METALLIC C	0564
LGM3(*)	LIGHT GRAY METALLIC 3	0137
SL	SILVER	0035
SMX(*)	BLACK METALLIC X	0903
VRC7(*)	VIVID RED COCKTAIL 7	0580
YB	YAMAHA BLACK	0033

9. Nº de serie inicial aplicable

Nº de Serie del bastidor

Nº de serie	Nombre de la columna de cantidades	Código de Modelo

Nº de Serie del motor

Nº de serie	Nombre de la columna de cantidades	Código de Modelo

7. Applicable Serial No.

Frame Serial No.

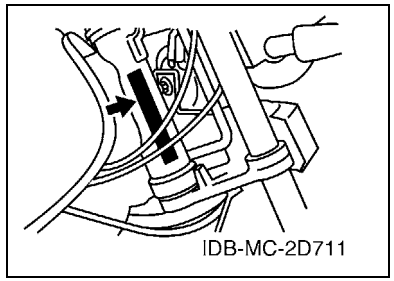

Engine Serial No.

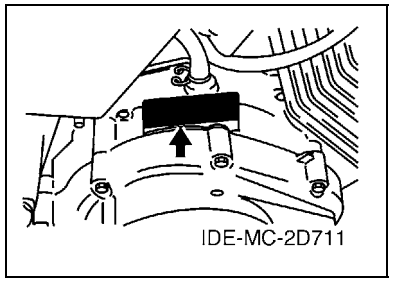

8. Applicable Colour Code (The (*) mark shows Model colour.)

Abbreviation	Colour Name	Colour Code
BWC1(*)	BLUISH WHITE COCKTAIL 1	0390
DPBMC(*)	DEEP PURPLISH BLUE METALLIC C	0564
LGM3(*)	LIGHT GRAY METALLIC 3	0137
SL	SILVER	0035
SMX(*)	BLACK METALLIC X	0903
VRC7(*)	VIVID RED COCKTAIL 7	0580
YB	YAMAHA BLACK	0033

9. Applicable Starting Serial No.

Frame Serial No.

Serial No.	Name Of Q'ty Column	Model Code

Engine Serial No.

Serial No.	Name Of Q'ty Column	Model Code

CONTENIDO

MOTOR

CILINDRO 1
CIGUENAL & PISTON 2
VALVULA 3
ARBOL DE LEVAS & CADENA 4
BOMBA DE ACEITE 5
ADMISION 6
CARBURADOR 7
DESCARGA 8
CARTER 9
CUBIERTA DE CARTER 1 10
ARRANQUE 11
EMBRAGUE DEL ARRANQUE 12
EMBRAGUE 13
TRANSMISION 14
LEVA DE CAMBIO & HORQUILLA 16
EJE DE CAMBIO & PEDAL 17

SHASIS

CUADRO 18
GUARDABARRO 19
CUBIERTA LATERAL 20
BRAZO TRASERO & SUSPENSION 22
DIRECCION 23
DIRECCION 2 24
HORQUILLA DELANTERA 25
HORQUILLA DELANTERA 2 27
DEPOSITO DE COMBUSTIBLE 29
ASIENTO 32
RUEDA DELANTERA 34
RUEDA DELANTERA 2 35
CALIBRE FRENO DELANTERA 37
RUEDA TRASERA 38
RUEDA TRASERA 2 40
MANILLAR & CABLE 42
MANILLAR & CABLE 2 43
CILINDRO MAESTRO DELANTERO 44
SOPORTE & APOYAPIE 45
BOVEDA 47
GENERADOR 48
MOTOR DE ARRANQUE 49
LUZ DE DESTELLADOR 50
LUZ DE DESTELLADOR 2 51
MEDIDOR 52
FARO DELANTERO 53
FARO DELANTERO 2 54
LUZ DE COLA 55
INTERRUPTOR DE MANILLAR&PALANC 56
EQUIPO ELECTRICO 1 58
EQUIPO ELECTRICO 2 59

INDICE

INDICE NUMERICO 60

CONTENTS

ENGINE

CYLINDER 1
CRANKSHAFT & PISTON 2
VALVE 3
CAMSHAFT & CHAIN 4
OIL PUMP 5
INTAKE 6
CARBURETOR 7
EXHAUST 8
CRANKCASE 9
CRANKCASE COVER 1 10
STARTER 11
STARTER CLUTCH 12
CLUTCH 13
TRANSMISSION 14
SHIFT CAM & FORK 16
SHIFT SHAFT 17

CHASSIS

FRAME 18
FENDER 19
SIDE COVER 20
REAR ARM & SUSPENSION 22
STEERING 23
STEERING 2 24
FRONT FORK 25
FRONT FORK 2 27
FUEL TANK 29
SEAT 32
FRONT WHEEL 34
FRONT WHEEL 2 35
FRONT BRAKE CALIPER 37
REAR WHEEL 38
REAR WHEEL 2 40
STEERING HANDLE & CABLE 42
STEERING HANDLE & CABLE 2 43
FRONT MASTER CYLINDER 44
STAND & FOOTREST 45
COWLING 47
GENERATOR 48
STARTING MOTOR 49
FLASHER LIGHT 50
FLASHER LIGHT 2 51
METER 52
HEADLIGHT 53
HEADLIGHT 2 54
TAILLIGHT 55
HANDLE SWITCH & LEVER 56
ELECTRICAL 1 58
ELECTRICAL 2 59

INDEX

NUMERICAL INDEX 60

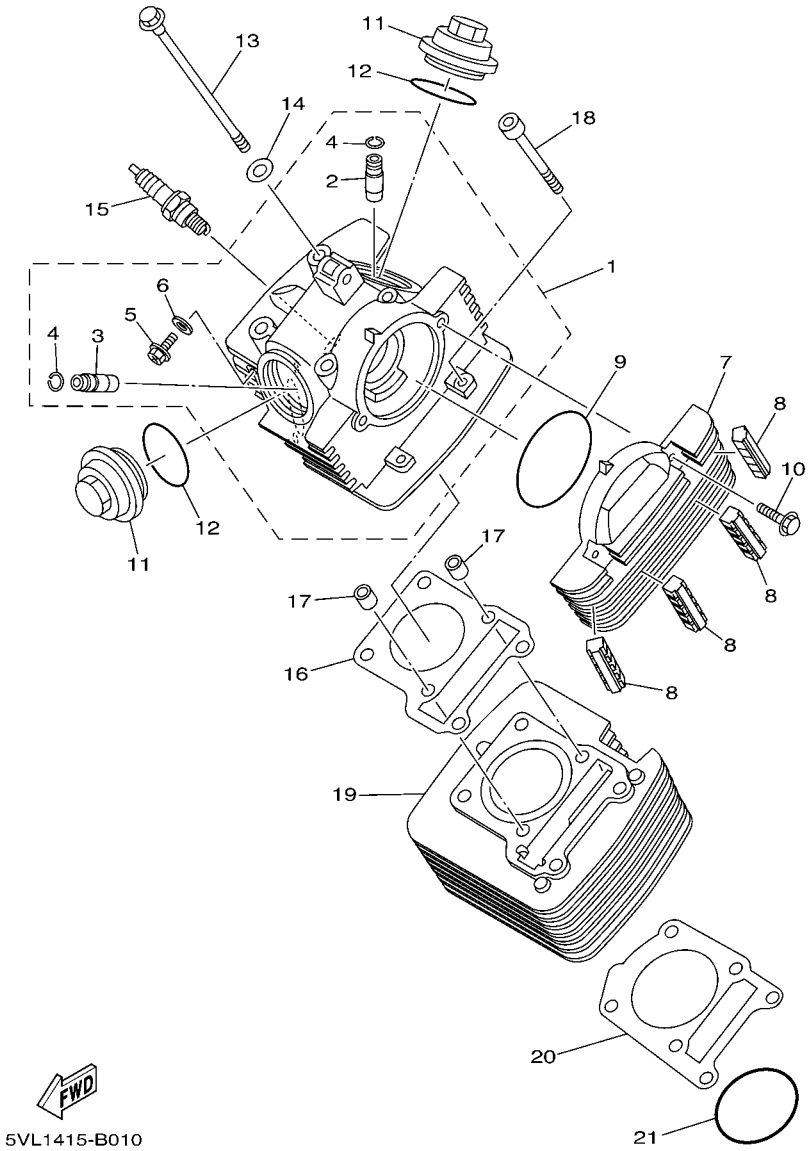

FIG. 1 CILINDRO — CYLINDER

REF. Nº	CODIGO Nº PART NO.	DESCRIPCION DESCRIPTION	4P2G	4P2H	4P2J			OBSERVACIONES REMARKS
1	5VL–E1111–01	CULATA CILINDRO 1 HEAD, CYLINDER 1	1	1	1			
2	2UJ–11133–10	.GUIA DE VALVULA 1 .GUIDE, VALVE 1	1	1	1			
3	22F–11134–10	.GUIA DE VALVULA 2 .GUIDE, VALVE 2	1	1	1			
4	93440–10109	.SEGURO .CIRCLIP	2	2	2			
5	90153–06803	.TORNILLO HEXAGONAL .SCREW, HEXAGON	1	1	1			
6	90430–06817	.JUNTA .GASKET	1	1	1			
7	5VL–E1185–00	CUBIERTA CULATA CIL.LAT.3 COVER, CYLINDER HEAD SIDE 3	1	1	1			
8	5VL–E1161–00	AMORTIGUADOR 1 ABSORBER 1	4	4	4			
9	93210–71801	ANILLO O O-RING	1	1	1			
10	95022–06020	PERNO, DE BRIDA BOLT, FLANGE	2	2	2			
11	5VL–E1186–00	CUBIERTA CULATA CIL.LAT.2 COVER, CYLINDER HEAD SIDE 2	2	2	2			
12	93210–44889	ANILLO O O-RING	2	2	2			
13	90105–08724	TORNILLO BOLT, FLANGE	4	4	4			
14	90201–088C3	ARANDELA PLANA WASHER, PLATE	4	4	4			
15	94700–00869	BUJIA (NGK CR6HSA) PLUG SPARK (NGK CR6HSA)	1	1	1			
16	5VL–E1181–00	JUNTA, DE CULATA 1 GASKET, CYLINDER HEAD 1	1	1	1			
17	99530–10114	PASADOR, DE ESPIGA PIN, DOWEL	2	2	2			
18	91312–06090	TORNILLO BOLT	2	2	2			
19	5VL–E1310–00	CILINDRO CYLINDER	1	1	1			
20	5VL–E1351–10	JUNTA, DE CILINDRO GASKET, CYLINDER	1	1	1			
21	93210–57897	ANILLO O O-RING	1	1	1			

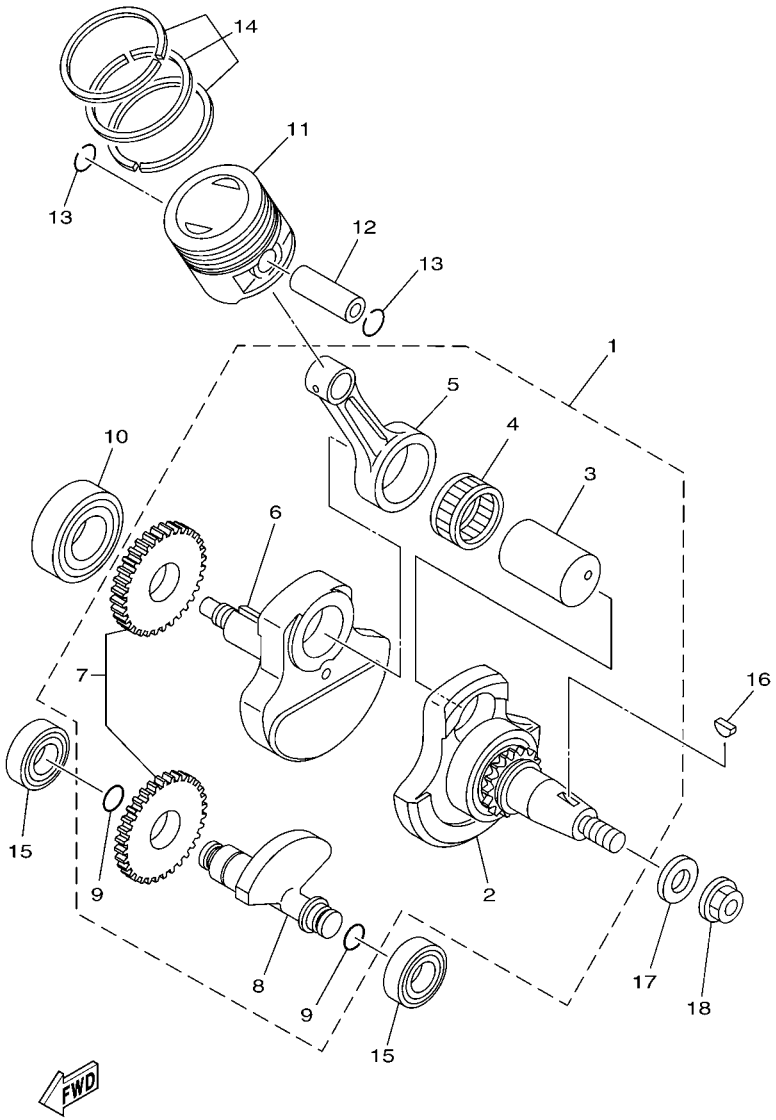

4P26200-G020

FIG. 2 CIGUENAL & PISTON — CRANKSHAFT & PISTON

REF. Nº	CODIGO Nº PART NO.	DESCRIPCION DESCRIPTION	4P2G	4P2H	4P2J			OBSERVACIONES REMARKS
1	2D0–W1140–00	CIGUENAL COMPLETO CRANKSHAFT ASSY	1	1	1			
2	2D0–W1141–00	.MANIVELA SEMI-ARMADA 1 .CRANK SUB ASSY 1	1	1	1			
3	5VL–E1681–00	.PASADOR MANIVELA 1 .PIN, CRANK 1	1	1	1			
4	93310–629Y3	.COJINETE DE RODILLOS .BEARING	1	1	1			
5	5VL–E1651–00	.BIELA .ROD, CONNECTING	1	1	1			
6	5VL–E1422–00	.MANIVELA 2 .CRANK 2	1	1	1			
7	5VL–Y1153–00	.ENGRANAJE TRACCION .GEAR, BALANCE WEIGHT ASSY.	1	1	1			
8	5VL–E1454–00	.PESO 1 .WEIGHT 1	1	1	1			
9	93210–11800	.ANILLO O .O-RING	2	2	2			
10	93306–205XJ	COJINETE BEARING	1	1	1			
11	5VL–E1631–00	PISTON (NORMA) PISTON (STD)	1	1	1			
12	5VL–E1633–00	PASADOR, PISTON PIN, PISTON	1	1	1			
13	93450–16812	SEGURO CIRCLIP	2	2	2			
14	5VL–Y1161–00	JUEGO DE ANILLOS (NORMA) PISTON RING SET (STD)	1	1	1			
15	93306–202XN	COJINETE BEARING	2	2	2			
16	90280–03017	CUNA WOODRUFF KEY, WOODRUFF	1	1	1			
17	90201–122H1	ARANDELA PLANA WASHER, PLATE	1	1	1			
18	90179–12863	TUERCA NUT	1	1	1			

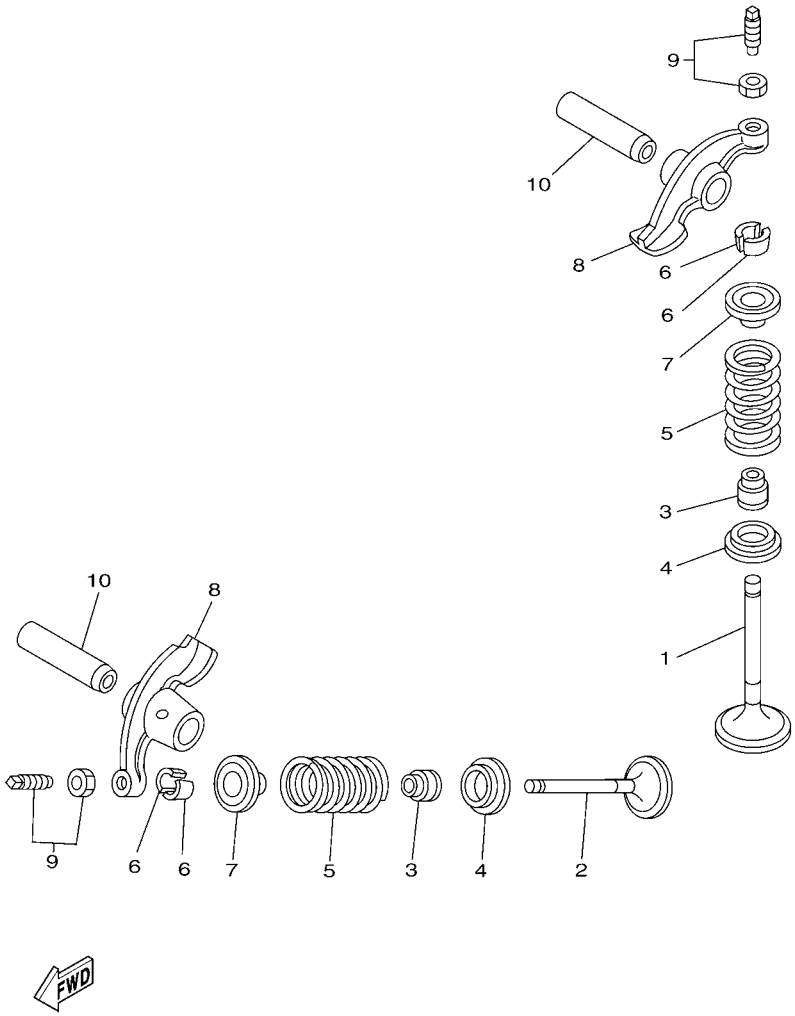

27S1300-G031

FIG. 3 VALVULA — VALVE

REF. Nº	CODIGO Nº PART NO.	DESCRIPCION DESCRIPTION	4P2G	4P2H	4P2J			OBSERVACIONES REMARKS
1	5VL–E2111–00	VALVULA DE ADMISION VALVE, INTAKE	1	1	1			
2	5VL–E2121–00	VALVULA DE ESCAPE VALVE, EXHAUST	1	1	1			
3	5VL–E2119–00	SELLO DE ACEITE VALVULA SEAL, VALVE STEM	2	2	2			
4	5VL–E2116–01	ASIENTO RESORTE DE VALVULA SEAT, VALVE SPRING	2	2	2			
5	5KA–12113–00	RESORTE VALVULA INTERNA SPRING, VALVE INNER	2	2	2			
6	5VL–E2118–00	SEGURO DE VALVULA COTTER, VALVE	4	4	4			
7	5VL–E2117–01	RETEN RESORTE DE VALVULA RETAINER, VALVE SPRING	2	2	2			
8	5VL–E2151–00	BRAZO DE BALANCIN DE VALVULA ARM, VALVE ROCKER	2	2	2			
9	5VL–Y1215–00	TORNILLO DE AJUSTE DE VALVULA SCREW, VALVE ADJUSTING	2	2	2			
10	5VL–E2156–00	EJE DE BALANCIN SHAFT, ROCKER 2	2	2	2			

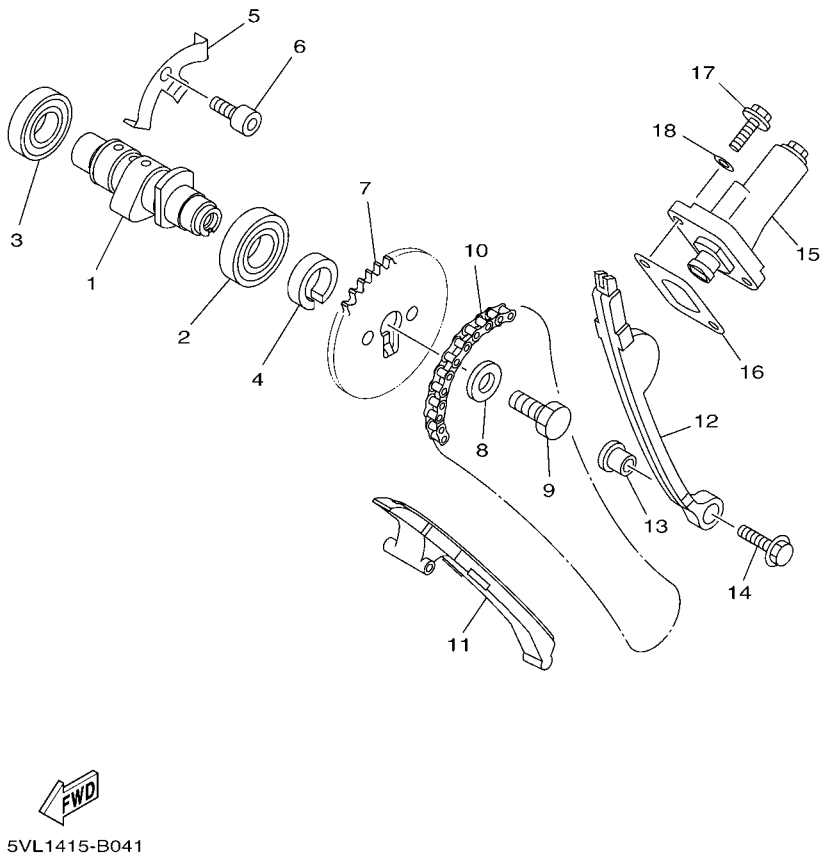

FIG. 4 ARBOL DE LEVAS & CADENA CAMSHAFT & CHAIN

REF. Nº	CODIGO Nº PART NO.	DESCRIPCION DESCRIPTION	4P2G	4P2H	4P2J			OBSERVACIONES REMARKS
1	5VL–E2171–00	ARBOL DE LEVAS 1 CAMSHAFT 1	1	1	1			
2	93306–003X6	COJINETE BEARING	1	1	1			
3	93306–002YU	COJINETE BEARING	1	1	1			
4	90387–167L5	ESPACIADOR COLLAR	1	1	1			
5	5VL–E111F–00	PLACA PLATE	1	1	1			
6	91312–06012	TORNILLO BOLT	1	1	1			
7	5VL–E2176–00	CATALINA DE CADENA (34T) SPROCKET, CAM CHAIN (34T)	1	1	1			
8	90201–08326	ARANDELA PLANA WASHER, PLATE	1	1	1			
9	90101–08820	TORNILLO BOLT	1	1	1			
10	94568–C1088	CADENA CHAIN	1	1	1			
11	5VL–E2231–00	TOPE DE GUIA 1 GUIDE, STOPPER 1	1	1	1			
12	5VL–E2241–00	TOPE DE GUIA 2 GUIDE, STOPPER 2	1	1	1			
13	5VL–E5598–00	COLLAR COLLAR	1	1	1			
14	95802–06020	TORNILLO DE REBORDE BOLT, FLANGE	1	1	1			
15	5VL–E2210–01	TENSOR CADENA DE LEVA TENSIONER ASSY, CAM CHAIN	1	1	1			
16	5VL–E2213–10	EMPAQUE DE CAJA TENSOR GASKET, TENSIONER CASE	1	1	1			
17	95022–06016	PERNO, DE BRIDA BOLT, FLANGE	2	2	2			
18	90430–06817	JUNTA GASKET	2	2	2			

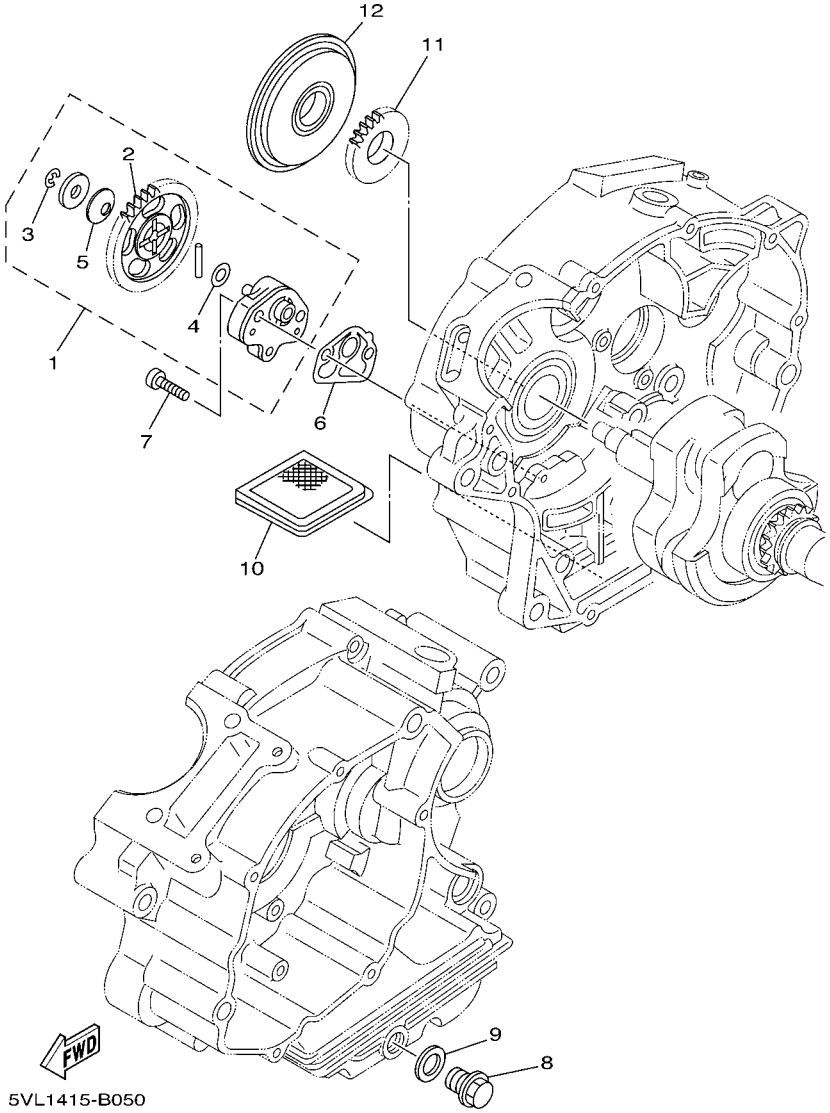

FIG. 5 BOMBA DE ACEITE OIL PUMP

REF. Nº	CODIGO Nº PART NO.	DESCRIPCION DESCRIPTION	4P2G	4P2H	4P2J			OBSERVACIONES REMARKS
1	5VL–E3300–01	BOMBA DE ACEITE COMPLETA OIL PUMP ASSY	1	1	1			
2	5VL–E3325–00	.ENGRANAJE IMPULSOR DE BOMBA 1 .GEAR, PUMP DRIVEN	1	1	1			
3	99002–05600	.PRESILLA REDONDA .CLIP	1	1	1			
4	90201–07641	.ARANDELA PLANA .WASHER, PLATE	1	1	1			
5	90208–07052	.ARANDELA DE RESORTE CONICO .WASHER, CONICAL SPRING	1	1	1			
6	5VL–E3329–00	EMPAQUE TAPA DE BOMBA GASKET, PUMP COVER	1	1	1			
7	90155–06800	TORNILLO CABEZA PLANA RAN. SCREW, FLAT FILLISTER	2	2	2			
8	90340–12097	TORNILLO, DE DRENAJE PLUG, STRAIGHT SCREW	1	1	1			
9	90430–12227	JUNTA GASKET	1	1	1			
10	4FP–E3411–00	FILTRO DE ACEITE STRAINER, OIL	1	1	1			
11	5VL–E3324–00	ENGRANAJE TRACC. DE BOMBA GEAR, PUMP DRIVE	1	1	1			
12	5VL–E3451–00	FILTRE ROTATIVO FILTER,ROTARY	1	1	1			

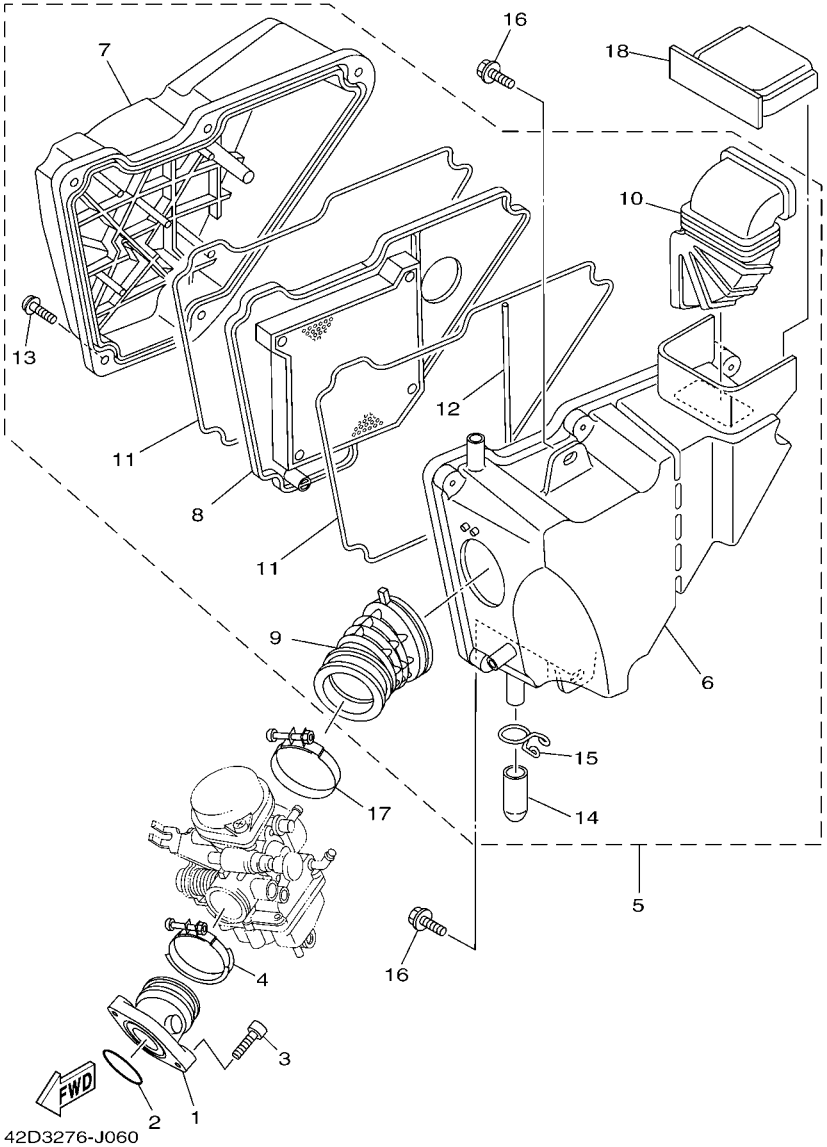

FIG. 6 ADMISION INTAKE

REF. Nº	CODIGO Nº PART NO.	DESCRIPCION DESCRIPTION	4P2G	4P2H	4P2J			OBSERVACIONES REMARKS
1	4P2–E3586–00	TOBERA DE CARBURADOR 1 JOINT, CARBURETOR 1	1	1	1			
2	93210–30611	ANILLO O O-RING	1	1	1			
3	91312–06025	TORNILLO BOLT	2	2	2			
4	90450–44804	BRIDA, MANGUERA HOSE CLAMP ASSY	1	1	1			
5	4P2–Y1441–01	FILTRO DE AIRE COMPLETO AIR CLEANER ASSY.	1	1	1			
6	5VL–E4411–00	.CAJA FILTRO DEL AIRE 1 .CASE, AIR CLEANER 1	1	1	1			
7	5VL–E4412–00	.TAPA CAJA DEL FILTRO 1 .CAP, CLEANER CASE 1	1	1	1			
8	5VL–E4450–00	.ELEMENTO COMP.FILTRO DE AIRE .ELEMENT ASSY, AIR CLEANER	1	1	1			
9	4P2–E4453–00	.UNION DEL FILTRO DEL AIRE 1 .JOINT, AIR CLEANER 1	1	1	1			
10	5VL–E4437–00	.CONDUCTO .DUCT	1	1	1			
11	5VL–E4452–00	.SELLO .SEAL	2	2	2			
12	5VL–E4462–00	.SELLO .SEAL	1	1	1			
13	97602–06220	.TORNILLO CON RONDONA .SCREW, PAN HEAD W/WASHER	5	5	5			
14	5VL–E443E–00	TUBO, DRENAJE PIPE, DRAIN	1	1	1			
15	5VL–E4424–01	PRESILLA ACCESORIO DE TAPA CLIP, CAP FITTING	1	1	1			
16	90119–06869	TORNILLO CON ARANDELA BOLT, WITH WASHER	2	2	2			
17	90450–51802	BRIDA, MANGUERA HOSE CLAMP ASSY	1	1	1			
18	5VL–E4417–00	CUBIERTA 1 COVER 1	1	1	1			

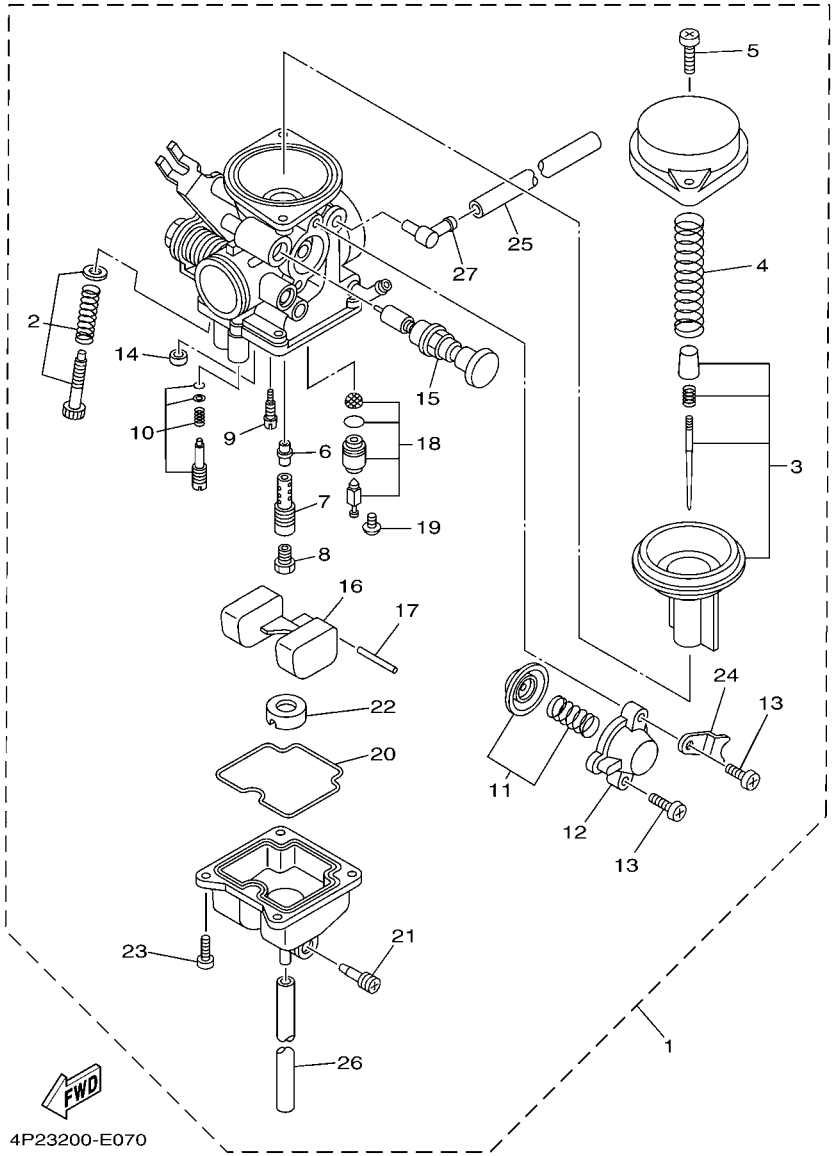

FIG. 7 CARBURADOR CARBURETOR

REF. Nº	CODIGO Nº PART NO.	DESCRIPCION DESCRIPTION	4P2G	4P2H	4P2J			OBSERVACIONES REMARKS
1	4P2–E4301–01	CARBURADOR COMPLETO 1 CARBURETOR ASSY 1	1	1	1			
2	4P2–W149K–00	.CJTO. TORNILLO DEL RALENTI .THROTTLE SCREW SET	1	1	1			
3	4P2–W149J–00	.CJTO. AGUJA .NEEDLE SET	1	1	1			
4	4P2–E4286–00	.RESORTE .SPRING	1	1	1			
5	5LB–E4214–00	.TORNILLO DE CABEZA CON PLANA .SCREW, PAN HEAD	2	2	2			
6	5RS–E4341–00	.BOQUILLA PRINCIPAL .NOZZLE, MAIN	1	1	1			
7	5RS–E4341–10	.BOQUILLA PRINCIPAL .NOZZLE, MAIN	1	1	1			
8	288–E4343–60	.INYECTOR PRINCIPAL (#120) .JET, MAIN (#120)	1	1	1			
9	5LB–E4342–17	.ESPREA DE PILOTO (# 34) .JET, PILOT (# 34)	1	1	1			
10	4P2–W1415–00	.TORNILLO DE PILOTO .PILOT SCREW SET	1	1	1			
11	4P2–W149A–00	.CONTROL REMOTO .DIAPHRAGM SET 1	1	1	1			
12	5LB–E4293–00	.CUBIERTA .COVER 1	1	1	1			
13	97801–04010	.TORNILLO DE MUESCA .SCREW, PAN HEAD	2	2	2			
14	50M–E4355–00	.ASIENTO .NOZZLE, MAIN 2	1	1	1			
15	4P2–E4371–00	.EMBOLO DE ARRANQUE .PLUNGER, STARTER	1	1	1			
16	5LB–E4385–00	.BOIA .FLOAT	1	1	1			
17	5LB–E4386–00	.PASADOR DE BOIA .PIN, FLOAT	1	1	1			
18	1BV–E4390–00	.VALVULA DE AGUJA COMPLETA .NEEDLE VALVE ASSY	1	1	1			
19	30S–14325–00	.TORNILLO CABEZA REDONDA .SCREW, PAN HEAD	1	1	1			
20	5LB–E4384–00	.EMPAQUE DE CAMARA DE BOIA .GASKET, FLOAT CHAMBER	1	1	1			
21	4JP–E4323–00	.TORNILLO DE AJUSTE DE AIRE .SCREW, AIR ADJUSTING	1	1	1			
22	5LB–E4153–00	.PLACA,BAFFLE .PLATE,BAFFLE	1	1	1			
23	5LB–E4592–00	.TORNILLO .SCREW	4	4	4			
24	5LB–E4292–00	.SOPORTE 2 .BRACKET 2	1	1	1			
25	4P2–E4197–00	.TUBO RESPIRADERO .PIPE	1	1	1			
26	4P2–E4196–00	.TUBO DE DRENASE .PIPE, OVER FLOW 1	1	1	1			
27	5FY–E4251–00	.NIPLE .NIPPLE	1	1	1			

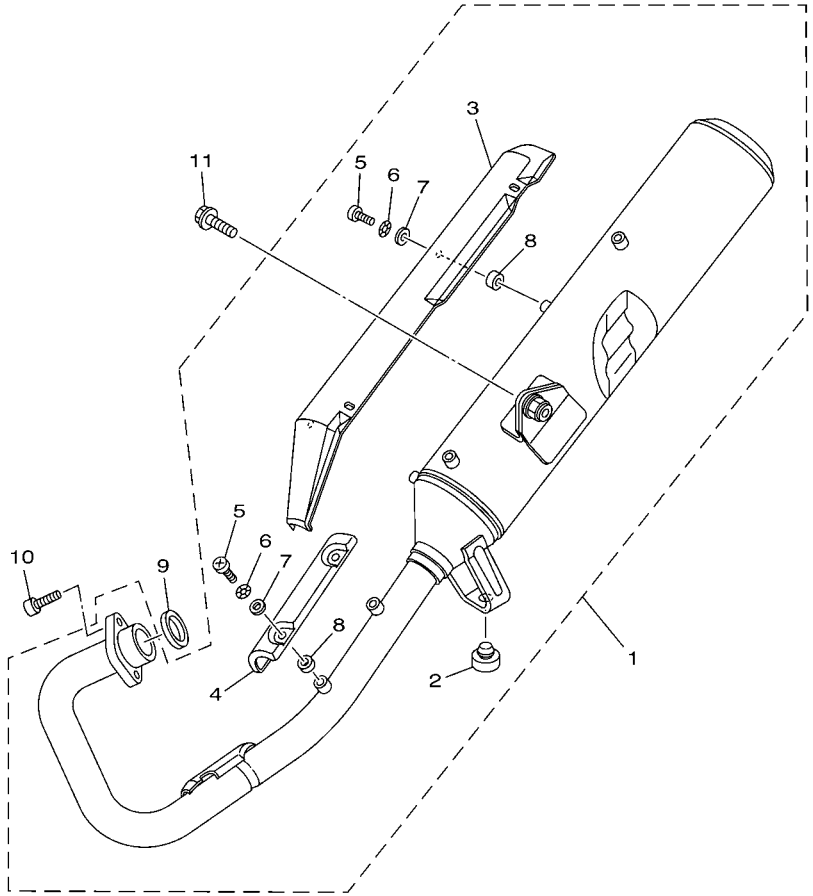

2D71516-C080

FIG. 8 DESCARGA EXHAUST

REF. Nº	CODIGO Nº PART NO.	DESCRIPCION DESCRIPTION	4P2G	4P2H	4P2J			OBSERVACIONES REMARKS
1	5VL–E4710–00	TUBO DE ESCAPE COMPLETO 1 MUFFLER ASSY 1	1	1	1			
2	4TU–F4741–00	.COJIN DE ASIENTO .PAD, SEAT	1	1	1			
3	5VL–E4758–00	.PROTECTOR DE SILENCIADOR .PROTECTOR, SILENCER	1	1	1			
4	5VL–E4628–00	.PROTECTOR DE TUBO DE ESCAPE .PROTECTOR, EXHAUST PIPE	1	1	1			
5	98980–06012	.TORNILLO DE LIGAR .SCREW, BIND	6	6	6			
6	90206–06090	.ARANDELA ONDULADA .WASHER, WAVE	6	6	6			
7	90201–05803	.ARANDELA PLANA .WASHER, PLATE	6	6	6			
8	90201–05804	.ARANDELA PLANA .WASHER, PLATE	6	6	6			
9	5VL–E4613–00	JUNTA, TUBO DE ESCAPE GASKET, EXHAUST PIPE	1	1	1			
10	91312–06020	TORNILLO BOLT	2	2	2			
11	95812–08020	TORNILLO DE REBORDE BOLT, FLANGE	1	1	1			

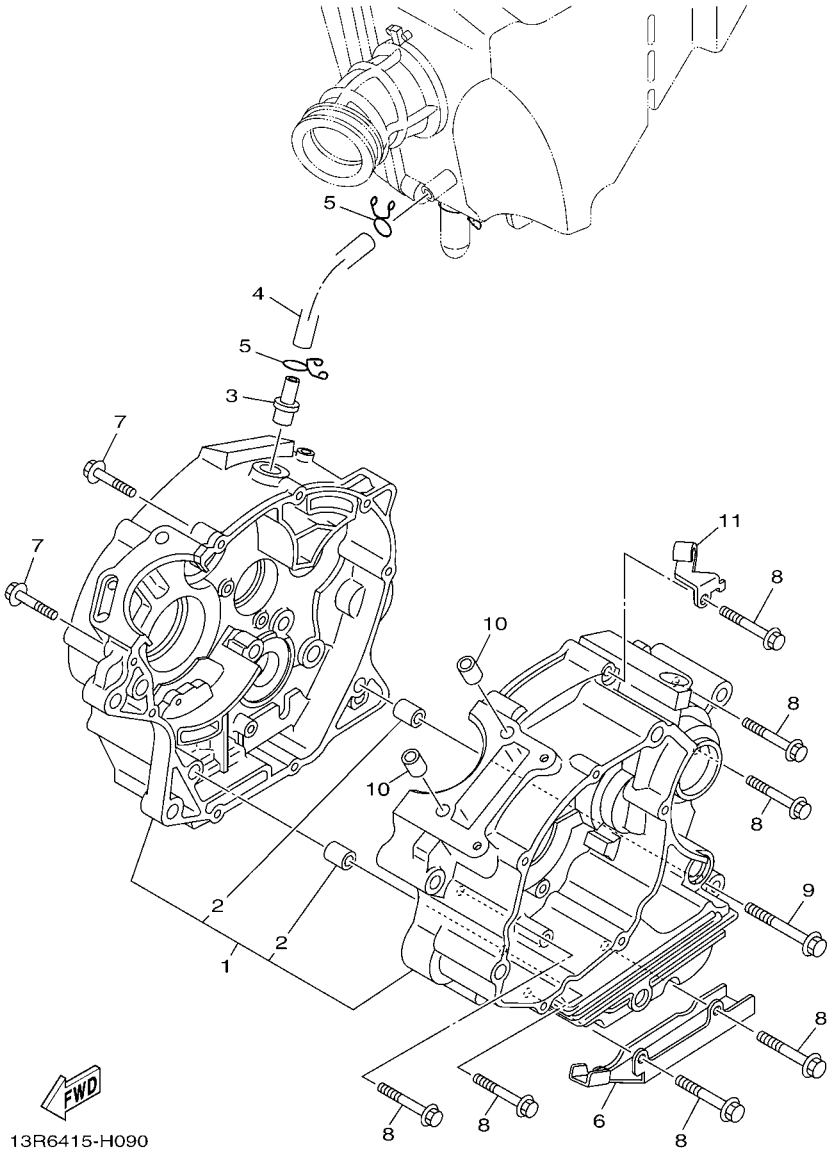

FIG. 9 CARTER — CRANKCASE

REF. Nº	CODIGO Nº PART NO.	DESCRIPCION DESCRIPTION	4P2G	4P2H	4P2J			OBSERVACIONES REMARKS
1	5VL–W1510–11	CARTER COMPLETO CRANKCASE ASSY	1	1	1			
2	99530–10114	.PASADOR, DE ESPIGA .PIN, DOWEL	2	2	2			
3	4FP–E1167–00	CUBIERTA RESPIRADERO 2 PIPE, BREATHER 2	1	1	1			
4	5VL–E1166–00	TUBO RESPIRADERO 1 PIPE, BREATHER 1	1	1	1			
5	90467–12828	PRESILLA CLIP	2	2	2			
6	90462–16801	BRIDA CLAMP	1	1	1			
7	95022–06030	PERNO, DE BRIDA BOLT, FLANGE	2	2	2			
8	95022–06045	PERNO, DE BRIDA BOLT, FLANGE	7	7	7			
9	95022–06055	PERNO, DE BRIDA BOLT, FLANGE	1	1	1			
10	99530–10114	PASADOR, DE ESPIGA PIN, DOWEL	2	2	2			
11	5VL–E5441–00	SOSTEN DE CABLE DE EMBRAGUE HOLDER, CLUTCH CABLE	1	1	1			

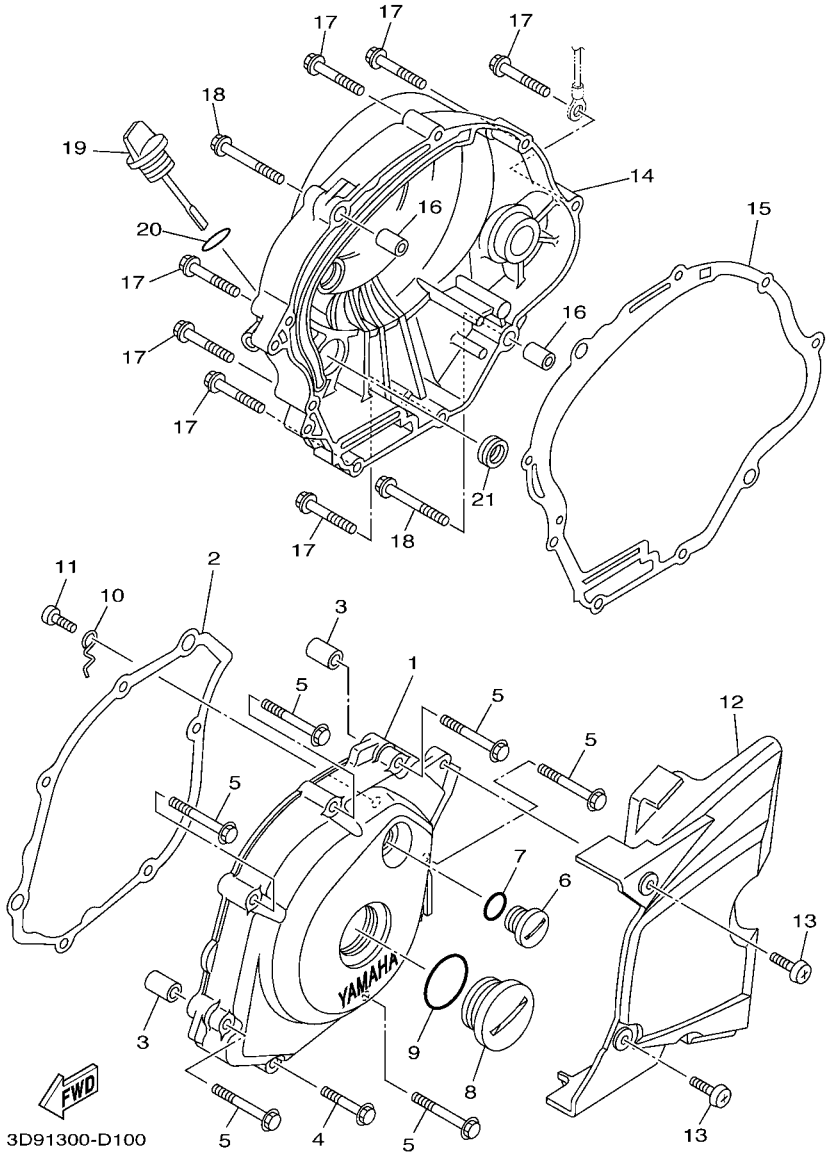

FIG. 10 CUBIERTA DE CARTER 1 CRANKCASE COVER 1

REF. Nº	CODIGO Nº PART NO.	DESCRIPCION DESCRIPTION	4P2G	4P2H	4P2J			OBSERVACIONES REMARKS
1	5VL–E5411–10	CUBIERTA DE CARTER 1 COVER, CRANKCASE 1	1	1	1			
2	5VL–E5451–10	EMPAQ DE CUBIERTA DE CARTER GASKET, CRANKCASE COVER 1	1	1	1			
3	99530–10114	PASADOR, DE ESPIGA PIN, DOWEL	2	2	2			
4	95022–06035	PERNO, DE BRIDA BOLT, FLANGE	1	1	1			
5	95022–06050	PERNO, DE BRIDA BOLT, FLANGE	6	6	6			
6	90340–14810	TORNILLO, DE DRENAJE PLUG,STRAIGHT SCREW	1	1	1			
7	93210–14899	ANILLO O O-RING	1	1	1			
8	90340–32812	TORNILLO, DE DRENAJE PLUG,STRAIGHT SCREW	1	1	1			
9	93210–328A4	ANILLO O O-RING	1	1	1			
10	5VL–E5191–00	PLACA PLATE	1	1	1			
11	98512–06010	TORNILLO SCREW, PAN HEAD	1	1	1			
12	5VL–E5418–01	CUBIERTA CAJA DE CADENA COVER, CHAIN CASE	1	1	1			
13	98902–06016	TORNILLO DE LIGAR SCREW, BIND	2	2	2			
14	5VL–E5421–00	TAPA DE CARTER DERECHA COVER, CRANKCASE 2	1	1	1			
15	5VL–E5461–10	JUNTA TAPA CARTER DERECHO 2 GASKET, CRANKCASE COVER 2	1	1	1			
16	99530–10114	PASADOR, DE ESPIGA PIN, DOWEL	2	2	2			
17	95022–06035	PERNO, DE BRIDA BOLT, FLANGE	7	7	7			
18	95022–06045	PERNO, DE BRIDA BOLT, FLANGE	2	2	2			
19	5VL–E5362–00	TAPON DEL NIVEL DE ACEITE PLUG, OIL LEVEL	1	1	1			
20	93210–19809	ANILLO O O-RING	1	1	1			
21	93101–10800	SELLO ACEITE OIL SEAL	1	1	1			

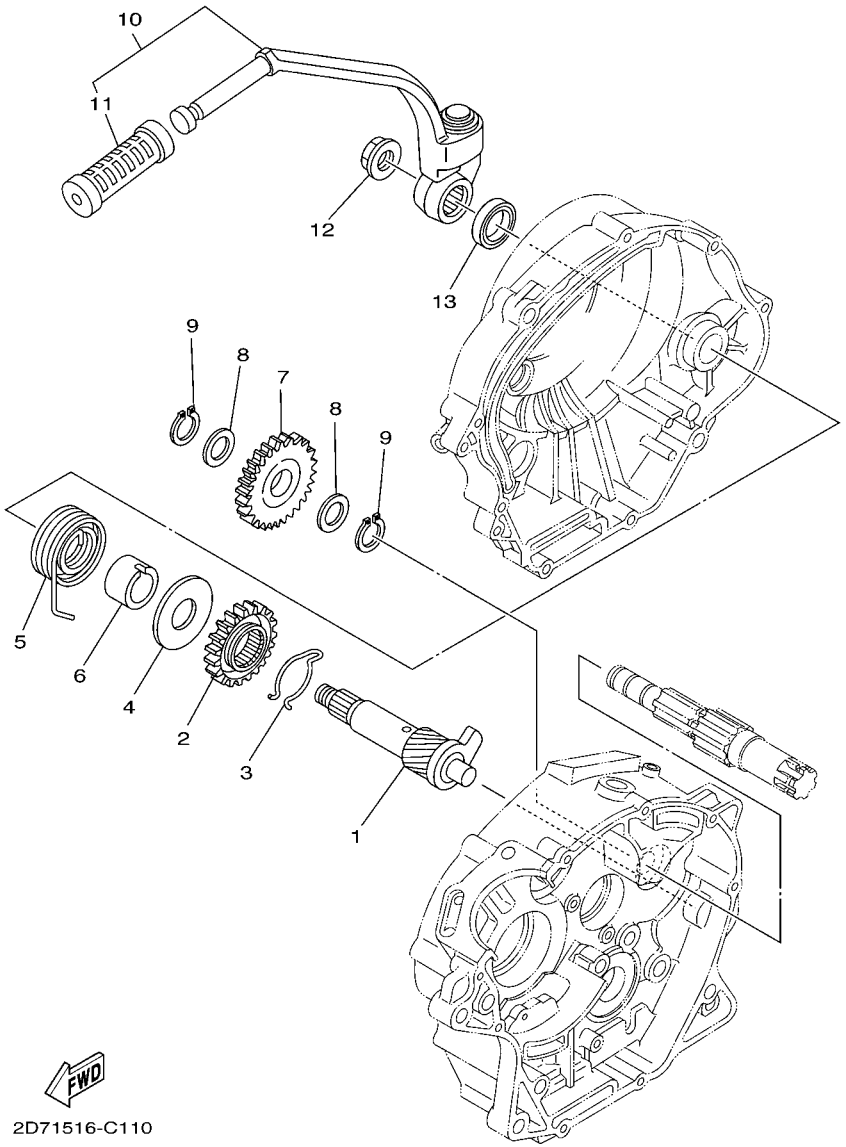

FIG. 11 ARRANQUE STARTER

REF. Nº	CODIGO Nº PART NO.	DESCRIPCION DESCRIPTION	4P2G	4P2H	4P2J			OBSERVACIONES REMARKS
1	5VL–E5660–01	EJE DEL PEDAL DE ARRAN.COMPLET KICK AXLE ASSY	1	1	1			
2	4FP–E5641–00	ENGRANAJE PEDAL ARRANQUE GEAR, KICK	1	1	1			
3	90468–26813	PRESILLA CLIP	1	1	1			
4	90201–208D5	ARANDELA PLANA WASHER, PLATE	1	1	1			
5	90508–26836	RESORTE DE TORSION SPRING, TORSION	1	1	1			
6	4FP–E5666–00	SEPARADOR SPACER	1	1	1			
7	5VL–E5651–00	PINON LIBRE, PEDAL ARRANQUE GEAR, KICK IDLE	1	1	1			
8	90201–152H7	ARANDELA PLANA WASHER, PLATE	2	2	2			
9	99009–15400	PRESILLA REDONDA CIRCLIP	2	2	2			
10	5VL–E5620–01	PEDAL DE ARRANQUE COMPLETO KICK CRANK ASSY	1	1	1			
11	47V–E5618–00	.GOMA PROTECTORA, PEDAL .COVER, KICK LEVER	1	1	1			
12	90179–12813	TUERCA NUT	1	1	1			
13	93109–20806	SELLO ACEITE OIL SEAL	1	1	1			

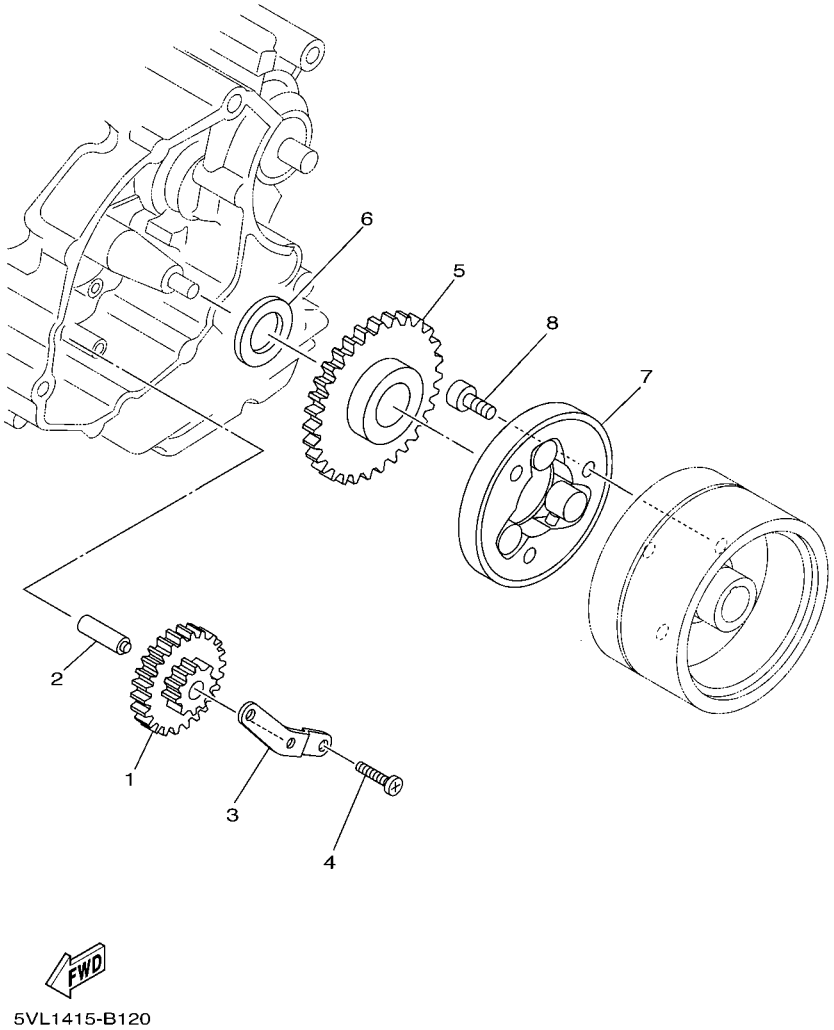

FIG. 12 EMBRAGUE DEL ARRANQUE STARTER CLUTCH

REF. Nº	CODIGO Nº PART NO.	DESCRIPCION DESCRIPTION	4P2G	4P2H	4P2J			OBSERVACIONES REMARKS
1	5VL–E5512–00	ENGRENAJE NEUTRO GEAR, IDLER 1	1	1	1			
2	5VL–E5521–00	EJE 1 SHAFT 1	1	1	1			
3	5VL–E5532–00	PLACA DE ENGRENAJE NEUTRO PLATE, IDLE GEAR	1	1	1			
4	98512–06012	TORNILLO SCREW, PAN HEAD	2	2	2			
5	5VL–E5517–00	ENGRENAJE POSICION 2DA GEAR, IDLER 2	1	1	1			
6	90201–258D7	ARANDELA PLANA WASHER, PLATE	1	1	1			
7	4FP–E5580–00	ENSAMBLE EXT.EMBRAGUE ARRANQUE STARTER CLUTCH OUTER ASSY	1	1	1			
8	91312–08016	TORNILLO BOLT	3	3	3			

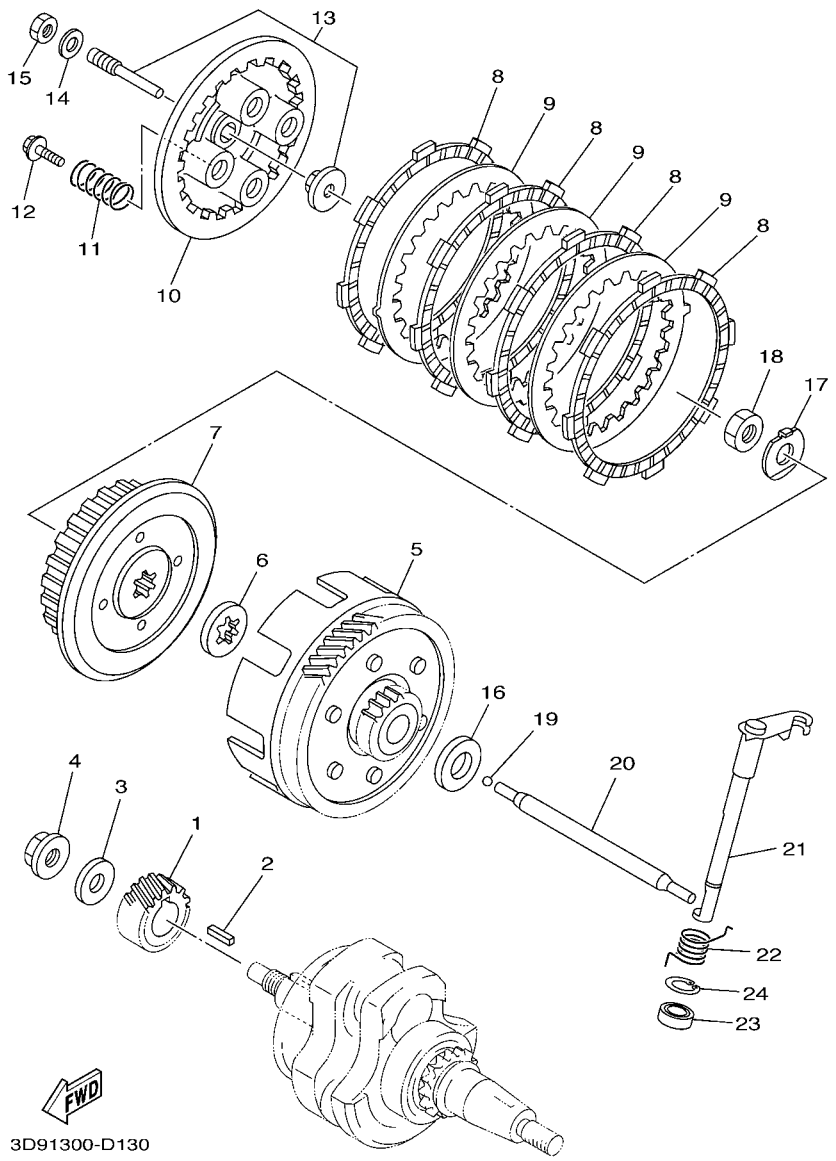

FIG. 13 EMBRAGUE CLUTCH

REF. Nº	CODIGO Nº PART NO.	DESCRIPCION DESCRIPTION	4P2G	4P2H	4P2J			OBSERVACIONES REMARKS
1	5VL–E6111–00	ENGRANAJE TRACC.PRIMARIA GEAR, PRIMARY DRIVE	1	1	1			
2	90282–05001	CHAVETA, RECTA (5MMX16MM) KEY, STRAIGHT (5MMX16MM)	1	1	1			
3	90201–122H1	ARANDELA PLANA WASHER, PLATE	1	1	1			
4	90179–12813	TUERCA NUT	1	1	1			
5	5VL–E6150–00	CAMPANA DE EMBRAGUE PRIMARY DRIVEN GEAR COMP.	1	1	1			
6	5VL–E6154–00	ARANDELA, DE EMPUJE 1 PLATE, THRUST 1	1	1	1			
7	5VL–E6371–10	CUBO, DE EMBRAGUE BOSS, CLUTCH	1	1	1			
8	5VL–E6321–10	PLACA DE FRICCION PLATE, FRICTION	4	4	4			
9	5VL–E6324–00	PLACA DE EMBRAGUE PLATE, CLUTCH 1	3	3	3			
10	5VL–E6351–00	PLATO DE PRESION PLATE, PRESSURE 1	1	1	1			
11	5VL–E6333–10	RESORTE DE EMBRAGUE 1 SPRING, CLUTCH 1	4	4	4			
12	5VL–E6337–00	TORNILLO DE RESORTE SCREW, SPRING	4	4	4			
13	5VL–Y1635–10	CONJ. PALANCA DE EMPUJE PUSH LEVER COMP.	1	1	1			
14	92902–06200	ARANDELA WASHER	1	1	1			
15	95302–06600	TUERCA NUT	1	1	1			
16	5VL–E6164–10	PLACA DE EMPUJE 2 PLATE, THRUST 2	1	1	1			
17	90215–12211	ARANDELA DE CIERRE WASHER, LOCK	1	1	1			
18	90170–12060	TUERCA NUT	1	1	1			
19	93503–16824	ESFERA BALL	1	1	1			
20	5VL–E6357–01	VARILLA DE EMPUJE 2 ROD, PUSH 2	1	1	1			
21	5VL–E6381–02	CONJ. PALANCA DE EMPUJE PUSH LEVER COMP.	1	1	1			
22	90508–16800	RESORTE DE TORSION SPRING, TORSION	1	1	1			
23	93102–12802	SELLO ACEITE OIL SEAL	1	1	1			
24	99009–20500	PRESILLA REDONDA CIRCLIP	1	1	1			

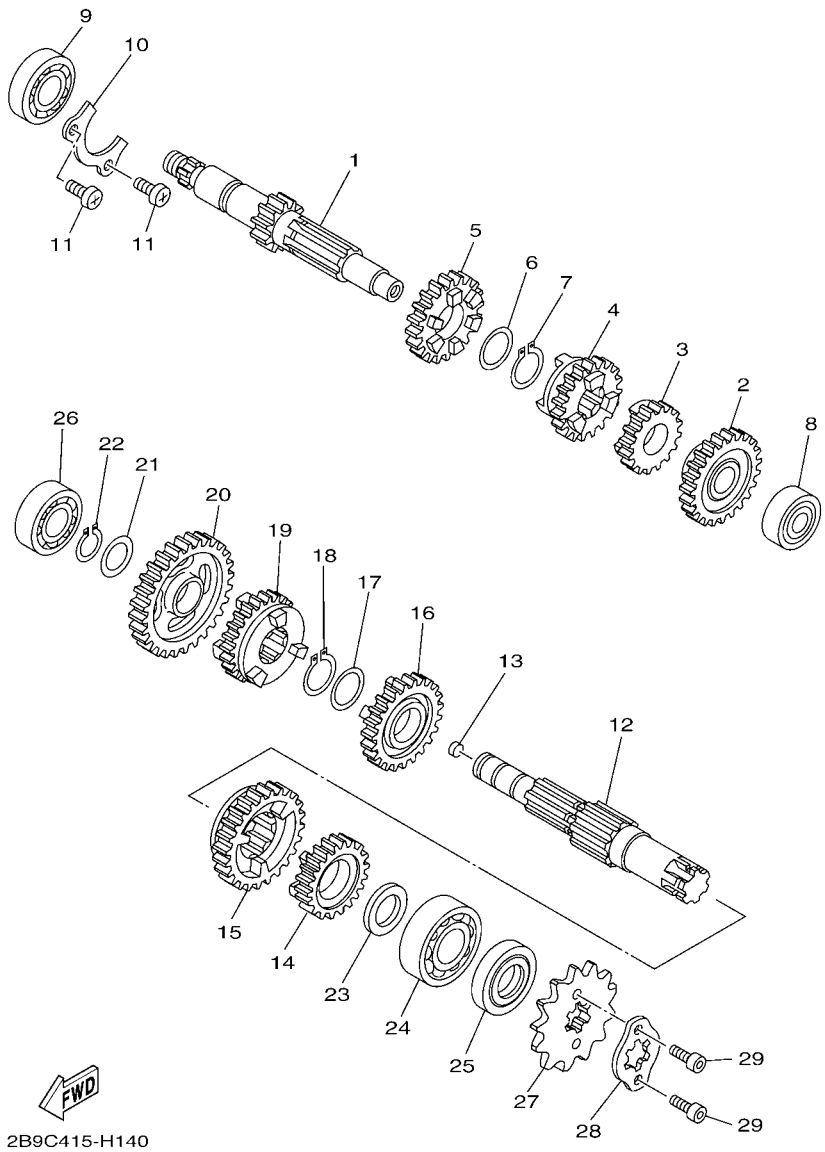

FIG. 14 TRANSMISION — TRANSMISSION

REF. Nº	CODIGO Nº PART NO.	DESCRIPCION DESCRIPTION	4P2G	4P2H	4P2J			OBSERVACIONES REMARKS
1	5VL–E7411–00	EJE PRIMARIO (14T) AXLE, MAIN (14T)	1	1	1			
2	5VL–E7151–00	ENGRANAJE PINON DE 5TA (24T) GEAR, 5TH PINION (24T)	1	1	1			
3	5VL–E7121–00	ENGRANAJE DE PINON DE 2DA(18T) GEAR, 2ND PINION (18T)	1	1	1			
4	5VL–E7131–00	ENGRANAJE PINON DE 3RA (19T) GEAR, 3RD PINION (19T)	1	1	1			
5	5VL–E7141–00	ENGRANAJE PINON DE 4TA (22T) GEAR, 4TH PINION (22T)	1	1	1			
6	90201–20266	ARANDELA, PLACA (T=1.0) WASHER, PLATE (T=1.0)	1	1	1			
7	93410–20809	SEGURO CIRCLIP	1	1	1			
8	93306–201Y8	COJINETE BEARING	1	1	1			
9	93306–203YT	COJINETE BEARING	1	1	1			
10	5VL–E7471–00	PLACA, DE CUBIERTA PLATE, COVER	1	1	1			
11	98512–06012	TORNILLO SCREW, PAN HEAD	2	2	2			
12	5VL–E7421–00	EJE SECUNDARIO AXLE, DRIVE	1	1	1			
13	90331–07031	TAPON PLUG	1	1	1			
14	5VL–E7251–00	ENGRANAJE RUEDA DE 5TA (21T) GEAR, 5TH WHEEL (21T)	1	1	1			
15	5VL–E7221–00	ENGRANAJE RUEDA DE 2DA (32T) GEAR, 2ND WHEEL (32T)	1	1	1			
16	5VL–E7231–00	ENGRANAJE RUEDA DE 3RA (25T) GEAR, 3RD WHEEL (25T)	1	1	1			
17	90201–20266	ARANDELA, PLACA (T=1.0) WASHER, PLATE (T=1.0)	1	1	1			
18	93410–20809	SEGURO CIRCLIP	1	1	1			
19	5VL–E7241–00	ENGRANAJE DE RUEDA 4TA (23T) GEAR, 4TH WHEEL (23T)	1	1	1			
20	5VL–E7211–00	ENGRANAJE RUEDA DE 1 RA (37T) GEAR, 1ST WHEEL (37T)	1	1	1			
21	90201–15700	ARANDELA PLANA WASHER, PLATE	1	1	1			
22	99009–15400	PRESILLA REDONDA CIRCLIP	1	1	1			
23	90201–20272	ARANDELA PLANA WASHER, PLATE	1	1	1			
24	93306–204YD	COJINETE BEARING	1	1	1			
25	93102–20854	SELLO ACEITE OIL SEAL	1	1	1			
26	93306–202XP	COJINETE BEARING	1	1	1			
27	93822–14813	CORONA (14T) SPROCKET, DRIVE (14T)	1	1	1			

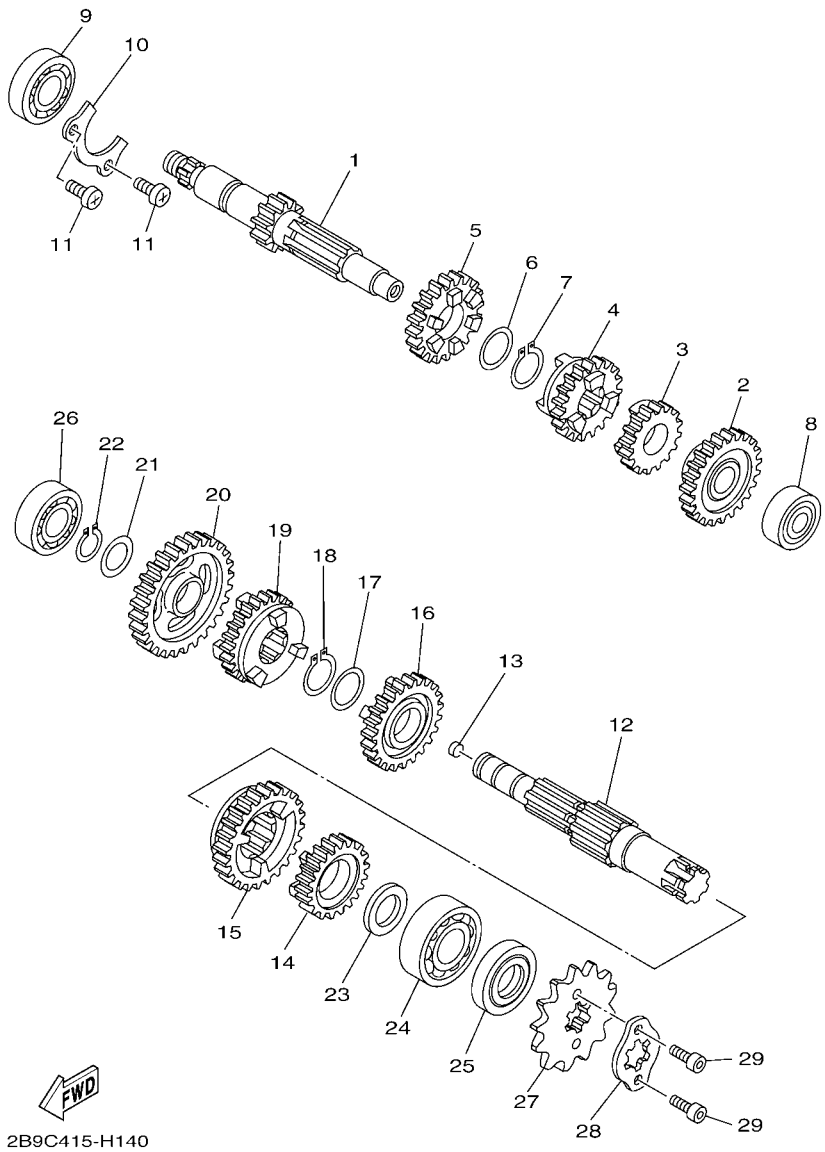

FIG. 14 TRANSMISION — TRANSMISSION

REF. Nº	CODIGO Nº PART NO.	DESCRIPCION DESCRIPTION	4P2G	4P2H	4P2J			OBSERVACIONES REMARKS
28	3D9–E7456–01	SOPORTE DE CORONA HOLDER, SPROCKET	1	1	1			
29	91312–05010	TORNILLO BOLT	2	2	2			

FIG. 15 LEVA DE CAMBIO & HORQUILLA SHIFT CAM & FORK

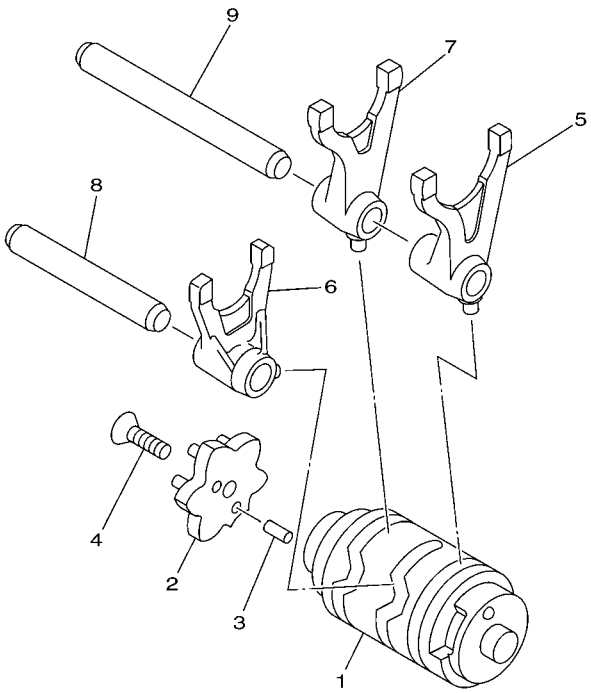

5HP1100-0140

REF. Nº	CODIGO Nº PART NO.	DESCRIPCION DESCRIPTION	4P2G	4P2H	4P2J			OBSERVACIONES REMARKS
1	5VL–Y1854–01	LEVADEL CAMBIO COMPLETA SHIFT CAM ASSY	1	1	1			
2	2D0–E8185–00	SEGMENTO DE RETENCION SEGMENT	1	1	1			
3	93604–10837	PASADOR DE CLAVIJA PIN, DOWEL	2	2	2			
4	90151–06818	TORNILLO EMBUTIDO SCREW, COUNTERSUNK	1	1	1			
5	5VL–E8511–00	HORQUILLA DEL CAMBIO 1 FORK, SHIFT 1	1	1	1			
6	5VL–E8512–00	HORQUILLA DEL CAMBIO 2 FORK, SHIFT 2	1	1	1			
7	5VL–E8513–00	HORQUILLA DEL CAMBIO 3 FORK, SHIFT 3	1	1	1			
8	5VL–E8531–00	BARRA GUIA HORQ. CAMBIO 1 BAR, SHIFT FORK GUIDE 1	1	1	1			
9	5VL–E8535–00	BARRA GUIA HORQ .CAMBIO 2 BAR, SHIFT FORK GUIDE 2	1	1	1			

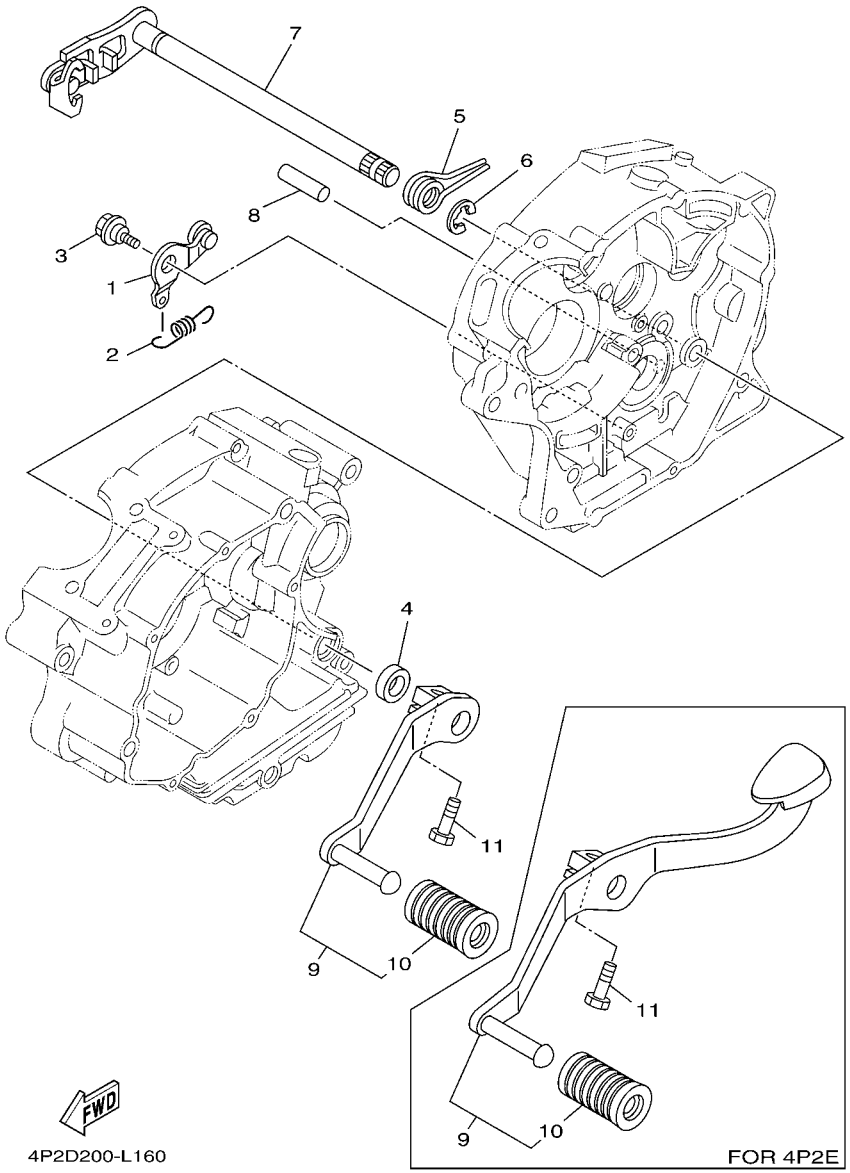

FIG. 16 EJE DE CAMBIO & PEDAL SHIFT SHAFT

REF. Nº	CODIGO Nº PART NO.	DESCRIPCION DESCRIPTION	4P2G	4P2H	4P2J			OBSERVACIONES REMARKS
1	5VL–E8140–00	PALANCA DE TOPE COMPLETA STOPPER LEVER ASSY	1	1	1			
2	5VL–E8337–00	RESORTE SPRING	1	1	1			
3	4FP–E8177–00	TORNILLO DE TOPE BOLT, STOPPER	1	1	1			
4	93101–12812	SELLO ACEITE OIL SEAL	1	1	1			
5	90508–32801	RESORTE DE TORSION SPRING, TORSION	1	1	1			
6	99002–10600	PRESILLA REDONDA CLIP	1	1	1			
7	5VL–E8101–02	EJE SELECTOR COMPLETO SHIFT SHAFT ASSY	1	1	1			
8	93608–30839	PASADOR DE CLAVIJA PIN, DOWEL	1	1	1			
9	5VL–E8110–00	PEDAL DE CAMBIO COMPLETO SHIFT PEDAL ASSY	1		1			
	5VL–E8110–12	PEDAL DE CAMBIO COMPLETO SHIFT PEDAL ASSY		1				
10	1KL–E8113–00	.FUNDA DEL PEDAL DEL CAMBIO .COVER, SHIFT PEDAL	1	1	1			
11	97022–06020	PERNO BOLT	1	1	1			

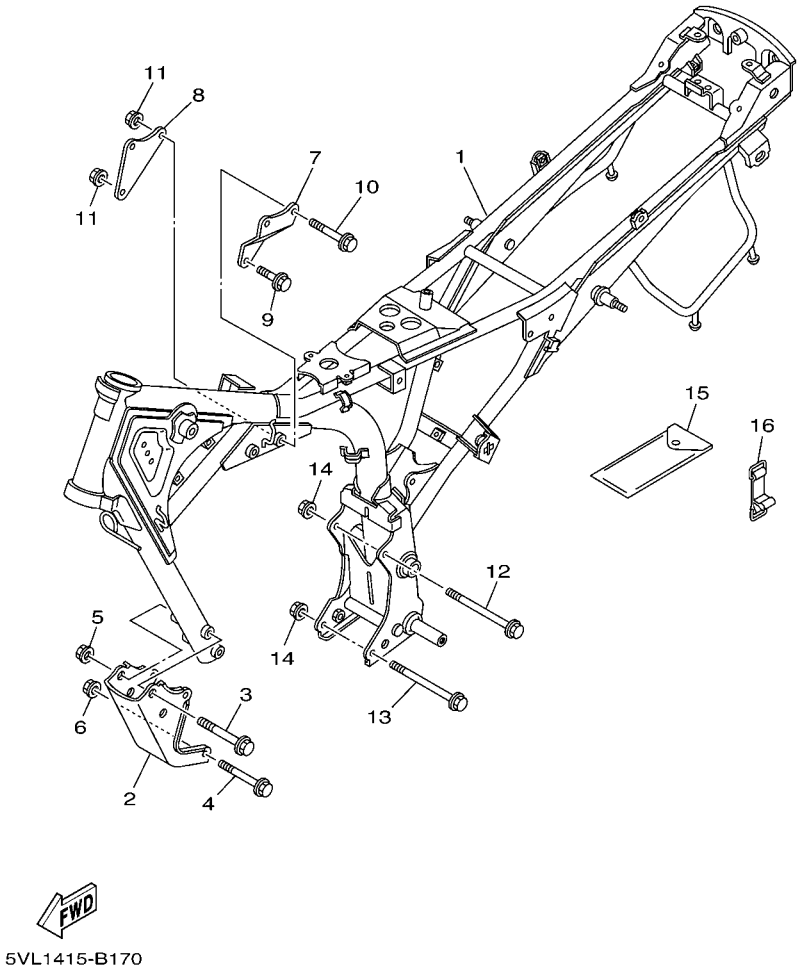

FIG. 17 CUADRO FRAME

REF. Nº	CODIGO Nº PART NO.	DESCRIPCION DESCRIPTION	4P2G	4P2H	4P2J			OBSERVACIONES REMARKS
1	5VL–F1110–40–33	ARMAZON COMPLETO FRAME COMP.	1	1	1			YB YB
2	5VL–F1316–01	SOPORTE DE MOTOR 3 STAY, ENGINE 3	1	1	1			
3	95812–10080	TORNILLO DE REBORDE BOLT, FLANGE	2	2	2			
4	90105–08874	TORNILLO BOLT, FLANGE	2	2	2			
5	9570L–10500	TUERCA DE BRIDA NUT, FLANGE	2	2	2			
6	90179–08830	TUERCA NUT	2	2	2			
7	5VL–F1317–00	SOPORTE DE MOTOR 3 STAY, ENGINE 3	1	1	1			
8	5VL–F1318–00	SOPORTE DE MOTOR 5 STAY, ENGINE 5	1	1	1			
9	90105–088E4	TORNILLO BOLT, FLANGE	1	1	1			
10	90105–088E5	TORNILLO BOLT, FLANGE	2	2	2			
11	90179–08830	TUERCA NUT	2	2	2			
12	90105–08873	TORNILLO BOLT, FLANGE	1	1	1			
13	90105–088E6	TORNILLO BOLT, FLANGE	1	1	1			
14	90179–08830	TUERCA NUT	2	2	2			
15	5VL–F8100–01	JUEGO DE HERRAMIENTAS TOOL KIT	1	1	1			
16	5VL–F811G–01	CINTA BAND	1	1	1			

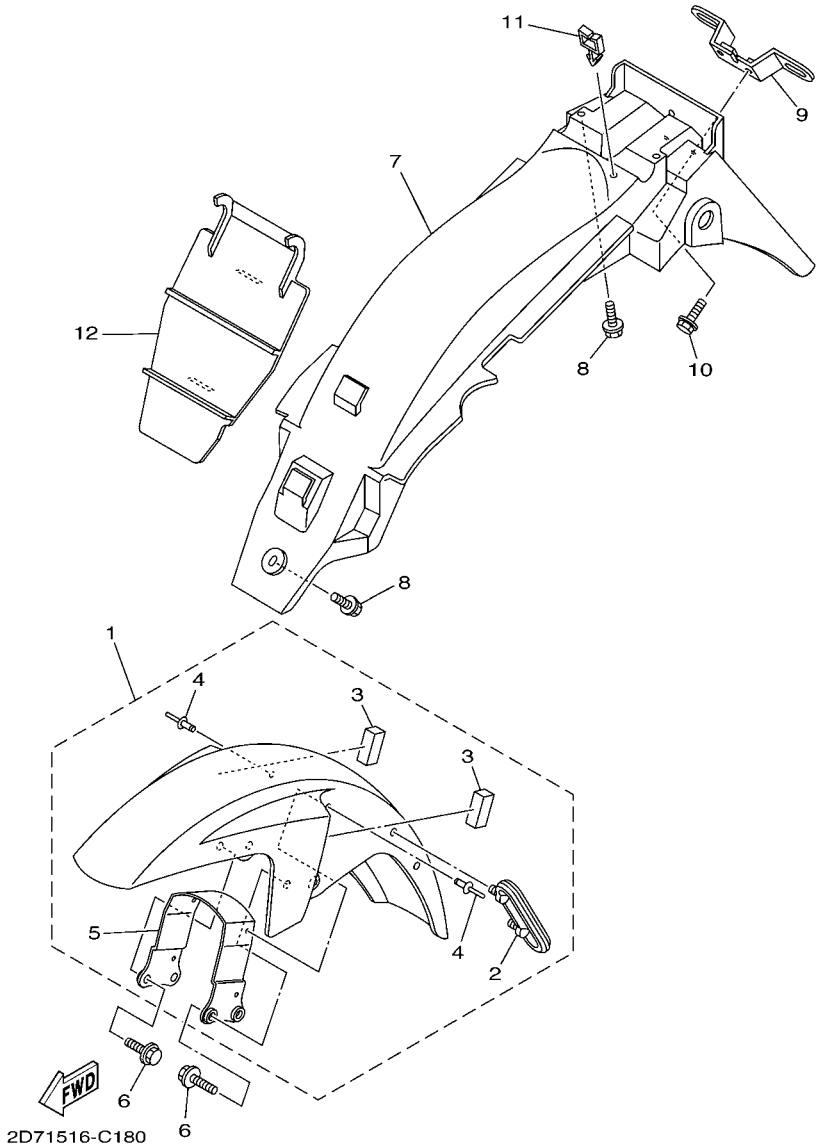

FIG. 18 GUARDABARRO FENDER

REF. Nº	CODIGO Nº PART NO.	DESCRIPCION DESCRIPTION	4P2G	4P2H	4P2J			OBSERVACIONES REMARKS
1	5VL–Y2151–05–P4	GUARDABARRO DELANTERO COMPL. FRONT FENDER ASSY	1	1	1			UR PARA VRC7 UR FOR VRC7
	5VL–Y2151–03–P3	GUARDABARRO DELANTERO COMPL. FRONT FENDER ASSY	1	1	1			UR PARA SMX UR FOR SMX
	5VL–Y2151–03–P1	GUARDABARRO DELANTERO COMPL. FRONT FENDER ASSY	1	1	1			UR PARA DPBMC UR FOR DPBMC
	5VL–Y2151–03–P2	GUARDABARRO DELANTERO COMPL. FRONT FENDER ASSY	1	1	1			UR PARA LGM3 UR FOR LGM3
	5VL–Y2151–05–P6	GUARDABARRO DELANTERO COMPL. FRONT FENDER ASSY		1				UR PARA BWC1 UR FOR BWC1
2	5VL–F1518–01	.SOPORTE DE CABLE .HOLDER, CABLE	1	1	1			
3	5VL–F1541–00	.AMORTIGUADOR 1 .DAMPER 1	2	2	2			
4	90267–48854	.REMACHE CIEGO .RIVET, BLIND	4	4	4			
5	5VL–F1513–01	.SOPORTE DE GUARDABARRO .STAY, FENDER 1	1	1	1			
6	95822–06016	TORNILLO DE REBORDE BOLT, FLANGE	4	4	4			
7	5VL–F1611–02	GUARDABARRO TRASERO FENDER, REAR	1	1	1			
8	90119–06869	TORNILLO CON ARANDELA BOLT, WITH WASHER	3	3	3			
9	4GU–F1685–00	SOPORTE DE LICENCIA BRACKET, LICENSE	1	1	1			
10	90119–06811	TORNILLO CON ARANDELA BOLT, WITH WASHER	2	2	2			
11	90464–12803	BRIDA CLAMP	2	2	2			
12	5VL–F1621–00	CHARNELA FLAP	1	1	1			

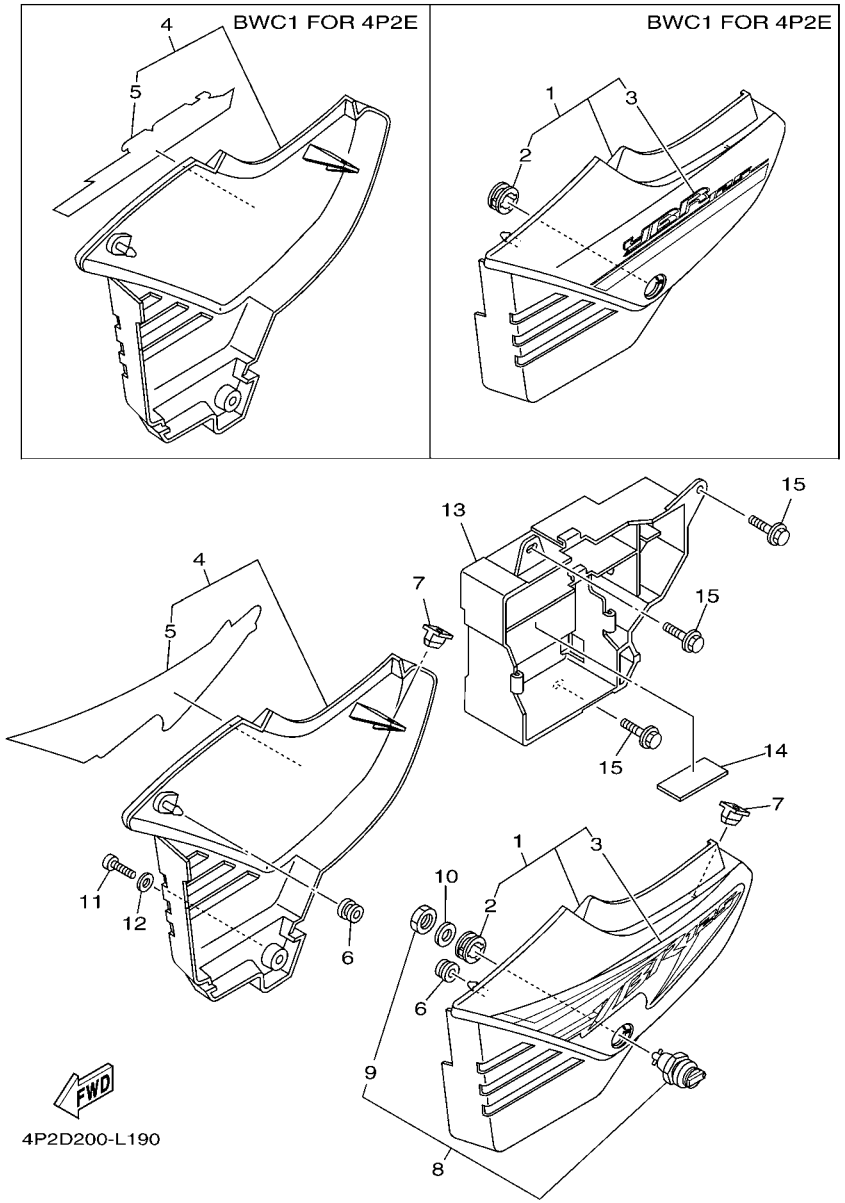

FIG. 19 CUBIERTA LATERAL SIDE COVER

REF. Nº	CODIGO Nº PART NO.	DESCRIPCION DESCRIPTION	4P2G	4P2H	4P2J			OBSERVACIONES REMARKS
1	5VL–Y2171–12–6X	CUBIERTA, LATERAL 1 COVER, SIDE 1	1					UR PARA VRC7 UR FOR VRC7
	5VL–Y2171–25–3X	CUBIERTA, LATERAL 1 COVER, SIDE 1	1					UR PARA SMX UR FOR SMX
	5VL–Y2171–25–4X	CUBIERTA, LATERAL 1 COVER, SIDE 1	1					UR PARA DPBMC UR FOR DPBMC
	5VL–Y2171–15–5X	CUBIERTA, LATERAL 1 COVER, SIDE 1	1					UR PARA LGM3 UR FOR LGM3
	5VL–Y2171–07–6X	CUBIERTA, LATERAL 1 COVER, SIDE 1		1	1			UR PARA VRC7 UR FOR VRC7
	5VL–Y2171–26–3X	CUBIERTA, LATERAL 1 COVER, SIDE 1		1	1			UR PARA SMX UR FOR SMX
	5VL–Y2171–26–4X	CUBIERTA, LATERAL 1 COVER, SIDE 1		1	1			UR PARA DPBMC UR FOR DPBMC
	5VL–Y2171–16–5X	CUBIERTA, LATERAL 1 COVER, SIDE 1		1	1			UR PARA LGM3 UR FOR LGM3
	5VL–Y2171–01–8X	CUBIERTA, LATERAL 1 COVER, SIDE 1		1				UR PARA BWC1 UR FOR BWC1
2	90480–24186	.TAPON .GROMMET	1	1	1			
3	3D9–F173E–20	.GRAFICO, 1 .GRAPHIC 1	1	1	1			UR PARA VRC7 UR FOR VRC7
	3D9–F173E–40	.GRAFICO, 1 .GRAPHIC 1	1	1	1			UR PARA SMX UR FOR SMX
	3D9–F173E–10	.GRAFICO, 1 .GRAPHIC 1	1	1	1			UR PARA DPBMC UR FOR DPBMC
	3D9–F173E–30	.GRAFICO, 1 .GRAPHIC 1	1	1	1			UR PARA LGM3 UR FOR LGM3
	36S–F173E–00	.GRAFICO, 1 .GRAPHIC 1		1				UR PARA BWC1 UR FOR BWC1
4	3D9–Y2172–13–1X	CUBIERTA, LATERAL 2 COVER, SIDE 2	1	1	1			UR PARA VRC7 UR FOR VRC7
	3D9–Y2172–17–3X	CUBIERTA, LATERAL 2 COVER, SIDE 2	1	1	1			UR PARA SMX UR FOR SMX
	3D9–Y2172–14–0X	CUBIERTA, LATERAL 2 COVER, SIDE 2	1	1	1			UR PARA DPBMC UR FOR DPBMC
	3D9–Y2172–13–2X	CUBIERTA, LATERAL 2 COVER, SIDE 2	1	1	1			UR PARA LGM3 UR FOR LGM3
	3D9–Y2172–11–5X	CUBIERTA, LATERAL 2 COVER, SIDE 2		1				UR PARA BWC1 UR FOR BWC1
5	3D9–F173F–20	.GRAFICO 2 .GRAPHIC 2	1	1	1			UR PARA VRC7 UR FOR VRC7
	3D9–F173F–40	.GRAFICO 2 .GRAPHIC 2	1	1	1			UR PARA SMX UR FOR SMX
	3D9–F173F–10	.GRAFICO 2 .GRAPHIC 2	1	1	1			UR PARA DPBMC UR FOR DPBMC
	3D9–F173F–30	.GRAFICO 2 .GRAPHIC 2	1	1	1			UR PARA LGM3 UR FOR LGM3
	36S–F173F–00	.GRAFICO 2 .GRAPHIC 2		1				UR PARA BWC1 UR FOR BWC1
6	90480–13837	TAPON GROMMET	2	2	2			
7	5VL–F1778–00	AMORTIGUADOR DE MONTAJE DAMPER, LOCATING 1	2	2	2			

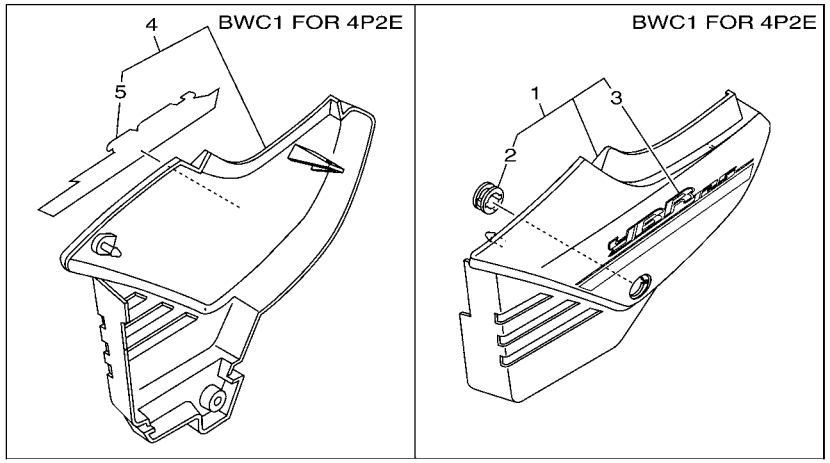

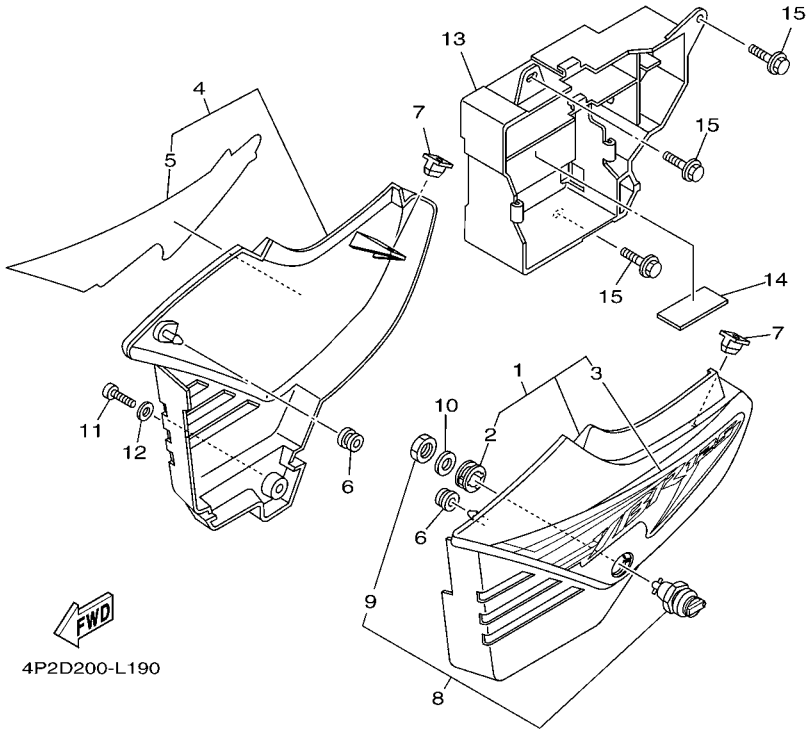

FIG. 19 CUBIERTA LATERAL SIDE COVER

REF. Nº	CODIGO Nº PART NO.	DESCRIPCION DESCRIPTION	4P2G	4P2H	4P2J			OBSERVACIONES REMARKS
8	5VL–F1780–01	CERRADURA COMPLETA LOCK ASSY	1	1	1			
9	90170–22850	TUERCA NUT	1	1	1			
10	90201–228F6	ARANDELA PLANA WASHER, PLATE	1	1	1			
11	98902–06020	TORNILLO DE LIGAR SCREW, BIND	1	1	1			
12	90201–06850	ARANDELA PLANA WASHER, PLATE	1	1	1			
13	5VL–F177G–00	CAJA DE BATERIA BOX, BATTERY	1	1	1			
14	5VL–F1746–00	AMORTIGUADOR DAMPER	1	1	1			
15	90119–06811	TORNILLO CON ARANDELA BOLT, WITH WASHER	3	3	3			

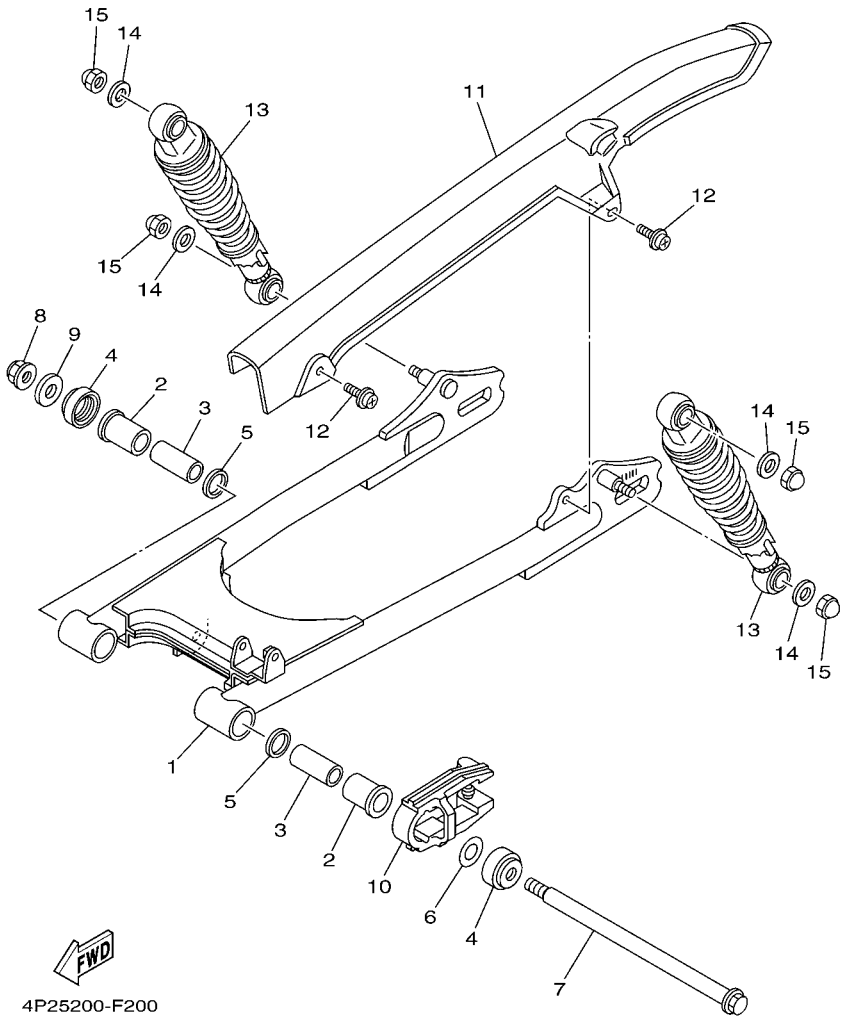

FIG. 20 BRAZO TRASERO & SUSPENSION REAR ARM & SUSPENSION

REF. Nº	CODIGO Nº PART NO.	DESCRIPCION DESCRIPTION	4P2G	4P2H	4P2J			OBSERVACIONES REMARKS
1	5VL–F2110–00–33	BRAZO TRASERO COMPLETO REAR ARM COMP.	1	1	1			YB YB
2	90386–18801	BUJE BUSH	2	2				
	90386–18099	BUJE BUSH			2			
3	5VL–F2123–00	BUJE 1 BUSH 1	2	2	2			
4	5VL–F2128–01	TAPA DE EMPIJE 1 COVER, THRUST 1	2	2	2			
5	93109–18802	SELLO ACEITE OIL SEAL	2	2	2			
6	5VL–F2127–00	CUNA SHIM	1	1	1			UN UN
7	5VL–F2141–01	EJE DEL BARCULANTE SHAFT, PIVOT	1	1	1			
8	95602–12200	TUERCA DE AUTO-CIERRE NUT, SELF-LOCKING	1	1	1			
9	90201–12819	ARANDELA PLANA WASHER, PLATE	1	1	1			
10	5VL–F2151–10	SELLO DE GUARDA SEAL, GUARD	1	1	1			
11	5VL–F2311–00	CABRECADENA CASE, CHAIN	1	1	1			
12	90159–06830	TORNILLO CON VALONA SCREW, WITH WASHER	2	2	2			
13	5VL–F2210–01	AMORTIGUADOR TRASERO COMPLETO SHOCK ABSORBER ASSY, REAR	2	2	2			
14	90201–108C7	ARANDELA PLANA WASHER, PLATE	4	4	4			
15	90176–10810	TUERCA CORONA NUT, CROWN	4	4	4			

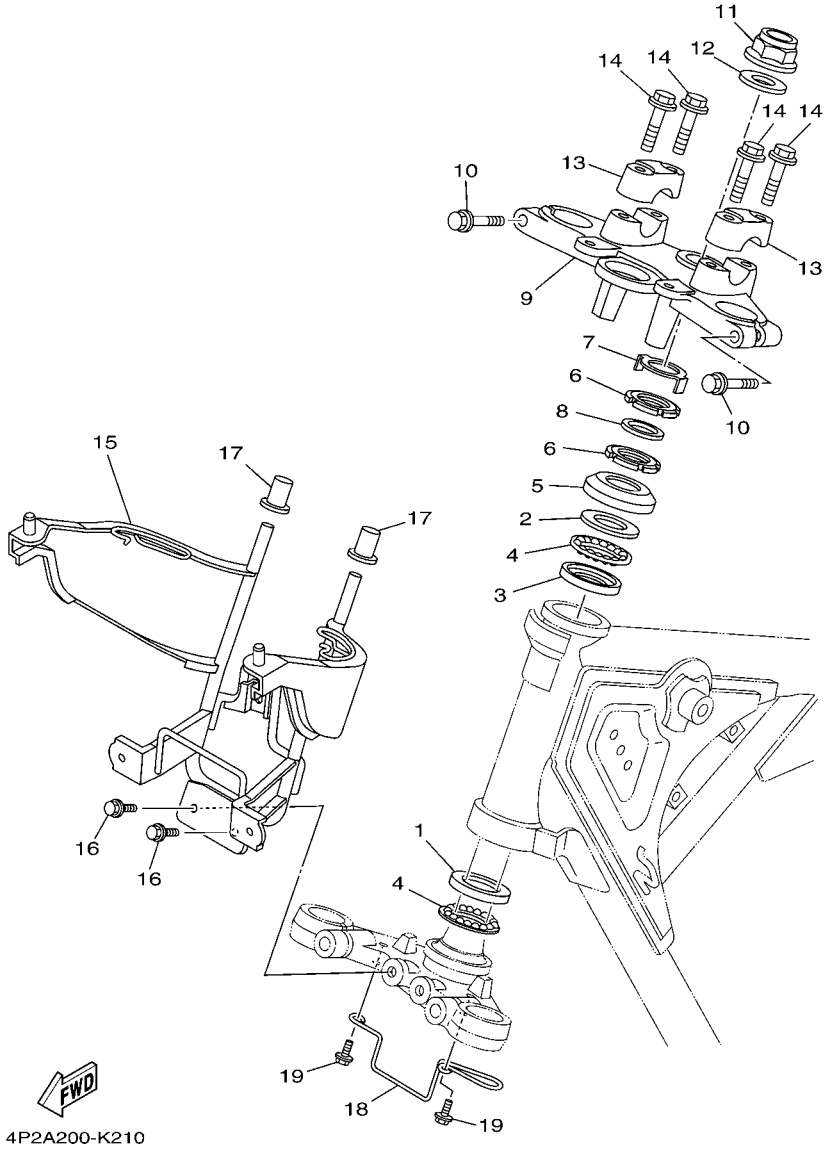

FIG. 21 DIRECCION STEERING

REF. Nº	CODIGO Nº PART NO.	DESCRIPCION DESCRIPTION	4P2G	4P2H	4P2J			OBSERVACIONES REMARKS
1	1KL–F3412–00	PISTA DE BOLAS 2 RACE, BALL 2	1					
2	4FP–F3411–00	PISTA DE BOLAS 1 RACE, BALL 1	1					
3	4FP–F3412–00	PISTA DE BOLAS 2 RACE, BALL 2	1					
4	5VL–F341E–00	RETEN DE COJINETE RETAINER, BALL BEARING	2					
5	4GU–F3416–00	CUBIERTA DE BASE DE BOLA 2 COVER, BALL RACE 2	1					
6	90179–25806	TUERCA NUT	2					
7	5VL–F3418–01	ARANDELA ESPECIAL WASHER, SPECIAL	1					
8	90202–26142	ARANDELA DE PLANA WASHER, PLATE	1					
9	5VL–F3435–00–33	PLATINA SUPERIOR CROWN, HANDLE	1					YB YB
10	95022–08040	PERNO, DE BRIDA BOLT, FLANGE	2					
11	90176–22801	TUERCA CORONA NUT, CROWN	1					
12	5VL–F3165–01	ARANDELA DE FIELTRO WASHER, FELT	1					
13	5VL–F3441–00	SOPORTE DE MANUBRIO HOLDER, HANDLE UPPER	2					
14	95022–08035	PERNO, DE BRIDA BOLT, FLANGE	4					
15	5VL–F3174–10	SOPORTE DEL FARO DELANTERO STAY, HEADLIGHT	1					
16	95822–06012	TORNILLO DE REBORDE BOLT, FLANGE	2					
17	4FP–F317J–00	AMORTIGUADOR 1 DAMPER 1	2					
18	5VL–F3389–01	GUIA DE CABLE GUIDE, CABLE	1					
19	95822–06012	TORNILLO DE REBORDE BOLT, FLANGE	2					

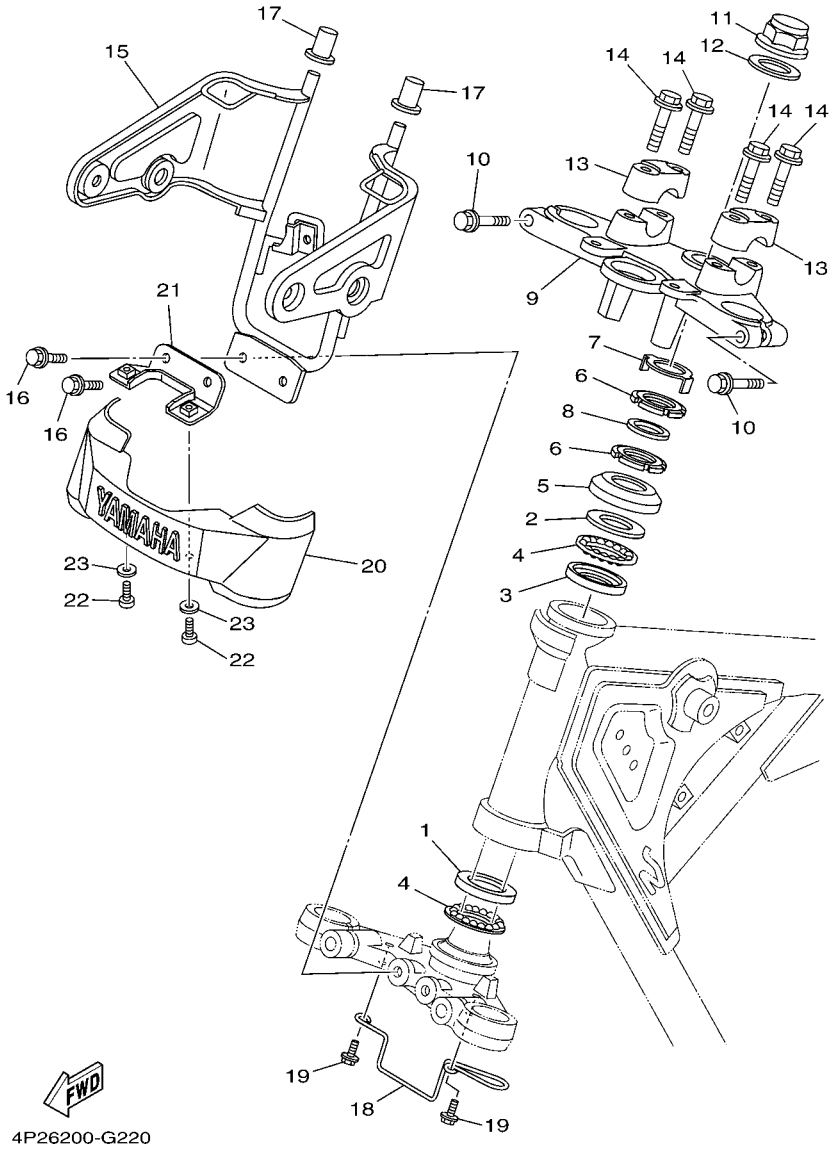

FIG. 22 DIRECCION 2 STEERING 2

REF. Nº	CODIGO Nº PART NO.	DESCRIPCION DESCRIPTION	4P2G	4P2H	4P2J			OBSERVACIONES REMARKS
1	1KL–F3412–00	PISTA DE BOLAS 2 RACE, BALL 2		1	1			
2	4FP–F3411–00	PISTA DE BOLAS 1 RACE, BALL 1		1	1			
3	4FP–F3412–00	PISTA DE BOLAS 2 RACE, BALL 2		1	1			
4	5VL–F341E–00	RETEN DE COJINETE RETAINER, BALL BEARING		2	2			
5	4GU–F3416–00	CUBIERTA DE BASE DE BOLA 2 COVER, BALL RACE 2		1	1			
6	90179–25806	TUERCA NUT		2	2			
7	5VL–F3418–01	ARANDELA ESPECIAL WASHER, SPECIAL		1	1			
8	90202–26142	ARANDELA DE PLANA WASHER, PLATE		1	1			
9	5VL–F3435–00–33	PLATINA SUPERIOR CROWN, HANDLE		1	1			YB YB
10	95022–08040	PERNO, DE BRIDA BOLT, FLANGE		2	2			
11	90176–22801	TUERCA CORONA NUT, CROWN		1	1			
12	5VL–F3165–01	ARANDELA DE FIELTRO WASHER, FELT		1	1			
13	5VL–F3441–00	SOPORTE DE MANUBRIO HOLDER, HANDLE UPPER		2	2			
14	95022–08035	PERNO, DE BRIDA BOLT, FLANGE		4	4			
15	5VL–F3174–00	SOPORTE DEL FARO DELANTERO STAY, HEADLIGHT		1	1			
16	95822–06016	TORNILLO DE REBORDE BOLT, FLANGE		2	2			
17	4FP–F317J–00	AMORTIGUADOR 1 DAMPER 1		2	2			
18	5VL–F3389–01	GUIA DE CABLE GUIDE, CABLE		1	1			
19	95822–06012	TORNILLO DE REBORDE BOLT, FLANGE		2	2			
20	4FP–F3395–10	EMBLEMA EMBLEM		1	1			
21	5VL–F334G–11	SOPORTE 1 BRACKET 1		1	1			
22	97002–05012	PERNO BOLT		2	2			
23	90201–05802	ARANDELA PLANA WASHER, PLATE		2	2			

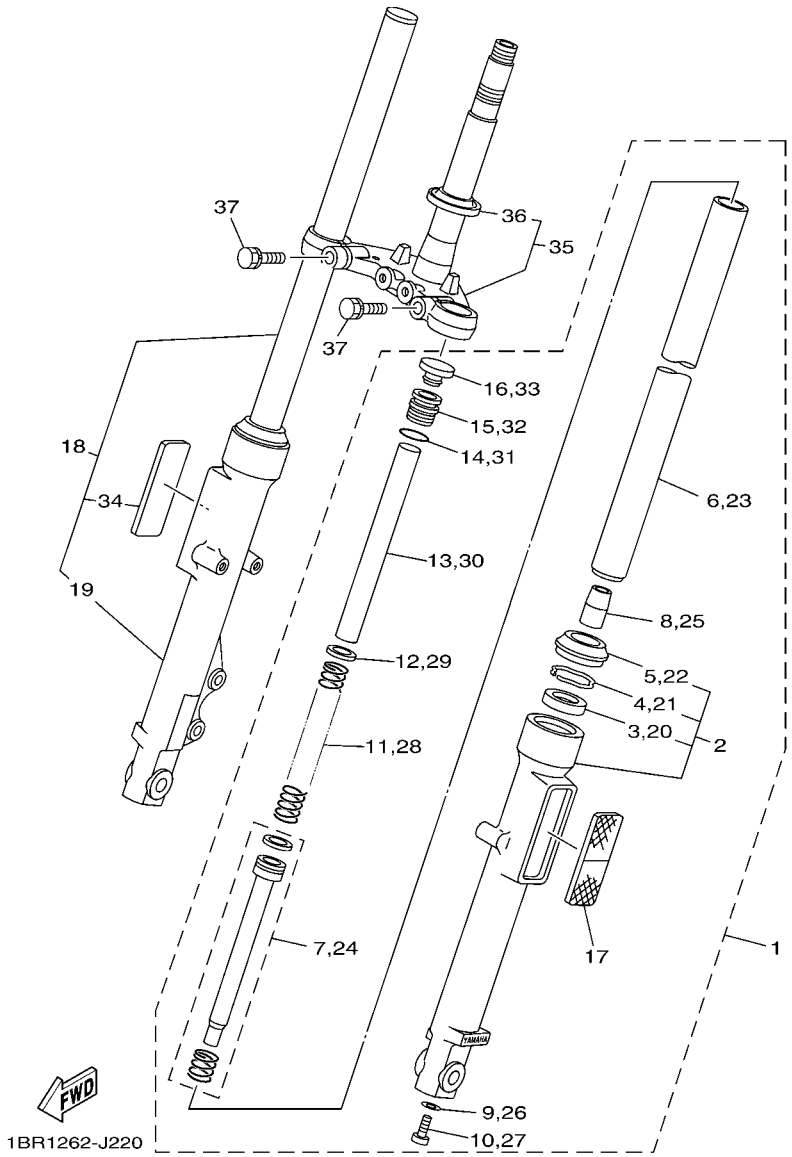

FIG. 23 HORQUILLA DELANTERA FRONT FORK

REF. Nº	CODIGO Nº PART NO.	DESCRIPCION DESCRIPTION	4P2G	4P2H	4P2J			OBSERVACIONES REMARKS
1	5VL–F3102–B0	HORQUILLA DELANTERA COMPL.(MI) FRONT FORK ASSY (L.H)	1		1			
2	5VL–F3106–30	.TUBO EXTERIOR COMPLETO .OUTER TUBE COMP.	1		1			
3	4GU–F3145–00	..RETEN DE ACEITE ..OIL SEAL	1		1			
4	5AP–F3153–00	..ANILLO DE ENGANCHE ..RING, SNAP	1		1			
5	4GU–F3144–00	..GUARDAPOLVO ..SEAL, DUST	1		1			
6	5HH–F3110–22	.TUBO INTERIOR COMPLETO 1 .INNER TUBE COMP.1	1		1			
7	5VL–F3170–01	.CILINDRO COMPL DE HORQ DELANT .CYLINDER COMP., FRONT FORK	1		1			
8	4GU–F3173–01	.VASTAGO AHUSADO .SPINDLE, TAPER	1		1			
9	4TU–F3479–00	.EMPAQUE .GASKET	1		1			
10	5LK–F3356–01	.PERNO 2 .BOLT 2	1		1			
11	5VL–F3141–40	.RESORTE HORQUILLA DELANT. .SPRING, FRONT FORK	1		1			
12	5AP–F3427–00	.ARANDELA .WASHER	1		1			
13	5HH–F3118–10	.SEPARADOR .SPACER	1		1			
14	5AP–F3147–00	.ARO .O-RING	1		1			
15	5VL–F3111–20	.PERNO DE TAPA .BOLT, CAP	1		1			
16	5VL–F3154–00	.TAPON TUBO INTERIOR .CAP	1		1			
17	5VL–H5110–01	.REFLECTOR COMPLETO .REFLECTOR ASSY	1		1			
18	5VL–F3103–B0	HORQUILLA DELANTERA COMPL.(MD) FRONT FORK ASSY (R.H)	1		1			
19	5VL–F3107–40	.TUBO EXTERIOR COMPLETO (MD) .OUTER TUBE COMP. (R.H)	1		1			
20	4GU–F3145–00	..RETEN DE ACEITE ..OIL SEAL	1		1			
21	5AP–F3153–00	..ANILLO DE ENGANCHE ..RING, SNAP	1		1			
22	4GU–F3144–00	..GUARDAPOLVO ..SEAL, DUST	1		1			
23	5HH–F3110–22	.TUBO INTERIOR COMPLETO 1 .INNER TUBE COMP.1	1		1			
24	5VL–F3170–01	.CILINDRO COMPL DE HORQ DELANT .CYLINDER COMP., FRONT FORK	1		1			
25	4GU–F3173–01	.VASTAGO AHUSADO .SPINDLE, TAPER	1		1			
26	4TU–F3479–00	.EMPAQUE .GASKET	1		1			
27	5LK–F3356–01	.PERNO 2 .BOLT 2	1		1			

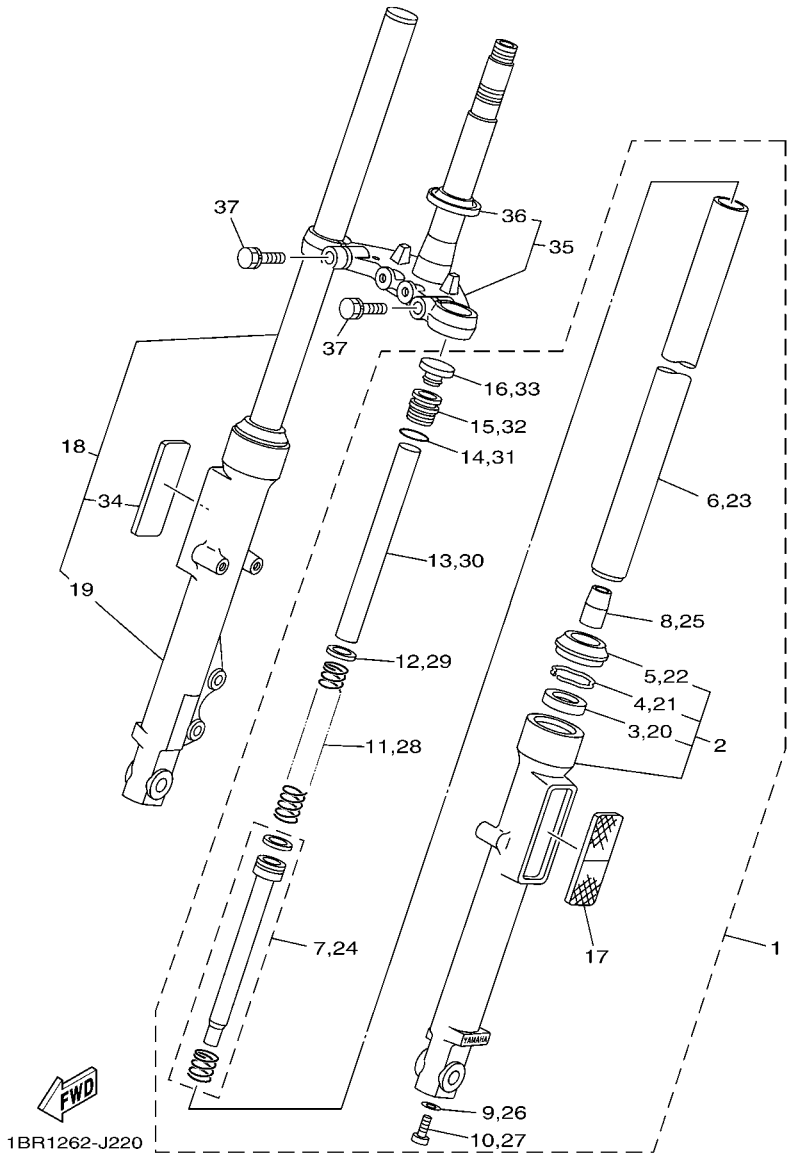

FIG. 23 HORQUILLA DELANTERA FRONT FORK

REF. Nº	CODIGO Nº PART NO.	DESCRIPCION DESCRIPTION	4P2G	4P2H	4P2J			OBSERVACIONES REMARKS
28	5VL–F3141–40	.RESORTE HORQUILLA DELANT. .SPRING, FRONT FORK	1		1			
29	5AP–F3427–00	.ARANDELA .WASHER	1		1			
30	5HH–F3118–10	.SEPARADOR .SPACER	1		1			
31	5AP–F3147–00	.ARO .O-RING	1		1			
32	5VL–F3111–20	.PERNO DE TAPA .BOLT, CAP	1		1			
33	5VL–F3154–00	.TAPON TUBO INTERIOR .CAP	1		1			
34	5VL–H5110–01	.REFLECTOR COMPLETO .REFLECTOR ASSY	1		1			
35	5VL–F331X–01	MENSULA INFERIOR BRACKET, UNDER	1		1			
36	4FP–F3411–10	.PISTA DE BOLAS 1 .RACE, BALL 1	1		1			
37	5VL–F3346–01	PERNO 1 BOLT 1	2		2			

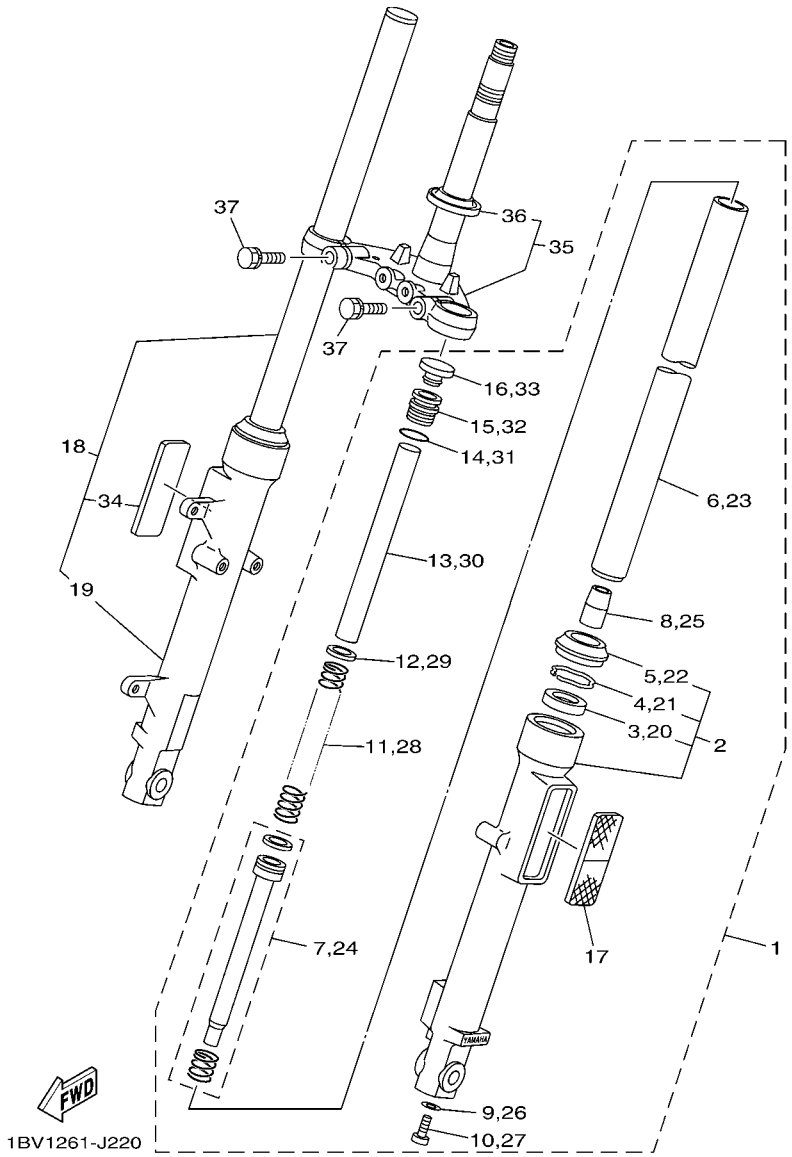

FIG. 24 HORQUILLA DELANTERA 2 FRONT FORK 2

REF. Nº	CODIGO Nº PART NO.	DESCRIPCION DESCRIPTION	4P2G	4P2H	4P2J			OBSERVACIONES REMARKS
1	5VL–F3102–92	HORQUILLA DELANTERA COMPL.(MI) FRONT FORK ASSY (L.H)		1				
2	5VL–F3106–01	.TUBO EXTERIOR COMPLETO .OUTER TUBE COMP.		1				
3	4GU–F3145–00	..RETEN DE ACEITE ..OIL SEAL		1				
4	5AP–F3153–00	..ANILLO DE ENGANCHE ..RING, SNAP		1				
5	4GU–F3144–00	..GUARDAPOLVO ..SEAL, DUST		1				
6	5HH–F3110–22	.TUBO INTERIOR COMPLETO 1 .INNER TUBE COMP.1		1				
7	5VL–F3170–01	.CILINDRO COMPL DE HORQ DELANT .CYLINDER COMP., FRONT FORK		1				
8	4GU–F3173–01	.VASTAGO AHUSADO .SPINDLE, TAPER		1				
9	4TU–F3479–00	.EMPAQUE .GASKET		1				
10	5LK–F3356–01	.PERNO 2 .BOLT 2		1				
11	5VL–F3141–40	.RESORTE HORQUILLA DELANT. .SPRING, FRONT FORK		1				
12	5AP–F3427–00	.ARANDELA .WASHER		1				
13	5HH–F3118–10	.SEPARADOR .SPACER		1				
14	5AP–F3147–00	.ARO .O-RING		1				
15	5VL–F3111–20	.PERNO DE TAPA .BOLT, CAP		1				
16	5VL–F3154–00	.TAPON TUBO INTERIOR .CAP		1				
17	5VL–H5110–01	.REFLECTOR COMPLETO .REFLECTOR ASSY		1				
18	5VL–F3103–92	HORQUILLA DELANTERA COMPL.(MD) FRONT FORK ASSY (R.H)		1				
19	5VL–F3107–01	.TUBO EXTERIOR COMPLETO (MD) .OUTER TUBE COMP. (R.H)		1				
20	4GU–F3145–00	..RETEN DE ACEITE ..OIL SEAL		1				
21	5AP–F3153–00	..ANILLO DE ENGANCHE ..RING, SNAP		1				
22	4GU–F3144–00	..GUARDAPOLVO ..SEAL, DUST		1				
23	5HH–F3110–22	.TUBO INTERIOR COMPLETO 1 .INNER TUBE COMP.1		1				
24	5VL–F3170–01	.CILINDRO COMPL DE HORQ DELANT .CYLINDER COMP., FRONT FORK		1				
25	4GU–F3173–01	.VASTAGO AHUSADO .SPINDLE, TAPER		1				
26	4TU–F3479–00	.EMPAQUE .GASKET		1				
27	5LK–F3356–01	.PERNO 2 .BOLT 2		1				

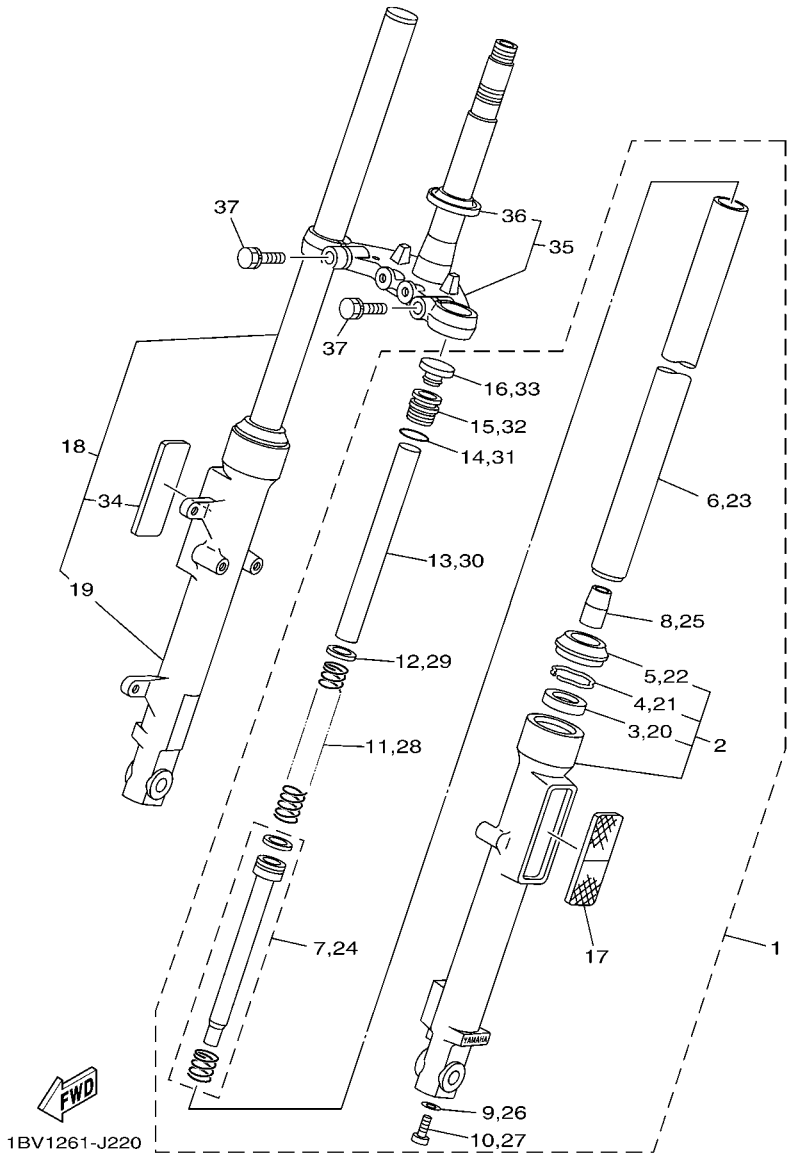

FIG. 24 HORQUILLA DELANTERA 2 FRONT FORK 2

REF. Nº	CODIGO Nº PART NO.	DESCRIPCION DESCRIPTION	4P2G	4P2H	4P2J			OBSERVACIONES REMARKS
28	5VL–F3141–40	.RESORTE HORQUILLA DELANT. .SPRING, FRONT FORK		1				
29	5AP–F3427–00	.ARANDELA .WASHER		1				
30	5HH–F3118–10	.SEPARADOR .SPACER		1				
31	5AP–F3147–00	.ARO .O-RING		1				
32	5VL–F3111–20	.PERNO DE TAPA .BOLT, CAP		1				
33	5VL–F3154–00	.TAPON TUBO INTERIOR .CAP		1				
34	5VL–H5110–01	.REFLECTOR COMPLETO .REFLECTOR ASSY		1				
35	5VL–F331X–01	MENSULA INFERIOR BRACKET, UNDER		1				
36	4FP–F3411–10	.PISTA DE BOLAS 1 .RACE, BALL 1		1				
37	5VL–F3346–01	PERNO 1 BOLT 1		2				

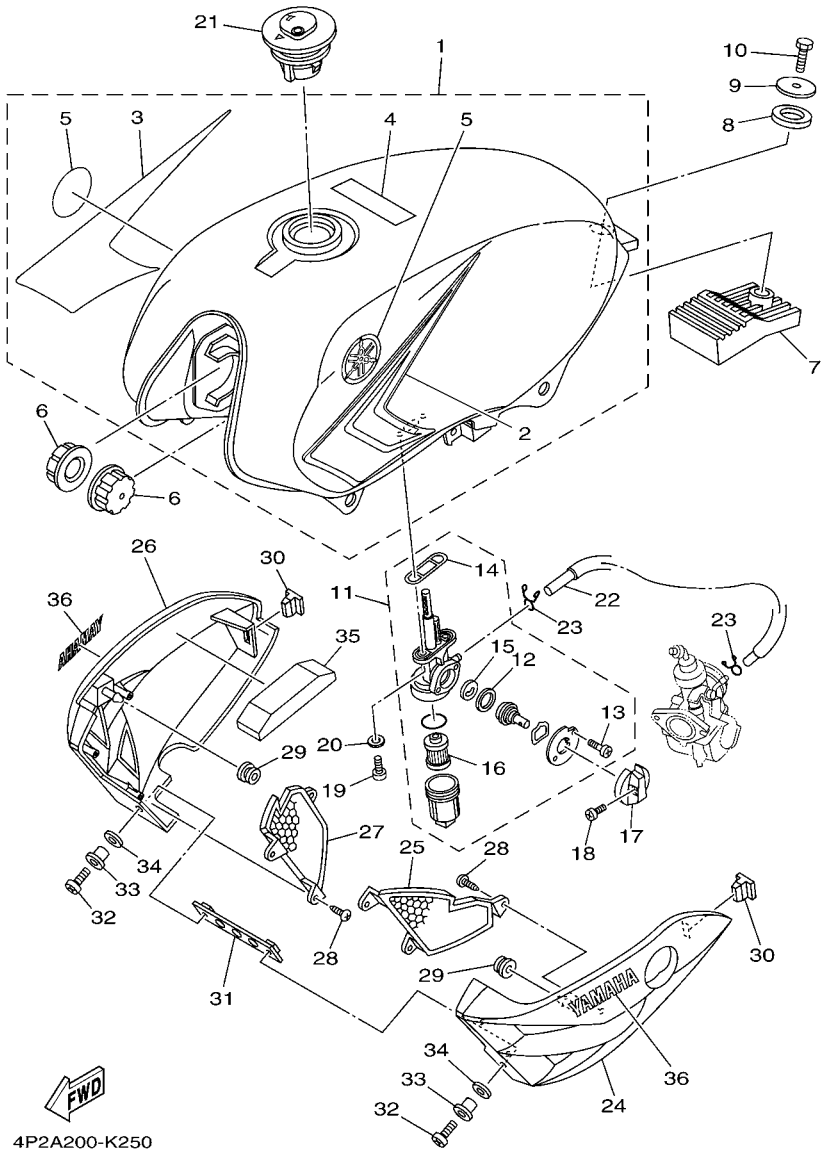

FIG. 25 DEPOSITO DE COMBUSTIBLE FUEL TANK

REF. Nº	CODIGO Nº PART NO.	DESCRIPCION DESCRIPTION	4P2G	4P2H	4P2J			OBSERVACIONES REMARKS
1	5VL–W2411–33–P5	DEPOSITO DE COMBUSTIBLE COMP. FUEL TANK ASSY	1	1	1			UR PARA VRC7 UR FOR VRC7
	5VL–W2411–33–P0	DEPOSITO DE COMBUSTIBLE COMP. FUEL TANK ASSY	1	1	1			UR PARA SMX UR FOR SMX
	5VL–W2411–33–P2	DEPOSITO DE COMBUSTIBLE COMP. FUEL TANK ASSY	1	1	1			UR PARA DPBMC UR FOR DPBMC
	5VL–W2411–33–P1	DEPOSITO DE COMBUSTIBLE COMP. FUEL TANK ASSY	1	1	1			UR PARA LGM3 UR FOR LGM3
	5VL–W2411–10–P6	DEPOSITO DE COMBUSTIBLE COMP. FUEL TANK ASSY		1				UR PARA BWC1 UR FOR BWC1
2	3D9–F4244–50	.CALCOMANIA DEPOSITO COMBUST.1 .GRAPHIC, FUEL TANK 1	1	1	1			UR PARA VRC7 UR FOR VRC7
	3D9–F4244–70	.CALCOMANIA DEPOSITO COMBUST.1 .GRAPHIC, FUEL TANK 1	1	1	1			UR PARA SMX UR FOR SMX
	3D9–F4244–40	.CALCOMANIA DEPOSITO COMBUST.1 .GRAPHIC, FUEL TANK 1	1	1	1			UR PARA DPBMC UR FOR DPBMC
	3D9–F4244–60	.CALCOMANIA DEPOSITO COMBUST.1 .GRAPHIC, FUEL TANK 1	1	1	1			UR PARA LGM3 UR FOR LGM3
3	3D9–F4245–50	.CALCOMANIA DEPOSITO COMBUST.2 .GRAPHIC, FUEL TANK 2	1	1	1			UR PARA VRC7 UR FOR VRC7
	3D9–F4245–70	.CALCOMANIA DEPOSITO COMBUST.2 .GRAPHIC, FUEL TANK 2	1	1	1			UR PARA SMX UR FOR SMX
	3D9–F4245–40	.CALCOMANIA DEPOSITO COMBUST.2 .GRAPHIC, FUEL TANK 2	1	1	1			UR PARA DPBMC UR FOR DPBMC
	3D9–F4245–60	.CALCOMANIA DEPOSITO COMBUST.2 .GRAPHIC, FUEL TANK 2	1	1	1			UR PARA LGM3 UR FOR LGM3
4	5PA–21568–01	.ETIQUETA DE PRECAUCION .LABEL, WARNING	1	1	1			
5	3D9–F411B–00	.EMBLEMA .EMBLEM	2		2			
	3D9–F411B–10	.EMBLEMA .EMBLEM		2				UR EXCEPT PARA BW UR EXCEPT FOR BWC
	2B9–F411B–00	.EMBLEMA .EMBLEM		2				UR PARA BWC1 UR FOR BWC1
6	4FP–F4181–00	AMORTIGUADOR DE MONTAJE 1 DAMPER, LOCATING 1	2	2	2			
7	5VL–F4183–00	AMORTIGUADOR DE MONTAJE 3 DAMPER, LOCATING 3	1	1	1			
8	5VL–F4182–00	AMORTIGUADOR DE MONTAJE 2 DAMPER, LOCATING 2	1	1	1			
9	90201–088P2	ARANDELA PLANA WASHER, PLATE	1	1	1			
10	97002–08016	PERNO BOLT	1	1	1			
11	5VL–F4500–00	GRIFO DE COMBUSTIBLE 1 FUEL COCK ASSY 1	1	1	1			
12	5VL–F4534–00	.SELLO DE GRIFO .SEAL, COCK	1	1	1			
13	97880–03008	.TORNILLO DE CABEZA CON PLANA .SCREW, PAN HEAD	2	2	2			
14	5VL–F4512–00	.EMPAQUE .GASKET	1	1	1			
15	5VL–F4523–00	.VALVULA .VALVE	1	1	1			

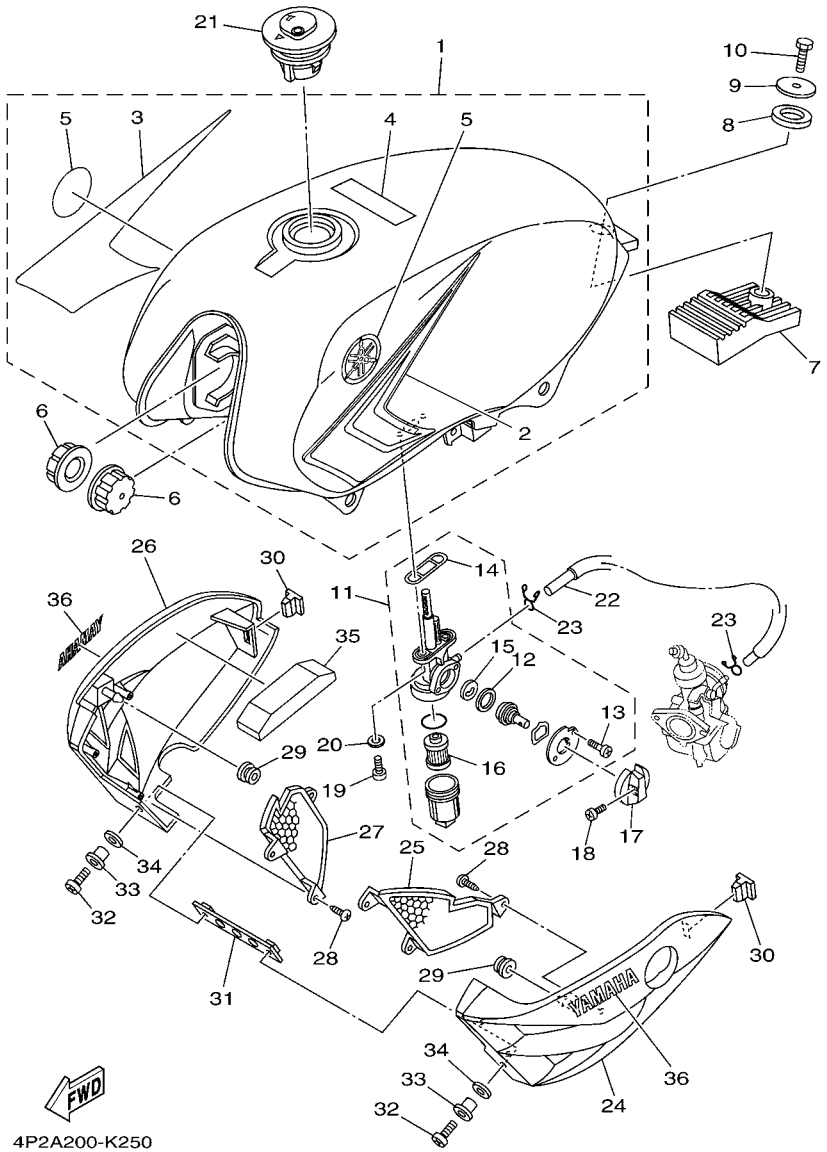

FIG. 25 DEPOSITO DE COMBUSTIBLE FUEL TANK

REF. Nº	CODIGO Nº PART NO.	DESCRIPCION DESCRIPTION	4P2G	4P2H	4P2J			OBSERVACIONES REMARKS
16	5VL–F4515–00	.RED DE FILTRO 2 .NET, FILTER 2	1	1	1			
17	5VL–F4524–01	LLAVE DEL GRIFO LEVER, COCK	1	1	1			
18	90157–03800	TORNILLO CABEZA CONICA PLANA SCREW, PAN HEAD	1	1	1			
19	90159–06820	TORNILLO CON VALONA SCREW, WITH WASHER	2	2	2			
20	90430–05800	JUNTA GASKET	2	2	2			
21	5VL–F4610–02	TAPA COMPLETA CAP ASSY	1	1	1			
22	4P2–F4311–00	TUBO DE COMBUSTIBLE 1 PIPE, FUEL 1	1	1	1			
23	90467–09854	PRESILLA CLIP	2	2	2			
24	5VL–F137W–20–P4	CUBIERTA DE GUIA DE AIRE 1 SCOOP, AIR 1	1	1	1			UR PARA VRC7 UR FOR VRC7
	5VL–F137W–20–P0	CUBIERTA DE GUIA DE AIRE 1 SCOOP, AIR 1	1	1	1			UR PARA SMX UR FOR SMX
	5VL–F137W–20–P2	CUBIERTA DE GUIA DE AIRE 1 SCOOP, AIR 1	1	1	1			UR PARA DPBMC UR FOR DPBMC
	5VL–F137W–20–P1	CUBIERTA DE GUIA DE AIRE 1 SCOOP, AIR 1	1	1	1			UR PARA LGM3 UR FOR LGM3
	5VL–F137W–20–P5	CUBIERTA DE GUIA DE AIRE 1 SCOOP, AIR 1		1				UR PARA BWC1 UR FOR BWC1
25	5VL–F137U–20	GUIA DE AIRE 1 GUIDE, AIR 1	1	1	1			
26	5VL–F137X–20–P4	CUBIERTA DE GUIA DE AIRE 2 SCOOP, AIR 2	1	1	1			UR PARA VRC7 UR FOR VRC7
	5VL–F137X–20–P0	CUBIERTA DE GUIA DE AIRE 2 SCOOP, AIR 2	1	1	1			UR PARA SMX UR FOR SMX
	5VL–F137X–20–P2	CUBIERTA DE GUIA DE AIRE 2 SCOOP, AIR 2	1	1	1			UR PARA DPBMC UR FOR DPBMC
	5VL–F137X–20–P1	CUBIERTA DE GUIA DE AIRE 2 SCOOP, AIR 2	1	1	1			UR PARA LGM3 UR FOR LGM3
	5VL–F137X–20–P5	CUBIERTA DE GUIA DE AIRE 2 SCOOP, AIR 2		1				UR PARA BWC1 UR FOR BWC1
27	5VL–F137V–20	GUIA DE AIRE 2 GUIDE, AIR 2	1	1	1			
28	97702–40014	TORNILLO ROSCA HEMBRA SCREW, TAPPING	6	6	6			
29	90480–13837	TAPON GROMMET	2	2	2			
30	5VL–F1778–00	AMORTIGUADOR DE MONTAJE DAMPER, LOCATING 1	2	2	2			
31	5VL–F4216–11	SOPORTE STAY	1	1	1			
32	98512–06016	TORNILLO SCREW, PAN HEAD	2	2	2			
33	90387–06879	ESPACIADOR COLLAR	2	2	2			
34	90202–09800	ARANDELA DE PLANA WASHER, PLATE	2	2	2			

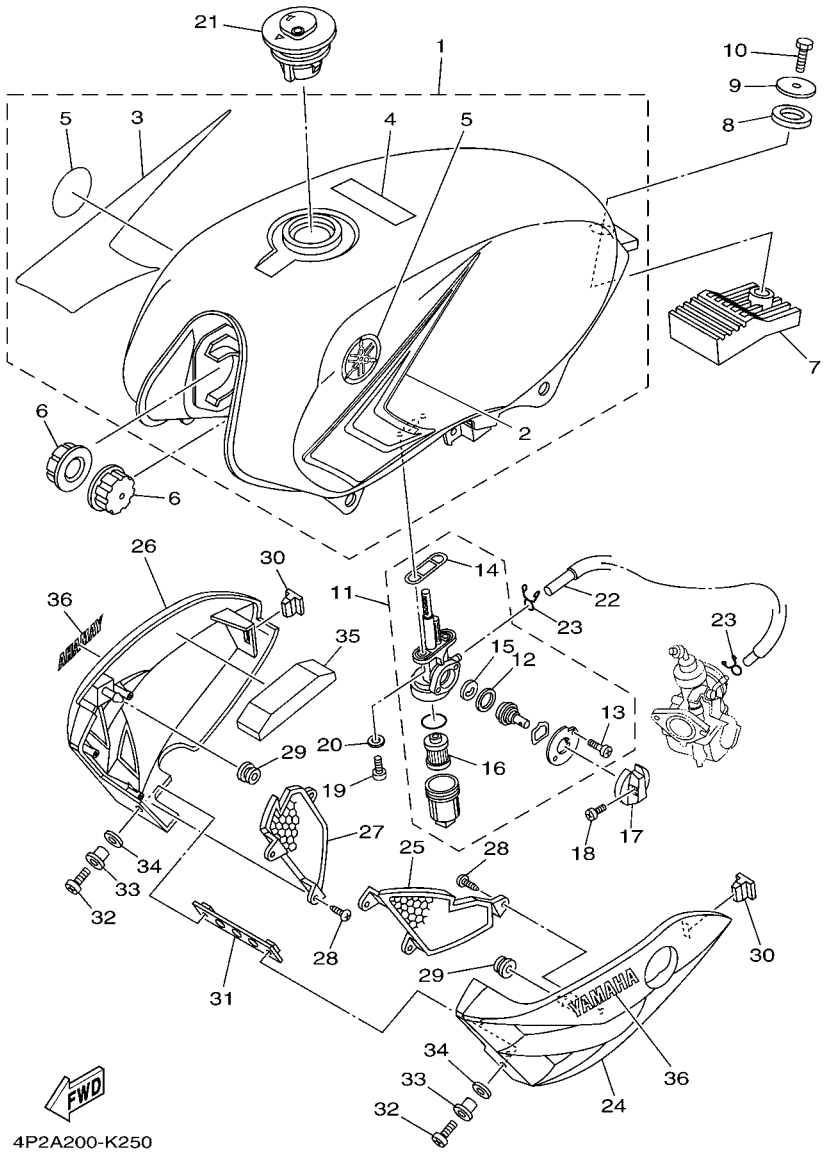

FIG. 25 DEPOSITO DE COMBUSTIBLE FUEL TANK

REF. Nº	CODIGO Nº PART NO.	DESCRIPCION DESCRIPTION	4P2G	4P2H	4P2J			OBSERVACIONES REMARKS
35	5VL–F414H–00	EQUILIBRIO, CUBIERTA DAMPER, PLATE 1	1	1	1			
36	99236–00080	EMBLEMA, YAMAHA EMBLEM, YAMAHA	2	2	2			EXCEPT LGM3,BWC1 EXCEPT LGM3,BWC1
	99234–00080	EMBLEMA, YAMAHA EMBLEM, YAMAHA	2	2	2			PARA LGM3,BWC1 FOR LGM3,BWC1

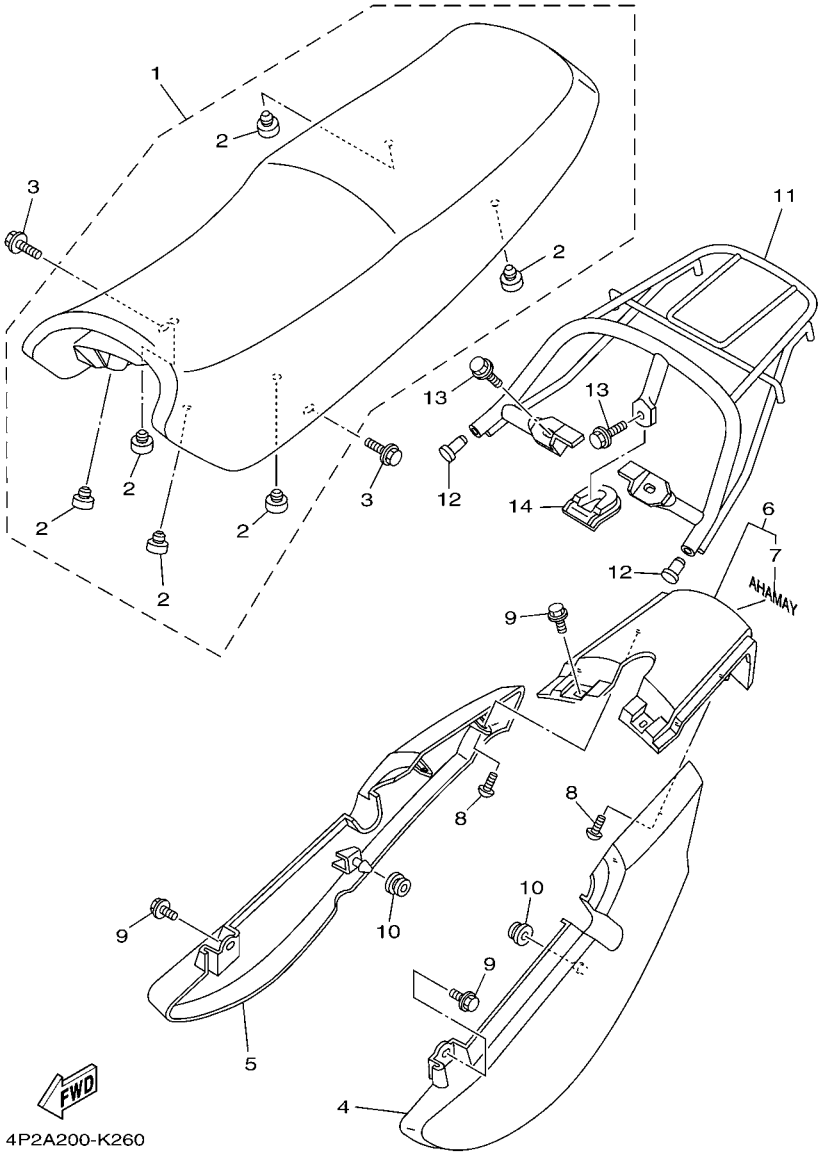

FIG. 26 ASIENTO — SEAT

REF. Nº	CODIGO Nº PART NO.	DESCRIPCION DESCRIPTION	4P2G	4P2H	4P2J			OBSERVACIONES REMARKS
1	5VL–F4730–12	SILLIN DOBLE COMPLETO DOUBLE SEAT ASSY	1	1	1			
2	4TU–F4741–00	.COJIN DE ASIENTO .PAD, SEAT	6	6	6			
3	90119–06869	TORNILLO CON ARANDELA BOLT, WITH WASHER	2	2	2			
4	5VL–F471K–00–P4	CUBIERTA, DE COLA 1 COVER, TAIL 1	1	1	1			UR PARA VRC7 UR FOR VRC7
	5VL–F471K–00–P3	CUBIERTA, DE COLA 1 COVER, TAIL 1	1	1	1			UR PARA SMX UR FOR SMX
	5VL–F471K–00–P1	CUBIERTA, DE COLA 1 COVER, TAIL 1	1	1	1			UR PARA DPBMC UR FOR DPBMC
	5VL–F471K–00–P2	CUBIERTA, DE COLA 1 COVER, TAIL 1	1	1	1			UR PARA LGM3 UR FOR LGM3
	5VL–F471K–00–P6	CUBIERTA, DE COLA 1 COVER, TAIL 1		1				UR PARA BWC1 UR FOR BWC1
5	5VL–F472K–00–P4	CUBIERTA, DE COLA 2 COVER, TAIL 2	1	1	1			UR PARA VRC7 UR FOR VRC7
	5VL–F472K–00–P3	CUBIERTA, DE COLA 2 COVER, TAIL 2	1	1	1			UR PARA SMX UR FOR SMX
	5VL–F472K–00–P1	CUBIERTA, DE COLA 2 COVER, TAIL 2	1	1	1			UR PARA DPBMC UR FOR DPBMC
	5VL–F472K–00–P2	CUBIERTA, DE COLA 2 COVER, TAIL 2	1	1	1			UR PARA LGM3 UR FOR LGM3
	5VL–F472K–00–P6	CUBIERTA, DE COLA 2 COVER, TAIL 2		1				UR PARA BWC1 UR FOR BWC1
6	5VL–W4756–00–P4	LENTE DE COLA COPLETO TAIL COVER ASSY	1	1	1			UR PARA VRC7 UR FOR VRC7
	5VL–W4756–00–P3	LENTE DE COLA COPLETO TAIL COVER ASSY	1	1	1			UR PARA SMX UR FOR SMX
	5VL–W4756–00–P1	LENTE DE COLA COPLETO TAIL COVER ASSY	1		1			UR PARA DPBMC UR FOR DPBMC
	5VL–W4756–00–P2	LENTE DE COLA COPLETO TAIL COVER ASSY	1	1	1			UR PARA LGM3 UR FOR LGM3
	5VL–W4756–01–P1	LENTE DE COLA COPLETO TAIL COVER ASSY		1				UR PARA DPBMC UR FOR DPBMC
	5VL–W4756–01–P6	LENTE DE COLA COPLETO TAIL COVER ASSY		1				UR PARA BWC1 UR FOR BWC1
7	99236–00080	.EMBLEMA, YAMAHA .EMBLEM, YAMAHA	1	1	1			EXCEPT LGM3,BWC1 EXCEPT LGM3,BWC1
	99234–00080	.EMBLEMA, YAMAHA .EMBLEM, YAMAHA	1	1	1			PARA LGM3,BWC1 FOR LGM3,BWC1
8	97702–50012	TORNILLO ROSCA HEMBRA SCREW, TAPPING	4	4	4			
9	90119–06869	TORNILLO CON ARANDELA BOLT, WITH WASHER	4	4	4			
10	90480–01868	TAPON GROMMET	2	2	2			
11	5VL–F4773–00	MANIJA DE ASIENTO HANDLE, SEAT	1	1	1			
12	5VL–F4481–00	TAPON PLUG	2	2	2			
13	95812–08016	TORNILLO DE REBORDE BOLT, FLANGE	3	3	3			

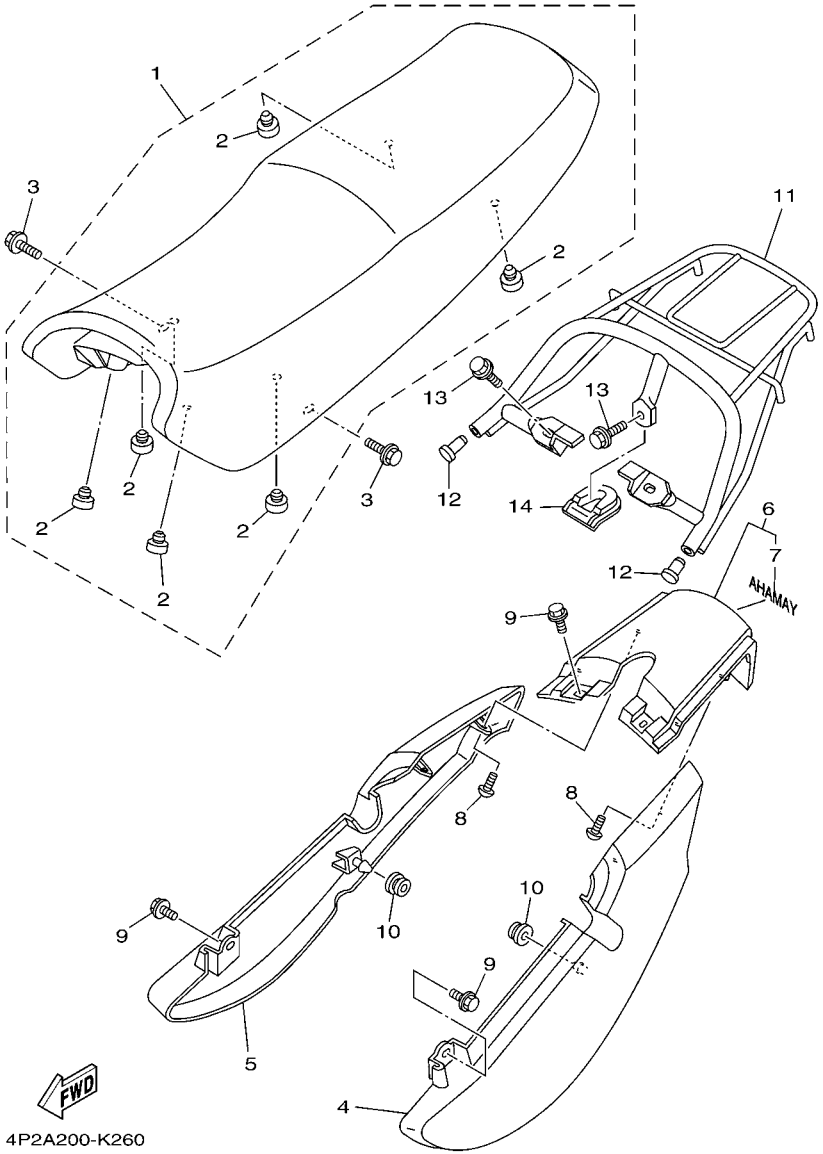

FIG. 26 ASIENTO SEAT

REF. Nº	CODIGO Nº PART NO.	DESCRIPCION DESCRIPTION	4P2G	4P2H	4P2J			OBSERVACIONES REMARKS
14	5VL–F4796–01	CUBIERTA COVER	1	1	1			

FIG. 27 RUEDA DELANTERA FRONT WHEEL

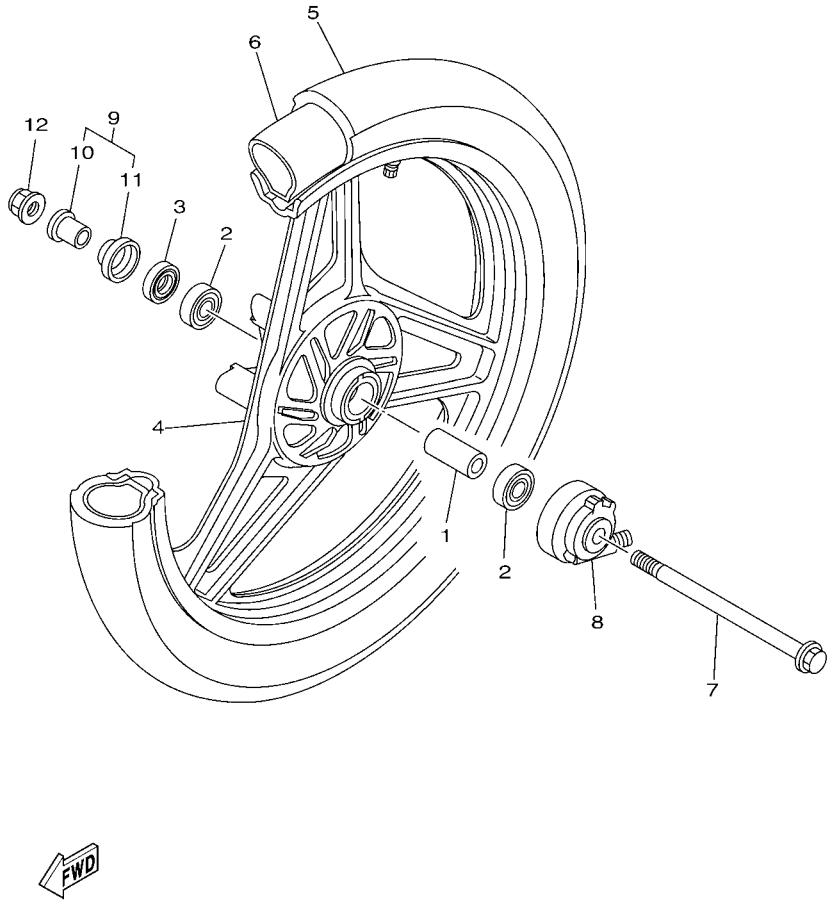

REF. Nº	CODIGO Nº PART NO.	DESCRIPCION DESCRIPTION	4P2G	4P2H	4P2J			OBSERVACIONES REMARKS
1	1PX–F5168–00–33	RUEDA FUNDIDA DELANTERA CAST WHEEL, FRONT	1		1			YB YB
2	90560–15293	SEPARADOR SPACER	1		1			
3	93306–202Y4	COJINETE BEARING	2		2			
4	93102–20857	SELLO ACEITE OIL SEAL	1		1			
5	94127–18823	NEUMATICO(2.75-18 S901 42P4PR) TIRE (2.75-18 S901 42P 4PR)	1		1			CHENG SHIN CHENG SHIN
6	94227–18808	TUBO (2.75-18 TR4) TUBE (2.75-18 TR4)	1		1			CHENG SHIN CHENG SHIN
7	5VL–F5181–11	EJE DE LA RUEDA AXLE, WHEEL	1		1			
8	4GU–F5190–12	UNIDAD DE ENGRANAJE COMPLETA GEAR UNIT ASSY	1		1			
9	93105–47808	.SELLO ACEITE .OIL SEAL	1		1			
10	4GU–F511X–01	COLLAR COLLAR	1		1			
11	90387–158K1	.ESPACIADOR .COLLAR	1		1			
12	4GU–F5118–00	.CUBIERTA DE MASA PARA POLVO .COVER, HUB DUST	1		1			
13	95602–14200	TUERCA DE AUTO-CIERRE NUT, SELF-LOCKING	1		1			

FIG. 28 RUEDA DELANTERA 2 FRONT WHEEL 2

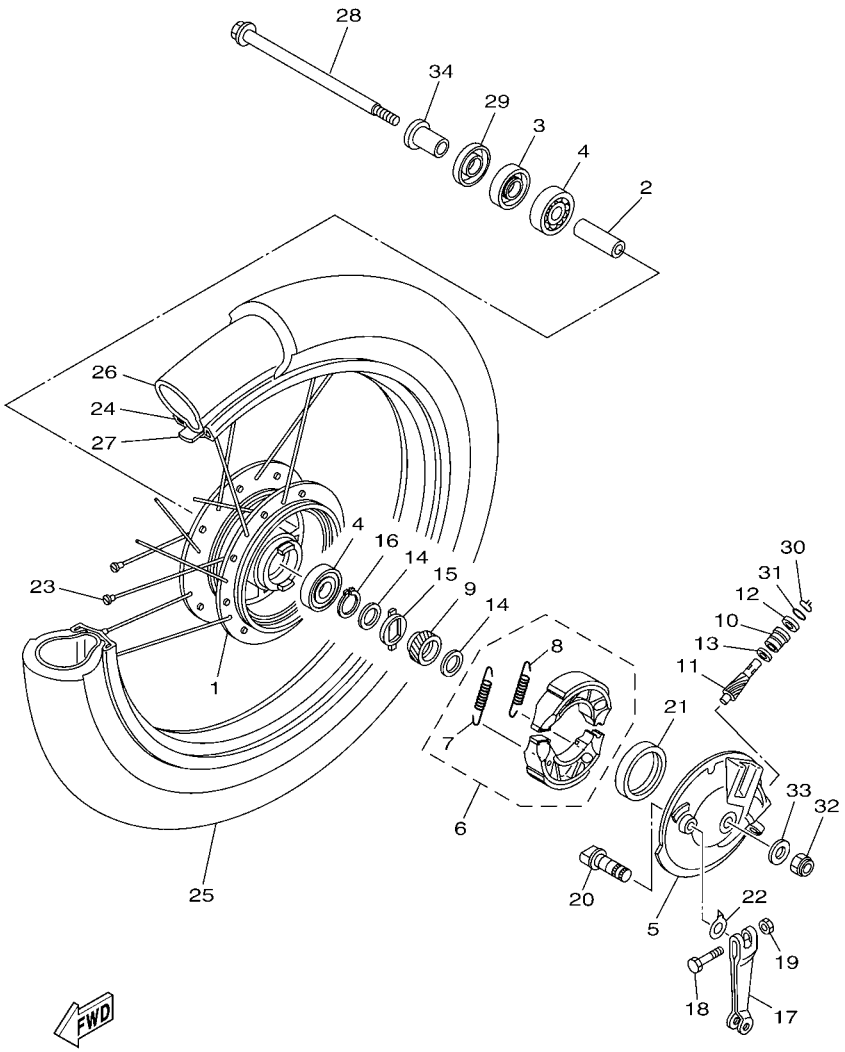

REF. Nº	CODIGO Nº PART NO.	DESCRIPCION DESCRIPTION	4P2G	4P2H	4P2J			OBSERVACIONES REMARKS
1	5VL–F5111–00–35	MASA DELANTERA HUB, FRONT		1				SL SL
2	90560–12828	SEPARADOR SPACER		1				
3	93102–18804	SELLO ACEITE OIL SEAL		1				
4	93306–301Y6	COJINETE BEARING		2				
5	5VL–F5121–01–35	PLACA DE ZAPATA DE FRENO PLATE, BRAKE SHOE		1				SL SL
6	3D9–W2533–00	JUEGO DE ZAPATA DE FRENO BRAKE SHOE KIT		1				
7	90506–12801	.RESORTE DE TENSION .SPRING, TENSION		1				
8	90506–15802	.RESORTE DE TENSION .SPRING, TENSION		1				
9	1KL–F5135–00	ENGRANAJE DE TRACCION GEAR, DRIVE		1				
10	1KL–F5136–00	BUJE BUSH		1				
11	1KL–F5138–00	ENGRANAJE DE MEDIDOR GEAR, METER		1				
12	93104–07811	SELLO ACEITE OIL SEAL		1				
13	90201–07836	ARANDELA PLANA WASHER, PLATE		1				
14	90201–20844	ARANDELA PLANA WASHER, PLATE		2				
15	1KL–F5149–01	EMBRAGUE DEL CUENTAKMS CLUTCH, METER		1				
16	93410–19831	SEGURO CIRCLIP		1				
17	4FP–F5155–11	PALANCA DE ARBOL DE LEVAS LEVER, CAMSHAFT 1		1				
18	90101–06848	TORNILLO BOLT		1				
19	95302–06600	TUERCA NUT		1				
20	4GU–F5351–02	ARBOL DE LEVAS CAMSHAFT		1				
21	93105–47802	SELLO ACEITE OIL SEAL		1				
22	4GU–F533A–01	PLACA INDICADOR PLATE, INDICATOR		1				
23	5VL–W5304–01	JUEGO DE RAYOS TRASEROS SPOKE SET, REAR		1				
24	94416–18803	ARO (1.60-18) RIM (1.60-18)		1				
25	94127–18823	NEUMATICO(2.75-18 S901 42P4PR) TIRE (2.75-18 S901 42P 4PR)		1				CHENG SHIN CHENG SHIN
26	94227–18808	TUBO (2.75-18 TR4) TUBE (2.75-18 TR4)		1				CHENG SHIN CHENG SHIN
27	94327–18800	BANDA DE ARO (2.75-18) BAND, RIM (2.75-18)		1				CHENG SHIN CHENG SHIN

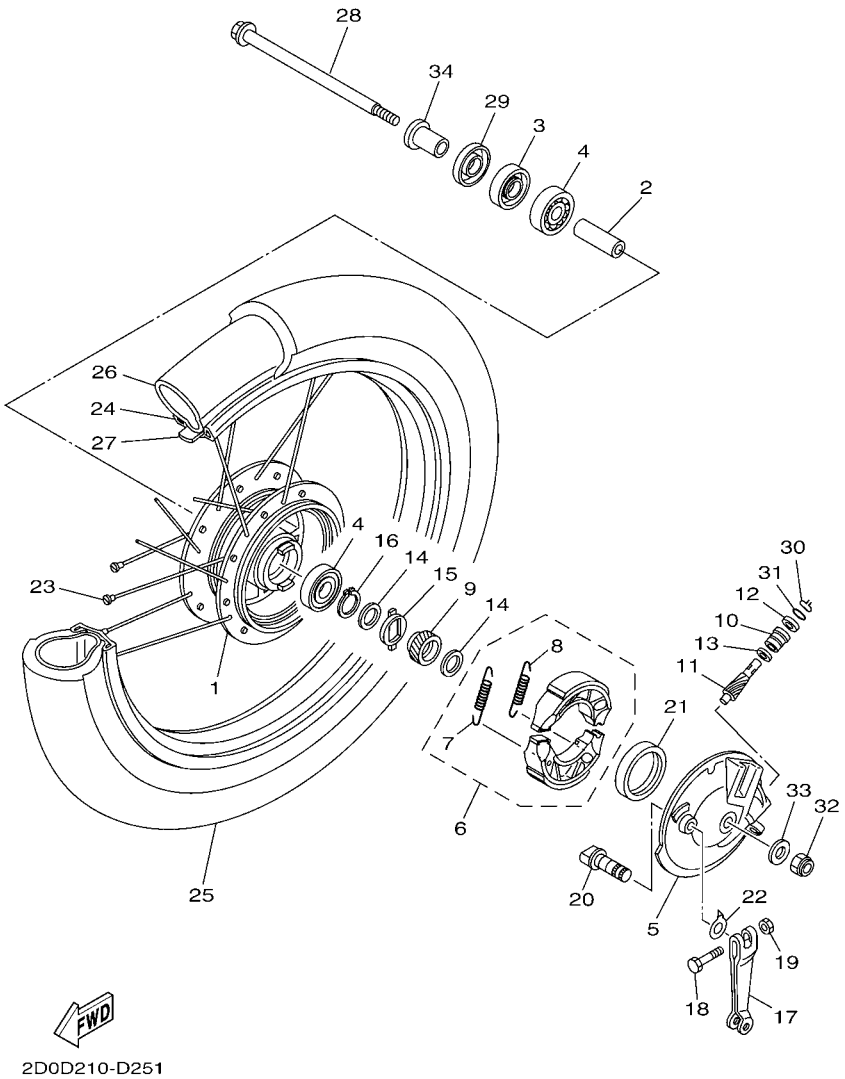

FIG. 28 RUEDA DELANTERA 2 FRONT WHEEL 2

REF. Nº	CODIGO Nº PART NO.	DESCRIPCION DESCRIPTION	4P2G	4P2H	4P2J			OBSERVACIONES REMARKS
28	5VL–F5181–01	EJE DE LA RUEDA AXLE, WHEEL		1				
29	1KL–F5118–00	CUBIERTA DE MASA PARA POLVO COVER, HUB DUST		1				
30	1KL–F5137–01	ANILLO DE TOPE RING, STOP		1				
31	93210–14813	ANILLO O O-RING		1				
32	90185–10807	TUERCA AUTOBLOCANTE NUT, SELF-LOCKING		1				
33	90201–108C7	ARANDELA PLANA WASHER, PLATE		1				
34	90387–12840	ESPACIADOR COLLAR		1				

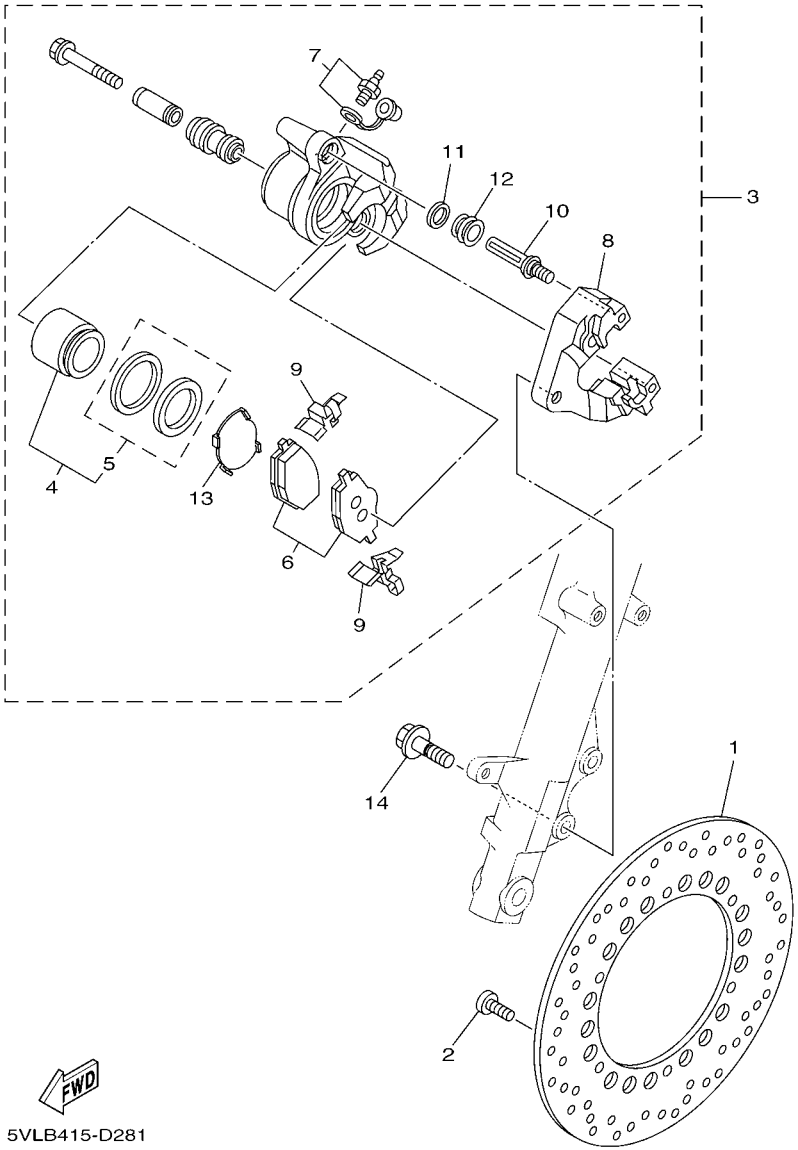

FIG. 29 CALIBRE FRENO DELANTERA FRONT BRAKE CALIPER

REF. Nº	CODIGO Nº PART NO.	DESCRIPCION DESCRIPTION	4P2G	4P2H	4P2J			OBSERVACIONES REMARKS
1	3D9–F582U–10	DISCO DE FRENO (DERECHO) DISK, BRAKE (RIGHT)	1		1			
2	90111–08805	TORNILLO BOLT,HEX. SOCKET BUTTON	5		5			
3	3D9–F580U–01	CALIBRE COMPLETO (DERECHO) CALIPER ASSY (RIGHT)	1		1			
4	4S5–W0057–00	.PISTON COMPLETO PINZA .PISTON ASSY, CALIPER	1		1			
5	4S5–W0047–00	..JUEGO DE RETENES DE PINZA ..CALIPER SEAL KIT	1		1			
6	4S5–W0045–00	.JUEGO DE COJIN DE FRENO .BRAKE PAD KIT	1		1			
7	4S5–W0048–01	.CJTO TORNILLO DE PURGA .BLEED SCREW KIT	1		1			
8	4S5–F5921–01	.MENSULA DE SOPORTE .BRACKET, SUPPORT	1		1			
9	4S5–F5937–00	.FUNDA .BOOT 2	1		1			
10	4S5–F5939–00	.PRESILLA .CLIP, PAD	1		1			
11	4S5–F5919–00	.SOPORTE DE PASTILLAS .SUPPORT, PAD	1		1			
12	4S5–F5917–00	.FUNDA DE CALIBRE .BOOT, CALIPER	1		1			
13	4S5–F5924–01	.PASADOR .PIN, PAD	1		1			
14	4S5–F5925–00	.PRESILLA .CLIP	2		2			
15	90105–10831	TORNILLO BOLT, FLANGE	2		2			

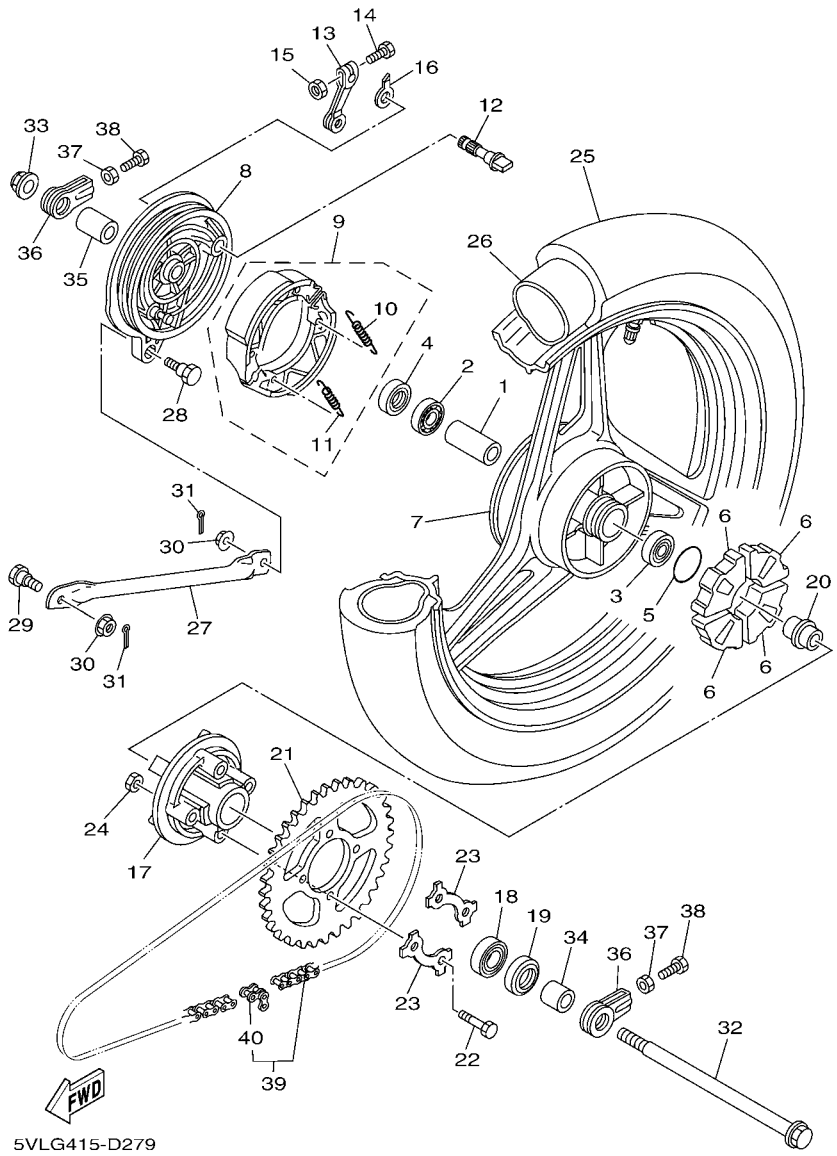

FIG. 30 RUEDA TRASERA REAR WHEEL

REF. Nº	CODIGO Nº PART NO.	DESCRIPCION DESCRIPTION	4P2G	4P2H	4P2J			OBSERVACIONES REMARKS
1	1PX–F5338–00–33	RUEDA FUNDIDA TRASERA CAST WHEEL, REAR	1		1			YB YB
2	90387–15809	ESPACIADOR COLLAR	1		1			
3	93306–202Y4	COJINETE BEARING	1		1			
4	93306–252X5	COJINETE BEARING	1		1			
5	93104–22802	SELLO ACEITE OIL SEAL	1		1			
6	93210–42807	ANILLO O O-RING	1		1			
7	1KL–F5364–00	AMORTIGUADOR DAMPER	4		4			
8	5VL–F5321–01–33	PLACA DE ZAPATA DE FRENO PLATE, BRAKE SHOE	1		1			YB YB
9	3D9–W2533–00	JUEGO DE ZAPATA DE FRENO BRAKE SHOE KIT	1		1			
10	90506–12801	.RESORTE DE TENSION .SPRING, TENSION	1		1			
11	90506–15802	.RESORTE DE TENSION .SPRING, TENSION	1		1			
12	4GU–F5351–02	ARBOL DE LEVAS CAMSHAFT	1		1			
13	5VL–F5355–01	PALANCA DE ARBOL DE LEVAS LEVER, CAMSHAFT	1		1			
14	90101–06848	TORNILLO BOLT	1		1			
15	95302–06600	TUERCA NUT	1		1			
16	4GU–F533A–01	PLACA INDICADOR PLATE, INDICATOR	1		1			
17	5VL–F5366–00	EMBRAGUE DE MASA CLUTCH, HUB	1		1			
18	93306–004YL	COJINETE BEARING	1		1			
19	93106–26804	SELLO ACEITE OIL SEAL	1		1			
20	5VL–F5387–01	EJE DE CORONA AXLE, SPROCKET	1		1			
21	5VL–F5445–01	CORONA (45T) SPROCKET, DRIVEN (45T)	1		1			
22	90109–08864	PERNO BOLT	4		4			
23	5LK–F5412–01	ARANDELA WASHER	2		2			
24	90179–08639	TUERCA NUT	4		4			
25	94109–18805	NEUMATICO (90/90-18 S180 57P) TIRE (90/90-18 S180 57P)	1		1			CHENG SHIN CHENG SHIN
26	94227–18808	TUBO (2.75-18 TR4) TUBE (2.75-18 TR4)	1		1			CHENG SHIN CHENG SHIN
27	5VL–F5371–00	BARRA TENSORA BAR, TENSION	1		1			

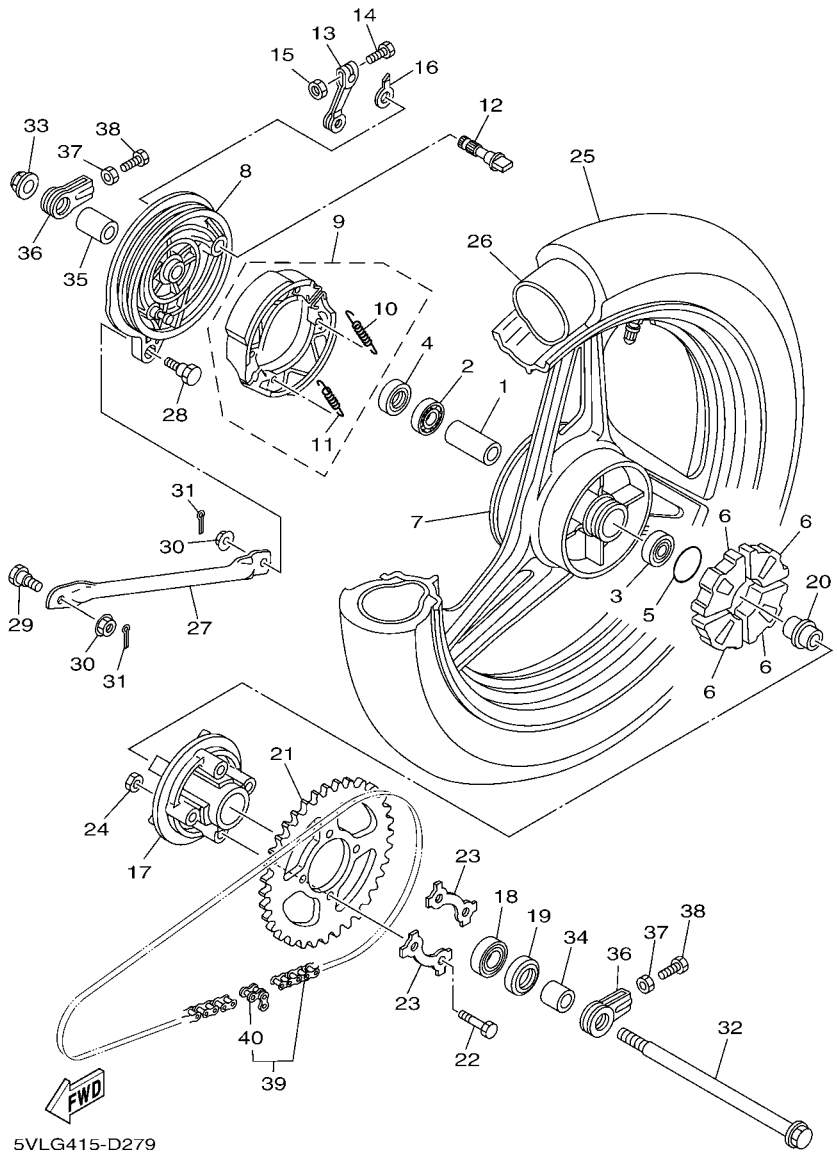

FIG. 30 RUEDA TRASERA REAR WHEEL

REF. Nº	CODIGO Nº PART NO.	DESCRIPCION DESCRIPTION	4P2G	4P2H	4P2J			OBSERVACIONES REMARKS
28	90109–08847	PERNO BOLT	1		1			
29	90109–08848	PERNO BOLT	1		1			
30	95702–08500	TUERCA DE BRIDA NUT, FLANGE	2		2			
31	91402–20012	CHAVETA PIN, COTTER	2		2			
32	5VL–F5381–01	EJE DE RUEDA AXLE, WHEEL	1		1			
33	95602–14200	TUERCA DE AUTO-CIERRE NUT, SELF-LOCKING	1		1			
34	5VL–F5386–01	COLLAR EJE DE RUEDA DENTADA COLLAR, SPROCKET AXLE	1		1			
35	5VL–F5377–01	COLLAR DE RUEDA COLLAR, WHEEL	1		1			
36	5VL–F5388–01	TIRADOR DE CADENA 1 PULLER, CHAIN 1	2		2			
37	95312–08600	TUERCA HEXAGONAL NUT	2		2			
38	90153–08804	TORNILLO HEXAGONAL SCREW, HEXAGON	2		2			
39	5VL–F53C0–10	CADENA CHAIN	1		1			
40	94668–E2001	.CONECTOR DE CADENA .JOINT, CHAIN	1		1			

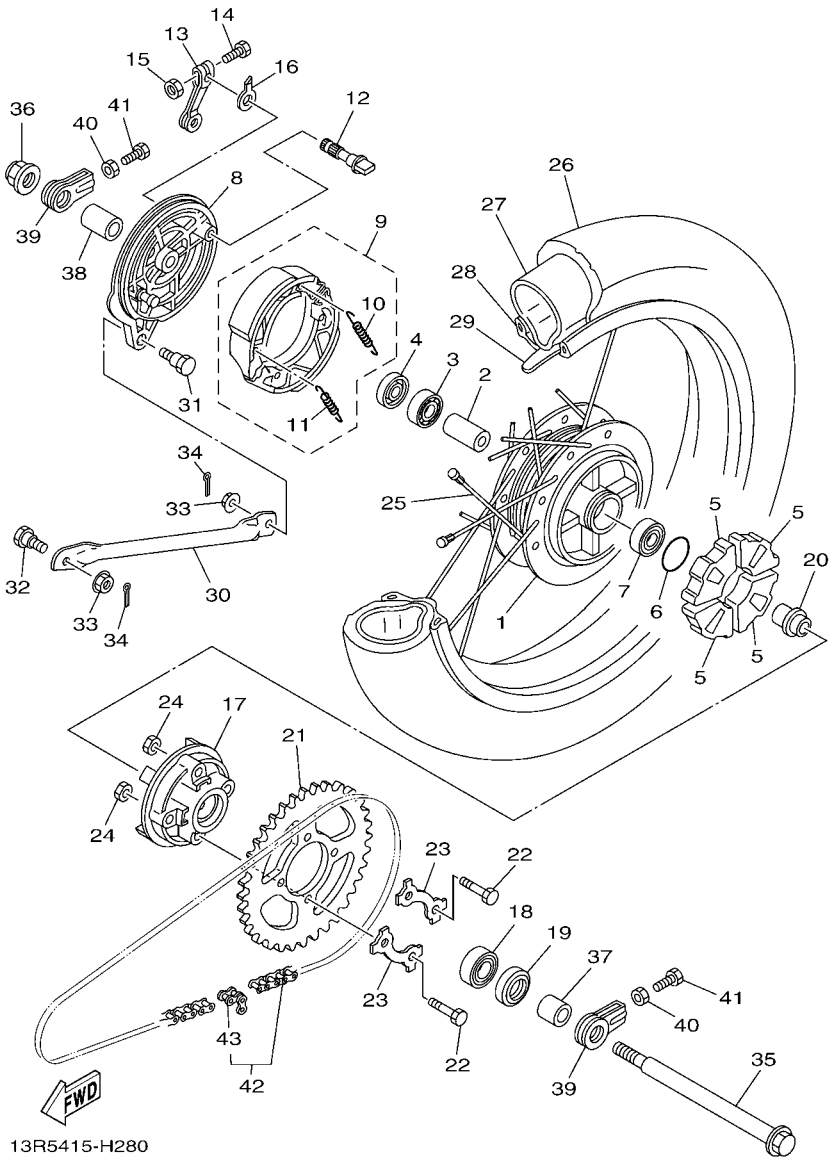

FIG. 31 RUEDA TRASERA 2 REAR WHEEL 2

REF. Nº	CODIGO Nº PART NO.	DESCRIPCION DESCRIPTION	4P2G	4P2H	4P2J			OBSERVACIONES REMARKS
1	5VL–F5311–00–35	MASA TRASERA HUB, REAR		1				SL SL
2	90387–15809	ESPACIADOR COLLAR		1				
3	93306–202Y4	COJINETE BEARING		1				
4	93104–22802	SELLO ACEITE OIL SEAL		1				
5	1KL–F5364–00	AMORTIGUADOR DAMPER		4				
6	93210–42807	ANILLO O O-RING		1				
7	93306–252X5	COJINETE BEARING		1				
8	5VL–F5321–01–35	PLACA DE ZAPATA DE FRENO PLATE, BRAKE SHOE		1				SL SL
9	3D9–W2533–00	JUEGO DE ZAPATA DE FRENO BRAKE SHOE KIT		1				
10	90506–12801	.RESORTE DE TENSION .SPRING, TENSION		1				
11	90506–15802	.RESORTE DE TENSION .SPRING, TENSION		1				
12	4GU–F5351–02	ARBOL DE LEVAS CAMSHAFT		1				
13	5VL–F5355–01	PALANCA DE ARBOL DE LEVAS LEVER, CAMSHAFT		1				
14	90101–06848	TORNILLO BOLT		1				
15	95302–06600	TUERCA NUT		1				
16	4GU–F533A–01	PLACA INDICADOR PLATE, INDICATOR		1				
17	5VL–F5366–00	EMBRAGUE DE MASA CLUTCH, HUB		1				
18	93306–004YL	COJINETE BEARING		1				
19	93106–26804	SELLO ACEITE OIL SEAL		1				
20	5VL–F5387–01	EJE DE CORONA AXLE, SPROCKET		1				
21	5VL–F5445–01	CORONA (45T) SPROCKET, DRIVEN (45T)		1				
22	90109–08864	PERNO BOLT		4				
23	5LK–F5412–01	ARANDELA WASHER		2				
24	90179–08639	TUERCA NUT		4				
25	5VL–W5304–01	JUEGO DE RAYOS TRASEROS SPOKE SET, REAR		1				
26	94109–18805	NEUMATICO (90/90-18 S180 57P) TIRE (90/90-18 S180 57P)		1				CHENG SHIN CHENG SHIN
27	94227–18808	TUBO (2.75-18 TR4) TUBE (2.75-18 TR4)		1				CHENG SHIN CHENG SHIN

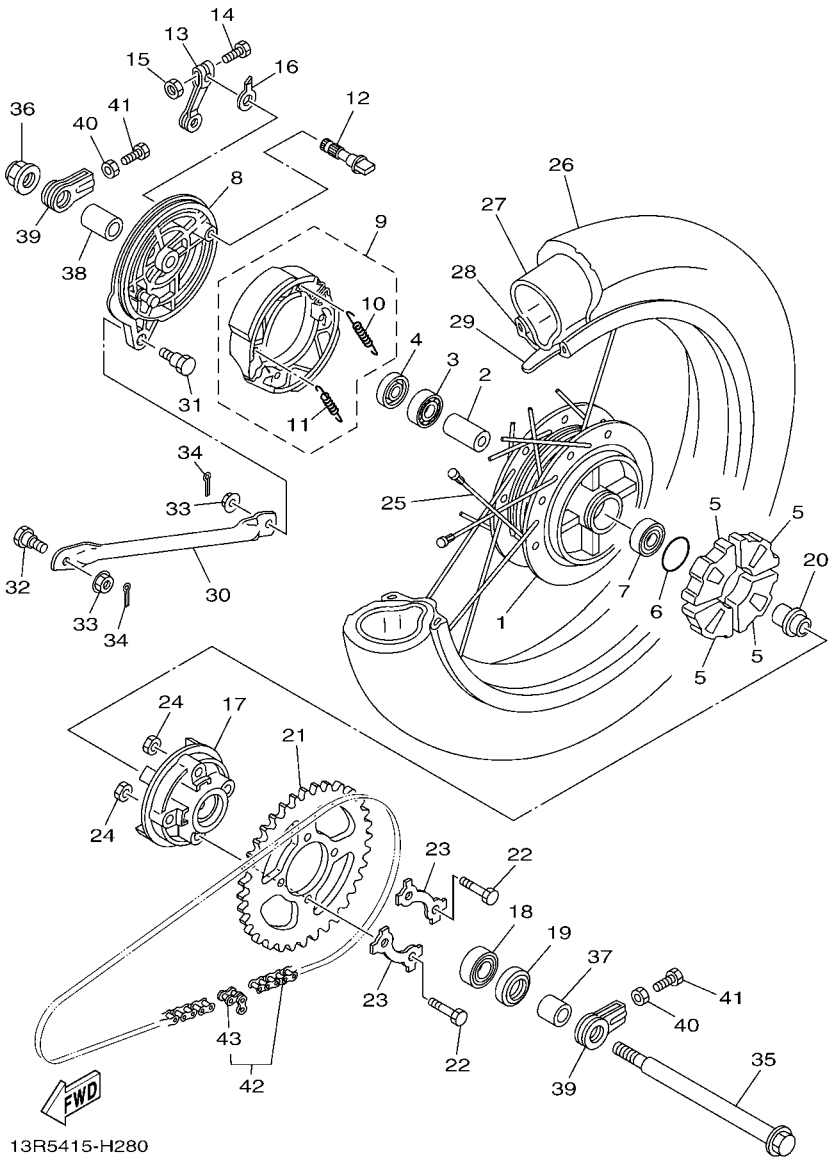

FIG. 31 RUEDA TRASERA 2 REAR WHEEL 2

REF. Nº	CODIGO Nº PART NO.	DESCRIPCION DESCRIPTION	4P2G	4P2H	4P2J			OBSERVACIONES REMARKS
28	94418–18802	ARO (1.85-18) RIM (1.85-18)		1				
29	94327–18800	BANDA DE ARO (2.75-18) BAND, RIM (2.75-18)		1				CHENG SHIN CHENG SHIN
30	5VL–F5371–00	BARRA TENSORA BAR, TENSION		1				
31	90109–08847	PERNO BOLT		1				
32	90109–08848	PERNO BOLT		1				
33	95702–08500	TUERCA DE BRIDA NUT, FLANGE		2				
34	91402–20012	CHAVETA PIN, COTTER		2				
35	5VL–F5381–01	EJE DE RUEDA AXLE, WHEEL		1				
36	95602–14200	TUERCA DE AUTO-CIERRE NUT, SELF-LOCKING		1				
37	5VL–F5386–01	COLLAR EJE DE RUEDA DENTADA COLLAR, SPROCKET AXLE		1				
38	5VL–F5377–01	COLLAR DE RUEDA COLLAR, WHEEL		1				
39	5VL–F5388–01	TIRADOR DE CADENA 1 PULLER, CHAIN 1		2				
40	95312–08600	TUERCA HEXAGONAL NUT		2				
41	90153–08804	TORNILLO HEXAGONAL SCREW, HEXAGON		2				
42	5VL–F53C0–00	CADENA (DID428 98LL) CHAIN (DID428 98LL)		1				
43	94668–83001	.CONECTOR DE CADENA (DID 428) .JOINT, CHAIN (DID 428)		1				

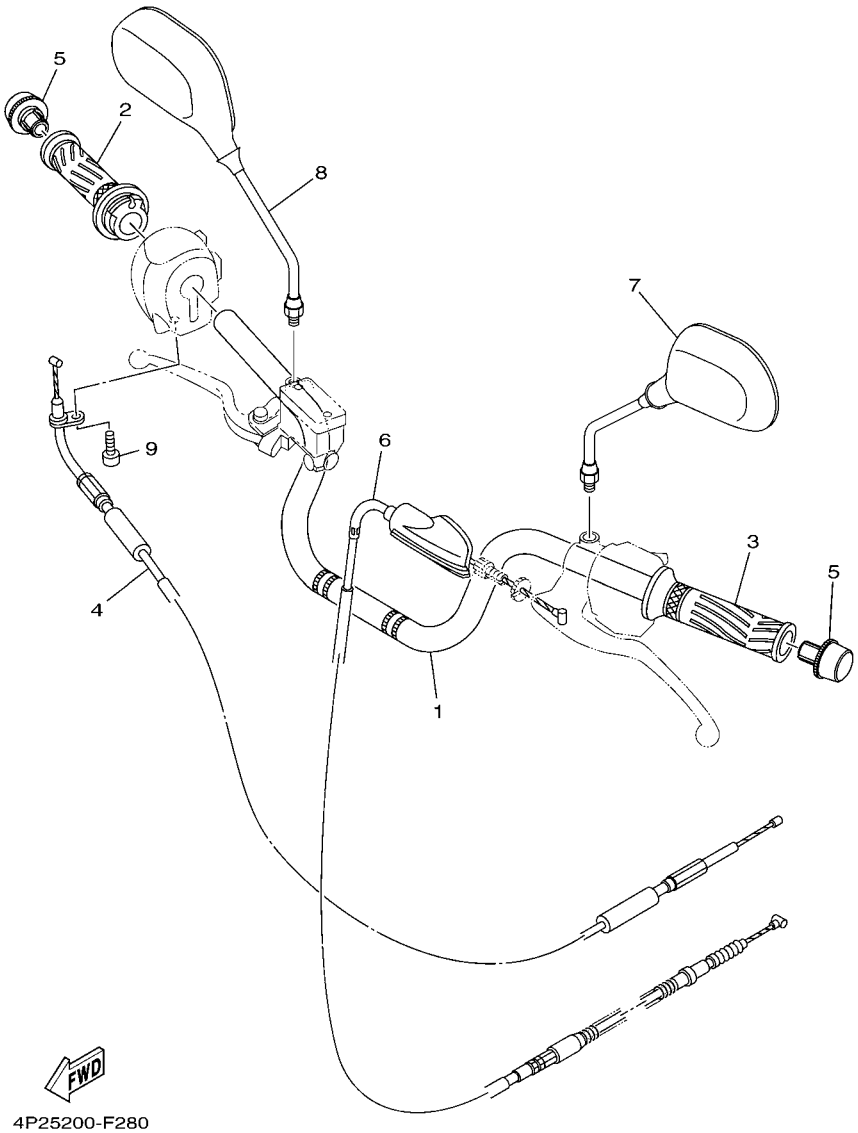

FIG. 32 MANILLAR & CABLE — STEERING HANDLE & CABLE

REF. Nº	CODIGO Nº PART NO.	DESCRIPCION DESCRIPTION	4P2G	4P2H	4P2J			OBSERVACIONES REMARKS
1	5VL–F6111–00	MANUBRIO HANDLEBAR	1		1			
2	5VL–F6240–10	EMPUNADURA COMPLETA GRIP ASSY	1		1			
3	5VL–F6241–10	EMPUNADURA GRIP	1		1			
4	4P2–F6311–01	CABLE DE ACELERADOR 1 CABLE, THROTTLE 1	1		1			
5	5VL–F628J–10	TAPA EMPUNADURA CAP, GRIP	2		2			
6	5VL–F6335–11	CABLE DE EMBRAGUE CABLE, CLUTCH	1					
	5VL–F6335–03	CABLE DE EMBRAGUE CABLE, CLUTCH			1			
7	5VL–F6280–12	ESPEJO COMPLETO (IZQUIERDO) REAR VIEW MIRROR ASSY (LEFT)	1		1			
8	5VL–F6290–12	ESPEJO COMPLETO (DERECHO) REAR VIEW MIRROR ASSY (RIGHT)	1		1			
9	98502–05014	TORNILLO SCREW, PAN HEAD	1		1			

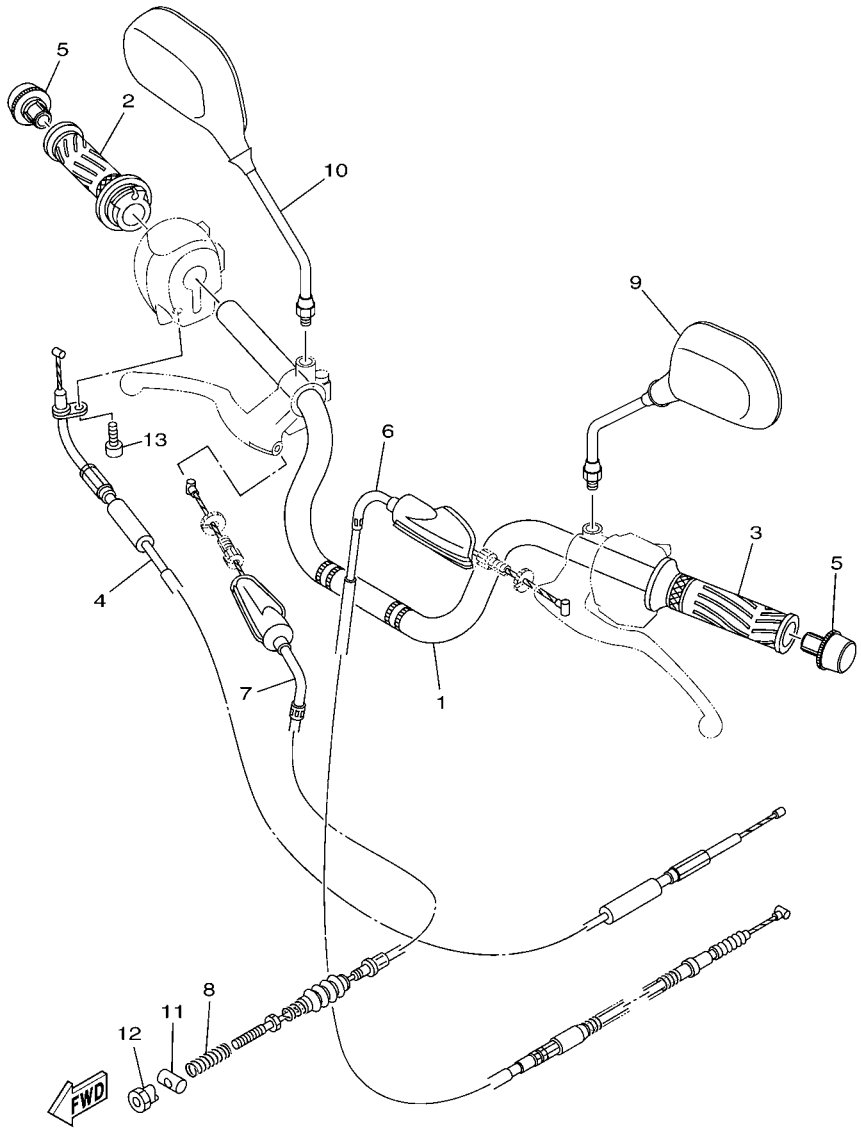

FIG. 33 MANILLAR & CABLE 2 — STEERING HANDLE & CABLE 2

REF. Nº	CODIGO Nº PART NO.	DESCRIPCION DESCRIPTION	4P2G	4P2H	4P2J			OBSERVACIONES REMARKS
1	5VL–F6111–00	MANUBRIO HANDLEBAR		1				
2	5VL–F6240–10	EMPUNADURA COMPLETA GRIP ASSY		1				
3	5VL–F6241–10	EMPUNADURA GRIP		1				
4	4P2–F6311–01	CABLE DE ACELERADOR 1 CABLE, THROTTLE 1		1				
5	5VL–F628J–10	TAPA EMPUNADURA CAP, GRIP		2				
6	5VL–F6335–03	CABLE DE EMBRAGUE CABLE, CLUTCH		1				
7	5VL–F6341–01	CABLE DE FRENO WIRE, BRAKE 1		1				
8	90501–08803	RESORTE DE COMPRESION SPRING, COMPRESSION		1				
9	5VL–F6280–12	ESPEJO COMPLETO (IZQUIERDO) REAR VIEW MIRROR ASSY (LEFT)		1				
10	5VL–F6290–12	ESPEJO COMPLETO (DERECHO) REAR VIEW MIRROR ASSY (RIGHT)		1				
11	90249–12808	PASADOR PIN		1				
12	90179–06826	TUERCA NUT		1				
13	98502–05014	TORNILLO SCREW, PAN HEAD		1				

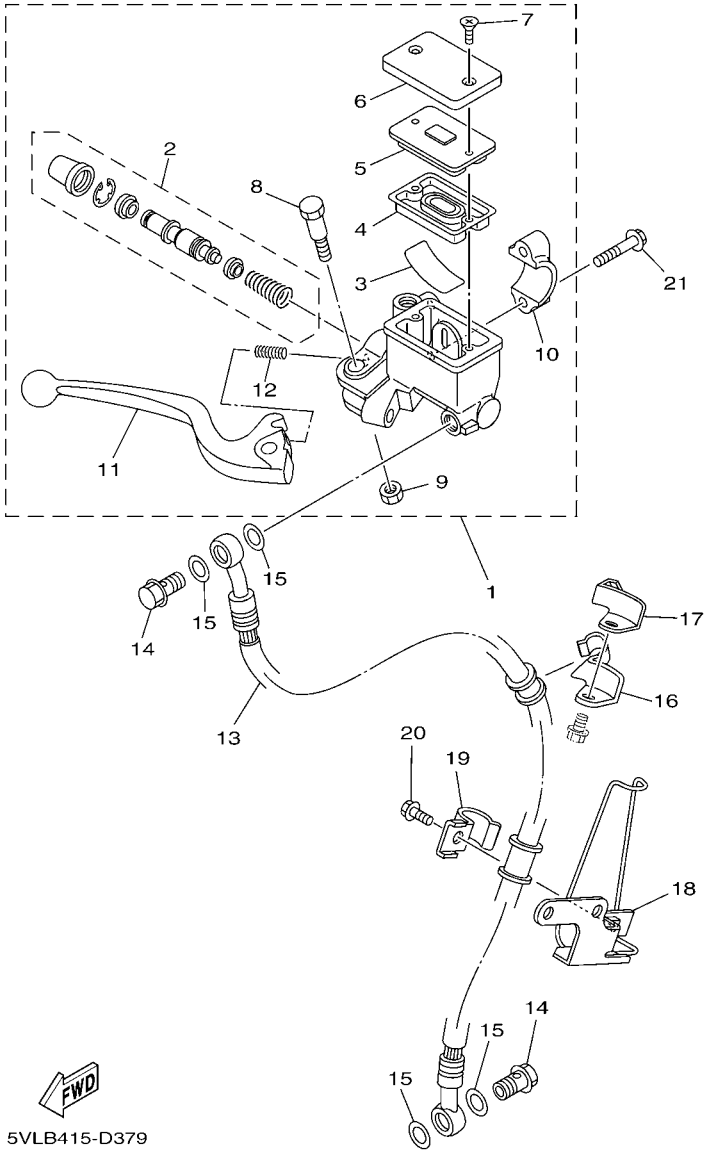

FIG. 34 CILINDRO MAESTRO DELANTERO FRONT MASTER CYLINDER

REF. Nº	CODIGO Nº PART NO.	DESCRIPCION DESCRIPTION	4P2G	4P2H	4P2J			OBSERVACIONES REMARKS
1	2B9–F583T–02	CILINDRO MAESTRO COMPLETO MASTER CYLINDER ASSY	1		1			
2	3D9–W0041–02	.JUEGO DE CILINDRO MAESTRO .CYLINDER KIT, MASTER	1		1			
3	4KL–F5896–00	.PLACA DEP. DE RESERVA .PLATE, RESERVOIR	1		1			
4	4KL–F5854–00	.EMPAQUE,DIAFRAGMA .DIAPHRAGM, RESERVOIR	1		1			
5	4KL–F585B–00	.PLACA, DIAFRAGMA .PLATE, DIAPHRAGM	1		1			
6	4KL–F5852–00	.TAPA DE TANQUE DE RESERVA .CAP, RESERVOIR	1		1			
7	4KL–F589H–01	.TORNILLO .SCREW	2		2			
8	3D9–F589F–01	.PERNO DE PALANCA .BOLT, LEVER	1		1			
9	3D9–F586F–01	.TUERCA AUTOBLOCANTE .NUT, U	1		1			
10	5VL–F5867–00	.SOPORTE DE CILINDRO MAESTRO .BRACKET, MASTER CYLINDER	1		1			
11	5VL–H3922–21	.PALANCA 2 .LEVER 2	1		1			
12	3D9–F5865–01	.RESORTE DE ASIENTO .SPRING, LEVER	1		1			
13	3D9–F5872–11	MANGUERA DE FRENO 1 HOSE, BRAKE 1	1		1			
14	90401–10811	PERNO DE UNION BOLT, UNION	2		2			
15	90201–108J9	ARANDELA PLANA WASHER, PLATE	4		4			
16	5VL–F5887–00	SOPORTE DE MANGUERA FRENO HOLDER, BRAKE HOSE	1		1			
17	5VL–F5886–00	SOPORTE DE MANGUERA FRENO HOLDER, BRAKE HOSE	1		1			
18	5VL–F5875–01	SOPORTE DE MANGUERA FRENO 1 HOLDER, BRAKE HOSE 1	1		1			
19	5VL–F5876–00	SOPORTE DE MANGUERA FRENO 2 HOLDER, BRAKE HOSE 2	1		1			
20	95022–06016	PERNO, DE BRIDA BOLT, FLANGE	1		1			
21	95022–06025	PERNO, DE BRIDA BOLT, FLANGE	2		2			

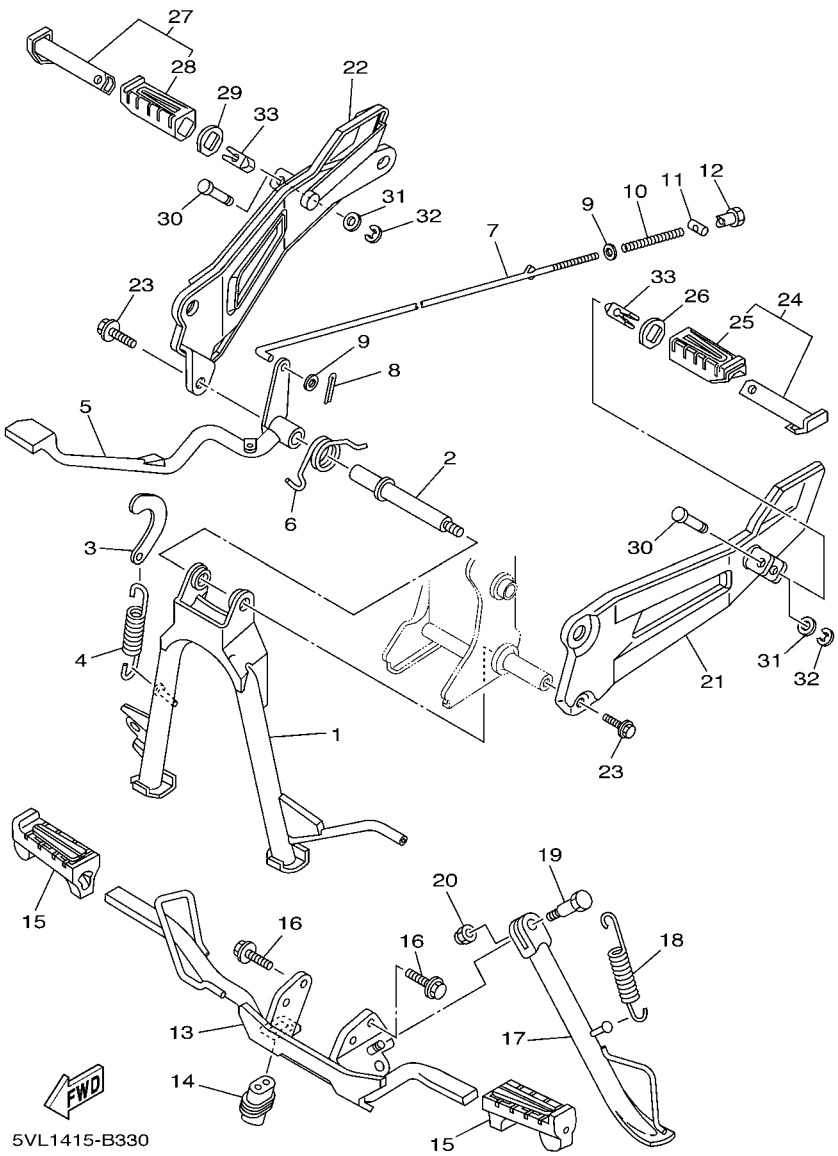

FIG. 35 SOPORTE & APOYAPIE — STAND & FOOTREST

REF. Nº	CODIGO Nº PART NO.	DESCRIPCION DESCRIPTION	4P2G	4P2H	4P2J			OBSERVACIONES REMARKS
1	5VL–F7111–00	PUNTAL PRINCIPAL STAND, MAIN	1	1	1			
2	5VL–F7112–11	EJE DE PUNTAL PRINCIPAL SHAFT, MAIN STAND	1	1	1			
3	5VL–F7115–01	CONEXION DE PUNTAL PRINCIPAL LINK, MAIN STAND	1	1	1			
4	90506–32800	RESORTE DE TENSION SPRING, TENSION	1	1	1			
5	5VL–F7211–00	PEDAL DE FRENO PEDAL, BRAKE	1	1	1			
6	90508–40801	RESORTE DE TORSION SPRING, TORSION	1	1	1			
7	5VL–F7231–01	VARILLA DE FRENO ROD, BRAKE	1	1	1			
8	91402–20012	CHAVETA PIN, COTTER	1	1	1			
9	92902–06200	ARANDELA WASHER	2	2	2			
10	90501–10806	RESORTE DE COMPRESION SPRING, COMPRESSION	1	1	1			
11	90249–12808	PASADOR PIN	1	1	1			
12	90179–06826	TUERCA NUT	1	1	1			
13	5VL–F7411–00	APOYAPIE 1 FOOTREST 1	1	1	1			
14	5VL–H2109–00	UNION, TUBO JOINT, HOSE	1	1	1			
15	5VL–F7413–00	CUBIERTA DE APOYAPIE COVER, FOOTREST	2	2	2			
16	95812–08020	TORNILLO DE REBORDE BOLT, FLANGE	2	2	2			
17	5VL–F7311–00	PUNTAL LATERAL STAND, SIDE	1	1	1			
18	90506–29800	RESORTE DE TENSION SPRING, TENSION	1	1	1			
19	90109–10849	PERNO BOLT	1	1	1			
20	90185–10807	TUERCA AUTOBLOCANTE NUT, SELF-LOCKING	1	1	1			
21	5VL–F7452–00	SOPORTE, DE APOYAPIE 1 BRACKET, FOOTREST 1	1	1	1			
22	5VL–F7462–00	SOPORTE, DE APOYAPIE 2 BRACKET, FOOTREST 2	1	1	1			
23	95812–08020	TORNILLO DE REBORDE BOLT, FLANGE	2	2	2			
24	5VL–F7430–01	APOYAPIE POSTERIOR COMPLETO 1 REAR FOOTREST ASSY 1	1	1	1			
25	5VL–F7433–00	.CUBIERTA APOYAPIE TRASERO .COVER, REAR FOOTREST	1	1	1			
26	5VL–F7445–01	PLACE 1 PLATE 1	1	1	1			
27	5VL–F7440–01	APOYAPIE POSTERIOR COMPLETO 2 REAR FOOTREST ASSY 2	1	1	1			

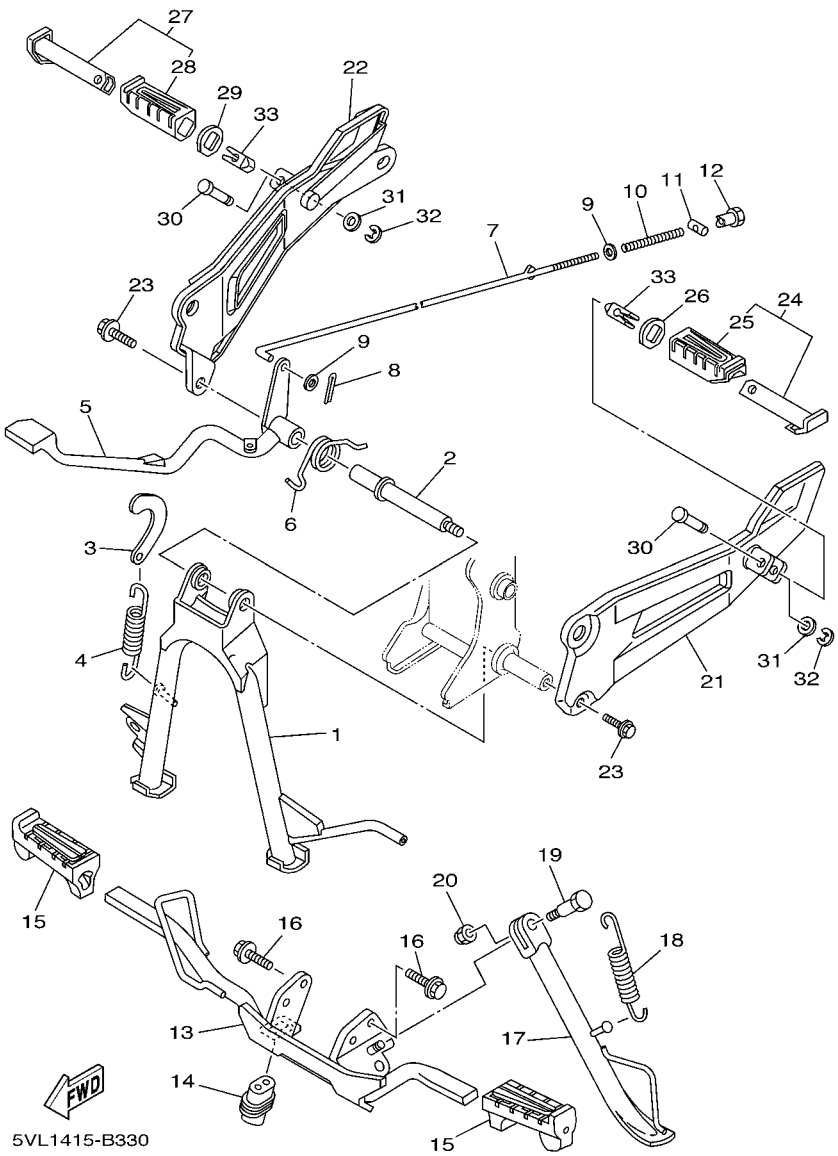

FIG. 35 SOPORTE & APOYAPIE — STAND & FOOTREST

REF. Nº	CODIGO Nº PART NO.	DESCRIPCION DESCRIPTION	4P2G	4P2H	4P2J			OBSERVACIONES REMARKS
28	5VL–F7444–00	.CUBIERTA APOYAPIE TRASERO .COVER, REAR FOOTREST	1	1	1			
29	5VL–F7445–01	PLACE 1 PLATE 1	1	1	1			
30	90249–06800	PASADOR PIN	2	2	2			
31	92902–06200	ARANDELA WASHER	2	2	2			
32	99002–05600	PRESILLA REDONDA CLIP	2	2	2			
33	5VL–F7414–00	AMORTIGUADOR DE APOYAPIE DAMPER, FOOTREST	2	2	2			

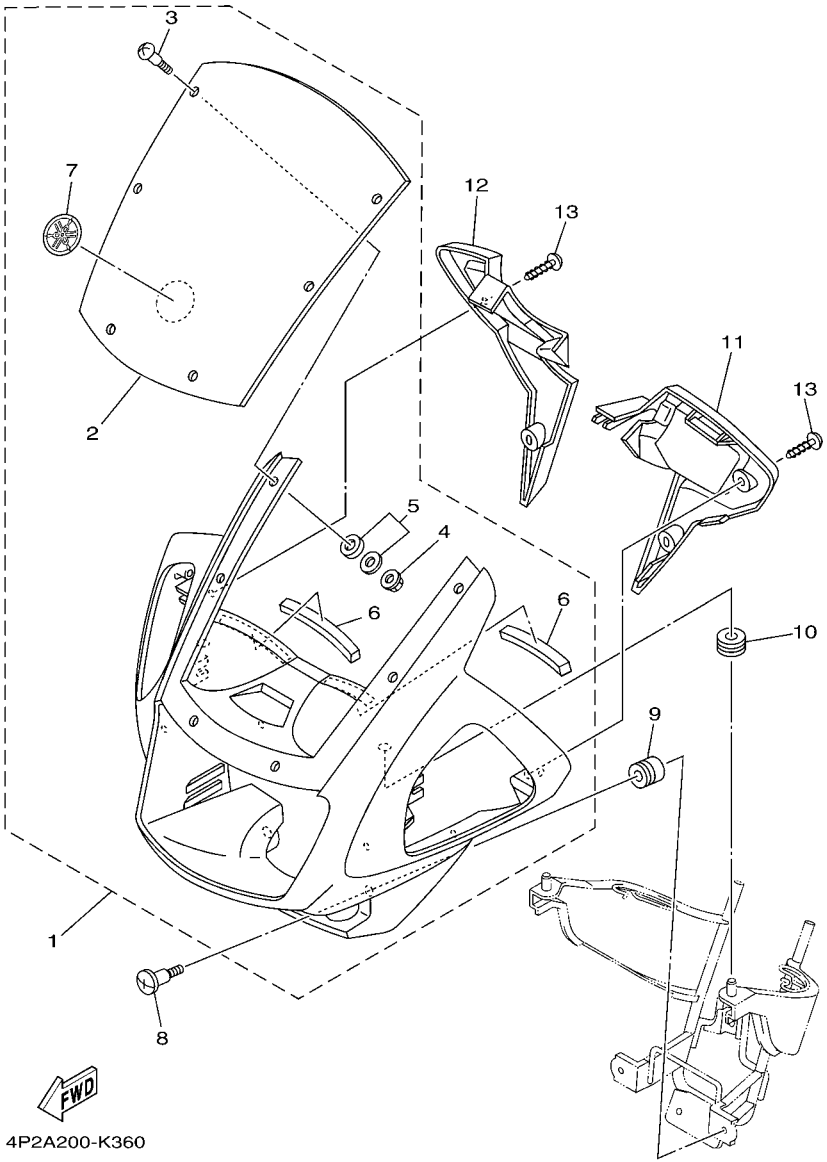

FIG. 36 BOVEDA — COWLING

REF. Nº	CODIGO Nº PART NO.	DESCRIPCION DESCRIPTION	4P2G	4P2H	4P2J			OBSERVACIONES REMARKS
1	5VL–W2835–42–P4	COBERTURA COMPLETA COWLING ASSY	1					UR PARA VRC7 UR FOR VRC7
	5VL–W2835–42–P3	COBERTURA COMPLETA COWLING ASSY	1					UR PARA SMX UR FOR SMX
	5VL–W2835–42–P1	COBERTURA COMPLETA COWLING ASSY	1					UR PARA DPBMC UR FOR DPBMC
	5VL–W2835–42–P2	COBERTURA COMPLETA COWLING ASSY	1					UR PARA LGM3 UR FOR LGM3
2	5VL–W8381–00	.PARABRISA .WINDSHIELD	1					
3	90149–05800	.TORNILLO DE REGLAJE .SCREW	6					
4	95702–05500	.TUERCA DE BRIDA .NUT, FLANGE	6					
5	5VL–F8215–01	.ARANDELA ESPECIAL .WASHER, SPECIAL	6					
6	5VL–F8217–00	.AMORTIGUADOR 1 .DAMPER 1	2					
7	5VL–F8315–10	.EMBLEMA .EMBLEM	1					
8	90150–06807	TORNILLO CABEZA REDONDA SCREW, ROUND HEAD	2					
9	90480–08891	TAPON GROMMET	2					
10	90480–13890	TAPON GROMMET	2					
11	5VL–F837L–01	PANEL DE CONSOLA PANEL, CONSOLE 1	1					
12	5VL–F837M–01	PANEL, DE CONSOLA 2 PANEL, CONSOLE 2	1					
13	97702–50016	TORNILLO ROSCA HEMBRA SCREW, TAPPING	4					

FIG. 37 GENERADOR GENERATOR

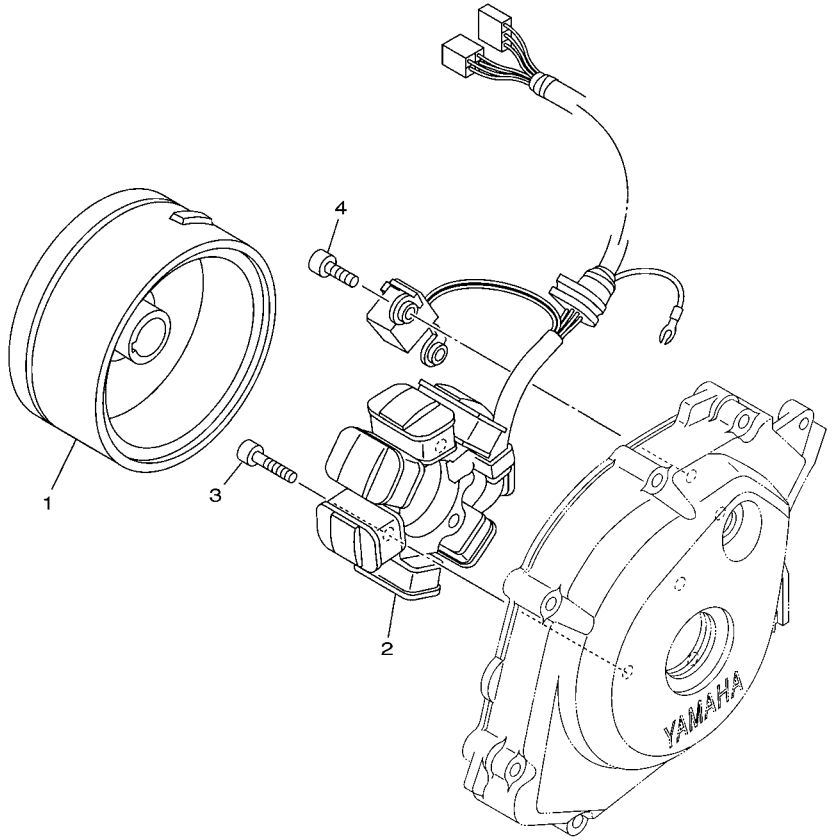

5VL1415-B350

REF. Nº	CODIGO Nº PART NO.	DESCRIPCION DESCRIPTION	4P2G	4P2H	4P2J			OBSERVACIONES REMARKS
1	5VL–H5550–01	ROTOR COMPLETO ROTOR ASSY	1	1	1			
2	5VL–H5510–01	ESTATOR COMPLETO STATOR ASSY	1	1	1			
3	91312–06025	TORNILLO BOLT	3	3	3			
4	91312–06014	TORNILLO BOLT	2	2	2			

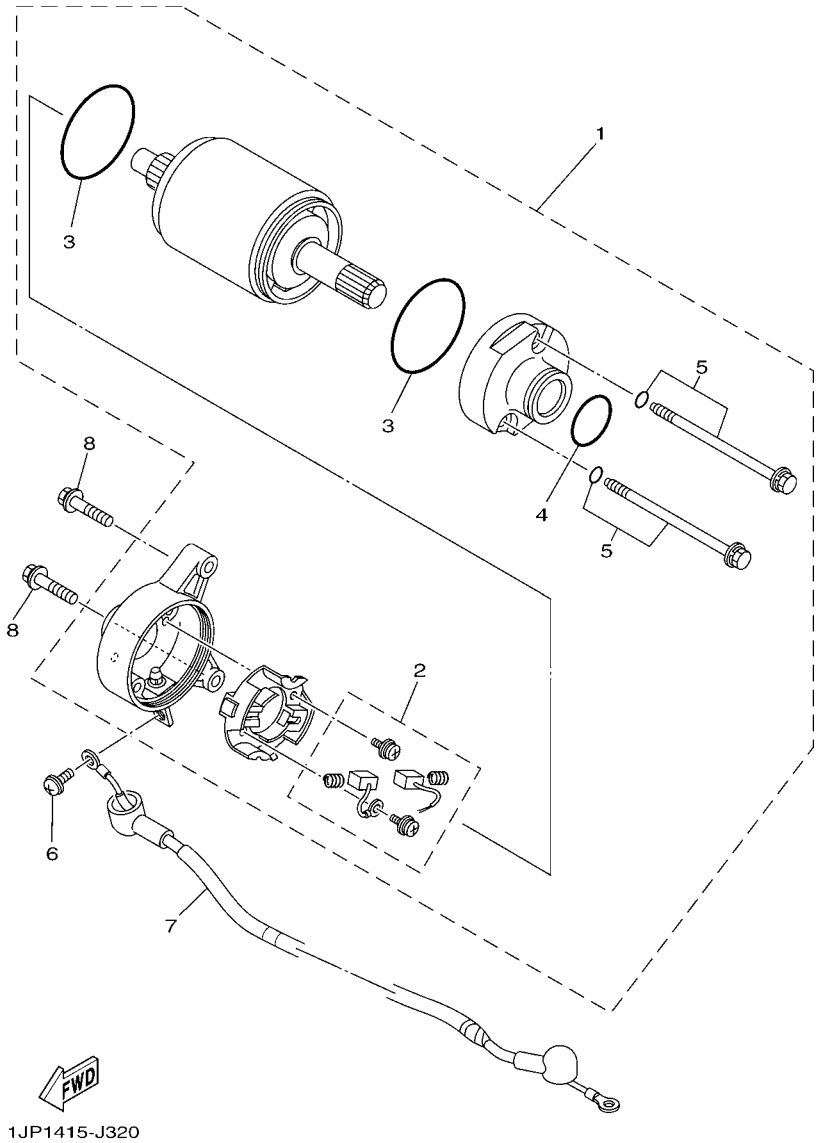

FIG. 38 MOTOR DE ARRANQUE STARTING MOTOR

REF. Nº	CODIGO Nº PART NO.	DESCRIPCION DESCRIPTION	4P2G	4P2H	4P2J			OBSERVACIONES REMARKS
1	5VL–H1890–00	MOTOR DE ARRANQUE COMPLETO MOTOR ASSY	1	1	1			
2	4FP–H1801–00	.JUEGO DE ESCOBILLA .BRUSH SET	1	1	1			
3	93210–55669	.ANILLO O .O-RING	2	2	2			
4	4FP–H182L–00	.ANILLO EN O .O-RING 1	1	1	1			
5	4FP–H1828–01	.TORNILLO DE EMPUJE 2 .SCREW 2	2	2	2			
6	98902–05008	TORNILLO DE LIGAR SCREW, BIND	1	1	1			
7	5VL–H183G–01	CABLE DEL MOTOR COMPL. CORD COMP.	1	1	1			
8	95022–06025	PERNO, DE BRIDA BOLT, FLANGE	2	2	2			

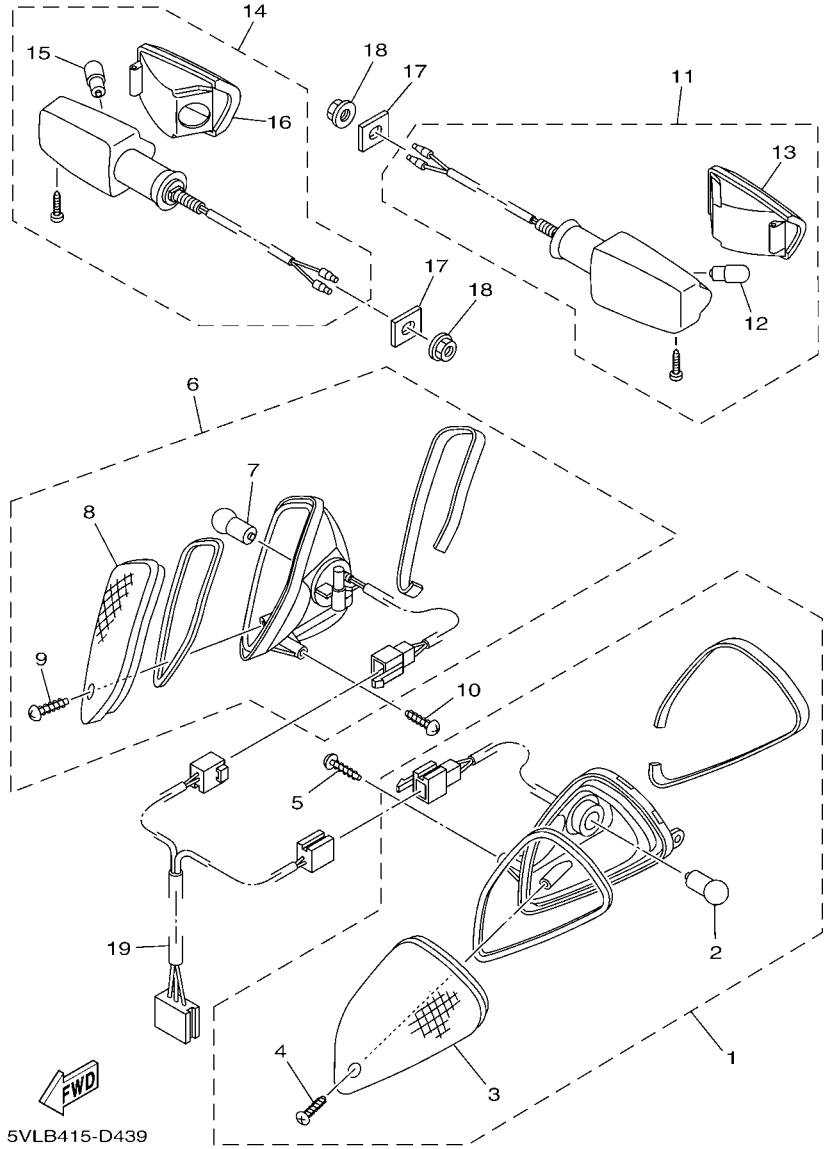

FIG. 39 LUZ DE DESTELLADOR FLASHER LIGHT

REF. Nº	CODIGO Nº PART NO.	DESCRIPCION DESCRIPTION	4P2G	4P2H	4P2J			OBSERVACIONES REMARKS
1	5VL–H3310–11	DESTELLADOR DE LUZ DELANT. FRONT FLASHER LIGHT ASSY 1	1					
2	4GU–H3311–10	.BOMBILLA DE DESTELLADOR (10W) .BULB, FLASHER (10W)	1					
3	5VL–H3312–11	.LENTE DE DESTELLADOR .LENS, FLASHER	1					
4	9770N–42613	.TORNILLO ROSCA HEMBRA .SCREW, TAPPING	1					
5	97702–50016	TORNILLO ROSCA HEMBRA SCREW, TAPPING	2					
6	5VL–H3320–11	DESTELLADOR DE LUZ DELANT. FRONT FLASHER LIGHT ASSY 2	1					
7	4GU–H3311–10	.BOMBILLA DE DESTELLADOR (10W) .BULB, FLASHER (10W)	1					
8	5VL–H3322–11	.LENTE DE INTERMITENTE 2 .LENS, FLASHER 2	1					
9	9770N–42613	.TORNILLO ROSCA HEMBRA .SCREW, TAPPING	1					
10	97702–50016	TORNILLO ROSCA HEMBRA SCREW, TAPPING	2					
11	5VL–H3330–11	DESTELLADOR DE LUZ TRAS.COMPL. REAR FLASHER LIGHT ASSY 1	1					
12	4FP–H3311–00	.BOMBILLA (12V-10W) .BULB, FLASHER (12V-10W)	1					
13	5VL–H333A–21	.LENTES COMPLETO 1 .LENS COMP 1	1					
14	5VL–H3340–11	DESTELLADOR DE LUZ TRAS.COMPL. REAR FLASHER LIGHT ASSY 2	1					
15	4FP–H3311–00	.BOMBILLA (12V-10W) .BULB, FLASHER (12V-10W)	1					
16	5VL–H333A–21	.LENTES COMPLETO 1 .LENS COMP 1	1					
17	5VL–H3359–01	ARANDELA ESPECIAL WASHER, SPECIAL	2					
18	95702–10500	TUERCA DE BRIDA NUT, FLANGE	2					
19	5VL–H4359–00	CABLE DE FARO DELANTERO CORD, HEADLIGHT	1					

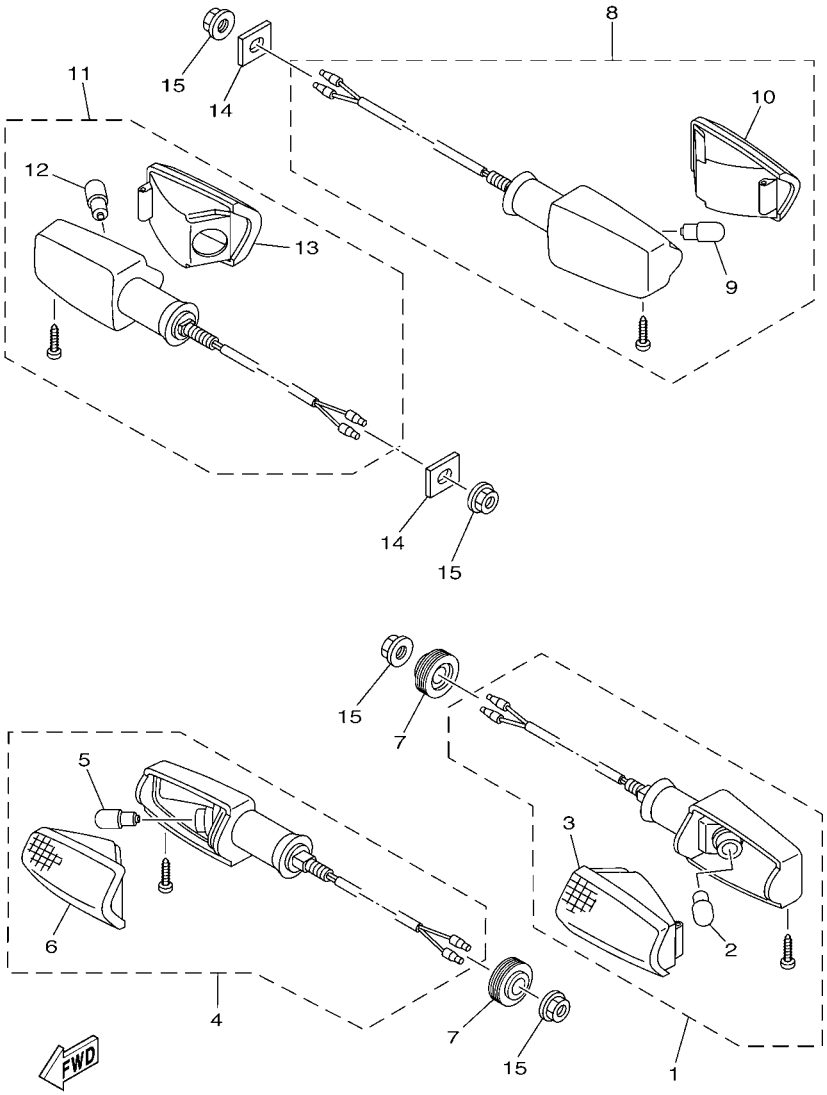

FIG. 40 LUZ DE DESTELLADOR 2 FLASHER LIGHT 2

REF. Nº	CODIGO Nº PART NO.	DESCRIPCION DESCRIPTION	4P2G	4P2H	4P2J			OBSERVACIONES REMARKS
1	5VL–H3310–21	DESTELLADOR DE LUZ DELANT. FRONT FLASHER LIGHT ASSY 1		1	1			
2	4FP–H3311–00	.BOMBILLA (12V-10W) .BULB, FLASHER (12V-10W)		1	1			
3	5VL–H333A–21	.LENTES COMPLETO 1 .LENS COMP 1		1	1			
4	5VL–H3320–21	DESTELLADOR DE LUZ DELANT. FRONT FLASHER LIGHT ASSY 2		1	1			
5	4FP–H3311–00	.BOMBILLA (12V-10W) .BULB, FLASHER (12V-10W)		1	1			
6	5VL–H333A–21	.LENTES COMPLETO 1 .LENS COMP 1		1	1			
7	5VL–H3321–00	AMORTIGUADOR DE DESTELLADOR 1 DAMPER, FLASHER 1		2	2			
8	5VL–H3330–11	DESTELLADOR DE LUZ TRAS.COMPL. REAR FLASHER LIGHT ASSY 1		1	1			
9	4FP–H3311–00	.BOMBILLA (12V-10W) .BULB, FLASHER (12V-10W)		1	1			
10	5VL–H333A–21	.LENTES COMPLETO 1 .LENS COMP 1		1	1			
11	5VL–H3340–11	DESTELLADOR DE LUZ TRAS.COMPL. REAR FLASHER LIGHT ASSY 2		1	1			
12	4FP–H3311–00	.BOMBILLA (12V-10W) .BULB, FLASHER (12V-10W)		1	1			
13	5VL–H333A–21	.LENTES COMPLETO 1 .LENS COMP 1		1	1			
14	5VL–H3359–01	ARANDELA ESPECIAL WASHER, SPECIAL		2	2			
15	95702–10500	TUERCA DE BRIDA NUT, FLANGE		4	4			

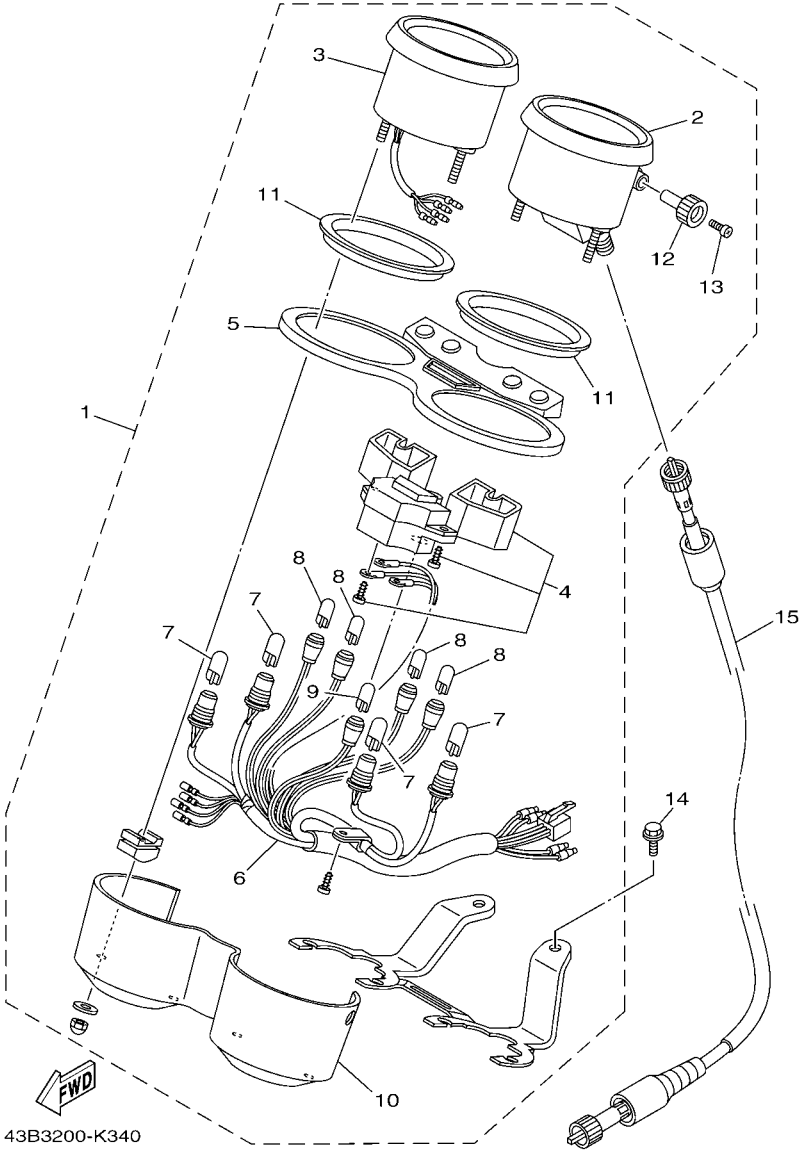

FIG. 41 MEDIDOR METER

REF. Nº	CODIGO Nº PART NO.	DESCRIPCION DESCRIPTION	4P2G	4P2H	4P2J			OBSERVACIONES REMARKS
1	5VL–H3500–12	METRO COMPLETO METER ASSY	1	1	1			
2	5VL–H3570–10	.VELOCIMETRO COMPLETO .SPEEDOMETER ASSY	1	1	1			
3	5VL–H3540–10	.TACOMETRO COMPLETO .TACHOMETER ASSY	1	1	1			
4	5VL–H350F–00	.MEDIDOR DE GESTION COMBUSTIBLE .FUEL METER MOVEMENT ASSY	1	1	1			
5	5VL–H3559–00	.CUBIERTA DE MEDIDOR .COVER, METER	1	1	1			
6	5VL–H3509–00	.ENCASTRE DE CABLE COMPLETO .SOCKET CORD ASSY	1	1	1			
7	4FP–H3517–10	.AMPOLLETA (12V-1.7W) .BULB (12V-1.7W)	4	4	4			
8	4GU–H3517–10	.AMPOLLETA (14V-3W) .BULB (14V-3W)	4	4	4			
9	4GU–H3517–20	.AMPOLLETA (12V-1.7W T6.5) .BULB (12V-1.7W T6.5)	1	1	1			
10	5VL–H353F–00	.CAJA DE MEDIDOR INFERIOR .CASE, METER LOWER	1	1	1			
11	5VL–H3541–00	.AMORTIGUADOR .DAMPER	2	2	2			
12	5VL–H357H–00	.PERILLA .KNOB	1	1	1			
13	5VL–H353S–00	.TORNILLO ACCESORIO DE PERILLA .SCREW, KNOB FITTING	1	1	1			
14	95022–06016	PERNO, DE BRIDA BOLT, FLANGE	2	2	2			
15	5VL–H3550–12	CABLE DE VELOCIMETRO COMPLETO SPEEDOMETER CABLE ASSY	1		1			
	5VL–H3550–03	CABLE DE VELOCIMETRO COMPLETO SPEEDOMETER CABLE ASSY		1				

FIG. 42 FARO DELANTERO HEADLIGHT

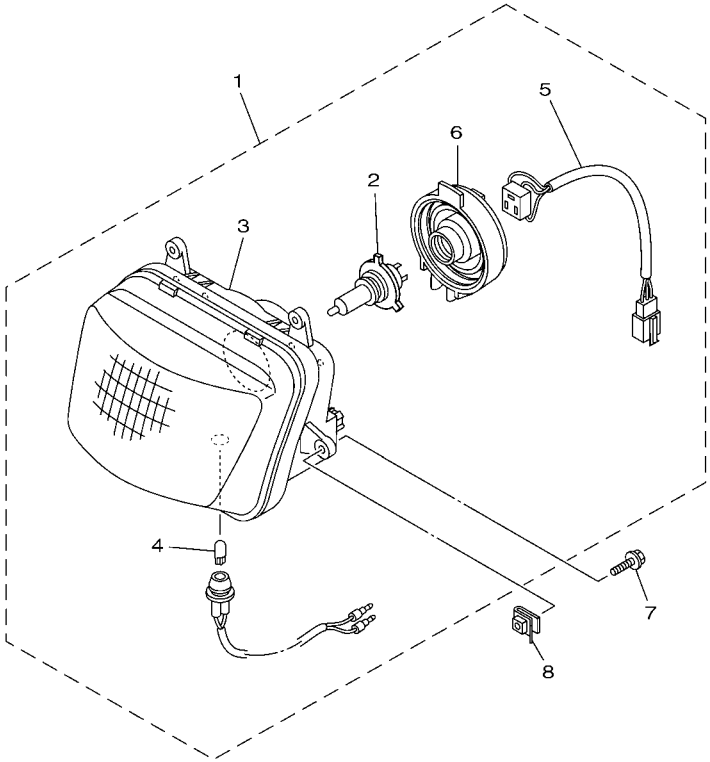

13R6415-H380

REF. Nº	CODIGO Nº PART NO.	DESCRIPCION DESCRIPTION	4P2G	4P2H	4P2J			OBSERVACIONES REMARKS
1	5VL–H4310–31	UNIDAD DE FARO DELANTERO COMPL HEADLIGHT UNIT ASSY	1					
2	5VL–H4314–10	.BOMBILLA (12V-35/35W) .BULB, HEADLIGHT (12V-35/35W)	1					
3	5VL–H4330–31	.CUERPO COMPLETO .BODY ASSY	1					
4	4GU–H4347–10	.BOMBILLA (12V-5W) .BULB (12V-5W)	1					
5	5VL–H4359–30	.CABLE DE FARO DELANTERO .CORD, HEADLIGHT	1					
6	5VL–H4378–30	.TAPA .CAP	1					
7	95802–06020	TORNILLO DE REBORDE BOLT, FLANGE	4					
8	5VL–F1535–01	TUERCA 1 NUT 1	4					

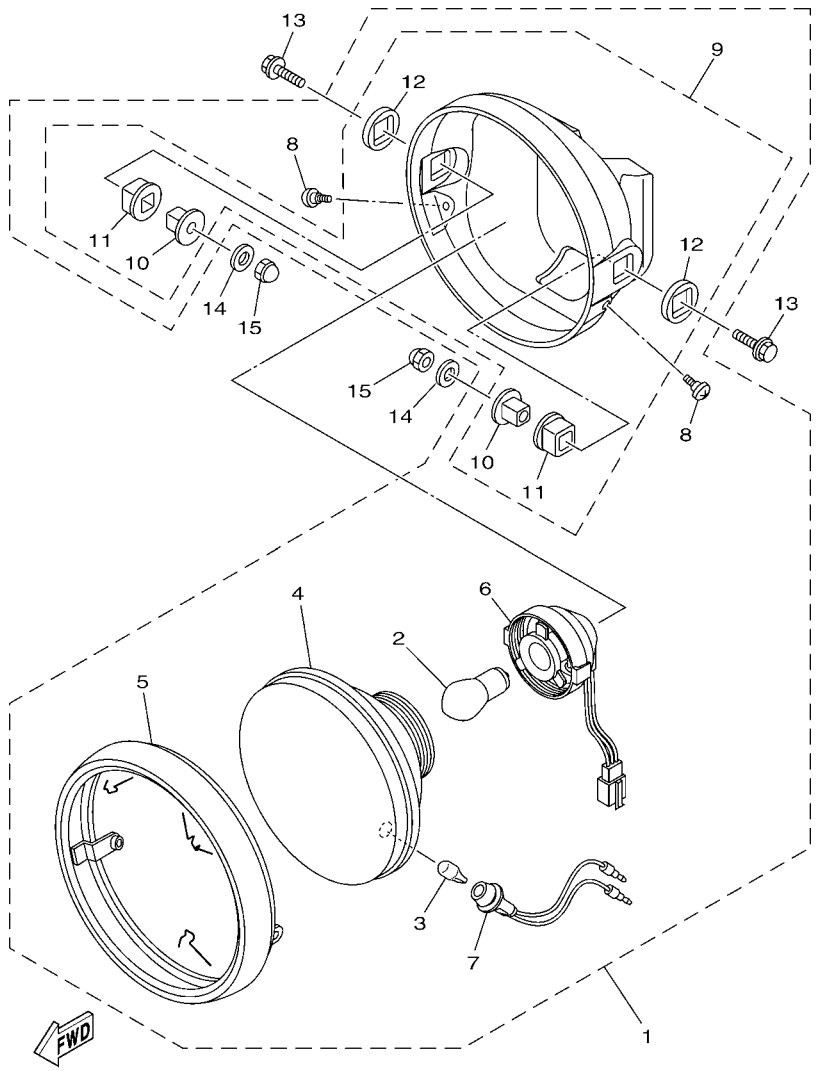

FIG. 43 FARO DELANTERO 2 HEADLIGHT 2

REF. Nº	CODIGO Nº PART NO.	DESCRIPCION DESCRIPTION	4P2G	4P2H	4P2J			OBSERVACIONES REMARKS
1	5VL–H4300–23	FARO DELANTERO COMPLETO HEADLIGHT ASSY		1	1			
2	5VL–H4314–20	.BOMBILLA (12V-35/35W) .BULB, HEADLIGHT (12V-35/35W)		1	1			
3	5VL–H4347–10	.BOMBILLA (12V-5W) .BULB (12V-5W)		1	1			
4	5VL–H4310–22	.UNIDAD DE FARO DELANTERO COMPL .HEADLIGHT UNIT ASSY		1	1			
5	5VL–H4315–21	.ARO DE FARO DELANTERO .RIM, HEADLIGHT		1	1			
6	5VL–H4312–10	.CABLE COMPLETA .CORD ASSY		1	1			
7	5VL–H4159–10	.CABLE DE FARO DELANTERO .CORD, HEADLIGHT		1	1			
8	5VL–H4526–00	.TORNILLO .SCREW		2	2			
9	5VL–H4330–22	.CUERPO COMPLETO .BODY ASSY		1	1			
10	5VL–H4145–00	..COLLAR ACCESORIO DE CUERPO ..COLLAR, BODY FITTING		2	2			
11	5VL–H4163–00	..AMORTIGUADOR ..DAMPER		2	2			
12	5VL–H4164–00	..AMORTIGUADOR ..DAMPER		2	2			
13	95023–08030	TORNILLO BOLT		2	2			
14	90201–08830	ARANDELA PLANA WASHER, PLATE		2	2			
15	95302–08800	TUERCA NUT, CROWN		2	2			

FIG. 44 LUZ DE COLA — TAILLIGHT

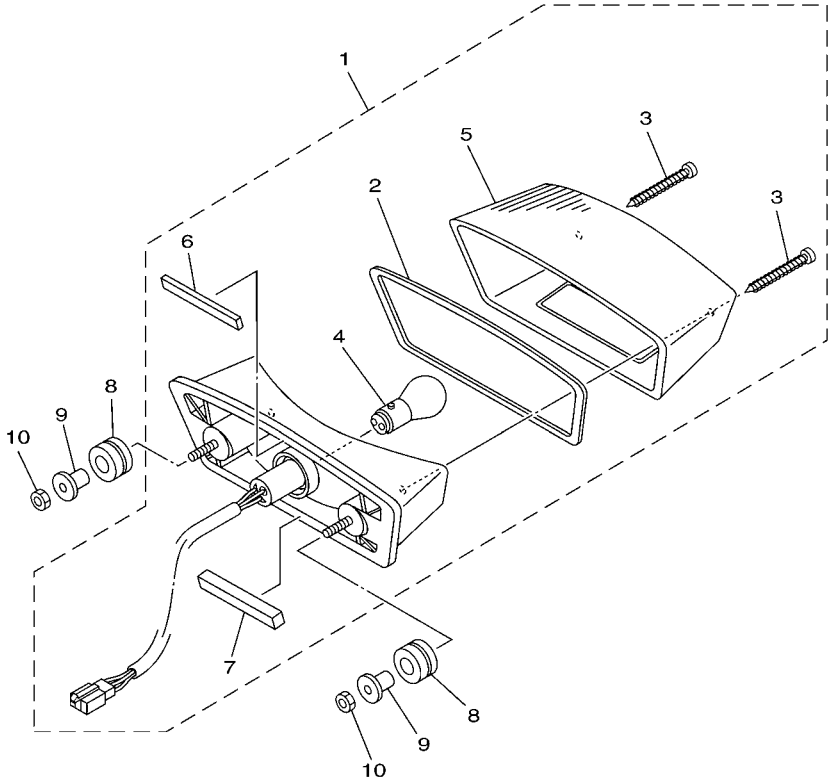

36S3210-L340

REF. Nº	CODIGO Nº PART NO.	DESCRIPCION DESCRIPTION	4P2G	4P2H	4P2J			OBSERVACIONES REMARKS
1	5VL–Y8471–01	UNIDAD FARO TRASERO COMPL. TAILLIGHT UNIT ASSY	1	1	1			
2	5VL–H4723–00	..EMPAQUE LENTE FARO TRASERO ..GASKET, TAIL LENS	1	1	1			
3	5VL–H4724–00	..TORNILLO ACCESORIO DE LENTE ..SCREW, LENS FITTING	2	2	2			
4	5VL–H4714–00	..BOMBILLA (12V-21/5W) ..BULB (12V-21/5W)	1	1	1			
5	5VL–H472C–01	..LENTE DE FARO TRASERO ..LENS, TAILLIGHT	1	1	1			
6	5VL–H4753–00	.AMORTIGUADOR .DAMPER	1	1	1			
7	5VL–H4736–00	.AMORTIGUADOR DE COLA .DAMPER, TAIL 1	1	1	1			
8	90480–14812	TAPON GROMMET	2	2	2			
9	90387–06837	ESPACIADOR COLLAR	2	2	2			
10	95302–06600	TUERCA NUT	2	2	2			

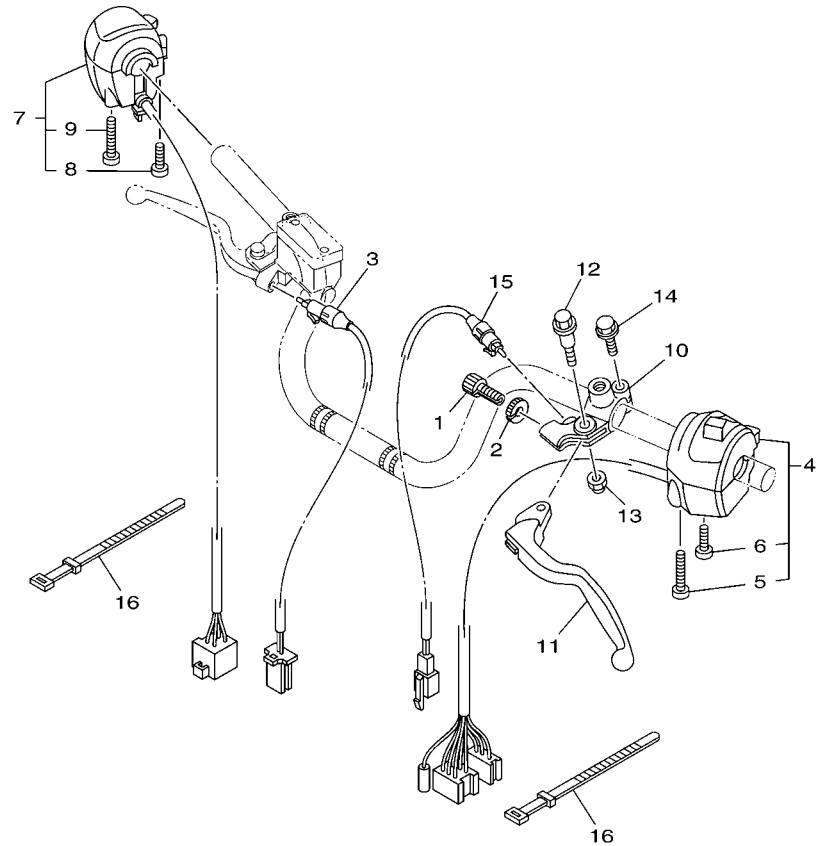

4P26200-G450

FIG. 45 INTERRUPTOR DE MANILLAR&PALANC HANDLE SWITCH & LEVER

REF. Nº	CODIGO Nº PART NO.	DESCRIPCION DESCRIPTION	4P2G	4P2H	4P2J			OBSERVACIONES REMARKS
1	90123–08813	PERNO BOLT	1		1			
2	90179–08862	TUERCA NUT	1		1			
3	5VL–H3980–01	INTERRUP. DE PARADA DELANTERO FRONT STOP SWITCH ASSY	1		1			
4	5VL–H3973–01	INTERRUPTOR DE MANIJA 3 SWITCH, HANDLE 3	1		1			
5	98507–05043	.TORNILLO DE CABEZA PLANA .SCREW, PAN HEAD	1		1			
6	98507–05025	.TORNILLO DE CABEZA PLANA .SCREW, PAN HEAD	1		1			
7	5VL–H3963–02	INTERRUPTOR DE MANIJA 3 SWITCH, HANDLE 3	1		1			UR UR
	4P2–H3976–00	INTERRUPTOR DE MANIJA 1 SWITCH, HANDLE 1			1			UR UR
8	98507–05030	.TORNILLO DE CABEZA PLANA .SCREW, PAN HEAD	1		1			
9	98507–05050	.TORNILLO DE CABEZA PLANA .SCREW, PAN HEAD	1		1			
10	4FP–H2911–00	SOPORTE DE LEVA 1 HOLDER, LEVER 1	1		1			
11	5VL–H3912–00	PALANCA 1 LEVER 1	1		1			
12	90109–06850	PERNO BOLT	1		1			
13	95602–06100	TUERCA U NUT, U	1		1			
14	97590–06522	PERNO CON ARANDELA BOLT, WITH WASHER	1		1			
15	5VL–H2917–11	INTERRUPTOR SWITCH	1		1			
16	4TU–H3936–00	BANDA DE CABLE DE INTERRUPTOR BAND, SWITCH CORD	2		2			

FIG. 46 INTERRUPTOR DE MANILLAR&PALANC HANDLE SWITCH & LEVER 2

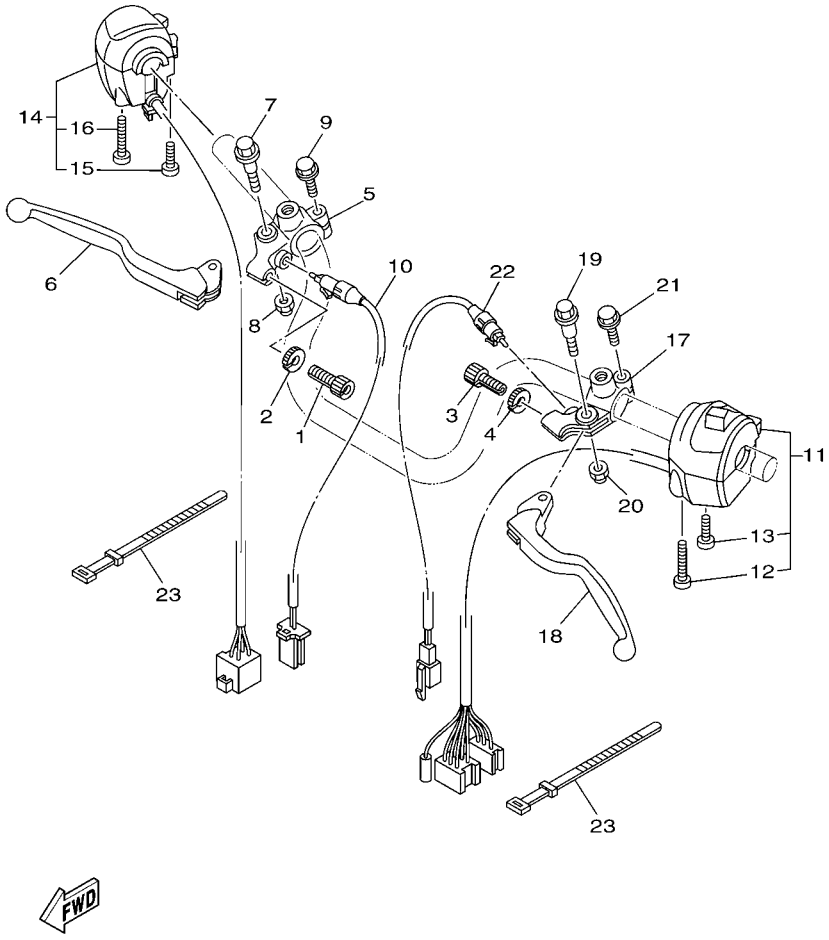

REF. Nº	CODIGO Nº PART NO.	DESCRIPCION DESCRIPTION	4P2G	4P2H	4P2J			OBSERVACIONES REMARKS
1	90123–08813	PERNO BOLT		1				
2	90179–08862	TUERCA NUT		1				
3	90123–08813	PERNO BOLT		1				
4	90179–08862	TUERCA NUT		1				
5	4FP–H2921–00	SOPORTE DE LEVA 2 HOLDER, LEVER 2		1				
6	5VL–H3922–00	PALANCA 2 LEVER 2		1				
7	90109–06850	PERNO BOLT		1				
8	95602–06100	TUERCA U NUT, U		1				
9	97590–06522	PERNO CON ARANDELA BOLT, WITH WASHER		1				
10	5VL–H3980–21	INTERRUP. DE PARADA DELANTERO FRONT STOP SWITCH ASSY		1				
11	5VL–H3973–01	INTERRUPTOR DE MANIJA 3 SWITCH, HANDLE 3		1				
12	98507–05043	.TORNILLO DE CABEZA PLANA .SCREW, PAN HEAD		1				
13	98507–05025	.TORNILLO DE CABEZA PLANA .SCREW, PAN HEAD		1				
14	5VL–H3963–02	INTERRUPTOR DE MANIJA 3 SWITCH, HANDLE 3		1				
15	98507–05030	.TORNILLO DE CABEZA PLANA .SCREW, PAN HEAD		1				
16	98507–05050	.TORNILLO DE CABEZA PLANA .SCREW, PAN HEAD		1				
17	4FP–H2911–00	SOPORTE DE LEVA 1 HOLDER, LEVER 1		1				
18	5VL–H3912–00	PALANCA 1 LEVER 1		1				
19	90109–06850	PERNO BOLT		1				
20	95602–06100	TUERCA U NUT, U		1				
21	97590–06522	PERNO CON ARANDELA BOLT, WITH WASHER		1				
22	5VL–H2917–11	INTERRUPTOR SWITCH		1				
23	4TU–H3936–00	BANDA DE CABLE DE INTERRUPTOR BAND, SWITCH CORD		2				

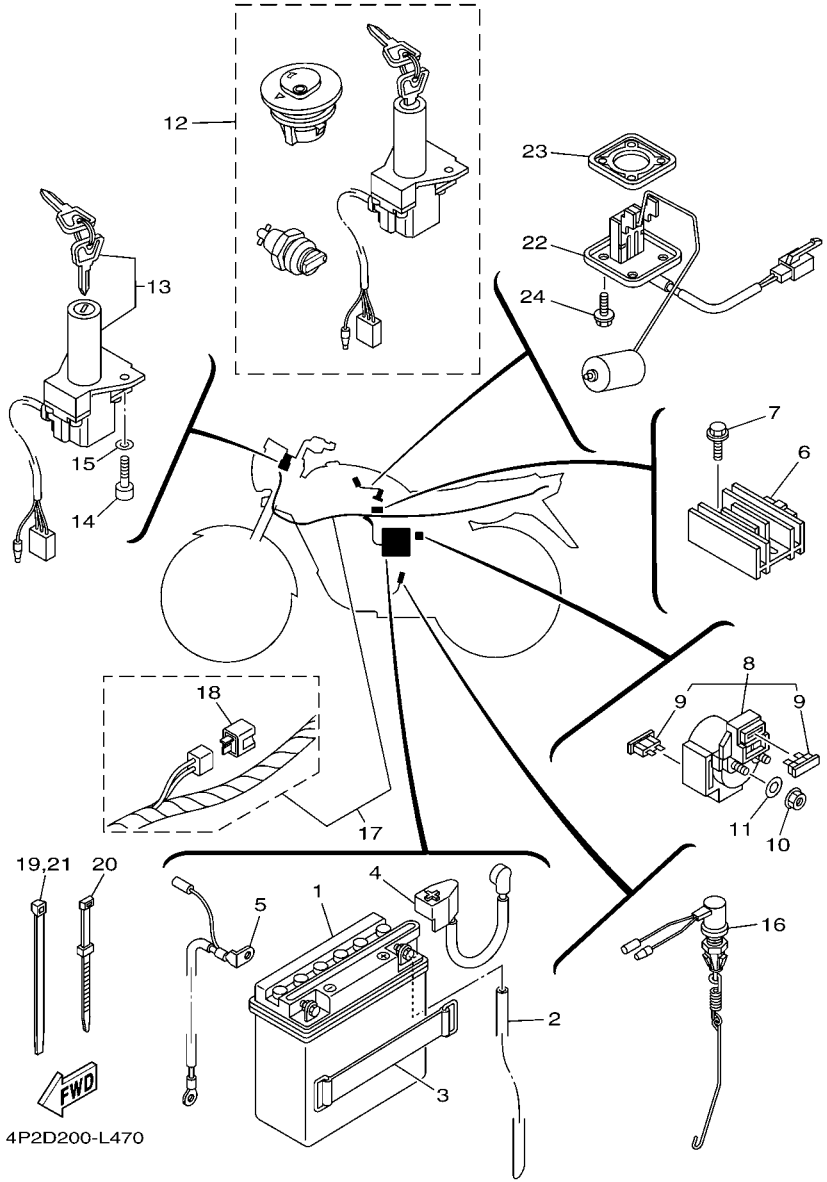

FIG. 47 EQUIPO ELECTRICO 1 ELECTRICAL 1

REF. Nº	CODIGO Nº PART NO.	DESCRIPCION DESCRIPTION	4P2G	4P2H	4P2J			OBSERVACIONES REMARKS
1	5VL–H2100–00	BATERIA COMPLETA (CB5L-B) BATTERY ASSY (CB5L-B)	1	1	1			
2	90445–08830	TUBO HOSE	1	1	1			
3	5VL–H2131–01	TIRANTE DE BATERIA BAND, BATTERY	1	1	1			
4	5VL–H2115–00	CABLE CONDUCTOR POSITIVO WIRE, PLUS LEAD	1	1	1			
5	5VL–H2116–00	CABLE CONDUCTOR NEGATIVO WIRE, MINUS LEAD	1	1	1			
6	5VL–H1960–00	RECTIFICADOR Y REGULADOR RECTIFIER & REGULATOR ASSY	1	1	1			
7	95802–06020	TORNILLO DE REBORDE BOLT, FLANGE	2	2	2			
8	5VL–H1940–01	CONJUNTO ARRANCADOR RELEVO STARTER RELAY ASSY	1	1	1			
9	4FP–H2151–00	.FUSIBLE (15A) .FUSE (15A)	2	2	2			
10	95302–06600	TUERCA NUT	2	2	2			
11	90201–068C2	ARANDELA PLANA WASHER, PLATE	2	2				
	9290N–06600	ARANDELA WASHER			2			
12	5VL–Y8250–00	CONJUNTO DE LLAVE IGNICION SWITCH ASSY	1	1	1			
13	5VL–H2501–02	LLAVE DE IGNICION COMPLT MAIN SWITCH STEERING LOCK	1	1	1			
14	91312–06020	TORNILLO BOLT	2	2	2			
15	90201–068C2	ARANDELA PLANA WASHER, PLATE	2	2				
	9290N–06600	ARANDELA WASHER			2			
16	5VL–H2530–00	INTERRUPTOR DE PARADA COMPLETO STOP SWITCH ASSY	1	1	1			
17	5VL–H2590–10	CONJUNTO DE CABLES WIRE HARNESS ASSY	1					
	5VL–H2590–00	CONJUNTO DE CABLES WIRE HARNESS ASSY		1	1			
18	5VL–H1980–10	.CONJUNTO DIODO .DIODE ASSY	1	1	1			
19	90464–35820	BRIDA CLAMP	1	1	1			
20	5VL–H3936–00	BANDA DE CABLE DE INTERRUPTOR BAND, SWITCH CORD	1	1	1			
21	90464–35820	BRIDA CLAMP	2					
22	5VL–H5752–01	UNIDAD TRANSM. MED. COMBUST. SENDER UNIT ASSY, FUEL METER	1	1	1			
23	4FP–H5753–00	EMPAQUE DE UNIDAD TRANSMISORA GASKET, SENDER UNIT	1	1	1			
24	90105–05832	TORNILLO BOLT, FLANGE	4	4	4			

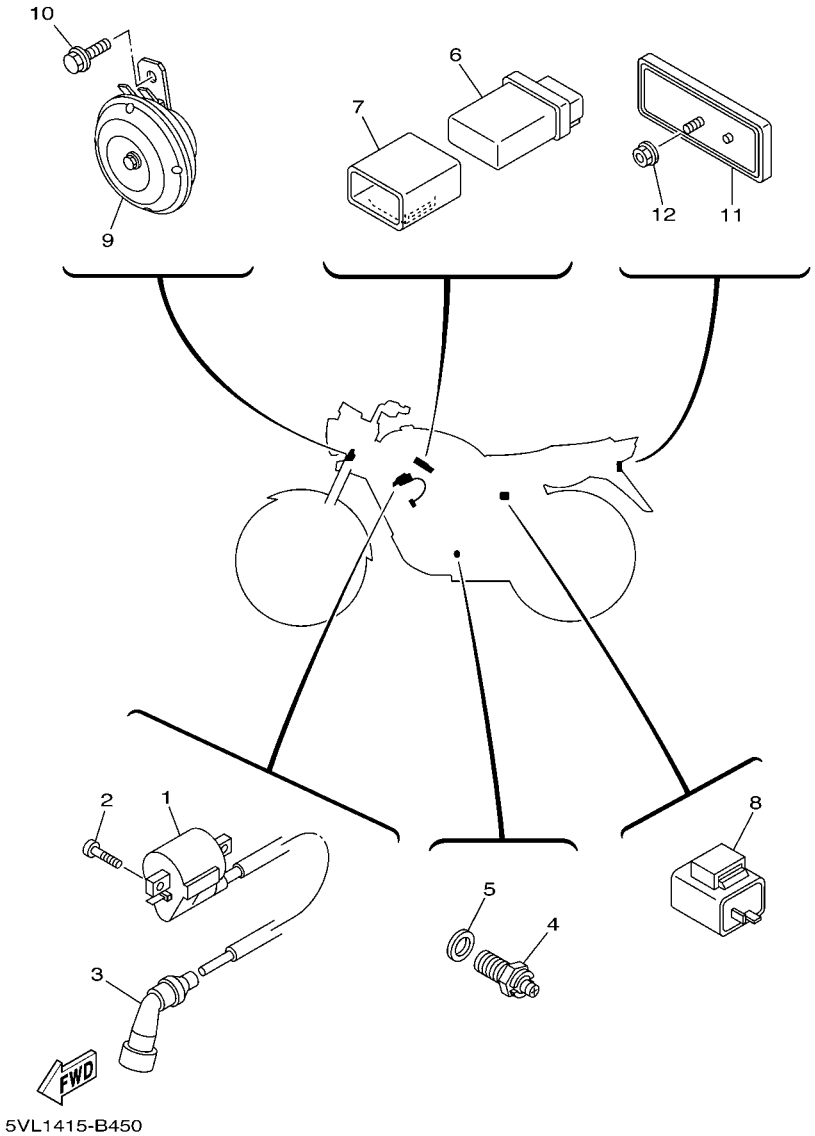

FIG. 48 EQUIPO ELECTRICO 2 ELECTRICAL 2

REF. Nº	CODIGO Nº PART NO.	DESCRIPCION DESCRIPTION	4P2G	4P2H	4P2J			OBSERVACIONES REMARKS
1	4P2–H2310–00	BOBINA DE ENCENDIDO COMPLETA IGNITION COIL ASSY	1	1	1			
2	98502–06016	TORNILLO SCREW, PAN HEAD	2	2	2			
3	4FP–H2370–01	TAPON DE BUJIA COMPLT PLUG CAP ASSY	1	1	1			
4	5VL–H2540–01	INTERRUPTOR NEUTRAL COMPL NEUTRAL SWITCH ASSY	1	1	1			
5	90430–10819	JUNTA GASKET	1	1	1			
6	5VL–H5540–00	UNIDAD C.D.I. COMPLETA C.D.I. UNIT ASSY	1	1	1			
7	5VL–H5546–00	BANDA BAND	1	1	1			
8	5VL–H3350–21	RELE DE DESTELLADOR COMPL. FLASHER RELAY ASSY	1	1	1			
9	1BK–H3371–00	BOCINA HORN	1	1	1			
10	95822–06012	TORNILLO DE REBORDE BOLT, FLANGE	1	1	1			
11	4FP–H5130–21	REFLECTOR TRASERO COMPLETO REAR REFLECTOR ASSY	1	1	1			
12	95702–05500	TUERCA DE BRIDA NUT, FLANGE	1	1	1			

INDICE NUMERICO
NUMERICAL INDEX

CODIGO Nº PART NO.	REF. Nº
2UJ–11133–10	1 – 2
22F–11134–10	1 – 3
5KA–12113–00	3 – 5
30S–14325–00	7 – 19
5PA–21568–01	25 – 4
5VL–E1111–01	1 – 1
5VL–E111F–00	4 – 5
5VL–E1161–00	1 – 8
5VL–E1166–00	9 – 4
4FP–E1167–00	9 – 3
5VL–E1181–00	1 – 16
5VL–E1185–00	1 – 7
5VL–E1186–00	1 – 11
5VL–E1310–00	1 – 19
5VL–E1351–10	1 – 20
5VL–E1422–00	2 – 6
5VL–E1454–00	2 – 8
5VL–E1631–00	2 – 11
5VL–E1633–00	2 – 12
5VL–E1651–00	2 – 5
5VL–E1681–00	2 – 3
5VL–E2111–00	3 – 1
5VL–E2116–01	3 – 4
5VL–E2117–01	3 – 7
5VL–E2118–00	3 – 6
5VL–E2119–00	3 – 3
5VL–E2121–00	3 – 2
5VL–E2151–00	3 – 8
5VL–E2156–00	3 – 10
5VL–E2171–00	4 – 1
5VL–E2176–00	4 – 7
5VL–E2210–01	4 – 15
5VL–E2213–10	4 – 16
5VL–E2231–00	4 – 11
5VL–E2241–00	4 – 12
5VL–E3300–01	5 – 1
5VL–E3324–00	5 – 11
5VL–E3325–00	5 – 2
5VL–E3329–00	5 – 6
4FP–E3411–00	5 – 10
5VL–E3451–00	5 – 12
4P2–E3586–00	6 – 1
5LB–E4153–00	7 – 22
4P2–E4196–00	7 – 26
4P2–E4197–00	7 – 25
5LB–E4214–00	7 – 5
5FY–E4251–00	7 – 27
4P2–E4286–00	7 – 4

CODIGO Nº PART NO.	REF. Nº
5LB–E4292–00	7 – 24
5LB–E4293–00	7 – 12
4P2–E4301–01	7 – 1
4JP–E4323–00	7 – 21
5RS–E4341–00	7 – 6
5RS–E4341–10	7 – 7
5LB–E4342–17	7 – 9
288–E4343–60	7 – 8
50M–E4355–00	7 – 14
4P2–E4371–00	7 – 15
5LB–E4384–00	7 – 20
5LB–E4385–00	7 – 16
5LB–E4386–00	7 – 17
1BV–E4390–00	7 – 18
5VL–E4411–00	6 – 6
5VL–E4412–00	6 – 7
5VL–E4417–00	6 – 18
5VL–E4424–01	6 – 15
5VL–E4437–00	6 – 10
5VL–E443E–00	6 – 14
5VL–E4450–00	6 – 8
5VL–E4452–00	6 – 11
4P2–E4453–00	6 – 9
5VL–E4462–00	6 – 12
5LB–E4592–00	7 – 23
5VL–E4613–00	8 – 9
5VL–E4628–00	8 – 4
5VL–E4710–00	8 – 1
5VL–E4758–00	8 – 3
5VL–E5191–00	10 – 10
5VL–E5362–00	10 – 19
5VL–E5411–10	10 – 1
5VL–E5418–01	10 – 12
5VL–E5421–00	10 – 14
5VL–E5441–00	9 – 11
5VL–E5451–10	10 – 2
5VL–E5461–10	10 – 15
5VL–E5512–00	12 – 1
5VL–E5517–00	12 – 5
5VL–E5521–00	12 – 2
5VL–E5532–00	12 – 3
4FP–E5580–00	12 – 7
5VL–E5598–00	4 – 13
47V–E5618–00	11 – 11
5VL–E5620–01	11 – 10
4FP–E5641–00	11 – 2
5VL–E5651–00	11 – 7
5VL–E5660–01	11 – 1

CODIGO Nº PART NO.	REF. Nº
4FP–E5666–00	11 – 6
5VL–E6111–00	13 – 1
5VL–E6150–00	13 – 5
5VL–E6154–00	13 – 6
5VL–E6164–10	13 – 16
5VL–E6321–10	13 – 8
5VL–E6324–00	13 – 9
5VL–E6333–10	13 – 11
5VL–E6337–00	13 – 12
5VL–E6351–00	13 – 10
5VL–E6357–01	13 – 20
5VL–E6371–10	13 – 7
5VL–E6381–02	13 – 21
5VL–E7121–00	14 – 3
5VL–E7131–00	14 – 4
5VL–E7141–00	14 – 5
5VL–E7151–00	14 – 2
5VL–E7211–00	14 – 20
5VL–E7221–00	14 – 15
5VL–E7231–00	14 – 16
5VL–E7241–00	14 – 19
5VL–E7251–00	14 – 14
5VL–E7411–00	14 – 1
5VL–E7421–00	14 – 12
3D9–E7456–01	14 – 28
5VL–E7471–00	14 – 10
5VL–E8101–02	16 – 7
5VL–E8110–00	16 – 9
5VL–E8110–12	16 – 9
1KL–E8113–00	16 – 10
5VL–E8140–00	16 – 1
4FP–E8177–00	16 – 3
2D0–E8185–00	15 – 2
5VL–E8337–00	16 – 2
5VL–E8511–00	15 – 5
5VL–E8512–00	15 – 6
5VL–E8513–00	15 – 7
5VL–E8531–00	15 – 8
5VL–E8535–00	15 – 9
5VL–F1110–40–33	17 – 1
5VL–F1316–01	17 – 2
5VL–F1317–00	17 – 7
5VL–F1318–00	17 – 8
5VL–F137U–20	25 – 25
5VL–F137V–20	25 – 27
5VL–F137W–20–P0	25 – 24
5VL–F137W–20–P1	25 – 24
5VL–F137W–20–P2	25 – 24

CODIGO Nº PART NO.	REF. Nº
5VL–F137W–20–P4	25 – 24
5VL–F137W–20–P5	25 – 24
5VL–F137X–20–P0	25 – 26
5VL–F137X–20–P1	25 – 26
5VL–F137X–20–P2	25 – 26
5VL–F137X–20–P4	25 – 26
5VL–F137X–20–P5	25 – 26
5VL–F1513–01	18 – 5
5VL–F1518–01	18 – 2
5VL–F1535–01	42 – 8
5VL–F1541–00	18 – 3
5VL–F1611–02	18 – 7
5VL–F1621–00	18 – 12
4GU–F1685–00	18 – 9
36S–F173E–00	19 – 3
3D9–F173E–10	19 – 3
3D9–F173E–20	19 – 3
3D9–F173E–30	19 – 3
3D9–F173E–40	19 – 3
36S–F173F–00	19 – 5
3D9–F173F–10	19 – 5
3D9–F173F–20	19 – 5
3D9–F173F–30	19 – 5
3D9–F173F–40	19 – 5
5VL–F1746–00	19 – 14
5VL–F1778–00	19 – 7
	25 – 30
5VL–F177G–00	19 – 13
5VL–F1780–01	19 – 8
5VL–F2110–00–33	20 – 1
5VL–F2123–00	20 – 3
5VL–F2127–00	20 – 6
5VL–F2128–01	20 – 4
5VL–F2141–01	20 – 7
5VL–F2151–10	20 – 10
5VL–F2210–01	20 – 13
5VL–F2311–00	20 – 11
5VL–F3102–92	24 – 1
5VL–F3102–B0	23 – 1
5VL–F3103–92	24 – 18
5VL–F3103–B0	23 – 18
5VL–F3106–01	24 – 2
5VL–F3106–30	23 – 2
5VL–F3107–01	24 – 19
5VL–F3107–40	23 – 19
5HH–F3110–22	23 – 6
	23 – 23
	24 – 6

CODIGO Nº PART NO.	REF. Nº
5HH–F3110–22	24 – 23
5VL–F3111–20	23 – 15
	23 – 32
	24 – 15
	24 – 32
5HH–F3118–10	23 – 13
	23 – 30
	24 – 13
	24 – 30
5VL–F3141–40	23 – 11
	23 – 28
	24 – 11
	24 – 28
4GU–F3144–00	23 – 5
	23 – 22
	24 – 5
	24 – 22
4GU–F3145–00	23 – 3
	23 – 20
	24 – 3
	24 – 20
5AP–F3147–00	23 – 14
	23 – 31
	24 – 14
	24 – 31
5AP–F3153–00	23 – 4
	23 – 21
	24 – 4
	24 – 21
5VL–F3154–00	23 – 16
	23 – 33
	24 – 16
	24 – 33
5VL–F3165–01	21 – 12
	22 – 12
5VL–F3170–01	23 – 7
	23 – 24
	24 – 7
	24 – 24
4GU–F3173–01	23 – 8
	23 – 25
	24 – 8
	24 – 25
5VL–F3174–00	22 – 15
5VL–F3174–10	21 – 15
4FP–F317J–00	21 – 17
	22 – 17
5VL–F331X–01	23 – 35

CODIGO Nº PART NO.	REF. Nº
5VL–F331X–01	24 – 35
5VL–F3346–01	23 – 37
	24 – 37
5VL–F334G–11	22 – 21
5LK–F3356–01	23 – 10
	23 – 27
	24 – 10
	24 – 27
5VL–F3389–01	21 – 18
	22 – 18
4FP–F3395–10	22 – 20
4FP–F3411–00	21 – 2
	22 – 2
4FP–F3411–10	23 – 36
	24 – 36
1KL–F3412–00	21 – 1
	22 – 1
4FP–F3412–00	21 – 3
	22 – 3
4GU–F3416–00	21 – 5
	22 – 5
5VL–F3418–01	21 – 7
	22 – 7
5VL–F341E–00	21 – 4
	22 – 4
5AP–F3427–00	23 – 12
	23 – 29
	24 – 12
	24 – 29
5VL–F3435–00–33	21 – 9
	22 – 9
5VL–F3441–00	21 – 13
	22 – 13
4TU–F3479–00	23 – 9
	23 – 26
	24 – 9
	24 – 26
2B9–F411B–00	25 – 5
3D9–F411B–00	25 – 5
3D9–F411B–10	25 – 5
5VL–F414H–00	25 – 35
4FP–F4181–00	25 – 6
5VL–F4182–00	25 – 8
5VL–F4183–00	25 – 7
5VL–F4216–11	25 – 31
3D9–F4244–40	25 – 2
3D9–F4244–50	25 – 2
3D9–F4244–60	25 – 2

INDICE NUMERICO
NUMERICAL INDEX

CODIGO Nº PART NO.	REF. Nº
3D9–F4244–70	25 – 2
3D9–F4245–40	25 – 3
3D9–F4245–50	25 – 3
3D9–F4245–60	25 – 3
3D9–F4245–70	25 – 3
4P2–F4311–00	25 – 22
5VL–F4481–00	26 – 12
5VL–F4500–00	25 – 11
5VL–F4512–00	25 – 14
5VL–F4515–00	25 – 16
5VL–F4523–00	25 – 15
5VL–F4524–01	25 – 17
5VL–F4534–00	25 – 12
5VL–F4610–02	25 – 21
5VL–F471K–00–P1	26 – 4
5VL–F471K–00–P2	26 – 4
5VL–F471K–00–P3	26 – 4
5VL–F471K–00–P4	26 – 4
5VL–F471K–00–P6	26 – 4
5VL–F472K–00–P1	26 – 5
5VL–F472K–00–P2	26 – 5
5VL–F472K–00–P3	26 – 5
5VL–F472K–00–P4	26 – 5
5VL–F472K–00–P6	26 – 5
5VL–F4730–12	26 – 1
4TU–F4741–00	8 – 2
	26 – 2
5VL–F4773–00	26 – 11
5VL–F4796–01	26 – 14
5VL–F5111–00–35	28 – 1
1KL–F5118–00	28 – 29
4GU–F5118–00	27 – 12
4GU–F511X–01	27 – 10
5VL–F5121–01–35	28 – 5
1KL–F5135–00	28 – 9
1KL–F5136–00	28 – 10
1KL–F5137–01	28 – 30
1KL–F5138–00	28 – 11
1KL–F5149–01	28 – 15
4FP–F5155–11	28 – 17
1PX–F5168–00–33	27 – 1
5VL–F5181–01	28 – 28
5VL–F5181–11	27 – 7
4GU–F5190–12	27 – 8
5VL–F5311–00–35	31 – 1
5VL–F5321–01–33	30 – 8
5VL–F5321–01–35	31 – 8
1PX–F5338–00–33	30 – 1

CODIGO Nº PART NO.	REF. Nº
4GU–F533A–01	28 – 22
	30 – 16
	31 – 16
4GU–F5351–02	28 – 20
	30 – 12
	31 – 12
5VL–F5355–01	30 – 13
	31 – 13
1KL–F5364–00	30 – 7
	31 – 5
5VL–F5366–00	30 – 17
	31 – 17
5VL–F5371–00	30 – 27
	31 – 30
5VL–F5377–01	30 – 35
	31 – 38
5VL–F5381–01	30 – 32
	31 – 35
5VL–F5386–01	30 – 34
	31 – 37
5VL–F5387–01	30 – 20
	31 – 20
5VL–F5388–01	30 – 36
	31 – 39
5VL–F53C0–00	31 – 42
5VL–F53C0–10	30 – 39
5LK–F5412–01	30 – 23
	31 – 23
5VL–F5445–01	30 – 21
	31 – 21
3D9–F580U–01	29 – 3
3D9–F582U–10	29 – 1
2B9–F583T–02	34 – 1
4KL–F5852–00	34 – 6
4KL–F5854–00	34 – 4
4KL–F585B–00	34 – 5
3D9–F5865–01	34 – 12
5VL–F5867–00	34 – 10
3D9–F586F–01	34 – 9
3D9–F5872–11	34 – 13
5VL–F5875–01	34 – 18
5VL–F5876–00	34 – 19
5VL–F5886–00	34 – 17
5VL–F5887–00	34 – 16
4KL–F5896–00	34 – 3
3D9–F589F–01	34 – 8
4KL–F589H–01	34 – 7
4S5–F5917–00	29 – 12

CODIGO Nº PART NO.	REF. Nº
4S5–F5919–00	29 – 11
4S5–F5921–01	29 – 8
4S5–F5924–01	29 – 13
4S5–F5925–00	29 – 14
4S5–F5937–00	29 – 9
4S5–F5939–00	29 – 10
5VL–F6111–00	32 – 1
	33 – 1
5VL–F6240–10	32 – 2
	33 – 2
5VL–F6241–10	32 – 3
	33 – 3
5VL–F6280–12	32 – 7
	33 – 9
5VL–F628J–10	32 – 5
	33 – 5
5VL–F6290–12	32 – 8
	33 – 10
4P2–F6311–01	32 – 4
	33 – 4
5VL–F6335–03	32 – 6
	33 – 6
5VL–F6335–11	32 – 6
5VL–F6341–01	33 – 7
5VL–F7111–00	35 – 1
5VL–F7112–11	35 – 2
5VL–F7115–01	35 – 3
5VL–F7211–00	35 – 5
5VL–F7231–01	35 – 7
5VL–F7311–00	35 – 17
5VL–F7411–00	35 – 13
5VL–F7413–00	35 – 15
5VL–F7414–00	35 – 33
5VL–F7430–01	35 – 24
5VL–F7433–00	35 – 25
5VL–F7440–01	35 – 27
5VL–F7444–00	35 – 28
5VL–F7445–01	35 – 26
	35 – 29
5VL–F7452–00	35 – 21
5VL–F7462–00	35 – 22
5VL–F8100–01	17 – 15
5VL–F811G–01	17 – 16
5VL–F8215–01	36 – 5
5VL–F8217–00	36 – 6
5VL–F8315–10	36 – 7
5VL–F837L–01	36 – 11
5VL–F837M–01	36 – 12

CODIGO Nº PART NO.	REF. Nº
4FP–H1801–00	38 – 2
4FP–H1828–01	38 – 5
4FP–H182L–00	38 – 4
5VL–H183G–01	38 – 7
5VL–H1890–00	38 – 1
5VL–H1940–01	47 – 8
5VL–H1960–00	47 – 6
5VL–H1980–10	47 – 18
5VL–H2100–00	47 – 1
5VL–H2109–00	35 – 14
5VL–H2115–00	47 – 4
5VL–H2116–00	47 – 5
5VL–H2131–01	47 – 3
4FP–H2151–00	47 – 9
4P2–H2310–00	48 – 1
4FP–H2370–01	48 – 3
5VL–H2501–02	47 – 13
5VL–H2530–00	47 – 16
5VL–H2540–01	48 – 4
5VL–H2590–00	47 – 17
5VL–H2590–10	47 – 17
4FP–H2911–00	45 – 10
	46 – 17
5VL–H2917–11	45 – 15
	46 – 22
4FP–H2921–00	46 – 5
5VL–H3310–11	39 – 1
5VL–H3310–21	40 – 1
4FP–H3311–00	39 – 12
	39 – 15
	40 – 2
	40 – 5
	40 – 9
	40 – 12
4GU–H3311–10	39 – 2
	39 – 7
5VL–H3312–11	39 – 3
5VL–H3320–11	39 – 6
5VL–H3320–21	40 – 4
5VL–H3321–00	40 – 7
5VL–H3322–11	39 – 8
5VL–H3330–11	39 – 11
	40 – 8
5VL–H333A–21	39 – 13
	39 – 16
	40 – 3
	40 – 6
	40 – 10

CODIGO Nº PART NO.	REF. Nº
5VL–H333A–21	40 – 13
5VL–H3340–11	39 – 14
	40 – 11
5VL–H3350–21	48 – 8
5VL–H3359–01	39 – 17
	40 – 14
1BK–H3371–00	48 – 9
5VL–H3500–12	41 – 1
5VL–H3509–00	41 – 6
5VL–H350F–00	41 – 4
4FP–H3517–10	41 – 7
4GU–H3517–10	41 – 8
4GU–H3517–20	41 – 9
5VL–H353F–00	41 – 10
5VL–H353S–00	41 – 13
5VL–H3540–10	41 – 3
5VL–H3541–00	41 – 11
5VL–H3550–03	41 – 15
5VL–H3550–12	41 – 15
5VL–H3559–00	41 – 5
5VL–H3570–10	41 – 2
5VL–H357H–00	41 – 12
5VL–H3912–00	45 – 11
	46 – 18
5VL–H3922–00	46 – 6
5VL–H3922–21	34 – 11
4TU–H3936–00	45 – 16
	46 – 23
5VL–H3936–00	47 – 20
5VL–H3963–02	45 – 7
	46 – 14
5VL–H3973–01	45 – 4
	46 – 11
4P2–H3976–00	45 – 7
5VL–H3980–01	45 – 3
5VL–H3980–21	46 – 10
5VL–H4145–00	43 – 10
5VL–H4159–10	43 – 7
5VL–H4163–00	43 – 11
5VL–H4164–00	43 – 12
5VL–H4300–23	43 – 1
5VL–H4310–22	43 – 4
5VL–H4310–31	42 – 1
5VL–H4312–10	43 – 6
5VL–H4314–10	42 – 2
5VL–H4314–20	43 – 2
5VL–H4315–21	43 – 5
5VL–H4330–22	43 – 9

CODIGO Nº PART NO.	REF. Nº
5VL–H4330–31	42 – 3
4GU–H4347–10	42 – 4
5VL–H4347–10	43 – 3
5VL–H4359–00	39 – 19
5VL–H4359–30	42 – 5
5VL–H4378–30	42 – 6
5VL–H4526–00	43 – 8
5VL–H4714–00	44 – 4
5VL–H4723–00	44 – 2
5VL–H4724–00	44 – 3
5VL–H472C–01	44 – 5
5VL–H4736–00	44 – 7
5VL–H4753–00	44 – 6
5VL–H5110–01	23 – 17
	23 – 34
	24 – 17
	24 – 34
4FP–H5130–21	48 – 11
5VL–H5510–01	37 – 2
5VL–H5540–00	48 – 6
5VL–H5546–00	48 – 7
5VL–H5550–01	37 – 1
5VL–H5752–01	47 – 22
4FP–H5753–00	47 – 23
3D9–W0041–02	34 – 2
4S5–W0045–00	29 – 6
4S5–W0047–00	29 – 5
4S5–W0048–01	29 – 7
4S5–W0057–00	29 – 4
2D0–W1140–00	2 – 1
2D0–W1141–00	2 – 2
4P2–W1415–00	7 – 10
4P2–W149A–00	7 – 11
4P2–W149J–00	7 – 3
4P2–W149K–00	7 – 2
5VL–W1510–11	9 – 1
5VL–W2411–10–P6	25 – 1
5VL–W2411–33–P0	25 – 1
5VL–W2411–33–P1	25 – 1
5VL–W2411–33–P2	25 – 1
5VL–W2411–33–P5	25 – 1
3D9–W2533–00	28 – 6
	30 – 9
	31 – 9
5VL–W2835–42–P1	36 – 1
5VL–W2835–42–P2	36 – 1
5VL–W2835–42–P3	36 – 1
5VL–W2835–42–P4	36 – 1

INDICE NUMERICO
NUMERICAL INDEX

CODIGO Nº PART NO.	REF. Nº
5VL–W4756–00–P1	26 – 6
5VL–W4756–00–P2	26 – 6
5VL–W4756–00–P3	26 – 6
5VL–W4756–00–P4	26 – 6
5VL–W4756–01–P1	26 – 6
5VL–W4756–01–P6	26 – 6
5VL–W5304–01	28 – 23
	31 – 25
5VL–W8381–00	36 – 2
5VL–Y1153–00	2 – 7
5VL–Y1161–00	2 – 14
5VL–Y1215–00	3 – 9
4P2–Y1441–01	6 – 5
5VL–Y1635–10	13 – 13
5VL–Y1854–01	15 – 1
5VL–Y2151–03–P1	18 – 1
5VL–Y2151–03–P2	18 – 1
5VL–Y2151–03–P3	18 – 1
5VL–Y2151–05–P4	18 – 1
5VL–Y2151–05–P6	18 – 1
5VL–Y2171–01–8X	19 – 1
5VL–Y2171–07–6X	19 – 1
5VL–Y2171–12–6X	19 – 1
5VL–Y2171–15–5X	19 – 1
5VL–Y2171–16–5X	19 – 1
5VL–Y2171–25–3X	19 – 1
5VL–Y2171–25–4X	19 – 1
5VL–Y2171–26–3X	19 – 1
5VL–Y2171–26–4X	19 – 1
3D9–Y2172–11–5X	19 – 4
3D9–Y2172–13–1X	19 – 4
3D9–Y2172–13–2X	19 – 4
3D9–Y2172–14–0X	19 – 4
3D9–Y2172–17–3X	19 – 4
5VL–Y8250–00	47 – 12
5VL–Y8471–01	44 – 1
90101–06848	28 – 18
	30 – 14
	31 – 14
90101–08820	4 – 9
90105–05832	47 – 24
90105–08724	1 – 13
90105–08873	17 – 12
90105–08874	17 – 4
90105–088E4	17 – 9
90105–088E5	17 – 10
90105–088E6	17 – 13
90105–10831	29 – 15
90109–06850	45 – 12
	46 – 7
	46 – 19
90109–08847	30 – 28
	31 – 31
90109–08848	30 – 29
	31 – 32
90109–08864	30 – 22
	31 – 22
90109–10849	35 – 19
90111–08805	29 – 2
90119–06811	18 – 10
	19 – 15
90119–06869	6 – 16
	18 – 8
	26 – 3
	26 – 9
90123–08813	45 – 1
	46 – 1
	46 – 3
90149–05800	36 – 3
90150–06807	36 – 8
90151–06818	15 – 4
90153–06803	1 – 5
90153–08804	30 – 38
	31 – 41
90155–06800	5 – 7
90157–03800	25 – 18
90159–06820	25 – 19
90159–06830	20 – 12
90170–12060	13 – 18
90170–22850	19 – 9
90176–10810	20 – 15
90176–22801	21 – 11
	22 – 11
90179–06826	33 – 12
	35 – 12
90179–08639	30 – 24
	31 – 24
90179–08830	17 – 6
	17 – 11
	17 – 14
90179–08862	45 – 2
	46 – 2
	46 – 4
90179–12813	11 – 12
	13 – 4
90179–12863	2 – 18
90179–25806	21 – 6
	22 – 6
90185–10807	28 – 32
	35 – 20
90201–05802	22 – 23
90201–05803	8 – 7
90201–05804	8 – 8
90201–06850	19 – 12
90201–068C2	47 – 11
	47 – 15
90201–07641	5 – 4
90201–07836	28 – 13
90201–08326	4 – 8
90201–08830	43 – 14
90201–088C3	1 – 14
90201–088P2	25 – 9
90201–108C7	20 – 14
	28 – 33
90201–108J9	34 – 15
90201–122H1	2 – 17
	13 – 3
90201–12819	20 – 9
90201–152H7	11 – 8
90201–15700	14 – 21
90201–20266	14 – 6
	14 – 17
90201–20272	14 – 23
90201–20844	28 – 14
90201–208D5	11 – 4
90201–228F6	19 – 10
90201–258D7	12 – 6
90202–09800	25 – 34
90202–26142	21 – 8
	22 – 8
90206–06090	8 – 6
90208–07052	5 – 5
90215–12211	13 – 17
90249–06800	35 – 30
90249–12808	33 – 11
	35 – 11
90267–48854	18 – 4
90280–03017	2 – 16
90282–05001	13 – 2
90331–07031	14 – 13
90340–12097	5 – 8
90340–14810	10 – 6
90340–32812	10 – 8
90386–18099	20 – 2
90386–18801	20 – 2
90387–06837	44 – 9
90387–06879	25 – 33
90387–12840	28 – 34
90387–15809	30 – 2
	31 – 2
90387–158K1	27 – 11
90387–167L5	4 – 4
90401–10811	34 – 14
90430–05800	25 – 20
90430–06817	1 – 6
	4 – 18
90430–10819	48 – 5
90430–12227	5 – 9
90445–08830	47 – 2
90450–44804	6 – 4
90450–51802	6 – 17
90462–16801	9 – 6
90464–12803	18 – 11
90464–35820	47 – 19
	47 – 21
90467–09854	25 – 23
90467–12828	9 – 5
90468–26813	11 – 3
90480–01868	26 – 10
90480–08891	36 – 9
90480–13837	19 – 6
	25 – 29
90480–13890	36 – 10
90480–14812	44 – 8
90480–24186	19 – 2
90501–08803	33 – 8
90501–10806	35 – 10
90506–12801	28 – 7
	30 – 10
	31 – 10
90506–15802	28 – 8
	30 – 11
	31 – 11
90506–29800	35 – 18
90506–32800	35 – 4
90508–16800	13 – 22
90508–26836	11 – 5
90508–32801	16 – 5
90508–40801	35 – 6
90560–12828	28 – 2
90560–15293	27 – 2
91312–05010	14 – 29
91312–06012	4 – 6
91312–06014	37 – 4
91312–06020	8 – 10
	47 – 14
91312–06025	6 – 3
	37 – 3
91312–06090	1 – 18
91312–08016	12 – 8
91402–20012	30 – 31
	31 – 34
	35 – 8
92902–06200	13 – 14
	35 – 9
	35 – 31
9290N–06600	47 – 11
	47 – 15
93101–10800	10 – 21
93101–12812	16 – 4
93102–12802	13 – 23
93102–18804	28 – 3
93102–20854	14 – 25
93102–20857	27 – 4
93104–07811	28 – 12
93104–22802	30 – 5
	31 – 4
93105–47802	28 – 21
93105–47808	27 – 9
93106–26804	30 – 19
	31 – 19
93109–18802	20 – 5
93109–20806	11 – 13
93210–11800	2 – 9
93210–14813	28 – 31
93210–14899	10 – 7
93210–19809	10 – 20
93210–30611	6 – 2
93210–328A4	10 – 9
93210–42807	30 – 6
	31 – 6
93210–44889	1 – 12
93210–55669	38 – 3
93210–57897	1 – 21
93210–71801	1 – 9
93306–002YU	4 – 3
93306–003X6	4 – 2
93306–004YL	30 – 18
	31 – 18
93306–201Y8	14 – 8
93306–202XN	2 – 15
93306–202XP	14 – 26
93306–202Y4	27 – 3
	30 – 3
	31 – 3
93306–203YT	14 – 9
93306–204YD	14 – 24
93306–205XJ	2 – 10
93306–252X5	30 – 4
	31 – 7
93306–301Y6	28 – 4
93310–629Y3	2 – 4
93410–19831	28 – 16
93410–20809	14 – 7
	14 – 18
93440–10109	1 – 4
93450–16812	2 – 13
93503–16824	13 – 19
93604–10837	15 – 3
93608–30839	16 – 8
93822–14813	14 – 27
94109–18805	30 – 25
	31 – 26
94127–18823	27 – 5
	28 – 25
94227–18808	27 – 6
	28 – 26
	30 – 26
	31 – 27
94327–18800	28 – 27
	31 – 29
94416–18803	28 – 24
94418–18802	31 – 28
94568–C1088	4 – 10
94668–83001	31 – 43
94668–E2001	30 – 40
94700–00869	1 – 15
95022–06016	4 – 17
	34 – 20
	41 – 14
95022–06020	1 – 10
95022–06025	34 – 21
	38 – 8
95022–06030	9 – 7
95022–06035	10 – 4
	10 – 17
95022–06045	9 – 8
	10 – 18

INDICE NUMERICO
NUMERICAL INDEX

CODIGO Nº PART NO.	REF. Nº
95022–06050	10 – 5
95022–06055	9 – 9
95022–08035	21 – 14
	22 – 14
95022–08040	21 – 10
	22 – 10
95023–08030	43 – 13
95302–06600	13 – 15
	28 – 19
	30 – 15
	31 – 15
	44 – 10
	47 – 10
95302–08800	43 – 15
95312–08600	30 – 37
	31 – 40
95602–06100	45 – 13
	46 – 8
	46 – 20
95602–12200	20 – 8
95602–14200	27 – 13
	30 – 33
	31 – 36
95702–05500	36 – 4
	48 – 12
95702–08500	30 – 30
	31 – 33
95702–10500	39 – 18
	40 – 15
9570L–10500	17 – 5
95802–06020	4 – 14
	42 – 7
	47 – 7
95812–08016	26 – 13
95812–08020	8 – 11
	35 – 16
	35 – 23
95812–10080	17 – 3
95822–06012	21 – 16
	21 – 19
	22 – 19
	48 – 10
95822–06016	18 – 6
	22 – 16
97002–05012	22 – 22
97002–08016	25 – 10
97022–06020	16 – 11
97590–06522	45 – 14

CODIGO Nº PART NO.	REF. Nº
97590–06522	46 – 9
	46 – 21
97602–06220	6 – 13
97702–40014	25 – 28
97702–50012	26 – 8
97702–50016	36 – 13
	39 – 5
	39 – 10
9770N–42613	39 – 4
	39 – 9
97801–04010	7 – 13
97880–03008	25 – 13
98502–05014	32 – 9
	33 – 13
98502–06016	48 – 2
98507–05025	45 – 6
	46 – 13
98507–05030	45 – 8
	46 – 15
98507–05043	45 – 5
	46 – 12
98507–05050	45 – 9
	46 – 16
98512–06010	10 – 11
98512–06012	12 – 4
	14 – 11
98512–06016	25 – 32
98902–05008	38 – 6
98902–06016	10 – 13
98902–06020	19 – 11
98980–06012	8 – 5
99002–05600	5 – 3
	35 – 32
99002–10600	16 – 6
99009–15400	11 – 9
	14 – 22
99009–20500	13 – 24
99234–00080	25 – 36
	26 – 7
99236–00080	25 – 36
	26 – 7
99530–10114	1 – 17
	9 – 2
	9 – 10
	10 – 3
	10 – 16

CODIGO Nº PART NO.	REF. Nº

CODIGO Nº PART NO.	REF. Nº

CODIGO Nº PART NO.	REF. Nº

CODIGO Nº PART NO.	REF. Nº